Dist	COUNTY	ROUTE	POST MILES TOTAL PROJECT	SHEET No.	TOTAL SHEETS
04	Sol	80	0.0/R28.4	301	509

REGISTERED CIVIL ENGINEER — DATE 2-29-12

5-7-12
PLANS APPROVAL DATE

REGISTERED PROFESSIONAL ENGINEER — Florante P. Perez — No. 41030 — Exp. 3-31-13 — CIVIL — STATE OF CALIFORNIA

THE STATE OF CALIFORNIA OR ITS OFFICERS OR AGENTS SHALL NOT BE RESPONSIBLE FOR THE ACCURACY OR COMPLETENESS OF SCANNED COPIES OF THIS PLAN SHEET.

NOTE:

FOR ACCURATE RIGHT OF WAY DATA, CONTACT RIGHT OF WAY ENGINEERING AT THE DISTRICT OFFICE.

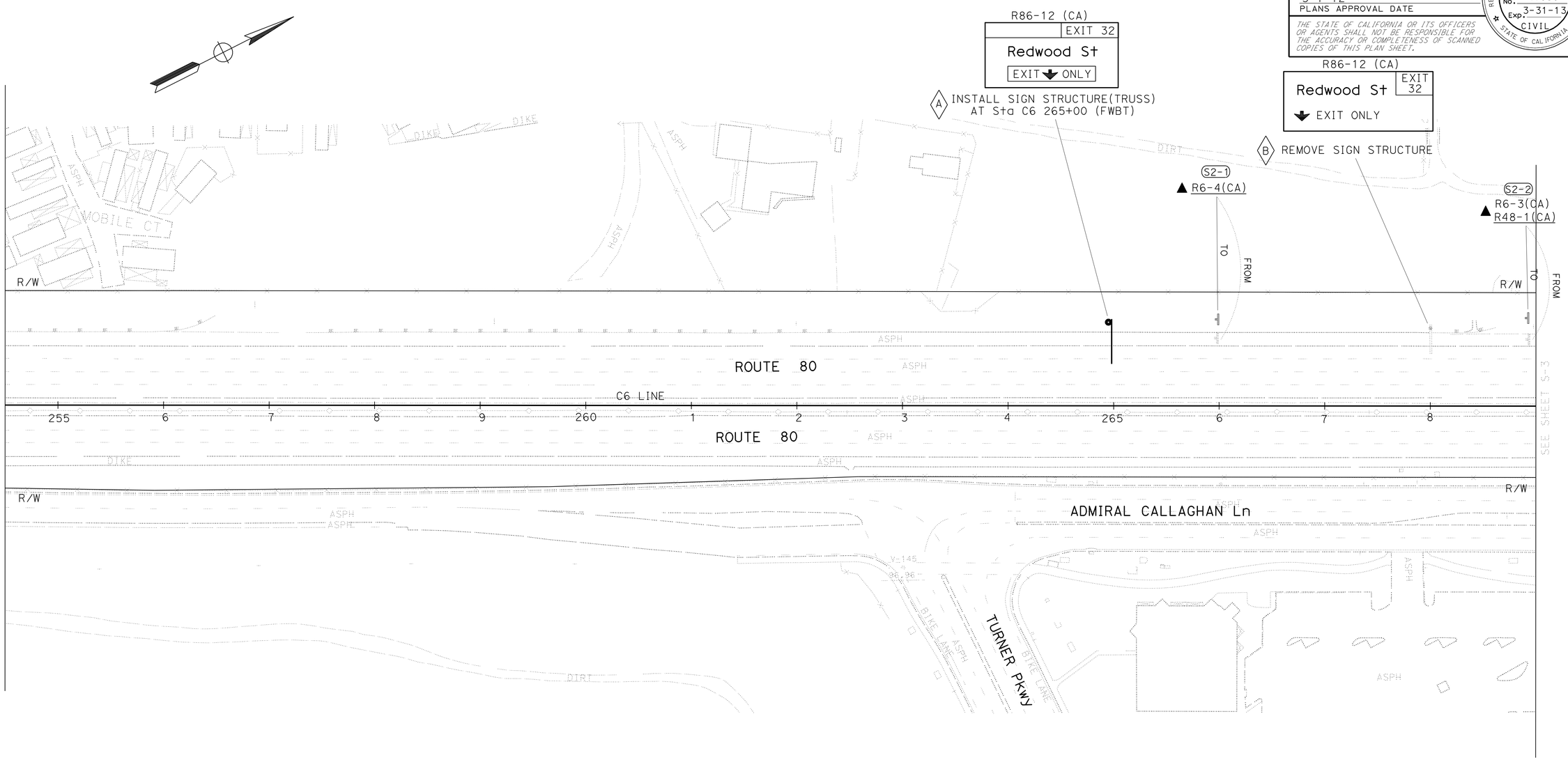

APPROVED FOR SIGN WORK ONLY

FOR NOTES, ABBREVIATIONS AND LEGEND, SEE SHEET S-1

SIGN PLAN

NO SCALE

S-2

STATE OF CALIFORNIA - DEPARTMENT OF TRANSPORTATION

Caltrans® TRAFFIC

FUNCTIONAL SUPERVISOR: LOURDES DAVID

CALCULATED-DESIGNED BY: LEOPOLDO BONGATO

CHECKED BY: FLORANTE P. PEREZ

REVISED BY / DATE REVISED

LAST REVISION 00-00-00 — DATE PLOTTED => 09-MAY-2012 — TIME PLOTTED => 18:46

Dist	COUNTY	ROUTE	POST MILES TOTAL PROJECT	SHEET No.	TOTAL SHEETS
04	Sol	80	0.0/R28.4	302	509

REGISTERED CIVIL ENGINEER — DATE 2-29-12

5-7-12
PLANS APPROVAL DATE

REGISTERED PROFESSIONAL ENGINEER — Florante P. Perez — No. 41030 — Exp. 3-31-13 — CIVIL — STATE OF CALIFORNIA

THE STATE OF CALIFORNIA OR ITS OFFICERS OR AGENTS SHALL NOT BE RESPONSIBLE FOR THE ACCURACY OR COMPLETENESS OF SCANNED COPIES OF THIS PLAN SHEET.

NOTE:

FOR ACCURATE RIGHT OF WAY DATA, CONTACT RIGHT OF WAY ENGINEERING AT THE DISTRICT OFFICE.

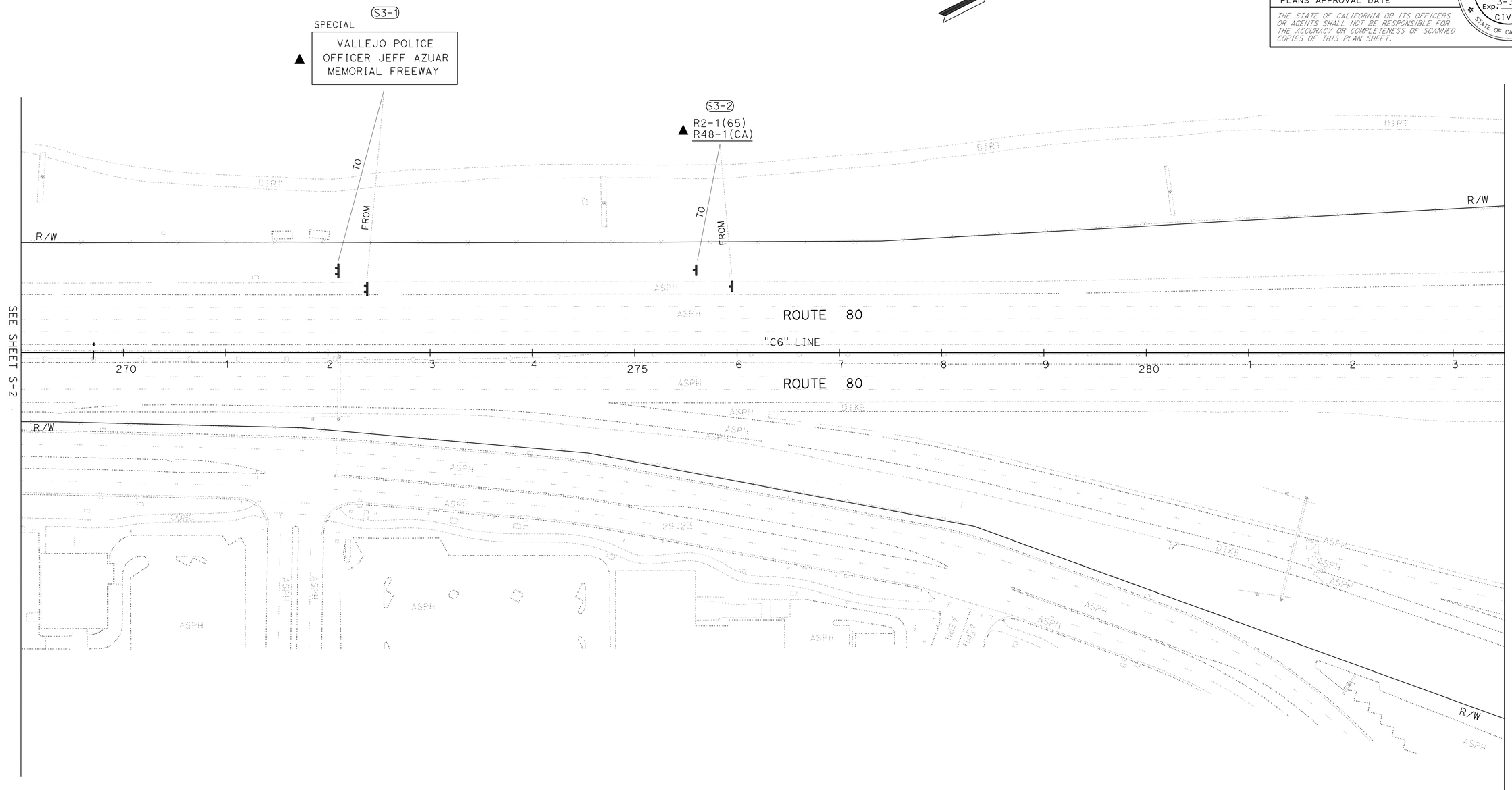

SIGN PLAN

NO SCALE

APPROVED FOR SIGN WORK ONLY

FOR NOTES, ABBREVIATIONS AND LEGEND, SEE SHEET S-1

S-3

STATE OF CALIFORNIA - DEPARTMENT OF TRANSPORTATION

Caltrans

TRAFFIC

FUNCTIONAL SUPERVISOR: LOURDES DAVID

CALCULATED-DESIGNED BY: LEOPOLDO BONGATO

CHECKED BY: FLORANTE P. PEREZ

REVISED BY

DATE REVISED

LAST REVISION — DATE PLOTTED => 09-MAY-2012 — TIME PLOTTED => 18:46

00-00-00

Dist	COUNTY	ROUTE	POST MILES TOTAL PROJECT	SHEET No.	TOTAL SHEETS
04	Sol	80	0.0/R28.4	303	509

REGISTERED CIVIL ENGINEER 2-29-12 DATE

5-7-12
PLANS APPROVAL DATE

REGISTERED PROFESSIONAL ENGINEER Florante P. Perez No. 41030 Exp. 3-31-13 CIVIL STATE OF CALIFORNIA

THE STATE OF CALIFORNIA OR ITS OFFICERS OR AGENTS SHALL NOT BE RESPONSIBLE FOR THE ACCURACY OR COMPLETENESS OF SCANNED COPIES OF THIS PLAN SHEET.

NOTE:

FOR ACCURATE RIGHT OF WAY DATA, CONTACT RIGHT OF WAY ENGINEERING AT THE DISTRICT OFFICE.

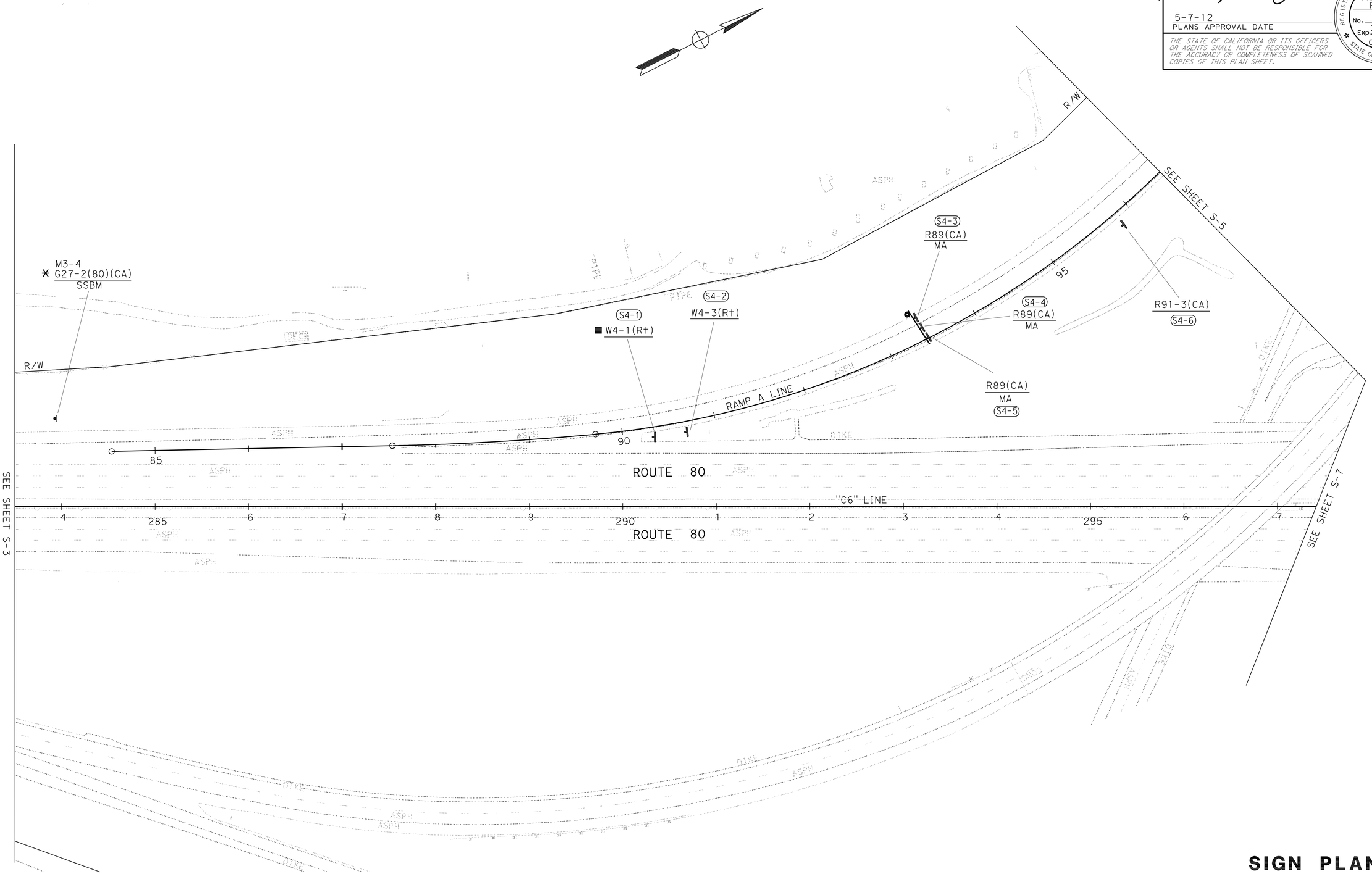

APPROVED FOR SIGN WORK ONLY

FOR NOTES, ABBREVIATIONS AND LEGEND, SEE SHEET S-1

SIGN PLAN

NO SCALE

S-4

STATE OF CALIFORNIA - DEPARTMENT OF TRANSPORTATION

Caltrans

TRAFFIC

FUNCTIONAL SUPERVISOR: LOURDES DAVID

CALCULATED-DESIGNED BY: LEOPOLDO BONGATO

CHECKED BY: FLORANTE P. PEREZ

REVISED BY

DATE REVISED

LAST REVISION 02-22-12

DATE PLOTTED => 09-MAY-2012
TIME PLOTTED => 18:46

Dist	COUNTY	ROUTE	POST MILES TOTAL PROJECT	SHEET No.	TOTAL SHEETS
04	Sol	80	0.0/R28.4	304	509

REGISTERED CIVIL ENGINEER — DATE 2-29-12

5-7-12
PLANS APPROVAL DATE

REGISTERED PROFESSIONAL ENGINEER — Florante P. Perez — No. 41030 — Exp. 3-31-13 — CIVIL — STATE OF CALIFORNIA

THE STATE OF CALIFORNIA OR ITS OFFICERS OR AGENTS SHALL NOT BE RESPONSIBLE FOR THE ACCURACY OR COMPLETENESS OF SCANNED COPIES OF THIS PLAN SHEET.

NOTE:

FOR ACCURATE RIGHT OF WAY DATA, CONTACT RIGHT OF WAY ENGINEERING AT THE DISTRICT OFFICE.

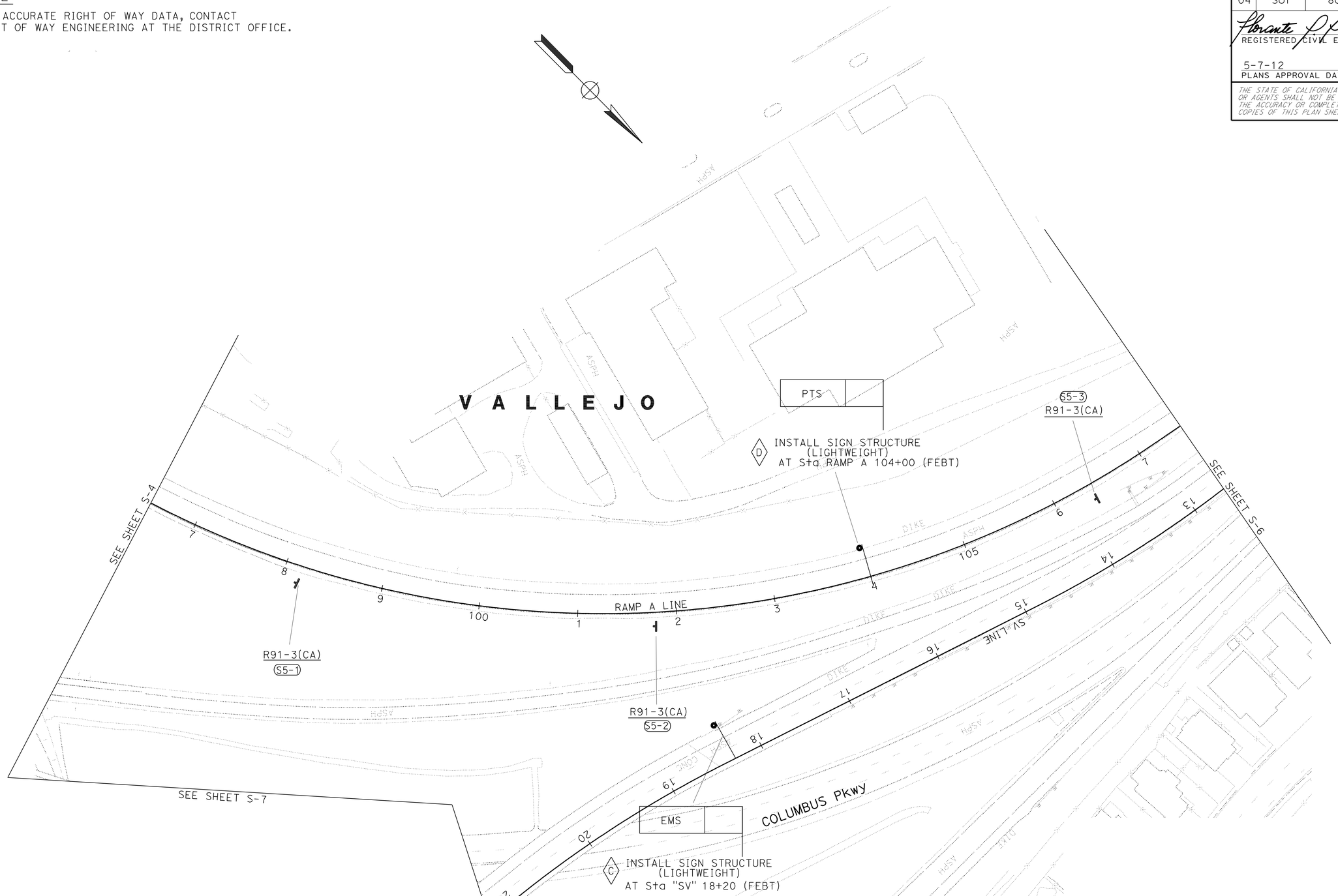

APPROVED FOR SIGN WORK ONLY

FOR NOTES, ABBREVIATIONS AND LEGEND, SEE SHEET S-1

SIGN PLAN

NO SCALE

S-5

STATE OF CALIFORNIA - DEPARTMENT OF TRANSPORTATION

Caltrans®

TRAFFIC

FUNCTIONAL SUPERVISOR: LOURDES DAVID

CALCULATED-DESIGNED BY: LEOPOLDO BONGATO

CHECKED BY: FLORANTE P. PEREZ

REVISED BY

DATE REVISED

LAST REVISION 02-22-12

DATE PLOTTED => 09-MAY-2012

TIME PLOTTED => 18:46

Dist	COUNTY	ROUTE	POST MILES TOTAL PROJECT	SHEET No.	TOTAL SHEETS
04	Sol	80	0.0/R28.4	305	509

Florante P. Perez 2-29-12
REGISTERED CIVIL ENGINEER DATE

5-7-12
PLANS APPROVAL DATE

REGISTERED PROFESSIONAL ENGINEER
Florante P. Perez
No. 41030
Exp. 3-31-13
CIVIL
STATE OF CALIFORNIA

THE STATE OF CALIFORNIA OR ITS OFFICERS OR AGENTS SHALL NOT BE RESPONSIBLE FOR THE ACCURACY OR COMPLETENESS OF SCANNED COPIES OF THIS PLAN SHEET.

NOTE:

FOR ACCURATE RIGHT OF WAY DATA, CONTACT RIGHT OF WAY ENGINEERING AT THE DISTRICT OFFICE.

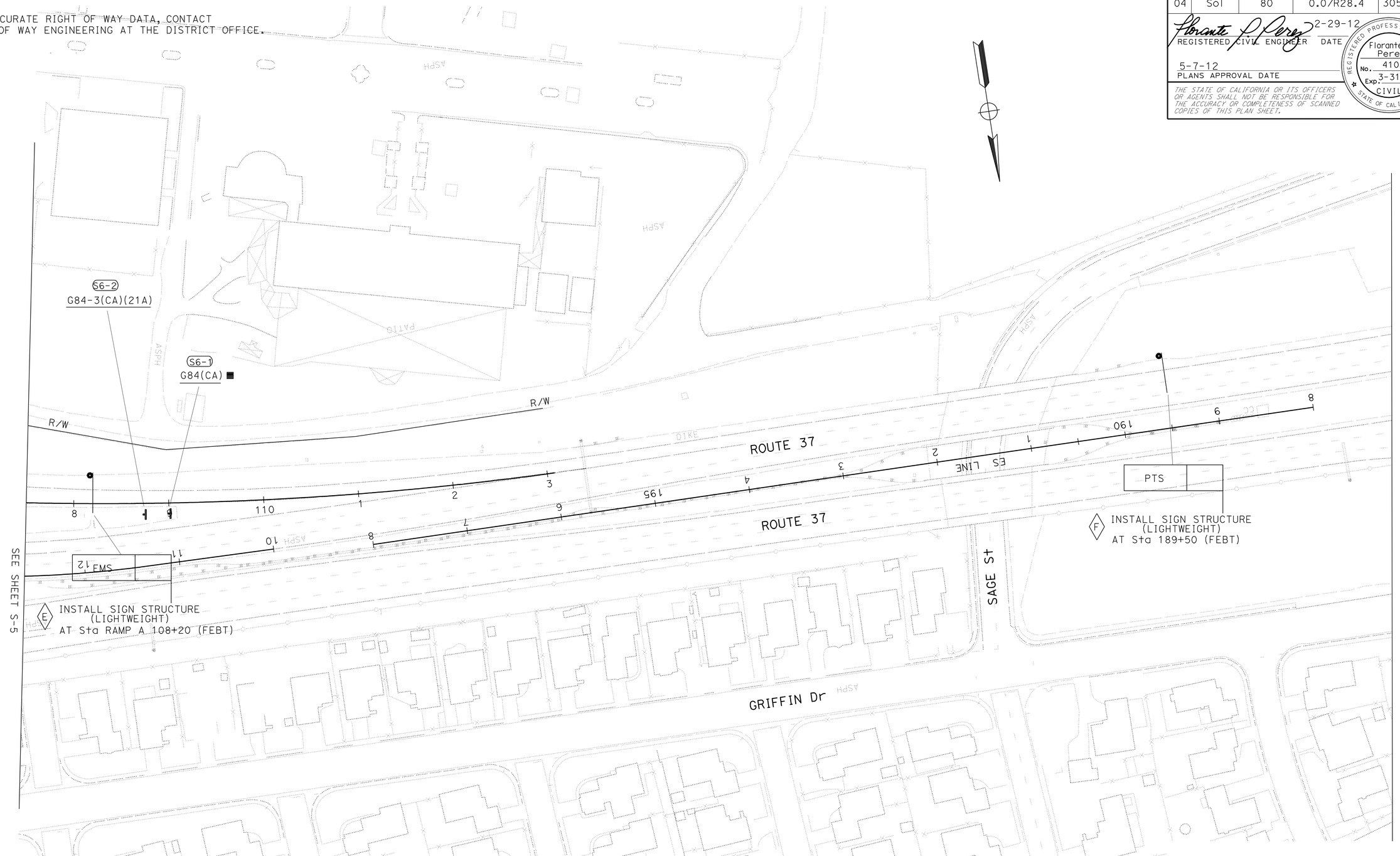

SIGN PLAN

NO SCALE

S-6

APPROVED FOR SIGN WORK ONLY

FOR NOTES, ABBREVIATIONS AND LEGEND, SEE SHEET S-1

STATE OF CALIFORNIA - DEPARTMENT OF TRANSPORTATION
Caltrans
TRAFFIC

FUNCTIONAL SUPERVISOR: LOURDES DAVID
CALCULATED-DESIGNED BY: LEOPOLDO BONGATO
CHECKED BY: FLORANTE P. PEREZ
REVISED BY
DATE REVISED

LAST REVISION 02-22-12
DATE PLOTTED => 09-MAY-2012
TIME PLOTTED => 18:47

Dist	COUNTY	ROUTE	POST MILES TOTAL PROJECT	SHEET No.	TOTAL SHEETS
04	Sol	80	0.0/R28.4	306	509

REGISTERED CIVIL ENGINEER — DATE 2-29-12

5-7-12
PLANS APPROVAL DATE

REGISTERED PROFESSIONAL ENGINEER — Florante P. Perez — No. 41030 — Exp. 3-31-13 — CIVIL — STATE OF CALIFORNIA

THE STATE OF CALIFORNIA OR ITS OFFICERS OR AGENTS SHALL NOT BE RESPONSIBLE FOR THE ACCURACY OR COMPLETENESS OF SCANNED COPIES OF THIS PLAN SHEET.

NOTE:

FOR ACCURATE RIGHT OF WAY DATA, CONTACT RIGHT OF WAY ENGINEERING AT THE DISTRICT OFFICE.

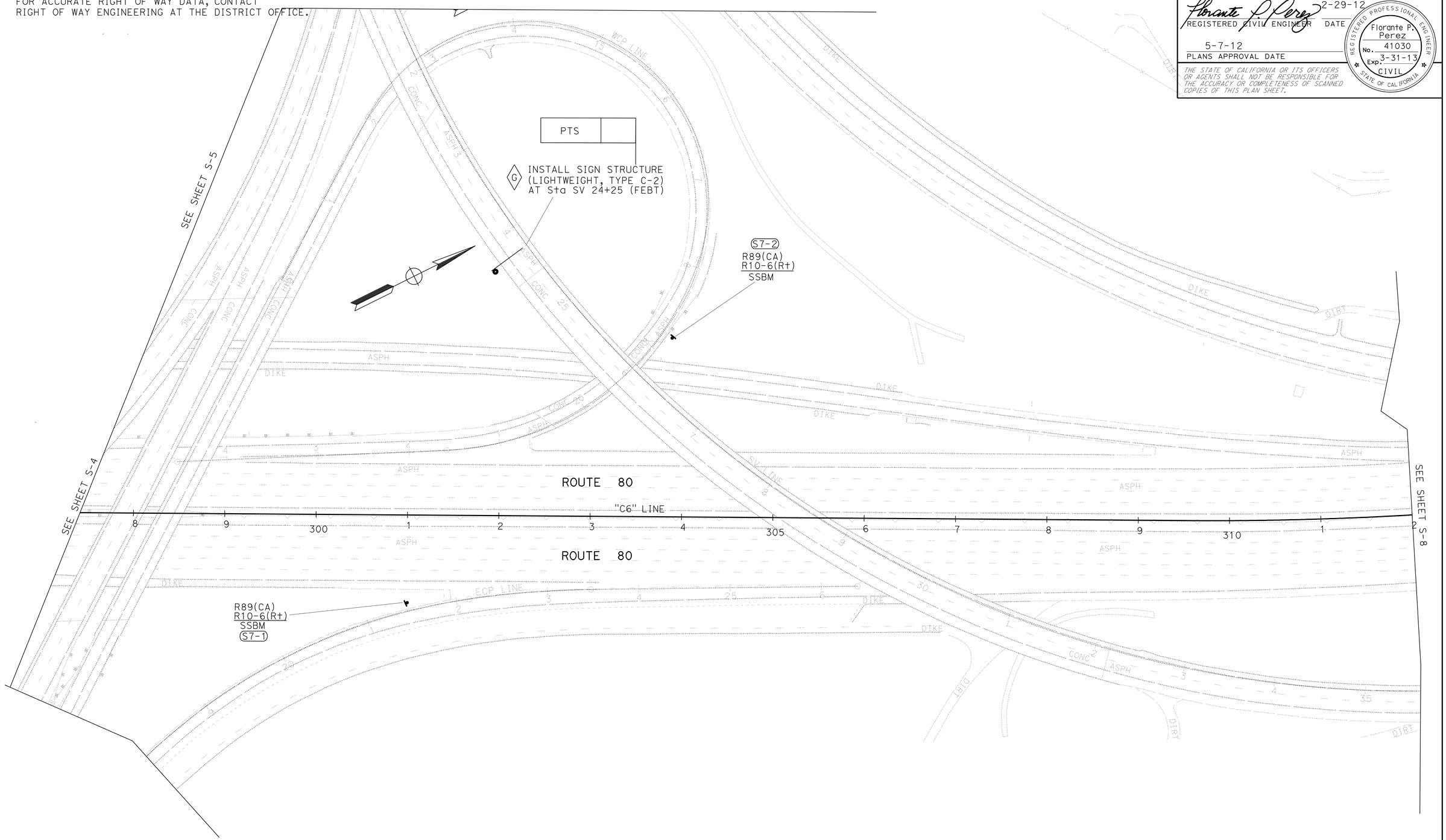

APPROVED FOR SIGN WORK ONLY

FOR NOTES, ABBREVIATIONS AND LEGEND, SEE SHEET S-1

SIGN PLAN

NO SCALE

S-7

STATE OF CALIFORNIA - DEPARTMENT OF TRANSPORTATION

Caltrans

TRAFFIC

FUNCTIONAL SUPERVISOR: LOURDES DAVID

CALCULATED-DESIGNED BY: LEOPOLDO BONGATO

CHECKED BY: FLORANTE P. PEREZ

REVISED BY

DATE REVISED

LAST REVISION 02-22-12

DATE PLOTTED => 09-MAY-2012

TIME PLOTTED => 19:33

Dist	COUNTY	ROUTE	POST MILES TOTAL PROJECT	SHEET No.	TOTAL SHEETS
04	Sol	80	0.0/R28.4	307	509

REGISTERED CIVIL ENGINEER — DATE 2-29-12

5-7-12
PLANS APPROVAL DATE

REGISTERED PROFESSIONAL ENGINEER — Florante P. Perez — No. 41030 — Exp. 3-31-13 — CIVIL — STATE OF CALIFORNIA

THE STATE OF CALIFORNIA OR ITS OFFICERS OR AGENTS SHALL NOT BE RESPONSIBLE FOR THE ACCURACY OR COMPLETENESS OF SCANNED COPIES OF THIS PLAN SHEET.

NOTE:

FOR ACCURATE RIGHT OF WAY DATA, CONTACT RIGHT OF WAY ENGINEERING AT THE DISTRICT OFFICE.

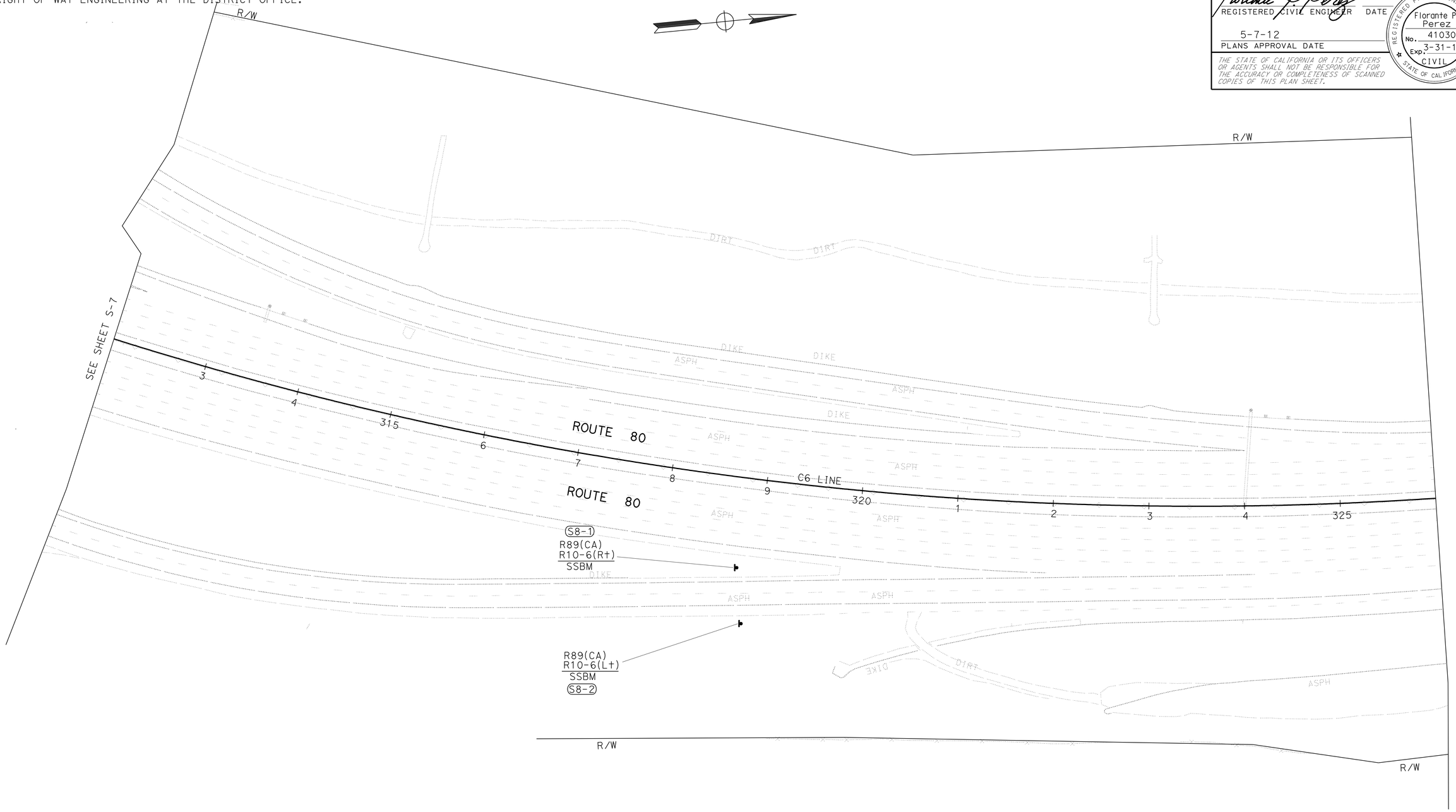

APPROVED FOR SIGN WORK ONLY

FOR NOTES, ABBREVIATIONS AND LEGEND, SEE SHEET S-1

SIGN PLAN

NO SCALE

S-8

STATE OF CALIFORNIA - DEPARTMENT OF TRANSPORTATION

Caltrans

TRAFFIC

FUNCTIONAL SUPERVISOR: LOURDES DAVID

CALCULATED-DESIGNED BY: LEOPOLDO BONGATO

CHECKED BY: FLORANTE P. PEREZ

REVISED BY

DATE REVISED

LAST REVISION 00-00-00

DATE PLOTTED => 09-MAY-2012

TIME PLOTTED => 19:33

Dist	COUNTY	ROUTE	POST MILES TOTAL PROJECT	SHEET No.	TOTAL SHEETS
04	Sol	80	0.0/R28.4	308	509

Florante P. Perez 2-29-12
REGISTERED CIVIL ENGINEER DATE

5-7-12
PLANS APPROVAL DATE

REGISTERED PROFESSIONAL ENGINEER
Florante P. Perez
No. 41030
Exp. 3-31-13
CIVIL
STATE OF CALIFORNIA

THE STATE OF CALIFORNIA OR ITS OFFICERS OR AGENTS SHALL NOT BE RESPONSIBLE FOR THE ACCURACY OR COMPLETENESS OF SCANNED COPIES OF THIS PLAN SHEET.

NOTE:

FOR ACCURATE RIGHT OF WAY DATA, CONTACT RIGHT OF WAY ENGINEERING AT THE DISTRICT OFFICE.

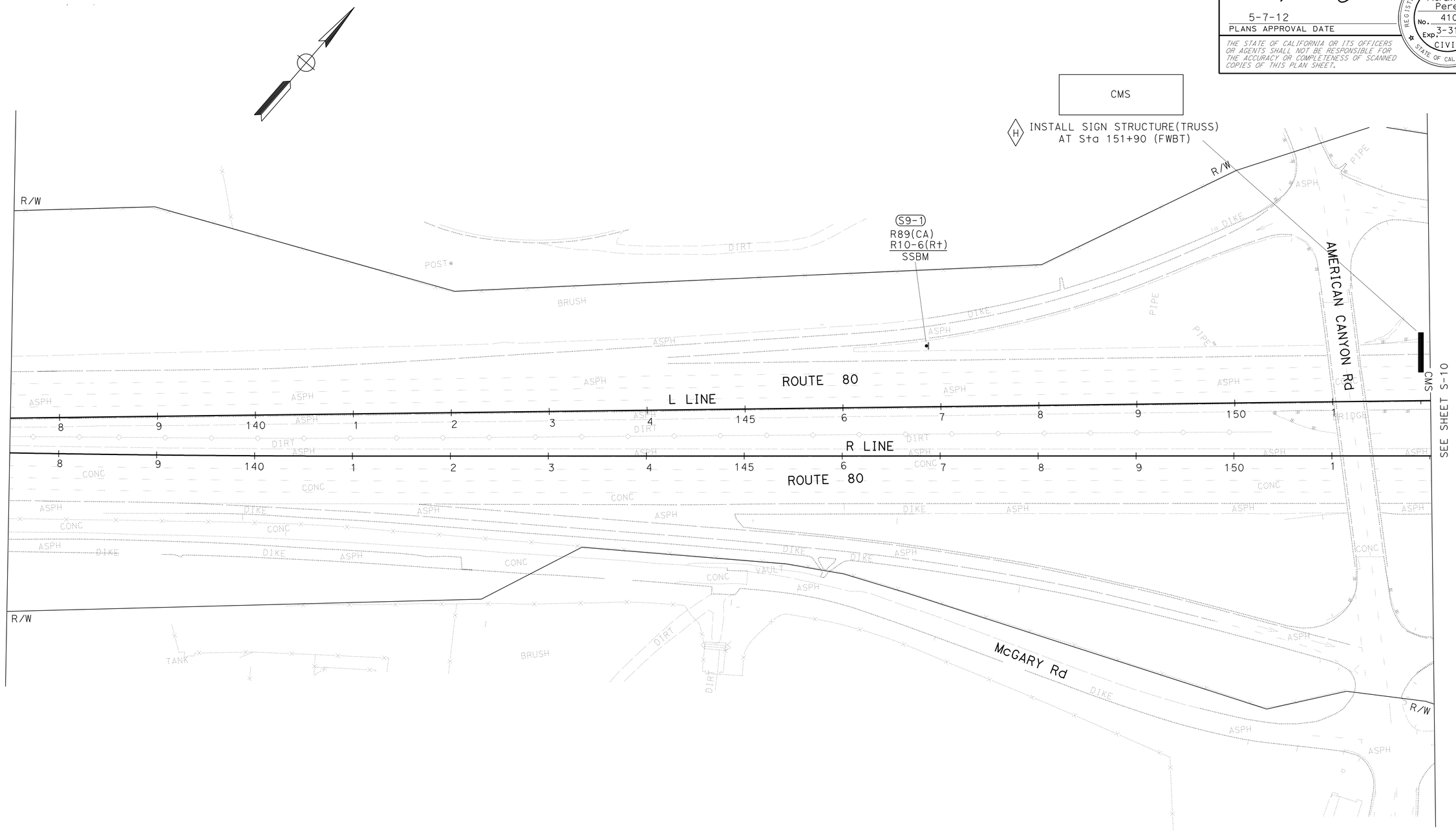

APPROVED FOR SIGN WORK ONLY

FOR NOTES, ABBREVIATIONS AND LEGEND, SEE SHEET S-1

SIGN PLAN

NO SCALE

S-9

REVISED BY	DATE REVISED

CALCULATED-DESIGNED BY	CHECKED BY
LEOPOLDO BONGATO	FLORANTE P. PEREZ

FUNCTIONAL SUPERVISOR: LOURDES DAVID

STATE OF CALIFORNIA - DEPARTMENT OF TRANSPORTATION

Caltrans®

TRAFFIC

LAST REVISION 02-22-12 | DATE PLOTTED => 09-MAY-2012 | TIME PLOTTED => 19:33

Dist	COUNTY	ROUTE	POST MILES TOTAL PROJECT	SHEET No.	TOTAL SHEETS
04	Sol	80	0.0/R28.4	309	509

Florante P. Perez 2-29-12
REGISTERED CIVIL ENGINEER DATE

5-7-12
PLANS APPROVAL DATE

REGISTERED PROFESSIONAL ENGINEER
Florante P. Perez
No. 41030
Exp. 3-31-13
CIVIL
STATE OF CALIFORNIA

THE STATE OF CALIFORNIA OR ITS OFFICERS OR AGENTS SHALL NOT BE RESPONSIBLE FOR THE ACCURACY OR COMPLETENESS OF SCANNED COPIES OF THIS PLAN SHEET.

NOTE:

FOR ACCURATE RIGHT OF WAY DATA, CONTACT RIGHT OF WAY ENGINEERING AT THE DISTRICT OFFICE.

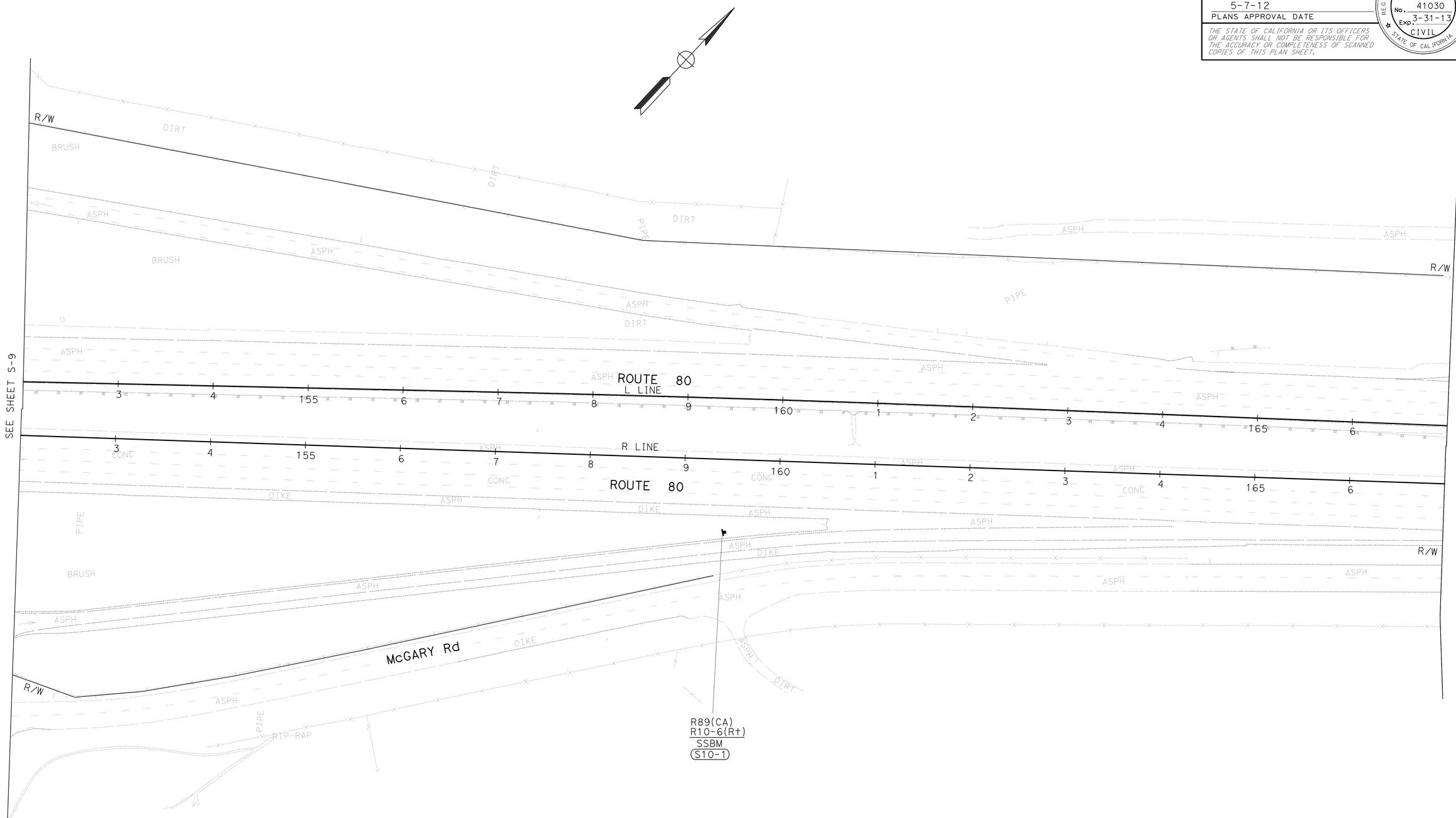

SIGN PLAN

NO SCALE

S-10

APPROVED FOR SIGN WORK ONLY

FOR NOTES, ABBREVIATIONS AND LEGEND, SEE SHEET S-1

STATE OF CALIFORNIA - DEPARTMENT OF TRANSPORTATION
Caltrans
TRAFFIC

FUNCTIONAL SUPERVISOR: LOURDES DAVID

CALCULATED-DESIGNED BY: LEOPOLDO BONGATO
CHECKED BY: FLORANTE P. PEREZ

REVISED BY
DATE REVISED

LAST REVISION 00-00-00
DATE PLOTTED => 09-MAY-2012
TIME PLOTTED => 19:33

Dist	COUNTY	ROUTE	POST MILES TOTAL PROJECT	SHEET No.	TOTAL SHEETS
04	Sol	80	0.0/R28.4	310	509

REGISTERED CIVIL ENGINEER — DATE 2-29-12

5-7-12
PLANS APPROVAL DATE

REGISTERED PROFESSIONAL ENGINEER — Florante P. Perez — No. 41030 — Exp. 3-31-13 — CIVIL — STATE OF CALIFORNIA

THE STATE OF CALIFORNIA OR ITS OFFICERS OR AGENTS SHALL NOT BE RESPONSIBLE FOR THE ACCURACY OR COMPLETENESS OF SCANNED COPIES OF THIS PLAN SHEET.

NOTE:

FOR ACCURATE RIGHT OF WAY DATA, CONTACT RIGHT OF WAY ENGINEERING AT THE DISTRICT OFFICE.

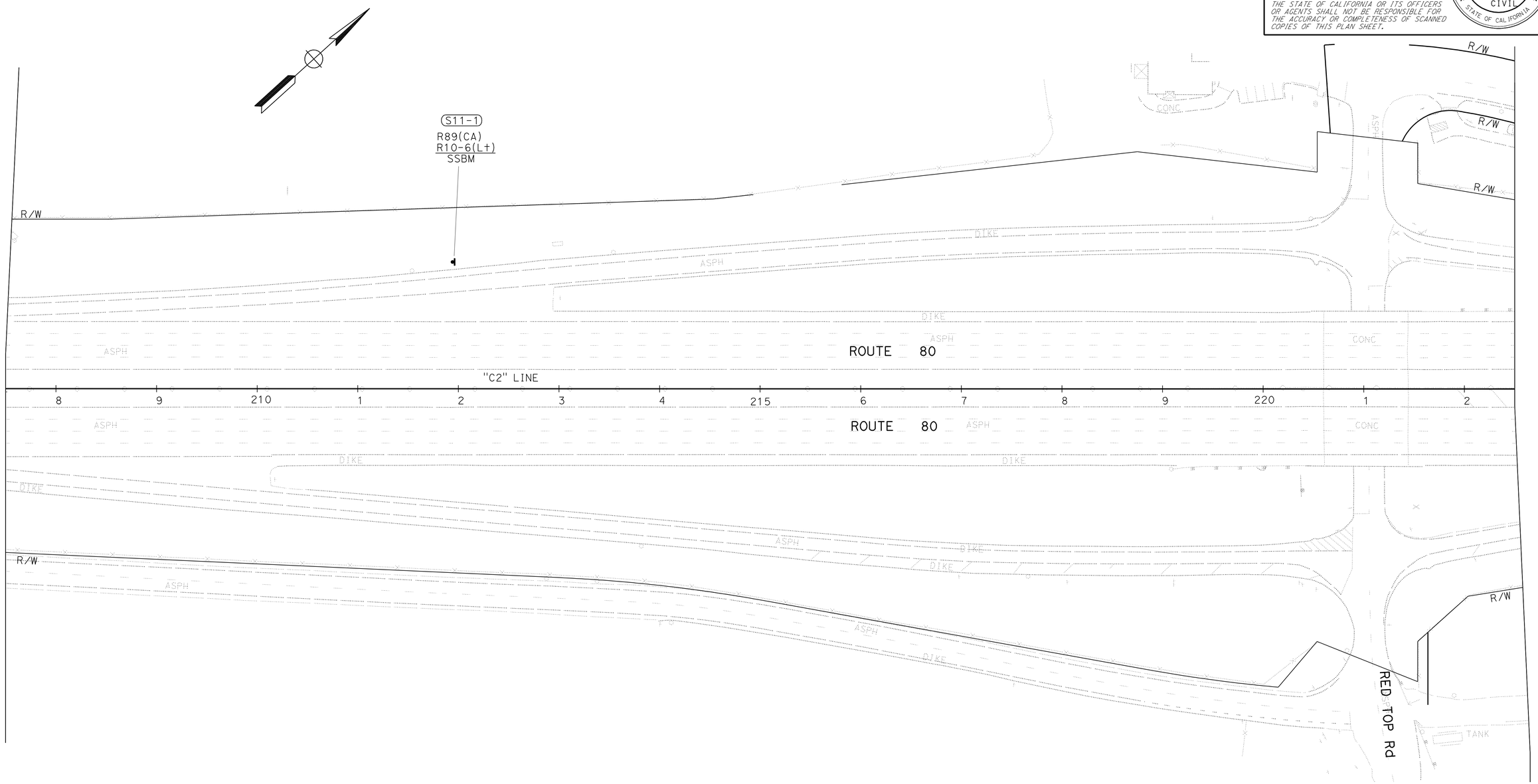

SIGN PLAN
NO SCALE

APPROVED FOR SIGN WORK ONLY

FOR NOTES, ABBREVIATIONS AND LEGEND, SEE SHEET S-1

S-11

REVISED BY | DATE REVISED

LEOPOLDO BONGATO | FLORANTE P. PEREZ

CALCULATED-DESIGNED BY | CHECKED BY

FUNCTIONAL SUPERVISOR: LOURDES DAVID

STATE OF CALIFORNIA - DEPARTMENT OF TRANSPORTATION

Caltrans® ELECTRICAL

LAST REVISION 02-03-02 | DATE PLOTTED => 09-MAY-2012 | TIME PLOTTED => 19:33

Dist	COUNTY	ROUTE	POST MILES TOTAL PROJECT	SHEET No.	TOTAL SHEETS
04	Sol	80	0.0/R28.4	311	509

REGISTERED CIVIL ENGINEER 2-29-12 DATE

5-7-12
PLANS APPROVAL DATE

REGISTERED PROFESSIONAL ENGINEER
Florante P. Perez
No. 41030
Exp. 3-31-13
CIVIL
STATE OF CALIFORNIA

THE STATE OF CALIFORNIA OR ITS OFFICERS OR AGENTS SHALL NOT BE RESPONSIBLE FOR THE ACCURACY OR COMPLETENESS OF SCANNED COPIES OF THIS PLAN SHEET.

NOTE:

FOR ACCURATE RIGHT OF WAY DATA, CONTACT RIGHT OF WAY ENGINEERING AT THE DISTRICT OFFICE.

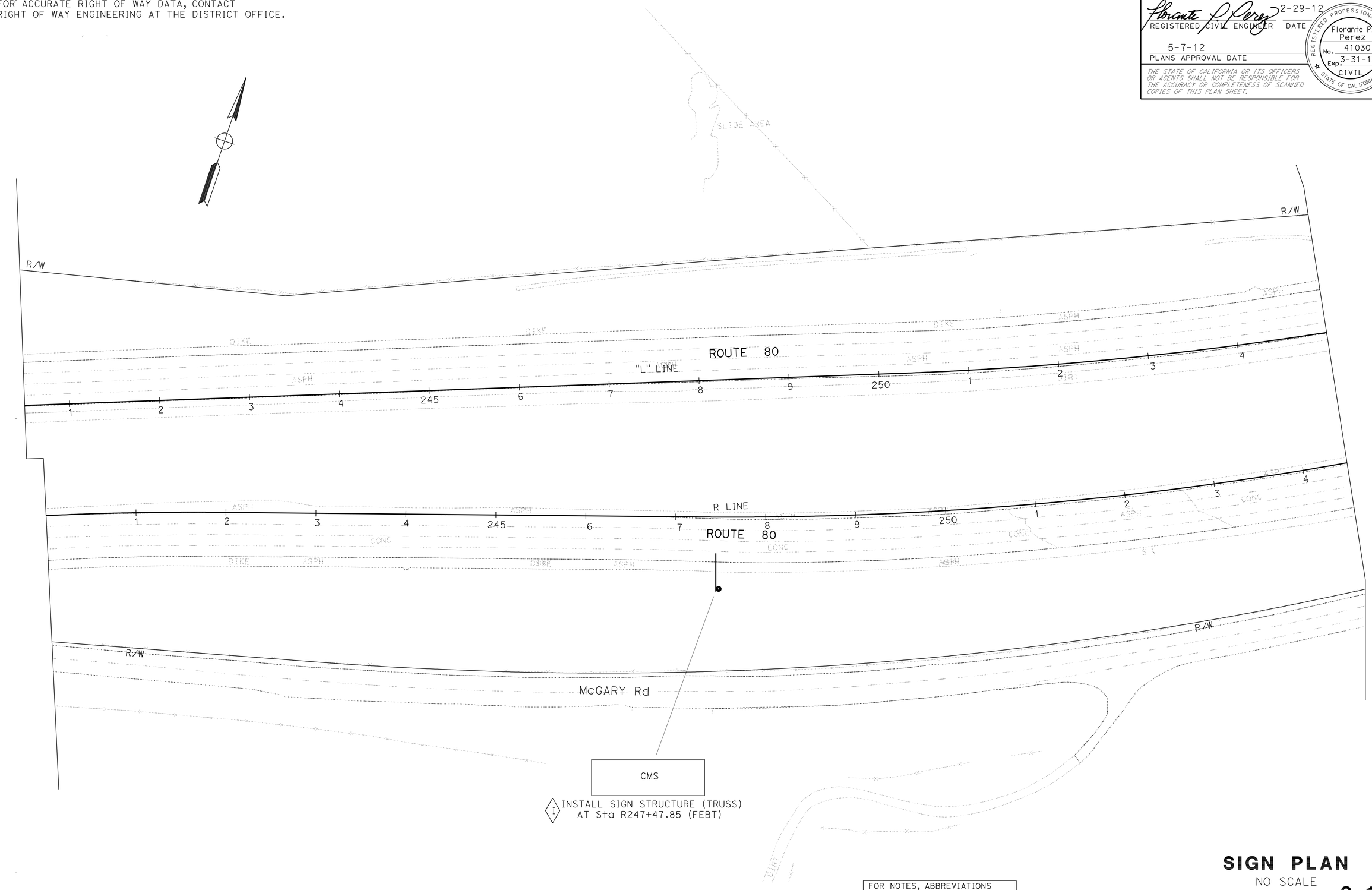

APPROVED FOR SIGN WORK ONLY

FOR NOTES, ABBREVIATIONS AND LEGEND, SEE SHEET S-1

SIGN PLAN

NO SCALE

S-12

STATE OF CALIFORNIA - DEPARTMENT OF TRANSPORTATION
Caltrans
TRAFFIC

FUNCTIONAL SUPERVISOR: LOURDES DAVID
CALCULATED-DESIGNED BY: LEOPOLDO BONGATO
CHECKED BY: FLORANTE P. PEREZ
REVISED BY
DATE REVISED

LAST REVISION 02-23-12
DATE PLOTTED => 09-MAY-2012
TIME PLOTTED => 19:33

Dist	COUNTY	ROUTE	POST MILES TOTAL PROJECT	SHEET No.	TOTAL SHEETS
04	Sol	80	0.0/R28.4	312	509

REGISTERED CIVIL ENGINEER 2-29-12 DATE

5-7-12
PLANS APPROVAL DATE

REGISTERED PROFESSIONAL ENGINEER Florante P. Perez No. 41030 Exp. 3-31-13 CIVIL STATE OF CALIFORNIA

THE STATE OF CALIFORNIA OR ITS OFFICERS OR AGENTS SHALL NOT BE RESPONSIBLE FOR THE ACCURACY OR COMPLETENESS OF SCANNED COPIES OF THIS PLAN SHEET.

NOTE:

FOR ACCURATE RIGHT OF WAY DATA, CONTACT RIGHT OF WAY ENGINEERING AT THE DISTRICT OFFICE.

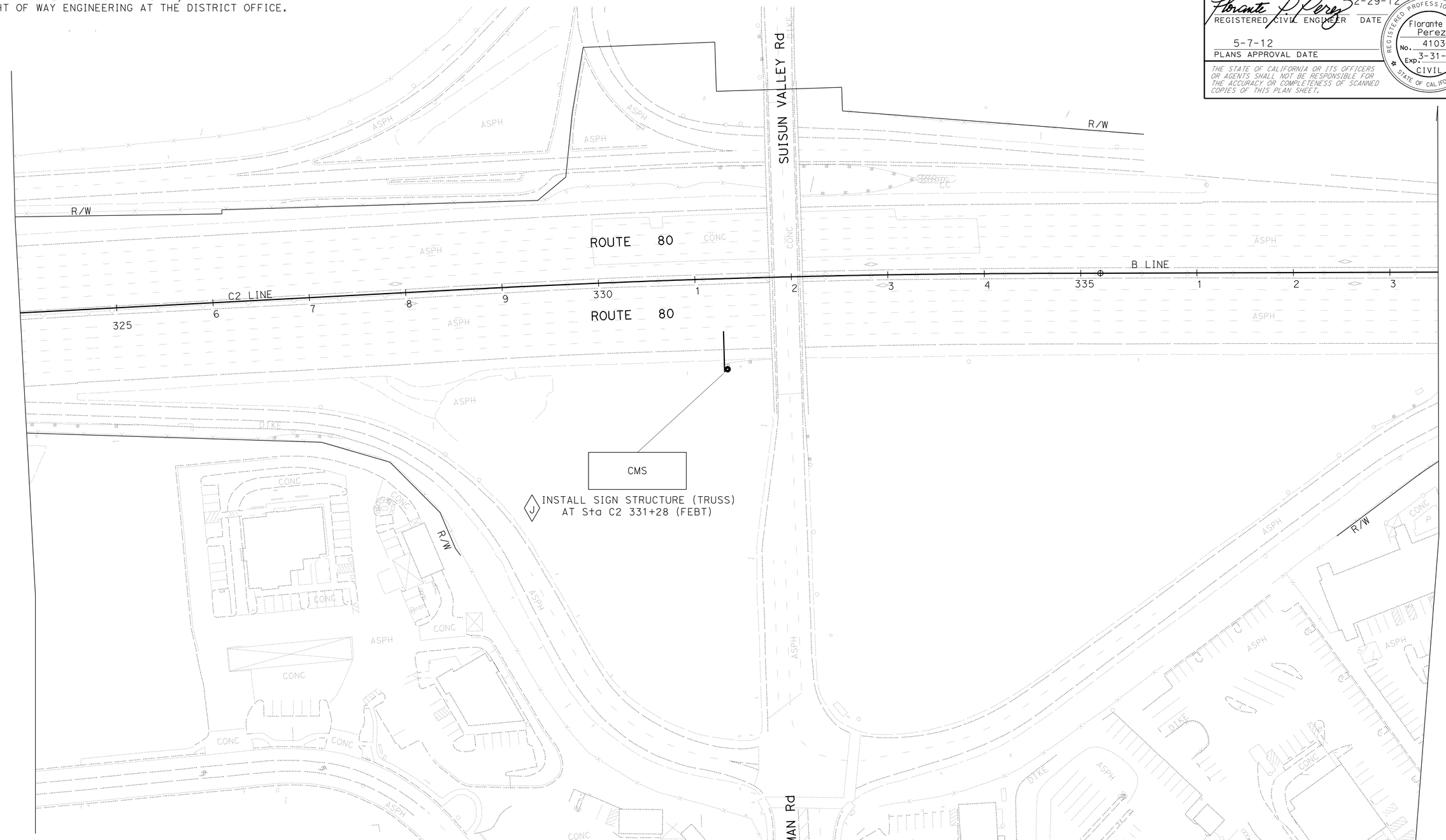

APPROVED FOR SIGN WORK ONLY

FOR NOTES, ABBREVIATIONS AND LEGEND, SEE SHEET S-1

SIGN PLAN

NO SCALE

S-13

STATE OF CALIFORNIA - DEPARTMENT OF TRANSPORTATION

Caltrans

TRAFFIC

FUNCTIONAL SUPERVISOR: LOURDES DAVID

CALCULATED-DESIGNED BY: LEOPOLDO BONGATO

CHECKED BY: FLORANTE P. PEREZ

REVISED BY | DATE REVISED

LAST REVISION 02-23-12 | DATE PLOTTED => 09-MAY-2012 | TIME PLOTTED => 19:33

Dist	COUNTY	ROUTE	POST MILES TOTAL PROJECT	SHEET No.	TOTAL SHEETS
04	Sol	80	0.0/R28.4	313	509

REGISTERED CIVIL ENGINEER 2-29-12 DATE

5-7-12
PLANS APPROVAL DATE

REGISTERED PROFESSIONAL ENGINEER Florante P. Perez No. 41030 Exp. 3-31-13 CIVIL STATE OF CALIFORNIA

THE STATE OF CALIFORNIA OR ITS OFFICERS OR AGENTS SHALL NOT BE RESPONSIBLE FOR THE ACCURACY OR COMPLETENESS OF SCANNED COPIES OF THIS PLAN SHEET.

NOTE:

FOR ACCURATE RIGHT OF WAY DATA, CONTACT RIGHT OF WAY ENGINEERING AT THE DISTRICT OFFICE.

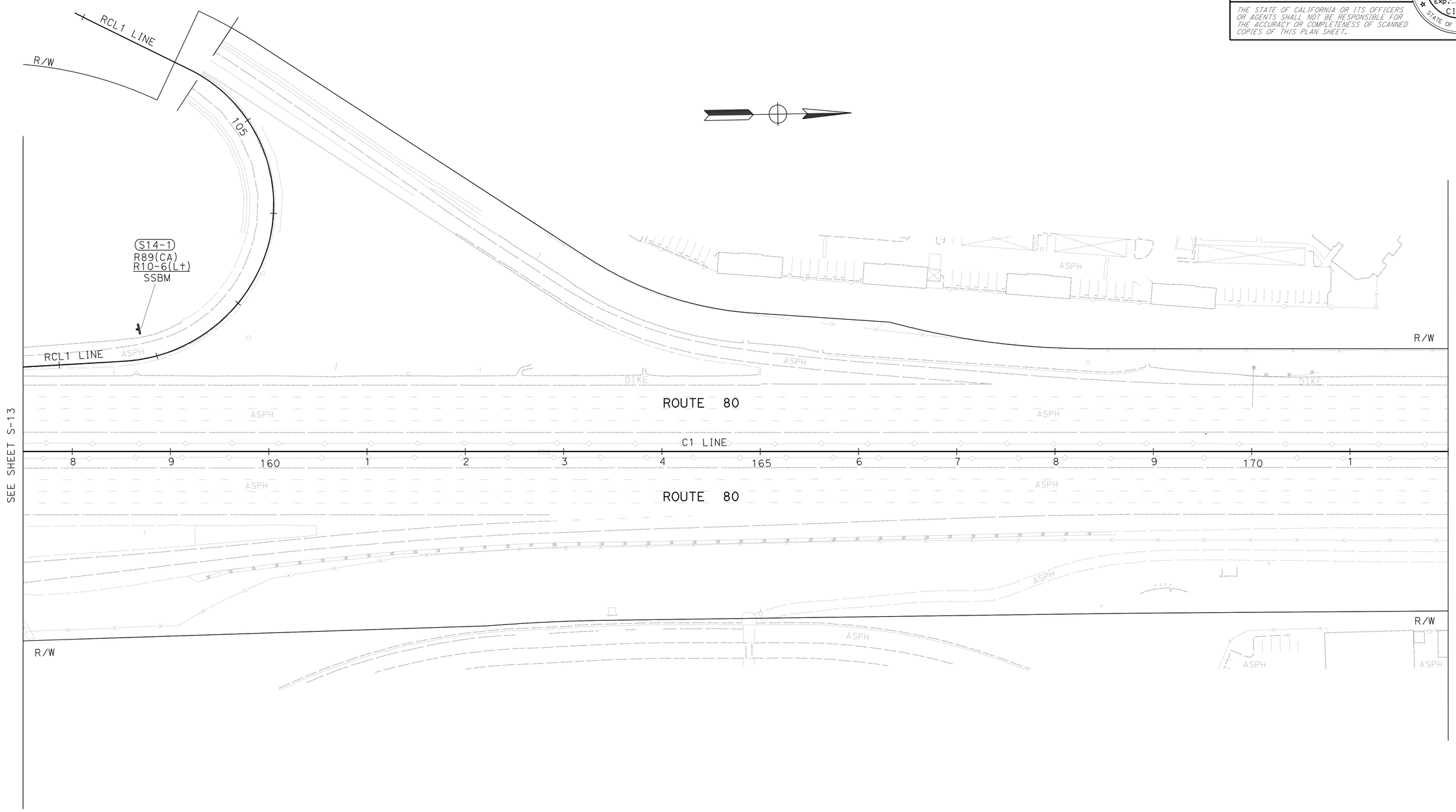

APPROVED FOR SIGN WORK ONLY

FOR NOTES, ABBREVIATIONS AND LEGEND, SEE SHEET S-1

SIGN PLAN

NO SCALE

S-14

REVISED BY	DATE REVISED

CALCULATED-DESIGNED BY: LEOPOLDO BONGATO
CHECKED BY: FLORANTE P. PEREZ
FUNCTIONAL SUPERVISOR: LOURDES DAVID

STATE OF CALIFORNIA - DEPARTMENT OF TRANSPORTATION
Caltrans
TRAFFIC

LAST REVISION 02-22-12
DATE PLOTTED => 09-MAY-2012
TIME PLOTTED => 19:33

Dist	COUNTY	ROUTE	POST MILES TOTAL PROJECT	SHEET No.	TOTAL SHEETS
04	Sol	80	0.0/R28.4	314	509

REGISTERED CIVIL ENGINEER 2-29-12 DATE

5-7-12
PLANS APPROVAL DATE

REGISTERED PROFESSIONAL ENGINEER
Florante P. Perez
No. 41030
Exp. 3-31-13
CIVIL
STATE OF CALIFORNIA

THE STATE OF CALIFORNIA OR ITS OFFICERS OR AGENTS SHALL NOT BE RESPONSIBLE FOR THE ACCURACY OR COMPLETENESS OF SCANNED COPIES OF THIS PLAN SHEET.

NOTE:

FOR ACCURATE RIGHT OF WAY DATA, CONTACT RIGHT OF WAY ENGINEERING AT THE DISTRICT OFFICE.

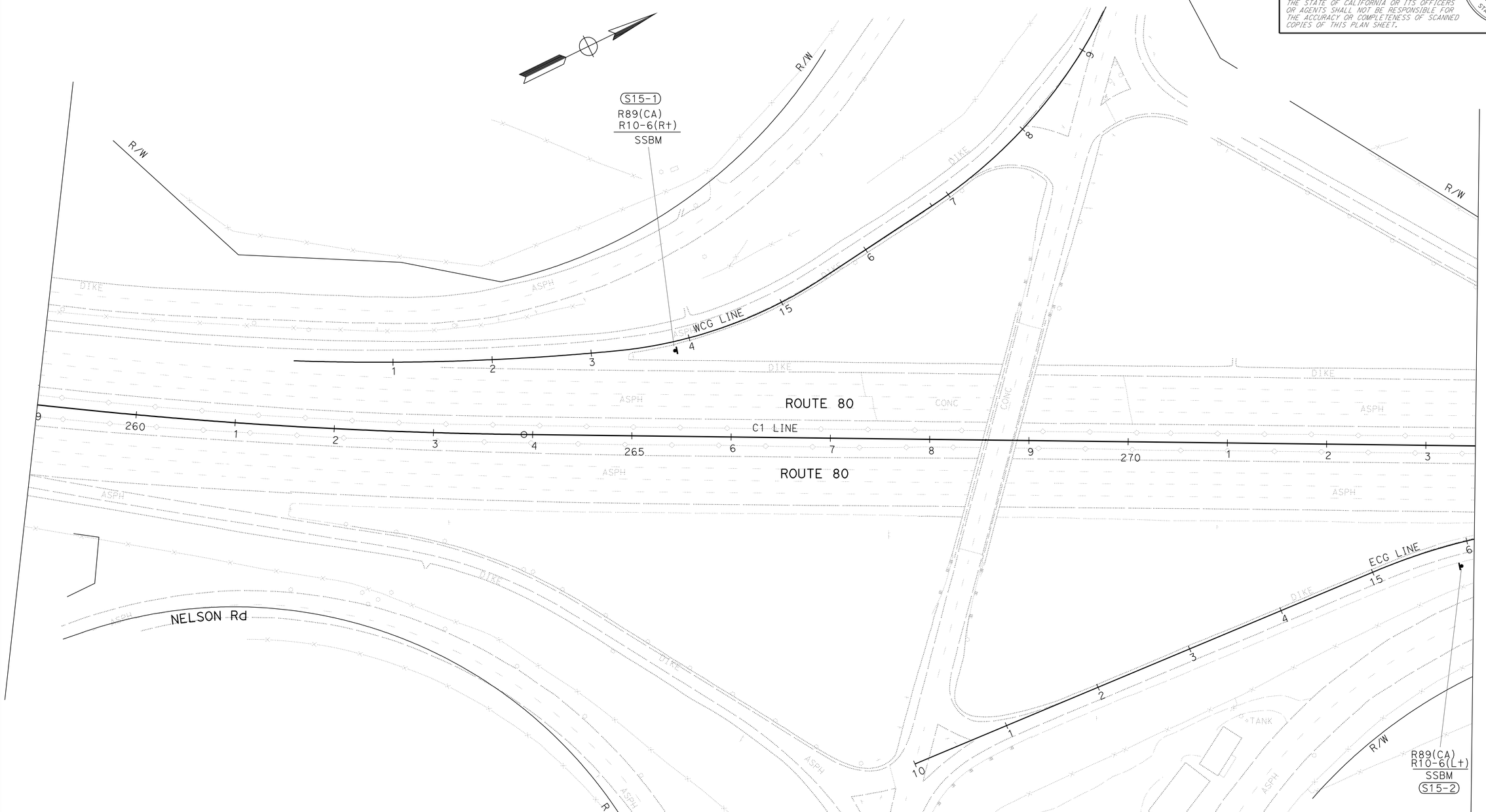

FOR NOTES, ABBREVIATIONS AND LEGEND, SEE SHEET S-1

APPROVED FOR SIGN WORK ONLY

SIGN PLAN

NO SCALE

S-15

STATE OF CALIFORNIA - DEPARTMENT OF TRANSPORTATION
Caltrans
TRAFFIC

FUNCTIONAL SUPERVISOR: LOURDES DAVID
CALCULATED-DESIGNED BY: LEOPOLDO BONGATO
CHECKED BY: FLORANTE P. PEREZ
REVISED BY
DATE REVISED

LAST REVISION 02-22-12
DATE PLOTTED => 10-MAY-2012
TIME PLOTTED => 13:03

Dist	COUNTY	ROUTE	POST MILES TOTAL PROJECT	SHEET No.	TOTAL SHEETS
04	Sol	80	0.0/R28.4	315	509

REGISTERED CIVIL ENGINEER 2-29-12 DATE

5-7-12
PLANS APPROVAL DATE

REGISTERED PROFESSIONAL ENGINEER Florante P. Perez No. 41030 Exp. 3-31-13 CIVIL STATE OF CALIFORNIA

THE STATE OF CALIFORNIA OR ITS OFFICERS OR AGENTS SHALL NOT BE RESPONSIBLE FOR THE ACCURACY OR COMPLETENESS OF SCANNED COPIES OF THIS PLAN SHEET.

NOTE:

FOR ACCURATE RIGHT OF WAY DATA, CONTACT RIGHT OF WAY ENGINEERING AT THE DISTRICT OFFICE.

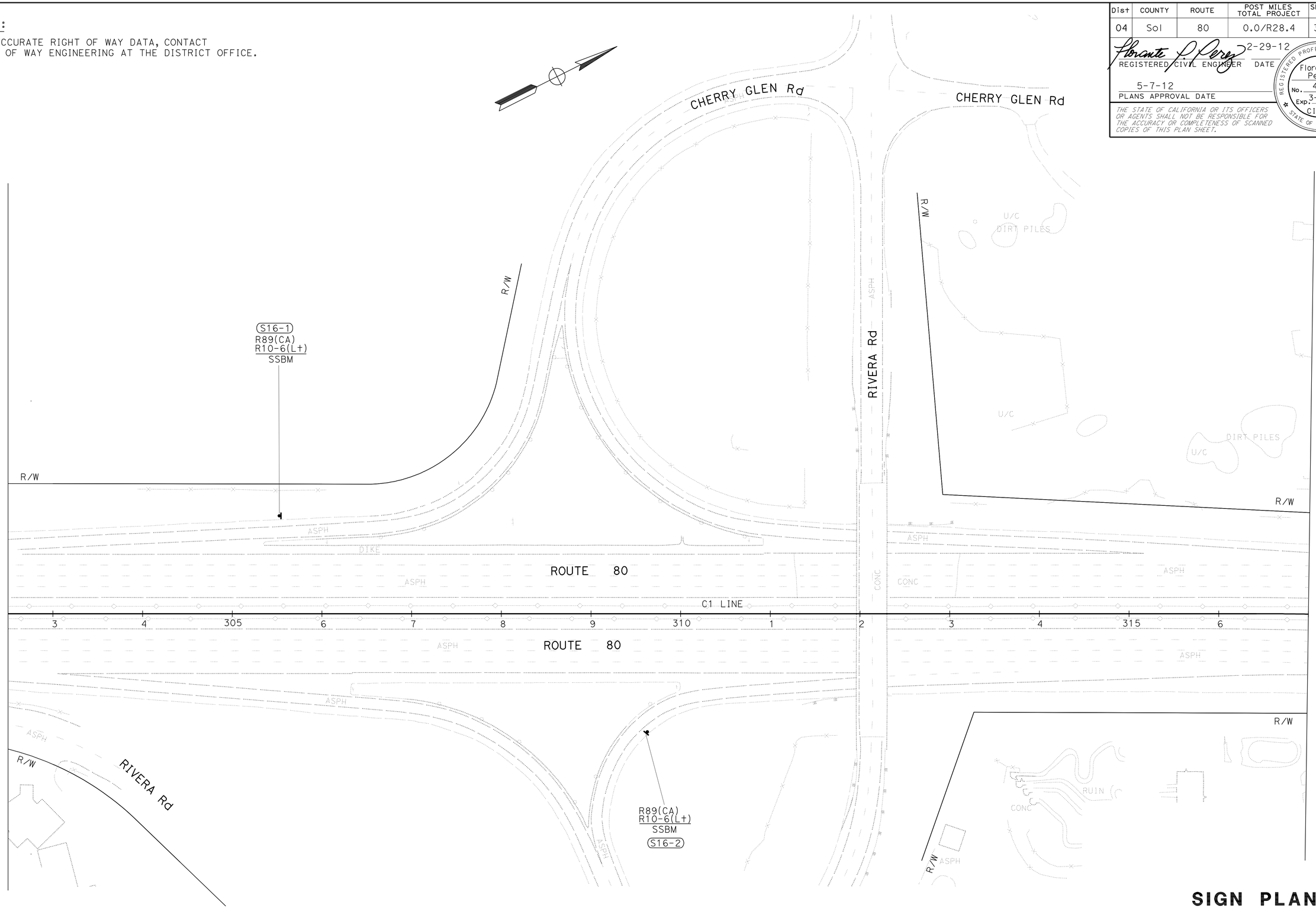

APPROVED FOR SIGN WORK ONLY

FOR NOTES, ABBREVIATIONS AND LEGEND, SEE SHEET S-1

SIGN PLAN

NO SCALE

S-16

STATE OF CALIFORNIA - DEPARTMENT OF TRANSPORTATION

Caltrans

TRAFFIC

FUNCTIONAL SUPERVISOR: LOURDES DAVID

CALCULATED-DESIGNED BY: LEOPOLDO BONGATO

CHECKED BY: FLORANTE P. PEREZ

REVISED BY

DATE REVISED

LAST REVISION 00-00-00

DATE PLOTTED => 09-MAY-2012

TIME PLOTTED => 19:33

Dist	COUNTY	ROUTE	POST MILES TOTAL PROJECT	SHEET No.	TOTAL SHEETS
04	Sol	80	0.0/R28.4	316	509

REGISTERED CIVIL ENGINEER 2-29-12 DATE

5-7-12
PLANS APPROVAL DATE

REGISTERED PROFESSIONAL ENGINEER Florante P. Perez No. 41030 Exp. 3-31-13 CIVIL STATE OF CALIFORNIA

THE STATE OF CALIFORNIA OR ITS OFFICERS OR AGENTS SHALL NOT BE RESPONSIBLE FOR THE ACCURACY OR COMPLETENESS OF SCANNED COPIES OF THIS PLAN SHEET.

NOTE:

FOR ACCURATE RIGHT OF WAY DATA, CONTACT RIGHT OF WAY ENGINEERING AT THE DISTRICT OFFICE.

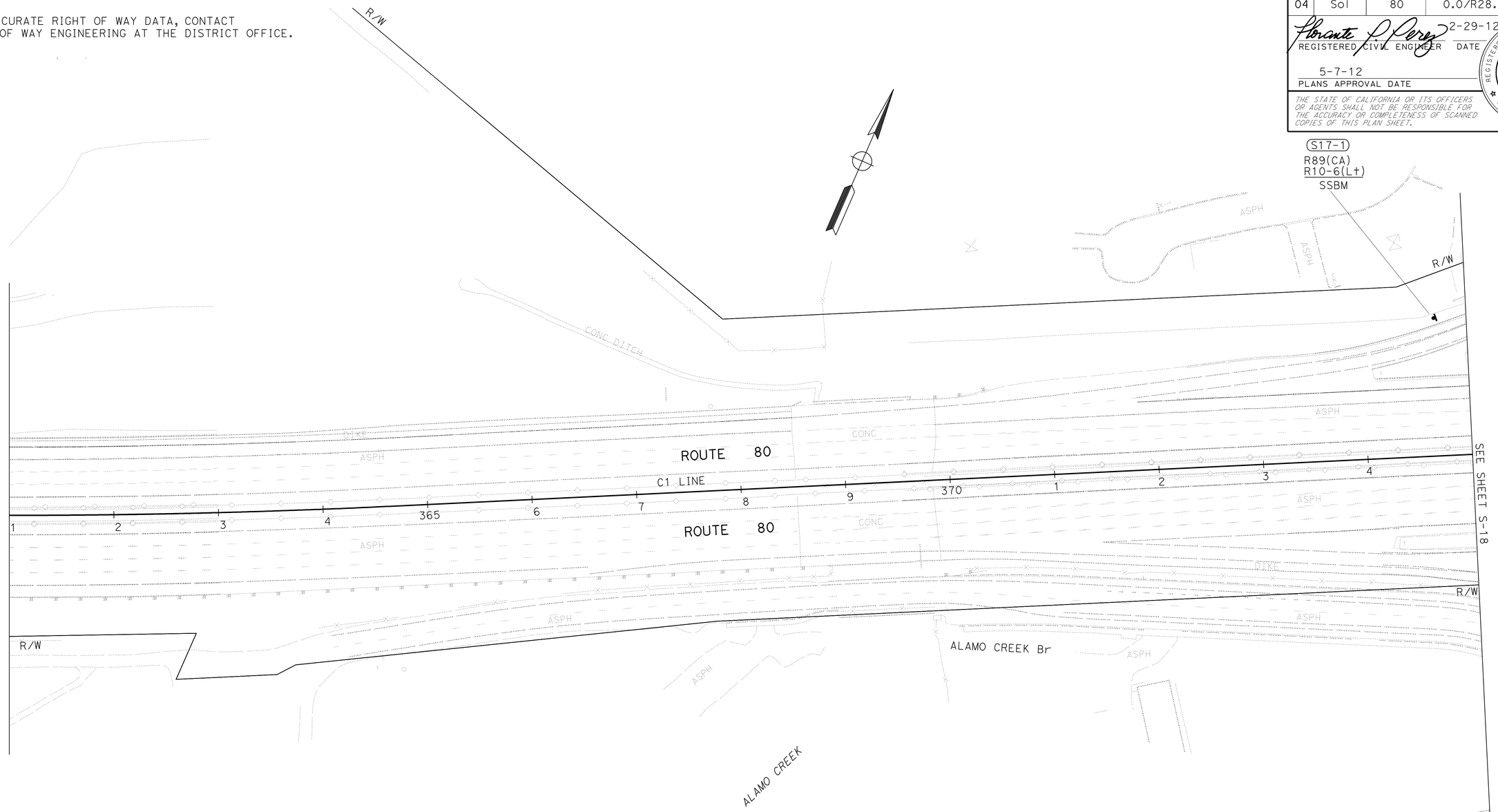

APPROVED FOR SIGN WORK ONLY

FOR NOTES, ABBREVIATIONS AND LEGEND, SEE SHEET S-1

SIGN PLAN

NO SCALE

S-17

STATE OF CALIFORNIA - DEPARTMENT OF TRANSPORTATION

Caltrans® TRAFFIC

FUNCTIONAL SUPERVISOR: LOURDES DAVID

CALCULATED-DESIGNED BY: LEOPOLDO BONGATO

CHECKED BY: FLORANTE P. PEREZ

REVISED BY

DATE REVISED

LAST REVISION 00-00-00

DATE PLOTTED => 09-MAY-2012
TIME PLOTTED => 19:33

Dist	COUNTY	ROUTE	POST MILES TOTAL PROJECT	SHEET No.	TOTAL SHEETS
04	Sol	80	0.0/R28.4	317	509

REGISTERED CIVIL ENGINEER — DATE 2-29-12

5-7-12
PLANS APPROVAL DATE

REGISTERED PROFESSIONAL ENGINEER — Florante P. Perez — No. 41030 — Exp. 3-31-13 — CIVIL — STATE OF CALIFORNIA

THE STATE OF CALIFORNIA OR ITS OFFICERS OR AGENTS SHALL NOT BE RESPONSIBLE FOR THE ACCURACY OR COMPLETENESS OF SCANNED COPIES OF THIS PLAN SHEET.

NOTE:

FOR ACCURATE RIGHT OF WAY DATA, CONTACT RIGHT OF WAY ENGINEERING AT THE DISTRICT OFFICE.

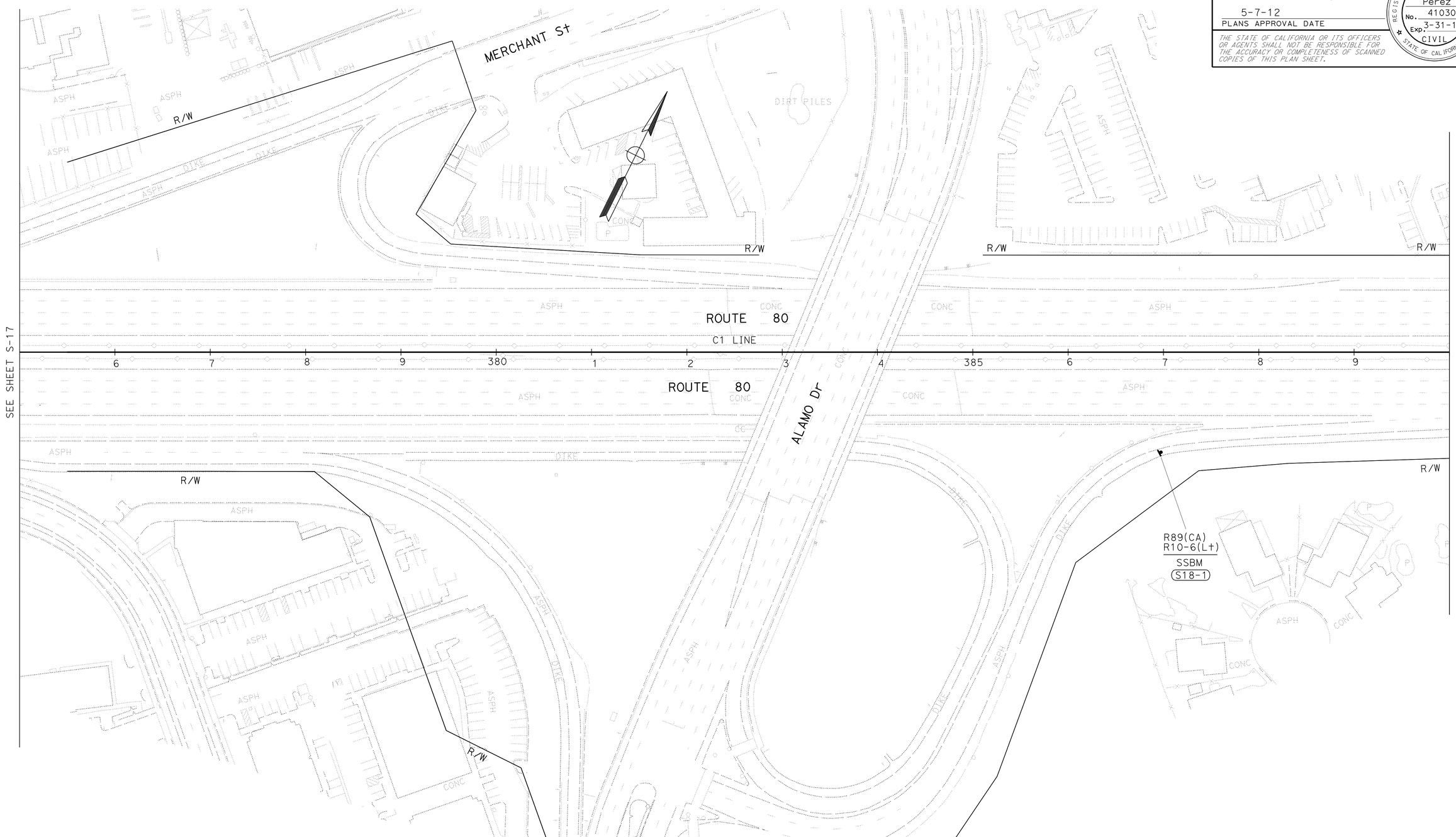

FOR NOTES, ABBREVIATIONS AND LEGEND, SEE SHEET S-1

SIGN PLAN

NO SCALE

S-18

STATE OF CALIFORNIA - DEPARTMENT OF TRANSPORTATION

Caltrans

TRAFFIC

FUNCTIONAL SUPERVISOR: LOURDES DAVID

CALCULATED-DESIGNED BY: LEOPOLDO BONGATO

CHECKED BY: FLORANTE P. PEREZ

REVISED BY

DATE REVISED

LAST REVISION 02-23-12

DATE PLOTTED => 09-MAY-2012

TIME PLOTTED => 19:33

Dist	COUNTY	ROUTE	POST MILES TOTAL PROJECT	SHEET No.	TOTAL SHEETS
04	Sol	80	0.0/R28.4	318	509

REGISTERED CIVIL ENGINEER 2-29-12 DATE

5-7-12
PLANS APPROVAL DATE

REGISTERED PROFESSIONAL ENGINEER Florante P. Perez No. 41030 Exp. 3-31-13 CIVIL STATE OF CALIFORNIA

THE STATE OF CALIFORNIA OR ITS OFFICERS OR AGENTS SHALL NOT BE RESPONSIBLE FOR THE ACCURACY OR COMPLETENESS OF SCANNED COPIES OF THIS PLAN SHEET.

NOTE:

FOR ACCURATE RIGHT OF WAY DATA, CONTACT RIGHT OF WAY ENGINEERING AT THE DISTRICT OFFICE.

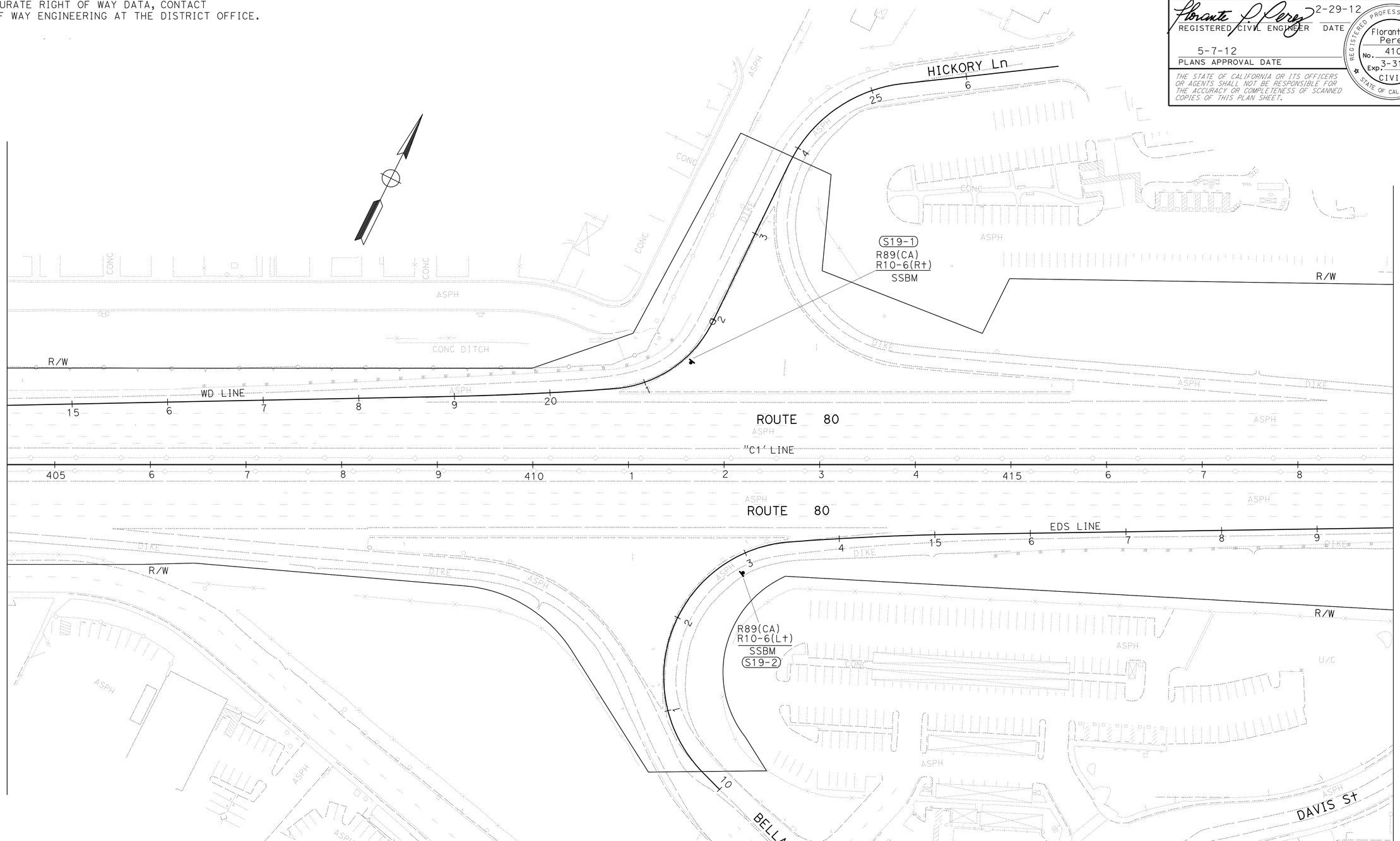

APPROVED FOR SIGN WORK ONLY

FOR NOTES, ABBREVIATIONS AND LEGEND, SEE SHEET S-1

SIGN PLAN

NO SCALE

S-19

STATE OF CALIFORNIA - DEPARTMENT OF TRANSPORTATION

Caltrans

TRAFFIC

FUNCTIONAL SUPERVISOR: LOURDES DAVID

CALCULATED-DESIGNED BY: LEOPOLDO BONGATO

CHECKED BY: FLORANTE P. PEREZ

REVISED BY

DATE REVISED

LAST REVISION 02-23-12 | DATE PLOTTED => 09-MAY-2012 | TIME PLOTTED => 19:33

BORDER LAST REVISED 7/2/2010 | USERNAME => s114640 | DGN FILE => 04000207391oa019.dgn | RELATIVE BORDER SCALE IS IN INCHES 0 1 2 3 | UNIT 0721 | PROJECT NUMBER & PHASE 04000207391

Dist	COUNTY	ROUTE	POST MILES TOTAL PROJECT	SHEET No.	TOTAL SHEETS
04	Sol	80	0.0/R28.4	319	509

REGISTERED CIVIL ENGINEER — DATE 2-29-12

5-7-12
PLANS APPROVAL DATE

REGISTERED PROFESSIONAL ENGINEER — Florante P. Perez — No. 41030 — Exp. 3-31-13 — CIVIL — STATE OF CALIFORNIA

THE STATE OF CALIFORNIA OR ITS OFFICERS OR AGENTS SHALL NOT BE RESPONSIBLE FOR THE ACCURACY OR COMPLETENESS OF SCANNED COPIES OF THIS PLAN SHEET.

NOTE:

FOR ACCURATE RIGHT OF WAY DATA, CONTACT RIGHT OF WAY ENGINEERING AT THE DISTRICT OFFICE.

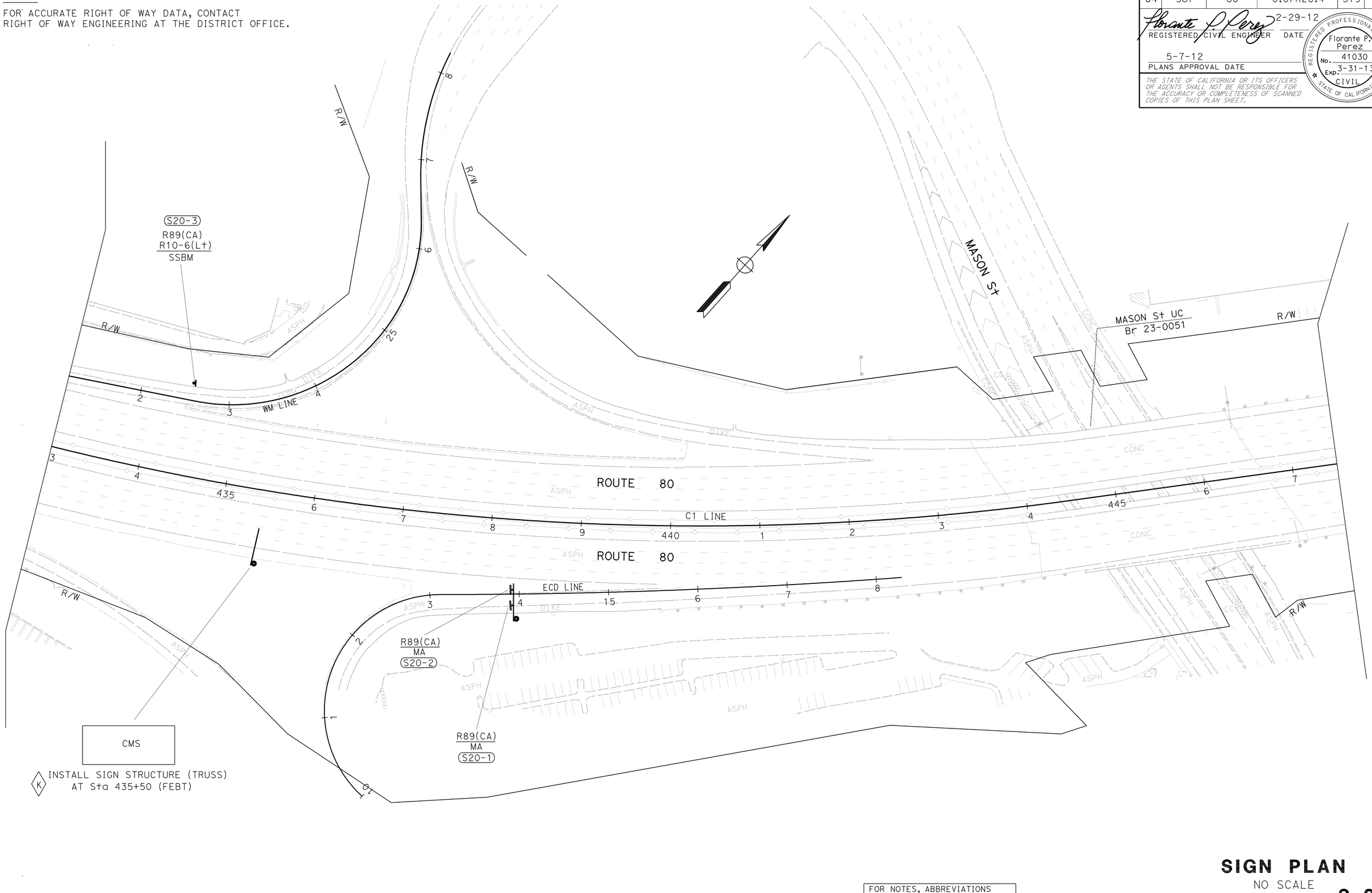

K INSTALL SIGN STRUCTURE (TRUSS) AT Sta 435+50 (FEBT)

APPROVED FOR SIGN WORK ONLY

FOR NOTES, ABBREVIATIONS AND LEGEND, SEE SHEET S-1

SIGN PLAN

NO SCALE

S-20

STATE OF CALIFORNIA - DEPARTMENT OF TRANSPORTATION

Caltrans

TRAFFIC

FUNCTIONAL SUPERVISOR: LOURDES DAVID

CALCULATED-DESIGNED BY: LEOPOLDO BONGATO

CHECKED BY: FLORANTE P. PEREZ

REVISED BY | DATE REVISED

LAST REVISION 00-00-00 | DATE PLOTTED => 09-MAY-2012 | TIME PLOTTED => 19:33

Dist	COUNTY	ROUTE	POST MILES TOTAL PROJECT	SHEET No.	TOTAL SHEETS
04	Sol	80	0.0/R28.4	320	509

REGISTERED CIVIL ENGINEER 2-29-12 DATE

5-7-12
PLANS APPROVAL DATE

REGISTERED PROFESSIONAL ENGINEER
Florante P. Perez
No. 41030
Exp. 3-31-13
CIVIL
STATE OF CALIFORNIA

THE STATE OF CALIFORNIA OR ITS OFFICERS OR AGENTS SHALL NOT BE RESPONSIBLE FOR THE ACCURACY OR COMPLETENESS OF SCANNED COPIES OF THIS PLAN SHEET.

NOTE:

FOR ACCURATE RIGHT OF WAY DATA, CONTACT RIGHT OF WAY ENGINEERING AT THE DISTRICT OFFICE.

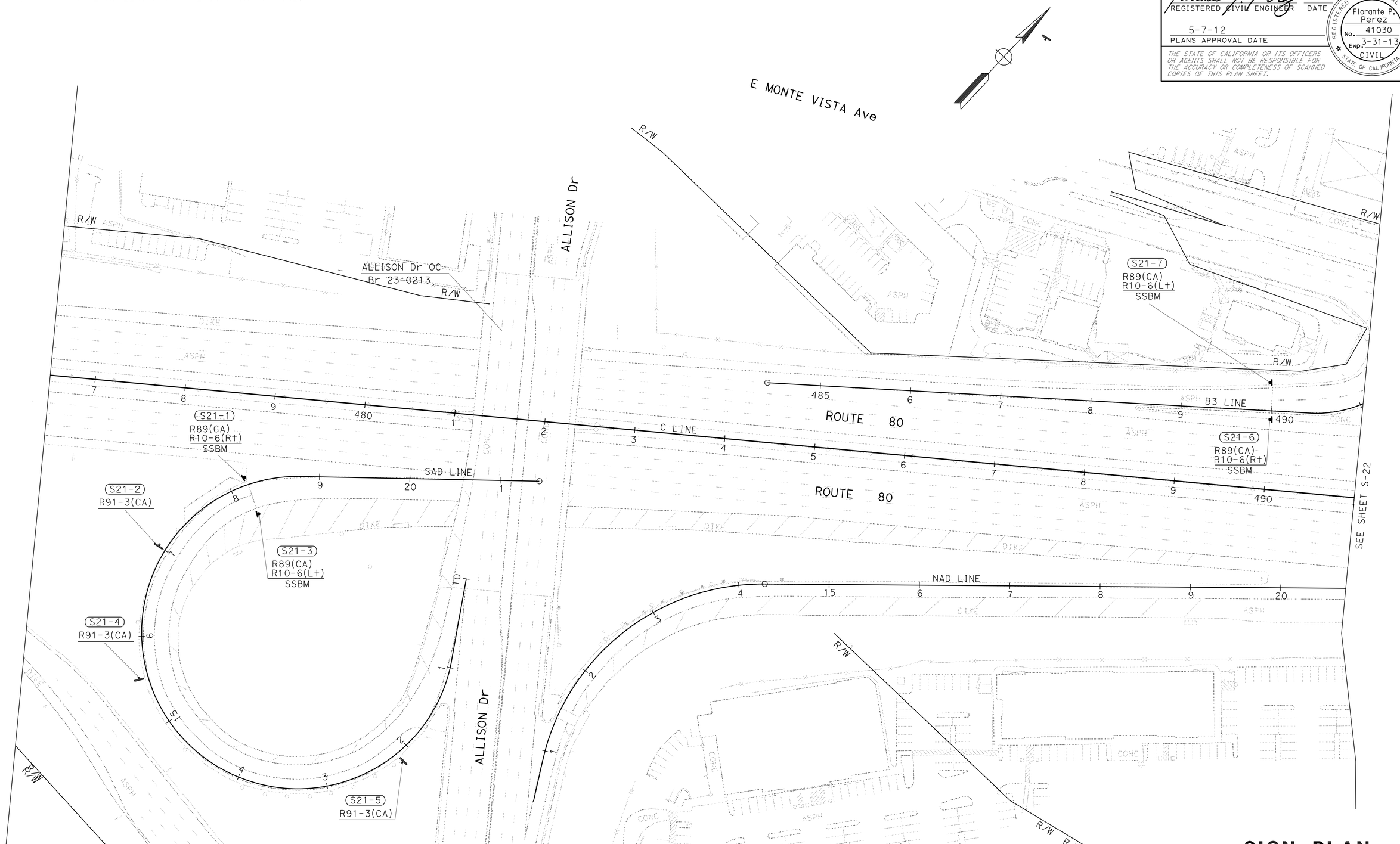

APPROVED FOR SIGN WORK ONLY

FOR NOTES, ABBREVIATIONS AND LEGEND, SEE SHEET S-1

SIGN PLAN

NO SCALE

S-21

STATE OF CALIFORNIA - DEPARTMENT OF TRANSPORTATION
Caltrans
TRAFFIC

FUNCTIONAL SUPERVISOR: LOURDES DAVID
CALCULATED-DESIGNED BY: LEOPOLDO BONGATO
CHECKED BY: FLORANTE P. PEREZ
REVISED BY
DATE REVISED

LAST REVISION 00-00-00
DATE PLOTTED => 09-MAY-2012
TIME PLOTTED => 20:12

Dist	COUNTY	ROUTE	POST MILES TOTAL PROJECT	SHEET No.	TOTAL SHEETS
04	Sol	80	0.0/R28.4	321	509

REGISTERED CIVIL ENGINEER — DATE 2-29-12

5-7-12
PLANS APPROVAL DATE

REGISTERED PROFESSIONAL ENGINEER — Florante P. Perez — No. 41030 — Exp. 3-31-13 — CIVIL — STATE OF CALIFORNIA

THE STATE OF CALIFORNIA OR ITS OFFICERS OR AGENTS SHALL NOT BE RESPONSIBLE FOR THE ACCURACY OR COMPLETENESS OF SCANNED COPIES OF THIS PLAN SHEET.

NOTE:

FOR ACCURATE RIGHT OF WAY DATA, CONTACT RIGHT OF WAY ENGINEERING AT THE DISTRICT OFFICE.

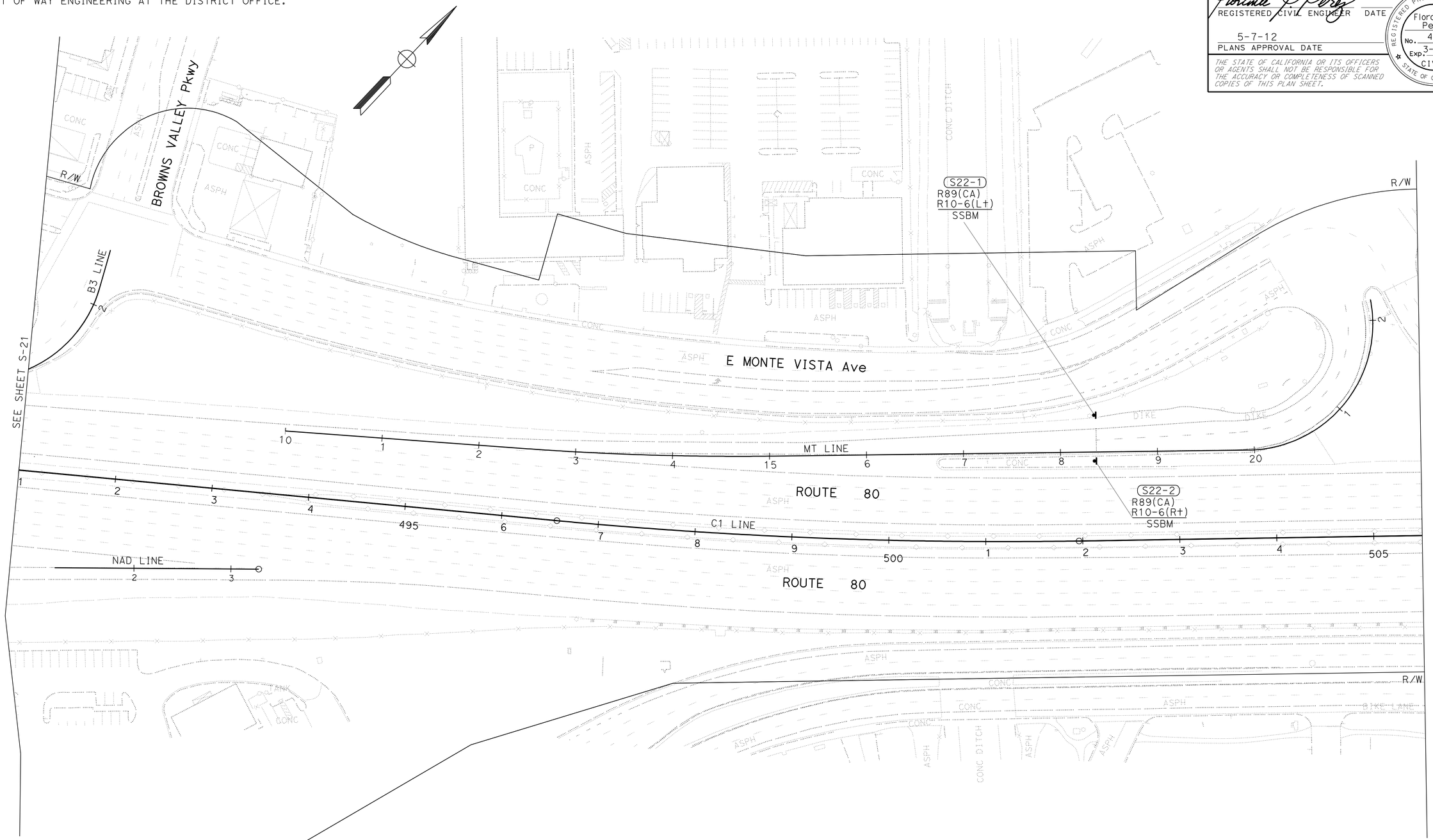

APPROVED FOR SIGN WORK ONLY

FOR NOTES, ABBREVIATIONS AND LEGEND, SEE SHEET S-1

SIGN PLAN

NO SCALE

S-22

STATE OF CALIFORNIA - DEPARTMENT OF TRANSPORTATION

Caltrans

TRAFFIC

FUNCTIONAL SUPERVISOR: LOURDES DAVID

CALCULATED-DESIGNED BY: LEOPOLDO BONGATO

CHECKED BY: FLORANTE P. PEREZ

REVISED BY

DATE REVISED

LAST REVISION 00-00-00

DATE PLOTTED => 09-MAY-2012

TIME PLOTTED => 20:12

Dist	COUNTY	ROUTE	POST MILES TOTAL PROJECT	SHEET No.	TOTAL SHEETS
04	Sol	80	0.0/R28.4	322	509

REGISTERED CIVIL ENGINEER — DATE 2-29-12

5-7-12
PLANS APPROVAL DATE

REGISTERED PROFESSIONAL ENGINEER — Florante P. Perez — No. 41030 — Exp. 3-31-13 — CIVIL — STATE OF CALIFORNIA

THE STATE OF CALIFORNIA OR ITS OFFICERS OR AGENTS SHALL NOT BE RESPONSIBLE FOR THE ACCURACY OR COMPLETENESS OF SCANNED COPIES OF THIS PLAN SHEET.

NOTE:

FOR ACCURATE RIGHT OF WAY DATA, CONTACT RIGHT OF WAY ENGINEERING AT THE DISTRICT OFFICE.

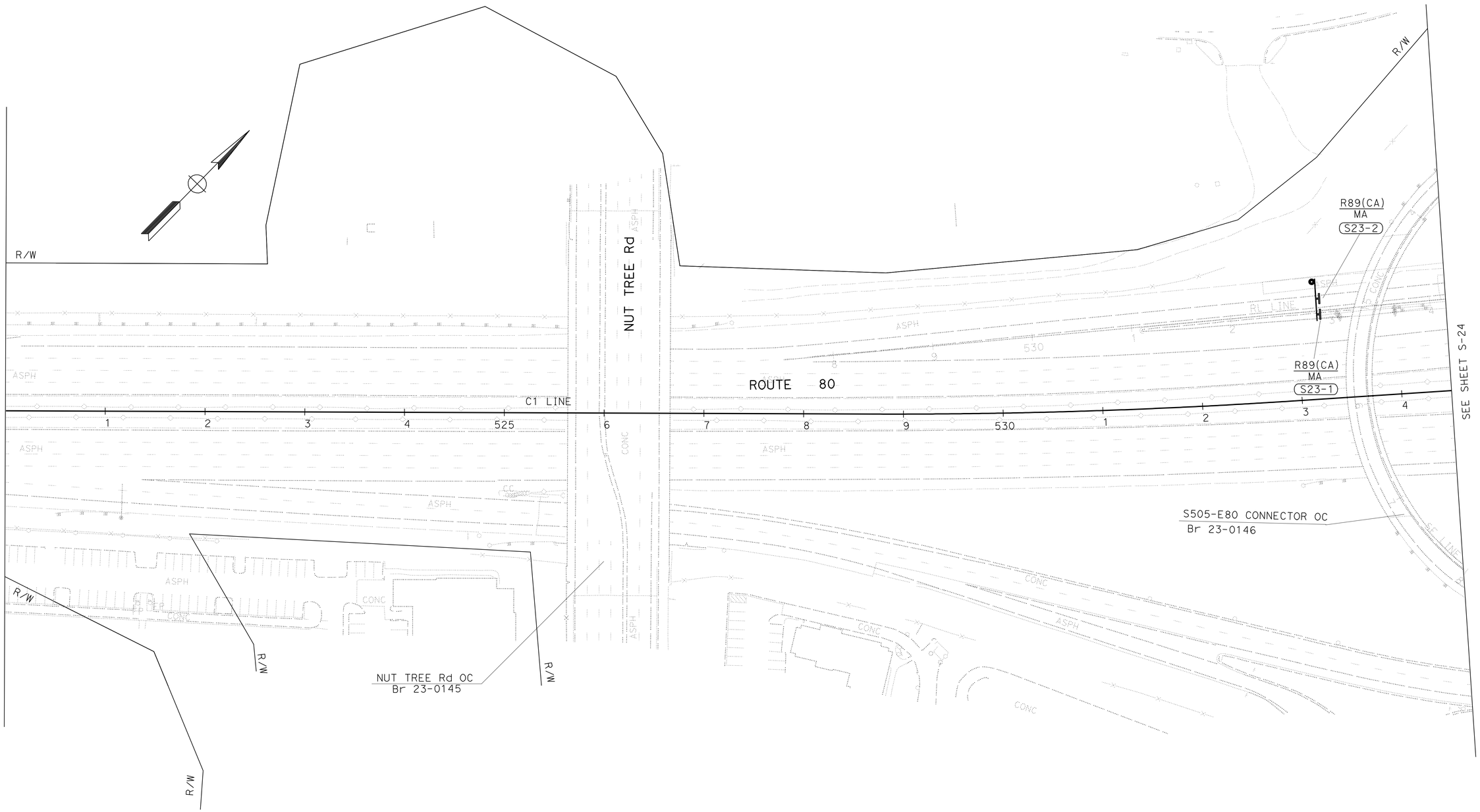

SIGN PLAN
NO SCALE

S-23

APPROVED FOR SIGN WORK ONLY

FOR NOTES, ABBREVIATIONS AND LEGEND, SEE SHEET S-1

STATE OF CALIFORNIA - DEPARTMENT OF TRANSPORTATION
Caltrans®
TRAFFIC

FUNCTIONAL SUPERVISOR: LOURDES DAVID
CALCULATED-DESIGNED BY: LEOPOLDO BONGATO
CHECKED BY: FLORANTE P. PEREZ
REVISED BY
DATE REVISED

LAST REVISION 00-00-00
DATE PLOTTED => 09-MAY-2012
TIME PLOTTED => 20:12

Dist	COUNTY	ROUTE	POST MILES TOTAL PROJECT	SHEET No.	TOTAL SHEETS
04	Sol	80	0.0/R28.4	323	509

Florante P. Perez 2-29-12
REGISTERED CIVIL ENGINEER DATE

5-7-12
PLANS APPROVAL DATE

REGISTERED PROFESSIONAL ENGINEER Florante P. Perez No. 41030 Exp. 3-31-13 CIVIL STATE OF CALIFORNIA

THE STATE OF CALIFORNIA OR ITS OFFICERS OR AGENTS SHALL NOT BE RESPONSIBLE FOR THE ACCURACY OR COMPLETENESS OF SCANNED COPIES OF THIS PLAN SHEET.

NOTE:

FOR ACCURATE RIGHT OF WAY DATA, CONTACT RIGHT OF WAY ENGINEERING AT THE DISTRICT OFFICE.

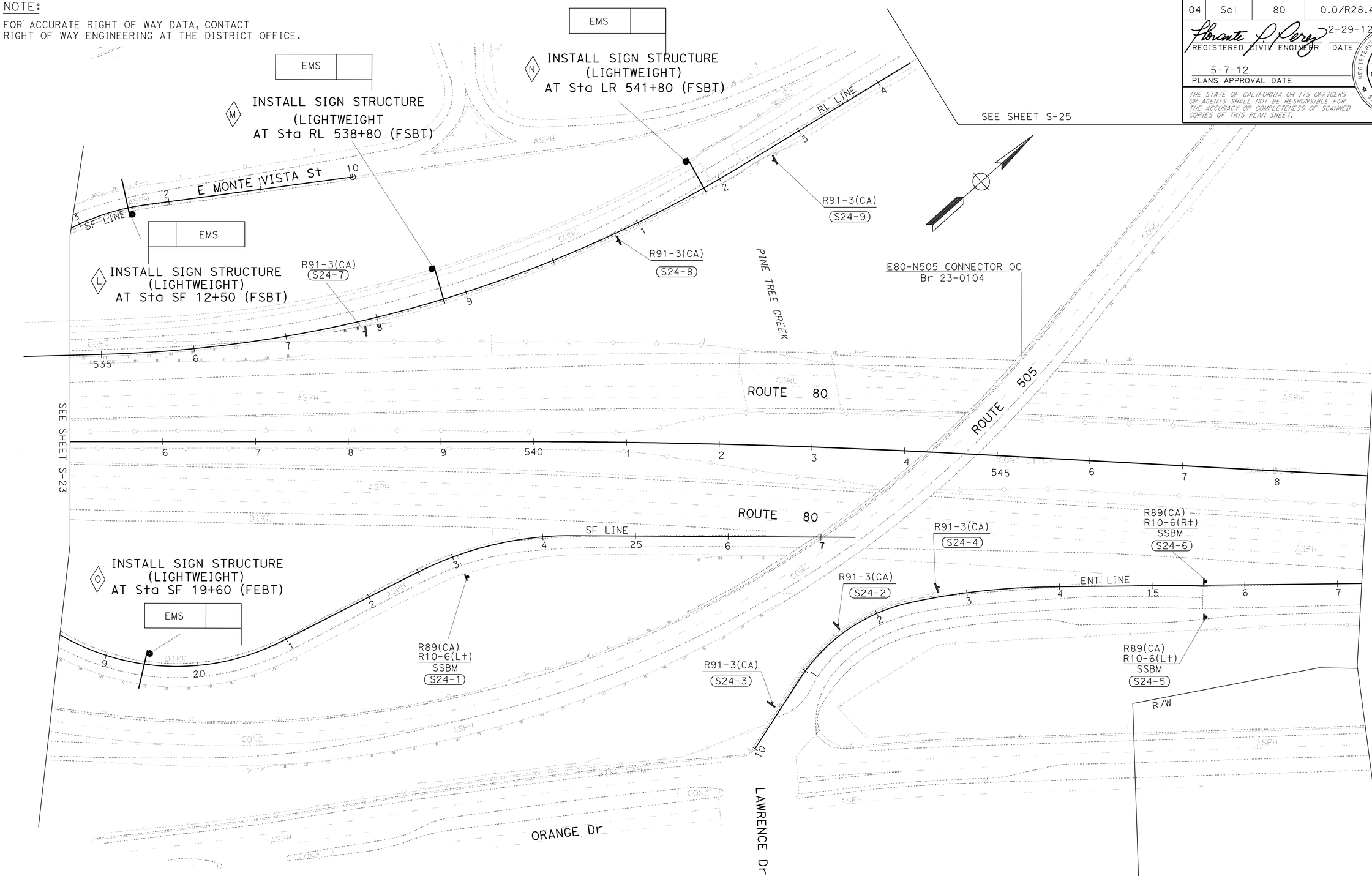

APPROVED FOR SIGN WORK ONLY

FOR NOTES, ABBREVIATIONS AND LEGEND, SEE SHEET S-1

SIGN PLAN

NO SCALE

S-24

STATE OF CALIFORNIA - DEPARTMENT OF TRANSPORTATION
TRAFFIC
Caltrans

FUNCTIONAL SUPERVISOR: LOURDES DAVID
CALCULATED-DESIGNED BY: FLORANTE P. PEREZ
CHECKED BY: LEOPOLDO BONGATO
REVISED BY
DATE REVISED

LAST REVISION 00-00-00
DATE PLOTTED => 09-MAY-2012
TIME PLOTTED => 20:12

Dist	COUNTY	ROUTE	POST MILES TOTAL PROJECT	SHEET No.	TOTAL SHEETS
04	Sol	80	0.0/R28.4	324	509

REGISTERED CIVIL ENGINEER — DATE 2-29-12

5-7-12
PLANS APPROVAL DATE

REGISTERED PROFESSIONAL ENGINEER — Florante P. Perez — No. 41030 — Exp. 3-31-13 — CIVIL — STATE OF CALIFORNIA

THE STATE OF CALIFORNIA OR ITS OFFICERS OR AGENTS SHALL NOT BE RESPONSIBLE FOR THE ACCURACY OR COMPLETENESS OF SCANNED COPIES OF THIS PLAN SHEET.

NOTE:

FOR ACCURATE RIGHT OF WAY DATA, CONTACT RIGHT OF WAY ENGINEERING AT THE DISTRICT OFFICE.

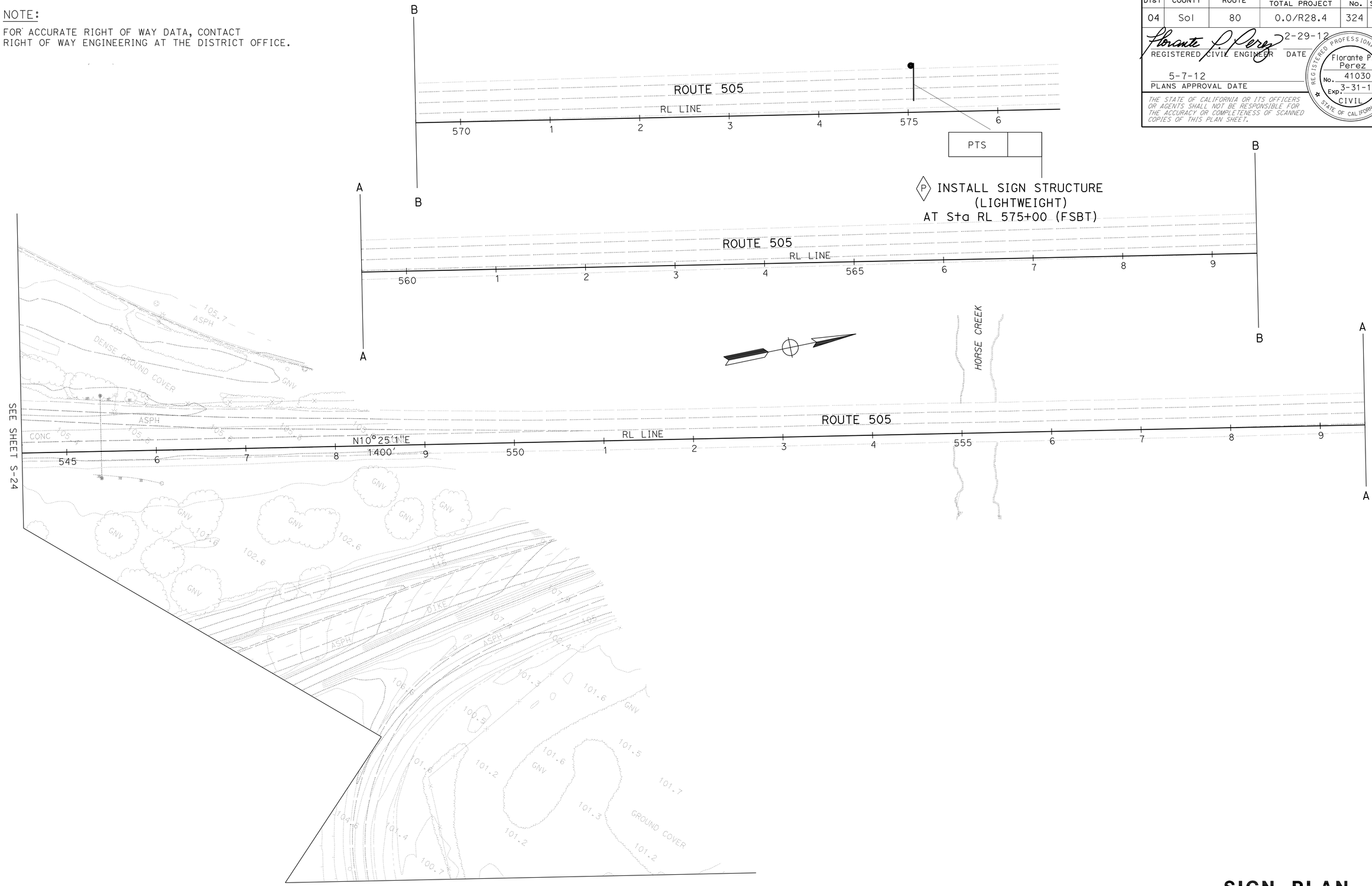

APPROVED FOR SIGN WORK ONLY

FOR NOTES, ABBREVIATIONS AND LEGEND, SEE SHEET S-1

SIGN PLAN

NO SCALE

S-25

REVISED BY	
DATE REVISED	
CALCULATED-DESIGNED BY	LEOPOLDO BONGATO
CHECKED BY	FLORANTE P. PEREZ
FUNCTIONAL SUPERVISOR	LOURDES DAVID

STATE OF CALIFORNIA - DEPARTMENT OF TRANSPORTATION

Caltrans

TRAFFIC

LAST REVISION 00-00-00 — DATE PLOTTED => 09-MAY-2012 — TIME PLOTTED => 20:12

Dist	COUNTY	ROUTE	POST MILES TOTAL PROJECT	SHEET No.	TOTAL SHEETS
04	Sol	80	0.0/R28.4	325	509

REGISTERED CIVIL ENGINEER — DATE 2-29-12

5-7-12
PLANS APPROVAL DATE

REGISTERED PROFESSIONAL ENGINEER — Florante P. Perez — No. 41030 — Exp. 3-31-13 — CIVIL — STATE OF CALIFORNIA

THE STATE OF CALIFORNIA OR ITS OFFICERS OR AGENTS SHALL NOT BE RESPONSIBLE FOR THE ACCURACY OR COMPLETENESS OF SCANNED COPIES OF THIS PLAN SHEET.

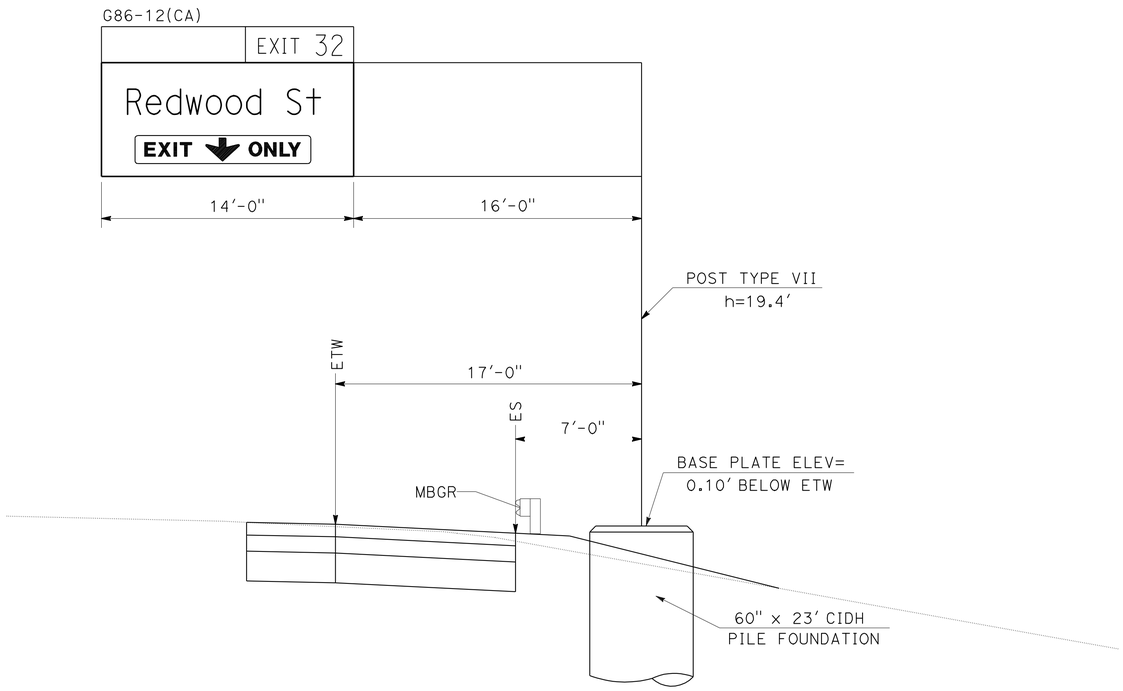

(A) INSTALL SIGN STRUCTURE (TRUSS) AT STA. C6 265 + 00 (FWBT)

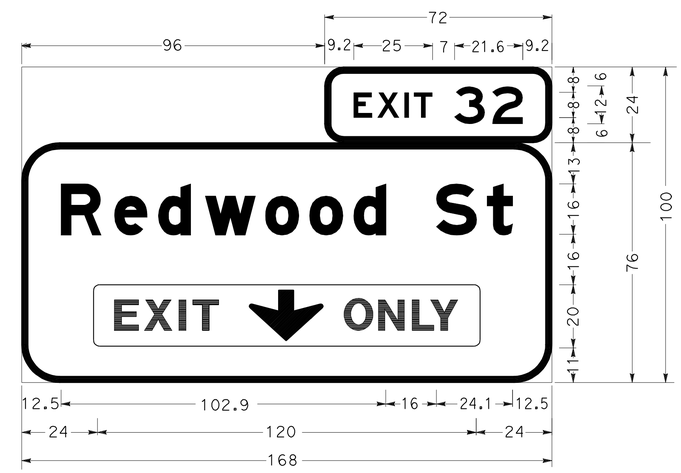

6.0" Radius, 2.0" Border, White on Green;
[EXIT] E; [32] E;
12.0" Radius, 2.0" Border, White on Green;
[Redwood St] E Mod; W61D(CA);

SIGN DETAILS

NO SCALE

SD-1

STATE OF CALIFORNIA - DEPARTMENT OF TRANSPORTATION
Caltrans
TRAFFIC

FUNCTIONAL SUPERVISOR: LOURDES DAVID
CALCULATED-DESIGNED BY: LEOPOLDO G. BONGATO
CHECKED BY: FLORANTE P. PEREZ
REVISED BY
DATE REVISED

LAST REVISION 00-00-00
DATE PLOTTED => 09-MAY-2012
TIME PLOTTED => 20:30

Dist	COUNTY	ROUTE	POST MILES TOTAL PROJECT	SHEET No.	TOTAL SHEETS
04	Sol	80	0.0/R28.4	326	509

Florante P. Perez 2-29-12
REGISTERED CIVIL ENGINEER DATE

5-7-12
PLANS APPROVAL DATE

REGISTERED PROFESSIONAL ENGINEER Florante P. Perez No. 41030 Exp. 3-31-13 CIVIL STATE OF CALIFORNIA

THE STATE OF CALIFORNIA OR ITS OFFICERS OR AGENTS SHALL NOT BE RESPONSIBLE FOR THE ACCURACY OR COMPLETENESS OF SCANNED COPIES OF THIS PLAN SHEET.

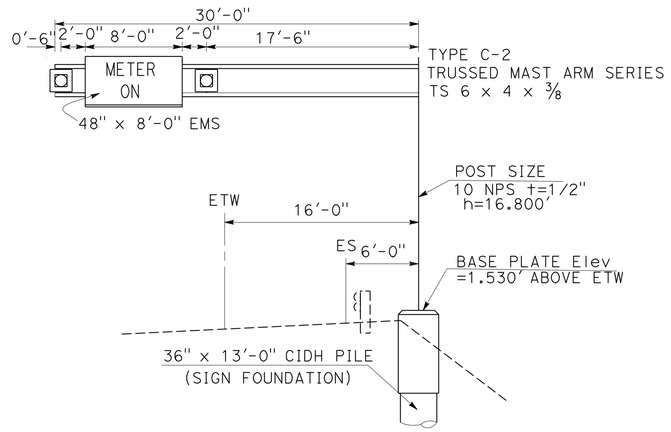

C INSTALL SIGN STRUCTURE (LIGHTWEIGHT)
AT STA SV 18+20 (FEBT)

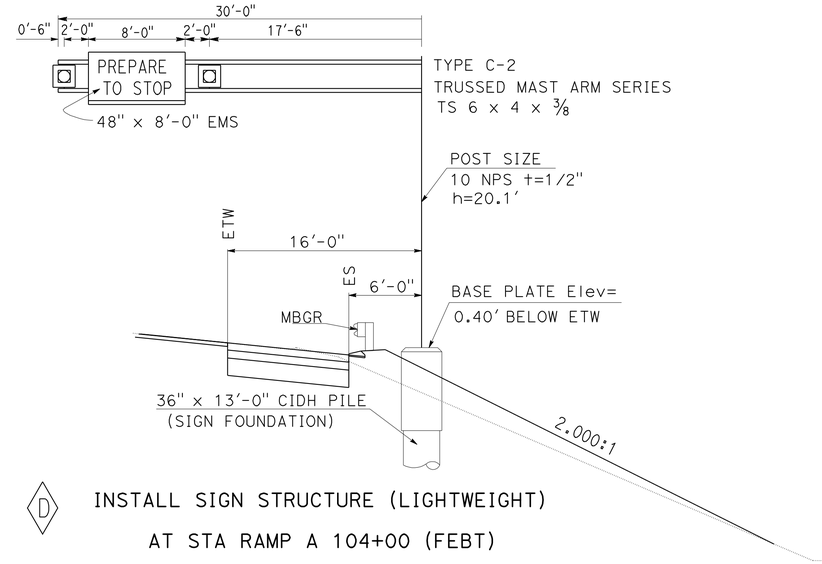

D INSTALL SIGN STRUCTURE (LIGHTWEIGHT)
AT STA RAMP A 104+00 (FEBT)

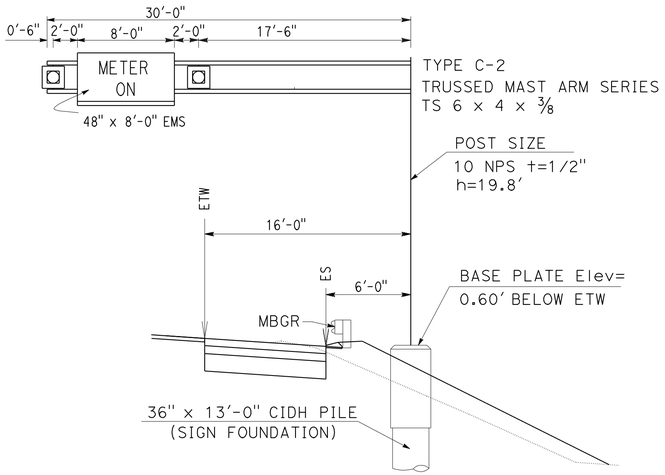

E INSTALL SIGN STRUCTURE (LIGHTWEIGHT)
AT STA RAMP A 108+20 (FEBT)

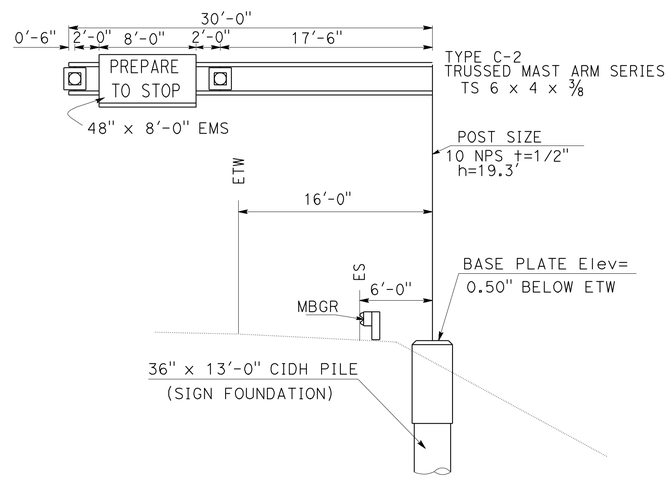

F INSTALL SIGN STRUCTURE (LIGHTWEIGHT)
AT STA ES 189+50 (FEBT)

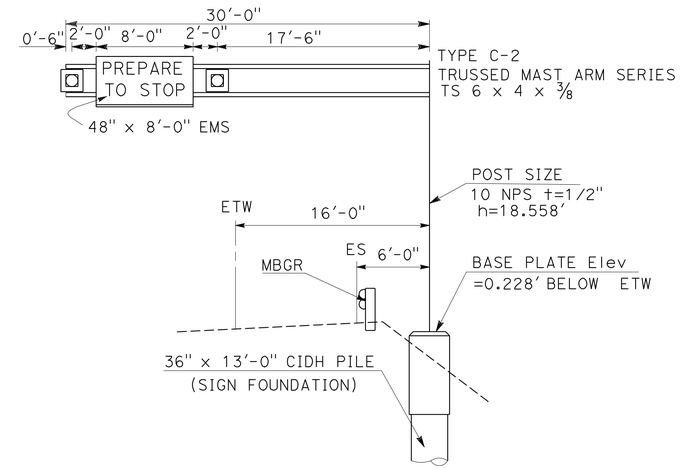

G INSTALL SIGN STRUCTURE (LIGHTWEIGHT)
AT STA SV 24+25 (FEBT)

SIGN DETAILS

NO SCALE

SD-2

STATE OF CALIFORNIA - DEPARTMENT OF TRANSPORTATION
Caltrans® TRAFFIC

FUNCTIONAL SUPERVISOR: LOURDES DAVID
CALCULATED-DESIGNED BY: LEOPOLDO G. BONGATO
CHECKED BY: FLORANTE P. PEREZ
REVISED BY / DATE REVISED

LAST REVISION 02-17-12 | DATE PLOTTED => 11-MAY-2012 | TIME PLOTTED => 13:30

Dist	COUNTY	ROUTE	POST MILES TOTAL PROJECT	SHEET No.	TOTAL SHEETS
04	Sol	80	0.0/R28.4	327	509

REGISTERED CIVIL ENGINEER — DATE 2-29-12

5-7-12
PLANS APPROVAL DATE

REGISTERED PROFESSIONAL ENGINEER — Florante P. Perez — No. 41030 — Exp. 3-31-13 — CIVIL — STATE OF CALIFORNIA

THE STATE OF CALIFORNIA OR ITS OFFICERS OR AGENTS SHALL NOT BE RESPONSIBLE FOR THE ACCURACY OR COMPLETENESS OF SCANNED COPIES OF THIS PLAN SHEET.

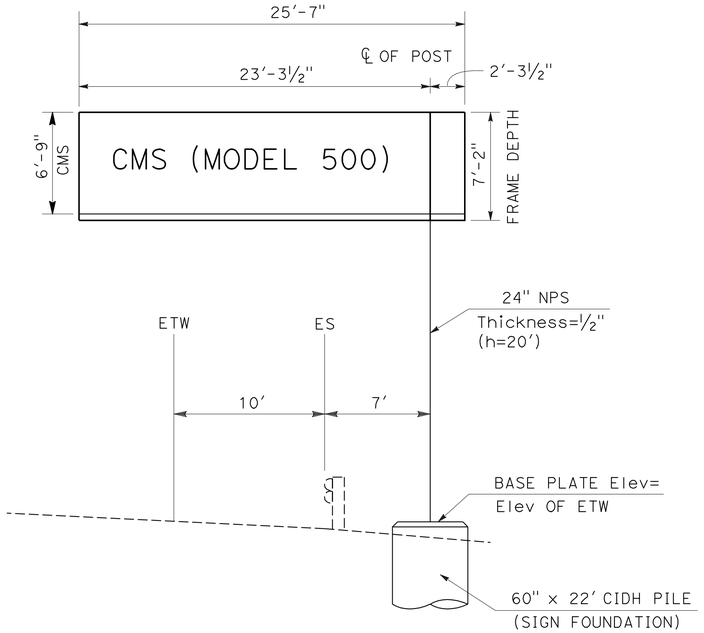

H INSTALL SIGN STRUCTURE (TRUSS) AT STA L 151+90 (FWBT)

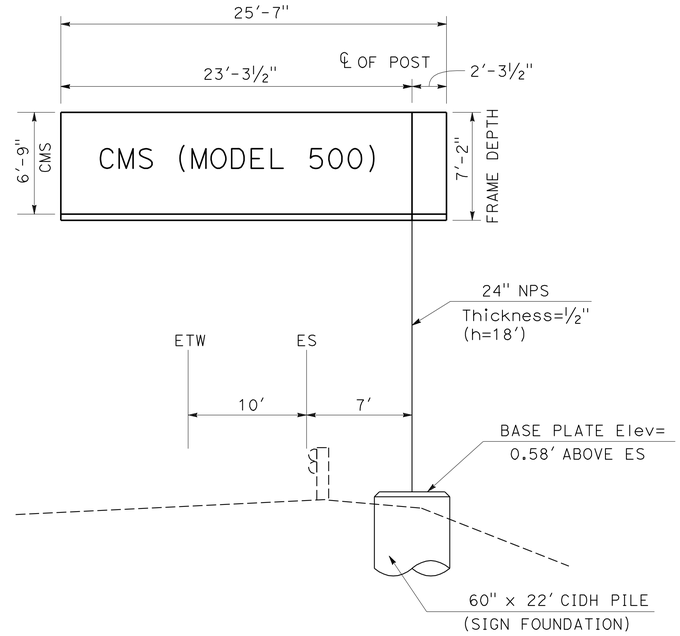

I INSTALL SIGN STRUCTURE (TRUSS) AT STA R 259+50 (FEBT)

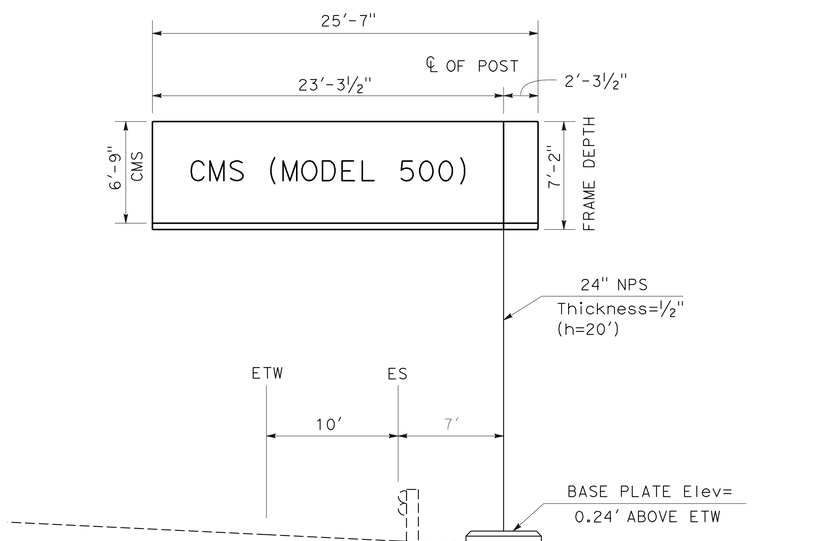

J INSTALL SIGN STRUCTURE (TRUSS) AT STA C2 331+28 (FEBT)

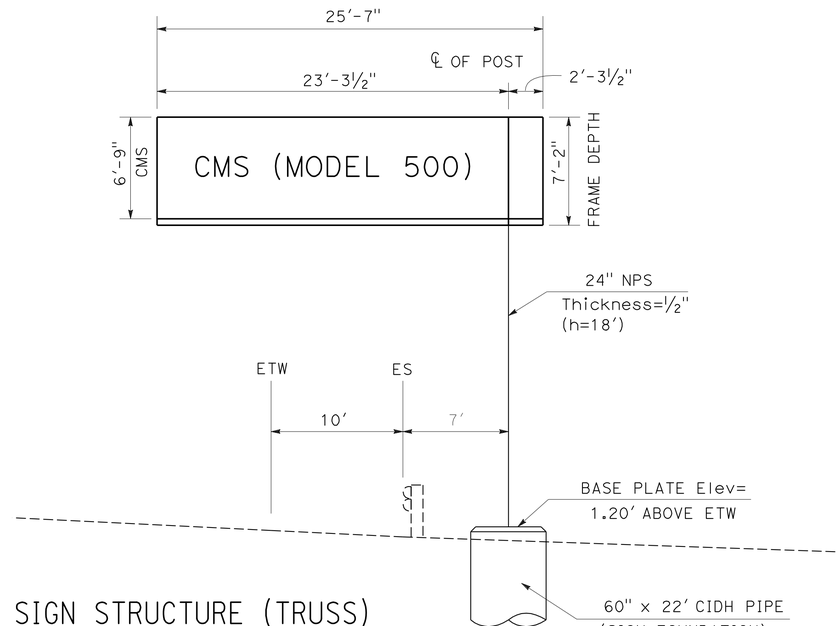

K INSTALL SIGN STRUCTURE (TRUSS) AT STA C2 435+50 (FEBT)

SIGN DETAILS

NO SCALE

SD-3

STATE OF CALIFORNIA - DEPARTMENT OF TRANSPORTATION
Caltrans® TRAFFIC

FUNCTIONAL SUPERVISOR: LOURDES DAVID
CALCULATED-DESIGNED BY: CLAUDIA FANG, LEOPOLDO G. BONGATO
CHECKED BY: FLORANTE P. PEREZ
REVISED BY / DATE REVISED

LAST REVISION 00-00-00 — DATE PLOTTED => 10-MAY-2012 — TIME PLOTTED => 13:08

Dist	COUNTY	ROUTE	POST MILES TOTAL PROJECT	SHEET No.	TOTAL SHEETS
04	Sol	80	0.0/R28.4	328	509

REGISTERED CIVIL ENGINEER — DATE 2-29-12

5-7-12
PLANS APPROVAL DATE

REGISTERED PROFESSIONAL ENGINEER — Florante P. Perez — No. 41030 — Exp. 3-31-13 — CIVIL — STATE OF CALIFORNIA

THE STATE OF CALIFORNIA OR ITS OFFICERS OR AGENTS SHALL NOT BE RESPONSIBLE FOR THE ACCURACY OR COMPLETENESS OF SCANNED COPIES OF THIS PLAN SHEET.

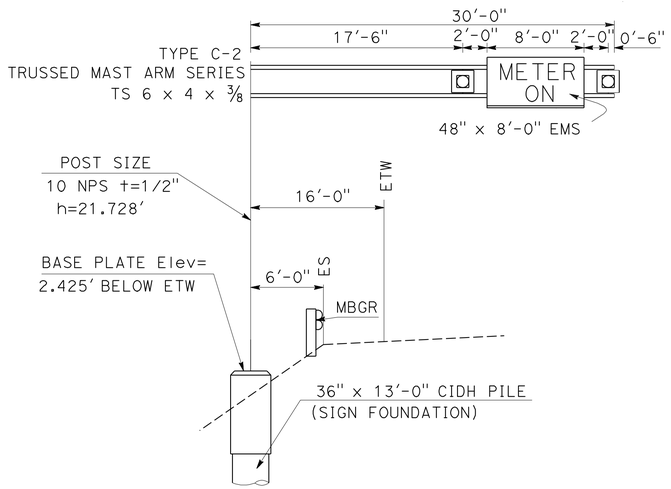

L INSTALL SIGN STRUCTURE (LIGHTWEIGHT) AT STA SF 12+50 (FEBT)

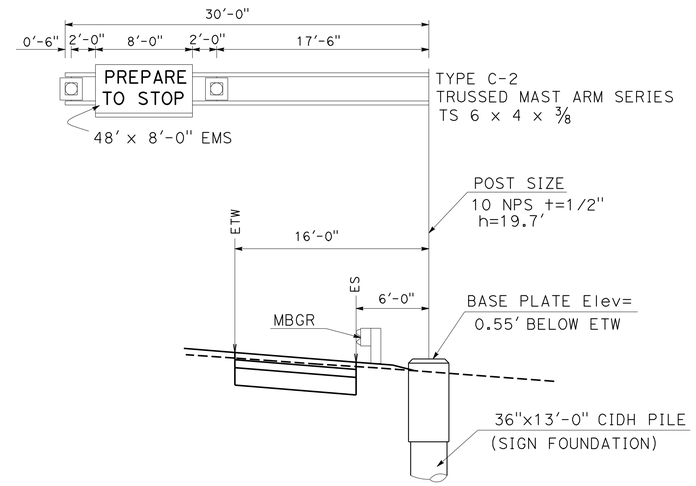

M INSTALL SIGN STRUCTURE (LIGHTWEIGHT) AT STA RL 538+80 (FWBT)

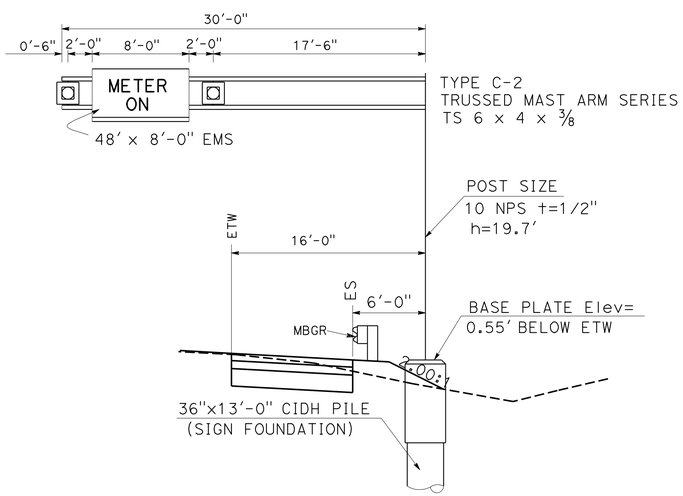

N INSTALL SIGN STRUCTURE (LIGHTWEIGHT) AT STA RL 541+80 (FWBT)

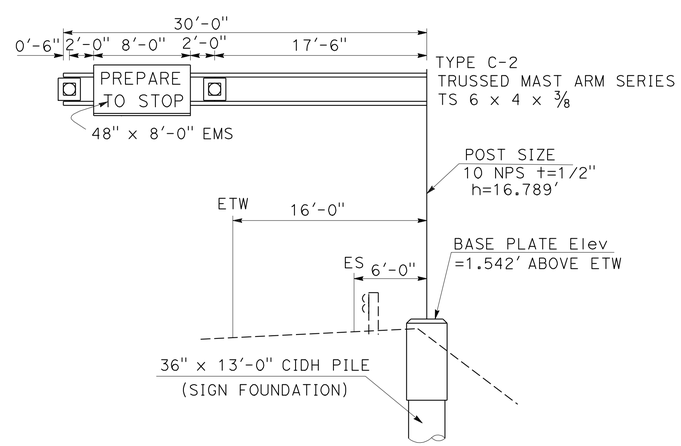

O INSTALL SIGN STRUCTURE (LIGHTWEIGHT) AT STA SF 19+60 (FEBT)

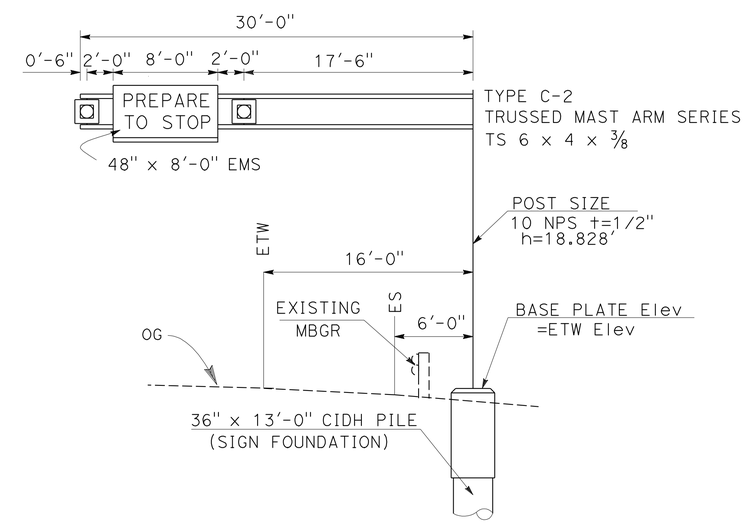

P INSTALL SIGN STRUCTURE (LIGHTWEIGHT) AT STA RL 575+00 (FEBT)

SIGN DETAILS

NO SCALE

SD-4

REVISED BY	DATE REVISED

CALCULATED-DESIGNED BY	LEOPOLDO G. BONGATO
CHECKED BY	FLORANTE P. PEREZ

FUNCTIONAL SUPERVISOR: LOURDES DAVID

STATE OF CALIFORNIA - DEPARTMENT OF TRANSPORTATION — Caltrans — TRAFFIC

LAST REVISION 00-00-00 — DATE PLOTTED => 11-MAY-2012 — TIME PLOTTED => 13:30

Dist	COUNTY	ROUTE	POST MILES TOTAL PROJECT	SHEET No.	TOTAL SHEETS
04	Sol	80	0.0/R28.4	329	509

REGISTERED CIVIL ENGINEER 2-29-12 DATE

5-7-12
PLANS APPROVAL DATE

REGISTERED PROFESSIONAL ENGINEER Florante P. Perez No. 41030 Exp. 3-31-13 CIVIL STATE OF CALIFORNIA

THE STATE OF CALIFORNIA OR ITS OFFICERS OR AGENTS SHALL NOT BE RESPONSIBLE FOR THE ACCURACY OR COMPLETENESS OF SCANNED COPIES OF THIS PLAN SHEET.

ROADSIDE SIGN QUANTITIES

SHEET No.	SIGN	SIGN CODE	PANEL SIZE	POST SIZE AND LENGTH 4'' x 6''	POST SIZE AND LENGTH 6'' x 6''	REMOVE ROADSIDE SIGN	RELOCATE ROADSIDE SIGN	ROADSIDE SIGN ONE POST	ROADSIDE SIGN SSBM	SINGLE FACE	BACKGROUND SHEETING COLOR	BACKGROUND RETROREFLECTIVE ASTM TYPE	LEGEND SHEETING COLOR	LEGEND RETROREFLECTIVE ASTM TYPE	PROTECTIVE FILM STANDARD	PROTECTIVE FILM PREMIUM	FURNISH SINGLE SHEET ALUMINUM SIGN UNFRAMED 0.063''	FURNISH SINGLE SHEET ALUMINUM SIGN UNFRAMED 0.080''	REMARKS
			(INCHES)	FEET		EA											SQ. FT.		
S-1	S1-1	R89(CA)	24 x 6						1	X	WHITE	III	BLACK	PLAIN		X	1.00		
		R10-6(R+)	24 x 36						1	X	WHITE	III	BLACK	PLAIN		X	6.00		
	S1-2	R89(CA)	24 x 6						1	X	WHITE	III	BLACK	PLAIN		X	1.00		
		R10-6(L+)	24 x 36						1	X	WHITE	III	BLACK	PLAIN		X	6.00		
	S1-3	R91-3(CA)	30 X 48	15.50				1		X	WHITE	III	BLACK	PLAIN		X	10.00		
	S1-4	R91-3(CA)	30 X 48	15.50				1		X	WHITE	III	BLACK	PLAIN		X	10.00		
	S1-5	R89(CA)	24 x 6						1	X	WHITE	III	BLACK	PLAIN		X	1.00		
		R10-6(R+)	24 x 36						1	X	WHITE	III	BLACK	PLAIN		X	6.00		
S-2	S2-1	R6-4(CA)					1												
	S2-2	R6-3(CA)					1												
		R48-1(CA)																	
S-3	S3-1	SPECIAL					1												
	S3-2	R2-1(65)					1												
		R48-1(CA)																	
S-4	S4-1	W4-1(R+)				1													
	S4-2	W4-3(R+)	48 x 48	17.16				1		X	YELLOW	III	BLACK	PLAIN		X	16.00		
	S4-3	R89(CA)	24 x 6							X	WHITE	III	BLACK	PLAIN		X	1.00		ELECT ITEM
	S4-4	R89(CA)	24 x 6							X	WHITE	III	BLACK	PLAIN		X	1.00		ELECT ITEM
	S4-5	R89(CA)	24 x 6							X	WHITE	III	BLACK	PLAIN		X	1.00		ELECT ITEM
	S4-6	R91-3(CA)	30 X 48	15.50				1		X	WHITE	III	BLACK	PLAIN		X	10.00		
S-5	S5-1	R91-3(CA)	30 X 48	15.50				1		X	WHITE	III	BLACK	PLAIN		X	10.00		
	S5-2	R91-3(CA)	30 X 48	15.50				1		X	WHITE	III	BLACK	PLAIN		X	10.00		
	S5-3	R91-3(CA)	30 X 48	15.50				1		X	WHITE	III	BLACK	PLAIN		X	10.00		
S-6	S6-1	G84(CA)				1													
	S6-2	G84-3(CA)	48 X 60	17.16				1		X	GREEN	IV	WHITE	IV		X		20.00	EXIT 21A
S-7	S7-1	R89(CA)	24 x 6						1	X	WHITE	III	BLACK	PLAIN		X	1.00		
		R10-6(R+)	24 x 36						1	X	WHITE	III	BLACK	PLAIN		X	6.00		
	S7-2	R89(CA)	24 x 6						1	X	WHITE	III	BLACK	PLAIN		X	1.00		
		R10-6(R+)	24 x 36						1	X	WHITE	III	BLACK	PLAIN		X	6.00		
S-8	S8-1	R89(CA)	24 x 6						1	X	WHITE	III	BLACK	PLAIN		X	1.00		
		R10-6(R+)	24 x 36						1	X	WHITE	III	BLACK	PLAIN		X	6.00		
	S8-2	R89(CA)	24 x 6						1	X	WHITE	III	BLACK	PLAIN		X	1.00		
		R10-6(L+)	24 x 36						1	X	WHITE	III	BLACK	PLAIN		X	6.00		
S-9	S9-1	R89(CA)	24 x 6						1	X	WHITE	III	BLACK	PLAIN		X	1.00		
		R10-6(R+)	24 x 36						1	X	WHITE	III	BLACK	PLAIN		X	6.00		
S-10	S10-1	R89(CA)	24 x 6						1	X	WHITE	III	BLACK	PLAIN		X	1.00		
		R10-6(R+)	24 x 36						1	X	WHITE	III	BLACK	PLAIN		X	6.00		
S-11	S11-1	R89(CA)	24 x 6						1	X	WHITE	III	BLACK	PLAIN		X	1.00		
		R10-6(L+)	24 x 36						1	X	WHITE	III	BLACK	PLAIN		X	6.00		
S-14	S14-1	R89(CA)	24 x 6						1	X	WHITE	III	BLACK	PLAIN		X	1.00		
		R10-6(L+)	24 x 36						1	X	WHITE	III	BLACK	PLAIN		X	6.00		
S-15	S15-1	R89(CA)	24 x 6						1	X	WHITE	III	BLACK	PLAIN		X	1.00		
		R10-6(R+)	24 x 36						1	X	WHITE	III	BLACK	PLAIN		X	6.00		
	S15-2	R89(CA)	24 x 6						1	X	WHITE	III	BLACK	PLAIN		X	1.00		
		R10-6(L+)	24 x 36						1	X	WHITE	III	BLACK	PLAIN		X	6.00		
SHEET TOTAL						2	4	8	26								170	20.00	

SIGN QUANTITIES

SQ-1

STATE OF CALIFORNIA - DEPARTMENT OF TRANSPORTATION
TRAFFIC
Caltrans

FUNCTIONAL SUPERVISOR: LOURDES DAVID
CALCULATED-DESIGNED BY: LEOPOLDO G. BONGATO
CHECKED BY: FLORANTE P. PEREZ
REVISED BY
DATE REVISED

LAST REVISION 00-00-00
DATE PLOTTED => 10-MAY-2012
TIME PLOTTED => 08:53

Dist	COUNTY	ROUTE	POST MILES TOTAL PROJECT	SHEET No.	TOTAL SHEETS
04	Sol	80	0.0/R28.4	330	509

REGISTERED CIVIL ENGINEER — DATE 2-29-12

5-7-12
PLANS APPROVAL DATE

REGISTERED PROFESSIONAL ENGINEER — Florante P. Perez — No. 41030 — Exp. 3-31-13 — CIVIL — STATE OF CALIFORNIA

THE STATE OF CALIFORNIA OR ITS OFFICERS OR AGENTS SHALL NOT BE RESPONSIBLE FOR THE ACCURACY OR COMPLETENESS OF SCANNED COPIES OF THIS PLAN SHEET.

ROADSIDE SIGN QUANTITIES

SHEET No.	SIGN	SIGN CODE	PANEL SIZE (INCHES)	POST SIZE AND LENGTH 4'' x 6'' (FEET)	POST SIZE AND LENGTH 6'' x 6'' (FEET)	REMOVE ROADSIDE SIGN (EA)	RELOCATE ROADSIDE SIGN (EA)	ROADSIDE SIGN ONE POST (EA)	ROADSIDE SIGN SSBM (EA)	SINGLE FACE	BACKGROUND SHEETING COLOR	BACKGROUND RETROREFLECTIVE ASTM TYPE	LEGEND SHEETING COLOR	LEGEND RETROREFLECTIVE ASTM TYPE	PROTECTIVE FILM STANDARD	PROTECTIVE FILM PREMIUM	FURNISH SINGLE SHEET ALUMINUM SIGN UNFRAMED 0.063'' (SQ. FT.)	FURNISH SINGLE SHEET ALUMINUM SIGN UNFRAMED 0.080'' (SQ. FT.)	REMARKS
S-16	S16-1	R89(CA)	24 x 6						1	X	WHITE	III	BLACK	PLAIN		X	1.00		
		R10-6(L†)	24 x 36						1	X	WHITE	III	BLACK	PLAIN		X	6.00		
	S16-2	R89(CA)	24 x 6						1	X	WHITE	III	BLACK	PLAIN		X	1.00		
		R10-6(L†)	24 x 36						1	X	WHITE	III	BLACK	PLAIN		X	6.00		
S-17	S17-1	R89(CA)	24 x 6						1	X	WHITE	III	BLACK	PLAIN		X	1.00		
		R10-6(L†)	24 x 36						1	X	WHITE	III	BLACK	PLAIN		X	6.00		
S-18	S18-1	R89(CA)	24 x 6						1	X	WHITE	III	BLACK	PLAIN		X	1.00		
		R10-6(L†)	24 x 36						1	X	WHITE	III	BLACK	PLAIN		X	6.00		
S-19	S19-1	R89(CA)	24 x 6						1	X	WHITE	III	BLACK	PLAIN		X	1.00		
		R10-6(R†)	24 x 36						1	X	WHITE	III	BLACK	PLAIN		X	6.00		
	S19-2	R89(CA)	24 x 6						1	X	WHITE	III	BLACK	PLAIN		X	1.00		
		R10-6(L†)	24 x 36						1	X	WHITE	III	BLACK	PLAIN		X	6.00		
S-20	S20-1	R89(CA)	24 x 6							X	WHITE	III	BLACK	PLAIN		X	1.00		ELECT ITEM
	S20-2	R89(CA)	24 x 6							X	WHITE	III	BLACK	PLAIN		X	1.00		ELECT ITEM
	S20-3	R89(CA)	24 x 6						1	X	WHITE	III	BLACK	PLAIN		X	1.00		
		R10-6(L†)	24 x 36						1	X	WHITE	III	BLACK	PLAIN		X	6.00		
S-21	S21-1	R89(CA)	24 x 6						1	X	WHITE	III	BLACK	PLAIN		X	1.00		
		R10-6(R†)	24 x 36						1	X	WHITE	III	BLACK	PLAIN		X	6.00		
	S21-2	R91-3(CA)	30 X 48	15.50				1		X	WHITE	III	BLACK	PLAIN		X	10.00		
	S21-3	R89(CA)	24 x 6						1	X	WHITE	III	BLACK	PLAIN		X	1.00		
		R10-6(L†)	24 x 36						1	X	WHITE	III	BLACK	PLAIN		X	6.00		
	S21-4	R91-3(CA)	30 X 48	15.50				1		X	WHITE	III	BLACK	PLAIN		X	10.00		
	S21-5	R91-3(CA)	30 X 48	15.50				1		X	WHITE	III	BLACK	PLAIN		X	10.00		
	S21-6	R89(CA)	24 x 6						1	X	WHITE	III	BLACK	PLAIN		X	1.00		
		R10-6(L†)	24 x 36						1	X	WHITE	III	BLACK	PLAIN		X	6.00		
	S21-7	R89(CA)	24 x 6						1	X	WHITE	III	BLACK	PLAIN		X	1.00		
		R10-6(R†)	24 x 36						1	X	WHITE	III	BLACK	PLAIN		X	6.00		
S-22	S22-1	R89(CA)	24 x 6						1	X	WHITE	III	BLACK	PLAIN		X	1.00		
		R10-6(L†)	24 x 36						1	X	WHITE	III	BLACK	PLAIN		X	6.00		
	S22-2	R89(CA)	24 x 6						1	X	WHITE	III	BLACK	PLAIN		X	1.00		
		R10-6(R†)	24 x 36						1	X	WHITE	III	BLACK	PLAIN		X	6.00		
S-23	S23-1	R89(CA)	24 x 6							X	WHITE	III	BLACK	PLAIN		X	1.00		ELECT ITEM
	S23-2	R89(CA)	24 x 6							X	WHITE	III	BLACK	PLAIN		X	1.00		ELECT ITEM
S-24	S24-1	R89(CA)	24 x 6						1	X	WHITE	III	BLACK	PLAIN		X	1.00		
		R10-6(L†)	24 x 36						1	X	WHITE	III	BLACK	PLAIN		X	6.00		
	S24-2	R91-3(CA)	30 X 48	15.50				1		X	WHITE	III	BLACK	PLAIN		X	10.00		
	S24-3	R91-3(CA)	30 X 48	15.50				1		X	WHITE	III	BLACK	PLAIN		X	10.00		
	S24-4	R91-3(CA)	30 X 48	15.50				1		X	WHITE	III	BLACK	PLAIN		X	10.00		
	S24-5	R89(CA)	24 x 6						1	X	WHITE	III	BLACK	PLAIN		X	1.00		
		R10-6(L†)	24 x 36						1	X	WHITE	III	BLACK	PLAIN		X	6.00		
	S24-6	R89(CA)	24 x 6						1	X	WHITE	III	BLACK	PLAIN		X	1.00		
		R10-6(R†)	24 x 36						1	X	WHITE	III	BLACK	PLAIN		X	6.00		
	S24-7	R91-3(CA)	30 X 48	15.50				1		X	WHITE	III	BLACK	PLAIN		X	10.00		
	S24-8	R91-3(CA)	30 X 48	15.50				1		X	WHITE	III	BLACK	PLAIN		X	10.00		
	S24-9	R91-3(CA)	30 X 48	15.50				1		X	WHITE	III	BLACK	PLAIN		X	10.00		
SHEET TOTAL						0	0	9	32								206.00	0	
TOTAL						2	4	17	58								376	20.00	

SIGN QUANTITIES

SQ-2

STATE OF CALIFORNIA - DEPARTMENT OF TRANSPORTATION
Caltrans® TRAFFIC

FUNCTIONAL SUPERVISOR: LOURDES DAVID
CALCULATED-DESIGNED BY: LEOPOLDO G. BONGATO
CHECKED BY: FLORANTE P. PEREZ
REVISED BY / DATE REVISED

LAST REVISION 00-00-00 | DATE PLOTTED => 10-MAY-2012 | TIME PLOTTED => 08:53

Dist	COUNTY	ROUTE	POST MILES TOTAL PROJECT	SHEET No.	TOTAL SHEETS
04	Sol	80	0.0/R28.4	331	509

REGISTERED CIVIL ENGINEER — DATE 2-29-12

5-7-12
PLANS APPROVAL DATE

REGISTERED PROFESSIONAL ENGINEER — Florante P. Perez — No. 41030 — Exp. 3-31-13 — CIVIL — STATE OF CALIFORNIA

THE STATE OF CALIFORNIA OR ITS OFFICERS OR AGENTS SHALL NOT BE RESPONSIBLE FOR THE ACCURACY OR COMPLETENESS OF SCANNED COPIES OF THIS PLAN SHEET.

OVERHEAD SIGN QUANTITIES

SHEET No.	SIGN ◊	SIGN CODE	PANEL SIZE	FURNISH SIGN STRUCTURE (LIGHTWEIGHT)	INSTALL SIGN STRUCTURE (LIGHTWEIGHT)	FURNISH SIGN STRUCTURE (TRUSS)	INSTALL SIGN STRUCTURE (TRUSS)	REMOVE SIGN STRUCTURE	CIDH CONCRETE PILE (SIGN FOUNDATION)		SINGLE FACE	BACKGROUND		LEGEND		PROTECTIVE FILM		FURNISH FORMED PANEL SIGN (OVERHEAD)	REMARKS
									36''	60''		SHEETING COLOR	RETROREFLECTIVE ASTM TYPE	SHEETING COLOR	RETROREFLECTIVE ASTM TYPE	STANDARD	PREMIUM		
			(INCHES)	LBS				EA	LF									SQ. FT.	
S-2	A	R86-12(CA)	168 x 100			14,871	14,871			23	X	GREEN	IV	WHITE	IX		X	117.00	
	B							1											
S-5	C	EMS		3469	3469				13										
	D	EMS		3657	3657				13										
S-6	E	EMS		3640	3640				13										METER ON
	F	EMS		3611	3611				13										PREPARE TO STOP
S-7	G	EMS		3570	3570				13										PREPARE TO STOP
S-9	H	CMS				13,896	13,896			22									
S-12	I	CMS				13,640	13,640			22									
S-13	J	CMS				13,896	13,896			27									
S-20	K	CMS				13,896	13,640			22									
S-24	L	EMS		3749	3749				13										METER ON
	M	EMS		3634	3634				13										PREPARE TO STOP
	N	EMS		3634	3634				13										METER ON
	O	EMS		3606	3606				13										PREPARE TO STOP
S-25	P	EMS		3606	3606				13										PREPARE TO STOP
TOTAL				36176	36176	69,943	69,943	1	130	116								117.00	

REVISED BY | DATE REVISED

LEOPOLDO G. BONGATO — FLORANTE P. PEREZ — CALCULATED-DESIGNED BY — CHECKED BY

FUNCTIONAL SUPERVISOR: LOURDES DAVID

STATE OF CALIFORNIA - DEPARTMENT OF TRANSPORTATION — Caltrans — TRAFFIC

SIGN QUANTITIES

SQ-3

LAST REVISION 00-00-00 | DATE PLOTTED => 10-MAY-2012 | TIME PLOTTED => 08:53

DIST	COUNTY	ROUTE	POST MILES TOTAL PROJECT	SHEET No.	TOTAL SHEETS
04	Sol	80	0.0/R28.4	332	509

REGISTERED CIVIL ENGINEER 2-8-12 DATE

5-7-12
PLANS APPROVAL DATE

REGISTERED PROFESSIONAL ENGINEER
Samuel Awad
No. C64589
Exp. 6-30-13
CIVIL
STATE OF CALIFORNIA

The State of California or its officers or agents shall not be responsible for the accuracy or completeness of electronic copies of this plan sheet.

This LOTB sheet was prepared in accordance with the Caltrans Soil & Rock Logging, Classification, & Presentation Manual (2010 Edition).

BENCH MARK

CT 69
79.0′ Rt "C1" Line
Sta 396+09.0
N 1888452.0
E 6563657.6
Elev 171.985′
NAD83

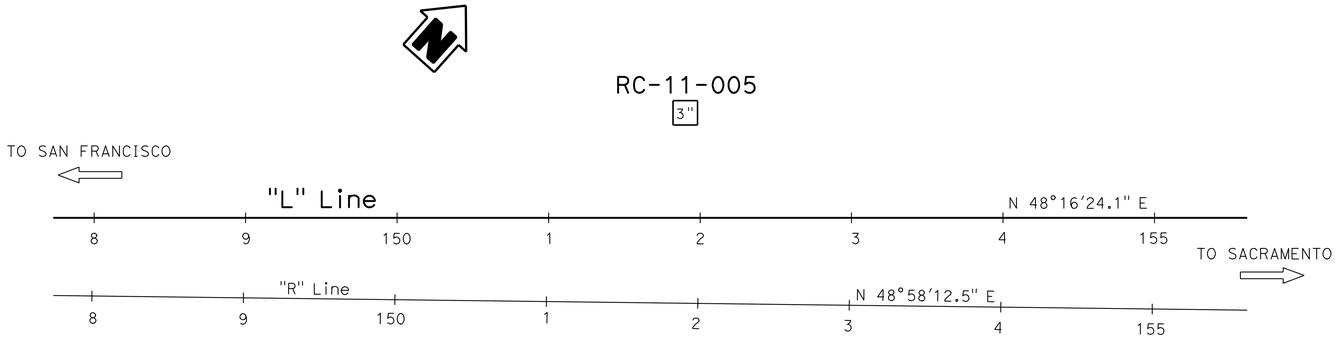

PLAN

1" = 50′

PROFILE

Horiz: 1" = 20′
Vert: 1" = 10′

ENGINEERING SERVICES	MATERIALS AND GEOTECHNICAL SERVICES	STATE OF CALIFORNIA DEPARTMENT OF TRANSPORTATION	DIVISION OF ENGINEERING SERVICES OFFICE OF GEOTECHNICAL DESIGN BRANCH X	BRIDGE NO. / POST MILE 0.0/R28.4	GEOTECHNICAL DESIGN REPORT-CMS 1 LOG OF TEST BORINGS 1 OF 3
FUNCTIONAL SUPERVISOR NAME: H. Nikoui	DRAWN BY: F. Nguyen CHECKED BY: M. Gaffney	FIELD INVESTIGATION BY: S. Awad			

OGS CIVIL LOG OF TEST BORINGS SHEET

ORIGINAL SCALE IN INCHES FOR REDUCED PLANS 0 1 2 3

UNIT: 3643
PROJECT NUMBER & PHASE: 04000207391
CONTRACT NO.: 04-153501

DISREGARD PRINTS BEARING EARLIER REVISION DATES

REVISION DATES: 11-22-11 12-07-11 12-21-11 02-08-12 | SHEET X | OF X

FILE => 0400020739ui001.dgn

USERNAME => s124096 DATE PLOTTED => 10-MAY-2012 TIME PLOTTED => 05:49

DIST	COUNTY	ROUTE	POST MILES TOTAL PROJECT	SHEET No.	TOTAL SHEETS
04	Sol	80	0.0/R28.4	333	509

REGISTERED CIVIL ENGINEER 2-8-12 DATE

5-7-12
PLANS APPROVAL DATE

REGISTERED PROFESSIONAL ENGINEER Samuel Awad No. C64589 Exp. 6-30-13 CIVIL STATE OF CALIFORNIA

The State of California or its officers or agents shall not be responsible for the accuracy or completeness of electronic copies of this plan sheet.

REFERENCE: CALTRANS SOIL & ROCK LOGGING, CLASSIFICATION, AND PRESENTATION MANUAL (2010)

CEMENTATION

Description	Criteria
Weak	Crumbles or breaks with handling or little finger pressure.
Moderate	Crumbles or breaks with considerable finger pressure.
Strong	Will not crumble or break with finger pressure.

BOREHOLE IDENTIFICATION

Symbol	Hole Type	Description
Size	A	Auger Boring (hollow or solid stem bucket)
Size	R RW RC P	Rotary drilled boring (conventional) Rotary drilled with self-casing wire-line Rotary core with continuously-sampled, self-casing wire-line Rotary percussion boring (air)
Size	R RC	Rotary drilled diamond core Rotary drilled rock core
Size	HD HA	Hand driven (1-inch soil tube) Hand Auger
●	D	Dynamic Cone Penetration Boring
▲	CPT	Cone Penetration Test (ASTM D 5778)
⬚	O	Other (note on LOTB)

Note: Size in inches.

CONSISTENCY OF COHESIVE SOILS

Description	Shear Strength (tsf)	Pocket Penetrometer Measurement, PP, (tsf)	Torvane Measurement, TV, (tsf)	Vane Shear Measurement, VS, (tsf)
Very Soft	Less than 0.12	Less than 0.25	Less than 0.12	Less than 0.12
Soft	0.12 - 0.25	0.25 - 0.5	0.12 - 0.25	0.12 - 0.25
Medium Stiff	0.25 - 0.5	0.5 - 1	0.25 - 0.5	0.25 - 0.5
Stiff	0.5 - 1	1 - 2	0.5 - 1	0.5 - 1
Very Stiff	1 - 2	2 - 4	1 - 2	1 - 2
Hard	Greater than 2	Greater than 4	Greater than 2	Greater than 2

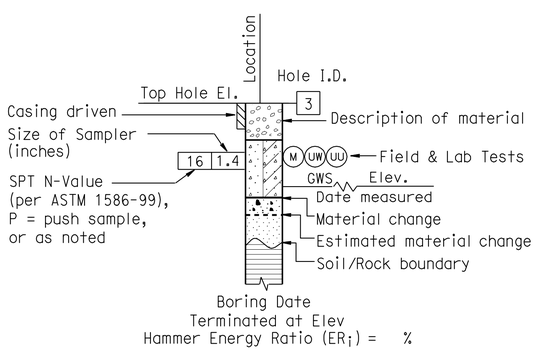

ROTARY BORING

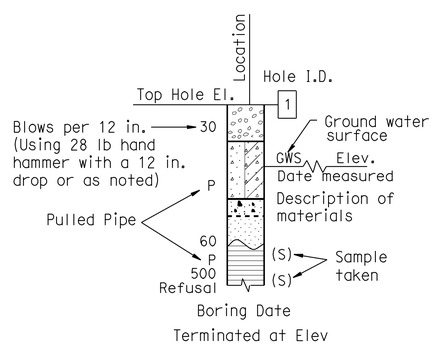

HAND BORING

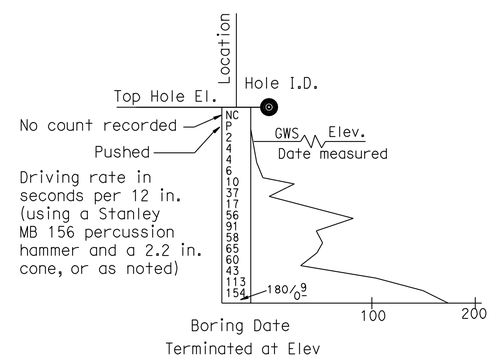

DYNAMIC CONE PENETRATION BORING

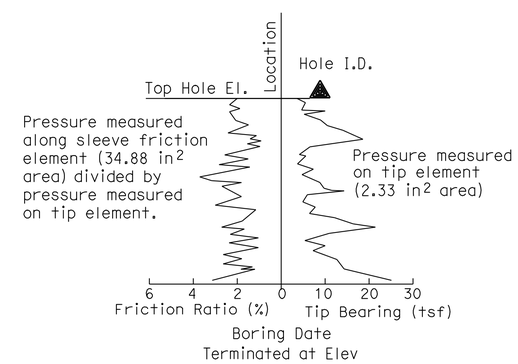

CONE PENETRATION TEST (CPT) BORING

ENGINEERING SERVICES	MATERIALS AND GEOTECHNICAL SERVICES	STATE OF CALIFORNIA DEPARTMENT OF TRANSPORTATION	DIVISION OF ENGINEERING SERVICES OFFICE OF GEOTECHNICAL DESIGN BRANCH X	BRIDGE NO. / POST MILE 0.0/R28.4	GEOTECHNICAL DESIGN REPORT-CMS 1 LOG OF TEST BORINGS 2 OF 3
	PREPARED BY: F. Nguyen				

GS LOTB SOIL LEGEND

ORIGINAL SCALE IN INCHES FOR REDUCED PLANS 0 1 2 3

UNIT: 3643
PROJECT NUMBER & PHASE: 04000207391 CONTRACT NO.: 04-153501

DISREGARD PRINTS BEARING EARLIER REVISION DATES → 11-25-11 12-09-11 01-26-12

SHEET X OF X

FILE => 0400020739ui002.dgn

USERNAME => s124496 DATE PLOTTED => 10-MAY-2012 TIME PLOTTED => 05:49

REFERENCE: CALTRANS SOIL & ROCK LOGGING, CLASSIFICATION, AND PRESENTATION MANUAL (2010)

DIST	COUNTY	ROUTE	POST MILES TOTAL PROJECT	SHEET No.	TOTAL SHEETS
04	Sol	80	0.0/R28.4	334	509

REGISTERED CIVIL ENGINEER 2-8-12 DATE

5-7-12
PLANS APPROVAL DATE

REGISTERED PROFESSIONAL ENGINEER Samuel Awad No. C64589 Exp. 6-30-13 CIVIL STATE OF CALIFORNIA

The State of California or its officers or agents shall not be responsible for the accuracy or completeness of electronic copies of this plan sheet.

GROUP SYMBOLS AND NAMES

Graphic/Symbol	Group Names	Graphic/Symbol	Group Names
GW	Well-graded GRAVEL Well-graded GRAVEL with SAND	CL	Lean CLAY Lean CLAY with SAND Lean CLAY with GRAVEL SANDY lean CLAY SANDY lean CLAY with GRAVEL GRAVELLY lean CLAY GRAVELLY lean CLAY with SAND
GP	Poorly-graded GRAVEL Poorly-graded GRAVEL with SAND		
GW-GM	Well-graded GRAVEL with SILT Well-graded GRAVEL with SILT and SAND	CL-ML	SILTY CLAY SILTY CLAY with SAND SILTY CLAY with GRAVEL SANDY SILTY CLAY SANDY SILTY CLAY with GRAVEL GRAVELLY SILTY CLAY GRAVELLY SILTY CLAY with SAND
GW-GC	Well-graded GRAVEL with CLAY (or SILTY CLAY) Well-graded GRAVEL with CLAY and SAND (or SILTY CLAY and SAND)		
GP-GM	Poorly-graded GRAVEL with SILT Poorly-graded GRAVEL with SILT and SAND	ML	SILT SILT with SAND SILT with GRAVEL SANDY SILT SANDY SILT with GRAVEL GRAVELLY SILT GRAVELLY SILT with SAND
GP-GC	Poorly-graded GRAVEL with CLAY (or SILTY CLAY) Poorly-graded GRAVEL with CLAY and SAND (or SILTY CLAY and SAND)		
GM	SILTY GRAVEL SILTY GRAVEL with SAND	OL	ORGANIC lean CLAY ORGANIC lean CLAY with SAND ORGANIC lean CLAY with GRAVEL SANDY ORGANIC lean CLAY SANDY ORGANIC lean CLAY with GRAVEL GRAVELLY ORGANIC lean CLAY GRAVELLY ORGANIC lean CLAY with SAND
GC	CLAYEY GRAVEL CLAYEY GRAVEL with SAND		
GC-GM	SILTY, CLAYEY GRAVEL SILTY, CLAYEY GRAVEL with SAND	OL	ORGANIC SILT ORGANIC SILT with SAND ORGANIC SILT with GRAVEL SANDY ORGANIC SILT SANDY ORGANIC SILT with GRAVEL GRAVELLY ORGANIC SILT GRAVELLY ORGANIC SILT with SAND
SW	Well-graded SAND Well-graded SAND with GRAVEL		
SP	Poorly-graded SAND Poorly-graded SAND with GRAVEL	CH	Fat CLAY Fat CLAY with SAND Fat CLAY with GRAVEL SANDY fat CLAY SANDY fat CLAY with GRAVEL GRAVELLY fat CLAY GRAVELLY fat CLAY with SAND
SW-SM	Well-graded SAND with SILT Well-graded SAND with SILT and GRAVEL		
SW-SC	Well-graded SAND with CLAY (or SILTY CLAY) Well-graded SAND with CLAY and GRAVEL (or SILTY CLAY and GRAVEL)	MH	Elastic SILT Elastic SILT with SAND Elastic SILT with GRAVEL SANDY elastic SILT SANDY elastic SILT with GRAVEL GRAVELLY elastic SILT GRAVELLY elastic SILT with SAND
SP-SM	Poorly-graded SAND with SILT Poorly-graded SAND with SILT and GRAVEL		
SP-SC	Poorly-graded SAND with CLAY (or SILTY CLAY) Poorly-graded SAND with CLAY and GRAVEL (or SILTY CLAY and GRAVEL)	OH	ORGANIC fat CLAY ORGANIC fat CLAY with SAND ORGANIC fat CLAY with GRAVEL SANDY ORGANIC fat CLAY SANDY ORGANIC fat CLAY with GRAVEL GRAVELLY ORGANIC fat CLAY GRAVELLY ORGANIC fat CLAY with SAND
SM	SILTY SAND SILTY SAND with GRAVEL		
SC	CLAYEY SAND CLAYEY SAND with GRAVEL	OH	ORGANIC elastic SILT ORGANIC elastic SILT with SAND ORGANIC elastic SILT with GRAVEL SANDY ORGANIC elastic SILT SANDY ORGANIC elastic SILT with GRAVEL GRAVELLY ORGANIC elastic SILT GRAVELLY ORGANIC elastic SILT with SAND
SC-SM	SILTY, CLAYEY SAND SILTY, CLAYEY SAND with GRAVEL		
PT	PEAT	OL/OH	ORGANIC SOIL ORGANIC SOIL with SAND ORGANIC SOIL with GRAVEL SANDY ORGANIC SOIL SANDY ORGANIC SOIL with GRAVEL GRAVELLY ORGANIC SOIL GRAVELLY ORGANIC SOIL with SAND
	COBBLES COBBLES and BOULDERS BOULDERS		

FIELD AND LABORATORY TESTING

- (C) Consolidation (ASTM D 2435)
- (CL) Collapse Potential (ASTM D 5333)
- (CP) Compaction Curve (CTM 216)
- (CR) Corrosivity Testing (CTM 643, CTM 422, CTM 417)
- (CU) Consolidated Undrained Triaxial (ASTM D 4767)
- (DS) Direct Shear (ASTM D 3080)
- (EI) Expansion Index (ASTM D 4829)
- (M) Moisture Content (ASTM D 2216)
- (OC) Organic Content-% (ASTM D 2974)
- (P) Permeability (CTM 220)
- (PA) Particle Size Analysis (ASTM D 422)
- (PI) Plasticity Index (AASHTO T 90) Liquid Limit (AASHTO T 89)
- (PL) Point Load Index (ASTM D 5731)
- (PM) Pressure Meter
- (R) R-Value (CTM 301)
- (SE) Sand Equivalent (CTM 217)
- (SG) Specific Gravity (AASHTO T 100)
- (SL) Shrinkage Limit (ASTM D 427)
- (SW) Swell Potential (ASTM D 4546)
- (UC) Unconfined Compression-Soil (ASTM D 2166) Unconfined Compression-Rock (ASTM D 2938)
- (UU) Unconsolidated Undrained Triaxial (ASTM D 2850)
- (UW) Unit Weight (ASTM D 4767)

APPARENT DENSITY OF COHESIONLESS SOILS

Description	SPT N_{60} (Blows / 12 in.)
Very Loose	0 - 5
Loose	5 - 10
Medium Dense	10 - 30
Dense	30 - 50
Very Dense	Greater than 50

MOISTURE

Description	Criteria
Dry	No discernable moisture
Moist	Moisture present, but no free water
Wet	Visible free water

PERCENT OR PROPORTION OF SOILS

Description	Criteria
Trace	Particles are present but estimated to be less than 5%
Few	5% - 10%
Little	15% - 25%
Some	30% - 45%
Mostly	50% - 100%

PARTICLE SIZE

Description		Size (in.)
Boulder		Greater than 12
Cobble		3 - 12
Gravel	Coarse	3/4 - 3
	Fine	1/5 - 3/4
Sand	Coarse	1/16 - 1/5
	Medium	1/64 - 1/16
	Fine	1/300 - 1/64
Silt and Clay		Less than 1/300

ENGINEERING SERVICES

MATERIALS AND GEOTECHNICAL SERVICES

PREPARED BY: F. Nguyen

STATE OF CALIFORNIA DEPARTMENT OF TRANSPORTATION

DIVISION OF ENGINEERING SERVICES OFFICE OF GEOTECHNICAL DESIGN BRANCH X

BRIDGE NO.

POST MILE 0.0/R28.4

GEOTECHNICAL DESIGN REPORT-CMS 1

LOG OF TEST BORINGS 3 OF 3

GS LOTB SOIL LEGEND

ORIGINAL SCALE IN INCHES FOR REDUCED PLANS 0 1 2 3

UNIT: 3643
PROJECT NUMBER & PHASE: 04000207391
CONTRACT NO.: 04-153501

DISREGARD PRINTS BEARING EARLIER REVISION DATES

REVISION DATES 11-23-11 12-07-11 01-26-12 SHEET X OF X

FILE => 0400020739ui003.dgn

USERNAME => s124096 DATE PLOTTED => 10-MAY-2012 TIME PLOTTED => 05:49

DIST	COUNTY	ROUTE	POST MILES TOTAL PROJECT	SHEET No.	TOTAL SHEETS
04	Sol	80	0.0/R28.4	335	509

REGISTERED CIVIL ENGINEER 2-8-12 DATE

5-7-12
PLANS APPROVAL DATE

REGISTERED PROFESSIONAL ENGINEER
Samuel Awad
No. C64589
Exp. 6-30-13
CIVIL
STATE OF CALIFORNIA

The State of California or its officers or agents shall not be responsible for the accuracy or completeness of electronic copies of this plan sheet.

This LOTB sheet was prepared in accordance with the Caltrans Soil & Rock Logging, Classification, & Presentation Manual (2010 Edition).

BENCH MARK

CT 70
79.1′ Rt "C1" Line
Sta 409+01.171
N 1889024.0
E 6564815.4
Elev 172.692′
NAD83

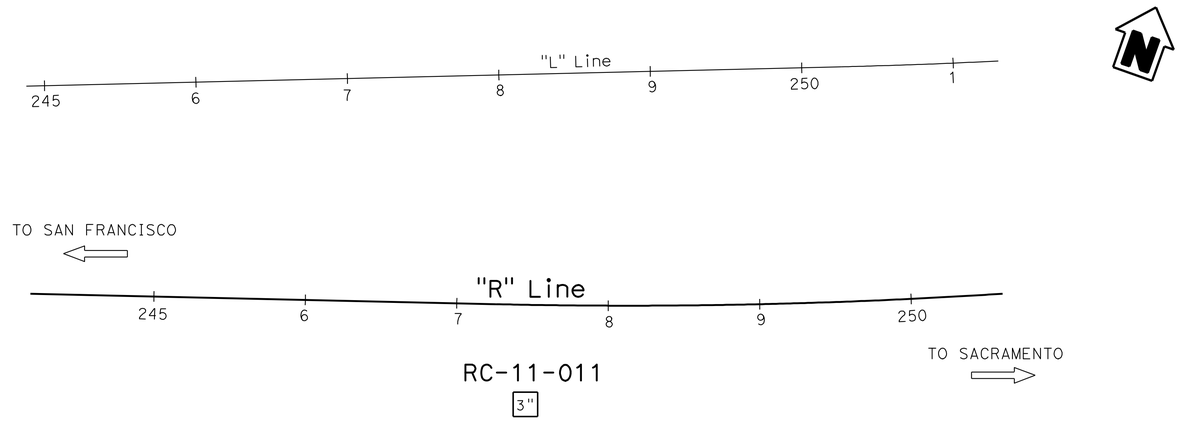

PLAN

1" = 50′

PROFILE

Horiz: 1" = 10′
Vert: 1" = 10′

ENGINEERING SERVICES	MATERIALS AND GEOTECHNICAL SERVICES	STATE OF CALIFORNIA DEPARTMENT OF TRANSPORTATION	DIVISION OF ENGINEERING SERVICES OFFICE OF GEOTECHNICAL DESIGN BRANCH X	BRIDGE NO. / POST MILE 0.0/R28.4	GEOTECHNICAL DESIGN REPORT-CMS 2 LOG OF TEST BORINGS 1 OF 3
FUNCTIONAL SUPERVISOR NAME: H. Nikoui	DRAWN BY: F. Nguyen CHECKED BY: M. Gaffney	FIELD INVESTIGATION BY: S. Awad			

OGS CIVIL LOG OF TEST BORINGS SHEET

ORIGINAL SCALE IN INCHES FOR REDUCED PLANS 0 1 2 3

UNIT: 3643
PROJECT NUMBER & PHASE: 04000207391 CONTRACT NO.: 04-153501

DISREGARD PRINTS BEARING EARLIER REVISION DATES

REVISION DATES: 11-23-11 12-07-11 12-21-11 02-08-12 SHEET X OF X

FILE => 0400020739ui004.dgn

USERNAME => s124496 DATE PLOTTED => 10-MAY-2012 TIME PLOTTED => 05:49

DIST	COUNTY	ROUTE	POST MILES TOTAL PROJECT	SHEET No.	TOTAL SHEETS
04	Sol	80	0.0/R28.4	336	509

REGISTERED CIVIL ENGINEER 2-8-12 DATE

5-7-12
PLANS APPROVAL DATE

REGISTERED PROFESSIONAL ENGINEER
Samuel Awad
No. C64589
Exp. 6-30-13
CIVIL
STATE OF CALIFORNIA

The State of California or its officers or agents shall not be responsible for the accuracy or completeness of electronic copies of this plan sheet.

REFERENCE: CALTRANS SOIL & ROCK LOGGING, CLASSIFICATION, AND PRESENTATION MANUAL (2010)

CEMENTATION

Description	Criteria
Weak	Crumbles or breaks with handling or little finger pressure.
Moderate	Crumbles or breaks with considerable finger pressure.
Strong	Will not crumble or break with finger pressure.

BOREHOLE IDENTIFICATION

Symbol	Hole Type	Description
Size	A	Auger Boring (hollow or solid stem bucket)
Size	R RW RC P	Rotary drilled boring (conventional) Rotary drilled with self-casing wire-line Rotary core with continuously-sampled, self-casing wire-line Rotary percussion boring (air)
Size	R RC	Rotary drilled diamond core Rotary drilled rock core
Size	HD HA	Hand driven (1-inch soil tube) Hand Auger
●	D	Dynamic Cone Penetration Boring
▲	CPT	Cone Penetration Test (ASTM D 5778)
⬚	O	Other (note on LOTB)

Note: Size in inches.

CONSISTENCY OF COHESIVE SOILS

Description	Shear Strength (tsf)	Pocket Penetrometer Measurement, PP, (tsf)	Torvane Measurement, TV, (tsf)	Vane Shear Measurement, VS, (tsf)
Very Soft	Less than 0.12	Less than 0.25	Less than 0.12	Less than 0.12
Soft	0.12 - 0.25	0.25 - 0.5	0.12 - 0.25	0.12 - 0.25
Medium Stiff	0.25 - 0.5	0.5 - 1	0.25 - 0.5	0.25 - 0.5
Stiff	0.5 - 1	1 - 2	0.5 - 1	0.5 - 1
Very Stiff	1 - 2	2 - 4	1 - 2	1 - 2
Hard	Greater than 2	Greater than 4	Greater than 2	Greater than 2

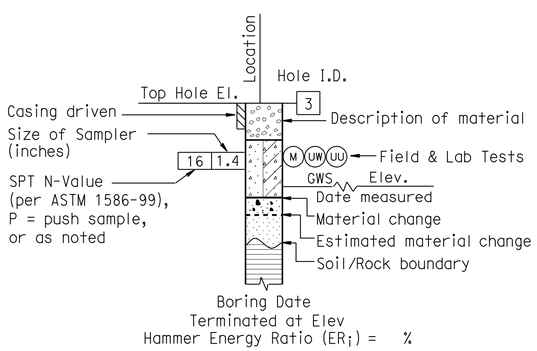

ROTARY BORING

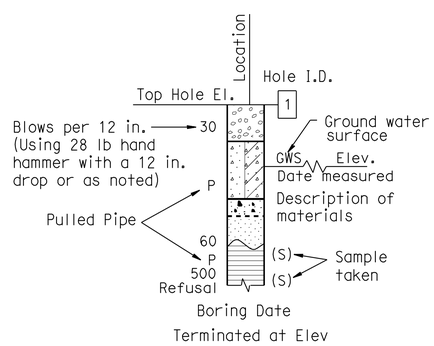

HAND BORING

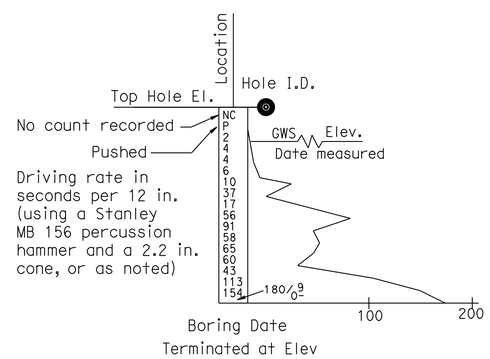

DYNAMIC CONE PENETRATION BORING

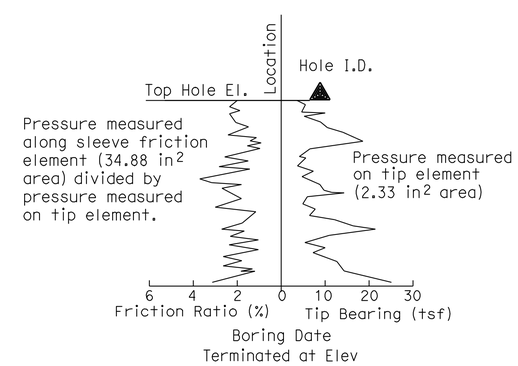

CONE PENETRATION TEST (CPT) BORING

ENGINEERING SERVICES	MATERIALS AND GEOTECHNICAL SERVICES	STATE OF CALIFORNIA DEPARTMENT OF TRANSPORTATION	DIVISION OF ENGINEERING SERVICES OFFICE OF GEOTECHNICAL DESIGN BRANCH X	BRIDGE NO. / POST MILE 0.0/R28.4	GEOTECHNICAL DESIGN REPORT-CMS 2 LOG OF TEST BORINGS 2 OF 3
	PREPARED BY: F. Nguyen				

GS LOTB SOIL LEGEND

ORIGINAL SCALE IN INCHES FOR REDUCED PLANS 0 1 2 3

UNIT: 3643
PROJECT NUMBER & PHASE: 04000207391 CONTRACT NO.: 04-153501

DISREGARD PRINTS BEARING EARLIER REVISION DATES

REVISION DATES 11-25-11 12-09-11 01-26-12 SHEET X OF X

FILE => 0400020739ui005.dgn

USERNAME => s124496 DATE PLOTTED => 10-MAY-2012 TIME PLOTTED => 05:49

REFERENCE: CALTRANS SOIL & ROCK LOGGING, CLASSIFICATION, AND PRESENTATION MANUAL (2010)

DIST	COUNTY	ROUTE	POST MILES TOTAL PROJECT	SHEET No.	TOTAL SHEETS
04	Sol	80	0.0/R28.4	337	509

REGISTERED CIVIL ENGINEER 2-8-12 DATE

5-7-12
PLANS APPROVAL DATE

REGISTERED PROFESSIONAL ENGINEER Samuel Awad No. C64589 Exp. 6-30-13 CIVIL STATE OF CALIFORNIA

The State of California or its officers or agents shall not be responsible for the accuracy or completeness of electronic copies of this plan sheet.

GROUP SYMBOLS AND NAMES

Graphic/Symbol	Group Names	Graphic/Symbol	Group Names
GW	Well-graded GRAVEL Well-graded GRAVEL with SAND	CL	Lean CLAY Lean CLAY with SAND Lean CLAY with GRAVEL SANDY lean CLAY SANDY lean CLAY with GRAVEL GRAVELLY lean CLAY GRAVELLY lean CLAY with SAND
GP	Poorly-graded GRAVEL Poorly-graded GRAVEL with SAND		
GW-GM	Well-graded GRAVEL with SILT Well-graded GRAVEL with SILT and SAND	CL-ML	SILTY CLAY SILTY CLAY with SAND SILTY CLAY with GRAVEL SANDY SILTY CLAY SANDY SILTY CLAY with GRAVEL GRAVELLY SILTY CLAY GRAVELLY SILTY CLAY with SAND
GW-GC	Well-graded GRAVEL with CLAY (or SILTY CLAY) Well-graded GRAVEL with CLAY and SAND (or SILTY CLAY and SAND)		
GP-GM	Poorly-graded GRAVEL with SILT Poorly-graded GRAVEL with SILT and SAND	ML	SILT SILT with SAND SILT with GRAVEL SANDY SILT SANDY SILT with GRAVEL GRAVELLY SILT GRAVELLY SILT with SAND
GP-GC	Poorly-graded GRAVEL with CLAY (or SILTY CLAY) Poorly-graded GRAVEL with CLAY and SAND (or SILTY CLAY and SAND)		
GM	SILTY GRAVEL SILTY GRAVEL with SAND	OL	ORGANIC lean CLAY ORGANIC lean CLAY with SAND ORGANIC lean CLAY with GRAVEL SANDY ORGANIC lean CLAY SANDY ORGANIC lean CLAY with GRAVEL GRAVELLY ORGANIC lean CLAY GRAVELLY ORGANIC lean CLAY with SAND
GC	CLAYEY GRAVEL CLAYEY GRAVEL with SAND		
GC-GM	SILTY, CLAYEY GRAVEL SILTY, CLAYEY GRAVEL with SAND	OL	ORGANIC SILT ORGANIC SILT with SAND ORGANIC SILT with GRAVEL SANDY ORGANIC SILT SANDY ORGANIC SILT with GRAVEL GRAVELLY ORGANIC SILT GRAVELLY ORGANIC SILT with SAND
SW	Well-graded SAND Well-graded SAND with GRAVEL		
SP	Poorly-graded SAND Poorly-graded SAND with GRAVEL	CH	Fat CLAY Fat CLAY with SAND Fat CLAY with GRAVEL SANDY fat CLAY SANDY fat CLAY with GRAVEL GRAVELLY fat CLAY GRAVELLY fat CLAY with SAND
SW-SM	Well-graded SAND with SILT Well-graded SAND with SILT and GRAVEL		
SW-SC	Well-graded SAND with CLAY (or SILTY CLAY) Well-graded SAND with CLAY and GRAVEL (or SILTY CLAY and GRAVEL)	MH	Elastic SILT Elastic SILT with SAND Elastic SILT with GRAVEL SANDY elastic SILT SANDY elastic SILT with GRAVEL GRAVELLY elastic SILT GRAVELLY elastic SILT with SAND
SP-SM	Poorly-graded SAND with SILT Poorly-graded SAND with SILT and GRAVEL		
SP-SC	Poorly-graded SAND with CLAY (or SILTY CLAY) Poorly-graded SAND with CLAY and GRAVEL (or SILTY CLAY and GRAVEL)	OH	ORGANIC fat CLAY ORGANIC fat CLAY with SAND ORGANIC fat CLAY with GRAVEL SANDY ORGANIC fat CLAY SANDY ORGANIC fat CLAY with GRAVEL GRAVELLY ORGANIC fat CLAY GRAVELLY ORGANIC fat CLAY with SAND
SM	SILTY SAND SILTY SAND with GRAVEL		
SC	CLAYEY SAND CLAYEY SAND with GRAVEL	OH	ORGANIC elastic SILT ORGANIC elastic SILT with SAND ORGANIC elastic SILT with GRAVEL SANDY ORGANIC elastic SILT SANDY ORGANIC elastic SILT with GRAVEL GRAVELLY ORGANIC elastic SILT GRAVELLY ORGANIC elastic SILT with SAND
SC-SM	SILTY, CLAYEY SAND SILTY, CLAYEY SAND with GRAVEL		
PT	PEAT	OL/OH	ORGANIC SOIL ORGANIC SOIL with SAND ORGANIC SOIL with GRAVEL SANDY ORGANIC SOIL SANDY ORGANIC SOIL with GRAVEL GRAVELLY ORGANIC SOIL GRAVELLY ORGANIC SOIL with SAND
	COBBLES COBBLES and BOULDERS BOULDERS		

FIELD AND LABORATORY TESTING

- (C) Consolidation (ASTM D 2435)
- (CL) Collapse Potential (ASTM D 5333)
- (CP) Compaction Curve (CTM 216)
- (CR) Corrosivity Testing (CTM 643, CTM 422, CTM 417)
- (CU) Consolidated Undrained Triaxial (ASTM D 4767)
- (DS) Direct Shear (ASTM D 3080)
- (EI) Expansion Index (ASTM D 4829)
- (M) Moisture Content (ASTM D 2216)
- (OC) Organic Content-% (ASTM D 2974)
- (P) Permeability (CTM 220)
- (PA) Particle Size Analysis (ASTM D 422)
- (PI) Plasticity Index (AASHTO T 90) Liquid Limit (AASHTO T 89)
- (PL) Point Load Index (ASTM D 5731)
- (PM) Pressure Meter
- (R) R-Value (CTM 301)
- (SE) Sand Equivalent (CTM 217)
- (SG) Specific Gravity (AASHTO T 100)
- (SL) Shrinkage Limit (ASTM D 427)
- (SW) Swell Potential (ASTM D 4546)
- (UC) Unconfined Compression-Soil (ASTM D 2166) Unconfined Compression-Rock (ASTM D 2938)
- (UU) Unconsolidated Undrained Triaxial (ASTM D 2850)
- (UW) Unit Weight (ASTM D 4767)

APPARENT DENSITY OF COHESIONLESS SOILS

Description	SPT N_{60} (Blows / 12 in.)
Very Loose	0 - 5
Loose	5 - 10
Medium Dense	10 - 30
Dense	30 - 50
Very Dense	Greater than 50

MOISTURE

Description	Criteria
Dry	No discernable moisture
Moist	Moisture present, but no free water
Wet	Visible free water

PERCENT OR PROPORTION OF SOILS

Description	Criteria
Trace	Particles are present but estimated to be less than 5%
Few	5% - 10%
Little	15% - 25%
Some	30% - 45%
Mostly	50% - 100%

PARTICLE SIZE

Description		Size (in.)
Boulder		Greater than 12
Cobble		3 - 12
Gravel	Coarse	3/4 - 3
	Fine	1/5 - 3/4
Sand	Coarse	1/16 - 1/5
	Medium	1/64 - 1/16
	Fine	1/300 - 1/64
Silt and Clay		Less than 1/300

ENGINEERING SERVICES

MATERIALS AND GEOTECHNICAL SERVICES

PREPARED BY: F. Nguyen

STATE OF CALIFORNIA DEPARTMENT OF TRANSPORTATION

DIVISION OF ENGINEERING SERVICES OFFICE OF GEOTECHNICAL DESIGN BRANCH X

BRIDGE NO.

POST MILE 0.0/R28.4

GEOTECHNICAL DESIGN REPORT-CMS 2

LOG OF TEST BORINGS 3 OF 3

GS LOTB SOIL LEGEND

ORIGINAL SCALE IN INCHES FOR REDUCED PLANS 0 1 2 3

UNIT: 3643
PROJECT NUMBER & PHASE: 04000207391
CONTRACT NO.: 04-153501

DISREGARD PRINTS BEARING EARLIER REVISION DATES

REVISION DATES 11-23-11 12-07-11 01-26-12

SHEET X OF X

FILE => 0400020739ui006.dgn

USERNAME => s124096 DATE PLOTTED => 10-MAY-2012 TIME PLOTTED => 05:50

DIST	COUNTY	ROUTE	POST MILES TOTAL PROJECT	SHEET No.	TOTAL SHEETS
04	Sol	80	0.0/R28.4	338	509

REGISTERED CIVIL ENGINEER 2-8-12 DATE

5-7-12
PLANS APPROVAL DATE

REGISTERED PROFESSIONAL ENGINEER
Samuel Awad
No. C64589
Exp. 6-30-13
CIVIL
STATE OF CALIFORNIA

The State of California or its officers or agents shall not be responsible for the accuracy or completeness of electronic copies of this plan sheet.

This LOTB sheet was prepared in accordance with the Caltrans Soil & Rock Logging, Classification, & Presentation Manual (2010 Edition).

BENCH MARK

CT 71
79.9′ Rt "C1" Line
Sta 432+79.3
N 1890081.4
E 6566947.9
Elev 185.467′
NAD83

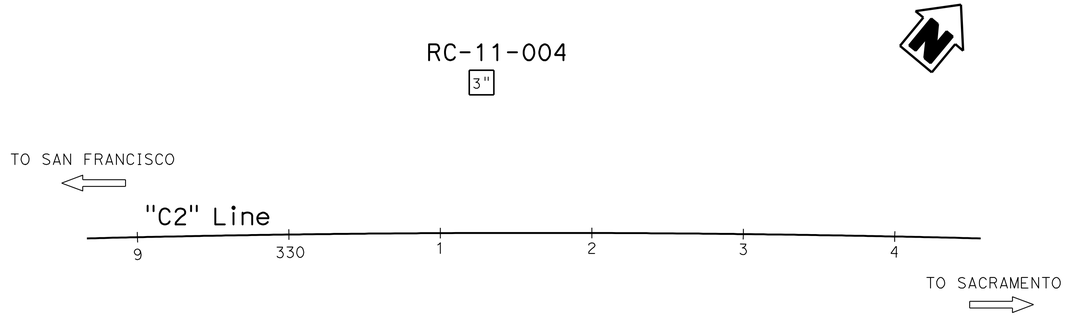

PLAN
1" = 50′

PROFILE
Horiz: 1" = 10′
Vert: 1" = 10′

ENGINEERING SERVICES	MATERIALS AND GEOTECHNICAL SERVICES	STATE OF CALIFORNIA DEPARTMENT OF TRANSPORTATION	DIVISION OF ENGINEERING SERVICES OFFICE OF GEOTECHNICAL DESIGN BRANCH X	BRIDGE NO. X / POST MILE 0.0/R28.4	GEOTECHNICAL DESIGN REPORT-CMS 3
FUNCTIONAL SUPERVISOR NAME: H. Nikoui	DRAWN BY: F. Nguyen / CHECKED BY: M. Gaffney	FIELD INVESTIGATION BY: S. Awad			LOG OF TEST BORINGS 1 OF 3

OGS CIVIL LOG OF TEST BORINGS SHEET

ORIGINAL SCALE IN INCHES FOR REDUCED PLANS 0 1 2 3

UNIT: 3643
PROJECT NUMBER & PHASE: 04000207391 CONTRACT NO.: 04-153501

DISREGARD PRINTS BEARING EARLIER REVISION DATES → REVISION DATES 11-25-11 02-08-12 01-19-12 SHEET X OF X

FILE => 0400020739ui007.dgn

USERNAME => s124496 DATE PLOTTED => 10-MAY-2012 TIME PLOTTED => 05:50

DIST	COUNTY	ROUTE	POST MILES TOTAL PROJECT	SHEET No.	TOTAL SHEETS
04	Sol	80	0.0/R28.4	339	509

REGISTERED CIVIL ENGINEER 2-8-12 DATE

5-7-12
PLANS APPROVAL DATE

REGISTERED PROFESSIONAL ENGINEER
Samuel Awad
No. C64589
Exp. 6-30-13
CIVIL
STATE OF CALIFORNIA

The State of California or its officers or agents shall not be responsible for the accuracy or completeness of electronic copies of this plan sheet.

REFERENCE: CALTRANS SOIL & ROCK LOGGING, CLASSIFICATION, AND PRESENTATION MANUAL (2010)

CEMENTATION

Description	Criteria
Weak	Crumbles or breaks with handling or little finger pressure.
Moderate	Crumbles or breaks with considerable finger pressure.
Strong	Will not crumble or break with finger pressure.

BOREHOLE IDENTIFICATION

Symbol	Hole Type	Description
Size	A	Auger Boring (hollow or solid stem bucket)
Size	R RW RC P	Rotary drilled boring (conventional) Rotary drilled with self-casing wire-line Rotary core with continuously-sampled, self-casing wire-line Rotary percussion boring (air)
Size	R RC	Rotary drilled diamond core Rotary drilled rock core
Size	HD HA	Hand driven (1-inch soil tube) Hand Auger
●	D	Dynamic Cone Penetration Boring
▲	CPT	Cone Penetration Test (ASTM D 5778)
⬚	O	Other (note on LOTB)

Note: Size in inches.

CONSISTENCY OF COHESIVE SOILS

Description	Shear Strength (tsf)	Pocket Penetrometer Measurement, PP, (tsf)	Torvane Measurement, TV, (tsf)	Vane Shear Measurement, VS, (tsf)
Very Soft	Less than 0.12	Less than 0.25	Less than 0.12	Less than 0.12
Soft	0.12 - 0.25	0.25 - 0.5	0.12 - 0.25	0.12 - 0.25
Medium Stiff	0.25 - 0.5	0.5 - 1	0.25 - 0.5	0.25 - 0.5
Stiff	0.5 - 1	1 - 2	0.5 - 1	0.5 - 1
Very Stiff	1 - 2	2 - 4	1 - 2	1 - 2
Hard	Greater than 2	Greater than 4	Greater than 2	Greater than 2

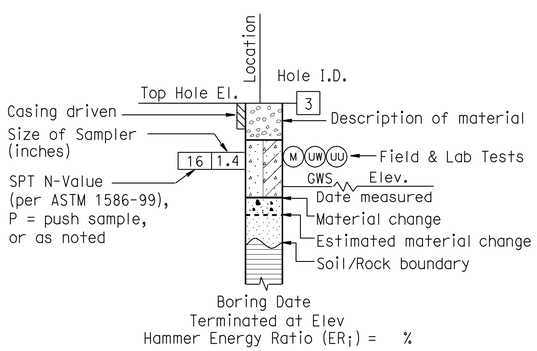

ROTARY BORING

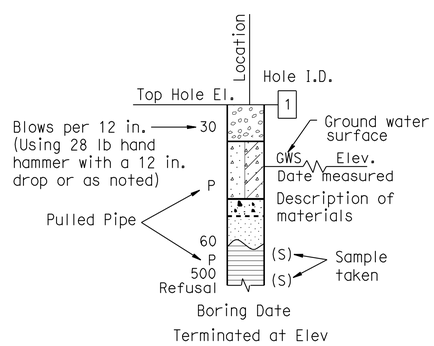

HAND BORING

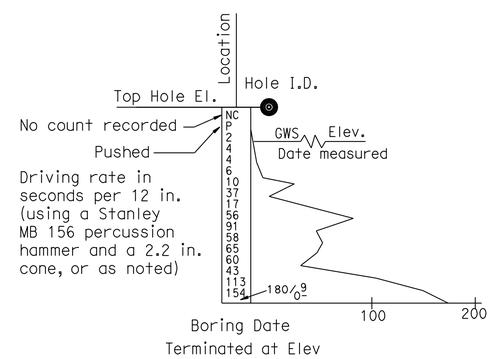

DYNAMIC CONE PENETRATION BORING

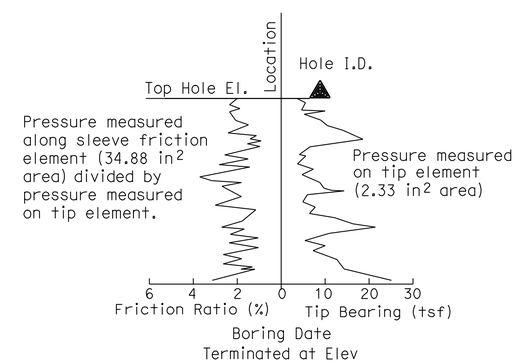

CONE PENETRATION TEST (CPT) BORING

ENGINEERING SERVICES	MATERIALS AND GEOTECHNICAL SERVICES	STATE OF CALIFORNIA DEPARTMENT OF TRANSPORTATION	DIVISION OF ENGINEERING SERVICES OFFICE OF GEOTECHNICAL DESIGN BRANCH X	BRIDGE NO. / POST MILE 0.0/R28.4	GEOTECHNICAL DESIGN REPORT-CMS 3 LOG OF TEST BORINGS 2 OF 3
	PREPARED BY: F. Nguyen				

GS LOTB SOIL LEGEND

ORIGINAL SCALE IN INCHES FOR REDUCED PLANS 0 1 2 3

UNIT: 3643
PROJECT NUMBER & PHASE: 04000207391 CONTRACT NO.: 04-153501

DISREGARD PRINTS BEARING EARLIER REVISION DATES → 11-29-11 12-09-11 01-26-12

SHEET X OF X

FILE => 0400020739ui008.dgn

USERNAME => s124496 DATE PLOTTED => 10-MAY-2012 TIME PLOTTED => 05:50

REFERENCE: CALTRANS SOIL & ROCK LOGGING, CLASSIFICATION, AND PRESENTATION MANUAL (2010)

DIST	COUNTY	ROUTE	POST MILES TOTAL PROJECT	SHEET No.	TOTAL SHEETS
04	Sol	80	0.0/R28.4	340	509

REGISTERED CIVIL ENGINEER 2-8-12 DATE

5-7-12
PLANS APPROVAL DATE

REGISTERED PROFESSIONAL ENGINEER Samuel Awad No. C64589 Exp. 6-30-13 CIVIL STATE OF CALIFORNIA

The State of California or its officers or agents shall not be responsible for the accuracy or completeness of electronic copies of this plan sheet.

GROUP SYMBOLS AND NAMES

Graphic/Symbol	Group Names	Graphic/Symbol	Group Names
GW	Well-graded GRAVEL Well-graded GRAVEL with SAND	CL	Lean CLAY Lean CLAY with SAND Lean CLAY with GRAVEL SANDY lean CLAY SANDY lean CLAY with GRAVEL GRAVELLY lean CLAY GRAVELLY lean CLAY with SAND
GP	Poorly-graded GRAVEL Poorly-graded GRAVEL with SAND		
GW-GM	Well-graded GRAVEL with SILT Well-graded GRAVEL with SILT and SAND	CL-ML	SILTY CLAY SILTY CLAY with SAND SILTY CLAY with GRAVEL SANDY SILTY CLAY SANDY SILTY CLAY with GRAVEL GRAVELLY SILTY CLAY GRAVELLY SILTY CLAY with SAND
GW-GC	Well-graded GRAVEL with CLAY (or SILTY CLAY) Well-graded GRAVEL with CLAY and SAND (or SILTY CLAY and SAND)		
GP-GM	Poorly-graded GRAVEL with SILT Poorly-graded GRAVEL with SILT and SAND	ML	SILT SILT with SAND SILT with GRAVEL SANDY SILT SANDY SILT with GRAVEL GRAVELLY SILT GRAVELLY SILT with SAND
GP-GC	Poorly-graded GRAVEL with CLAY (or SILTY CLAY) Poorly-graded GRAVEL with CLAY and SAND (or SILTY CLAY and SAND)		
GM	SILTY GRAVEL SILTY GRAVEL with SAND	OL	ORGANIC lean CLAY ORGANIC lean CLAY with SAND ORGANIC lean CLAY with GRAVEL SANDY ORGANIC lean CLAY SANDY ORGANIC lean CLAY with GRAVEL GRAVELLY ORGANIC lean CLAY GRAVELLY ORGANIC lean CLAY with SAND
GC	CLAYEY GRAVEL CLAYEY GRAVEL with SAND		
GC-GM	SILTY, CLAYEY GRAVEL SILTY, CLAYEY GRAVEL with SAND	OL	ORGANIC SILT ORGANIC SILT with SAND ORGANIC SILT with GRAVEL SANDY ORGANIC SILT SANDY ORGANIC SILT with GRAVEL GRAVELLY ORGANIC SILT GRAVELLY ORGANIC SILT with SAND
SW	Well-graded SAND Well-graded SAND with GRAVEL		
SP	Poorly-graded SAND Poorly-graded SAND with GRAVEL	CH	Fat CLAY Fat CLAY with SAND Fat CLAY with GRAVEL SANDY fat CLAY SANDY fat CLAY with GRAVEL GRAVELLY fat CLAY GRAVELLY fat CLAY with SAND
SW-SM	Well-graded SAND with SILT Well-graded SAND with SILT and GRAVEL		
SW-SC	Well-graded SAND with CLAY (or SILTY CLAY) Well-graded SAND with CLAY and GRAVEL (or SILTY CLAY and GRAVEL)	MH	Elastic SILT Elastic SILT with SAND Elastic SILT with GRAVEL SANDY elastic SILT SANDY elastic SILT with GRAVEL GRAVELLY elastic SILT GRAVELLY elastic SILT with SAND
SP-SM	Poorly-graded SAND with SILT Poorly-graded SAND with SILT and GRAVEL		
SP-SC	Poorly-graded SAND with CLAY (or SILTY CLAY) Poorly-graded SAND with CLAY and GRAVEL (or SILTY CLAY and GRAVEL)	OH	ORGANIC fat CLAY ORGANIC fat CLAY with SAND ORGANIC fat CLAY with GRAVEL SANDY ORGANIC fat CLAY SANDY ORGANIC fat CLAY with GRAVEL GRAVELLY ORGANIC fat CLAY GRAVELLY ORGANIC fat CLAY with SAND
SM	SILTY SAND SILTY SAND with GRAVEL		
SC	CLAYEY SAND CLAYEY SAND with GRAVEL	OH	ORGANIC elastic SILT ORGANIC elastic SILT with SAND ORGANIC elastic SILT with GRAVEL SANDY ORGANIC elastic SILT SANDY ORGANIC elastic SILT with GRAVEL GRAVELLY ORGANIC elastic SILT GRAVELLY ORGANIC elastic SILT with SAND
SC-SM	SILTY, CLAYEY SAND SILTY, CLAYEY SAND with GRAVEL		
PT	PEAT	OL/OH	ORGANIC SOIL ORGANIC SOIL with SAND ORGANIC SOIL with GRAVEL SANDY ORGANIC SOIL SANDY ORGANIC SOIL with GRAVEL GRAVELLY ORGANIC SOIL GRAVELLY ORGANIC SOIL with SAND
	COBBLES COBBLES and BOULDERS BOULDERS		

FIELD AND LABORATORY TESTING

- (C) Consolidation (ASTM D 2435)
- (CL) Collapse Potential (ASTM D 5333)
- (CP) Compaction Curve (CTM 216)
- (CR) Corrosivity Testing (CTM 643, CTM 422, CTM 417)
- (CU) Consolidated Undrained Triaxial (ASTM D 4767)
- (DS) Direct Shear (ASTM D 3080)
- (EI) Expansion Index (ASTM D 4829)
- (M) Moisture Content (ASTM D 2216)
- (OC) Organic Content-% (ASTM D 2974)
- (P) Permeability (CTM 220)
- (PA) Particle Size Analysis (ASTM D 422)
- (PI) Plasticity Index (AASHTO T 90) Liquid Limit (AASHTO T 89)
- (PL) Point Load Index (ASTM D 5731)
- (PM) Pressure Meter
- (R) R-Value (CTM 301)
- (SE) Sand Equivalent (CTM 217)
- (SG) Specific Gravity (AASHTO T 100)
- (SL) Shrinkage Limit (ASTM D 427)
- (SW) Swell Potential (ASTM D 4546)
- (UC) Unconfined Compression-Soil (ASTM D 2166) Unconfined Compression-Rock (ASTM D 2938)
- (UU) Unconsolidated Undrained Triaxial (ASTM D 2850)
- (UW) Unit Weight (ASTM D 4767)

APPARENT DENSITY OF COHESIONLESS SOILS

Description	SPT N_{60} (Blows / 12 in.)
Very Loose	0 - 5
Loose	5 - 10
Medium Dense	10 - 30
Dense	30 - 50
Very Dense	Greater than 50

MOISTURE

Description	Criteria
Dry	No discernable moisture
Moist	Moisture present, but no free water
Wet	Visible free water

PERCENT OR PROPORTION OF SOILS

Description	Criteria
Trace	Particles are present but estimated to be less than 5%
Few	5% - 10%
Little	15% - 25%
Some	30% - 45%
Mostly	50% - 100%

PARTICLE SIZE

Description		Size (in.)
Boulder		Greater than 12
Cobble		3 - 12
Gravel	Coarse	3/4 - 3
	Fine	1/5 - 3/4
Sand	Coarse	1/16 - 1/5
	Medium	1/64 - 1/16
	Fine	1/300 - 1/64
Silt and Clay		Less than 1/300

ENGINEERING SERVICES

MATERIALS AND GEOTECHNICAL SERVICES

PREPARED BY: F. Nguyen

STATE OF CALIFORNIA DEPARTMENT OF TRANSPORTATION

DIVISION OF ENGINEERING SERVICES OFFICE OF GEOTECHNICAL DESIGN BRANCH X

BRIDGE NO.

POST MILE 0.0/R28.4

GEOTECHNICAL DESIGN REPORT-CMS 3

LOG OF TEST BORINGS 3 OF 3

GS LOTB SOIL LEGEND

ORIGINAL SCALE IN INCHES FOR REDUCED PLANS 0 1 2 3

UNIT: 3643
PROJECT NUMBER & PHASE: 04000207391
CONTRACT NO.: 04-153501

DISREGARD PRINTS BEARING EARLIER REVISION DATES

REVISION DATES 11-22-11 12-02-11 01-26-12 SHEET X OF X

FILE => 0400020739ui009.dgn

USERNAME => s124496 DATE PLOTTED => 10-MAY-2012 TIME PLOTTED => 05:50

DIST	COUNTY	ROUTE	POST MILES TOTAL PROJECT	SHEET No.	TOTAL SHEETS
04	Sol	80	0.0/R28.4	341	509

REGISTERED CIVIL ENGINEER 2-8-12 DATE

5-7-12
PLANS APPROVAL DATE

REGISTERED PROFESSIONAL ENGINEER
Samuel Awad
No. C64589
Exp. 6-30-13
CIVIL
STATE OF CALIFORNIA

The State of California or its officers or agents shall not be responsible for the accuracy or completeness of electronic copies of this plan sheet.

This LOTB sheet was prepared in accordance with the Caltrans Soil & Rock Logging, Classification, & Presentation Manual (2010 Edition).

BENCH MARK

CT 72
82.7′ Rt "C1" Line
Sta 444+32.9
N 1890809.7
E 6567872.5
Elev 189.706′
NAD83

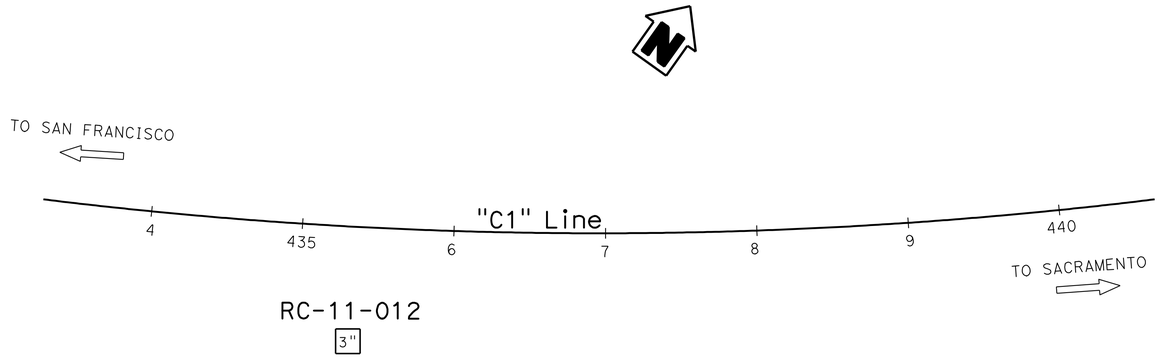

PLAN

1" = 50′

Note: No ground water encountered during field investigation.

PROFILE

Horiz: 1" = 10′
Vert: 1" = 10′

ENGINEERING SERVICES	MATERIALS AND GEOTECHNICAL SERVICES	STATE OF CALIFORNIA DEPARTMENT OF TRANSPORTATION	DIVISION OF ENGINEERING SERVICES OFFICE OF GEOTECHNICAL DESIGN BRANCH X	BRIDGE NO. / POST MILE 0.0/R28.4	GEOTECHNICAL DESIGN REPORT-CMS 4 LOG OF TEST BORINGS 1 OF 3
FUNCTIONAL SUPERVISOR NAME: H. Nikoui	DRAWN BY: F. Nguyen CHECKED BY: M. Gaffney	FIELD INVESTIGATION BY: S. Awad			

OGS CIVIL LOG OF TEST BORINGS SHEET

ORIGINAL SCALE IN INCHES FOR REDUCED PLANS 0 1 2 3

UNIT: 3643
PROJECT NUMBER & PHASE: 04000207391 CONTRACT NO.: 04-153501

DISREGARD PRINTS BEARING EARLIER REVISION DATES → 11-25-11 02-08-12 01-18-12 REVISION DATES SHEET X OF X

FILE => 0400020739ui010.dgn

USERNAME => s124436 DATE PLOTTED => 10-MAY-2012 TIME PLOTTED => 05:50

DIST	COUNTY	ROUTE	POST MILES TOTAL PROJECT	SHEET No.	TOTAL SHEETS
04	Sol	80	0.0/R28.4	342	509

REGISTERED CIVIL ENGINEER 2-8-12 DATE

5-7-12
PLANS APPROVAL DATE

REGISTERED PROFESSIONAL ENGINEER Samuel Awad No. C64589 Exp. 6-30-13 CIVIL STATE OF CALIFORNIA

The State of California or its officers or agents shall not be responsible for the accuracy or completeness of electronic copies of this plan sheet.

REFERENCE: CALTRANS SOIL & ROCK LOGGING, CLASSIFICATION, AND PRESENTATION MANUAL (2010)

CEMENTATION

Description	Criteria
Weak	Crumbles or breaks with handling or little finger pressure.
Moderate	Crumbles or breaks with considerable finger pressure.
Strong	Will not crumble or break with finger pressure.

BOREHOLE IDENTIFICATION

Symbol	Hole Type	Description
Size	A	Auger Boring (hollow or solid stem bucket)
Size	R RW RC P	Rotary drilled boring (conventional) Rotary drilled with self-casing wire-line Rotary core with continuously-sampled, self-casing wire-line Rotary percussion boring (air)
Size	R RC	Rotary drilled diamond core Rotary drilled rock core
Size	HD HA	Hand driven (1-inch soil tube) Hand Auger
●	D	Dynamic Cone Penetration Boring
▲	CPT	Cone Penetration Test (ASTM D 5778)
⬚	O	Other (note on LOTB)

Note: Size in inches.

CONSISTENCY OF COHESIVE SOILS

Description	Shear Strength (tsf)	Pocket Penetrometer Measurement, PP, (tsf)	Torvane Measurement, TV, (tsf)	Vane Shear Measurement, VS, (tsf)
Very Soft	Less than 0.12	Less than 0.25	Less than 0.12	Less than 0.12
Soft	0.12 - 0.25	0.25 - 0.5	0.12 - 0.25	0.12 - 0.25
Medium Stiff	0.25 - 0.5	0.5 - 1	0.25 - 0.5	0.25 - 0.5
Stiff	0.5 - 1	1 - 2	0.5 - 1	0.5 - 1
Very Stiff	1 - 2	2 - 4	1 - 2	1 - 2
Hard	Greater than 2	Greater than 4	Greater than 2	Greater than 2

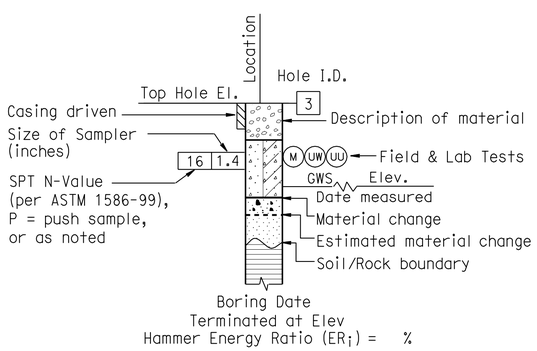

ROTARY BORING

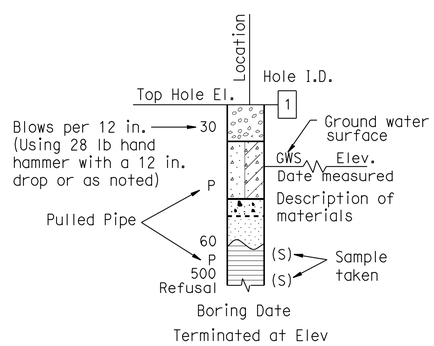

HAND BORING

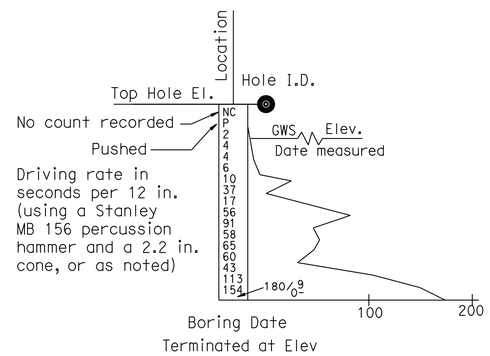

DYNAMIC CONE PENETRATION BORING

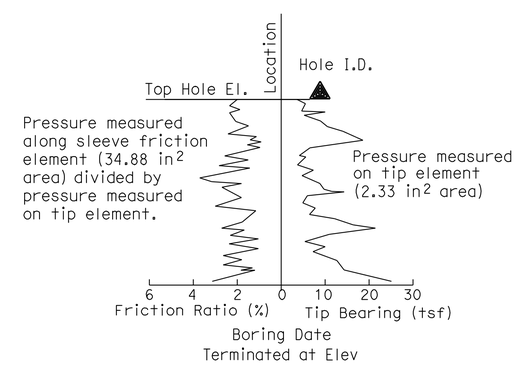

CONE PENETRATION TEST (CPT) BORING

ENGINEERING SERVICES	MATERIALS AND GEOTECHNICAL SERVICES	STATE OF CALIFORNIA DEPARTMENT OF TRANSPORTATION	DIVISION OF ENGINEERING SERVICES OFFICE OF GEOTECHNICAL DESIGN BRANCH X	BRIDGE NO. / POST MILE 0.0/R28.4	GEOTECHNICAL DESIGN REPORT-CMS 4 LOG OF TEST BORINGS 2 OF 3
	PREPARED BY: F. Nguyen				

GS LOTB SOIL LEGEND

ORIGINAL SCALE IN INCHES FOR REDUCED PLANS 0 1 2 3

UNIT: 3643
PROJECT NUMBER & PHASE: 04000207391 CONTRACT NO.: 04-153501

DISREGARD PRINTS BEARING EARLIER REVISION DATES

REVISION DATES 11-25-11 12-07-11 01-26-12 02-08-12 SHEET X OF X

FILE => 0400020739ui011.dgn

USERNAME => s124496 DATE PLOTTED => 10-MAY-2012 TIME PLOTTED => 05:50

REFERENCE: CALTRANS SOIL & ROCK LOGGING, CLASSIFICATION, AND PRESENTATION MANUAL (2010)

DIST	COUNTY	ROUTE	POST MILES TOTAL PROJECT	SHEET No.	TOTAL SHEETS
04	Sol	80	0.0/R28.4	343	509

REGISTERED CIVIL ENGINEER 2-8-12 DATE

5-7-12
PLANS APPROVAL DATE

REGISTERED PROFESSIONAL ENGINEER Samuel Awad No. C64589 Exp. 6-30-13 CIVIL STATE OF CALIFORNIA

The State of California or its officers or agents shall not be responsible for the accuracy or completeness of electronic copies of this plan sheet.

GROUP SYMBOLS AND NAMES

Graphic/Symbol	Group Names	Graphic/Symbol	Group Names
GW	Well-graded GRAVEL Well-graded GRAVEL with SAND	CL	Lean CLAY Lean CLAY with SAND Lean CLAY with GRAVEL SANDY lean CLAY SANDY lean CLAY with GRAVEL GRAVELLY lean CLAY GRAVELLY lean CLAY with SAND
GP	Poorly-graded GRAVEL Poorly-graded GRAVEL with SAND		
GW-GM	Well-graded GRAVEL with SILT Well-graded GRAVEL with SILT and SAND	CL-ML	SILTY CLAY SILTY CLAY with SAND SILTY CLAY with GRAVEL SANDY SILTY CLAY SANDY SILTY CLAY with GRAVEL GRAVELLY SILTY CLAY GRAVELLY SILTY CLAY with SAND
GW-GC	Well-graded GRAVEL with CLAY (or SILTY CLAY) Well-graded GRAVEL with CLAY and SAND (or SILTY CLAY and SAND)		
GP-GM	Poorly-graded GRAVEL with SILT Poorly-graded GRAVEL with SILT and SAND	ML	SILT SILT with SAND SILT with GRAVEL SANDY SILT SANDY SILT with GRAVEL GRAVELLY SILT GRAVELLY SILT with SAND
GP-GC	Poorly-graded GRAVEL with CLAY (or SILTY CLAY) Poorly-graded GRAVEL with CLAY and SAND (or SILTY CLAY and SAND)		
GM	SILTY GRAVEL SILTY GRAVEL with SAND	OL	ORGANIC lean CLAY ORGANIC lean CLAY with SAND ORGANIC lean CLAY with GRAVEL SANDY ORGANIC lean CLAY SANDY ORGANIC lean CLAY with GRAVEL GRAVELLY ORGANIC lean CLAY GRAVELLY ORGANIC lean CLAY with SAND
GC	CLAYEY GRAVEL CLAYEY GRAVEL with SAND		
GC-GM	SILTY, CLAYEY GRAVEL SILTY, CLAYEY GRAVEL with SAND	OL	ORGANIC SILT ORGANIC SILT with SAND ORGANIC SILT with GRAVEL SANDY ORGANIC SILT SANDY ORGANIC SILT with GRAVEL GRAVELLY ORGANIC SILT GRAVELLY ORGANIC SILT with SAND
SW	Well-graded SAND Well-graded SAND with GRAVEL		
SP	Poorly-graded SAND Poorly-graded SAND with GRAVEL	CH	Fat CLAY Fat CLAY with SAND Fat CLAY with GRAVEL SANDY fat CLAY SANDY fat CLAY with GRAVEL GRAVELLY fat CLAY GRAVELLY fat CLAY with SAND
SW-SM	Well-graded SAND with SILT Well-graded SAND with SILT and GRAVEL		
SW-SC	Well-graded SAND with CLAY (or SILTY CLAY) Well-graded SAND with CLAY and GRAVEL (or SILTY CLAY and GRAVEL)	MH	Elastic SILT Elastic SILT with SAND Elastic SILT with GRAVEL SANDY elastic SILT SANDY elastic SILT with GRAVEL GRAVELLY elastic SILT GRAVELLY elastic SILT with SAND
SP-SM	Poorly-graded SAND with SILT Poorly-graded SAND with SILT and GRAVEL		
SP-SC	Poorly-graded SAND with CLAY (or SILTY CLAY) Poorly-graded SAND with CLAY and GRAVEL (or SILTY CLAY and GRAVEL)	OH	ORGANIC fat CLAY ORGANIC fat CLAY with SAND ORGANIC fat CLAY with GRAVEL SANDY ORGANIC fat CLAY SANDY ORGANIC fat CLAY with GRAVEL GRAVELLY ORGANIC fat CLAY GRAVELLY ORGANIC fat CLAY with SAND
SM	SILTY SAND SILTY SAND with GRAVEL		
SC	CLAYEY SAND CLAYEY SAND with GRAVEL	OH	ORGANIC elastic SILT ORGANIC elastic SILT with SAND ORGANIC elastic SILT with GRAVEL SANDY ORGANIC elastic SILT SANDY ORGANIC elastic SILT with GRAVEL GRAVELLY ORGANIC elastic SILT GRAVELLY ORGANIC elastic SILT with SAND
SC-SM	SILTY, CLAYEY SAND SILTY, CLAYEY SAND with GRAVEL		
PT	PEAT	OL/OH	ORGANIC SOIL ORGANIC SOIL with SAND ORGANIC SOIL with GRAVEL SANDY ORGANIC SOIL SANDY ORGANIC SOIL with GRAVEL GRAVELLY ORGANIC SOIL GRAVELLY ORGANIC SOIL with SAND
	COBBLES COBBLES and BOULDERS BOULDERS		

FIELD AND LABORATORY TESTING

- (C) Consolidation (ASTM D 2435)
- (CL) Collapse Potential (ASTM D 5333)
- (CP) Compaction Curve (CTM 216)
- (CR) Corrosivity Testing (CTM 643, CTM 422, CTM 417)
- (CU) Consolidated Undrained Triaxial (ASTM D 4767)
- (DS) Direct Shear (ASTM D 3080)
- (EI) Expansion Index (ASTM D 4829)
- (M) Moisture Content (ASTM D 2216)
- (OC) Organic Content-% (ASTM D 2974)
- (P) Permeability (CTM 220)
- (PA) Particle Size Analysis (ASTM D 422)
- (PI) Plasticity Index (AASHTO T 90) Liquid Limit (AASHTO T 89)
- (PL) Point Load Index (ASTM D 5731)
- (PM) Pressure Meter
- (R) R-Value (CTM 301)
- (SE) Sand Equivalent (CTM 217)
- (SG) Specific Gravity (AASHTO T 100)
- (SL) Shrinkage Limit (ASTM D 427)
- (SW) Swell Potential (ASTM D 4546)
- (UC) Unconfined Compression-Soil (ASTM D 2166) Unconfined Compression-Rock (ASTM D 2938)
- (UU) Unconsolidated Undrained Triaxial (ASTM D 2850)
- (UW) Unit Weight (ASTM D 4767)

APPARENT DENSITY OF COHESIONLESS SOILS

Description	SPT N_{60} (Blows / 12 in.)
Very Loose	0 - 5
Loose	5 - 10
Medium Dense	10 - 30
Dense	30 - 50
Very Dense	Greater than 50

MOISTURE

Description	Criteria
Dry	No discernable moisture
Moist	Moisture present, but no free water
Wet	Visible free water

PERCENT OR PROPORTION OF SOILS

Description	Criteria
Trace	Particles are present but estimated to be less than 5%
Few	5% - 10%
Little	15% - 25%
Some	30% - 45%
Mostly	50% - 100%

PARTICLE SIZE

Description		Size (in.)
Boulder		Greater than 12
Cobble		3 - 12
Gravel	Coarse	3/4 - 3
	Fine	1/5 - 3/4
Sand	Coarse	1/16 - 1/5
	Medium	1/64 - 1/16
	Fine	1/300 - 1/64
Silt and Clay		Less than 1/300

ENGINEERING SERVICES

MATERIALS AND GEOTECHNICAL SERVICES

PREPARED BY: F. Nguyen

STATE OF CALIFORNIA DEPARTMENT OF TRANSPORTATION

DIVISION OF ENGINEERING SERVICES OFFICE OF GEOTECHNICAL DESIGN BRANCH X

BRIDGE NO.

POST MILE 0.0/R28.4

GEOTECHNICAL DESIGN REPORT-CMS 4
LOG OF TEST BORINGS 3 OF 3

GS LOTB SOIL LEGEND

ORIGINAL SCALE IN INCHES FOR REDUCED PLANS 0 1 2 3

UNIT: 3643
PROJECT NUMBER & PHASE: 04000207391
CONTRACT NO.: 04-153501

DISREGARD PRINTS BEARING EARLIER REVISION DATES

REVISION DATES 11-23-11 12-07-11 01-26-12 02-08-12 SHEET X OF X

FILE => 0400020739ui012.dgn

USERNAME => s124096 DATE PLOTTED => 10-MAY-2012 TIME PLOTTED => 05:50

Dist	COUNTY	ROUTE	POST MILES TOTAL PROJECT	SHEET No.	TOTAL SHEETS
04	Sol	80	0.0/R28.4	344	509

REGISTERED CIVIL ENGINEER 2-28-12 DATE

5-7-12
PLANS APPROVAL DATE

REGISTERED PROFESSIONAL ENGINEER Dennis B. Ocampo No. 53523 Exp. 6-30-13 CIVIL STATE OF CALIFORNIA

THE STATE OF CALIFORNIA OR ITS OFFICERS OR AGENTS SHALL NOT BE RESPONSIBLE FOR THE ACCURACY OR COMPLETENESS OF SCANNED COPIES OF THIS PLAN SHEET.

EXTEND IRRIGATION CROSSOVER

LOCATION		SIDE		EXTEND CONDUIT SIZE (IN)	CB	OL	WATERLINE CROSSOVER SIZE (IN) (N)	SPRINKLER CONTROL CROSSOVER SIZE (IN) (N)
LINE	STATION	L+	R+	10				
				LENGTH (LF)				
RAMP A	97+00	X	X	30		X	2½	2
TOTAL				30				

(N) NOT A SEPERATE PAY ITEM FOR INFORMATION ONLY

X DENOTE REQUIREMENT

PLACE HMA DIKE

STATION LIMITS	TYPE A	TYPE C	TYPE E	TYPE F	HMA (A)
	LF				TON
C6 262+53.13 TO 269+00.00		65	244	38	7
C6 269+00.00 TO 283+50.00			1450		38
C6 283+50.00 TO 284+53.13			103		3
C6 290+20.00 TO 291+68.00			148		4
RAMP A 90+60.00 TO 96+50.00		63	480	47	16
RAMP A 96+50.00 TO 107+50.00		65	997	38	27
RAMP A 107+50.00 TO 109+69.42		65	116	38	4
ECD 11+00 TO 18+78.57	400	75	175	429	29
WA 13+00 TO 21+00			800		21
ENT 10+80 TO 11+80			100		3
TOTAL	400	333	4613	590	152

ABBREVIATIONS:

CB - COUPLING BAND
OL - OVERLAP

ROADWAY QUANTITIES

STATION	ROADWAY EXCAVATION	ROADWAY EXCAVATION (TYPE Y-1) ADL	IMPORTED BORROW	RHMA-G	HMA(TYPE A)	HMA (OGFC)	CLASS 3 AB	CLASS 4 AS	LCB	TACK COAT	COLD PLANE ASPHALT CONCRETE PAVEMENT	CRACK EXISTING CONCRETE PAVEMENT	GEOSYNTHETIC PAVEMENT INTERLAYER
	CY			TON			CY			TON	SQYD		
A 84+53.58 TO 109+69.42	4933		4410		3827	98		3030	1370	8	729		
C6 262+53.13 TO 284+53.31	4815		1552		2400	342		2792	1269	7			
RL 531+00 TO 542+00	1900		140	640	1000			950	430	3	240	2400	2400
ECD 10+00 TO 18+26.57	1601	267	3173		761		505	703		7	240		
WA 13+00 TO 21+00	1707	494	9		742		503	700		10	228		
ENT 10+00 TO 19+00	1479		100		1525		504	650		2	1540		
FROM MVP	504	612			359.6		886.6						
FROM DIKE					152								
FROM HMA OVERSIZE DRAIN					2								
FROM HMA SIDEGUTTER					8		6						
TOTAL	16975	1373	9384	640	10777	440	2404.6	8825	3069	37	2977	2400	2400

SUMMARY OF QUANTIES

Q-1

REVISED BY | DATE REVISED
DENNIS OCAMPO | JAY FONG
CALCULATED-DESIGNED BY | CHECKED BY
FUNCTIONAL SUPERVISOR: VINCE BONNER

STATE OF CALIFORNIA - DEPARTMENT OF TRANSPORTATION
Caltrans® DESIGN

LAST REVISION 03-03-12 | DATE PLOTTED => 11-MAY-2012 | TIME PLOTTED => 13:31

Dist	COUNTY	ROUTE	POST MILES TOTAL PROJECT	SHEET No.	TOTAL SHEETS
04	Sol	80	0.0/R28.4	345	509

REGISTERED CIVIL ENGINEER 2-28-12 DATE

5-7-12
PLANS APPROVAL DATE

REGISTERED PROFESSIONAL ENGINEER Dennis B. Ocampo No. 53523 Exp. 6-30-13 CIVIL STATE OF CALIFORNIA

THE STATE OF CALIFORNIA OR ITS OFFICERS OR AGENTS SHALL NOT BE RESPONSIBLE FOR THE ACCURACY OR COMPLETENESS OF SCANNED COPIES OF THIS PLAN SHEET.

TEMPORARY REINFORCED SILT FENCE

STATION	LOCATION	LENGTH
		LF
C5 121+50 TO 126+54	R+	458
ERS 11+00 TO 244+00	R+	586
C6 278+89 TO 283+43	R+	538
ECP 16+20 TO C6 306+91	R+	1030
SV 32+00 TO 19+53	L+	928
WAC 11+90 TO 15+20	L+	330
L 151+29 TO 158+32	L+	796
L 162+35 TO 173+82	L+	1147
C2 201+00 TO RC 624+16.43	L+	2053
C2 283+00 TO 285+30	R+	700
M 160+76 TO 162+55	R+	179
M 184+40 TO 189+13	R+	473
M 202+76 TO 204+89	R+	213
M 257+00 TO 258+58	R+	158
M 368+00 TO C1 116+16+26	R+	743
RCL1 104+20 TO TP 110+80	L+	660
C1 160+55 TP 162+39	L+	300
C1 160+55 TO 163+81	L+	326
C1 159+40 TO 187+22	R+	2782
WCG 14+05 TO 15+90	R+	250
ECG 12+00 TO 15+80	L+	380
C1 307+43 TO 310+43	L+	900
WA 10+00 TO 14+86	L+	486
D 380+20 TO 392+00	R+	1180
EDS 10+72 TO 16+54	R+	582
WM 22+00 TO 27+61	L+	561
C1 461+76 TO 473+86	R+	1210
C1 482+79 TO 487+70	L+	640
C1 505+96 TO 506+74	L+	78
RL 535+38 TO 541+37	L+	599
TOTAL		21266

MAINTENANCE VEHICLE PULLOUT

STATION	LOCATION	HMA (TYPE A)	CLASS 3 AB	ROADWAY EXCAVATION	ROADWAY EXCAVATION (TYPE Y-1) ADL
		TON	CY		
C5 228+00 TO 228+85	L+	11.6	28.6	36	
ECP 20+71 TO 21+63	R+	11.6	28.6	36	
SV 42+66 TO 43+51	R+	11.6	28.6		36
C6 397+50 TO 398+35	L+	11.6	28.6		36
EAC 14+84 TO 15+69	R+	11.6	28.6	36	
L 196+00 TO 196+85	L+	11.6	28.6		36
C2 188+48 TO 189+33	L+	11.6	28.6		36
C2 330+16 TO 331+01	R+	11.6	28.6	36	
M 120+20 TO 121+05	L+	11.6	28.6	36	
M 141+38 TO 142+23	R+	11.6	28.6	36	
M 160+76 TO 161+61	R+	11.6	28.6	36	
M 203+21 TO 204+06	R+	11.6	28.6		36
M 277+58 TO 278+43	R+	11.6	28.6		36
M 317+32 TO 318+17	R+	11.6	28.6	36	
C1 214+04 TO 214+89	L+	11.6	28.6		36
WCG 14+80 TO 15+65	L+	11.6	28.6		36
C1 269+44 TO 270+29	R+	11.6	28.6	36	
EPV 13+40 TO 14+25	R+	11.6	28.6		36
WA 15+89 TO 16+74	R+	11.6	28.6		36
D 386+00 TO 386+85	L+	11.6	28.6		36
EDS 12+20 TO 13+05	L+	11.6	28.6		36
C1 433+15 TO 434+00	R+	11.6	28.6		36
SAD 17+35 TO 18+20	L+	11.6	28.6	36	
NAD 20+00 TO 20+85	R+	11.6	28.6	36	
SF 23+88 TO 24+79	R+	11.6	28.6	36	
C6 282+92 TO 283+77	R+	11.6	28.6		36
C1 159+26 TO 160+11	L+	11.6	28.6	36	
C1 308+97 TO 309+82	L+	11.6	28.6		36
WPC 17+35 TO 18+20	L+	11.6	28.6	36	
C1 345+42 TO 346+27	L+	11.6	28.6		36
WM 24+00 TO 24+85	R+	11.6	28.6		36
TOTAL		359.6	886.6	504	612

SUMMARY OF QUANTIES

Q-2

STATE OF CALIFORNIA - DEPARTMENT OF TRANSPORTATION
Caltrans® DESIGN

FUNCTIONAL SUPERVISOR: VINCE BONNER
CALCULATED-DESIGNED BY: DENNIS OCAMPO
CHECKED BY: JAY FONG
REVISED BY / DATE REVISED

LAST REVISION 03-03-12
DATE PLOTTED => 10-MAY-2012
TIME PLOTTED => 06:30

Dist	COUNTY	ROUTE	POST MILES TOTAL PROJECT	SHEET No.	TOTAL SHEETS
04	Sol	80	0.0/R28.4	346	509

REGISTERED CIVIL ENGINEER 2-28-12 DATE

5-7-12
PLANS APPROVAL DATE

REGISTERED PROFESSIONAL ENGINEER Dennis B. Ocampo No. 53523 Exp. 6-30-13 CIVIL STATE OF CALIFORNIA

THE STATE OF CALIFORNIA OR ITS OFFICERS OR AGENTS SHALL NOT BE RESPONSIBLE FOR THE ACCURACY OR COMPLETENESS OF SCANNED COPIES OF THIS PLAN SHEET.

CONCRETE BARRIER

STATION LIMITS	TYPE 60GE	TYPE 60C
	LF	
RL 532+83.95 TO 534+00.83	117	
RL 534+00.83 TO 534+16.00		15
RL 534+16.00 TO 537+50.00		334
TOTAL	117	349

MINOR CONCRETE (Misc CONSTRUCTION)

STATION LIMITS	LOCATION	CURB	GORE PAVING
		CY	
RL 533+80 TO 536+50	R+	1	
RL 533+80 TO 537+50	R+	14	55
TOTAL		69	

REMOVE AC DIKE

STATION LIMITS	LENGTH
	LF
EAC 14+84 TO 15+69	85
M 277+58 TO 278+43	85
M 317+32 TO 318+17	85
C1 159+26 TO 160+11	85
WCG 14+80 TO 15+65	85
D 386+00 TO 386+85	85
ECD 10+00 TO 18+28	654
WA 13+00 TO 21+00	800
WM 24+00 TO 24+85	85
TOTAL	2049

CHAIN LINK FENCE (TYPE CL-6)

STATION LIMITS	LOCATION	LENGTH
		LF
ENT 10+84 TO 15+00	RT	416
TOTAL		416

FENCE (TYPE WM, METAL POST)

STATION LIMITS	LENGTH
	LF
WA 16+34 TO 21+00	466
TOTAL	466

REMOVE FENCE

STATION LIMITS	LOCATION	LENGTH
		LF
WA 16+34 TO 21+00	LT	466
ENT 10+60 TO 12+60	LT	200
TOTAL		666

SUMMARY OF QUANTIES

Q-3

STATE OF CALIFORNIA - DEPARTMENT OF TRANSPORTATION
Caltrans® DESIGN

FUNCTIONAL SUPERVISOR: VINCE BONNER
CALCULATED-DESIGNED BY: DENNIS OCAMPO
CHECKED BY: JAY FONG
REVISED BY
DATE REVISED

LAST REVISION 03-03-12
DATE PLOTTED => 10-MAY-2012
TIME PLOTTED => 06:30

Dist	COUNTY	ROUTE	POST MILES TOTAL PROJECT	SHEET No.	TOTAL SHEETS
04	Sol	80	0.0/R28.4	347	509

REGISTERED CIVIL ENGINEER 2-28-12 DATE

5-7-12
PLANS APPROVAL DATE

REGISTERED PROFESSIONAL ENGINEER Dennis B. Ocampo No. 53523 Exp. 6-30-13 CIVIL STATE OF CALIFORNIA

THE STATE OF CALIFORNIA OR ITS OFFICERS OR AGENTS SHALL NOT BE RESPONSIBLE FOR THE ACCURACY OR COMPLETENESS OF SCANNED COPIES OF THIS PLAN SHEET.

METAL BEAM GUARD RAILING

STATION	LOCATION	MBGR (STEEL POST)	REMOVE MBGR	ALTERNATIVE FLARED TERMINAL SYSTEM	ALTERNATIVE IN-LINE TERMINAL SYSTEM	END ANCHOR ASSEMBLY (TYPE SFT)	TRANSITION RAILINGS (TYPE WB)	VEGETATION CONTROL (MINOR CONCRETE)
		LF		EA				SQYD
C6 264+87 TO 265+65	L+	37.5		1		1		75
C6 267+87 TO 268+62	L+		75					
ECP 10+40 TO 11+20	R+	50		1		1		67
ECP 15+00 TO 15+80	R+	50		1		1		67
ECP 16+40 TO 17+20	L+	50		1		1		67
L 151+49 TO 152+46	L+	62.5	43	1		1		75
R 243+60 TO 244+40	R+	50			1	1		40
R 246+78 TO 247+58	R+	50			1	1		40
C2 199+00 TO 199+80	R+	50			1	1		40
RC 615+80 TO 616+60	L+	62.5			1	1		76
M 276+20 TO 277+50	R+	100		1		1		89
M 370+28 TO 372+00	R+	137.5		1		1		108
C1 176+00 TO 176+80	R+	50		1		1		67
C1 234+50 TO 235+30	L+	50		1		1		67
ECD 13+50 TO C1 443+00	R+	487.5	317	1				175
RL 533+31 TO 537+20	R+		800					
RL 537+50 TO 538+25	R+	37.5		1			1	64
RL 574+80 TO 575+60	L+	50		1		1		67
RAMP A 103+87 TO 104+65	L+	50		1		1		66
RAMP A 107+87 TO 108+65	L+	50		1		1		66
ES 189+85 TO 190+50	R+	37.5	65	1		1	1	105
RL 538+67 TO 539+45	R+	50		1		1		66
RL 541+29.10 TO 541+92.10	R+	25					1	60
L 175+80 TO 176+60	L+	50		1		1		67
C1 194+60 TO 195+40	R+	50			1	1		67
C1 289+60 TO 290+40	R+	50		1		1		67
C1 343+40 TO 344+20	L+	50		1		1		67
C1 434+91 TO 435+87	R+	50		1		1		75
C1 473+00 TO 473+78	R+	50		1		1		67
SF 19+00 TO 19+80	L+	50		1		1		67
RAMP A 94+47 TO 95+25	L+	50		1		1		
TOTAL		1900	1235	23	5	26	3	2081

SUMMARY OF QUANTIES

Q-4

STATE OF CALIFORNIA - DEPARTMENT OF TRANSPORTATION
Caltrans® DESIGN
FUNCTIONAL SUPERVISOR: VINCE BONNER
CALCULATED-DESIGNED BY: DENNIS OCAMPO
CHECKED BY: JAY FONG
REVISED BY / DATE REVISED

LAST REVISION 03-03-12
DATE PLOTTED => 10-MAY-2012
TIME PLOTTED => 13:18

Dist	COUNTY	ROUTE	POST MILES TOTAL PROJECT	SHEET No.	TOTAL SHEETS
04	Sol	80	0.0/R28.4	348	509

Susan M Lindsay
LICENSED LANDSCAPE ARCHITECT

5-7-12
PLANS APPROVAL DATE

LICENSED LANDSCAPE ARCHITECT
SUSAN M. LINDSAY NO. 4745
Susan M Lindsay
Signature
5-31-13
Renewal Date
2-28-12
Date
STATE OF CALIFORNIA

THE STATE OF CALIFORNIA OR ITS OFFICERS OR AGENTS SHALL NOT BE RESPONSIBLE FOR THE ACCURACY OR COMPLETENESS OF SCANNED COPIES OF THIS PLAN SHEET.

PLANT LIST AND PLANTING SPECIFICATIONS

PLANT GROUP	PLANT No.	SYMBOL	BOTANICAL NAME	COMMON NAME	SIZE	QUANTITY EACH	HOLE SIZE (INCH) Dia	HOLE SIZE (INCH) DEPTH	BASIN TYPE	IRON SULFATE ①	SOIL AMEND ①	COMMERCIAL FERTILIZER ① PLANTING	COMMERCIAL FERTILIZER ① PLT ESTB	BASIN MULCH (CY)	STAKING	PLANTING LIMITS MINIMUM DISTANCE (ft) FROM ETW	Pvmt	FENCE	WALL	PAVED DITCH	EARTH DITCH	ON CENTER (ft)	REMARKS
U	1.		PISTACIA CHINENSIS	CHINESE PISTACHE	No. 15	12	24	36	II	-	0.07 CY	4 Pkt	8 Oz	0.07	④	40	-	20	20	20	22	30	TREE
	2.		QUERCUS SUBER	CORK OAK	No. 15	10	24	36	II	-	0.07 CY	4 Pkt	8 Oz	0.07	④	30	-	15	15	15	17	30	TREE
	3.		ROBINIAAMBIGUA 'PURPLE ROBE'	PURPLE ROBE LOCUST	No. 15	14	24	36	II	-	0.07 CY	4 Pkt	8 Oz	0.07	④	30	-	15	10	10	12	30	TREE

APPLICABLE WHEN CIRCLED:

① - QUANTITIES SHOWN ARE "PER PLANT" UNLESS SHOWN AS SQFT OR SQYD APPLICATION RATES
2 - BASIN MULCH IS INCLUDED WITH MULCH QUANTITIES SHOWN ON PLANTING PLAN
3 - SUFFICIENT TO RECEIVE ROOT BALL AND AMENDMENTS IF REQUIRED
④ - SEE DETAIL
5 - SEE SPECIAL PROVISIONS
6 - SEE STANDARD SPECIFICATIONS
7 - AS SHOWN ON PLANS
8 - UNLESS OTHERWISE SHOWN ON PLANS
9 - FOLIAGE PROTECTOR REQUIRED
10 - ROOT PROTECTOR REQUIRED
11 - ROOT BARRIER REQUIRED
12 - STATE-FURNISHED

NOTE:
UNDERLINED PORTIONS OF BOTANICAL NAME INDICATE ABBREVIATIONS USED ON PLANTING PLANS.

PLANT LIST
PL-1

REVISED BY | DATE REVISED
SUSAN ALDRICH | SUSAN LINDSAY
CALCULATED-DESIGNED BY | CHECKED BY
SENIOR LANDSCAPE ARCHITECT
SUSAN LINDSAY
STATE OF CALIFORNIA - DEPARTMENT OF TRANSPORTATION
Caltrans® LANDSCAPE ARCHITECTURE

LAST REVISION 00-00-00 | DATE PLOTTED => 10-MAY-2012 | TIME PLOTTED => 06:30

Dist	COUNTY	ROUTE	POST MILES TOTAL PROJECT	SHEET No.	TOTAL SHEETS
04	Sol	80	0.0/R28.4	349	509

Susan M Lindsay
LICENSED LANDSCAPE ARCHITECT

5-7-12
PLANS APPROVAL DATE

LICENSED LANDSCAPE ARCHITECT
SUSAN M. LINDSAY NO. 4405
Susan M Lindsay
Signature
5-31-13
Renewal Date
2-28-12
Date
STATE OF CALIFORNIA

THE STATE OF CALIFORNIA OR ITS OFFICERS OR AGENTS SHALL NOT BE RESPONSIBLE FOR THE ACCURACY OR COMPLETENESS OF SCANNED COPIES OF THIS PLAN SHEET.

NOTE:

FOR ACCURATE RIGHT OF WAY DATA, CONTACT
RIGHT OF WAY ENGINEERING AT THE DISTRICT OFFICE.

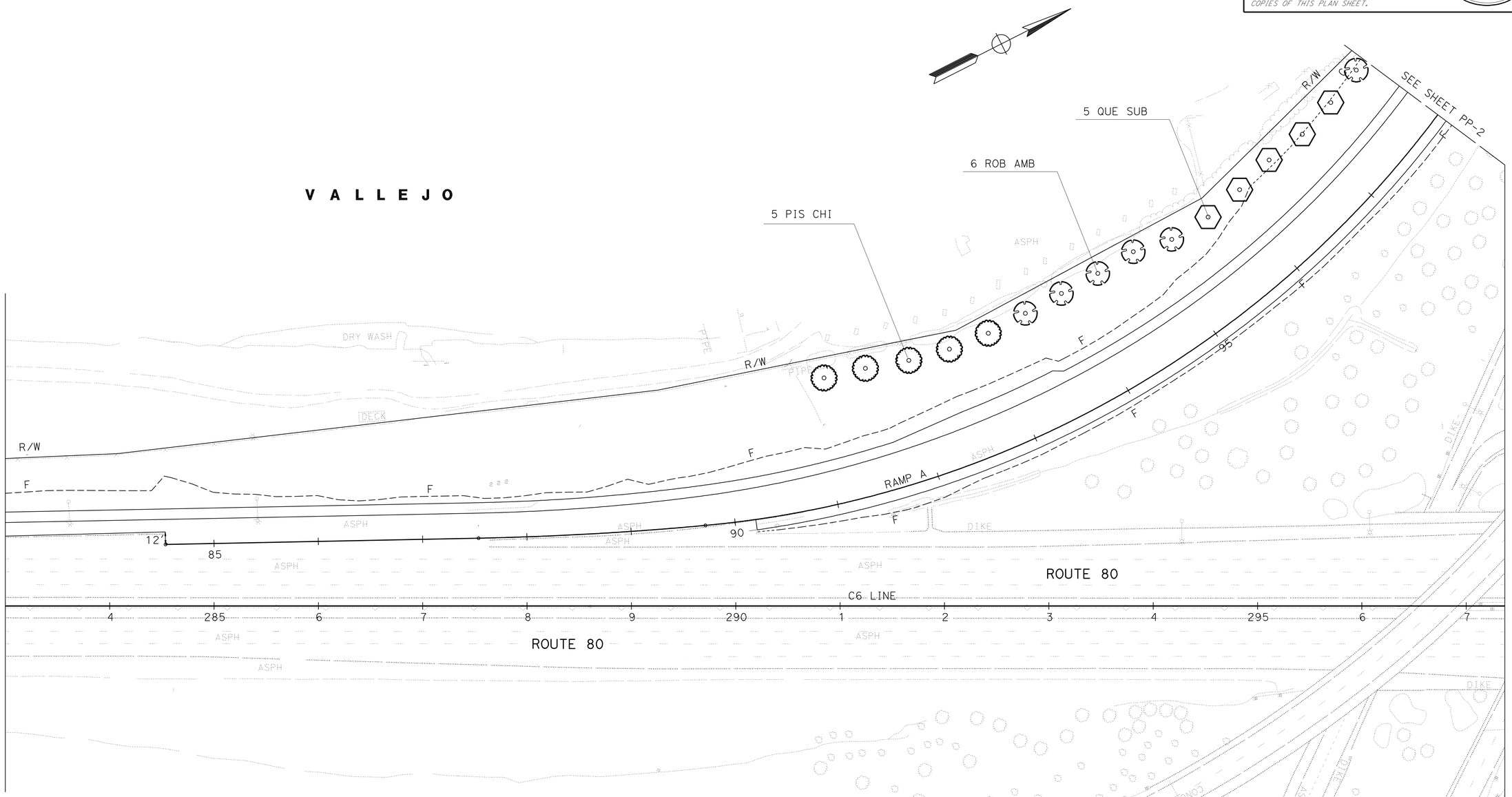

PLANTING PLAN

SCALE: 1" = 50'

PP-1

APPROVED FOR PLANTING WORK ONLY

STATE OF CALIFORNIA - DEPARTMENT OF TRANSPORTATION
Caltrans® LANDSCAPE ARCHITECTURE

SENIOR LANDSCAPE ARCHITECT: SUSAN LINDSAY
CALCULATED-DESIGNED BY: SUSAN ALDRICH
CHECKED BY: SUSAN LINDSAY
REVISED BY
DATE REVISED

LAST REVISION 02-13-12
DATE PLOTTED => 10-MAY-2012
TIME PLOTTED => 06:30

Dist	COUNTY	ROUTE	POST MILES TOTAL PROJECT	SHEET No.	TOTAL SHEETS
04	Sol	80	0.0/R28.4	350	509

Susan M Lindsay
LICENSED LANDSCAPE ARCHITECT

5-7-12
PLANS APPROVAL DATE

LICENSED LANDSCAPE ARCHITECT
SUSAN M. LINDSAY NO. 4405
Susan M Lindsay
Signature
5-31-13
Renewal Date
2-28-12
Date
STATE OF CALIFORNIA

THE STATE OF CALIFORNIA OR ITS OFFICERS OR AGENTS SHALL NOT BE RESPONSIBLE FOR THE ACCURACY OR COMPLETENESS OF SCANNED COPIES OF THIS PLAN SHEET.

NOTE:

FOR ACCURATE RIGHT OF WAY DATA, CONTACT
RIGHT OF WAY ENGINEERING AT THE DISTRICT OFFICE.

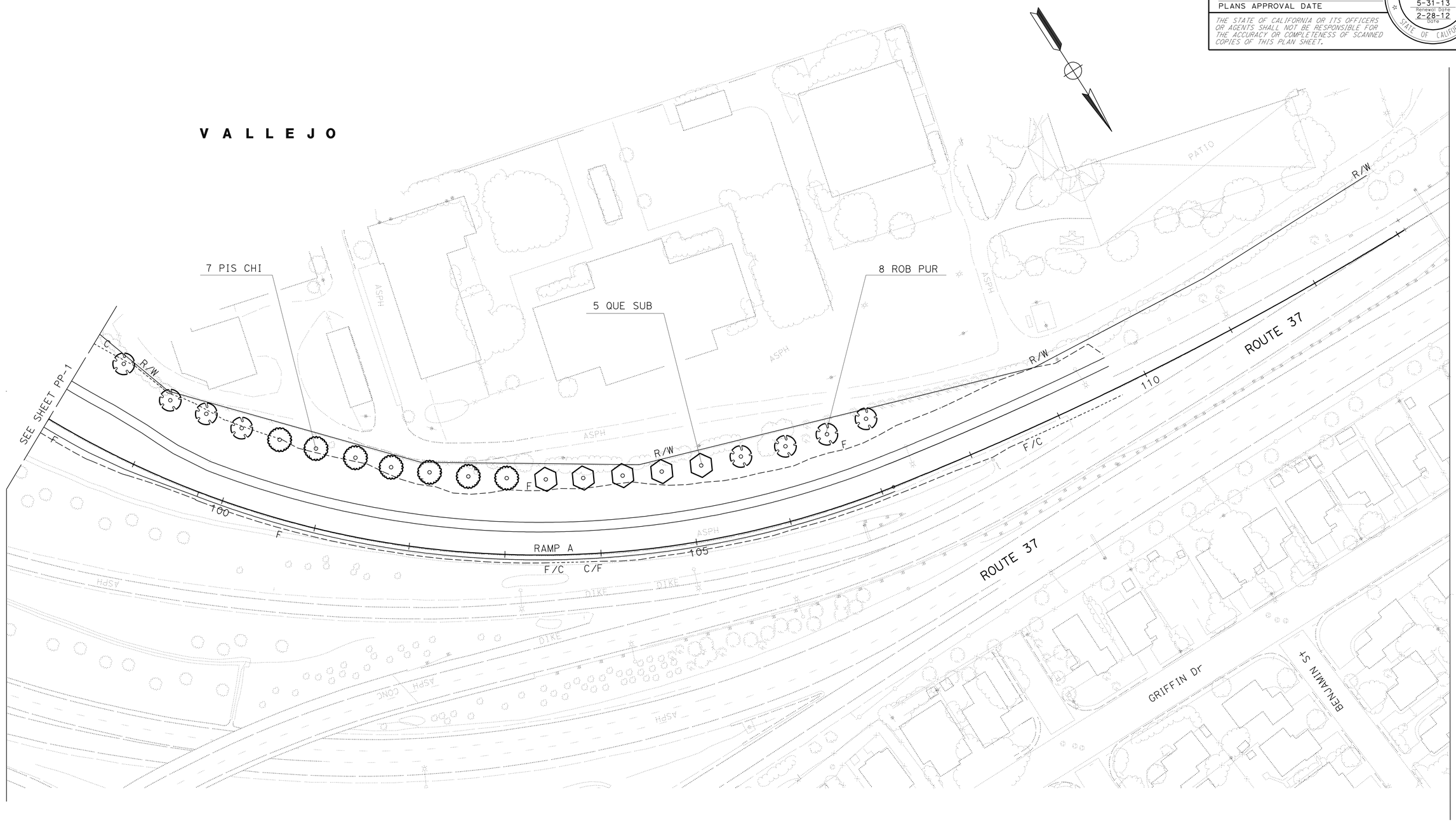

APPROVED FOR PLANTING WORK ONLY

PLANTING PLAN
SCALE: 1" = 50'

PP-2

REVISED BY	DATE REVISED

CALCULATED-DESIGNED BY	CHECKED BY
SUSAN ALDRICH	SUSAN LINDSAY

SENIOR LANDSCAPE ARCHITECT
SUSAN LINDSAY

STATE OF CALIFORNIA - DEPARTMENT OF TRANSPORTATION
Caltrans® LANDSCAPE ARCHITECTURE

LAST REVISION 00-00-00
DATE PLOTTED => 10-MAY-2012
TIME PLOTTED => 06:30

Dist	COUNTY	ROUTE	POST MILES TOTAL PROJECT	SHEET No.	TOTAL SHEETS
04	Sol	80	0.0/R28.4	351	509

Susan M Lindsay
LICENSED LANDSCAPE ARCHITECT

5-7-12
PLANS APPROVAL DATE

LICENSED LANDSCAPE ARCHITECT
SUSAN M. LINDSAY NO. 4403
Susan M Lindsay
Signature
5-31-13
Renewal Date
2-28-12
Date
STATE OF CALIFORNIA

THE STATE OF CALIFORNIA OR ITS OFFICERS OR AGENTS SHALL NOT BE RESPONSIBLE FOR THE ACCURACY OR COMPLETENESS OF SCANNED COPIES OF THIS PLAN SHEET.

NOTE:

FOR ACCURATE RIGHT OF WAY DATA, CONTACT RIGHT OF WAY ENGINEERING AT THE DISTRICT OFFICE.

IRRIGATION NOTES:

1. Unlabeled plastic pipe supply line (lateral) downstream of remote control valves shall be 1" (SCH 40), unless otherwise noted.
2. Quick coupling valves (QCV) shall be ¾" installed on a swing joint (Type I) with a sprinkler protector (Type I), unless otherwise noted.
3. Sprinkler (Type C-2), when located on slopes, shall be installed on the uphill side of the plant basin.
4. See Electrical Plans for electric service (irrigation) information.

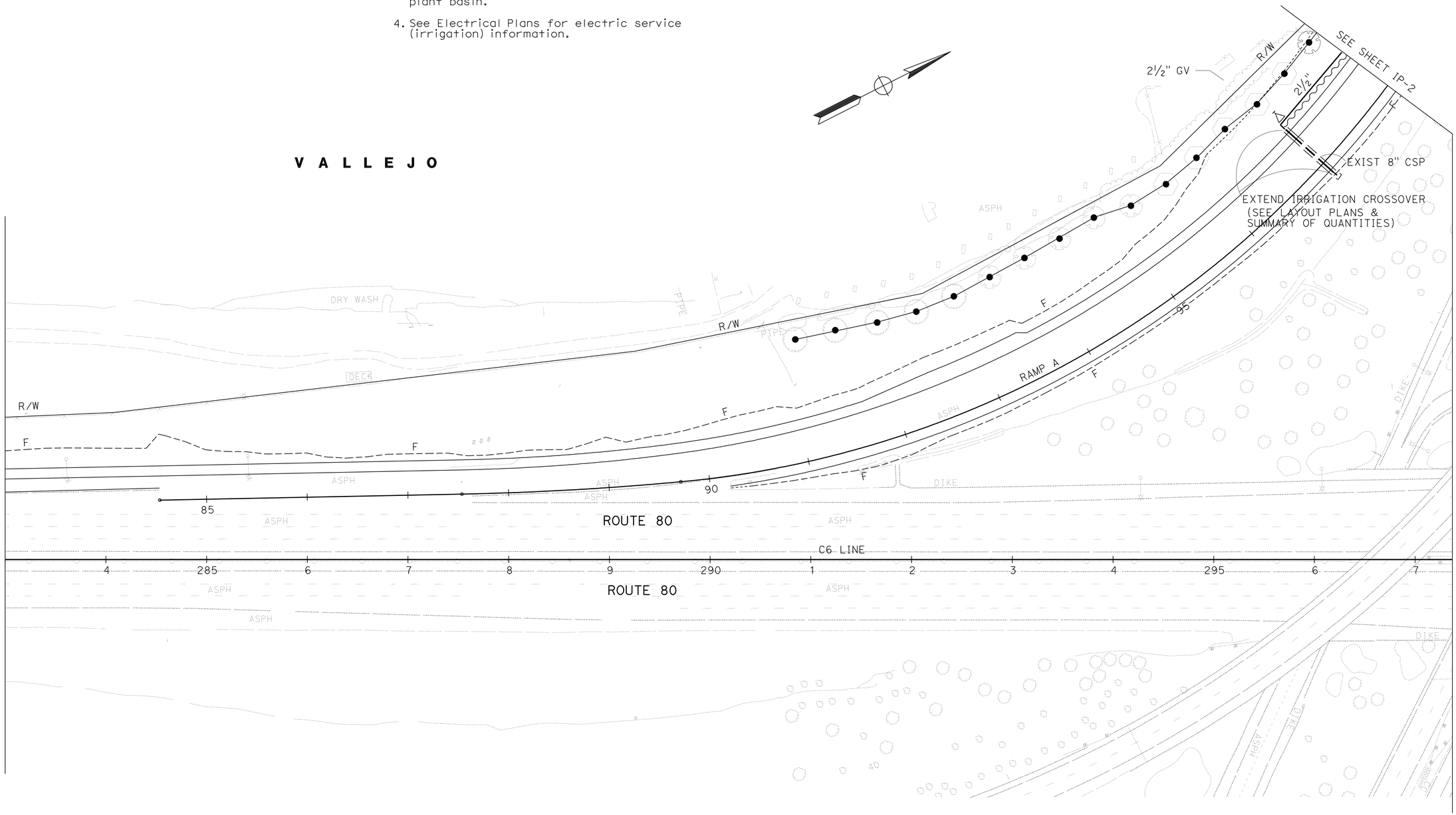

IRRIGATION PLAN

SCALE: 1" = 50'

IP-1

APPROVED FOR IRRIGATION WORK ONLY

STATE OF CALIFORNIA - DEPARTMENT OF TRANSPORTATION
Caltrans® LANDSCAPE ARCHITECTURE

SENIOR LANDSCAPE ARCHITECT: SUSAN LINDSAY
CALCULATED-DESIGNED BY: SUSAN ALDRICH
CHECKED BY: SUSAN LINDSAY
REVISED BY
DATE REVISED

LAST REVISION 00-00-00
DATE PLOTTED => 10-MAY-2012
TIME PLOTTED => 06:31

Dist	COUNTY	ROUTE	POST MILES TOTAL PROJECT	SHEET No.	TOTAL SHEETS
04	Sol	80	0.0/R28.4	352	509

Susan M Lindsay
LICENSED LANDSCAPE ARCHITECT

5-7-12
PLANS APPROVAL DATE

LICENSED LANDSCAPE ARCHITECT
SUSAN M. LINDSAY NO. 4415
Susan M Lindsay
Signature
5-31-13
Renewal Date
2-28-12
Date
STATE OF CALIFORNIA

THE STATE OF CALIFORNIA OR ITS OFFICERS OR AGENTS SHALL NOT BE RESPONSIBLE FOR THE ACCURACY OR COMPLETENESS OF SCANNED COPIES OF THIS PLAN SHEET.

NOTE:

FOR ACCURATE RIGHT OF WAY DATA, CONTACT
RIGHT OF WAY ENGINEERING AT THE DISTRICT OFFICE.

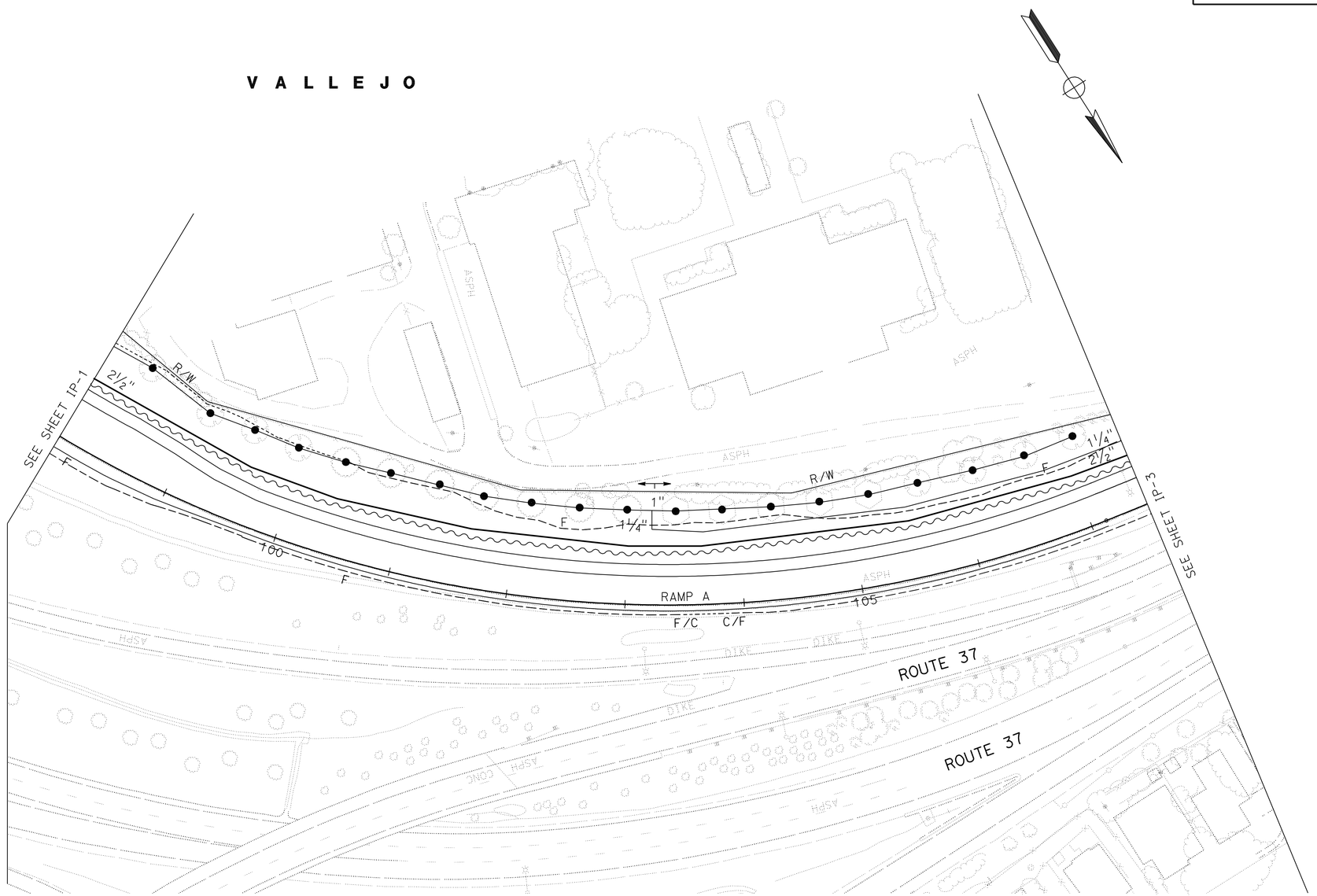

APPROVED FOR IRRIGATION WORK ONLY

IRRIGATION PLAN

SCALE: 1" = 50'

IP-2

STATE OF CALIFORNIA - DEPARTMENT OF TRANSPORTATION
Caltrans® LANDSCAPE ARCHITECTURE

SENIOR LANDSCAPE ARCHITECT: SUSAN LINDSAY

CALCULATED-DESIGNED BY: SUSAN ALDRICH
CHECKED BY: SUSAN LINDSAY

REVISED BY
DATE REVISED

LAST REVISION 02-13-12
DATE PLOTTED => 10-MAY-2012
TIME PLOTTED => 06:31

Dist	COUNTY	ROUTE	POST MILES TOTAL PROJECT	SHEET No.	TOTAL SHEETS
04	Sol	80	0.0/R28.4	353	509

Susan M Lindsay
LICENSED LANDSCAPE ARCHITECT

5-7-12
PLANS APPROVAL DATE

LICENSED LANDSCAPE ARCHITECT
SUSAN M. LINDSAY NO. 4405
Susan M Lindsay
Signature
5-31-13
Renewal Date
2-28-12
Date
STATE OF CALIFORNIA

THE STATE OF CALIFORNIA OR ITS OFFICERS OR AGENTS SHALL NOT BE RESPONSIBLE FOR THE ACCURACY OR COMPLETENESS OF SCANNED COPIES OF THIS PLAN SHEET.

NOTE:

FOR ACCURATE RIGHT OF WAY DATA, CONTACT RIGHT OF WAY ENGINEERING AT THE DISTRICT OFFICE.

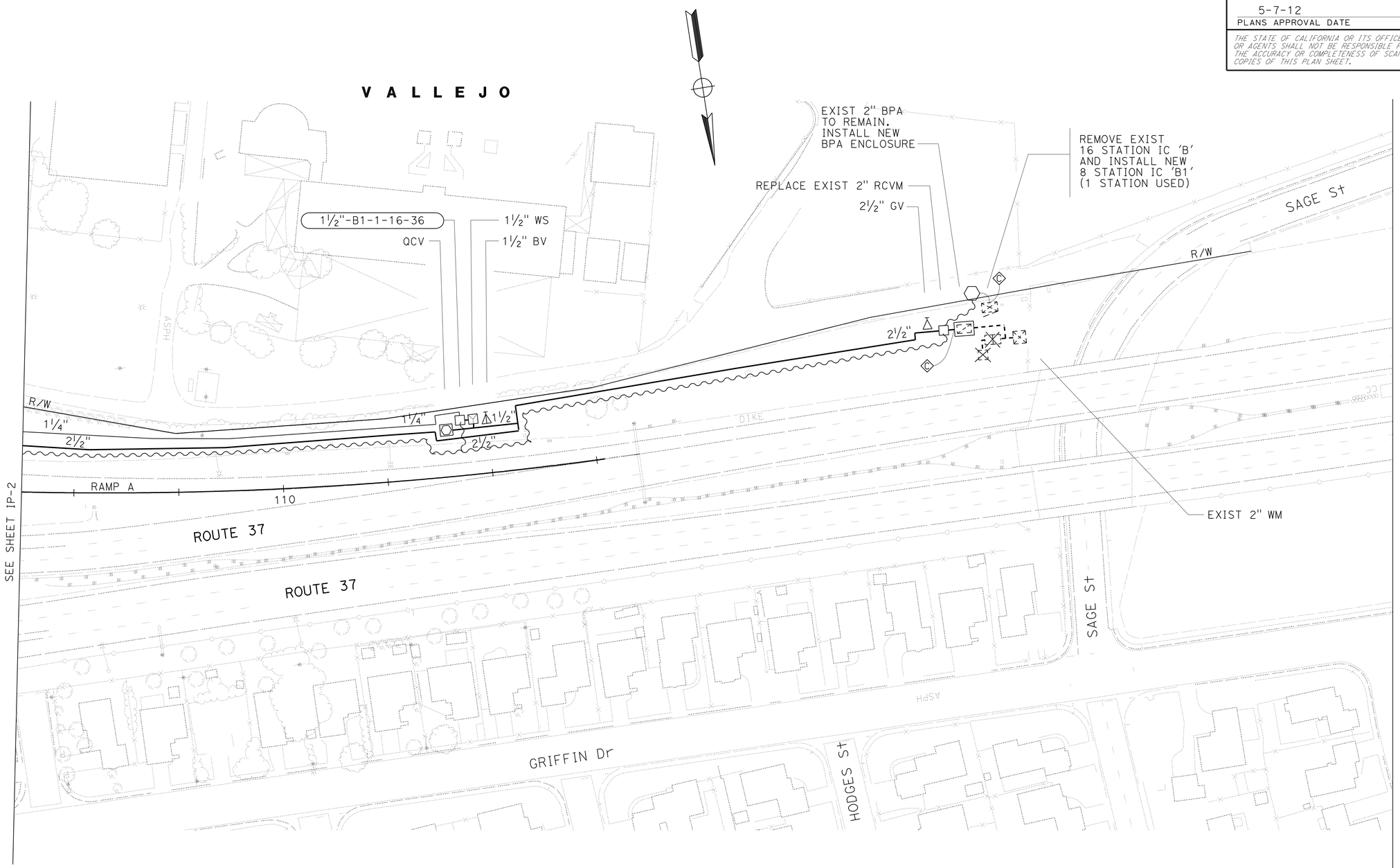

APPROVED FOR IRRIGATION WORK ONLY

IRRIGATION PLAN

SCALE: 1" = 50'

IP-3

STATE OF CALIFORNIA - DEPARTMENT OF TRANSPORTATION
Caltrans® LANDSCAPE ARCHITECTURE

SENIOR LANDSCAPE ARCHITECT: SUSAN LINDSAY
CALCULATED-DESIGNED BY: SUSAN ALDRICH
CHECKED BY: SUSAN LINDSAY
REVISED BY
DATE REVISED

LAST REVISION 00-00-00
DATE PLOTTED => 10-MAY-2012
TIME PLOTTED => 06:31

Dist	COUNTY	ROUTE	POST MILES TOTAL PROJECT	SHEET No.	TOTAL SHEETS
04	Sol	80	0.0/R28.4	354	509

Susan M Lindsay
LICENSED LANDSCAPE ARCHITECT

5-7-12
PLANS APPROVAL DATE

LICENSED LANDSCAPE ARCHITECT
SUSAN M. LINDSAY No. 4415
Susan M Lindsay
Signature
5-31-13
Renewal Date
2-28-12
Date
STATE OF CALIFORNIA

THE STATE OF CALIFORNIA OR ITS OFFICERS OR AGENTS SHALL NOT BE RESPONSIBLE FOR THE ACCURACY OR COMPLETENESS OF SCANNED COPIES OF THIS PLAN SHEET.

SPRINKLER SCHEDULE

SYMBOL	TYPE	DESCRIPTION	SPRAY PATTERN	OPERATING PRESSURE (psi)	PRESSURE COMPENSATING	PLUS/MINUS 5% ② DISCHARGE GALLONS PER MINUTE (GPM)	DISCHARGE GALLONS PER HOUR (GPH)	RADIUS (ft)	WIDTH x LENGTH (ft)	MATERIAL	INLET CONNECTION (NPT INCH)	POSITIVE-LOCKING Adj ARC STOP	BACKSPLASH PREVENTER	DIFFUSER PIN	DISTANCE CONTROL FLAP	Adj DISCHARGE	RISER TYPE	RISER MATERIAL PLASTIC	RISER MATERIAL GALVANIZED	RISER SIZE (IPS INCH)	RISER HEIGHT (INCH)	RISER FLOW SHUTOFF DEVICE	⑤ SWING JOINT (TYPE)	RISER SUPPORT	SPRINKLER PROTECTOR (TYPE)	REMARKS
●	C-2	FLOOD BUBBLER	-	20	X	0.5	-	-	-	PL	½"	-	-	-	-	-	V	X	-	½"	-	-	-	-	-	ONE SPRINKLER PER TREE

X IN BOX DENOTES REQUIREMENT

APPLICABLE WHEN CIRCLED BELOW:

1 - SEE SPECIAL PROVISIONS.
② - IF A PRESSURE COMPENSATING DEVICE IS SPECIFIED, THE DISCHARGE AND RADII SHOWN REFLECT ITS USE.
3 - ARC STOP SHALL BE FITTED WITH A NUT AND BOLT.
4 - VINYL-COATED CAST IRON HOUSING.
5 - SWING JOINTS REQUIRED ADJACENT TO SHOULDERS, CURBS, SIDEWALKS, AND DIKES.
6 - UNLESS OTHERWISE SHOWN ON PLANS.

LANDSCAPE DETAILS

LD-1

STATE OF CALIFORNIA - DEPARTMENT OF TRANSPORTATION
Caltrans® LANDSCAPE ARCHITECTURE

SENIOR LANDSCAPE ARCHITECT: SUSAN LINDSAY
CALCULATED-DESIGNED BY: SUSAN ALDRICH
CHECKED BY: SUSAN LINDSAY
REVISED BY
DATE REVISED

LAST REVISION 00-00-00
DATE PLOTTED => 10-MAY-2012
TIME PLOTTED => 06:31

Dist	COUNTY	ROUTE	POST MILES TOTAL PROJECT	SHEET No.	TOTAL SHEETS
04	Sol	80	0.0/R28.4	355	509

Elaine Wong 2-29-12
REGISTERED ELECTRICAL ENGINEER DATE

5-7-12
PLANS APPROVAL DATE

REGISTERED PROFESSIONAL ENGINEER Elaine T. Wong No. 13753 Exp. 6-30-13 ELECT STATE OF CALIFORNIA

THE STATE OF CALIFORNIA OR ITS OFFICERS OR AGENTS SHALL NOT BE RESPONSIBLE FOR THE ACCURACY OR COMPLETENESS OF SCANNED COPIES OF THIS PLAN SHEET.

GENERAL NOTES:

1. ELECTRICAL EQUIPMENT SHALL BE INSTALLED INSIDE STATE OR LOCAL AGENCY RIGHT OF WAY.
2. No. 9 PULL BOXES SHALL BE PROVIDED WITH KNOCKOUTS TO FIT THE CONDUITS SHOWN ON THE PLANS.
3. NO ABOVE GROUND ELECTRICAL WORK SHALL BE PERFORMED ON ANY SYSTEM WITHIN THE PROJECT SITE UNTIL ALL CONTRACTOR-FURNISHED ELECTRICAL MATERIALS FOR THAT INDIVIDUAL SYSTEM HAVE BEEN TESTED AND DELIVERED TO CONTRACTOR.
4. THE NEUTRAL CONDUCTOR SHALL RUN FROM THE SERVICE EQUIPMENT ENCLOSURE TO THE CONTROLLER CABINET WITHOUT SPLICING TO ANY OTHER NEUTRAL CONDUCTOR.
5. THE CLEARANCE BETWEEN THE BOTTOM OF THE LOWEST CIRCUIT BREAKER AND THE BOTTOM OF THE SERVICE EQUIPMENT ENCLOSURE FOR A TYPE III-A SERIES SHALL BE 24 INCHES MINIMUM.

ABBREVIATIONS

CTID	CALTRANS IDENTIFICATION
GPRS	GENERAL PACKET RADIO SYSTEM
HM	HIGH MAST
HCC	HYBRID CAMERA CABLE
PTS	PREPARE TO STOP
TC	TELEPHONE CABLE
TOU	TIME OF USE
TVC	TELEVISION CONTROL CABLE
TVPC	TELEVISION CONTROL POWER CABLE
TVL	TELEVISION VIDEO CABLE
wim	EXISTING WEIGHT IN MOTION
wsp	EXISTING WEIGHT STATION BY PASS

PROJECT NOTES:

1 INSTALL TYPE III-AF SERVICE EQUIPMENT ENCLOSURE, PROVIDE EQUIPMENT ITEMS (1) TROUGH (9), (22) TROUGH (29) AS SHOWN ON E-90 SEE FOUNDATION DETAILS ON RSP ES-2D. ITEMS NOT IN USE SHALL BE MARKED SPARE FOR FUTURE USE.

2 EXISTING TYPE III-AF SERVICE EQUIPMENT ENCLOSURE WITH ITEMS (1) THROUGH (6), (8) TROUGH (20), AS SHOWN ON E-89 INSTALL 30 A, 240 V, 1P CB AND MARKED AS "TMS EAST 2".

3 EXISTING TYPE III-AF SERVICE EQUIPMENT ENCLOSURE WITH ITEMS (1) THROUGH (9), (17) TROUGH (19), (25) TROUGH (27) AS SHOWN ON E-90 ITEM (25) WAS MARKED "WSB1" AND ITEM (27) WAS MARKED "WSB2". INSTALL 30 A, 120 V, 1P CB AND MARKED AS "TMS2".

4 EXISTING TYPE III-AF SERVICE EQUIPMENT ENCLOSURE WITH ITEMS (1) THROUGH (9), (11) TROUGH (14), (17) TROUGH (20), (22) TROUGH (26) AS SHOWN ON E-90 TO REMAIN THE SAME.

5 EXISTING TYPE III-AF SERVICE EQUIPMENT ENCLOSURE WITH ITEMS (1) THROUGH (9), (23), (24), (26), AS SHOWN ON E-90 TO REMAIN THE SAME.

6 EXISTING TYPE III-AF SERVICE EQUIPMENT ENCLOSURE WITH ITEMS (1) THROUGH (9), (11) TROUGH (14), (17) TROUGH (19), (22) AND (23) AS SHOWN ON E-90. TO REMAIN. INSTALL ITEMS (24) AND (25).

7 EXISTING TYPE III-AF SERVICE EQUIPMENT ENCLOSURE WITH ITEMS (1) THROUGH (9), (23), (24), AS SHOWN ON E-90 TO REMAIN. INSTALL ITEMS (25).

8 EXISTING TYPE III-AF SERVICE EQUIPMENT ENCLOSURE WITH ITEMS (1) THROUGH (9), (23), (24), AND (26), AS SHOWN ON E-90 TO REMAIN ITEMS (23) WAS MARKED" RM A" AND ITEM (26), WAS MARKED "RM B". INSTALL ITEM (25).

9 INSTALL NO. 5 PULL BOX WITH COVER MARKED "CALTRANS/PG&E" SC BY PG&E. THIS IS A PG&E TERMINATION POINT.

10 INSTALL PULL BOX PER SERVICE UTILITY REQUIREMENTS (SIMILAR TO CALTRANS No. 6 PULLBOX). COVER SHALL BE MARKED "PG&E".

11 INSTALL TYPE H SERVICE, CONDUIT BEND RADIUS SHALL MEET SERVICE UTILITY REQUIREMENT.

12 INSTALL 2"C, 3#2 (120/240 V, SERVICE).

13 INSTALL 3"C, 2#6 (120 V SERVICE TO CCTV1 CONTROLLER), 2#2 (120 V, CCTV2 CONTROLLER), 2#2 (120 V, CCTV3 CONTROLLER), 2#6 (120 V, SERVICE TO CMS CONTROLLER), 3#6 (120/240 V, SERVICE TO CMS PANEL), 2#10 (120 V, SERVICE TO TDC).

14 INSTALL 3"C, MT, DEPTH TO MEET PG&E REQUIREMENTS.

15 INSTALL 2"C, MT, TC WILL BE INSTALLED BY AT&T. CONTRACTOR SHALL COORDINATE WITH AT&T FOR SERVICE CONNECTION

16 DLC SHALL BE IDENTIFIED WITH DETECTOR DESIGNATION No. INDICATED ON THE PLAN IN EACH TERMINATION PULL BOX AND CONTROLLER CABINET SEE INSTALLATION DETAILS ON RSP ES-5A, ES-5B, ES-5D AND E-92.

17 INSTALL 3"C, 4 DLC.

18 INSTALL 2"C, 8 DLC.

19 INSTALL CCTV CAMERA ON POLE TYPE CCTV 40. SEE DETAILS ON ES-16A, E-94, E-95 AND SES-1.

20 INSTALL 3"C, 1 HCC.

21 INSTALL 2"C, 2#6 (120 V CMS CONTROLLER). 3#6 (120 /240 V SERVICE TO CMS PANEL).

22 INSTALL STATE-FURNISHED MODEL 2070 CONTROLLER ASSEMBLY, SEE FOUNDATION DETAILS ON ES-3C.

23 INSTALL TDC, SEE RSP ES-3E, E-96 AND E-97.

24 INSTALL 2"C, 2#10 (120 V, SERVICE TO TDC).

25 INSTALL 2"C, 1 TC.

26 INSTALL 2"C, 2 TC.

27 INSTALL 2"C, 2#6 (120 V, SERVICE TO CCTV CONTROLLER).

28 INSTALL 2"C, 2#6 (120 V, TMS CONTROLLER).

29 INSTALL 2-3"C, CABLES (STATE-FURNISHED HARNESS #4 AND #5), 2#6 (120 V, SERVICE TO CMS CONTROLLER).

30 INSTALL 2-3"C, CABLES (STATE-FURNISHED HARNESS #4 AND #5), 3#6 (120/240 V, SERVICE TO CMS PANEL).

31 INSTALL 3"C, 2#6 (120 V, SERVICE TO CCTV1 CONTROLLER), 2#2 (120 V, CCTV2 CONTROLLER), 2#2 (120 V, CCTV3 CONTROLLER), 2#6 (120 V, SERVICE TO CMS CONTROLLER), 3#6 (120/240 V, TO CMS PANEL), 2#10 (120 V, SERVICE TO TDC).

32 INSTALL 2½"C, 2#6 (120 V, SERVICE TO CCTV CONTROLLER), 2#6 (120 V, SERVICE TO TMS CONTROLLER), 2#10 (120 V, SERVICE TO TDC).

33 INSTALL 2"C, 2#4 (120 V, SERVICE TO TMS CONTROLLER).

34 INSTALL 2"C, 2#6 (120 V, SERVICE TO CCTV CONTROLLER), 2#10 (120 V, SERVICE SERVICE TO TDC).

35 INSTALL 3"C, 8 DLC.

36 INSTALL 2"C, 4 DLC.

37 INSTALL 2-3"C, 2#6 (120 V, SERVICE TO TMS CONTROLLER), 16 DLC.

38 INSTALL 3"C, 4#6 (120 V, SERVICE TO TMS CONTROLLERS).

39 INSTALL No. 9 PULL BOX AND CONDUIT IN EXISTING CONCRETE BARRIER. SEE CONSTRUCTION DETAIL SHEETS FOR DETAILS.

40 INSTALL 2"C, 6 DLC.

41 EXISTING 2"C, 2#6 (480 V, LIGHTING), 2#6 (480 V, SIGN LIGHTING), 2#6 (240 V, RM/CCTV CONTROLLER), 2#6 (240 V, RM CONTROLLER), 2#14 (240 V, TDC), 2#14 (240 V, SIGN TEST SWITCH), 5#14 (240 V, PEU) TO REMAIN. INSTALL 2#6 (240 V, TMS CONTROLLER).

42 EXISTING 2"C, 2#6 (480 V, LIGHTING), 2#6 (480 V, SIGN LIGHTING), 2#6 (240 V, RM/CCTV CONTROLLER), 2#6 (240 V RM CONTROLLER), 2#14 (240 V, TDC), 2#14 (240 V, SIGN TEST SWITCH), TO REMAIN. INSTALL 2#6 (240 V, TMS CONTROLLER).

43 EXISTING 2"C, 2#6 (480 V, LIGHTING), 2#6 (480 V, SIGN LIGHTING), 2#6 (240 V, RM CONTROLLER), 2#14 (240 V, TDC), 2#14 (240 V, SIGN TEST SWITCH), TO REMAIN INSTALL. 2#6 (240 V, TMS CONTROLLER).

44 EXISTING 1½"C, 2#6 (480 V, LIGHTING), 2#6 (480 V, SIGN LIGHTING), 2#14 (240 V, SIGN TEST SWITCH) TO REMAIN. INSTALL 2#6 (240 V, TMS CONTROLLER).

45 EXISTING 1½"C, 2#6 (480 V, SIGN LIGHTING), 2#14 (240 V, SIGN TEST SWITCH), TO REMAIN. INSTALL 1 DLC.

46 INSTALL 2#6 (240 V, TMS CONTROLLER).

47 INSTALL 2 kVA (120/240 V), STEP DOWN SUBMERSIBLE TRANSFORMER IN PULL BOX.

48 INSTALL 2-3"C, 2#6 (120 V, TMS CONTROLLER), 8 DLC.

49 EXISTING CONDUIT WITH CONDUCTOR AND/OR CABLES TO REMAIN.

50 INSTALL 3"C, 6 DLC.

51 INSTALL 2-3"C, 2#6 (120 V, TMS CONTROLLER), 24 DLC.

52 INSTALL TYPE 1-B STANDARD WITH SIGNAL HEADS AS SHOWN ON DETAIL "SIG" RAMP METER SIGNAL, POLE MOUNTED ON NEW FOUNDATION SEE E-91.

53 INSTALL TYPE 1-B STANDARD WITH METER ON SIGN AS SHOWN ON DETAIL "METER ON" SIGN ON NEW FOUNDATION SEE E-91.

54 EXISTING 2"C, RC EXISTING CONDUCTORS AND INSTALL 2#12 (120 V, METER ON SIGN), 2#12 (SPARES), 1#8 (120 V, SIGNAL NEUTRAL).

55 EXISTING 2"C, RC EXISTING CONDUCTORS AND INSTALL, 2#6 (240 V, RM CONTROLLER), 2#12 (120 V, METER ON SIGN), 2#12 (SPARES),1#8 (120 V, SIGNAL NEUTRAL).

56 EXISTING 2"C, RC EXISTING CONDUCTORS AND INSTALL 2#6 (240 V, RM CONTROLLER), 1 DLC. 2#12 (120 V, METER ON SIGN), 2#12 (SPARES), 1#8 (120 V, SIGNAL NEUTRAL).

57 EXISTING 2-3"C, RC EXISTING dlc CABLES AND CONDUTORS AND INSTALL, 2#6 (120 V, RM CONTROLLER), 2#12 (120 V, METER ON SIGN), 2#12 (SPARES), 2#8 (120 V, SIGNAL NEUTRAL), 3#14 (120 V, RM SIGNAL), 3#14 (RM SPARES), 12 DLC.

58 EXISTING 3"C, RC EXISTING CONDUCTORS AND dlc CABLES AND INSTALL 8 DLC.

59 EXISTING 3"C, RC EXISTING CONDUCTORS AND dlc CABLES AND INSTALL 1#8 (120 V, SIGNAL NEUTRAL), 3#14 (120 V, RM SIGNAL), 3#14 (RM SPARES), 3 DLC.

60 EXISTING 1½"C, RC EXISTING dlc CABLE AND INSTALL 1 DLC.

61 EXISTING 1½"C, 2#6 (480 V, LIGHTING), 2#6 (480 V, SIGN LIGHTING), 2#14 (240 V, SIGN TEST SWITCH), TO REMAIN. RC EXISTING dlc CABLE AND INSTALL 1 DLC, 2#6 (240 V, TMS CONTROLLER).

62 INSTALL 2"C, 2 DLC.

63 INSTALL 2"C, 10 DLC.

64 INSTALL 2½"C, 13 DLC.

65 EXISTING CONDUIT WITH CONDUCTORS AND/OR CABLES TO REMAIN. INSTALL 1 DLC.

66 EXISTING 2-3"C WITH CONDUCTORS AND/OR CABLES TO REMAIN. INSTALL 14 DLC.

67 INSTALL STATE-FURNISHED MODEL 500 CMS SIGN PANEL AND CMS STATION. FOR INSTALLATION DETAILS, SEE SHEETS SD-1 AND SD-2.

68 INSTALL 2-3"C, 2#6 (120 V, CCTV1 CONTROLLER), 1 HCC, 8 DLC.

69 INSTALL 2-3"C, 2#6 (120 V, SERVICE TO CCTV CONTROLLER), 1 HCC.

70 INSTALL 3"C, 12 DLC.

71 EXISTING 2"C, 4#6, 2#8 TO REMAIN. INSTALL 2#6 (120 V, SERVICE TO CCTV CONTROLLER).

72 EXISTING 2"C, 1 EXISTING TC TO REMAIN. INSTALL 1 NEW TC.

73 INSTALL CONTRACTOR-FURNISHED MODEL 334 CONTROLLER CABINET. SEE FOUNDATION DETAILS ON ES-3C.

74 INSTALL 2"C, 2#6 (120 V, SERVICE TO CCTV CONTROLLER), 2#10 (METER ON).

75 EXISTING 2-3"C, 2#6 (120 V, RM CONTROLLER), 2#10 (120 V, "METER ON" SIGN), 6#14 (120 V, RM SIGNALS), 3#14 (SPARE), 1#8 (120 V, SIGNAL NEUTRAL), 13 dlc TO REMAIN. INSTALL 1 DLC.

76 EXISTING 2"C, 2#6 (240 V, LIGHTING), 2#8 (240 V, SIGN ILLUMINATION), 5#14 (120 V, PEU), 2#14 (120 V, SIGN TEST SWITCH) TO REMAIN. INSTALL 2#6 (120 V, CCTV CONTROLLER), 2#10 (120 V, TDC).

77 EXISTING 3"C, 2#4 (240 V, LIGHTING), 2#4 (240 V, SIGN LIGHTING), 2#14 (120 V, SIGN TEST SWITCH), 5#14 (120 V, PEU), 2#6(120 V, rm CONTROLLER), 2#12 (120 V, IRRIGATION) TO REMAIN. INSTALL 2#6 (120 V, CCTV CONTROLLER), 2#10 (120 V, TDC).

78 EXISTING 2"C, 2#4 (240 V, LIGHTING), 2#4 (240 V, SIGN LIGHTING), 2#14 (120 V,SIGN TEST SWITCH), 2#12 (120 V, IRRIGATION) TO REMAIN. INSTALL 2#10 (120 V, TDC).

79 EXISTING 2"C, 2#6 (120 V, RM CONTROLLER) TO REMAIN. INSTALL 2#6 (120 V, CCTV CONTROLLER).

80 EXISTING 1½"C, 2#6 (240 V, LIGHTING) TO REMAIN. INSTALL 2#6 (120 V, CCTV CONTROLLER), 2#10 (120 V, TDC).

81 EXISTING 3"C, 4 dlc.

82 INSTALL GPRS WIRELESS MODEM ASSEMBLY ANTENNA, POWER SUPPLY AND TERMINAL BLOCK IN CABINET, SEE DETAIL ON E-93.

83 INSTALL CAMERA STATION, SEE SHEETS E-94, E-95 AND SES-1 FOR DETAILS.

APPROVED FOR ELECTRICAL WORK ONLY

TRAFFIC OPERATIONS SYSTEM (GENERAL NOTES, ABBREVIATIONS AND PROJECT NOTES)

E-1

STATE OF CALIFORNIA - DEPARTMENT OF TRANSPORTATION
Caltrans®
ELECTRICAL
FUNCTIONAL SUPERVISOR: LAI HONG CHIU
CALCULATED-DESIGNED BY: ALEX KHOO
CHECKED BY: ELAINE T. WONG
REVISED BY / DATE REVISED

LAST REVISION 03-19-12 | DATE PLOTTED => MAY-2012 | TIME PLOTTED => 02

Dist	COUNTY	ROUTE	POST MILES TOTAL PROJECT	SHEET No.	TOTAL SHEETS
04	Sol	80	0.0/R28.4	356	509

REGISTERED ELECTRICAL ENGINEER — DATE 2-29-12

5-7-12
PLANS APPROVAL DATE

REGISTERED PROFESSIONAL ENGINEER — Elaine T. Wong — No. 13753 — Exp. 6-30-13 — ELECT — STATE OF CALIFORNIA

THE STATE OF CALIFORNIA OR ITS OFFICERS OR AGENTS SHALL NOT BE RESPONSIBLE FOR THE ACCURACY OR COMPLETENESS OF SCANNED COPIES OF THIS PLAN SHEET.

84 EXISTING MODEL 334 CONTROLLER CABINET.

85 EXISTING TYPE III A-F SERVICE EQUIPMENT ENCLOSURE.

86 EXISTING 1½"C, 3#4 (HM LIGHTING/SIGN LIGHTING), 2#4 (SERVICE TO EMS CABINET).

87 EXISTING 1½"C, 2#4 (SERVICE TO EMS CABINET).

88 INSTALL 2"C, 1 DLC, 8 DLC.

89 INSTALL 3"C, 2 DLC.

90 INSTALL LOOP DETECTOR SENSOR UNITS.

91 EXISTING 2"C, 1 dlc, RC 1 dlc AND ADD 1 DLC.

92 EXISTING 2-3"C, 2#8 (EMS CONTROLLER), 4#8 (120 V, EMS CONTROL). ADD 7 DLC.

93 INSTALL 2"C, 7 DLC.

94 AB EXISTING LOOPS.

95 MOUNT CONDUIT ALONG THE BRIDGE STRUCTURE WALL.

96 INSTALL LONG LEAD-IN CABLE LOOP DETECTOR SENSOR UNIT.

97 INSTALL 1½"C, 1 DLC.

98 EXISTING 2"C, 1 dlc, ADD 1 DLC.

99 EXISTING 2"C, 2 dlc, ADD 1 DLC.

100 EXISTING 3"C, 2 dlc, ADD 2 DLC.

101 EXISTING 3"C, 8 dlc, ADD 2 DLC.

102 EXISTING 2"C, 5 dlc, ADD 1 DLC.

103 EXISTING 2"C, 6 dlc, ADD 1 DLC.

104 EXISTING 3"C, 16 dlc, ADD 3 DLC.

105 EXISTING 2"C, 2 dlc, RC 2 dlc, ADD 2 DLC.

106 EXISTING 2"C, 2 dlc, RC 2 dlc, ADD 8 DLC.

107 EXISTING 3"C, 5 dlc, RC 2 dlc, ADD 10 DLC.

108 EXISTING 3"C, 6 dlc, RC 3 dlc AND ADD 11 DLC.

109 NOT USED

110 EXISTING 2"C, 1 dlc, ADD 4 DLC.

111 EXISTING 2"C, 1 dlc, RC 1 dlc AND ADD 9 DLC.

112 EXISTING 3"C, 1 dlc, RC 1 dlc AND ADD 8 DLC.

113 EXISTING 3"C, 2 dlc, ADD 4 DLC.

114 EXISTING 3"C, 4 dlc, RC 1 dlc AND ADD 12 DLC.

115 EXISTING 2"C, mt. ADD 3#2 (120/240 V SERVICE).

116 EXISTING 2"C, mt. ADD 1 TC, 2#10 (120 V SERVICE TO TDC).

117 INSTALL TYPE III-AF SERVICE EQUIPMENT ENCLOSURE.

118 EXISTING 2"C, mt. ADD 2#6 (120 V, SERVICE TO CONTROLLER).

119 EXISTING 2-3"C. 1 mt, 4 dlc. RC 4 dlc. ADD 2#6 (120 V, SERVICE TO CONTROLLER), 13 DLC.

120 EXISTING 2-1½"C, 1 TVP, 1 TVCP, 1 TVC, 1 TVL. RC ALL CABLES, INSTALL 1 HCC.

121 EXISTING 2-1/2"C, 1 TVP, 1 TVCP, 1 TVC, 1 TVL.

122 EXISTING 3"C, 2 dlc.

123 EXISTING 2-3"C, 21 dlc, ADD 1 HCC.

124 INSTALL 2"C, 2#4 (120 V, TMS CONTROLLER), 1 DLC.

125 EXISTING 1½"C, 1 TC. ADD 1 TC.

126 INSTALL 2"C, 1 TC.

127 INSTALL 2"C, 1 HCC.

128 EXISTING 2-1½"C, 1 TVP, 1 TVCP, 1 TVC, 1 TVL ADD 1-HCC.

129 EXISTING 2"C, 2#6 (120 V, SERVICE TO CCTV CONTROLLER).2#10 (120 V, SERVICE TO TDC).

130 INSTALL 2"C, 2#6 (120 V, SERVICE TO CONTROLLER CCTV-EB).

131 INSTALL 2-3"C, 1 HCC.

132 INSTALL 2"C, 2#2 (120 V SERVICE TO CCTV3 CONTROLLER).

133 INSTALL 2"C, 2 DLC.

134 INSTALL 2-3"C,17 DLC, 2#4 (120 V, SERVICE TO TMS CONTROLLER).

135 EXISTING 1½"C, 2#6 (240 V, LIGHTING). ADD 2#6 (120 V, SERVICE TO CCTV CONTROLLER), 2#6 (120 V, SERVICE TO TMS CONTROLLER).

136 INSTALL 1½"C, 2#4 (120 V, SERVICE TO CONTROLLER).

137 EXISTING 1½"C, 2#4 (240 V, LIGHTING). ADD 2#4 (120 V, SERVICE TO CONTROLLER).

138 INSTALL 2"C, 2#2 (CCTV CONTROLLER), 2#6 (TMS CONTROLLER), 2#10 (TDC).

139 INSTALL 2-3"C, 16 DLC.

140 EXISTING 1½"C, 2#6(LIGHTING). ADD 2#4(120 V, TMS CONTROLLER).

141 INSTALL 2"C, 2#6 (120 V, RM CONTROLLER), 1 DLC.

142 EXISTING 2"C, 2#6 (LIGHTING), 2#8 (SIGN ILLUMINATION), 2#14 (SIGN TEST SWITCH). ADD 2#2 (CCTV CONTROLLER), 2#6 (RM CONTROLLER).

143 INSTALL 2"C, 2#2 (CCTV CONTROLLER), 2#6 (TMS CONTROLLER).

144 INSTALL 2-3"C, 3#14 (SIGNALS), 3#14 (SPARE), 1#10 (NEUTRAL), 2#10 (120 V, METER ON), 19 DLC.

145 INSTALL 2"C, 3#6 (SERVICE TO CMS PANEL).

146 INSTALL 2"C, 2#6 (SERVICE TO RM), 2#6 (SERVICE TO CMS), 3#6 (SERVICE TO CMS PANEL).

147 INSTALL 1½"C, 4#2 (120 V, SERVICE TO CONTROLLER), 2#10 (120 V, SERVICE TO TDC).

148 INSTALL 1½"C, 4#2 (120 V, SERVICE TO CONTROLLER).

149 INSTALL 3"C, 8 DLC.

150 INSTALL 3"C, 16 DLC.

151 EXISTING 2"C, 3#2 (120/240 V, SERVICE).

152 ADD 1P-30 A, 120 V, CB (TMS CONTROLLER).

153 EXISTING 1½"C, 2#6 (240 V. LIGHTING), 2#8 (240 V SIGN LIGHTING), 2#14 (TEST SWITCH), 5#14(2-PEU). ADD 2#4 (120 V, SERVICE TO TMS).

154 EXISTING 1½"C, 2#6 (240 V, LIGHTING). ADD 2#6 (120 V, SERVICE TO CONTROLLER), 3#6 (120 V SERVICE TO CMS PANEL).

155 EXISTING 1½"C, 2#6 (240 V, LIGHTING), 2#8 (240 V SIGN LIGHTING), 2#14 (TEST SWITCH). ADD 2#4 (120 V, SERVICE TO TMS).

156 EXISTING 2"C, 1 dlc.

157 EXISTING 2"C, 5 dlc.

158 EXISTING 2"C, 9 dlc.

159 INSTALL 2"C, 3#14 (SIGNALS), 3#14 (SPARES), 1#10 (NEUTRAL), 2 DLC.

160 EXISTING 2"C, 10 dlc. RC 1 dlc (Q-1). ADD 3#14 (SIGNALS), 3#14 (SPARES), 1#10 (NEUTRAL), 2 DLC.

161 EXISTING 2"C, 10 dlc. RC 8 dlc, REUSE 1 DLC (Q-1). ADD 2#10 (METER ON).

162 EXISTING 2-3"C, 20 dlc. RC 9 dlc (ML LOOPS WB/Q1 WB), REUSE 1 DLC (Q1).

163 EXISTING 1½"C, 2#6 (120 V, SERVICE TO CCTV).

164 INSTALL 2"C, 2#6 (120 V, RM CONTROLLER).

165 EXISTING 2"C, 2#2 (120 V, SERVICE TO CONTROLLER)

166 INSTALL 3"C, 2#6 (120 V, SERVICE TO CONTROLLER/EB TO WB), 2#6(120 V, SERVICE TO CONTROLLER/WB TO EB), 2#6 (120 V, SERVICE TO CONTROLLER/WB TO WB), 2#6 (240 V, LIGHTING), 2#8 (240 V, SIGN LIGHTING), 2#10(120 V, IRRIGATION), 3#14 (PEU).

167 INSTALL 3"C, 2#6 (120 V, SERVICE TO CONTROLLER/EB TO WB), 2#6 (120 V, SERVICE TO CONTROLLER/WB TO EB), 2#6 (120 V, SERVICE TO CONTROLLER/WB TO WB),

168 INSTALL 2"C, 2#8 (120 V, PTS-1/2/EB TO WB), 2#8 (120 V, METER ON-1/EB TO WB).

169 INSTALL 1½"C, 2#10 (120 V, SERVICE IRRIGATION).

170 INSTALL 2"C, 2#6 (120 V, PTS-2/WB TO WB), 2#12 (PTS-1/METER ON-1 CONTROL).

171 INSTALL 2"C, 2#6 (120 V, PTS-1/EB TO WB), 2#12 (METER ON 1-CONTROL).

172 INSTALL 2"C, 2#6 (240 V, LIGHTING), 2#8 (240 V, SIGN LIGHTING).

173 INSTALL 2"C, 2#12 (PTS-1/METER ON-1 CONTROL), 2#6 (PTS-1 AND 2/METER ON-1), 2 DLC.

174 INSTALL 2"C, 2#12 (PTS-1 AND 2/METER ON-1 CONTROL), 2#6 (PTS-1 AND 2/METER ON-1), 2 DLC.

175 INSTALL 2"C, 2#6 (120 V, SERVICE TO CONTROLLER/EB TO WB).

176 INSTALL 2½"C, 2#6 (120 V, SERVICE TO CONTROLLER/WB TO WB), 2#6 (120 V, SERVICE TO CONTROLLER/WB TO EB).

177 INSTALL 2"C, 2#6 (120 V, SERVICE TO CONTROLLER/EB TO WB, 2#6 (120 V, SERVICE TO CONTROLLER/WB TO WB, 2#6 (120 V, SERVICE TO CONTROLLER/WB TO EB).

178 INSTALL 2"C, 2#6 (120 V, PTS-3 AND METER ON-2/EB TO EB), 2#12 (METER ON 2-CONTROL).

179 INSTALL 2½"C, 2#6 (120 V, SERVICE TO CONTROLLER/WB TO EB).

180 INSTALL 2"C, 2#12 (PTS-3 AND METER ON 2-CONTROL), 2 DLC, 2#6 (120 V, PTS-3 AND METER ON-2/ EB TO EB).

181 INSTALL 2½"C, ,2#6 (120 V, SERVICE TO CONTROLLER/WB TO EB), 2#6 (120 V, PTS-3 AND METER ON-2/ WB TO EB), 2#12 (PTS-3 AND METER ON-2 CONTROL), 2 DLC.

182 INSTALL 3"C, 2#6 (120 V, SERVICE TO CONTROLLER/WB TO EB), 2#6 (120 V, PTS-3 AND METER ON-2/ WB TO EB), 2#12 (PTS-3 AND METER ON 2-CONTROL), 2 DLC.

183 INSTALL 2"C, 2#6 (120 V, SERVICE TO CONTROLLER/WB TO WB), 2#12 (PTS-4 AND METER ON-3/WB TO WB), 2#6 (PTS-4/METER ON-3), 1 DLC.

184 INSTALL 2"C, 2#12 (PTS-4 AND METER ON-3/WB TO WB), 2#6 (PTS-4/METER ON-3), 1 DLC.

185 INSTALL 2"C, 2#12 (METER ON-3/WB TO WB), 2#6 (PTS-4/METER ON-3).

186 INSTALL 2-3"C, 2#6 (120 V, SERVICE TO CONTROLLER/WB TO WB), 2#12 (PTS-4 AND METER ON-3/WB TO WB), 2#6 (PTS-4/METER ON-3), 3#14 (SIGNALS), 3#14 (SPARES), 1#10 (NEUTRAL),1 DLC.

187 EXISTING 3"C, 4 dlc. RC 4 dlc. ADD 4 DLC.

188 INSTALL 3"C, 10 DLC.

189 INSTALL 3"C, 3#14 (SIGNALS), 3#14 (SPARES), 1#10 (NEUTRAL), 10 DLC.

190 INSTALL 3"C, 3#14 (SIGNALS), 3#14 (SPARES), 1#10 (NEUTRAL), 12 DLC.

191 INSTALL 2"C, 2#6 (METER ON-4), 2#12 (METER ON-4 CONTROL), 1 DLC.

192 INSTALL 2"C, 2#6 (PTS-5/METER ON-4), 2#12 (PTS-5/METER ON-4 CONTROL), 1 DLC.

193 INSTALL 2-3"C, 3#14 (SIGNALS), 3#14 (SPARES), 1#10 (NEUTRAL), 2#12 (PTS-5/METER ON-4 CONTROL), 2#6 (PTS-5/METER ON-3), 13 DLC, 2#6 (SERVICE).

194 EXISTING 1½"C, 1 tc.

195 EXISTING 1½"C, 2 tc.

196 EXISTING 3"C, 8 dlc.

197 EXISTING 1½"C, 2#10 (120 V, SERVICE TO TDC), 2#2 (120 V, SERVICE TO CONTROLLER).

198 EXISTING 1½"C, 2#2 (120 V, SERVICE TO CONTROLLER).

199 EXISTING 1½"C, 2#2 (120 V, SERVICE TO CONTROLLER), 2#10 (120 V, SERVICE TO TDC).

200 EXISTING 2-3"C, 20 dlc. RC 12 dlc (MAINLINE EB LOOPS AND COLLECTOR RAMP).

201 EXISTING 2"C, 2#6 (120 V, TMS B), 2 dlc. ADD 2#2 (120 V, CCTV CONTROLLER).

202 EXISTING 2"C, 2#6 (SIGNAL), 4#8 (LIGHTING), 2#8 (SIGN LIGHTING), 2#14 (SIGN TEST SWITCH), 5#14 (PEU). ADD 2#6 (120 V, CCTV CONTROLLER), 2#10 (120 V, TDC)

203 INSTALL 2"C, 2#6 (120 V RM CONTROLLER), 2#10 (METER ON), 1 DLC.

204 EXISTING 1½" C, 2#6 (SIGNAL), 2#8 (LIGHTING). ADD 2#6 (120 V, CCTV CONTROLLER).

205 INSTALL 3" C, 2#4 (120 V, RM CONTROLLER), 2#6 (120 V, CCTV CONTROLLER), 1 DLC.

206 INSTALL 2"C, 1 DLC.

207 EXISTING 1½"C, 2#6 (LIGHTING). ADD 1 DLC.

208 EXISTING 1½"C, 2#6(LIGHTING). ADD 2#6(120 V, CCTV CONTROLLER), 2#4 (120 V, RM CONTROLLER).

209 INSTALL 2"C, 2 DLC, 2#10 (METER ON).

210 INSTALL 2"C, 2#10 (METER ON).

211 INSTALL 2"C, 2#10 (METER ON), 1 DLC

212 INSTALL 3"C, 2#2 (120 V, RM CONTROLLER), 2#6 (120 V, TMS CONTROLLER), 2#10 (TDC).

213 INSTALL 2-3"C, 2#6 (120 V, RM CONTROLLER), 6#14, 1#10, 13 DLC, 2#10 (METER ON).

214 INSTALL 3"C, 1 HCC. 3"C, 6#14, 1#10, 10 DLC.

215 INSTALL 3"C, 2#6 (120 V, RM CONTROLLER), 2#10 (METER ON), 2 DLC, 3"C, 6#14,1#10, 12 DLC.

216 INSTALL 3"C, 2#4 (RM CONTROLLER).

217 EXIST 11/2"C, 2#6 (LIGHTING), 3#14 (PEU). ADD 2#10 (TDC), 2#6 (CCTV CONTROLLER), 2#4 (120 V, RM CONTROLLER).

218 EXIST 1½"C, 2#6 (LIGHTING). ADD 2#6 (120 V CCTV CONTROLLER), 2#6 (120 V, RM CONTROLLER), 1 DLC.

219 ADD 1-15 A, 120 V, 1P CB FOR TDC, 1-30 A, 120 V, 1P CB FOR CCTV CONTROLLER.

220 ADD 1-30 A, 120 V, 1P CB FOR TMS CONTROLLER.

221 ADD 1-30 A, 120 V, 1P CB FOR RM CONTROLLER.

222 INSTALL 2"C, 2#10 (TDC), 2#10 (METER ON).

223 INSTALL 2"C, 2#2 (CCTV CONTROLLER).

224 INSTALL 3"C, 1 HCC, 3"C, 2#6 (120 V, CCTV CONTROLLER), 6#14, 1#10, 11 DLC.

TRAFFIC OPERATIONS SYSTEM (PROJECT NOTES)

APPROVED FOR ELECTRICAL WORK ONLY

E-2

REVISED BY | DATE REVISED
JESSIE CABUGAO | ELAINE T. WONG
CALCULATED-DESIGNED BY | CHECKED BY
FUNCTIONAL SUPERVISOR: LAI HONG CHIU

STATE OF CALIFORNIA - DEPARTMENT OF TRANSPORTATION
Caltrans®
ELECTRICAL

LAST REVISION 04-25-12 | DATE PLOTTED => 11-MAY-2012 | TIME PLOTTED => 16:34

Dist	COUNTY	ROUTE	POST MILES TOTAL PROJECT	SHEET No.	TOTAL SHEETS
04	Sol	80	0.0/R28.4	357	509

Elaine Wong 2-29-12
REGISTERED ELECTRICAL ENGINEER DATE

5-7-12
PLANS APPROVAL DATE

REGISTERED PROFESSIONAL ENGINEER Elaine T. Wong No. 13753 Exp. 6-30-13 ELECT STATE OF CALIFORNIA

THE STATE OF CALIFORNIA OR ITS OFFICERS OR AGENTS SHALL NOT BE RESPONSIBLE FOR THE ACCURACY OR COMPLETENESS OF SCANNED COPIES OF THIS PLAN SHEET.

225 Exist 1½"C, 2#6 (LIGHTING), 3#14 (peu). ADD 2#6 (RM CONTROLLER).

226 Exist 1½"C, 2#6 (LIGHTING). ADD 2#6 (RM CONTROLLER).

227 Exist 2"C, 2#6 (LIGHTING). ADD 2#6 (CCTV CONTROLLER), 2#10 (TDC) .

228 INSTALL 3"C, 9#14, 1#10, 12 DLC.

229 INSTALL 3"C, 9#14, 1#10, 13 DLC, 2#10 (METER ON).

230 INSTALL 2"C, 2#4 (TMS CONTROLLER), 2#6 (RM CONTROLLER), 3 DLC.

231 INSTALL 2"C, 2#6 (CCTV CONTROLLER), 1 DLC.

232 INSTALL 2"C, 2#6 (RM CONTROLLER), 3 DLC.

233 INSTALL 2"C, 2#2 (TMS CONTROLLER), 1 DLC.

234 INSTALL 3"C 6#14, 1#10, 2#10 (METER ON).

235 INSTALL 3"C, 6#14, 1#10, 2#10, 3 DLC.

236 INSTALL 3"C, 6#14, 1#10, 2#10, 4 DLC.

237 INSTALL 2-3"C, 2#4 (RM CONTROLLER), 6#14, 1#10, 12 DLC, 2#10 (METER ON).

238 INSTALL 2"C, 2# 6 (120V SERVICE TO CONTROLLER/EB TO EB), 2#6 (120V SERVICE TO CONTROLLER/WB TO EB).

239 INSTALL 2-3"C, 1 HCC, 2#6 (CCTV CONTROLLER), 6#14, 1#10, 12 DLC, 2#10 (METER ON).

240 INSTALL 2-30 A, 120 V, 1PCB FOR CCTV CONTROLLER AND TMS CONTROLLER.

241 Exist 1½" C, 4#6, 5#14. ADD 2#6 (CCTV CONTROLLER), 2#4 (RM CONTROLLER), 2#10 (TDC).

242 Exist 1½" C, 4#6, 2#14. ADD 2#6 (CCTV CONTROLLER), 2#4 (RM CONTROLLER), 2#10 (TDC).

243 INSTALL 2"C, 2#6 (CCTV CONTROLLER), 2#4 (RM CONTROLLER), 1 DLC.

244 INSTALL 3"C, 2#2 (CMS CONTROLLER), 2#2 (CCTV CONTROLLER), 2#6 (RM CONTROLLER), 2#10 (TDC), 3#2 (CMS PANEL).

245 INSTALL 3" C, 2#2 (CMS CONTROLLER), 2#6 (CCTV CONTROLLER), 3#2 (CMS PANEL).

246 INSTALL 2-3"C, 2#6 (RM CONTROLLER), 6#14, 1#10, 12 DLC, 2#10 (METER ON).

247 INSTALL 3"C, 2#6 (CCTV CONTROLLER), 14 DLC, 2#10, 9#14, 1#10

248 INSTALL 3"C, 6#14, 1#10, 11 DLC, 2#10 (METER ON).

249 INSTALL 3"C, 6#14, 1#10, 12 DLC, 2#10 (METER ON).

250 INSTALL 3"C, 9#14, 1#10, 8 DLC

251 INSTALL 1-30 A, 120 V, 1P CB FOR CCTV CONTROLLER.

252 INSTALL 1-15 A, 120 V, 1P CB FOR TDC, ONE 30 A, 120 V, 1P CB FOR RM, 1-30 A, 120 V, 1P CB FOR CCTV.

253 INSTALL TYPE 18-4-161 SIGNAL STANDARD WITH 25 FOOT SMA. SEE DETAILS ON E-91.

254 INSTALL METER ON OR PTS EMS, HAR EMS CONTROL ASSEMBLY ON WOOD POST, SEE DETAILS ON E-98.

255 INSTALL 3" C, 17 DLC.

256 INSTALL TYPE 1-B STANDARD WITH SIGNAL HEADS AS SHOWN DETAIL "SIG" RAMP METER SIGNAL, POLE MOUNTED ON Exist FOUNDATION, SEE E-91.

257 INSTALL STATE-FURNISHED MODEL 2070 CONTROLLER ASSEMBLY ON Exist FOUNDATION.

258 INSTALL 3"C, 2#6 (CCTV CONTROLLER), 9#14, 1#10, 12 DLC. 2#10 (METER ON).

259 INSTALL 3"C, 2#6 (CCTV CONTROLLER), 2#10 (METER ON), 9#14, 1#10 12 DLC.

260 INSTALL 3"C, 2#6 (CCTV CONTROLLER), 2#10 (METER ON), 12 DLC.

261 INSTALL 2"C, 2#6 (CCTV CONTROLLER), 2#10 (METER ON).

262 INSTALL 2-3"C, 2#6 (TMS CONTROLLER), 13 DLC.

263 INSTALL 3"C, 2#6 (TMS CONTROLLER), 5 DLC.

264 INSTALL 3"C, 2#6 (TMS CONTROLLER), 3 DLC.

265 INSTALL 2"C, 3 DLC.

266 INSTALL 2"C, 2#6 (LIGHTING), 2#8 (SIGN LIGHTING), 3#4 (SIGN TEST SWITCH), 2#6, (TMS CONTROLLER), 3#14 (PEU).

267 INSTALL 2"C, 2#6 (RM CONTROLLER).

268 INSTALL 3"C, 2#2, (CCTV CONTROLLER), 9#14, 1#10.

269 INSTALL 2½"C, 2#6 (CCTV CONTROLLER), 9#14, 1#10, 4 DLC.

270 INSTALL 2½"C, 2#6 (CCTV CONTROLLER), 2#6 (RM CONTROLLER), 2#10 (TDC).

271 INSTALL 2½"C, 2#6 (CCTV CONTROLLER), 9#14, 1#10, 14 DLC.

272 INSTALL 2½"C, 2#6 (RM CONTROLLER), 6#14, 1#10, 10 DLC.

273 INSTALL 2-3"C, 2#6 (RM CONTROLLER), 6#14, 1#10, 4#8 (PTS), 11 DLC, 2#10 (METER ON).

274 INSTALL 3"C, 2#10 (METER ON), 4#8 (PTS), 1 DLC.

275 INSTALL METER ON OR PTS EMS, HAR EMS CONTROL ASSEMBLY ON STANDARD, SEE RSP ES-14C AND E-98.

276 INSTALL 2"C, 2#6 (RM CONTROLLER), 2#10 (METER ON), 2 DLC.

277 INSTALL 3"C, 2#6 (RM CONTROLLER), 2#10 (METER ON), 6#14, 1#10, 14 DLC.

278 ADD 2-30 A, 120 V, 1P CB FOR RM CONTROLLER AND TMS CONTROLLER.

279 Exist 1½"C, 2#6 (LIGHTING), 2#8 (SIGN ILLUMINATION), 2#14 (SIGN TEST SWITCH).

280 Exist 1½"C, 2#8 (SIGN ILLUMINATION), 2#14 (SIGN TEST SWITCH). ADD 4#8 (PTS).

281 INSTALL 2"C, 4#8 (PTS).

282 INSTALL 3"C, 2#4 (120 V, TMS CONTROLLER).

283 INSTALL 3"C, 2#6 (RM CONTROLLER), 2#2 (CCTV CONTROLLER), 4#8 (EMS/PTS).

284 INSTALL 2"C, 2#2 (CCTV CONTROLLER), 2#6 (RM CONTROLLER).

285 INSTALL 3"C, 4#8 (EMS/PTS), 2#6 (RM CONTROLLER), 2#2 (CCTV CONTROLLER).

286 INSTALL 2-3"C, 2#6 (RM CONTROLLER), 9#14, 1#10, 10 DLC, 4#8 (EMS/PTS).

287 INSTALL TYPE 1-B STANDARD WITH "METER ON" SIGN ON EXISTING FOUNDATION, SEE E-91.

288 INSTALL 3"C, 2#2 (120 V CCTV2 CONTROLLER), 2#2 (120 V, CCTV3 CONTROLLER), 2#6 (120 V, SERVICE TO CCTV1 CONTROLLER), 2#6 (120 V, SERVICE TO CMS CONTROLLER), 3#6 (120/240 V, SERVICE TO CMS PANEL), 8DLC.

289 INSTALL 3"C, 2#2 (120 V, CCT V2 CONTROLLER), 2#2 (120 V, CCT V3 CONTROLLER), 2#6 (120 V, SERVICE TO CCT V1 CONTROLLER), 8 DLC.

290 INSTALL 2"C, 2#2 (120 V CCT V2 CONTROLLER), 2#2 (120 V, CCT V3 CONTROLLER), 2#10 (120 V TDC).

291 EXISTING 3"C, 4 dlc. RC 4 dlc. INSTALL 4 DLC.

292 EXISTING 3"C, 8 dlc. RC 8 dlc, INSTALL 8 DLC.

293 INSTALL 3"C, 9#14 (SIGNALS), 3#14 (SPARES), 1#10 (NEUTRAL), 8 DLC.

294 INSTALL 3"C, 9#14 (SIGNALS), 3#14 (SPARES), 1#10(NEUTRAL), 14 DLC.

295 INSTALL 2-3"C, 9#14 (SIGNALS), 3#14 (SPARES), 1#10 (NEUTRAL), 2#12 (PTS-1/PTS-2/METER ON -1 CONTROL), 8 DLC, 2#6 (PTS-1 AND 2/METER ON-1).

296 EXISTING 2"C, 2#2 (SERVICE TO TMS CONTROLLER). 2#2 (SERVICE TO TMS CONTROLLER), RC 2#2.

297 EXISTING 2"C, 2#6 (240 V LIGHTING), 2#8 (240 V SIGN LIGHTING), 2#12 (TEST SWITCH), 3#14 (PEU), 2#2 (SERVICE TO WB TMS), 2#2 (SERVICE TO EB TMS). RC 2#2 AND 2#6 (SERVICE TO CCTV).

298 EXISTING 2"C, 3#2 (120/240 V, SERVICE).

299 EXISTING 1½"C, 2#6 (240 V, LIGHTING).

300 EXISTING 2"C, 2#6 (240 V LIGHTING), 2#8(240 V SIGN LIGHTING), 2#12 (TEST SWITCH), 3#14 (PEU). ADD 2#6 (120 V, SERVICE TO CCTV CONTROLLER).

301 EXISTING 2"C, 2#2 (SERVICE TO WB TMS CONTROLLER), 2#2 (120 V SERVICE TO EB CONTROLLER). RC 2#2 .

302 EXISTING 1½"C, 2#6 (240 V, LIGHTING), 3#14 (PEU).

303 EXISTING 1½"C, 2#6 (240 V, LIGHTING). ADD 2#6 (120 V, SERVICE TO CCTV CONTROLLER).

304 EXISTING 1½"C, 2#6 (240 V, LIGHTING) , 2#8 (240 V, SIGN LIGHTING), 2#14 (TEST SWITCH).

305 EXISTING 3"C, 6 dlc.

306 EXISTING 2-3"C, 6 dlc.

307 INSTALL 2-3"C, 10 dlc.

308 EXISTING 1½"C, 2#8 (240 V, SIGN LIGHTING), 2#14 (TEST SWITCH).

309 EXISTING 3"C, 22 dlc. RC 22 dlc. INSTALL 4 DLC.

310 EXISTING 3"C, 8 dlc. RC 8 dlc. INSTALL 8 DLC.

311 EXISTING 3"C, 10 dlc. RC 16 dlc. INSTALL 16 DLC.

312 INSTALL 3"C, 22 DLC.

313 INSTALL 3"C, 6#14 (SIGNALS), 3#14 (SPARES), 1#10 (NEUTRAL), 22 DLC.

314 INSTALL 2-3"C, 6#14 (SIGNALS), 3#14 (SPARES), 1#10 (NEUTRAL), 26 DLC.

315 INSTALL 2-3"C, 6#14 (SIGNALS), 3#14 (SPARES), 1#10 (NEUTRAL), 2#6 (120 V, SERVICE TO EB CONTROLLER), 26 DLC.

316 INSTALL 3"C, 2#6 (120 V, SERVICE TO EB CONTROLLER).

317 EXISTING 2"C, 2#2 (SERVICE TO WB TMS CONTROLLER), 2#6 (120 V, SERVICE TO 37 EB CONTROLLER), 2#10 (TDC SERVICE), 2#6 (240 V, LIGHTING), 2#8 (240 V, SIGN LIGHTING), 2#12 (TEST SWITCH), 3#14 (PEU). RC 2#6. ADD 2#6 (120 V, SERVICE TO EB RM CONTROLLER).

318 INSTALL 2"C, 2#6 (120 V, SERVICE TO EB RM CONTROLLER).

319 EXISTING 2 "C, 2#10 (120 V, SERVICE TO TDC).

320 EXISTING 3"C, 2#2 (120 V, SERVICE TO CONTROLLER/TMS STATION, NOW AS RM), 2#4 (120 V, SERVICE TO CONTROLLER CCTV), 2#10 (120 V, TDC). ADD 2#6 (120 V, SERVICE TO RM CONTROLLER).

321 EXISTING 2"C, 2#2 (120 V, SERVICE TO CONTROLLER/TMS STATION, NOW AS RM), 2#4 (120 V, SERVICE TO CONTROLLER CCTV). ADD 2#6 (120 V SERVICE TO RM CONTROLLER).

322 EXISTING 3"C, 2#4 (120 V, SERVICE TO CONTROLLER CCTV), 8 dlc. REUSE 7 DLC FOR RM. RC 1 dlc.

323 EXISTING 2-3"C, 2#4 (120 V, SERVICE TO CONTROLLER CCTV), 8 dlc. REUSE 7 DLC FOR RM. RC 1 dlc.

324 EXISTING 2-3 "C, 1 TVP, 1 TVCP, 1 TVC, 1 TVL.

325 EXISTING 3"C, 8 dlc. REUSE 6 DLC FOR RM. RC 1 dlc.

326 INSTALL 3"C, 16 DLC. (6 DLC FROM REROUTED DLC'S).

327 EXISTING 2"C, 2#6, 3#14. ADD 2#6 (SERVICE TO RM), 2#6 (SERVICE TO CMS),3#6 (CMS PANEL), 2#4 (CCTV).

328 INSTALL 2-3"C, 3#14 (SIGNALS), 3#14 (SPARES), 1#10 (NEUTRAL), 18 DLC.

329 EXISTING 2"C, 2#2, 1 dlc.

330 INSTALL 2"C, 2#10, 1 DLC.

331 INSTALL 2"C, 3#14 (SIGNALS), 3#14 (SPARES), 1#10 (NEUTRAL), 2 DLC.

332 INSTALL 2"C, 6#14 (SIGNALS), 3#14 (SPARES), 1#10 (NEUTRAL), 4 DLC.

333 EXISTING 2"C, 1 dlc. ADD 6#14 (SIGNALS), 3#14 (SPARES), 1#10 (NEUTRAL), 4 DLC.

334 EXISTING 3"C, 7 dlc. RC 1 dlc. ADD 6#14 (SIGNALS), 3#14 (SPARES),1#10 (NEUTRAL), 4 DLC.

335 EXISTING 2-3"C, 9 dlc 2#2. RC 1 dlc. ADD 6#14 (SIGNALS), 3#14 (SPARES), 1#10 (NEUTRAL), 4 DLC.

336 INSTALL 2-3"C, 1 HCC, 17 DLC, 2#6 (CCTV).

337 EXISTING 2"C, 9 dlc. RC 9 dlc. INSTALL 4 DLC.

338 EXISTING 2½"C, 5 dlc. RC 5 dlc. INSTALL 12 DLC.

339 INSTALL 3"C, 3#14 (SIGNALS), 3#14(SPARES), 1#10 (NEUTRAL),19 DLC.

340 INSTALL 2-3"C, CABLES (STATE-FURNISHED HARNESS #4 AND #5).

341 EXISTING 2"C, 2#6 (240 V, LIGHTING). ADD 2#6 (120 V, SERVICE TO CMS), 3#6 (120/240 V, SERVICE TO CMS PANEL).

APPROVED FOR ELECTRICAL WORK ONLY

TRAFFIC OPERATIONS SYSTEM (PROJECT NOTES)

E-3

REVISED BY | DATE REVISED
WILLIAM Y. WONG | ELAINE T. WONG
CALCULATED-DESIGNED BY | CHECKED BY
FUNCTIONAL SUPERVISOR: ELAINE WONG

STATE OF CALIFORNIA - DEPARTMENT OF TRANSPORTATION
Caltrans
ELECTRICAL

LAST REVISION 04-25-12 | DATE PLOTTED => 10-MAY-2012 | TIME PLOTTED => 07:02

Dist	COUNTY	ROUTE	POST MILES TOTAL PROJECT	SHEET No.	TOTAL SHEETS
04	Sol	80	0.0/R28.4	358	509

REGISTERED ELECTRICAL ENGINEER — DATE 2-29-12

5-7-12
PLANS APPROVAL DATE

REGISTERED PROFESSIONAL ENGINEER — Elaine T. Wong — No. 13753 — Exp 6-30-13 — ELECT — STATE OF CALIFORNIA

THE STATE OF CALIFORNIA OR ITS OFFICERS OR AGENTS SHALL NOT BE RESPONSIBLE FOR THE ACCURACY OR COMPLETENESS OF SCANNED COPIES OF THIS PLAN SHEET.

342 INSTALL TYPE 1-B POLE WITH PEU, SEE ES-7N FOR INSTALLATION DETAILS.

343 EXISTING 2-3"C, INSTALL 2#10 (METER ON), 9#14, 1#10, 18 DLC.

344 EXISTING 2"C, INSTALL 2#10 (METER ON), 6 DLC,

345 EXISTING 2"C, INSTALL 4 DLC.

346 EXISTING 2"C, INSTALL 2#10 (METER ON), 2 DLC.

347 EXISTING 2"C, INSTALL 2#10 (METER ON).

348 EXISTING 2"C, INSTALL 6#14, 1#10, 10 DLC.

349 INSTALL 3"C, 2#2 (120 V, CMS CONTROLLER), 3#2 (120 V, CMS PANEL), 2#2 (120 V, CCTV CONTROLLER).

350 INSTALL 2"C, 2#2 (120 V, CMS CONTROLLER), 3#2 (120 V, CMS PANEL).

351 INSTALL 2-3"C, 2#2 (120 V, CMS CONTROLLER), CABLES (STATE-FURNISHED HARNESS #4 AND #5).

352 INSTALL 2-3" C, 3#2 (120 V, CMS PANEL), CABLES (STATE-FURNISHED HARNESS #4 AND #5).

353 INSTALL 2"C, 2#2 (120 V, CCTV CONTROLLER)

354 INSTALL 2-3"C, 1 HCC, 2#2 (120 V, CCTV CONTROLLER), 9#14, 1#10, 14 DLC, 2#10 (METER ON).

355 INSTALL 2-3"C, 2#2 (120 V, CCTV CONTROLLER), 9#14, 1#10, 13 DLC, 2#10 (METER ON).

356 EXISTING 1½"C, ADD 2#6 (120 V, RM CONTROLLER), 2#4 (120 V, TMS CONTROLLER).

357 EXISTING 1½"C, ADD 2#4 (120 V, RM CONTROLLER), 2#4 (120 V, TMS CONTROLLER), 2 DLC, 2#10 (METER ON).

358 EXISTING 1½"C, ADD 2#6 (120 V, TMS CONTROLLER), 3 DLC.

359 EXISTING 1½"C, ADD 2#4 (120 V, RM CONTROLLER), 5 DLC, 2#10 (METER ON).

360 EXISTING 3"C, ADD 2#4 (120 V, RM CONTROLLER), 17 DLC, 9#14,1#10, 2#10 (METER ON).

361 EXISTING 3"C, ADD 9#14, 1#10, 12 DLC.

362 EXISTING 3"C, ADD 6#14, 1#10, 10 DLC.

363 EXISTING 2"C, 2#6 (120 V, RM CONTROLLER), 2#4 (120 V, RM CONTROLLER), ADD 2#10 (METER-ON).

364 EXISTING 1½"C, 2#4 (120 V, RM CONTROLLER). ADD 2#10 (METER-ON).

365 EXISTING 3"C, 2#4 (120 V, RM CONTROLLER). ADD 9#14, 1#10, 14 DLC, 2#10 (METER-ON).

366 EXISTING 2"C, ADD 6#14, 10 DLC.

367 EXISTING 3"C, 2#4 (LIGHTING), 8#6 (LIGHTING) , 3#14 (SIGN TEST SWITCH), 4#8 (SIGN LIGHTING), 2#10 (IRRIGATION), 2#4 (RM CONTROLLER), 2#6 (RM CONTROLLER). ADD 2#4 (RM CONTROLLER). 2#4 (TMS CONTROLLER).

368 INSTALL 2-3"C, 2#6 (120 V, CCTV CONTROLLER), 9#14, 1#10, 14 DLC, 2#10 (METER ON).

369 INSTALL 2"C, 2#4 (120 V, TMS CONTROLLER), 2#6 (120 V, RM CONTROLLER), 2#6 (240 V, LIGHTING), 2#8 (120 V, SIGN LIGHTING), 3#14 (SIGN TEST SWITCH), 2#12 (IRRIGATION), 3#14 (PEU).

370 INSTALL 2"C, 2#4 (120 V, TMS CONTROLLER), 2#6 (120 V, RM CONTROLLER), 2#6 (240 V, LIGHTING), 2#8 (120 V, SIGN LIGHTING), 3#14 (SIGN TEST SWITCH), 2#12 (IRRIGATION).

371 INSTALL 2"C, 2#4 (120 V, TMS CONTROLLER), 2#6 (120 V, RM CONTROLLER).

372 INSTALL 2-3"C, 6#14, 1#10, 14 DLC, 2#6 (120 V, TMS CONTROLLER).

373 INSTALL 2"C, 6#14, 1#10, 1 DLC, 2#10 (METER ON).

374 RC EXISTING TYPE J2 LIGHTING CONTROL.

375 EXISTING 1½"C, 2#6 (LIGHTING), 2#8 (SIGN LIGHTING), 2#14 (SIGN TEST SWITCH), 2#12 (RRIGATION).

376 EXISTING 3"C, 2#6 (LIGHTING), 2#6 (SIGNAL), 2#10 (IISNS). ADD 2#6 (120 V, CCTV CONTROLLER), 2#10 (TDC).

377 EXISTING 2"C, 2#6 (RM CONTROLLER), 2#4 (RM CONTROLLER)

378 INSTALL 2-3"C, 1 HCC, 2#6 (CCTV CONTROLLER), 2#10 (METER ON), 9#14, 1#10, 12 DLC.

379 INSTALL ELECTRICAL EQUIPMENT OUTSIDE OF SILT FENCE, SEE LAYOUT PLANS. AVOID WETLAND AND DITCHES.

380 INSTALL 2"C, 2#6 (RM CONTROLLER), 2#10 (METER ON), 1 DLC.

381 INSTALL 2"C, 2#6 (RM CONTROLLER), 2#10 (METER ON).

382 INSTALL 2-3"C, 1 HCC, 2#6 (CCTV CONTROLLER), 17 DLC.

383 INSTALL 2"C, 2#6 (SERVICE TO RM), 2#6 (SERVICE TO CMS), 3#6 (SERVICE TO CMS PANEL), 2#4 (SERVICE TO CCTV).

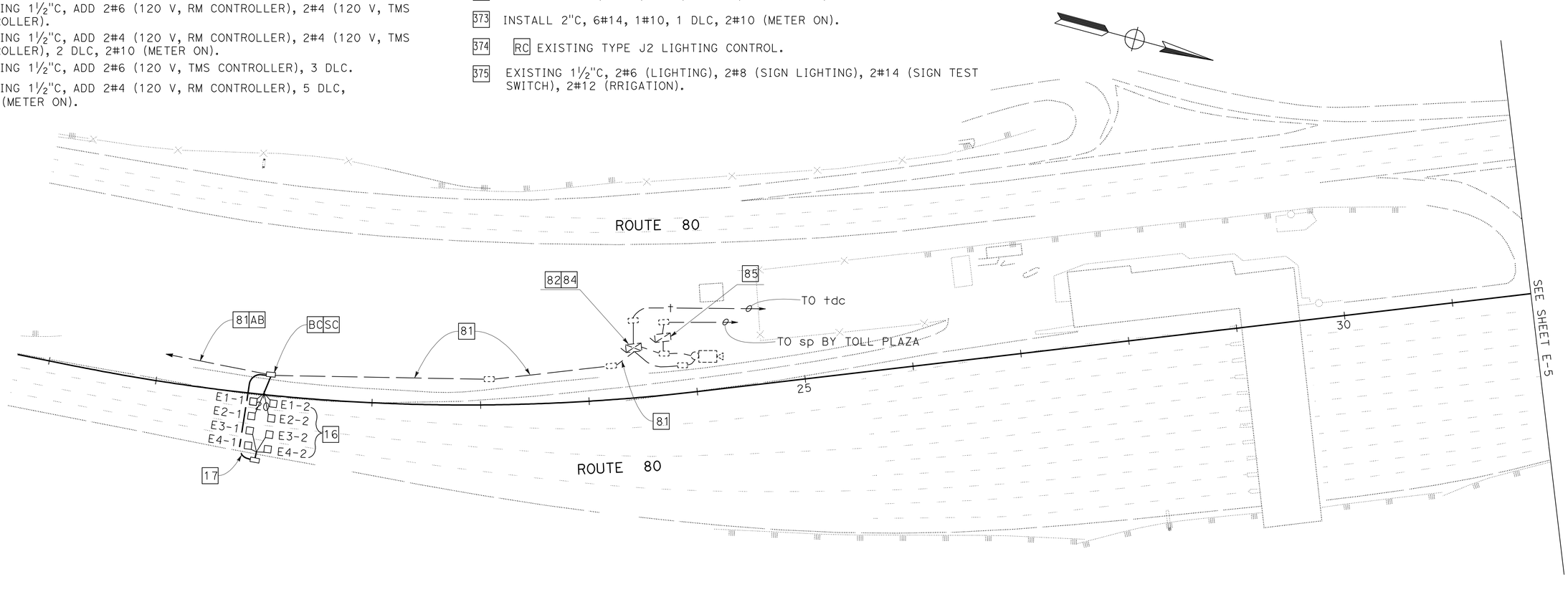

TRAFFIC OPERATIONS SYSTEM (LOCATION 1)

SCALE: 1" = 50'

FOR NOTES, SEE SHEET E-1 THRU E-4.
FOR ABBREVIATIONS, SEE SHEET E-1.

APPROVED FOR ELECTRICAL WORK ONLY

E-4

STATE OF CALIFORNIA - DEPARTMENT OF TRANSPORTATION
Caltrans
ELECTRICAL

FUNCTIONAL SUPERVISOR: LAI HONG CHIU
CALCULATED-DESIGNED BY: JESSIE CABUGAO
CHECKED BY: ELAINE T. WONG
REVISED BY / DATE REVISED

LAST REVISION 04-21-12 | DATE PLOTTED => 10-MAY-2012 | TIME PLOTTED => 07:02

Dist	COUNTY	ROUTE	POST MILES TOTAL PROJECT	SHEET No.	TOTAL SHEETS
04	Sol	80	0.0/R28.4	359	509

REGISTERED ELECTRICAL ENGINEER 2-29-12 DATE

5-7-12
PLANS APPROVAL DATE

REGISTERED PROFESSIONAL ENGINEER Elaine T. Wong No. 13753 Exp. 6-30-13 ELECT STATE OF CALIFORNIA

THE STATE OF CALIFORNIA OR ITS OFFICERS OR AGENTS SHALL NOT BE RESPONSIBLE FOR THE ACCURACY OR COMPLETENESS OF SCANNED COPIES OF THIS PLAN SHEET.

NOTE:

FOR ACCURATE RIGHT OF WAY DATA, CONTACT RIGHT OF WAY ENGINEERING AT THE DISTRICT OFFICE.

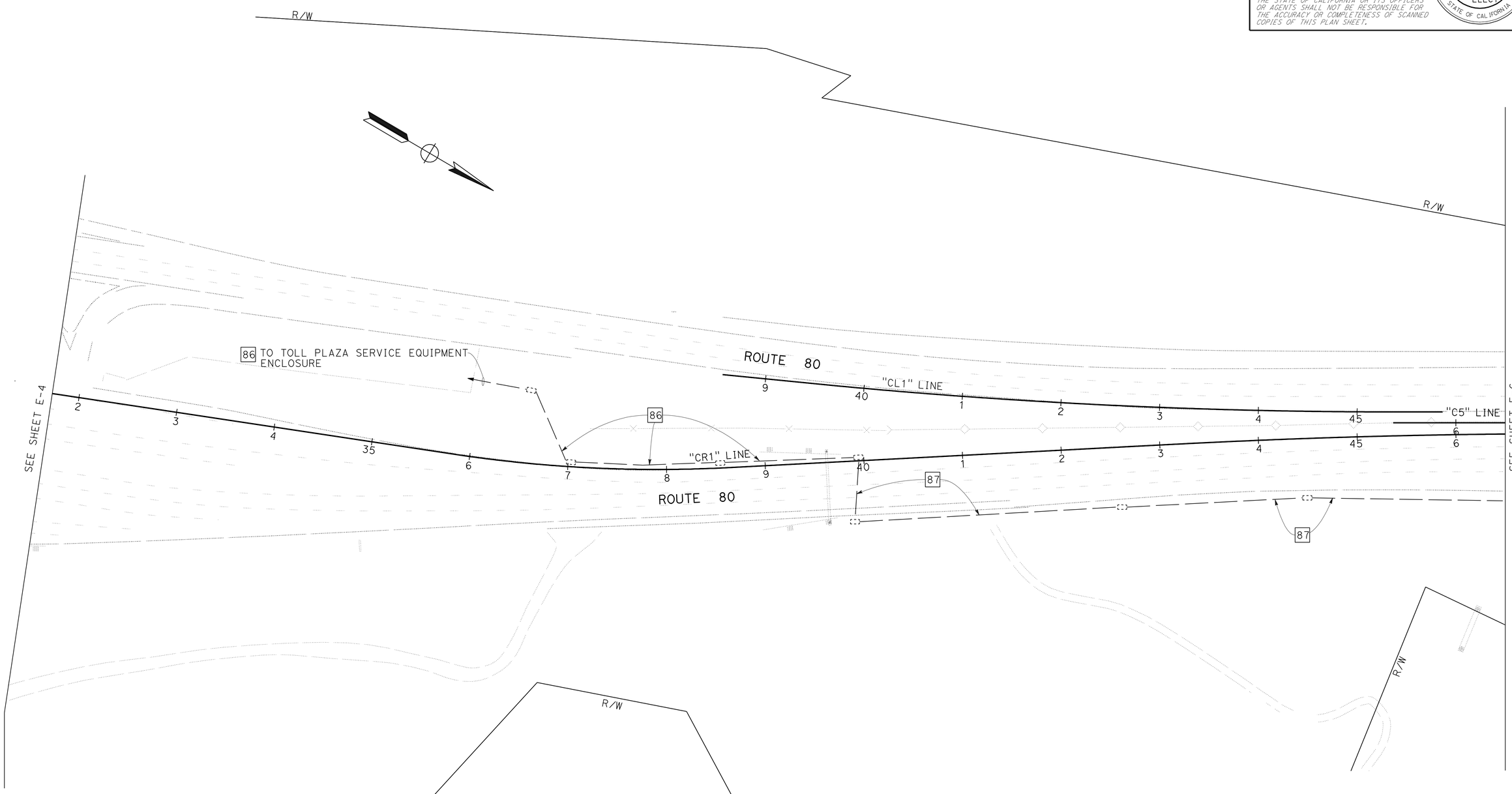

FOR INFORMATION ONLY

TRAFFIC OPERATIONS SYSTEM (LOCATION 1)

SCALE: 1" = 50'

APPROVED FOR ELECTRICAL WORK ONLY

FOR NOTES, SEE SHEET E-1 THRU E-4.
FOR ABBREVIATIONS, SEE SHEET E-1.

E-5

STATE OF CALIFORNIA - DEPARTMENT OF TRANSPORTATION
Caltrans
ELECTRICAL

FUNCTIONAL SUPERVISOR: LAI HONG CHIU

CALCULATED-DESIGNED BY: JESSIE CABUGAO
CHECKED BY: ELAINE T. WONG

REVISED BY
DATE REVISED

LAST REVISION 04-21-12
DATE PLOTTED => 10-MAY-2012
TIME PLOTTED => 07:02

Dist	COUNTY	ROUTE	POST MILES TOTAL PROJECT	SHEET No.	TOTAL SHEETS
04	Sol	80	0.0/R28.4	360	509

REGISTERED ELECTRICAL ENGINEER — DATE 2-29-12

5-7-12
PLANS APPROVAL DATE

REGISTERED PROFESSIONAL ENGINEER — Elaine T. Wong — No. 13753 — Exp. 6-30-13 — ELECT — STATE OF CALIFORNIA

THE STATE OF CALIFORNIA OR ITS OFFICERS OR AGENTS SHALL NOT BE RESPONSIBLE FOR THE ACCURACY OR COMPLETENESS OF SCANNED COPIES OF THIS PLAN SHEET.

NOTE:

FOR ACCURATE RIGHT OF WAY DATA, CONTACT RIGHT OF WAY ENGINEERING AT THE DISTRICT OFFICE.

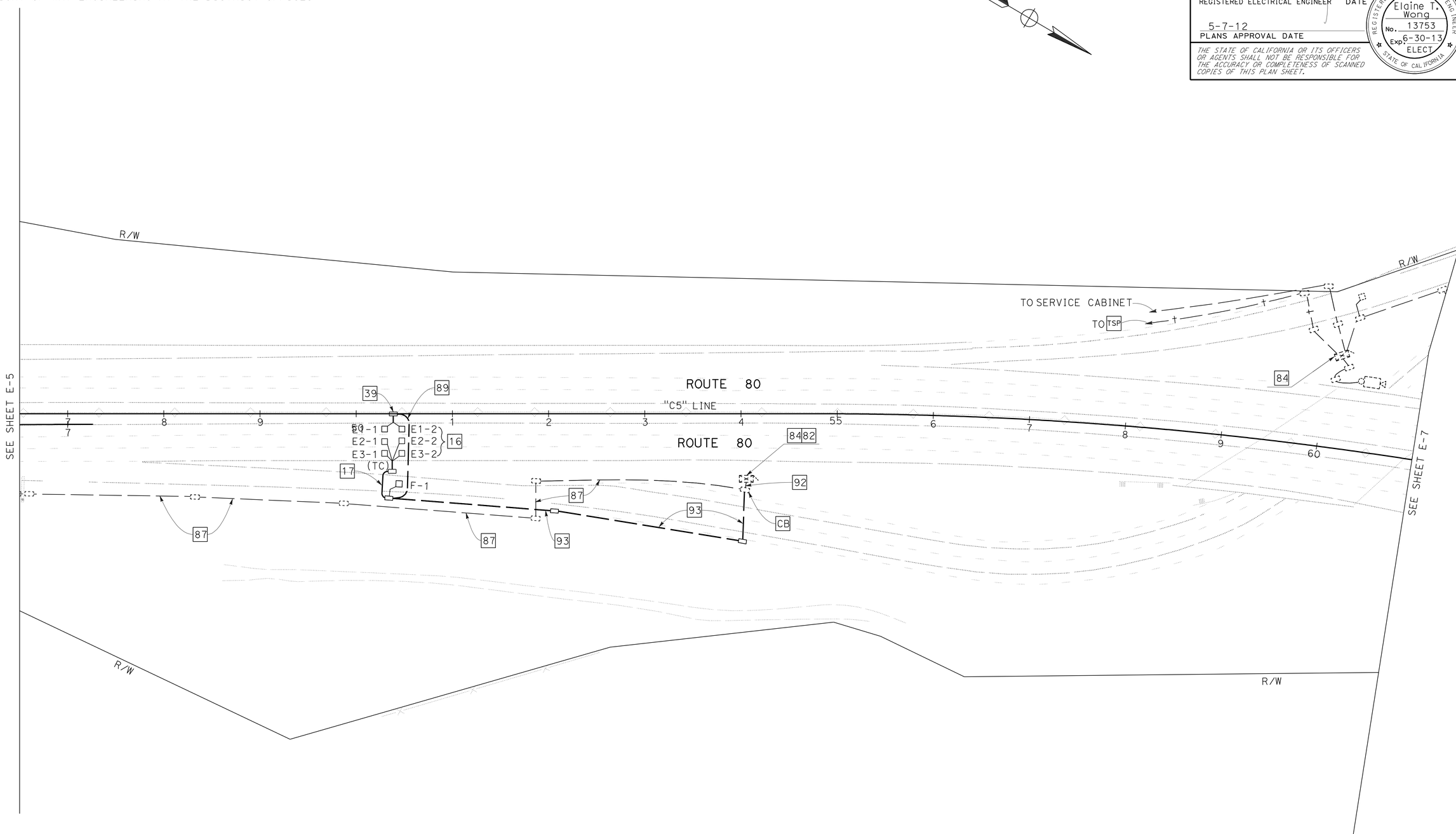

TRAFFIC OPERATIONS SYSTEM (LOCATION 1)

SCALE: 1" = 50'

APPROVED FOR ELECTRICAL WORK ONLY

FOR NOTES, SEE SHEET E-1 THRU E-4.
FOR ABBREVIATIONS, SEE SHEET E-1.

E-6

REVISED BY	DATE REVISED

CALCULATED-DESIGNED BY: JESSIE CABUGAO
CHECKED BY: ELAINE T. WONG

FUNCTIONAL SUPERVISOR: LAI HONG CHIU

STATE OF CALIFORNIA - DEPARTMENT OF TRANSPORTATION
Caltrans®
ELECTRICAL

LAST REVISION 02-29-12 | DATE PLOTTED => 10-MAY-2012 | TIME PLOTTED => 07:21

Dist	COUNTY	ROUTE	POST MILES TOTAL PROJECT	SHEET No.	TOTAL SHEETS
04	Sol	80	0.0/R28.4	361	509

Elaine Wong 2-29-12
REGISTERED ELECTRICAL ENGINEER DATE

5-7-12
PLANS APPROVAL DATE

REGISTERED PROFESSIONAL ENGINEER Elaine T. Wong No. 13753 Exp. 6-30-13 ELECT STATE OF CALIFORNIA

THE STATE OF CALIFORNIA OR ITS OFFICERS OR AGENTS SHALL NOT BE RESPONSIBLE FOR THE ACCURACY OR COMPLETENESS OF SCANNED COPIES OF THIS PLAN SHEET.

NOTE:

FOR ACCURATE RIGHT OF WAY DATA, CONTACT RIGHT OF WAY ENGINEERING AT THE DISTRICT OFFICE.

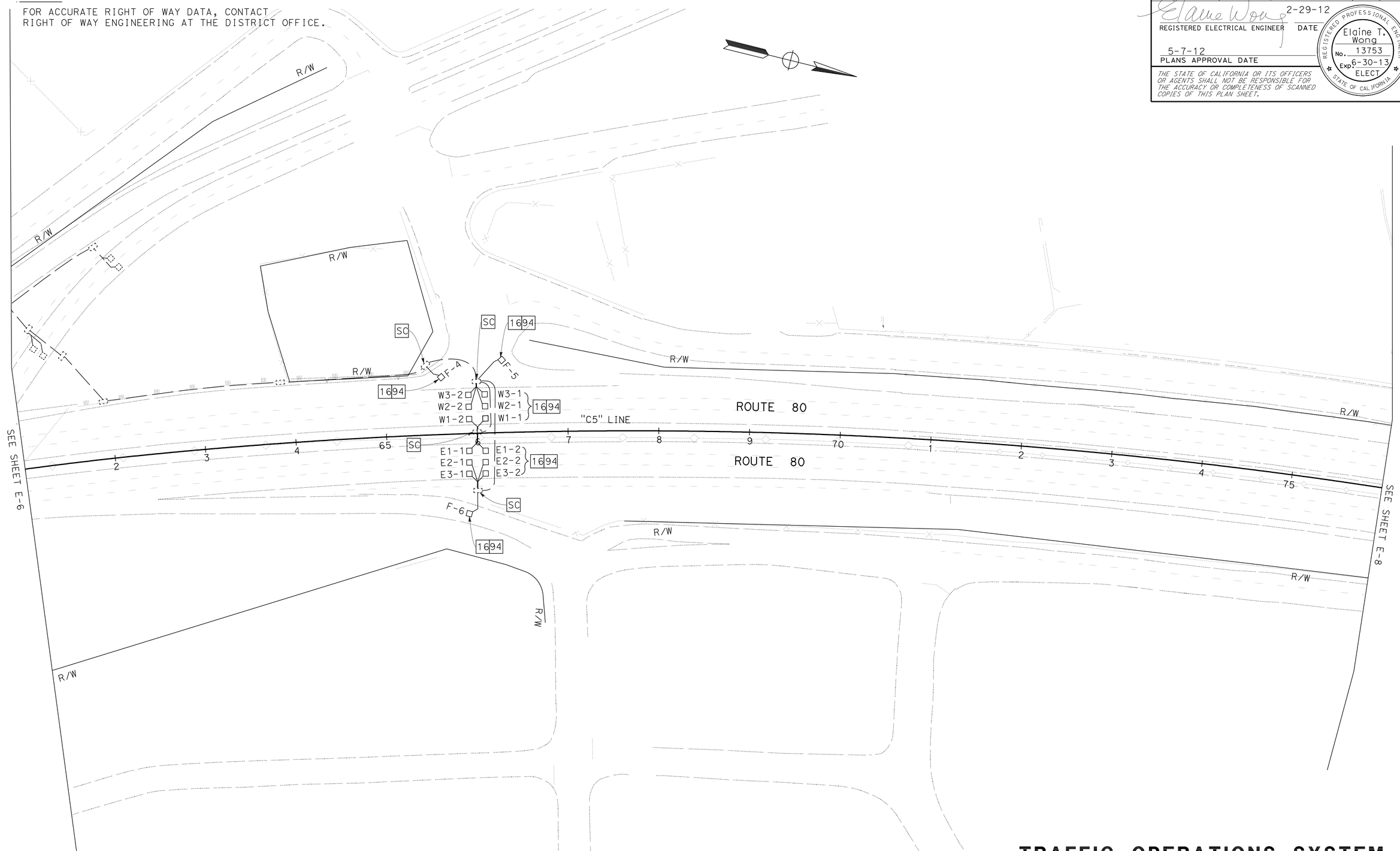

TRAFFIC OPERATIONS SYSTEM (LOCATION 1)

SCALE: 1" = 50'

FOR NOTES, SEE SHEET E-1 THRU E-4.
FOR ABBREVIATIONS, SEE SHEET E-1.

APPROVED FOR ELECTRICAL WORK ONLY

E-7

STATE OF CALIFORNIA - DEPARTMENT OF TRANSPORTATION
Caltrans
ELECTRICAL

FUNCTIONAL SUPERVISOR: LAI HONG CHIU
CALCULATED-DESIGNED BY: JESSIE CABUGAO
CHECKED BY: ELAINE T. WONG
REVISED BY
DATE REVISED

LAST REVISION 04-21-12
DATE PLOTTED => 10-MAY-2012
TIME PLOTTED => 07:21

Dist	COUNTY	ROUTE	POST MILES TOTAL PROJECT	SHEET No.	TOTAL SHEETS
04	Sol	80	0.0/R28.4	362	509

REGISTERED ELECTRICAL ENGINEER — DATE 2-29-12

5-7-12
PLANS APPROVAL DATE

REGISTERED PROFESSIONAL ENGINEER — Elaine T. Wong — No. 13753 — Exp. 6-30-13 — ELECT. — STATE OF CALIFORNIA

THE STATE OF CALIFORNIA OR ITS OFFICERS OR AGENTS SHALL NOT BE RESPONSIBLE FOR THE ACCURACY OR COMPLETENESS OF SCANNED COPIES OF THIS PLAN SHEET.

NOTE:

FOR ACCURATE RIGHT OF WAY DATA, CONTACT RIGHT OF WAY ENGINEERING AT THE DISTRICT OFFICE.

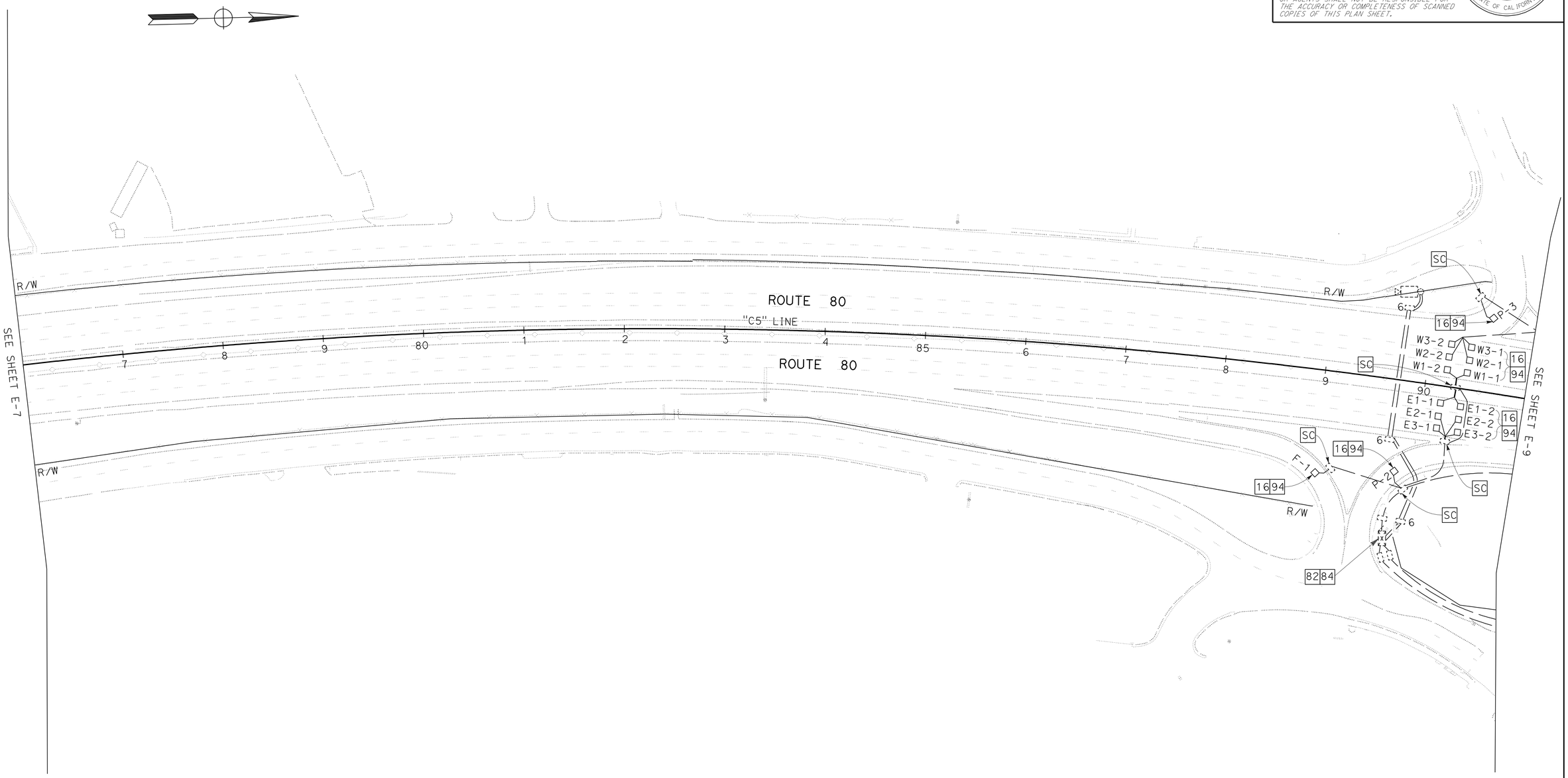

TRAFFIC OPERATIONS SYSTEM (LOCATION 2)

SCALE: 1" = 50'

APPROVED FOR ELECTRICAL WORK ONLY

FOR NOTES, SEE SHEET E-1 THRU E-4.
FOR ABBREVIATIONS, SEE SHEET E-1.

E-8

STATE OF CALIFORNIA - DEPARTMENT OF TRANSPORTATION
Caltrans
ELECTRICAL

FUNCTIONAL SUPERVISOR: LAI HONG CHIU

CALCULATED-DESIGNED BY: JESSIE CABUGAO
CHECKED BY: ELAINE T. WONG

REVISED BY
DATE REVISED

LAST REVISION 04-24-12 | DATE PLOTTED => 11-MAY-2012 | TIME PLOTTED => 16:35

Dist	COUNTY	ROUTE	POST MILES TOTAL PROJECT	SHEET No.	TOTAL SHEETS
04	Sol	80	0.0/R28.4	363	509

REGISTERED ELECTRICAL ENGINEER — DATE 2-29-12

5-7-12
PLANS APPROVAL DATE

REGISTERED PROFESSIONAL ENGINEER — Elaine T. Wong — No. 13753 — Exp. 6-30-13 — ELECT — STATE OF CALIFORNIA

THE STATE OF CALIFORNIA OR ITS OFFICERS OR AGENTS SHALL NOT BE RESPONSIBLE FOR THE ACCURACY OR COMPLETENESS OF SCANNED COPIES OF THIS PLAN SHEET.

NOTE:

FOR ACCURATE RIGHT OF WAY DATA, CONTACT RIGHT OF WAY ENGINEERING AT THE DISTRICT OFFICE.

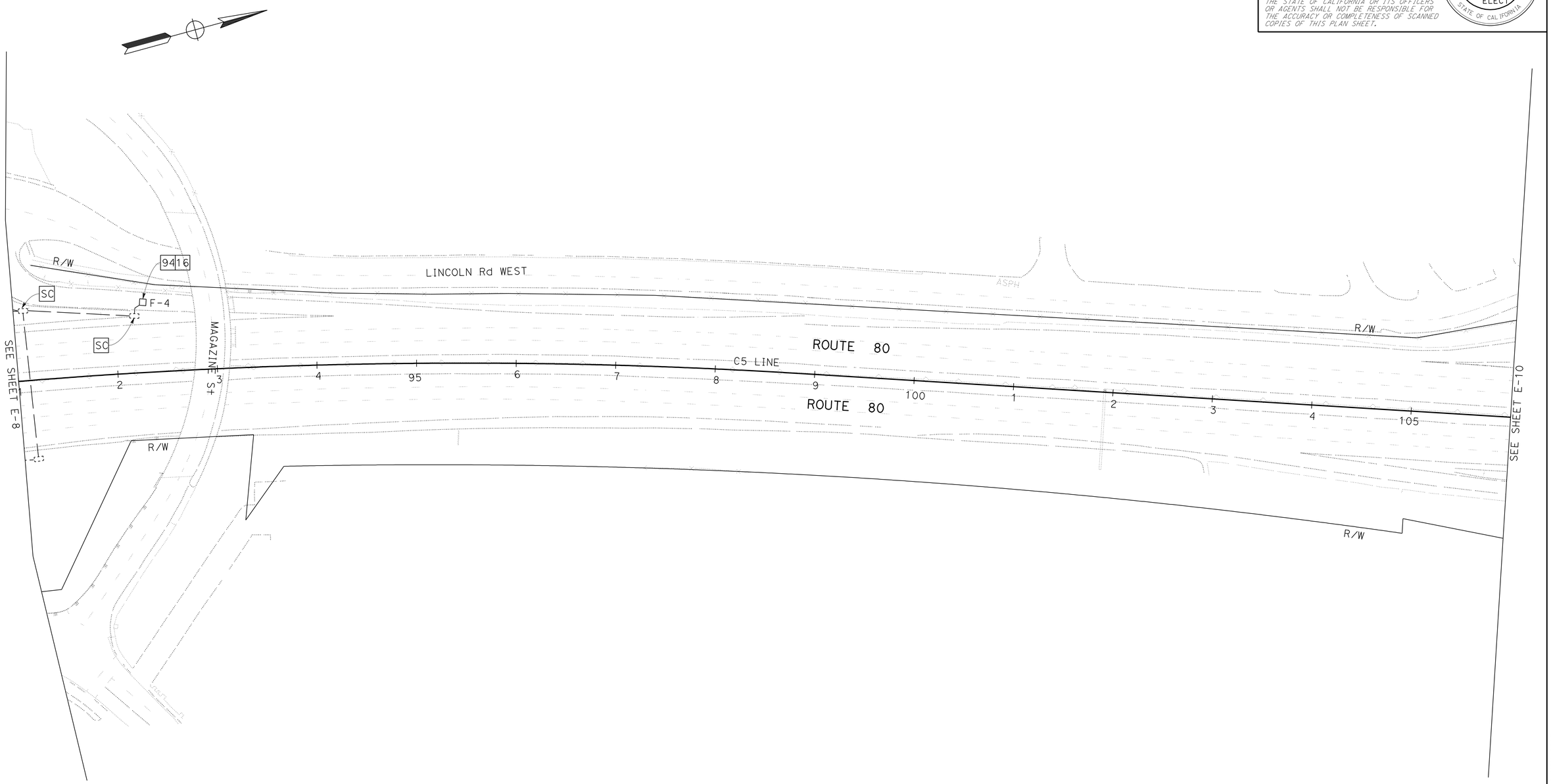

TRAFFIC OPERATIONS SYSTEM (LOCATION 2)

SCALE: 1" = 50'

FOR NOTES, SEE SHEET E-1 THRU E-4.
FOR ABBREVIATIONS, SEE SHEET E-1.

APPROVED FOR ELECTRICAL WORK ONLY

E-9

STATE OF CALIFORNIA - DEPARTMENT OF TRANSPORTATION
Caltrans
ELECTRICAL

FUNCTIONAL SUPERVISOR: LAI HONG CHIU
CALCULATED-DESIGNED BY: JESSIE CABUGAO
CHECKED BY: ELAINE T. WONG
REVISED BY
DATE REVISED

LAST REVISION 04-24-12
DATE PLOTTED => 10-MAY-2012
TIME PLOTTED => 07:21

Dist	COUNTY	ROUTE	POST MILES TOTAL PROJECT	SHEET No.	TOTAL SHEETS
04	Sol	80	0.0/R28.4	364	509

REGISTERED ELECTRICAL ENGINEER — DATE 2-29-12

5-7-12
PLANS APPROVAL DATE

REGISTERED PROFESSIONAL ENGINEER — Elaine T. Wong — No. 13753 — Exp. 6-30-13 — ELECT — STATE OF CALIFORNIA

THE STATE OF CALIFORNIA OR ITS OFFICERS OR AGENTS SHALL NOT BE RESPONSIBLE FOR THE ACCURACY OR COMPLETENESS OF SCANNED COPIES OF THIS PLAN SHEET.

NOTE:

FOR ACCURATE RIGHT OF WAY DATA, CONTACT RIGHT OF WAY ENGINEERING AT THE DISTRICT OFFICE.

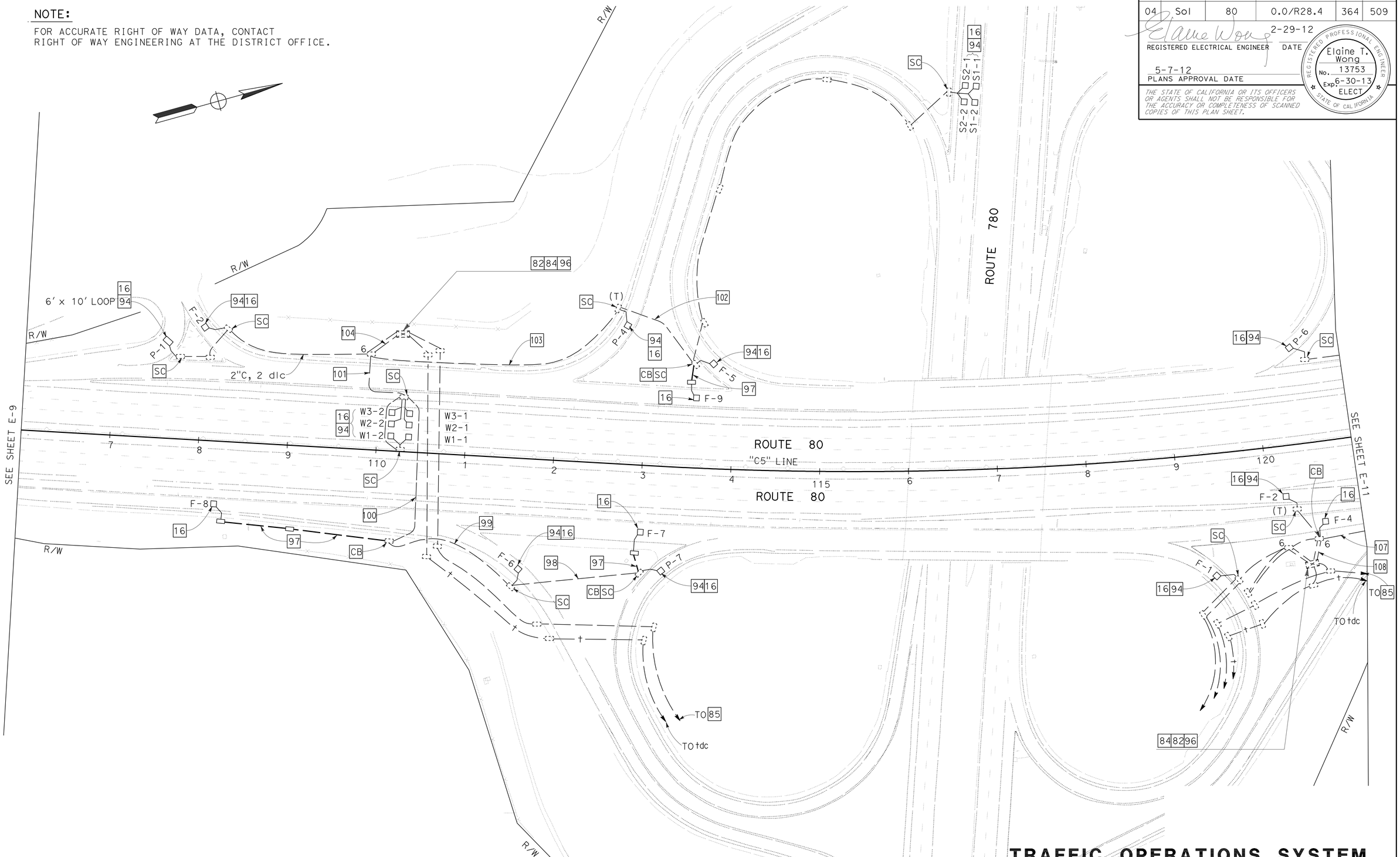

TRAFFIC OPERATIONS SYSTEM (LOCATION 3)

SCALE: 1" = 50'

FOR NOTES, SEE SHEET E-1 THRU E-4.
FOR ABBREVIATIONS, SEE SHEET E-1.

APPROVED FOR ELECTRICAL WORK ONLY

E-10

STATE OF CALIFORNIA - DEPARTMENT OF TRANSPORTATION
Caltrans
ELECTRICAL

FUNCTIONAL SUPERVISOR: LAI HONG CHIU
CALCULATED-DESIGNED BY: JESSIE CABUGAO
CHECKED BY: ELAINE T. WONG
REVISED BY
DATE REVISED

LAST REVISION 04-24-12
DATE PLOTTED => 10-MAY-2012
TIME PLOTTED => 07:21

Dist	COUNTY	ROUTE	POST MILES TOTAL PROJECT	SHEET No.	TOTAL SHEETS
04	Sol	80	0.0/R28.4	365	509

REGISTERED ELECTRICAL ENGINEER — DATE 2-29-12

5-7-12
PLANS APPROVAL DATE

REGISTERED PROFESSIONAL ENGINEER — Elaine T. Wong — No. 13753 — Exp. 6-30-13 — ELECT — STATE OF CALIFORNIA

THE STATE OF CALIFORNIA OR ITS OFFICERS OR AGENTS SHALL NOT BE RESPONSIBLE FOR THE ACCURACY OR COMPLETENESS OF SCANNED COPIES OF THIS PLAN SHEET.

NOTE:

FOR ACCURATE RIGHT OF WAY DATA, CONTACT RIGHT OF WAY ENGINEERING AT THE DISTRICT OFFICE.

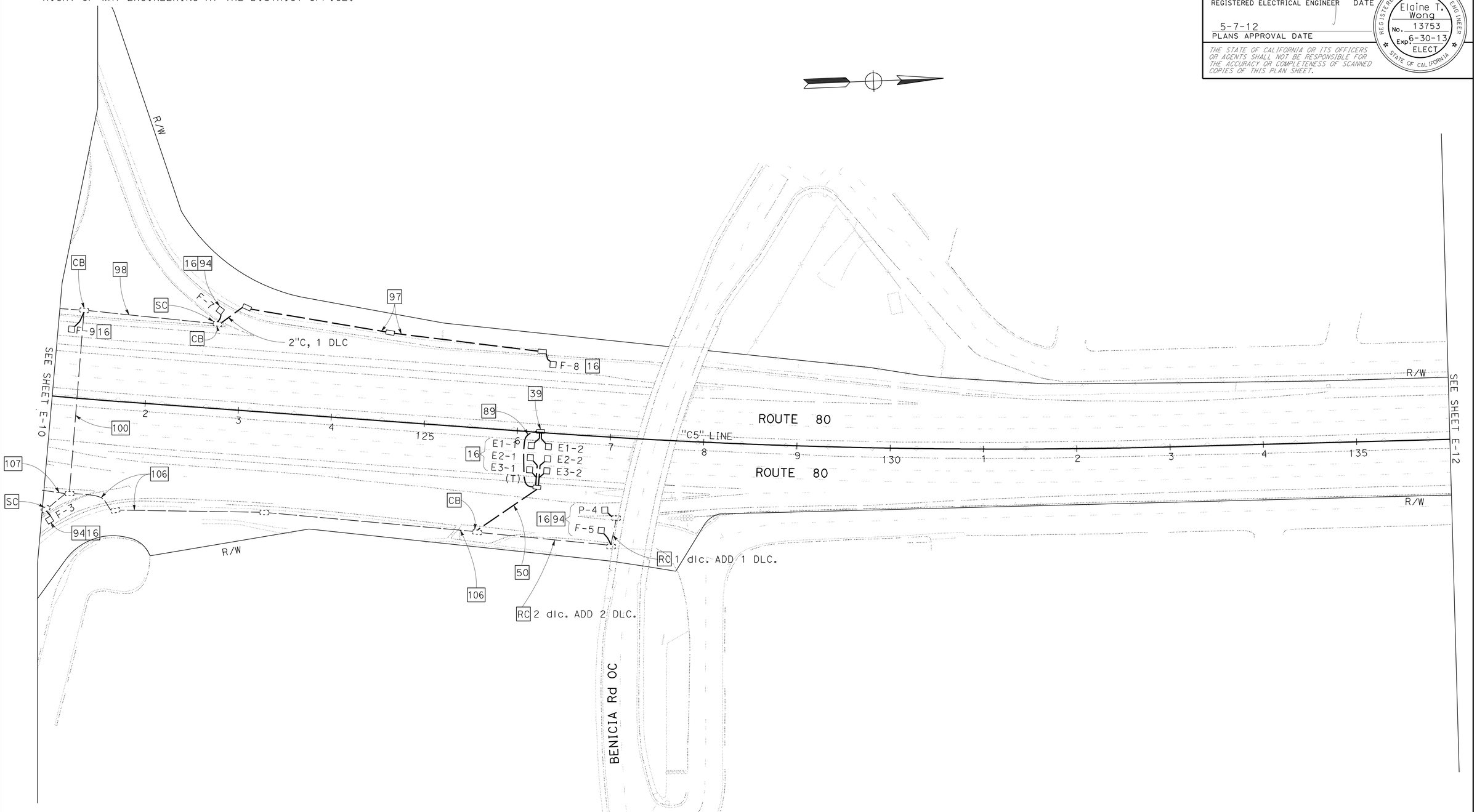

TRAFFIC OPERATIONS SYSTEM (LOCATION 3)

SCALE: 1" = 50'

FOR NOTES, SEE SHEET E-1 THRU E-4.
FOR ABBREVIATIONS, SEE SHEET E-1.

APPROVED FOR ELECTRICAL WORK ONLY

E-11

STATE OF CALIFORNIA - DEPARTMENT OF TRANSPORTATION
Caltrans
ELECTRICAL

FUNCTIONAL SUPERVISOR: LAI HONG CHIU
CALCULATED-DESIGNED BY: JESSIE CABUGAO
CHECKED BY: ELAINE T. WONG
REVISED BY
DATE REVISED

LAST REVISION 04-24-12
DATE PLOTTED => 10-MAY-2012
TIME PLOTTED => 07:21

Dist	COUNTY	ROUTE	POST MILES TOTAL PROJECT	SHEET No.	TOTAL SHEETS
04	Sol	80	0.0/R28.4	366	509

Elaine Wong 2-29-12
REGISTERED ELECTRICAL ENGINEER DATE

5-7-12
PLANS APPROVAL DATE

REGISTERED PROFESSIONAL ENGINEER Elaine T. Wong No. 13753 Exp. 6-30-13 ELECT STATE OF CALIFORNIA

THE STATE OF CALIFORNIA OR ITS OFFICERS OR AGENTS SHALL NOT BE RESPONSIBLE FOR THE ACCURACY OR COMPLETENESS OF SCANNED COPIES OF THIS PLAN SHEET.

NOTE:

FOR ACCURATE RIGHT OF WAY DATA, CONTACT RIGHT OF WAY ENGINEERING AT THE DISTRICT OFFICE.

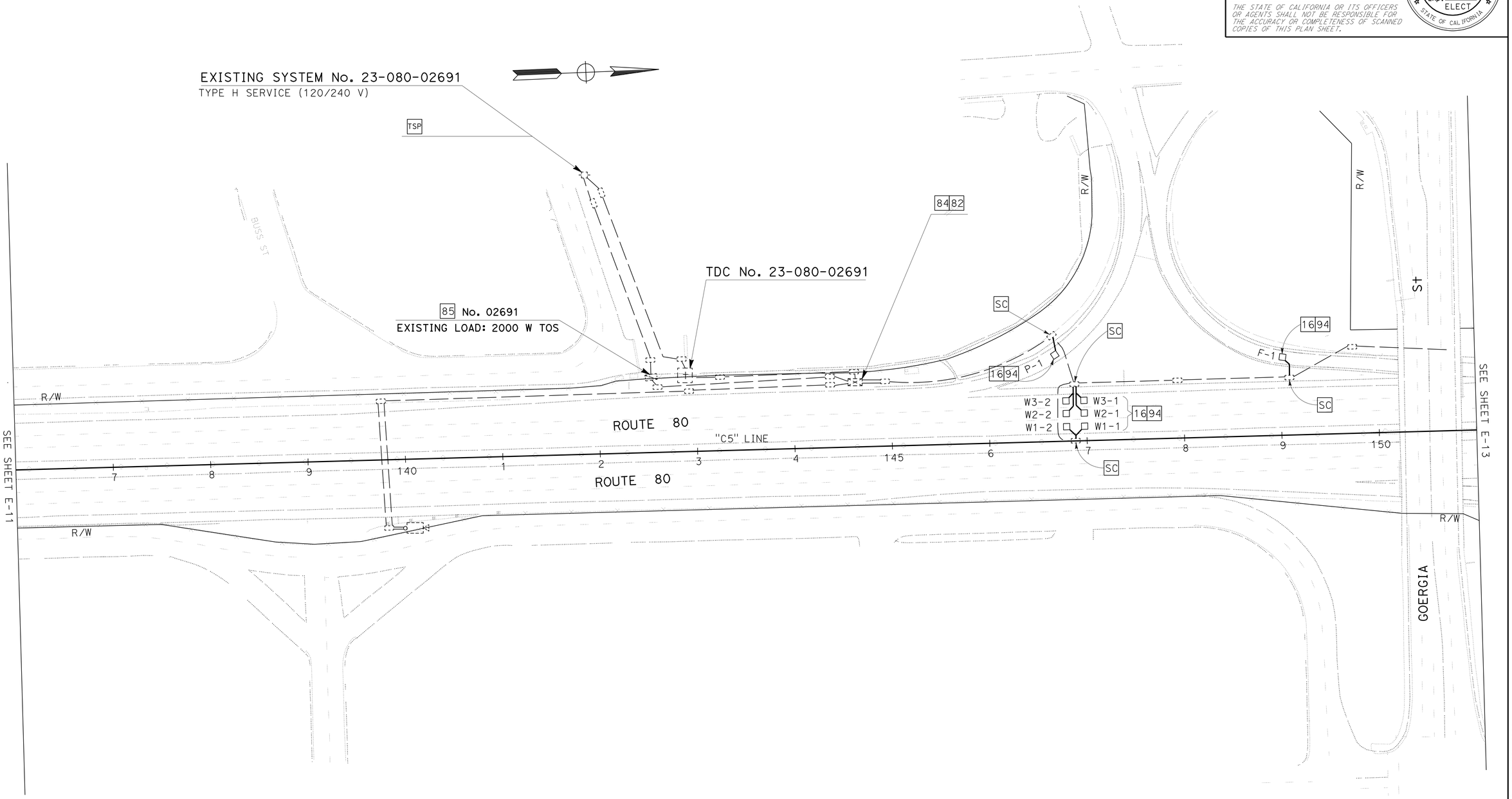

TRAFFIC OPERATIONS SYSTEM (LOCATION 4)

SCALE: 1" = 50'

FOR NOTES, SEE SHEET E-1 THRU E-4.
FOR ABBREVIATIONS, SEE SHEET E-1.

APPROVED FOR ELECTRICAL WORK ONLY

E-12

REVISED BY | DATE REVISED
JESSIE CABUGAO | ELAINE T. WONG
CALCULATED-DESIGNED BY | CHECKED BY
FUNCTIONAL SUPERVISOR
LAI HONG CHIU

STATE OF CALIFORNIA - DEPARTMENT OF TRANSPORTATION
Caltrans
ELECTRICAL

LAST REVISION 04-24-12 | DATE PLOTTED => 10-MAY-2012 | TIME PLOTTED => 07:43

Dist	COUNTY	ROUTE	POST MILES TOTAL PROJECT	SHEET No.	TOTAL SHEETS
04	Sol	80	0.0/R28.4	367	509

Elaine Wong 2-29-12
REGISTERED ELECTRICAL ENGINEER DATE

5-7-12
PLANS APPROVAL DATE

REGISTERED PROFESSIONAL ENGINEER Elaine T. Wong No. 13753 Exp. 6-30-13 ELECT STATE OF CALIFORNIA

THE STATE OF CALIFORNIA OR ITS OFFICERS OR AGENTS SHALL NOT BE RESPONSIBLE FOR THE ACCURACY OR COMPLETENESS OF SCANNED COPIES OF THIS PLAN SHEET.

NOTE:

FOR ACCURATE RIGHT OF WAY DATA, CONTACT RIGHT OF WAY ENGINEERING AT THE DISTRICT OFFICE.

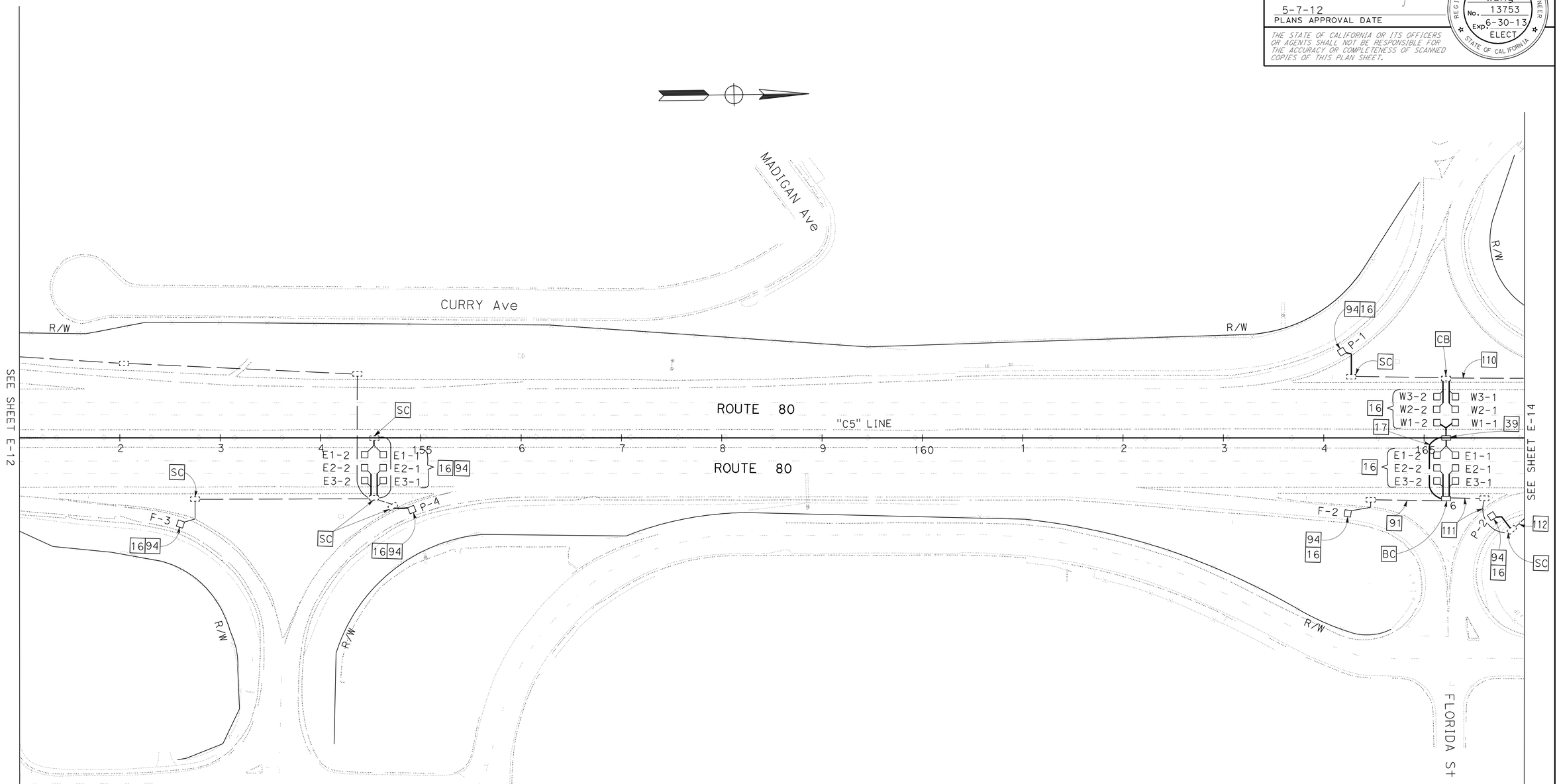

TRAFFIC OPERATIONS SYSTEM (LOCATION 4)

SCALE: 1" = 50'

FOR NOTES, SEE SHEET E-1 THRU E-4.
FOR ABBREVIATIONS, SEE SHEET E-1.

APPROVED FOR ELECTRICAL WORK ONLY

E-13

STATE OF CALIFORNIA - DEPARTMENT OF TRANSPORTATION
Caltrans
ELECTRICAL

FUNCTIONAL SUPERVISOR: LAI HONG CHIU
CALCULATED-DESIGNED BY: JESSIE CABUGAO
CHECKED BY: ELAINE T. WONG
REVISED BY
DATE REVISED

LAST REVISION 02-29-12
DATE PLOTTED => 10-MAY-2012
TIME PLOTTED => 07:21

Dist	COUNTY	ROUTE	POST MILES TOTAL PROJECT	SHEET No.	TOTAL SHEETS
04	Sol	80	0.0/R28.4	368	509

REGISTERED ELECTRICAL ENGINEER — DATE 2-29-12

5-7-12
PLANS APPROVAL DATE

REGISTERED PROFESSIONAL ENGINEER — Elaine T. Wong — No. 13753 — Exp. 6-30-13 — ELECT — STATE OF CALIFORNIA

THE STATE OF CALIFORNIA OR ITS OFFICERS OR AGENTS SHALL NOT BE RESPONSIBLE FOR THE ACCURACY OR COMPLETENESS OF SCANNED COPIES OF THIS PLAN SHEET.

NOTE:

FOR ACCURATE RIGHT OF WAY DATA, CONTACT RIGHT OF WAY ENGINEERING AT THE DISTRICT OFFICE.

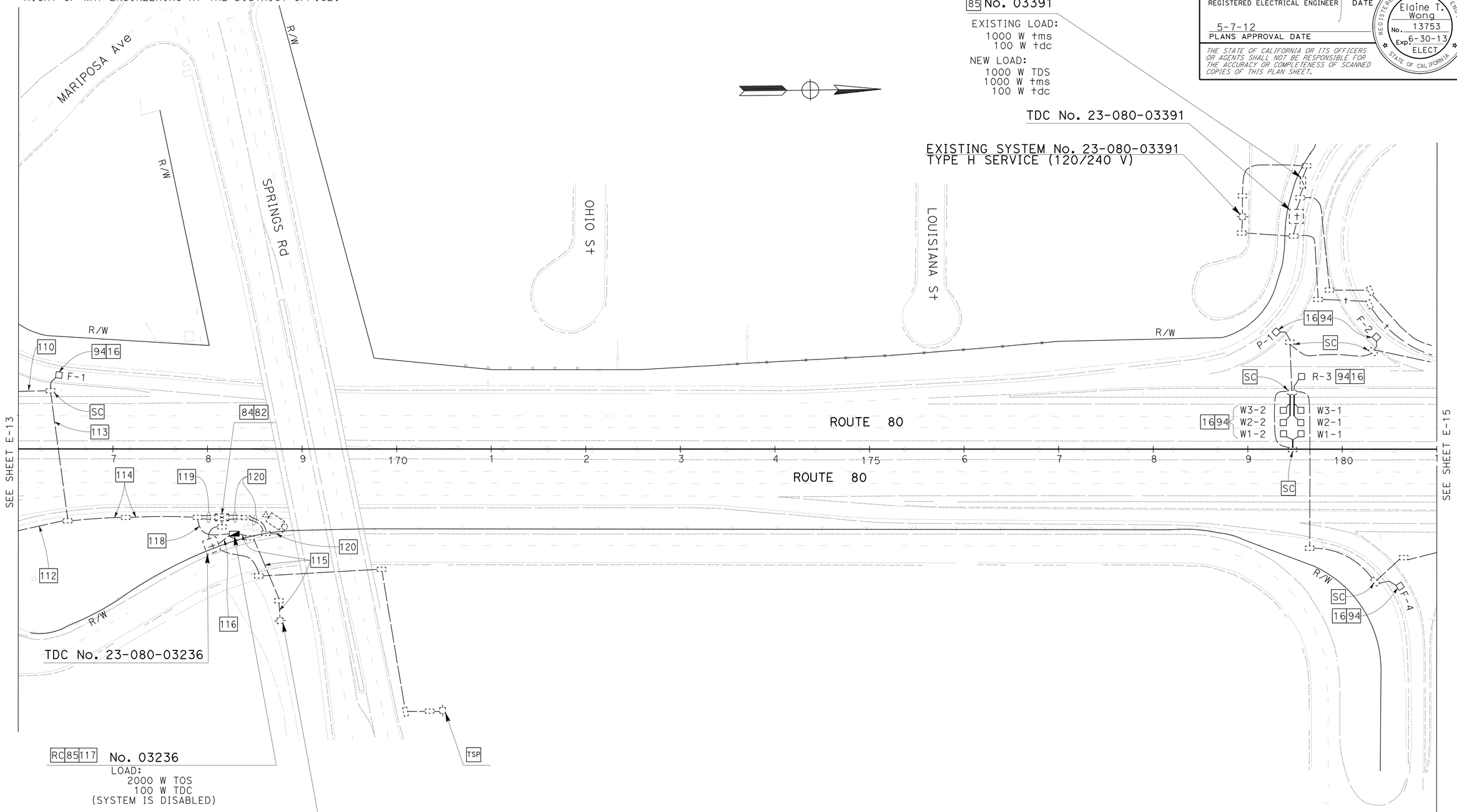

TRAFFIC OPERATIONS SYSTEM (LOCATION 4)

SCALE: 1" = 50'

FOR NOTES, SEE SHEET E-1 THRU E-4.
FOR ABBREVIATIONS, SEE SHEET E-1.

APPROVED FOR ELECTRICAL WORK ONLY

E-14

STATE OF CALIFORNIA - DEPARTMENT OF TRANSPORTATION
Caltrans
ELECTRICAL

FUNCTIONAL SUPERVISOR: LAI HONG CHIU
CALCULATED-DESIGNED BY: JESSIE CABUGAO
CHECKED BY: ELAINE T. WONG
REVISED BY
DATE REVISED

LAST REVISION 04-24-12
DATE PLOTTED => 10-MAY-2012
TIME PLOTTED => 07:22

Dist	COUNTY	ROUTE	POST MILES TOTAL PROJECT	SHEET No.	TOTAL SHEETS
04	Sol	80	0.0/R28.4	369	509

REGISTERED ELECTRICAL ENGINEER — DATE 2-29-12

5-7-12
PLANS APPROVAL DATE

REGISTERED PROFESSIONAL ENGINEER — Elaine T. Wong — No. 13753 — Exp. 6-30-13 — ELECT — STATE OF CALIFORNIA

THE STATE OF CALIFORNIA OR ITS OFFICERS OR AGENTS SHALL NOT BE RESPONSIBLE FOR THE ACCURACY OR COMPLETENESS OF SCANNED COPIES OF THIS PLAN SHEET.

NOTE:

FOR ACCURATE RIGHT OF WAY DATA, CONTACT RIGHT OF WAY ENGINEERING AT THE DISTRICT OFFICE.

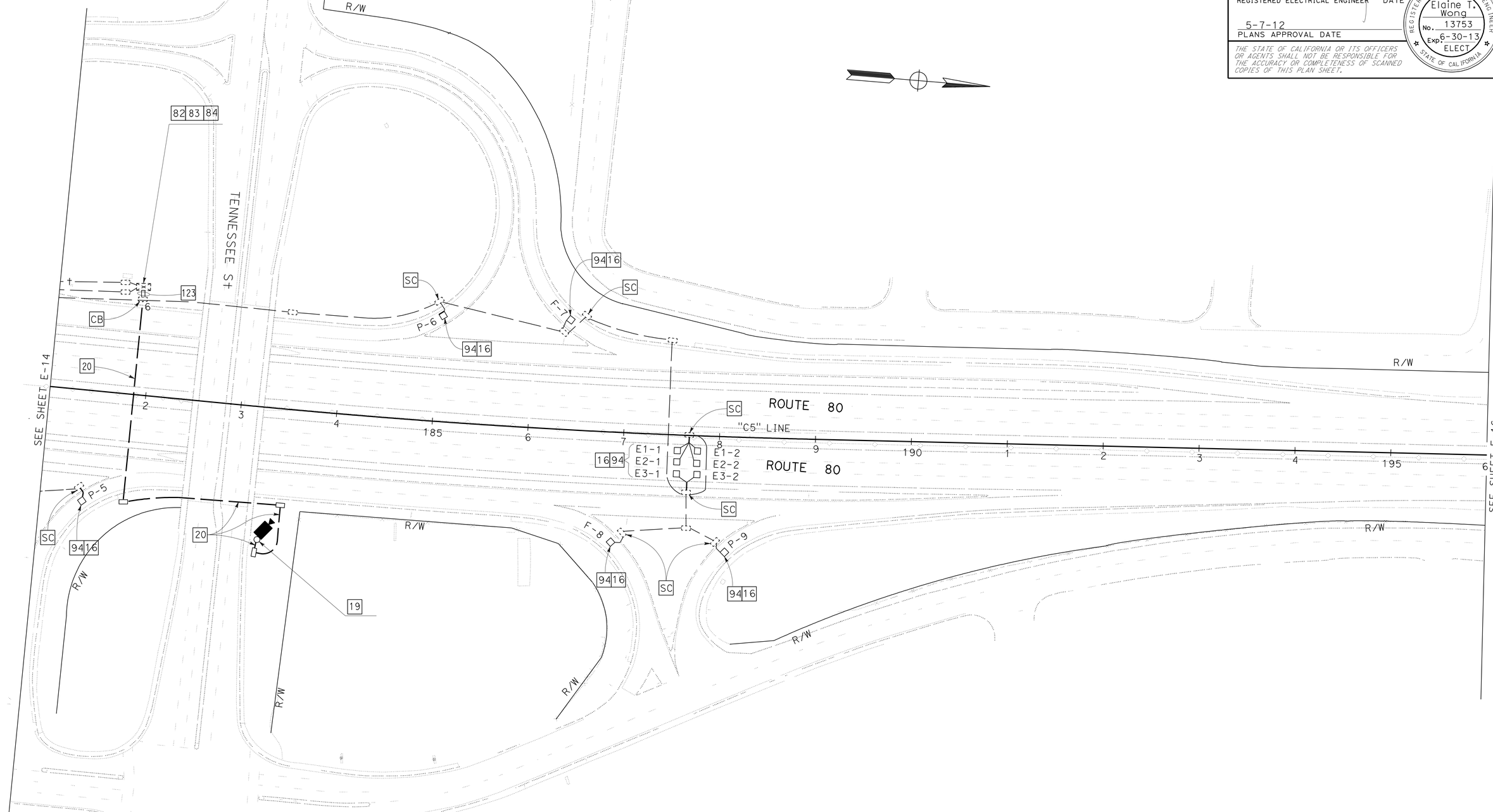

TRAFFIC OPERATIONS SYSTEM (LOCATION 4)

SCALE: 1" = 50'

FOR NOTES, SEE SHEET E-1 THRU E-4.
FOR ABBREVIATIONS, SEE SHEET E-1.

APPROVED FOR ELECTRICAL WORK ONLY

E-15

STATE OF CALIFORNIA - DEPARTMENT OF TRANSPORTATION
Caltrans
ELECTRICAL

FUNCTIONAL SUPERVISOR: LAI HONG CHIU
CALCULATED-DESIGNED BY: JESSIE CABUGAO
CHECKED BY: ELAINE T. WONG
REVISED BY
DATE REVISED

LAST REVISION 04-24-12
DATE PLOTTED => 10-MAY-2012
TIME PLOTTED => 07:22

Dist	COUNTY	ROUTE	POST MILES TOTAL PROJECT	SHEET No.	TOTAL SHEETS
04	Sol	80	0.0/R28.4	370	509

REGISTERED ELECTRICAL ENGINEER — DATE: 2-29-12

5-7-12
PLANS APPROVAL DATE

REGISTERED PROFESSIONAL ENGINEER — Elaine T. Wong — No. 13753 — Exp 6-30-13 — ELECT — STATE OF CALIFORNIA

THE STATE OF CALIFORNIA OR ITS OFFICERS OR AGENTS SHALL NOT BE RESPONSIBLE FOR THE ACCURACY OR COMPLETENESS OF SCANNED COPIES OF THIS PLAN SHEET.

NOTE:

FOR ACCURATE RIGHT OF WAY DATA, CONTACT RIGHT OF WAY ENGINEERING AT THE DISTRICT OFFICE.

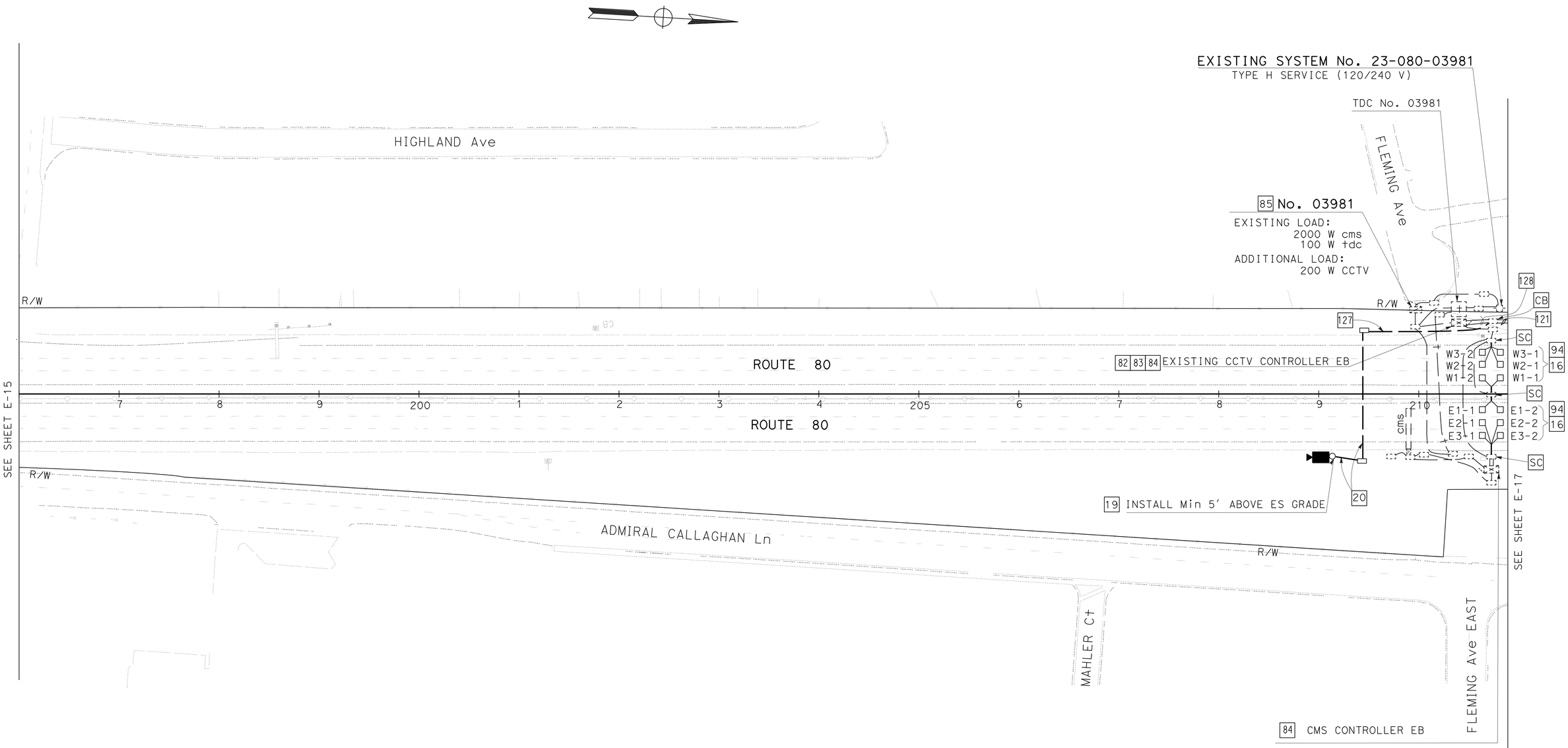

TRAFFIC OPERATIONS SYSTEM (LOCATION 5)

SCALE: 1" = 50'

FOR NOTES, SEE SHEET E-1 THRU E-4.
FOR ABBREVIATIONS, SEE SHEET E-1.

APPROVED FOR ELECTRICAL WORK ONLY

E-16

REVISED BY | DATE REVISED

CALCULATED-DESIGNED BY: JESSIE CABUGAO
CHECKED BY: ELAINE T. WONG

FUNCTIONAL SUPERVISOR: LAI HONG CHIU

STATE OF CALIFORNIA - DEPARTMENT OF TRANSPORTATION
Caltrans
ELECTRICAL

LAST REVISION 04-21-12 | DATE PLOTTED => 10-MAY-2012 | TIME PLOTTED => 07:43

Dist	COUNTY	ROUTE	POST MILES TOTAL PROJECT	SHEET No.	TOTAL SHEETS
04	Sol	80	0.0/R28.4	371	509

Elaine Wong 2-29-12
REGISTERED ELECTRICAL ENGINEER DATE

5-7-12
PLANS APPROVAL DATE

REGISTERED PROFESSIONAL ENGINEER Elaine T. Wong No. 13753 Exp. 6-30-13 ELECT STATE OF CALIFORNIA

THE STATE OF CALIFORNIA OR ITS OFFICERS OR AGENTS SHALL NOT BE RESPONSIBLE FOR THE ACCURACY OR COMPLETENESS OF SCANNED COPIES OF THIS PLAN SHEET.

NOTE:

FOR ACCURATE RIGHT OF WAY DATA, CONTACT RIGHT OF WAY ENGINEERING AT THE DISTRICT OFFICE.

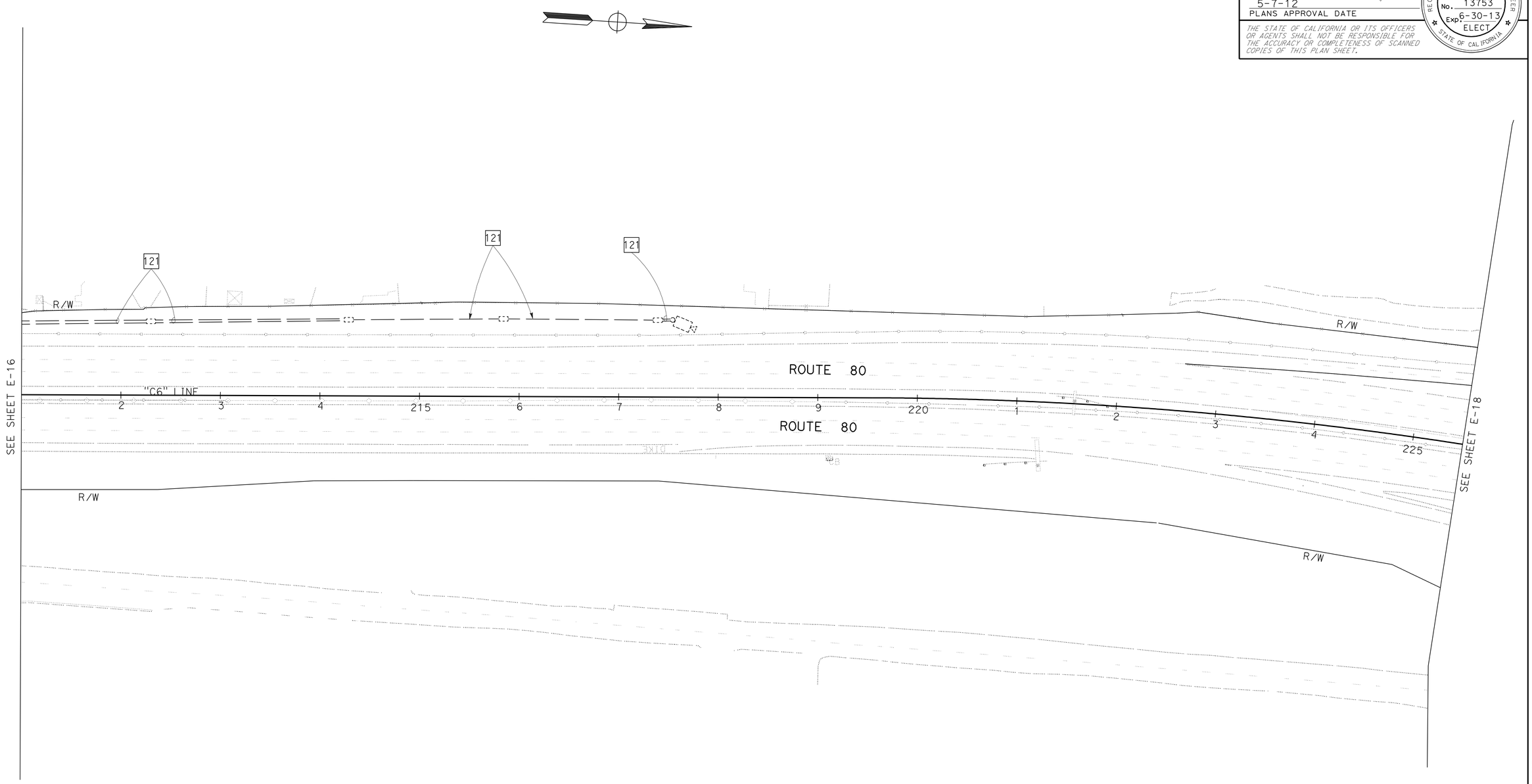

FOR INFORMATION ONLY

TRAFFIC OPERATIONS SYSTEM (LOCATION 5)

SCALE: 1" = 50'

FOR NOTES, SEE SHEET E-1 THRU E-4.
FOR ABBREVIATIONS, SEE SHEET E-1.

APPROVED FOR ELECTRICAL WORK ONLY

E-17

STATE OF CALIFORNIA - DEPARTMENT OF TRANSPORTATION
Caltrans
ELECTRICAL

FUNCTIONAL SUPERVISOR: LAI HONG CHIU
CALCULATED-DESIGNED BY: JESSIE CABUGAO
CHECKED BY: ELAINE T. WONG
REVISED BY
DATE REVISED

LAST REVISION 04-24-12
DATE PLOTTED => 10-MAY-2012
TIME PLOTTED => 07:22

Dist	COUNTY	ROUTE	POST MILES TOTAL PROJECT	SHEET No.	TOTAL SHEETS
04	Sol	80	0.0/R28.4	372	509

Elaine Wong 2-29-12
REGISTERED ELECTRICAL ENGINEER DATE

5-7-12
PLANS APPROVAL DATE

REGISTERED PROFESSIONAL ENGINEER Elaine T. Wong No. 13753 Exp. 6-30-13 ELECT. STATE OF CALIFORNIA

THE STATE OF CALIFORNIA OR ITS OFFICERS OR AGENTS SHALL NOT BE RESPONSIBLE FOR THE ACCURACY OR COMPLETENESS OF SCANNED COPIES OF THIS PLAN SHEET.

NOTE:

FOR ACCURATE RIGHT OF WAY DATA, CONTACT RIGHT OF WAY ENGINEERING AT THE DISTRICT OFFICE.

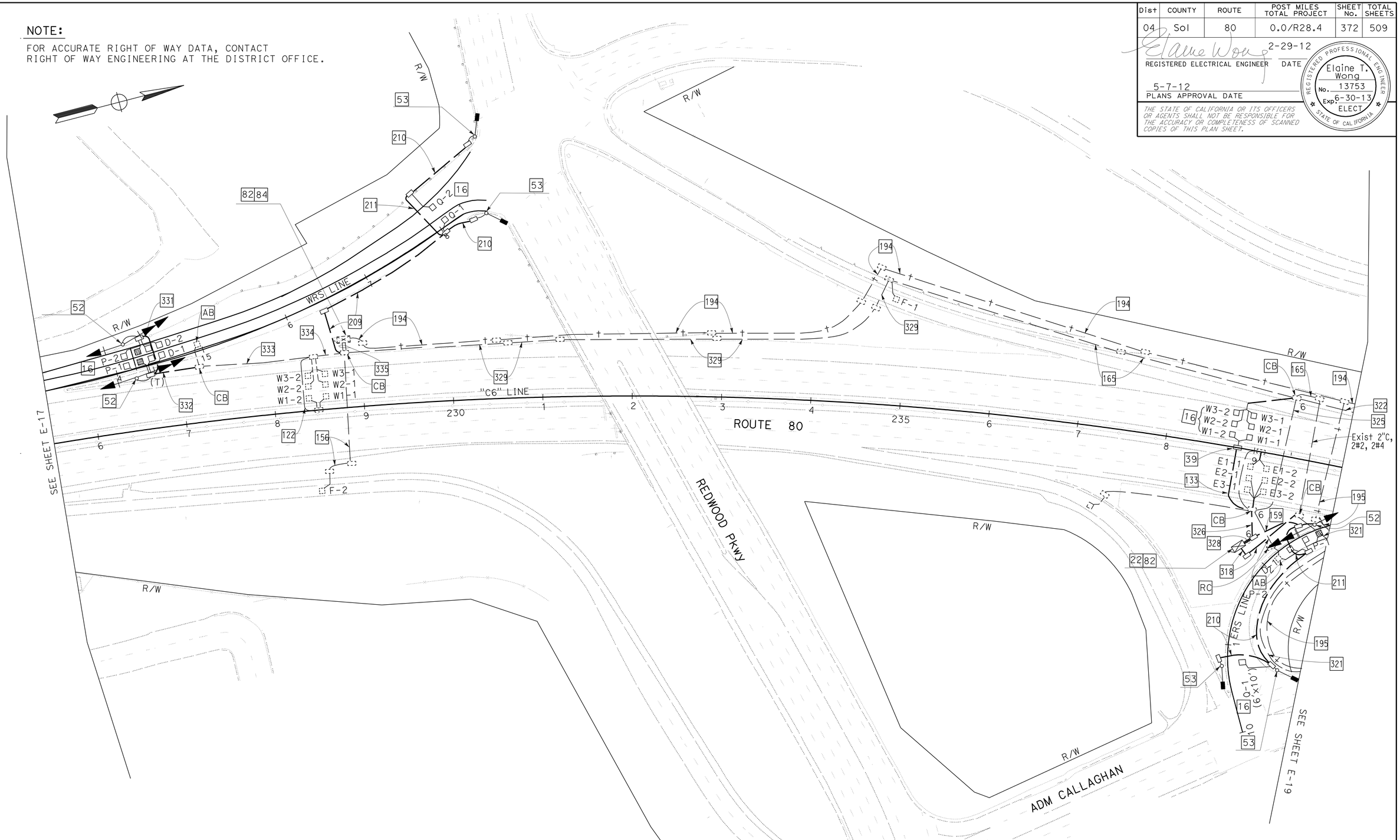

TRAFFIC OPERATIONS SYSTEM (LOCATION 6)

SCALE: 1" = 50'

FOR NOTES, SEE SHEET E-1 THRU E-4.
FOR ABBREVIATIONS, SEE SHEET E-1.

APPROVED FOR ELECTRICAL WORK ONLY

E-18

STATE OF CALIFORNIA - DEPARTMENT OF TRANSPORTATION
Caltrans
ELECTRICAL

FUNCTIONAL SUPERVISOR: LAI HONG CHIU
CALCULATED-DESIGNED BY: JESSIE CABUGAO
CHECKED BY: ELAINE T. WONG
REVISED BY / DATE REVISED

LAST REVISION 04-24-12
DATE PLOTTED => 11-MAY-2012
TIME PLOTTED => 16:35

Dist	COUNTY	ROUTE	POST MILES TOTAL PROJECT	SHEET No.	TOTAL SHEETS
04	Sol	80	0.0/R28.4	373	509

Elaine Wong 2-29-12
REGISTERED ELECTRICAL ENGINEER DATE

5-7-12
PLANS APPROVAL DATE

REGISTERED PROFESSIONAL ENGINEER Elaine T. Wong No. 13753 Exp. 6-30-13 ELECT STATE OF CALIFORNIA

THE STATE OF CALIFORNIA OR ITS OFFICERS OR AGENTS SHALL NOT BE RESPONSIBLE FOR THE ACCURACY OR COMPLETENESS OF SCANNED COPIES OF THIS PLAN SHEET.

NOTE:

FOR ACCURATE RIGHT OF WAY DATA, CONTACT RIGHT OF WAY ENGINEERING AT THE DISTRICT OFFICE.

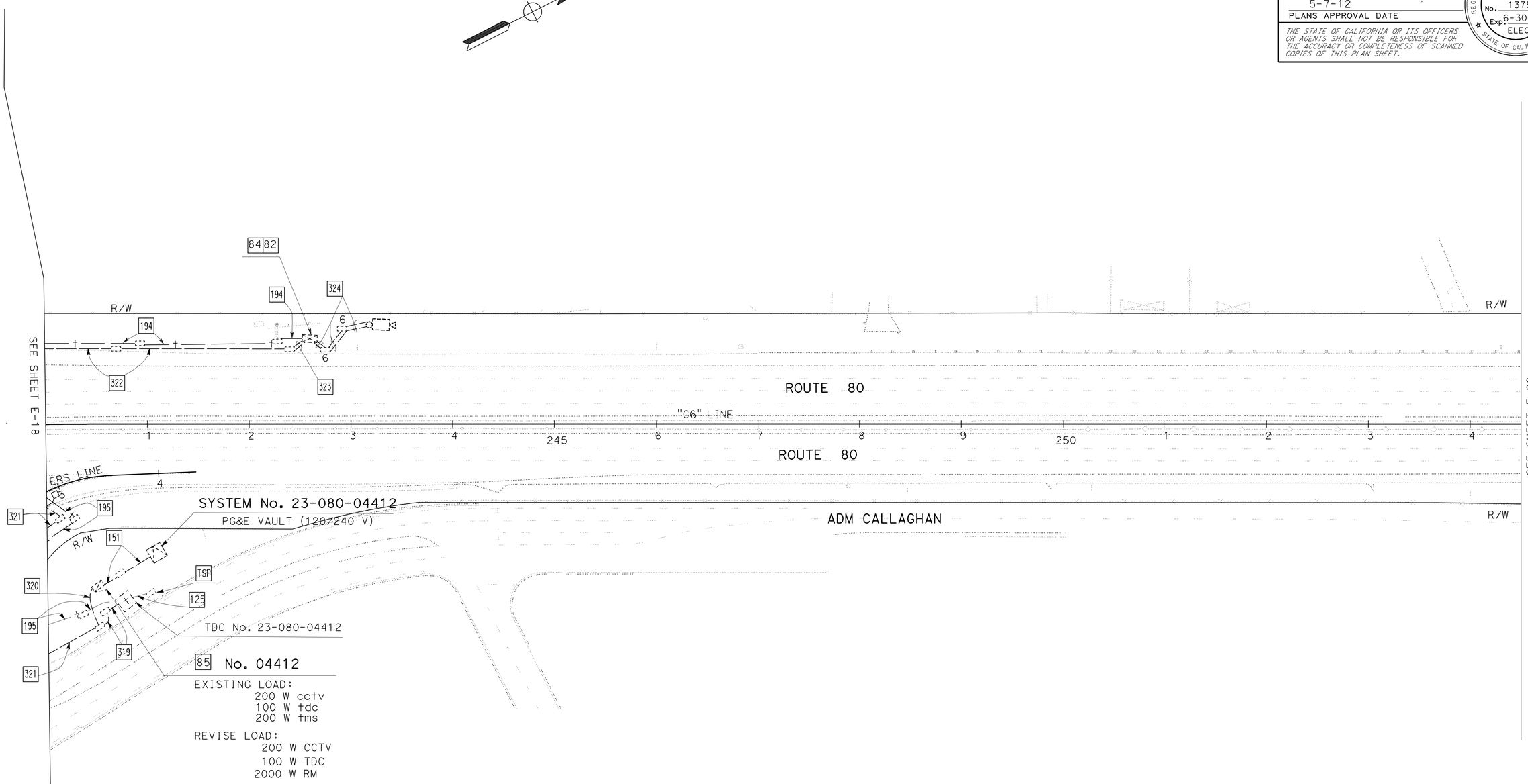

TRAFFIC OPERATIONS SYSTEM (LOCATION 6)

SCALE: 1" = 50'

FOR NOTES, SEE SHEET E-1 THRU E-4.
FOR ABBREVIATIONS, SEE SHEET E-1.

APPROVED FOR ELECTRICAL WORK ONLY

E-19

REVISED BY | DATE REVISED

JESSIE CABUGAO | ELAINE T. WONG

CALCULATED-DESIGNED BY | CHECKED BY

FUNCTIONAL SUPERVISOR: LAI HONG CHIU

STATE OF CALIFORNIA - DEPARTMENT OF TRANSPORTATION

Caltrans

ELECTRICAL

LAST REVISION 04-24-12 | DATE PLOTTED => 10-MAY-2012 | TIME PLOTTED => 07:36

Dist	COUNTY	ROUTE	POST MILES TOTAL PROJECT	SHEET No.	TOTAL SHEETS
04	Sol	80	0.0/R28.4	374	509

REGISTERED ELECTRICAL ENGINEER 2-29-12 DATE

5-7-12
PLANS APPROVAL DATE

REGISTERED PROFESSIONAL ENGINEER Elaine T. Wong No. 13753 Exp. 6-30-13 ELECT STATE OF CALIFORNIA

THE STATE OF CALIFORNIA OR ITS OFFICERS OR AGENTS SHALL NOT BE RESPONSIBLE FOR THE ACCURACY OR COMPLETENESS OF SCANNED COPIES OF THIS PLAN SHEET.

NOTE:

FOR ACCURATE RIGHT OF WAY DATA, CONTACT RIGHT OF WAY ENGINEERING AT THE DISTRICT OFFICE.

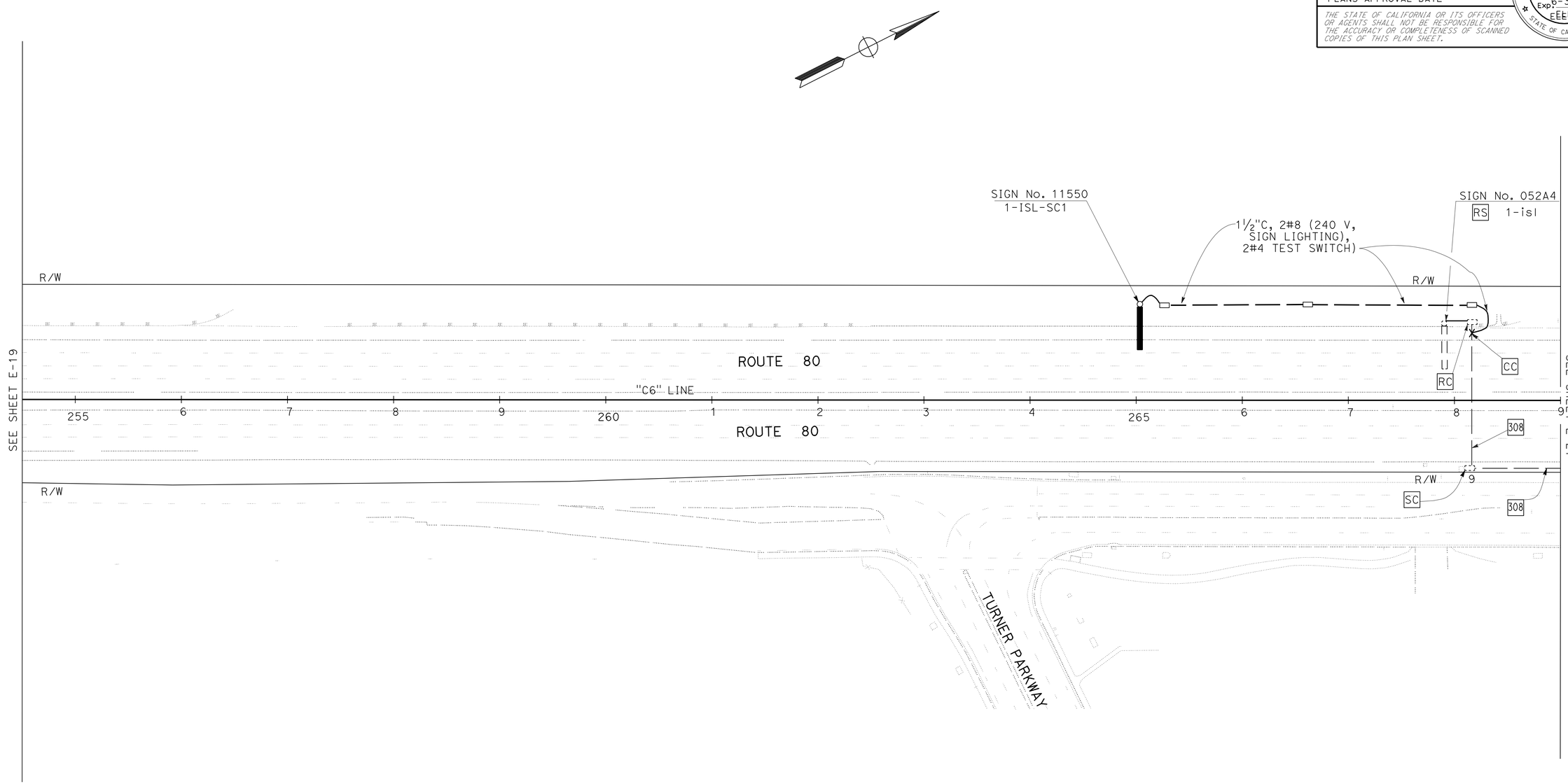

TRAFFIC OPERATIONS SYSTEM (LOCATION 7)

SCALE: 1" = 50'

FOR NOTES, SEE SHEET E-1 THRU E-4.
FOR ABBREVIATIONS, SEE SHEET E-1.

APPROVED FOR ELECTRICAL WORK ONLY

E-20

STATE OF CALIFORNIA - DEPARTMENT OF TRANSPORTATION
Caltrans
ELECTRICAL

FUNCTIONAL SUPERVISOR: LAI HONG CHIU
CALCULATED-DESIGNED BY: JESSIE CABUGAO
CHECKED BY: ELAINE T. WONG
REVISED BY
DATE REVISED

LAST REVISION 04-24-12
DATE PLOTTED => 10-MAY-2012
TIME PLOTTED => 07:37

Dist	COUNTY	ROUTE	POST MILES TOTAL PROJECT	SHEET No.	TOTAL SHEETS
04	Sol	80	0.0/R28.4	375	509

REGISTERED ELECTRICAL ENGINEER — DATE: 2-29-12

5-7-12
PLANS APPROVAL DATE

REGISTERED PROFESSIONAL ENGINEER — Elaine T. Wong — No. 13753 — Exp. 6-30-13 — ELECT — STATE OF CALIFORNIA

THE STATE OF CALIFORNIA OR ITS OFFICERS OR AGENTS SHALL NOT BE RESPONSIBLE FOR THE ACCURACY OR COMPLETENESS OF SCANNED COPIES OF THIS PLAN SHEET.

NOTE:

FOR ACCURATE RIGHT OF WAY DATA, CONTACT RIGHT OF WAY ENGINEERING AT THE DISTRICT OFFICE.

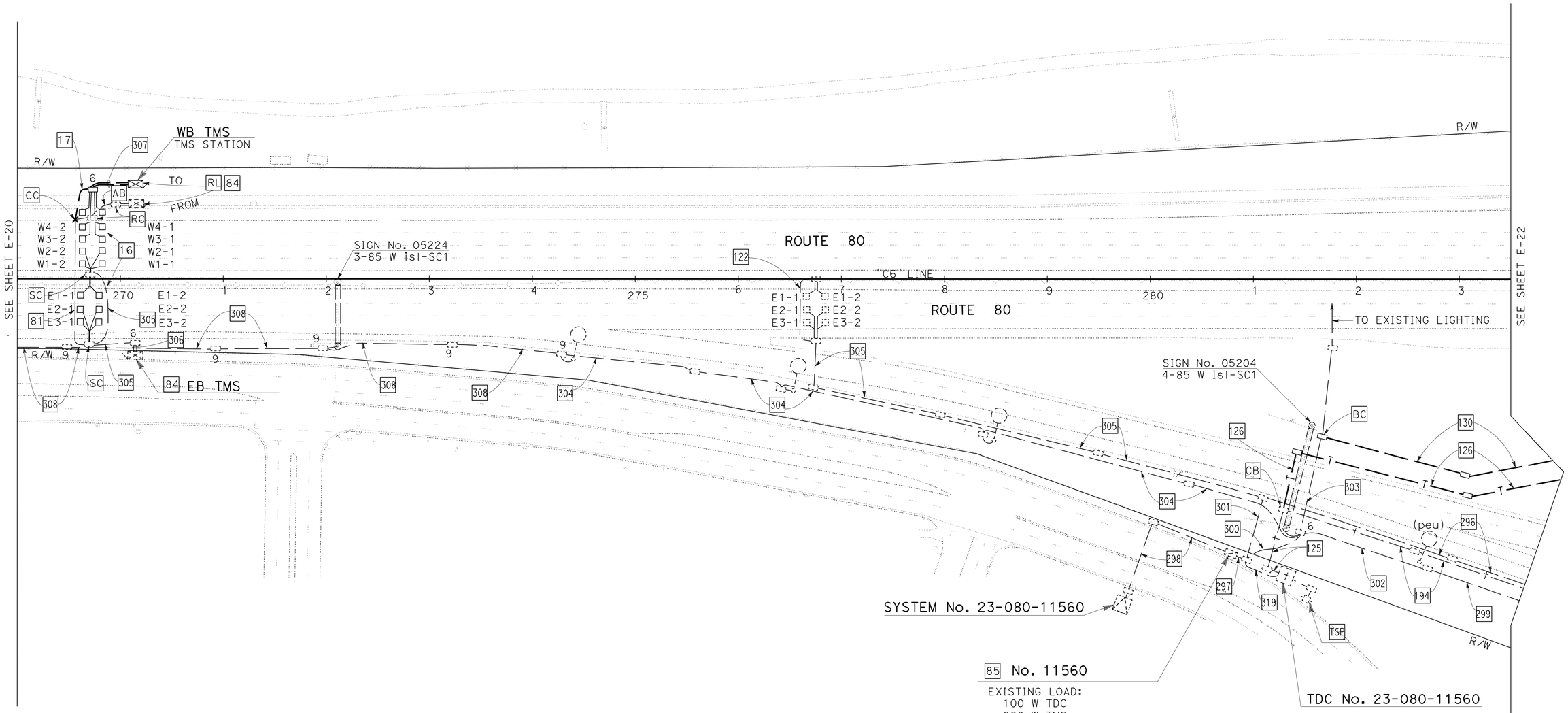

TRAFFIC OPERATIONS SYSTEM (LOCATION 7)

SCALE: 1" = 50'

APPROVED FOR ELECTRICAL WORK ONLY

FOR NOTES, SEE SHEET E-1 THRU E-4.
FOR ABBREVIATIONS, SEE SHEET E-1.

E-21

STATE OF CALIFORNIA - DEPARTMENT OF TRANSPORTATION
Caltrans
ELECTRICAL

FUNCTIONAL SUPERVISOR: LAI HONG CHIU
CALCULATED-DESIGNED BY: JESSIE CABUGAO
CHECKED BY: ELAINE T. WONG
REVISED BY
DATE REVISED

LAST REVISION 04-24-12 | DATE PLOTTED => 11-MAY-2012 | TIME PLOTTED => 16:35

Dist	COUNTY	ROUTE	POST MILES TOTAL PROJECT	SHEET No.	TOTAL SHEETS
04	Sol	80	0.0/R28.4	376	509

REGISTERED ELECTRICAL ENGINEER — DATE 2-29-12

5-7-12
PLANS APPROVAL DATE

REGISTERED PROFESSIONAL ENGINEER — Elaine T. Wong — No. 13753 — Exp. 6-30-13 — ELECT — STATE OF CALIFORNIA

THE STATE OF CALIFORNIA OR ITS OFFICERS OR AGENTS SHALL NOT BE RESPONSIBLE FOR THE ACCURACY OR COMPLETENESS OF SCANNED COPIES OF THIS PLAN SHEET.

NOTE:

FOR ACCURATE RIGHT OF WAY DATA, CONTACT RIGHT OF WAY ENGINEERING AT THE DISTRICT OFFICE.

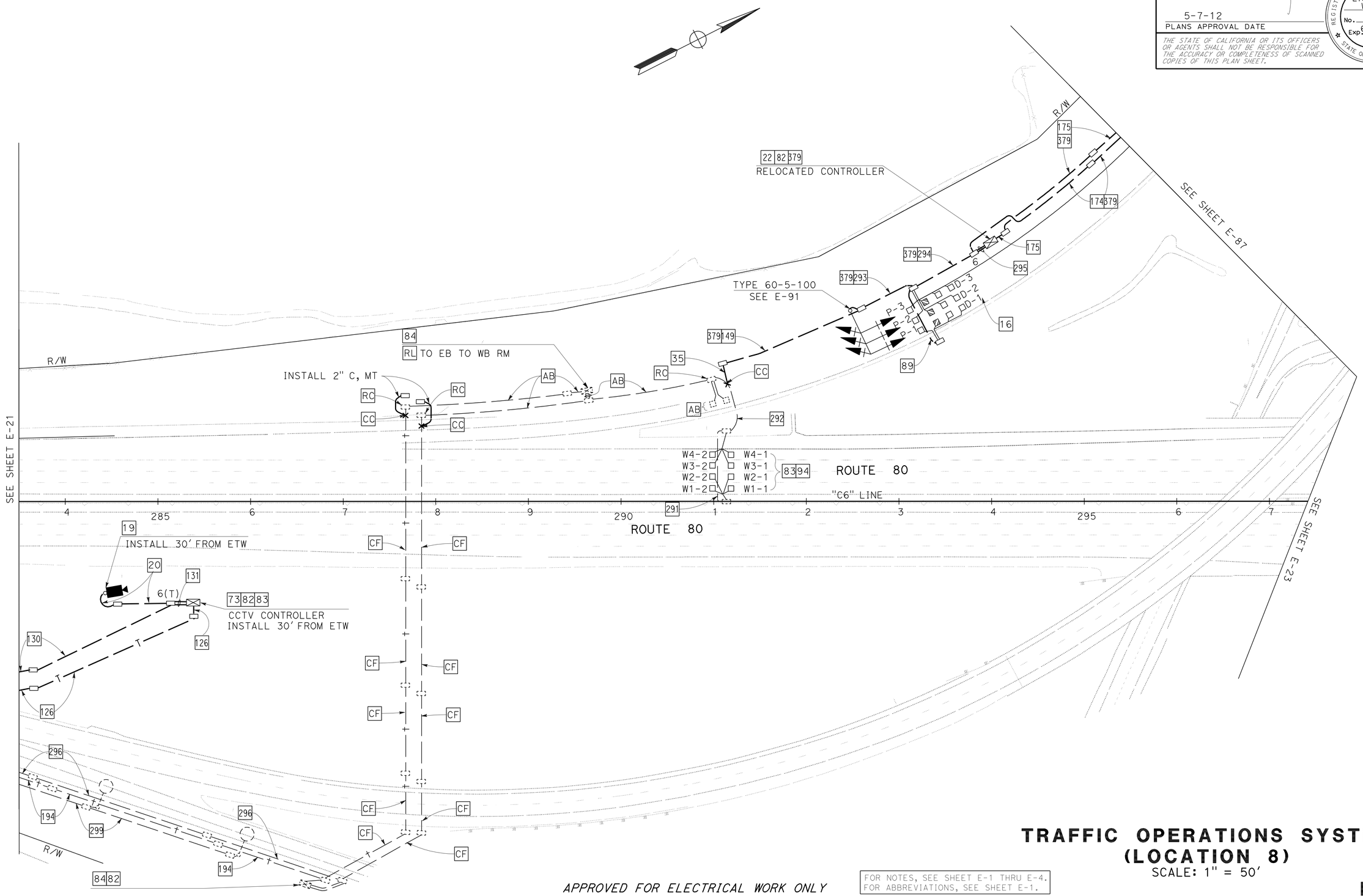

APPROVED FOR ELECTRICAL WORK ONLY

FOR NOTES, SEE SHEET E-1 THRU E-4.
FOR ABBREVIATIONS, SEE SHEET E-1.

TRAFFIC OPERATIONS SYSTEM (LOCATION 8)

SCALE: 1" = 50'

E-22

STATE OF CALIFORNIA - DEPARTMENT OF TRANSPORTATION
Caltrans®
ELECTRICAL

FUNCTIONAL SUPERVISOR: LAI HONG CHIU
CALCULATED-DESIGNED BY: JESSIE CABUGAO
CHECKED BY: ELAINE T. WONG
REVISED BY
DATE REVISED

LAST REVISION 04-24-12
DATE PLOTTED => 11-MAY-2012
TIME PLOTTED => 16:35

Dist	COUNTY	ROUTE	POST MILES TOTAL PROJECT	SHEET No.	TOTAL SHEETS
04	Sol	80	0.0/R28.4	377	509

REGISTERED ELECTRICAL ENGINEER — DATE 2-29-12

5-7-12
PLANS APPROVAL DATE

THE STATE OF CALIFORNIA OR ITS OFFICERS OR AGENTS SHALL NOT BE RESPONSIBLE FOR THE ACCURACY OR COMPLETENESS OF SCANNED COPIES OF THIS PLAN SHEET.

REGISTERED PROFESSIONAL ENGINEER — Elaine T. Wong — No. 13753 — Exp. 6-30-13 — ELECT — STATE OF CALIFORNIA

NOTE:

FOR ACCURATE RIGHT OF WAY DATA, CONTACT RIGHT OF WAY ENGINEERING AT THE DISTRICT OFFICE.

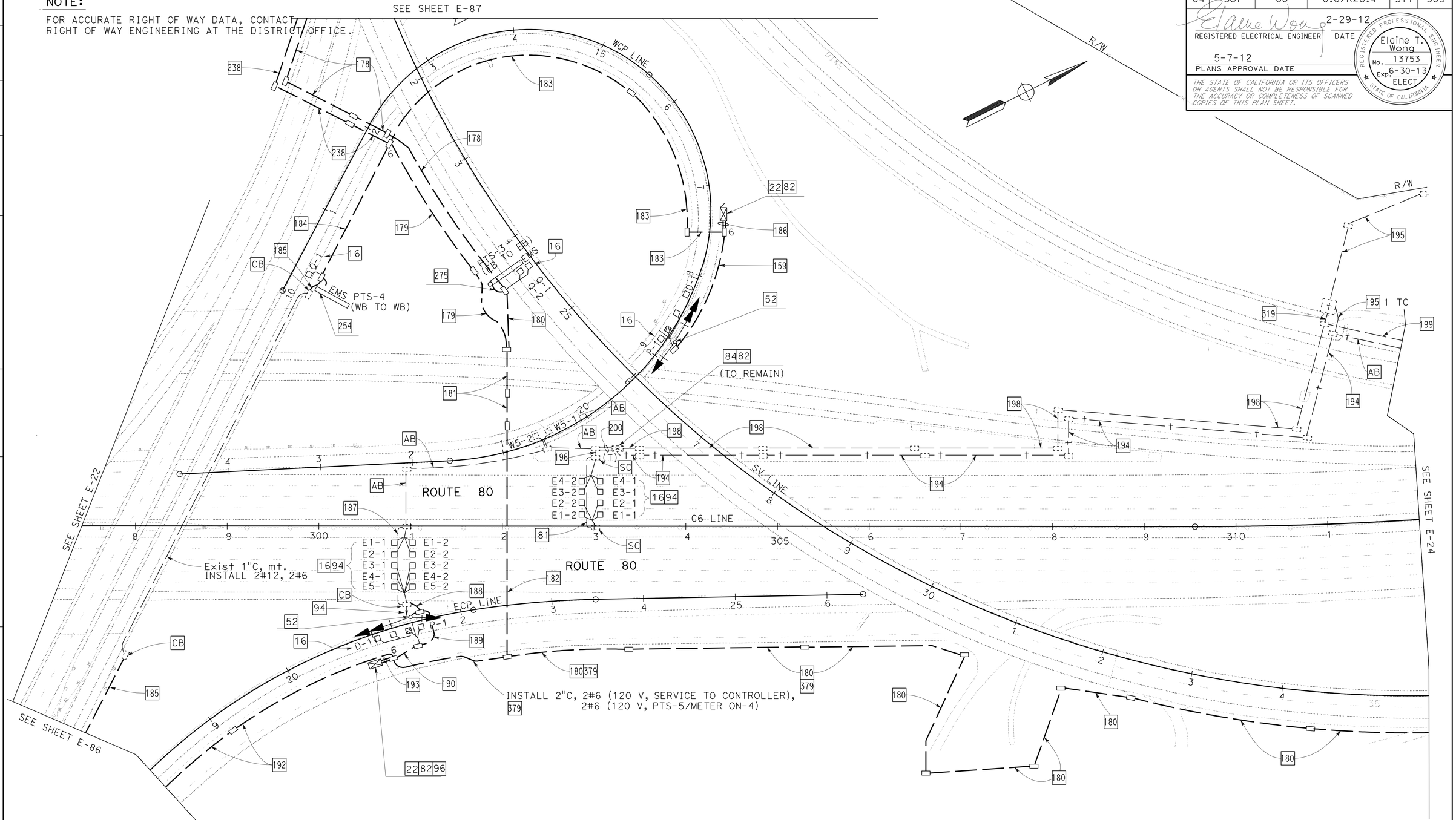

TRAFFIC OPERATIONS SYSTEM (LOCATION 8)

SCALE: 1" = 50'

APPROVED FOR ELECTRICAL WORK ONLY

FOR NOTES, SEE SHEET E-1 THRU E-4.
FOR ABBREVIATIONS, SEE SHEET E-1.

E-23

STATE OF CALIFORNIA - DEPARTMENT OF TRANSPORTATION
Caltrans
ELECTRICAL

FUNCTIONAL SUPERVISOR: LAI HONG CHIU
CALCULATED-DESIGNED BY: JESSIE CABUGAO
CHECKED BY: ELAINE T. WONG
REVISED BY / DATE REVISED

LAST REVISION — DATE PLOTTED => 11-MAY-2012 — TIME PLOTTED => 15:39
04-25-12

BORDER LAST REVISED 7/2/2010 | USERNAME => s114640 | DGN FILE => 0400020739ua023.dgn | RELATIVE BORDER SCALE IS IN INCHES 0 1 2 3 | UNIT 0721 | PROJECT NUMBER & PHASE 04000207391

Dist	COUNTY	ROUTE	POST MILES TOTAL PROJECT	SHEET No.	TOTAL SHEETS
04	Sol	80	0.0/R28.4	378	509

Elaine Wong 2-29-12
REGISTERED ELECTRICAL ENGINEER DATE

5-7-12
PLANS APPROVAL DATE

REGISTERED PROFESSIONAL ENGINEER Elaine T. Wong No. 13753 Exp. 6-30-13 ELECT STATE OF CALIFORNIA

THE STATE OF CALIFORNIA OR ITS OFFICERS OR AGENTS SHALL NOT BE RESPONSIBLE FOR THE ACCURACY OR COMPLETENESS OF SCANNED COPIES OF THIS PLAN SHEET.

NOTE:

FOR ACCURATE RIGHT OF WAY DATA, CONTACT RIGHT OF WAY ENGINEERING AT THE DISTRICT OFFICE.

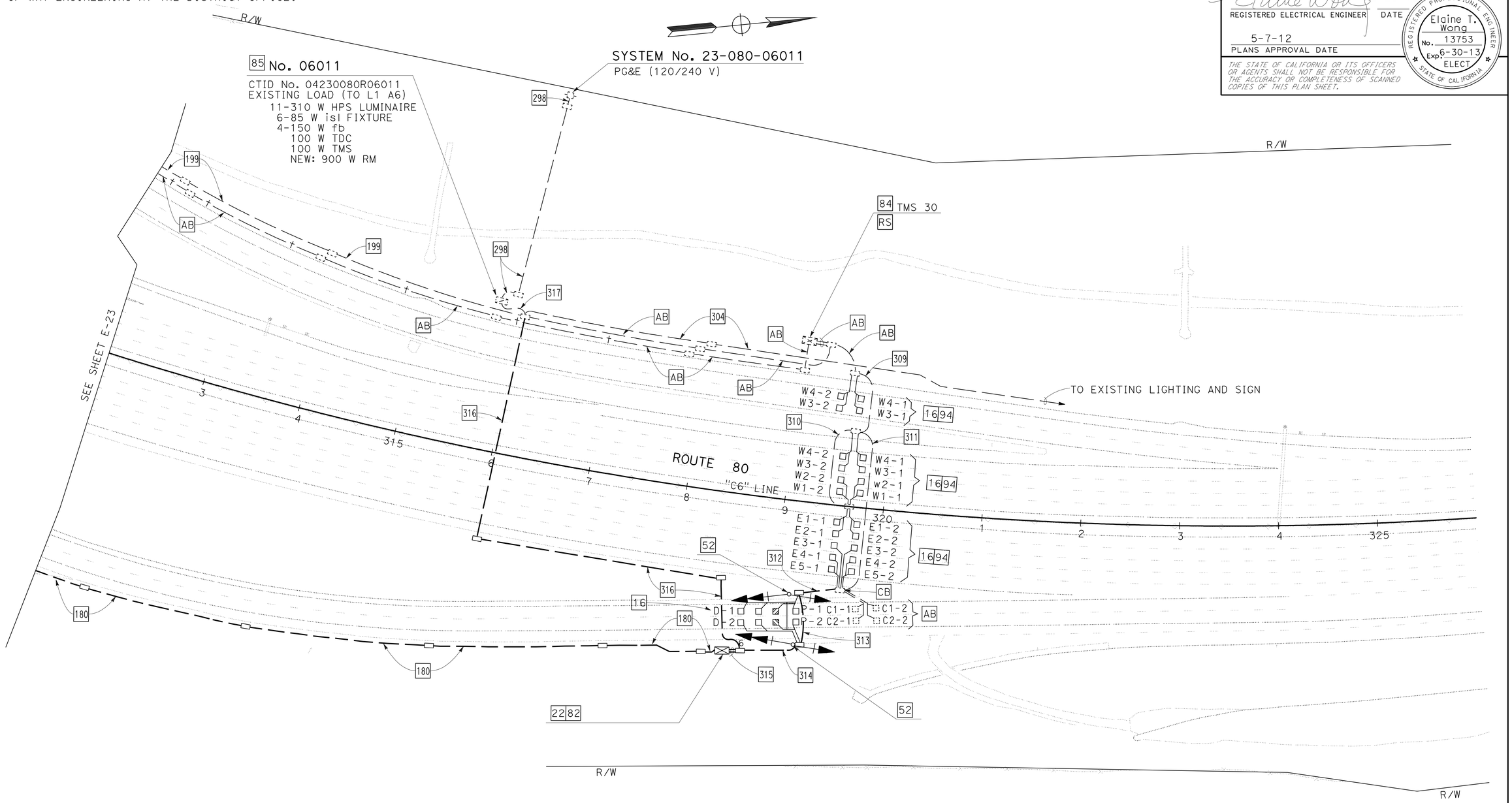

APPROVED FOR ELECTRICAL WORK ONLY

FOR NOTES, SEE SHEET E-1 THRU E-4.
FOR ABBREVIATIONS, SEE SHEET E-1.

TRAFFIC OPERATIONS SYSTEM (LOCATION 8)

SCALE: 1" = 50'

E-24

STATE OF CALIFORNIA - DEPARTMENT OF TRANSPORTATION
Caltrans
ELECTRICAL

FUNCTIONAL SUPERVISOR: LAI HONG CHIU
CALCULATED-DESIGNED BY: JESSIE CABUGAO
CHECKED BY: ELAINE T. WONG
REVISED BY
DATE REVISED

LAST REVISION 04-23-12
DATE PLOTTED => 11-MAY-2012
TIME PLOTTED => 15:39

Dist	COUNTY	ROUTE	POST MILES TOTAL PROJECT	SHEET No.	TOTAL SHEETS
04	Sol	80	0.0/R28.4	379	509

REGISTERED ELECTRICAL ENGINEER Elaine Wong DATE 2-29-12

PLANS APPROVAL DATE 5-7-12

REGISTERED PROFESSIONAL ENGINEER Elaine T. Wong No. 13753 Exp. 6-30-13 ELECT STATE OF CALIFORNIA

THE STATE OF CALIFORNIA OR ITS OFFICERS OR AGENTS SHALL NOT BE RESPONSIBLE FOR THE ACCURACY OR COMPLETENESS OF SCANNED COPIES OF THIS PLAN SHEET.

NOTE:

FOR ACCURATE RIGHT OF WAY DATA, CONTACT RIGHT OF WAY ENGINEERING AT THE DISTRICT OFFICE.

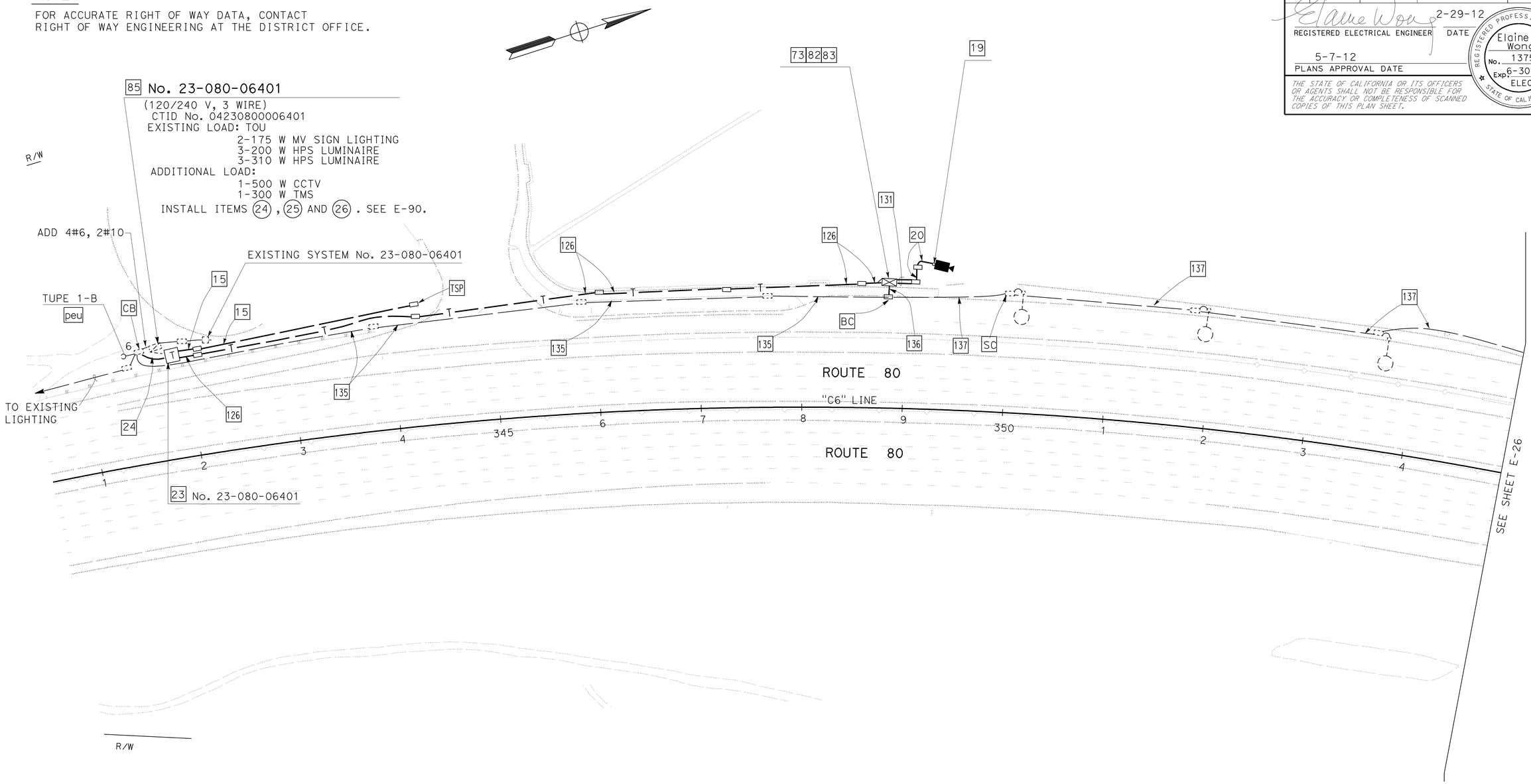

TRAFFIC OPERATIONS SYSTEM (LOCATION 9)

SCALE: 1" = 50'

APPROVED FOR ELECTRICAL WORK ONLY

FOR NOTES, SEE SHEET E-1 THRU E-4.
FOR ABBREVIATIONS, SEE SHEET E-1.

E-25

STATE OF CALIFORNIA - DEPARTMENT OF TRANSPORTATION

Caltrans

ELECTRICAL

FUNCTIONAL SUPERVISOR: LAI HONG CHIU

CALCULATED-DESIGNED BY: JESSIE CABUGAO

CHECKED BY: ELAINE T. WONG

REVISED BY

DATE REVISED

LAST REVISION 04-23-12 | DATE PLOTTED => 11-MAY-2012 | TIME PLOTTED => 15:39

Dist	COUNTY	ROUTE	POST MILES TOTAL PROJECT	SHEET No.	TOTAL SHEETS
04	Sol	80	0.0/R28.4	380	509

REGISTERED ELECTRICAL ENGINEER — DATE 2-29-12

5-7-12
PLANS APPROVAL DATE

REGISTERED PROFESSIONAL ENGINEER — Elaine T. Wong — No. 13753 — Exp. 6-30-13 — ELECT — STATE OF CALIFORNIA

THE STATE OF CALIFORNIA OR ITS OFFICERS OR AGENTS SHALL NOT BE RESPONSIBLE FOR THE ACCURACY OR COMPLETENESS OF SCANNED COPIES OF THIS PLAN SHEET.

NOTE:

FOR ACCURATE RIGHT OF WAY DATA, CONTACT RIGHT OF WAY ENGINEERING AT THE DISTRICT OFFICE.

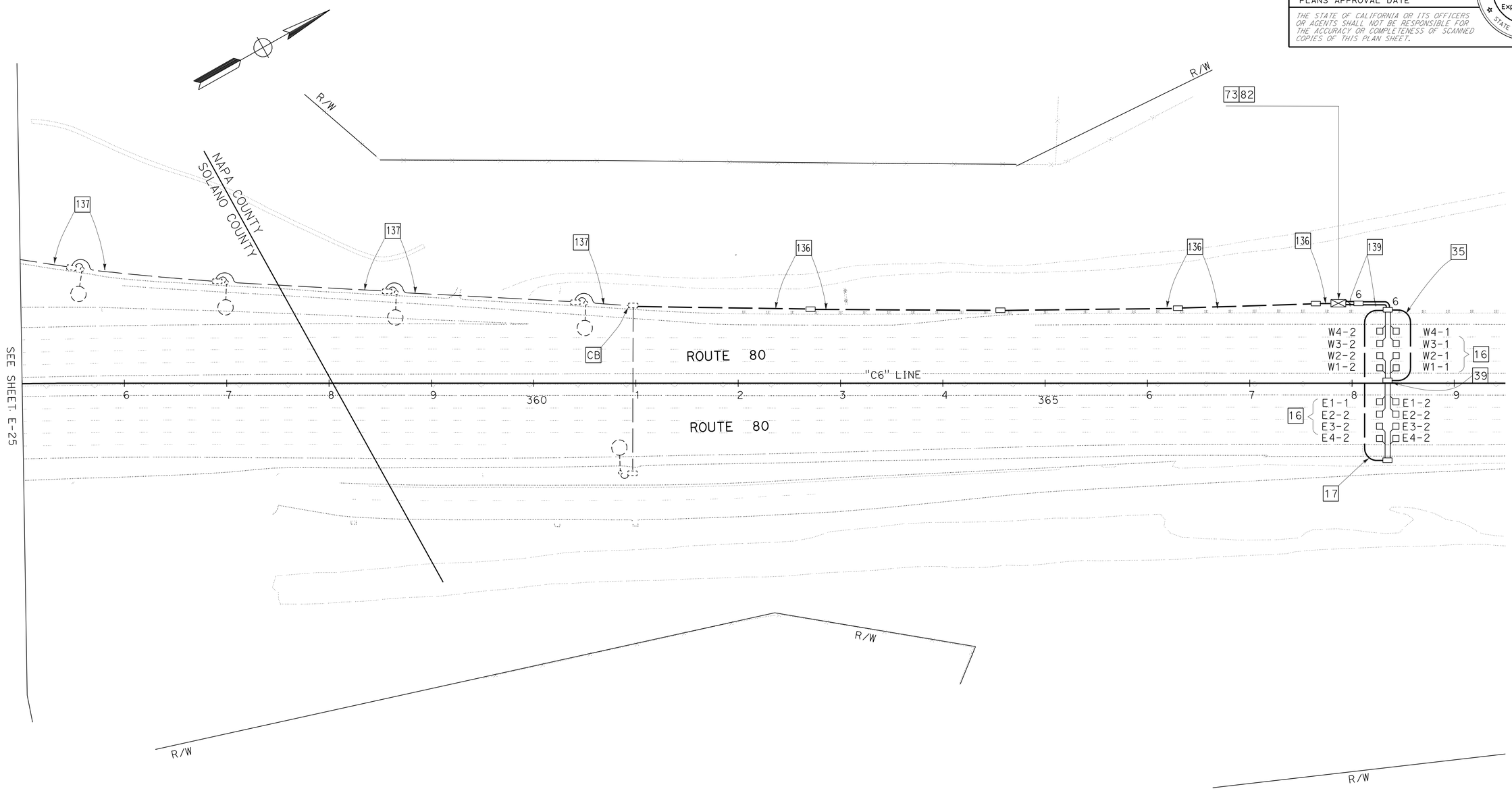

TRAFFIC OPERATIONS SYSTEM (LOCATION 9)

SCALE: 1" = 50'

APPROVED FOR ELECTRICAL WORK ONLY

FOR NOTES, SEE SHEET E-1 THRU E-4.
FOR ABBREVIATIONS, SEE SHEET E-1.

E-26

STATE OF CALIFORNIA - DEPARTMENT OF TRANSPORTATION
Caltrans
ELECTRICAL

FUNCTIONAL SUPERVISOR: LAI HONG CHIU
CALCULATED-DESIGNED BY: JESSIE CABUGAO
CHECKED BY: ELAINE T. WONG
REVISED BY
DATE REVISED

LAST REVISION 04-21-12
DATE PLOTTED => 10-MAY-2012
TIME PLOTTED => 07:37

Dist	COUNTY	ROUTE	POST MILES TOTAL PROJECT	SHEET No.	TOTAL SHEETS
04	Sol	80	0.0/R28.4	381	509

REGISTERED ELECTRICAL ENGINEER — DATE 2-29-12

5-7-12
PLANS APPROVAL DATE

REGISTERED PROFESSIONAL ENGINEER Elaine T. Wong No. 13753 Exp. 6-30-13 ELECT STATE OF CALIFORNIA

THE STATE OF CALIFORNIA OR ITS OFFICERS OR AGENTS SHALL NOT BE RESPONSIBLE FOR THE ACCURACY OR COMPLETENESS OF SCANNED COPIES OF THIS PLAN SHEET.

NOTE:

FOR ACCURATE RIGHT OF WAY DATA, CONTACT RIGHT OF WAY ENGINEERING AT THE DISTRICT OFFICE.

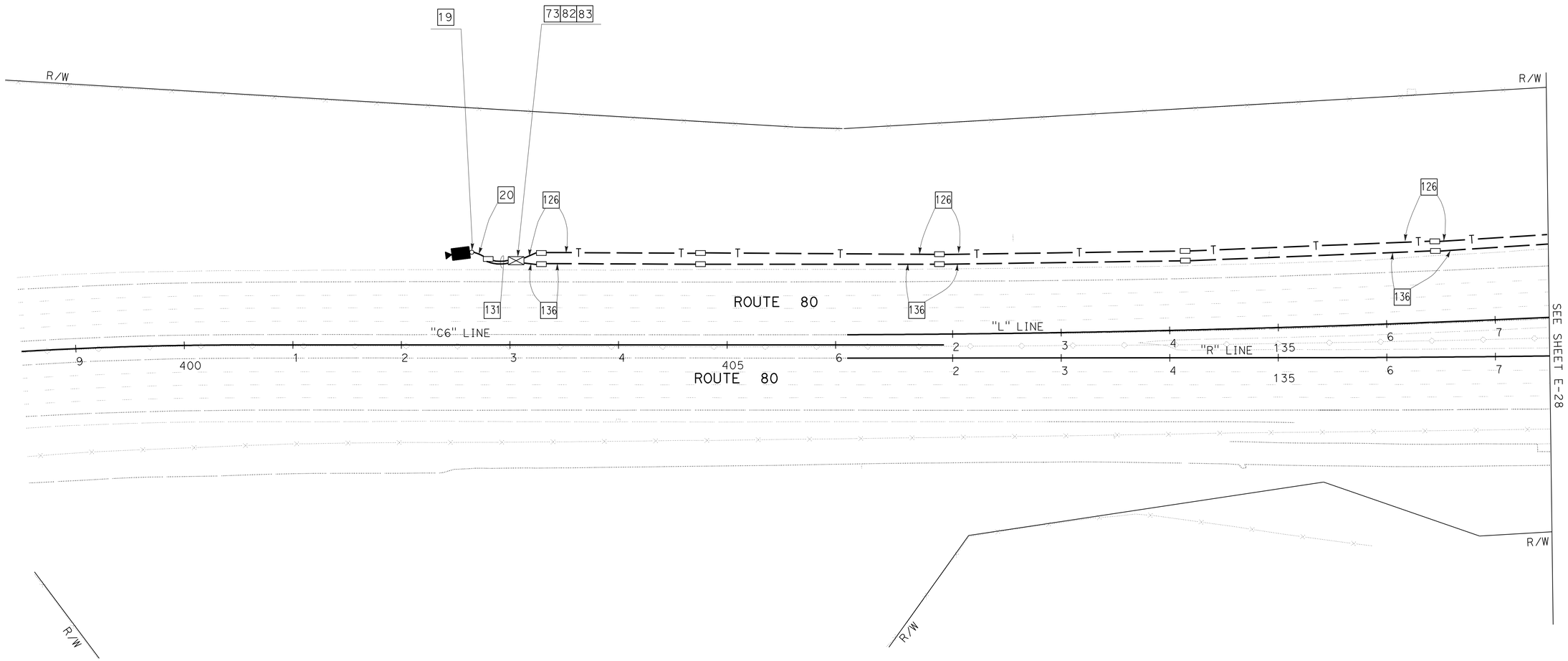

TRAFFIC OPERATIONS SYSTEM (LOCATION 10)

SCALE: 1" = 50'

APPROVED FOR ELECTRICAL WORK ONLY

FOR NOTES, SEE SHEET E-1 THRU E-4.
FOR ABBREVIATIONS, SEE SHEET E-1.

E-27

STATE OF CALIFORNIA - DEPARTMENT OF TRANSPORTATION
Caltrans
ELECTRICAL

FUNCTIONAL SUPERVISOR: LAI HONG CHIU

CALCULATED-DESIGNED BY: JESSIE CABUGAO
CHECKED BY: ELAINE T. WONG

REVISED BY
DATE REVISED

LAST REVISION 09-00-00
DATE PLOTTED => 10-MAY-2012
TIME PLOTTED => 07:37

Dist	COUNTY	ROUTE	POST MILES TOTAL PROJECT	SHEET No.	TOTAL SHEETS
04	Sol	80	0.0/R28.4	382	509

REGISTERED ELECTRICAL ENGINEER — DATE 2-29-12

5-7-12
PLANS APPROVAL DATE

REGISTERED PROFESSIONAL ENGINEER — Elaine T. Wong — No. 13753 — Exp. 6-30-13 — ELECT — STATE OF CALIFORNIA

THE STATE OF CALIFORNIA OR ITS OFFICERS OR AGENTS SHALL NOT BE RESPONSIBLE FOR THE ACCURACY OR COMPLETENESS OF SCANNED COPIES OF THIS PLAN SHEET.

NOTE:

FOR ACCURATE RIGHT OF WAY DATA, CONTACT RIGHT OF WAY ENGINEERING AT THE DISTRICT OFFICE.

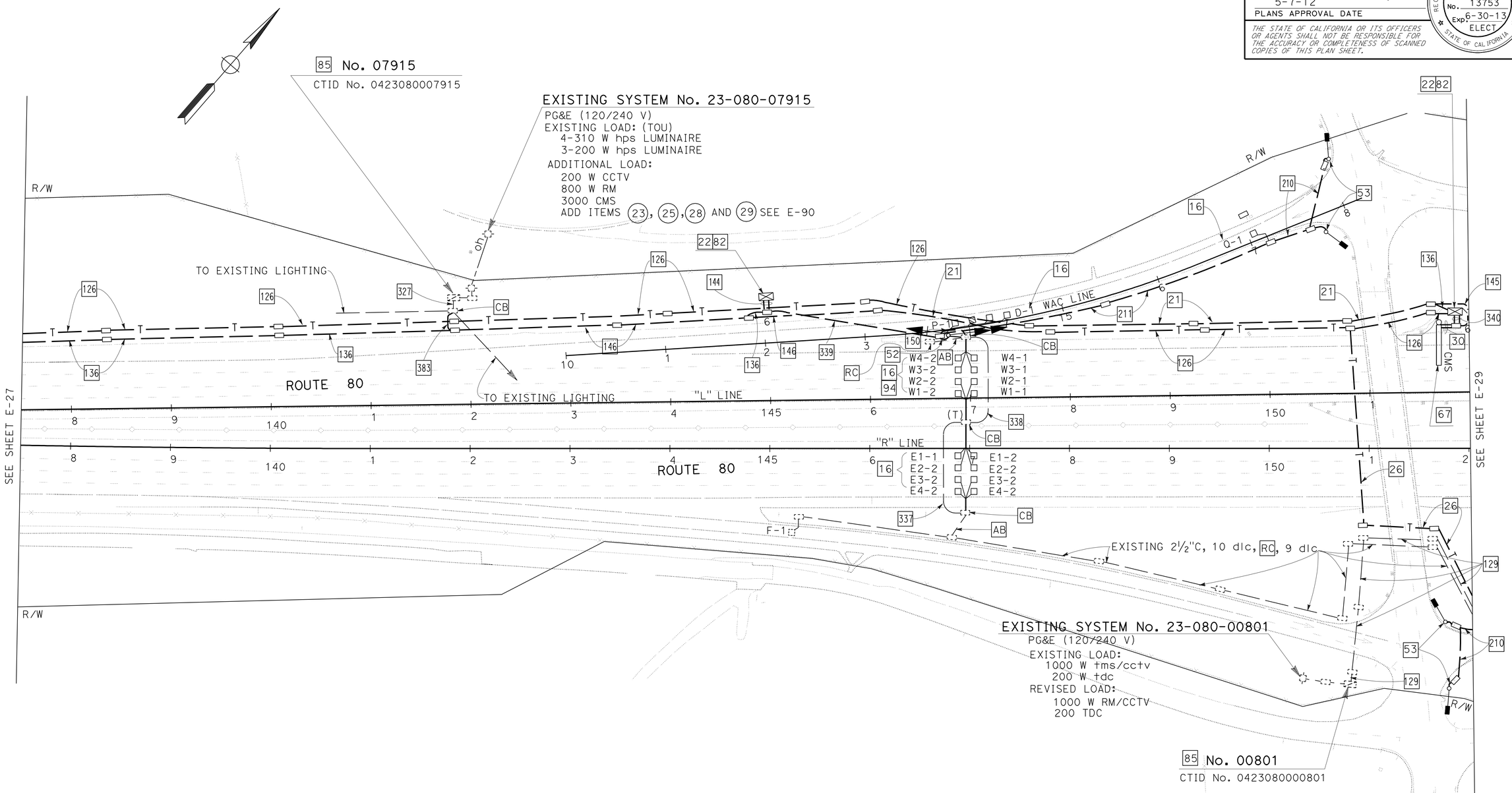

TRAFFIC OPERATIONS SYSTEM (LOCATION 10)

SCALE: 1" = 50'

APPROVED FOR ELECTRICAL WORK ONLY

FOR NOTES, SEE SHEET E-1 THRU E-4.
FOR ABBREVIATIONS, SEE SHEET E-1.

E-28

STATE OF CALIFORNIA - DEPARTMENT OF TRANSPORTATION
Caltrans®
ELECTRICAL

FUNCTIONAL SUPERVISOR: LAI HONG CHIU
CALCULATED-DESIGNED BY: JESSIE CABUGAO
CHECKED BY: ELAINE T. WONG
REVISED BY / DATE REVISED

LAST REVISION 04-24-12
DATE PLOTTED => 11-MAY-2012
TIME PLOTTED => 15:39

Dist	COUNTY	ROUTE	POST MILES TOTAL PROJECT	SHEET No.	TOTAL SHEETS
04	Sol	80	0.0/R28.4	383	509

Elaine Wong 2-29-12
REGISTERED ELECTRICAL ENGINEER DATE

5-7-12
PLANS APPROVAL DATE

REGISTERED PROFESSIONAL ENGINEER Elaine T. Wong No. 13753 Exp 6-30-13 ELECT STATE OF CALIFORNIA

THE STATE OF CALIFORNIA OR ITS OFFICERS OR AGENTS SHALL NOT BE RESPONSIBLE FOR THE ACCURACY OR COMPLETENESS OF SCANNED COPIES OF THIS PLAN SHEET.

NOTE:

FOR ACCURATE RIGHT OF WAY DATA, CONTACT RIGHT OF WAY ENGINEERING AT THE DISTRICT OFFICE.

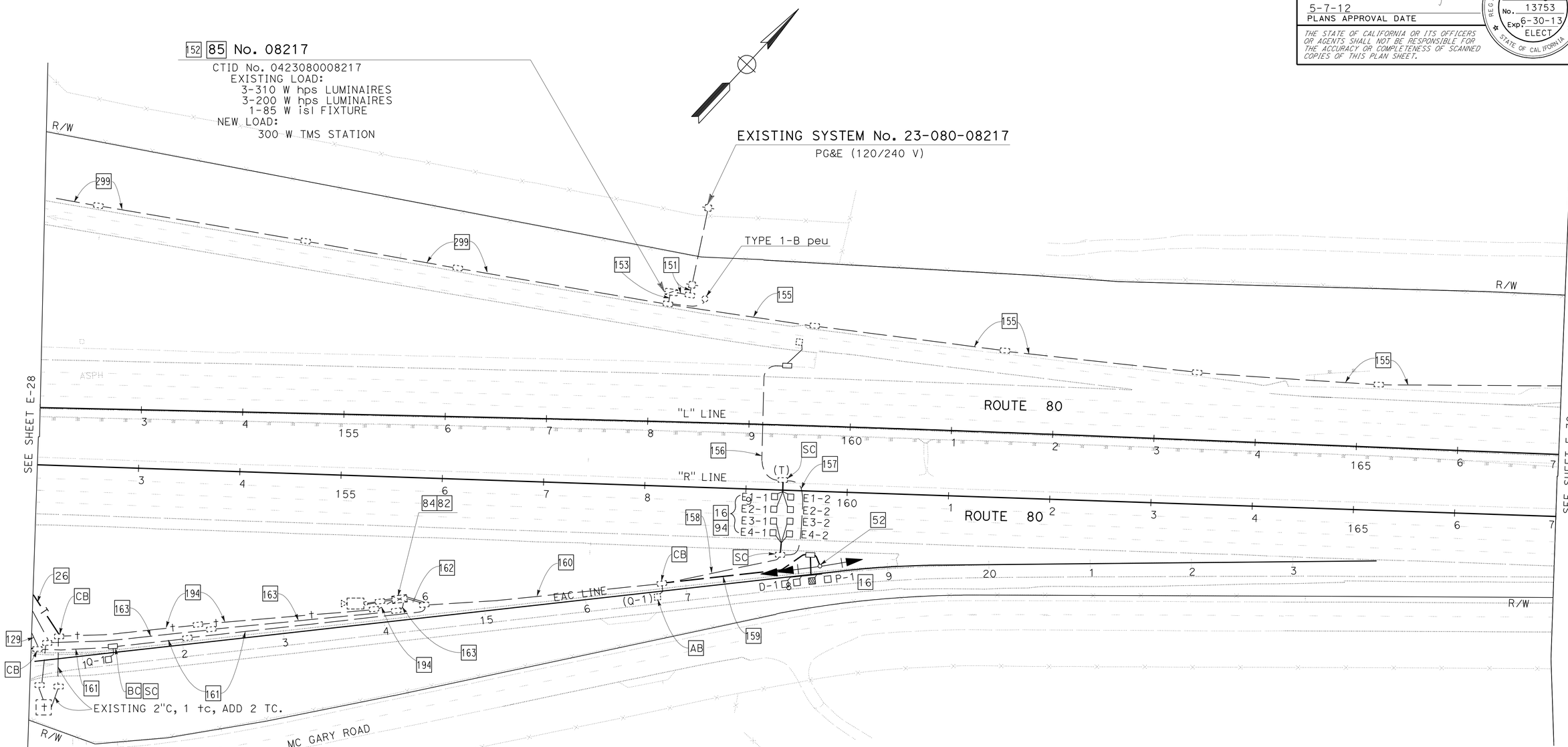

TRAFFIC OPERATIONS SYSTEM (LOCATION 10)

SCALE: 1" = 50'

APPROVED FOR ELECTRICAL WORK ONLY

FOR NOTES, SEE SHEET E-1 THRU E-4.
FOR ABBREVIATIONS, SEE SHEET E-1.

E-29

STATE OF CALIFORNIA - DEPARTMENT OF TRANSPORTATION
Caltrans
ELECTRICAL

FUNCTIONAL SUPERVISOR: LAI HONG CHIU
CALCULATED-DESIGNED BY: JESSIE CABUGAO
CHECKED BY: ELAINE T. WONG
REVISED BY
DATE REVISED

LAST REVISION 04-21-12
DATE PLOTTED => 11-MAY-2012
TIME PLOTTED => 17:28

Dist	COUNTY	ROUTE	POST MILES TOTAL PROJECT	SHEET No.	TOTAL SHEETS
04	Sol	80	0.0/R28.4	384	509

REGISTERED ELECTRICAL ENGINEER — DATE 2-29-12

5-7-12
PLANS APPROVAL DATE

REGISTERED PROFESSIONAL ENGINEER — Elaine T. Wong — No. 13753 — Exp. 6-30-13 — ELECT — STATE OF CALIFORNIA

THE STATE OF CALIFORNIA OR ITS OFFICERS OR AGENTS SHALL NOT BE RESPONSIBLE FOR THE ACCURACY OR COMPLETENESS OF SCANNED COPIES OF THIS PLAN SHEET.

NOTE:

FOR ACCURATE RIGHT OF WAY DATA, CONTACT RIGHT OF WAY ENGINEERING AT THE DISTRICT OFFICE.

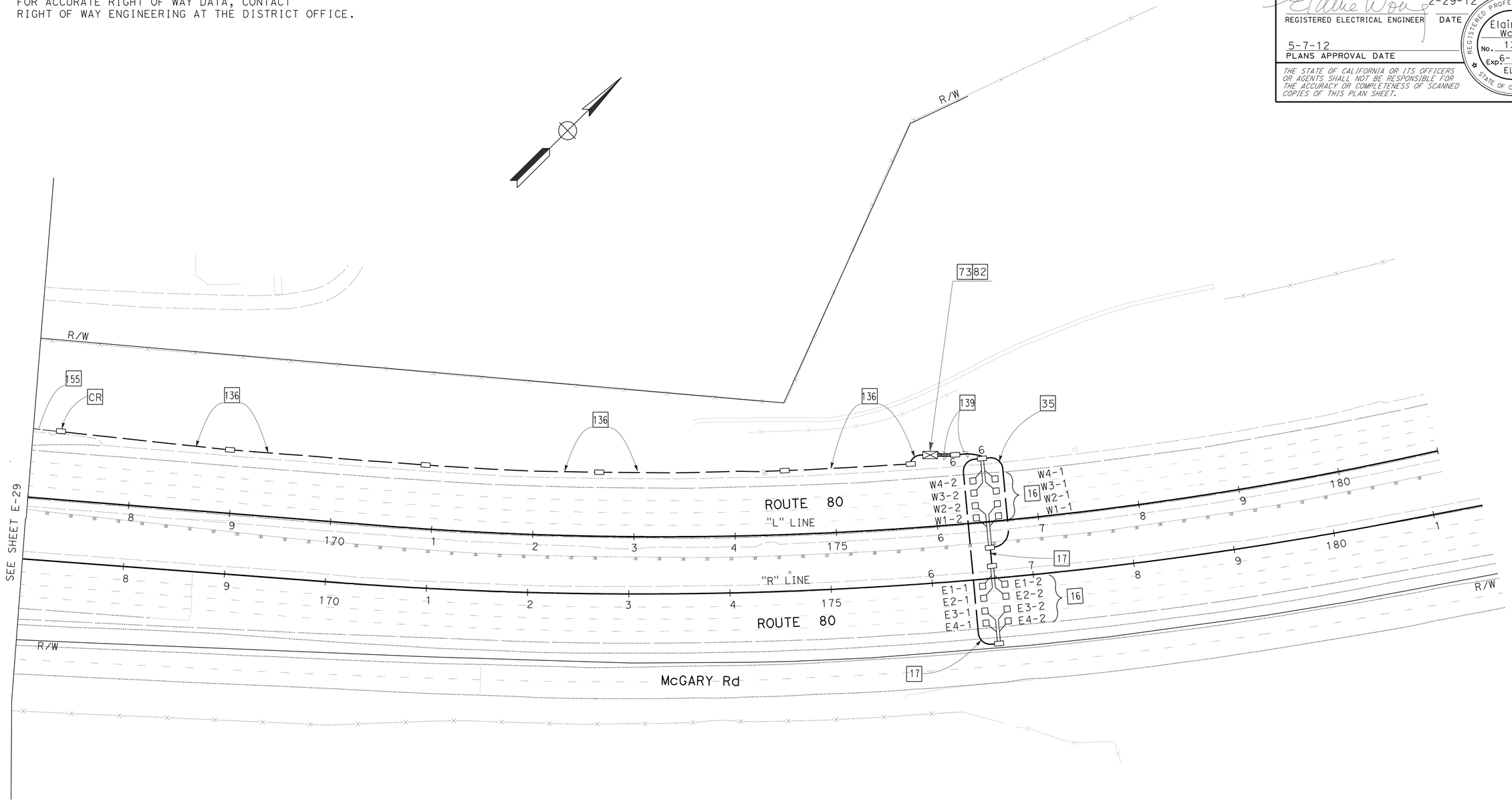

TRAFFIC OPERATIONS SYSTEM (LOCATION 10)

SCALE: 1" = 50'

APPROVED FOR ELECTRICAL WORK ONLY

FOR NOTES, SEE SHEET E-1 THRU E-4.
FOR ABBREVIATIONS, SEE SHEET E-1.

E-30

STATE OF CALIFORNIA - DEPARTMENT OF TRANSPORTATION
Caltrans
ELECTRICAL

FUNCTIONAL SUPERVISOR: LAI HONG CHIU

CALCULATED-DESIGNED BY: JESSIE CABUGAO
CHECKED BY: ELAINE T. WONG

REVISED BY
DATE REVISED

LAST REVISION 04-21-12
DATE PLOTTED => 11-MAY-2012
TIME PLOTTED => 16:10

Dist	COUNTY	ROUTE	POST MILES TOTAL PROJECT	SHEET No.	TOTAL SHEETS
04	Sol	80	0.0/R28.4	385	509

REGISTERED ELECTRICAL ENGINEER — DATE 2-29-12

5-7-12
PLANS APPROVAL DATE

REGISTERED PROFESSIONAL ENGINEER — Elaine T. Wong — No. 13753 — Exp. 6-30-13 — ELECT — STATE OF CALIFORNIA

THE STATE OF CALIFORNIA OR ITS OFFICERS OR AGENTS SHALL NOT BE RESPONSIBLE FOR THE ACCURACY OR COMPLETENESS OF SCANNED COPIES OF THIS PLAN SHEET.

NOTE:

FOR ACCURATE RIGHT OF WAY DATA, CONTACT RIGHT OF WAY ENGINEERING AT THE DISTRICT OFFICE.

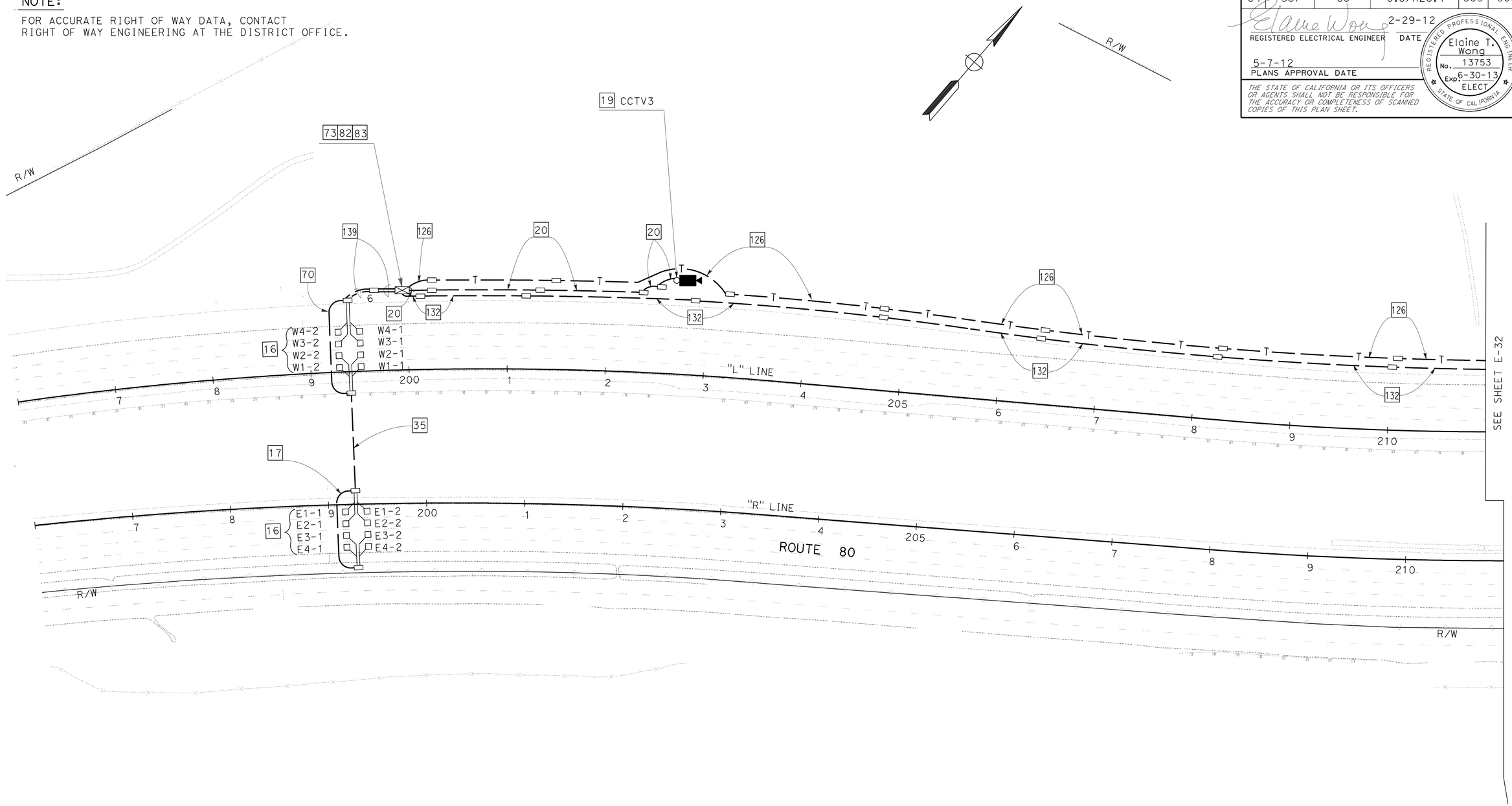

TRAFFIC OPERATIONS SYSTEM (LOCATION 11)

SCALE: 1" = 50'

APPROVED FOR ELECTRICAL WORK ONLY

FOR NOTES, SEE SHEET E-1 THRU E-4.
FOR ABBREVIATIONS, SEE SHEET E-1.

E-31

STATE OF CALIFORNIA - DEPARTMENT OF TRANSPORTATION
Caltrans®
ELECTRICAL

FUNCTIONAL SUPERVISOR: LAI HONG CHIU
CALCULATED-DESIGNED BY: JESSIE CABUGAO
CHECKED BY: ELAINE T. WONG
REVISED BY
DATE REVISED

LAST REVISION 04-21-12
DATE PLOTTED => 10-MAY-2012
TIME PLOTTED => 07:40

Dist	COUNTY	ROUTE	POST MILES TOTAL PROJECT	SHEET No.	TOTAL SHEETS
04	Sol	80	0.0/R28.4	386	509

Elaine Wong 2-29-12
REGISTERED ELECTRICAL ENGINEER DATE

5-7-12
PLANS APPROVAL DATE

REGISTERED PROFESSIONAL ENGINEER Elaine T. Wong No. 13753 Exp. 6-30-13 ELECT STATE OF CALIFORNIA

THE STATE OF CALIFORNIA OR ITS OFFICERS OR AGENTS SHALL NOT BE RESPONSIBLE FOR THE ACCURACY OR COMPLETENESS OF SCANNED COPIES OF THIS PLAN SHEET.

NOTE:

FOR ACCURATE RIGHT OF WAY DATA, CONTACT RIGHT OF WAY ENGINEERING AT THE DISTRICT OFFICE.

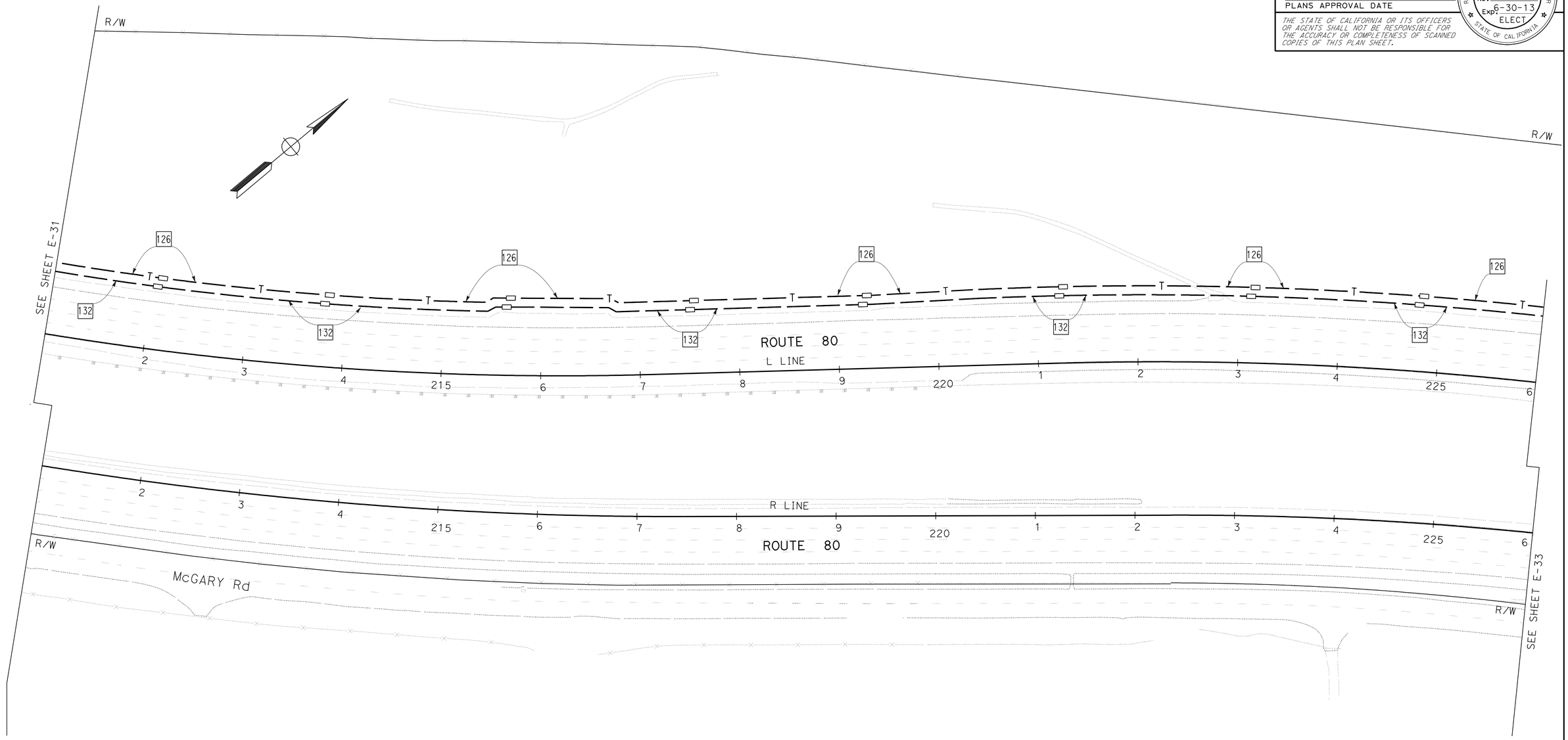

TRAFFIC OPERATIONS SYSTEM (LOCATION 11)

SCALE: 1" = 50'

APPROVED FOR ELECTRICAL WORK ONLY

FOR NOTES, SEE SHEET E-1 THRU E-4.
FOR ABBREVIATIONS, SEE SHEET E-1.

E-32

STATE OF CALIFORNIA - DEPARTMENT OF TRANSPORTATION
Caltrans
ELECTRICAL

FUNCTIONAL SUPERVISOR: LAI HONG CHIU
CALCULATED-DESIGNED BY: JESSIE CABUGAO
CHECKED BY: ELAINE T. WONG
REVISED BY
DATE REVISED

LAST REVISION 04-24-12
DATE PLOTTED => 10-MAY-2012
TIME PLOTTED => 07:40

Dist	COUNTY	ROUTE	POST MILES TOTAL PROJECT	SHEET No.	TOTAL SHEETS
04	Sol	80	0.0/R28.4	387	509

REGISTERED ELECTRICAL ENGINEER — DATE 2-29-12

5-7-12
PLANS APPROVAL DATE

REGISTERED PROFESSIONAL ENGINEER — Elaine T. Wong — No. 13753 — Exp. 6-30-13 — ELECT — STATE OF CALIFORNIA

THE STATE OF CALIFORNIA OR ITS OFFICERS OR AGENTS SHALL NOT BE RESPONSIBLE FOR THE ACCURACY OR COMPLETENESS OF SCANNED COPIES OF THIS PLAN SHEET.

NOTE:

FOR ACCURATE RIGHT OF WAY DATA, CONTACT RIGHT OF WAY ENGINEERING AT THE DISTRICT OFFICE.

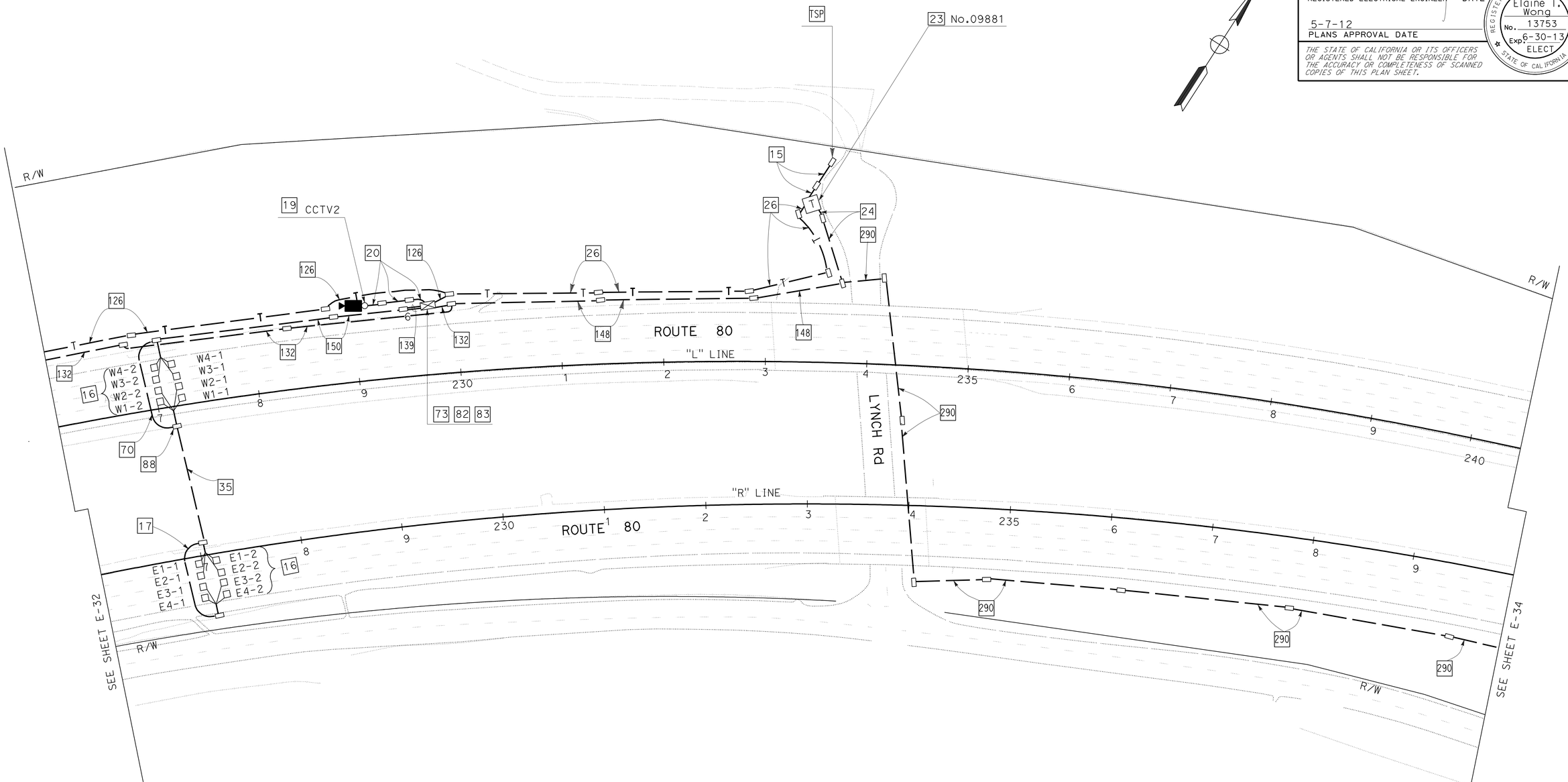

TRAFFIC OPERATIONS SYSTEM (LOCATION 11)

SCALE: 1" = 50'

APPROVED FOR ELECTRICAL WORK ONLY

FOR NOTES, SEE SHEET E-1 THRU E-4.
FOR ABBREVIATIONS, SEE SHEET E-1.

E-33

STATE OF CALIFORNIA - DEPARTMENT OF TRANSPORTATION
Caltrans
ELECTRICAL

FUNCTIONAL SUPERVISOR: LAI HONG CHIU
CALCULATED-DESIGNED BY: JESSIE CABUGAO
CHECKED BY: ELAINE T. WONG
REVISED BY
DATE REVISED

LAST REVISION 04-21-12
DATE PLOTTED => 10-MAY-2012
TIME PLOTTED => 07:40

Dist	COUNTY	ROUTE	POST MILES TOTAL PROJECT	SHEET No.	TOTAL SHEETS
04	Sol	80	0.0/R28.4	388	509

Elaine Wong 2-29-12
REGISTERED ELECTRICAL ENGINEER DATE

5-7-12
PLANS APPROVAL DATE

REGISTERED PROFESSIONAL ENGINEER Elaine T. Wong No. 13753 Exp. 6-30-13 ELECT STATE OF CALIFORNIA

THE STATE OF CALIFORNIA OR ITS OFFICERS OR AGENTS SHALL NOT BE RESPONSIBLE FOR THE ACCURACY OR COMPLETENESS OF SCANNED COPIES OF THIS PLAN SHEET.

NOTE:

FOR ACCURATE RIGHT OF WAY DATA, CONTACT RIGHT OF WAY ENGINEERING AT THE DISTRICT OFFICE.

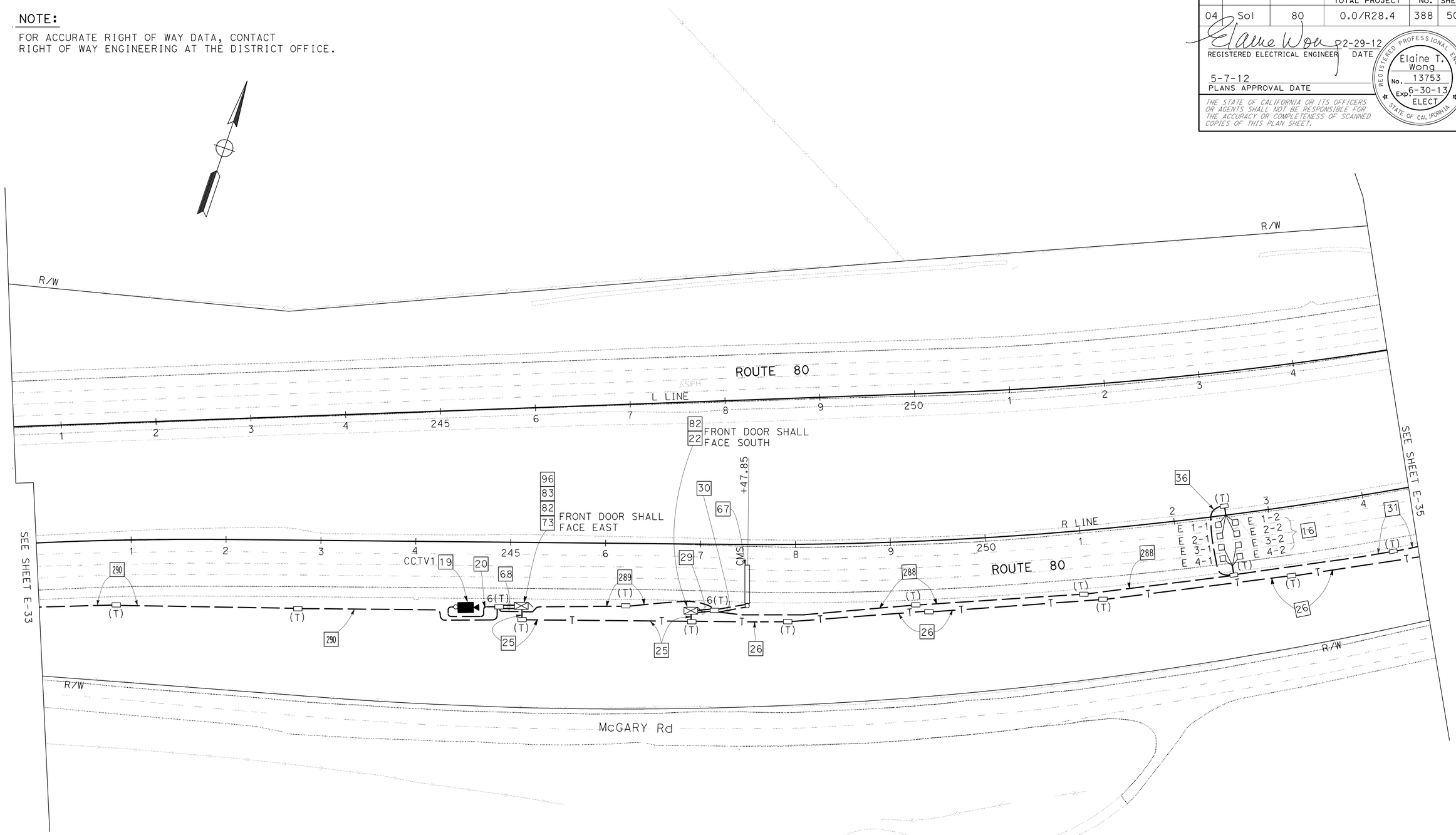

TRAFFIC OPERATIONS SYSTEM (LOCATION 12)

SCALE: 1" = 50'

APPROVED FOR ELECTRICAL WORK ONLY

FOR NOTES, SEE SHEET E-1 THRU E-4.
FOR ABBREVIATIONS, SEE SHEET E-1.

E-34

REVISED BY	DATE REVISED

CALCULATED-DESIGNED BY: ALEX KHOO
CHECKED BY: ELAINE T. WONG
FUNCTIONAL SUPERVISOR: LAI HONG CHIU

STATE OF CALIFORNIA - DEPARTMENT OF TRANSPORTATION
Caltrans
ELECTRICAL

LAST REVISION 03-03-12 | DATE PLOTTED => 10-MAY-2012 | TIME PLOTTED => 07:40

Dist	COUNTY	ROUTE	POST MILES TOTAL PROJECT	SHEET No.	TOTAL SHEETS
04	Sol	80	0.0/R28.4	389	509

REGISTERED ELECTRICAL ENGINEER — DATE 2-29-12

5-7-12
PLANS APPROVAL DATE

REGISTERED PROFESSIONAL ENGINEER — Elaine T. Wong — No. 13753 — Exp. 6-30-13 — ELECT. — STATE OF CALIFORNIA

THE STATE OF CALIFORNIA OR ITS OFFICERS OR AGENTS SHALL NOT BE RESPONSIBLE FOR THE ACCURACY OR COMPLETENESS OF SCANNED COPIES OF THIS PLAN SHEET.

NOTE:

FOR ACCURATE RIGHT OF WAY DATA, CONTACT RIGHT OF WAY ENGINEERING AT THE DISTRICT OFFICE.

TYPE III-AF SERVICE EQUIPMENT ENCLOSURE No. 10131

CTID No. 04230800010131
LOAD: TOU METER
2000 W CMS
3000 W CCTV
300 W TMS
100 W TDC

SAME AS PROJECT NOTE 1 EXCEP ITEM 25 SHALL BE MARKED "120 V CCTV1", ITEM 26 SHALL BE MARKED "120 V CCTV2", ITEM 27 SHALL BE MARKED "120 V CCTV3", DOOR SHALL FACE WEST. ALSO SEE GENERAL NOTE No. 4.

SYSTEM No. 23-080-10131
PG&E SERVICE (120/240 V)

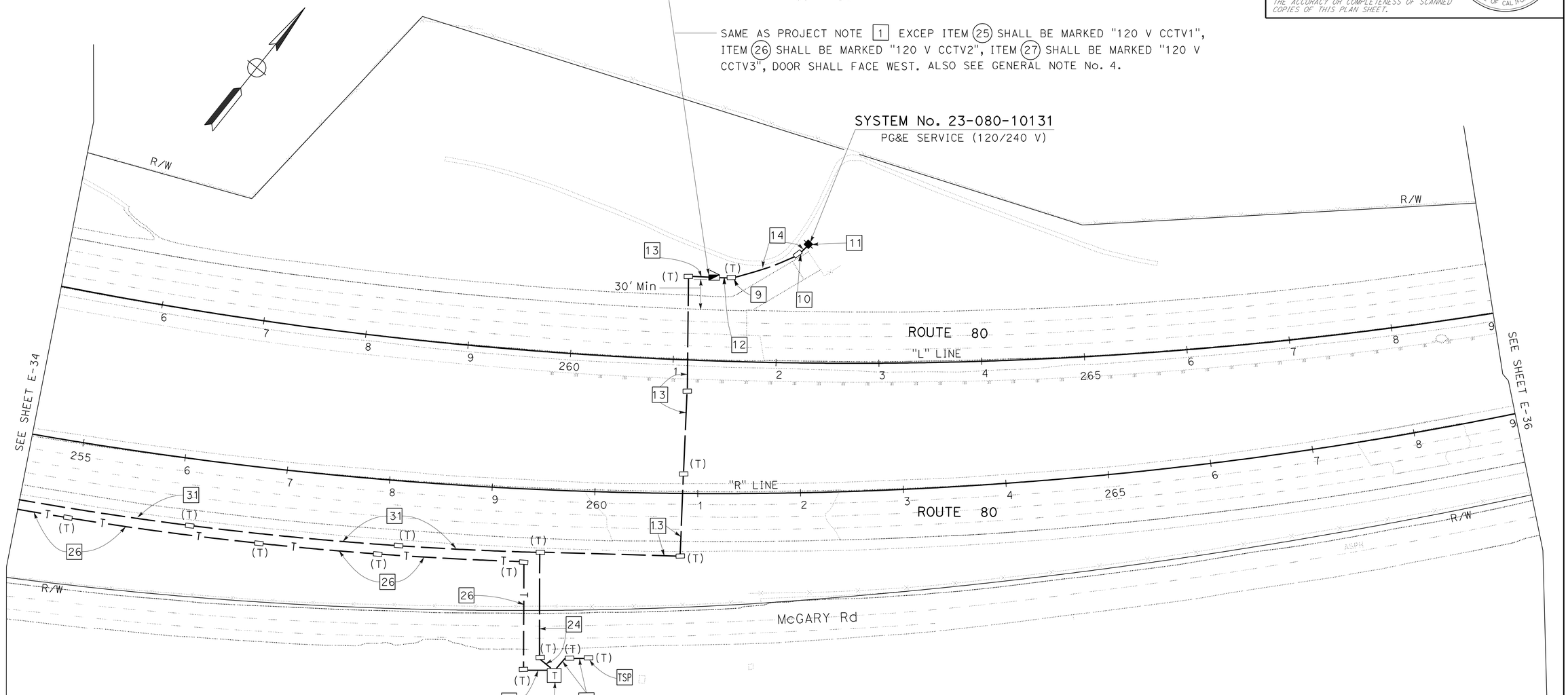

TRAFFIC OPERATIONS SYSTEM (LOCATION 12)

SCALE: 1" = 50'

APPROVED FOR ELECTRICAL WORK ONLY

FOR NOTES, SEE SHEET E-1 THRU E-4.
FOR ABBREVIATIONS, SEE SHEET E-1.

E-35

STATE OF CALIFORNIA - DEPARTMENT OF TRANSPORTATION
Caltrans
ELECTRICAL

FUNCTIONAL SUPERVISOR: LAI HONG CHIU
CALCULATED-DESIGNED BY: ALEX KHOO
CHECKED BY: ELAINE T. WONG
REVISED BY
DATE REVISED

LAST REVISION 02-09-12 | DATE PLOTTED => 10-MAY-2012 | TIME PLOTTED => 07:40

BORDER LAST REVISED 7/2/2010 | USERNAME => s124496 | DGN FILE => 0400020739ua035.dgn | RELATIVE BORDER SCALE IS IN INCHES 0 1 2 3 | UNIT 0721 | PROJECT NUMBER & PHASE 04000207391

Dist	COUNTY	ROUTE	POST MILES TOTAL PROJECT	SHEET No.	TOTAL SHEETS
04	Sol	80	0.0/R28.4	390	509

REGISTERED ELECTRICAL ENGINEER 2-29-12 DATE

5-7-12
PLANS APPROVAL DATE

REGISTERED PROFESSIONAL ENGINEER Elaine T. Wong No. 13753 Exp. 6-30-13 ELECT STATE OF CALIFORNIA

THE STATE OF CALIFORNIA OR ITS OFFICERS OR AGENTS SHALL NOT BE RESPONSIBLE FOR THE ACCURACY OR COMPLETENESS OF SCANNED COPIES OF THIS PLAN SHEET.

NOTE:

FOR ACCURATE RIGHT OF WAY DATA, CONTACT RIGHT OF WAY ENGINEERING AT THE DISTRICT OFFICE.

TYPE III-AF SERVICE EQUIPMENT
ENCLOSURE No. 10401

CTID No. 04230800010401
LOAD: TOU METER
1000 W CCTV
150 W TMS
100 W TDC

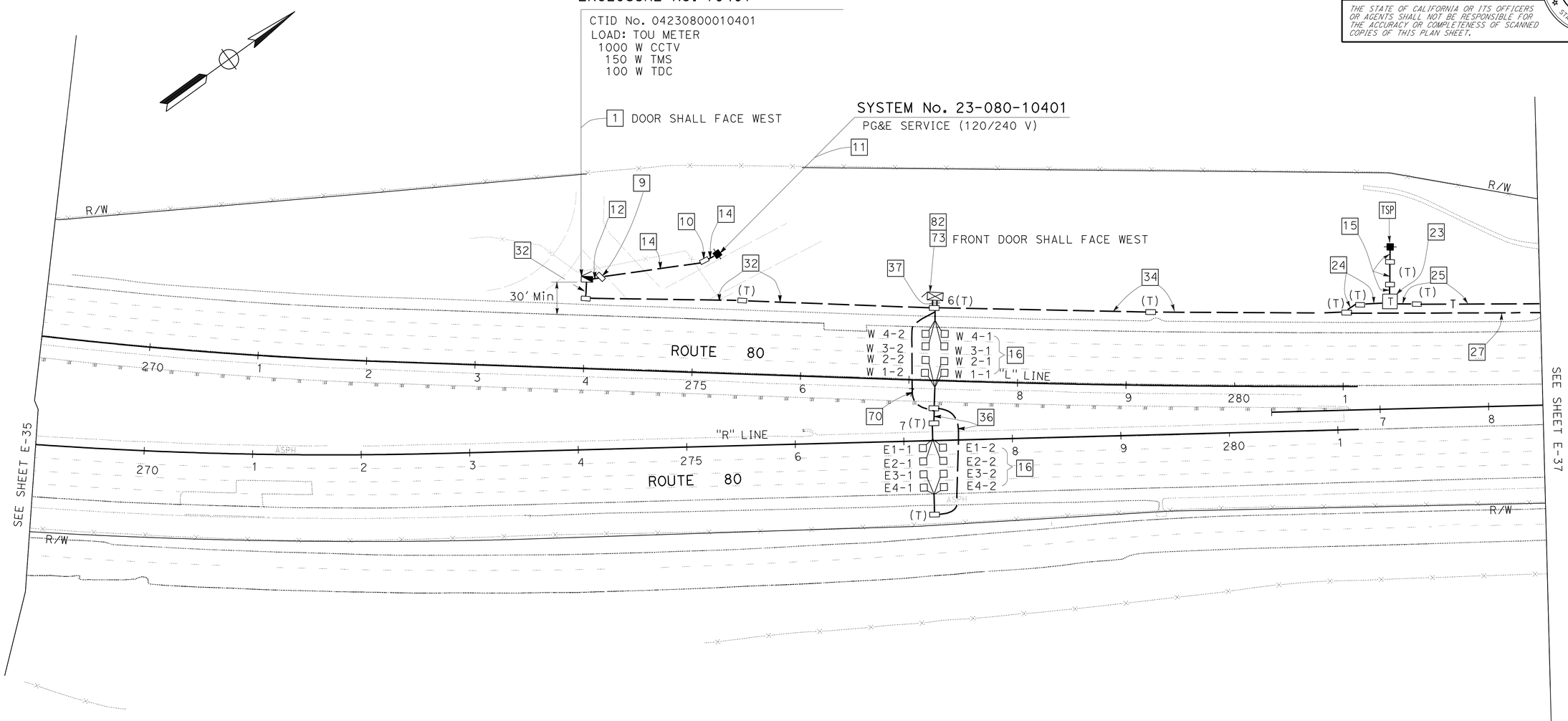

APPROVED FOR ELECTRICAL WORK ONLY

FOR NOTES, SEE SHEET E-1 THRU E-4.
FOR ABBREVIATIONS, SEE SHEET E-1.

TRAFFIC OPERATIONS SYSTEM (LOCATION 13)

SCALE: 1" = 50'

E-36

STATE OF CALIFORNIA - DEPARTMENT OF TRANSPORTATION
Caltrans
ELECTRICAL

FUNCTIONAL SUPERVISOR: LAI HONG CHIU
CALCULATED-DESIGNED BY: ALEX KHOO
CHECKED BY: ELAINE T. WONG
REVISED BY
DATE REVISED

LAST REVISION 02-16-12
DATE PLOTTED => 10-MAY-2012
TIME PLOTTED => 10:04

Dist	COUNTY	ROUTE	POST MILES TOTAL PROJECT	SHEET No.	TOTAL SHEETS
04	Sol	80	0.0/R28.4	391	509

REGISTERED ELECTRICAL ENGINEER — 2-29-12 DATE

5-7-12
PLANS APPROVAL DATE

REGISTERED PROFESSIONAL ENGINEER — Elaine T. Wong — No. 13753 — Exp. 6-30-13 — ELECT — STATE OF CALIFORNIA

THE STATE OF CALIFORNIA OR ITS OFFICERS OR AGENTS SHALL NOT BE RESPONSIBLE FOR THE ACCURACY OR COMPLETENESS OF SCANNED COPIES OF THIS PLAN SHEET.

NOTE:

FOR ACCURATE RIGHT OF WAY DATA, CONTACT RIGHT OF WAY ENGINEERING AT THE DISTRICT OFFICE.

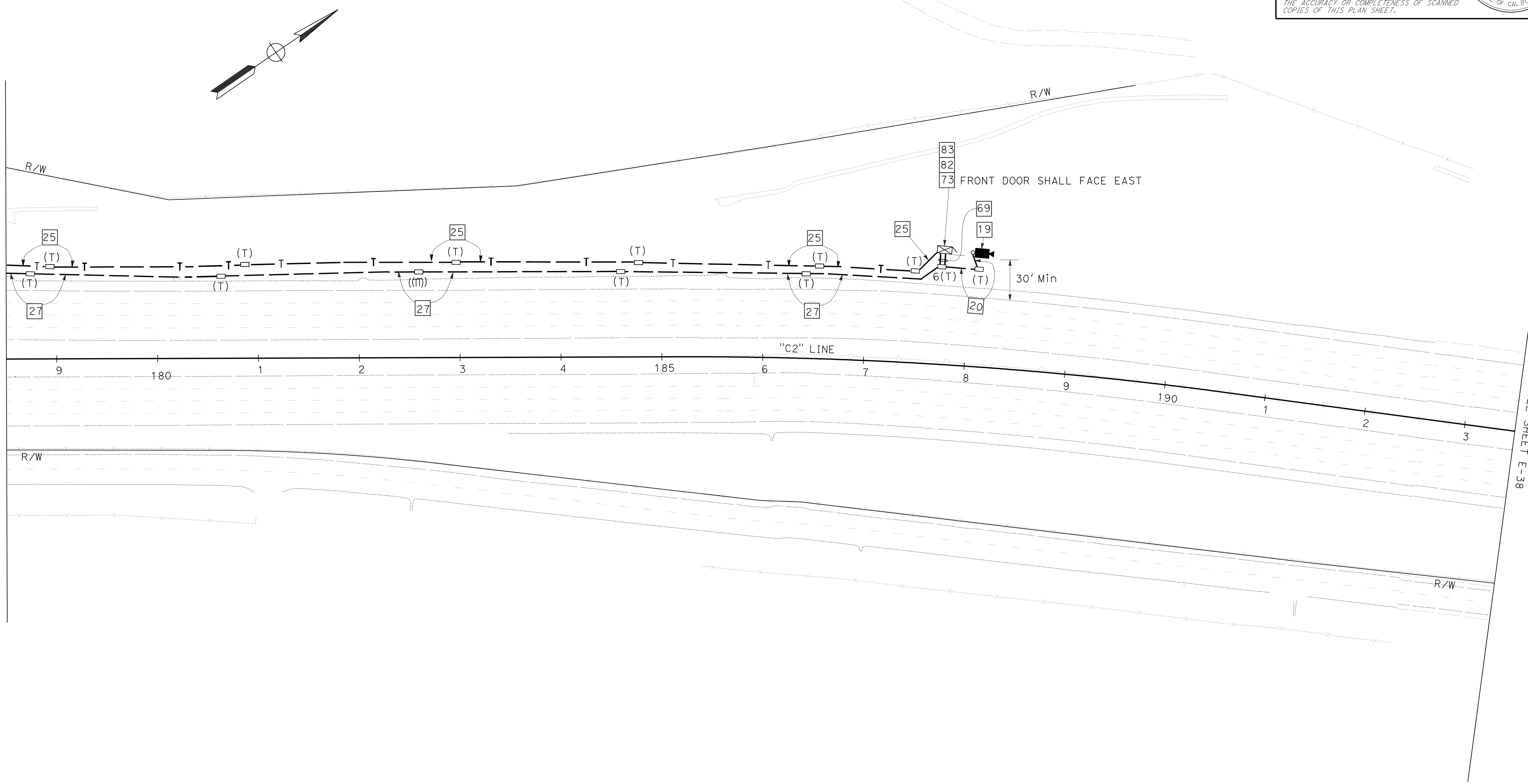

STATE OF CALIFORNIA - DEPARTMENT OF TRANSPORTATION

Caltrans®

ELECTRICAL

FUNCTIONAL SUPERVISOR	LAI HONG CHIU
CALCULATED-DESIGNED BY	ALEX KHOO
CHECKED BY	ELAINE T. WONG
REVISED BY	DATE REVISED

APPROVED FOR ELECTRICAL WORK ONLY

FOR NOTES, SEE SHEET E-1 THRU E-4.
FOR ABBREVIATIONS, SEE SHEET E-1.

TRAFFIC OPERATIONS SYSTEM (LOCATION 13)

SCALE: 1" = 50'

E-37

LAST REVISION 00-00-00 DATE PLOTTED => 10-MAY-2012 TIME PLOTTED => 10:04

BORDER LAST REVISED 7/2/2010 USERNAME => s114926 DGN FILE => 0400020739ua037.dgn RELATIVE BORDER SCALE IS IN INCHES 0 1 2 3

UNIT 0721 PROJECT NUMBER & PHASE 04000207391

Dist	COUNTY	ROUTE	POST MILES TOTAL PROJECT	SHEET No.	TOTAL SHEETS
04	Sol	80	0.0/R28.4	392	509

REGISTERED ELECTRICAL ENGINEER — DATE 2-29-12

5-7-12
PLANS APPROVAL DATE

REGISTERED PROFESSIONAL ENGINEER — Elaine T. Wong — No. 13753 — Exp. 6-30-13 — ELECT — STATE OF CALIFORNIA

THE STATE OF CALIFORNIA OR ITS OFFICERS OR AGENTS SHALL NOT BE RESPONSIBLE FOR THE ACCURACY OR COMPLETENESS OF SCANNED COPIES OF THIS PLAN SHEET.

NOTE:

FOR ACCURATE RIGHT OF WAY DATA, CONTACT RIGHT OF WAY ENGINEERING AT THE DISTRICT OFFICE.

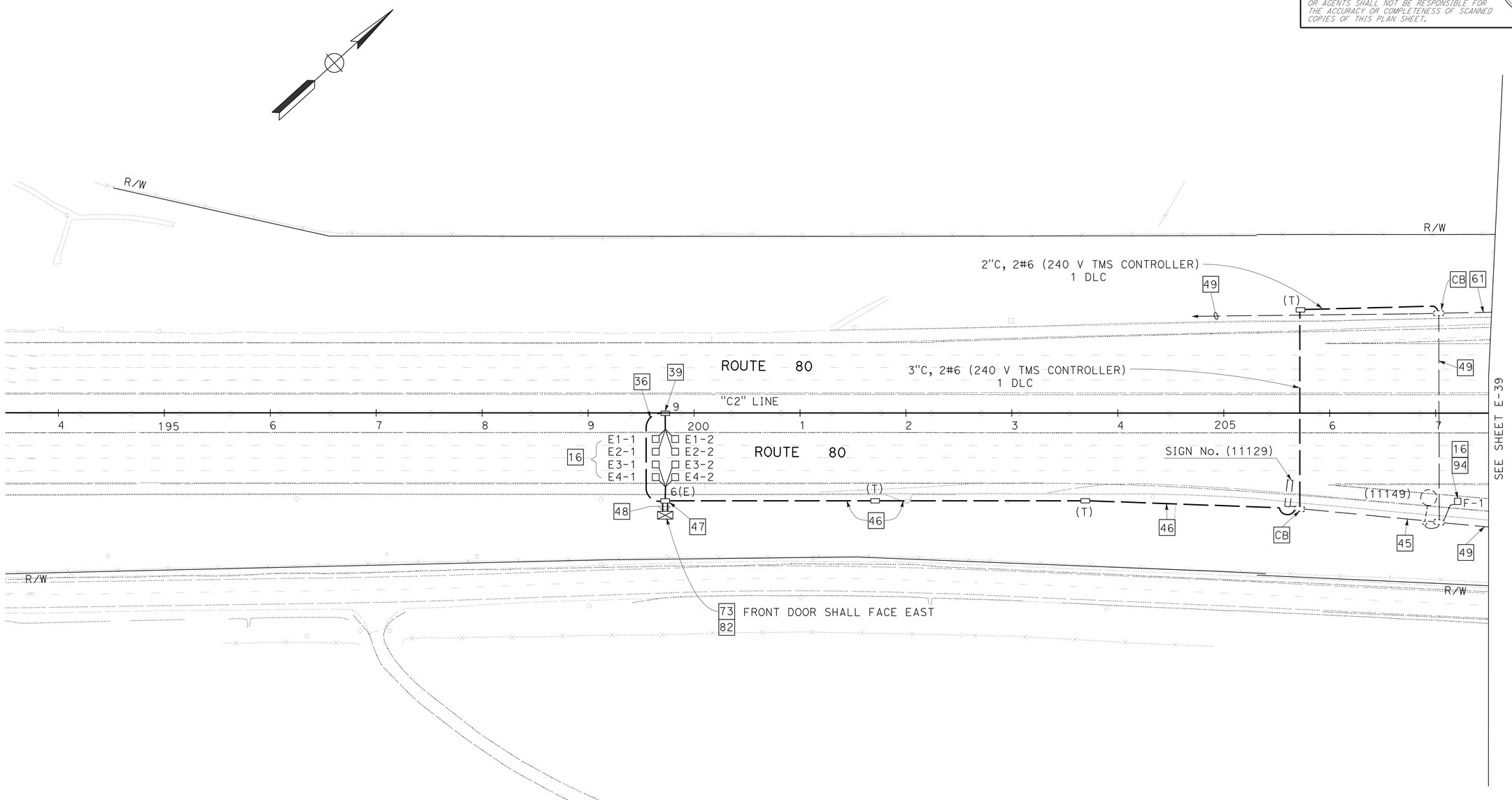

TRAFFIC OPERATIONS SYSTEM (LOCATION 14)

SCALE: 1" = 50'

APPROVED FOR ELECTRICAL WORK ONLY

FOR NOTES, SEE SHEET E-1 THRU E-4.
FOR ABBREVIATIONS, SEE SHEET E-1.

E-38

REVISED BY | DATE REVISED

ALEX KHOO | ELAINE T. WONG

CALCULATED-DESIGNED BY | CHECKED BY

FUNCTIONAL SUPERVISOR: LAI HONG CHIU

STATE OF CALIFORNIA - DEPARTMENT OF TRANSPORTATION

Caltrans

ELECTRICAL

LAST REVISION 02-14-12 | DATE PLOTTED => 10-MAY-2012 | TIME PLOTTED => 10:04

Dist	COUNTY	ROUTE	POST MILES TOTAL PROJECT	SHEET No.	TOTAL SHEETS
04	Sol	80	0.0/R28.4	393	509

Elaine Wong 2-29-12
REGISTERED ELECTRICAL ENGINEER DATE

5-7-12
PLANS APPROVAL DATE

REGISTERED PROFESSIONAL ENGINEER Elaine T. Wong No. 13753 Exp. 6-30-13 ELECT. STATE OF CALIFORNIA

THE STATE OF CALIFORNIA OR ITS OFFICERS OR AGENTS SHALL NOT BE RESPONSIBLE FOR THE ACCURACY OR COMPLETENESS OF SCANNED COPIES OF THIS PLAN SHEET.

NOTE:

FOR ACCURATE RIGHT OF WAY DATA, CONTACT RIGHT OF WAY ENGINEERING AT THE DISTRICT OFFICE.

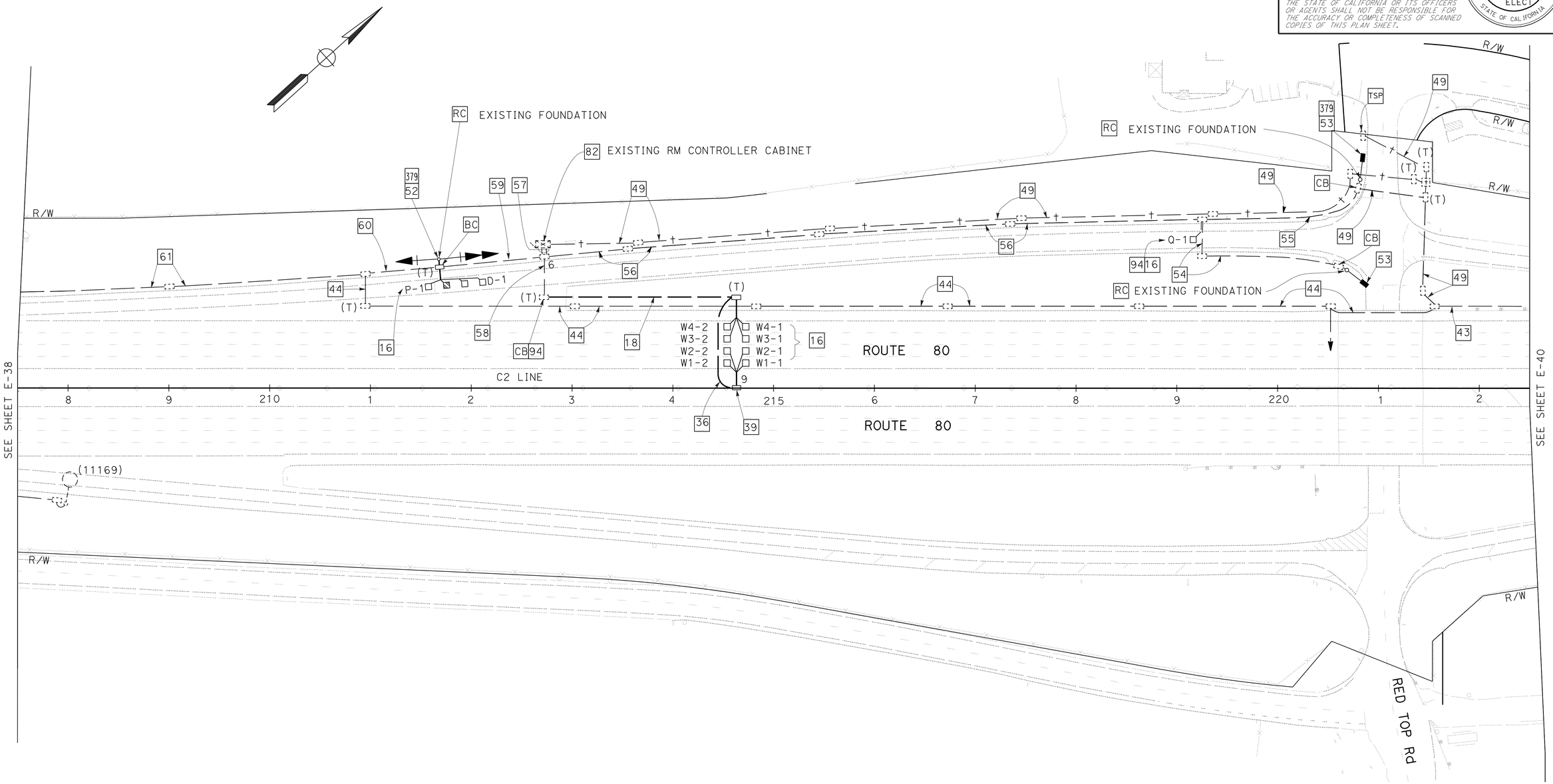

TRAFFIC OPERATIONS SYSTEM (LOCATION 14)

SCALE: 1" = 50'

FOR NOTES, SEE SHEET E-1 THRU E-4.
FOR ABBREVIATIONS, SEE SHEET E-1.

APPROVED FOR ELECTRICAL WORK ONLY

E-39

STATE OF CALIFORNIA - DEPARTMENT OF TRANSPORTATION
Caltrans
ELECTRICAL

FUNCTIONAL SUPERVISOR: LAI HONG CHIU
CALCULATED-DESIGNED BY: ALEX KHOO
CHECKED BY: ELAINE T. WONG
REVISED BY
DATE REVISED

LAST REVISION 03-03-12
DATE PLOTTED => 11-MAY-2012
TIME PLOTTED => 16:42

Dist	COUNTY	ROUTE	POST MILES TOTAL PROJECT	SHEET No.	TOTAL SHEETS
04	Sol	80	0.0/R28.4	394	509

Elaine Wong 2-29-12
REGISTERED ELECTRICAL ENGINEER DATE

5-7-12
PLANS APPROVAL DATE

REGISTERED PROFESSIONAL ENGINEER Elaine T. Wong No. 13753 Exp 6-30-13 ELECT STATE OF CALIFORNIA

THE STATE OF CALIFORNIA OR ITS OFFICERS OR AGENTS SHALL NOT BE RESPONSIBLE FOR THE ACCURACY OR COMPLETENESS OF SCANNED COPIES OF THIS PLAN SHEET.

NOTE:

FOR ACCURATE RIGHT OF WAY DATA, CONTACT RIGHT OF WAY ENGINEERING AT THE DISTRICT OFFICE.

SYSTEM No. 23-080-11499

PG&E SERVICE (240/480 V)

2 **No. 11449**

CTID No. 04230800011499 (240/480 V)
LOAD AFTER MODIFICATION: (TOU METER)
6 - 310 W HPS LUMINAIRES
6 - 200 W HPS LUMINAIRES
3 - 85 W INDUCTION SIGN LIGHTING FIXTURES
150 W OF TMS EAST 2
1500 W OF RAMP METERING (TMS WEST DT 351)
150 W OF TMS (TMS WEST DT 351)
2800 W OF TMS (TMS EAST DT 807, 1500 RM, 1000 CCTV, 300 TMS)
100 W TDC

LOAD BEFORE MODIFICATION: (TOU METER)
6 - 310 W HPS LUMINAIRES
6 - 200 W HPS LUMINAIRES
3 - 85 W INDUCTION SIGN LIGHTING FIXTURES
150 W OF TMS (TMS WEST, DT 351)
2800 W OF TMS (TMS EAST DT 807)
100 W TDC

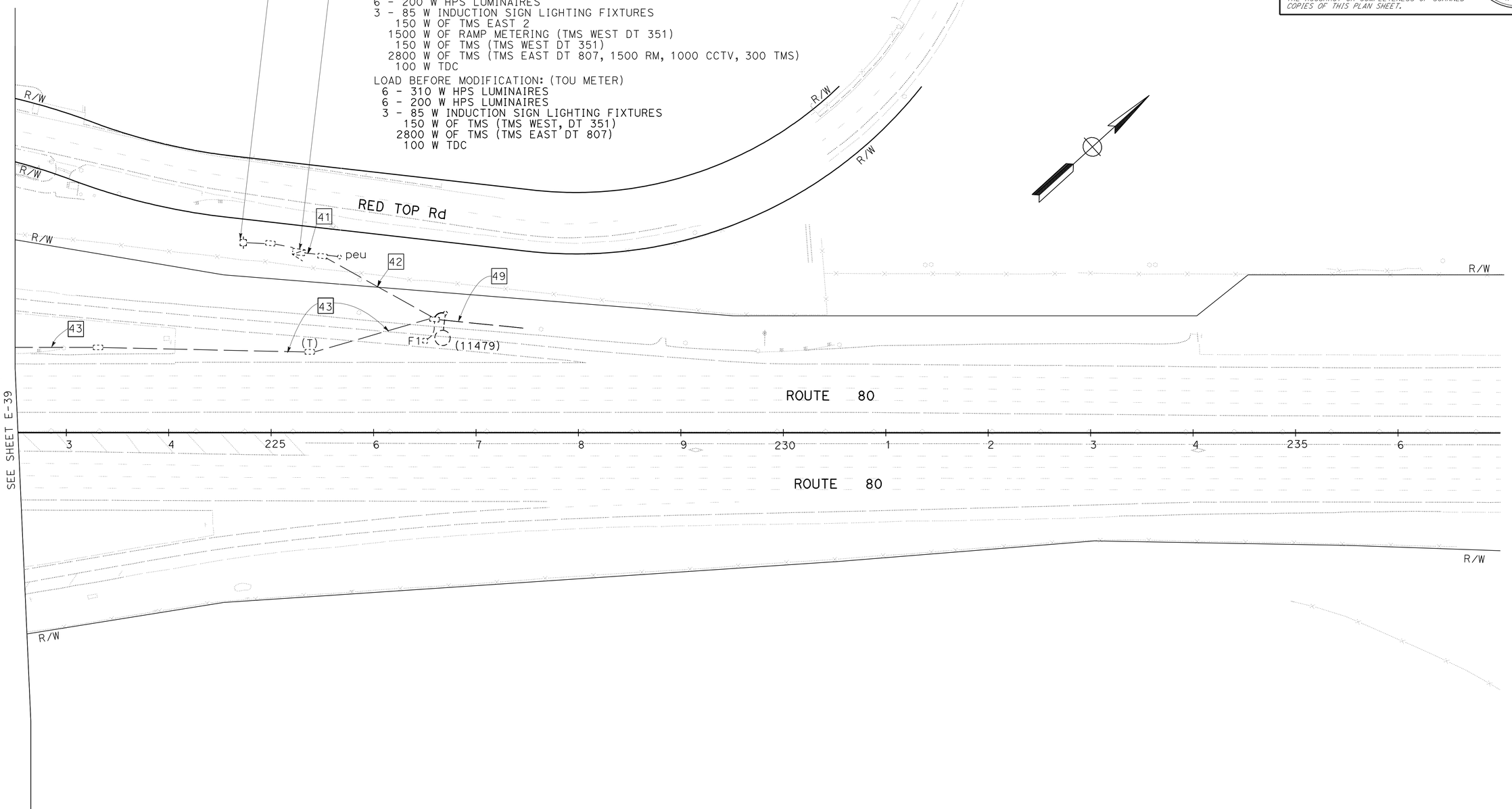

TRAFFIC OPERATIONS SYSTEM (LOCATION 14)

SCALE: 1" = 50'

APPROVED FOR ELECTRICAL WORK ONLY

FOR NOTES, SEE SHEET E-1 THRU E-4.
FOR ABBREVIATIONS, SEE SHEET E-1.

E-40

REVISED BY | DATE REVISED
ALEX KHOO | ELAINE T. WONG
CALCULATED-DESIGNED BY | CHECKED BY
FUNCTIONAL SUPERVISOR: LAI HONG CHIU
STATE OF CALIFORNIA - DEPARTMENT OF TRANSPORTATION
Caltrans
ELECTRICAL

LAST REVISION 03-03-12 | DATE PLOTTED => 10-MAY-2012 | TIME PLOTTED => 10:05

Dist	COUNTY	ROUTE	POST MILES TOTAL PROJECT	SHEET No.	TOTAL SHEETS
04	Sol	80	0.0/R28.4	395	509

REGISTERED ELECTRICAL ENGINEER — DATE 2-29-12

5-7-12
PLANS APPROVAL DATE

REGISTERED PROFESSIONAL ENGINEER — Elaine T. Wong — No. 13753 — Exp 6-30-13 — ELECT — STATE OF CALIFORNIA

THE STATE OF CALIFORNIA OR ITS OFFICERS OR AGENTS SHALL NOT BE RESPONSIBLE FOR THE ACCURACY OR COMPLETENESS OF SCANNED COPIES OF THIS PLAN SHEET.

NOTE:

FOR ACCURATE RIGHT OF WAY DATA, CONTACT RIGHT OF WAY ENGINEERING AT THE DISTRICT OFFICE.

EXISTING TYPE III-AF SERVICE EQUIPMENT ENCLOSURE WITH ITEMS (1) THROUGH (9), (11) THROUGH (14), (17) THROUGH (25) AND (27), AS SHOWN ON E-90 TO REMAIN.
ITEM (20) WAS MARKED FLASHING BEACON 1" AND ITEM (21) 1S 15A, IP, CB AND WAS MARKED "FLASHING BEACON 2"

No. 12904

CTID No. 04236800012904
LOAD AFTER MODIFICATION: TOU METER
1150 W TMS/har
8-310 W hps LUMINAIRES
6-175 W mv SIGN LIGHTING FIXTURES
4-150 W ALTERNATION fb
3000 W ems/cctv
2000 W rm
100 W tdc

LOAD BEFORE MODIFICATION: TOU METER
8-310 W hps LUMINAIRES
6-175 W mv SIGN LIGHTING FIXTURES
4-150 W ALTERNATION fb
3000 W ems/cctv
2000 W rm
1000 W har
100 W tdc

EXISTING SYSTEM No. 23-680-12900
PG&E SERVICE (120/240 V)

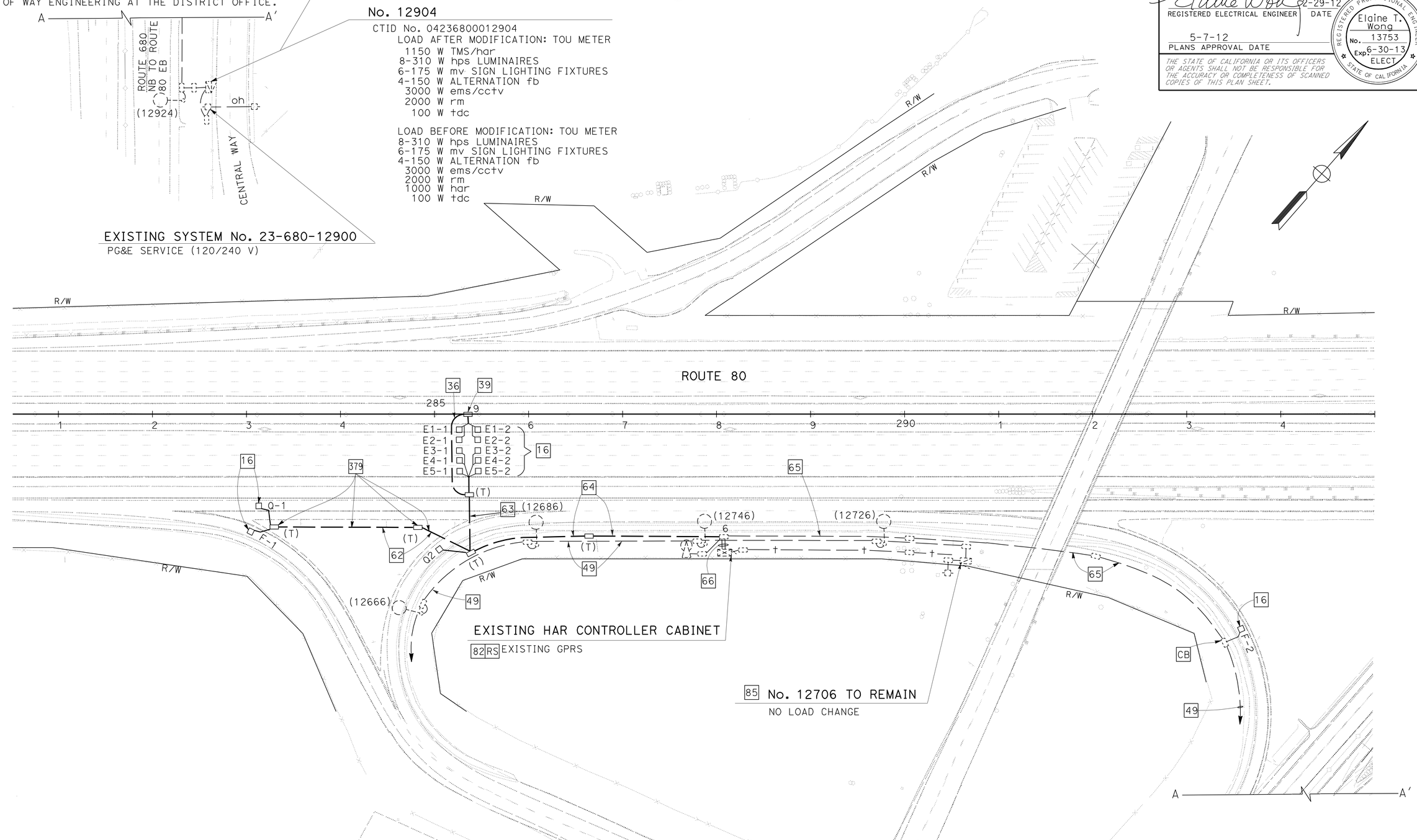

TRAFFIC OPERATIONS SYSTEM (LOCATION 15)

SCALE: 1" = 50'

APPROVED FOR ELECTRICAL WORK ONLY

FOR NOTES, SEE SHEET E-1 THRU E-4.
FOR ABBREVIATIONS, SEE SHEET E-1.

E-41

STATE OF CALIFORNIA - DEPARTMENT OF TRANSPORTATION
Caltrans
ELECTRICAL

FUNCTIONAL SUPERVISOR: LAI HONG CHIU
CALCULATED-DESIGNED BY: ALEX KHOO
CHECKED BY: ELAINE T. WONG
REVISED BY
DATE REVISED

LAST REVISION 03-03-12
DATE PLOTTED => 10-MAY-2012
TIME PLOTTED => 10:05

Dist	COUNTY	ROUTE	POST MILES TOTAL PROJECT	SHEET No.	TOTAL SHEETS
04	Sol	80	0.0/R28.4	396	509

REGISTERED ELECTRICAL ENGINEER — DATE 2-29-12

5-7-12
PLANS APPROVAL DATE

REGISTERED PROFESSIONAL ENGINEER — Elaine T. Wong — No. 13753 — Exp. 6-30-13 — ELECT — STATE OF CALIFORNIA

THE STATE OF CALIFORNIA OR ITS OFFICERS OR AGENTS SHALL NOT BE RESPONSIBLE FOR THE ACCURACY OR COMPLETENESS OF SCANNED COPIES OF THIS PLAN SHEET.

NOTE:

FOR ACCURATE RIGHT OF WAY DATA, CONTACT RIGHT OF WAY ENGINEERING AT THE DISTRICT OFFICE.

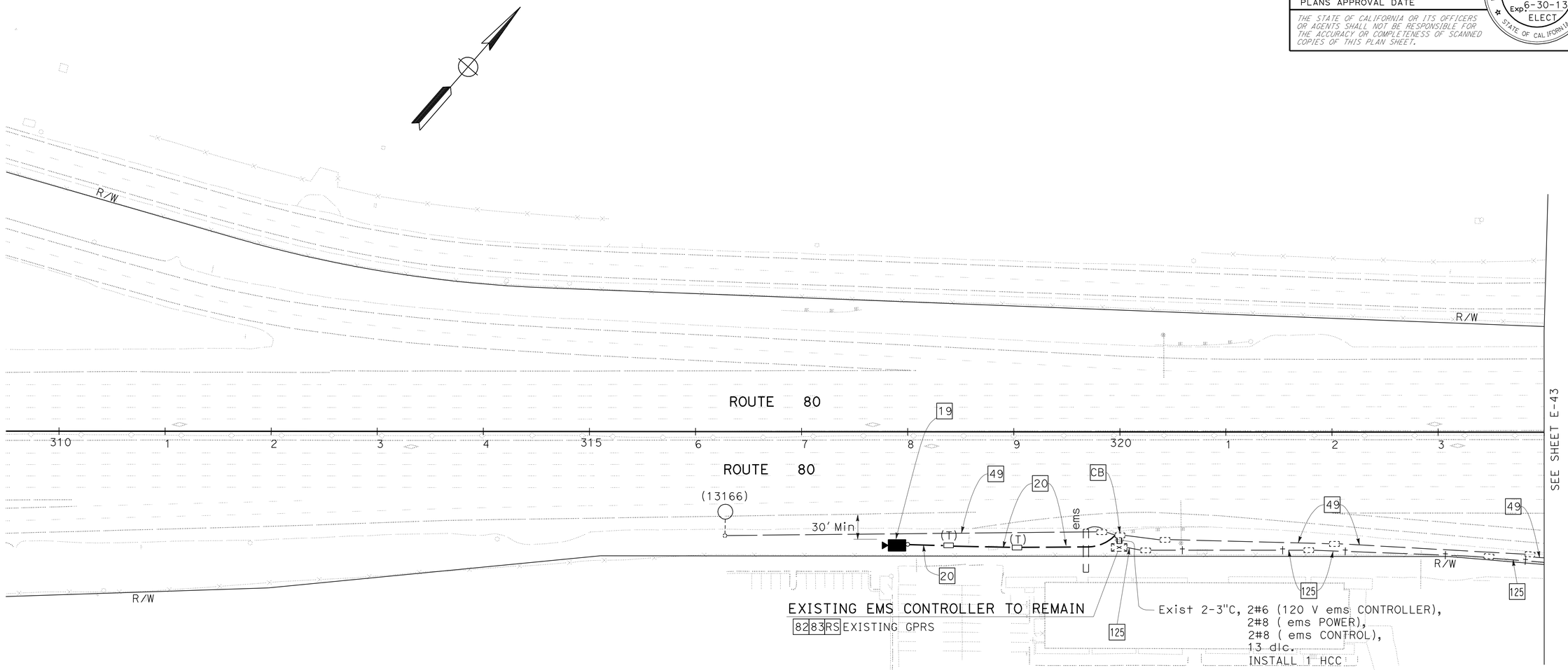

TRAFFIC OPERATIONS SYSTEM (LOCATION 16)

SCALE: 1" = 50'

FOR NOTES, SEE SHEET E-1 THRU E-4.
FOR ABBREVIATIONS, SEE SHEET E-1.

APPROVED FOR ELECTRICAL WORK ONLY

E-42

REVISED BY | DATE REVISED

ALEX KHOO | ELAINE T. WONG

CALCULATED-DESIGNED BY | CHECKED BY

FUNCTIONAL SUPERVISOR: LAI HONG CHIU

STATE OF CALIFORNIA - DEPARTMENT OF TRANSPORTATION

Caltrans

ELECTRICAL

LAST REVISION 03-02-12 | DATE PLOTTED => 10-MAY-2012 | TIME PLOTTED => 10:05

Dist	COUNTY	ROUTE	POST MILES TOTAL PROJECT	SHEET No.	TOTAL SHEETS
04	Sol	80	0.0/R28.4	397	509

Elaine Wong 2-29-12
REGISTERED ELECTRICAL ENGINEER DATE

5-7-12
PLANS APPROVAL DATE

REGISTERED PROFESSIONAL ENGINEER Elaine T. Wong No. 13753 Exp. 6-30-13 ELECT STATE OF CALIFORNIA

THE STATE OF CALIFORNIA OR ITS OFFICERS OR AGENTS SHALL NOT BE RESPONSIBLE FOR THE ACCURACY OR COMPLETENESS OF SCANNED COPIES OF THIS PLAN SHEET.

NOTE:

FOR ACCURATE RIGHT OF WAY DATA, CONTACT RIGHT OF WAY ENGINEERING AT THE DISTRICT OFFICE.

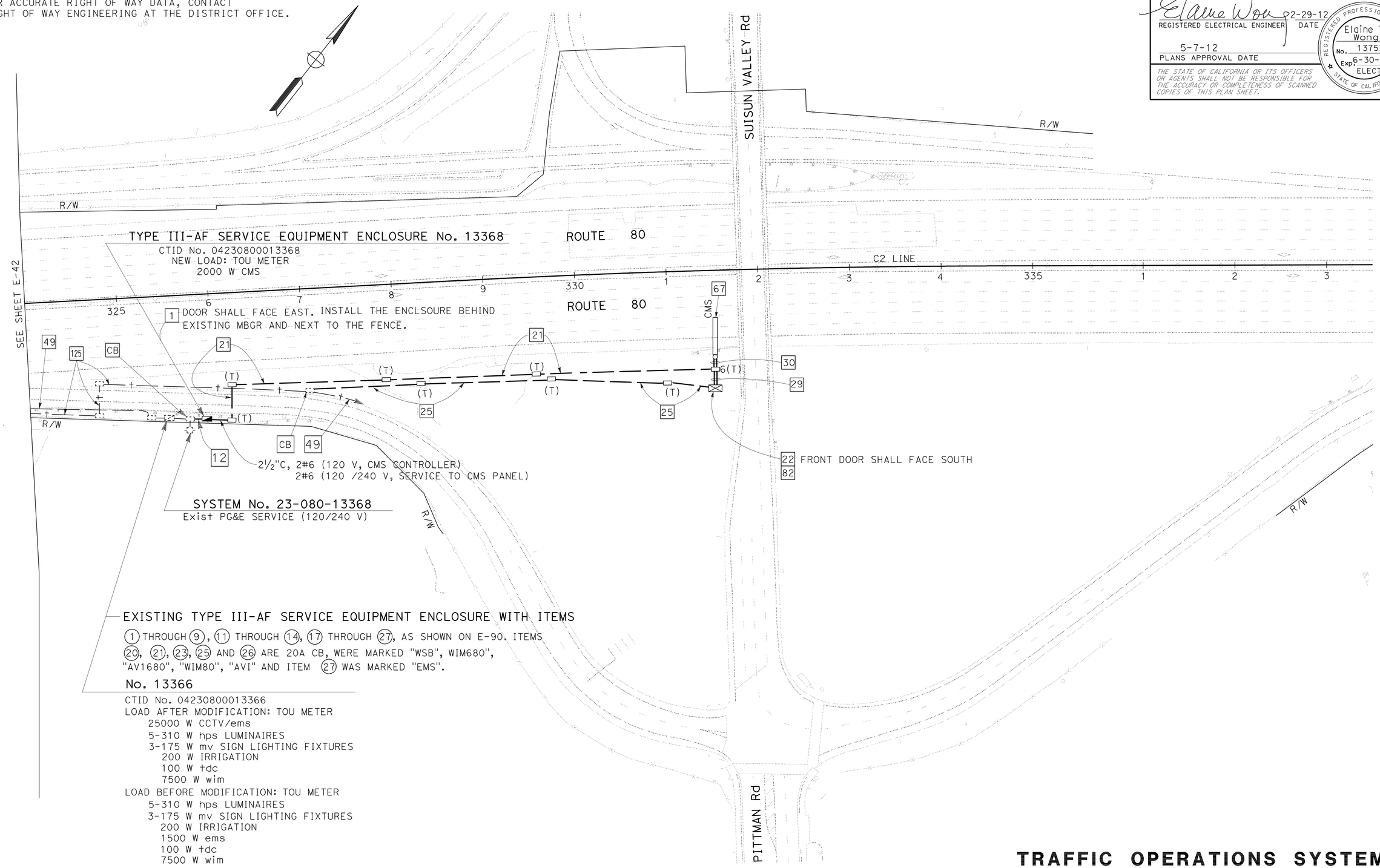

EXISTING TYPE III-AF SERVICE EQUIPMENT ENCLOSURE WITH ITEMS

(1) THROUGH (9), (11) THROUGH (14), (17) THROUGH (27), AS SHOWN ON E-90. ITEMS (20), (21), (23), (25) AND (26) ARE 20A CB, WERE MARKED "WSB", WIM680", "AV1680", "WIM80", "AVI" AND ITEM (27) WAS MARKED "EMS".

No. 13366

CTID No. 04230800013366
LOAD AFTER MODIFICATION: TOU METER
- 25000 W CCTV/ems
- 5-310 W hps LUMINAIRES
- 3-175 W mv SIGN LIGHTING FIXTURES
  - 200 W IRRIGATION
  - 100 W tdc
  - 7500 W wim

LOAD BEFORE MODIFICATION: TOU METER
- 5-310 W hps LUMINAIRES
- 3-175 W mv SIGN LIGHTING FIXTURES
  - 200 W IRRIGATION
  - 1500 W ems
  - 100 W tdc
  - 7500 W wim

APPROVED FOR ELECTRICAL WORK ONLY

FOR NOTES, SEE SHEET E-1 THRU E-4.
FOR ABBREVIATIONS, SEE SHEET E-1.

TRAFFIC OPERATIONS SYSTEM (LOCATION 16)

SCALE: 1" = 50'

E-43

STATE OF CALIFORNIA - DEPARTMENT OF TRANSPORTATION
Caltrans
ELECTRICAL

FUNCTIONAL SUPERVISOR: LAI HONG CHIU
CALCULATED-DESIGNED BY: ALEX KHOO
CHECKED BY: ELAINE T. WONG
REVISED BY
DATE REVISED

LAST REVISION 03-03-12
DATE PLOTTED => 10-MAY-2012
TIME PLOTTED => 10:05

Dist	COUNTY	ROUTE	POST MILES TOTAL PROJECT	SHEET No.	TOTAL SHEETS
04	Sol	80	0.0/R28.4	398	509

REGISTERED ELECTRICAL ENGINEER — DATE 2-29-12

5-7-12
PLANS APPROVAL DATE

REGISTERED PROFESSIONAL ENGINEER — Elaine T. Wong — No. 13753 — Exp. 6-30-13 — ELECT. — STATE OF CALIFORNIA

THE STATE OF CALIFORNIA OR ITS OFFICERS OR AGENTS SHALL NOT BE RESPONSIBLE FOR THE ACCURACY OR COMPLETENESS OF SCANNED COPIES OF THIS PLAN SHEET.

NOTE:

FOR ACCURATE RIGHT OF WAY DATA, CONTACT RIGHT OF WAY ENGINEERING AT THE DISTRICT OFFICE.

SYSTEM No. 23-080-14805
Exist PG&E SERVICE (120/240 V)

3 EXISTING TYPE III-AF SERVICE EQUIPMENT ENCLOSURE No. 14805
CTID No. 04230800014805
LOAD AFTER MODIFICATION:(TOU METER)
2-300 W tms/TMS
2-175 W mv
2-300 W wsb CONTROLLER
LOAD BEFORE MODIFICATION:(TOU METER)
1-300 W tms
2-175 W mv
2-300 W wsb CONTROLLER

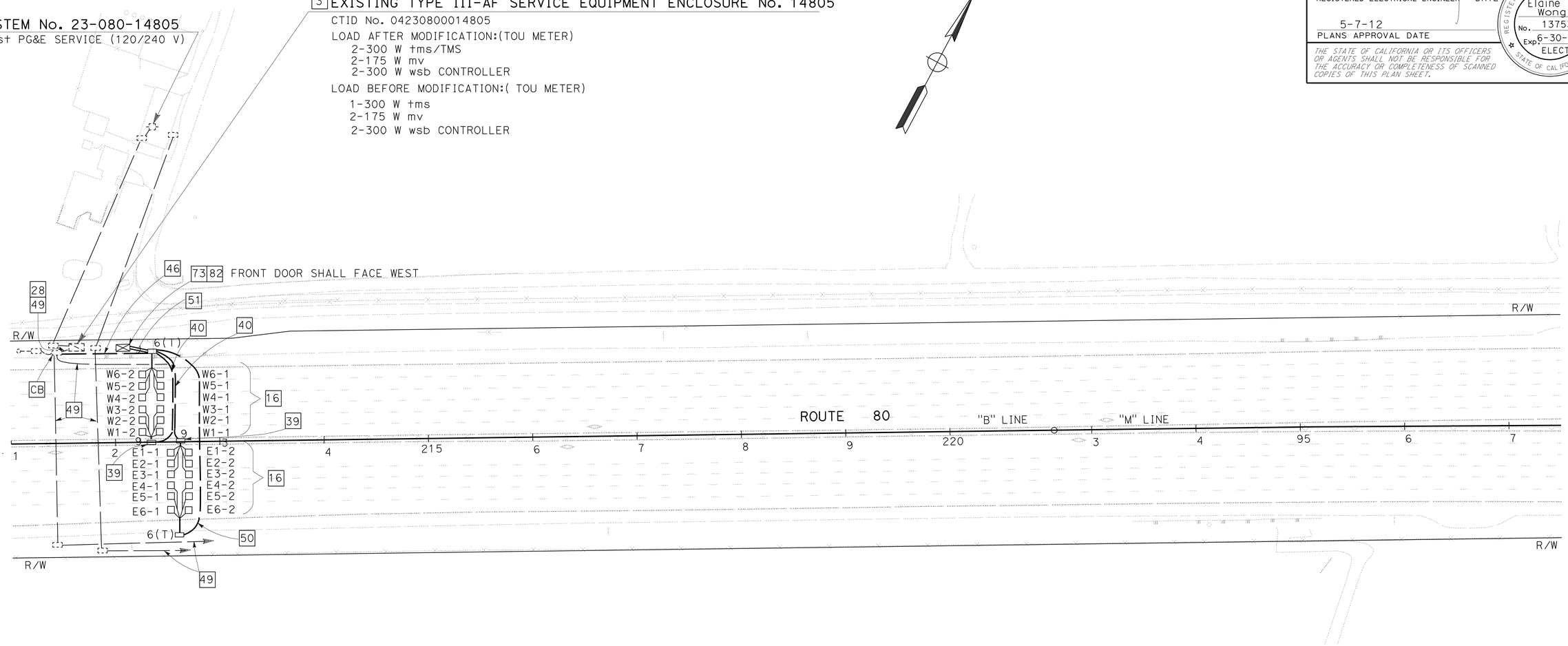

TRAFFIC OPERATIONS SYSTEM (LOCATION 17)

APPROVED FOR ELECTRICAL WORK ONLY

FOR NOTES, SEE SHEET E-1 THRU E-4.
FOR ABBREVIATIONS, SEE SHEET E-1.

SCALE: 1" = 50'

E-44

STATE OF CALIFORNIA - DEPARTMENT OF TRANSPORTATION
Caltrans
ELECTRICAL

FUNCTIONAL SUPERVISOR: LAI HONG CHIU
CALCULATED-DESIGNED BY: ALEX KHOO
CHECKED BY: ELAINE T. WONG
REVISED BY
DATE REVISED

LAST REVISION 02-13-12 | DATE PLOTTED => 10-MAY-2012 | TIME PLOTTED => 10:05

Dist	COUNTY	ROUTE	POST MILES TOTAL PROJECT	SHEET No.	TOTAL SHEETS
04	Sol	80	0.0/R28.4	399	509

REGISTERED ELECTRICAL ENGINEER — DATE 2-29-12

5-7-12
PLANS APPROVAL DATE

REGISTERED PROFESSIONAL ENGINEER — Elaine T. Wong — No. 13753 — Exp 6-30-13 — ELECT — STATE OF CALIFORNIA

THE STATE OF CALIFORNIA OR ITS OFFICERS OR AGENTS SHALL NOT BE RESPONSIBLE FOR THE ACCURACY OR COMPLETENESS OF SCANNED COPIES OF THIS PLAN SHEET.

NOTE:

FOR ACCURATE RIGHT OF WAY DATA, CONTACT RIGHT OF WAY ENGINEERING AT THE DISTRICT OFFICE.

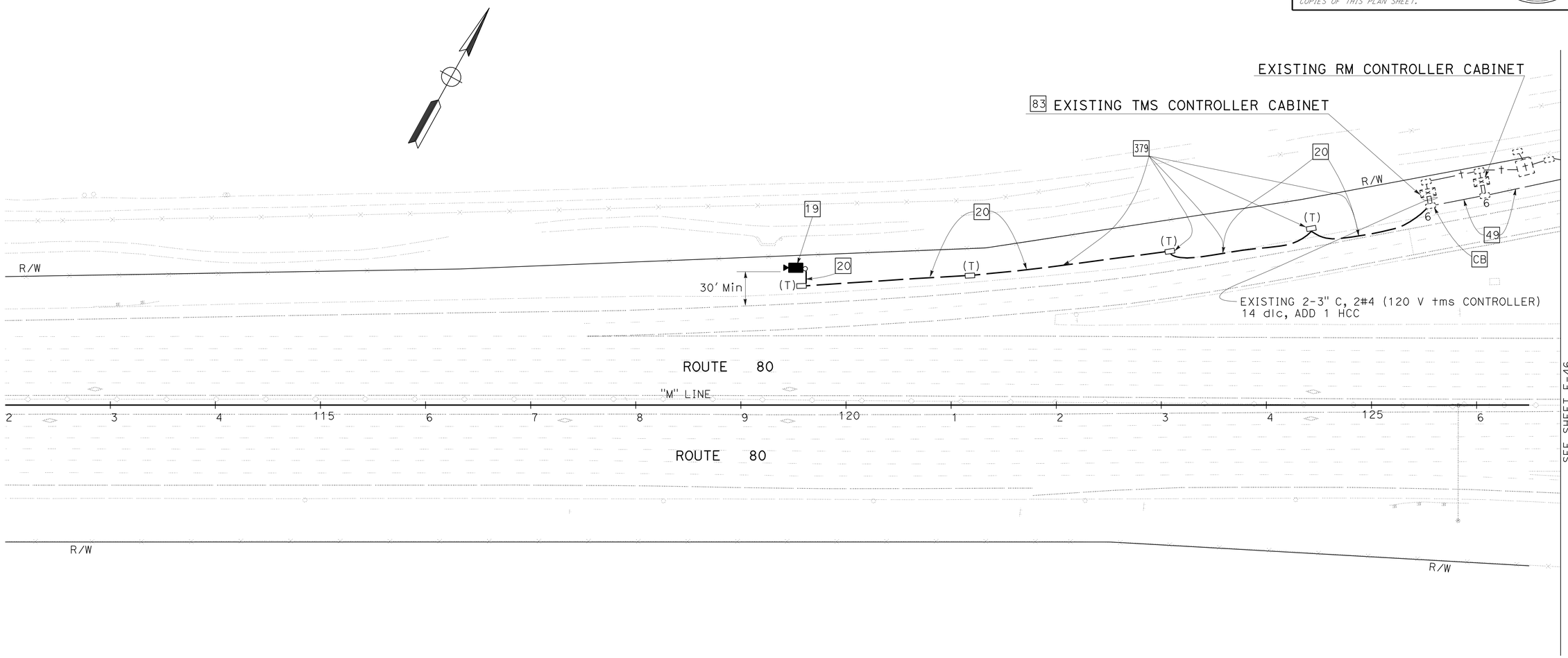

TRAFFIC OPERATIONS SYSTEM (LOCATION 18)

SCALE: 1" = 50'

APPROVED FOR ELECTRICAL WORK ONLY

FOR NOTES, SEE SHEET E-1 THRU E-4.
FOR ABBREVIATIONS, SEE SHEET E-1.

E-45

STATE OF CALIFORNIA - DEPARTMENT OF TRANSPORTATION
Caltrans
ELECTRICAL

FUNCTIONAL SUPERVISOR: LAI HONG CHIU
CALCULATED-DESIGNED BY: ALEX KHOO
CHECKED BY
REVISED BY
DATE REVISED

LAST REVISION 02-02-12
DATE PLOTTED => 10-MAY-2012
TIME PLOTTED => 10:05

Dist	COUNTY	ROUTE	POST MILES TOTAL PROJECT	SHEET No.	TOTAL SHEETS
04	Sol	80	0.0/R28.4	400	509

Elaine Wong 2-29-12
REGISTERED ELECTRICAL ENGINEER DATE

5-7-12
PLANS APPROVAL DATE

REGISTERED PROFESSIONAL ENGINEER Elaine T. Wong No. 13753 Exp. 6-30-13 ELECT. STATE OF CALIFORNIA

THE STATE OF CALIFORNIA OR ITS OFFICERS OR AGENTS SHALL NOT BE RESPONSIBLE FOR THE ACCURACY OR COMPLETENESS OF SCANNED COPIES OF THIS PLAN SHEET.

NOTE:

FOR ACCURATE RIGHT OF WAY DATA, CONTACT RIGHT OF WAY ENGINEERING AT THE DISTRICT OFFICE.

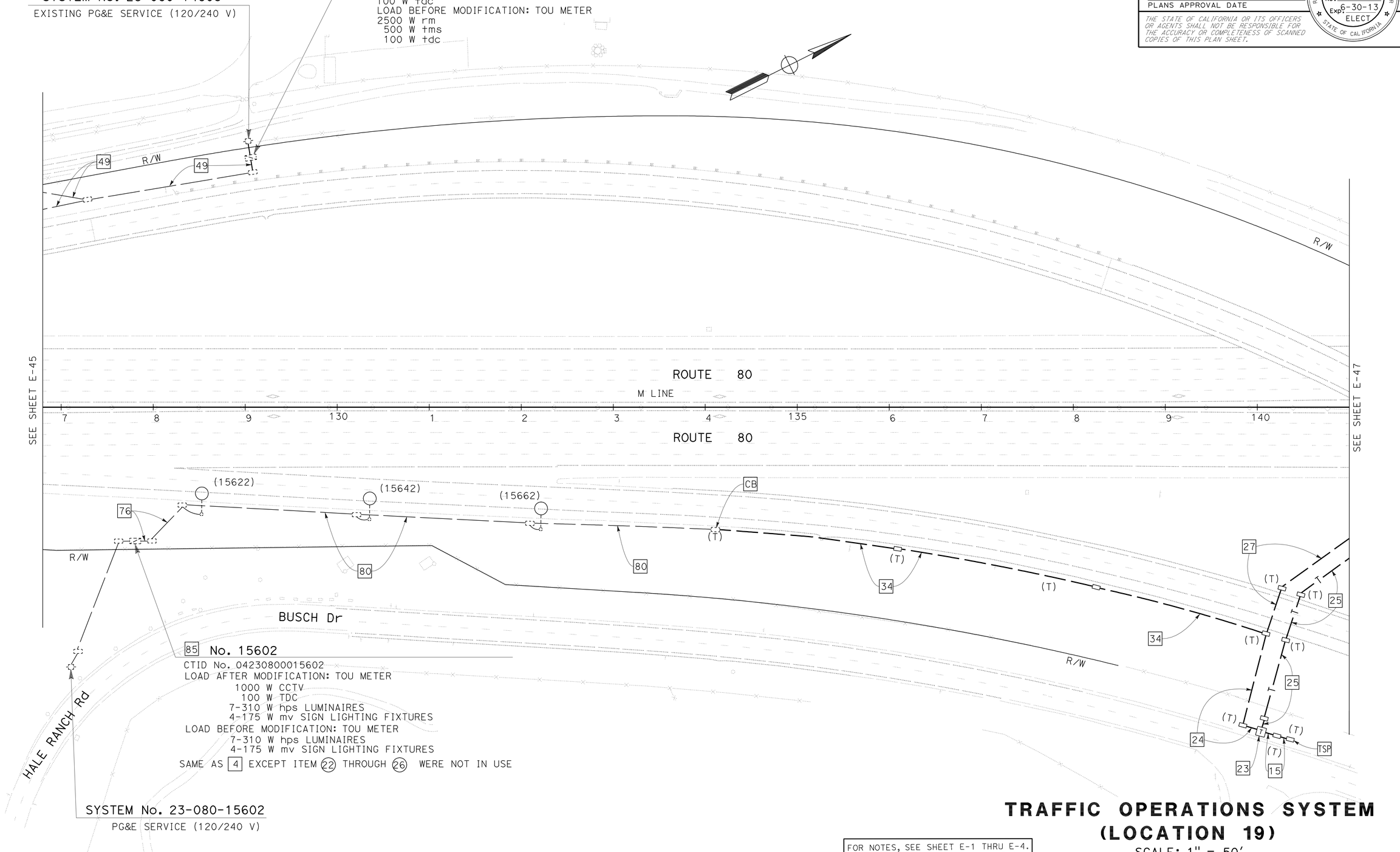

TRAFFIC OPERATIONS SYSTEM (LOCATION 19)

SCALE: 1" = 50'

FOR NOTES, SEE SHEET E-1 THRU E-4.
FOR ABBREVIATIONS, SEE SHEET E-1.

APPROVED FOR ELECTRICAL WORK ONLY

E-46

STATE OF CALIFORNIA - DEPARTMENT OF TRANSPORTATION
Caltrans
ELECTRICAL

FUNCTIONAL SUPERVISOR: LAI HONG CHIU
CALCULATED-DESIGNED BY: ALEX KHOO
CHECKED BY: ELAINE T. WONG
REVISED BY
DATE REVISED

LAST REVISION 00-00-00
DATE PLOTTED => 10-MAY-2012
TIME PLOTTED => 08:46