Dist	COUNTY	ROUTE	POST MILES TOTAL PROJECT	SHEET No.	TOTAL SHEETS
04	SF	101,1	9.2/9.8, 6.8/7.1	11	567

REGISTERED CIVIL ENGINEER 6-08-09 DATE

7-20-09
PLANS APPROVAL DATE

REGISTERED PROFESSIONAL ENGINEER Hossein Khodabakhsh No. 71650 Exp. 12-31-09 CIVIL STATE OF CALIFORNIA

THE STATE OF CALIFORNIA OR ITS OFFICERS OR AGENTS SHALL NOT BE RESPONSIBLE FOR THE ACCURACY OR COMPLETENESS OF SCANNED COPIES OF THIS PLAN SHEET.

FOR ACCURATE RIGHT OF WAY AND ACCESS DATA, CONTACT RIGHT OF WAY ENGINEERING AT THE DISTRICT OFFICE.

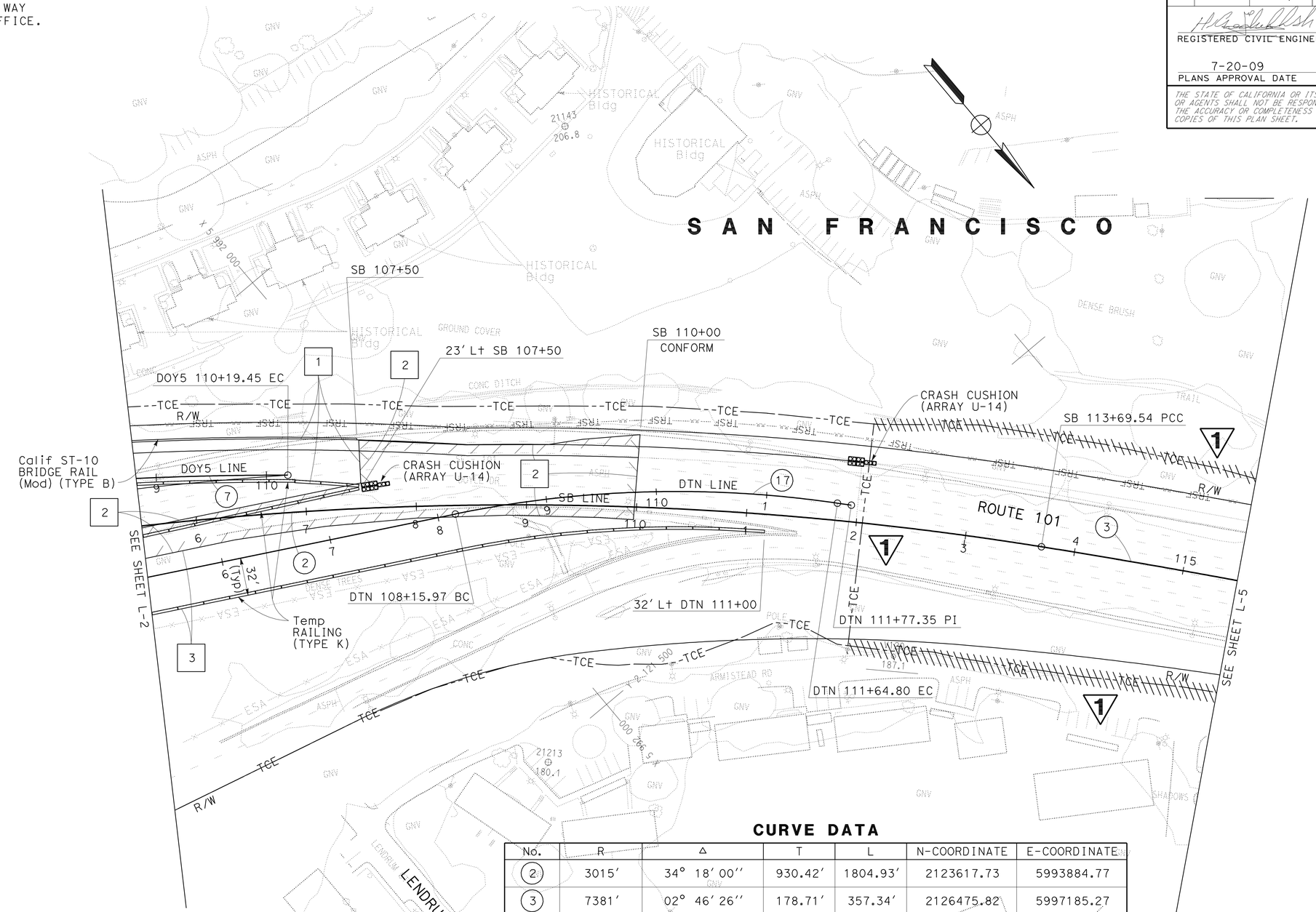

CURVE DATA

No.	R	Δ	T	L	N-COORDINATE	E-COORDINATE
2	3015'	34° 18' 00''	930.42'	1804.93'	2123617.73	5993884.77
3	7381'	02° 46' 26''	178.71'	357.34'	2126475.82	5997185.27
7	2767'	07° 34' 37''	183.22'	365.91'	2123268.51	5993873.15
17	1000'	19° 59' 12''	176.21'	348.83'	2122159.01	5992469.57

1 REVISED PER ADDENDUM No. 1 DATED AUGUST 13, 2009

FOR NOTES, ABBREVIATIONS &/OR LEGEND, SEE SHEET L-1

LAYOUT
SCALE: 1'' = 50'

L-4

REVISED BY	DATE REVISED
GC	7/03/09
CS	6/10/09

CARLOS SANDOVAL — ROGER DAYOAN — CALCULATED-DESIGNED BY — CHECKED BY

FUNCTIONAL SUPERVISOR: ABOLFAZL EMADZADEH

STATE OF CALIFORNIA - DEPARTMENT OF TRANSPORTATION — Caltrans — DESIGN

LAST REVISION 07-03-09 | DATE PLOTTED => 12-AUG-2009 | TIME PLOTTED => 10:11

Dist	COUNTY	ROUTE	POST MILES TOTAL PROJECT	SHEET No.	TOTAL SHEETS
04	SF	101,1	9.2/9.8, 6.8/7.1	12	567

REGISTERED CIVIL ENGINEER 6-08-09 DATE

7-20-09
PLANS APPROVAL DATE

REGISTERED PROFESSIONAL ENGINEER Hossein Khodabakhsh No. 71650 Exp. 12-31-09 CIVIL STATE OF CALIFORNIA

THE STATE OF CALIFORNIA OR ITS OFFICERS OR AGENTS SHALL NOT BE RESPONSIBLE FOR THE ACCURACY OR COMPLETENESS OF SCANNED COPIES OF THIS PLAN SHEET.

FOR ACCURATE RIGHT OF WAY AND ACCESS DATA, CONTACT RIGHT OF WAY ENGINEERING AT THE DISTRICT OFFICE.

CURVE DATA

No.	R	Δ	T	L	N-COORDINATE	E-COORDINATE
3	7381′	02° 46′ 26″	178.71′	357.34′	2126475.82	5997185.27

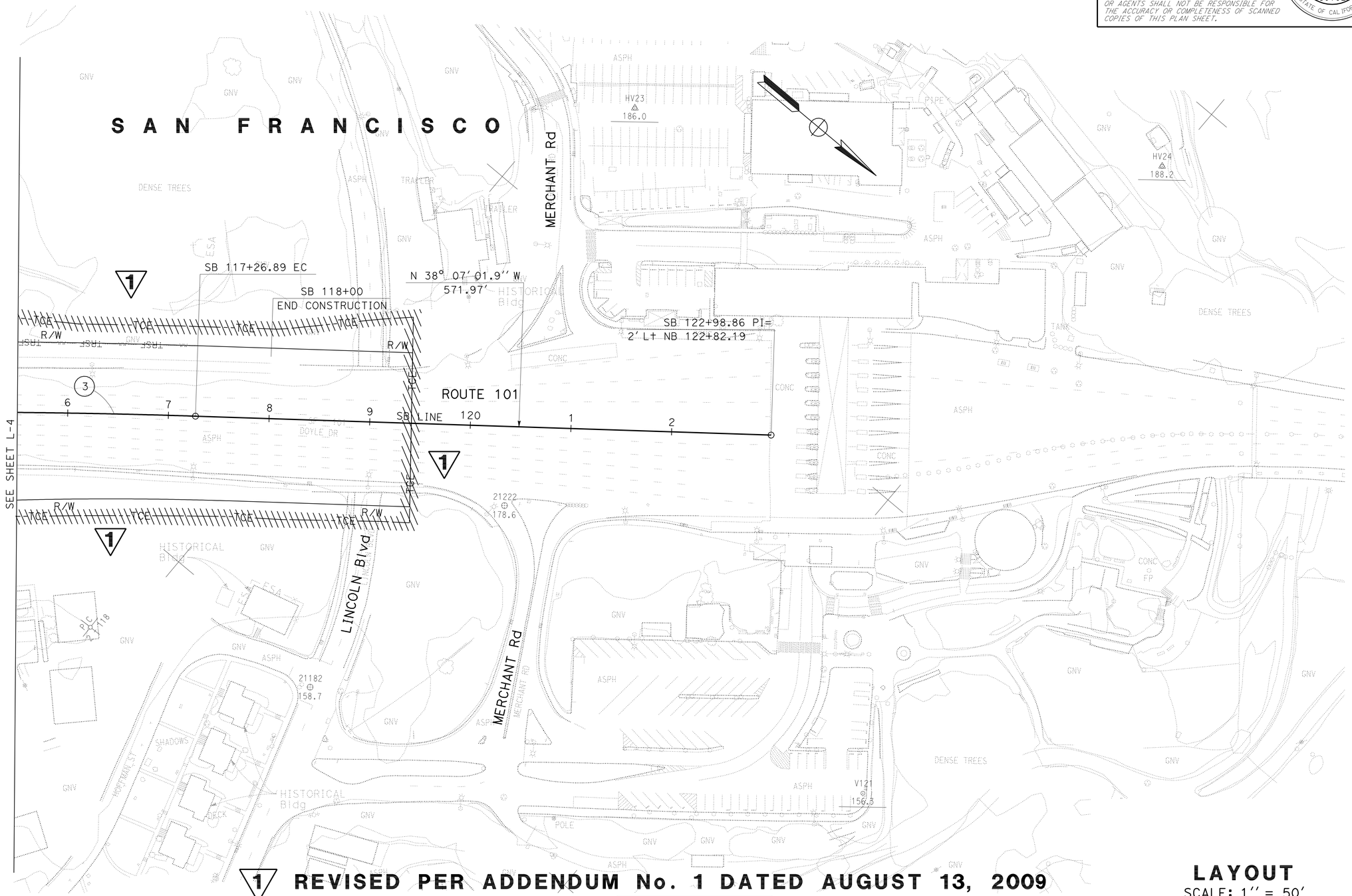

1 REVISED PER ADDENDUM No. 1 DATED AUGUST 13, 2009

FOR NOTES, ABBREVIATIONS &/OR LEGEND, SEE SHEET L-1

LAYOUT
SCALE: 1″ = 50′

L-5

GC	7/03/09		
CS	6/10/09		
REVISED BY	DATE REVISED		
CARLOS SANDOVAL	ROGER DAYOAN		
CALCULATED-DESIGNED BY	CHECKED BY		
FUNCTIONAL SUPERVISOR	ABOLFAZL EMADZADEH		

STATE OF CALIFORNIA - DEPARTMENT OF TRANSPORTATION
Caltrans
DESIGN

LAST REVISION 06-03-09 | DATE PLOTTED => 12-AUG-2009 | TIME PLOTTED => 10:12

Dist	COUNTY	ROUTE	POST MILES TOTAL PROJECT	SHEET No.	TOTAL SHEETS
04	SF	101,1	9.2/9.8, 6.8/7.1	42A	567

REGISTERED CIVIL ENGINEER 8-3-09 DATE

7-20-09
PLANS APPROVAL DATE

REGISTERED PROFESSIONAL ENGINEER Hossein Khodabakhsh No. 71650 Exp. 12-31-09 CIVIL STATE OF CALIFORNIA

THE STATE OF CALIFORNIA OR ITS OFFICERS OR AGENTS SHALL NOT BE RESPONSIBLE FOR THE ACCURACY OR COMPLETENESS OF SCANNED COPIES OF THIS PLAN SHEET.

1

SOUND CONTROL TABLE

RECEPTOR No.	LOCATION	BASELINE LEQ AND LMAX (dBA)			
		MONDAY-FRIDAY 7PM TO 7AM		SATURDAY 6PM TO MONDAY 7AM	
		LEQ	LMAX	LEQ	LMAX
1	1291 STOREY AVENUE	65	85	69	84
2	1289 STOREY AVENUE	68	81	68	89
3	1258 ARMISTEAD ROAD	66	80	54	69
4	Bldg 964	68	80	66	89
5	Bldg 135	61	82	64	88
6	Bldg 106	71	87	74	95
7	Bldg 682	64	82	67	82
8	Bldg 129	68	91	72	88
9	Bldg 610	62	75	62	82
10	Bldg 1029	58	75	59	77
11	302 HITCHCOCK STREET	64	80	66	83

NOTE:

IN ADDITION TO THE ELEVEN (11) RECEPTOR LOCATIONS SHOWN, THE ENGINEER WILL SPECIFY THE LOCATIONS OF SEVEN (7) OTHER RECEPTORS IN THE FIELD TO MONITOR CONSTRUCTION NOISE AT SENSITIVE BIOLOGICAL RECEPTORS.

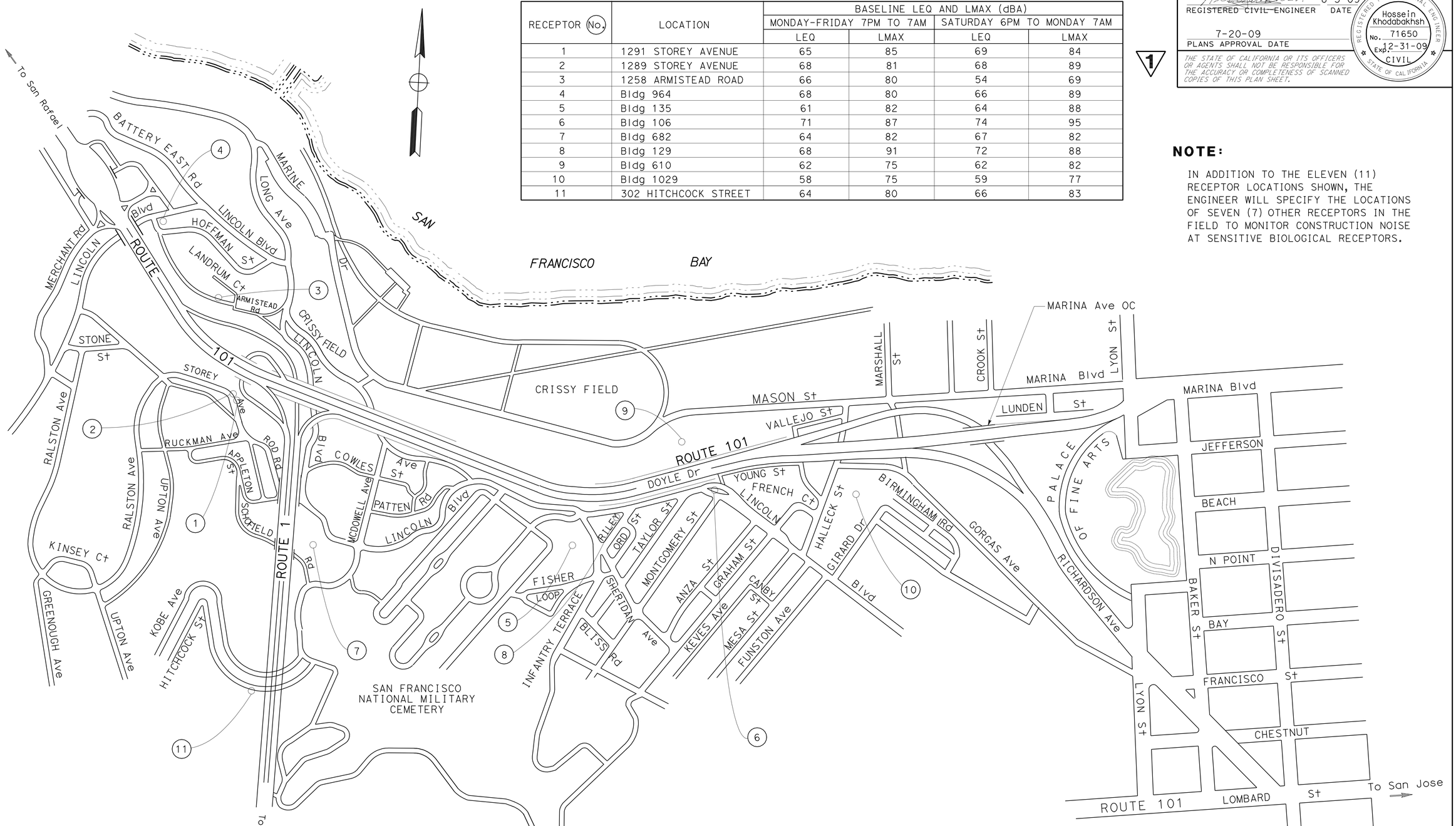

1 **ADDED PER ADDENDUM No. 1 DATED AUGUST 13, 2009**

THIS PLAN ACCURATE FOR SOUND CONTROL RECEPTOR LOCATIONS ONLY

CONSTRUCTION DETAILS
SOUND CONTROL RECEPTOR LOCATIONS

NO SCALE

C-8A

STATE OF CALIFORNIA - DEPARTMENT OF TRANSPORTATION
Caltrans DESIGN

FUNCTIONAL SUPERVISOR: ABOLFAZL EMADZADEH
CALCULATED-DESIGNED BY: ROGER DAYOAN
CHECKED BY: HOSSEIN KHODABAKHSH
REVISED BY: RD
DATE REVISED: 7/15/09

LAST REVISION DATE PLOTTED => 12-AUG-2009
08-04-09 TIME PLOTTED => 10:12

BORDER LAST REVISED 4/11/2008
RELATIVE BORDER SCALE IS IN INCHES 0 1 2 3
USERNAME => trlenard
DGN FILE => 416373ga009.dgn
CU 04242
EA 163731

FOR ACCURATE RIGHT OF WAY AND
ACCESS DATA, CONTACT RIGHT OF WAY
ENGINEERING AT THE DISTRICT OFFICE.

Dist	COUNTY	ROUTE	POST MILES TOTAL PROJECT	SHEET No.	TOTAL SHEETS
04	SF	101,1	9.2/9.8, 6.8/7.1	46	567

Alex McDonald
LICENSED LANDSCAPE ARCHITECT

7-20-09
PLANS APPROVAL DATE

LICENSED LANDSCAPE ARCHITECT
ALEXANDER K. McDONALD No. 5292
Alex McDonald
Signature
08-31-10
Renewal Date
Date
STATE OF CALIFORNIA

THE STATE OF CALIFORNIA OR ITS OFFICERS OR AGENTS SHALL NOT BE RESPONSIBLE FOR THE ACCURACY OR COMPLETENESS OF SCANNED COPIES OF THIS PLAN SHEET.

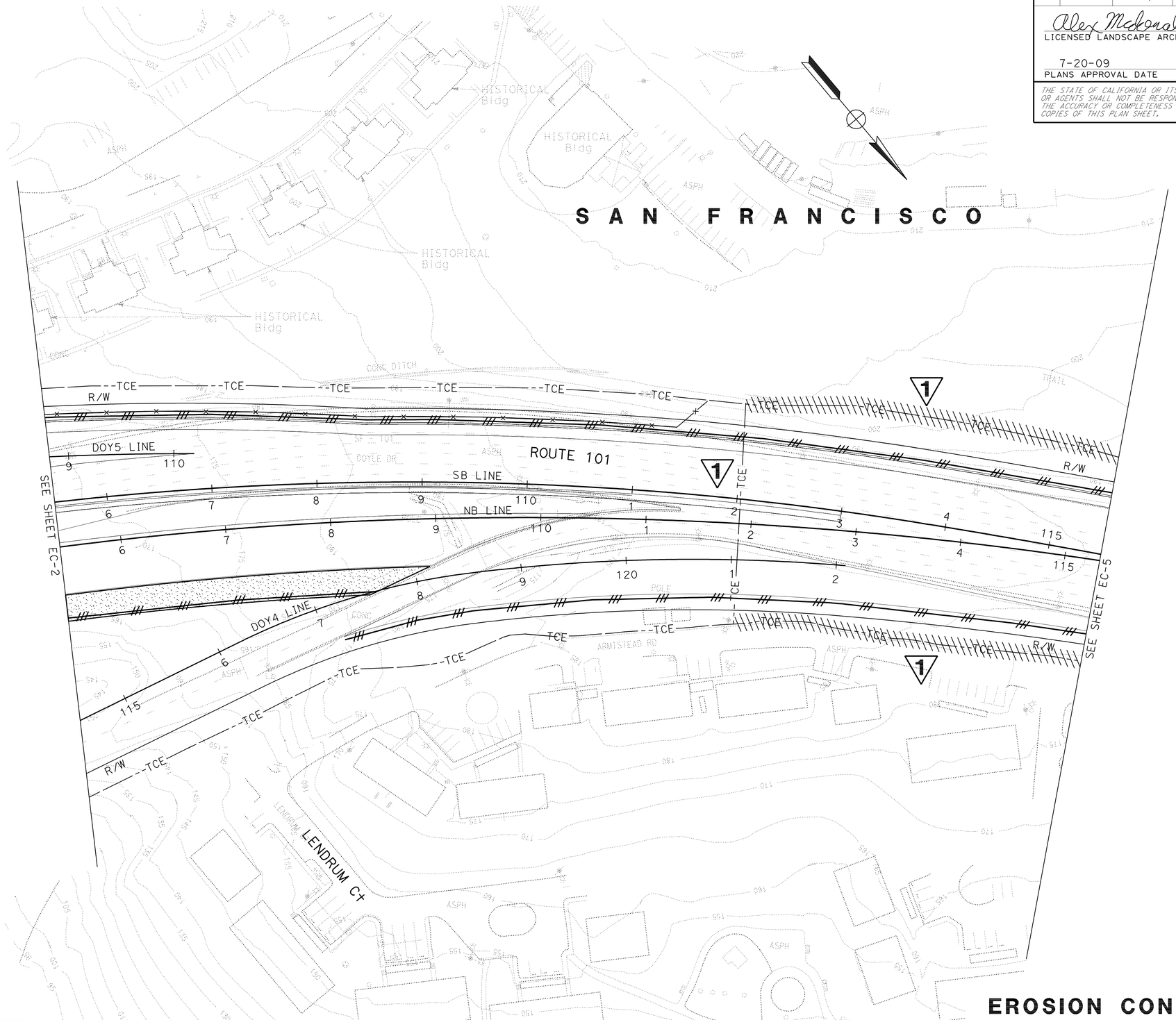

1 REVISED PER ADDENDUM No. 1 DATED AUGUST 13, 2009

THIS PLAN ACCURATE FOR EROSION CONTROL WORK ONLY.

EROSION CONTROL PLAN

SCALE: 1'' = 50'

EC-4

STATE OF CALIFORNIA - DEPARTMENT OF TRANSPORTATION
Caltrans® LANDSCAPE ARCHITECTURE

SENIOR LANDSCAPE ARCHITECT: DAVID W. YAM

CALCULATED-DESIGNED BY: Alex McDonald
CHECKED BY: Jennifer Egawa

REVISED BY
DATE REVISED

LAST REVISION 05-22-09
DATE PLOTTED => 12-AUG-2009
TIME PLOTTED => 10:12

FOR ACCURATE RIGHT OF WAY AND
ACCESS DATA, CONTACT RIGHT OF WAY
ENGINEERING AT THE DISTRICT OFFICE.

Dist	COUNTY	ROUTE	POST MILES TOTAL PROJECT	SHEET No.	TOTAL SHEETS
04	SF	101,1	9.2/9.8, 6.8/7.1	47	567

Alex McDonald
LICENSED LANDSCAPE ARCHITECT

7-20-09
PLANS APPROVAL DATE

LICENSED LANDSCAPE ARCHITECT
ALEXANDER K. McDONALD No. 5292
Alex McDonald
Signature
08-31-10
Renewal Date
Date
STATE OF CALIFORNIA

THE STATE OF CALIFORNIA OR ITS OFFICERS OR AGENTS SHALL NOT BE RESPONSIBLE FOR THE ACCURACY OR COMPLETENESS OF SCANNED COPIES OF THIS PLAN SHEET.

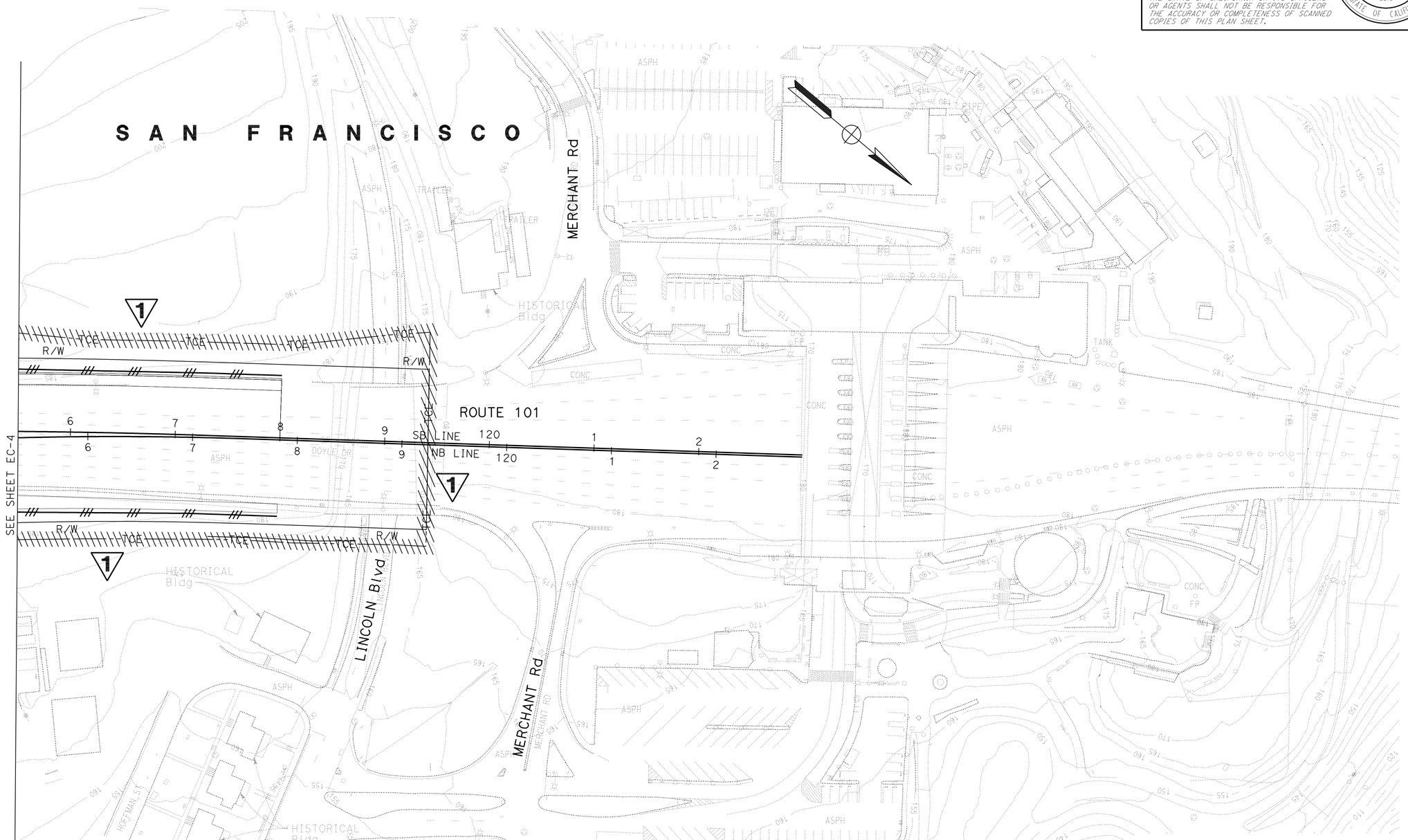

1 REVISED PER ADDENDUM No. 1 DATED AUGUST 13, 2009

THIS PLAN ACCURATE FOR EROSION CONTROL WORK ONLY.

EROSION CONTROL PLAN

SCALE: 1'' = 50'

EC-5

STATE OF CALIFORNIA - DEPARTMENT OF TRANSPORTATION
Caltrans LANDSCAPE ARCHITECTURE

SENIOR LANDSCAPE ARCHITECT: DAVID W. YAM

CALCULATED-DESIGNED BY: Alex McDonald
CHECKED BY: Jennifer Egawa

REVISED BY
DATE REVISED

LAST REVISION 05-22-09
DATE PLOTTED => 12-AUG-2009
TIME PLOTTED => 10:12

Dist	COUNTY	ROUTE	POST MILES TOTAL PROJECT	SHEET No.	TOTAL SHEETS
04	SF	101,1	9.2/9.8, 6.8/7.1	56	567

REGISTERED CIVIL ENGINEER 6-09-09 DATE

7-20-09
PLANS APPROVAL DATE

REGISTERED PROFESSIONAL ENGINEER JOHN EDWARD KARN JR No. C66743 Exp. 9-30-10 CIVIL STATE OF CALIFORNIA

THE STATE OF CALIFORNIA OR ITS OFFICERS OR AGENTS SHALL NOT BE RESPONSIBLE FOR THE ACCURACY OR COMPLETENESS OF SCANNED COPIES OF THIS PLAN SHEET.

Arup PB JV
560 Mission Street, Suite 700
San Francisco, CA 94105

NOTES:

1. FOR ACCURATE RIGHT OF WAY AND ACCESS DATA, CONTACT RIGHT OF WAY ENGINEERING AT THE DISTRICT OFFICE.
2. FOR NOTES, LEGEND, AND ABBREVIATIONS SEE SHEET D-1.

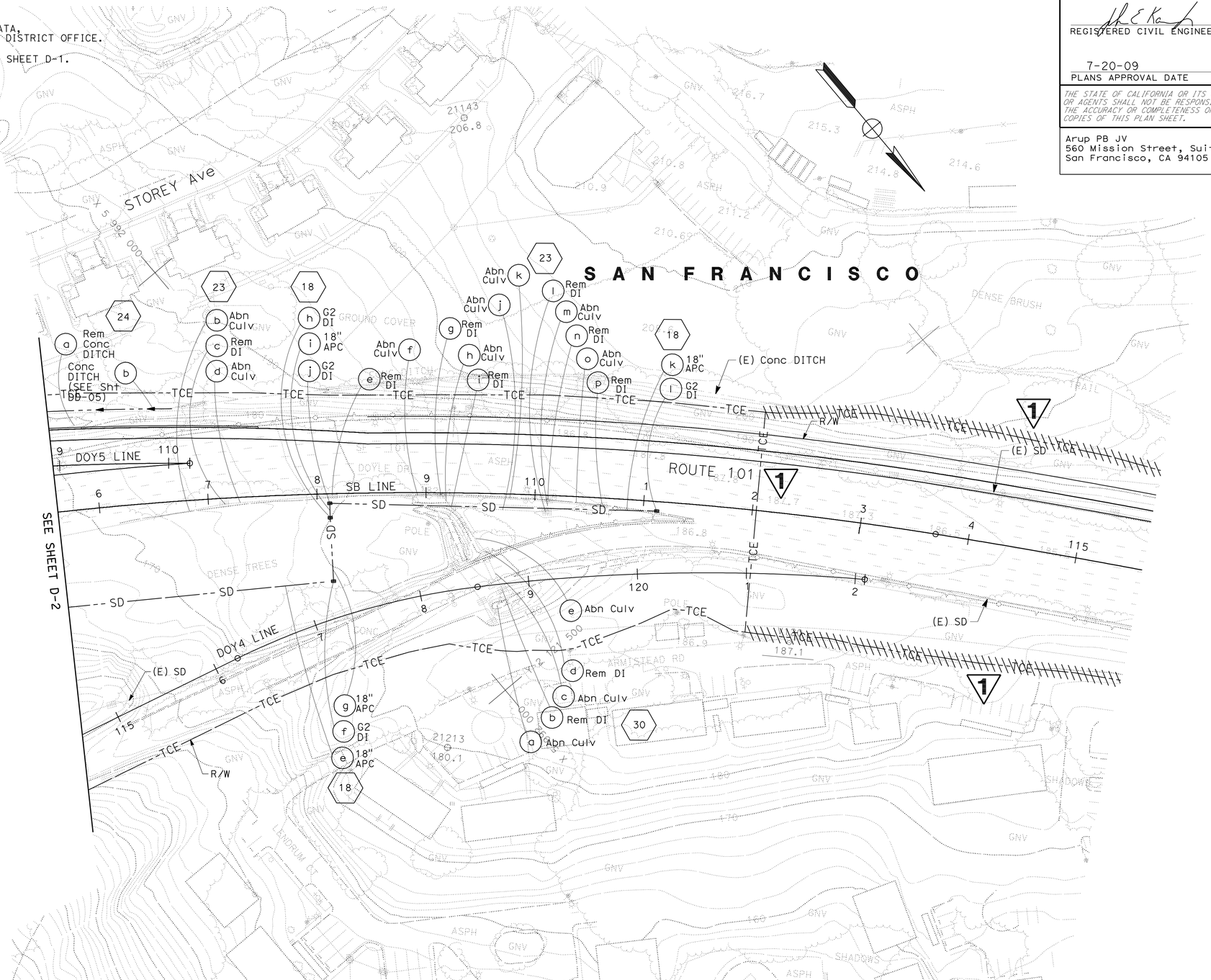

1 REVISED PER ADDENDUM No. 1 DATED AUGUST 13, 2009

THIS PLAN ACCURATE FOR DRAINAGE WORK ONLY

DRAINAGE PLAN

SCALE 1" = 50'

D-4

STATE OF CALIFORNIA - DEPARTMENT OF TRANSPORTATION	CONSULTANT FUNCTIONAL SUPERVISOR	CALCULATED-DESIGNED BY	MANISH DALIA/JACK MONG
Caltrans	ABOLFAZL EMADZADEH	CHECKED BY	DUANNE GILMORE
		REVISED BY	ML/KM
		DATE REVISED	6/09/09

LAST REVISION 06-08-09 DATE PLOTTED => 12-AUG-2009 TIME PLOTTED => 10:12

Dist	COUNTY	ROUTE	POST MILES TOTAL PROJECT	SHEET No.	TOTAL SHEETS
04	SF	101,1	9.2/9.8, 6.8/7.1	89	567

REGISTERED CIVIL ENGINEER 6-09-09 DATE

7-20-09
PLANS APPROVAL DATE

REGISTERED PROFESSIONAL ENGINEER
JOHN EDWARD KARN JR
No. C66743
Exp. 9-30-10
CIVIL
STATE OF CALIFORNIA

THE STATE OF CALIFORNIA OR ITS OFFICERS OR AGENTS SHALL NOT BE RESPONSIBLE FOR THE ACCURACY OR COMPLETENESS OF SCANNED COPIES OF THIS PLAN SHEET.

Arup PB JV
560 Mission Street, Suite 700
San Francisco, CA 94105

NOTE:

1. FOR GENERAL NOTES, LEGENDS, AND ABBREVIATIONS, SEE SHEET U-1.

1 REVISED PER ADDENDUM No. 1 DATED AUGUST 13, 2009

THIS PLAN ACCURATE FOR UTILITY INFORMATION ONLY

UTILITY PLAN

SCALE 1" = 50'

U-4

STATE OF CALIFORNIA - DEPARTMENT OF TRANSPORTATION
Caltrans

CONSULTANT FUNCTIONAL SUPERVISOR: ABOLFAZL EMADZADEH
CALCULATED-DESIGNED BY: DUANNE GILMORE
CHECKED BY: JOHN E KARN
REVISED BY: DG
DATE REVISED: 6/09/09

LAST REVISION 06-08-09
DATE PLOTTED => 12-AUG-2009
TIME PLOTTED => 10:12

Dist	COUNTY	ROUTE	POST MILES TOTAL PROJECT	SHEET No.	TOTAL SHEETS
04	SF	101,1	9.2/9.8, 6.8/7.1	100	567

REGISTERED CIVIL ENGINEER 6-08-09 DATE

7-20-09
PLANS APPROVAL DATE

REGISTERED PROFESSIONAL ENGINEER Hossein Khodabakhsh No. 71650 Exp. 12-31-09 CIVIL STATE OF CALIFORNIA

THE STATE OF CALIFORNIA OR ITS OFFICERS OR AGENTS SHALL NOT BE RESPONSIBLE FOR THE ACCURACY OR COMPLETENESS OF SCANNED COPIES OF THIS PLAN SHEET.

FOR ACCURATE RIGHT OF WAY AND ACCESS DATA, CONTACT RIGHT OF WAY ENGINEERING AT THE DISTRICT OFFICE.

GENERAL NOTE:

1. FOR TRAFFIC DETOUR AND SIGNING, SEE DETOUR PLANS AND SIGNING PLANS.
2. TRAFFIC STRIPE REMOVAL LIMITS ARE IN THE AREA CONFLICTING BETWEEN THE EXISTING ROADWAY AND THE STAGE CONSTRUCTION ROAD.

TRAFFIC HANDLING - STAGE 1 PER LANE CLOSURE CHART

AA — TRAFFIC REMAINS ON Exist LANES WITH LANE CLOSURES DURING ALLOWABLE HOURS.

BB — CONSTRUCT LINCOLN Blvd, PROMENADE AND COWLES REALIGNMENT. CLOSE LINCOLN Blvd FOR REALIGNMENT.

CC — CLOSE SB VETERANS Blvd EXIT RAMP FOR N101/S1 CONNECTOR SEPARATION (Br No. 34-0155R) CONSTRUCTION.

DD — CLOSE CRISSY FIELD Ave FOR VIADUCT CONSTRUCTION.

1 ~~EE — CLOSE NB 1 TO SB 101 CONNECTOR RAMP.~~

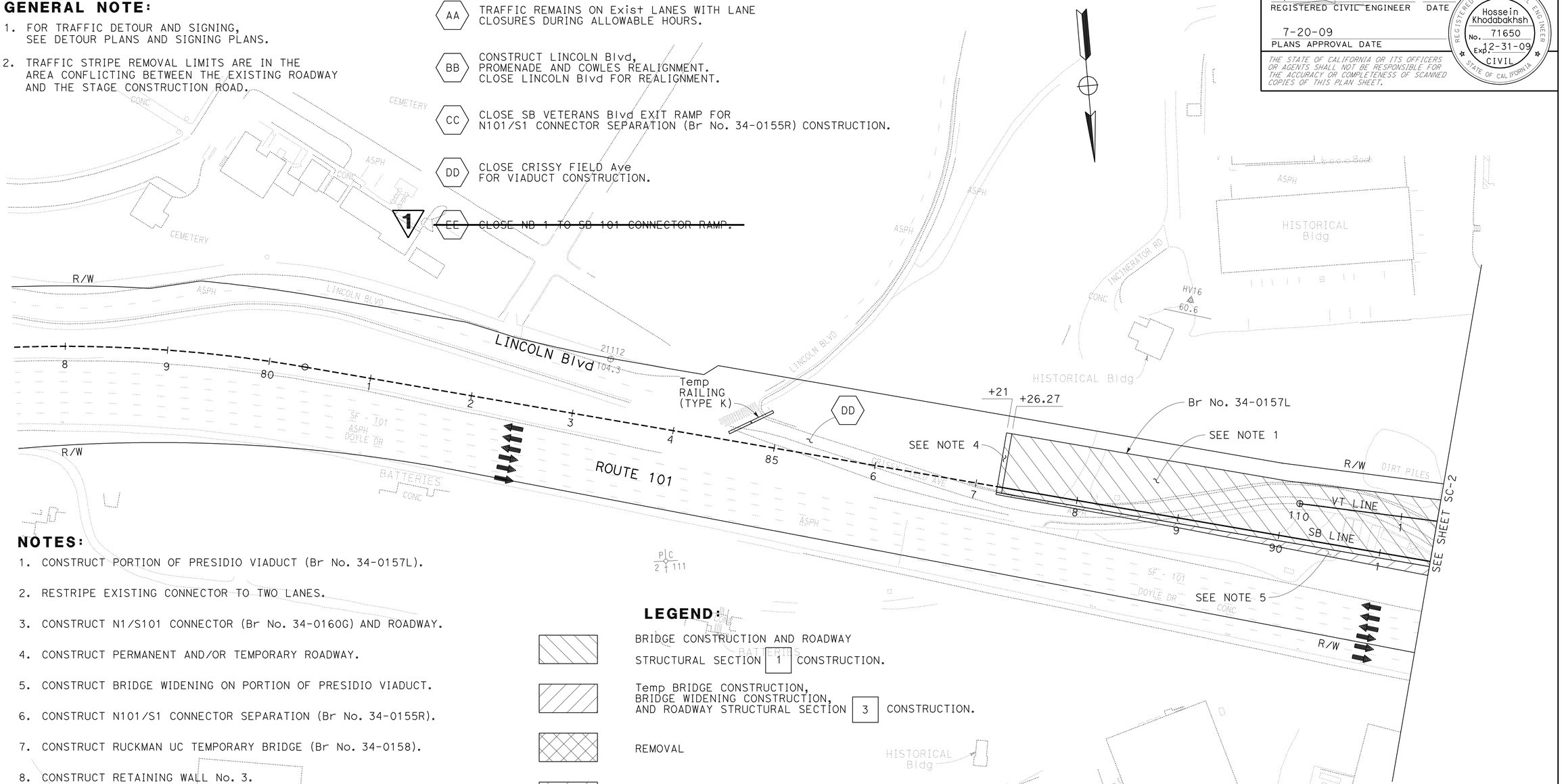

NOTES:

1. CONSTRUCT PORTION OF PRESIDIO VIADUCT (Br No. 34-0157L).
2. RESTRIPE EXISTING CONNECTOR TO TWO LANES.
3. CONSTRUCT N1/S101 CONNECTOR (Br No. 34-0160G) AND ROADWAY.
4. CONSTRUCT PERMANENT AND/OR TEMPORARY ROADWAY.
5. CONSTRUCT BRIDGE WIDENING ON PORTION OF PRESIDIO VIADUCT.
6. CONSTRUCT N101/S1 CONNECTOR SEPARATION (Br No. 34-0155R).
7. CONSTRUCT RUCKMAN UC TEMPORARY BRIDGE (Br No. 34-0158).
8. CONSTRUCT RETAINING WALL No. 3.
9. CONSTRUCT RETAINING WALL No. 4.
10. CONSTRUCT PORTION OF RETAINING WALL No. 1.
11. CONSTRUCT PORTION OF RETAINING WALL No. 2.

1 ~~12. REMOVE Exist NB 1 TO SB 101 CONNECTOR. CONTRACTOR SHALL COMPLETE CONSTRUCTION OF BRIDGE No. 34-0155R AND ROADWAY WIDENING FROM 32' Rt DTN 101+60 TO 32' Rt DTN 110+40 AND OPEN MAINLINE NB 101 AND SB 101 TO TRAFFIC ON STAGE 1 - PHASE 3 BEFORE REMOVING NB 1 TO SB 101 CONNECTOR.~~

1 12. CONSTRUCT CIDH PILES AND OTHER SUBSTRUCTURE WORK FOR PRESIDIO VIADUCT (Br No. 34-0157L) PRIOR TO REMOVAL OF EXISTING NB 1 TO SB 101 CONNECTOR. CONSTRUCT SUPERSTRUCTURE OF PRESIDIO VIADUCT (Br No. 34-0157L) IN STAGE 1 PHASE 3 AFTER REMOVAL OF EXISTING NB 1 TO SB 101 CONNECTOR.

LEGEND:

- BRIDGE CONSTRUCTION AND ROADWAY STRUCTURAL SECTION [1] CONSTRUCTION.
- Temp BRIDGE CONSTRUCTION, BRIDGE WIDENING CONSTRUCTION, AND ROADWAY STRUCTURAL SECTION [3] CONSTRUCTION.
- REMOVAL
- HMA RESURFACING, ROADWAY STRUCTURAL SECTION [2] [4] [5] CONSTRUCTION.
- Temp RAILING (TYPE K)
- DIRECTION OF TRAFFIC
- No. — PAVEMENT DELINEATION DETAIL
- CHANGE OF PAVEMENT DELINEATION DETAILS
- No. — CURVE DATA
- No. — CONSTRUCTION AREA SIGN NUMBER

THIS PLAN ACCURATE FOR STAGE CONSTRUCTION AND TRAFFIC HANDLING WORK ONLY

1 **REVISED PER ADDENDUM No. 1 DATED AUGUST 13, 2009**

STAGE CONSTRUCTION AND TRAFFIC HANDLING PLAN

STAGE 1 - PHASE 1

SCALE: 1'' = 50'

SC-1

GG	6/10/09	GEORGE GIN	ROGER DAYOAN
REVISED BY	DATE REVISED	CALCULATED-DESIGNED BY	CHECKED BY

FUNCTIONAL SUPERVISOR: ABOLFAZL EMADZADEH

STATE OF CALIFORNIA - DEPARTMENT OF TRANSPORTATION

Caltrans® DESIGN

LAST REVISION 06-08-09 | DATE PLOTTED => 12-AUG-2009 | TIME PLOTTED => 10:13

Dist	COUNTY	ROUTE	POST MILES TOTAL PROJECT	SHEET No.	TOTAL SHEETS
04	SF	101,1	9.2/9.8, 6.8/7.1	101	567

REGISTERED CIVIL ENGINEER 6-08-09 DATE

7-20-09
PLANS APPROVAL DATE

REGISTERED PROFESSIONAL ENGINEER Hossein Khodabakhsh No. 71650 Exp. 12-31-09 CIVIL STATE OF CALIFORNIA

THE STATE OF CALIFORNIA OR ITS OFFICERS OR AGENTS SHALL NOT BE RESPONSIBLE FOR THE ACCURACY OR COMPLETENESS OF SCANNED COPIES OF THIS PLAN SHEET.

FOR ACCURATE RIGHT OF WAY AND ACCESS DATA, CONTACT RIGHT OF WAY ENGINEERING AT THE DISTRICT OFFICE.

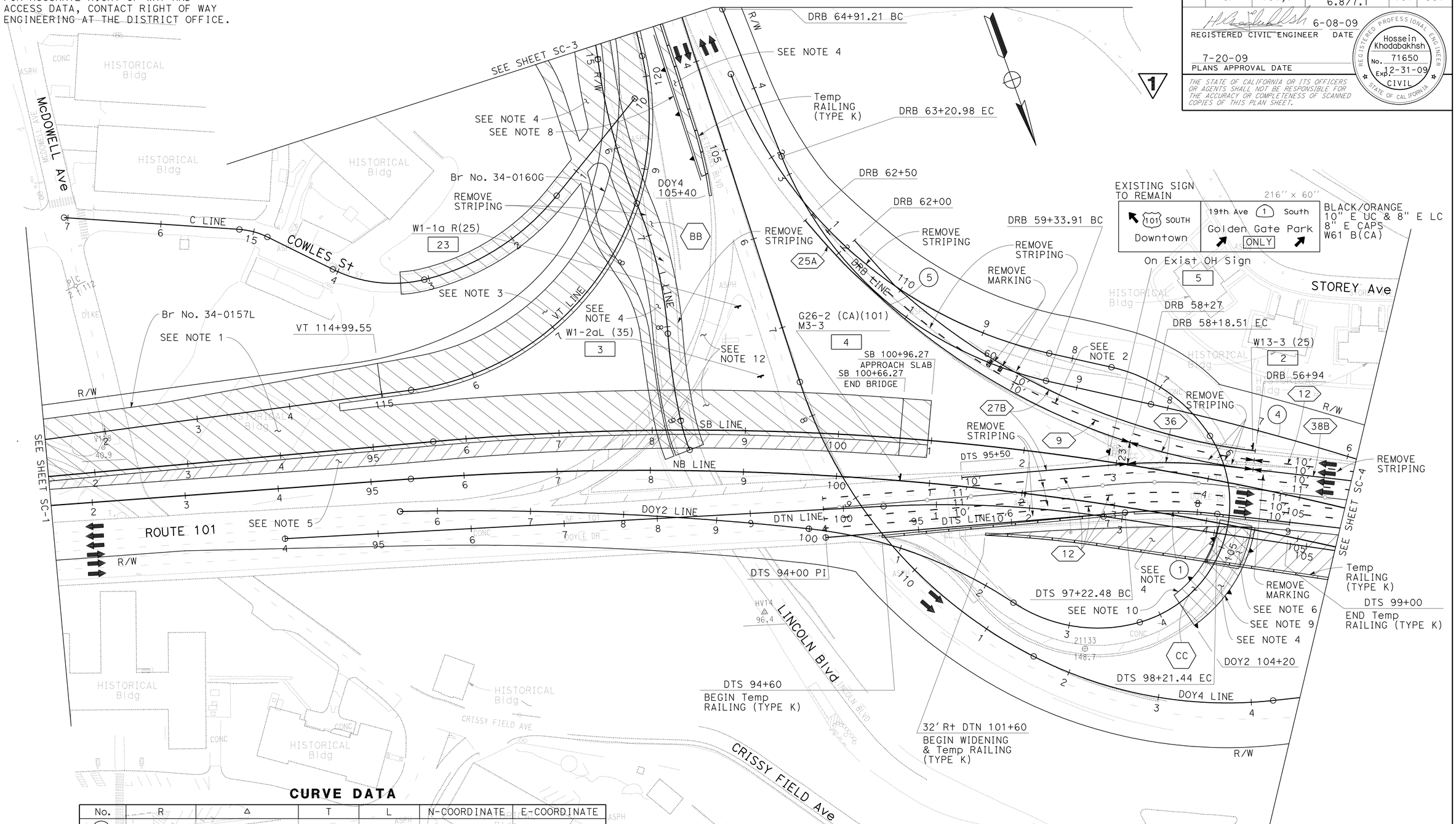

CURVE DATA

No.	R	Δ	T	L	N-COORDINATE	E-COORDINATE
1	500.00'	11° 20' 20''	49.64'	98.95'	2121510.83	5992573.92
4	2780'	05° 14' 45''	127.35'	254.53'	2123270.55	5993874.59
5	400'	55° 26' 38''	210.20'	387.07'	2120529.49	5992258.34

1 REVISED PER ADDENDUM No. 1 DATED AUGUST 13, 2009

FOR NOTES, ABBREVIATIONS &/OR LEGEND, SEE SHEET SC-1

THIS PLAN ACCURATE FOR STAGE CONSTRUCTION AND TRAFFIC HANDLING WORK ONLY

STAGE CONSTRUCTION AND TRAFFIC HANDLING PLAN

STAGE 1 - PHASE 1

SCALE: 1'' = 50'

SC-2

STATE OF CALIFORNIA - DEPARTMENT OF TRANSPORTATION
Caltrans DESIGN

FUNCTIONAL SUPERVISOR: ABOLFAZL EMADZADEH
CALCULATED-DESIGNED BY: GEORGE GIN
CHECKED BY: ROGER DAYOAN
REVISED BY: GG
DATE REVISED: 6/10/09

LAST REVISION DATE PLOTTED => 12-AUG-2009
TIME PLOTTED => 10:13
06-09-09

BORDER LAST REVISED 4/11/2008
RELATIVE BORDER SCALE IS IN INCHES 0 1 2 3
USERNAME => trlenard
DGN FILE => 416373ma002.add
CU 04242
EA 163731

Dist	COUNTY	ROUTE	POST MILES TOTAL PROJECT	SHEET No.	TOTAL SHEETS
04	SF	101,1	9.2/9.8, 6.8/7.1	102	567

REGISTERED CIVIL ENGINEER 6-08-09 DATE

7-20-09
PLANS APPROVAL DATE

REGISTERED PROFESSIONAL ENGINEER Hossein Khodabakhsh No. 71650 Exp. 12-31-09 CIVIL STATE OF CALIFORNIA

THE STATE OF CALIFORNIA OR ITS OFFICERS OR AGENTS SHALL NOT BE RESPONSIBLE FOR THE ACCURACY OR COMPLETENESS OF SCANNED COPIES OF THIS PLAN SHEET.

FOR ACCURATE RIGHT OF WAY AND ACCESS DATA, CONTACT RIGHT OF WAY ENGINEERING AT THE DISTRICT OFFICE.

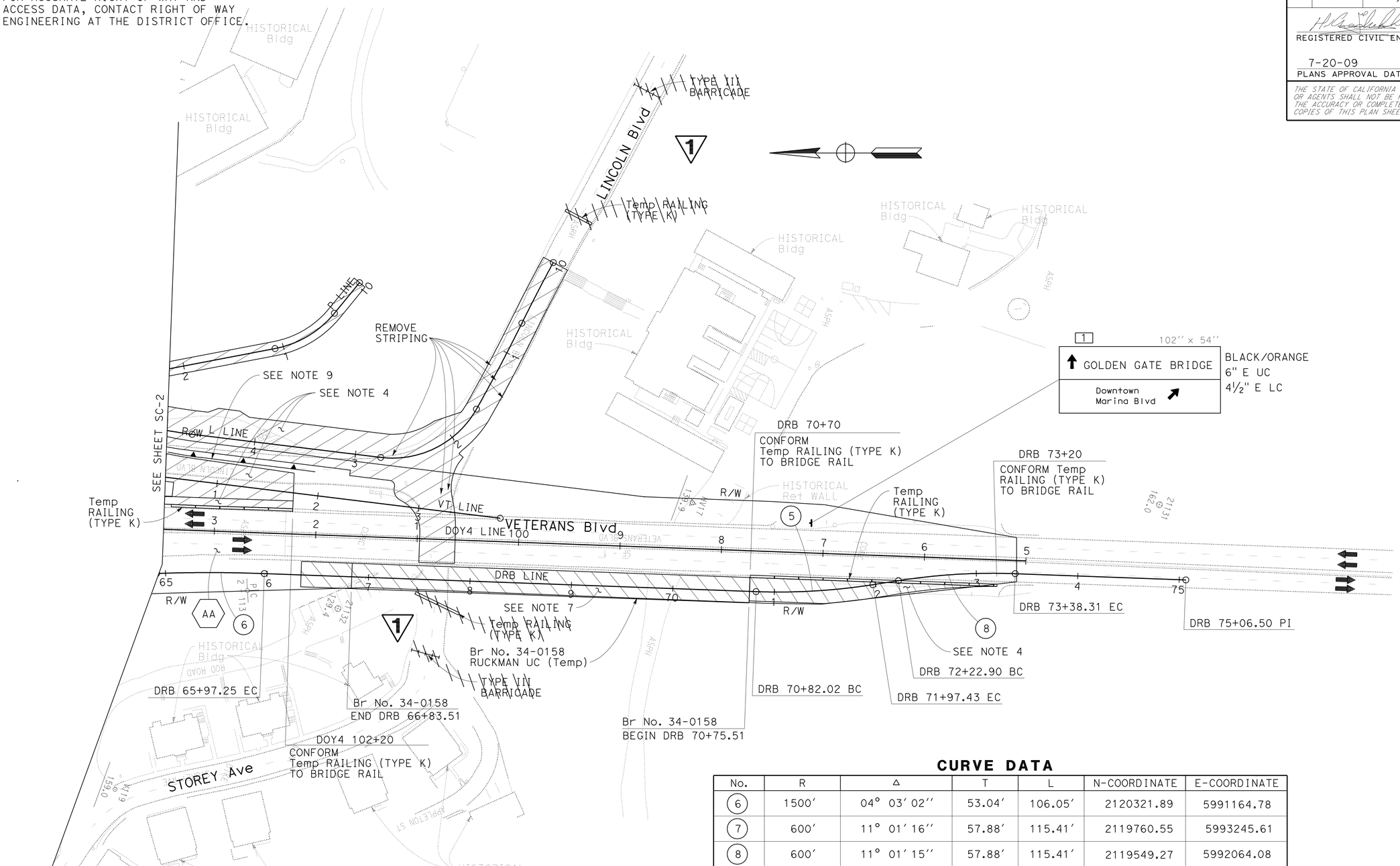

CURVE DATA

No.	R	Δ	T	L	N-COORDINATE	E-COORDINATE
6	1500′	04° 03′ 02″	53.04′	106.05′	2120321.89	5991164.78
7	600′	11° 01′ 16″	57.88′	115.41′	2119760.55	5993245.61
8	600′	11° 01′ 15″	57.88′	115.41′	2119549.27	5992064.08

STAGE CONSTRUCTION AND TRAFFIC HANDLING PLAN

STAGE 1 - PHASE 1

SCALE: 1″ = 50′

1 **REVISED PER ADDENDUM No. 1 DATED AUGUST 13, 2009**

FOR NOTES, ABBREVIATIONS &/OR LEGEND, SEE SHEET SC-1

THIS PLAN ACCURATE FOR STAGE CONSTRUCTION AND TRAFFIC HANDLING WORK ONLY

SC-3

REVISED BY	DATE REVISED
GG	6/10/09

CALCULATED-DESIGNED BY: GEORGE GIN
CHECKED BY: ROGER DAYOAN
FUNCTIONAL SUPERVISOR: ABOLFAZL EMADZADEH

STATE OF CALIFORNIA - DEPARTMENT OF TRANSPORTATION
Caltrans
DESIGN

LAST REVISION 06-09-09
DATE PLOTTED => 12-AUG-2009
TIME PLOTTED => 10:13

Dist	COUNTY	ROUTE	POST MILES TOTAL PROJECT	SHEET No.	TOTAL SHEETS
04	SF	101,1	9.2/9.8, 6.8/7.1	106	567

REGISTERED CIVIL ENGINEER 6-08-09 DATE

PLANS APPROVAL DATE 7-20-09

REGISTERED PROFESSIONAL ENGINEER Hossein Khodabakhsh No. 71650 Exp. 12-31-09 CIVIL STATE OF CALIFORNIA

THE STATE OF CALIFORNIA OR ITS OFFICERS OR AGENTS SHALL NOT BE RESPONSIBLE FOR THE ACCURACY OR COMPLETENESS OF SCANNED COPIES OF THIS PLAN SHEET.

FOR ACCURATE RIGHT OF WAY AND ACCESS DATA, CONTACT RIGHT OF WAY ENGINEERING AT THE DISTRICT OFFICE.

TRAFFIC HANDLING - STAGE 1 - PHASE 3 PER LANE CLOSURE CHART

- AA — TRAFFIC REMAINS ON Exist LANES WITH LANE CLOSURES DURING ALLOWABLE HOURS.
- BB — CLOSE SB VETERANS Blvd OFF-RAMP. FOR TRAFFIC DETOUR AND SIGNING, SEE CS SHEETS.
- CC — SHIFT DOYLE Dr TRAFFIC.
- DD — SHIFT SB VETERANS Blvd OFF-RAMP TRAFFIC.
- EE — CLOSE NB 1 TO SB 101 CONNECTOR RAMP.

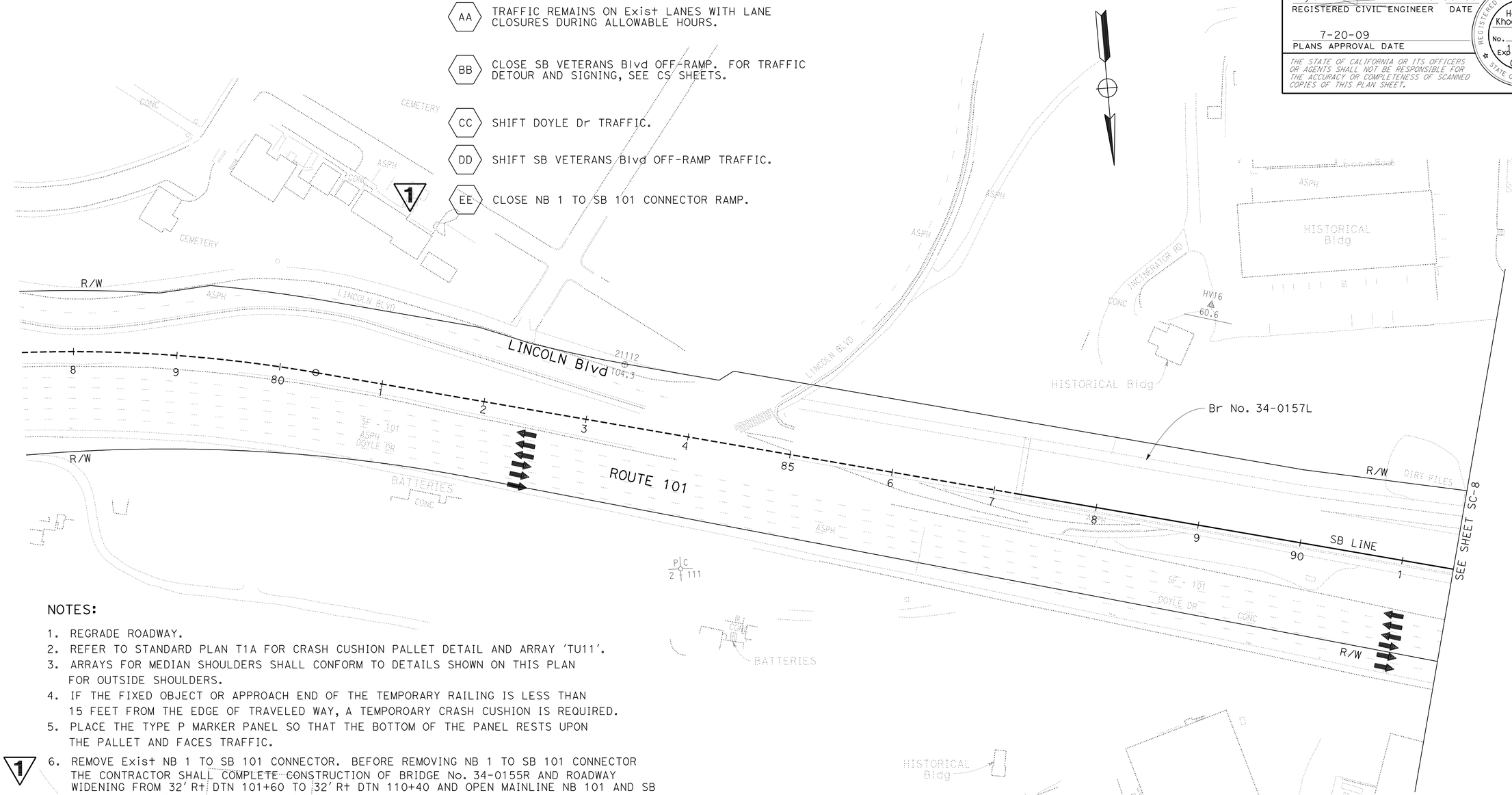

NOTES:

1. REGRADE ROADWAY.
2. REFER TO STANDARD PLAN T1A FOR CRASH CUSHION PALLET DETAIL AND ARRAY 'TU11'.
3. ARRAYS FOR MEDIAN SHOULDERS SHALL CONFORM TO DETAILS SHOWN ON THIS PLAN FOR OUTSIDE SHOULDERS.
4. IF THE FIXED OBJECT OR APPROACH END OF THE TEMPORARY RAILING IS LESS THAN 15 FEET FROM THE EDGE OF TRAVELED WAY, A TEMPOROARY CRASH CUSHION IS REQUIRED.
5. PLACE THE TYPE P MARKER PANEL SO THAT THE BOTTOM OF THE PANEL RESTS UPON THE PALLET AND FACES TRAFFIC.
6. (1) REMOVE Exist NB 1 TO SB 101 CONNECTOR. BEFORE REMOVING NB 1 TO SB 101 CONNECTOR THE CONTRACTOR SHALL COMPLETE CONSTRUCTION OF BRIDGE No. 34-0155R AND ROADWAY WIDENING FROM 32' Rt DTN 101+60 TO 32' Rt DTN 110+40 AND OPEN MAINLINE NB 101 AND SB 101 TO TRAFFIC ON STAGE 1 - PHASE 3.

(1) **REVISED PER ADDENDUM No. 1 DATED AUGUST 13, 2009**

FOR ABBREVIATIONS &/OR LEGEND, SEE SHEET SC-1

THIS PLAN ACCURATE FOR STAGE CONSTRUCTION AND TRAFFIC HANDLING WORK ONLY

STAGE CONSTRUCTION AND TRAFFIC HANDLING PLAN
STAGE 1 - PHASE 3

SCALE: 1'' = 50'

SC-7

STATE OF CALIFORNIA - DEPARTMENT OF TRANSPORTATION
Caltrans® DESIGN

FUNCTIONAL SUPERVISOR: ABOLFAZL EMADZADEH
CALCULATED-DESIGNED BY: GEORGE GIN
CHECKED BY: ROGER DAYOAN
REVISED BY: GG
DATE REVISED: 6/10/09

LAST REVISION 06-09-09 DATE PLOTTED => 12-AUG-2009 TIME PLOTTED => 10:13

BORDER LAST REVISED 4/11/2008 | RELATIVE BORDER SCALE IS IN INCHES 0 1 2 3 | USERNAME => trlenard DGN FILE => 416373ma007.add | CU 04242 | EA 163731

Dist	COUNTY	ROUTE	POST MILES TOTAL PROJECT	SHEET No.	TOTAL SHEETS
04	SF	101,1	9.2/9.8, 6.8/7.1	107	567

REGISTERED CIVIL ENGINEER 6-08-09 DATE

7-20-09
PLANS APPROVAL DATE

REGISTERED PROFESSIONAL ENGINEER Hossein Khodabakhsh No. 71650 Exp. 12-31-09 CIVIL STATE OF CALIFORNIA

THE STATE OF CALIFORNIA OR ITS OFFICERS OR AGENTS SHALL NOT BE RESPONSIBLE FOR THE ACCURACY OR COMPLETENESS OF SCANNED COPIES OF THIS PLAN SHEET.

FOR ACCURATE RIGHT OF WAY AND ACCESS DATA, CONTACT RIGHT OF WAY ENGINEERING AT THE DISTRICT OFFICE.

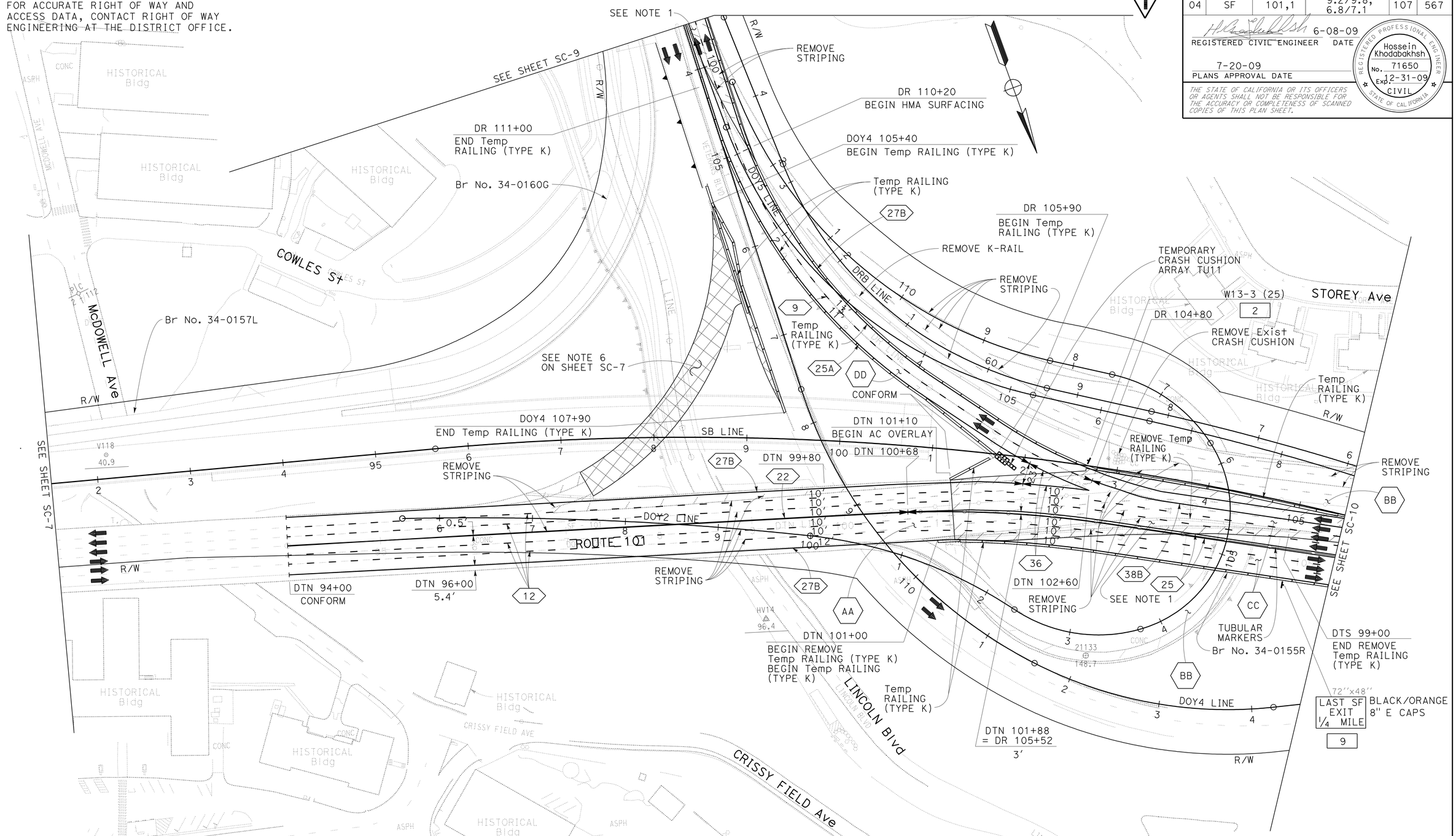

1 REVISED PER ADDENDUM No. 1 DATED AUGUST 13, 2009

FOR NOTES, SEE SHEET SC-7

FOR ABBREVIATIONS &/OR LEGEND, SEE SHEET SC-1

THIS PLAN ACCURATE FOR STAGE CONSTRUCTION AND TRAFFIC HANDLING WORK ONLY

STAGE CONSTRUCTION AND TRAFFIC HANDLING PLAN

STAGE 1 - PHASE 3

SCALE: 1" = 50'

SC-8

STATE OF CALIFORNIA - DEPARTMENT OF TRANSPORTATION

Caltrans® DESIGN

FUNCTIONAL SUPERVISOR: ABOLFAZL EMADZADEH

CALCULATED-DESIGNED BY: GEORGE GIN

CHECKED BY: ROGER DAYOAN

REVISED BY: GG

DATE REVISED: 6/10/09

LAST REVISION DATE PLOTTED => 12-AUG-2009
TIME PLOTTED => 10:13
06-10-09

BORDER LAST REVISED 4/11/2008

RELATIVE BORDER SCALE IS IN INCHES 0 1 2 3

USERNAME => trlenard
DGN FILE => 416373ma008.add

CU 04242

EA 163731

Dist	COUNTY	ROUTE	POST MILES TOTAL PROJECT	SHEET No.	TOTAL SHEETS
04	SF	101,1	9.2/9.8, 6.8/7.1	159	567

REGISTERED CIVIL ENGINEER 6-08-09 DATE

7-20-09
PLANS APPROVAL DATE

REGISTERED PROFESSIONAL ENGINEER Jerilyn L. Struven No. 49964 Exp. 12-31-10 CIVIL STATE OF CALIFORNIA

THE STATE OF CALIFORNIA OR ITS OFFICERS OR AGENTS SHALL NOT BE RESPONSIBLE FOR THE ACCURACY OR COMPLETENESS OF SCANNED COPIES OF THIS PLAN SHEET.

ROADSIDE SIGN QUANTITIES

SHEET No.	SIGN No.	CODE	PANEL SIZE	POST SIZE LENGTH				ROADSIDE SIGN		REMOVE ROADSIDE SIGN	METAL (RAIL MOUNTED SIGN)	REMARKS
								ONE POST	TWO POST			
			INCH x INCH	4'' x 4''	4'' x 6''	6'' x 6''	6'' x 8''	EA			LB	
S-2	37-99	DELETED										
	100	R2-1(45)	36 x 48		15'-6''			1				
	101	G20(CA)	114 x 84				22'-0''		1			
	102	SW48(CA)(30)	48 x 36		15'-6''			1				
		SW48-2(CA)(6)	48 x 12									
	103	W4-7 L	48 x 48		17'-6''			1				
	104	R18A R(CA)	66 x 48		15'-6''				1			
	105	R2-1(45)	36 x 48		15'-6''			1				
	106	R5-10a	30 x 36		14'-6''			1				
	107	R2-1(45)	36 x 48		17'-6''			1				
		R48-1(CA)	36 x 18									
	108	SW48(CA)	48 x 36		15'-6''			1				
		SW48-2(CA)	48 x 12									
	109	R8-4	30 x 24		12'-6''			2				
	110	D3	54 x 30		14'-0''			1				
	111	R8-4	30 x 24		12'-6''			1				
	112	SW48(CA)(30)	48 x 36		15'-6''			1				
		SW48-1(CA)	48 x 12									
	113	W13-3(25)	36 x 48								275	RAIL MOUNTED SEE S-2
	114	W1-2a R(25)	48 x 48								260	RAIL MOUNTED SEE S-3
	115	W4-3 R	48 x 48								260	RAIL MOUNTED SEE S-3
	116	M3-3	24 x 12								235	RAIL MOUNTED SEE S-3
		G26-2(CA)(1a)	28 x 24									
	117	R8-4	30 x 24		12'-6''			1				
	118	W1-2a L(35)	48 x 48		17'-6''			1				
	119	W1-8 L	24 x 30	13'-0''				8				
	120	G22(CA)	72 x 48		15'-6''				1			
	121	W4-3 R	48 x 48		17'-6''			1				
	122	DELETED										
	123	R2-1(35)	36 x 48		15'-6''			1				
	124	G20(CA)	84 x 36		14'-6''			1				
	125	G8(CA)	96 x 66			17'-6''			1			
TOTAL								25	4			
TOTAL FROM SQ-1										43	1030	
GRAND TOTAL								25	4	43	1030	

OVERHEAD SIGN QUANTITIES

1

STATION	SIGN LETTER ◇	FURNISH SIGN STRUCTURE (TRUSS)	INSTALL SIGN STRUCTURE (TRUSS)	CIDH CONCRETE PILE (SIGN FOUNDATION)	REMOVE SIGN STRUCTURE	REMARKS	FURNISH SIGN STRUCTURE (TUBULAR)	INSTALL SIGN STRUCTURE (TUBULAR)
		LB		5'-0'' Dia	EA		LB	LB
	A				1			
	B				1			
	C	23,720	23,720	30'				
	D	20,180	20,180	26'				
SB 112+00	VMS	~~12,535~~	~~12,535~~	~~22'~~ 25'		SEE E-46 AND E-47	8,770	8,770
VT 111+80	VMS	~~32,500~~	~~32,500~~			SEE PRESIDIO VIADUCT	29,600	29,600
DOY4 107				~~22'~~ 25'		SEE E-10		
TOTAL		~~88,935~~ 43,900	~~88,935~~ 43,900	~~100'~~ 106'			38,370	38,370

1 REVISED PER ADDENDUM No. 1 DATED AUGUST 13, 2009

SIGN QUANTITIES

SQ-2

STATE OF CALIFORNIA - DEPARTMENT OF TRANSPORTATION
Caltrans TRAFFIC

FUNCTIONAL SUPERVISOR: ROLAND AU-YEUNG
CALCULATED-DESIGNED BY: ULICES F. VEGA
CHECKED BY: LILY Y. TING
REVISED BY: UV
DATE REVISED: 6/10/09

LAST REVISION 06-10-09 | DATE PLOTTED => 12-AUG-2009 | TIME PLOTTED => 10:13

Dist	COUNTY	ROUTE	POST MILES TOTAL PROJECT	SHEET No.	TOTAL SHEETS
04	SF	101,1	9.2/9.8, 6.8/7.1	165	567

REGISTERED ELECTRICAL ENGINEER 6-03-09 DATE

7-20-09
PLANS APPROVAL DATE

REGISTERED PROFESSIONAL ENGINEER Mahmood Noii No. 13717 Exp 6-30-11 ELECT STATE OF CALIFORNIA

THE STATE OF CALIFORNIA OR ITS OFFICERS OR AGENTS SHALL NOT BE RESPONSIBLE FOR THE ACCURACY OR COMPLETENESS OF SCANNED COPIES OF THIS PLAN SHEET.

GENERAL NOTES:

1. PRIOR TO ANY WORK ON PG&E SERVICE POINTS, THE CONTRACTOR SHALL NOTIFY THE PG&E INSPECTOR.
2. PRIOR TO ANY WORK ON AT&T SERVICE POINTS, THE CONTRACTOR SHALL NOTIFY THE AT&T INSPECTOR.
3. PRIOR TO ANY WORK ON THE GOLDEN GATE BRIDGE ELECTRICAL SYSTEMS, THE CONTRACTOR SHALL NOTIFY THE GOLDEN GATE BRIDGE MAINTENANCE SUPERINTENDENT.
4. THE MINIMUM DISTANCE BETWEEN MODEL 170 CONTROLLER ASSEMBLY AND SERVICE EQUIPMENT ENCLOSURE SHALL BE 10'.
5. ALL No. 9 PULL BOXES SHALL BE PROVIDED WITH KNOCKOUTS THAT MATCH THE SIZE AND NUMBER OF THE CONDUITS SHOWN ON THE PLANS.
6. NO ABOVE GROUND ELECTRICAL WORK SHALL BE PERFORMED ON ANY SYSTEM WITHIN THE PROJECT SITE UNTIL ALL CONTRACTOR-FURNISHED ELECTRICAL MATERIALS FOR THAT INDIVIDUAL SYSTEM HAVE BEEN TESTED AND DELIVERED TO THE CONTRACTOR.
7. THE NEUTRAL CONDUCTOR SHALL RUN FROM THE SERVICE EQUIPMENT ENCLOSURE TO THE CONTROLLER CABINET WITHOUT SPLICING TO ANY OTHER NUETRAL CONDUCTOR.
8. THE CLEARANCE BETWEEN THE BOTTOM OF THE LOWEST CIRCUIT BREAKER AND THE BOTTOM OF THE SERVICE EQUIPMENT ENCLOSURE FOR A TYPE III-A SERIES SHALL BE 24 INCHES MINIMUM.
9. NO OVERHEAD SIGN PANEL SHALL BE INSTALLED UNTIL THE OVERHEAD SIGN LIGHTING IS COMPLETELY OPERATIONAL.

SYMBOLS

PROPOSED	EXISTING	
HV		HIGH VOLTAGE CONDUIT (SUBSTATION)
	ems	EXTINGUISHABLE MESSAGE SIGN (LED)-WOOD POSTS
	ems	EXTINGUISHABLE MESSAGE SIGN (LED)-SIGN POST CANTILEVER
VMS		VARIABLE MESSAGE SIGN-WOOD POSTS
VMS	1	VARIABLE MESSAGE SIGN AND SIGN POST ~~TRUSS~~
VMS(F) VMS(F)	1	FOUNDATION-FUTURE VMS SIGN AND SIGN POST ~~VMS SIGN POST (TRUSS)~~
1-B(F)	1-B(f)	FOUNDATION-FUTURE TYPE 1-B STANDARD
		GOLDEN GATE BRIDGE TYPE LIGHT STANDARD
21		FOUNDATION-FUTURE LIGHT STANDARD WITH 12' LUMINAIRE ARM 21 - TYPE 21 LIGHT STANDARD 30 - TYPE 30 LIGHT STANDARD
FO		FIBER OPTIC PULL BOX (SEE E-26 FOR DETAILS)
F		BASE CAMERA - FUTURE

PROJECT NOTES:

1. PART OF BID ITEM "TRAFFIC OPERATIONS SYSTEM." SEE E-11.
2. 1½"C, MT. INSTALL CONDUIT IN STRUCTURE
3. INSTALL STATE-FURNISHED MODEL 170 CONTROLLER ASSEMBLY WITH A MODEL 334 CABINET.
4. CAMERA STATION: INSTALL TYPE CCTV 45 POLE AND AN INTEGRATED CCTV CAMERA UNIT. SEE ES-16A FOR POLE DETAILS AND E-22 FOR CCTV MOUNTING DETAILS.
5. CAMERA STATION: INSTALL CONTRACTOR-FURNISHED MODEL 334 CABINET WITH STATE-FURNISHED MODEL 170 CONTROLLER UNIT. INSTALL 1 CCU AND 1 VEU. SEE E-21 AND E-23 FOR DETAILS.
6. INSTALL CONDUIT INSIDE THE BRIDGE DECK.
7. INSTALL PREFORMED LOOP DETECTORS. DETECTORS SHALL BE CENTERED IN EACH LANE.
8. DETECTORS SHALL BE CENTERED IN EACH LANE AND SHALL BE INSTALLED 14' APART (20' FROM CENTER TO CENTER). SEE DETAILS ON E-24.
9. INSTALL FDU, FODM AND FOTS. SEE E-29 FOR DETAILS.
10. INSTALL WALL MOUNTED LUMINAIRE WITH 100 W HPS LAMP. SEE ES-9E AND STRUCTURE PLANS FOR DETAILS.
11. RC EXISTING SIGN LIGHTING FIXTURES AND SIGN DISCONNECT.
12. INSTALL FOUNDATION FOR A FUTURE VMS SIGN POST. SEE THE STRUCTURE PLANS FOR DETAILS.
13. VMS SYSTEM: INSTALL VMS SIGN POST WITH A 27' ARM. INSTALL STATE-FURNISHED VMS PANEL AND CONTROLLER ASSEMBLY. INSTALL NEMA 3R ENCLOSURE ON SIGN POST AS SHOWN ON ES-15C. INSTALL VMS CONTROLLER ASSEMBLY 6" MINIMUM ABOVE THE NEMA 3R ENCLOSURE. SEE E-14, E-20 AND STRUCTURE PLANS FOR DETAILS.
14. INSTALL FOUNDATION FOR A FUTURE VMS SIGN POST WITH A 24' CANTILEVER. SEE STRUCTURE PLANS FOR DETAILS.
15. INSTALL ELECTRICAL EQUIPMENT BEHIND THE BRIDGE RAIL.
16. RC SIGN POST. RS ems, EXISTING NEMA 3R ENCLOSURE AND CONTROL CABINET.
17. INSTALL A SINGLE PHASE, 7.0 kVA (480 V/120-240 V), STEPDOWN SUBMERSIBLE TYPE TRANSFORMER IN PULL BOX. INSTALL TWO 20 A, 480 V IN-LINE FUSES ON THE PRIMARY SIDE OF THE TRANSFORMER.
18. BASE CAMERA SYSTEM: INSTALL CONTRACTOR-FURNISHED MODEL 334 CABINET.
19. SEE SHEET E-11.
20. BASE CAMERA SYSTEM: INSTALL TYPE 18-1-100 POLE WITHOUT SIGNAL ARM AND GUSSET. SEE RSP ES-7C FOR POLE DETAILS.
21. HAR SYSTEM: INSTALL CONTRACTOR-FURNISHED MODEL 334 CABINET.
22. INSTALL FDU AND FODM. SEE E-29 FOR DETAILS.
23. 2"C, MT (FO CONDUIT). SEE E-28 FOR DETAILS.

PROJECT NOTES (Cont):

24. VMS SYSTEM: INSTALL STATE-FURNISHED VMS PANEL AND CONTROLLER ASSEMBLY ON WOOD POSTS. SEE E-20 FOR DETAILS.
25. CAMERA STATION: INSTALL 1 CCU AND 1 VEU. SEE E-21 AND E-23 FOR DETAILS.
26. 3"C, 2#4 (120 V TMS/CCTV SERVICE),
    2#6 (120 V HAR SERVICE),
    2#6 (120 V RM/CCTV SERVICE),
    2#6 (120 V BASE CAMERA-SB),
    2#8 (120 V IRRIGATION, IC-A, B),
    2#8 (120 V IRRIGATION, IC-C, D)
27. SEE E-14. PART OF BID ITEM "BASE CAMERA SYSTEM".
28. Exist 2"C, 5#4
29. Exist 2"C, 5#4, 2#12
30. 1½"C, 2#8 (120 V IRRIGATION)
31. INSTALL TYPE 30 LIGHT STANDARD WITH 12' LUMINAIRE ARM ADJACENT TO THE BACK OF THE BRIDGE RAIL.
32. INSTALL THE FOUNDATION ADJACENT TO THE BACK OF THE BRIDGE RAIL.
33. INSTALL 10' OF SLACK FOR EACH CONDUCTOR. COIL THE CONDUCTORS IN THE PULL BOX. TAPE ENDS OF CONDUCTORS.
34. COIL 6' OF SLACK OF EACH LOOP CONDUCTOR IN THE PULL BOX.
35. INSTALL GPRS WIRELESS MODEM ASSEMBLY, ANTENNA, POWER SUPPLY AND TERMINAL BLOCK IN THE CABINET. SEE E-25 FOR DETAILS.

ABBREVIATIONS:

PROPOSED	EXISTING	
ACC	acc	ANTENNA COAXIAL CABLE
CTID		CALTRANS IDENTIFICATION
CCU		CAMERA CONTROL UNIT
FDU		FIBER OPTIC DISTRIBUTION UNIT
FOC		FIBER OPTIC CABLE
FORS		FIBER OPTIC RECEIVERS
FOTS		FIBER OPTIC TRANSMITTERS
GPRS		GENERAL PACKET RADIO SYSTEM
HCC		HYBRID CAMERA CABLE
IC-A		IRRIGATION CONTROLLER (A, B ...)
	mvc	MVDS CABLE
MVDS	mvds	MICROWAVE VEHICLE DETECTION SYSTEM
	tc	TELEPHONE CABLE
	tvc	TELEVISION CONTROL CABLE
	tvcp	TELEVISION CONTROL POWER CABLE
	tvl	TELEVISION VIDEO CABLE
	tvp	TELEVISION POWER CABLE
VCC		VMS CONTROL CABLE
VMS		VARIABLE MESSAGE SIGN
WAN		WIDE AREA NETWORK

ELECTRICAL INDEX

DRAWING No.	TITLE
E-1	ELECTRICAL INDEX, NOTES, ABBREVIATIONS AND SYMBOLS
E-2 TO E-8	LIGHTING AND SIGN ILLUMINATION
E-9	COMMUNICATION CONDUIT
E-10 TO E-12	TRAFFIC OPERATIONS SYSTEM
E-13 & E-14	TUNNEL TRAFFIC CONTROL SYSTEM
E-15 & E-16	LIGHTING AND SIGN ILLUMINATION (EXISTING)
E-17 TO E-29	ELECTRICAL DETAILS
E-30	LIGHTING AND SIGN ILLUMINATION (STAGE CONSTRUCTION) (ELECTRICAL NOTES, SYMBOLS AND DETAILS)
E-31 TO E-43	LIGHTING AND SIGN ILLUMINATION (STAGE CONSTRUCTION)
E-44 TO E-47	ELECTRICAL DETAILS (STRUCTURES)

1 **REVISED PER ADDENDUM No. 1 DATED AUGUST 13, 2009**

THIS PLAN IS ACCURATE FOR ELECTRICAL WORK ONLY

ELECTRICAL INDEX, NOTES, ABBREVIATIONS AND SYMBOLS

E-1

REVISED BY	DATE REVISED
PL	6/10/09

PIERRE LASSALLE — MAHMOOD NOII — CALCULATED-DESIGNED BY — CHECKED BY — FUNCTIONAL SUPERVISOR: LAI HONG CHIU

STATE OF CALIFORNIA - DEPARTMENT OF TRANSPORTATION — Caltrans — ELECTRICAL

LAST REVISION 06-15-09 — DATE PLOTTED => 12-AUG-2009 — TIME PLOTTED => 10:13

Dist	COUNTY	ROUTE	POST MILES TOTAL PROJECT	SHEET No.	TOTAL SHEETS
04	SF	101,1	9.2/9.8, 6.8/7.1	178	567

REGISTERED ELECTRICAL ENGINEER 6-03-09 DATE

7-20-09
PLANS APPROVAL DATE

REGISTERED PROFESSIONAL ENGINEER Mahmood Noii No. 13717 Exp 6-30-11 ELECT STATE OF CALIFORNIA

THE STATE OF CALIFORNIA OR ITS OFFICERS OR AGENTS SHALL NOT BE RESPONSIBLE FOR THE ACCURACY OR COMPLETENESS OF SCANNED COPIES OF THIS PLAN SHEET.

FOR ACCURATE RIGHT OF WAY AND ACCESS DATA, CONTACT RIGHT OF WAY ENGINEERING AT THE DISTRICT OFFICE.

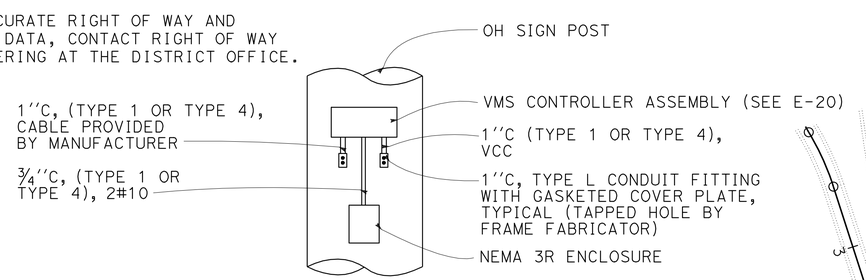

OH SIGN POST INSTALLATION DETAILS 1

(SEE ES-15A AND ES-15C FOR MORE DETAILS)

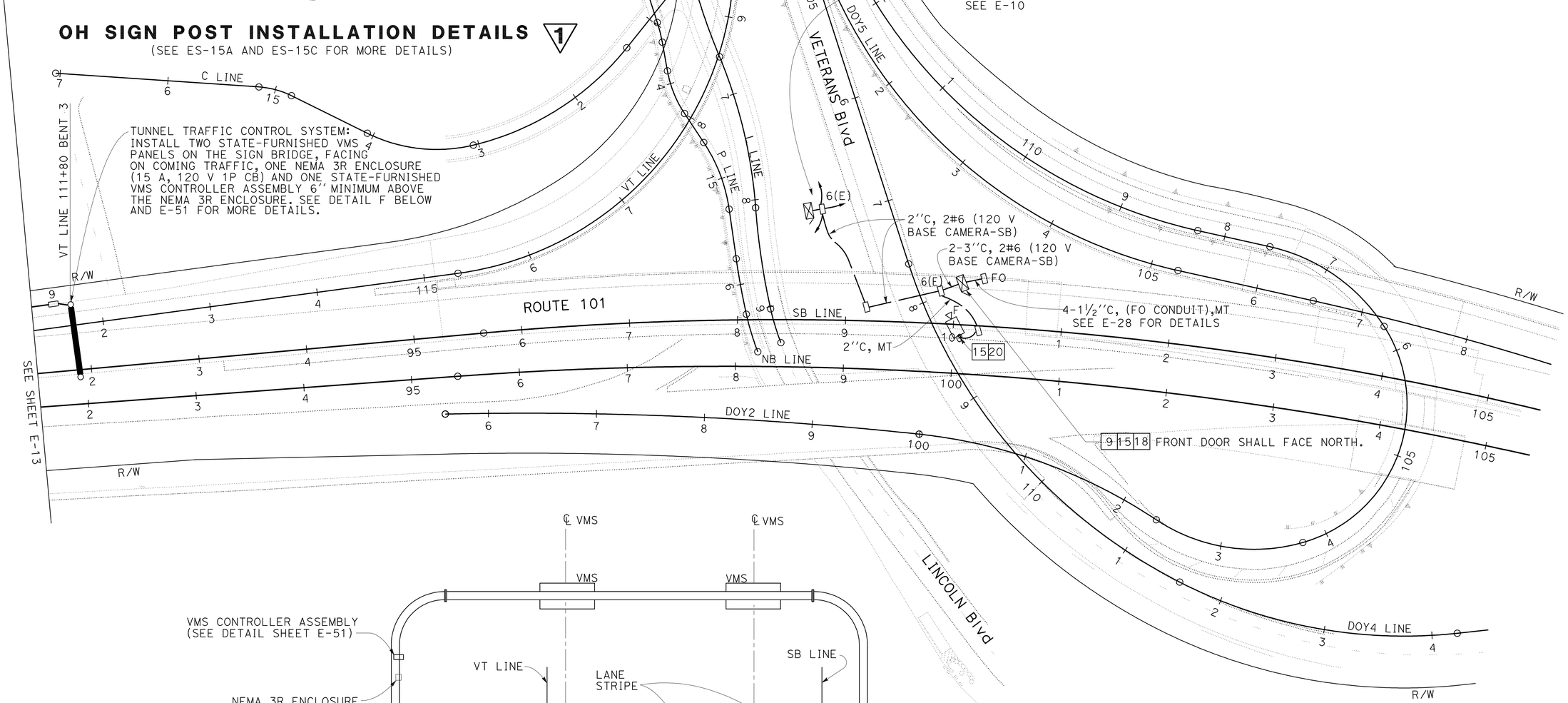

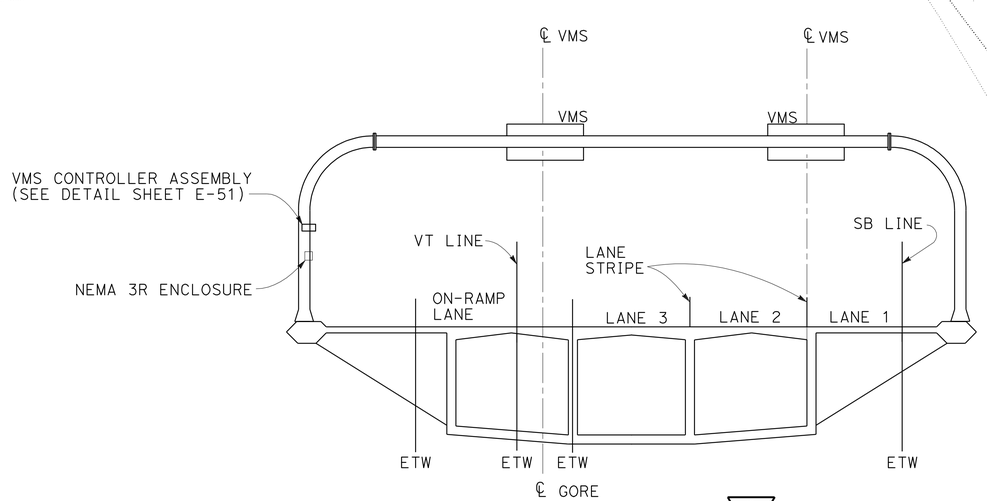

DETAIL F 1

FOR NOTES, ABBREVIATIONS AND LEGEND, SEE SHEET E-1

THIS PLAN IS ACCURATE FOR ELECTRICAL WORK ONLY

1 REVISED PER ADDENDUM No. 1 DATED AUGUST 13, 2009

TUNNEL TRAFFIC CONTROL SYSTEM BASE CAMERA SYSTEM

SCALE: 1'' = 50'

E-14

STATE OF CALIFORNIA - DEPARTMENT OF TRANSPORTATION	ELECTRICAL	FUNCTIONAL SUPERVISOR	LAI HONG CHIU	CALCULATED-DESIGNED BY	PIERRE LASSALLE	REVISED BY	PL
				CHECKED BY	MAHMOOD NOII	DATE REVISED	6/10/09

LAST REVISION 06-05-09 DATE PLOTTED => 12-AUG-2009 TIME PLOTTED => 10:14

Dist	COUNTY	ROUTE	POST MILES TOTAL PROJECT	SHEET No.	TOTAL SHEETS
04	SF	101,1	9.2/9.8, 6.8/7.1	184	567

REGISTERED ELECTRICAL ENGINEER 6-07-09 DATE

7-20-09
PLANS APPROVAL DATE

REGISTERED PROFESSIONAL ENGINEER Michael P. Lee No. 13435 Exp 9-30-10 ELECT STATE OF CALIFORNIA

THE STATE OF CALIFORNIA OR ITS OFFICERS OR AGENTS SHALL NOT BE RESPONSIBLE FOR THE ACCURACY OR COMPLETENESS OF SCANNED COPIES OF THIS PLAN SHEET.

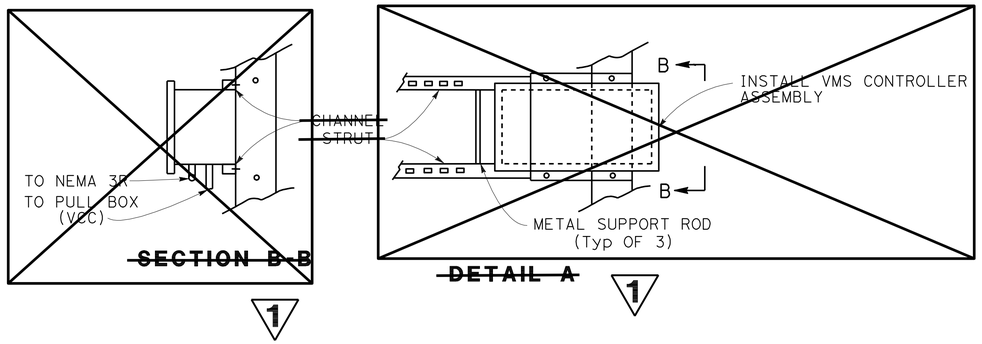

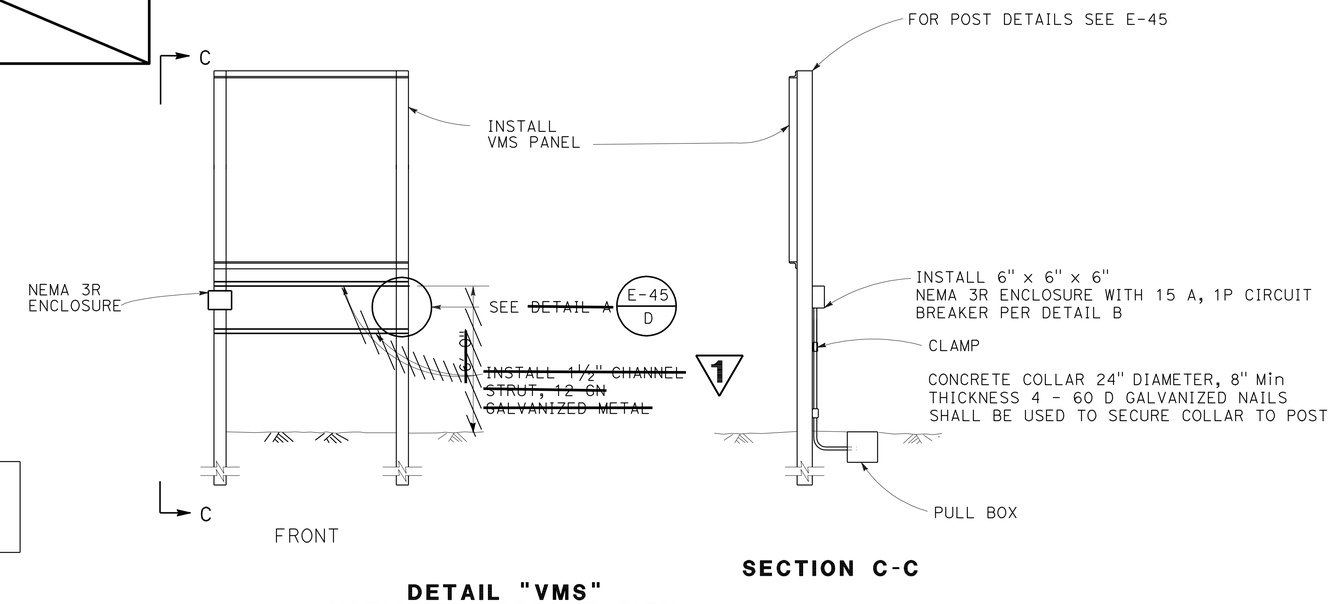

DETAIL "VMS"
VARIABLE MESSAGE SIGN

SECTION C-C

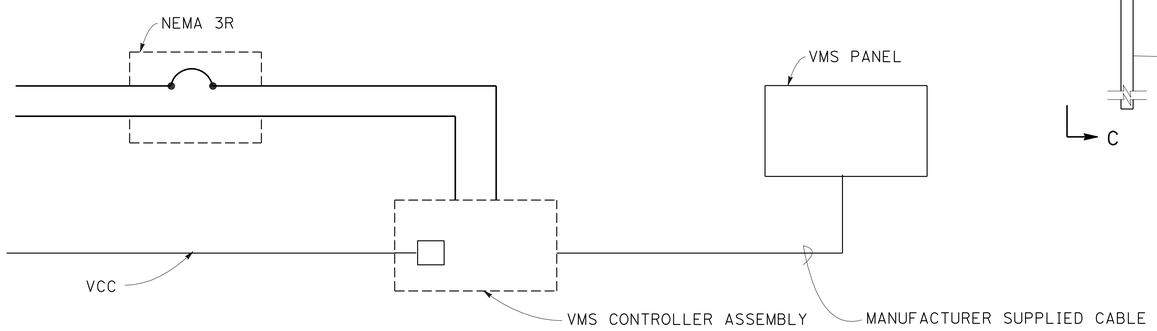

VMS WIRING DIAGRAM

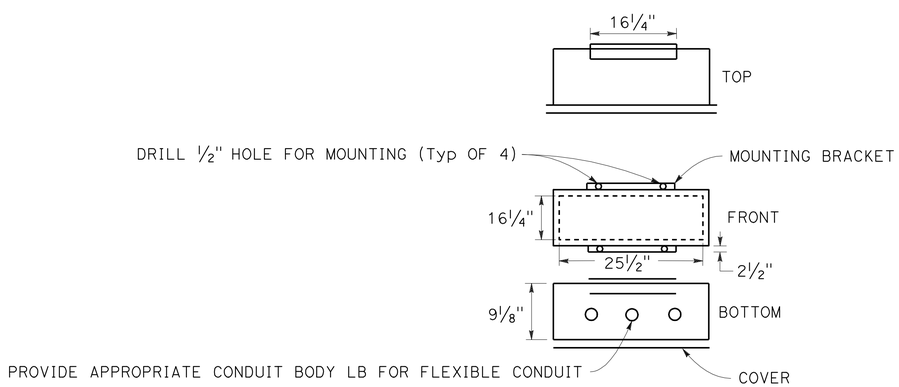

VMS CONTROLLER ASSEMBLY

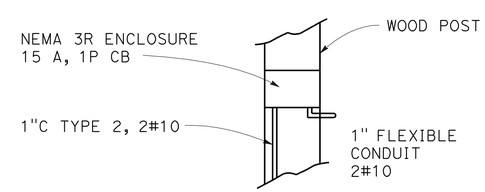

DETAIL B

1 **REVISED PER ADDENDUM No. 1 DATED AUGUST 13, 2009**

THIS PLAN IS ACCURATE FOR ELECTRICAL WORK ONLY

FOR NOTES, ABBREVIATIONS AND LEGEND, SEE SHEET E-1

ELECTRICAL DETAILS
(VMS INSTALLATION)

NO SCALE

E-20

REVISED BY	DATE REVISED
ML	6/10/09

MICHAEL P. LEE — CALCULATED-DESIGNED BY
CHARLES PRICE — CHECKED BY
CHARLES PRICE — FUNCTIONAL SUPERVISOR

STATE OF CALIFORNIA - DEPARTMENT OF TRANSPORTATION
Caltrans
ELECTRICAL

LAST REVISION 06-04-09
DATE PLOTTED => 12-AUG-2009
TIME PLOTTED => 10:14

DIST	COUNTY	ROUTE	POST MILE TOTAL PROJECT	SHEET No	TOTAL SHEETS
04	SF	101,1	9.2/9.8, 6.8/7.1	209	567

REGISTERED CIVIL ENGINEER 5/15/09 DATE

7-20-09
PLANS APPROVAL DATE

The State of California or its officers or agents shall not be responsible for the accuracy or completeness of electronic copies of this plan sheet.

REGISTERED PROFESSIONAL ENGINEER ANDREW BUI No. C63560 Exp. 9/30/10 CIVIL STATE OF CALIFORNIA

1

VMS Sign DOY4 Line STA 107+00	POST DATA, See Note 5								
	Laminated Wood Box Post Type	Section Dimensions	Length, Ft		Weight, Lb		Breakaway System	Panel Manufacturer	Mounting Bolt Size
			Left	Right	Left	Right			
Roadside	"L"	14⅞" x 7⅞"	18.25	20.0	310	340	No	VMS Ver-Mac	½" ø
					Total Wgt = 650 lbs				

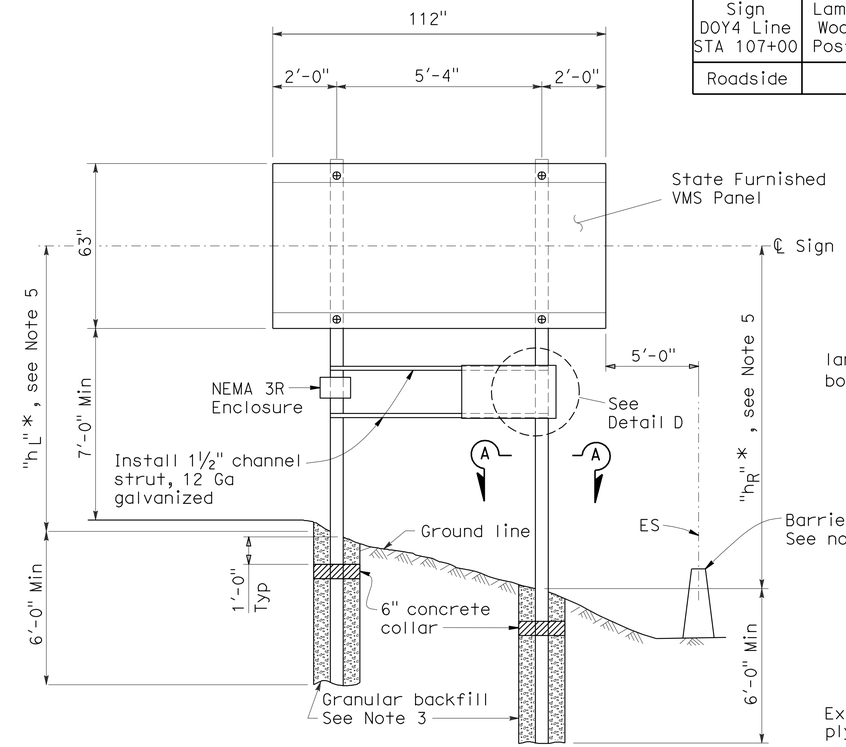

ELEVATION

* Dimensions shown on project plans are for fabrication. At time of installation adjust these dimensions to verify in field.

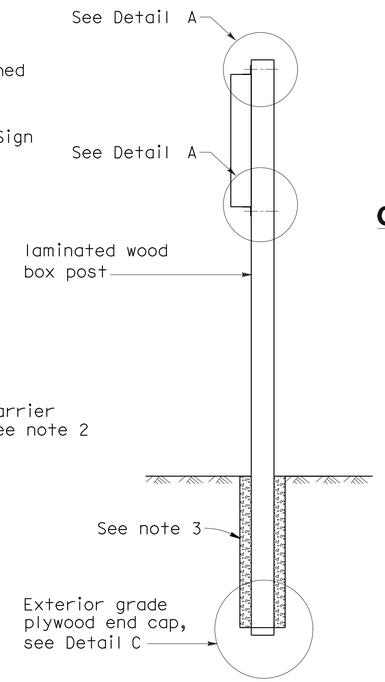

SIDE VIEW

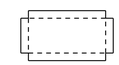

GALV METAL CAP

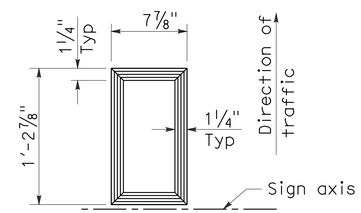

SECTION A-A

TYPE "L"

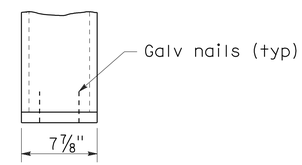

SECTION B-B

GENERAL NOTES

DESIGN:
AASHTO Specifications for Structural Supports for Highway Signs, Luminaries and Traffic Signals, dated 2001

CONSTRUCTION:
Standard Specifications and the Special Provisions
State of California Department of Transportation
Dated July 1999 and May 2006

Standard Plans
State of California Department of Transportation
Dated May 2006 and current Revised Plans

LOADING:
WIND LOADING:
40 psf applied load combinations per 3.9 AASHTO Specifications for Structural Supports for Hightway Signs, Luminaries and Traffic Signals, dated 2001

STANDARD PLANS DATED MAY 2006

A10A	ACRONYMS AND ABBREVIATIONS (A-L)
A10B	ACRONYMS AND ABBREVIATIONS (M-Z)
RS1	ROADSIDE SIGNS TYPICAL INSTALLATION DETAIL NO.1
RS2	ROADSIDE SIGNS TYPICAL INSTALLATION DETAIL NO.2

NOTES:

1. For details not shown, see "2006 STANDARD PLANS" and "2006 REVISED STANDARD PLANS".
2. For sign location and barrier type see "PROJECT PLANS".
3. Diameter of post holes shall be at least 2'-6"
4. Refer to VMS Manufacturer to verify bolt hole layout and length.
5. Design based on 1:4 slope. Contractor to verify before post fabrication.

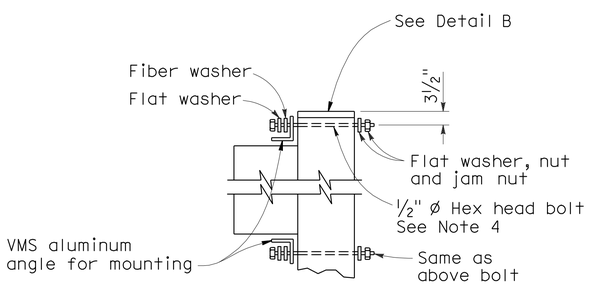

DETAIL A

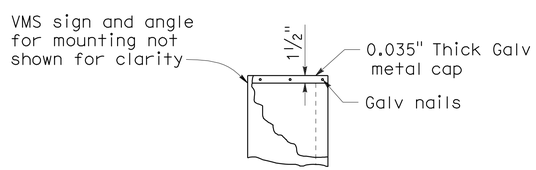

DETAIL B

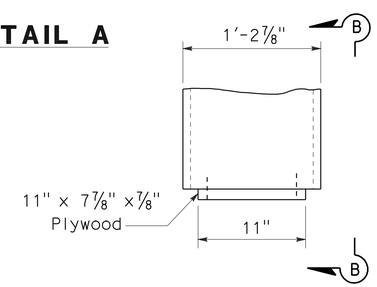

DETAIL C

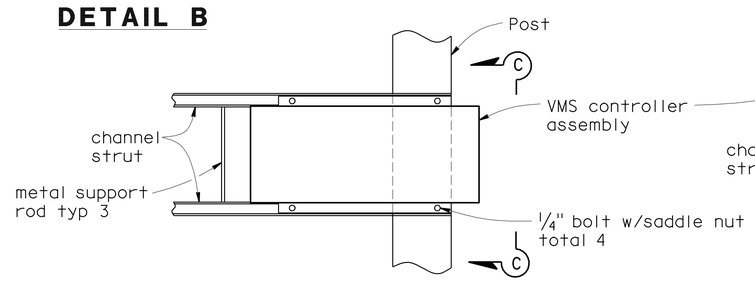

DETAIL D

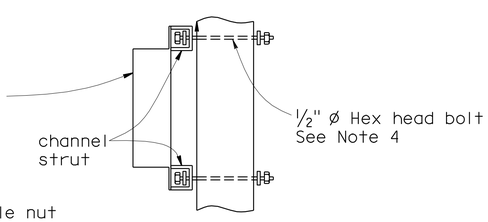

SECTION C-C

Both Posts

NOTE:
THE CONTRACTOR SHALL VERIFY ALL CONTROLLING FIELD DIMENSIONS BEFORE ORDERING OR FABRICATING ANY MATERIAL.

1 **REVISED PER ADDENDUM No. 1 DATED AUGUST 13, 2009**

VMS ROADSIDE SIGN AT DOY4 LINE STA 107+00 INSTALLATION & DETAILS

E-45

STATE OF CALIFORNIA - DEPARTMENT OF TRANSPORTATION
Caltrans SPECIAL DESIGNS BRANCH

PROJECT ENGINEER ANDREW BUI

CALCULATED/DESIGNED BY T MARCHENKO DATE 5-13-09 DETAILS D W JUSTICE Jr
CHECKED BY A BUI 5-13-09 QUANTITIES

LAST REVISION 7-31-09 DATE PLOTTED => 12-AUG-2009 TIME PLOTTED => 10:14

ORIGINAL SCALE IN INCHES FOR REDUCED PLANS 0 1 2 3

USERNAME => trlenard
DGN FILE =>spec_des_br_prj/2009sd/04-163731/ 04-163731_e45.dgn

CU 04 EA 163731

DIST	COUNTY	ROUTE	POST MILE TOTAL PROJECT	SHEET No	TOTAL SHEETS
04	SF	101,1	9.2/9.8, 6.8/7.1	210	567

REGISTERED CIVIL ENGINEER 5/15/09 DATE

7-20-09
PLANS APPROVAL DATE

REGISTERED PROFESSIONAL ENGINEER ANDREW BUI No. C63560 Exp. 9/30/10 CIVIL STATE OF CALIFORNIA

The State of California or its officers or agents shall not be responsible for the accuracy or completeness of electronic copies of this plan sheet.

1

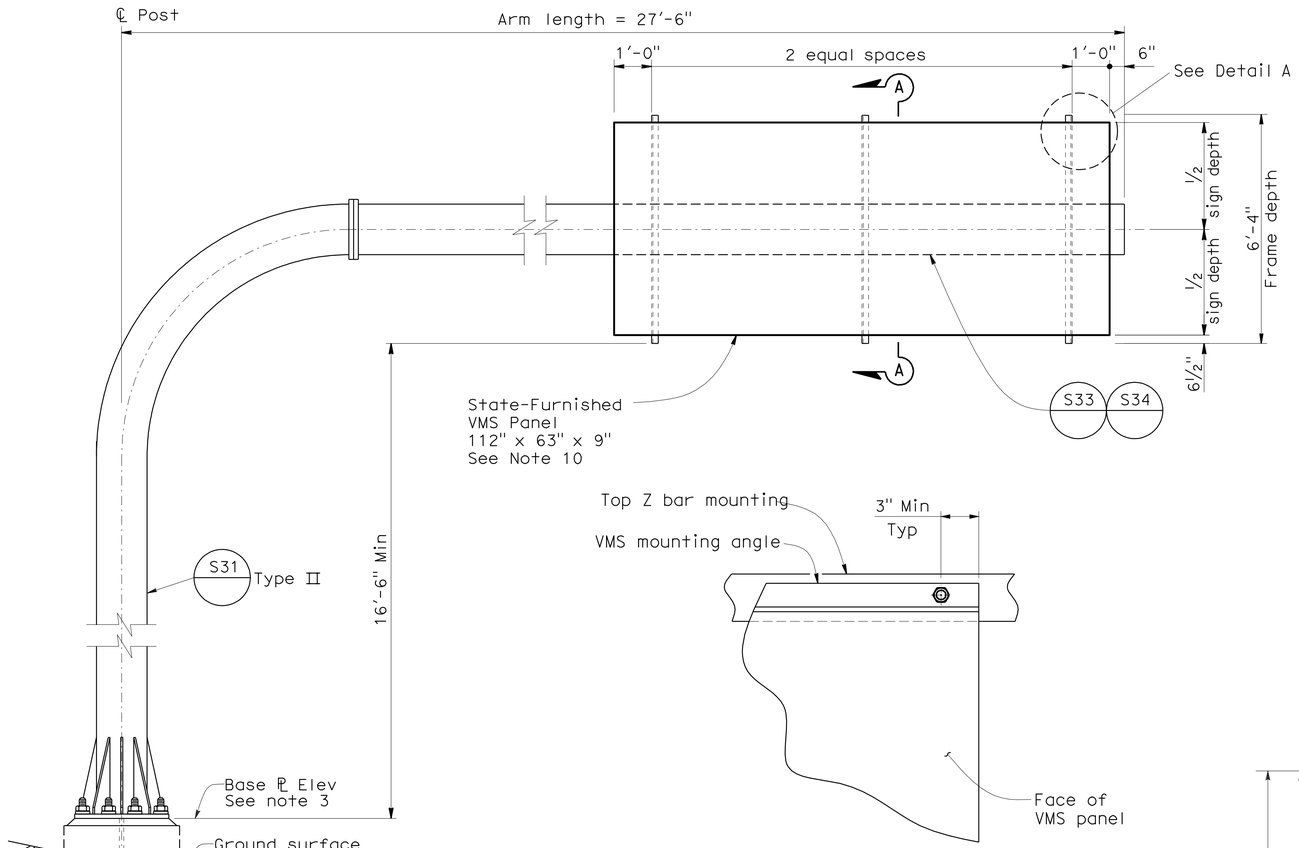

ELEVATION

DETAIL A

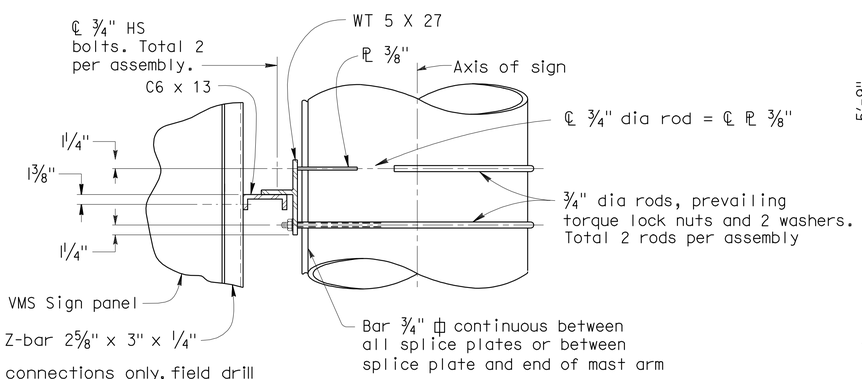

For Z bar connections only, field drill gluminum Z bar 7/8" Dia hole for 3/4" Dia A325 Dia HS bolt with hardened washer each side, lock washer between nut and hardened flat washer. HS bolts shall be snug tight.

SECTION B-B

NOTES:

1. For "General Notes", see Standard Plan S31, S33 and S34.
2. Backfill shall be in place prior to erection of post.
3. See Project Plans for details
4. For pile foundation details, see Standard Plans S35 and S36.
5. Anchor plates may be retained with hexagon nut or formed head as alternatives to details shown.
6. The post shall be raked out of plumb, with the use of the leveling nuts make the bottom of the sign frame level.
7. At final position of post all top and bottom nuts shall be tightened against base plate.
8. Foundation is located on a steep slope with exposed face of concrete adjacent to traffic, see sheet S36.
9. Slope protection required when indicated on the Project Plans.
10. Refer to VMS manufacturer for details.
11. Sign stucture shall be galvanized and painted.

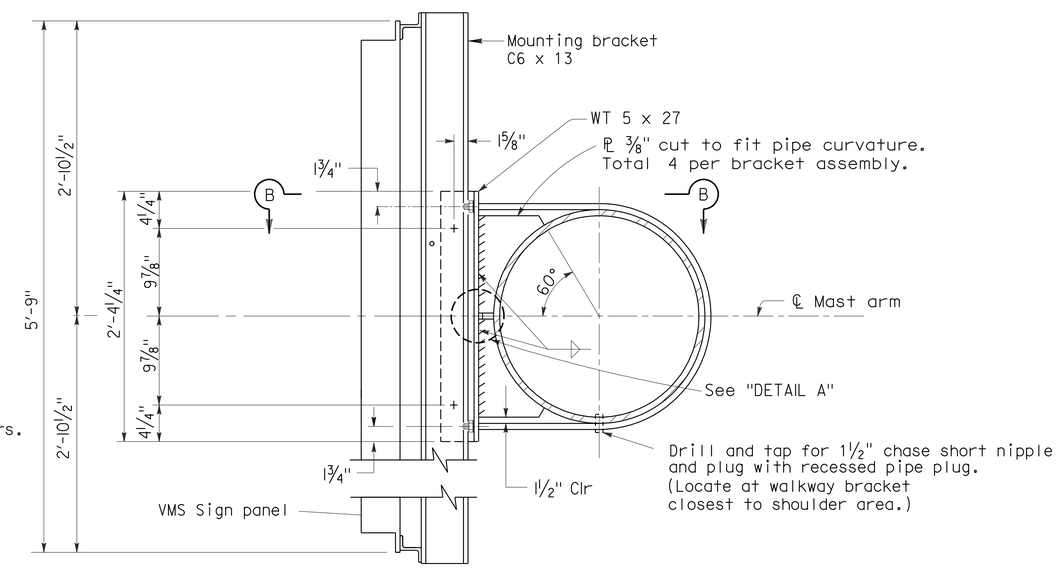

SECTION A-A

NOTE:
THE CONTRACTOR SHALL VERIFY ALL CONTROLLING FIELD DIMENSIONS BEFORE ORDERING OR FABRICATING ANY MATERIAL.

1 **REVISED PER ADDENDUM No. 1 DATED AUGUST 13, 2009**

VARIABLE MESSAGE SIGN AT SB LINE STA 112+00
27' ARM OVERHEAD SIGN
TUBULAR LAYOUT & DETAILS

No Scale

E-46

STATE OF CALIFORNIA - DEPARTMENT OF TRANSPORTATION			
Caltrans	SPECIAL DESIGNS BRANCH		
PROJECT ENGINEER	ANDREW BUI	CALCULATED/DESIGNED BY	T MARCHENKO
		CHECKED BY	A BUI
DETAILS	D W JUSTICE Jr	DATE 5-13-09	
QUANTITIES	T MARCHENKO	5-13-09	

LAST REVISION 7-31-09
DATE PLOTTED => 12-AUG-2009
TIME PLOTTED => 10:14

ORIGINAL SCALE IN INCHES FOR REDUCED PLANS 0 1 2 3

USERNAME => trienard
DGN FILE =>spec_des_br_prj/2009sd/04-163731/ 04-163731_e46.dgn

CU 04 EA 163731

DIST	COUNTY	ROUTE	POST MILE TOTAL PROJECT	SHEET No	TOTAL SHEETS
04	SF	101,1	9.2/9.8, 6.8/7.1	211	567

REGISTERED CIVIL ENGINEER 5/15/09 DATE

7-20-09
PLANS APPROVAL DATE

The State of California or its officers or agents shall not be responsible for the accuracy or completeness of electronic copies of this plan sheet.

REGISTERED PROFESSIONAL ENGINEER ANDREW BUI No. C63560 Exp. 9/30/10 CIVIL STATE OF CALIFORNIA

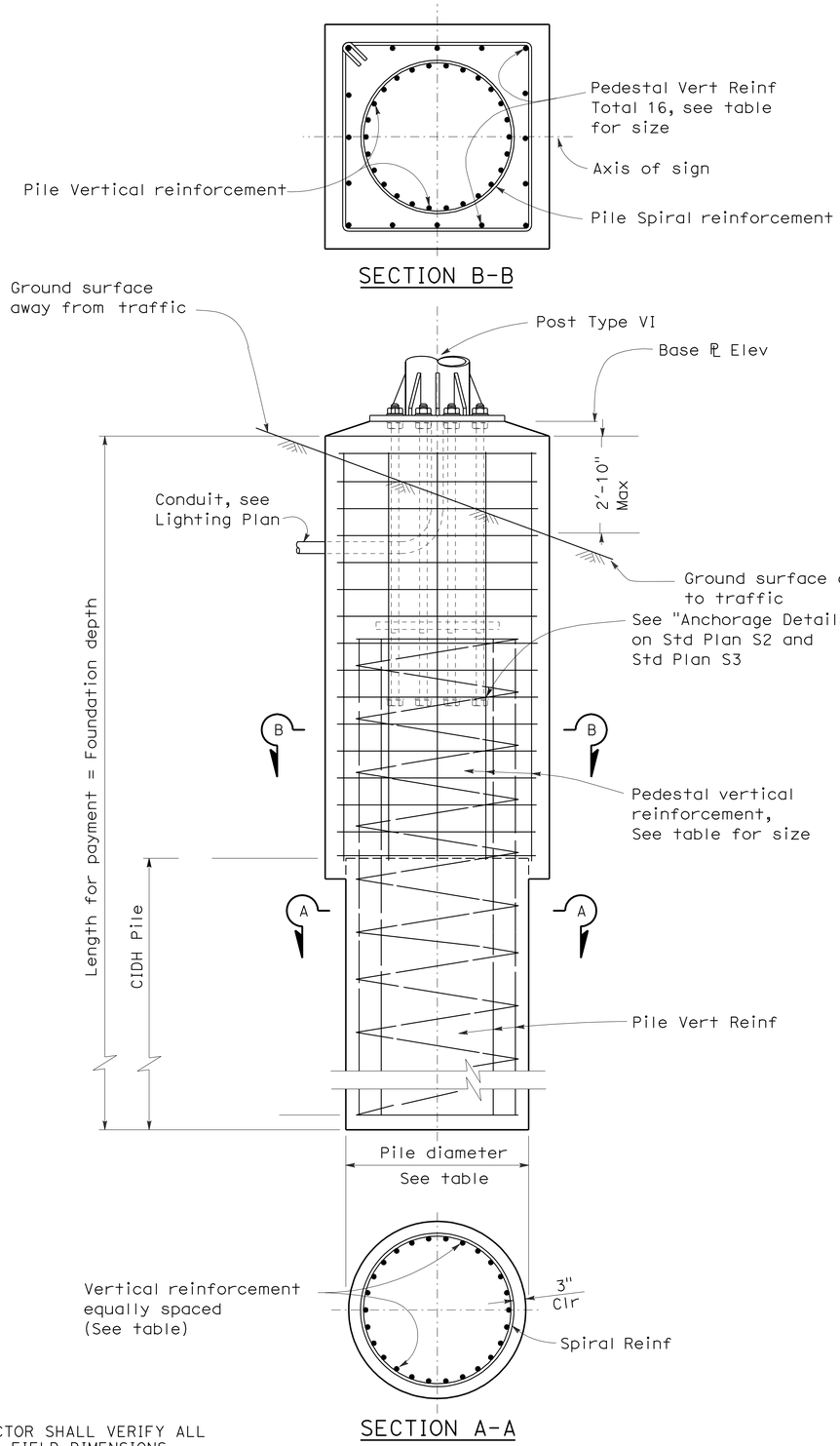

Post Type No.	Anchor Bolts			Square Pile Pedestal						CIDH Pile					Foundation Depth
	Bolt Circle	Bolt Total and Dia	Total Length	Pedestal Square one side	Vertical Reinforcing			Hoop		Pile Dia	Vertical Reinforcing		Spiral		See Note 4
					Total	Bar Size	# of bars each face	Bar Size	Spacing		Total	Bar Size	Bar Size	Pitch	
VI	2'-10"	16-2½"	5'-0"	5'-9"	16	#11	5	#5	3½"	5'-0"	28	#11	#5	3½"	~~22'-0"~~ 25'-0"

1

NOTES:

1. For notes refer to Standard Plans S7.
2. For details not shown see Standard Plans.
3. Foundation design is based on 2001 AASHTO article 13.6 Broms' approximate procedure assuming a cohesionless material. The angle of internal friction used is 30 degree and unit weight of soil used is 120 lb/ft^3.
4. The Standard design soil properties shall be verified in field. Foundation shall be approved by Engineer if the Standard design soil properties have not met.

NOTE:
THE CONTRACTOR SHALL VERIFY ALL CONTROLLING FIELD DIMENSIONS BEFORE ORDERING OR FABRICATING ANY MATERIAL.

1 **REVISED PER ADDENDUM No. 1 DATED AUGUST 13, 2009**

VARIABLE MESSAGE SIGN AT SB LINE STA 112+00 AND DOY4 STA 107+00 OVERHEAD SIGN-TUBULAR SQUARE PEDESTAL PILE FOUNDATION

No Scale

E-47

STATE OF CALIFORNIA - DEPARTMENT OF TRANSPORTATION
Caltrans SPECIAL DESIGNS BRANCH

PROJECT ENGINEER ANDREW BUI

CALCULATED/DESIGNED BY T MARCHENKO DATE 5-13-09 DETAILS D W JUSTICE Jr
CHECKED BY A BUI 5-13-09 QUANTITIES

LAST REVISION 7-31-09 DATE PLOTTED => 12-AUG-2009 TIME PLOTTED => 10:14

ORIGINAL SCALE IN INCHES FOR REDUCED PLANS 0 1 2 3

USERNAME => trlenard
DGN FILE =>spec_des_br_prj/2009sd/04-163731/ 04-163731_e47.dgn

CU 04 EA 163731

DIST	COUNTY	ROUTE	POST MILE TOTAL PROJECT	SHEET No	TOTAL SHEETS
04	SF	101,1	9.2/9.8, 6.8/7.1	215	567

REGISTERED CIVIL ENGINEER DATE

7-20-09
PLANS APPROVAL DATE

REGISTERED PROFESSIONAL ENGINEER ANDREW BUI No. C63560 Exp. 9/30/10 CIVIL STATE OF CALIFORNIA

The State of California or its officers or agents shall not be responsible for the accuracy or completeness of electronic copies of this plan sheet.

1

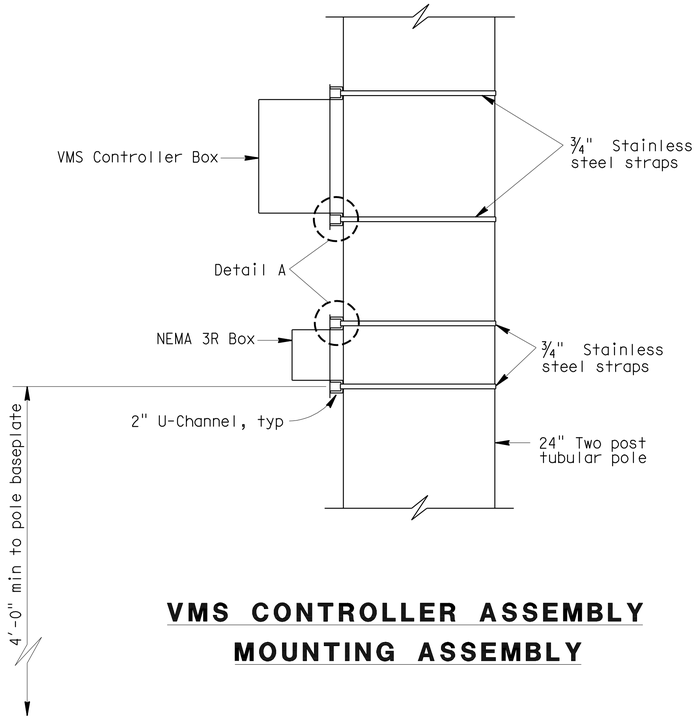

VMS CONTROLLER ASSEMBLY MOUNTING ASSEMBLY

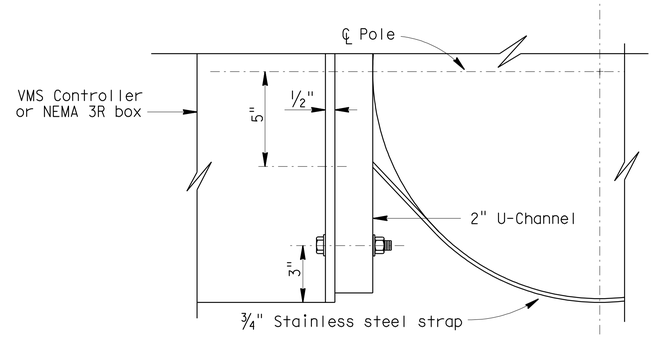

VIEW A-A

NOTES:

1. Conduit for VMS Controller assembly not shown.
2. Drilled holes for electrical wires, in post shall not exceed 1¼" and shall be spaced 12" min in all directions.
3. Maximum weight of individual box shall not exceed 50 lbs.
4. Details show an acceptable method of mounting VMS Controller assembly on two post tubular on the Presidio Viaduct. For variations of other enclosure cabinets, the contractor shall submit mounting methods in writing, for approval by the engineer.
5. All attachments unless otherwise noted, shall be mounted to pole with stainless steel straps or other method without drilling holes in pole. Enclosure may require drilling through post for mounting. Method of mounting enclosure will require engineer's approval.
6. Refer to sheet SD1.14 for sign pole details.
7. VMS Controller assembly to be mounted on pole away from traveled way.
8. Box to U-Channel connection shall be made according to manufacturer's recommendation and shall be approved by the engineer.
9. See Road Plans for quantites.

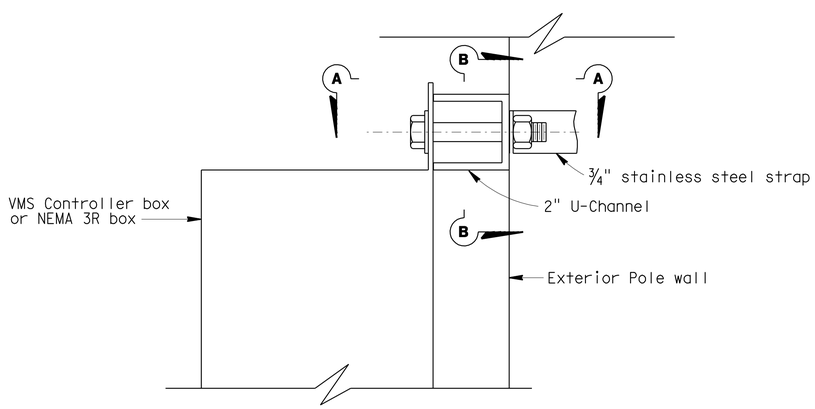

DETAIL A

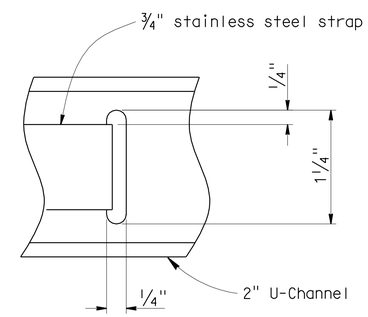

SECTION B-B

NOTE:
THE CONTRACTOR SHALL VERIFY ALL CONTROLLING FIELD DIMENSIONS BEFORE ORDERING OR FABRICATING ANY MATERIAL.

1 **REVISED PER ADDENDUM No. 1 DATED AUGUST 13, 2009**

VARIABLE MESSAGE SIGN AT SB LINE STA 112+00
27' ARM OVERHEAD SIGN
TUBULAR LAYOUT & DETAILS

E-51

STATE OF CALIFORNIA - DEPARTMENT OF TRANSPORTATION
Caltrans SPECIAL DESIGNS BRANCH

PROJECT ENGINEER ANDREW BUI

CALCULATED/DESIGNED BY T MARCHENKO DATE 5-13-09 DETAILS D W JUSTICE Jr
CHECKED BY A BUI 5-13-09 QUANTITIES

LAST REVISION 7-30-09 DATE PLOTTED => 12-AUG-2009 TIME PLOTTED => 10:14

ORIGINAL SCALE IN INCHES FOR REDUCED PLANS 0 1 2 3

USERNAME => trlenard
DGN FILE =>spec_des_br_prj/2009sd/04-163731/ 04_163731_e51.dgn

CU 04 EA 163731

DIST	COUNTY	ROUTE	POST MILES TOTAL PROJECT	SHEET No	TOTAL SHEETS
04	SF	101,1	9.2/9.8, 6.8/7.1	311	567

REGISTERED CIVIL ENGINEER 06-04-09 DATE

7-20-09
PLANS APPROVAL DATE

REGISTERED PROFESSIONAL ENGINEER Philip E. Lutz No. C55839 Exp. 12-31-10 CIVIL STATE OF CALIFORNIA

The State of California or its officers or agents shall not be responsible for the accuracy or completeness of electronic copies of this plan sheet.

NOTES

1. Paint "Br No. 34-0156"
2. Paint Br Name "Ruckman Avenue UC"
3. Structure Approach Type N(30S)(MOD)
4. California ST-10 Bridge Rail (MOD)
5. Barrier Type 50
6. Temporary Railing Type K, see "Road Plans"
7. 12" Ø Storm Drain, see "Road Plans"
8. Temporary Deck Bridging
9. 2"Ø electrical and communications conduit, tot 3, see "Road Plans"

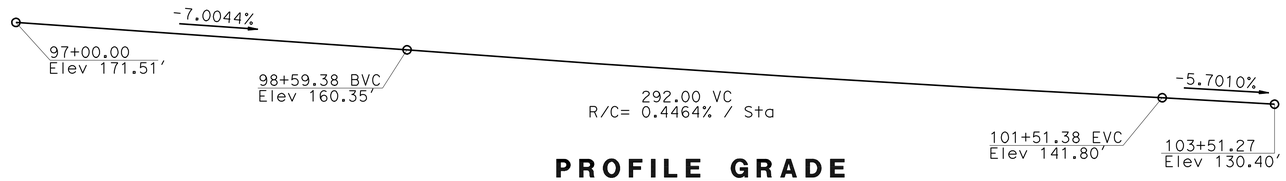

PROFILE GRADE

No Scale

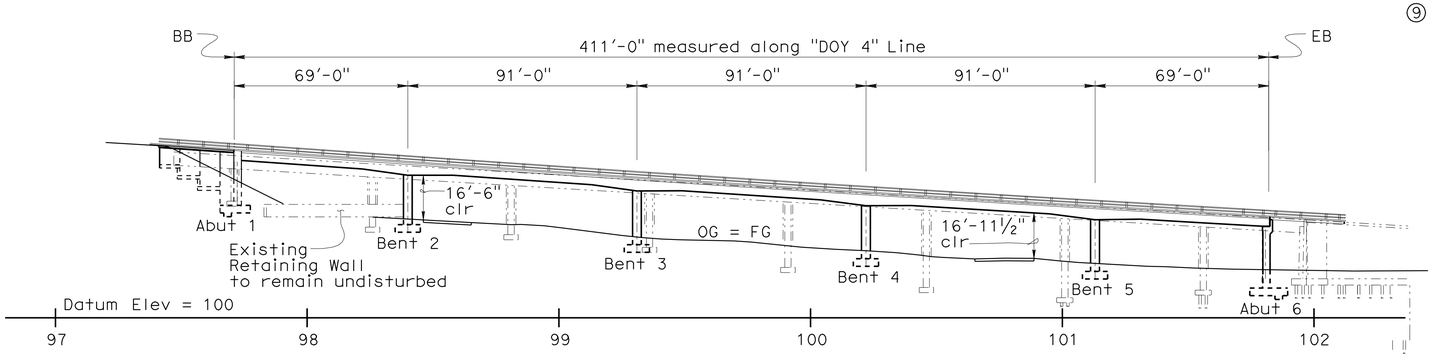

ELEVATION

1" = 30'

(Temporary Widening not shown for clarity)

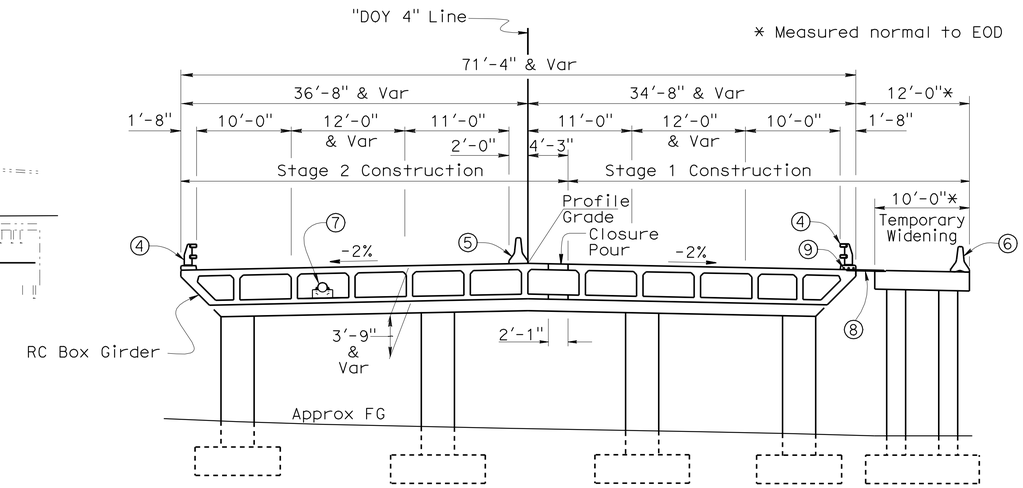

TYPICAL SECTION

⅛" = 1'

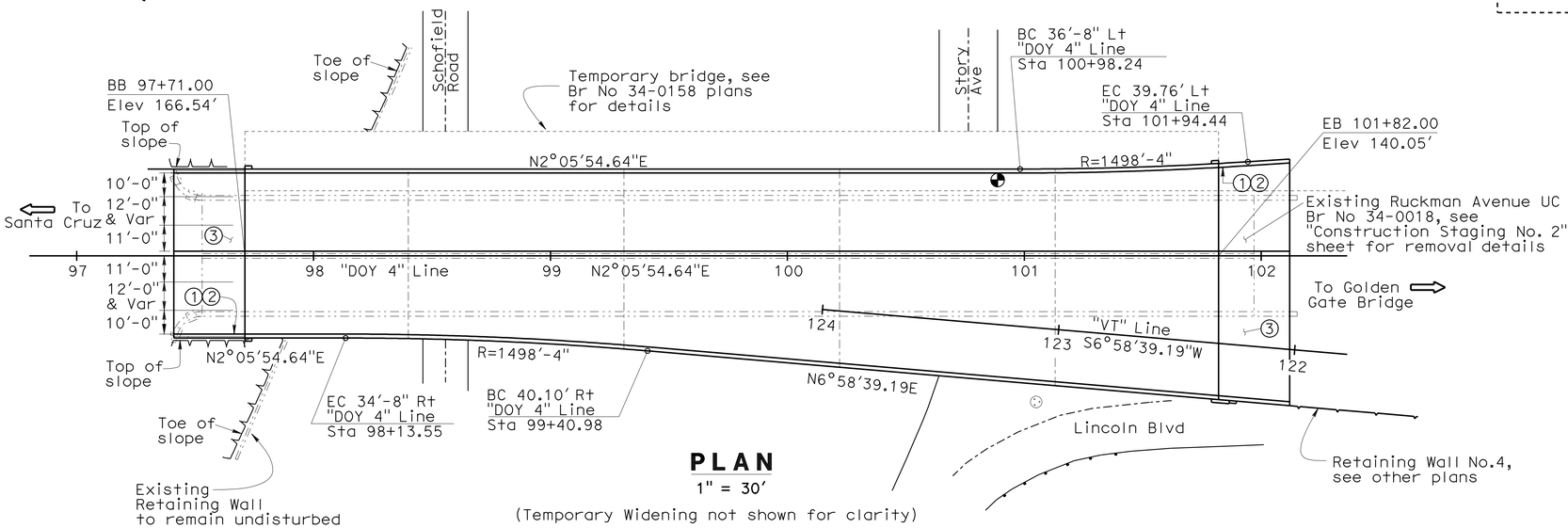

PLAN

1" = 30'

(Temporary Widening not shown for clarity)

QUANTITIES

TEMPORARY DECK BRIDGING	LUMP	SUM
BRIDGE REMOVAL, LOCATION C	LUMP	SUM
BRIDGE REMOVAL, LOCATION D	LUMP	SUM
STRUCTURE EXCAVATION (BRIDGE) (NATURALLY OCCURING ASBESTOS)	1,040	CY
STRUCTURE EXCAVATION (BRIDGE) (TEMPORARY WIDENING) (NATURALLY OCCURING ASBESTOS)	135	CY
STRUCTURE EXCAVATION (TYPE Z-2) (AERIALLY DEPOSITED LEAD)	450	CY
STRUCTURE BACKFILL (BRIDGE)	1,600	CY
STRUCTURE BACKFILL (BRIDGE) (TEMPORARY WIDENING)	180	CY
STRUCTURAL CONCRETE, BRIDGE FOOTING	460	CY
STRUCTURAL CONCRETE, BRIDGE FOOTING (TEMPORARY WIDENING)	55	CY
STRUCTURAL CONCRETE, BRIDGE	2,720	CY
STRUCTURAL CONCRETE, BRIDGE (TEMPORARY WIDENING)	220	CY
STRUCTURAL CONCRETE, APPROACH SLAB (TYPE N MODIFIED)	205	CY
ARCHITECTURAL TEXTURE (FLUTED FIN)	2,770	SQFT
~~ARCHITECTURAL TREATMENT (2" THICK)~~	~~75~~	~~SQFT~~
JOINT SEAL (MR 2")	182	LF
BAR REINFORCING STEEL (BRIDGE)	1,023,000	LB
BAR REINFORCING STEEL (BRIDGE) (TEMPORARY WIDENING)	63,500	LB
CONCRETE BARRIER (TYPE 50)	472	LF
CALIFORNIA ST-10 BRIDGE RAIL (MODIFIED)	942	LF

1 **REVISED PER ADDENDUM No. 1 DATED AUGUST 13, 2009**

DESIGN	BY John E. Peterson	CHECKED Muthanna Omran	LOAD & RESISTANCE FACTOR DESIGN	LIVE LOADING: HL93 W/"LOW-BOY"; PERMIT DESIGN VEHICLE	
DETAILS	BY Tim Fairall/ Liang Ma	CHECKED Muthanna Omran	LAYOUT	BY John E. Peterson	CHECKED Muthanna Omran
QUANTITIES	BY Paotsan Wang	CHECKED Bunma Nou	SPECIFICATIONS	BY J. Corrado	PLANS AND SPECS COMPARED X

DESIGN ENGINEER

STATE OF CALIFORNIA DEPARTMENT OF TRANSPORTATION

DIVISION OF ENGINEERING SERVICES STRUCTURE DESIGN DESIGN BRANCH 16

BRIDGE NO. 34-0156 POST MILE 6.81

RUCKMAN AVENUE UC (REPLACE)
GENERAL PLAN

STRUCTURES DESIGN GENERAL PLAN SHEET (ENGLISH) (REV. 10/25/05)

ORIGINAL SCALE IN INCHES FOR REDUCED PLANS 0 1 2 3

CU 04
EA 163731

DISREGARD PRINTS BEARING EARLIER REVISION DATES

REVISION DATES: 5-06-08 5-08-08 11-10-08 11-13-08 2-26-09 3-4-09 5-18-09 6-4-09 7-11-09

SHEET 1 OF 40

FILE => 34-0156-a-gp01.add

STRUCTURES DESIGN GENERAL PLAN SHEET (ENGLISH) (REV.07-24-06)

USERNAME => trlenard DATE PLOTTED => 12-AUG-2009 TIME PLOTTED => 10:15

DIST	COUNTY	ROUTE	POST MILES TOTAL PROJECT	SHEET No	TOTAL SHEETS
04	SF	101,1	9.2/9.8, 6.8/7.1	353	567

REGISTERED CIVIL ENGINEER — DATE 6-4-09

7-20-09
PLANS APPROVAL DATE

REGISTERED PROFESSIONAL ENGINEER — AHMED M M IBRAHIM — No. S 4865 — EXP. 9-30-10 — STRUCTURAL — STATE OF CALIFORNIA

The State of California or its officers or agents shall not be responsible for the accuracy or completeness of electronic copies of this plan sheet.

NOTE:
THE CONTRACTOR SHALL VERIFY ALL CONTROLLING FIELD DIMENSIONS BEFORE ORDERING OR FABRICATING ANY MATERIAL.

PILE DATA TABLE

Location	PileType	Design Loading (kip)	Nominal Resistance		Cut-Off Elevation (ft)	Permanent Steel Casing Design Tip Elev (ft)	Design Tip Elevations (ft)	Specified Tip Elevations (ft)
			Compression	Tension				
Abut 1	24" CIDH	165	330	0	71.3	N/A	36(a)	36
Bent 2	144" CIDH (Type II) /138" CIDH (Rock Socket)	8310	20,740	0	36.0	-9	-54(a)	-54
Bent 3R	144" CIDH (Type II) /138" CIDH (Rock Socket)	5160	13,350	-2815	37.6	-121	-156(a)	-156
Bent 3L	144" CIDH (Type II) /138" CIDH (Rock Socket)	5160	13,350	-2815	37.6	-103	-146(a)	-146
Bent 4R	144" CIDH (Type II) /138" CIDH (Rock Socket)	6460	16,850	0	45.0	-30	-70(a)	-70
Bent 4L	144" CIDH (Type II) /138" CIDH (Rock Socket)	6460	16,850	0	45.0	-21	-60(a)	-60
Bent 5	138" CIDH (Rock Socket)	6420	16,700	0	66.0	N/A	6(c)	6
Bent 6	102" CIDH (Rock Socket)	4200	11,350	0	101.0	N/A	56(a)	56
Abut 7	24" CIDH (Rock Socket)	174	350	0	129.5	N/A	90(a)	90

(1) Design tip elevation is controlled by the following demands: (a) Compression, (b) Tension, (c) Lateral.
(2) The specified tip elevation shall not be raised above the design tip elevations.

INDEX TO PLANS

SHEET NO.	PLANS
1	GENERAL PLAN NO. 1
2	GENERAL PLAN NO. 2
3	INDEX TO PLANS
4	GENERAL NOTES
5	STRUCTURE EXCAVATION AND BACKFILL LIMIT
6	DECK CONTOURS NO. 1
7	DECK CONTOURS NO. 2
8	FOUNDATION PLANS NO. 1
9	FOUNDATION PLANS NO. 2
10	FOUNDATION PLANS NO. 3
11	ABUTMENT 1 LAYOUT
12	ABUTMENT 1 DETAILS NO. 1
13	ABUTMENT 1 DETAILS NO. 2
14	ABUTMENT 1 DETAILS NO. 3
15	ABUTMENT 7 LAYOUT
16	ABUTMENT 7 DETAILS NO. 1
17	ABUTMENT 7 DETAILS NO. 2
18	ABUTMENT 7 DETAILS NO. 3
19	ABUTMENT 7 RETAINING WALL LAYOUT
20	ABUTMENT 7 RETAINING WALL DETAILS NO. 1
21	ABUTMENT 7 RETAINING WALL DETAILS NO. 2
22	ABUTMENT 7 RETAINING WALL DETAILS NO. 3
23	PTFE SPHERICAL BEARING DETAILS NO.1
24	PTFE SPHERICAL BEARING DETAILS NO.2
25	BENT 2 DETAILS NO. 1
26	BENT 2 DETAILS NO. 2
27	BENT 2 DETAILS NO. 3
28	BENT 3 DETAILS NO. 1
29	BENT 3 DETAILS NO. 2
30	BENT 3 DETAILS NO. 3
31	BENT 4 DETAILS NO. 1
32	BENT 4 DETAILS NO. 2
33	BENT 4 DETAILS NO. 3
34	BENT 5 DETAILS NO. 1
35	BENT 5 DETAILS NO. 2
36	BENT 5 DETAILS NO. 3
37	BENT 6 DETAILS NO. 1
38	BENT 6 DETAILS NO. 2
39	BENT 6 DETAILS NO. 3
40	COLUMN ISOLATION DETAILS
41	TYPICAL SECTION NO. 1
42	TYPICAL SECTION NO. 2
43	TYPICAL SECTION NO. 3
44	GIRDER LAYOUT NO. 1
45	GIRDER LAYOUT NO. 2
46	GIRDER LAYOUT NO. 3
47	ADDITIONAL TOP REINFORCEMENT
48	ADDITIONAL BOTTOM REINFORCEMENT
49	GIRDER DETAILS
50	ANCHOR BLISTER DETAIL
51	TRANSVERSE PT DETAILS NO.1
52	TRANSVERSE PT DETAILS NO.2
53	HINGE LAYOUT
54	"SB" HINGE DETAILS NO. 1
55	"SB" HINGE DETAILS NO. 2
56	"SB" HINGE DETAILS NO. 3
57	"SB" HINGE DETAILS NO. 4

INDEX TO PLANS

SHEET NO.	PLANS
58	"VT" HINGE DETAILS NO. 1
59	"VT" HINGE DETAILS NO. 2
60	"VT" HINGE DETAILS NO. 3
61	"VT" HINGE DETAILS NO. 4
62	HINGE SEISMIC JOINT DETAILS NO. 1
63	HINGE SEISMIC JOINT DETAILS NO. 2
64	HINGE SEISMIC JOINT DETAILS NO. 3
65	HINGE SEISMIC JOINT DETAILS NO. 4
66	HINGE SEISMIC JOINT DETAILS NO. 5
67	HINGE SEISMIC JOINT DETAILS NO. 6
68	ABUTMENT SEISMIC JOINT DETAILS NO. 1
69	ABUTMENT SEISMIC JOINT DETAILS NO. 2
70	ABUTMENT SEISMIC JOINT DETAILS NO. 3
71	ABUTMENT SEISMIC JOINT DETAILS NO. 4
72	ABUTMENT SEISMIC JOINT DETAILS NO. 5
73	ABUTMENT SEISMIC JOINT DETAILS NO. 6
74	TEMPORARY BRIDGE WIDENING
75	STEEL FIN LAYOUT
76	STEEL FIN DETAILS NO. 1
77	STEEL FIN DETAILS NO. 2
78	DRAINAGE DETAILS NO. 1
79	DRAINAGE DETAILS NO. 2
80	DRAINAGE DETAILS NO. 3
81	DRAINAGE DETAILS NO. 4
82	LADDER DETAILS
83	SOFFIT AND TEMPORARY DECK ACCESS
84	PEDESTAL DETAILS NO. 1
85	PEDESTAL DETAILS NO. 2
86	PEDESTAL DETAILS NO. 3
87	PEDESTAL DETAILS NO. 4
88	PEDESTAL DETAILS NO. 5
89	PEDESTAL DETAILS NO. 6
90	PEDESTAL DETAILS NO. 7
91	PEDESTAL DETAILS NO. 8
92	PEDESTAL DETAILS NO. 9
93	PEDESTAL DETAILS NO. 10
94	PEDESTAL DETAILS NO. 11
95	PEDESTAL DETAILS NO. 12
96	PEDESTAL DETAILS NO. 13
97	STRUCTURE APPROACH TYPE N(30S)
98	STRUCTURE APPROACH DRAINAGE DETAILS
99	LOG OF TEST BORINGS 1 OF 16
100	LOG OF TEST BORINGS 2 OF 16
101	LOG OF TEST BORINGS 3 OF 16
102	LOG OF TEST BORINGS 4 OF 16
103	LOG OF TEST BORINGS 5 OF 16
104	LOG OF TEST BORINGS 6 OF 16
105	LOG OF TEST BORINGS 7 OF 16
106	LOG OF TEST BORINGS 8 OF 16
107	LOG OF TEST BORINGS 9 OF 16
108	LOG OF TEST BORINGS 10 OF 16
109	LOG OF TEST BORINGS 11 OF 16
110	LOG OF TEST BORINGS 12 OF 16
111	LOG OF TEST BORINGS 13 OF 16
112	LOG OF TEST BORINGS 14 OF 16
113	LOG OF TEST BORINGS 15 OF 16
114	LOG OF TEST BORINGS 16 OF 16

STANDARD PLANS DATED MAY 2006

PLAN	PLAN TITLE
A10A	ACRONYMS AND ABBREVIATIONS (A-L)
A10B	ACRONYMS AND ABBREVIATIONS (M-Z)
A62C	LIMITS OF PAYMENT FOR EXCAVATION AND BACKFILL-BRIDGE
T-3	TEMPORARY RAILING (TYPE K)
B0-1	BRIDGE DETAILS
B0-3	BRIDGE DETAILS
B0-5	BRIDGE DETAILS
B0-13	BRIDGE DETAILS
B2-3	16" AND 24" CAST-IN-DRILLED-HOLE CONCRETE PILE
B3-1	RETAINING WALL TYPE 1 - H = 4' THROUGH 30'
B3-8	RETAINING WALL TYPE 1 - H = 32' THROUGH 36'
B6-21	JOINT SEALS (MAXIMUM MOVEMENT RATING=2")
B7-1	BOX GIRDER DETAILS
B7-6	DECK DRAINS - TYPES D-1 AND D-2
B7-8	DECK DRAINAGE DETAILS
B7-11	UTILITY DETAILS
B8-5	CAST-IN-PLACE PRESTRESSED GIRDER DETAILS
B11-68	CALIFORNIA ST-10 BRIDGE RAIL (SHEET 1 OF 3)
B11-69	CALIFORNIA ST-10 BRIDGE RAIL (SHEET 2 OF 3)
B11-70	CALIFORNIA ST-10 BRIDGE RAIL (SHEET 3 OF 3)
ES-6A	LIGHTING STANDARDS TYPES 15, 21 AND 22
ES-6B	ELECTRICAL SYSTEMS (LIGHTING STANDARDS TYPES 15 AND 21, BARRIER RAIL MOUNTED DETAILS)
S-10	OVERHEAD SIGNS -TRUSS, TWO POST TYPE - BASE PLATE AND ANCHORAGE DETAILS

PRESIDIO VIADUCT (SB) #34-0157L QUANTITIES

BRIDGE REMOVAL, LOCATION A	LUMP	SUM
STRUCTURE EXCAVATION (BRIDGE)	600	CY
(NATURALLY OCCURING ASBESTOS)		
STRUCTURE EXCAVATION (BRIDGE)(SERPENTINE)	125	CY
STRUCTURE EXCAVATION (RETAINING WALL)	260	CY
(NATURALLY OCCURING ASBESTOS)		
STRUCTURE EXCAVATION (TYPE Z-2)	340	CY
(AERIALLY DEPOSITED LEAD)		
STRUCTURE BACKFILL (BRIDGE)	430	CY
STRUCTURE BACKFILL (RETAINING WALL)	350	CY
(NATURALLY OCCURING ASBESTOS)	485	LF
144" PERMANENT STEEL CASING		
24" CAST-IN-DRILLED-HOLE CONCRETE PILING	918	LF
144" CAST-IN-DRILLED-HOLE CONCRETE PILING	485	LF
24" CAST-IN-DRILLED-HOLE CONCRETE	790	LF
PILING (ROCK SOCKET)		
102" CAST-IN-DRILLED-HOLE CONCRETE	45	LF
PILING (ROCK SOCKET)		
138" CAST-IN-DRILLED-HOLE CONCRETE	262	LF
PILING(ROCK SOCKET)		
PRESTRESSING CAST-IN-PLACE CONCRETE	LUMP	SUM
PRESTRESSING CAST-IN-PLACE CONCRETE	LUMP	SUM
(TRANSVERSE)		
PRESTRESSING CAST-IN-PLACE CONCRETE	LUMP	SUM
(HS BARS)		
STRUCTURAL CONCRETE, BRIDGE FOOTING	160	CY
STRUCTURAL CONCRETE, BRIDGE	9,900	CY
STRUCTURAL CONCRETE, RETAINING WALL	170	CY
STRUCTURAL CONCRETE, APPROACH SLAB	60	CY
(TYPE N)		
1 ~~ARCHITECTURAL TREATMENT (2" THICK)~~	~~2,160~~	~~SQFT~~
PTFE SPHERICAL BEARING	12	EA
SEISMIC JOINT (ABUTMENT 1)	LUMP	SUM
SEISMIC JOINT (ABUTMENT 7)	LUMP	SUM
SEISMIC JOINT (HINGE 1)	LUMP	SUM
BAR REINFORCING STEEL (BRIDGE)	4,392,000	LB
BAR REINFORCING STEEL (RETAINING WALL)	13,000	LB
HEADED BAR REINFORCEMENT	14,000	EA
STRUCTURAL STEEL (BRIDGE)	680,000	LB
CLEAN AND PAINT STRUCTURAL STEEL	LUMP	SUM
ISOLATION CASING	18,700	LB
MISCELLANEOUS METAL (BRIDGE)	16,800	LB
BRIDGE DECK DRAINAGE SYSTEM	19,400	LB
BRIDGE DECK DRAINAGE SYSTEM (TEMPORARY)	25,000	LB
CALIFORNIA ST-10 BRIDGE RAIL (MODIFIED)	2,008	LF

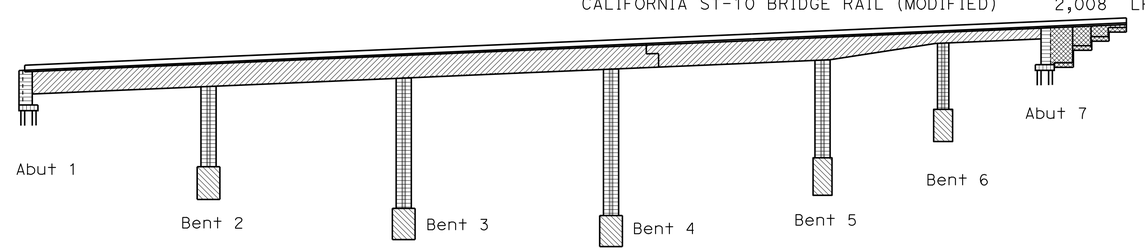

STANDARD PLAN SHEET NO.
DETAIL NO.

Structural Concrete, Bridge (f'c = 5 ksi : @ 28 days)
Structural Concrete, Bridge (f'c = 5 ksi : @ 28 days)
Structural Concrete, Bridge Footing (f'c = 4 ksi : @ 28 days)
Structural Concrete, Pile (f'c = 4 ksi : @ 28 days)
Structural Concrete, Retaining Wall (f'c = 4 ksi : @ 28 days)

CONCRETE STRENGTH AND TYPE LIMITS

No Scale

1 REVISED PER ADDENDUM No. 1 DATED AUGUST 13, 2009

	BY	CHECKED
DESIGN	Q.Zhao/P.Norboe/R.Bromenschenkel	T. Skreslet
DETAILS	Jeff Thorne	Q.Zhao/P.Norboe/R.Bromenschenkel
QUANTITIES	A. Alcantara	J. Han

STATE OF CALIFORNIA
DEPARTMENT OF TRANSPORTATION

DIVISION OF ENGINEERING SERVICES
STRUCTURE DESIGN
DESIGN BRANCH 4

BRIDGE NO. 34-0157L
POST MILE 9.02

PRESIDIO VIADUCT - LEFT
INDEX TO PLANS

STRUCTURES DESIGN DETAIL SHEET (ENGLISH) (REV. 10/25/05)

ORIGINAL SCALE IN INCHES FOR REDUCED PLANS 0 1 2 3

CU 04242
EA 163731

DISREGARD PRINTS BEARING EARLIER REVISION DATES

REVISION DATES: 4-16-09, 7-7-09, 7-9-09, 5-18-09, 5-20-09, 5-24-09, 5-26-09, 5-30-09, 6-12-09

SHEET 3 OF 114

FILE => 34-0157l-aa-ltp.add

USERNAME => rtrenard DATE PLOTTED => 12-AUG-2009 TIME PLOTTED => 10:15

DIST	COUNTY	ROUTE	POST MILES TOTAL PROJECT	SHEET No	TOTAL SHEETS
04	SF	101,1	9.2/9.8, 6.8/7.1	434	567

Robert B. Giorgis Jr. 6-15-09
REGISTERED CIVIL ENGINEER DATE

7-20-09
PLANS APPROVAL DATE

REGISTERED PROFESSIONAL ENGINEER ROBERT B. GIORGIS JR. No. C60705 Exp. 12/31/10 CIVIL STATE OF CALIFORNIA

The State of California or its officers or agents shall not be responsible for the accuracy or completeness of electronic copies of this plan sheet.

1

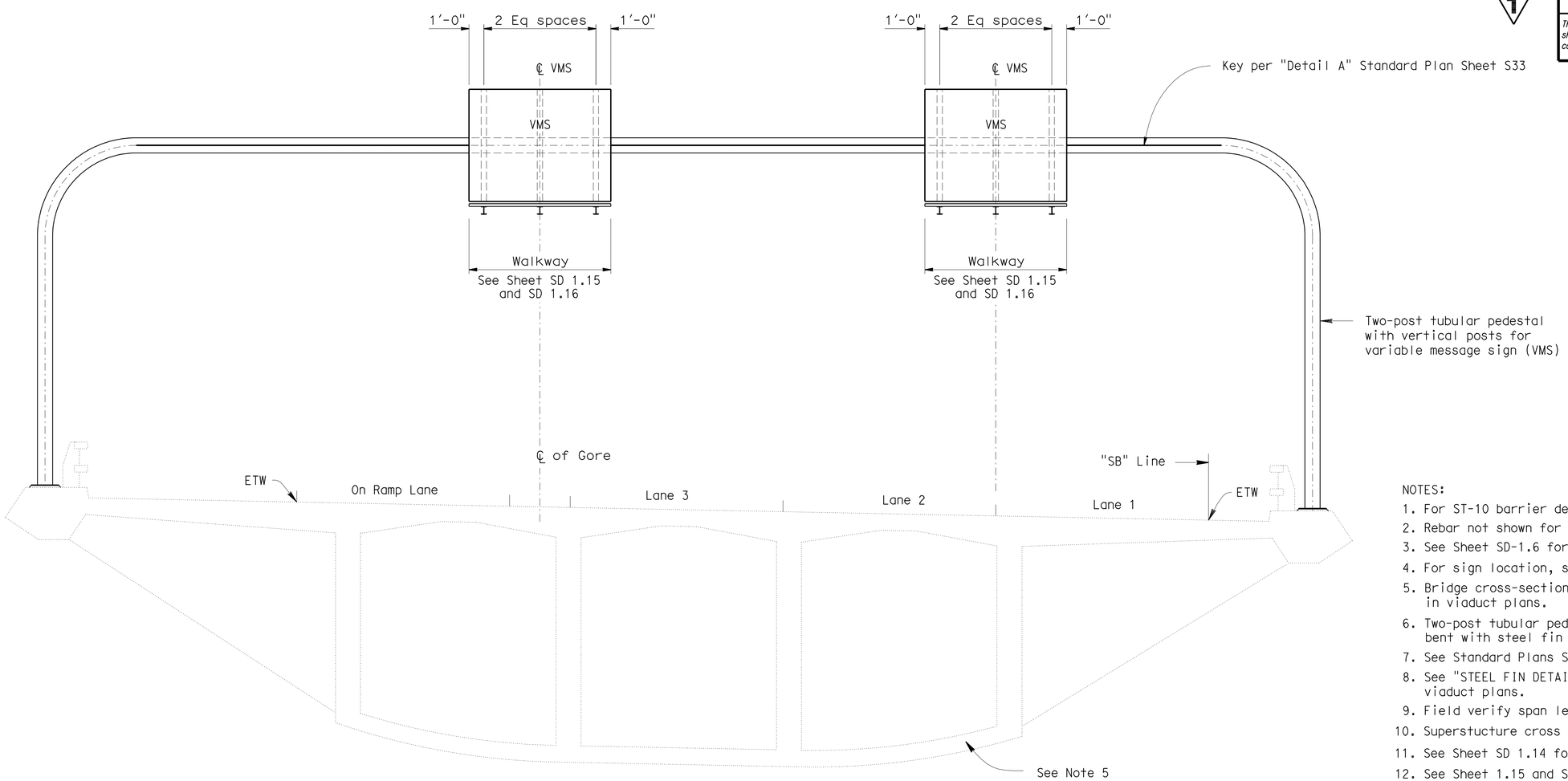

PEDESTAL FOR TWO-POST TUBULAR WITH VMS PRESIDIO VIADUCT AT VT LINE STA 111+80

NO SCALE

NOTES:
1. For ST-10 barrier details see Viaduct plans.
2. Rebar not shown for clarity.
3. See Sheet SD-1.6 for two-post tubular sign structure anchorage.
4. For sign location, see "ROAD PLANS".
5. Bridge cross-section details not shown. See "TYPICAL SECTION" in viaduct plans.
6. Two-post tubular pedestal must be located at centerline of bent with steel fin at centerline of bent.
7. See Standard Plans S30 to S34 for additional sign details.
8. See "STEEL FIN DETAILS" and SD 1.9 for fin details in viaduct plans.
9. Field verify span length.
10. Superstructure cross slope not shown.
11. See Sheet SD 1.14 for VMS to two post tubular sign details.
12. See Sheet 1.15 and SD 1.16 for VMS to two post tubular sign connection.
13. See Sheet 1.17 for VMS controller assembly amd mounting
14. See Road Plans for sign structure and related items quantities.
15. Sign structure shall be galvanized and painted.

NOTE:
THE CONTRACTOR SHALL VERIFY ALL CONTROLLING FIELD DIMENSIONS BEFORE ORDERING OR FABRICATING ANY MATERIAL.

1 REVISED PER ADDENDUM No. 1 DATED AUGUST 13, 2009

PEDESTAL TWO-POST TUBULAR WITH VARIABLE MESSAGE SIGN (VMS)

SD 1.1

Jeffrey B Woody
BRANCH CHIEF

DESIGN	BY M O'LEARY	CHECKED JOHN DATILES	
DETAILS	BY A R DUDSAK	CHECKED M O'LEARY	
QUANTITIES	BY D VORA	CHECKED JOHN DATILES	

STATE OF CALIFORNIA
DEPARTMENT OF TRANSPORTATION

DIVISION OF ENGINEERING SERVICES
STRUCTURE DESIGN
SPECIAL DESIGNS BRANCH

BRIDGE NO. 34-0157L
POST MILE X

PRESIDIO VIADUCT - LEFT
PEDESTAL DETAILS NO. 1

STRUCTURES DESIGN SPECIAL DESIGN SHEET (ENGLISH) (REV. 10-25-05)

ORIGINAL SCALE IN INCHES FOR REDUCED PLANS 0 1 2 3

CU 04
EA 163731

DISREGARD PRINTS BEARING EARLIER REVISION DATES
REVISION DATES: 5/14/09 5/18/09 6-12-09 7-15-09 7-30-09

SHEET 84 OF 114

FILE => 04_163731_sd1.1.add

USERNAME => trlenard DATE PLOTTED => 12-AUG-2009 TIME PLOTTED => 10:15

DIST	COUNTY	ROUTE	POST MILES TOTAL PROJECT	SHEET No	TOTAL SHEETS
04	SF	101,1	9.2/9.8, 6.8/7.1	435	567

Robert B. Giorgis Jr. 6-15-09
REGISTERED CIVIL ENGINEER DATE

7-20-09
PLANS APPROVAL DATE

REGISTERED PROFESSIONAL ENGINEER ROBERT B. GIORGIS JR. No. C60705 Exp. 12/31/10 CIVIL STATE OF CALIFORNIA

The State of California or its officers or agents shall not be responsible for the accuracy or completeness of electronic copies of this plan sheet.

1

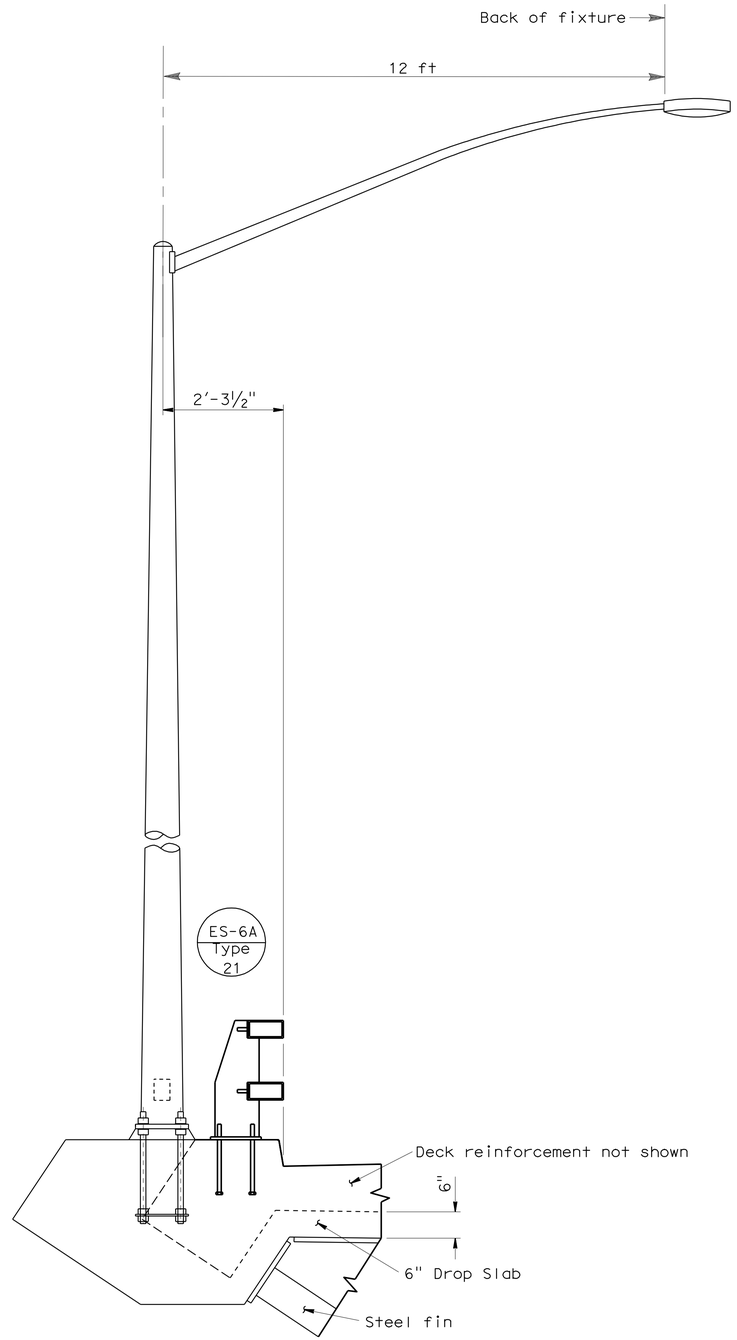

PEDESTAL TYPE 21 PRESIDIO VIADUCT

NO SCALE

Notes:

1. Rebar not shown for clarity - See Sheet SD-1.7.
2. For ST-10 Barrier details see "Viaduct Plans".
3. See Sheet SD 1.8 for Type 21 Anchorage details.
4. For Type 21 locations see "Road Plans".
5. Type 21 must be located at steel fin.

NOTE:
THE CONTRACTOR SHALL VERIFY ALL CONTROLLING FIELD DIMENSIONS BEFORE ORDERING OR FABRICATING ANY MATERIAL.

1 **REVISED PER ADDENDUM No. 1 DATED AUGUST 13, 2009**

PEDESTAL TYPE 21 LIGHTING STANDARD

SD 1.2

Jeffrey B Woody
BRANCH CHIEF

	BY	CHECKED
DESIGN	M O'LEARY	JOHN DATILES
DETAILS	T. ZOLNIKOVA	M O'LEARY
QUANTITIES	M O'LEARY	JOHN DATILES

STATE OF CALIFORNIA
DEPARTMENT OF TRANSPORTATION

DIVISION OF ENGINEERING SERVICES
STRUCTURE DESIGN
SPECIAL DESIGNS BRANCH

BRIDGE NO. 34-0157L
POST MILE X

PRESIDIO VIADUCT - LEFT
PEDESTAL DETAILS NO. 2

STRUCTURES DESIGN SPECIAL DESIGN SHEET (ENGLISH) (REV. 10-25-05)

ORIGINAL SCALE IN INCHES FOR REDUCED PLANS 0 1 2 3

CU 04
EA 163731

DISREGARD PRINTS BEARING EARLIER REVISION DATES

REVISION DATES: 5-14-09 6-12-09 7-20-09 7-24-09

SHEET 85 OF 114

FILE => 04_163731_sd1.2.dgn

USERNAME => trienard DATE PLOTTED => 12-AUG-2009 TIME PLOTTED => 10:15

DIST	COUNTY	ROUTE	POST MILES TOTAL PROJECT	SHEET No	TOTAL SHEETS
04	SF	101,1	9.2/9.8, 6.8/7.1	436	567

Robert B Giorgis 6-15-09
REGISTERED CIVIL ENGINEER DATE

7-20-09
DATE

REGISTERED PROFESSIONAL ENGINEER ROBERT B. GIORGIS JR. No. C60705 Exp. 12/31/10 CIVIL STATE OF CALIFORNIA

The State of California or its officers or agents shall not be responsible for the accuracy or completeness of electronic copies of this plan sheet.

1

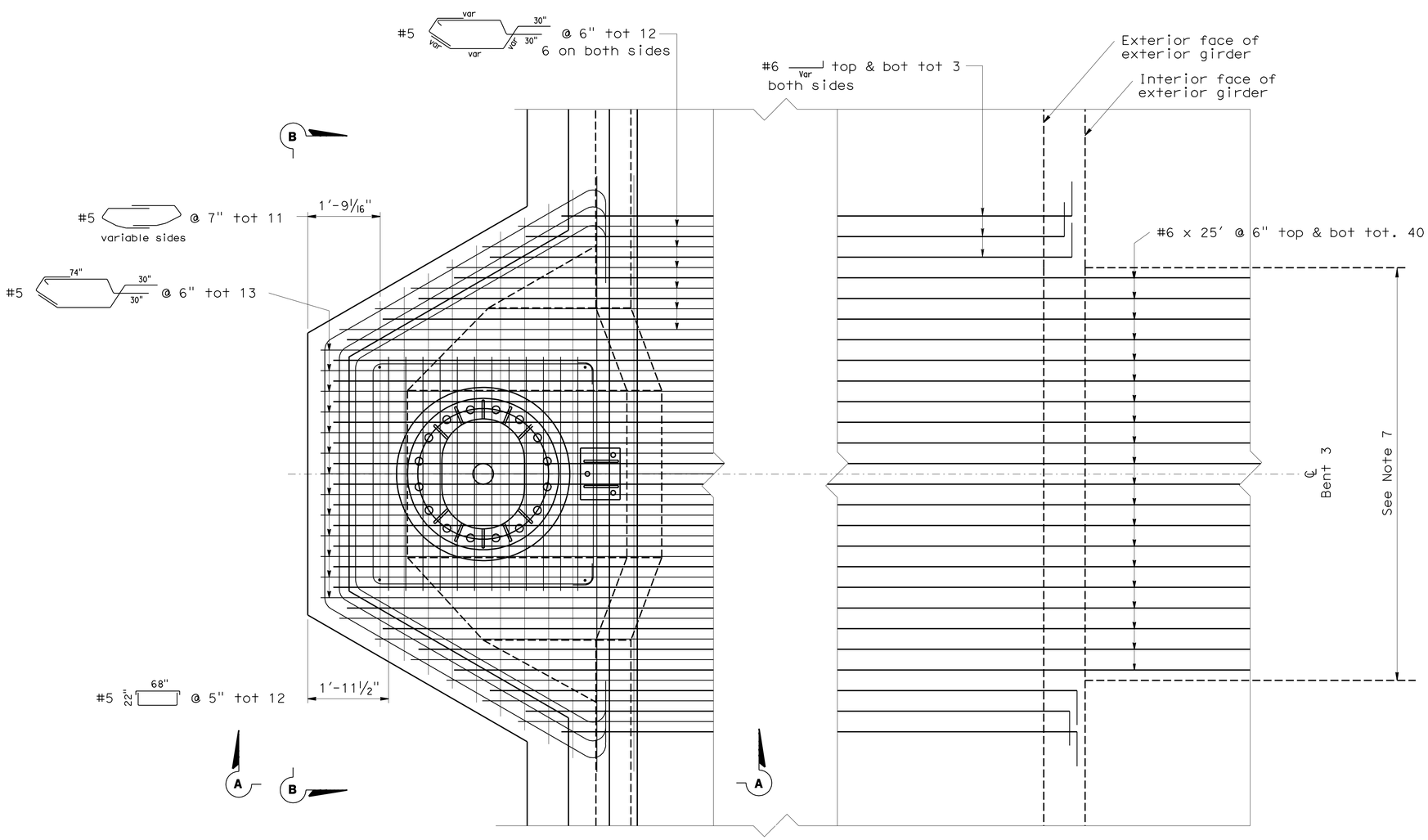

Note: Unmodified edge beam rebar and ST-10 rail anchorage shown in "Detail B" of "TYPICAL SECTION NO. 3" of PRESIDIO VIADUCT - LEFT is not included for clarity

PLAN VIEW

Notes:

1. 2" cover on pedestal rebar.
2. f'_c = 5000 psi.
3. Barrier not shown for clarity.
4. Deck rebar not shown.
5. Transverse deck rebar and prestressing ducts not shown for clarity
6. 25 foot bars extend into bent cap with cover to match deck rebar.
7. For physical dimensions of pedestal see Sheets SD 1.10 and SD 1.11.
8. See Sheet SD 1.6 for base plate and anchorage details.
9. Steel fin not shown for clarity.
10. See sheet SD 1.14 for sign stucture details.
11. See Sheet SD 1.4 for View A-A.

NOTE:
THE CONTRACTOR SHALL VERIFY ALL CONTROLLING FIELD DIMENSIONS BEFORE ORDERING OR FABRICATING ANY MATERIAL.

1 **REVISED PER ADDENDUM No. 1 DATED AUGUST 13, 2009**

PEDESTAL FOR TWO-POST TUBULAR DETAILS 1

NO SCALE

SD 1.3

Jeffrey B Woody
BRANCH CHIEF

	BY	CHECKED
DESIGN	BOB GIORGIS	JOHN DATILES
DETAILS	D W JUSTICE Jr	BOB GIORGIS
QUANTITIES	M O'LEARY	JOHN DATILES

STATE OF CALIFORNIA
DEPARTMENT OF TRANSPORTATION

DIVISION OF ENGINEERING SERVICES
STRUCTURE DESIGN
SPECIAL DESIGNS BRANCH

BRIDGE NO. 34-0157L
POST MILE X

PRESIDIO VIADUCT - LEFT
PEDESTAL DETAILS NO. 3

STRUCTURES DESIGN SPECIAL DESIGN SHEET (ENGLISH) (REV. 10-25-05)

ORIGINAL SCALE IN INCHES FOR REDUCED PLANS 0 1 2 3

CU 04
EA 163731

DISREGARD PRINTS BEARING EARLIER REVISION DATES

REVISION DATES: 5-11-09 5-28-09 6-2-09 6-8-09 6-11-09 7-20-09 7-30-09

SHEET 86 OF 114

FILE => 04_163731_sd1.3.add

USERNAME => trlenard DATE PLOTTED => 12-AUG-2009 TIME PLOTTED => 10:15

DIST	COUNTY	ROUTE	POST MILES TOTAL PROJECT	SHEET No	TOTAL SHEETS
04	SF	101,1	9.2/9.8, 6.8/7.1	437	567

Robert B Giorgis 6-15-09
REGISTERED CIVIL ENGINEER DATE

7-20-09
PLANS APPROVAL DATE

REGISTERED PROFESSIONAL ENGINEER ROBERT B. GIORGIS JR. No. C60705 Exp. 12/31/10 CIVIL STATE OF CALIFORNIA

The State of California or its officers or agents shall not be responsible for the accuracy or completeness of electronic copies of this plan sheet.

1

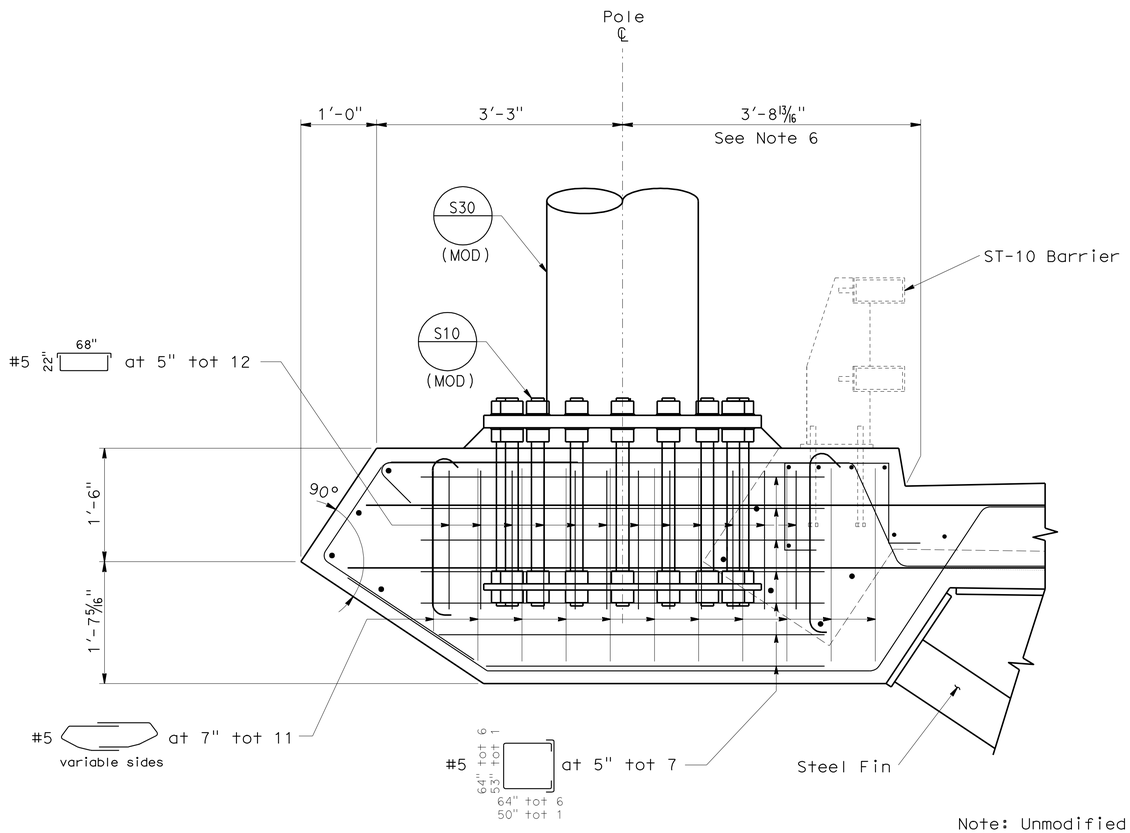

Note: Unmodified transverse edge beam rebar and ST-10 rail anchorage shown in "Detail B" of "TYPICAL SECTION NO. 3" of PRESIDIO VIADUCT - LEFT is not included for clarity.

VIEW A-A

Notes:

1. 2" cover on pedestal rebar.
2. f'_c = 5000 psi.
3. For ST-10 Barrier details see "Viaduct Plans".
4. Transverse deck rebar and prestressing ducts not shown for clarity.
5. See Sheet SD 1.6 for anchorage details not shown.
6. One pedestal shall be placed on each side of Viaduct at Bent 3 ℄.
7. For Steel Fin details see "STEEL FIN DETAILS" and SD 1.9.
8. See Sheet SD 1.14 for pole details.

NOTE:
THE CONTRACTOR SHALL VERIFY ALL CONTROLLING FIELD DIMENSIONS BEFORE ORDERING OR FABRICATING ANY MATERIAL.

1 **REVISED PER ADDENDUM No. 1 DATED AUGUST 13, 2009**

PEDESTAL FOR TWO-POST TUBULAR DETAILS 2
NO SCALE
SD 1.4

Jeffrey B Woody
BRANCH CHIEF

	BY	CHECKED
DESIGN	BOB GIORGIS	JOHN DATILES
DETAILS	D W JUSTICE Jr	BOB GIORGIS
QUANTITIES	M O'LEARY	JOHN DATILES

STATE OF CALIFORNIA
DEPARTMENT OF TRANSPORTATION

DIVISION OF ENGINEERING SERVICES
STRUCTURE DESIGN
SPECIAL DESIGNS BRANCH

BRIDGE NO. 34-0157L
POST MILE X

PRESIDIO VIADUCT - LEFT
PEDESTAL DETAILS NO. 4

STRUCTURES DESIGN SPECIAL DESIGN SHEET (ENGLISH) (REV. 10-25-05)

ORIGINAL SCALE IN INCHES FOR REDUCED PLANS 0 1 2 3

CU 04
EA 163731

DISREGARD PRINTS BEARING EARLIER REVISION DATES

REVISION DATES: 5/11/09 5/18/09 6/4/09 6/8/09 6/17/09 7-20-09 7-24-09

SHEET 87 OF 114

FILE => 04_163731_sd1.4.add

USERNAME => friehard DATE PLOTTED => 12-AUG-2009 TIME PLOTTED => 10:15

DIST	COUNTY	ROUTE	POST MILES TOTAL PROJECT	SHEET No	TOTAL SHEETS
04	SF	101,1	9.2/9.8, 6.8/7.1	438	567

Robert B. Giorgis Jr. 6-15-09
REGISTERED CIVIL ENGINEER DATE

7-20-09
DATE

REGISTERED PROFESSIONAL ENGINEER ROBERT B. GIORGIS JR. No. C60705 Exp. 12/31/10 CIVIL STATE OF CALIFORNIA

The State of California or its officers or agents shall not be responsible for the accuracy or completeness of electronic copies of this plan sheet.

1

Notes:

1. 2" cover on pedestal rebar.
2. f'_c = 5000 psi.
3. Barrier and tubular post not shown for clarity.
4. Deck rebar not shown for clarity.
5. See Sheet SD 1.6 for anchorage details not shown.
6. Steel fin not shown for clarity.
7. See Sheet SD 1.14 for Pole details.

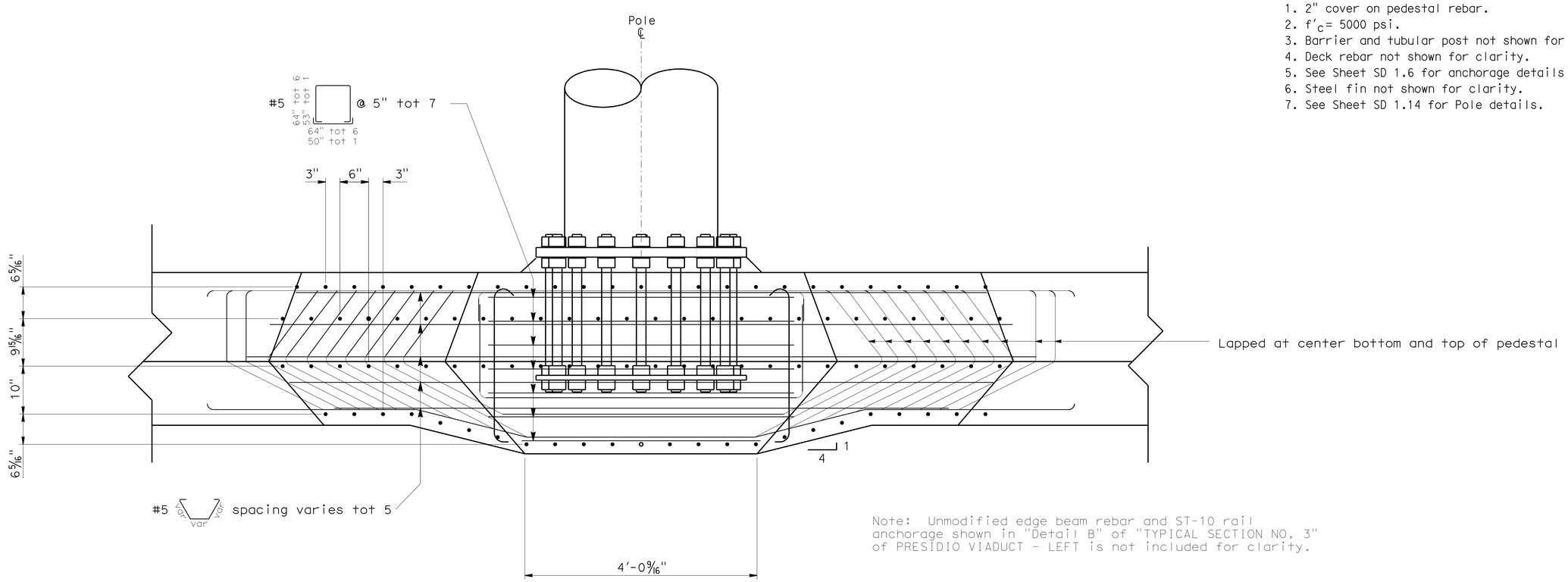

Note: Unmodified edge beam rebar and ST-10 rail anchorage shown in "Detail B" of "TYPICAL SECTION NO. 3" of PRESIDIO VIADUCT - LEFT is not included for clarity.

VIEW B-B

NOTE:
THE CONTRACTOR SHALL VERIFY ALL CONTROLLING FIELD DIMENSIONS BEFORE ORDERING OR FABRICATING ANY MATERIAL.

1 **REVISED PER ADDENDUM No. 1 DATED AUGUST 13, 2009**

PEDESTAL FOR TWO-POST TUBULAR DETAILS 3
NO SCALE
SD 1.5

Jeffrey B Woody
BRANCH CHIEF

	BY	CHECKED
DESIGN	BOB GIORGIS	JOHN DATILES
DETAILS	D W JUSTICE Jr	BOB GIORGIS
QUANTITIES	M O'LEARY	JOHN DATILES

STATE OF CALIFORNIA
DEPARTMENT OF TRANSPORTATION

DIVISION OF ENGINEERING SERVICES
STRUCTURE DESIGN
SPECIAL DESIGNS BRANCH

BRIDGE NO. 34-0157L
POST MILE X

PRESIDIO VIADUCT - LEFT
PEDESTAL DETAILS NO. 5

STRUCTURES DESIGN SPECIAL DESIGN SHEET (ENGLISH) (REV. 10-25-05)

ORIGINAL SCALE IN INCHES FOR REDUCED PLANS 0 1 2 3

CU 04
EA 163731

DISREGARD PRINTS BEARING EARLIER REVISION DATES

REVISION DATES: 5-14-09 5-19-09 6-3-09 6-8-09 6-17-09 7-20-09 7-30-09

SHEET 88 OF 114

FILE => 04_163731_sd1.5.add

USERNAME => tfrienard DATE PLOTTED => 12-AUG-2009 TIME PLOTTED => 10:16

DIST	COUNTY	ROUTE	POST MILES TOTAL PROJECT	SHEET No	TOTAL SHEETS
04	SF	101,1	9.2/9.8, 6.8/7.1	439	567

Robert B. Giorgis Jr. 6-15-09
REGISTERED CIVIL ENGINEER DATE

7-20-09
PLANS APPROVAL DATE

REGISTERED PROFESSIONAL ENGINEER ROBERT B. GIORGIS JR. No. C60705 Exp. 12/31/10 CIVIL STATE OF CALIFORNIA

The State of California or its officers or agents shall not be responsible for the accuracy or completeness of electronic copies of this plan sheet.

1

TWO POST TUBULAR ANCHORAGE (MOD)

POST TYPE	PIPE			BASE PLATE OD AND THICKNESS	ANCHOR		
	NPS	THICKNESS	SPLIT		BOLT CIRCLE	BOLT TOTALS AND DIA	LENGTH
II	24	1/2"	8"	3'-8" x 2"	3'-2"	16 - 2"	3'-2 1/2"

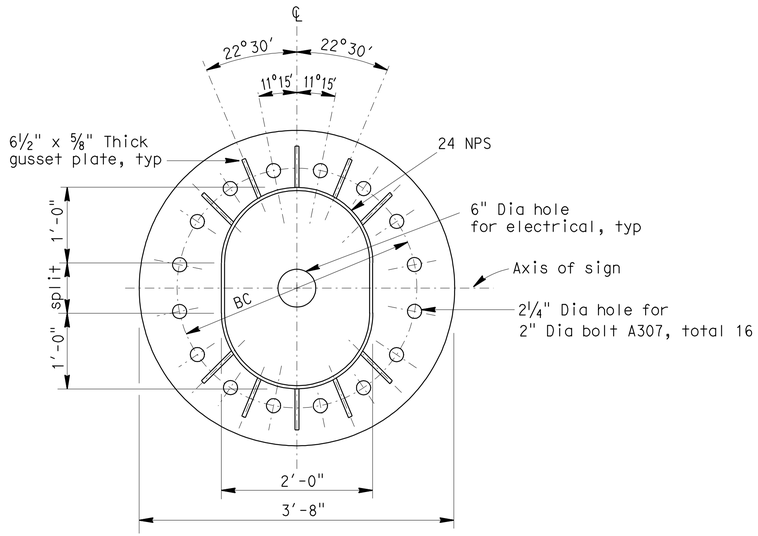

BASE PLATE 16 BOLTS (MODIFIED)

NO SCALE

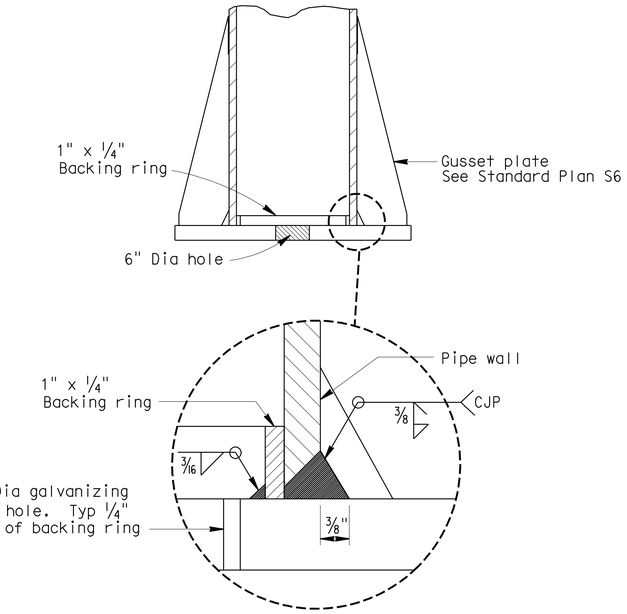

POST TO BASE PLATE CONNECTION DETAIL

NO SCALE

Type V-S shown

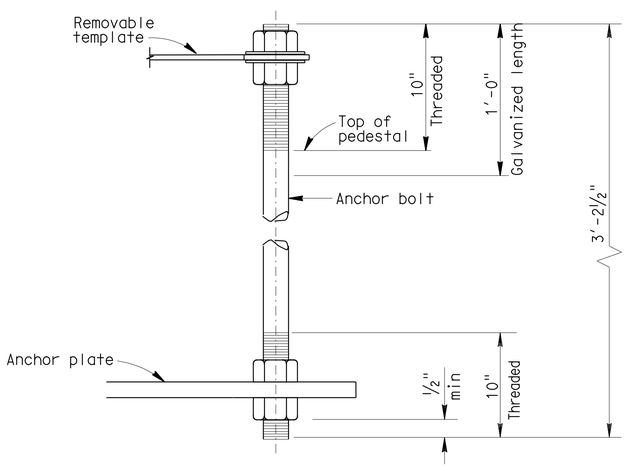

ANCHOR BOLT ASSEMBLY (MODIFIED)

Note: One bolt shown only. Other bolts same configuration around pipe sleeve. Template to match base plate anchor bolt pattern.

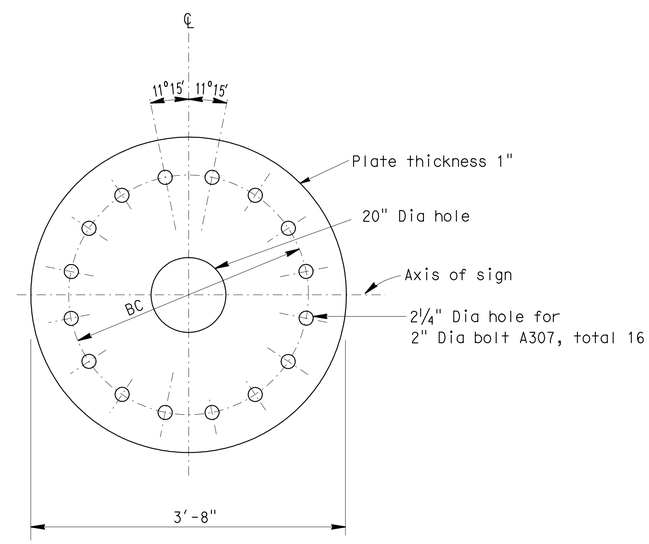

ANCHOR PLATE 16 BOLTS (MODIFIED)

Type V-S shown

Notes:

1. See Standard Plan S9 for Mortar Pad Details - Use 45° for sides.
2. For details not shown, see Standard Plan S10

NOTE:
THE CONTRACTOR SHALL VERIFY ALL CONTROLLING FIELD DIMENSIONS BEFORE ORDERING OR FABRICATING ANY MATERIAL.

1 REVISED PER ADDENDUM No. 1 DATED AUGUST 13, 2009

TWO-POST TUBULAR ANCHORAGE STD PLAN S10 (MODIFIED)

NO SCALE

SD 1.6

Jeffrey B Woody
BRANCH CHIEF

	BY	CHECKED
DESIGN	M O'LEARY	BOB GIORGIS
DETAILS	A R DUDSAK	M O'LEARY
QUANTITIES	M O'LEARY	JOHN DATILES

STATE OF CALIFORNIA DEPARTMENT OF TRANSPORTATION

DIVISION OF ENGINEERING SERVICES STRUCTURE DESIGN
SPECIAL DESIGNS BRANCH

BRIDGE NO. 34-0157L
POST MILE X

PRESIDIO VIADUCT - LEFT
PEDESTAL DETAILS NO. 6

STRUCTURES DESIGN SPECIAL DESIGN SHEET (ENGLISH) (REV. 10-25-05)

ORIGINAL SCALE IN INCHES FOR REDUCED PLANS 0 1 2 3

CU 04
EA 163731

DISREGARD PRINTS BEARING EARLIER REVISION DATES

REVISION DATES: 5-13-09 5-14-09 6-12-09 7-14-09 7-30-09

SHEET 89 OF 114

FILE => 04_163731_sd1.6.add

USERNAME => trlenard DATE PLOTTED => 12-AUG-2009 TIME PLOTTED => 10:16

DIST	COUNTY	ROUTE	POST MILES TOTAL PROJECT	SHEET No	TOTAL SHEETS
04	SF	101,1	9.2/9.8, 6.8/7.1	440	567

Robert B. Giorgis Jr. 6-15-09
REGISTERED CIVIL ENGINEER DATE

7-20-09
PLANS APPROVAL DATE

REGISTERED PROFESSIONAL ENGINEER ROBERT B. GIORGIS JR. No. C60705 Exp. 12/31/10 CIVIL STATE OF CALIFORNIA

The State of California or its officers or agents shall not be responsible for the accuracy or completeness of electronic copies of this plan sheet.

1

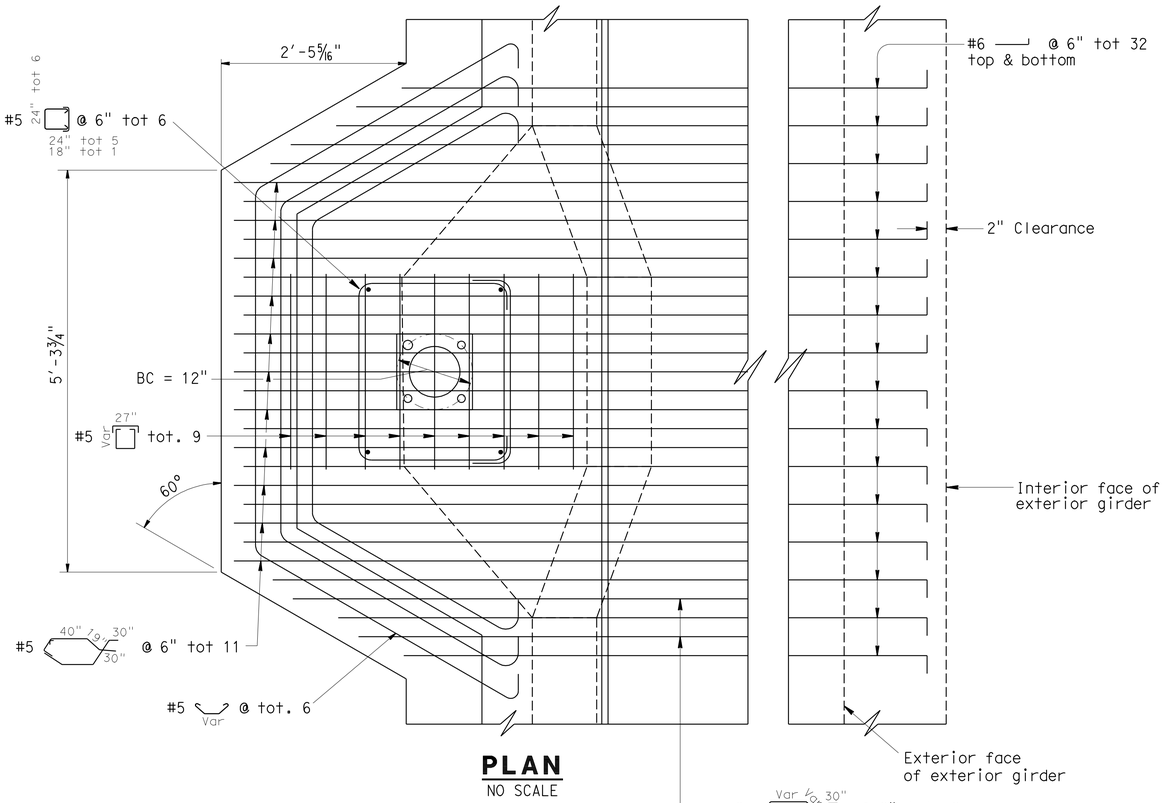

PLAN
NO SCALE

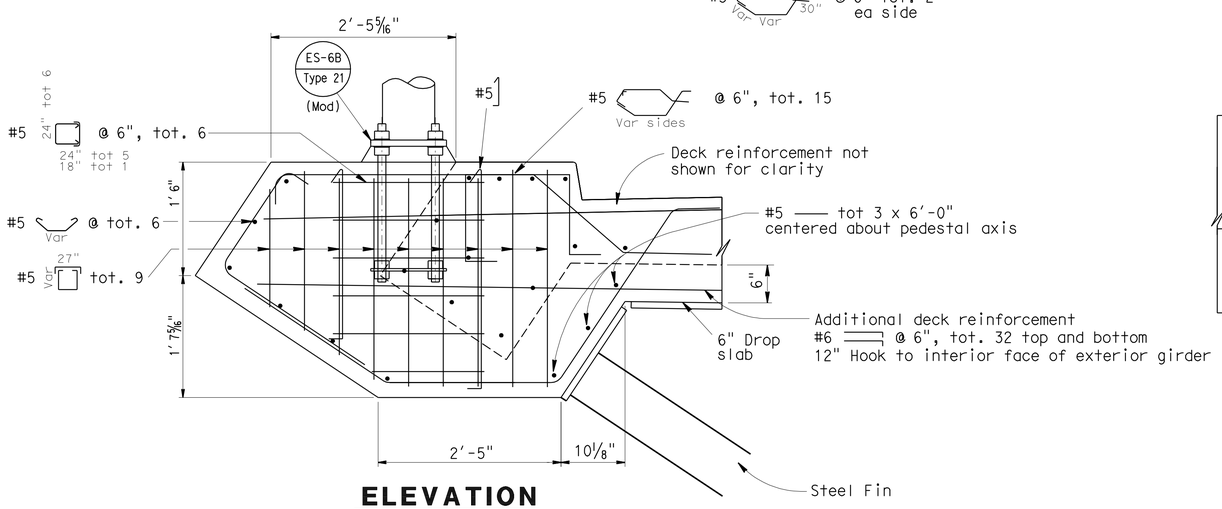

ELEVATION
NO SCALE

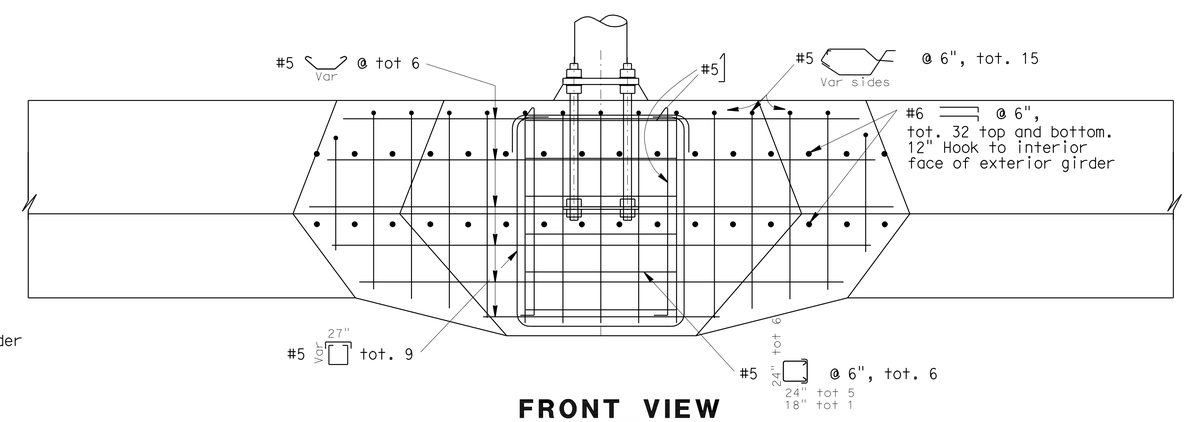

FRONT VIEW
NO SCALE

Notes:

1. Use 45° for mortar pad sides.
2. 2" cover for pedestal rebar.
3. f'_c = 5,000 psi.
4. Unmodified edge beam rebar and ST-10 rail anchorage shown in "Detail B" of "TYPICAL SECTION NO. 3" of PRESIDIO VIADUCT - LEFT is not shown

NOTE:
THE CONTRACTOR SHALL VERIFY ALL CONTROLLING FIELD DIMENSIONS BEFORE ORDERING OR FABRICATING ANY MATERIAL.

1 **REVISED PER ADDENDUM No. 1 DATED AUGUST 13, 2009**

PEDESTAL FOR TYPE 21 LIGHTING STANDARD DETAILS

SD 1.7

Jeffrey B Woody
BRANCH CHIEF

	BY	CHECKED
DESIGN	JOHN DATILES	M O'LEARY
DETAILS	D W JUSTICE Jr	M O'LEARY
QUANTITIES	M O'LEARY	JOHN DATILES

STATE OF CALIFORNIA
DEPARTMENT OF TRANSPORTATION

DIVISION OF ENGINEERING SERVICES
STRUCTURE DESIGN
SPECIAL DESIGNS BRANCH

BRIDGE NO. 34-0157L
POST MILE X

PRESIDIO VIADUCT - LEFT
PEDESTAL DETAILS NO. 7

STRUCTURES DESIGN SPECIAL DESIGN SHEET (ENGLISH) (REV. 10-25-05)

ORIGINAL SCALE IN INCHES FOR REDUCED PLANS 0 1 2 3

CU 04
EA 163731

DISREGARD PRINTS BEARING EARLIER REVISION DATES

REVISION DATES: 5/15-09 5/19-09 6/1-09 6/8-09 7-20-09 7-30-09

SHEET 90 OF 114

FILE => 04_163731_sd1.7.dgn

USERNAME => friemard DATE PLOTTED => 12-AUG-2009 TIME PLOTTED => 10:16

DIST	COUNTY	ROUTE	POST MILES TOTAL PROJECT	SHEET No	TOTAL SHEETS
04	SF	101,1	9.2/9.8, 6.8/7.1	441	567

Robert B. Giorgis Jr. 6-15-09
REGISTERED CIVIL ENGINEER DATE

7-20-09
PLANS APPROVAL DATE

REGISTERED PROFESSIONAL ENGINEER ROBERT B. GIORGIS JR. No. C60705 Exp. 12/31/10 CIVIL STATE OF CALIFORNIA

The State of California or its officers or agents shall not be responsible for the accuracy or completeness of electronic copies of this plan sheet.

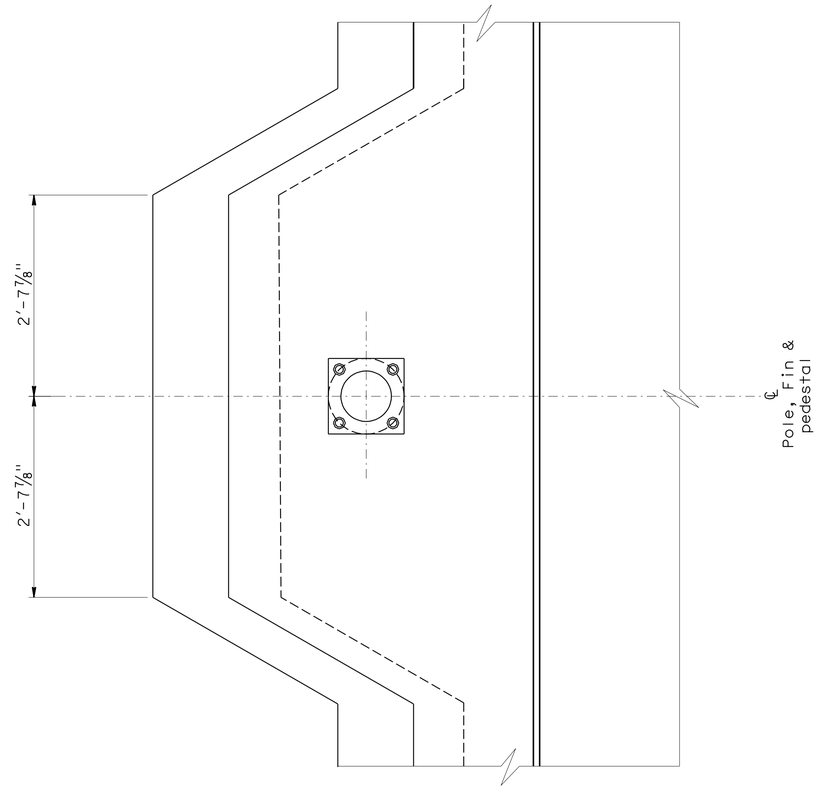

NOTES:

1. Steel fin not shown.
2. For steel fin details see "STEEL FIN DETAILS" in Viaduct Plans and SD 1.9.
3. See Std Plan ES-6A and ES-6B for additional anchorage information for Type 21.
4. Barrier not shown.
5. For bottom contour of Type 21 pedestal see Sheet SD 1.12.

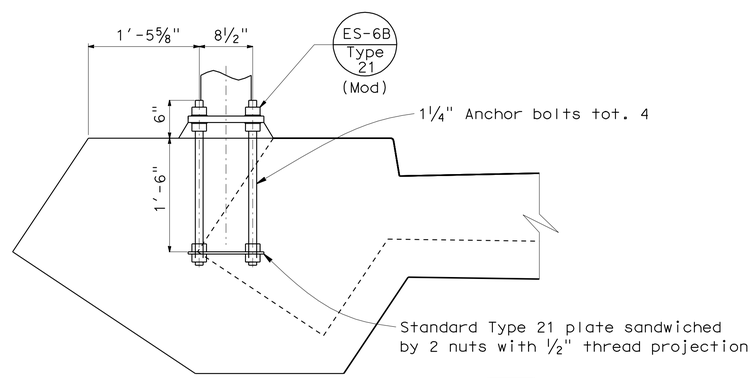

1

TYPE 21 ANCHOR BOLT

NO SCALE

NOTE:
THE CONTRACTOR SHALL VERIFY ALL CONTROLLING FIELD DIMENSIONS BEFORE ORDERING OR FABRICATING ANY MATERIAL.

1 **REVISED PER ADDENDUM No. 1 DATED AUGUST 13, 2009**

TYPE 21 LIGHTING STANDARD ANCHORAGE (MODIFIED)

SD 1.8

Jeffrey B Woody
BRANCH CHIEF

	BY	CHECKED
DESIGN	M O'LEARY	JOHN DATILES
DETAILS	T. ZOLNIKOVA	M O'LEARY
QUANTITIES	M O'LEARY	JOHN DATILES

STATE OF CALIFORNIA
DEPARTMENT OF TRANSPORTATION

DIVISION OF ENGINEERING SERVICES
STRUCTURE DESIGN
SPECIAL DESIGNS BRANCH

BRIDGE NO. 34-0157L
POST MILE X

PRESIDIO VIADUCT - LEFT
PEDESTAL DETAILS NO. 8

STRUCTURES DESIGN SPECIAL DESIGN SHEET (ENGLISH) (REV. 10-25-05)

ORIGINAL SCALE IN INCHES FOR REDUCED PLANS 0 1 2 3

CU 04
EA 163731

DISREGARD PRINTS BEARING EARLIER REVISION DATES

REVISION DATES: 5/14/09 5/19/09 6/2/09 6/8/09 6-15-09 7-20-09 7-30-09

SHEET 91 OF 114

FILE => 04_163731_sd1.8.add

USERNAME => trleonard DATE PLOTTED => 12-AUG-2009 TIME PLOTTED => 10:16

DIST	COUNTY	ROUTE	POST MILES TOTAL PROJECT	SHEET No	TOTAL SHEETS
04	SF	101,1	9.2/9.8, 6.8/7.1	442	567

Robert B. Giorgis Jr. 8-15-09
REGISTERED CIVIL ENGINEER DATE

7-20-09
PLANS APPROVAL DATE

REGISTERED PROFESSIONAL ENGINEER ROBERT B. GIORGIS JR. No. C60705 Exp. 12/31/10 CIVIL STATE OF CALIFORNIA

The State of California or its officers or agents shall not be responsible for the accuracy or completeness of electronic copies of this plan sheet.

1

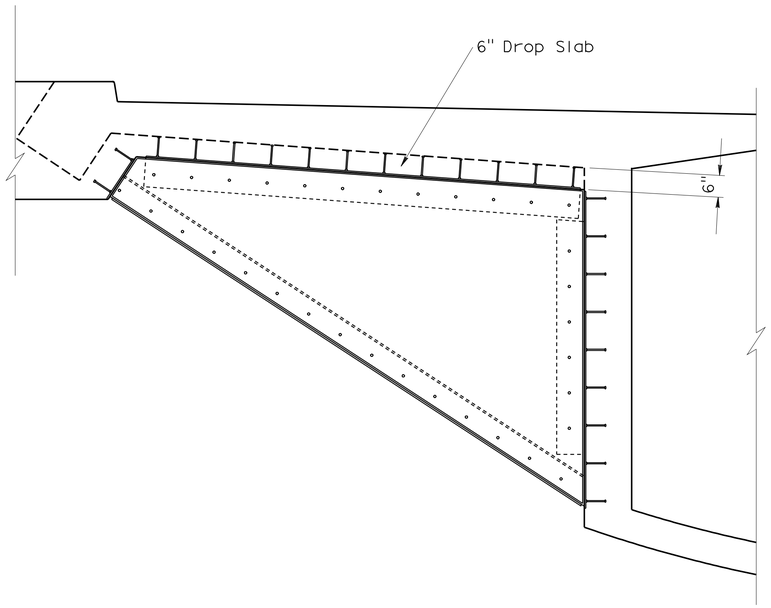

FIN MODIFICATION TO ACCOMMODATE DROP SLAB DETAIL

NOTES:

1. Refer to pedestal for Type 21 lighting standard on SD 1.7 and two-post tubular with VMS Pedestal on Sheets SD 1.3, SD 1.4 and SD 1.5 for pedestal details.
2. Refer to "Steel Fin Details No.1" in viaduct plans for additional information.
3. Rebar and Barrier not shown for clarity.

NOTE:
THE CONTRACTOR SHALL VERIFY ALL CONTROLLING FIELD DIMENSIONS BEFORE ORDERING OR FABRICATING ANY MATERIAL.

1 **REVISED PER ADDENDUM No. 1 DATED AUGUST 13, 2009**

DROP SLAB DETAIL 1
NO SCALE
SD 1.9

Jeffrey B Woody
BRANCH CHIEF

	BY	CHECKED
DESIGN	R GIORGIS	M O'LEARY
DETAILS	D W JUSTICE Jr	M O'LEARY
QUANTITIES	M O'LEARY	J DATILES

STATE OF CALIFORNIA
DEPARTMENT OF TRANSPORTATION

DIVISION OF ENGINEERING SERVICES
STRUCTURE DESIGN
DESIGN BRANCH 4

BRIDGE NO. 34-0157L
POST MILE X

PRESIDIO VIADUCT - LEFT
PEDESTAL DETAILS NO. 9

STRUCTURES DESIGN DETAIL SHEET (ENGLISH) (REV. 10/25/05)

ORIGINAL SCALE IN INCHES FOR REDUCED PLANS 0 1 2 3

CU 04
EA 163731

DISREGARD PRINTS BEARING EARLIER REVISION DATES

REVISION DATES: ~~5-28-09~~ ~~5-11-09~~ ~~5-21-09~~ ~~6-12-09~~ ~~7-20-09~~ 7-24-09

SHEET 92 OF 114

FILE => 04_163731_sd1.9.dgn

USERNAME => friemard DATE PLOTTED => 12-AUG-2009 TIME PLOTTED => 10:16

DIST	COUNTY	ROUTE	POST MILES TOTAL PROJECT	SHEET No	TOTAL SHEETS
04	SF	101,1	9.2/9.8, 6.8/7.1	443	567

Robert B. Giorgis Jr. 8-15-09
REGISTERED CIVIL ENGINEER DATE

7-20-09
PLANS APPROVAL DATE

REGISTERED PROFESSIONAL ENGINEER ROBERT B. GIORGIS JR. No. C60705 Exp. 12/31/10 CIVIL STATE OF CALIFORNIA

The State of California or its officers or agents shall not be responsible for the accuracy or completeness of electronic copies of this plan sheet.

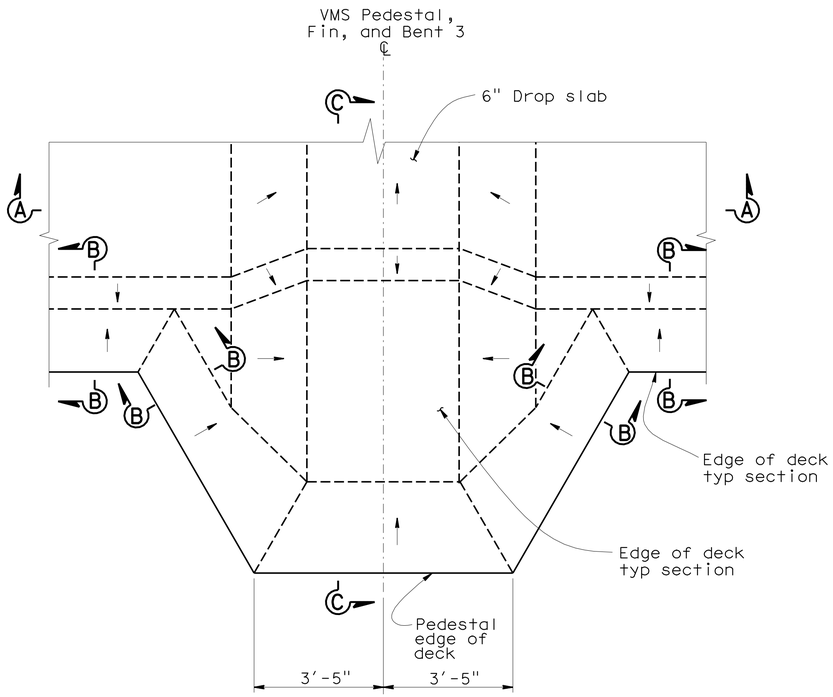

PLAN
(BOTTOM CONTOUR)

NOTE: Arrows indicate a downward direction.

NOTES:

1. For "Section B-B" see bridge details sheet "TYPICAL SECTION NO 1" "DETAIL A" in Viaduct Plans.
2. For "Section C-C" see "View A-A" on sheet SD 1.4.
3. For additional details see Sheets SD 1.3, SD 1.4, and SD 1.5.

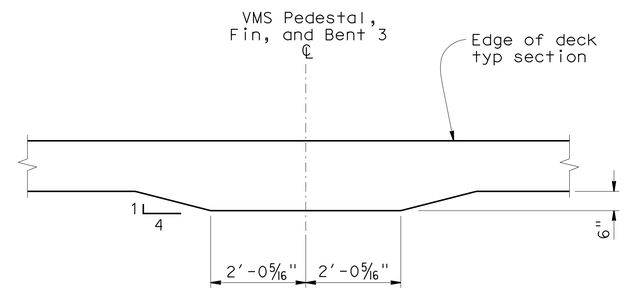

SECTION A-A

1

PEDESTAL FOR TWO-POST TUBULAR

NOTE:
THE CONTRACTOR SHALL VERIFY ALL CONTROLLING FIELD DIMENSIONS BEFORE ORDERING OR FABRICATING ANY MATERIAL.

1 **REVISED PER ADDENDUM No. 1 DATED AUGUST 13, 2009**

DROP SLAB DETAIL 2
NO SCALE
SD 1.10

Jeffrey B Wbody
BRANCH CHIEF

	BY	CHECKED
DESIGN	M O'LEARY	B GIORGIS
DETAILS	D W JUSTICE Jr	M O'LEARY
QUANTITIES	M O'LEARY	JOHN DATILES

STATE OF CALIFORNIA
DEPARTMENT OF TRANSPORTATION

DIVISION OF ENGINEERING SERVICES
STRUCTURE DESIGN
SPECIAL DESIGNS BRANCH

BRIDGE NO. 34-0157L
POST MILE X

PRESIDIO VIADUCT - LEFT
PEDESTAL DETAILS NO. 10

STRUCTURES DESIGN SPECIAL DESIGN SHEET (ENGLISH) (REV. 10-25-05)

ORIGINAL SCALE IN INCHES FOR REDUCED PLANS 0 1 2 3

CU 04
EA 163731

DISREGARD PRINTS BEARING EARLIER REVISION DATES

REVISION DATES: 6-1-09, 6-12-09, 7-20-09, 7-30-09

SHEET 93 OF 114

FILE => 04_163731_sd1.10.add

USERNAME => trlenard DATE PLOTTED => 12-AUG-2009 TIME PLOTTED => 10:17

DIST	COUNTY	ROUTE	POST MILES TOTAL PROJECT	SHEET No	TOTAL SHEETS
04	SF	101,1	9.2/9.8, 6.8/7.1	444	567

Robert B. Giorgis Jr. 6-15-09
REGISTERED CIVIL ENGINEER DATE

7-20-09
PLANS APPROVAL DATE

REGISTERED PROFESSIONAL ENGINEER ROBERT B. GIORGIS JR. No. C60705 Exp. 12/31/10 CIVIL STATE OF CALIFORNIA

The State of California or its officers or agents shall not be responsible for the accuracy or completeness of electronic copies of this plan sheet.

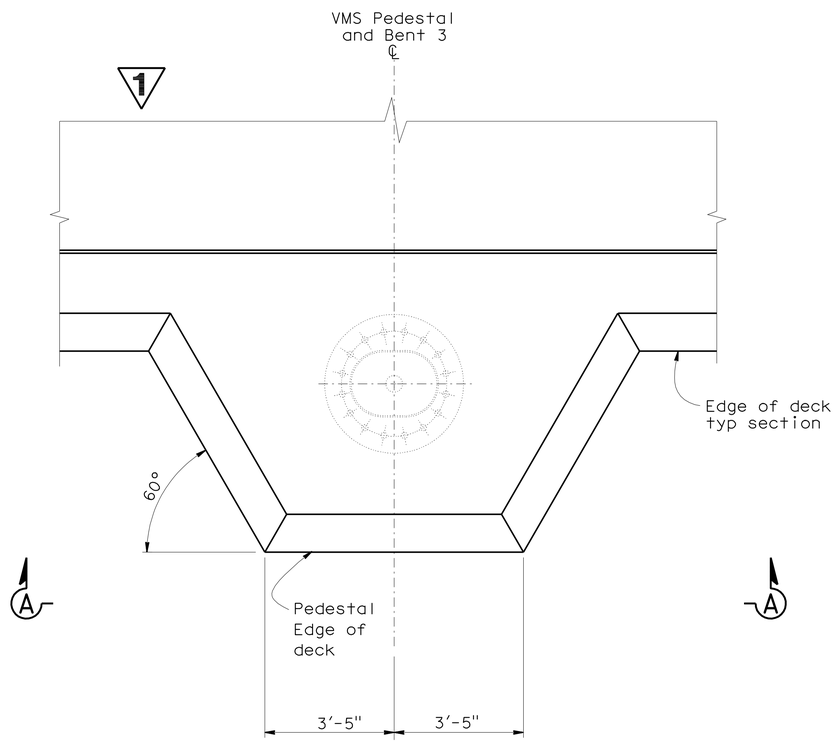

PLAN
(TOP CONTOUR)

NOTE:

1. For additional details see Sheets SD 1.3, SD 1.4, SD 1.5 and SD 1.6.

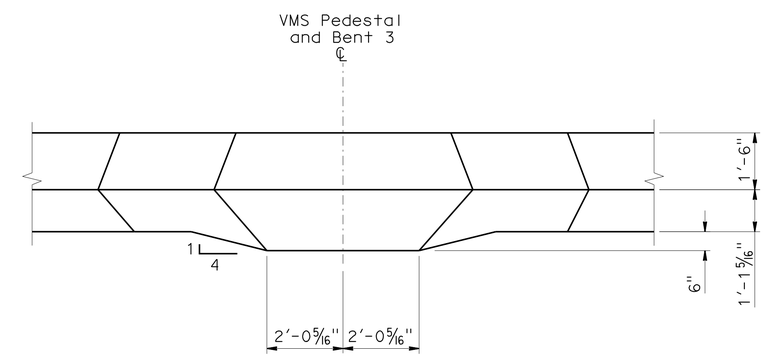

VIEW A-A

1 PEDESTAL FOR TWO-POST TUBULAR

NOTE:
THE CONTRACTOR SHALL VERIFY ALL CONTROLLING FIELD DIMENSIONS BEFORE ORDERING OR FABRICATING ANY MATERIAL.

1 REVISED PER ADDENDUM No. 1 DATED AUGUST 13, 2009

DROP SLAB DETAIL 3
NO SCALE

SD 1.11

Jeffrey B Woody
BRANCH CHIEF

	BY	CHECKED
DESIGN	M O'LEARY	B GIORGIS
DETAILS	D W JUSTICE Jr	M O'LEARY
QUANTITIES	M O'LEARY	JOHN DATILES

STATE OF CALIFORNIA
DEPARTMENT OF TRANSPORTATION

DIVISION OF ENGINEERING SERVICES
STRUCTURE DESIGN
SPECIAL DESIGNS BRANCH

BRIDGE NO. 34-0157L
POST MILE X

PRESIDIO VIADUCT - LEFT
PEDESTAL DETAILS NO. 11

STRUCTURES DESIGN SPECIAL DESIGN SHEET (ENGLISH) (REV. 10-25-05)

ORIGINAL SCALE IN INCHES FOR REDUCED PLANS 0 1 2 3

CU 04
EA 163731

DISREGARD PRINTS BEARING EARLIER REVISION DATES → 6-1-09 6-12-09 7-20-09 7-30-09

SHEET 94 OF 114

FILE => 04_163731_sd1.11.dgn

USERNAME => trlenard DATE PLOTTED => 12-AUG-2009 TIME PLOTTED => 10:17

DIST	COUNTY	ROUTE	POST MILES TOTAL PROJECT	SHEET No	TOTAL SHEETS
04	SF	101,1	9.2/9.8, 6.8/7.1	445	567

Robert B. Giorgis Jr. 6-15-09
REGISTERED CIVIL ENGINEER DATE

7-20-09
PLANS APPROVAL DATE

REGISTERED PROFESSIONAL ENGINEER ROBERT B. GIORGIS JR. No. C60705 Exp. 12/31/10 CIVIL STATE OF CALIFORNIA

The State of California or its officers or agents shall not be responsible for the accuracy or completeness of electronic copies of this plan sheet.

NOTES:

1. For Section B-B see bridge details sheet "TYPICAL SECTION NO 1" "DETAIL A" in Viaduct Plans.
2. For "Section C-C" see "ELEVATION" view sheet SD 1.7.
3. For additional details see sheets SD 1.7.

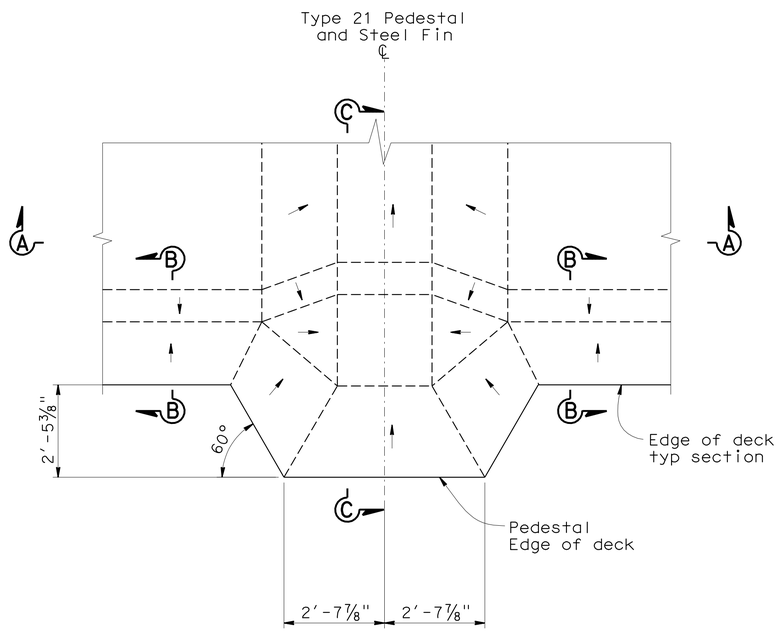

PLAN
(BOTTOM CONTOUR)

NOTE: Arrows indicate a downward sloping direction.

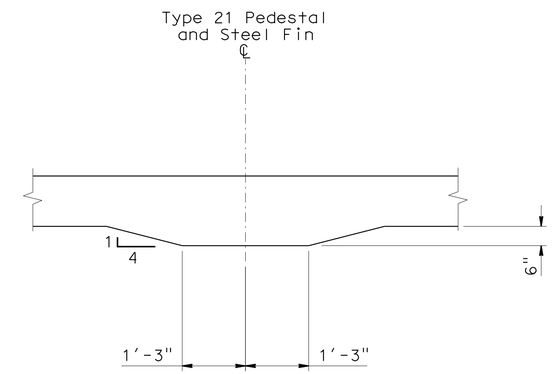

SECTION A-A

1 PEDESTAL FOR TYPE 21 LIGHTING STANDARD

NOTE:
THE CONTRACTOR SHALL VERIFY ALL CONTROLLING FIELD DIMENSIONS BEFORE ORDERING OR FABRICATING ANY MATERIAL.

1 REVISED PER ADDENDUM No. 1 DATED AUGUST 13, 2009

DROP SLAB DETAIL 4
NO SCALE
SD 1.12

Jeffrey B Woody
BRANCH CHIEF

	BY	CHECKED
DESIGN	M O'LEARY	JOHN DATILES
DETAILS	D W JUSTICE Jr	JOHN DATILES
QUANTITIES	M O'LEARY	JOHN DATILES

STATE OF CALIFORNIA
DEPARTMENT OF TRANSPORTATION

DIVISION OF ENGINEERING SERVICES
STRUCTURE DESIGN
SPECIAL DESIGNS BRANCH

BRIDGE NO. 34-0157L
POST MILE X

PRESIDIO VIADUCT - LEFT
PEDESTAL DETAILS NO. 12

STRUCTURES DESIGN SPECIAL DESIGN SHEET (ENGLISH) (REV. 10-25-05)

ORIGINAL SCALE IN INCHES FOR REDUCED PLANS 0 1 2 3

CU 04
EA 163731

DISREGARD PRINTS BEARING EARLIER REVISION DATES

REVISION DATES: 6-1-09 6-12-09 7-20-09 7-30-09

SHEET 95 OF 114

FILE => 04_163731_sd1.12.dgn

USERNAME => frlenard DATE PLOTTED => 12-AUG-2009 TIME PLOTTED => 10:17

DIST	COUNTY	ROUTE	POST MILES TOTAL PROJECT	SHEET No	TOTAL SHEETS
04	SF	101,1	9.2/9.8, 6.8/7.1	446	567

Robert B. Giorgis Jr. 6-15-09
REGISTERED CIVIL ENGINEER DATE

7-20-09
PLANS APPROVAL DATE

REGISTERED PROFESSIONAL ENGINEER ROBERT B. GIORGIS JR. No. C60705 Exp. 12/31/10 CIVIL STATE OF CALIFORNIA

The State of California or its officers or agents shall not be responsible for the accuracy or completeness of electronic copies of this plan sheet.

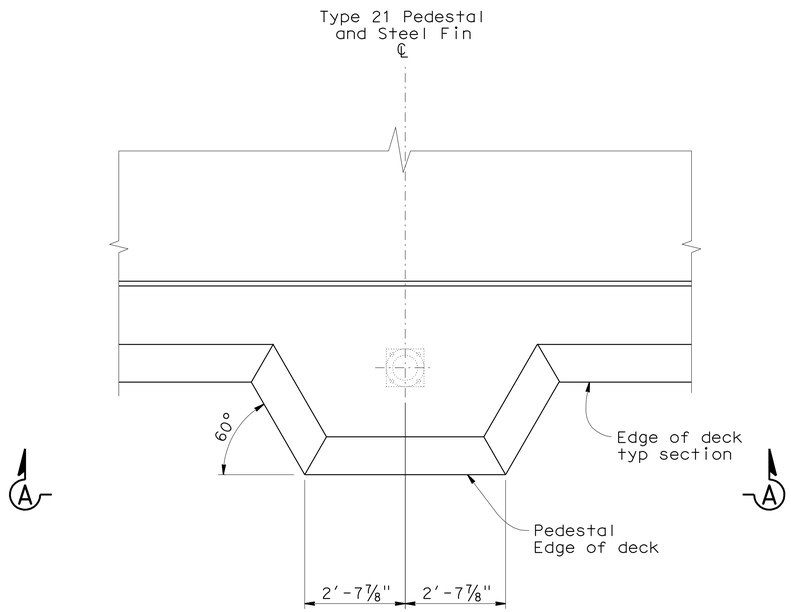

PLAN
(TOP CONTOUR)

NOTE:

1. For additional details see Sheet SD 1.7.

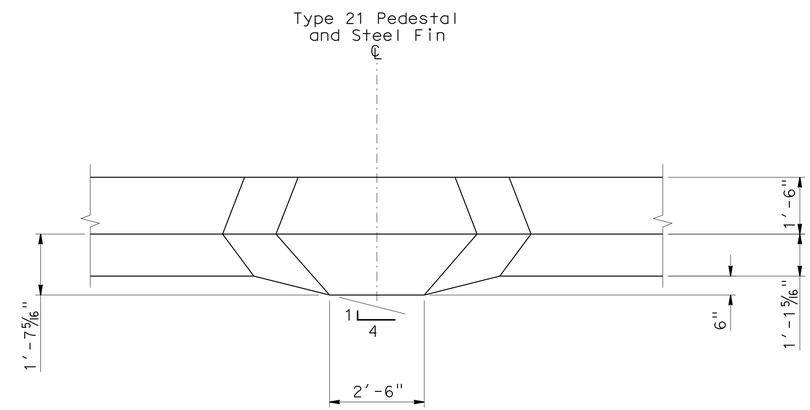

VIEW A-A

1 PEDESTAL TYPE 21 LIGHTING STANDARD

NOTE:
THE CONTRACTOR SHALL VERIFY ALL CONTROLLING FIELD DIMENSIONS BEFORE ORDERING OR FABRICATING ANY MATERIAL.

1 REVISED PER ADDENDUM No. 1 DATED AUGUST 13, 2009

DROP SLAB DETAIL 5
NO SCALE

SD 1.13

Jeffrey B Wbody
BRANCH CHIEF

	BY	CHECKED
DESIGN	M O'LEARY	JOHN DATILES
DETAILS	D W JUSTICE Jr	JOHN DATILES
QUANTITIES	M O'LEARY	JOHN DATILES

STATE OF CALIFORNIA
DEPARTMENT OF TRANSPORTATION

DIVISION OF ENGINEERING SERVICES
STRUCTURE DESIGN
SPECIAL DESIGNS BRANCH

BRIDGE NO. 34-0157L
POST MILE X

PRESIDIO VIADUCT - LEFT
PEDESTAL DETAILS NO. 13

STRUCTURES DESIGN SPECIAL DESIGN SHEET (ENGLISH) (REV. 10-25-05)

ORIGINAL SCALE IN INCHES FOR REDUCED PLANS 0 1 2 3

CU 04
EA 163731

DISREGARD PRINTS BEARING EARLIER REVISION DATES

REVISION DATES: 6-1-09, 6-12-09, 7-20-09, 7-30-09

SHEET 96 OF 114

FILE => 04_163731_sd1.13.dgn

USERNAME => Trlenard DATE PLOTTED => 12-AUG-2009 TIME PLOTTED => 10:17

DIST	COUNTY	ROUTE	POST MILES TOTAL PROJECT	SHEET No	TOTAL SHEETS
04	SF	101,1	9.2/9.8, 6.8/7.1	446A	567

Robert B. Giorgis Jr. 6-15-09
REGISTERED CIVIL ENGINEER DATE

7-20-09
PLANS APPROVAL DATE

The State of California or its officers or agents shall not be responsible for the accuracy or completeness of electronic copies of this plan sheet.

REGISTERED PROFESSIONAL ENGINEER ROBERT B. GIORGIS JR. No. C60705 Exp. 12/31/10 CIVIL STATE OF CALIFORNIA

1

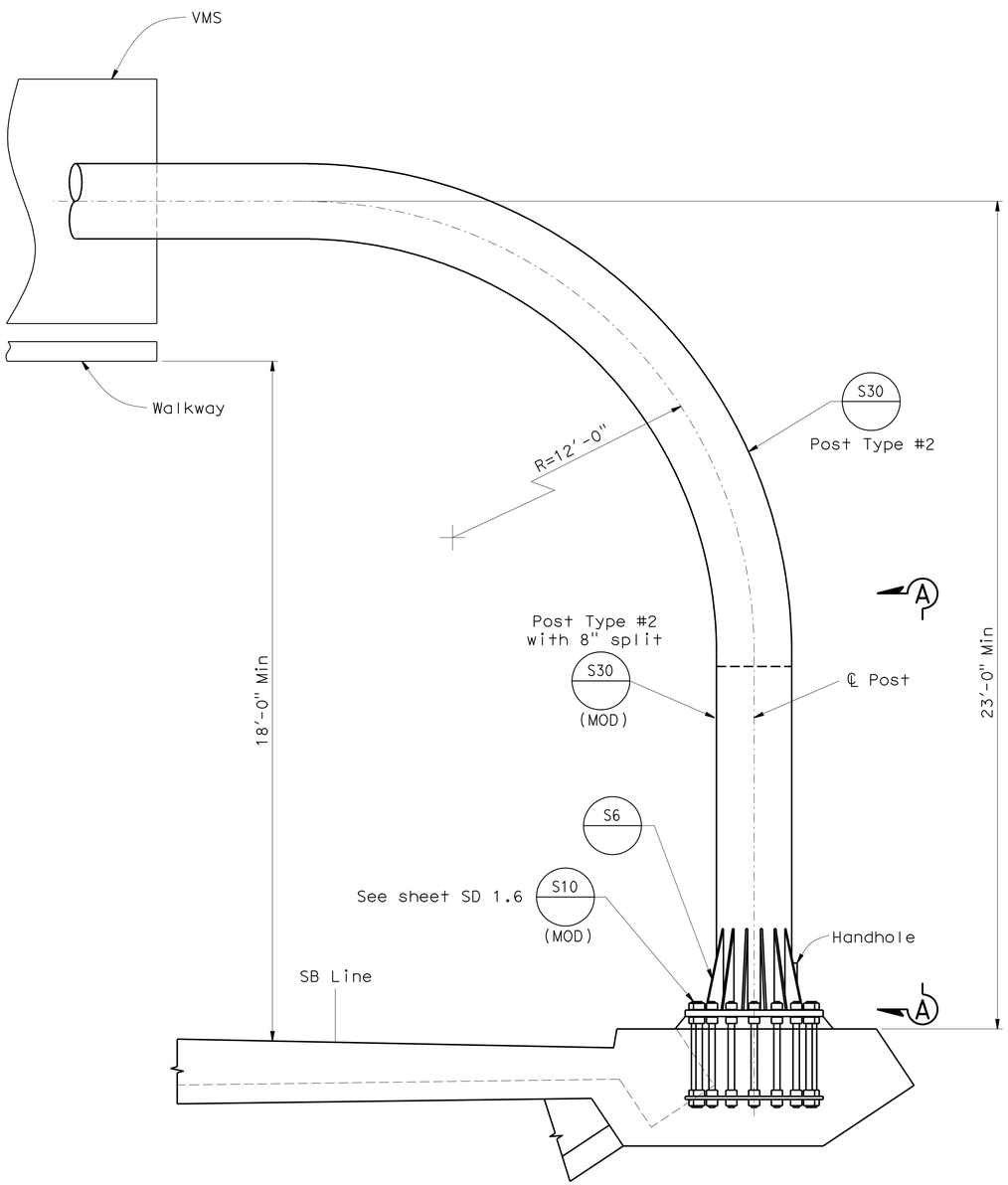

ELEVATION

(North post shown looking west)

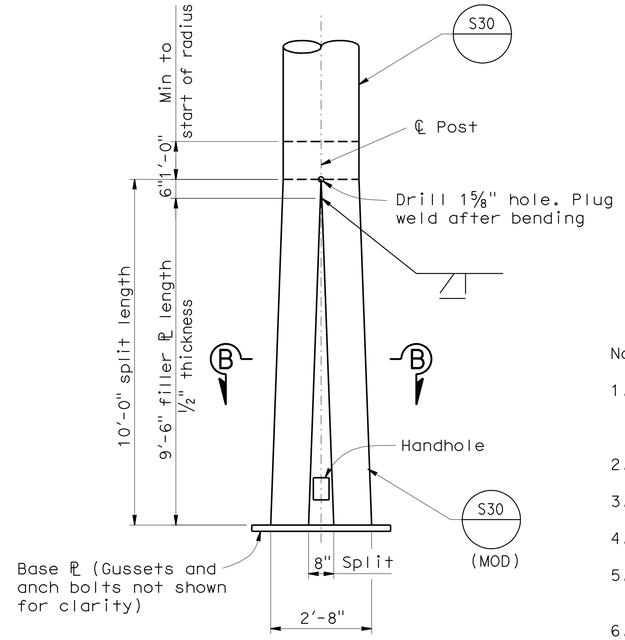

VIEW A-A

(Split Details S30 Modified)

Notes:

1. Sign structure consists of a two post tubular structure post, a two-post tubular post Type #2 with 8" split, and a two post truss post Type V-S modified anchorage.
2. Refer to Standard Plan S6 Post Type V-S for gusset size.
3. Refer to Standard Plan S34 for handhole size and placement.
4. Bridge rebar and barrier not shown for clarity.
5. For additiional anchorage, post to base plate connection and split information refer to Sheet SD-1.6.
6. Refer to SD 1.15 for VMS to pole structure connection details, and walkway details.

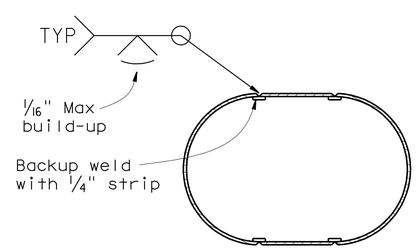

SECTION B-B

NOTE:
THE CONTRACTOR SHALL VERIFY ALL CONTROLLING FIELD DIMENSIONS BEFORE ORDERING OR FABRICATING ANY MATERIAL.

1 **ADDED PER ADDENDUM No. 1 DATED AUGUST 13, 2009**

TWO-POST TUBULAR SIGN STRUCTURE DETAILS

NO SCALE

SD 1.14

Jeffrey B Wbody
BRANCH CHIEF

DESIGN	BY M O'LEARY	CHECKED BOB GIORGIS	
DETAILS	BY D W JUSTICE Jr	CHECKED M O'LEARY	
QUANTITIES	BY M O'LEARY	CHECKED BOB GIORGIS	

STATE OF CALIFORNIA
DEPARTMENT OF TRANSPORTATION

DIVISION OF ENGINEERING SERVICES
STRUCTURE DESIGN
SPECIAL DESIGNS BRANCH

BRIDGE NO. 34-0157L
POST MILE X

PRESIDIO VIADUCT - LEFT
SIGN DETAILS NO. 1

STRUCTURES DESIGN SPECIAL DESIGN SHEET (ENGLISH) (REV. 10-25-05)

ORIGINAL SCALE IN INCHES FOR REDUCED PLANS 0 1 2 3

CU 04
EA 163731

DISREGARD PRINTS BEARING EARLIER REVISION DATES

REVISION DATES: ~~7-20-09~~ 7-30-09

SHEET 97 OF 114

FILE => 04_163731_sd1.14.add

USERNAME => Trenard DATE PLOTTED => 12-AUG-2009 TIME PLOTTED => 10:17

DIST	COUNTY	ROUTE	POST MILES TOTAL PROJECT	SHEET No	TOTAL SHEETS
04	SF	101,1	9.2/9.8, 6.8/7.1	446B	567

Robert B. Giorgis Jr. 6-15-09
REGISTERED CIVIL ENGINEER DATE

7-20-09
PLANS APPROVAL DATE

REGISTERED PROFESSIONAL ENGINEER ROBERT B. GIORGIS JR. No. C60705 Exp. 12/31/10 CIVIL STATE OF CALIFORNIA

The State of California or its officers or agents shall not be responsible for the accuracy or completeness of electronic copies of this plan sheet.

1

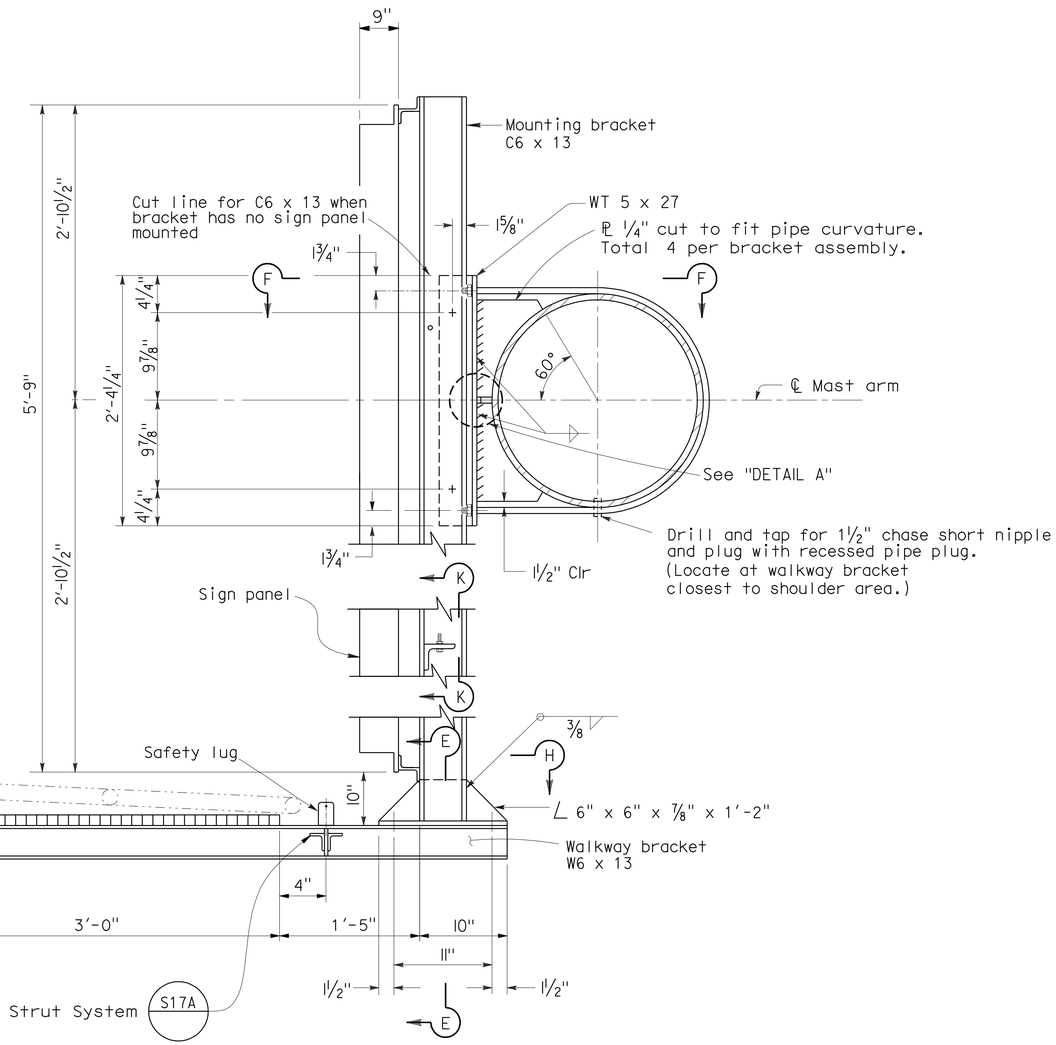

TYPICAL SECTION

NOTES

1. The exterior mounting brackets to face outward to accommodate the walkway chain angle.
2. For walkway chain details, see Revised Standard Plan sheet Standard Plan S18.
3. Refer to Sheet SD 1.16 for DETAIL A and SECTION F-F.
4. See Road Plans for quantities
5. Sign structure shall be galvanized and painted.
6. Refer to Stanard Plans S33 fot SECTION K-K.

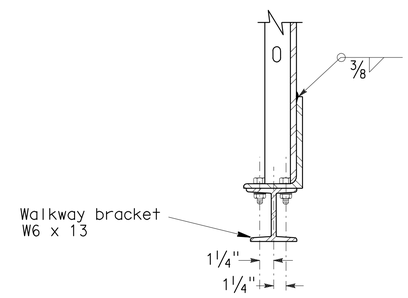

SECTION E-E

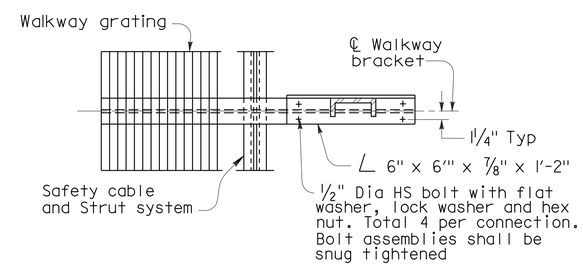

SECTION H-H

NOTE:
THE CONTRACTOR SHALL VERIFY ALL CONTROLLING FIELD DIMENSIONS BEFORE ORDERING OR FABRICATING ANY MATERIAL.

1 **ADDED PER ADDENDUM No. 1 DATED AUGUST 13, 2009**

SIGN DETAILS

SD 1.15

Jeffrey B Woody
BRANCH CHIEF

	BY	CHECKED
DESIGN	R GIORGIS	JOHN DATILES
DETAILS	D W JUSTICE Jr	R GIORGIS
QUANTITIES	D VORA	JOHN DATILES

STATE OF CALIFORNIA
DEPARTMENT OF TRANSPORTATION

DIVISION OF ENGINEERING SERVICES
STRUCTURE DESIGN
SPECIAL DESIGNS BRANCH

BRIDGE NO. 34-0157L
POST MILE X

PRESIDIO VIADUCT - LEFT
SIGN DETAILS NO. 2

STRUCTURES DESIGN SPECIAL DESIGN SHEET (ENGLISH) (REV. 10-25-05)

ORIGINAL SCALE IN INCHES FOR REDUCED PLANS 0 1 2 3

CU 04
EA 163731

DISREGARD PRINTS BEARING EARLIER REVISION DATES

REVISION DATES: 7-30-09 8-3-09

SHEET 98 OF 114

FILE => 04_163731_sd1.15.add

USERNAME => friehard DATE PLOTTED => 12-AUG-2009 TIME PLOTTED => 10:17

DIST	COUNTY	ROUTE	POST MILES TOTAL PROJECT	SHEET No	TOTAL SHEETS
04	SF	101,1	9.2/9.8, 6.8/7.1	446C	567

Robert B. Giorgis Jr. 6-15-09
REGISTERED CIVIL ENGINEER DATE

7-20-09
PLANS APPROVAL DATE

REGISTERED PROFESSIONAL ENGINEER ROBERT B. GIORGIS JR. No. C60705 Exp. 12/31/10 CIVIL STATE OF CALIFORNIA

The State of California or its officers or agents shall not be responsible for the accuracy or completeness of electronic copies of this plan sheet.

1

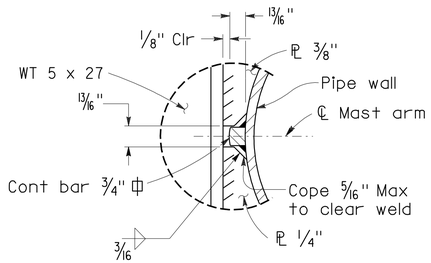

DETAIL A

Notes.

1. See Road Plans for quantities.
2. Sign structure shall be galvanized and painted.

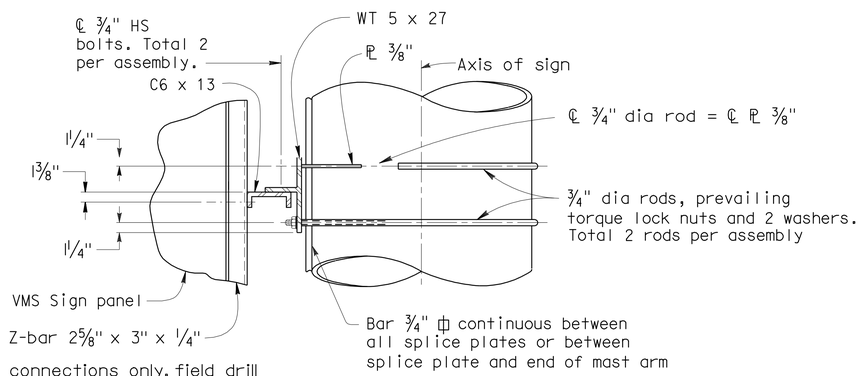

For Z bar connections only, field drill aluminum Z bar 7/8" Dia hole for 3/4" Dia A325 Dia HS bolt with hardened washer each side, lock washer between nut and hardened flat washer. HS bolts shall be snug tight.

SECTION F-F

NOTE:
THE CONTRACTOR SHALL VERIFY ALL CONTROLLING FIELD DIMENSIONS BEFORE ORDERING OR FABRICATING ANY MATERIAL.

1 **ADDED PER ADDENDUM No. 1 DATED AUGUST 13, 2009**

SIGN DETAILS

SD 1.16

Jeffrey B Woody
BRANCH CHIEF

	BY	CHECKED
DESIGN	R GIORGIS	JOHN DATILES
DETAILS	D W JUSTICE Jr	R GIORGIS
QUANTITIES	R GIORGIS	JOHN DATILES

STATE OF CALIFORNIA
DEPARTMENT OF TRANSPORTATION

DIVISION OF ENGINEERING SERVICES
STRUCTURE DESIGN
SPECIAL DESIGNS BRANCH

BRIDGE NO. 34-0157L
POST MILE X

PRESIDIO VIADUCT - LEFT
SIGN DETAILS NO. 3

STRUCTURES DESIGN SPECIAL DESIGN SHEET (ENGLISH) (REV. 10-25-05)

ORIGINAL SCALE IN INCHES FOR REDUCED PLANS 0 1 2 3

CU 04
EA 163731

DISREGARD PRINTS BEARING EARLIER REVISION DATES 7-30-09

REVISION DATES

SHEET 99 OF 114

FILE => 04_163731_sd1.16.add

USERNAME => trlenord DATE PLOTTED => 12-AUG-2009 TIME PLOTTED => 10:17

DIST	COUNTY	ROUTE	POST MILES TOTAL PROJECT	SHEET No	TOTAL SHEETS
04	SF	101,1	9.2/9.8, 6.8/7.1	446D	567

REGISTERED CIVIL ENGINEER DATE

7-20-09
PLANS APPROVAL DATE

REGISTERED PROFESSIONAL ENGINEER ROBERT B. GIORGIS JR. No. C60705 Exp. 12/31/10 CIVIL STATE OF CALIFORNIA

The State of California or its officers or agents shall not be responsible for the accuracy or completeness of electronic copies of this plan sheet.

1

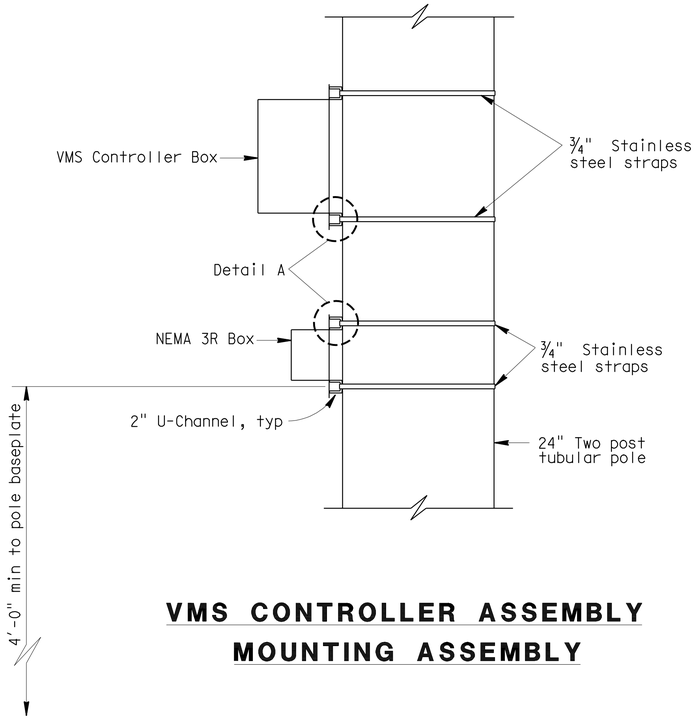

VMS CONTROLLER ASSEMBLY MOUNTING ASSEMBLY

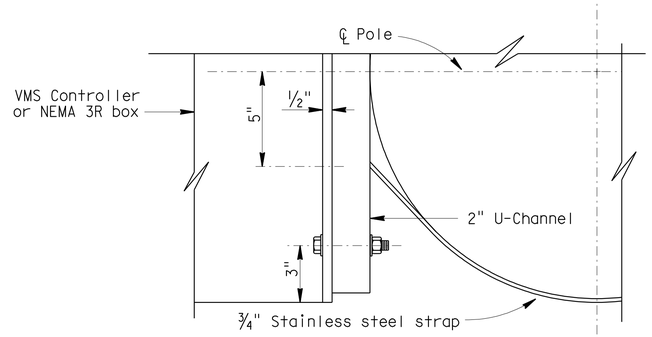

VIEW A-A

NOTES:

1. Conduit for VMS Controller assembly not shown.
2. Drilled holes for electrical wires, in post shall not exceed 1¼" and shall be spaced 12" min in all directions.
3. Maximum weight of individual box shall not exceed 50 lbs.
4. Details show an acceptable method of mounting VMS Controller assembly on two post tubular on the Presidio Viaduct. For variations of other enclosure cabinets, the Contractor shall submit mounting methods in writing, for approval by the Engineer.
5. All attachments unless otherwise noted, shall be mounted to pole with stainless steel straps or other method without drilling holes in pole. Enclosure may require drilling through post for mounting. Method of mounting enclosure will require Engineer's approval.
6. Refer to sheet SD1.14 for sign pole details.
7. VMS Controller assembly to be mounted on pole away from traveled way.
8. Box to U-Channel connection shall be made according to manufacturer's recommendation and shall be approved by the Engineer.
9. See Road Plans for quantites.

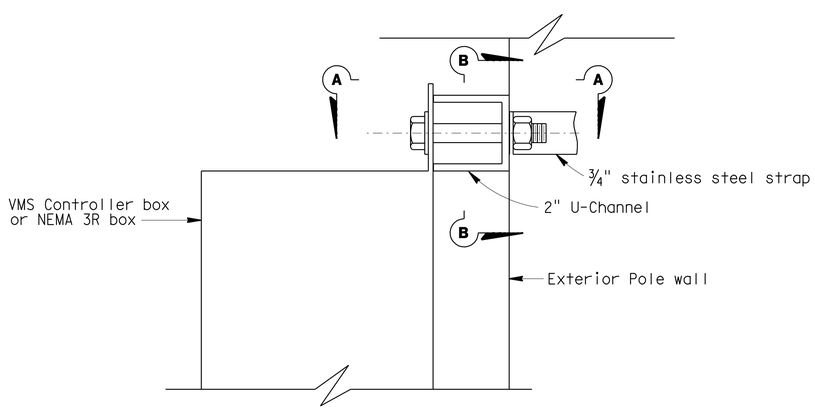

DETAIL A

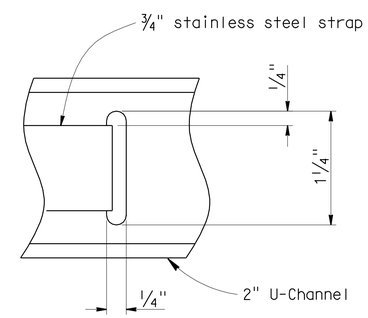

SECTION B-B

NOTE:
THE CONTRACTOR SHALL VERIFY ALL CONTROLLING FIELD DIMENSIONS BEFORE ORDERING OR FABRICATING ANY MATERIAL.

1 **ADDED PER ADDENDUM No. 1 DATED AUGUST 13, 2009**

VMS CONTROLLER ASSEMBLY MOUNTING

SD 1.17

BRANCH CHIEF

	BY	CHECKED
DESIGN	M O'LEARY	JOHN DATILES
DETAILS	D W JUSTICE Jr	JOHN DATILES
QUANTITIES	M O'LEARY	JOHN DATILES

STATE OF CALIFORNIA
DEPARTMENT OF TRANSPORTATION

DIVISION OF ENGINEERING SERVICES
STRUCTURE DESIGN
SPECIAL DESIGNS BRANCH

BRIDGE NO. 34-0157L
POST MILE X

PRESIDIO VIADUCT - LEFT
ELECTRICAL PANEL MOUNTING DETAILS

STRUCTURES DESIGN SPECIAL DESIGN SHEET (ENGLISH) (REV. 10-25-05)

ORIGINAL SCALE IN INCHES FOR REDUCED PLANS 0 1 2 3

CU 04
EA 163731

DISREGARD PRINTS BEARING EARLIER REVISION DATES → 7-30-09

REVISION DATES

SHEET 100 OF 114

FILE => 04_163731_sd1.17.add

USERNAME => friemard DATE PLOTTED => 12-AUG-2009 TIME PLOTTED => 10:18

DIST	COUNTY	ROUTE	POST MILES TOTAL PROJECT	SHEET No	TOTAL SHEETS
04	SF	101,1	9.2/9.8, 6.8/7.1	514	567

Robert B. Giorgis Jr. 6-15-09
REGISTERED CIVIL ENGINEER DATE

7-20-09
PLANS APPROVAL DATE

REGISTERED PROFESSIONAL ENGINEER ROBERT B. GIORGIS JR. No. C60705 Exp. 12/31/10 CIVIL STATE OF CALIFORNIA

The State of California or its officers or agents shall not be responsible for the accuracy or completeness of electronic copies of this plan sheet.

1

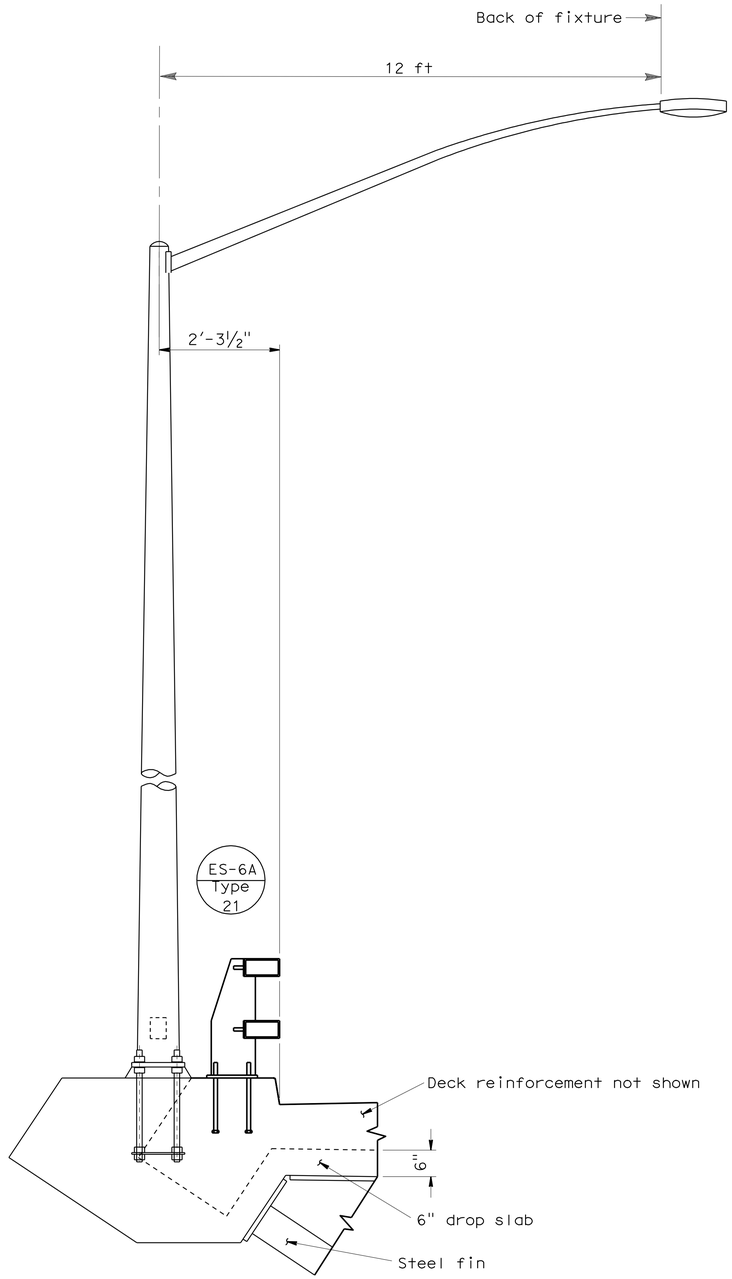

TYPE 21 LIGHTING STANDARD PEDESTAL N1-S101 CONNECTOR

NO SCALE

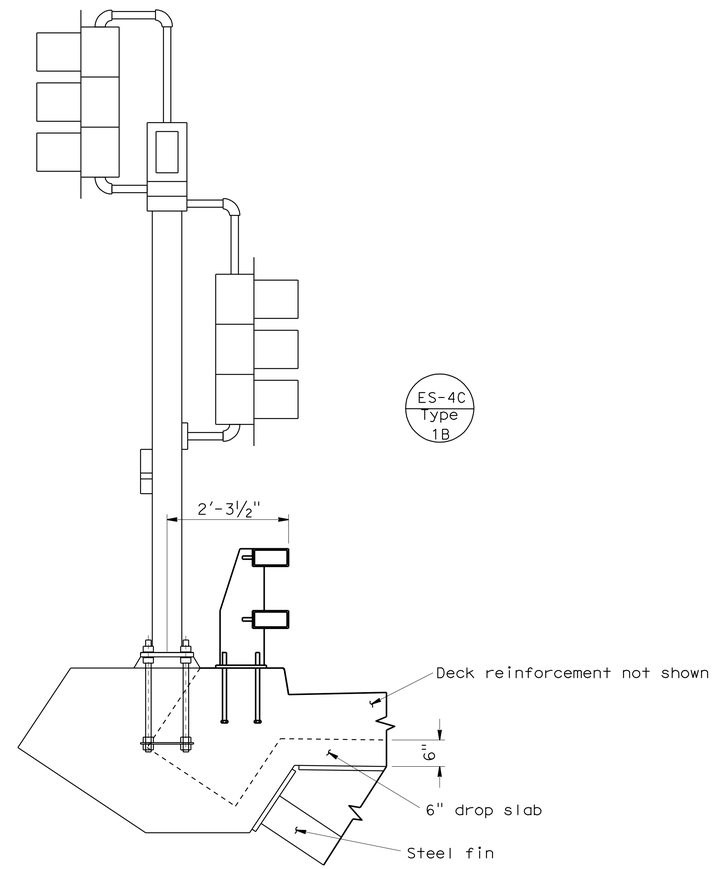

TYPE 1B PEDESTAL N1-S101 CONNECTOR

NO SCALE

Notes:

1. Rebar not shown for clarity - See Sheet SD 5.2.
2. For ST-10 barrier details see "CONNECTOR PLANS".
3. See sheet SD 5.3 for anchorage detail.
4. For light / pole locations see "Road Plans".
5. Type 21 / Type 1B must be located at centerline of Steel Fin.

NOTE:
THE CONTRACTOR SHALL VERIFY ALL CONTROLLING FIELD DIMENSIONS BEFORE ORDERING OR FABRICATING ANY MATERIAL.

1 **REVISED PER ADDENDUM No. 1 DATED AUGUST 13, 2009**

PEDESTAL FOR TYPE 21 / TYPE 1B

SD 5.1

Jeffrey B Woody
BRANCH CHIEF

	BY	CHECKED
DESIGN	M O'LEARY	JOHN DATILES
DETAILS	T. ZOLNIKOVA	M O'LEARY
QUANTITIES	M O'LEARY	JOHN DATILES

STATE OF CALIFORNIA
DEPARTMENT OF TRANSPORTATION

DIVISION OF ENGINEERING SERVICES
STRUCTURE DESIGN
SPECIAL DESIGNS BRANCH

BRIDGE NO. 34-0160G
POST MILE X

N1 - S101 CONNECTOR
PEDESTAL DETAILS NO. 1

STRUCTURES DESIGN SPECIAL DESIGN SHEET (ENGLISH) (REV. 10-25-05)

ORIGINAL SCALE IN INCHES FOR REDUCED PLANS 0 1 2 3

CU 04
EA 163731

DISREGARD PRINTS BEARING EARLIER REVISION DATES

REVISION DATES: 5/14/09 6-15-09 7-20-09 7-27-09

SHEET 1 OF 6

FILE => 04_163731_sd5.1.add

USERNAME => rfriemord DATE PLOTTED => 12-AUG-2009 TIME PLOTTED => 10:18

DIST	COUNTY	ROUTE	POST MILES TOTAL PROJECT	SHEET No	TOTAL SHEETS
04	SF	101,1	9.2/9.8, 6.8/7.1	515	567

Robert B. Giorgis Jr.
REGISTERED CIVIL ENGINEER DATE

7-20-09
PLANS APPROVAL DATE

REGISTERED PROFESSIONAL ENGINEER ROBERT B. GIORGIS JR. No. C60705 Exp. 12/31/10 CIVIL STATE OF CALIFORNIA

The State of California or its officers or agents shall not be responsible for the accuracy or completeness of electronic copies of this plan sheet.

1

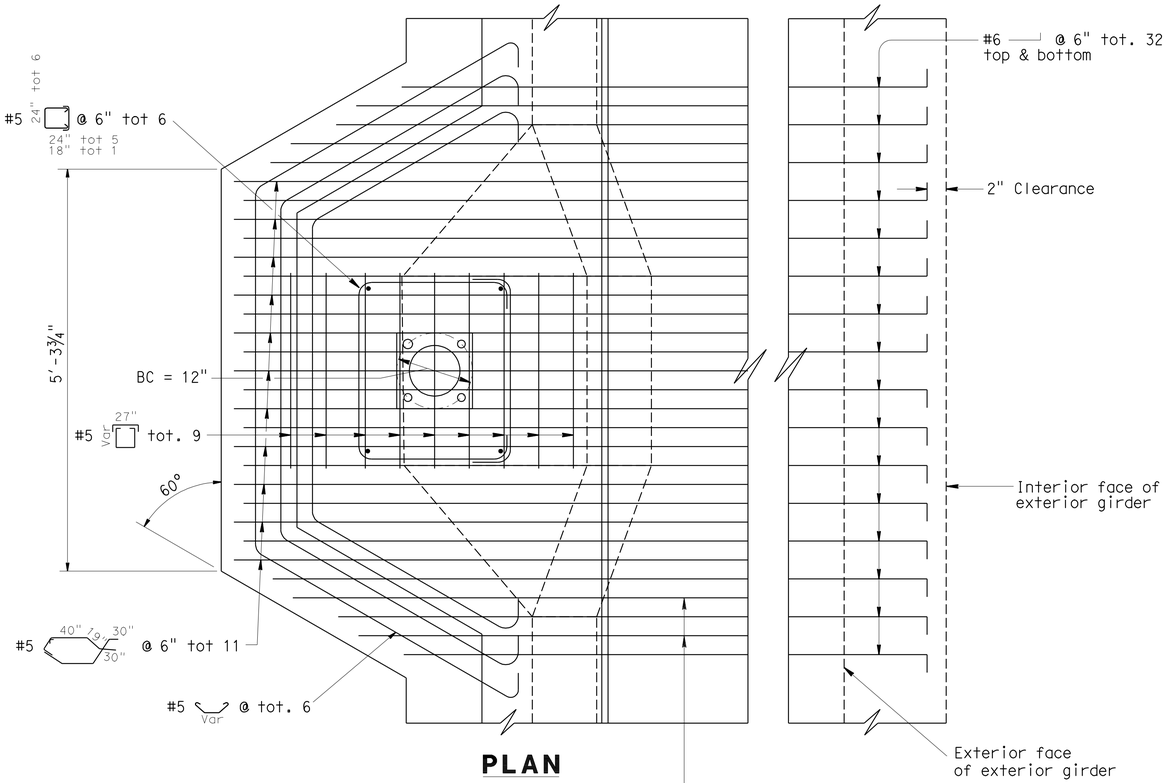

PLAN

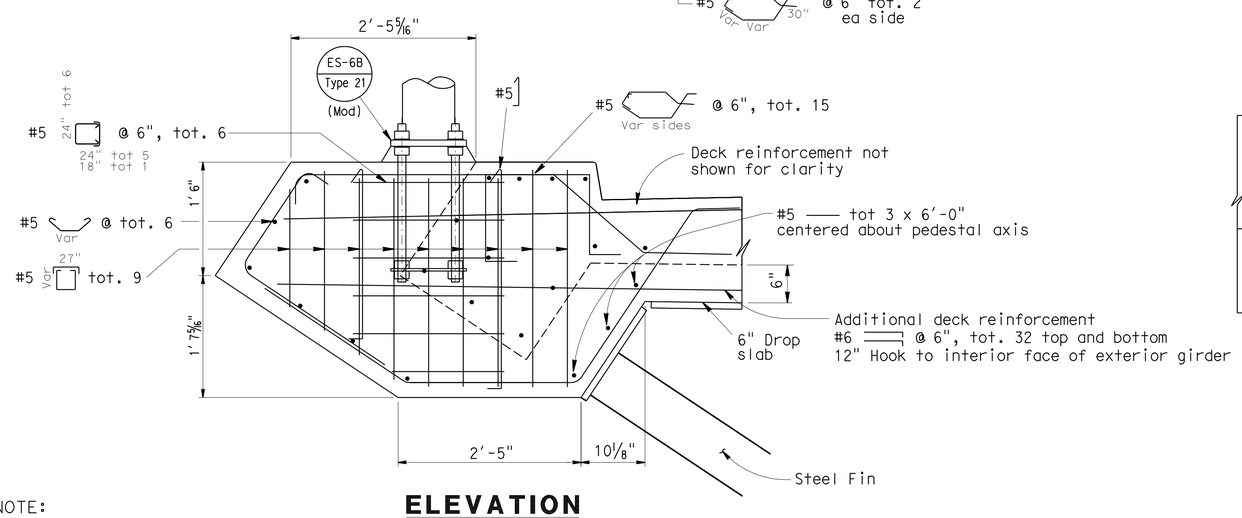

ELEVATION

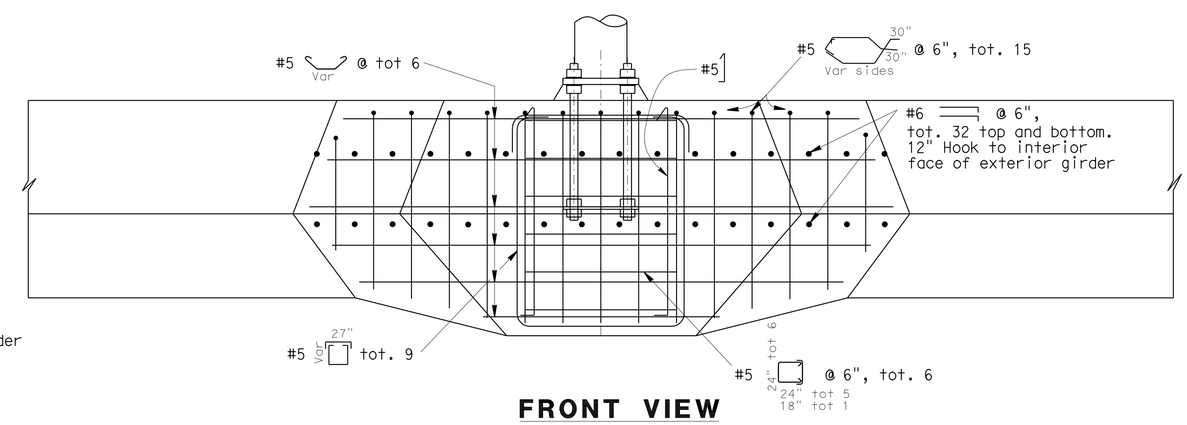

FRONT VIEW

Notes:

1. Use 45° for mortar pad sides.
2. 2" cover for pedestal rebar.
3. f'_c = 5,000 psi.
4. Unmodified edge beam rebar and ST-10 rail anchorage shown in Detail C of TYPICAL SECTION NO. 1 of N1-S101 CONNECTOR is not shown

NOTE:
THE CONTRACTOR SHALL VERIFY ALL CONTROLLING FIELD DIMENSIONS BEFORE ORDERING OR FABRICATING ANY MATERIAL.

1 **REVISED PER ADDENDUM No. 1 DATED AUGUST 13, 2009**

PEDESTAL FOR TYPE 21 / TYPE 1B DETAILS

NO SCALE

SD 5.2

Jeffrey B Woody
BRANCH CHIEF

	BY	CHECKED
DESIGN	JOHN DATILES	M O'LEARY
DETAILS	D W JUSTICE Jr	M O'LEARY
QUANTITIES	M O'LEARY	JOHN DATILES

STATE OF CALIFORNIA
DEPARTMENT OF TRANSPORTATION

DIVISION OF ENGINEERING SERVICES
STRUCTURE DESIGN
SPECIAL DESIGNS BRANCH

BRIDGE NO. 34-0160G
POST MILE X

N1-S101 CONNECTOR
PEDESTAL DETAILS NO. 2

STRUCTURES DESIGN SPECIAL DESIGN SHEET (ENGLISH) (REV. 10-25-05)

ORIGINAL SCALE IN INCHES FOR REDUCED PLANS 0 1 2 3

CU 04
EA 163731

DISREGARD PRINTS BEARING EARLIER REVISION DATES

REVISION DATES: 5-15-09 5-18-09 6-4-09 6-17-09 7-21-09 7-27-09

SHEET 2 OF 6

FILE => 04_163731_sd5.2.add

USERNAME => trlenard DATE PLOTTED => 12-AUG-2009 TIME PLOTTED => 10:18

DIST	COUNTY	ROUTE	POST MILES TOTAL PROJECT	SHEET No	TOTAL SHEETS
04	SF	101,1	9.279.8, 6.8/7.1	516	567

Robert B. Giorgis Jr. 6-15-09
REGISTERED CIVIL ENGINEER DATE

7-20-09
PLANS APPROVAL DATE

REGISTERED PROFESSIONAL ENGINEER ROBERT B. GIORGIS JR. No. C60705 Exp. 12/31/10 CIVIL STATE OF CALIFORNIA

The State of California or its officers or agents shall not be responsible for the accuracy or completeness of electronic copies of this plan sheet.

1

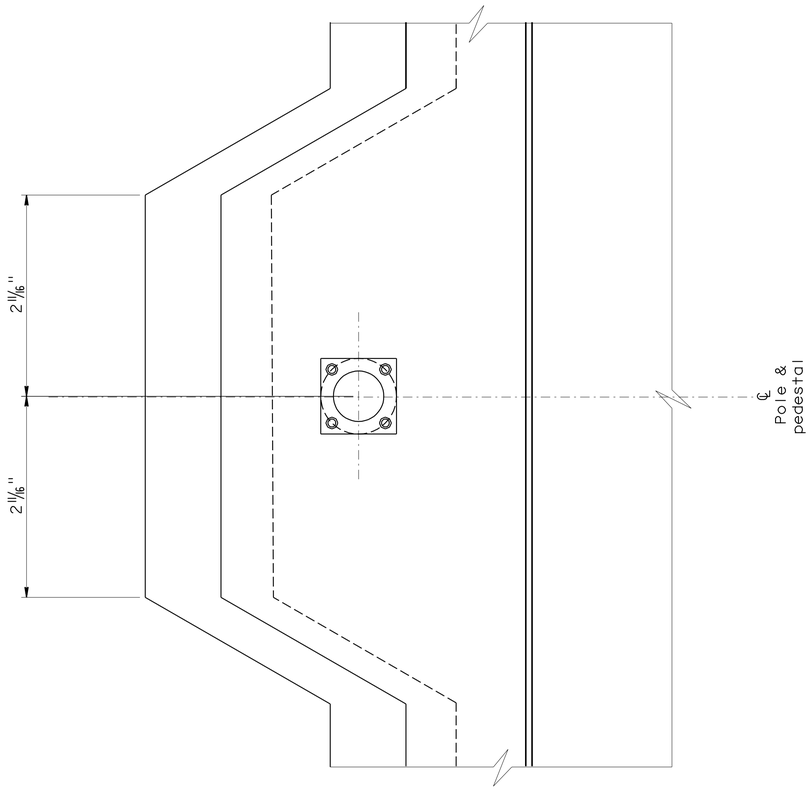

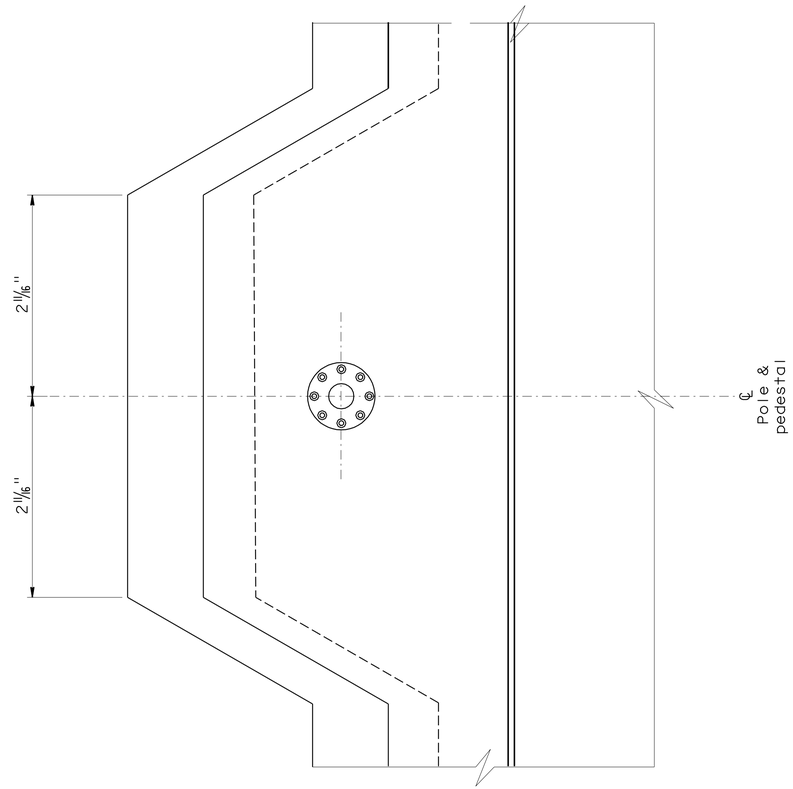

NOTES:

1. Steel fin not shown.
2. For steel fin details see "STEEL FIN DETAILS" and Sheet SD 5.3.
3. See Standard Plan ES-6A and ES-6B for additional anchorage information for Type 21 Lighting Standard.
4. Barrier not shown for clarity.
5. For bottom contour of Type 21/Type 1B pedestal see Sheet SD 5.6.

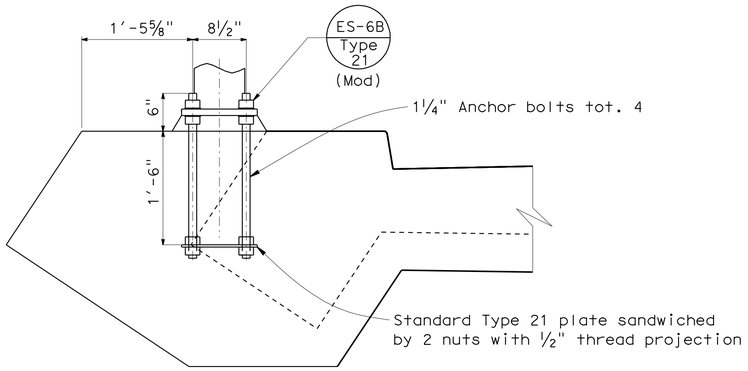

TYPE 21 ANCHOR BOLT

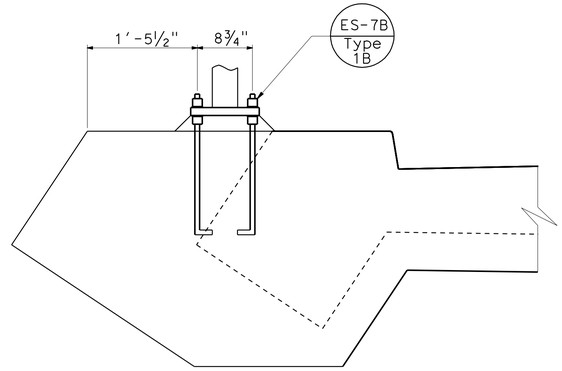

TYPE 1B ANCHOR BOLT

NOTE:
THE CONTRACTOR SHALL VERIFY ALL CONTROLLING FIELD DIMENSIONS BEFORE ORDERING OR FABRICATING ANY MATERIAL.

1 **REVISED PER ADDENDUM No. 1 DATED AUGUST 13, 2009**

TYPE 21 / TYPE 1B ANCHORAGE

NO SCALE

SD 5.3

Jeffrey B Woody
BRANCH CHIEF

DESIGN	BY M O'LEARY	CHECKED JOHN DATILES
DETAILS	BY T. ZOLNIKOVA	CHECKED M O'LEARY
QUANTITIES	BY M O'LEARY	CHECKED JOHN DATILES

STATE OF CALIFORNIA
DEPARTMENT OF TRANSPORTATION

DIVISION OF ENGINEERING SERVICES
STRUCTURE DESIGN
SPECIAL DESIGNS BRANCH

BRIDGE NO. 34-0160G
POST MILE X

N1 - S101 CONNECTOR
PEDESTAL DETAILS NO. 3

STRUCTURES DESIGN SPECIAL DESIGN SHEET (ENGLISH) (REV. 10-25-05)

ORIGINAL SCALE IN INCHES FOR REDUCED PLANS 0 1 2 3

CU 04
EA 163731

DISREGARD PRINTS BEARING EARLIER REVISION DATES

REVISION DATES: 5-14-09 5-19-09 6-12-09 6-18-09 7-20-09 7-21-09

SHEET 3 OF 6

FILE => 04_163731_sd5.3.add

USERNAME => tfrenord DATE PLOTTED => 12-AUG-2009 TIME PLOTTED => 10:18

DIST	COUNTY	ROUTE	POST MILES TOTAL PROJECT	SHEET No	TOTAL SHEETS
04	SF	101,1	9.2/9.8, 6.8/7.1	517	567

Robert B. Giorgis Jr. 8-15-09
REGISTERED CIVIL ENGINEER DATE

7-20-09
PLANS APPROVAL DATE

REGISTERED PROFESSIONAL ENGINEER ROBERT B. GIORGIS JR. No. C60705 Exp. 12/31/10 CIVIL STATE OF CALIFORNIA

The State of California or its officers or agents shall not be responsible for the accuracy or completeness of electronic copies of this plan sheet.

1

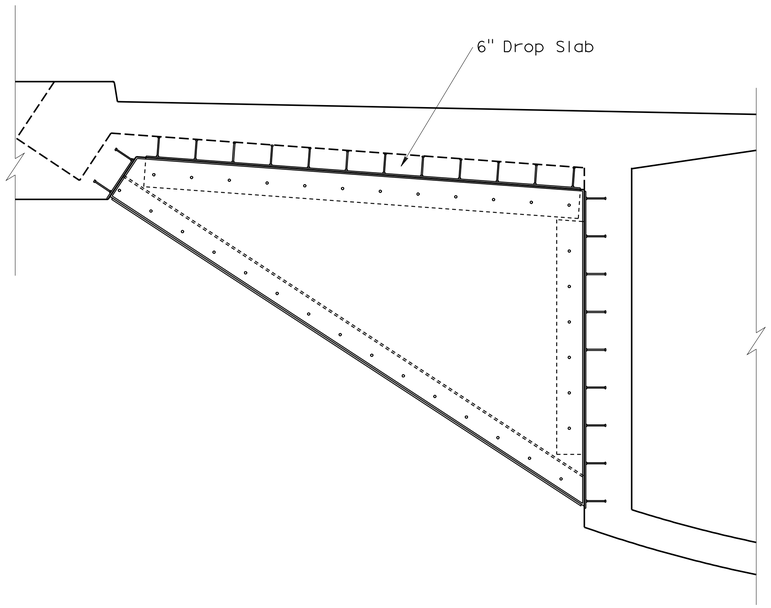

NOTES:

1. Refer to Type 21 Pedestal and 1B Pedestal for pedestal details.
2. Refer to "Steel Fin Details" for addtional information.

FIN MODIFICATION TO ACCOMMODATE DROP SLAB DETAIL

NOTE:
THE CONTRACTOR SHALL VERIFY ALL CONTROLLING FIELD DIMENSIONS BEFORE ORDERING OR FABRICATING ANY MATERIAL.

1 **REVISED PER ADDENDUM No. 1 DATED AUGUST 13, 2009**

DROP SLAB DETAIL 1
NO SCALE

SD 5.4

Jeffrey B Woody
BRANCH CHIEF

	BY	CHECKED
DESIGN	J DATILES	M O'LEARY
DETAILS	D W JUSTICE Jr	M O'LEARY
QUANTITIES	M O'LEARY	J DATILES

STATE OF CALIFORNIA
DEPARTMENT OF TRANSPORTATION

DIVISION OF ENGINEERING SERVICES
STRUCTURE DESIGN
DESIGN BRANCH 4

BRIDGE NO. 34-0160G
POST MILE X

N1 - S101 CONNECTOR
PEDESTAL DETAILS NO. 4

STRUCTURES DESIGN DETAIL SHEET (ENGLISH) (REV. 10/25/05)

ORIGINAL SCALE IN INCHES FOR REDUCED PLANS 0 1 2 3

CU 04
EA 163731

DISREGARD PRINTS BEARING EARLIER REVISION DATES

REVISION DATES: ~~5-28-09~~ ~~5-11-09~~ ~~5-21-09~~ ~~6-12-09~~ ~~7-20-09~~ 7-27-09

SHEET 4 OF 6

FILE => 04_163731_sd5.4.dgn

USERNAME => friemard DATE PLOTTED => 12-AUG-2009 TIME PLOTTED => 10:18

DIST	COUNTY	ROUTE	POST MILES TOTAL PROJECT	SHEET No	TOTAL SHEETS
04	SF	101,1	9.2/9.8, 6.8/7.1	518	567

Robert B. Giorgis Jr.
REGISTERED CIVIL ENGINEER DATE

7-20-09
PLANS APPROVAL DATE

REGISTERED PROFESSIONAL ENGINEER ROBERT B. GIORGIS JR. No. C60705 Exp. 12/31/10 CIVIL STATE OF CALIFORNIA

The State of California or its officers or agents shall not be responsible for the accuracy or completeness of electronic copies of this plan sheet.

1

NOTES:

1. For "SECTION B-B" see bridge details sheet "TYPICAL SECTION NO 2" "Detail C" in Connector Plans.
2. For "SECTION C-C" see "ELEVATION" Sheet SD 5.2.
3. For additional details see Sheets SD 5.2.

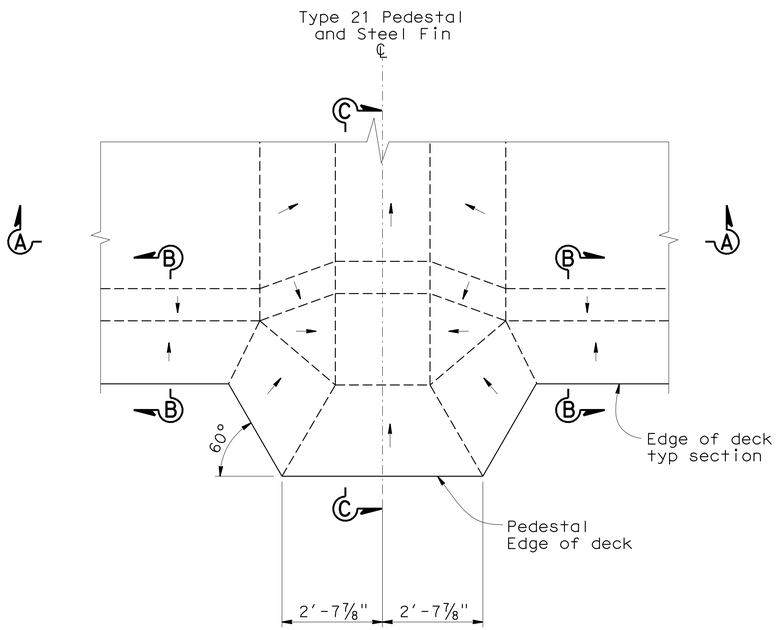

PLAN
(BOTTOM CONTOUR)

NOTE: Arrows indicate a downward direction.

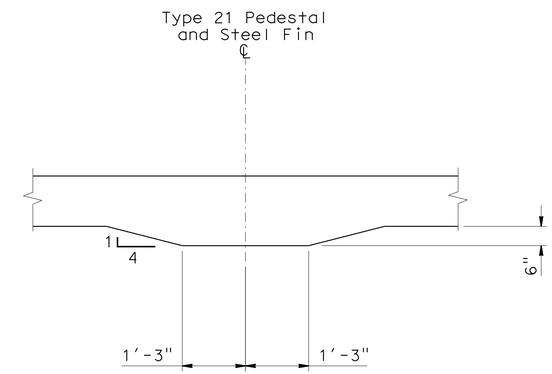

SECTION A-A

PEDESTAL FOR TYPE 21 LIGHTING STANDARD & TYPE 1B METERING LIGHT

NOTE:
THE CONTRACTOR SHALL VERIFY ALL CONTROLLING FIELD DIMENSIONS BEFORE ORDERING OR FABRICATING ANY MATERIAL.

1 **REVISED PER ADDENDUM No. 1 DATED AUGUST 13, 2009**

DROP SLAB DETAIL 2
NO SCALE
SD 5.5

Jeffrey B Woody
BRANCH CHIEF

DESIGN	BY M O'LEARY	CHECKED JOHN DATILES
DETAILS	BY D W JUSTICE Jr	CHECKED JOHN DATILES
QUANTITIES	BY M O'LEARY	CHECKED JOHN DATILES

STATE OF CALIFORNIA
DEPARTMENT OF TRANSPORTATION

DIVISION OF ENGINEERING SERVICES
STRUCTURE DESIGN
SPECIAL DESIGNS BRANCH

BRIDGE NO. 34-0160G
POST MILE X

N1-S101 CONNECTOR
PEDESTAL DETAILS NO. 5

STRUCTURES DESIGN SPECIAL DESIGN SHEET (ENGLISH) (REV. 10-25-05)

ORIGINAL SCALE IN INCHES FOR REDUCED PLANS 0 1 2 3

CU 04
EA 163731

DISREGARD PRINTS BEARING EARLIER REVISION DATES → ~~6-1-09~~ ~~6-17-09~~ 7-20-09

REVISION DATES

SHEET 5 OF 6

FILE => 04_163731_sd5.5.dgn

USERNAME => frlenard DATE PLOTTED => 12-AUG-2009 TIME PLOTTED => 10:18

DIST	COUNTY	ROUTE	POST MILES TOTAL PROJECT	SHEET No	TOTAL SHEETS
04	SF	101,1	9.2/9.8, 6.8/7.1	519	567

Robert B. Giorgis Jr. 6-15-09
REGISTERED CIVIL ENGINEER DATE

7-20-09
PLANS APPROVAL DATE

REGISTERED PROFESSIONAL ENGINEER ROBERT B. GIORGIS JR. No. C60705 Exp. 12/31/10 CIVIL STATE OF CALIFORNIA

The State of California or its officers or agents shall not be responsible for the accuracy or completeness of electronic copies of this plan sheet.

1

NOTE:

1. For additional details see Sheet SD 5.2

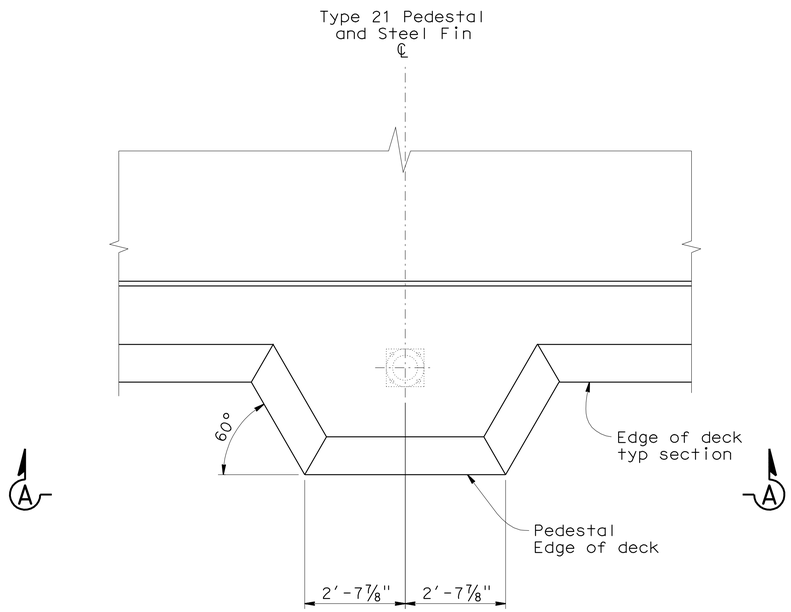

PLAN
(TOP CONTOUR)

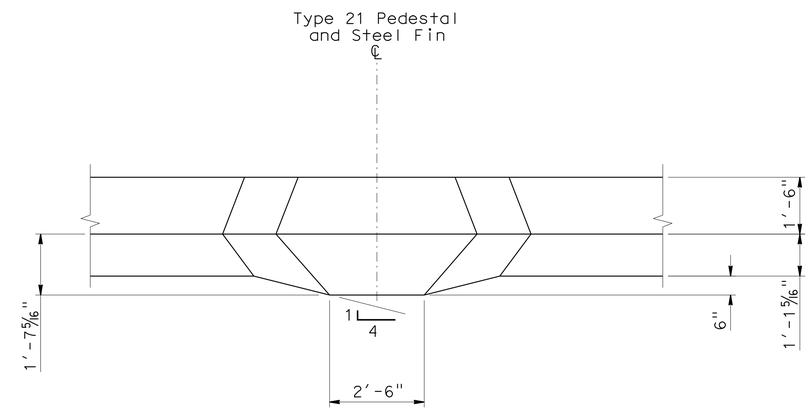

VIEW A-A

PEDESTAL FOR TYPE 21 LIGHTING STANDARD & TYPE 1B METERING LIGHT

NOTE:
THE CONTRACTOR SHALL VERIFY ALL CONTROLLING FIELD DIMENSIONS BEFORE ORDERING OR FABRICATING ANY MATERIAL.

1 **REVISED PER ADDENDUM No. 1 DATED AUGUST 13, 2009**

DROP SLAB DETAIL 3
NO SCALE
SD 5.6

Jeffrey B Wbody
BRANCH CHIEF

	BY	CHECKED
DESIGN	M O'LEARY	JOHN DATILES
DETAILS	D W JUSTICE Jr	JOHN DATILES
QUANTITIES	M O'LEARY	JOHN DATILES

STATE OF CALIFORNIA
DEPARTMENT OF TRANSPORTATION

DIVISION OF ENGINEERING SERVICES
STRUCTURE DESIGN
SPECIAL DESIGNS BRANCH

BRIDGE NO. 34-0160G
POST MILE X

N1-S101 CONNECTOR
PEDESTAL DETAILS NO. 6

STRUCTURES DESIGN SPECIAL DESIGN SHEET (ENGLISH) (REV. 10-25-05)

ORIGINAL SCALE IN INCHES FOR REDUCED PLANS 0 1 2 3

CU 04
EA 163731

DISREGARD PRINTS BEARING EARLIER REVISION DATES

REVISION DATES: ~~6-1-09~~ ~~6-12-09~~ ~~7-20-09~~ 7-27-09

SHEET 6 OF 6

FILE => 04_163731_sd5.6.dgn

USERNAME => Trlenard DATE PLOTTED => 12-AUG-2009 TIME PLOTTED => 10:19

DIST	COUNTY	ROUTE	POST MILES TOTAL PROJECT	SHEET No	TOTAL SHEETS
04	SF	101,1	9.2/9.8, 6.8/7.1	522A	567

REGISTERED CIVIL ENGINEER DATE

7-20-09
PLANS APPROVAL DATE

REGISTERED PROFESSIONAL ENGINEER GENARO M. DORIA No. C63583 Exp. 9/30/10 CIVIL STATE OF CALIFORNIA

The State of California or its officers or agents shall not be responsible for the accuracy or completeness of electronic copies of this plan sheet.

1

Notes:

1. See, "ROADWAY PLANS" for layout and location.

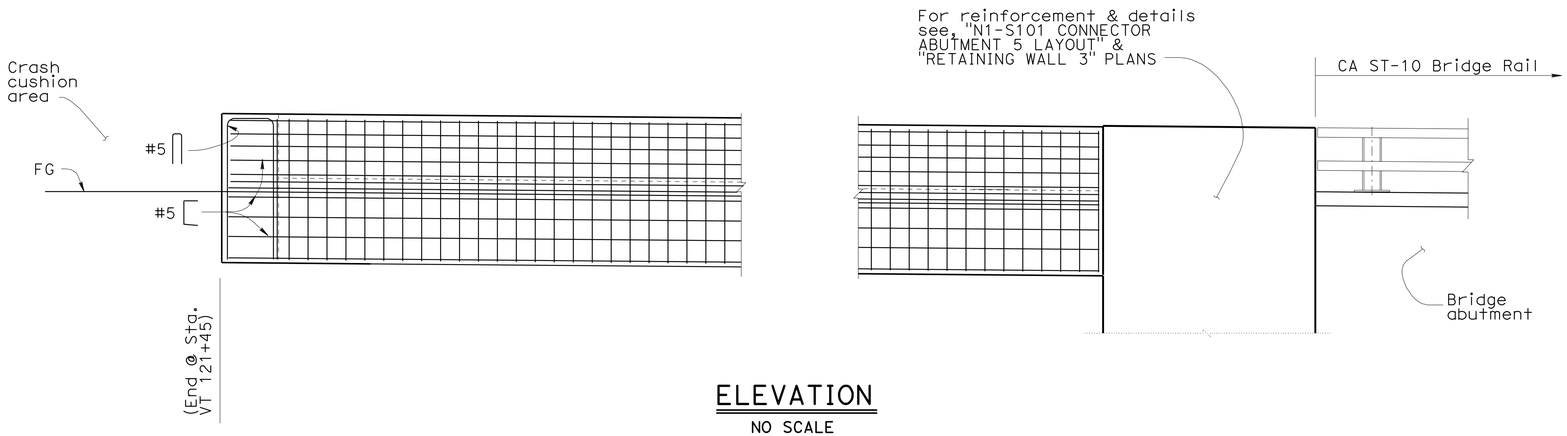

ELEVATION

NO SCALE

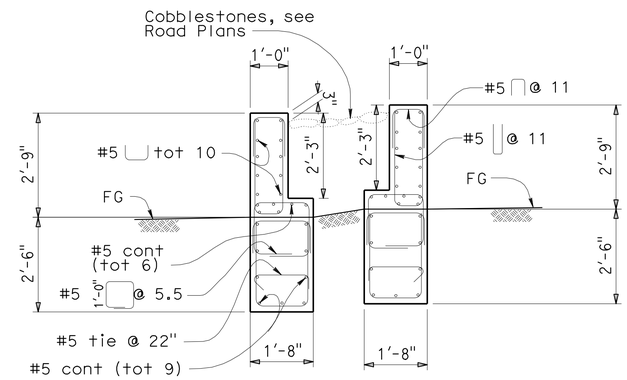

Note:
Left and right side similar

SECTION A-A

NO SCALE

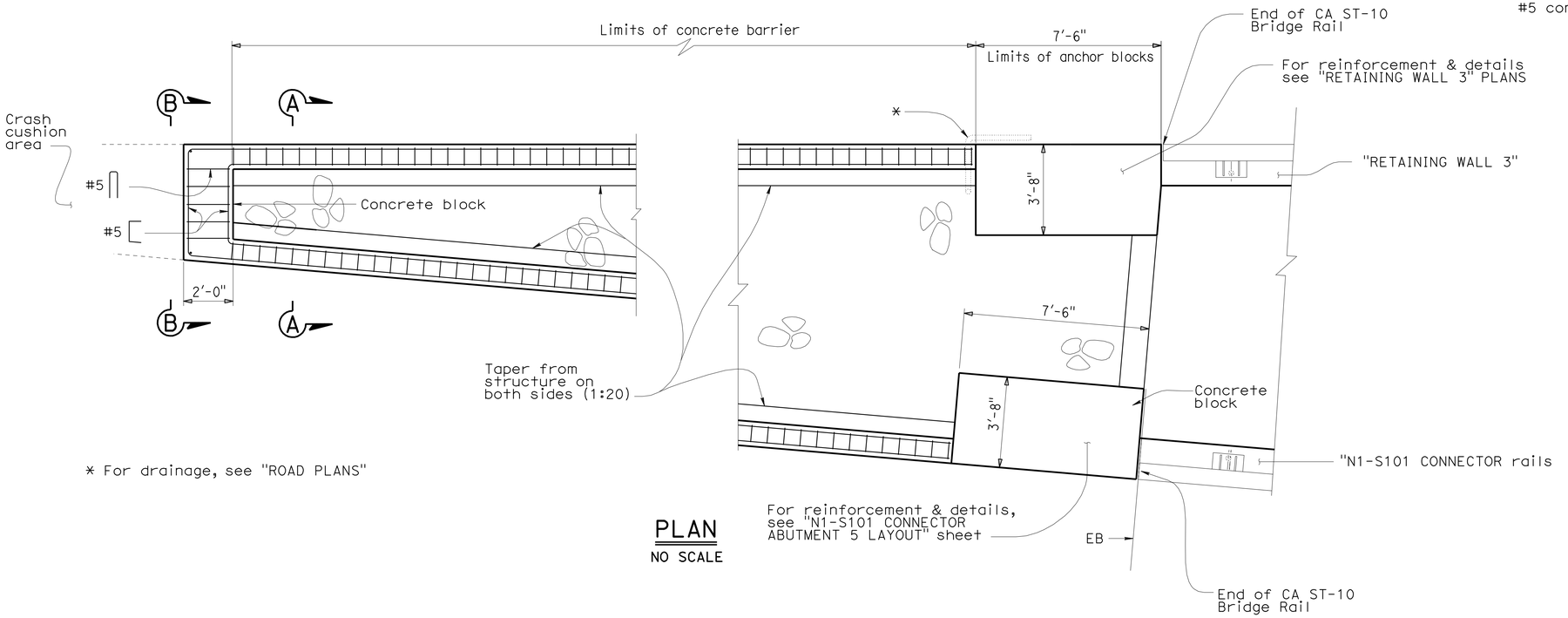

* For drainage, see "ROAD PLANS"

PLAN

NO SCALE

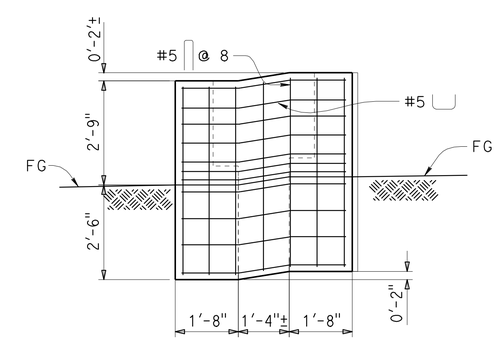

SECTION B-B

NO SCALE

(Ends @ Sta. 121+45)

1 ADDED PER ADDENDUM No. 1 DATED AUGUST 13, 2009

CONSTRUCTION DETAILS
CALIFORNIA ST-10 BARRIER TRANSITION

BRANCH CHIEF

	BY	CHECKED
DESIGN	G DORIA	J MAGANA
DETAILS	P C WELLS	G DORIA
QUANTITIES	G DORIA	P C WELLS

STATE OF CALIFORNIA
DEPARTMENT OF TRANSPORTATION

DIVISION OF ENGINEERING SERVICES
STRUCTURE DESIGN
SPECIAL DESIGNS BRANCH

BRIDGE NO. N/A
POST MILE

N1-S101 CONNECTOR (VT GORE AREA)
CALIFORNIA ST-10 BARRIER TRANSITION

STRUCTURES DESIGN SPECIAL DESIGN SHEET (ENGLISH) (REV. 10-25-05)

ORIGINAL SCALE IN INCHES FOR REDUCED PLANS 0 1 2 3

CU 04
EA 163731

DISREGARD PRINTS BEARING EARLIER REVISION DATES

REVISION DATES: 8-11-09

SHEET OF

FILE => KBARst10crash.add

USERNAME => trienard DATE PLOTTED => 12-AUG-2009 TIME PLOTTED => 10:19

DIST	COUNTY	ROUTE	POST MILES TOTAL PROJECT	SHEET No	TOTAL SHEETS
04	SF	101,1	9.2/9.8, 6.8/7.1	529	567

REGISTERED CIVIL ENGINEER 06-04-09 DATE

7-20-09
PLANS APPROVAL DATE

The State of California or its officers or agents shall not be responsible for the accuracy or completeness of electronic copies of this plan sheet.

REGISTERED PROFESSIONAL ENGINEER Philip E. Lutz No. C55839 Exp. 12-31-10 CIVIL STATE OF CALIFORNIA

LEGEND :

Denotes limits of Architectural Treament (Pattern to be determined)

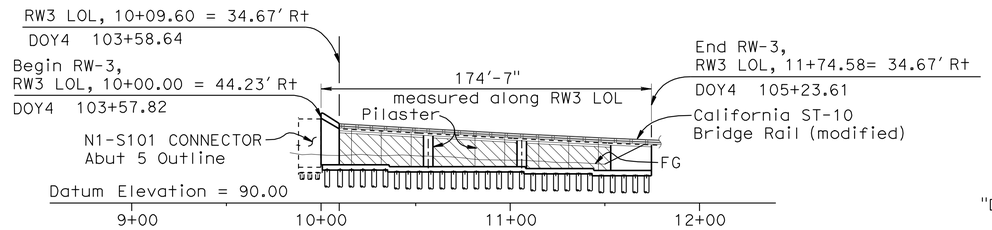

DEVELOPED ELEVATION

1"=40'-0"

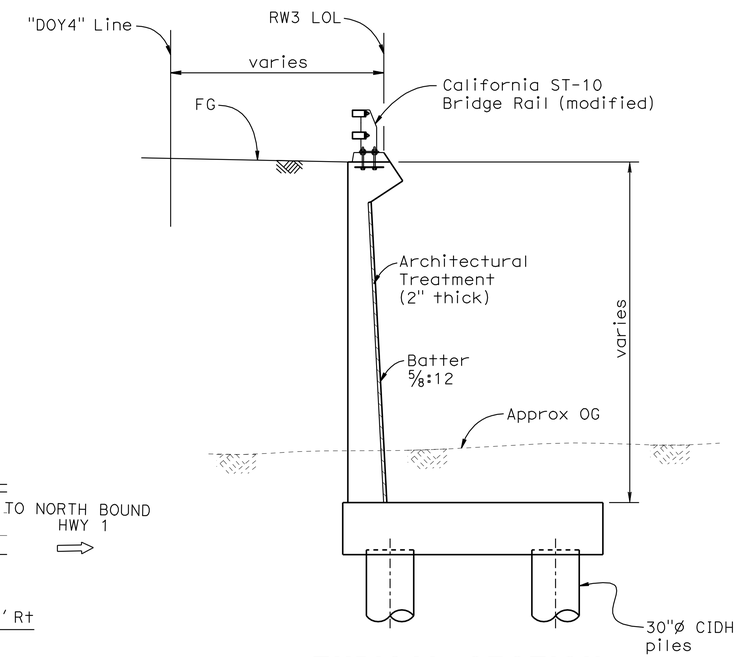

TYPICAL SECTION

1/4"=1'-0"

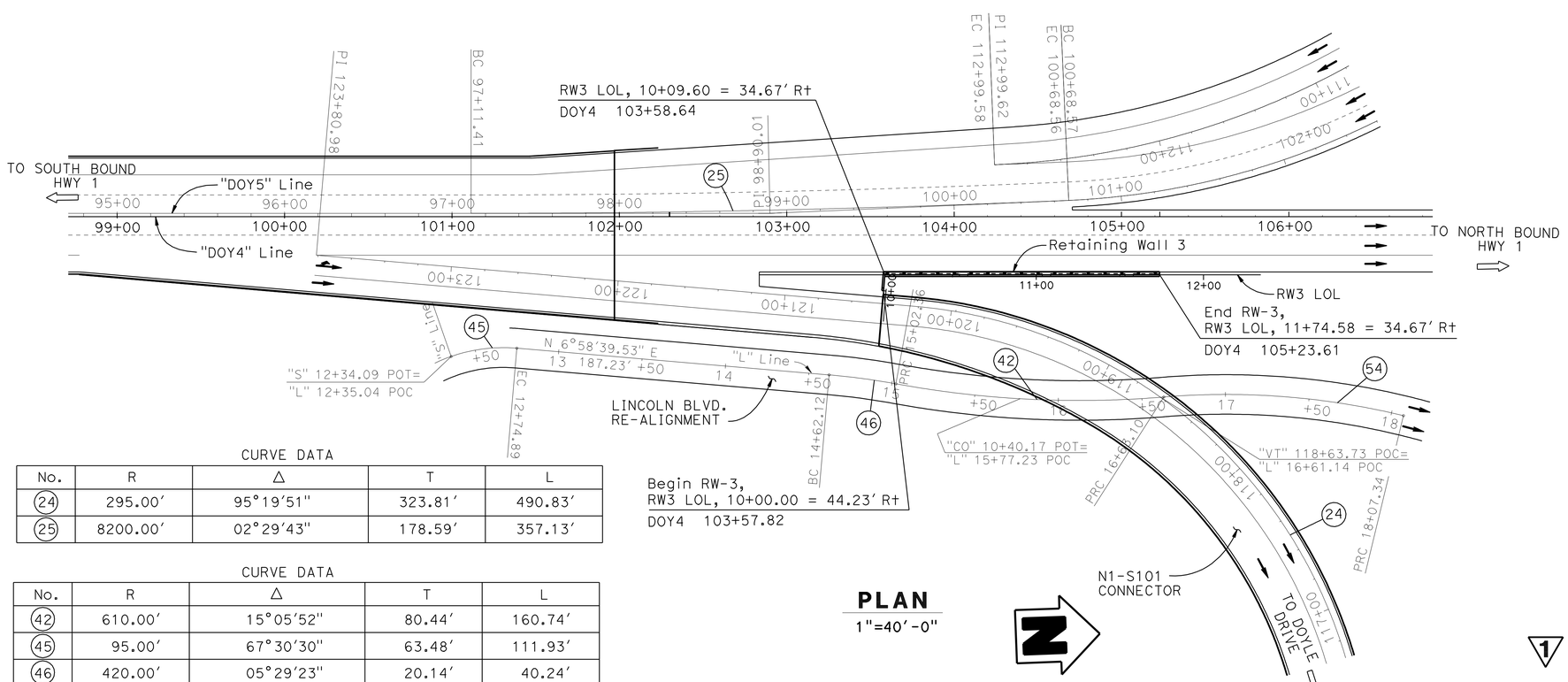

PLAN

1"=40'-0"

CURVE DATA

No.	R	Δ	T	L
24	295.00'	95°19'51"	323.81'	490.83'
25	8200.00'	02°29'43"	178.59'	357.13'

CURVE DATA

No.	R	Δ	T	L
42	610.00'	15°05'52"	80.44'	160.74'
45	95.00'	67°30'30"	63.48'	111.93'
46	420.00'	05°29'23"	20.14'	40.24'
54	450.01'	18°21'53"	72.74'	144.24'

QUANTITIES

STRUCTURE EXCAVATION (RETAINING WALL) (NATURALLY OCCURING ASBESTOS)	240	CY
STRUCTURE EXCAVATION (TYPE Z-2) (AERIALLY DEPOSITED LEAD)	175	CY
STRUCTURE BACKFILL (RETAINING WALL)	400	CY
30" CAST-IN-DRILLED-HOLE CONCRETE PILING	1,850	LF
STRUCTURAL CONCRETE, RETAINING WALL	400	CY
1 ~~ARCHITECTURAL TREATMENT (2" THICK)~~	~~1,820~~	~~SQFT~~
BAR REINFORCING STEEL (RETAINING WALL)	111,000	LB
CALIFORNIA ST-10 BRIDGE RAIL (MODIFIED)	173	LF

1 **REVISED PER ADDENDUM No. 1 DATED AUGUST 13, 2009**

DESIGN	BY Phil Lutz	CHECKED Nasser Tachta	LOAD & RESISTANCE FACTOR DESIGN		
DETAILS	BY Carlo Cancino	CHECKED Nasser Tachta	LAYOUT	BY Nasser Tachta	CHECKED Phil Lutz
QUANTITIES	BY B. Thach	CHECKED Nasser Tachta	SPECIFICATIONS	BY X	PLANS AND SPECS COMPARED X

Majid Madani
DESIGN ENGINEER

STATE OF CALIFORNIA
DEPARTMENT OF TRANSPORTATION

DIVISION OF ENGINEERING SERVICES
STRUCTURE DESIGN
DESIGN BRANCH 9

BRIDGE NO. 34E0011
POST MILE 6.95

RETAINING WALL NO. 3
GENERAL PLAN

ORIGINAL SCALE IN INCHES FOR REDUCED PLANS 0 1 2 3

CU 04242
EA 163731

DISREGARD PRINTS BEARING EARLIER REVISION DATES

REVISION DATES: 04-15-09 05-06-09 05-21-09 06-04-09 06-15-09 07-08-09

SHEET 1 OF 15

STRUCTURES DESIGN GENERAL PLAN SHEET (ENGLISH) (REV.07-24-06)

FILE => 34e0011-a-gp.add

USERNAME => trlenard DATE PLOTTED => 12-AUG-2009 TIME PLOTTED => 10:19

DIST	COUNTY	ROUTE	POST MILES TOTAL PROJECT	SHEET No	TOTAL SHEETS
04	SF	101,1	9.2/9.8, 6.8/7.1	555	567

REGISTERED CIVIL ENGINEER — DATE 06-04-09

7-20-09
PLANS APPROVAL DATE

The State of California or its officers or agents shall not be responsible for the accuracy or completeness of electronic copies of this plan sheet.

REGISTERED PROFESSIONAL ENGINEER — Philip E. Lutz — No. C55839 — Exp. 12-31-10 — CIVIL — STATE OF CALIFORNIA

LEGEND:

Denotes limits of Architectural Treament (Pattern to be determined)

QUANTITIES:

STRUCTURE EXCAVATION (RETAINING WALL) (NATURALLY OCCURING ASBESTOS)	850	CY
STRUCTURE EXCAVATION (TYPE Z-2) (AERIALLY DEPOSITED LEAD)	270	CY
STRUCTURE BACKFILL (RETAINING WALL)	1,950	CY
30" CAST-IN-DRILLED-HOLE CONCRETE PILING	3.150	LF
STRUCTURAL CONCRETE, RETAINING WALL	690	CY
~~ARCHITECTURAL TREATMENT (2" THICK)~~	~~3,450~~	~~SQFT~~
BAR REINFORCING STEEL (RETAINING WALL)	235,000	LB
CALIFORNIA ST-10 BRIDGE RAIL (MODIFIED)	162	LF

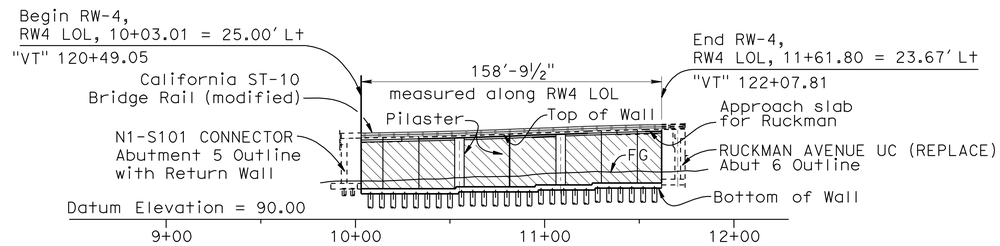

MIRRORED DEVELOPED ELEVATION

1"=40'-0"

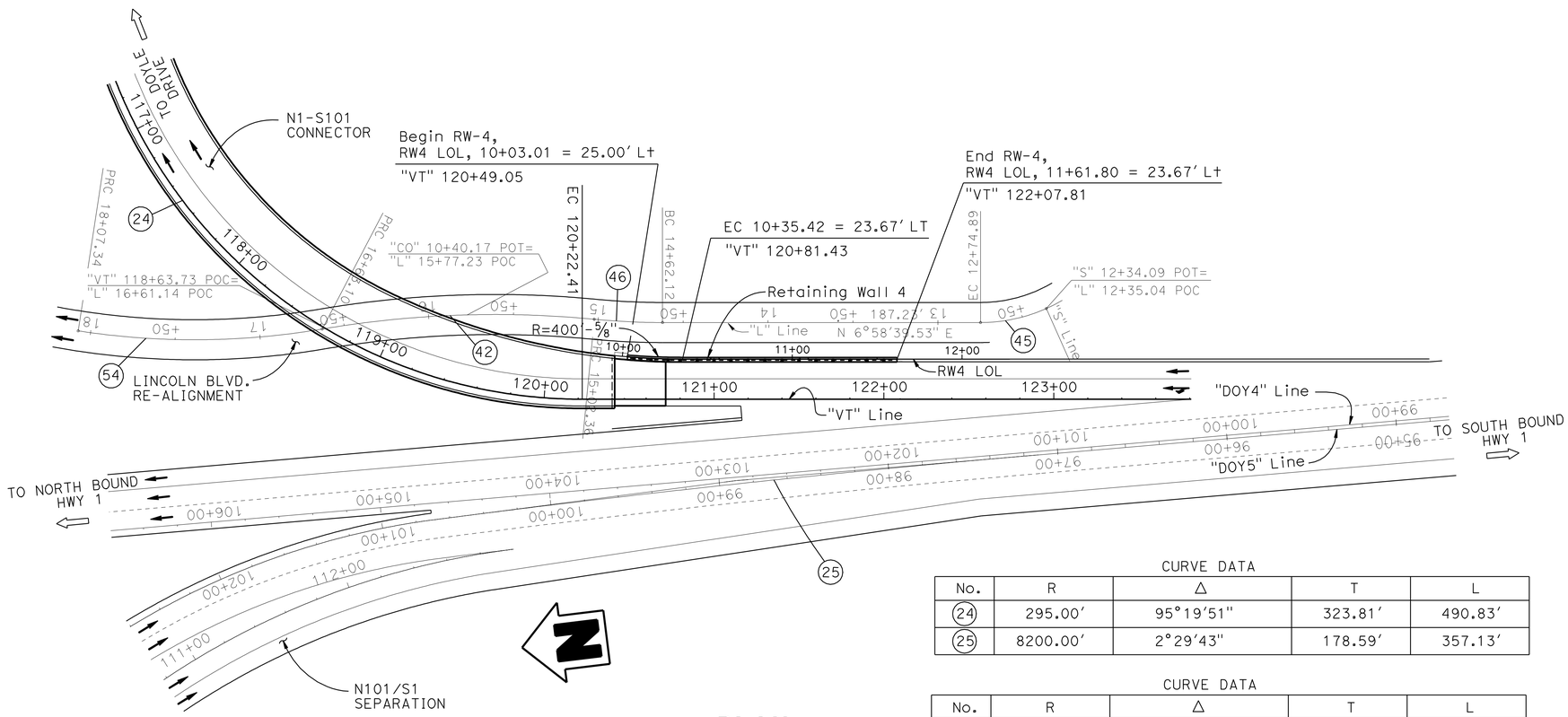

PLAN

1"=40'-0"

CURVE DATA

No.	R	Δ	T	L
24	295.00'	95°19'51"	323.81'	490.83'
25	8200.00'	2°29'43"	178.59'	357.13'

CURVE DATA

No.	R	Δ	T	L
42	610.00'	15°05'52"	80.44'	160.74'
45	95.00'	67°30'30"	63.48'	111.93'
46	420.00'	05°29'23"	20.14'	40.24'
54	450.01'	18°21'53"	72.74'	144.24'

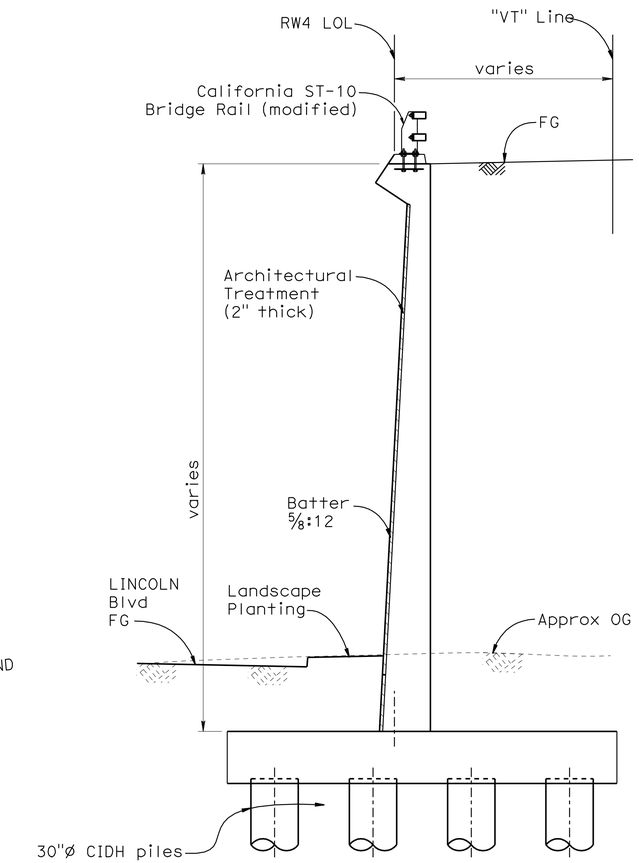

TYPICAL SECTION

¼"=1'-0"

NOTE:

Drainage for landscape planting to be installed in future replacement planting contract.

1 **REVISED PER ADDENDUM No. 1 DATED AUGUST 13, 2009**

DESIGN	BY Phil Lutz	CHECKED Nasser Tachta	LOAD & RESISTANCE FACTOR DESIGN		
DETAILS	BY Carlo Cancino	CHECKED Nasser Tachta	LAYOUT	BY Nasser Tachta	CHECKED Phil Lutz
QUANTITIES	BY B. Thach	CHECKED Nasser Tachta	SPECIFICATIONS	BY X	PLANS AND SPECS COMPARED X

Majid Madani
DESIGN ENGINEER

STATE OF CALIFORNIA
DEPARTMENT OF TRANSPORTATION

DIVISION OF ENGINEERING SERVICES
STRUCTURE DESIGN
DESIGN BRANCH 9

BRIDGE NO. 34E0013
POST MILE 6.90

RETAINING WALL NO. 4
GENERAL PLAN

ORIGINAL SCALE IN INCHES FOR REDUCED PLANS 0 1 2 3

CU 04242
EA 163731

DISREGARD PRINTS BEARING EARLIER REVISION DATES

REVISION DATES: 04-17-09 05-14-09 05-22-09 06-01-09 06-15-09 06-17-09 07-09-09

SHEET 1 OF 13

STRUCTURES DESIGN GENERAL PLAN SHEET (ENGLISH) (REV.07-24-06)

FILE => 34e0013-a-gp.add

USERNAME => trlenard DATE PLOTTED => 12-AUG-2009 TIME PLOTTED => 10:19