DIST	COUNTY	ROUTE	POST MILES TOTAL PROJECT	SHEET No	TOTAL SHEETS
04	SF	101	8.2/9.2	510	654

REGISTERED CIVIL ENGINEER 8/28/09 DATE

12-14-09
PLANS APPROVAL DATE

REGISTERED PROFESSIONAL ENGINEER KEVIN BARRY CLINCH No. C-48926 Exp. 9/30/10 CIVIL STATE OF CALIFORNIA

The State of California or its officers or agents shall not be responsible for the accuracy or completeness of scanned copies of this plan sheet.

Arup PB Joint Venture
560 Mission Street, Suite 700
San Francisco, CA 94105

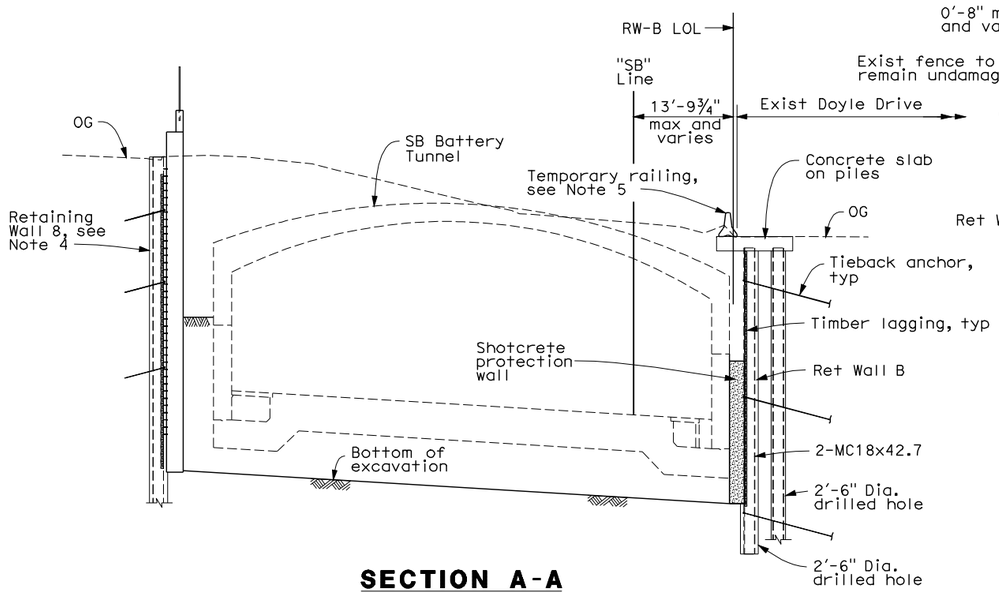

SECTION A-A
Scale: 1" = 10'

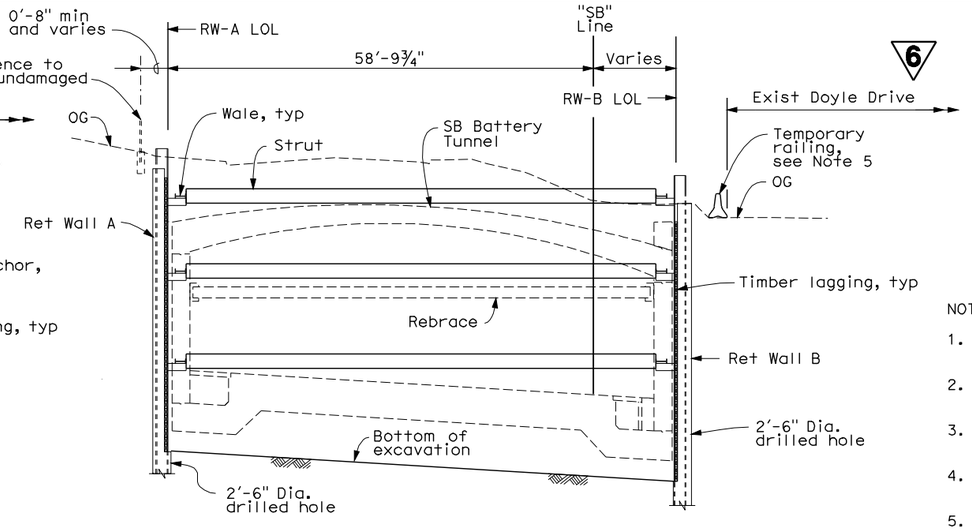

SECTION B-B
Scale: 1" = 10'

NOTES:

1. For SB Battery Tunnel details, see "Southbound Battery Tunnel" plans.
2. For locations of "Section A-A" thru "Section E-E", see sheet "RWAB-ST1".
3. For locations of inclinometers, see sheet "RWAB-ST37".
4. For Retaining Wall No. 8, see "Retaining Wall No. 8" plans.
5. For details of temporary railing, see "Roadway" plans.

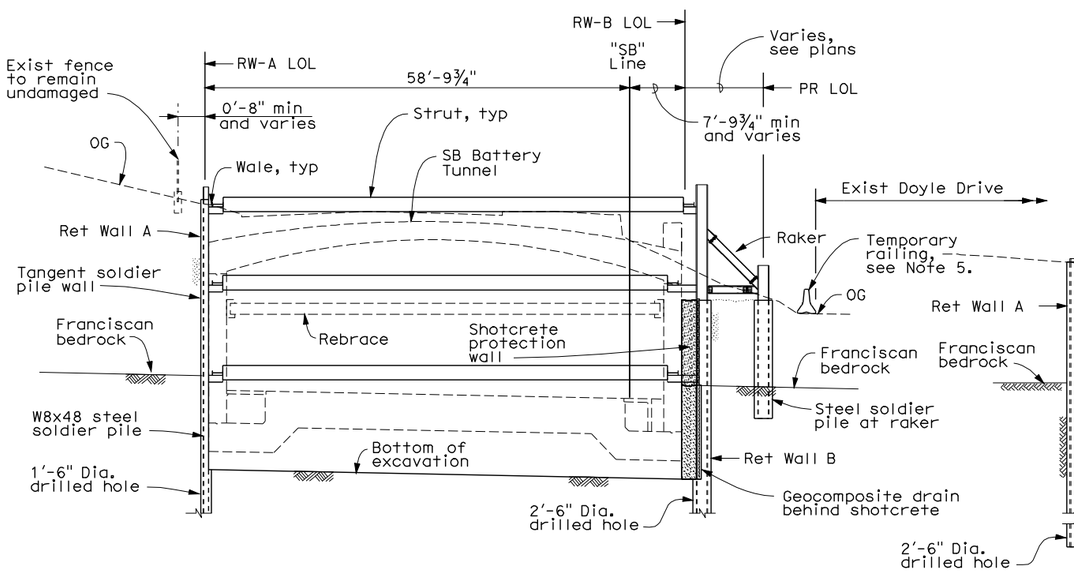

SECTION C-C
Scale: 1" = 10'

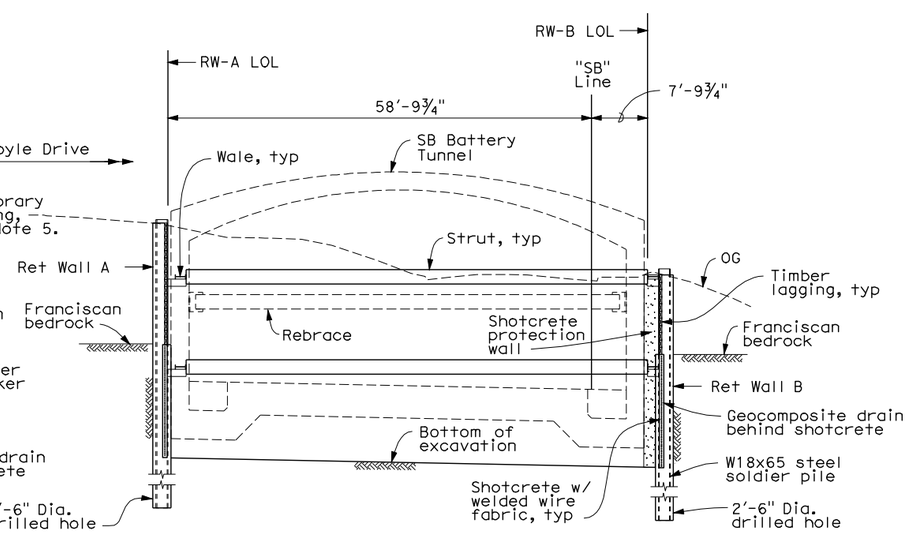

SECTION D-D
Scale: 1" = 10'

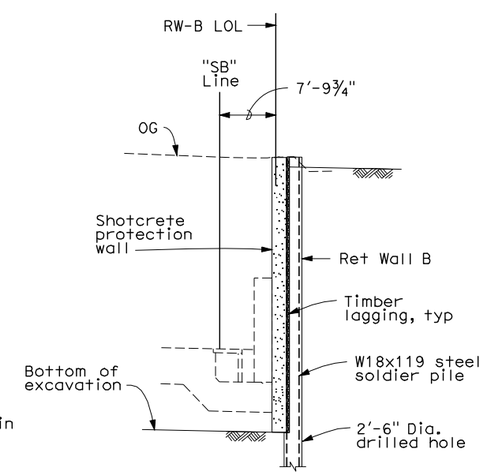

SECTION E-E
Scale: 1" = 10'

6 REVISED PER ADDENDUM No. 6 DATED FEBRUARY 17, 2010

RWAB-ST2

DESIGN	BY K. CLINCH	CHECKED M. YUCEKUL	
DETAILS	BY T. MARTARELLA	CHECKED M. YUCEKUL	
QUANTITIES	BY N. VIVAR	CHECKED J. YANG	

PREPARED FOR THE STATE OF CALIFORNIA DEPARTMENT OF TRANSPORTATION

QIYU LIU
PROJECT ENGINEER

BRIDGE NO. 34-0161RL
POST MILES 9.0/9.2

RETAINING WALL A & B
GENERAL PLAN NO.2

DESIGN DETAIL SHEET (ENGLISH) (REV. 06-01-09)

ORIGINAL SCALE IN INCHES FOR REDUCED PLANS 0 1 2 3

CU 04
EA 163741

DISREGARD PRINTS BEARING EARLIER REVISION DATES

REVISION DATES (PRELIMINARY STAGE ONLY) 06/04/09 07/08/09 08/07/09 08/26/09

SHEET 2 OF 37

FILE => 34-0161rl-ab-st002.add

USERNAME => trlenard DATE PLOTTED => 16-FEB-2010 TIME PLOTTED => 06:29

DIST	COUNTY	ROUTE	POST MILES TOTAL PROJECT	SHEET No	TOTAL SHEETS
04	SF	101	8.2/9.2	519	654

REGISTERED CIVIL ENGINEER 8/28/09 DATE

12-14-09
PLANS APPROVAL DATE

REGISTERED PROFESSIONAL ENGINEER KEVIN BARRY CLINCH No. C-48926 Exp. 9/30/10 CIVIL STATE OF CALIFORNIA

The State of California or its officers or agents shall not be responsible for the accuracy or completeness of scanned copies of this plan sheet.

Arup PB Joint Venture
560 Mission Street, Suite 700
San Francisco, CA 94105

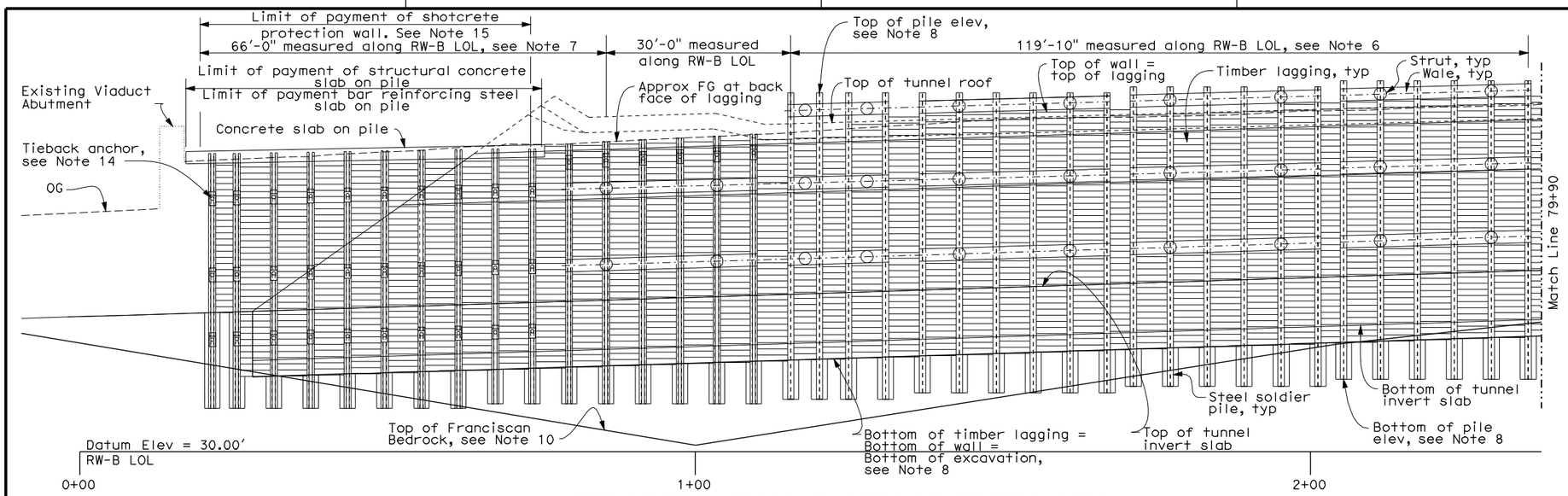

RETAINING WALL B MIRROR ELEVATION

Scale: 1"=10'

6 REVISED PER ADDENDUM No. 6 DATED FEBRUARY 17, 2010

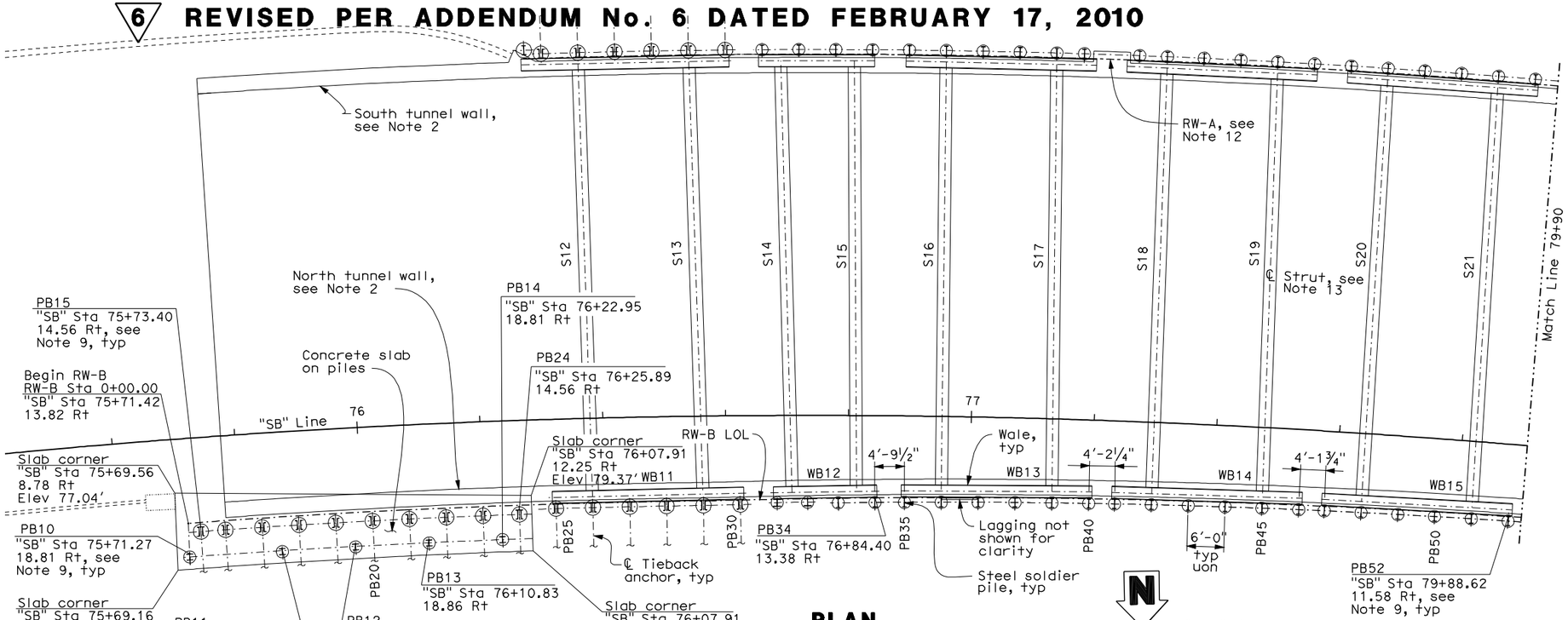

PLAN

Scale: 1"=10'

15. Limit of payment of shotcrete protection wall from Sta 75+71.25 to Sta 76+25.90 measured along RW-B LOL.

WALE SCHEDULE

Wales	Bracing Level	Size
WB1-WB10	NOT USED	
WB11	2	W14x176
	3	W14x257
WB12-WB20	1	W18x119
	2	W14x176
	3	W14x257
WB21-WB35	1	W18x119
	2, 3	W14x176
WB36-WB38	2, 3	W14x176

Notes:

1. For General Notes, see sheet "RWAB-ST4".
2. For "SB Battery Tunnel", see "Southbound Battery Tunnel" plans.
3. See sheet "RWAB-ST16" for "Part. Typical Section at RW-B" between piles PB15-PB24, inclusive.
4. For "Typical Section at Retaining Walls" between piles PB25-PB30, inclusive, see sheet "RWAB-ST16"
5. For "Typical Section at Retaining Walls" between piles PB31-PB52, inclusive, see sheet "RWAB-ST17"
6. For "Typical Section at Steel Soldier Pile With Lagging", see sheet "RWAB-ST25".
7. For "Typical Section at Soldier Pile With Tieback & Struts", see sheet "RWAB-ST28".
8. For "Soldier Pile Schedule" and Lagging Panel Schedule", see sheets "RWAB-ST30" thru "RWAB-ST35"
9. Soldier pile stations are located at the center of flange nearest tunnel wall. See "Section L-L" on sheet "RWAB-ST25" and "Section V-V" on sheet "RWAB-ST29"
10. For approx profile of Franciscan bedrock along SB Battery Tunnel, see "Doyle Drive Replacement Project Southbound Battery Tunnel Foundation Report".
11. For strut schedule, see sheet "RWAB-ST6".
12. For Retaining Wall A, see sheet "RWAB-ST6".
13. Strut ℄ work points are located at soldier pile stations, uon.
14. For tieback anchor design criteria, see sheet "RWAB-ST4".

RWAB-ST11

DESIGN	BY K. CLINCH	CHECKED M. YUCEKUL	
DETAILS	BY P. A. TONKIN	CHECKED M. YUCEKUL	
QUANTITIES	BY N. VIVAR	CHECKED J. YANG	

PREPARED FOR THE STATE OF CALIFORNIA DEPARTMENT OF TRANSPORTATION

QIYU LIU
PROJECT ENGINEER

BRIDGE NO. 34-0161RL
POST MILES 9.0/9.2

RETAINING WALL A&B
STRUCTURE PLAN NO.6

DESIGN DETAIL SHEET (ENGLISH) (REV. 06-01-09)

ORIGINAL SCALE IN INCHES FOR REDUCED PLANS 0 1 2 3

CU 04
EA 163741

DISREGARD PRINTS BEARING EARLIER REVISION DATES

REVISION DATES (PRELIMINARY STAGE ONLY) 06/04/09 07/10/09 08/07/09 08/26/09

SHEET 11 OF 37

FILE => 34-0161rl-ab-st011.add

USERNAME => $USER$ DATE PLOTTED => $DATE$ TIME PLOTTED => $TIME$

DIST	COUNTY	ROUTE	POST MILES TOTAL PROJECT	SHEET No	TOTAL SHEETS
04	SF	101	8.2/9.2	521	654

REGISTERED CIVIL ENGINEER 8/28/09 DATE

12-14-09
PLANS APPROVAL DATE

REGISTERED PROFESSIONAL ENGINEER KEVIN BARRY CLINCH No. C-48926 Exp. 9/30/10 CIVIL STATE OF CALIFORNIA

The State of California or its officers or agents shall not be responsible for the accuracy or completeness of scanned copies of this plan sheet.

Arup PB Joint Venture
560 Mission Street, Suite 700
San Francisco, CA 94105

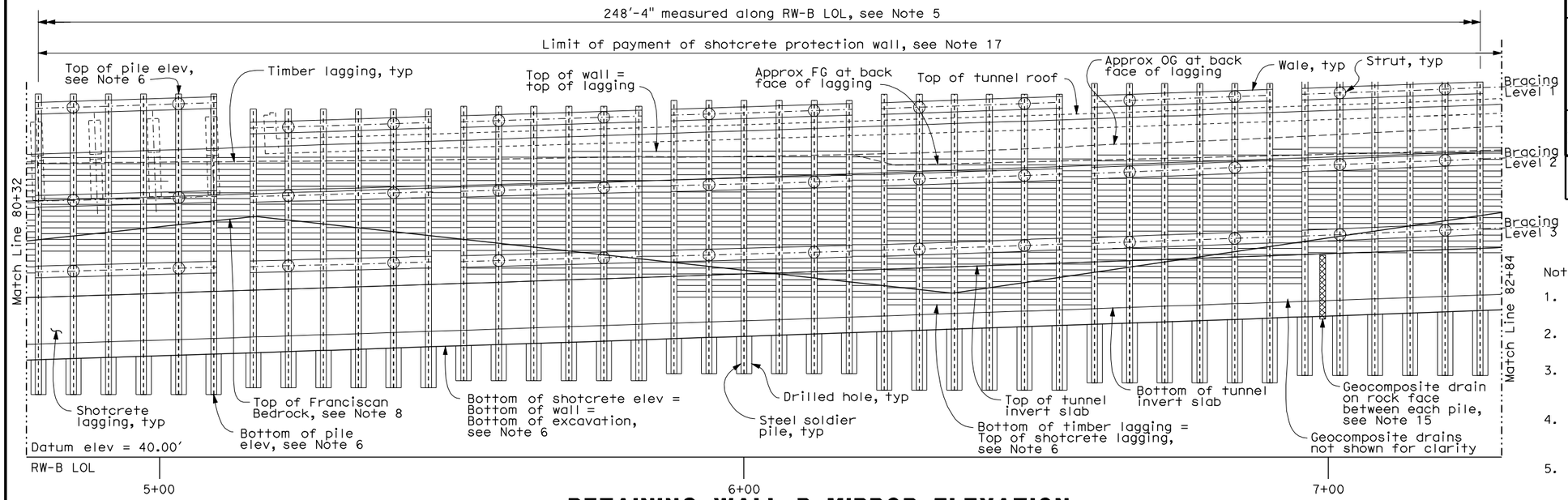

RETAINING WALL B MIRROR ELEVATION

Scale: 1"=10'

6 REVISED PER ADDENDUM No. 6 DATED FEBRUARY 17, 2010

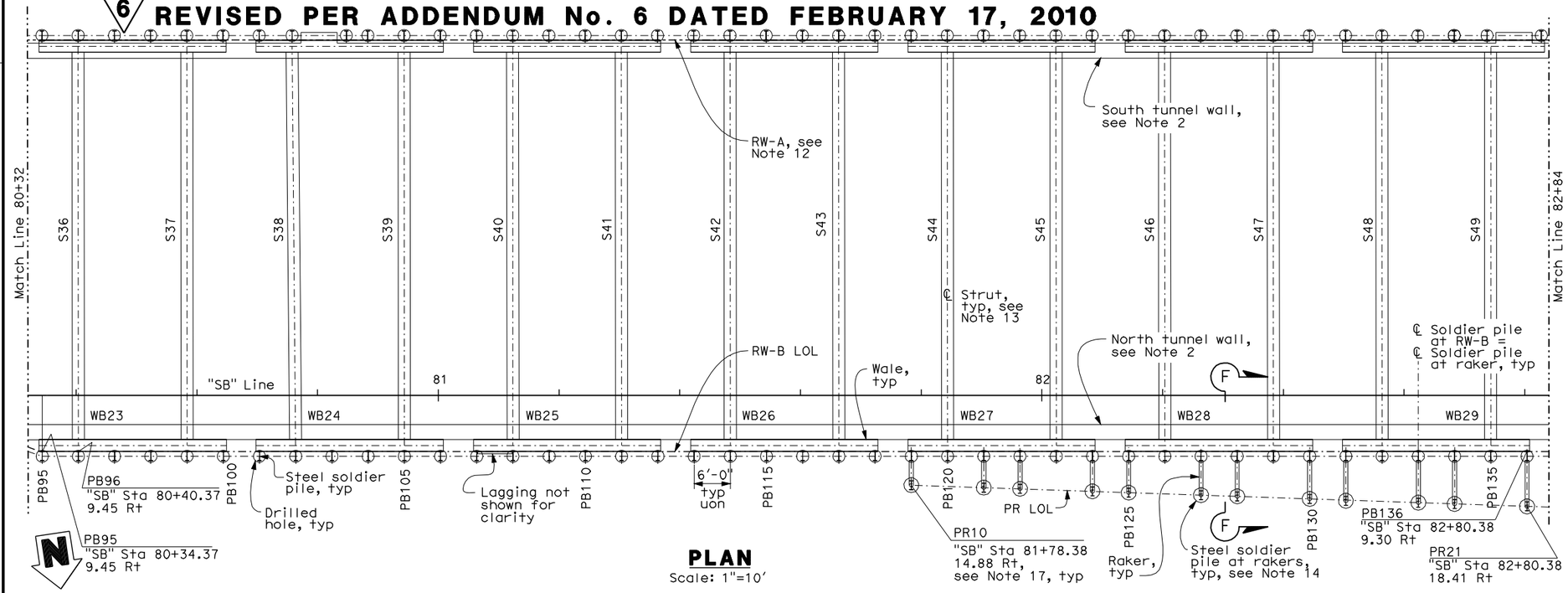

PLAN

Scale: 1"=10'

6

Notes:

1. For General Notes, see sheet "RWAB-ST4".
2. For "SB Battery Tunnel", see "Southbound Battery Tunnel" plans.
3. For "Part. Section at RW-B" between piles PB95-PB119, inclusive, see sheet "RWAB-ST19"
4. For "Typical Section at Retaining Walls" between piles PB120-PB135, inclusive, see sheet "RWAB-ST20"
5. For "Typical Section at Steel Soldier Pile With Shotcrete Lagging", see sheet "RWAB-ST26".
6. For "Soldier Pile Schedule" and "Lagging Panel Schedule", see sheets "RWAB-ST30" thru "RWAB-ST35"
7. Soldier pile stations are located at the center of flange nearest tunnel wall. See "Section L-L" on sheet "RWAB-ST25".
8. For approx profile of Franciscan bedrock along SB Battery Tunnel, see "Doyle Drive Replacement Project Southbound Battery Tunnel Foundation Report".
9. For strut schedule, see sheet "RWAB-ST6".
10. For wale schedule, see sheet "RWAB-ST11".
11. For "Section F-F", see sheet "RWAB-ST23".
12. For Retaining Wall A, see sheet "RWAB-ST8".
13. Strut ℄ work points are located at soldier pile stations, uon.
14. For Soldier Pile at Raker Schedule, see sheet RWAB-ST35".
15. For details of geocomposite drain, see sheet "RWAB-ST26".
16. Raker pile stations are located at the center of steel pile and PR LOL.
17. Limit of payment of shotcrete protection wall from Sta 80+34.37 to Sta 82+84.00 measured along RW-B LOL.

RWAB-ST13

DESIGN	BY K. CLINCH	CHECKED M. YUCEKUL	
DETAILS	BY P. A. TONKIN	CHECKED M. YUCEKUL	
QUANTITIES	BY N. VIVAR	CHECKED J. YANG	

PREPARED FOR THE STATE OF CALIFORNIA DEPARTMENT OF TRANSPORTATION

QIYU LIU
PROJECT ENGINEER

BRIDGE NO. 34-0161RL
POST MILES 9.0/9.2

RETAINING WALL A & B
STRUCTURE PLAN NO.8

DESIGN DETAIL SHEET (ENGLISH) (REV. 06-01-09)

ORIGINAL SCALE IN INCHES FOR REDUCED PLANS 0 1 2 3

CU 04
EA 163741

DISREGARD PRINTS BEARING EARLIER REVISION DATES

REVISION DATES (PRELIMINARY STAGE ONLY) 06/01/09 07/08/09 08/07/09 08/26/09

SHEET 13 OF 37

FILE => 34-0161rl-ab-st013.add

USERNAME => $USER$ DATE PLOTTED => $DATE$ TIME PLOTTED => $TIME$

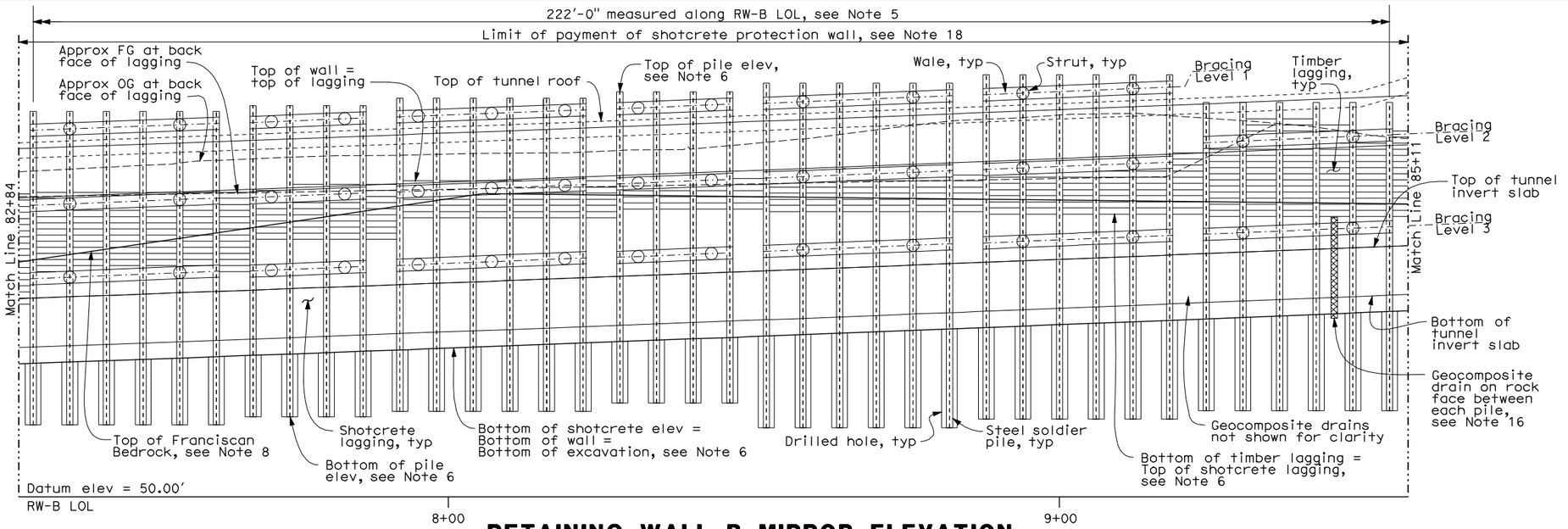

RETAINING WALL B MIRROR ELEVATION

Scale: 1"=10'

6 **REVISED PER ADDENDUM No. 6 DATED FEBRUARY 17, 2010**

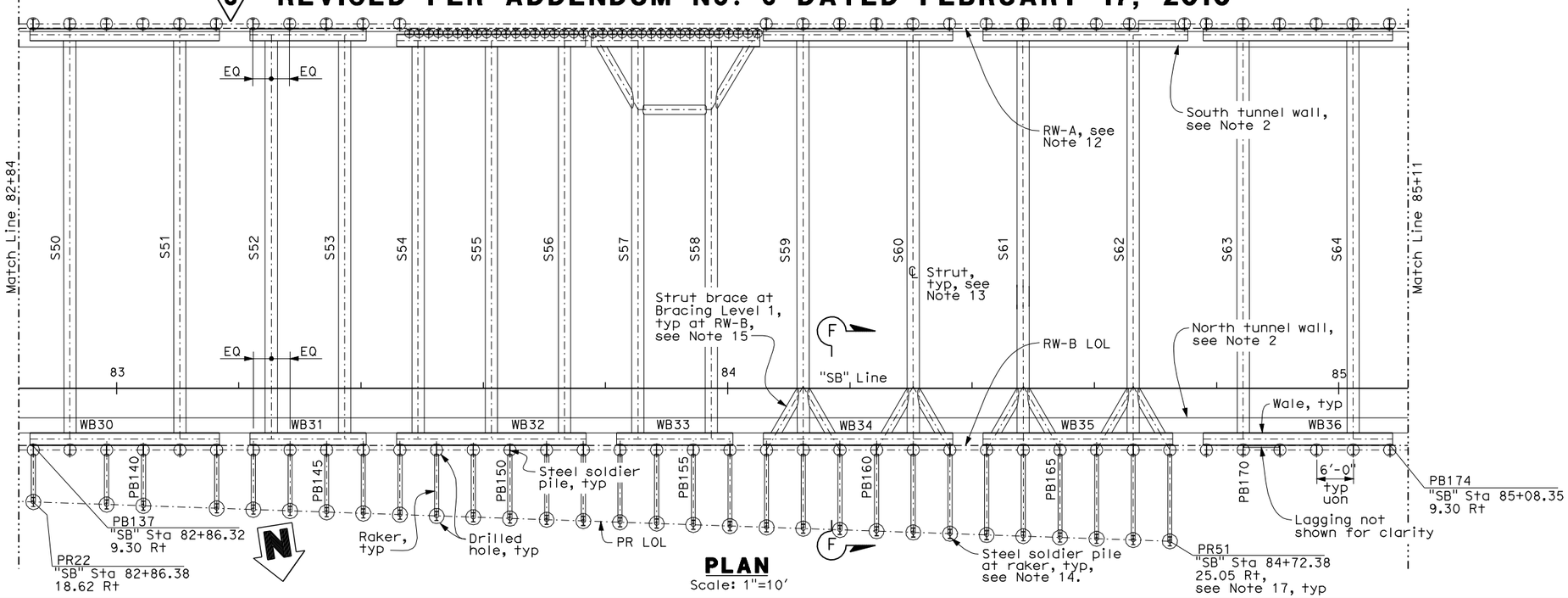

PLAN

Scale: 1"=10'

DIST	COUNTY	ROUTE	POST MILES TOTAL PROJECT	SHEET No	TOTAL SHEETS
04	SF	101	8.2/9.2	522	654

REGISTERED CIVIL ENGINEER 8/28/09 DATE

12-14-09
PLANS APPROVAL DATE

REGISTERED PROFESSIONAL ENGINEER KEVIN BARRY CLINCH No. C-48926 Exp. 9/30/10 CIVIL STATE OF CALIFORNIA

The State of California or its officers or agents shall not be responsible for the accuracy or completeness of scanned copies of this plan sheet.

Arup PB Joint Venture
560 Mission Street, Suite 700
San Francisco, CA 94105

6

Notes:

1. For General Notes, see sheet "RWAB-ST4".
2. For "SB Battery Tunnel", see "Southbound Battery Tunnel" plans.
3. For "Typical Section at Retaining Walls" between piles PB136-PB167, inclusive, see sheet "RWAB-ST20"
4. For "Typical Section at Retaining Walls" between piles PB168-PB173, inclusive, see sheet "RWAB-ST21"
5. For "Typical Section at Steel Soldier Pile With Shotcrete Lagging", see sheet "RWAB-ST26".
6. For "Soldier Pile Schedule" and "Lagging Panel Schedule", see sheets "RWAB-ST30" thru "RWAB-ST35"
7. Soldier pile stations are located at the center of flange nearest tunnel wall. See "Section L-L" on sheet "RWAB-ST25".
8. For approx profile of Franciscan bedrock along SB Battery Tunnel, see "Doyle Drive Replacement Project Southbound Battery Tunnel Foundation Report".
9. For strut schedule, see sheet "RWAB-ST6".
10. For wale schedule, see sheet "RWAB-ST11".
11. For "Section F-F", see sheet "RWAB-ST23".
12. For Retaining Wall A, see sheet "RWAB-ST9".
13. Strut ℄ work points are located at soldier pile stations, uon.
14. For Soldier Pile at Rakers Schedule" see sheet "RWAB-ST35".
15. For strut brace details, see sheet "RWAB-ST24".
16. For details of geocomposite drain, see sheet "RWAB-ST26".
17. Raker pile stations are located at the center of steel pile and PR LOL.
18. Limit of payment of shotcrete protection wall from Sta 82+84.00 to Sta 85+11.00 measured along RW-B LOL.

RWAB-ST14

	BY	CHECKED
DESIGN	K. CLINCH	M. YUCEKUL
DETAILS	P. A. TONKIN	M. YUCEKUL
QUANTITIES	N. VIVAR	J. YANG

PREPARED FOR THE STATE OF CALIFORNIA DEPARTMENT OF TRANSPORTATION

QIYU LIU
PROJECT ENGINEER

BRIDGE NO. 34-0161RL
POST MILES 9.0/9.2

RETAINING WALL A & B
STRUCTURE PLAN NO.9

DESIGN DETAIL SHEET (ENGLISH) (REV. 06-01-09)

ORIGINAL SCALE IN INCHES FOR REDUCED PLANS 0 1 2 3

CU 04
EA 163741

DISREGARD PRINTS BEARING EARLIER REVISION DATES

REVISION DATES (PRELIMINARY STAGE ONLY) 06/04/09 07/15/09 08/07/09 08/26/09

SHEET 14 OF 37

FILE => 34-0161rl-ab-st014.dgn

USERNAME => trlenard DATE PLOTTED => 16-FEB-2010 TIME PLOTTED => 06:30

DIST	COUNTY	ROUTE	POST MILES TOTAL PROJECT	SHEET No	TOTAL SHEETS
04	SF	101	8.2/9.2	523	654

REGISTERED CIVIL ENGINEER 8/28/09 DATE

12-14-09
PLANS APPROVAL DATE

REGISTERED PROFESSIONAL ENGINEER KEVIN BARRY CLINCH No. C-48926 Exp. 9/30/10 CIVIL STATE OF CALIFORNIA

The State of California or its officers or agents shall not be responsible for the accuracy or completeness of scanned copies of this plan sheet.

Arup PB Joint Venture
560 Mission Street, Suite 700
San Francisco, CA 94105

6

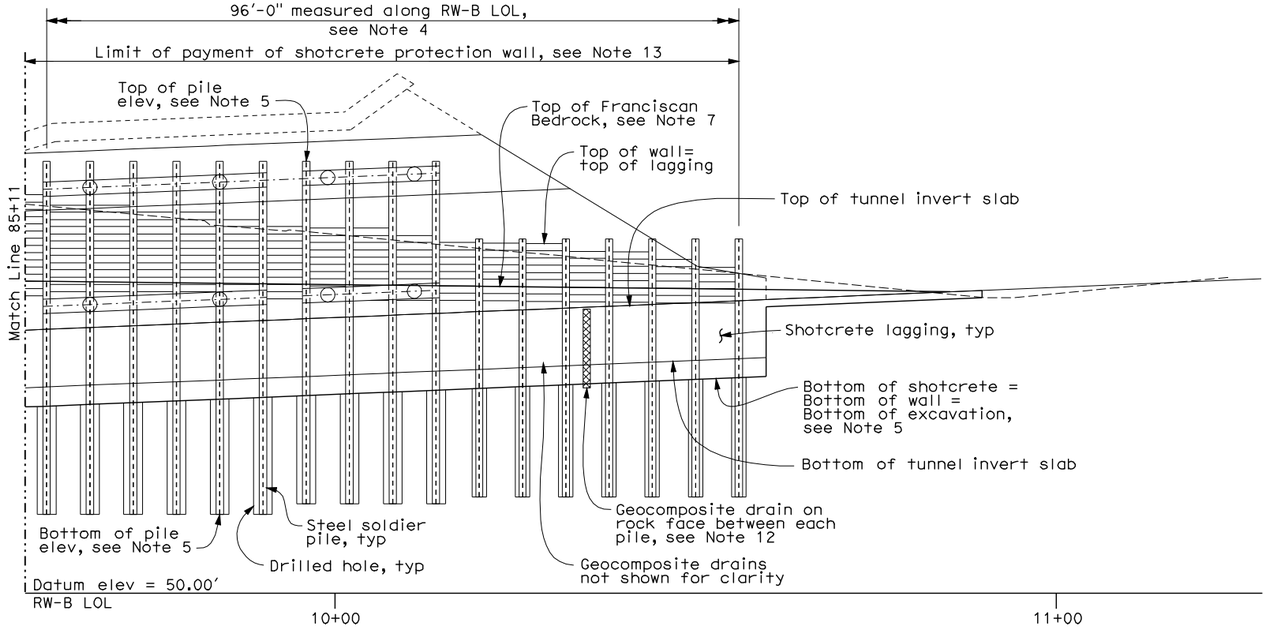

RETAINING WALL B MIRROR ELEVATION

Scale: 1"=10'

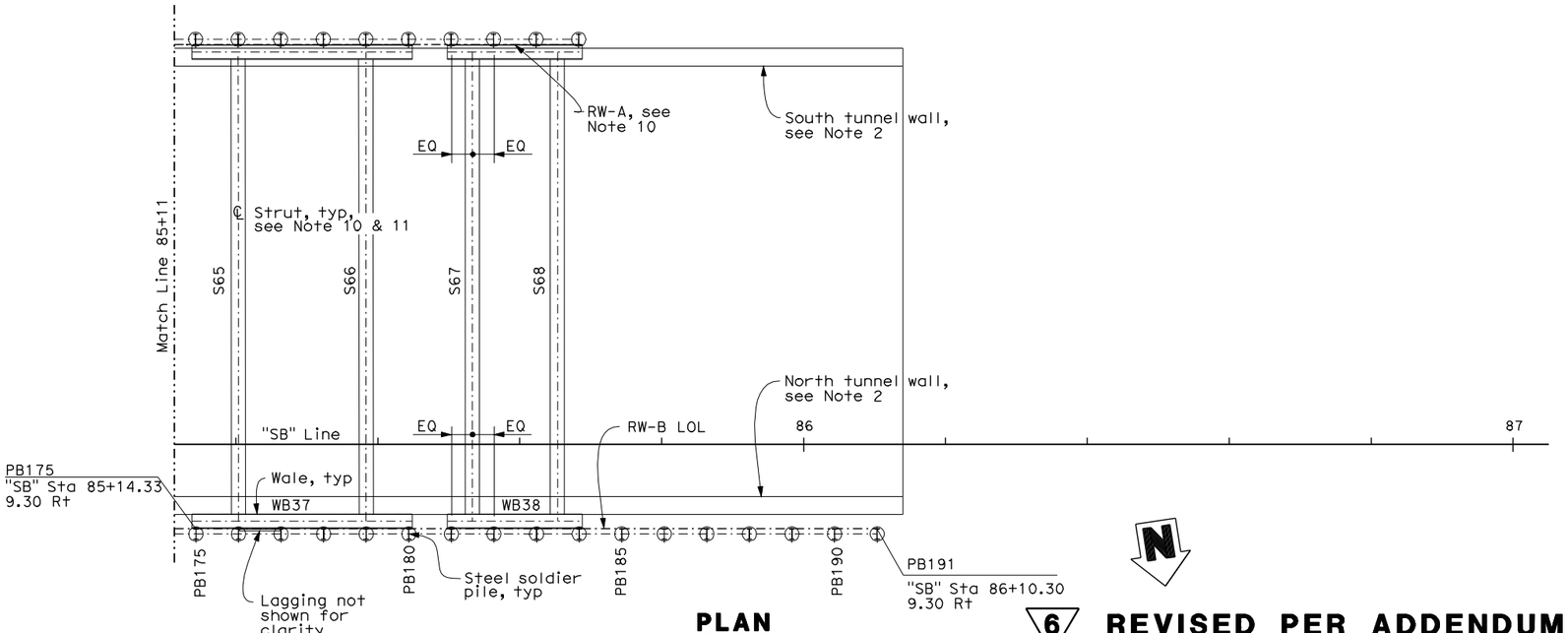

PLAN

Scale: 1"=10'

Notes:

1. For General Notes, see sheet "RWAB-ST4".
2. For "SB Battery Tunnel", see "Southbound Battery Tunnel" plans.
3. For "Typical Section at Retaining Walls" between piles PB174-PB183, see sheet "RWAB-ST21".
4. For "Typical Section at Steel Soldier Pile With Shotcrerte Lagging", see sheet "RWAB-ST26".
5. For "Soldier Pile Schedule" and "Lagging Panel Schedule", see sheets "RWAB-ST30" through "RWAB-ST35".
6. Soldier pile stations are located at the center of flange nearest tunnel wall. See "Section L-L" on sheet "RWAB-ST25".
7. For approx profile of Franciscan bedrock along SB Battery Tunnel, see "Doyle Drive Replacement Project Southbound Battery Tunnel Foundation Report".
8. For strut schedule, see sheet RWAB-ST6".
9. For wale schedule, see sheet RWAB-ST11".
10. For Retaining Wall A, see sheet "RWAB-ST10".
11. Strut ℄ work points are located at soldier piles stations, uon.
12. For detail of geocomposite drain, see sheet "RWAB-ST26".
13. Limit of payment of shotcrete protection wall from Sta 85+11.00 to Sta 86+10.30 measured along RW-B LOL.

6 **REVISED PER ADDENDUM No. 6 DATED FEBRUARY 17, 2010**

RWAB-ST15

	BY	CHECKED
DESIGN	K. CLINCH	M. YUCEKUL
DETAILS	P. A. TONKIN	M. YUCEKUL
QUANTITIES	N. VIVAR	J. YANG

PREPARED FOR THE STATE OF CALIFORNIA DEPARTMENT OF TRANSPORTATION

QIYU LIU
PROJECT ENGINEER

BRIDGE NO. 34-0161RL
POST MILES 9.0/9.2

RETAINING WALL A & B
STRUCTURE PLAN NO.10

DESIGN DETAIL SHEET (ENGLISH) (REV. 06-01-09)

ORIGINAL SCALE IN INCHES FOR REDUCED PLANS 0 1 2 3

CU 04
EA 163741

DISREGARD PRINTS BEARING EARLIER REVISION DATES

REVISION DATES (PRELIMINARY STAGE ONLY) 06/09/09 07/08/09 08/07/09 08/26/09

SHEET 15 OF 37

FILE => 34-0161r1-ab-st015.add

USERNAME => trlenard DATE PLOTTED => 16-FEB-2010 TIME PLOTTED => 06:30

DIST	COUNTY	ROUTE	POST MILES TOTAL PROJECT	SHEET No	TOTAL SHEETS
04	SF	101	8.2/9.2	524	654

REGISTERED CIVIL ENGINEER 9/11/09 DATE

12-14-09
PLANS APPROVAL DATE

REGISTERED PROFESSIONAL ENGINEER KEVIN BARRY CLINCH No. C-48926 Exp. 9/30/10 CIVIL STATE OF CALIFORNIA

The State of California or its officers or agents shall not be responsible for the accuracy or completeness of scanned copies of this plan sheet.

Arup PB Joint Venture
560 Mission Street, Suite 700
San Francisco, CA 94105

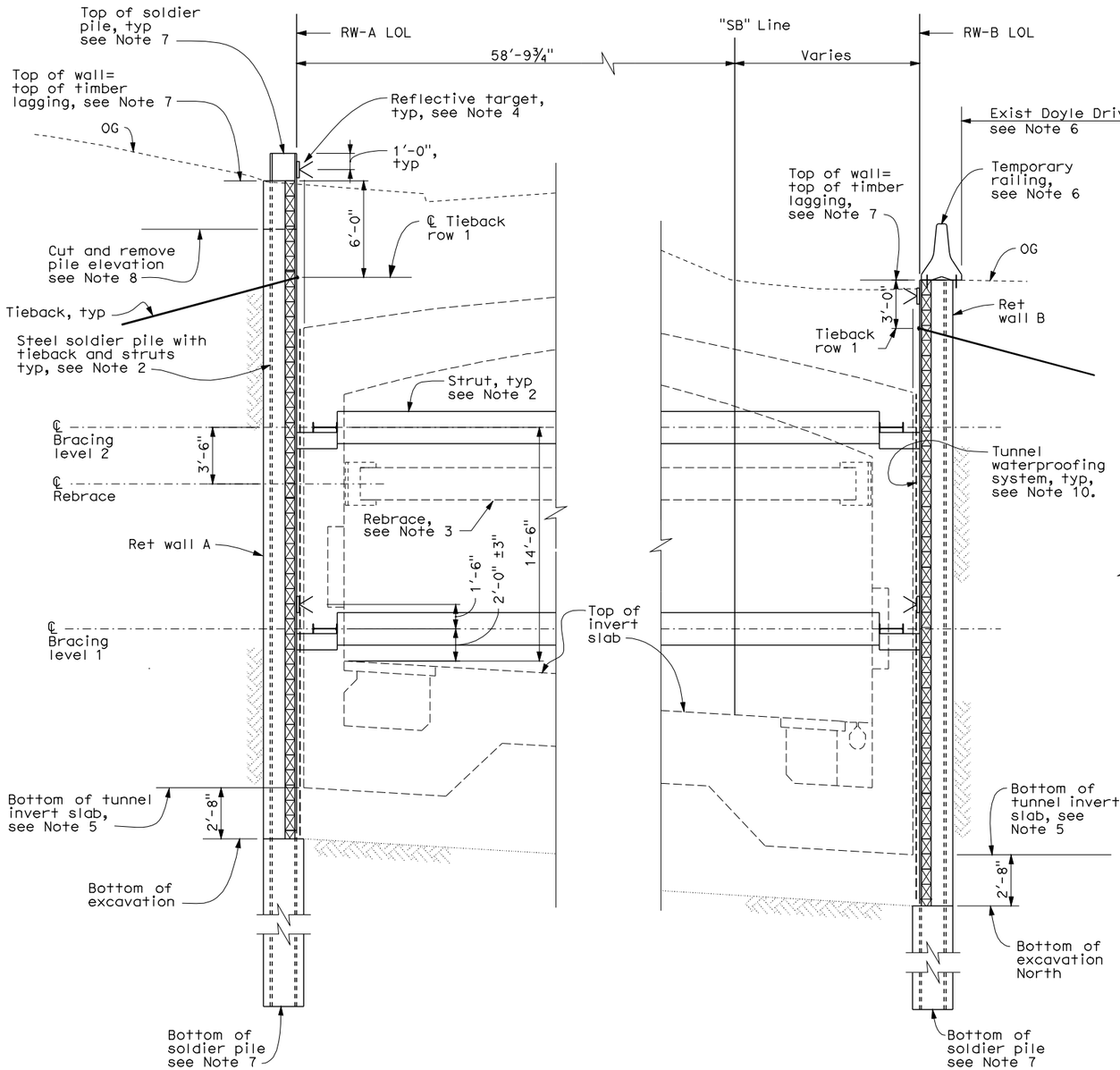

TYPICAL SECTION AT RETAINING WALLS

"SB" 76+31.73 to 76+60.50

Scale: 1/4"=1'-0"

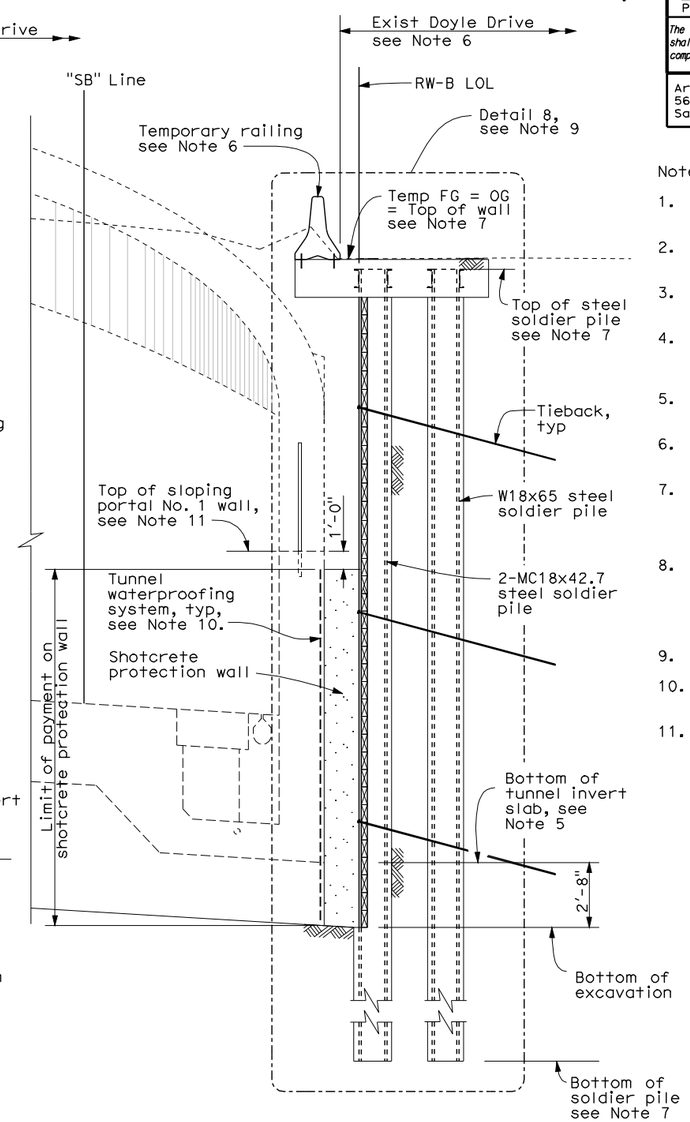

PART. TYPICAL SECTION AT RW-B

"SB" 75+71.25 to 76+25.90

Scale: 1/4"=1'-0"

Notes:

1. For construction sequence, see "Southbound Battery Tunnel" plans.
2. For soldier pile with tieback and strut details, see sheet "RWAB-ST28".
3. For rebrace details, see sheet "RWAB-ST24".
4. Reflective targets shall be placed at 24'-0" o.c. maximum along the length of the wall at the locations shown.
5. For bottom of invert slab, see "Southbound Battery Tunnel" plans.
6. For details at temporary railing, see "Roadway" plans.
7. For pile and lagging data, see "Soldier Pile Schedule" and "Lagging Panel Schedule" on sheets "RWAB-ST30" through "RWAB-ST35".
8. Cut pile and remove upper portion and lagging during tunnel backfilling work. See "Soldier Pile Schedule" on sheets "RWAB-ST30" through "RWAB-ST35" for elevation.
9. For "Detail 8", see sheet "RWAB-ST29".
10. For tunnel waterproofing system, see "Southbound Battery Tunnel" plans.
11. For top of sloping portal No. 1 wall, see "Southbound Battery Tunnel" plans.

6 **REVISED PER ADDENDUM No. 6 DATED FEBRUARY 17, 2010**

RWAB-ST16

DESIGN	BY K. CLINCH	CHECKED M. YUCEKUL	
DETAILS	BY T.MARTARELLA	CHECKED M. YUCEKUL	
QUANTITIES	BY N. VIVAR	CHECKED J. YANG	

PREPARED FOR THE STATE OF CALIFORNIA DEPARTMENT OF TRANSPORTATION

QIYU LIU
PROJECT ENGINEER

BRIDGE NO. 34-0161RL
POST MILES 9.0/9.2

RETAINING WALL A & B
TYPICAL SECTION NO.1

DESIGN DETAIL SHEET (ENGLISH) (REV. 06-01-09)

ORIGINAL SCALE IN INCHES FOR REDUCED PLANS 0 1 2 3

CU 04
EA 163741

DISREGARD PRINTS BEARING EARLIER REVISION DATES

REVISION DATES (PRELIMINARY STAGE ONLY) 06/01/09 07/15/09 08/07/09 08/26/09 09/11/09

SHEET 16 OF 37

FILE => 34-0161rl-ab-st016.add

USERNAME => trlenard DATE PLOTTED => 16-FEB-2010 TIME PLOTTED => 06:30

DIST	COUNTY	ROUTE	POST MILES TOTAL PROJECT	SHEET No	TOTAL SHEETS
04	SF	101	8.2/9.2	527	654

REGISTERED CIVIL ENGINEER 9/11/09 DATE

12-14-09
PLANS APPROVAL DATE

REGISTERED PROFESSIONAL ENGINEER KEVIN BARRY CLINCH No. C-48926 Exp. 9/30/10 CIVIL STATE OF CALIFORNIA

The State of California or its officers or agents shall not be responsible for the accuracy or completeness of scanned copies of this plan sheet.

Arup PB Joint Venture
560 Mission Street, Suite 700
San Francisco, CA 94105

6

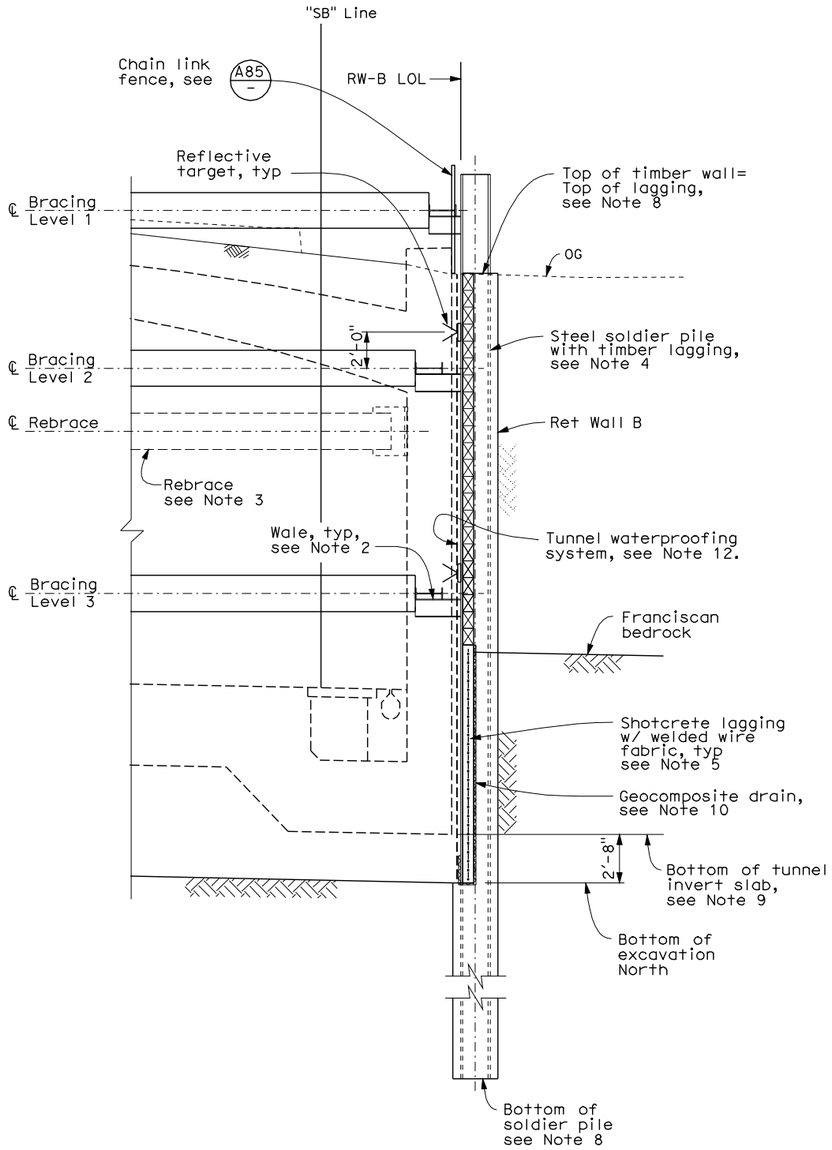

PART. TYPICAL SECTION AT RW-B
"SB" 78+27.32 to 80+30.30
Scale: 1/4" = 1'-0"

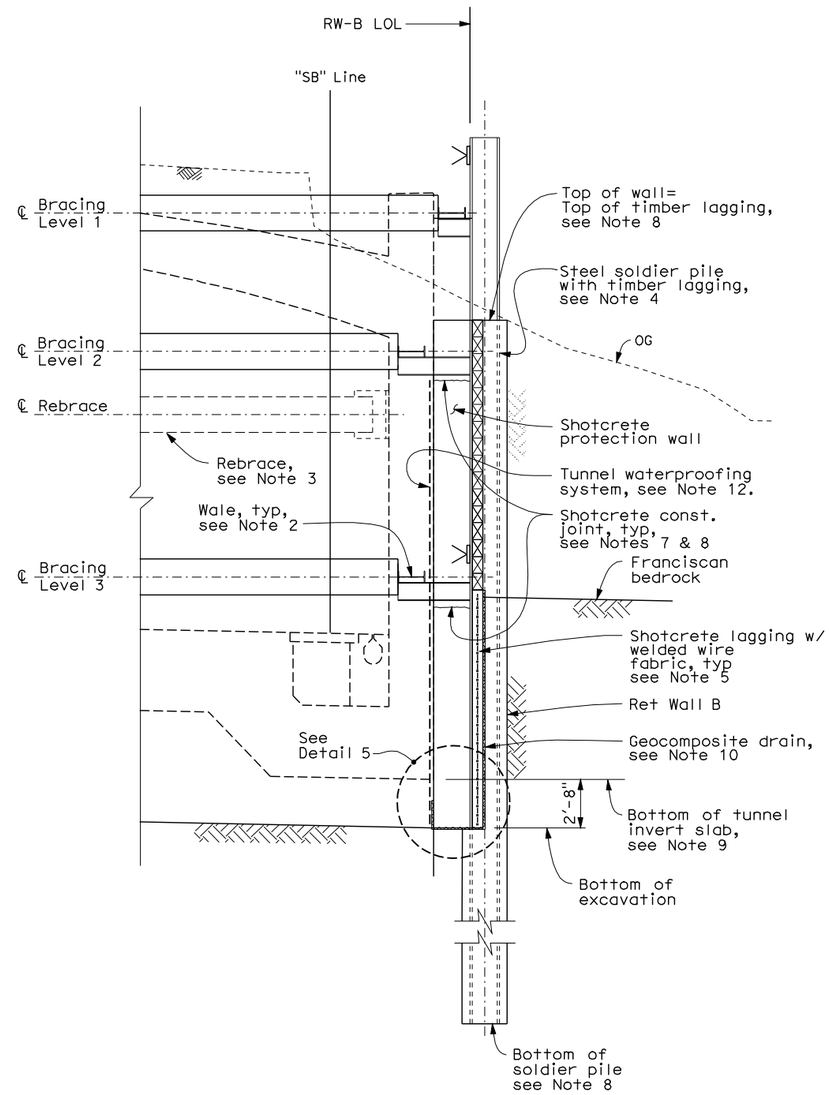

PART. TYPICAL SECTION AT RW-B
"SB" 80+34.36 to 81+78.38
Scale: 1/4" = 1'-0"

Notes:

1. For construction sequence, see "Southbound Battery Tunnel" plans.
2. For strut and wale details, see sheet "RWAB-ST22".
3. For rebrace details, see sheet "RWAB-ST24".
4. For soldier pile and lagging details, see sheet "RWAB-ST25".
5. For shotcrete lagging details, see sheet "RWAB-ST26".
6. Reflective targets shall be placed at 24'-0" o.c. maximum along the length of the wall at the locations shown.
7. Shotcrete shall be placed in lifts that correspond to strut removal sequence.
8. For pile lagging data, see "Soldier Pile Schedule" and "Lagging Panel Schedule" on sheets "RWAB-ST30" thru "RWAB-ST35".
9. For bottom of invert slab, see "Southbound Battery Tunnel" plans.
10. For details of geocomposite drain, see sheet "RWAB-ST26".
11. For "Detail 5" see sheet "RWAB-ST26".
12. For tunnel waterproofing system, see "Southbound Battery Tunnel" plans.

6 **REVISED PER ADDENDUM No. 6 DATED FEBRUARY 17, 2010**

RWAB-ST19

DESIGN	BY K. CLINCH	CHECKED M. YUCEKUL	PREPARED FOR THE STATE OF CALIFORNIA DEPARTMENT OF TRANSPORTATION	QIYU LIU PROJECT ENGINEER	BRIDGE NO. 34-0161RL
DETAILS	BY E. SUDHAUSEN	CHECKED M. YUCEKUL			POST MILES 9.0/9.2
QUANTITIES	BY N. VIVAR	CHECKED J. YANG			

RETAINING WALL A & B
TYPICAL SECTION NO.4

DESIGN DETAIL SHEET (ENGLISH) (REV. 06-01-09)

ORIGINAL SCALE IN INCHES FOR REDUCED PLANS 0 1 2 3

CU 04
EA 163741

DISREGARD PRINTS BEARING EARLIER REVISION DATES

REVISION DATES (PRELIMINARY STAGE ONLY) 06/01/09 07/15/09 08/07/09 08/26/09 09/11/09

SHEET 19 OF 37

FILE => 34-0161rl-ab-st019.add

USERNAME => trlenard DATE PLOTTED => 16-FEB-2010 TIME PLOTTED => 06:30

DIST	COUNTY	ROUTE	POST MILES TOTAL PROJECT	SHEET No	TOTAL SHEETS
04	SF	101	8.2/9.2	529	654

REGISTERED CIVIL ENGINEER 10/30/09 DATE

12-14-09
PLANS APPROVAL DATE

REGISTERED PROFESSIONAL ENGINEER KEVIN BARRY CLINCH No. C-48926 Exp. 9/30/10 CIVIL STATE OF CALIFORNIA

The State of California or its officers or agents shall not be responsible for the accuracy or completeness of scanned copies of this plan sheet.

Arup PB Joint Venture
560 Mission Street, Suite 700
San Francisco, CA 94105

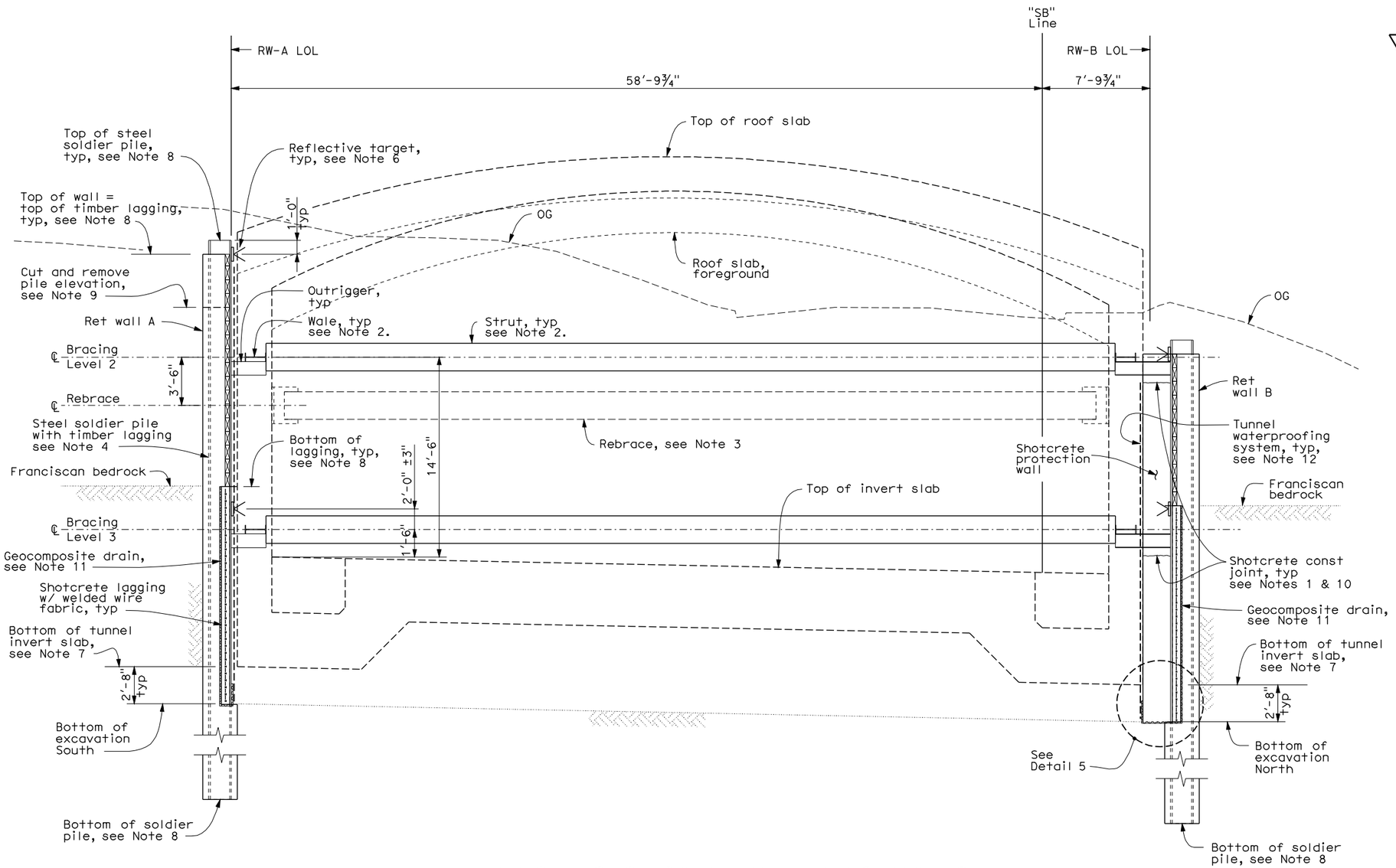

TYPICAL SECTION AT RETAINING WALLS

"SB" 84+78.32 to 85+68.32
Scale: ¼" = 1'-0"

Notes:

1. For construction sequence, see "Southbound Battery Tunnel" plans.
2. For strut and wale details, see sheet "RWAB-ST22".
3. For rebrace details, see sheet "RWAB-ST24".
4. For soldier pile and lagging details, see sheet "RWAB-ST25".
5. For shotcrete lagging details, see sheet "RWAB-ST26".
6. Reflective targets shall be placed at 24'-0" o.c. maximum along the length of the wall at the locations shown.
7. For bottom of invert slab, see "Southbound Battery Tunnel" plans.
8. For pile and lagging data, see "Soldier Pile Schedule" and "Lagging Panel Schedule" on sheets "RWAB-ST30" thru "RWAB-ST35".
9. Cut pile and remove upper portion and lagging during tunnel backfilling work. See "Soldier Pile Schedule" on sheets "RWAB-ST30" thru "RWAB-ST35" for elevations.
10. Shotcrete shall be placed in lifts that correspond to strut removal sequence.
11. For details of geocomposite drain, see sheet "RWAB-ST26".
12. For tunnel waterproofing system, see "Southbound Battery Tunnel" plans.
13. For "Detail 5", see sheet "RWAB-ST26".

6 **REVISED PER ADDENDUM No. 6 DATED FEBRUARY 17, 2010**

RWAB-ST21

DESIGN	BY K. CLINCH	CHECKED M. YUCEKUL	
DETAILS	BY E. SUDHAUSEN	CHECKED M. YUCEKUL	
QUANTITIES	BY N. VIVAR	CHECKED J. YANG	

PREPARED FOR THE STATE OF CALIFORNIA DEPARTMENT OF TRANSPORTATION

QIYU LIU
PROJECT ENGINEER

BRIDGE NO. 34-0161L
POST MILES 9.0/9.2

RETAINING WALL A & B
TYPICAL SECTION NO.6

DESIGN DETAIL SHEET (ENGLISH) (REV. 06-01-09)

ORIGINAL SCALE IN INCHES FOR REDUCED PLANS 0 1 2 3

CU 04
EA 163741

DISREGARD PRINTS BEARING EARLIER REVISION DATES

REVISION DATES (PRELIMINARY STAGE ONLY) 06/01/09 07/15/09 08/07/09 08/26/09 09/11/09 10/30/09

SHEET 21 OF 37

FILE => 34-0161rl-ab-st021.add

USERNAME => trlenard DATE PLOTTED => 16-FEB-2010 TIME PLOTTED => 06:30

DIST	COUNTY	ROUTE	POST MILES TOTAL PROJECT	SHEET No	TOTAL SHEETS
04	SF	101	8.2/9.2	532	654

REGISTERED CIVIL ENGINEER 8/28/09 DATE

12-14-09
PLANS APPROVAL DATE

REGISTERED PROFESSIONAL ENGINEER KEVIN BARRY CLINCH No. C-48926 Exp. 9/30/10 CIVIL STATE OF CALIFORNIA

The State of California or its officers or agents shall not be responsible for the accuracy or completeness of scanned copies of this plan sheet.

Arup PB Joint Venture
560 Mission Street, Suite 700
San Francisco, CA 94105

6

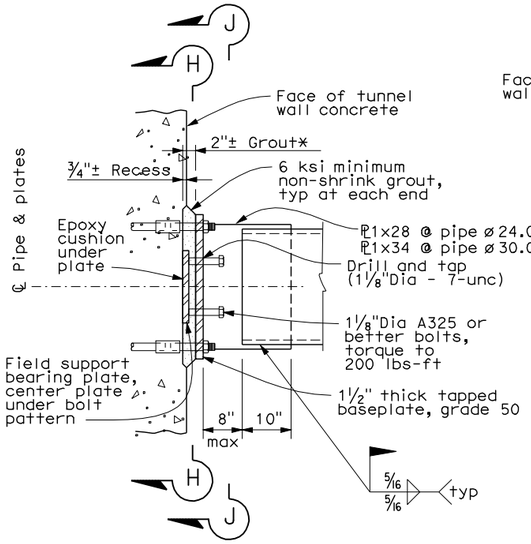

JACKED END

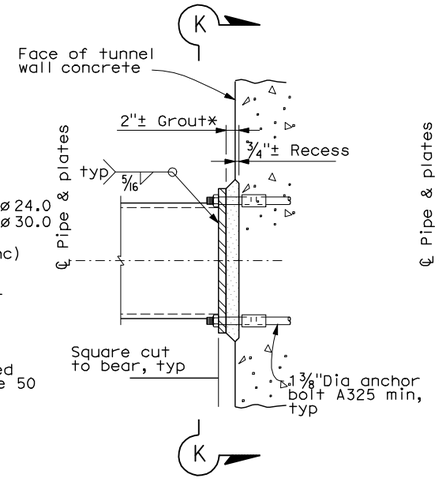

WELDED END

*ADJUST AS REQ'D FOR SKEW

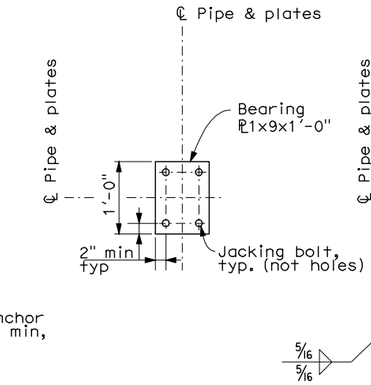

SECTION H-H

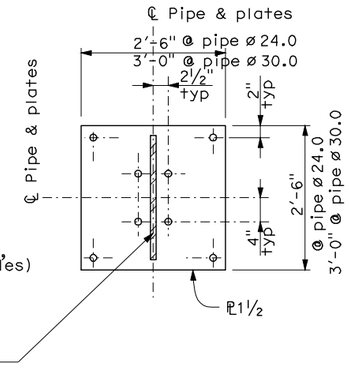

SECTION J-J

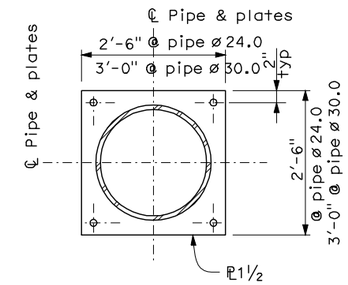

SECTION K-K

INSTALLATION PROCEDURE:

1. Install strut and secure with anchor bolts at welded end.
2. Place grout pad at welded end.
3. After wall concrete and grout pad have reached 3000 psi minimum compressive strength, install bearing plate and preload strut with jacking bolts. Apply torque incrementally to ensure uniform preload. Preload both struts on same centerline simultaneously.
4. Place grout pad and secure anchor bolts at jacked end.
5. After removal of rebrace, remove bolts and patch holes with concrete.

TYPICAL REBRACE DETAIL

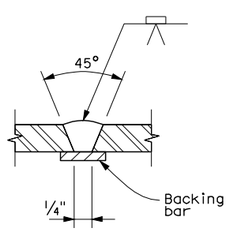

SINGLE VEE-GROOVE

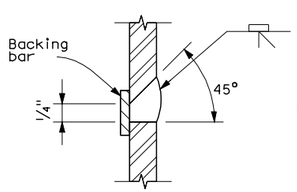

SINGLE BEVEL-GROOVE

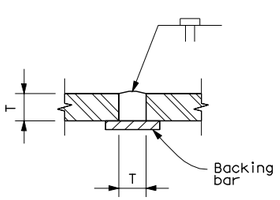

SQUARE GROOVE

PILE WELDING TYPICAL DETAIL - BUTT JOINTS

Notes:

1. Single Vee-Groove permitted for all positions.
2. Single Bevel-Groove permitted for horizontal joints only.

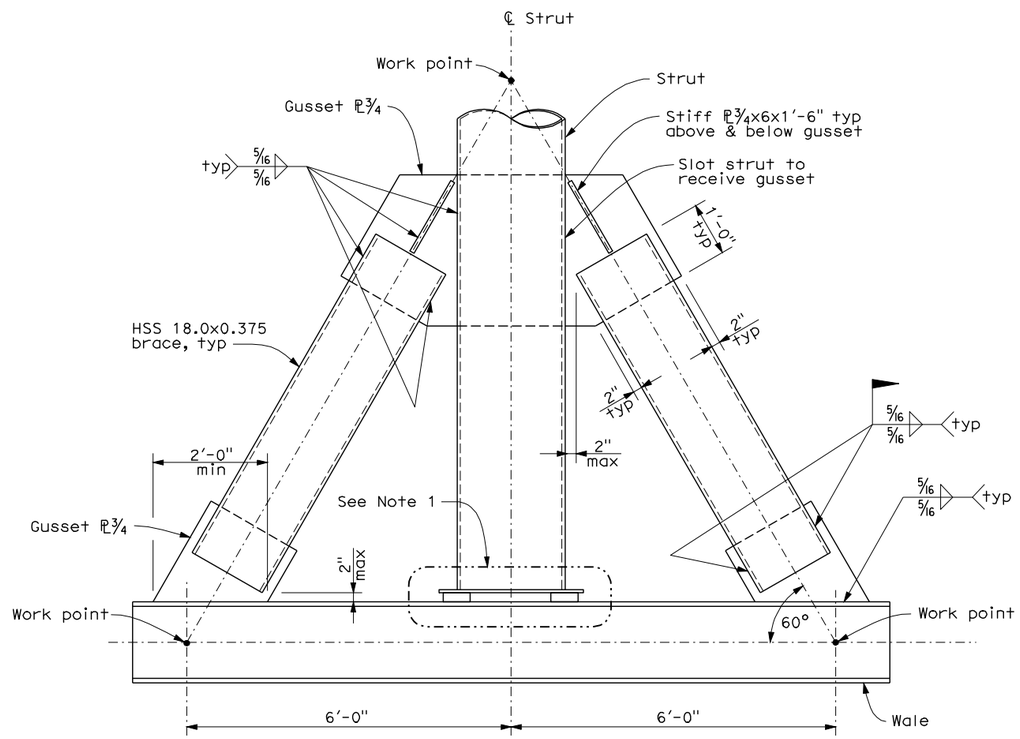

DETAIL 1

Scale: 3/4" = 1'-0"

Notes:

1. For typical strut to wale connection, see sheet "RWAB-ST22".

6 **REVISED PER ADDENDUM No. 6 DATED FEBRUARY 17, 2010**

RWAB-ST24

DESIGN	BY K. CLINCH	CHECKED M. YUCEKUL	
DETAILS	BY T. MARTARELLA	CHECKED M. YUCEKUL	
QUANTITIES	BY N. VIVAR	CHECKED J. YANG	

PREPARED FOR THE STATE OF CALIFORNIA DEPARTMENT OF TRANSPORTATION

QIYU LIU
PROJECT ENGINEER

BRIDGE NO. 34-0161RL
POST MILES 9.0/9.2

RETAINING WALL A & B
WALL DETAILS NO.3

DESIGN DETAIL SHEET (ENGLISH) (REV. 06-01-09)

ORIGINAL SCALE IN INCHES FOR REDUCED PLANS 0 1 2 3

CU 04
EA 163741

DISREGARD PRINTS BEARING EARLIER REVISION DATES

REVISION DATES (PRELIMINARY STAGE ONLY) 06/04/09 07/13/09 08/07/09 08/26/09

SHEET 24 OF 37

FILE => 34-0161rl-ab-st024.add

USERNAME => trlenard DATE PLOTTED => 16-FEB-2010 TIME PLOTTED => 06:30