Dist	COUNTY	ROUTE	POST MILES TOTAL PROJECT	SHEET No.	TOTAL SHEETS
04	SF	101, 1	8.8/9.2		

REGISTERED CIVIL ENGINEER 7-31-09 DATE

PLANS APPROVAL DATE

REGISTERED PROFESSIONAL ENGINEER JACK K. MONG No. C66151 Exp. 6-30-10 CIVIL STATE OF CALIFORNIA

THE STATE OF CALIFORNIA OR ITS OFFICERS OR AGENTS SHALL NOT BE RESPONSIBLE FOR THE ACCURACY OR COMPLETENESS OF SCANNED COPIES OF THIS PLAN SHEET.

Arup PB JV
560 Mission Street, Suite 700
San Francisco, CA 94105

NOTES:

1. FOR ACCURATE RIGHT OF WAY AND ACCESS DATA, CONTRACT RIGHT OF WAY ENGINEERING AT THE DISTRICT OFFICE.

LEGEND:

—#—#—#d— Exist ABANDONED STORM DRAIN

ABBREVIATIONS:

DDJ	DOWNDRAIN JOINTS
PT	PRESIDIO TRUST
Rem	REMOVE
SDFM	STORM DRAIN FORCE MAIN
SGD	STANDARD GUTTER DEPRESSION
w/	WITH

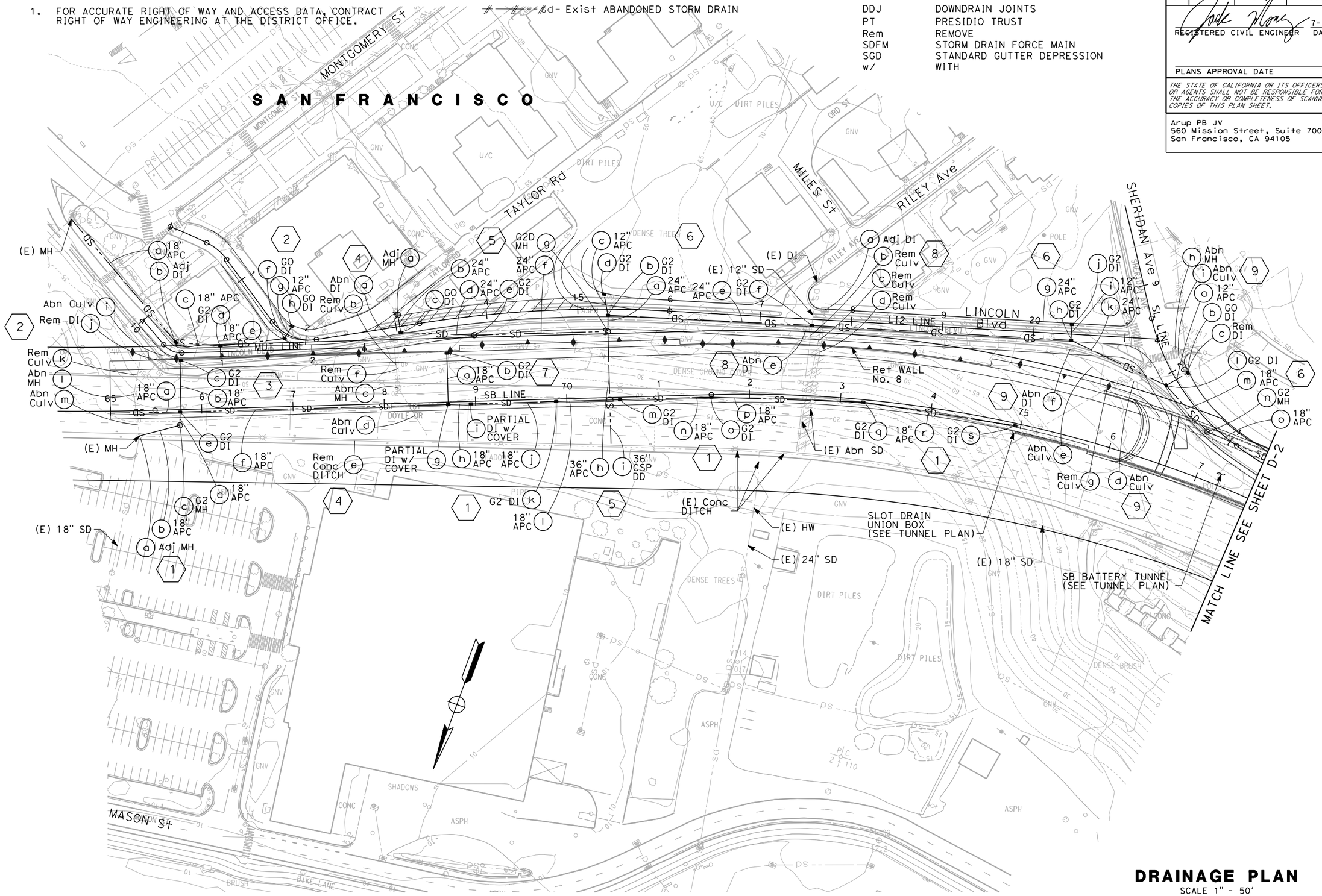

DRAINAGE PLAN

SCALE 1" - 50'

THIS PLAN ACCURATE FOR DRAINAGE WORK ONLY

D-1

STATE OF CALIFORNIA - DEPARTMENT OF TRANSPORTATION

Caltrans

CONSULTANT FUNCTIONAL SUPERVISOR: ABOLFAZL EMADZADEH

CALCULATED-DESIGNED BY: KATIE MING

CHECKED BY: DUANNE GILMORE

REVISED BY: ML/KM

DATE REVISED: 7/31/09

LAST REVISION 7-31-09 DATE PLOTTED => $DATE TIME PLOTTED => $TIME

BORDER LAST REVISED 4/11/2008

RELATIVE BORDER SCALE IS IN INCHES 0 1 2 3

USERNAME => $USER
DGN FILE => $REQUEST

CU 04242

EA 163741

Dist	COUNTY	ROUTE	POST MILES TOTAL PROJECT	SHEET No.	TOTAL SHEETS
04	SF	101, 1	8.8/9.2		

REGISTERED CIVIL ENGINEER 7-31-09 DATE

PLANS APPROVAL DATE

REGISTERED PROFESSIONAL ENGINEER JACK K. MONG No. C66151 Exp. 6-30-10 CIVIL STATE OF CALIFORNIA

THE STATE OF CALIFORNIA OR ITS OFFICERS OR AGENTS SHALL NOT BE RESPONSIBLE FOR THE ACCURACY OR COMPLETENESS OF SCANNED COPIES OF THIS PLAN SHEET.

Arup PB JV
560 Mission Street, Suite 700
San Francisco, CA 94105

NOTES:

1. FOR ACCURATE RIGHT OF WAY AND ACCESS DATA, CONTRACT RIGHT OF WAY ENGINEERING AT THE DISTRICT OFFICE.
2. FOR NOTES, ABBREVIATIONS AND LEGEND, SEE SHEET D-1.

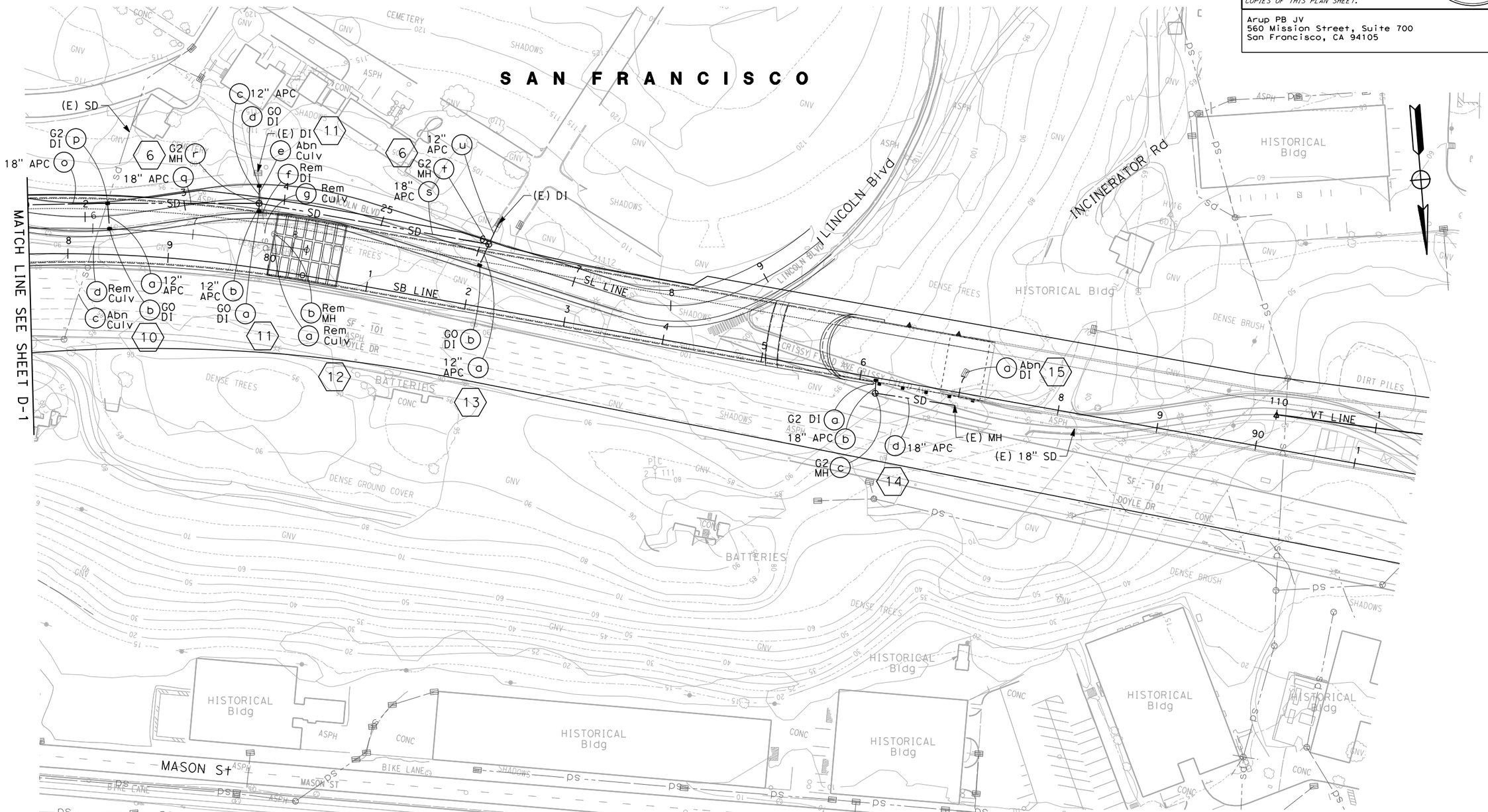

DRAINAGE PLAN

SCALE 1" - 50'

D-2

THIS PLAN ACCURATE FOR DRAINAGE WORK ONLY

REVISED BY	ML/KM
DATE REVISED	7/31/09
CALCULATED-DESIGNED BY	KATIE MING
CHECKED BY	DUANNE GILMORE
CONSULTANT FUNCTIONAL SUPERVISOR	ABOLFAZL EMADZADEH

STATE OF CALIFORNIA - DEPARTMENT OF TRANSPORTATION

Caltrans

LAST REVISION 7-31-09 | DATE PLOTTED => $DATE | TIME PLOTTED => $TIME

Dist	COUNTY	ROUTE	POST MILES TOTAL PROJECT	SHEET No.	TOTAL SHEETS
04	SF	101, 1	8.8/9.2		

REGISTERED CIVIL ENGINEER 7-31-09 DATE

PLANS APPROVAL DATE

REGISTERED PROFESSIONAL ENGINEER JACK K. MONG No. C66151 Exp. 6-30-10 CIVIL STATE OF CALIFORNIA

THE STATE OF CALIFORNIA OR ITS OFFICERS OR AGENTS SHALL NOT BE RESPONSIBLE FOR THE ACCURACY OR COMPLETENESS OF SCANNED COPIES OF THIS PLAN SHEET.

Arup PB JV
560 Mission Street, Suite 700
San Francisco, CA 94105

NOTES:

1. FOR ACCURATE RIGHT OF WAY AND ACCESS DATA, CONTRACT RIGHT OF WAY ENGINEERING AT THE DISTRICT OFFICE.
2. FOR NOTES, ABBREVIATIONS AND LEGEND, SEE SHEET D-1.

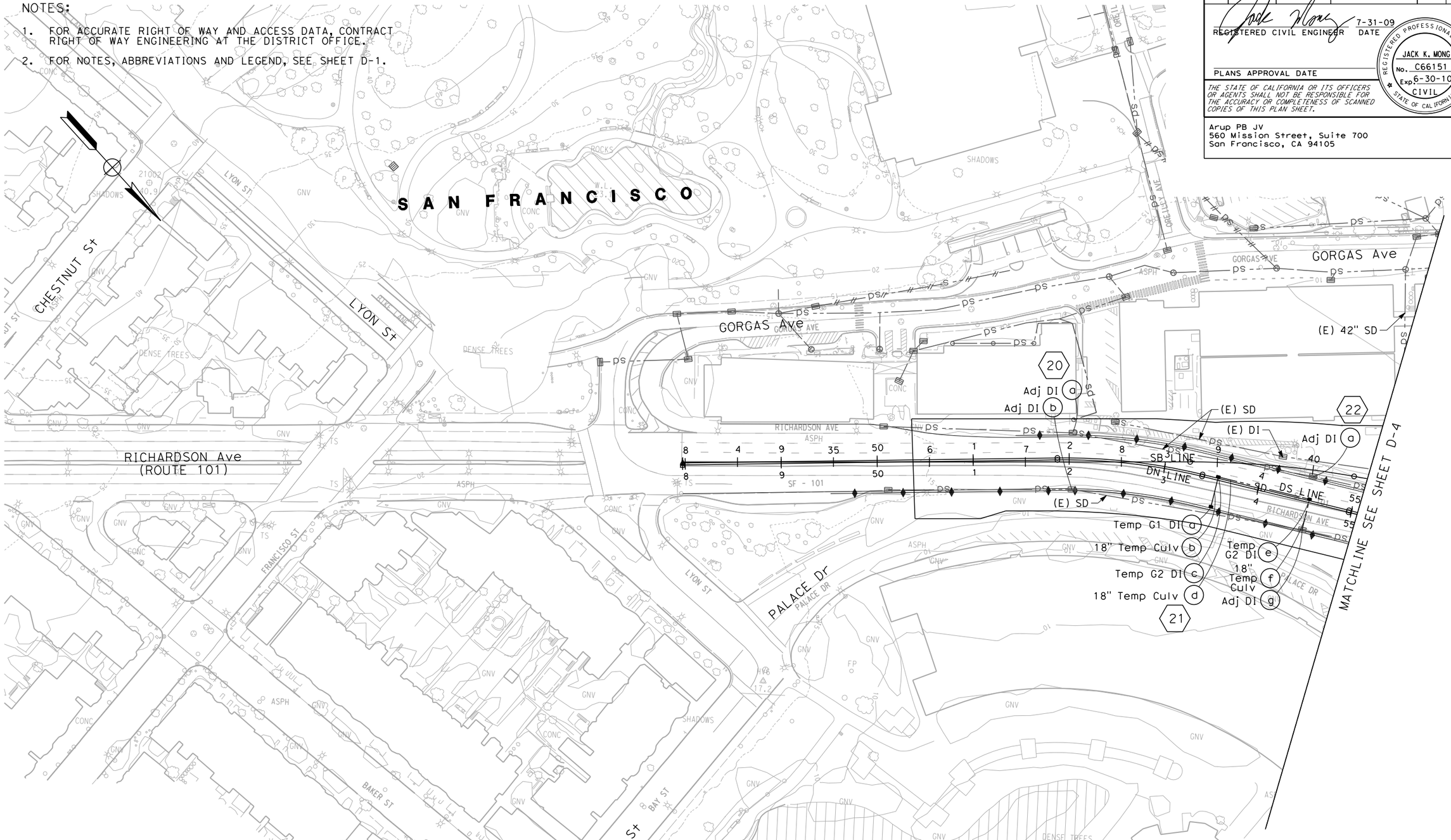

TEMPORARY DRAINAGE PLAN

SCALE: 1"=50'

THIS PLAN IS ACCURATE FOR DRAINAGE WORK ONLY.

D-3

REVISED BY	DATE REVISED
ML/KM	7/31/09

KATIE MING — DUANNE GILMORE

CALCULATED-DESIGNED BY — CHECKED BY

CONSULTANT FUNCTIONAL SUPERVISOR: ABOLFAZL EMADZADEH

STATE OF CALIFORNIA - DEPARTMENT OF TRANSPORTATION

Caltrans

LAST REVISION 7-31-09 — DATE PLOTTED => $DATE — TIME PLOTTED => $TIME

Dist	COUNTY	ROUTE	POST MILES TOTAL PROJECT	SHEET No.	TOTAL SHEETS
04	SF	101, 1	8.8/9.2		

REGISTERED CIVIL ENGINEER 7-31-09 DATE

PLANS APPROVAL DATE

REGISTERED PROFESSIONAL ENGINEER JACK K. MONG No. C66151 Exp. 6-30-10 CIVIL STATE OF CALIFORNIA

THE STATE OF CALIFORNIA OR ITS OFFICERS OR AGENTS SHALL NOT BE RESPONSIBLE FOR THE ACCURACY OR COMPLETENESS OF SCANNED COPIES OF THIS PLAN SHEET.

Arup PB JV
560 Mission Street, Suite 700
San Francisco, CA 94105

NOTES:

1. FOR ACCURATE RIGHT OF WAY AND ACCESS DATA, CONTRACT RIGHT OF WAY ENGINEERING AT THE DISTRICT OFFICE.
2. FOR NOTES, ABBREVIATIONS AND LEGEND, SEE SHEET D-1.

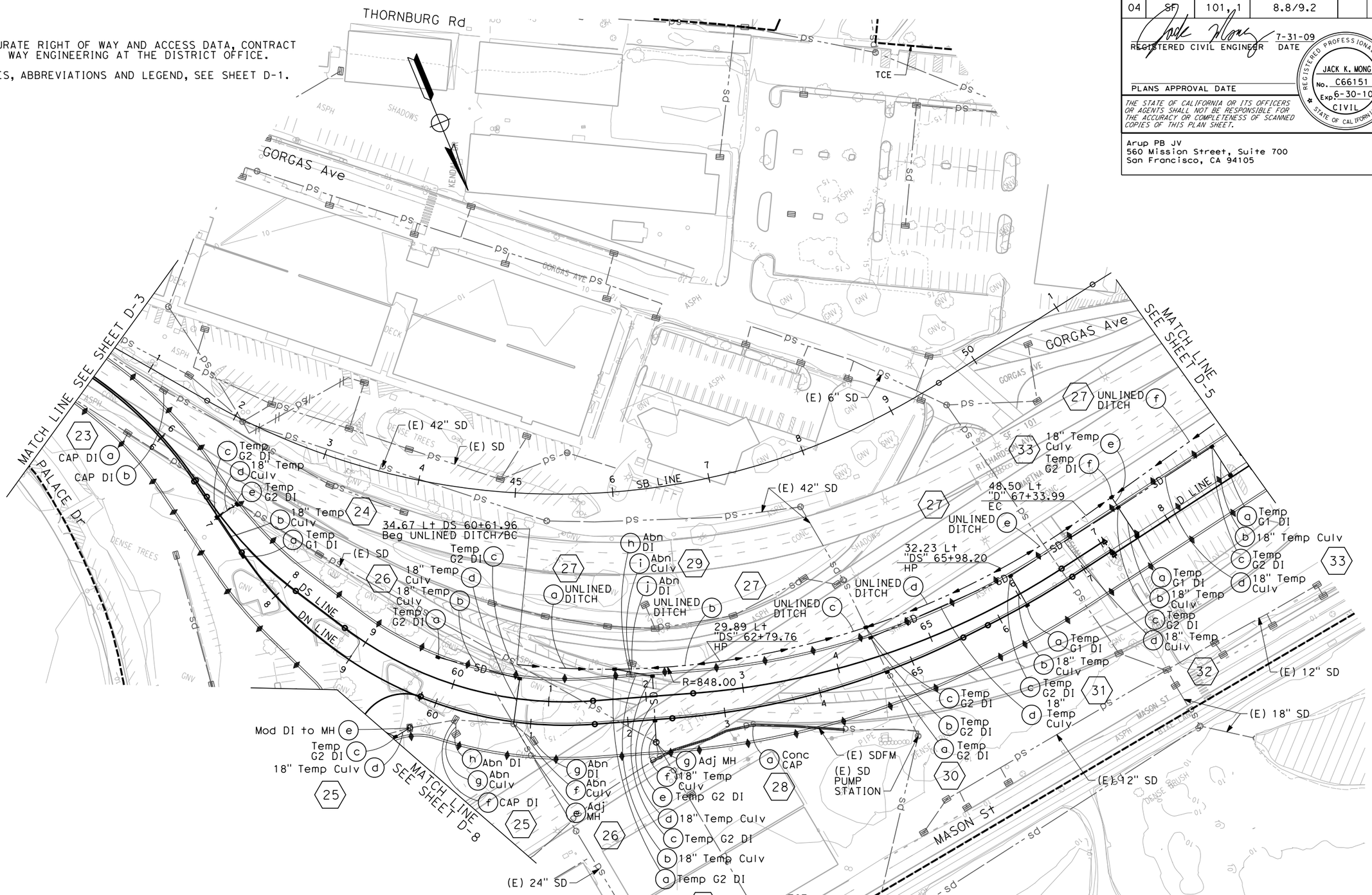

TEMPORARY DRAINAGE PLAN

SCALE 1" - 50'

THIS PLAN ACCURATE FOR DRAINAGE WORK ONLY

D-4

STATE OF CALIFORNIA - DEPARTMENT OF TRANSPORTATION

Caltrans

CONSULTANT FUNCTIONAL SUPERVISOR: ABOLFAZL EMADZADEH

CALCULATED-DESIGNED BY: KATIE MING

CHECKED BY: DUANNE GILMORE

REVISED BY: ML/KM

DATE REVISED: 7/31/09

LAST REVISION 7-31-09

DATE PLOTTED => $DATE
TIME PLOTTED => $TIME

BORDER LAST REVISED 4/11/2008

RELATIVE BORDER SCALE IS IN INCHES 0 1 2 3

USERNAME => $USER
DGN FILE => $REQUEST

CU 04242

EA 163741

Dist	COUNTY	ROUTE	POST MILES TOTAL PROJECT	SHEET No.	TOTAL SHEETS
04	SF	101, 1	8.8/9.2		

REGISTERED CIVIL ENGINEER 7-31-09 DATE

PLANS APPROVAL DATE

REGISTERED PROFESSIONAL ENGINEER JACK K. MONG No. C66151 Exp. 6-30-10 CIVIL STATE OF CALIFORNIA

THE STATE OF CALIFORNIA OR ITS OFFICERS OR AGENTS SHALL NOT BE RESPONSIBLE FOR THE ACCURACY OR COMPLETENESS OF SCANNED COPIES OF THIS PLAN SHEET.

Arup PB JV
560 Mission Street, Suite 700
San Francisco, CA 94105

NOTES:

1. FOR ACCURATE RIGHT OF WAY AND ACCESS DATA, CONTRACT RIGHT OF WAY ENGINEERING AT THE DISTRICT OFFICE.
2. FOR NOTES, ABBREVIATIONS AND LEGEND, SEE SHEET D-1.

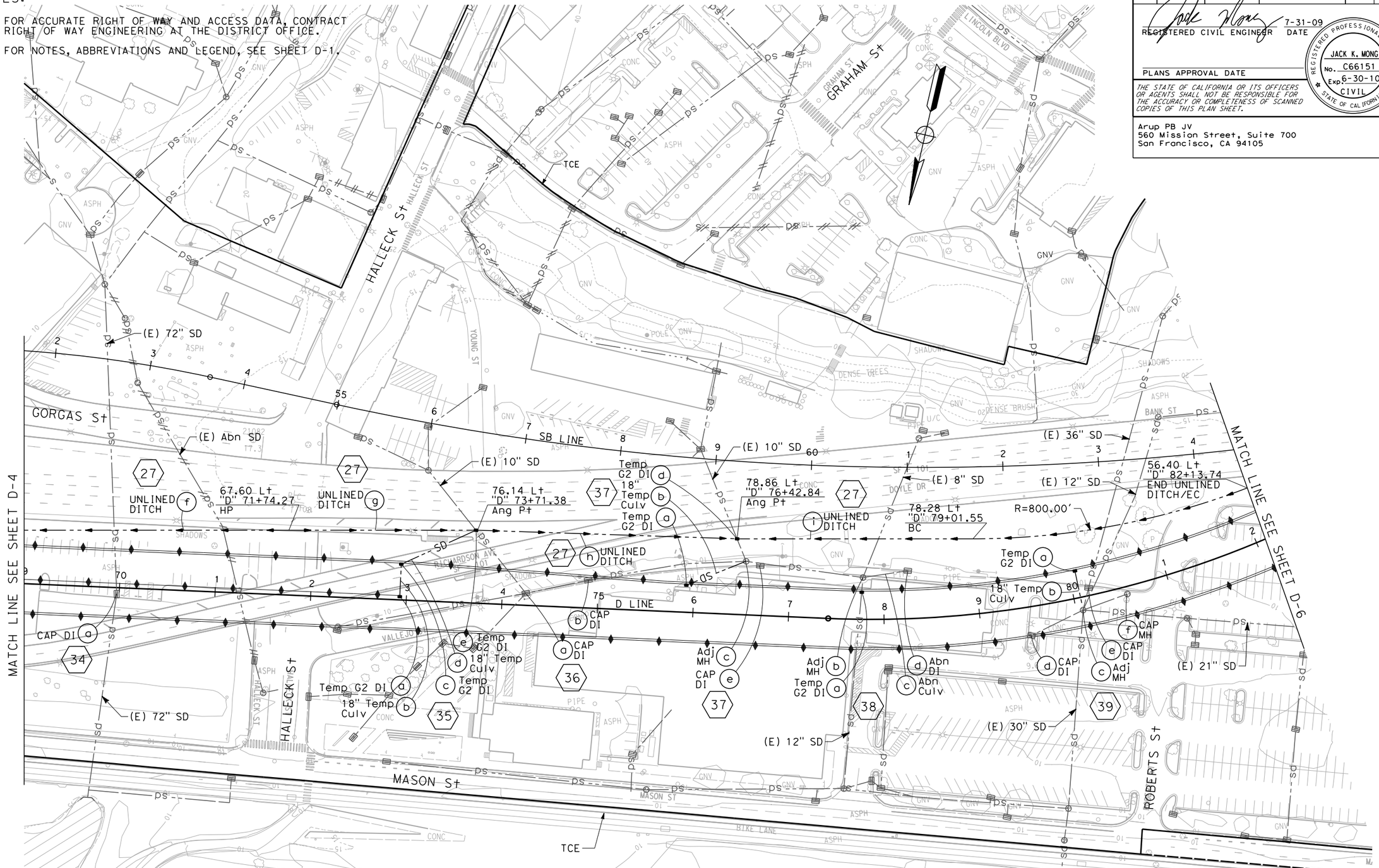

TEMPORARY DRAINAGE PLAN

SCALE: 1"=50'

D-5

THIS PLAN ACCURATE FOR DRAINAGE WORK ONLY

STATE OF CALIFORNIA - DEPARTMENT OF TRANSPORTATION
Caltrans

CONSULTANT FUNCTIONAL SUPERVISOR: ABOLFAZL EMADZADEH
CALCULATED-DESIGNED BY: KATIE MING
CHECKED BY: DUANNE GILMORE
REVISED BY: ML/KM
DATE REVISED: 7/31/09

LAST REVISION 7-31-09
DATE PLOTTED => $DATE
TIME PLOTTED => $TIME

BORDER LAST REVISED 4/11/2008
RELATIVE BORDER SCALE IS IN INCHES 0 1 2 3
USERNAME => $USER
DGN FILE => $REQUEST
CU 04242
EA 163741

Dist	COUNTY	ROUTE	POST MILES TOTAL PROJECT	SHEET No.	TOTAL SHEETS
04	SF	101, 1	8.8/9.2		

REGISTERED CIVIL ENGINEER 7-31-09 DATE

PLANS APPROVAL DATE

REGISTERED PROFESSIONAL ENGINEER JACK K. MONG No. C66151 Exp. 6-30-10 CIVIL STATE OF CALIFORNIA

THE STATE OF CALIFORNIA OR ITS OFFICERS OR AGENTS SHALL NOT BE RESPONSIBLE FOR THE ACCURACY OR COMPLETENESS OF SCANNED COPIES OF THIS PLAN SHEET.

Arup PB JV
560 Mission Street, Suite 700
San Francisco, CA 94105

NOTES:

1. FOR ACCURATE RIGHT OF WAY AND ACCESS DATA, CONTRACT RIGHT OF WAY ENGINEERING AT THE DISTRICT OFFICE.
2. FOR NOTES, ABBREVIATIONS AND LEGEND, SEE SHEET D-1.

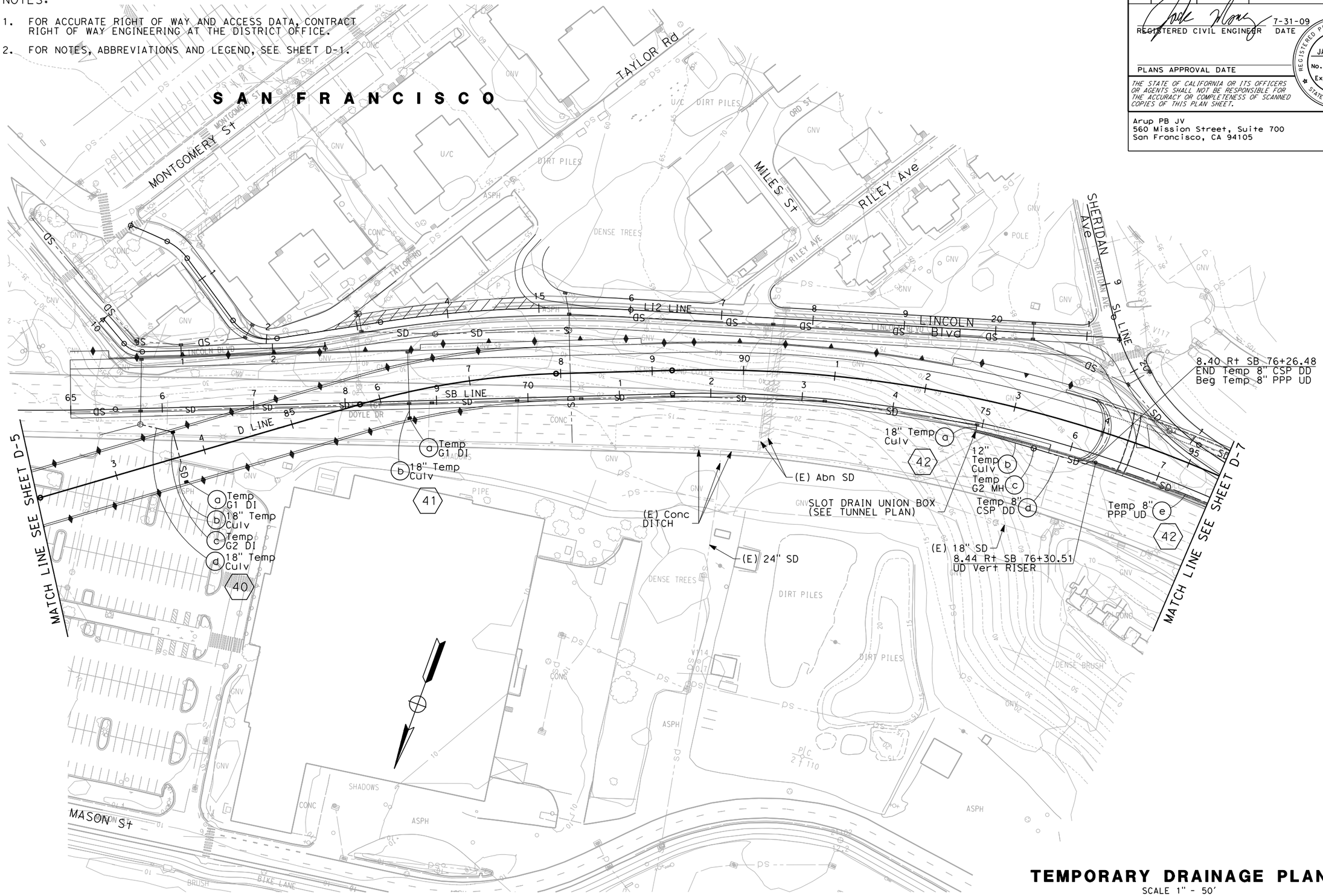

TEMPORARY DRAINAGE PLAN

SCALE 1" - 50'

THIS PLAN ACCURATE FOR DRAINAGE WORK ONLY

D-6

STATE OF CALIFORNIA - DEPARTMENT OF TRANSPORTATION

Caltrans

CONSULTANT FUNCTIONAL SUPERVISOR: ABOLFAZL EMADZADEH

CALCULATED-DESIGNED BY: KATIE MING

CHECKED BY: DUANNE GILMORE

REVISED BY: ML/KM

DATE REVISED: 7/31/09

LAST REVISION 7-31-09

DATE PLOTTED => $DATE
TIME PLOTTED => $TIME

BORDER LAST REVISED 4/11/2008

RELATIVE BORDER SCALE IS IN INCHES 0 1 2 3

USERNAME => $USER
DGN FILE => $REQUEST

CU 04242

EA 163741

Dist	COUNTY	ROUTE	POST MILES TOTAL PROJECT	SHEET No.	TOTAL SHEETS
04	SF	101, 1	8.8/9.2		

REGISTERED CIVIL ENGINEER 7-31-09 DATE

PLANS APPROVAL DATE

REGISTERED PROFESSIONAL ENGINEER JACK K. MONG No. C66151 Exp. 6-30-10 CIVIL STATE OF CALIFORNIA

THE STATE OF CALIFORNIA OR ITS OFFICERS OR AGENTS SHALL NOT BE RESPONSIBLE FOR THE ACCURACY OR COMPLETENESS OF SCANNED COPIES OF THIS PLAN SHEET.

Arup PB JV
560 Mission Street, Suite 700
San Francisco, CA 94105

NOTES:

1. FOR ACCURATE RIGHT OF WAY AND ACCESS DATA, CONTRACT RIGHT OF WAY ENGINEERING AT THE DISTRICT OFFICE.
2. FOR NOTES, ABBREVIATIONS AND LEGEND, SEE SHEET D-1.

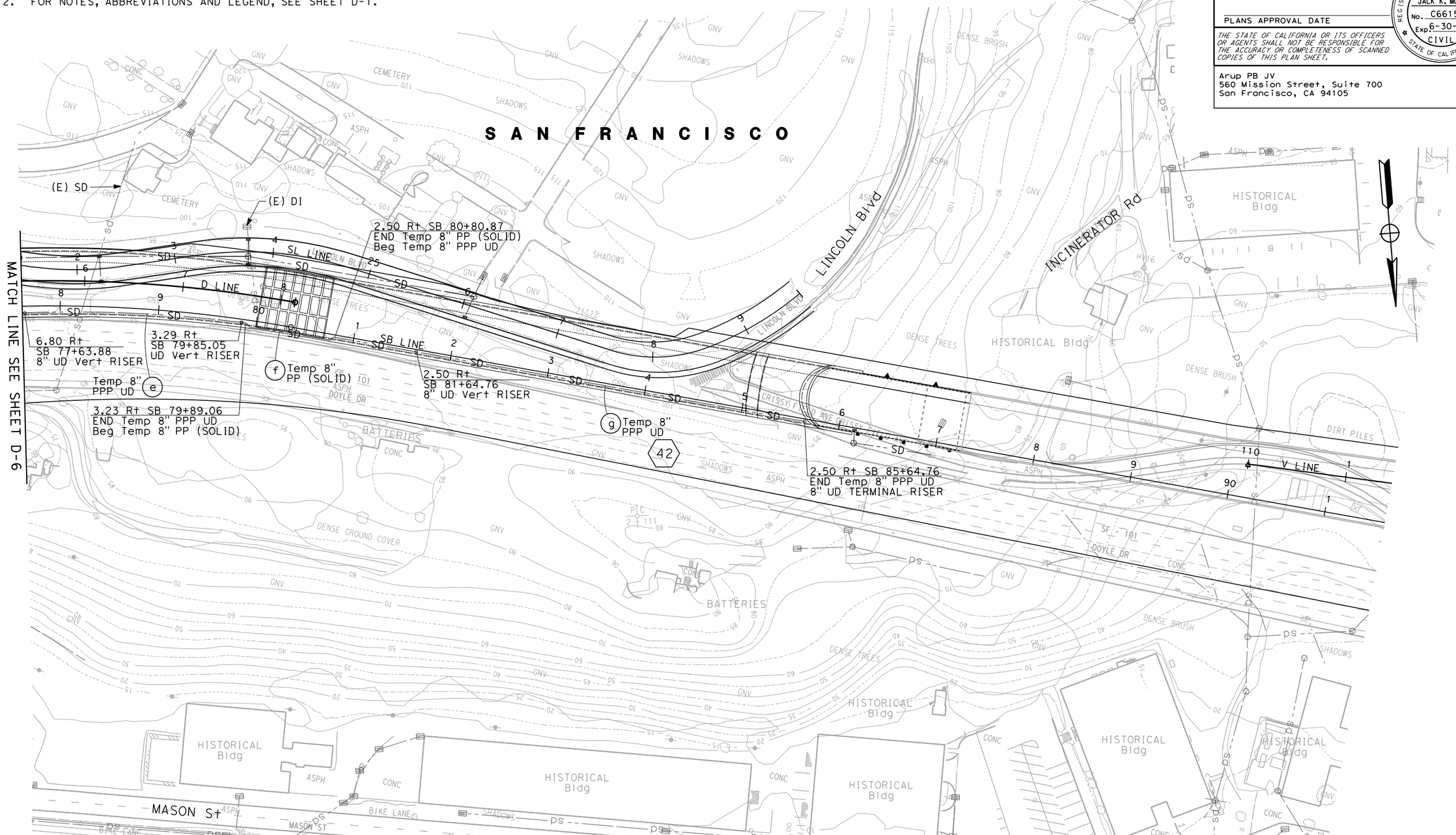

TEMPORARY DRAINAGE PLAN

SCALE 1" - 50'

D-7

THIS PLAN ACCURATE FOR DRAINAGE WORK ONLY

STATE OF CALIFORNIA - DEPARTMENT OF TRANSPORTATION

Caltrans

CONSULTANT FUNCTIONAL SUPERVISOR: ABOLFAZL EMADZADEH

CALCULATED-DESIGNED BY: KATIE MING

CHECKED BY: DUANNE GILMORE

REVISED BY: ML/KM

DATE REVISED: 7/31/09

LAST REVISION 7-31-09 DATE PLOTTED => $DATE TIME PLOTTED => $TIME

BORDER LAST REVISED 4/11/2008

RELATIVE BORDER SCALE IS IN INCHES 0 1 2 3

USERNAME => $USER
DGN FILE => $REQUEST

CU 04242

EA 163741

Dist	COUNTY	ROUTE	POST MILES TOTAL PROJECT	SHEET No.	TOTAL SHEETS
04	SF	101, 1	8.8/9.2		

REGISTERED CIVIL ENGINEER 7-31-09 DATE

PLANS APPROVAL DATE

REGISTERED PROFESSIONAL ENGINEER JACK K. MONG No. C66151 Exp. 6-30-10 CIVIL STATE OF CALIFORNIA

THE STATE OF CALIFORNIA OR ITS OFFICERS OR AGENTS SHALL NOT BE RESPONSIBLE FOR THE ACCURACY OR COMPLETENESS OF SCANNED COPIES OF THIS PLAN SHEET.

Arup PB JV
560 Mission Street, Suite 700
San Francisco, CA 94105

NOTES:

1. FOR ACCURATE RIGHT OF WAY AND ACCESS DATA, CONTACT RIGHT OF WAY ENGINEERING AT THE DISTRICT OFFICE.
2. FOR NOTES, ABBREVIATIONS AND LEGEND, SEE SHEET D-1.

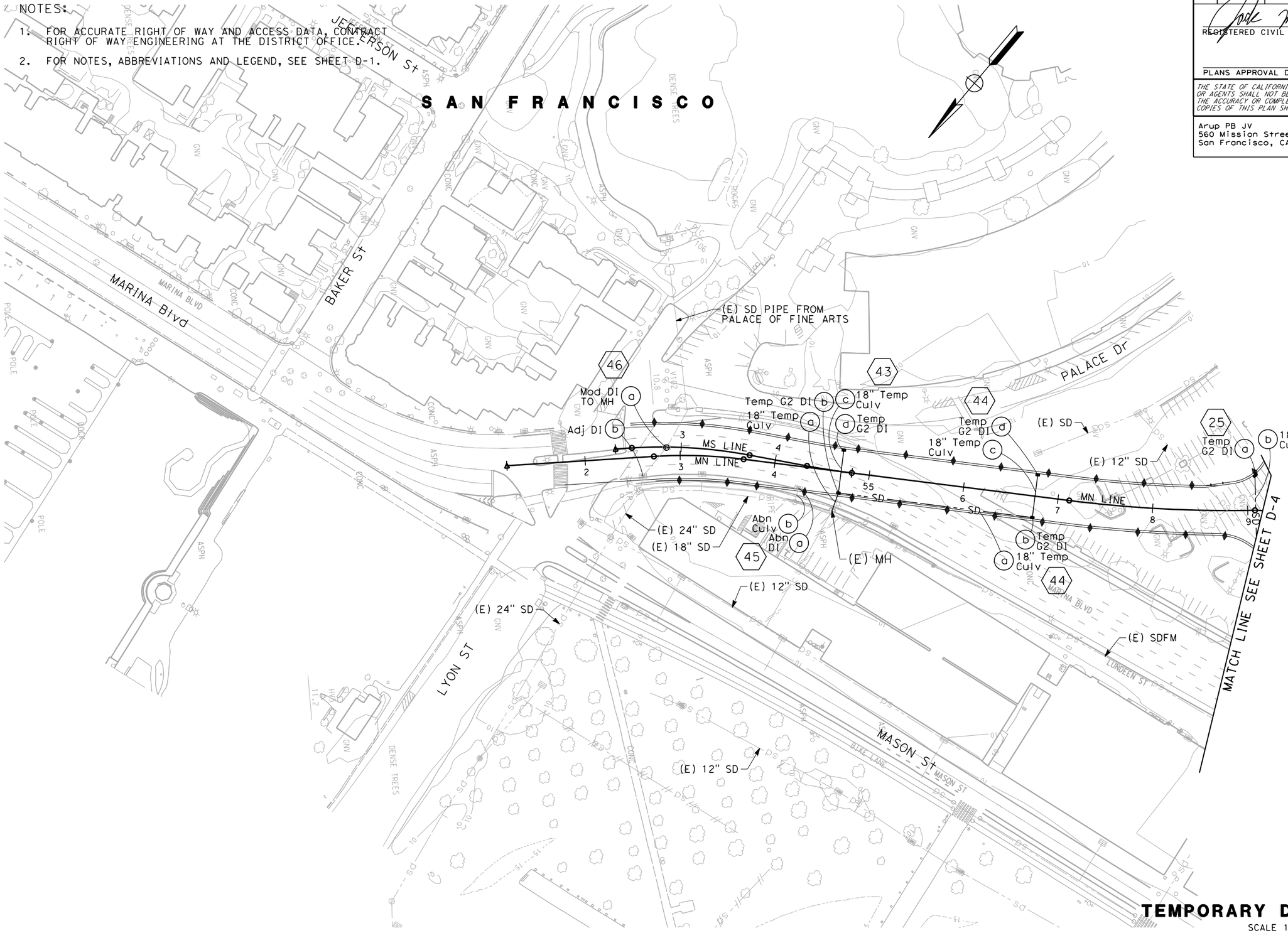

THIS PLAN ACCURATE FOR UTILITY WORK ONLY.

TEMPORARY DRAINAGE PLAN

SCALE 1" - 50'

D-8

STATE OF CALIFORNIA - DEPARTMENT OF TRANSPORTATION

Caltrans

CONSULTANT FUNCTIONAL SUPERVISOR: ABOLFAZL EMADZADEH

CALCULATED-DESIGNED BY: KATIE MING

CHECKED BY: DUANNE GILMORE

REVISED BY: ML/KM

DATE REVISED: 7/31/09

LAST REVISION 7-31-09

DATE PLOTTED => $DATE

TIME PLOTTED => $TIME

BORDER LAST REVISED 4/11/2008

RELATIVE BORDER SCALE IS IN INCHES 0 1 2 3

USERNAME => $USER

DGN FILE => $REQUEST

CU 04242

EA 163741

Dist	COUNTY	ROUTE	POST MILES TOTAL PROJECT	SHEET No.	TOTAL SHEETS
04	SF	101, 1	8.8/9.2		

REGISTERED CIVIL ENGINEER 7-31-09 DATE

PLANS APPROVAL DATE

REGISTERED PROFESSIONAL ENGINEER JACK K. MONG No. C66151 Exp. 6-30-10 CIVIL STATE OF CALIFORNIA

THE STATE OF CALIFORNIA OR ITS OFFICERS OR AGENTS SHALL NOT BE RESPONSIBLE FOR THE ACCURACY OR COMPLETENESS OF SCANNED COPIES OF THIS PLAN SHEET.

Arup PB JV
560 Mission Street, Suite 700
San Francisco, CA 94105

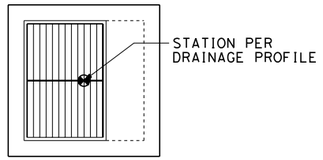

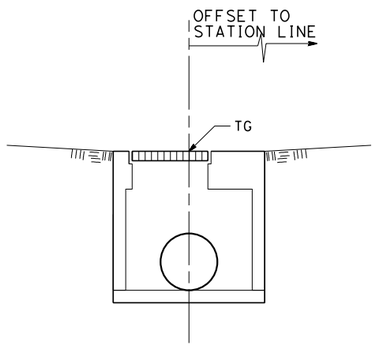

FIELD INLET

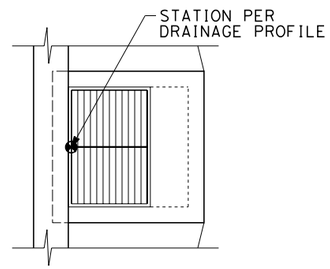

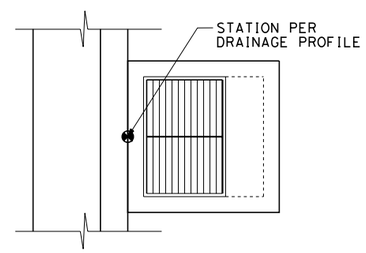

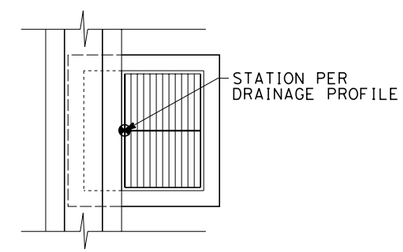

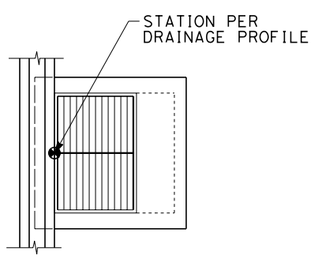

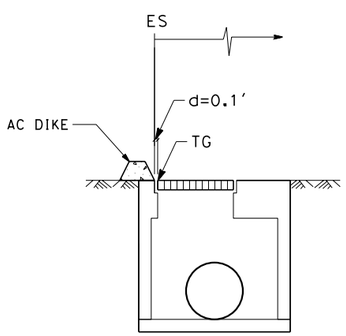

INLET ADJACENT TO AC DIKE

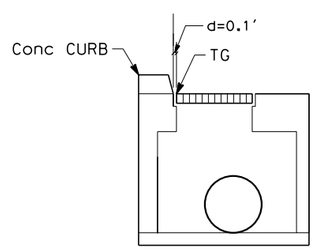

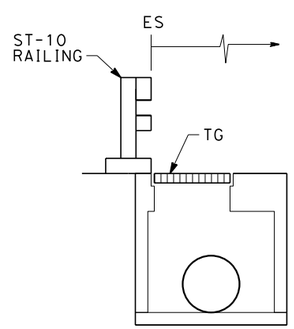

INLET ADJACENT TO CONCRETE CURB OR ST-10 RAILING

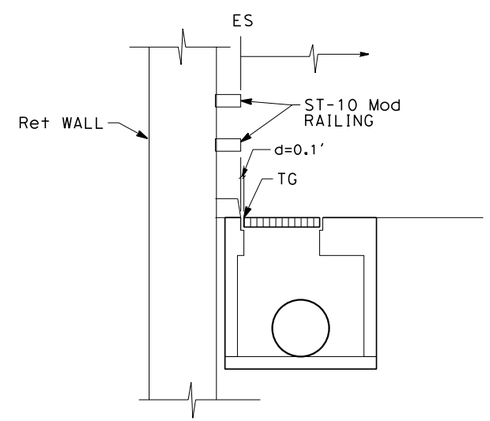

INLET ADJACENT TO BOTTOM RETAINING WALL

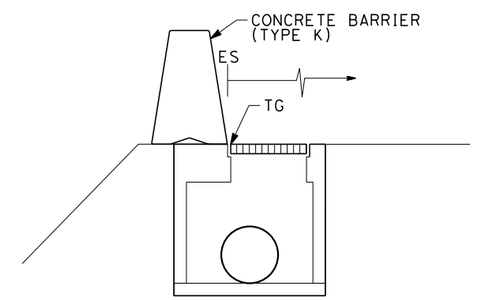

INLET ADJACENT TO CONCRETE BARRIER (TYPE K)

DRAINAGE DETAILS
NO SCALE

DD-1

STATE OF CALIFORNIA - DEPARTMENT OF TRANSPORTATION
Caltrans®

CONSULTANT FUNCTIONAL SUPERVISOR: ABOLFAZL EMADZADEH
CALCULATED-DESIGNED BY: KATIE MING
CHECKED BY: DUANNE GILMORE
REVISED BY: ML/KM
DATE REVISED: 7/31/09

LAST REVISION 7-31-09
DATE PLOTTED => $DATE
TIME PLOTTED => $TIME

Dist	COUNTY	ROUTE	POST MILES TOTAL PROJECT	SHEET No.	TOTAL SHEETS
04	SF	101, 1	8.8/9.2		

REGISTERED CIVIL ENGINEER 7-31-09 DATE

PLANS APPROVAL DATE

REGISTERED PROFESSIONAL ENGINEER JACK K. MONG No. C66151 Exp. 6-30-10 CIVIL STATE OF CALIFORNIA

THE STATE OF CALIFORNIA OR ITS OFFICERS OR AGENTS SHALL NOT BE RESPONSIBLE FOR THE ACCURACY OR COMPLETENESS OF SCANNED COPIES OF THIS PLAN SHEET.

Arup PB JV
560 Mission Street, Suite 700
San Francisco, CA 94105

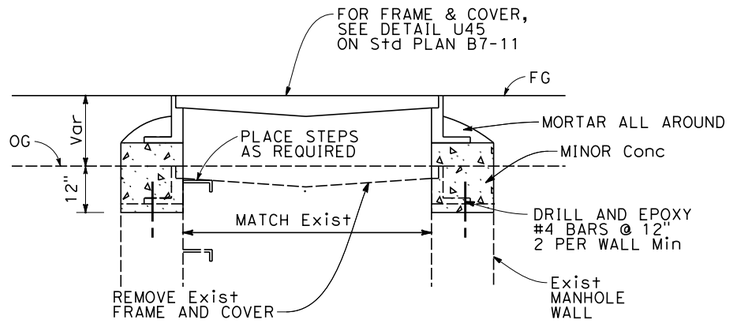

ADJUST MANHOLE TO GRADE

(1)(a)(5)(a)

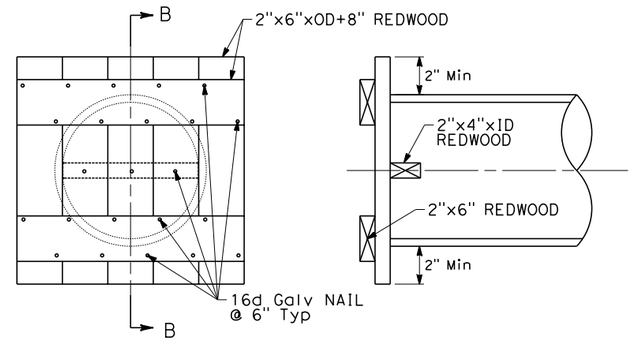

SECTIONAL B-B

PIPE STUB-OUT DETAIL

(3)(a)

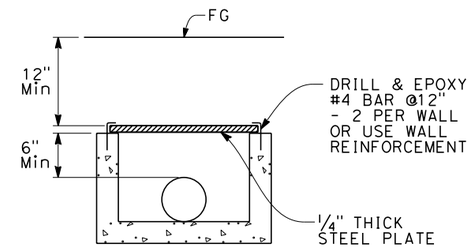

SECTIONAL VIEW

PARTIAL DI WITH COVER

(1)(g)(i)

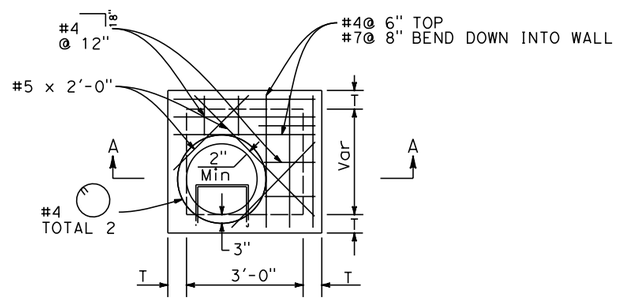

PLAN

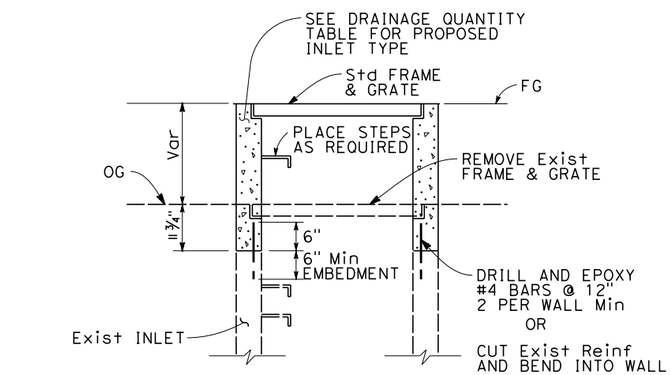

ADJUST INLET TO GRADE

SECTIONAL VIEW

(2)(b)(8)(a)

NOTE:

COLLAR CAN BE USED FOR JOINING NEW PIPE TO EXISTING PIPE, PIPES OF DIFFERENT SIZES, AND FLARED END SECTIONS TO PIPE AS DIRECTED BY THE ENGINEER.

CONCRETE COLLAR

(5)(h)

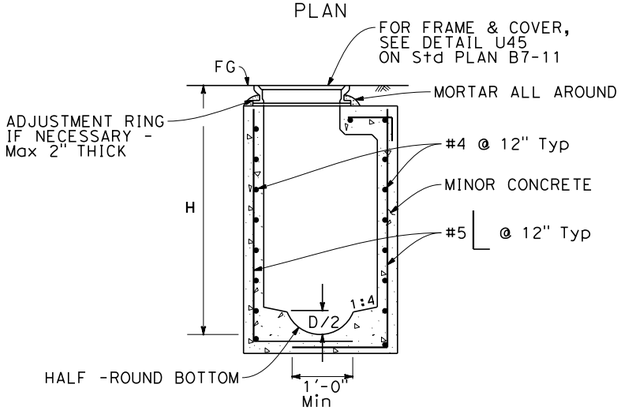

SECTION A-A

NOTE:
FOR DETAILS NOT SHOWN, SEE STA PLAN D73 - G2 INLET.

G2 MANHOLE

(1)(c)(5)(e)(6)(n)(p)(r)(t)(14)(c)

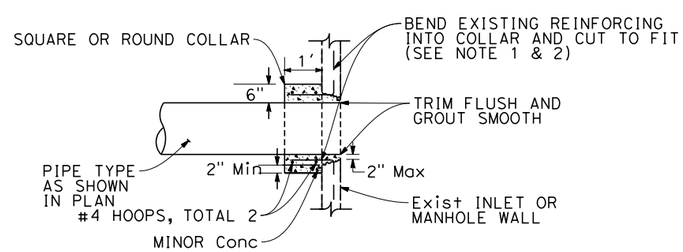

NOTES:

1) CUT REINFORCEMENT ON ALTERNATE SIDES AND BEND INTO COLLAR.

2) IF THERE ARE NO EXISTING REINFORCING BARS, THEN USE 6 #4 DOWELS, SPACED EVENLY AROUND NEW PIPE, AND DRILL AND GROUT INTO EXISTING INLET WALLS 6".

CONCRETE COLLAR PIPE CONNECTION TO EXISTING INLET OR MANHOLE

(1)(b)(2)(a)(5)(b)(6)(u)(14)(d)

DRAINAGE DETAILS

NO SCALE

DD-2

STATE OF CALIFORNIA - DEPARTMENT OF TRANSPORTATION
Caltrans

CONSULTANT FUNCTIONAL SUPERVISOR: ABOLFAZL EMADZADEH

CALCULATED-DESIGNED BY: KATIE MING
CHECKED BY: DUANNE GILMORE

REVISED BY: ML/KM
DATE REVISED: 7/31/09

LAST REVISION 7-31-09
DATE PLOTTED => $DATE
TIME PLOTTED => $TIME

Dist	COUNTY	ROUTE	POST MILES TOTAL PROJECT	SHEET No.	TOTAL SHEETS
04	SF	101, 1	8.8/9.2		

REGISTERED CIVIL ENGINEER 9-30-09 DATE

PLANS APPROVAL DATE

REGISTERED PROFESSIONAL ENGINEER KEVIN BARRY CLINCH No. C48926 Exp. 9-30-10 CIVIL STATE OF CALIFORNIA

THE STATE OF CALIFORNIA OR ITS OFFICERS OR AGENTS SHALL NOT BE RESPONSIBLE FOR THE ACCURACY OR COMPLETENESS OF SCANNED COPIES OF THIS PLAN SHEET.

Arup PB JV
560 Mission Street, Suite 700
San Francisco, CA 94105

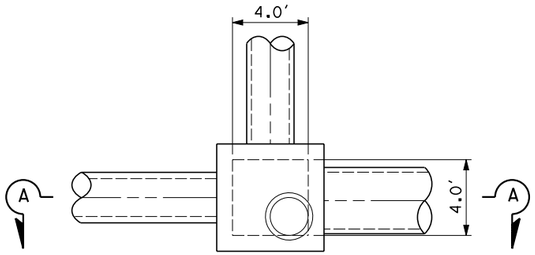

PLAN
SCALE: 1/4" = 1'-0"

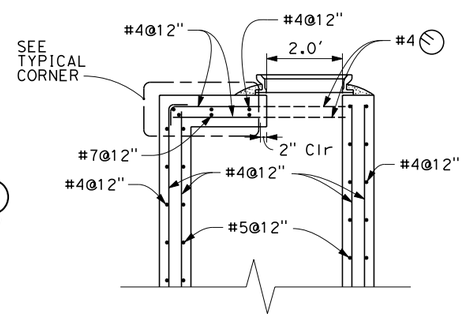

TOP SLAB SECTION
SCALE 1/2" = 1'-0"

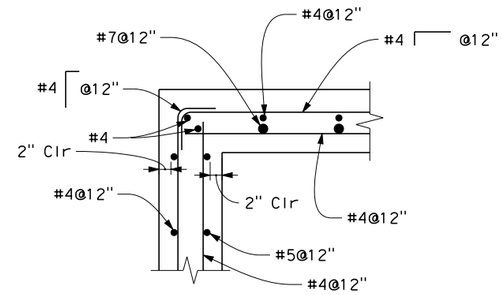

TYPICAL CORNER
SCALE 1" = 1'-0"

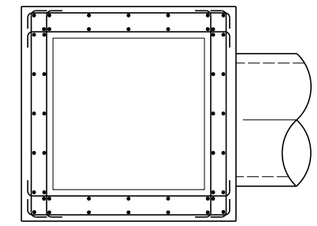

BOTTOM LANDING SECTION B-B
SCALE 1/2" = 1'-0"

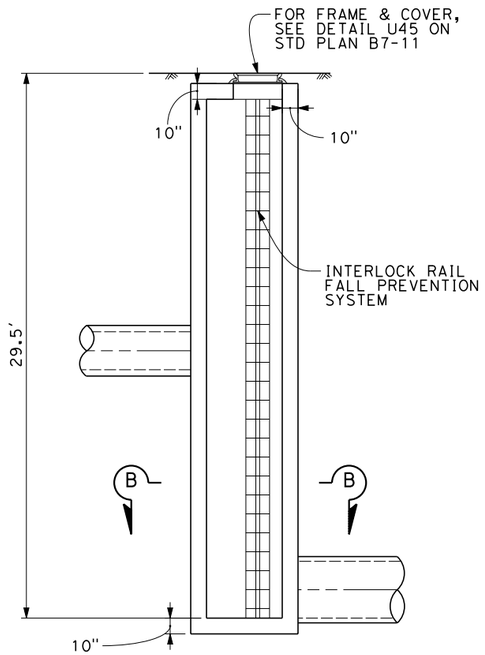

ELEVATION SECTION A-A
SCALE: 1/4" = 1'-0"

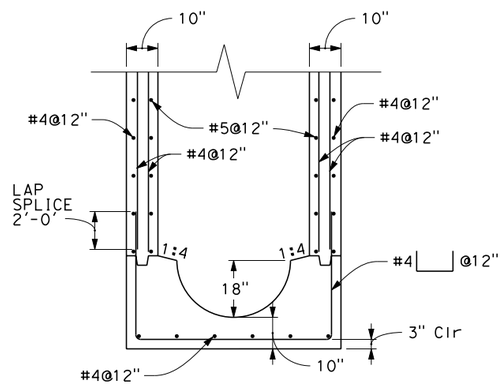

SLAB TO WALL REINFORCEMENT
SCALE 1/2" = 1'-0"

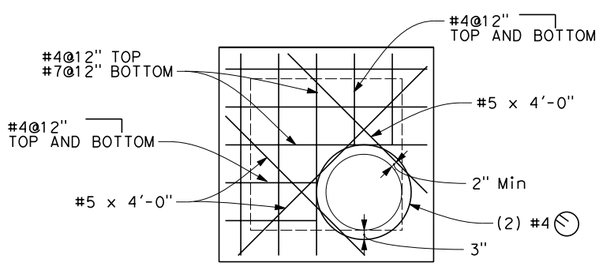

TOP SLAB
SCALE 1/2" = 1'-0"

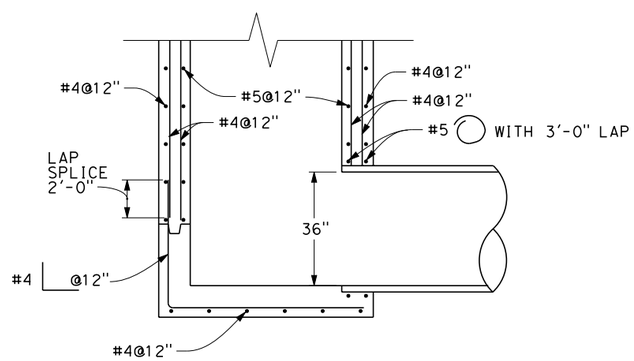

SECTION AT APC
SCALE 1/2" = 1'-0"

STANDARD PLANS DATED MAY 2006

A62C	LIMITS OF PAYMENT FOR EXCAVATION AND BACKFILL BRIDGE
B7-11	UTILITY DETAILS

GENERAL NOTES:

1. DESIGN: LRFD BRIDGE DESIGN SPECIFICATIONS, FOURTH EDITION (2007) PUBLISHED BY THE AMERICAN ASSOCIATION OF STATE HIGHWAY AND TRANSPORTATION OFFICIALS WITH CALIFORNIA AMENDMENT (V3.06.01)

   DOYLE DRIVE STRUCTURAL DESIGN CRITERIA CUT-AND-COVER TUNNELS AND NON-STANDARD RETAINING WALLS

   A. LOADS: SOIL DENSITY = 120pcf
   COEFFICIENT OF EARTH PRESSURE - AT REST CONDITION = 0.33
   LIVE LOAD FOR ROOF = 100psf

   B. REINFORCED CONCRETE (ULTIMATE STRENGTH DESIGN):
   f'c = 4000psi
   fy = 60000psi

   C. MISCELLANEOUS METAL (WORKING STRESS DESIGN):
   fy = 36000psi

2. SOIL REPORT: "DOYLE DRIVE REPLACEMENT PROJECT FOUNDATION REPORT FOR SOUTHBOUND BATTERY TUNNEL (BRIDGE NO. 34-0161L) DATED JULY 2009

3. ALLOWABLE SOIL BEARING PRESSURE = 41256psf

DETAIL NOTES

1. METAL WORKS NOTES:

   A. ALL METAL WORK SHALL BE HOT-DIP GALVANIZED AFTER FABRICATION.

   B. SECURE METAL TO METAL CONNECTIONS WITH 1/2" DIA x 1 1/2" DIA IN HEX HEAD MACHINE BOLTS, LOCK WASHERS AND HEX NUTS, UNLESS OTHERWISE NOTED.

   C. MECHANICAL EXPANSION ANCHORS USED FOR SECURING LADDERS INSIDE OF PUMPIMG PLANT SHALL BE OF STAINLESS STEEL.

   D ALL LOCK WASHERS SHALL BE HELICAL SPRING LOCK WASHERS

   E. ALL RAILING AND LADDERS SHALL HAVE SMOOTH EDGES

2. FOR PIPE LOCATIONS AND ELEVATIONS, SEE MECHANICAL PLANS.

G2D MANHOLE
5 g

DRAINAGE DETAILS
SCALE: AS SHOWN

DD-3

REVISED BY	ML/KM
DATE REVISED	7/31/09
CALCULATED-DESIGNED BY	KATIE MING
CHECKED BY	DUANNE GILMORE
CONSULTANT FUNCTIONAL SUPERVISOR	ABOLFAZL EMADZADEH

STATE OF CALIFORNIA - DEPARTMENT OF TRANSPORTATION

Caltrans

LAST REVISION 7-31-09 DATE PLOTTED => $DATE TIME PLOTTED => $TIME

Dist	COUNTY	ROUTE	POST MILES TOTAL PROJECT	SHEET No.	TOTAL SHEETS
04	SF	101, 1	8.8/9.2		

REGISTERED CIVIL ENGINEER 7-31-09 DATE

PLANS APPROVAL DATE

REGISTERED PROFESSIONAL ENGINEER JACK K. MONG No. C66151 Exp. 6-30-10 CIVIL STATE OF CALIFORNIA

THE STATE OF CALIFORNIA OR ITS OFFICERS OR AGENTS SHALL NOT BE RESPONSIBLE FOR THE ACCURACY OR COMPLETENESS OF SCANNED COPIES OF THIS PLAN SHEET.

Arup PB JV
560 Mission Street, Suite 700
San Francisco, CA 94105

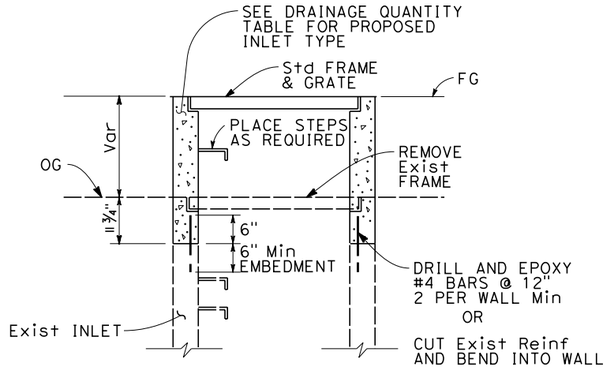

ADJUST INLET TO GRADE

SECTIONAL VIEW

20 a b 21 g 22 a 46 b

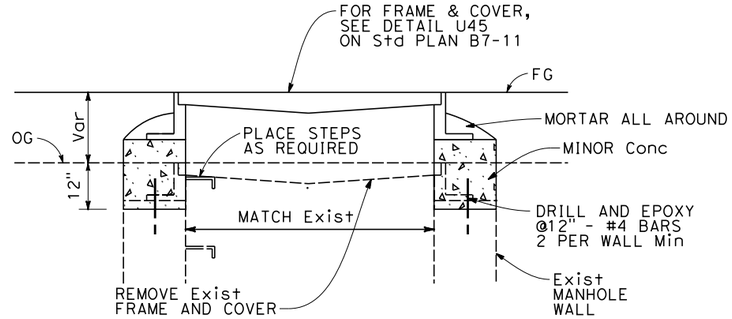

ADJUST MANHOLE TO GRADE

26 e 29 g 37 c 38 b 39 c

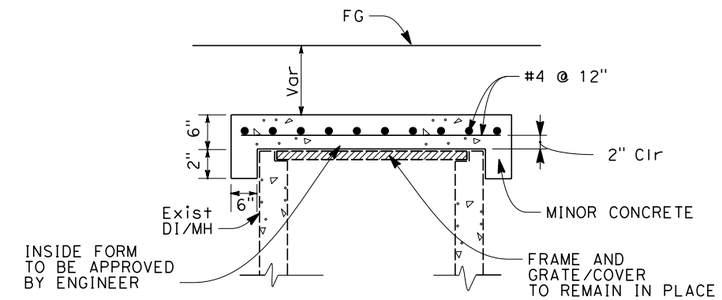

CONCRETE CAP FOR Exist DI/MH

23 a b 25 f 34 a

36 a b 37 e 39 d e f

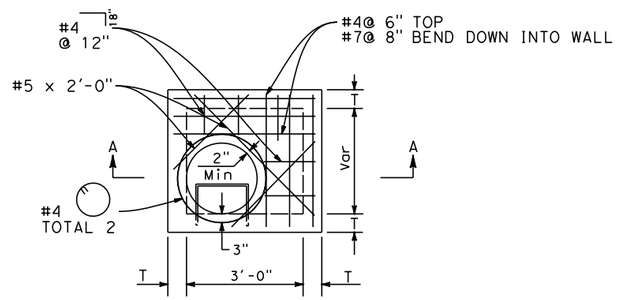

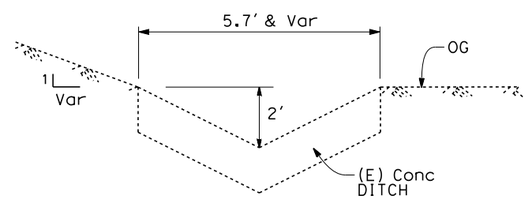

Exist Conc DITCH

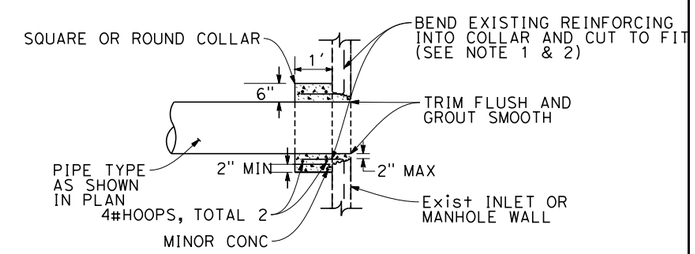

NOTES:

1) CUT REINFORCEMENT ON ALTERNATE SIDES AND BEND INTO COLLAR.

2) IF THERE ARE NO EXISTING REINFORCING BARS, THEN USE 6 - #4 DOWELS, SPACED EVENLY AROUND NEW PIPE, AND DRILL AND GROUT INTO EXISTING INLET WALLS 6".

CONCRETE COLLAR PIPE CONNECTION TO EXISTING INLET OR MANHOLE

21 f 26 d 29 f 37 b 39 b 43 a

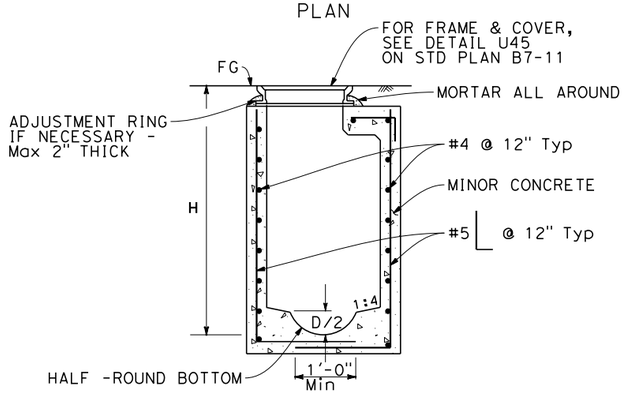

SECTION A-A

NOTE:
FOR DETAILS NOT SHOWN, SEE STA PLAN D73 - G2 INLET.

Temp G2 MANHOLE

42 c

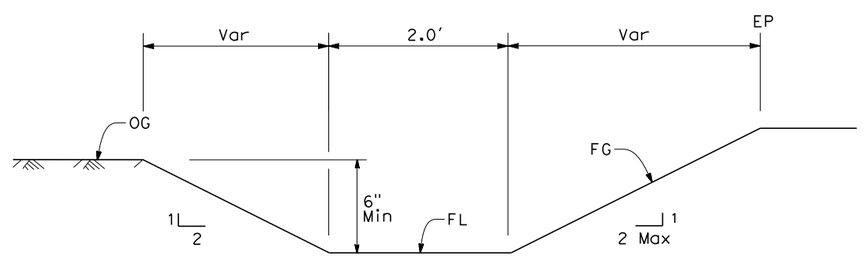

UNLINED DITCH

27 a b c d e f g h i

TEMPORARY DRAINAGE DETAILS

NO SCALE

DD-4

STATE OF CALIFORNIA - DEPARTMENT OF TRANSPORTATION	CONSULTANT FUNCTIONAL SUPERVISOR	CALCULATED-DESIGNED BY	REVISED BY
Caltrans	ABOLFAZL EMADZADEH	CHECKED BY	DATE REVISED
	KATIE MING	DUANNE GILMORE	ML/KM 7/31/09

LAST REVISION 7-31-09 | DATE PLOTTED => $DATE | TIME PLOTTED => $TIME

Dist	COUNTY	ROUTE	POST MILES TOTAL PROJECT	SHEET No.	TOTAL SHEETS
04	SF	101, 1	8.8/9.2		

REGISTERED CIVIL ENGINEER 7-31-09 DATE

PLANS APPROVAL DATE

REGISTERED PROFESSIONAL ENGINEER JACK K. MONG No. C66151 Exp. 6-30-10 CIVIL STATE OF CALIFORNIA

THE STATE OF CALIFORNIA OR ITS OFFICERS OR AGENTS SHALL NOT BE RESPONSIBLE FOR THE ACCURACY OR COMPLETENESS OF SCANNED COPIES OF THIS PLAN SHEET.

Arup PB JV
560 Mission Street, Suite 700
San Francisco, CA 94105

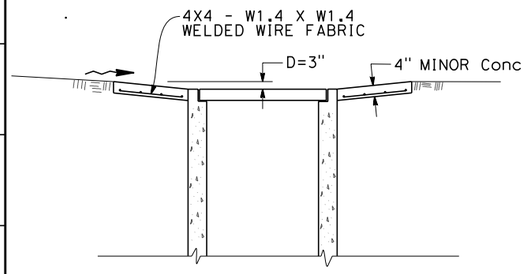

SECTION B-B

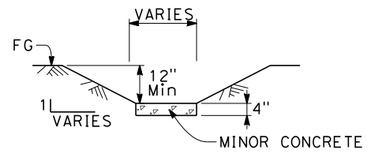

SECTION C-C

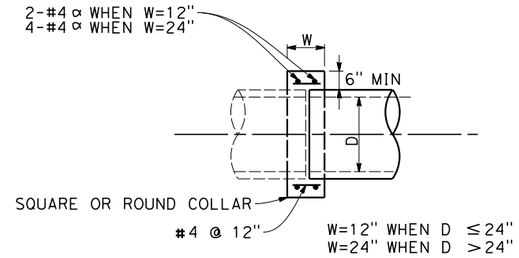

NOTE:

COLLAR CAN BE USED FOR JOINING NEW PIPE TO EXISTING PIPE, PIPES OF DIFFERENT SIZES, AND FLARED END SECTIONS TO PIPE AS DIRECTED BY THE ENGINEER.

CONCRETE COLLAR

42 c d e

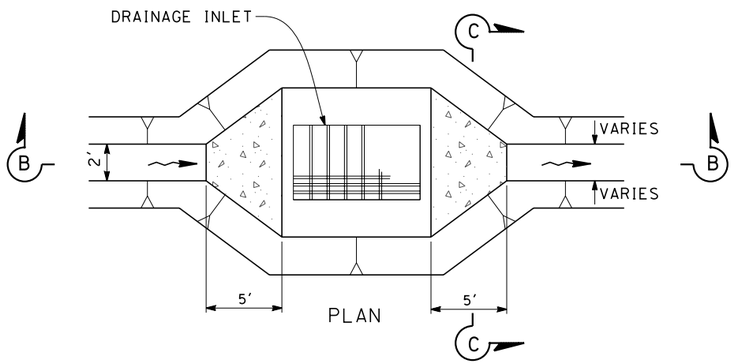

PLAN

DITCH TRANSITION TO DRAINAGE INLET

29 a 30 c 33 f 35 e 37 d

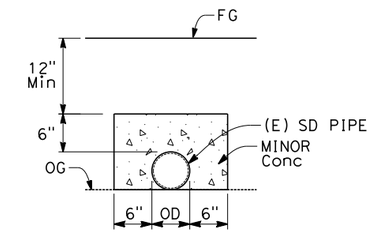

CONCRETE CAP

28 a

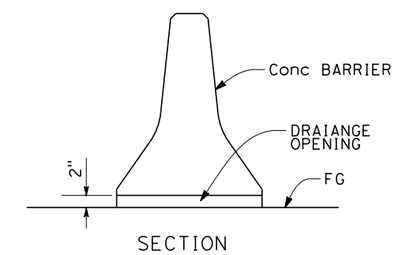

SECTION

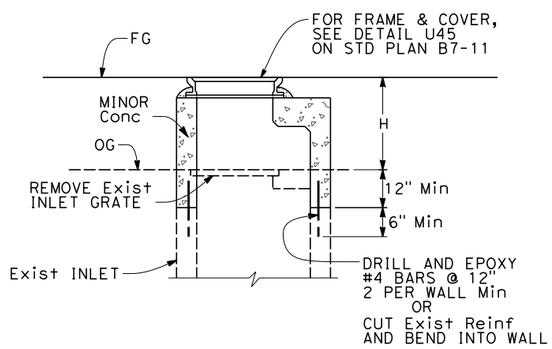

NOTE:
FOR DETAILS NOT SHOWN, SEE TEMPORARY G2 MH DETAIL.

MOD DI TO MH

25 e 46 a

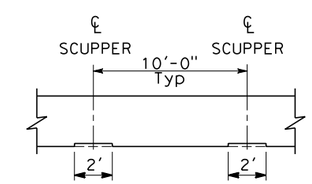

PLAN

SCUPPER DRAIN FOR Conc BARRIER (ALL TYPE) OR MOVABLE Conc BARRIER

TEMPORARY DRAINAGE DETAILS

NO SCALE

DD-5

STATE OF CALIFORNIA - DEPARTMENT OF TRANSPORTATION
Caltrans®

CONSULTANT FUNCTIONAL SUPERVISOR: ABOLFAZL EMADZADEH

CALCULATED-DESIGNED BY: KATIE MING
CHECKED BY: DUANNE GILMORE

REVISED BY: ML/KM
DATE REVISED: 7/31/09

LAST REVISION 7-31-09
DATE PLOTTED => $DATE
TIME PLOTTED => $TIME

Dist	COUNTY	ROUTE	POST MILES TOTAL PROJECT	SHEET No.	TOTAL SHEETS
04	SF	101, 1	8.8/9.2		

REGISTERED CIVIL ENGINEER DATE 7-31-09

PLANS APPROVAL DATE

REGISTERED PROFESSIONAL ENGINEER MANISH M. DALIA No. C74016 Exp. 6-30-11 CIVIL STATE OF CALIFORNIA

THE STATE OF CALIFORNIA OR ITS OFFICERS OR AGENTS SHALL NOT BE RESPONSIBLE FOR THE ACCURACY OR COMPLETENESS OF SCANNED COPIES OF THIS PLAN SHEET.

Arup PB JV
560 Mission Street, Suite 700
San Francisco, CA 94105

NOTES:

1. FOR UNDERDRAINS DETAIL NOT SHOWN, SEE Std PLAN D102.
2. FOR TUNNEL AND RETAINING WALL DETAILS, SEE TUNNEL AND RETAINING WALL PLANS.

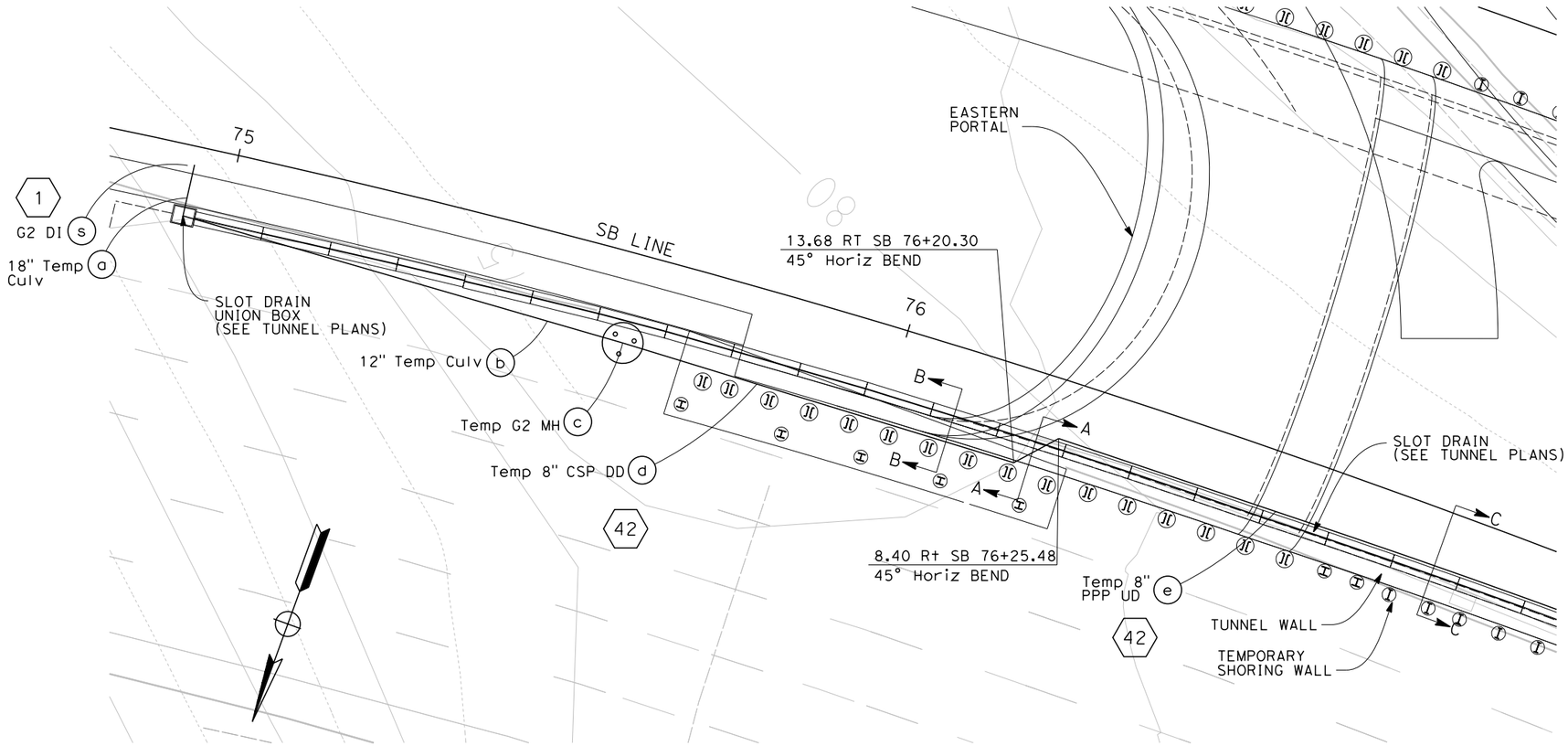

PLAN

SCALE: 1" = 10'

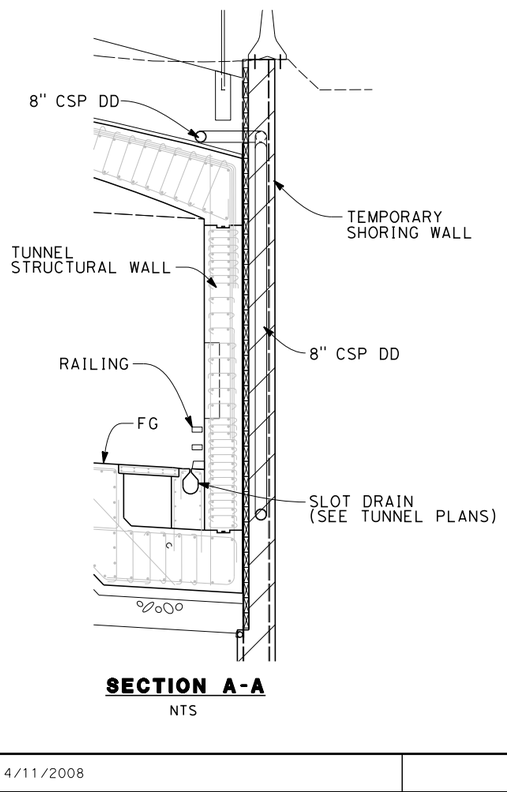

SECTION A-A

NTS

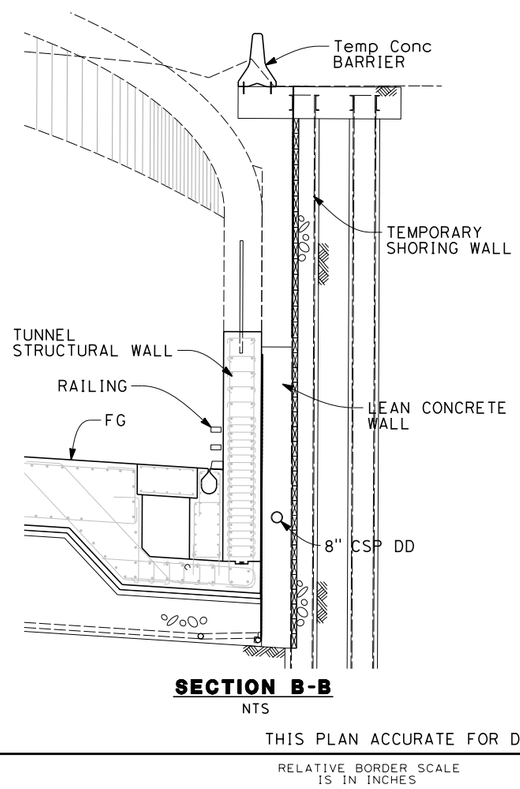

SECTION B-B

NTS

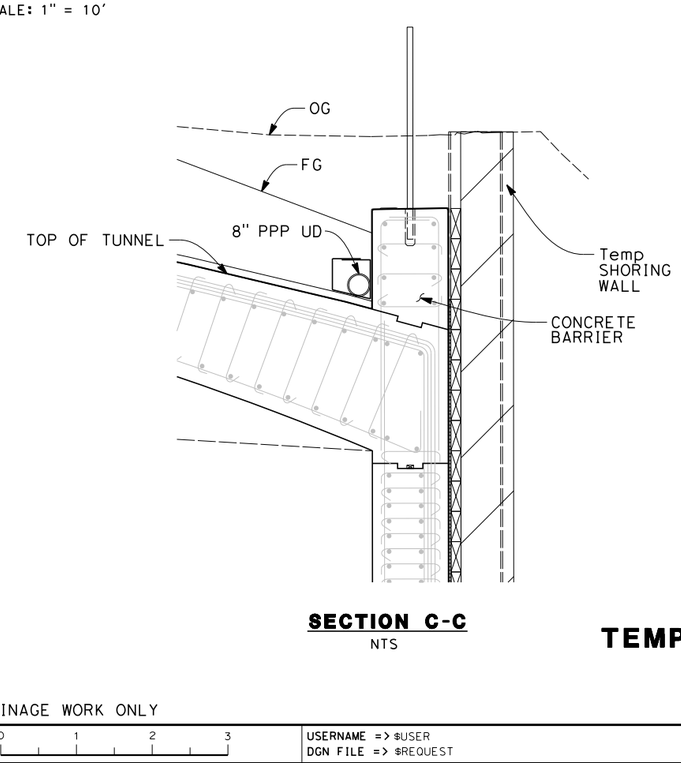

SECTION C-C

NTS

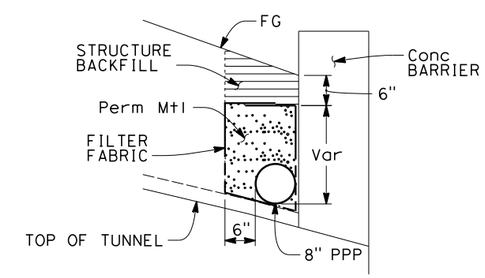

UNDERDRAIN TRENCH DETAIL

NTS

TEMPORARY DRAINAGE DETAILS

SCALE: AS SHOWN

THIS PLAN ACCURATE FOR DRAINAGE WORK ONLY

DD-6

REVISED BY	DATE REVISED
ML/KM	7/31/09

KATIE MING — DUANNE GILMORE — CALCULATED-DESIGNED BY — CHECKED BY

CONSULTANT FUNCTIONAL SUPERVISOR: ABOLFAZL EMADZADEH

STATE OF CALIFORNIA - DEPARTMENT OF TRANSPORTATION — Caltrans

LAST REVISION 7-31-09 — DATE PLOTTED => $DATE — TIME PLOTTED => $TIME

Dist	COUNTY	ROUTE	POST MILES TOTAL PROJECT	SHEET No.	TOTAL SHEETS
04	SF	101, 1	8.8/9.2		

REGISTERED CIVIL ENGINEER DATE 7-31-09

PLANS APPROVAL DATE

REGISTERED PROFESSIONAL ENGINEER MANISH M. DALIA No. C74016 Exp. 6-30-11 CIVIL STATE OF CALIFORNIA

THE STATE OF CALIFORNIA OR ITS OFFICERS OR AGENTS SHALL NOT BE RESPONSIBLE FOR THE ACCURACY OR COMPLETENESS OF SCANNED COPIES OF THIS PLAN SHEET.

Arup PB JV
560 Mission Street, Suite 700
San Francisco, CA 94105

NOTES:

1. FOR UNDERDRAINS DETAIL NOT SHOWN, SEE Std PLAN D102.
2. FOR TUNNEL AND RETAINING WALL DETAILS, SEE TUNNEL AND RETAINING WALL PLANS.

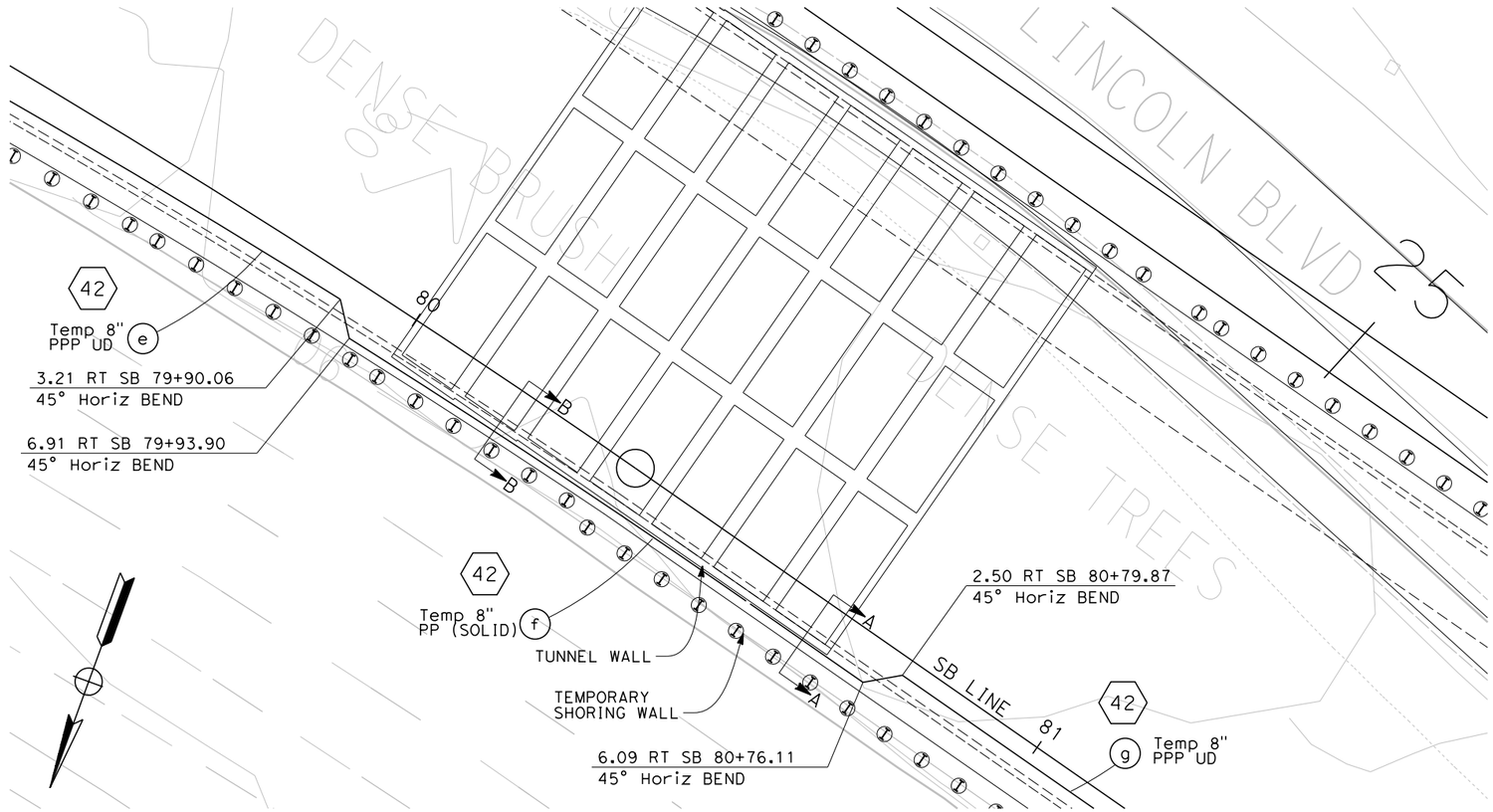

PLAN
SCALE: 1" = 10'

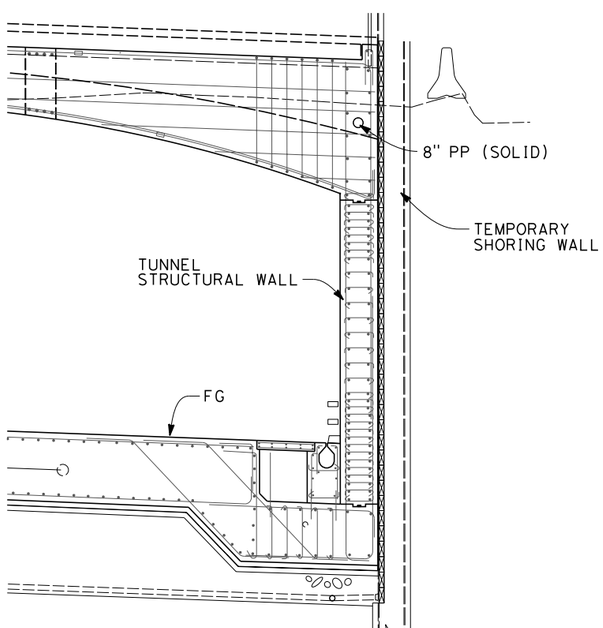

SECTION A-A
NTS

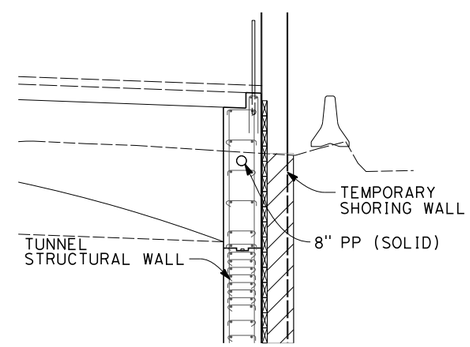

SECTION B-B
NTS

TEMPORARY DRAINAGE DETAILS
SCALE: AS SHOWN

THIS PLAN ACCURATE FOR DRAINAGE WORK ONLY

DD-7

STATE OF CALIFORNIA - DEPARTMENT OF TRANSPORTATION
Caltrans

CONSULTANT FUNCTIONAL SUPERVISOR: ABOLFAZL EMADZADEH
CALCULATED-DESIGNED BY: KATIE MING
CHECKED BY: DUANNE GILMORE
REVISED BY: ML/KM
DATE REVISED: 7/31/09

LAST REVISION 7-31-09 | DATE PLOTTED => $DATE | TIME PLOTTED => $TIME

BORDER LAST REVISED 4/11/2008 | RELATIVE BORDER SCALE IS IN INCHES 0 1 2 3 | USERNAME => $USER | DGN FILE => $REQUEST | CU 04242 | EA 163741

DESIGNATION	RCP	CSP			SSRP			PLASTIC
	SIZE	SIZE	THICKNESS WITH BC	THICKNESS WITH PSC	SIZE	THICKNESS WITH BC	THICKNESS WITH PSC	SMOOTH INTERIOR SIZE
12" APC	12"	12"	0.064"	0.052"	12"	0.064"	0.052"	12"
15" APC	15"	15"	0.064"	0.052"	15"	0.064"	0.052"	15"
18" APC	18"	18"	0.064"	0.052"	18"	0.064"	0.052"	18"
24" APC	24"	24"	0.064"	0.052"	24"	0.064"	0.052"	24"
36" APC	36"	36"	0.064"	0.052"	36"	0.064"	0.052"	36"

NOTES:

1. FOR MINIMUM ALLOWABLE CLASS OF RCP SEE STANDARD PLAN D79.
2. BITUMINOUS COATING IS ON THE SOIL SIDE ONLY.
3. ALL G2 INLETS, USE F&G TYPE 24-12.
4. ALL MANHOLES, USE F&C TYPE U45.
5. SURVEY INFORMATION IS INCONCLUSIVE OF SIZES OF SEVERAL EXISTING CULVERTS AND DITCHES. UNLESS OTHERWISE NOTED, CULVERTS HAVE BEEN ASSUMED TO BE 18" Dia AND DITCHES ARE 3' WIDE WITH 6" THICKNESS.

LEGEND

BC - BITUMINOUS COATING
DA - DEPRESSION APRON
DD - DOWN DRAIN JOINT TYPE
DIM - DRAINAGE INLET MARKER (FOR DETAIL, SEE WPCD SHEETS)
(F) - THE QUANTITY SHOWN IN THIS COLUMN FOR EACH INDIVIDUAL PORTION OF WORK IS A FINAL PAY QUANTITY
(N) - NOT A PAY ITEM, FOR INFORMATION ONLY
P - POSITIVE JOINT TYPE
PSC - POLYMETRIC SHEET COATING
S - NORMAL JOINT TYPE
SGD - STANDARD GUTTER DEPRESSION
WTJ - WATER TIGHT JOINT

Dist	COUNTY	ROUTE	POST MILES TOTAL PROJECT	SHEET No.	TOTAL SHEETS
04	SF	101, 1	8.8/9.2		

REGISTERED CIVIL ENGINEER 7-31-09 DATE

PLANS APPROVAL DATE

REGISTERED PROFESSIONAL ENGINEER MANISH M. DALIA No. C74016 Exp. 6-30-11 CIVIL STATE OF CALIFORNIA

THE STATE OF CALIFORNIA OR ITS OFFICERS OR AGENTS SHALL NOT BE RESPONSIBLE FOR THE ACCURACY OR COMPLETENESS OF SCANNED COPIES OF THIS PLAN SHEET.

Arup PB JV
560 Mission Street, Suite 700
San Francisco, CA 94105

DRAINAGE SYSTEM No.	DRAINAGE UNIT	ABANDON CULVERT	ABANDON INLET	ABANDON MANHOLE	REMOVE CULVERT	REMOVE INLET	REMOVE MANHOLE	ADJUST INLET TO GRADE	ADJUST MANHOLE TO GRADE	SAND BACKFILL	DITCH EXCAVATION	MINOR CONCRETE: MINOR STRUCTURE	MINOR CONCRETE: BACKFILL	MINOR CONCRETE: MISCELLANEOUS CONSTRUCTION	ALTERNATIVE PIPE CULVERT: 12"	ALTERNATIVE PIPE CULVERT: 18"	ALTERNATIVE PIPE CULVERT: 24"	ALTERNATIVE PIPE CULVERT: 36"	36" CSP w/ DD (0.079" THICK)	8" CSP w/ DD	8" PPP UNDERDRAIN	8" PP SOLID	MODIFY INLET TO MANHOLE	CAP MANHOLE	CAP INLET	FRAME & GRATE (TYPE 24-12) (N)	FRAME & GRATE (TYPE 24-12X) (N)	FRAME & COVER (TYPE U45) (N)	MISCELLANEOUS IRON AND STEEL (F)	CONCRETE COLLAR (N)	MAXIMUM PIPE COVER (N)	HEIGHT OF DRAINAGE STRUCTURE (N)	PIPE JOINT CLASSIFICATION	DESCRIPTION	STATION	DRAINAGE UNIT	DRAINAGE SYSTEM No.	DRAINAGE PROFILE SHEET No.	DRAINAGE PLAN SHEET No.
		LF	EA		LF	EA		LF		CY					LF								EA			EA			lbs	EA	Ft								
1	a								7.9			2.6																				14.0		ADJUST MANHOLE TO GRADE	27.72 R+ SB 65+31.36	a	1	DP-1	D-1
	b											0.2				46														1	9.5		S	18" APC w/ COLLAR	27.72 R+ SB 65+31.36 TO 17.23 R+ SB 65+75.69	b			
	c											4.5																1	435			10.9		G2 MANHOLE	17.23 R+ SB 65+75.69	c			
	d															15															10.1		P	18" APC	17.23 R+ SB 65+75.69 TO 4.00 R+ SB 65+76.28	d			
	e											4.1														1			326			9.8		G2 DI	4.00 R+ SB 65+76.28	e			
	f															294															3.0		S	18" APC	4.00 R+ SB 65+76.28 TO 2.70 R+ SB 68+70.00	f			
	g											1.3														1			326			3.0		PARTIAL DI w/ STEEL COVER	2.70 R+ SB 68+70.00	g			
	h															25															3.0		S	18" APC	2.70 R+ SB 68+70.00 TO 2.70 R+ SB 68+95.00	h			
	i											1.3														1			326			2.9		PARTIAL DI w/ STEEL COVER	2.70 R+ SB 68+95.00	i			
	j															93															3.0		S	18" APC	2.70 R+ SB 68+95.00 TO 4.00 R+ SB 69+88.23	j			
	k											2.2		1.2												1			326			6.4		G2 DI w/ SGD	2.70 R+ SB 69+88.23	k			
	l															70															3.0		S	18" APC	2.70 R+ SB 69+88.23 TO 2.70 R+ SB 70+58.23	l			
	m											1.6		1.2												1			326			4.1		G2 DI w/ SGD	2.70 R+ SB 70+58.23	m			
	n															100															3.0		S	18" APC	2.70 R+ SB 70+58.23 TO 2.70 R+ SB 71+58.31	n			
	o											1.4		1.2												1			326			3.5		G2 DI w/ SGD	2.70 R+ SB 71+58.31	o			
	p															166															3.0		S	18" APC	2.70 R+ SB 71+58.31 TO 2.70 R+ SB 73+25.00	p			
	q											1.7		1.2												1			326			4.6		G2 DI w/ SGD	2.70 R+ SB 73+25.00	q			
	r															169															3.0		S	18" APC	2.70 R+ SB 73+25.00 TO 2.70 R+ SB 74+94.00	r			
	s											3.5		1.2												1			326			8.0		G2 DI w/ SGD	2.70 R+ SB 74+94.00	s			
2	a											0.2				177														1	9.3		S	18' APC w/ COLLAR	210.34 L+ SB 64+56.37 TO 10.29 L+ MUT 10+46.57	a	2	DP-2	D-1
	b							1.6				1.0																				4.0		ADJUST DI TO GRADE	10.29 L+ MUT 10+46.57	b			
	c															49															3.0		S	18" APC	10.29 L+ MUT 10+46.57 TO 7.00 L+ MUT 11+00.00	c			
	d											1.7														1			326			4.5		G2 DI	7.00 L+ MUT 11+00.00	d			
	e															71															3.0		S	18" APC	7.00 L+ MUT 11+00.00 TO 6.81 R+ LI2 11+78.21	e			
	f											1.6		1.2													1		239			4.0		GO DI w/ SGD	6.81 R+ LI2 11+78.21	f			
SHEET TOTAL								1.6	7.9			28.9		7.2		1275										9	1	1	3608	2									

DRAINAGE QUANTITIES

NO SCALE

DQ-1

STATE OF CALIFORNIA - DEPARTMENT OF TRANSPORTATION
Caltrans

CONSULTANT FUNCTIONAL SUPERVISOR: ABOLFAZL EMADZADEH

CALCULATED-DESIGNED BY: KATIE MING
CHECKED BY: DUANNE GILMORE

REVISED BY: ML/KM
DATE REVISED: 7/31/09

LAST REVISION 7-31-09
DATE PLOTTED => $DATE
TIME PLOTTED => $TIME

NOTE:

1. FOR NOTES AND LEGEND SEE DQ-1.

Dist	COUNTY	ROUTE	POST MILES TOTAL PROJECT	SHEET No.	TOTAL SHEETS
04	SF	101, 1	8.8/9.2		

REGISTERED CIVIL ENGINEER 7-31-09 DATE

PLANS APPROVAL DATE

REGISTERED PROFESSIONAL ENGINEER MANISH M. DALIA No. C74016 Exp. 6-30-11 CIVIL STATE OF CALIFORNIA

THE STATE OF CALIFORNIA OR ITS OFFICERS OR AGENTS SHALL NOT BE RESPONSIBLE FOR THE ACCURACY OR COMPLETENESS OF SCANNED COPIES OF THIS PLAN SHEET.

Arup PB JV
560 Mission Street, Suite 700
San Francisco, CA 94105

DRAINAGE SYSTEM No.	DRAINAGE UNIT	ABANDON CULVERT	ABANDON INLET	ABANDON MANHOLE	REMOVE CULVERT	REMOVE INLET	REMOVE MANHOLE	ADJUST INLET TO GRADE	ADJUST MANHOLE TO GRADE	SAND BACKFILL	DITCH EXCAVATION	MINOR CONCRETE: MINOR STRUCTURE	MINOR CONCRETE: BACKFILL	MINOR CONCRETE: MISCELLANEOUS CONSTRUCTION	ALTERNATIVE PIPE CULVERT: 12"	ALTERNATIVE PIPE CULVERT: 18"	ALTERNATIVE PIPE CULVERT: 24"	ALTERNATIVE PIPE CULVERT: 36"	36" CSP w/ DD (0.079" THICK)	8" CSP w/ DD	8" PPP UNDERDRAIN	8" PP SOLID	MODIFY INLET TO MANHOLE	CAP MANHOLE	CAP INLET	FRAME & GRATE (TYPE 24-12) (N)	FRAME & GRATE (TYPE 24-12X) (N)	FRAME & COVER (TYPE U45) (N)	MISCELLANEOUS IRON AND STEEL (F)	CONCRETE COLLAR (N)	MAXIMUM PIPE COVER (N)	HEIGHT OF DRAINAGE STRUCTURE (N)	PIPE JOINT CLASSIFICATION	DESCRIPTION	STATION	DRAINAGE UNIT	DRAINAGE SYSTEM No.	DRAINAGE PROFILE SHEET No.	DRAINAGE PLAN SHEET No.
		LF	EA		LF	EA		LF		CY					LF								EA			EA			lbs	EA	Ft								
2	g														16																3.0		S	12" APC	6.81 Rt LI2 11+78.21 TO 11.80 Lt LI2 11+78.40	g	2	DP-2	D-1
	h											1.5		1.2												1		239			3.6		GO DI w/ SGD	11.80 Lt LI2 11+78.40	h			
	i	14								0.4																							ABANDON CULVERT (12")	39.91 Rt D 83+38.75 TO 40.01 Rt D 83+27.04	i			
	j																																REMOVE INLET	40.01 Rt D 83+27.04	j			
	k				64																												REMOVE CULVERT	40.01 Rt D 83+27.04 TO 86.17Lt D 82+89.91	k			
	l			1																													ABANDON MANHOLE	18.06 Lt SB 65+26.05	l			
	m	46								1.3																							ABANDON CULVERT (12")	18.06 Lt SB 65+26.05 TO 27.72 Rt SB 65+31.36	m			
3	a															76														8.5		S	18" APC w/ PIPE STUB	2.00 Rt SB 65+00.00 TO 4.00 Rt SB 65+76.28	a	3	DP-2	D-1
	b															55														4.2		S	18" APC	4.00 Rt SB 65+76.28 TO 55.00 Lt SB 65+78.85	b			
	c											1.6		1.2												1		326			4.0		G2 DI w/ SGD	55.00 Lt SB 65+78.85	c			
4	a		1																														ABANDON DI	14.05 Rt LI2 12+94.97	a	4		D-1
	b				80																												REMOVE CULVERT	94.09 Lt D 85+89.93 TO 16.48 Lt D 85+71.08	b			
	c			1																													ABANDON MANHOLE	16.48 Lt D 85+71.08	c			
	d	70								4.6																							ABANDON CULVERT	16.48 Lt D 85+71.08 TO 50.54 Rt D 85+91.30	d			
	e										16.7																						REMOVE CONCRETE DITCH	40.46 Lt D 82+83.85 TO 44.89 Rt D 85+69.40	e			
	f				80																												REMOVE CULVERT	96.84 Lt SB 68+17.69 TO 16.72 Lt SB 68+15.99	f			
5	a								1.8			1.0																			5.3		ADJUST MANHOLE TO GRADE	12.70 Lt LI2 13+03.95	a	5	DP-2	D-1
	b											0.3					19												1	3.2		S	24" APC w/ COLLAR	12.70 Lt LI2 13+03.95 TO 6.70 Rt LI2 13+03.94	b			
	c											1.9		1.2													1	239			5.2		GO DI w/ SGD	6.70 Rt LI2 13+03.94	c			
	d																81													8.0		S	24" APC	6.70 Rt LI2 13+03.94 TO 20.81 Rt LI2 13+84.09	d			
	e											4.2																1	435		10.1		G2 MANHOLE	20.81 Rt LI2 13+84.09	e			
	f																146													16.0		S	24" APC	20.81 Rt LI2 13+84.09 TO 24.45 Rt LI2 15+33.13	f			
	g											17.0																1	435		29.5		G2 D MH	24.45 Rt LI2 15+33.13	g			
SHEET TOTAL		130	1	2	224				1.8	6.3	16.7	27.5		3.6	16	131	246									1	2	2	1674	1								

DRAINAGE QUANTITIES

NO SCALE

DQ-2

STATE OF CALIFORNIA - DEPARTMENT OF TRANSPORTATION

Caltrans

CONSULTANT FUNCTIONAL SUPERVISOR: ABOLFAZL EMADZADEH

CALCULATED-DESIGNED BY: KATIE MING

CHECKED BY: DUANNE GILMORE

REVISED BY: ML/KM

DATE REVISED: 7/31/09

LAST REVISION 7-31-09

DATE PLOTTED => $DATE

TIME PLOTTED => $TIME

NOTE:

1. FOR NOTES AND LEGEND SEE DQ-1.

Dist	COUNTY	ROUTE	POST MILES TOTAL PROJECT	SHEET No.	TOTAL SHEETS
04	SF	101, 1	8.8/9.2		

REGISTERED CIVIL ENGINEER 7-31-09 DATE

PLANS APPROVAL DATE

REGISTERED PROFESSIONAL ENGINEER MANISH M. DALIA No. C74016 Exp. 6-30-11 CIVIL STATE OF CALIFORNIA

THE STATE OF CALIFORNIA OR ITS OFFICERS OR AGENTS SHALL NOT BE RESPONSIBLE FOR THE ACCURACY OR COMPLETENESS OF SCANNED COPIES OF THIS PLAN SHEET.

Arup PB JV
560 Mission Street, Suite 700
San Francisco, CA 94105

DRAINAGE SYSTEM No.	DRAINAGE UNIT	ABANDON CULVERT	ABANDON INLET	ABANDON MANHOLE	REMOVE CULVERT	REMOVE INLET	REMOVE MANHOLE	ADJUST INLET TO GRADE	ADJUST MANHOLE TO GRADE	SAND BACKFILL	DITCH EXCAVATION	MINOR CONCRETE: MINOR STRUCTURE	MINOR CONCRETE: BACKFILL	MINOR CONCRETE: MISCELLANEOUS CONSTRUCTION	ALTERNATIVE PIPE CULVERT: 12"	ALTERNATIVE PIPE CULVERT: 18"	ALTERNATIVE PIPE CULVERT: 24"	ALTERNATIVE PIPE CULVERT: 36"	36" CSP w/ DD (0.079" THICK)	8" CSP w/ DD	8" PPP UNDERDRAIN	8" PP SOLID	MODIFY INLET TO MANHOLE	CAP MANHOLE	CAP INLET	FRAME & GRATE (TYPE 24-12) (N)	FRAME & GRATE (TYPE 24-12X) (N)	FRAME & COVER (TYPE U45) (N)	MISCELLANEOUS IRON AND STEEL (F)	CONCRETE COLLAR (N)	MAXIMUM PIPE COVER (N)	HEIGHT OF DRAINAGE STRUCTURE (N)	PIPE JOINT CLASSIFICATION	DESCRIPTION	STATION	DRAINAGE UNIT	DRAINAGE SYSTEM No.	DRAINAGE PROFILE SHEET No.	DRAINAGE PLAN SHEET No.
		LF	EA		LF	EA		LF		CY					LF								EA			EA			lbs	EA	Ft								
5	h											0.4						96												1	24.5		P	36" APC w/ COLLAR	24.45 Rt LI2 15+33.13 TO 23.59 Rt SB 70+47.05	h			
	i																		32												0.0		DD	36" CSP w/ DD	23.59 Rt SB 70+47.05 TO 51.24 Rt SB 70+47.05	i			
6	a																18														5.0		P	24" APC	24.45 Rt LI2 15+33.13 TO 8.00 Rt LI2 15+33.13	a	6	DP-3	D-1
	b											1.8		1.2												1			326			5.0		G2 DI w/ SGD	8.00 Rt LI2 15+33.13	b			
	c														23																4.0		S	12" APC	17.56 Lt LI2 15+29.03 TO 8.00 Rt LI2 15+33.13	c			
	d											1.6		1.2												1			326			4.2		G2 DI w/ SGD	17.56 Lt LI2 15+29.03	d			
	e																224														5.0		S	24" APC	8.00 Rt LI2 15+33.13 TO 8.00 Rt LI2 17+56.91	e			
	f											2.4		1.2												1			326			7.3		G2 DI w/ SGD	8.00 Rt LI2 17+56.91	f			
	g																284														3.0		P	24" APC	8.00 Rt LI2 17+56.91 TO 8.00 Rt LI2 20+41.25	g			
	h											1.8		1.2												1			326			5.0		G2 DI w/ SGD	8.00 Rt LI2 20+41.25	h			
	i														18																4.0		S	12" APC	12.00 Lt LI2 20+41.25 TO 8.00 Rt LI2 20+41.25	i			
	j											1.7		1.2												1			326			4.4		G2 DI w/ SGD	12.00 Lt LI2 20+41.25	j			
	k																116														5.5		S	24" APC	8.00 Rt LI2 20+41.25 TO 14.00 Rt SL 20+09.55	k			
	l											1.9		1.2												1			326			5.2		G2 DI w/ SGD	14.00 Rt SL 20+09.55	l			
	m															68															4.7		S	18" APC	14.00 Rt SL 20+09.55 TO 8.72 Rt SL 20+74.65	m			
	n											2.1																1	435			6.0		G2 MANHOLE	8.72 Rt SL 20+74.65	n			
	o															149															4.0		S	18" APC	8.72 Rt SL 20+74.65 TO 14.00 Lt SL 22+23.44	o			
	p											1.6		1.2												1			326			4.2		G2 DI w/ SGD	14.00 Lt SL 22+23.44	p		DP-4	D-2
	q															151															3.0		S	18" APC	14.00 Lt SL 22+23.44 TO 4.59 Rt SL 23+74.63	q			
	r											1.8																1	435			5.0		G2 MANHOLE	4.59 Rt SL 23+74.63	r			
	s															233															3.0		S	18" APC	4.59 Rt SL 23+74.63 TO 10.00 Lt SL 26+08.05	s			
	t											1.6																1	435			4.2		G2 MANHOLE	10.00 Lt SL 26+08.05	t			
	u											0.1			23															1	3.0		P	12" APC w/ COLLAR	10.00 Lt SL 26+08.05 TO 32.97 Lt SL 26+11.41	u			
7	a															58															5.9		S	18" APC	2.70 Rt SB 68+70.00 TO 55.00 Lt SB 68+70.00	a	7	DP-4	D-1
SHEET TOTAL												18.8		8.4	64	659	642	96	32							7		3	3587	1									

DRAINAGE QUANTITIES

NO SCALE

DQ-3

STATE OF CALIFORNIA - DEPARTMENT OF TRANSPORTATION

Caltrans

CONSULTANT FUNCTIONAL SUPERVISOR: ABOLFAZL EMADZADEH

CALCULATED-DESIGNED BY: KATIE MING

CHECKED BY: DUANNE GILMORE

REVISED BY: ML/KM

DATE REVISED: 7/31/09

LAST REVISION 7-31-09

DATE PLOTTED => $DATE
TIME PLOTTED => $TIME

NOTE:

1. FOR NOTES AND LEGEND SEE DQ-1.

Dist	COUNTY	ROUTE	POST MILES TOTAL PROJECT	SHEET No.	TOTAL SHEETS
04	SF	101, 1	8.8/9.2		

REGISTERED CIVIL ENGINEER 7-31-09 DATE

PLANS APPROVAL DATE

REGISTERED PROFESSIONAL ENGINEER MANISH M. DALIA No. C74016 Exp. 6-30-11 CIVIL STATE OF CALIFORNIA

THE STATE OF CALIFORNIA OR ITS OFFICERS OR AGENTS SHALL NOT BE RESPONSIBLE FOR THE ACCURACY OR COMPLETENESS OF SCANNED COPIES OF THIS PLAN SHEET.

Arup PB JV
560 Mission Street, Suite 700
San Francisco, CA 94105

DRAINAGE SYSTEM No.	DRAINAGE UNIT	ABANDON CULVERT	ABANDON INLET	ABANDON MANHOLE	REMOVE CULVERT	REMOVE INLET	REMOVE MANHOLE	ADJUST INLET TO GRADE	ADJUST MANHOLE TO GRADE	SAND BACKFILL	DITCH EXCAVATION	MINOR CONCRETE: MINOR STRUCTURE	MINOR CONCRETE: BACKFILL	MINOR CONCRETE: MISCELLANEOUS CONSTRUCTION	ALTERNATIVE PIPE CULVERT: 12"	ALTERNATIVE PIPE CULVERT: 18"	ALTERNATIVE PIPE CULVERT: 24"	ALTERNATIVE PIPE CULVERT: 36"	36" CSP w/ DD (0.079" THICK)	8" CSP w/ DD	8" PPP UNDERDRAIN	8" PP SOLID	MODIFY INLET TO MANHOLE	CAP MANHOLE	CAP INLET	FRAME & GRATE (TYPE 24-12) (N)	FRAME & GRATE (TYPE 24-12X) (N)	FRAME & COVER (TYPE U45) (N)	MISCELLANEOUS IRON AND STEEL (F)	CONCRETE COLLAR (N)	MAXIMUM PIPE COVER (N)	HEIGHT OF DRAINAGE STRUCTURE (N)	PIPE JOINT CLASSIFICATION	DESCRIPTION	STATION	DRAINAGE UNIT	DRAINAGE SYSTEM No.	DRAINAGE PROFILE SHEET No.	DRAINAGE PLAN SHEET No.
		LF	EA		LF	EA		LF		CY					LF								EA			EA			lbs	EA	Ft								
7	b											1.4		1.2												1			326			3.5		G2 DI w/ SGD	55.00 Lt SB 68+70.00	b			
8	a							0.4																										ADJUST DI TO GRADE	10.82 Rt LI2 17+70.30	a	8	DP-4	D-1
	b				88																													REMOVE CULVERT	53.58 Lt D 90+19.93 TO 87.33 Rt D 90+08.82	b			
	c				104																													REMOVE CULVERT	68.69 Lt D 90+32.59 TO 34.55 Rt D 90+16.76	c			
	d				103																													REMOVE CULVERT	68.69 Lt D 90+32.59 TO 34.49 Rt D 90+23.55	d			
	e		1																															ABANDON INLET	71.25 Lt SB 72+58.36	e			
9	a														27																4.0		S	12" APC	14.00 Rt SL 20+09.55 TO 16.15 Lt SL 20+09.63	a	9	DP-4	D-1
	b											1.5															1		239			3.9		GO DI	16.15 Lt SL 20+09.63	b			
	c					1																												REMOVE INLET	16.15 Lt SL 20+09.63	c			
	d	81								5.3																								ABANDON CULVERT	16.15 Lt SL 20+09.63 TO 67.57 Lt SB 75+85.85	d			
	e	62								4.1																								ABANDON CULVERT	93.10 Lt SB 75+32.50 TO 67.57 Lt SB 75+85.85	e			
	f		1																															ABANDON INLET	93.10 Lt SB 75+32.50	f			
	g				178																													REMOVE CULVERT	124.21 Lt SB 76+34.96 TO 2.28 Rt SB 75+15.82	g			
	h			1																														ABANDON MANHOLE	124.21 Lt SB 76+34.96	h			
	i	29								1.9																								ABANDON CULVERT	124.21 Lt SB 76+34.96 TO 16.15 Lt SL 20+09.63	i			
10	a														22																2.5		S	12" APC	14.00 Lt SL 22+23.44 TO 14.00 Rt SL 22+23.44	a	10	DP-5	D-2
	b											1.3		1.2												1			239			3.0		GO DI w/ SGD	14.00 Rt SL 22+23.44	b			
	c				79																													REMOVE CULVERT	58.44 Lt SB 78+39.41 TO 17.73 Rt SB 78+19.11	c			
	d	71								4.6																								ABANDON CULVERT	17.73 Rt SB 78+19.11 TO 85.86 Rt SB 77+97.14	d			D-2
11	a											1.7		1.2													1		239			4.5		GO DI w/ SGD	14.00 Rt SL 23+74.63	a	11	DP-5	D-2
	b														8																3.8		S	12" APC	14.00 Rt SL 23+74.63 TO 4.59 Rt SL 23+74.63	b			
	c														17																3.9		S	12" APC	4.59 Rt SL 23+74.63 TO 14.00 Lt SL 23+74.63	c			
SHEET TOTAL		243	2	1	552	1		0.4		15.9		6.0		3.6	74											2	2		1043										

DRAINAGE QUANTITIES

NO SCALE

DQ-4

STATE OF CALIFORNIA - DEPARTMENT OF TRANSPORTATION

Caltrans

CONSULTANT FUNCTIONAL SUPERVISOR: ABOLFAZL EMADZADEH

CALCULATED-DESIGNED BY: KATIE MING

CHECKED BY: DUANNE GILMORE

REVISED BY: ML/KM

DATE REVISED: 7/31/09

LAST REVISION 7-31-09 | DATE PLOTTED => $DATE | TIME PLOTTED => $TIME

NOTE:

1. FOR NOTES AND LEGEND SEE DQ-1.

Dist	COUNTY	ROUTE	POST MILES TOTAL PROJECT	SHEET No.	TOTAL SHEETS
04	SF	101, 1	8.8/9.2		

REGISTERED CIVIL ENGINEER 7-31-09 DATE

PLANS APPROVAL DATE

REGISTERED PROFESSIONAL ENGINEER MANISH M. DALIA No. C74016 Exp. 6-30-11 CIVIL STATE OF CALIFORNIA

THE STATE OF CALIFORNIA OR ITS OFFICERS OR AGENTS SHALL NOT BE RESPONSIBLE FOR THE ACCURACY OR COMPLETENESS OF SCANNED COPIES OF THIS PLAN SHEET.

Arup PB JV
560 Mission Street, Suite 700
San Francisco, CA 94105

DRAINAGE SYSTEM No.	DRAINAGE UNIT	ABANDON CULVERT	ABANDON INLET	ABANDON MANHOLE	REMOVE CULVERT	REMOVE INLET	REMOVE MANHOLE	ADJUST INLET TO GRADE	ADJUST MANHOLE TO GRADE	SAND BACKFILL	DITCH EXCAVATION	MINOR CONCRETE: MINOR STRUCTURE	MINOR CONCRETE: BACKFILL	MINOR CONCRETE: MISCELLANEOUS CONSTRUCTION	ALTERNATIVE PIPE CULVERT: 12"	ALTERNATIVE PIPE CULVERT: 18"	ALTERNATIVE PIPE CULVERT: 24"	ALTERNATIVE PIPE CULVERT: 36"	36" CSP (0.079" THICK)	8" CSP DD	8" PPP UNDERDRAIN	8" PP SOLID	MODIFY INLET TO MANHOLE	CAP MANHOLE	CAP INLET	FRAME & GRATE (TYPE 24-12) (N)	FRAME & GRATE (TYPE 24-12X) (N)	FRAME & COVER (TYPE U45) (N)	MISCELLANEOUS IRON AND STEEL (F)	CONCRETE COLLAR (N)	MAXIMUM PIPE COVER (N)	HEIGHT OF DRAINAGE STRUCTURE (N)	PIPE JOINT CLASSIFICATION	DESCRIPTION	STATION	DRAINAGE UNIT	DRAINAGE SYSTEM No.	DRAINAGE PROFILE SHEET No.	DRAINAGE PLAN SHEET No.
		LF	EA		LF	EA		LF		CY					LF								EA			EA			lbs	EA	Ft								
11	d											1.7		1.2												1			326			4.5		GO DI w/ SGD	14.00 Lt SL 23+74.63	d	11	DP-5	D-2
	e	42								2.7																								ABANDON CULVERT	93.74 Lt SB 79+77.30 TO 54.78 Lt SB 79+86.97	e			
	f					1																												REMOVE INLET	54.78 Lt SB 79+86.97	f			
	g				39																													REMOVE CULVERT	54.78 Lt SB 79+86.97 TO 15.90 Lt SB 79+97.19	g			
12	a						1																											REMOVE MANHOLE	35.94' Lt SB 80+01.25	a	12		D-2
	b				20																													REMOVE CULVERT	35.94' Lt SB 80+01.25 TO 17.12' Lt SB 80+06.39	b			
13	a														23																3.5		P	12" APC	10.00 Lt SL 26+08.05 TO 14.00 Rt SL 26+05.61	a	13	DP-4	D-2
	b											1.0		1.2												1			239			1.9		GO DI w/ SGD	14.00 Rt SL 26+05.61	b			
14	a											2.4		1.2												1			326			7.1		G2 DI w/ SGD	4.00 Rt SB 86+15.98	a	14	DP-5	D-2
	b															13															7.0		S	18" APC	4.00 Rt SB 86+15.98 TO 15.28 Rt SB 86+17.49	b			
	c											7.1																1	435			18.1		G2 MANHOLE	15.28 Rt SB 86+17.49	c			
	d													0.2		80														1	18.0		S	18" APC w/ COLLAR	15.28 Rt SB 86+17.49 TO 13.27 Rt SB 86+97.60	d			
15	a		1																															ABANDON DI	20.22' Lt SB 87+62.41	a	15		D-2
16	-																																	NOT USED		-	16		
17	-																																	NOT USED		-	17		
18	-																																	NOT USED		-	18		
19	-																																	NOT USED		-	19		
SHEET TOTAL		42	1		59	1	1			2.7		12.1		3.8	23	93										3	0	1	1326	1									
GRAND TOTAL		415	4	3	835	2	1	2.0	9.7	25.0	16.7	93.3		26.6	177	2158	888	96	32							22	5	7	11238	5									

DRAINAGE QUANTITIES

NO SCALE

DQ-5

KATIE MING | REVISED BY | ML/KM
DUANNE GILMORE | DATE REVISED | 7/31/09
CALCULATED-DESIGNED BY
CHECKED BY
CONSULTANT FUNCTIONAL SUPERVISOR
ABOLFAZL EMADZADEH

STATE OF CALIFORNIA - DEPARTMENT OF TRANSPORTATION
Caltrans

LAST REVISION 7-31-09 | DATE PLOTTED => $DATE | TIME PLOTTED => $TIME

NOTE:

1. FOR NOTES AND LEGEND SEE DQ-1.

Dist	COUNTY	ROUTE	POST MILES TOTAL PROJECT	SHEET No.	TOTAL SHEETS
04	SF	101, 1	8.8/9.2		

REGISTERED CIVIL ENGINEER 7-31-09 DATE

PLANS APPROVAL DATE

REGISTERED PROFESSIONAL ENGINEER MANISH M. DALIA No. C74016 Exp. 6-30-11 CIVIL STATE OF CALIFORNIA

THE STATE OF CALIFORNIA OR ITS OFFICERS OR AGENTS SHALL NOT BE RESPONSIBLE FOR THE ACCURACY OR COMPLETENESS OF SCANNED COPIES OF THIS PLAN SHEET.

Arup PB JV
560 Mission Street, Suite 700
San Francisco, CA 94105

DRAINAGE SYSTEM No.	DRAINAGE UNIT	ABANDON CULVERT	ABANDON INLET	ABANDON MANHOLE	REMOVE CULVERT	REMOVE INLET	REMOVE MANHOLE	ADJUST INLET TO GRADE	ADJUST MANHOLE TO GRADE	SAND BACKFILL	DITCH EXCAVATION	MINOR CONCRETE: MINOR STRUCTURE	MINOR CONCRETE: BACKFILL	MINOR CONCRETE: MISCELLANEOUS CONSTRUCTION	Temp CULVERT: 12"	Temp CULVERT: 18"	Temp CULVERT: 24"	Temp CULVERT: 36"	36" CSP (0.079" THICK)	8" CSP DD	8" PPP UNDERDRAIN	8" PP SOLID	MODIFY INLET TO MANHOLE	CAP MANHOLE	CAP INLET	FRAME & GRATE (TYPE 24-12) (N)	FRAME & GRATE (TYPE 24-12X) (N)	FRAME & COVER (TYPE U45) (N)	MISCELLANEOUS IRON AND STEEL (F)	CONCRETE COLLAR (N)	MAXIMUM PIPE COVER (N)	HEIGHT OF DRAINAGE STRUCTURE (N)	PIPE JOINT CLASSIFICATION	DESCRIPTION	STATION	DRAINAGE UNIT	DRAINAGE SYSTEM No.	DRAINAGE PROFILE SHEET No.	DRAINAGE PLAN SHEET No.
		LF	EA		LF	EA		LF		CY					LF								EA			EA			lbs	EA	Ft								
20	a							1.9																										ADJUST INLET TO GRADE	35.19 Lt DN 51+99.61	a	20		D-3
	b							0.7																										ADJUST INLET TO GRADE	24.58 Rt DN 51+98.50	b			
21	a											1.4														1			326			3.4		Temp GI DI	30.00 Rt DN 53+56.52	a	21	DP-6	D-3
	b															32															4.5		S	18" Temp Culv	30.00 Rt DN 53+56.52 TO 0.00' Lt DS 53+57.03	b			
	c											1.9														1			326			5.5		Temp G2 DI	0.00' Lt DS 53+57.03	c			
	d															99															5.0		S	18" Temp Culv	0.00' Lt DS 53+57.03 TO 0.00 Lt DS 54+54.93	d			
	e											2.2														1			326			6.3		Temp G2 DI	0.00 Lt DS 54+54.93	e			
	f											0.2				32														1	4.8		S	18" Temp Culv w/ COLLAR	0.00 Lt DS 54+54.93 TO 30.00 Rt DN 54+54.35	f			
	g							1.6				0.4																				4.6		ADJUST INLET TO GRADE	30.00 Rt DN 54+54.35	g			
22	a							1.4				0.3																						ADJUST INLET TO GRADE	47.21 Lt DN 54+11.19	a	22		D-3
23	a													0.2											1									CAP DI	11.13 Rt DN 55+64.23	a	23		D-4
	b													0.2											1									CAP DI	10.96 Rt DN 55+59.84	b			
24	a											1.4														1			326			3.5		Temp G1 DI	0.00 Rt DN 57+47.70	a	24	DP-6	D-4
	b															48															3.1		S	18" Temp Culv	0.00 Rt DN 57+47.70 TO 0.00 Rt DN 56+99.50	b			
	c											1.5														1			326			3.9		Temp G2 DI	0.00 Rt DN 56+99.50	c			
	d															25															3.5		S	18" Temp Culv	0.00 Rt DN 56+99.50 TO 24.73 Lt DS 56+99.50	d			
	e											2.2														1			326			6.4		Temp G2 DI	24.73 Lt DS 56+99.50	e			
25	a											1.4														1			326			3.5		Temp G2 DI	37.38 Lt MN 59+07.61	a	25	DP-6	D-8
	b															75															3.0		S	18" Temp Culv	37.38 Lt MN 59+07.61 TO 39.88 Rt MN 59+07.61	b			
	c											1.6														1			326			4.1		Temp G2 DI	39.88 Rt MN 59+07.61	c			D-4
	d															18															3.0		S	18" Temp Culv	39.88 Rt MN 59+07.61 TO 33.22 Rt DN 59+84.75	d			
SHEET TOTAL								5.6				14.6		0.4		329									2	8			2608	1									

TEMPORARY DRAINAGE QUANTITIES

NO SCALE

DQ-6

STATE OF CALIFORNIA - DEPARTMENT OF TRANSPORTATION

Caltrans

CONSULTANT FUNCTIONAL SUPERVISOR: ABOLFAZL EMADZADEH

CALCULATED-DESIGNED BY: KATIE MING

CHECKED BY: DUANNE GILMORE

REVISED BY: ML/KM

DATE REVISED: 7/31/09

LAST REVISION 7-31-09

DATE PLOTTED => $DATE
TIME PLOTTED => $TIME

NOTE:

1. FOR NOTES AND LEGEND SEE DQ-1.

Dist	COUNTY	ROUTE	POST MILES TOTAL PROJECT	SHEET No.	TOTAL SHEETS
04	SF	101, 1	8.8/9.2		

REGISTERED CIVIL ENGINEER 7-31-09 DATE

PLANS APPROVAL DATE

REGISTERED PROFESSIONAL ENGINEER MANISH M. DALIA No. C74016 Exp. 6-30-11 CIVIL STATE OF CALIFORNIA

THE STATE OF CALIFORNIA OR ITS OFFICERS OR AGENTS SHALL NOT BE RESPONSIBLE FOR THE ACCURACY OR COMPLETENESS OF SCANNED COPIES OF THIS PLAN SHEET.

Arup PB JV
560 Mission Street, Suite 700
San Francisco, CA 94105

DRAINAGE SYSTEM No.	DRAINAGE UNIT	ABANDON CULVERT	ABANDON INLET	ABANDON MANHOLE	REMOVE CULVERT	REMOVE INLET	REMOVE MANHOLE	ADJUST INLET TO GRADE	ADJUST MANHOLE TO GRADE	SAND BACKFILL	DITCH EXCAVATION	MINOR CONCRETE: MINOR STRUCTURE	MINOR CONCRETE: BACKFILL	MINOR CONCRETE: MISCELLANEOUS CONSTRUCTION	Temp CULVERT: 12"	Temp CULVERT: 18"	Temp CULVERT: 24"	Temp CULVERT: 36"	36" CSP (0.079" THICK)	8" CSP DD	8" PPP UNDERDRAIN	8" PP SOLID	MODIFY INLET TO MANHOLE	CAP MANHOLE	CAP INLET	FRAME & GRATE (TYPE 24-12) (N)	FRAME & GRATE (TYPE 24-12X) (N)	FRAME & COVER (TYPE U45) (N)	MISCELLANEOUS IRON AND STEEL (F)	CONCRETE COLLAR (N)	MAXIMUM PIPE COVER (N)	HEIGHT OF DRAINAGE STRUCTURE (N)	PIPE JOINT CLASSIFICATION	DESCRIPTION	STATION	DRAINAGE UNIT	DRAINAGE SYSTEM No.	DRAINAGE PROFILE SHEET No.	DRAINAGE PLAN SHEET No.
		LF	EA		LF	EA		LF		CY					LF								EA			EA			lbs	EA	Ft								
25	e											2.3													1			1	435			6.8		MODIFY INLET TO MANHOLE	33.22 Rt DN 59+84.75	e	25	DP-6	D-4
	f													0.2											1									CAP DI	5.89 Rt DN 60+21.24	f			
	g	15								1.0																								ABANDON CULVERT	5.89 Rt DN 60+21.24 TO 20.10 Rt DN 60+25.06	g			
	h		1																															ABANDON INLET	20.10 Rt DN 60+25.06	h			
26	a											1.4														1			326			3.4		Temp G2 DI	22.00 Lt DS 59+75.21	a	26	DP-8	D-4
	b															87															2.6			18" Temp Culv	22.00 Lt DS 59+75.21 TO 22.00 Lt DS 60+67.28	b			
	c											1.6														1			326			4.0		Temp G2 DI	22.00 Lt DS 60+67.28	c			
	d											0.2				45														1	5.8			18" Temp Culv w/ COLLAR	22.00 Lt DS 60+67.28 TO 2.15 Rt DN 60+82.71	d			
	e								2.9			0.6																				9.7		ADJUST MANHOLE TO GRADE	2.15 Rt DN 60+82.71	e			
	f	27								1.8																								ABANDON CULVERT	0.00 Rt DN 60+80.32 TO 15.70 Rt 61+02.23	f			
	g		1																															ABANDON INLET	15.70 Rt 61+02.23	g			
27	a										19																							UNLINED DITCH (101')	34.67 Lt DS 60+61.96 TO 30.58 Lt DS 61+70.06	a	27	DP-6	D-4
	b										20																							UNLINED DITCH (109')	29.88 Lt DS 62+79.79 TO 30.58 Lt DS 61+70.06	b			
	c										29																							UNLINED DITCH (154')	29.88 Lt DS 62+79.79 TO 32.27 Lt DS 64+39.95	c			
	d										31																							UNLINED DITCH (167')	31.81 Lt DS 66+13.48 TO 32.27 Lt DS 64+39.95	d			
	e										22																							UNLINED DITCH (120')	31.81 Lt DS 66+13.48 TO 49.86 Lt D 67+64.26	e			
	f										76																							UNLINED DITCH (410')	67.60 Lt D 71+74.27 TO 49.86 Lt D 67+64.26	f		DP-7	D-5
	g										36																							UNLINED DITCH (196')	67.60 Lt D 71+74.27 TO 76.07 Lt D 73+69.77	g			
	h										50																							UNLINED DITCH (272')	78.86 Lt D 76+42.84 TO 76.07 Lt D 73+69.77	h			
	i										100																							UNLINED DITCH (540')	56.40 Lt D 82+13.74 TO 78.86 Lt D 76+42.84	i			
28	a													14.8																				CONCRETE CAP	38.61 Rt DN 62+19.33 TO 37.38 Rt DN 64+12.29	a	28		D-4
SHEET TOTAL		42	2						2.9	2.8	383	6.1		15.0		132									1	2		1	1087	1									

TEMPORARY DRAINAGE QUANTITIES

NO SCALE

DQ-7

STATE OF CALIFORNIA - DEPARTMENT OF TRANSPORTATION

Caltrans

CONSULTANT FUNCTIONAL SUPERVISOR: ABOLFAZL EMADZADEH

CALCULATED-DESIGNED BY: KATIE MING

CHECKED BY: DUANNE GILMORE

REVISED BY: ML/KM

DATE REVISED: 7/31/09

LAST REVISION 7-31-09 DATE PLOTTED => $DATE TIME PLOTTED => $TIME

NOTE:

1. FOR NOTES AND LEGEND SEE DQ-1.

Dist	COUNTY	ROUTE	POST MILES TOTAL PROJECT	SHEET No.	TOTAL SHEETS
04	SF	101, 1	8.8/9.2		

REGISTERED CIVIL ENGINEER 7-31-09 DATE

PLANS APPROVAL DATE

REGISTERED PROFESSIONAL ENGINEER MANISH M. DALIA No. C74016 Exp. 6-30-11 CIVIL STATE OF CALIFORNIA

THE STATE OF CALIFORNIA OR ITS OFFICERS OR AGENTS SHALL NOT BE RESPONSIBLE FOR THE ACCURACY OR COMPLETENESS OF SCANNED COPIES OF THIS PLAN SHEET.

Arup PB JV
560 Mission Street, Suite 700
San Francisco, CA 94105

DRAINAGE SYSTEM No.	DRAINAGE UNIT	ABANDON CULVERT	ABANDON INLET	ABANDON MANHOLE	REMOVE CULVERT	REMOVE INLET	REMOVE MANHOLE	ADJUST INLET TO GRADE	ADJUST MANHOLE TO GRADE	SAND BACKFILL	DITCH EXCAVATION	MINOR CONCRETE			Temp CULVERT				36" CSP (0.079" THICK)	8" CSP DD	8" PPP UNDERDRAIN	8" PP SOLID	MODIFY INLET TO MANHOLE	CAP MANHOLE	CAP INLET	FRAME & GRATE (TYPE 24-12)	FRAME & GRATE (TYPE 24-12X)	FRAME & COVER (TYPE U45) (N)	MISCELLANEOUS IRON AND STEEL (F)	CONCRETE COLLAR (N)	MAXIMUM PIPE COVER (N)	HEIGHT OF DRAINAGE STRUCTURE (N)	PIPE JOINT CLASSIFICATION	DESCRIPTION	STATION	DRAINAGE UNIT	DRAINAGE SYSTEM No.	DRAINAGE PROFILE SHEET No.	DRAINAGE PLAN SHEET No.
		LF	EA		LF	EA		LF		CY					LF								EA			EA			lbs	EA	Ft								
29	a											1.4														1			326			3.5		Temp G2 DI	30.58 Lt DS 61+70.06	a	29	DP-8	D-4
	b															40															5.5		S	18" Temp Culv	30.58 Lt DS 61+70.06 TO 22.00 Lt DS 62+08.36	b			
	c											2.1														1			326			6.3		Temp G2 DI	22.00 Lt DS 62+08.36	c			
	d															46															8.7		S	18" Temp Culv	22.00 Lt DS 62+08.36 TO 0.00 Rt DN 62+27.86	d			
	e											3.9														1			326			9.1		Temp G2 DI	0.00 Rt DN 62+27.86	e			
	f											0.2				21														1	9.9		S	18" Temp Culv w/ COLLAR	0.00 Rt DN 62+27.86 TO 23.37 Rt DN 62+27.40	f			
	g								4.4			1.0																				11.9		ADJUST MANHOLE TO GRADE	23.37 Rt DN 62+27.40	g			
	h		1																																ABANDON INLET	53.34 Lt DN 62+02.76	h			D-4
	i	11								0.7																									ABANDON CULVERT	53.34 Lt DN 62+02.76 TO 64.36 Lt DN 62+05.12	i			
	j		1																																ABANDON INLET	64.36 Lt DN 62+05.12	j			
30	a											4.6														1			326			11.1		Temp G1 DI	0.00 Rt DN 64+72.04	a	30	DP-8	D-4
	b											3.8														1			326			9.0		Temp G2 DI	21.96 Lt DS 64+41.39	b			
	c											2.4														1			326			7.4		Temp G2 DI	32.27 Lt DS 64+39.95	c			
31	a											1.4														1			326			3.5		Temp G1 DI	0.00 Rt DN 66+31.25	a	31	DP-8	D-4
	b															35															2.0		S	18" Temp Culv	0.00 Rt DN 66+31.25 TO 22.00 Lt DS 66+02.85	b			
	c											1.9														1			326			5.4		Temp G2 DI	22.00 Lt DS 66+02.85	c			
	d															137															6.0		S	18" Temp Culv	22.00 Lt DS 66+02.85 TO 21.96 Lt DS 64+41.39	d			
32	a											1.4														1			326			3.5		Temp G1 DI	3.50 Lt D 67+64.26	a	32	DP-8	D-4
	b															35															2.1		S	18" Temp Culv	3.50 Lt D 67+64.26 TO 38.50 Lt D 67+64.26	b			
	c											2.1														1			326			6.2		Temp G2 DI	38.50 Lt D 67+64.26	c			
	d															131															4.0		S	18" Temp Culv	38.50 Lt D 67+64.26 TO 22.00 Lt DS 66+02.85	d			
SHEET TOTAL		11	2						4.4	0.7		26.2				445										10			3260	1									

TEMPORARY DRAINAGE QUANTITIES

NO SCALE

DQ-8

STATE OF CALIFORNIA - DEPARTMENT OF TRANSPORTATION

Caltrans

CONSULTANT FUNCTIONAL SUPERVISOR: ABOLFAZL EMADZADEH

CALCULATED-DESIGNED BY: KATIE MING

CHECKED BY: DUANNE GILMORE

REVISED BY: ML/KM

DATE REVISED: 7/31/09

LAST REVISION 7-31-09 DATE PLOTTED => $DATE TIME PLOTTED => $TIME

NOTE:

1. FOR NOTES AND LEGEND SEE DQ-1.

Dist	COUNTY	ROUTE	POST MILES TOTAL PROJECT	SHEET No.	TOTAL SHEETS
04	SF	101, 1	8.8/9.2		

REGISTERED CIVIL ENGINEER 7-31-09 DATE

PLANS APPROVAL DATE

REGISTERED PROFESSIONAL ENGINEER MANISH M. DALIA No. C74016 Exp. 6-30-11 CIVIL STATE OF CALIFORNIA

THE STATE OF CALIFORNIA OR ITS OFFICERS OR AGENTS SHALL NOT BE RESPONSIBLE FOR THE ACCURACY OR COMPLETENESS OF SCANNED COPIES OF THIS PLAN SHEET.

Arup PB JV
560 Mission Street, Suite 700
San Francisco, CA 94105

DRAINAGE SYSTEM No.	DRAINAGE UNIT	ABANDON CULVERT	ABANDON INLET	ABANDON MANHOLE	REMOVE CULVERT	REMOVE INLET	REMOVE MANHOLE	ADJUST INLET TO GRADE	ADJUST MANHOLE TO GRADE	SAND BACKFILL	DITCH EXCAVATION	MINOR CONCRETE: MINOR STRUCTURE	MINOR CONCRETE: BACKFILL	MINOR CONCRETE: MISCELLANEOUS CONSTRUCTION	Temp CULVERT: 12"	Temp CULVERT: 18"	Temp CULVERT: 24"	Temp CULVERT: 36"	36" CSP (0.079" THICK)	8" CSP DD	8" PPP UNDERDRAIN	8" PP SOLID	MODIFY INLET TO MANHOLE	CAP MANHOLE	CAP INLET	FRAME & GRATE (TYPE 24-12)	FRAME & GRATE (TYPE 24-12X)	FRAME & COVER (TYPE U45) (N)	MISCELLANEOUS IRON AND STEEL (F)	CONCRETE COLLAR (N)	MAXIMUM PIPE COVER (N)	HEIGHT OF DRAINAGE STRUCTURE (N)	PIPE JOINT CLASSIFICATION	DESCRIPTION	STATION	DRAINAGE UNIT	DRAINAGE SYSTEM No.	DRAINAGE PROFILE SHEET No.	DRAINAGE PLAN SHEET No.
		LF	EA		LF	EA		LF		CY					LF								EA			EA			lbs	EA	Ft								
33	a											1.4														1			326			3.5		Temp G1 DI	3.50 Lt D 68+78.81	a	33	DP-9	D-4
	b															35															2.8		P	18" Temp Culv	3.50 Lt D 68+78.81 TO 22.00 Lt DS 66+02.85	b			
	c											1.7														1			326			4.6		Temp G2 DI	22.00 Lt DS 66+02.85	c			
	d															115															4.6		S	18" Temp Culv	22.00 Lt DS 66+02.85 TO 38.50 Lt D 67+64.26	d			
	e															12															4.5		S	18" Temp Culv	49.86 Lt D 67+64.26 TO 38.50 Lt D 67+64.26	e			
	f											1.2														1			326			2.5		Temp G2 DI	49.86 Lt D 67+64.26	f			
34	a													0.2											1									CAP DI	18.17 Rt D 69+96.75	a	34		D-5
35	a											1.4														1			326			3.5		Temp G2 DI	3.50 Lt D 72+93.00	a	35	DP-9	D-5
	b															34															3.0		P	18" Temp Culv	3.50 Lt D 72+93.00 TO 38.50 Lt D 72+93.00	b			
	c											1.7														1			326			4.5		Temp G2 DI	38.50 Lt D 72+93.00	c			
	d															86															3.0		S	18" Temp Culv	38.50 Lt D 72+93.00 TO 76.07 Lt D 73+69.77	d			
	e											1.1														1			326			2.2		Temp G2 DI	76.07 Lt D 73+69.77	e			
36	a													0.2											1									CAP DI	17.30 Rt D 74+24.61	a	36		D-5
	b													0.2											1									CAP DI	3.44 Rt D 74+89.79	b			
37	a											1.9														1			326			5.2		Temp G2 DI	29.50 Rt D 75+91.90	a	37	DP-9	D-5
	b											0.2				67														1	4.5		S	18" Temp Culv w/ COLLAR	29.50 Rt D 75+91.90 TO 55.93 Lt D 76+53.33	b			
	c								1.6			0.4																				4.7		ADJUST MANHOLE TO GRADE	55.93 Lt D 76+53.33	c			
	d											1.2														1			326			2.8		Temp G2 DI	78.86 Lt D 76+42.84	d			
	e													0.2											1									CAP DI	10.75 Lt D 76+69.62	e			
SHEET TOTAL									1.6			12.2		0.8		349									4	8			2608	1									

TEMPORARY DRAINAGE QUANTITIES

NO SCALE

DQ-9

STATE OF CALIFORNIA - DEPARTMENT OF TRANSPORTATION

Caltrans

CONSULTANT FUNCTIONAL SUPERVISOR: ABOLFAZL EMADZADEH

CALCULATED-DESIGNED BY: KATIE MING

CHECKED BY: DUANNE GILMORE

REVISED BY: ML/KM

DATE REVISED: 7/31/09

LAST REVISION 7-31-09 DATE PLOTTED => $DATE TIME PLOTTED => $TIME

NOTE:

1. FOR NOTES AND LEGEND SEE DQ-1.

Dist	COUNTY	ROUTE	POST MILES TOTAL PROJECT	SHEET No.	TOTAL SHEETS
04	SF	101, 1	8.8/9.2		

REGISTERED CIVIL ENGINEER 7-31-09 DATE

PLANS APPROVAL DATE

REGISTERED PROFESSIONAL ENGINEER MANISH M. DALIA No. C74016 Exp. 6-30-11 CIVIL STATE OF CALIFORNIA

THE STATE OF CALIFORNIA OR ITS OFFICERS OR AGENTS SHALL NOT BE RESPONSIBLE FOR THE ACCURACY OR COMPLETENESS OF SCANNED COPIES OF THIS PLAN SHEET.

Arup PB JV
560 Mission Street, Suite 700
San Francisco, CA 94105

DRAINAGE SYSTEM No.	DRAINAGE UNIT	ABANDON CULVERT	ABANDON INLET	ABANDON MANHOLE	REMOVE CULVERT	REMOVE INLET	REMOVE MANHOLE	ADJUST INLET TO GRADE	ADJUST MANHOLE TO GRADE	SAND BACKFILL	DITCH EXCAVATION	MINOR CONCRETE: MINOR STRUCTURE	MINOR CONCRETE: BACKFILL	MINOR CONCRETE: MISCELLANEOUS CONSTRUCTION	Temp CULVERT: 12"	Temp CULVERT: 18"	Temp CULVERT: 24"	Temp CULVERT: 36"	36" CSP (0.079" THICK)	8" CSP DD	8" PPP UNDERDRAIN	8" PP SOLID	MODIFY INLET TO MANHOLE	CAP MANHOLE	CAP INLET	FRAME & GRATE (TYPE 24-12)	FRAME & GRATE (TYPE 24-12X)	FRAME & COVER (TYPE U45) (N)	MISCELLANEOUS IRON AND STEEL (F)	CONCRETE COLLAR (N)	MAXIMUM PIPE COVER (N)	HEIGHT OF DRAINAGE STRUCTURE (N)	PIPE JOINT CLASSIFICATION	DESCRIPTION	STATION	DRAINAGE UNIT	DRAINAGE SYSTEM No.	DRAINAGE PROFILE SHEET No.	DRAINAGE PLAN SHEET No.
		LF	EA		LF	EA		LF		CY					LF								EA			EA			lbs	EA	Ft								
38	a											2.3														1			326			7.0		Temp G2 DI	29.50 Lt D 77+76.64	a	38	DP-9	D-5
	b								2.7			1.2																				6.1		ADJUST MANHOLE TO GRADE	43.72 Lt D 77+77.58	b			
	c	47								3.1																								ABANDON CULVERT	9.82 Rt D 77+77.00 TO 5.86 Lt D 78+23.57	c			
	d		1																															ABANDON INLET	5.86 Lt D 78+23.57	d			
39	a											1.8														1			326			5.0		Temp G2 DI	28.64 Lt D 80+03.06	a	39	DP-10	D-5
	b											0.2				42														1	5.0		S	18" Temp Culv w/ COLLAR	28.64 Lt D 80+03.06 TO 39.99 Rt D 80+03.06	b			
	c								8.4			3.6																				12.2		ADJUST MANHOLE TO GRADE	39.99 Rt D 80+03.06	c			
	d													0.2											1									CAP DI	29.13 Rt D 79+28.92	d			
	e													0.2											1									CAP DI	17.30' Rt D 74+24.61	e			
	f													0.2										1										CAP MH	3.44' Rt D 74+89.79	f			
40	a											1.4														1			326			3.5		Temp G1 DI	29.50 Rt D 83+71.47	a	40	DP-10	D-6
	b															57															2.0		S	18" Temp Culv	29.50 Rt D 83+71.47 TO 29.50 Lt D 83+72.52	b			
	c											1.6														1			326			4.0		Temp G2 DI	29.50 Lt D 83+72.52	c			
	d															79															3.0		S	18" Temp Culv	29.50 Lt D 83+72.52 TO 17.23 Rt SB 65+75.69	d			
41	a											1.7														1			326			4.4		Temp G1 DI	29.50 Rt D 86+26.97	a	41	DP-10	D-6
	b															14															4.0		S	18" Temp Culv	29.50 Rt D 86+26.97 TO 2.70 Rt SB 68+18.62	b			
SHEET TOTAL		47	1						11.1	3.1		13.9		0.6		192								1	2	5		0	1630	1									

TEMPORARY DRAINAGE QUANTITIES

NO SCALE

DQ-10

STATE OF CALIFORNIA - DEPARTMENT OF TRANSPORTATION

Caltrans

CONSULTANT FUNCTIONAL SUPERVISOR: ABOLFAZL EMADZADEH

CALCULATED-DESIGNED BY: KATIE MING

CHECKED BY: DUANNE GILMORE

REVISED BY: ML/KM

DATE REVISED: 7/31/09

LAST REVISION 7-31-09 DATE PLOTTED => $DATE TIME PLOTTED => $TIME

NOTE:

1. FOR NOTES AND LEGEND SEE DQ-1.

Dist	COUNTY	ROUTE	POST MILES TOTAL PROJECT	SHEET No.	TOTAL SHEETS
04	SF	101, 1	8.8/9.2		

REGISTERED CIVIL ENGINEER 7-31-09 DATE

PLANS APPROVAL DATE

REGISTERED PROFESSIONAL ENGINEER MANISH M. DALIA No. C74016 Exp. 6-30-11 CIVIL STATE OF CALIFORNIA

THE STATE OF CALIFORNIA OR ITS OFFICERS OR AGENTS SHALL NOT BE RESPONSIBLE FOR THE ACCURACY OR COMPLETENESS OF SCANNED COPIES OF THIS PLAN SHEET.

Arup PB JV
560 Mission Street, Suite 700
San Francisco, CA 94105

DRAINAGE SYSTEM No.	DRAINAGE UNIT	ABANDON CULVERT	ABANDON INLET	ABANDON MANHOLE	REMOVE CULVERT	REMOVE INLET	REMOVE MANHOLE	ADJUST INLET TO GRADE	ADJUST MANHOLE TO GRADE	SAND BACKFILL	DITCH EXCAVATION	MINOR CONCRETE: MINOR STRUCTURE	MINOR CONCRETE: BACKFILL	MINOR CONCRETE: MISCELLANEOUS CONSTRUCTION	Temp CULVERT: 12"	Temp CULVERT: 18"	Temp CULVERT: 24"	Temp CULVERT: 36"	36" CSP (0.079" THICK)	8" CSP DD	8" PPP UNDERDRAIN	8" PP SOLID	MODIFY INLET TO MANHOLE	CAP MANHOLE	CAP INLET	FRAME & GRATE (TYPE 24-12) (N)	FRAME & GRATE (TYPE 24-12X) (N)	FRAME & COVER (TYPE U45) (N)	MISCELLANEOUS IRON AND STEEL (F)	CONCRETE COLLAR (N)	MAXIMUM PIPE COVER (N)	HEIGHT OF DRAINAGE STRUCTURE (N)	PIPE JOINT CLASSIFICATION	DESCRIPTION	STATION	DRAINAGE UNIT	DRAINAGE SYSTEM No.	DRAINAGE PROFILE SHEET No.	DRAINAGE PLAN SHEET No.
		LF	EA		LF	EA		LF		CY					LF								EA			EA			lbs	EA	Ft								
42	a															7															6.7		S	18" Temp Culv	2.70 Rt SB 74+94.00 TO 4.00 Rt SB 74+92.00	a	42	DP-10	D-6
	b														64																3.0		S	12" Temp Culv	4.00 Rt SB 74+92.00 TO 12.80 Rt SB 75+59.73	b			
	c											1.6																1	435			4.3		Temp G2 MANHOLE	12.80 Rt SB 75+59.73	c			
	d											0.1								94										1	3.0		S	Temp 8" CSP DD w/ COLLAR	12.80 Rt SB 75+59.73 TO 8.40 Rt SB 76+25.48	d			
	e											0.1									363									1	1.2		S	Temp 8" PPP UD w/ COLLAR	8.40 Rt SB 76+25.48 TO 2.50 Rt SB 85+64.76	e		DP-11	D-7
	f											0.1										92								1				Temp 8" PP SOLID w/ COLLAR	3.21 Rt SB 79+90.06 TO 2.34 Rt SB 80+79.87	f			
	g																				485													Temp 8" PPP UNDERDRAIN	2.34 Rt SB 80+79.87 TO 2.50 Rt SB 85+64.76	g			
43	a											0.2				20														1	5.4		S	18" Temp Culv w/ COLLAR	42.18 Rt MN 54+65.82 TO 24.00 Rt MN 54+70.20	a	43	DP-11	D-8
	b											2.3														1			326			7.0		Temp G2 DI	24.00 Rt MN 54+70.20	b			
	c															46															5.5		S	18" Temp Culv	24.00 Rt MN 54+70.20 TO 24.00 Lt MS 54+69.84	c			
	d											2.0														1			326			5.6		Temp G2 DI	24.00 Lt MS 54+69.84	d			
44	a															205															3.1		S	18" Temp Culv	24.00 Rt MN 54+70.20 TO 24.00 Lt MN 56+75.66	a	44	DP-11	D-8
	b											1.7														1			326			4.4		Temp G2 DI	24.00 Lt MN 56+75.66	b			
	c															48															3.0		S	18" Temp Culv	24.00 Lt MN 56+75.66 TO 24.00 Lt MN 56+75.66	c			
	d											1.6														1			326			4.0		Temp G2 DI	24.00 Lt MN 56+75.66	d			
45	a		1																															ABANDON INLET	22.88 Rt MN 54+27.75	a	45		
	b	15								1.0																								ABANDON CULVERT	22.88 Rt MN 54+27.75 TO 37.91 Rt MN 54+25.79	b			
46	a																						1					1	435					MODIFY INLET TO MANHOLE	8.66 Lt MN 52+85.91	a	46		
	b							0.5				0.7																						ADJUST INLET TO GRADE	21.05 Rt MN 2+59.97	b			
SHEET TOTAL		15	1					0.5		1.0		10.4			64	326				94	848	92	1			4		2	2174	4								
GRAND TOTAL		115	6					6.1	20	7.6	383	83.4		16.8	64	1773				94	848	92	2	1	9	37		3	13367	9								

TEMPORARY DRAINAGE QUANTITIES

NO SCALE

DQ-11

STATE OF CALIFORNIA - DEPARTMENT OF TRANSPORTATION

Caltrans

CONSULTANT FUNCTIONAL SUPERVISOR: ABOLFAZL EMADZADEH

CALCULATED-DESIGNED BY: KATIE MING

CHECKED BY: DUANNE GILMORE

REVISED BY: ML/KM

DATE REVISED: 7/31/09

LAST REVISION: DATE PLOTTED => $DATE
7-31-09 TIME PLOTTED => $TIME