Dist	COUNTY	ROUTE	POST MILES TOTAL PROJECT	SHEET No.	TOTAL SHEETS
04	SF	101, 1	9.0/9.8, 6.8/7.1		

STATE OF CALIFORNIA

DEPARTMENT OF TRANSPORTATION

PROJECT PLANS FOR CONSTRUCTION ON

STATE HIGHWAY

IN THE CITY AND COUNTY OF SAN FRANCISCO
AT ROUTE 101 PM 8.0
TO GOLDEN GATE BRIDGE TOLL PLAZA

DOYLE DRIVE REPLACEMENT PROJECT - PACKAGE 2C/2D REVISIONS
CONTRACT 2 - UTILITIES RELOCATION

TO BE SUPPLEMENTED BY STANDARD PLANS DATED MAY 2006

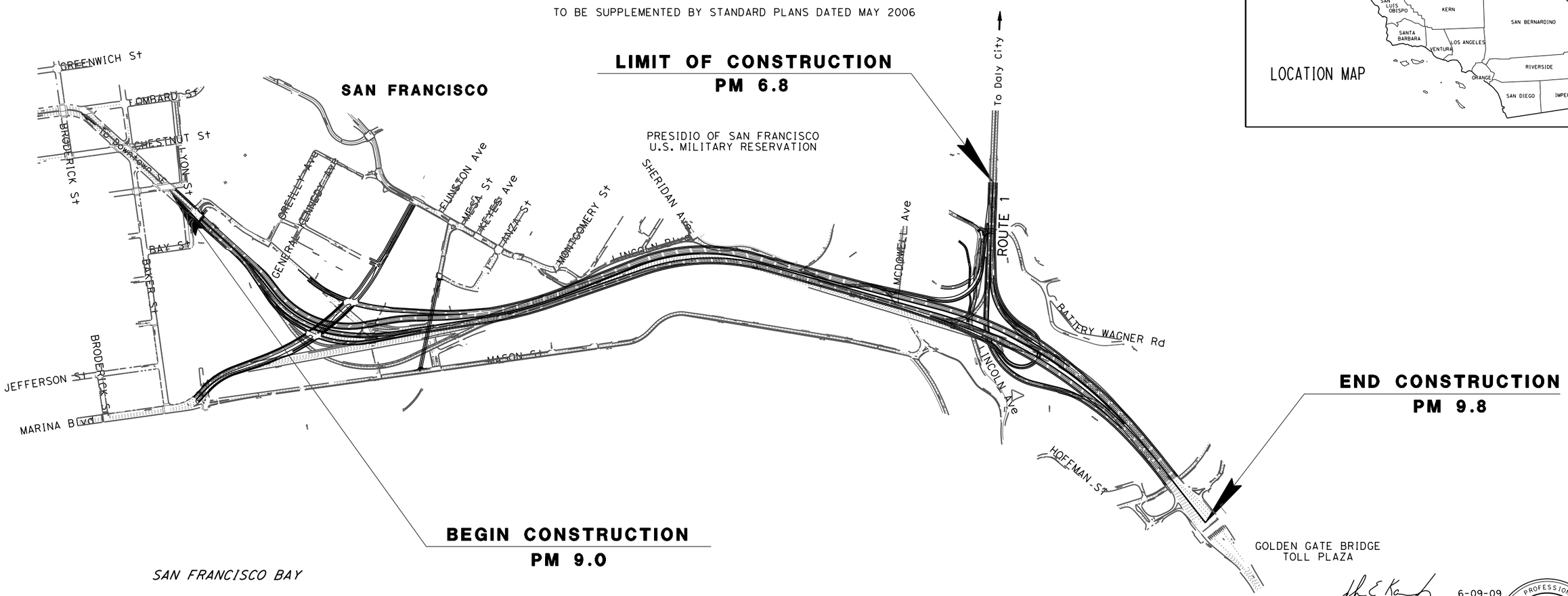

NOT TO SCALE

THE CONTRACTOR SHALL POSSESS THE CLASS (OR CLASSES) OF LICENSE AS SPECIFIED IN THE "NOTICE TO CONTRACTORS."

APPROVED AS TO IMPACT ON STATE FACILITIES AND CONFORMANCE WITH APPLICABLE STATE STANDARDS AND PRACTICES AND THAT TECHNICAL OVERSIGHT WAS PERFORMED.

CONSULTANT DESIGN ENGINEER | CALTRANS DESIGN OVERSIGHT APPROVAL | REGISTRATION No. | LICENSE Exp DATE | DATE SIGNED

PROJECT ENGINEER
REGISTERED CIVIL ENGINEER

6-09-09
DATE

REGISTERED PROFESSIONAL ENGINEER
JOHN EDWARD KARN JR
No. C66743
Exp. 9-30-10
CIVIL
STATE OF CALIFORNIA

PLANS APPROVAL DATE

THE STATE OF CALIFORNIA OR ITS OFFICERS OR AGENTS SHALL NOT BE RESPONSIBLE FOR THE ACCURACY OR COMPLETENESS OF ELECTRONIC COPIES OF THIS PLAN SHEET.

TITLE SHEET UT-01

CONTRACT No.

LAST REVISION 11-05-09

DATE PLOTTED => $DATE
TIME PLOTTED => $TIME

Dist	COUNTY	ROUTE	POST MILES TOTAL PROJECT	SHEET No.	TOTAL SHEETS
04	SF	101,1	9.0/9.8, 6.8/7.1		

LICENSED CIVIL ENGINEER 6-09-09

PLANS APPROVAL DATE

REGISTERED PROFESSIONAL ENGINEER JOHN EDWARD KARN JR No. C66743 Exp. 9-30-10 CIVIL STATE OF CALIFORNIA

THE STATE OF CALIFORNIA OR ITS OFFICERS OR AGENTS SHALL NOT BE RESPONSIBLE FOR THE ACCURACY OR COMPLETENESS OF ELECTRONIC COPIES OF THIS PLAN SHEET.

Arup PB JV
560 Mission Street, Suite 700
San Francisco, CA 94105

INDEX OF SHEETS

REFERENCE SHEETS			REVISION															
SHEET NO.		DATE	NO.	BY	NO.	BY	NO.	BY	NO.	BY	NO.	BY	APPROVED	DESCRIPTION
UT01	X	04/23/2010	8	MD	9	MD	10	MD	11	MD	12	MD	04/23/2010	TITLE SHEET
UT02	X	04/23/2010	11	MD	12	MD	13	MD	14	MD	15	MD	04/23/2010	INDEX SHEET
UT02A	X	04/23/2010	3	MD	4	MD	5	MD	6	MD	7	MD	04/23/2010	INDEX SHEET
UT03		02/02/2010	1	MD	2	MD	3	MD					02/02/2010	KEYMAP 1
UT04		02/02/2010	6	DG	7	MD	8	MD	9	MD	10	MD	02/02/2010	KEYMAP 2

PLAN SHEETS

ELECTRICAL			REVISION											
SHEET NO.		DATE	NO.	BY	NO.	BY	NO.	BY	NO.	BY	NO.	BY	APPROVED	DESCRIPTION
UNE01		02/02/2010	4	DG	5	MD	6	MD	7	MD	8	MD	02/02/2010	ELECTRICAL GENERAL NOTES SHEET
U02		-											-	-
U03		-											-	-
U04		-											-	-
U05		-											-	-
U06	X	04/23/2010	1	MD	2	MD	3	MD	4	MD			04/23/2010	ELECTRICAL PLAN SHEET PACKAGE 2B AND 2C
U07	X	04/23/2010	1	MD	2	MD	3	MD	4	MD	5	MD	04/23/2010	ELECTRICAL PLAN SHEET PACKAGE 2B AND 2C
U08	X	04/23/2010	2	DG	3	DG	4	MD	5	MD	6	MD	04/23/2010	LINE IN PARALLEL WITH PROP STRUCTURE (E2)
U09		02/02/2010	1	ES	2	DG	3	DG	4	MD	5	MD	02/02/2010	ELECTRICAL PLAN SHEET PACKAGE 2A MASON WEST
U10		-	1	ES	2	DG							09/02/2009	LINE TO CLEAR CONFLICT WITH FUTURE COLUMNS (E1)
U11		-											-	-
U12		-											-	-
U13		01/06/2010	1	MD									01/06/2010	ELECTRICAL PLAN SHEET PACKAGE 2B
U14		02/02/2010	1	MD	2	MD							02/02/2010	ELECTRICAL PLAN SHEET PACKAGE 2B
U15	X	04/23/2010	1	MD	2	MD	3	MD					04/23/2010	ELECTRICAL PLAN SHEET PACKAGE 2B
U16	X	04/23/2010	1	MD	2	MD	3	MD	4	MD			04/23/2010	ELECTRICAL PLAN SHEET PACKAGE 2A MASON WEST
U17		02/02/2010	1	MD	2	MD							02/02/2010	ELECTRICAL PLAN SHEET PACKAGE 2A MASON WEST

POTABLE WATER			REVISION											
SHEET NO.		DATE	NO.	BY	NO.	BY	NO.	BY	NO.	BY	NO.	BY	APPROVED	DESCRIPTION
UNW01		02/02/2010	1	DG	2	DG	3	MD					02/02/2010	POTABLE WATER GENERAL NOTES SHEET
U18		-											-	-
U19		-											-	-
U20		03/23/2010	1	MD	2	MD							03/23/2010	-
U21		-											-	-
U22		01/13/2010	1	MD	2	MD							01/13/2010	POTABLE WATER PACKAGE 2B AND 2C
U23		04/14/2010	1	MD	2	MD	3	MD	4	MD			04/14/2010	POTABLE WATER PACKAGE 2B AND 2C
U24		-											-	-
U25		08/19/2009	1	DG									08/12/2009	WATER MAIN RELOCATION AT FUTURE COLUMN LOCATION (W1)
U26		-											-	-
U27		-											-	-
U28		-											-	-
U29		03/23/2010	1	MD	2	MD							03/23/2010	-
U30		01/13/2010	1	MD	2	MD							01/13/2010	POTABLE WATER PACKAGE 2B AND 2C
U31		01/06/2010	1	MD									01/06/2010	POTABLE WATER PACKAGE 2B
U32		-											-	-
U33		-											-	-

TELECOMMUNICATIONS			REVISION											
SHEET NO.		DATE	NO.	BY	NO.	BY	NO.	BY	NO.	BY	NO.	BY	APPROVED	DESCRIPTION
UNT01		02/02/2010	1	DG	2	DG	3	DG	4	DG	5	MD	02/02/2010	TELECOMMUNICATIONS GENERAL NOTES SHEET
U34		-											-	
U35		-											-	
U36		-											-	
U37		-											-	
U38		01/13/2010	1	MD	2	MD							01/13/2010	PACKAGE 2B TELECOMMUNICATIONS PLAN
U39		03/23/2010	1	MD	2	MD	3	MD	4	MD			03/23/2010	PACKAGE 2B/2C TELECOMMUNICATIONS PLAN
U40		03/23/2010	2	DG	3	DG	4	MD	5	MD	6	MD	03/23/2010	TELECOMMUNICATIONS PLAN SHEET (T1) AND PACKAGE 2C
U41		04/01/2010	2	DG	3	DG	4	MD	5	MD	6	MD	04/01/2010	TELECOMMUNICATIONS PLAN SHEET (T1) WITH MASON WEST PK2A
U42		10/06/2009	1	DG	2	DG	3	DG					10/02/2009	TELECOMMUNICATIONS PLAN SHEET (T1)
U42A		10/06/2009	1	DG	2	DG							10/02/2009	TELECOMMUNICATIONS PLAN SHEET (T1)
U43		08/19/2009											08/19/2009	TELECOMMUNICATIONS PLAN SHEET (T1)
U44		-											-	
U45		-											-	
U46		02/02/2010	1	MD	2	MD	3	MD					02/02/2010	PACKAGE 2B TELECOMMUNICATIONS PLAN
U47		01/06/2010	1	MD									01/06/2010	PACKAGE 2B TELECOMMUNICATIONS PLAN
U48		12/10/2009	1	MD									12/10/2009	TELECOMMUNICATIONS PLAN SHEET MASON ST PACKAGE 2A
U49		04/01/2010	1	MD	2	MD	3	MD					04/01/2010	TELECOMMUNICATIONS PLAN SHEET MASON ST PACKAGE 2A

SANITARY SEWER			REVISION											
SHEET NO.		DATE	NO.	BY	NO.	BY	NO.	BY	NO.	BY	NO.	BY	APPROVED	DESCRIPTION
UNSS01		04/01/2010	1	MD									04/01/2010	SANITARY SEWER GENERAL NOTE SHEET
SS50		-											-	-
SS51		-											-	-
SS52		-											-	-
SS53		-											-	-
SS54		-											-	-
SS55	X	04/23/2010	1	MD	2	MD							04/23/2010	SANITARY SEWER ALONG LINCOLN
SS56		04/08/2010	1	DG	2	MD	3	MD					04/08/2010	SANITARY SEWER ALONG LINCOLN NEAR VA
SS57		-											-	-
SS58		08/19/2009	1	DG									08/12/2009	SYSTEM 9 ALIGNMENT (S1)
SS59		-											-	-
SS60		-											-	-
SS61		-											-	-
SS62		-											-	-
SS63		-											-	-
SS64		-											-	-
SS65		-											-	-

SANITARY SEWER PROFILES			REVISION											
SHEET NO.		DATE	NO.	BY	NO.	BY	NO.	BY	NO.	BY	NO.	BY	APPROVED	DESCRIPTION
SSP01		08/19/2009	1	DG									08/12/2009	SYSTEM 8 AND 9 PROFILES
SSP02	X	04/23/2010	1	MD									04/23/2010	SYSTEM 1 PROFILE
SSP03		04/01/2010											04/01/2010	SYSTEM 2 PROFILE
SSP04		04/08/2010											04/08/2010	SYSTEM 3 PROFILE

STORM SEWERS			REVISION											
SHEET NO.		DATE	NO.	BY	NO.	BY	NO.	BY	NO.	BY	NO.	BY	APPROVED	DESCRIPTION
UNSD01		01/13/2010											01/13/2010	STORM DRAINAGE GENERAL NOTE SHEET
SD66		03/23/2010	1	MD	2	MD							03/23/2010	OUTFALL F PLAN SHEET
-		-											-	-

STORM DRAINAGE PROFILES			REVISION											
SHEET NO.		DATE	NO.	BY	NO.	BY	NO.	BY	NO.	BY	NO.	BY	APPROVED	DESCRIPTION
SDP01		03/23/2010	1	MD	2	MD							03/23/2010	OUTFALL F PROFILE SHEET
-		-											-	-

REVISED BY	DATE REVISED
MD	04/23/10
MD	04/08/10
MD	04/01/10

CALCULATED-DESIGNED BY

CHECKED BY

FUNCTIONAL SUPERVISOR

DUANNE GILMORE

STATE OF CALIFORNIA - DEPARTMENT OF TRANSPORTATION

Caltrans

INDEX OF SHEETS

UT-02

LAST REVISION 11-05-09 | DATE PLOTTED => 4/23/2010 | TIME PLOTTED => 1:53:14 PM

Dist	COUNTY	ROUTE	POST MILES TOTAL PROJECT	SHEET No.	TOTAL SHEETS
04	SF	101,1	9.0/9.8, 6.8/7.1		

LICENSED CIVIL ENGINEER 6-09-09

PLANS APPROVAL DATE

REGISTERED PROFESSIONAL ENGINEER JOHN EDWARD KARN JR No. C66743 Exp. 9-30-10 CIVIL STATE OF CALIFORNIA

THE STATE OF CALIFORNIA OR ITS OFFICERS OR AGENTS SHALL NOT BE RESPONSIBLE FOR THE ACCURACY OR COMPLETENESS OF ELECTRONIC COPIES OF THIS PLAN SHEET.

Arup PB JV
560 Mission Street, Suite 700
San Francisco, CA 94105

INDEX OF SHEETS

ELECTRICAL DETAILS			REVISION															
SHEET NO.		DATE	NO.	BY	NO.	BY	NO.	BY	NO.	BY	NO.	BY	APPROVED	DESCRIPTION
UDE01		12/21/2009	1	ES	2	DG	3	DG	4	MD	5	MD	12/10/2009	ELECTRICAL DETAILS
UDE02	X	04/23/2010	2	DG	3	MD	4	MD	5	MD	6	MD	04/23/2010	ELECTRICAL DETAILS
UDE03		03/23/2010	1	MD	2	MD	3	MD					03/23/2010	JOINT TRENCH DETAIL
UDE04		03/23/2010											03/23/2010	JOINT TRENCH DETAIL
USE05	X	04/23/2010											04/23/2010	ELECTRICAL BUTTERFLY DIAGRAMS
USE06	X	04/23/2010											04/23/2010	ELECTRICAL BUTTERFLY DIAGRAMS
USE07	X	04/23/2010											04/23/2010	ELECTRICAL BUTTERFLY DIAGRAMS
USE08	X	04/23/2010											04/23/2010	ELECTRICAL BUTTERFLY DIAGRAMS
USE09	X	04/23/2010											04/23/2010	ELECTRICAL BUTTERFLY DIAGRAMS
USE10	X	04/23/2010											04/23/2010	ELECTRICAL BUTTERFLY DIAGRAMS
USE11	X	04/23/2010											04/23/2010	ELECTRICAL BUTTERFLY DIAGRAMS
USE12	X	04/23/2010											04/23/2010	ELECTRICAL BUTTERFLY DIAGRAMS
USE13	X	04/23/2010											04/23/2010	ELECTRICAL BUTTERFLY DIAGRAMS
USE14	X	04/23/2010											04/23/2010	ELECTRICAL BUTTERFLY DIAGRAMS
USE15	X	04/23/2010											04/23/2010	ELECTRICAL BUTTERFLY DIAGRAMS
USE16	X	04/23/2010											04/23/2010	ELECTRICAL BUTTERFLY DIAGRAMS
USE17	X	04/23/2010											04/23/2010	ELECTRICAL BUTTERFLY DIAGRAMS
USE18	X	04/23/2010											04/23/2010	ELECTRICAL BUTTERFLY DIAGRAMS
USE19	X	04/23/2010											04/23/2010	ELECTRICAL BUTTERFLY DIAGRAMS
USE20	X	04/23/2010											04/23/2010	ELECTRICAL BUTTERFLY DIAGRAMS
USE21	X	04/23/2010											04/23/2010	ELECTRICAL BUTTERFLY DIAGRAMS
USE22	X	04/23/2010											04/23/2010	ELECTRICAL BUTTERFLY DIAGRAMS
USE23	X	04/23/2010											04/23/2010	ELECTRICAL BUTTERFLY DIAGRAMS
USE24	X	04/23/2010											04/23/2010	ELECTRICAL BUTTERFLY DIAGRAMS
USE25	X	04/23/2010											04/23/2010	ELECTRICAL BUTTERFLY DIAGRAMS

ELEC. SINGLE LINE DIAGRAMS			REVISION															
SHEET NO.		DATE	NO.	BY	NO.	BY	NO.	BY	NO.	BY	NO.	BY	APPROVED	DESCRIPTION
USE01		03/23/2010	1	MD	2	MD	3	MD					03/23/2010	ELECTRICAL SINGLE LINE DIAGRAMS
USE02		03/23/2010	1	MD	2	MD	3	MD					03/23/2010	ELECTRICAL SINGLE LINE DIAGRAMS
USE03	X	04/23/2010	1	MD	2	MD	3	MD	4	MD			04/23/2010	ELECTRICAL SINGLE LINE DIAGRAMS
USE04	X	04/23/2010	1	MD	2	MD	3	MD	4	MD			04/23/2010	ELECTRICAL SINGLE LINE DIAGRAMS

POTABLE WATER DETAILS			REVISION															
SHEET NO.		DATE	NO.	BY	NO.	BY	NO.	BY	NO.	BY	NO.	BY	APPROVED	DESCRIPTION
UDW01		12/21/2009	1	DG	2	DG							12/21/2009	POTABLE WATER DETAILS
UDW02		04/14/2010	1	MD									04/14/2010	POTABLE WATER DETAILS
-		-											-	-
-		-											-	-

TELECOMMUNICATIONS DETAILS			REVISION															
SHEET NO.		DATE	NO.	BY	NO.	BY	NO.	BY	NO.	BY	NO.	BY	APPROVED	DESCRIPTION
UDT01		12/21/2009	1	DG	2	ES	3	DG	4	MD	5	DG	12/21/2009	TELECOMMUNICATIONS DETAILS
UDT02		12/21/2009	1	DG	2	ES	3	DG	4	MD	5	DG	12/21/2009	TELECOMMUNICATIONS DETAILS
UDT03		12/21/2009	1	DG	2	ES	3	DG	4	MD	5	DG	12/21/2009	TELECOMMUNICATIONS DETAILS
UDT04		12/21/2009	1	DG	2	ES	3	DG	4	MD	5	DG	12/21/2009	TELECOMMUNICATIONS DETAILS
UDT05		12/21/2009	1	DG	2	DG	3	MD	4	DG			12/21/2009	TELECOMMUNICATIONS DETAILS
UDT06		12/21/2009	1	DG	2	DG	3	MD	4	DG			12/21/2009	TELECOMMUNICATIONS DETAILS
UDT07		12/21/2009											12/21/2009	TELECOMMUNICATIONS DETAILS
UDT08		01/13/2009											01/13/2009	TELECOMMUNICATIONS DETAILS
UDT09		01/13/2009											01/13/2009	TELECOMMUNICATIONS DETAILS
UDT10		01/13/2009											01/13/2009	TELECOMMUNICATIONS DETAILS
UDT11		01/13/2009											01/13/2009	TELECOMMUNICATIONS DETAILS
UDT12		01/13/2009											01/13/2009	TELECOMMUNICATIONS DETAILS
UDT13		04/01/2010	1	TK									01/13/2009	TELECOMMUNICATIONS DETAILS
UDT14		01/13/2009											04/01/2010	TELECOMMUNICATIONS DETAILS
UDT15		01/13/2009											01/13/2009	TELECOMMUNICATIONS DETAILS
UDT16		01/13/2009											01/13/2009	TELECOMMUNICATIONS DETAILS
UDT17		04/01/2010	1	TK									04/01/2010	TELECOMMUNICATIONS DETAILS
UDT18		01/13/2009											01/13/2009	TELECOMMUNICATIONS DETAILS
UDT19		01/13/2009											01/13/2009	TELECOMMUNICATIONS DETAILS
UDT20		04/01/2010	1	TK									04/01/2010	TELECOMMUNICATIONS DETAILS
UDT21		04/01/2010											04/01/2010	TELECOMMUNICATIONS DETAILS

SANITARY SEWER DETAILS			REVISION															
SHEET NO.		DATE	NO.	BY	NO.	BY	NO.	BY	NO.	BY	NO.	BY	APPROVED	DESCRIPTION
SSD01		08/19/2009	1	DG									08/12/2009	SANITARY SEWER DETAILS
SSD02		08/19/2009	1	DG									08/12/2009	SANITARY SEWER DETAILS
SSD03		08/19/2009	1	DG									08/12/2009	SANITARY SEWER DETAILS
-		-											-	-

TEMPORARY SANITARY SEWER PUMP STATION DETAILS			REVISION															
SHEET NO.		DATE	NO.	BY	NO.	BY	NO.	BY	NO.	BY	NO.	BY	APPROVED	DESCRIPTION
PS D01	X	04/23/2010											04/23/2010	TEMP SS PUMP STATION DETAILS
PS D02		04/01/2010											04/01/2010	TEMP SS PUMP STATION DETAILS
PS D03		04/01/2010											04/01/2010	TEMP SS PUMP STATION SECTION DETAILS
PS D04		04/01/2010											04/01/2010	TEMP SS PUMP STATION SECTION DETAILS
PS G01	X	04/23/2010											04/23/2010	TEMP SS PUMP STATION GRADING PLAN
PS E01		04/01/2010											04/01/2010	TEMP SS PUMP STATION ELECTRICAL GENERAL NOTES
PS E02	X	04/23/2010											04/23/2010	TEMP SS PUMP STATION ELEC SITE/CONDUIT PLAN
PS E03	X	04/23/2010											04/23/2010	TEMP SS PUMP STATION ELEC GROUNDING PLAN
PS E04		04/01/2010											04/01/2010	TEMP SS PUMP STATION ELEC EQUIPMENT LAYOUT
PS E05		04/01/2010											04/01/2010	TEMP SS PUMP STATION ELEC DUPLEX PUMP CONTROL PANEL
PS E06		04/01/2010											04/01/2010	TEMP SS PUMP STATION ELEC CONTROL WIRING/CONNECTORS
PS E07		04/01/2010											04/01/2010	TEMP SS PUMP STATION ELEC SECTION DETAILS
PS E08		04/01/2010											04/01/2010	TEMP SS PUMP STATION ELEC DETAILS
-														

CROSS SECTIONS			REVISION															
SHEET NO.	X	DATE	NO.	BY	NO.	BY	NO.	BY	NO.	BY	NO.	BY	APPROVED	DESCRIPTION
UX-GH04		12/21/2009											12/21/2009	MASON ST CROSS SECTIONS
UX-IJ05		12/21/2009											12/21/2009	MASON ST CROSS SECTIONS
UX-KL06		12/21/2009											12/21/2009	MASON ST CROSS SECTIONS
UX-MN07		12/10/2009	1	DG	2	MD							12/10/2009	MASON ST CROSS SECTIONS
UX-OP08		12/10/2009	1	DG	2	MD							12/10/2009	MASON ST CROSS SECTIONS
UX-QR09		12/10/2009	1	DG	2	MD							12/10/2009	MASON ST CROSS SECTIONS
UX-ST10		12/10/2009	1	DG	2	MD							12/10/2009	MASON ST CROSS SECTIONS
UX-UV11		12/10/2009	1	DG	2	MD							12/10/2009	MASON ST CROSS SECTIONS
UX-WX12		12/10/2009	1	DG	2	MD							12/10/2009	MASON ST CROSS SECTIONS
RX-AB01		01/13/2010	1	MD									12/21/2009	ROBERTS ROAD CROSS SECTIONS
RX-CD02		01/13/2010	1	MD									12/21/2009	ROBERTS ROAD CROSS SECTIONS
RX-EF03		12/21/2009											12/21/2009	ROBERTS ROAD CROSS SECTIONS
LX-AB01		01/13/2010											01/13/2010	LINCOLN BLVD CROSS SECTIONS
LX-CD02		01/13/2010											01/13/2010	LINCOLN BLVD CROSS SECTIONS
LX-EF03		02/02/2010	1	MD									02/02/2010	LINCOLN BLVD CROSS SECTIONS
LX-GH04		02/02/2010	1	MD									02/02/2010	LINCOLN BLVD CROSS SECTIONS
LX-IJ05		01/13/2010											01/13/2010	LINCOLN BLVD CROSS SECTIONS
LX-KL06		03/23/2010											01/13/2010	LINCOLN BLVD CROSS SECTIONS

PACKAGE NO.	DATE	COMMENTS
01	08/12/2009	POTABLE WATER AND SANITARY SEWER TO CLEAR CONTRACT 3 AREA
01	08/19/2009	POTABLE WATER, SANITARY SEWER, AND TELECOMMUNICATIONS TO CLEAR CONTRACT 3 AREA
01	10/02/2009	TELECOMMUNICATIONS TO CLEAR CONTRACT 3 AREA
01	10/05/2009	ELECTRICAL AND TELECOMMUNICATIONS TO CLEAR CONTRACT 3 AREA
01	10/06/2009	ELECTRICAL AND TELECOMMUNICATIONS TO CLEAR CONTRACT 3 AREA
01	10/27/2009	ELECTRICAL TO CLEAR CONTRACT 3 AREA
01	11/05/2009	TELECOM PACKAGE 1 SUPPLEMENT
2A	11/13/2009	WEST END OF MASON STREET TEL AND ELEC
2A	12/10/2009	WEST END OF MASON STREET TEL AND ELEC
2B	12/21/2009	PACKAGE 2B. MASON ST FROM HALLECK ST TO BLD 641
2A	12/28/2009	PACKAGE 2A ELECTRICAL REVISIONS
2B	01/06/2010	PACKAGE 2B. REVISION PLAN SHEETS ONLY
2A	01/08/2010	PACKAGE 2A TELECOMMUNICATIONS REVISIONS
2C	01/13/2010	PACKAGE 2C ALIGNMENT CROSSING AND LINCOLN BLVD
2C	02/02/2010	PACKAGE 2C ALIGNMENT CROSSING AND LINCOLN BLVD REVISIONS
2C	03/23/2010	PACKAGE 2C REVISIONS
2D	04/01/2010	PACKAGE 2D SANITARY SEWER ON LINCOLN AND TEMPORARY PUMP STATION AND PACKAGE 2 REVISIONS
2D	04/08/2010	PACKAGE 2D SANITARY SEWER REVISIONS
2C/2D	04/23/2010	PACKAGE 2C ELECTRICAL REVISIONS AND 2D SANITARY SEWER REVISIONS

INDEX OF SHEETS

UT-02A

REVISED BY	DATE REVISED
MD	04/08/10
MD	04/01/10
MD	03/23/10

CALCULATED-DESIGNED BY

CHECKED BY

FUNCTIONAL SUPERVISOR

DUANNE GILMORE

STATE OF CALIFORNIA - DEPARTMENT OF TRANSPORTATION

Caltrans

LAST REVISION 11-05-09

DATE PLOTTED => 4/23/2010
TIME PLOTTED => 2:15:16 PM

Dist	COUNTY	ROUTE	POST MILES TOTAL PROJECT	SHEET No.	TOTAL SHEETS
04	SF	101,1	9.0/9.8, 6.8/7.1		

LICENSED CIVIL ENGINEER 7-31-09

REGISTERED PROFESSIONAL ENGINEER JOHN EDWARD KARN JR No. C66743 Exp. 9-30-10 CIVIL STATE OF CALIFORNIA

PLANS APPROVAL DATE

THE STATE OF CALIFORNIA OR ITS OFFICERS OR AGENTS SHALL NOT BE RESPONSIBLE FOR THE ACCURACY OR COMPLETENESS OF ELECTRONIC COPIES OF THIS PLAN SHEET.

Arup PB JV
560 Mission Street, Suite 700
San Francisco, CA 94105

KEY PLAN

SCALE 1" = 200'

UT-03

REVISED BY	ML	ML	ML
DATE REVISED	12/21/09	01/13/10	02/02/10

CALCULATED-DESIGNED BY
CHECKED BY

FUNCTIONAL SUPERVISOR
DUANNE GILMORE

STATE OF CALIFORNIA - DEPARTMENT OF TRANSPORTATION
Caltrans

LAST REVISION
DATE PLOTTED => 2/2/2010
TIME PLOTTED => 4:09:22 PM

BORDER LAST REVISED 3/1/2007

RELATIVE BORDER SCALE IS IN INCHES 0 1 2 3

USERNAME => manish.dalia
DGN FILE => $FILE$

CU 04242

EA 416372

Dist	COUNTY	ROUTE	POST MILES TOTAL PROJECT	SHEET No.	TOTAL SHEETS
04	SF	101,1	9.0/9.8, 6.8/7.1		

LICENSED CIVIL ENGINEER 7-31-09

PLANS APPROVAL DATE

REGISTERED PROFESSIONAL ENGINEER JOHN EDWARD KARN JR No. C66743 Exp. 9-30-10 CIVIL STATE OF CALIFORNIA

THE STATE OF CALIFORNIA OR ITS OFFICERS OR AGENTS SHALL NOT BE RESPONSIBLE FOR THE ACCURACY OR COMPLETENESS OF ELECTRONIC COPIES OF THIS PLAN SHEET.

Arup PB JV
560 Mission Street, Suite 700
San Francisco, CA 94105

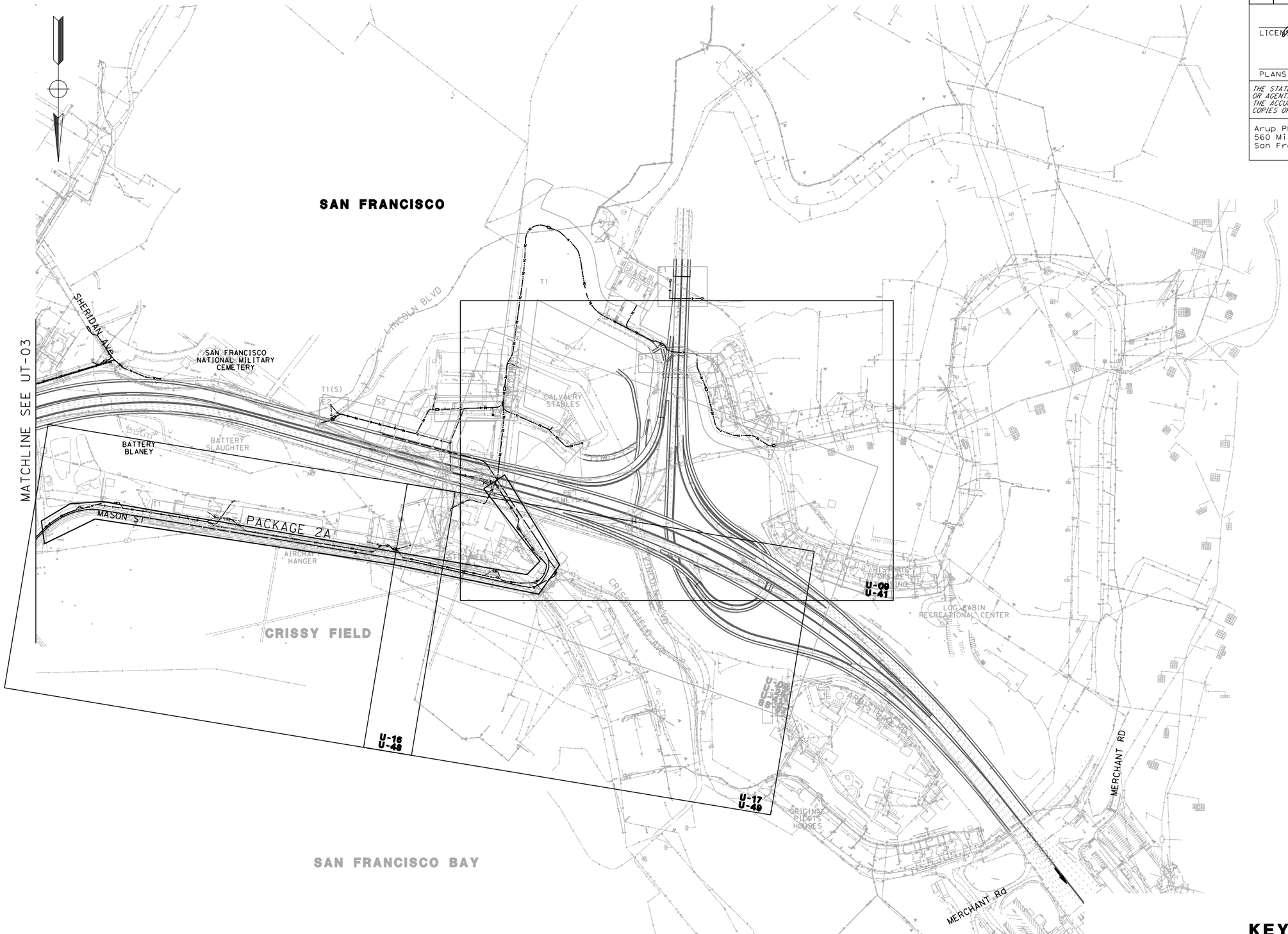

MATCHLINE SEE UT-03

KEY PLAN

SCALE 1" = 200'

UT-04

REVISED BY	DATE REVISED
MD	02/02/10
ML	01/13/10
ML	12/21/09

CALCULATED-DESIGNED BY
CHECKED BY

FUNCTIONAL SUPERVISOR
DUANNE GILMORE

STATE OF CALIFORNIA - DEPARTMENT OF TRANSPORTATION
Caltrans

LAST REVISION 11-05-09
DATE PLOTTED => 2/2/2010
TIME PLOTTED => 4:10:22 PM

BORDER LAST REVISED 3/1/2007

RELATIVE BORDER SCALE IS IN INCHES 0 1 2 3

USERNAME => manish.dalia
DGN FILE => $FILE$

CU 04242

EA 416372

Dist	COUNTY	ROUTE	POST MILES TOTAL PROJECT	SHEET No.	TOTAL SHEETS
04	SF	101,1	9.0/9.8, 6.8/7.1		

LICENSED ELECTRICAL ENGINEER 8-19-09

PLANS APPROVAL DATE

REGISTERED PROFESSIONAL ENGINEER SHAUN DAVID LANDMAN No. E17532 Exp. 6-30-11 ELEC STATE OF CALIFORNIA

THE STATE OF CALIFORNIA OR ITS OFFICERS OR AGENTS SHALL NOT BE RESPONSIBLE FOR THE ACCURACY OR COMPLETENESS OF ELECTRONIC COPIES OF THIS PLAN SHEET.

Arup PB JV
560 Mission Street, Suite 700
San Francisco, CA 94105

GENERAL NOTES:

1. LOCATION OF UTILITIES AND FACILITIES SHOWN ON THESE PLANS WERE OBTAINED FROM OWNER'S RECORDS,FIELD MEASUREMENTS, AND POTHOLE INFORMATION; LOCATIONS ARE APPROXIMATE ONLY. AN INDEPENDENT INVESTIGATION IS TO BE CARRIED OUT BY THE CONTRACTOR TO VERIFY LOCATIONS AND DEPTHS OF EXISTING UTILITIES.
2. NEW AND RELOCATED UTILITIES MAY BE OTHER THAN SHOWN, CONTRACTOR SHALL NOTIFY UNDERGROUND SERVICE ALERT (USA) AT 1-(800) 227-2600 48 HOURS BEFORE DIGGING, TRENCHING, OR GRADING.
3. THIS SET OF DRAWINGS, AS PART OF THE CONSTRUCTION DOCUMENT, IS A DIAGRAMMATIC REPRESENTATION OF THE DESIGN INTENT. CONTRACTOR SHALL COORDINATE PRECISE LOCATIONS OF ALL COMPONENTS DEPICTED HEREIN WITH ALL OTHER UTILITIES AND OTHER ENGINEERING DRAWINGS. INSTALLATION DETAILS SHALL BE COORDINATED WITH RESPECTIVE VENDORS AND SUBMITTED FOR REVIEW DURING THE CONSTRUCTION PROCESS.
4. EXISTING UTILITY MATERIALS FOR DUCTS, PIPE & CONDUIT MAY CONTAIN HAZARDOUS MATERIALS. HAZARDOUS MATERIALS ARE TO BE VERIFIED WITH PRESIDIO TRUST STAFF AND BE PROTECTED IN PLACE OR REMOVED WITH NECESSARY SAFETY REQUIREMENTS.
5. RESIDENT ENGINEER IS TO COORDINATE THE CONSTRUCTION SCHEDULE OF ALL PROPOSED UTILITIES ON SITE.
6. ALL WORKS ARE TO BE CARRIED OUT ACCORDING TO PRESIDIO TRUST STANDARD SPECIFICATIONS. FOR WORKS NOT DESCRIBED IN THE PRESIDIO TRUST STANDARD SPECIFICATIONS, CALTRANS OR CITY OF SAN FRANCISCO STANDARD SPECIFICATIONS WILL BE APPLIED AT THE SATISFACTION OF THE RESIDENT ENGINEER AND PRESIDIO TRUST.
7. COORDINATES SHOWN ARE CALIFORNIA STATE PLANE ZONE 3. COORDINATES SHALL BE VERIFIED WITH THE RESIDENT ENGINEER RELATIVE TO PERMANENT SURVEY MARK.
8. COORDINATES SHOWN ON MAINTENANCE HOLES ARE TO THE CENTER OF COVER.
9. REINSTATEMENT IS TO BE CONDUCTED PER PRESIDIO TRUST STANDARD SPECIFICATIONS AND OPERATIONS DEPARTMENT WORK APPLICATION STANDARDS.
10. EXISTING UTILITIES IN CONFLICT WITH FUTURE ALIGNMENT TO BE RELOCATED.
11. ALL UTILITIES SHOWN IN THESE PLANS ARE BASED UPON RECORD INFORMATION OBTAINED FROM UTILITY OWNERS, AND/OR FIELD SURVEYS OF EXISTING UTILITY SURFACE FEATURES.
12. LOCATION OF UTILITY FACILITIES SHOWN ON THESE PLANS ARE APPROXIMATE AND SHALL BE VERIFIED BY THE CONTRACTOR PRIOR TO CONSTRUCTION.
13. FUTURE COLUMN, ABUTMENT AND SURFACE STRUCTURES WILL BE STAKED AND VERIFIED BY THE RESIDENT ENGINEER IN THE FIELD PRIOR TO RELOCATION WORKS
14. DESIGN STRATEGIES AND CONSTRUCTION OF ALL PROPOSED NEW OR REPLACEMENT UTILITY LINES, MANHOLES AND APPRUTENANCES WILL CONFORM TO PRESIDIO TRUST CONSTRUCTION GUIDELINES AND BE ADJUSTED AS NEEDED BY PROJECT TO MATCH INTERIM AND PROPOSED, CONSTRUCTED LANDSCAPED/HARDSCAPE FEATURES/CONDITIONS COSTS ARE TO BE BORNE BY THE PROJECT. ALL PROPOSED NEW OR REPLACEMENT UTILITY WORK AND CONSTRUCTED PRIOR TO COMPLETION OF A GRADING AND LANDSCPE/HARDSCAPE PLAN THAT IS ACCEPTABLE TO THE PRESIDIO TRUST IS AT RISK.
15. ANY WORK IN THE VICINITY OF TREES SHALL BE LIMITED TO SPECIFIC ZONES APPROVED FOR CONSTRUCTION ACTIVITIES, INCLUIDING TREE REMOVAL. ANY PROPOSED WORK APPROVED WITHIN THE ROOT ZONE (OR DRIPLINE) OF ANY TO BE RETAINED TREE SHALL BE PERFORMED UNDER THE DIRECTION OF THE PROJECT ARBORIST AND SUBJECT TO PRESIDIO TRUST REVIEW.
16. THE RESIDENT ENGINEER IS TO ENSURE THAT ALL WORKS CARRIED OUT IN LAND USE CONTROL AREAS ARE TO THE SATISFACTION OF THE GEOTECHNICAL ENGINEER AND METHODOLOGY IS TO BE TO THE SATISFACTION OF THE PRESIDIO TRUST.
17. CONSTRUCTION THAT OCCURS OUTSIDE THE TEMPORARY CONSTRUCTION EASEMENT AND NOT WITHIN ROADWAYS SHOULD PROCEED WITH CONSENT FROM THE PRESIDIO TRUST AND VETERANS ADMINISTRATION (WHERE APPROPRIATE) TO AVOID MISTREATMENT OF SENSITIVE AREAS AND PLANT SPECIES.
18. FOR REINSTATEMENT OF ELATH SLOPE AREAS:
    - -MATERIAL THAT HAS BEEN PLACED ON THE SLOPE BE REMOVED AND REPLACED WITH SUITABLE FILL TO 98% COMPACTION.
    - -THE FILL MATERIAL SHOULD SATISFY ALL PRESIDIO TRUST TESTING CRITERIA FOR CONTAMINATED SOILS.
    - -THE SLOPE SHOULD BE PLACED AT NO STEEPER THAN 2H:1V
    - -CONTINUOUS MONITORING SHOULD BE CARRIED OUT TO ENSURE THE INTEGRITY OF THE SLOPE IS MAINTAINED FOR THE INTENDED TEMPORARY EXPOSED LIFE THE SLOPE WILL STAY COVERED WITH IMPERVIOUS MATERIALS (PLASTIC) DURING THE WET SEASON TO ENSURE A CONSTANT MOISTURE CONTENT UNTIL SEEDING AND APPROPRIATE VEGETATION CAN BE EFFECTIVELY PLACED.
    - -SHOULD SLOPE MOVEMENT BE OBSERVED, APPROPRIATE REMEDIATION WORK SHOULD BE CARRIED OUT AS A PRIORITY.

ELECTRICAL UTILITY

(E1) - SPLICE EXISTING FEED WITH NEW FEED. PROVIDE NEW MANHOLE OR PULLBOX AS INDICATED.

(E2) - ABANDON IN PLACE. CONTRACTOR TO CONFIRM FEEDERS ARE CURRENTLY ABANDONED

(E3) - CONTRACTOR TO PROTECT IN PLACE.

(E4) - CONTRACTOR TO REMOVE CONDUCTORS FOR RELOCATED CIRCUITS.

(E5) - CONDUIT RUN IN JOINT UTILITY DUCT.

(E6) - CONNECT NEW CIRCUIT TO EXISTING SUBSTATION. PROVIDE NEW CIRCUIT BREAKER.

(E7) - CONNECT NEW FEED TO EXISTING TRANSFORMER.

(E8) - CONNECT NEW FEED TO EXISTING BUILDING SERVICE ENTRANCE. TERMINATE NEW CONDUCTORS IN EXISTING EQUIPMENT.

(E9) - NOT USED

(E10) - 12KV PG&E ELECTRIC.

(E11) - PROVIDE NEW SUBMERSIBLE UNDERGROUND VACUUM-INTERRUPTOR SWITCH WITH OVERCURRENT PROTECTION. 5kV, 600A MINIMUM RATING.

(E12) - RELOCATE EXISTING TRANSFORMER TO NEW LOCATION. CONNECT TRANSFORMER TO EXISTING BUILDING.

(E13) - RECONNECT RELOCATED BUILDING TO RELOCATED CIRCUIT ONCE BUILDING HAS BEEN REPLACED.

(E14) - NOT USED

(E15) - PROVIDE NEW MANHOLE, CABLE AND CONDUIT AS INDICATED ON DRAWINGS FOR CONNECTION TO FUTURE PUMP STATION.

(E16) - NOT USED

(E17) -EXTEND FEEDERS FROM MANHOLE TO EX EQUIPMENT IN SSH 107 AND TERMINATE. CONTRACTOR TO MODIFY EX TERMINALS ON SWITCH GEAR AS REQUIRED FOR LARGER CONDUCTORS.

(E18) -12kV FEED TO PASS THROUGH EXISTING MANHOLE. 4kV FEEDS TO BE CONNECTED TO EXISTING SWITCH GEAR. PROVIDE NEW FEEDERS FOR BOTH INCOMING AND OUTGOING CIRCUITS. PROVIDE NEW MANHOLE AS SITE CONITIONS OR CODE REQUIRE.

(E19) -CONTRACTOR TO CONFIRM CONDUCTOR SIZE AND QUANTITY OF EXISTING FEED FROM TRANSFORMER. PROVIDE NEW CONDUCTORS TO MATCH EXISTING CONDUCTOR AMPACITY.

(E20) -SEVER EXISTING CONDUCTORS AND PROTECT IN PLACE. CONNECT NEW UNDERGROUND FEEDERS TO EXISITNG OVERHEAD FEEDERS ONCE NEW ELECTRICAL SERVICE IS INSTALLED.

(E21) -NOT USED

(E22) -CONNECT NEW UNDERGROUND FEED TO EXISTING OVERHEAD FEED. PROVIDE NEW OVERCURRENT PROTECTION/DISCONNECT TO MATCH EXISTING.

(E23) -CONTRACTOR TO ROUTE TEMPORARY 4kV SERVICE AS INDICATED ON PLANS, USING EXISTING/NEW CONDUITS AS AVAILABLE/REQUIRED. CONTRACTOR TO REMOVE TEMPORARY FEEDERS ONCE PERMANENT SERVICE RESTORED.

(E24) -48" COVER, CONCRETE ENCASED.

(E25) -NEW MANHOLE SHALL INTERCEPT EX. 12KV DUCT BANK. CONTRACTOR SHALL MAINTAIN EXISTING SERVICE UNTIL ALL NEW SERVICE FEEDERS ARE INSTALLED AND READY FOR CUT-OVER. PROVIDE NEW 3-WAY, 3-WAY SUBMERSIBLE UNDERGROUND VACUUM INTERRUPTOR SWITCH. 12KV 600A MINIMUM RATING.

(E26) -CONTRACTOR TO STUB NEW 4" CONDUIT TO LOCATION INDICATED ON PLANS FOR FUTURE PUMP STATION. PROVIDE MARKER.

(E27) -CONTRACTOR TO STUB NEW DUCT BANK TO LOCATION INDICATED ON PLANS FOR FUTURE SERVICE. PROVIDE MARKER.

(E28) -CONTRACTOR TO STUB NEW 6" CONDUIT TO LOCATION INDICATED ON PLANS FOR FUTURE PUMP STATION. PROVIDE MARKER.

(E29) -PROVIDE (2) NEW 6" CONDUITS TO EXISTING TRENCH FOR CONNECTION TO EXISTING SWITCH GEAR. CONTRACTOR TO PROVIDE NEW BUSBAR CONNECTIONS WITHIN SWITCHGEAR AS REQUIRED.

LEGEND:

-e- -e-	EX ELECTRICAL LINE
-e- -e-	ABANDON ELECTRICAL LINE
-E- -E-	NEW ELECTRICAL LINE
--t- --t-	EX TELECOMMUNICATIONS LINE
-t- -t-	ABANDON TELECOMMUNICATIONS CABLE AND CONDUIT
-- TC -- -- TC --	NEW TELECOMMUNICATIONS LINE
-w- -w-	EX WATER LINE
-w- -w-	ABANDON WATER LINE
-W- -W-	NEW WATER LINE
-RC- -w- RC- -w-	EX RECLAIMED WATER LINE
--s- -- --s-	EX SANITARY SEWER LINE
-s- -- -- -s-	ABANDON SANITARY SEWER LINE
-e- -(oh)-	EX OVERHEAD ELECTRIC LINE
-g- -g-	EX GAS LINE
- - - - - - - - - - - - - -	ENVIROMENTALLY/CULTURALLY SENSITIVE AREA
⋈	VALVE
▭	ELECTRIC MANHOLE OR PULLBOX. REFER TO DETAIL E5.
⊙	ELECTRIC MANHOLE. REFER TO DETAIL E4.
(E1)	DETAIL CALLOUT.
▲	EX. PIEZOMETER
	FUTURE COLUMN LOCATION.
	FUTURE COLUMN LOCATION.
	FUTURE COLUMN LOCATION.

ABBREVIATIONS:

C CONDUIT

EX EXISTING

(N) NEW

ELECTRICAL FEEDER SCHEDULE

5kV RATED	
F1	(3) #2 + #6G - 6"C
F2	(3) #2/0 + #6G - 6"C
F3	(3) 250 MCM + #4G - 6"C
15kV RATED	
H1	(3) 500 MCM + #1/0G - 6"C
H2	(3) 750 MCM + #2/0G - 6"C

NOTE: (F1) + 6"C INDICATES CONTRACTOR TO PROVIDE (3) #2 + #6G - 6"C PLUS (1) 6"C AS SPARE.

ELECTRICAL NOTES:

1. CONTRACTOR TO PROVIDE COORDINATION STUDY, FOR ALL CIRCUITS AFFECTED IN SCOPE OF THIS DOCUMENT. CONTRATOR TO ADJUST OVERCURRENT DEVICE TRIP SETTINGS PER COORDINATION STUDY
2. FOR BOTH NEW AND EXISTING EQUIPMENT.

   WHERE A SINGLE FEEDER IS SHOWN ENTERING A MANHOLE WITH 2 OR MORE SAME SIZE FEEDERS EXITING THE SAME MANHOLE, THE CONTRACTOR
3. SHALL PROVIDE THE MANHOLE WITH A MULTIPOINT JUNCTION AND SPLICE THE FEEDER USING SEPARABLE CONNECTORS AS NECESSARY TO ACHIEVE THE DESIGN INTENT AS SHOWN ON PLANS.

   CONTRACTOR TO PREPARE CUT-OVER REPORT FOR EACH CUT-OVER. INDICATE METHODS, PROCEDURES AND SCHEDULE.

ELECTRICAL GENERAL NOTES & LEGEND

NO SCALE

UNE-01

REVISED BY	DATE REVISED	CALCULATED-DESIGNED BY	CHECKED BY	FUNCTIONAL SUPERVISOR
MD	02/02/10	GEOFF GUNN	SHAUN LANDMAN	DUANNE GILMORE
MD	01/13/10			
ML	12/21/09			

STATE OF CALIFORNIA - DEPARTMENT OF TRANSPORTATION

Caltrans

LAST REVISION 09-02-09 | DATE PLOTTED => 2/2/2010 TIME PLOTTED => 5:47:05 PM

Dist	COUNTY	ROUTE	POST MILES TOTAL PROJECT	SHEET No.	TOTAL SHEETS
04	SF	101, 1	8.8/9.2		

REGISTERED CIVIL ENGINEER — DATE 7-31-09

PLANS APPROVAL DATE

REGISTERED PROFESSIONAL ENGINEER — JOHN EDWARD KARN JR — No. C66743 — Exp. 9-30-10 — CIVIL — STATE OF CALIFORNIA

THE STATE OF CALIFORNIA OR ITS OFFICERS OR AGENTS SHALL NOT BE RESPONSIBLE FOR THE ACCURACY OR COMPLETENESS OF SCANNED COPIES OF THIS PLAN SHEET.

Arup PB JV
560 Mission Street, Suite 700
San Francisco, CA 94105

NOTE:

1. FOR GENERAL NOTES, LEGENDS, AND ABBREVIATIONS, SEE SHEET U-1.

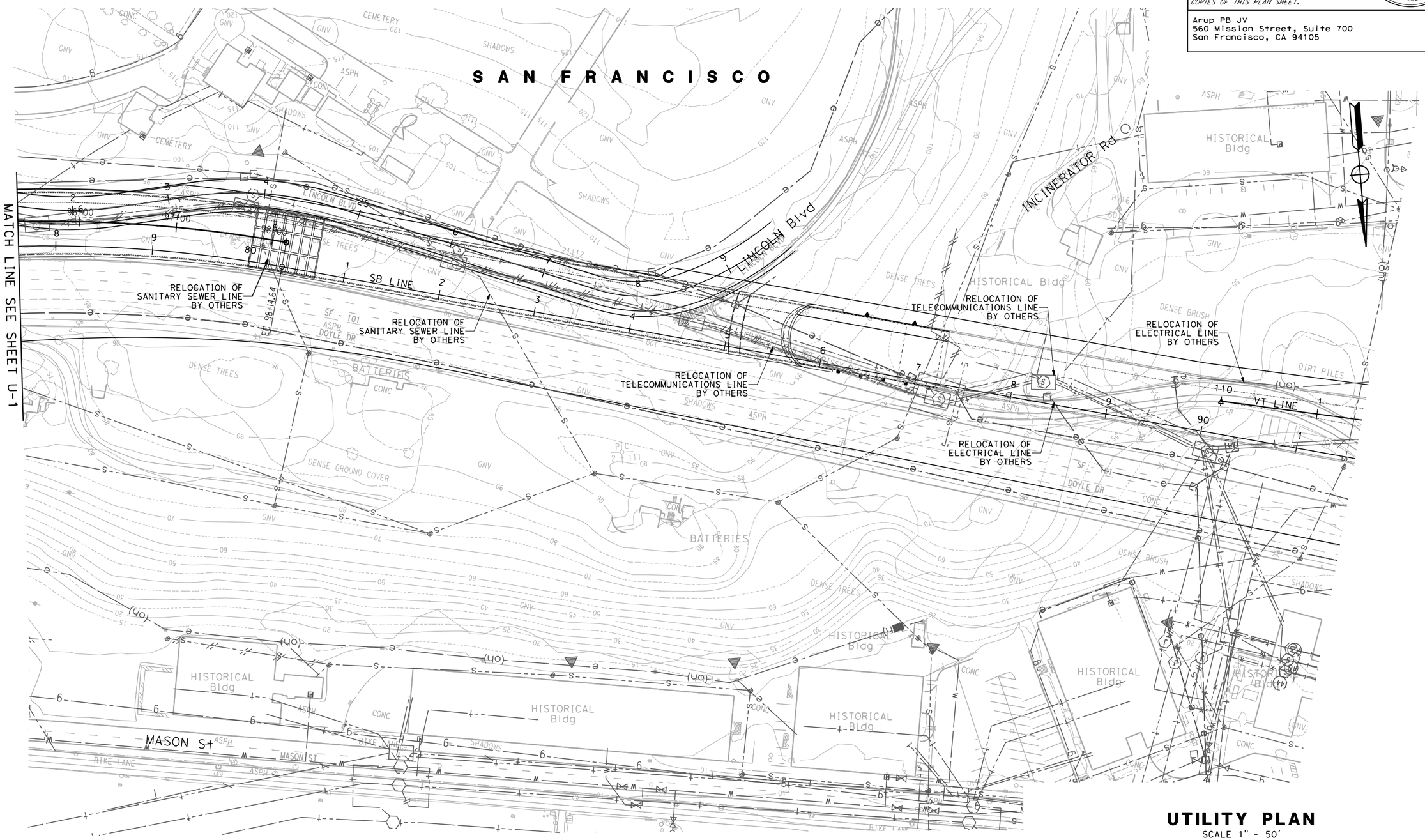

UTILITY PLAN

SCALE 1" - 50'

THIS PLAN ACCURATE FOR UTILITY WORK ONLY

U-2

STATE OF CALIFORNIA - DEPARTMENT OF TRANSPORTATION

Caltrans

CONSULTANT FUNCTIONAL SUPERVISOR: ABOLFAZL EMADZADEH

CALCULATED-DESIGNED BY: DUANNE GILMORE

CHECKED BY: JOHN E KARN

REVISED BY: DG

DATE REVISED: 7/31/09

LAST REVISION: 07-31-09

DATE PLOTTED => $DATE
TIME PLOTTED => $TIME

BORDER LAST REVISED 4/11/2008

RELATIVE BORDER SCALE IS IN INCHES 0 1 2 3

USERNAME => $USER
DGN FILE => $REQUEST

CU 04242

EA 163741

Dist	COUNTY	ROUTE	POST MILES TOTAL PROJECT	SHEET No.	TOTAL SHEETS
04	SF	101, 1	8.8/9.2		

REGISTERED CIVIL ENGINEER 7-31-09 DATE

PLANS APPROVAL DATE

REGISTERED PROFESSIONAL ENGINEER JOHN EDWARD KARN JR No. C66743 Exp. 9-30-10 CIVIL STATE OF CALIFORNIA

THE STATE OF CALIFORNIA OR ITS OFFICERS OR AGENTS SHALL NOT BE RESPONSIBLE FOR THE ACCURACY OR COMPLETENESS OF SCANNED COPIES OF THIS PLAN SHEET.

Arup PB JV
560 Mission Street, Suite 700
San Francisco, CA 94105

NOTE:

1. FOR GENERAL NOTES, LEGENDS, AND ABBREVIATIONS, SEE SHEET U-1.

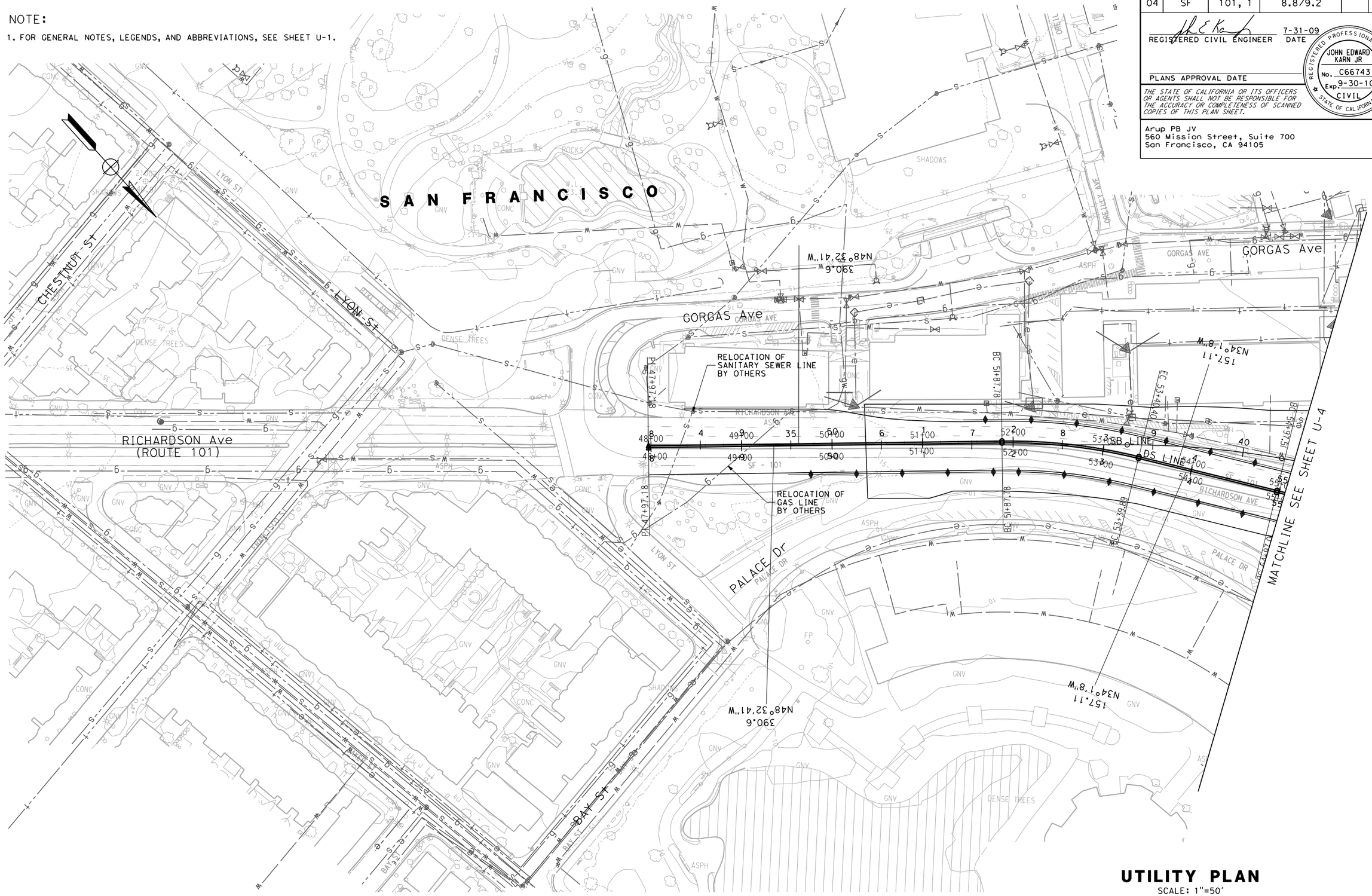

UTILITY PLAN
SCALE: 1"=50'

THIS PLAN IS ACCURATE FOR UTILITY WORK ONLY.

U-3

STATE OF CALIFORNIA - DEPARTMENT OF TRANSPORTATION
Caltrans

CONSULTANT FUNCTIONAL SUPERVISOR: ABOLFAZL EMADZADEH

CALCULATED-DESIGNED BY: DUANNE GILMORE
CHECKED BY: JOHN E KARN

REVISED BY: DG
DATE REVISED: 7/31/09

LAST REVISION 07-31-09
DATE PLOTTED => $DATE
TIME PLOTTED => $TIME

BORDER LAST REVISED 4/11/2008

RELATIVE BORDER SCALE IS IN INCHES 0 1 2 3

USERNAME => $USER
DGN FILE => $REQUEST

CU 04242

EA 163741

Dist	COUNTY	ROUTE	POST MILES TOTAL PROJECT	SHEET No.	TOTAL SHEETS
04	SF	101, 1	8.8/9.2		

REGISTERED CIVIL ENGINEER 7-31-09 DATE

PLANS APPROVAL DATE

REGISTERED PROFESSIONAL ENGINEER JOHN EDWARD KARN JR No. C66743 Exp. 9-30-10 CIVIL STATE OF CALIFORNIA

THE STATE OF CALIFORNIA OR ITS OFFICERS OR AGENTS SHALL NOT BE RESPONSIBLE FOR THE ACCURACY OR COMPLETENESS OF SCANNED COPIES OF THIS PLAN SHEET.

Arup PB JV
560 Mission Street, Suite 700
San Francisco, CA 94105

NOTE:

1. FOR GENERAL NOTES, LEGENDS, AND ABBREVIATIONS, SEE SHEET U-1.

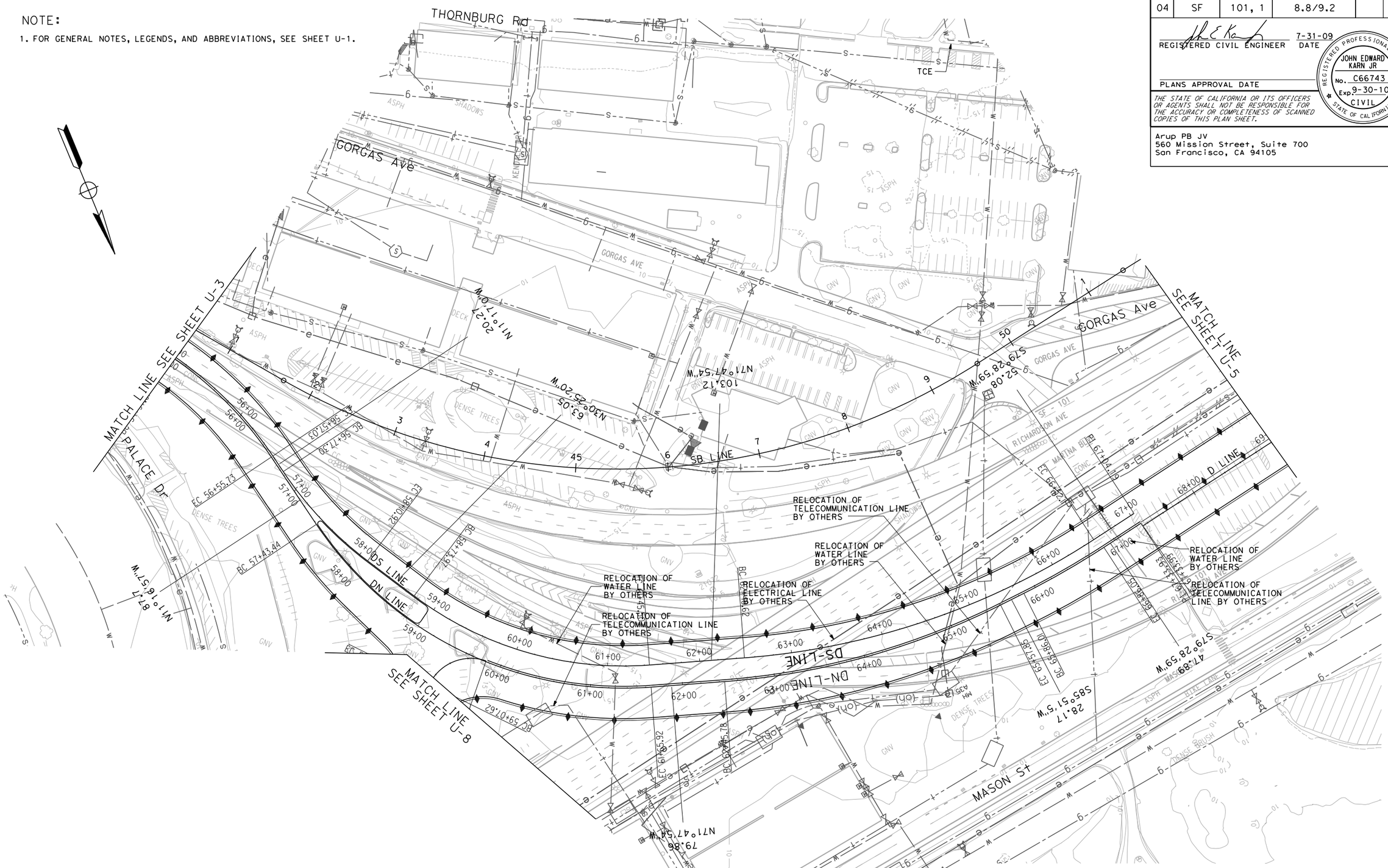

UTILITY PLAN

SCALE: 1"=50'

THIS PLAN ACCURATE FOR UTILITY WORK ONLY

U-4

DUANNE GILMORE	DG
JOHN E KARN	7/31/09
ABOLFAZL EMADZADEH	

REVISED BY / DATE REVISED

CALCULATED-DESIGNED BY / CHECKED BY

CONSULTANT FUNCTIONAL SUPERVISOR

STATE OF CALIFORNIA - DEPARTMENT OF TRANSPORTATION

Caltrans

LAST REVISION 07-31-09 | DATE PLOTTED => $DATE | TIME PLOTTED => $TIME

Dist	COUNTY	ROUTE	POST MILES TOTAL PROJECT	SHEET No.	TOTAL SHEETS
04	SF	101, 1	8.8/9.2		

REGISTERED CIVIL ENGINEER 7-31-09 DATE

PLANS APPROVAL DATE

REGISTERED PROFESSIONAL ENGINEER JOHN EDWARD KARN JR No. C66743 Exp. 9-30-10 CIVIL STATE OF CALIFORNIA

THE STATE OF CALIFORNIA OR ITS OFFICERS OR AGENTS SHALL NOT BE RESPONSIBLE FOR THE ACCURACY OR COMPLETENESS OF SCANNED COPIES OF THIS PLAN SHEET.

Arup PB JV
560 Mission Street, Suite 700
San Francisco, CA 94105

NOTE:

1. FOR GENERAL NOTES, LEGENDS, AND ABBREVIATIONS, SEE SHEET U-1.

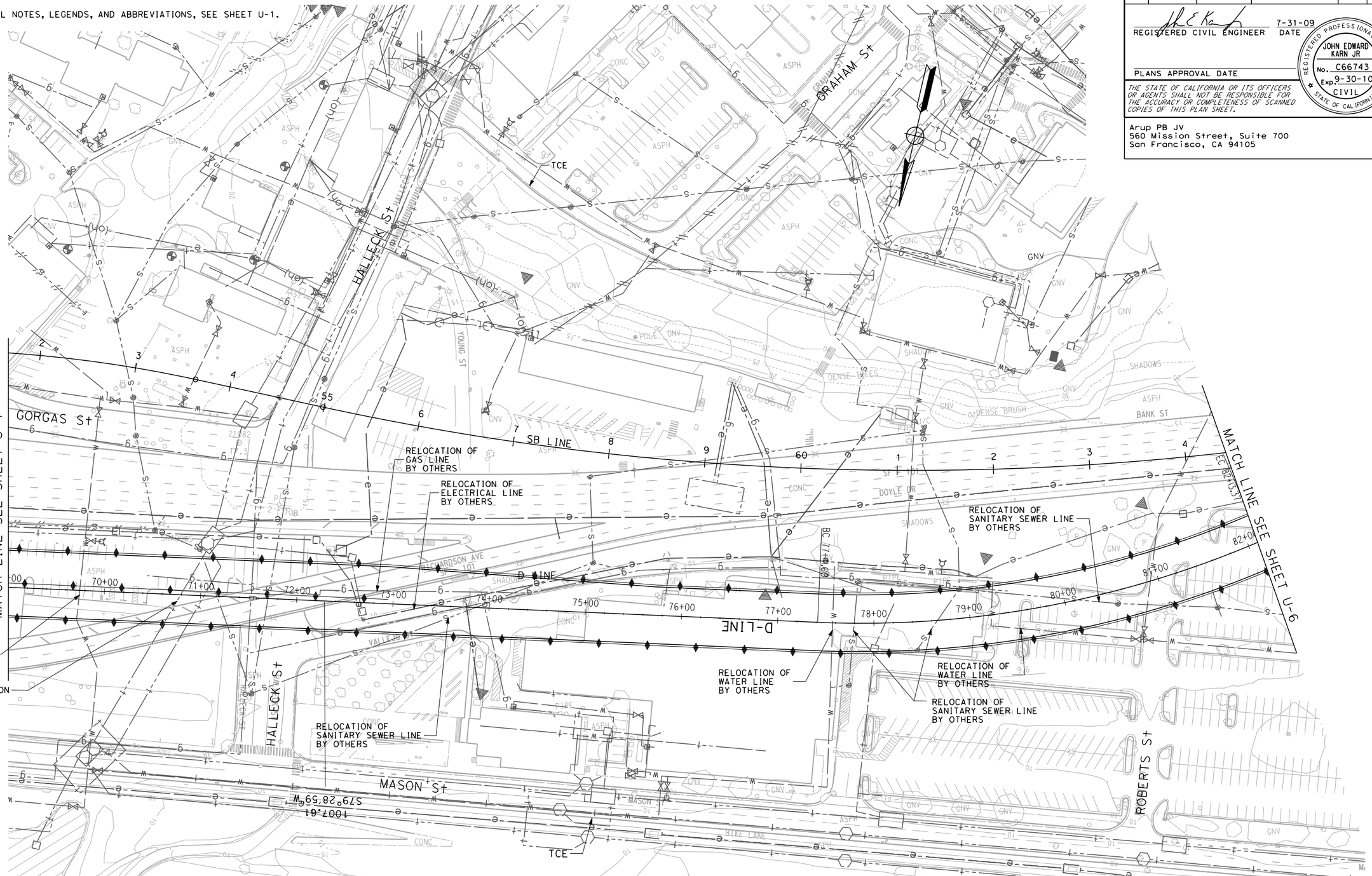

UTILITY PLAN

SCALE: 1"=50'

THIS PLAN ACCURATE FOR UTILITY WORK ONLY

U-5

STATE OF CALIFORNIA - DEPARTMENT OF TRANSPORTATION

Caltrans

CONSULTANT FUNCTIONAL SUPERVISOR: ABOLFAZL EMADZADEH

CALCULATED-DESIGNED BY: DUANNE GILMORE

CHECKED BY: JOHN E KARN

REVISED BY: DG

DATE REVISED: 7/31/09

LAST REVISION 07-31-09

DATE PLOTTED => $DATE

TIME PLOTTED => $TIME

BORDER LAST REVISED 4/11/2008

RELATIVE BORDER SCALE IS IN INCHES 0 1 2 3

USERNAME => $USER

DGN FILE => $REQUEST

CU 04242

EA 163741

Dist	COUNTY	ROUTE	POST MILES TOTAL PROJECT	SHEET No.	TOTAL SHEETS
04	SF	101,1	9.0/9.8, 6.8/7.1		

6-09-09
LICENSED ELECTRICAL ENGINEER

REGISTERED PROFESSIONAL ENGINEER
SHAUN DAVID LANDMAN
No. E17532
Exp. 6-30-11
ELECTRICAL
STATE OF CALIFORNIA

PLANS APPROVAL DATE

THE STATE OF CALIFORNIA OR ITS OFFICERS OR AGENTS SHALL NOT BE RESPONSIBLE FOR THE ACCURACY OR COMPLETENESS OF ELECTRONIC COPIES OF THIS PLAN SHEET.

Arup PB JV
560 Mission Street, Suite 700
San Francisco, CA 94105

NOTES:

1. FOR GENERAL NOTES, LEGENDS, AND ABBREVIATIONS SEE SHEET U-01.
2. FOR COORDINATION OF OTHER PROPOSED UTILITIES REFER TO
   - POTABLE WATER U22
   - TELECOMMUNICATIONS U38
   - SANITARY SEWER SS54
3. CONTRACTOR TO INSTALL ALL CONDUIT AS INDICATED ON THESE PLANS. CONTRACTOR TO PULL CABLES AS INDICATED ON ELECTRICAL SINGLE LINE DIAGRAMS.
4. CONTRACTOR AND PRESIDIO TRUST HAVE AGREED THAT 750' LENGTH OF CONDUIT BETWEEN BOXES MH 520 AND MH 515 IS ACCEPTABLE.
5. TRENCH ALIGNMENT FROM BEGIN SWEEP TO BOX TO END SWEEP IS INDICATIVE ONLY. CONTRACTOR TO CONSTRUCT PER FIELD CONDITIONS.
6. CONTRACTOR TO PULL ALL WIRES FOR PATHWAYS INSTALLED IN PACKAGE 2B.
7. FOR COORDINATES NOT SHOWN SEE U-07, U-14 AND U-15.

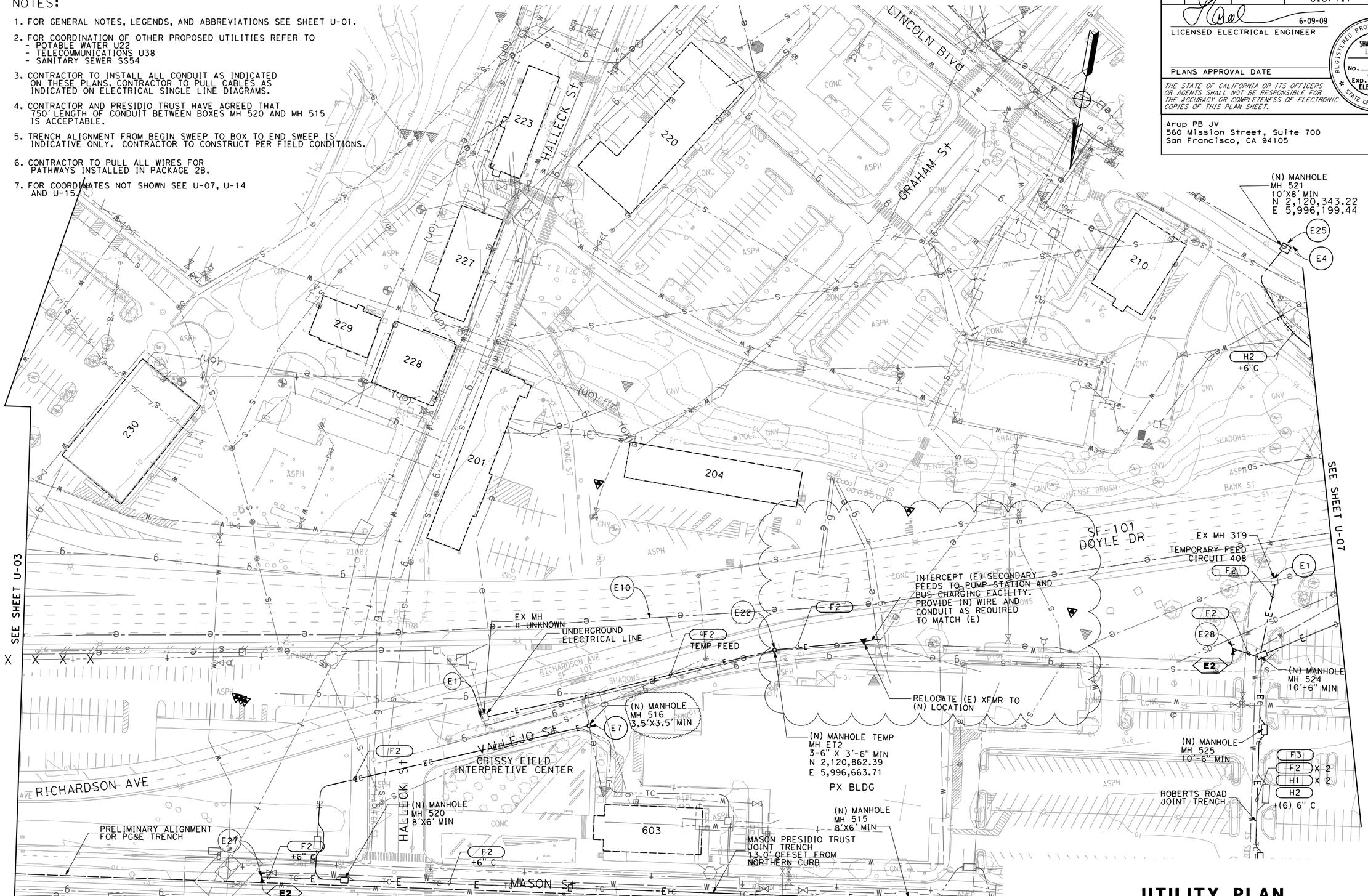

UTILITY PLAN
(ELECTRICAL RELOCATION)
SCALE 1" - 50'

THIS PLAN APPLIES TO ELECTRICAL WORK ONLY.

U-06

CALCULATED-DESIGNED BY	GEOFF GUNN	REVISED BY	MD
CHECKED BY	SHAUN LANDMAN	DATE REVISED	02/02/10 04/23/10 07/12/10

FUNCTIONAL SUPERVISOR: DUANNE GILMORE

STATE OF CALIFORNIA - DEPARTMENT OF TRANSPORTATION
Caltrans

LAST REVISION | DATE PLOTTED => 7/12/2010 | TIME PLOTTED => 11:48:01 PM

NOTE:

1. FOR GENERAL NOTES, LEGENDS, AND ABBREVIATIONS, SEE SHEET U-1.

Dist	COUNTY	ROUTE	POST MILES TOTAL PROJECT	SHEET No.	TOTAL SHEETS
04	SF	101, 1	8.8/9.2		

REGISTERED CIVIL ENGINEER 7-31-09 DATE

PLANS APPROVAL DATE

REGISTERED PROFESSIONAL ENGINEER JOHN EDWARD KARN JR No. C66743 Exp. 9-30-10 CIVIL STATE OF CALIFORNIA

THE STATE OF CALIFORNIA OR ITS OFFICERS OR AGENTS SHALL NOT BE RESPONSIBLE FOR THE ACCURACY OR COMPLETENESS OF SCANNED COPIES OF THIS PLAN SHEET.

Arup PB JV
560 Mission Street, Suite 700
San Francisco, CA 94105

UTILITY PLAN

SCALE 1" - 50'

THIS PLAN ACCURATE FOR UTILITY WORK ONLY

U-6

STATE OF CALIFORNIA - DEPARTMENT OF TRANSPORTATION

Caltrans

CONSULTANT FUNCTIONAL SUPERVISOR: ABOLFAZL EMADZADEH

CALCULATED-DESIGNED BY: DUANNE GILMORE

CHECKED BY: JOHN E KARN

REVISED BY: DG

DATE REVISED: 7/31/09

LAST REVISION 07-31-09

DATE PLOTTED => $DATE

TIME PLOTTED => $TIME

BORDER LAST REVISED 4/11/2008

RELATIVE BORDER SCALE IS IN INCHES 0 1 2 3

USERNAME => $USER

DGN FILE => $REQUEST

CU 04242

EA 163741

Dist	COUNTY	ROUTE	POST MILES TOTAL PROJECT	SHEET No.	TOTAL SHEETS
04	SF	101,1	9.0/9.8, 6.8/7.1	7	

6-09-09
LICENSED ELECTRICAL ENGINEER

REGISTERED PROFESSIONAL ENGINEER
SHAUN DAVID LANDMAN
No. E17532
Exp. 6-30-11
ELECTRICAL
STATE OF CALIFORNIA

PLANS APPROVAL DATE

THE STATE OF CALIFORNIA OR ITS OFFICERS OR AGENTS SHALL NOT BE RESPONSIBLE FOR THE ACCURACY OR COMPLETENESS OF ELECTRONIC COPIES OF THIS PLAN SHEET.

Arup PB JV
560 Mission Street, Suite 700
San Francisco, CA 94105

S A N F R A N C I S C O

NOTES:

1. FOR GENERAL NOTES, LEGENDS, AND ABBREVIATIONS SEE SHEET U-01.
2. FOR COORDINATION OF OTHER PROPOSED UTILITIES REFER TO
   - POTABLE WATER U23
   - TELECOMMUNICATIONS U39
   - SANITARY SEWER SS55
3. CONTRACTOR TO INSTALL ALL CONDUIT AS INDICATED ON THESE PLANS. CONTRACTOR TO PULL CABLES AS INDICATED ON ELECTRICAL SINGLE LINE DIAGRAMS.
4. CONTRACTOR TO PULL ALL WIRES FOR PATHWAYS INSTALLED IN PACKAGE 2B.
5. FOR COORDINATES NOT SHOWN SEE U-06, U-14 AND U-15.
6. TRENCH ALIGNMENT FROM BEGIN SWEEP TO BOX TO END SWEEP IS INDICATIVE ONLY. CONTRACTOR TO CONSTRUCT PER FIELD CONDITIONS.

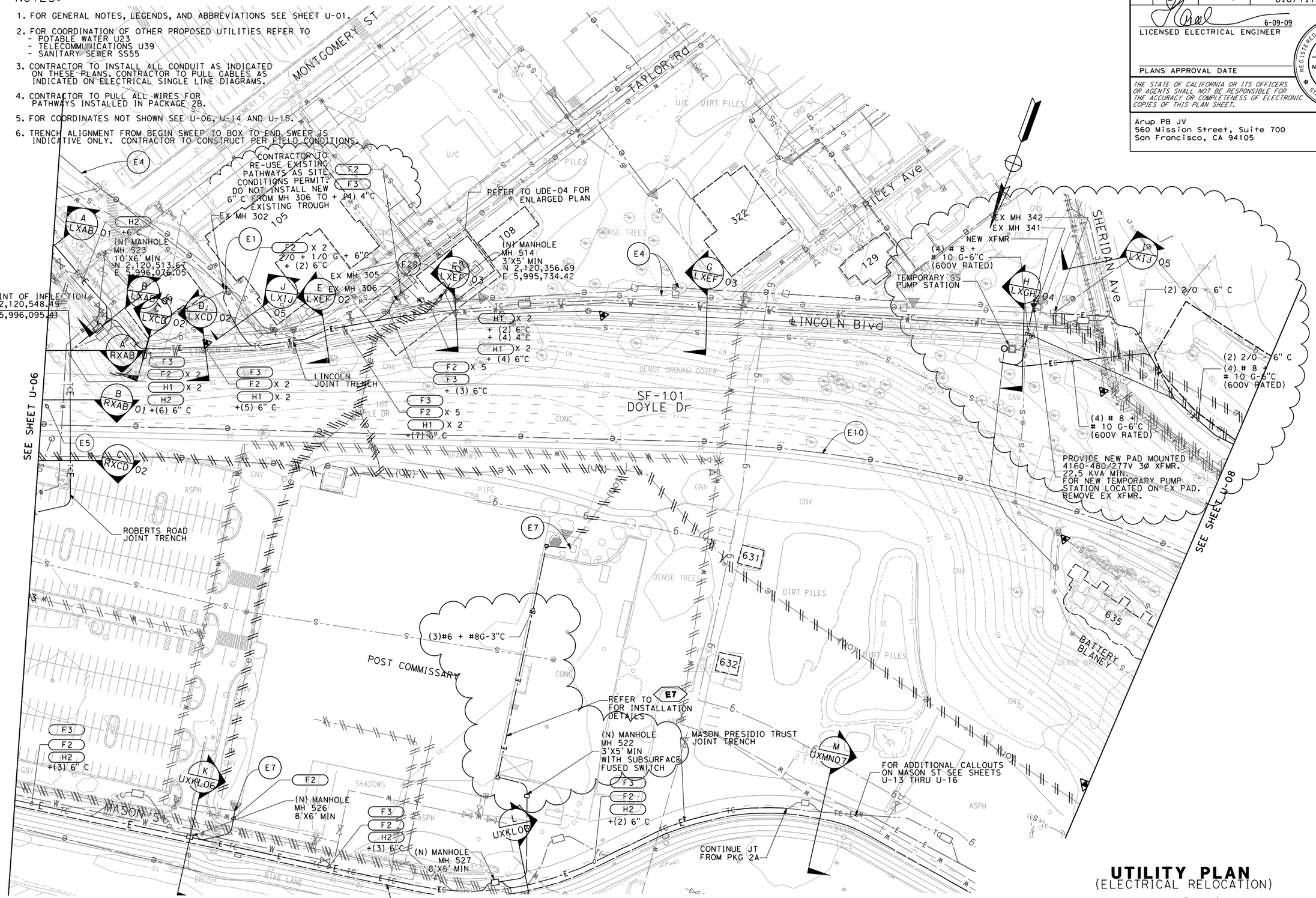

THIS PLAN APPLIES TO ELECTRICAL WORK ONLY.

UTILITY PLAN
(ELECTRICAL RELOCATION)

SCALE 1" - 50'

U-07

MD	MD	MD	REVISED BY
04/23/10	03/23/10	02/02/10	DATE REVISED

GEOFF GUNN — SHAUN LANDMAN — CALCULATED-DESIGNED BY — CHECKED BY

FUNCTIONAL SUPERVISOR — DUANNE GILMORE

STATE OF CALIFORNIA - DEPARTMENT OF TRANSPORTATION — Caltrans

LAST REVISION — DATE PLOTTED => 4/23/2010 — TIME PLOTTED => 11:51:45 AM

Dist	COUNTY	ROUTE	POST MILES TOTAL PROJECT	SHEET No.	TOTAL SHEETS
04	SF	101, 1	8.8/9.2		

REGISTERED CIVIL ENGINEER 7-31-09 DATE

PLANS APPROVAL DATE

REGISTERED PROFESSIONAL ENGINEER JOHN EDWARD KARN JR No. C66743 Exp. 9-30-10 CIVIL STATE OF CALIFORNIA

THE STATE OF CALIFORNIA OR ITS OFFICERS OR AGENTS SHALL NOT BE RESPONSIBLE FOR THE ACCURACY OR COMPLETENESS OF SCANNED COPIES OF THIS PLAN SHEET.

Arup PB JV
560 Mission Street, Suite 700
San Francisco, CA 94105

NOTE:

1. FOR GENERAL NOTES, LEGENDS, AND ABBREVIATIONS, SEE SHEET U-1.

UTILITY PLAN

SCALE 1" - 50'

THIS PLAN ACCURATE FOR UTILITY WORK ONLY

U-7

REVISED BY	DG
DATE REVISED	7/31/09
CALCULATED-DESIGNED BY	DUANNE GILMORE
CHECKED BY	JOHN E KARN
CONSULTANT FUNCTIONAL SUPERVISOR	ABOLFAZL EMADZADEH

STATE OF CALIFORNIA - DEPARTMENT OF TRANSPORTATION

Caltrans

LAST REVISION 07-31-09 DATE PLOTTED => $DATE TIME PLOTTED => $TIME

Dist	COUNTY	ROUTE	POST MILES TOTAL PROJECT	SHEET No.	TOTAL SHEETS
04	SF	101,1	9.0/9.8, 6.8/7.1	8	

8-19-09
LICENSED ELECTRICAL ENGINEER

REGISTERED PROFESSIONAL ENGINEER
SHAUN DAVID LANDMAN
No. E17532
Exp. 6-30-11
ELECTRICAL
STATE OF CALIFORNIA

PLANS APPROVAL DATE

THE STATE OF CALIFORNIA OR ITS OFFICERS OR AGENTS SHALL NOT BE RESPONSIBLE FOR THE ACCURACY OR COMPLETENESS OF ELECTRONIC COPIES OF THIS PLAN SHEET.

Arup PB JV
560 Mission Street, Suite 700
San Francisco, CA 94105

NOTES:

1. FOR GENERAL NOTES, LEGENDS, AND ABBREVIATIONS SEE SHEET U-01.
2. FOR COORDINATION OF OTHER PROPOSED UTILITIES REFER TO
   - POTABLE WATER U24
   - TELECOMMUNICATIONS U40
   - SANITARY SEWER SS56
3. CONTRACTOR TO INSTALL ALL CONDUIT AS INDICATED ON THESE PLANS. CONTRACTOR TO PULL CABLES AS INDICATED ON ELECTRICAL SINGLE LINE DIAGRAMS.

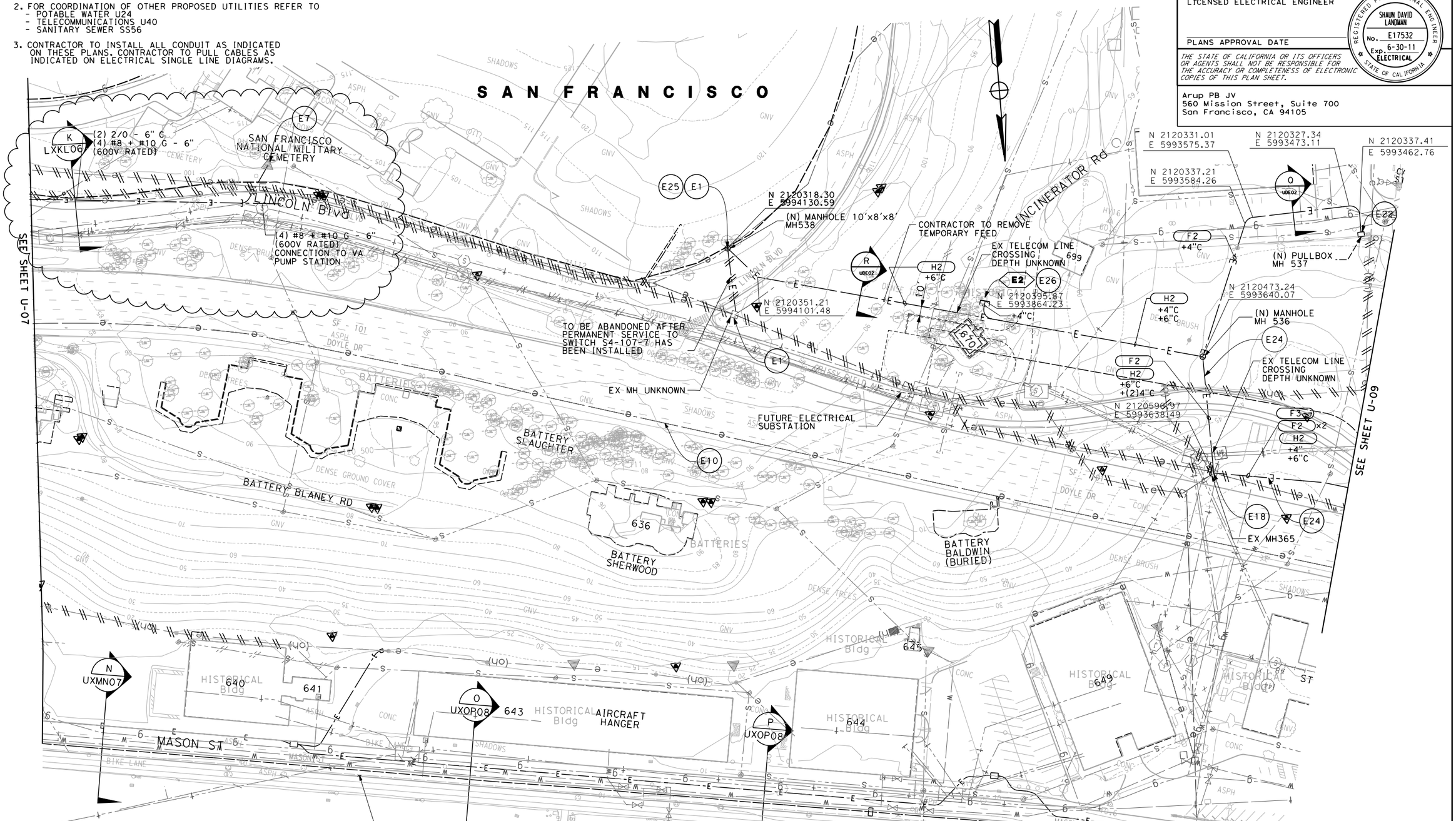

UTILITY PLAN
(ELECTRICAL RELOCATION)

SCALE: 1"=50'

THIS PLAN APPLIES TO ELECTRICAL WORK ONLY.

U-08

MD	MD	MD	REVISED BY
04/23/10	03/23/10	02/02/10	DATE REVISED
GEOFF GUNN			
SHAUN LANDMAN			
CALCULATED-DESIGNED BY			
CHECKED BY			
FUNCTIONAL SUPERVISOR			
DUANNE GILMORE			

STATE OF CALIFORNIA - DEPARTMENT OF TRANSPORTATION
Caltrans

LAST REVISION 10-06-09
DATE PLOTTED => 4/23/2010
TIME PLOTTED => 11:52:29 AM

Dist	COUNTY	ROUTE	POST MILES TOTAL PROJECT	SHEET No.	TOTAL SHEETS
04	SF	101,1	9.0/9.8, 6.8/7.1	9	

8-19-09
LICENSED ELECTRICAL ENGINEER

PLANS APPROVAL DATE

REGISTERED PROFESSIONAL ENGINEER SHAUN DAVID LANDMAN No. E17532 Exp. 6-30-11 ELECTRICAL STATE OF CALIFORNIA

THE STATE OF CALIFORNIA OR ITS OFFICERS OR AGENTS SHALL NOT BE RESPONSIBLE FOR THE ACCURACY OR COMPLETENESS OF ELECTRONIC COPIES OF THIS PLAN SHEET.

Arup PB JV
560 Mission Street, Suite 700
San Francisco, CA 94105

NOTES:

1. FOR GENERAL NOTES, LEGENDS, AND ABBREVIATIONS SEE SHEET U-01.
2. FOR COORDINATION OF OTHER PROPOSED UTILITIES REFER TO
   - POTABLE WATER U25
   - TELECOMMUNICATIONS U41
   - SANITARY SEWER SS57
3. CONTRACTOR TO VERIFY MANHOLE LOCATIONS WITH PRESIDIO TRUST, ENGINEER, AND CALTRANS DURING FIELD WALK PRIOR TO CONSTRUCTION.
4. CONTRACTOR TO PULL WIRES FOR PATHWAYS INSTALLED IN PACKAGE 2A.
5. TRENCH ALIGNMENT FROM BEGIN SWEEP TO BOX TO END SWEEP IS INDICATIVE ONLY. CONTRACTOR TO CONSTRUCT PER FIELD CONDITIONS.

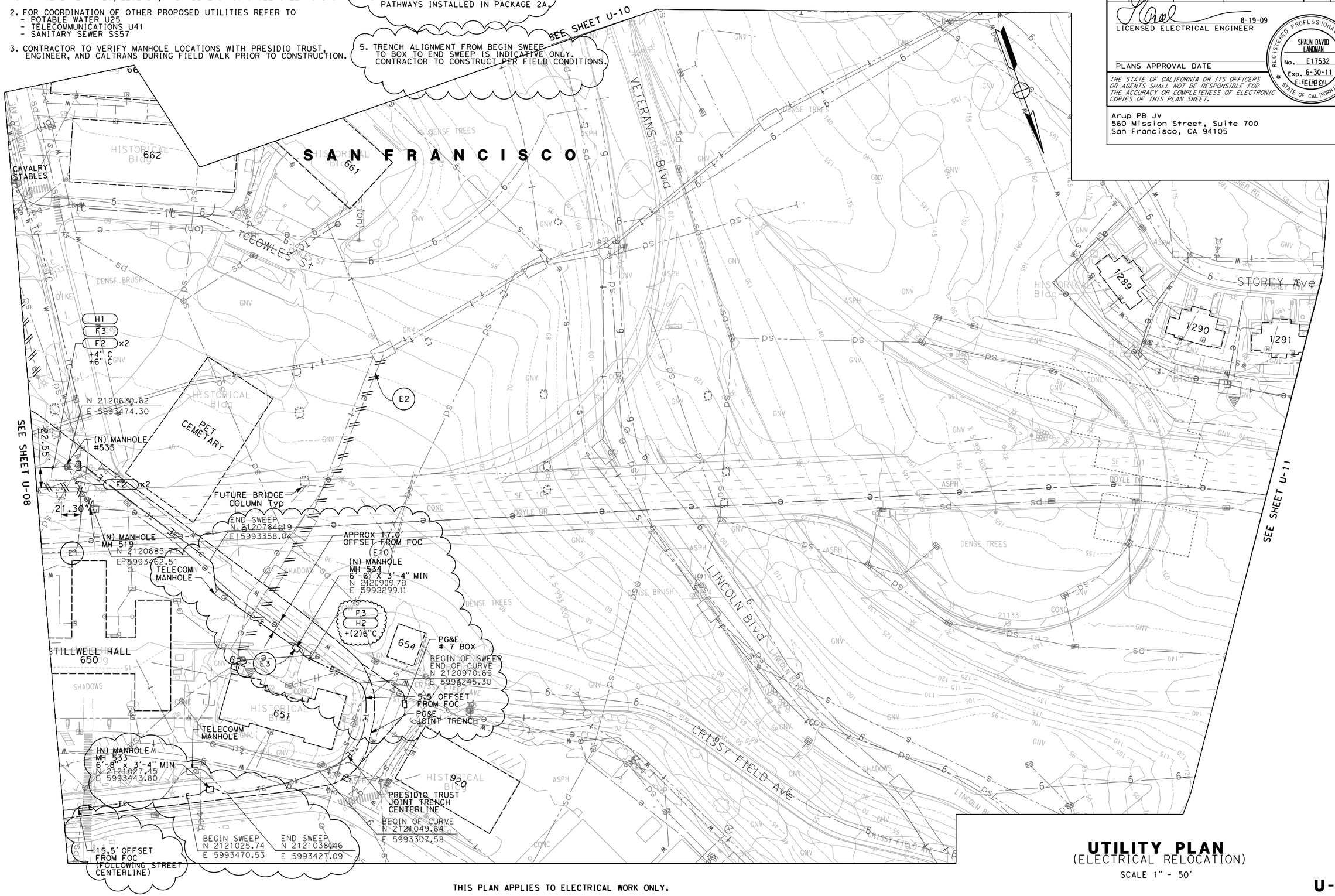

UTILITY PLAN
(ELECTRICAL RELOCATION)

SCALE 1" - 50'

U-09

THIS PLAN APPLIES TO ELECTRICAL WORK ONLY.

MD	12/02/10		
ML	12/10/09		
MD	11/13/09		
REVISED BY	DATE REVISED		
GEOFF GUNN	SHAUN LANDMAN		
CALCULATED-DESIGNED BY	CHECKED BY		
FUNCTIONAL SUPERVISOR	DUANNE GILMORE		

STATE OF CALIFORNIA - DEPARTMENT OF TRANSPORTATION
Caltrans

LAST REVISION | DATE PLOTTED => 2/2/2010 | TIME PLOTTED => 4:28:01 PM

Dist	COUNTY	ROUTE	POST MILES TOTAL PROJECT	SHEET No.	TOTAL SHEETS
04	SF	101,1	9.0/9.8, 6.8/7.1	10	

8-19-09
LICENSED ELECTRICAL ENGINEER

PLANS APPROVAL DATE

REGISTERED PROFESSIONAL ENGINEER
SHAUN DAVID LANDMAN
No. E17532
Exp. 6-30-11
ELEC
STATE OF CALIFORNIA

THE STATE OF CALIFORNIA OR ITS OFFICERS OR AGENTS SHALL NOT BE RESPONSIBLE FOR THE ACCURACY OR COMPLETENESS OF ELECTRONIC COPIES OF THIS PLAN SHEET.

Arup PB JV
560 Mission Street, Suite 700
San Francisco, CA 94105

NOTES:

1. FOR GENERAL NOTES, LEGENDS, AND ABBREVIATIONS SEE SHEET U-01.
2. FOR COORDINATION OF OTHER PROPOSED UTILITIES REFER TO
   - POTABLE WATER U26
   - TELECOMMUNICATIONS U42
   - SANITARY SEWER SS58

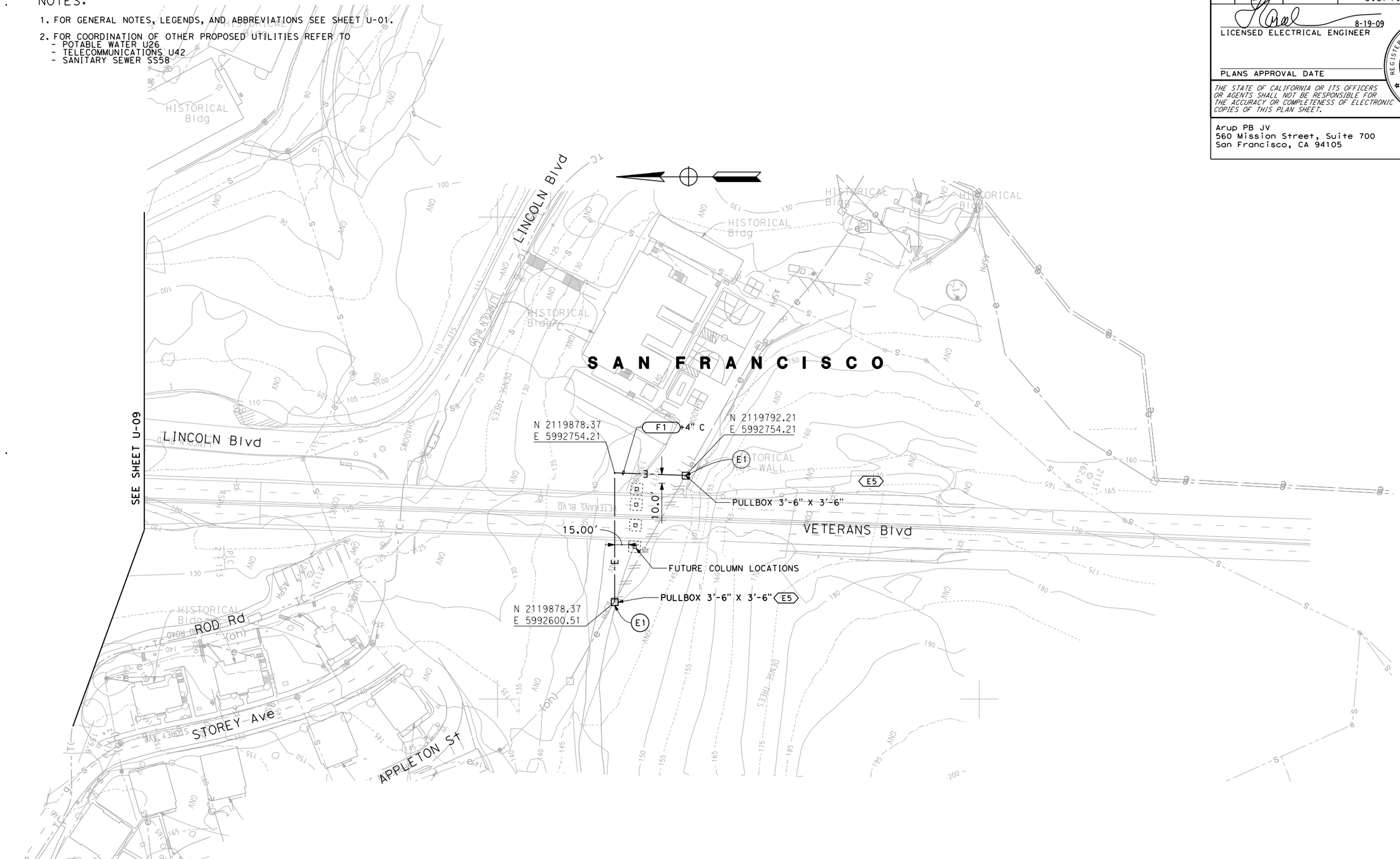

UTILITY PLAN

(ELECTRICAL RELOCATION)

SCALE 1" - 50'

THIS PLAN APPLIES TO ELECTRICAL WORK ONLY.

U-10

CALCULATED-DESIGNED BY	GEOFF GUNN	REVISED BY	ML
CHECKED BY	SHAUN LANDMAN	DATE REVISED	09/02/09 10/05/09
FUNCTIONAL SUPERVISOR	DUANNE GILMORE		

STATE OF CALIFORNIA - DEPARTMENT OF TRANSPORTATION

Caltrans

LAST REVISION 09-02-09 | DATE PLOTTED => 10/5/2009 | TIME PLOTTED => 4:53:44 PM

Dist	COUNTY	ROUTE	POST MILES TOTAL PROJECT	SHEET No.	TOTAL SHEETS
04	SF	101,1	9.0/9.8, 6.8/7.1	13	

6-09-09
LICENSED ELECTRICAL ENGINEER

REGISTERED PROFESSIONAL ENGINEER
SHAUN DAVID LANDMAN
No. E17532
Exp. 6-30-11
ELECTRICAL
STATE OF CALIFORNIA

PLANS APPROVAL DATE

THE STATE OF CALIFORNIA OR ITS OFFICERS OR AGENTS SHALL NOT BE RESPONSIBLE FOR THE ACCURACY OR COMPLETENESS OF ELECTRONIC COPIES OF THIS PLAN SHEET.

Arup PB JV
560 Mission Street, Suite 700
San Francisco, CA 94105

NOTES:

1. FOR GENERAL NOTES, LEGENDS, AND ABBREVIATIONS SEE SHEET U-01.
2. FOR COORDINATION OF OTHER PROPOSED UTILITIES REFER TO
   - POTABLE WATER U29
   - TELECOMMUNICATIONS U45
   - SANITARY SEWER SS61
3. CONTRACTOR TO INSTALL ALL CONDUIT AS INDICATED ON THESE PLANS. CONTRACTOR TO PULL CABLES AS INDICATED ON ELECTRICAL SINGLE LINE DIAGRAMS.

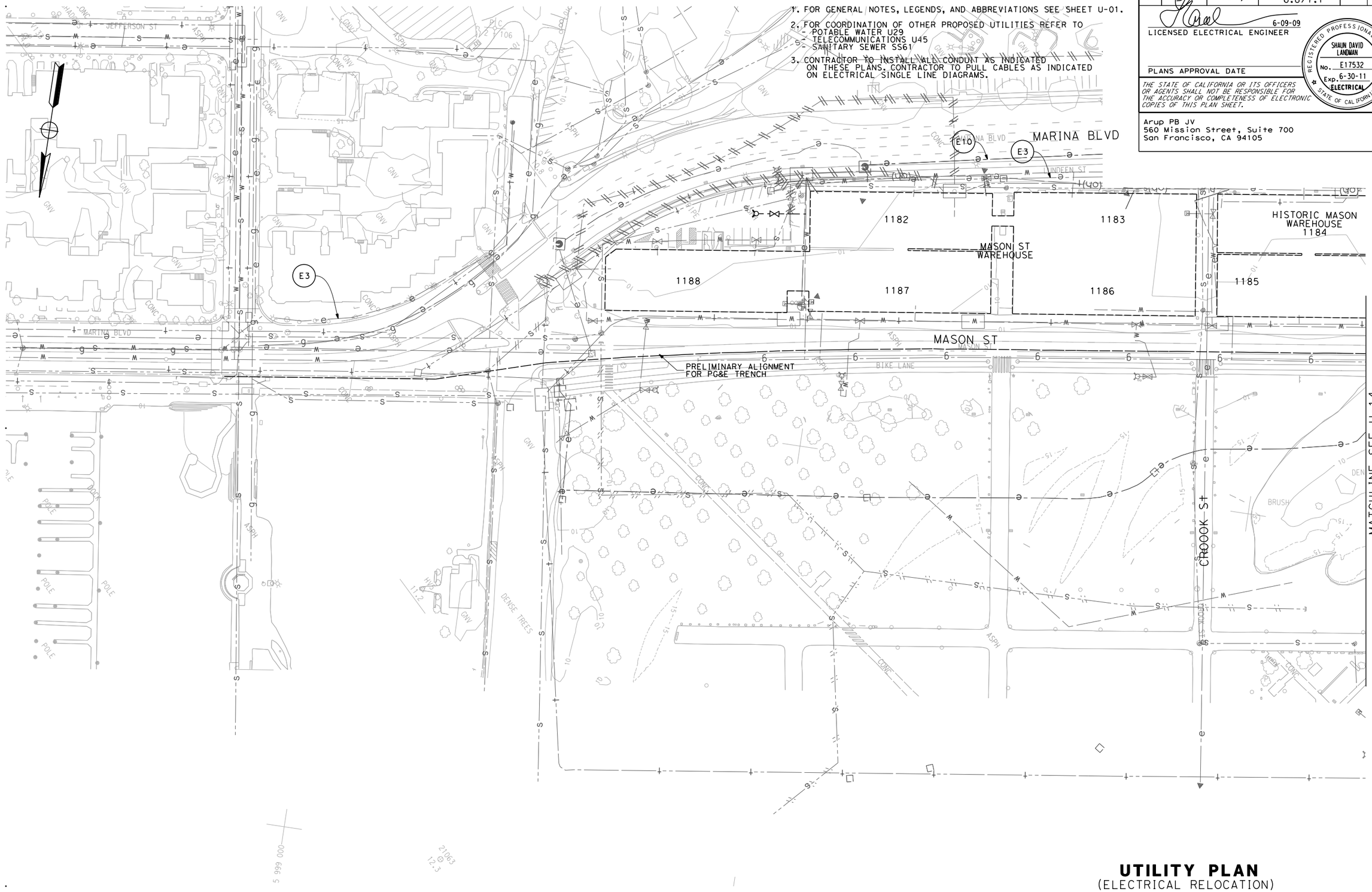

UTILITY PLAN
(ELECTRICAL RELOCATION)
SCALE: 1"=50'

THIS PLAN APPLIES TO ELECTRICAL WORK ONLY.

U-13

REVISED BY	DATE REVISED
MD	12/21/09
JAK	10/20/09

GEOFF GUNN
SHAUN LANDMAN
CALCULATED-DESIGNED BY
CHECKED BY
FUNCTIONAL SUPERVISOR
DUANNE GILMORE

STATE OF CALIFORNIA - DEPARTMENT OF TRANSPORTATION
Caltrans

LAST REVISION
DATE PLOTTED => 12/21/2009
TIME PLOTTED => 6:31:17 PM

Dist	COUNTY	ROUTE	POST MILES TOTAL PROJECT	SHEET No.	TOTAL SHEETS
04	SF	101,1	9.0/9.8, 6.8/7.1	14	

6-09-09
LICENSED ELECTRICAL ENGINEER

REGISTERED PROFESSIONAL ENGINEER
SHAUN DAVID LANDMAN
No. E17532
Exp. 6-30-11
ELECTRICAL
STATE OF CALIFORNIA

PLANS APPROVAL DATE

THE STATE OF CALIFORNIA OR ITS OFFICERS OR AGENTS SHALL NOT BE RESPONSIBLE FOR THE ACCURACY OR COMPLETENESS OF ELECTRONIC COPIES OF THIS PLAN SHEET.

Arup PB JV
560 Mission Street, Suite 700
San Francisco, CA 94105

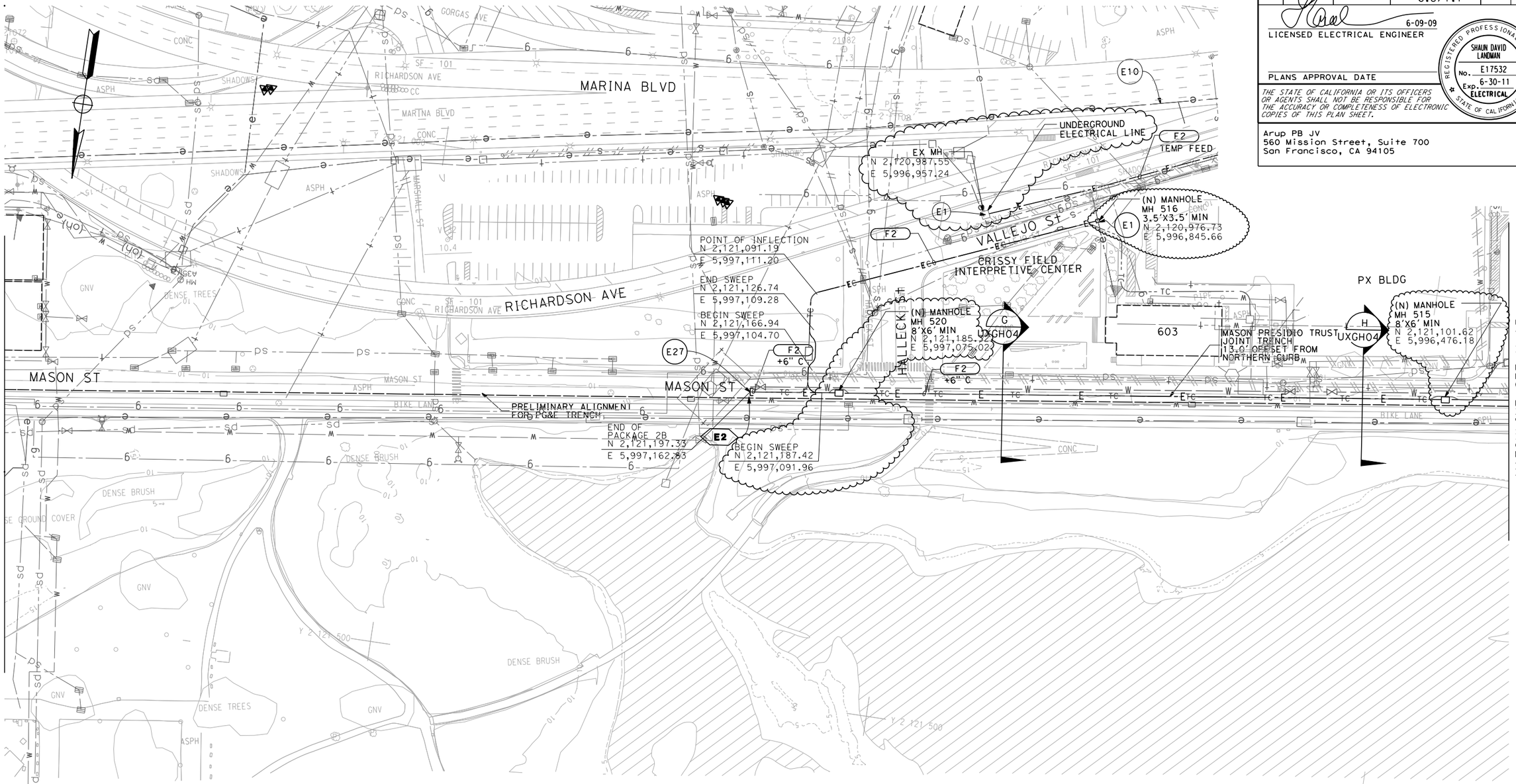

NOTES:

1. FOR GENERAL NOTES, LEGENDS, AND ABBREVIATIONS SEE SHEET U-02.
2. FOR COORDINATION OF OTHER PROPOSED UTILITIES REFER TO
   - POTABLE WATER U32
   - TELECOMMUNICATIONS U46
   - SANITARY SEWER SS62
3. CONTRACTOR TO INSTALL ALL CONDUIT AS INDICATED ON THESE PLANS. CONTRACTOR TO PULL CABLES AS INDICATED ON ELECTRICAL SINGLE LINE DIAGRAMS.
4. CONTRACTOR AND PRESIDIO TRUST HAVE AGREED THAT 750' LENGTH OF CONDUIT BETWEEN BOXES MH 520 AND MH 515 IS ACCEPTABLE.
5. TRENCH ALIGNMENT FROM BEGIN SWEEP TO BOX TO END SWEEP IS INDICATIVE ONLY. CONTRACTOR TO CONSTRUCT PER FIELD CONDITIONS.
6. CONTRACTOR TO PULL ALL WIRES FOR PATHWAYS INSTALLED IN PACKAGE 2B.
7. FOR COORDINATES NOT SHOWN SEE U-06, U-07 AND U-15.

UTILITY PLAN
(ELECTRICAL RELOCATION)

SCALE: 1"=50'

THIS PLAN APPLIES TO ELECTRICAL WORK ONLY.

U-14

REVISED BY	DATE REVISED
MD	02/02/10
MD	01/06/10
MD	12/21/09

GEOFF GUNN — SHAUN LANDMAN
CALCULATED-DESIGNED BY — CHECKED BY
FUNCTIONAL SUPERVISOR — DUANNE GILMORE

STATE OF CALIFORNIA - DEPARTMENT OF TRANSPORTATION
Caltrans

LAST REVISION — DATE PLOTTED => 2/2/2010 TIME PLOTTED => 4:28:12 PM

Dist	COUNTY	ROUTE	POST MILES TOTAL PROJECT	SHEET No.	TOTAL SHEETS
04	SF	101,1	9.0/9.8, 6.8/7.1	15	

6-09-09
LICENSED ELECTRICAL ENGINEER

REGISTERED PROFESSIONAL ENGINEER
SHAUN DAVID LANDMAN
No. E17532
Exp. 6-30-11
ELECTRICAL
STATE OF CALIFORNIA

PLANS APPROVAL DATE

THE STATE OF CALIFORNIA OR ITS OFFICERS OR AGENTS SHALL NOT BE RESPONSIBLE FOR THE ACCURACY OR COMPLETENESS OF ELECTRONIC COPIES OF THIS PLAN SHEET.

Arup PB JV
560 Mission Street, Suite 700
San Francisco, CA 94105

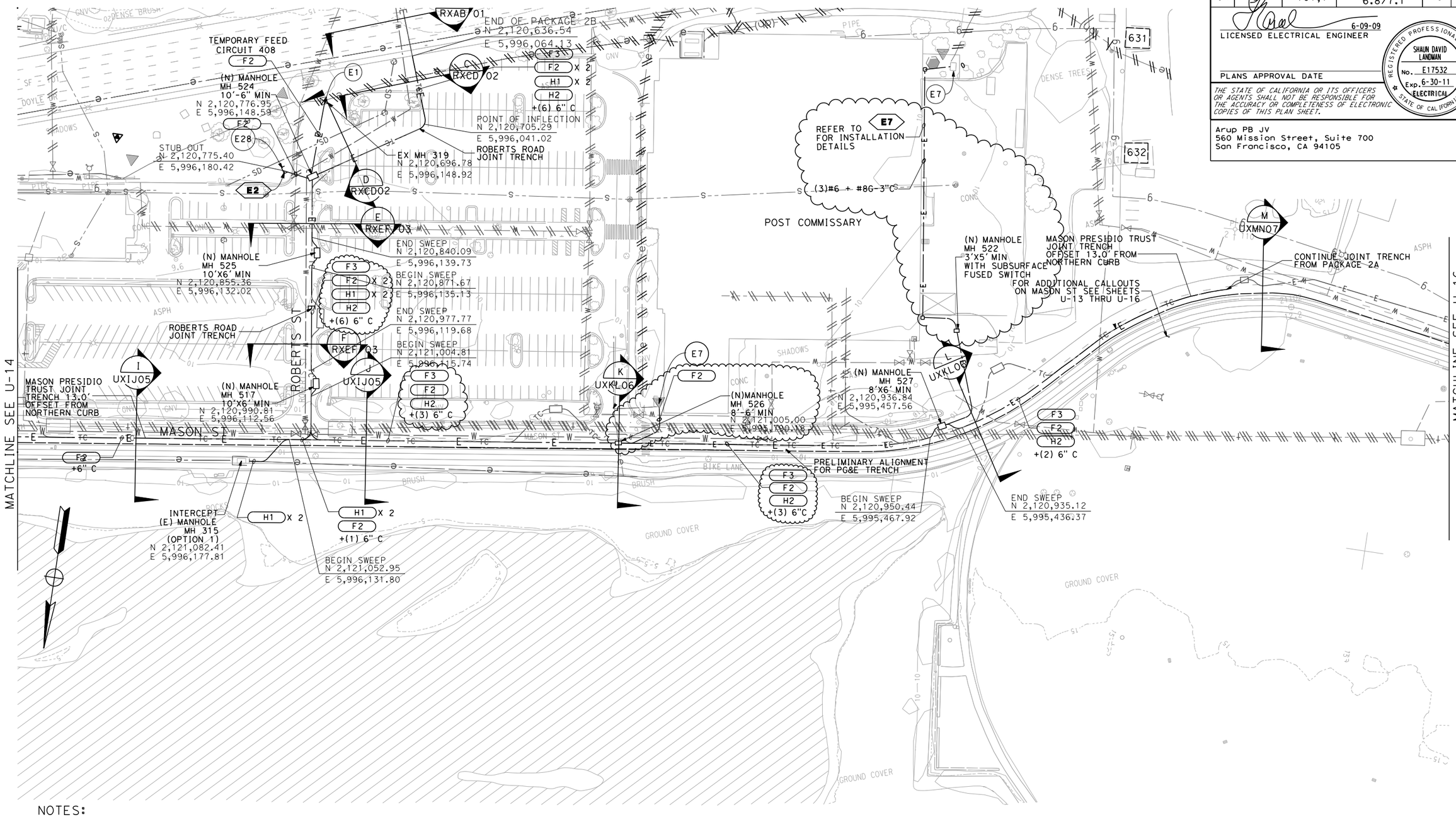

NOTES:

1. FOR GENERAL NOTES, LEGENDS, AND ABBREVIATIONS SEE SHEET U-01.
2. FOR COORDINATION OF OTHER PROPOSED UTILITIES REFER TO
   - POTABLE WATER U31
   - TELECOMMUNICATIONS U47
   - SANITARY SEWER SS63
3. CONTRACTOR TO INSTALL ALL CONDUIT AS INDICATED ON THESE PLANS. CONTRACTOR TO PULL CABLES AS INDICATED ON ELECTRICAL SINGLE LINE DIAGRAMS.
4. CONTRACTOR TO PULL ALL WIRES FOR PATHWAYS INSTALLED IN PACKAGE 2B.
5. FOR COORDINATES NOT SHOWN SEE U-06, U-07 AND U-14.
6. TRENCH ALIGNMENT FROM BEGIN SWEEP TO BOX TO END SWEEP IS INDICATIVE ONLY. CONTRACTOR TO CONSTRUCT PER FIELD CONDITIONS.

THIS PLAN APPLIES TO ELECTRICAL WORK ONLY.

UTILITY PLAN
(ELECTRICAL RELOCATION)

SCALE: 1"=50'

U-15

MD	MD	MD	MD	GEOFF GUNN	FUNCTIONAL SUPERVISOR
04/23/10	02/02/10	01/06/10	DATE REVISED	SHAUN LANDMAN	DUANNE GILMORE
			REVISED BY	CALCULATED-DESIGNED BY	CHECKED BY

STATE OF CALIFORNIA - DEPARTMENT OF TRANSPORTATION
Caltrans

LAST REVISION
DATE PLOTTED => 4/23/2010
TIME PLOTTED => 11:53:28 AM

Dist	COUNTY	ROUTE	POST MILES TOTAL PROJECT	SHEET No.	TOTAL SHEETS
04	SF	101,1	9.0/9.8, 6.8/7.1		

6-09-09
LICENSED ELECTRICAL ENGINEER

REGISTERED PROFESSIONAL ENGINEER
SHAUN DAVID LANDMAN
No. E17532
Exp. 6-30-11
ELEC
STATE OF CALIFORNIA

PLANS APPROVAL DATE

THE STATE OF CALIFORNIA OR ITS OFFICERS OR AGENTS SHALL NOT BE RESPONSIBLE FOR THE ACCURACY OR COMPLETENESS OF ELECTRONIC COPIES OF THIS PLAN SHEET.

Arup PB JV
560 Mission Street, Suite 700
San Francisco, CA 94105

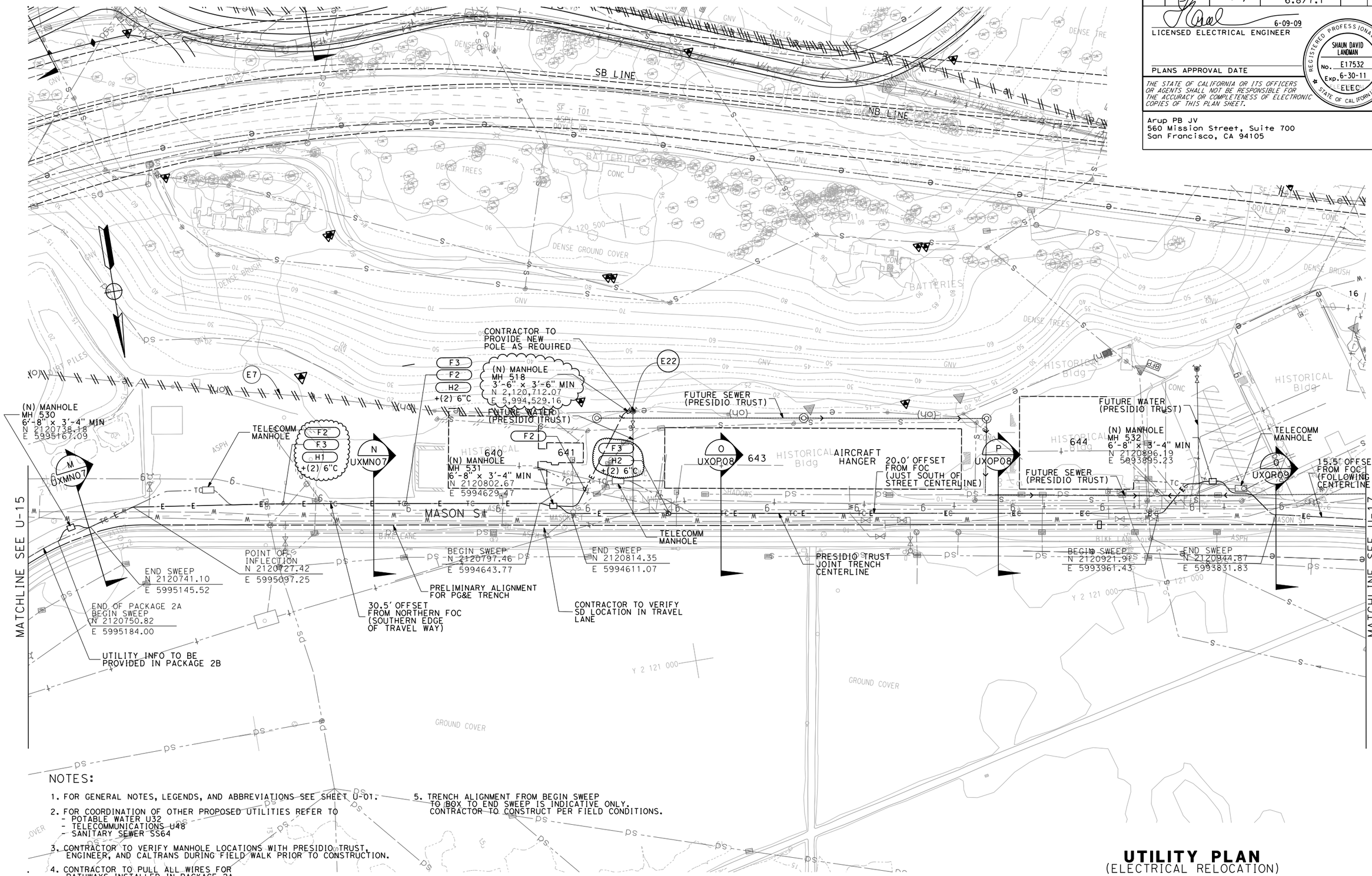

NOTES:

1. FOR GENERAL NOTES, LEGENDS, AND ABBREVIATIONS SEE SHEET U-01.
2. FOR COORDINATION OF OTHER PROPOSED UTILITIES REFER TO
   - POTABLE WATER U32
   - TELECOMMUNICATIONS U48
   - SANITARY SEWER SS64
3. CONTRACTOR TO VERIFY MANHOLE LOCATIONS WITH PRESIDIO TRUST, ENGINEER, AND CALTRANS DURING FIELD WALK PRIOR TO CONSTRUCTION.
4. CONTRACTOR TO PULL ALL WIRES FOR PATHWAYS INSTALLED IN PACKAGE 2A.
5. TRENCH ALIGNMENT FROM BEGIN SWEEP TO BOX TO END SWEEP IS INDICATIVE ONLY. CONTRACTOR TO CONSTRUCT PER FIELD CONDITIONS.

UTILITY PLAN
(ELECTRICAL RELOCATION)

SCALE:1"=50'

THIS PLAN APPLIES TO ELECTRICAL WORK ONLY.

U-16

	REVISED BY	DATE REVISED
	MD	04/23/10
	MD	02/02/10
	MD	12/28/09

CALCULATED-DESIGNED BY: GEOFF GUNN
CHECKED BY: SHAUN LANDMAN
FUNCTIONAL SUPERVISOR: DUANNE GILMORE

STATE OF CALIFORNIA - DEPARTMENT OF TRANSPORTATION
Caltrans

LAST REVISION
DATE PLOTTED => 4/22/2010
TIME PLOTTED => 11:09:02 AM

Dist	COUNTY	ROUTE	POST MILES TOTAL PROJECT	SHEET No.	TOTAL SHEETS
04	SF	101,1	9.0/9.8, 6.8/7.1	17	

6-09-09
LICENSED ELECTRICAL ENGINEER

REGISTERED PROFESSIONAL ENGINEER
SHAUN DAVID LANDMAN
No. E17532
Exp. 6-30-11
ELECTRICAL
STATE OF CALIFORNIA

PLANS APPROVAL DATE

THE STATE OF CALIFORNIA OR ITS OFFICERS OR AGENTS SHALL NOT BE RESPONSIBLE FOR THE ACCURACY OR COMPLETENESS OF ELECTRONIC COPIES OF THIS PLAN SHEET.

Arup PB JV
560 Mission Street, Suite 700
San Francisco, CA 94105

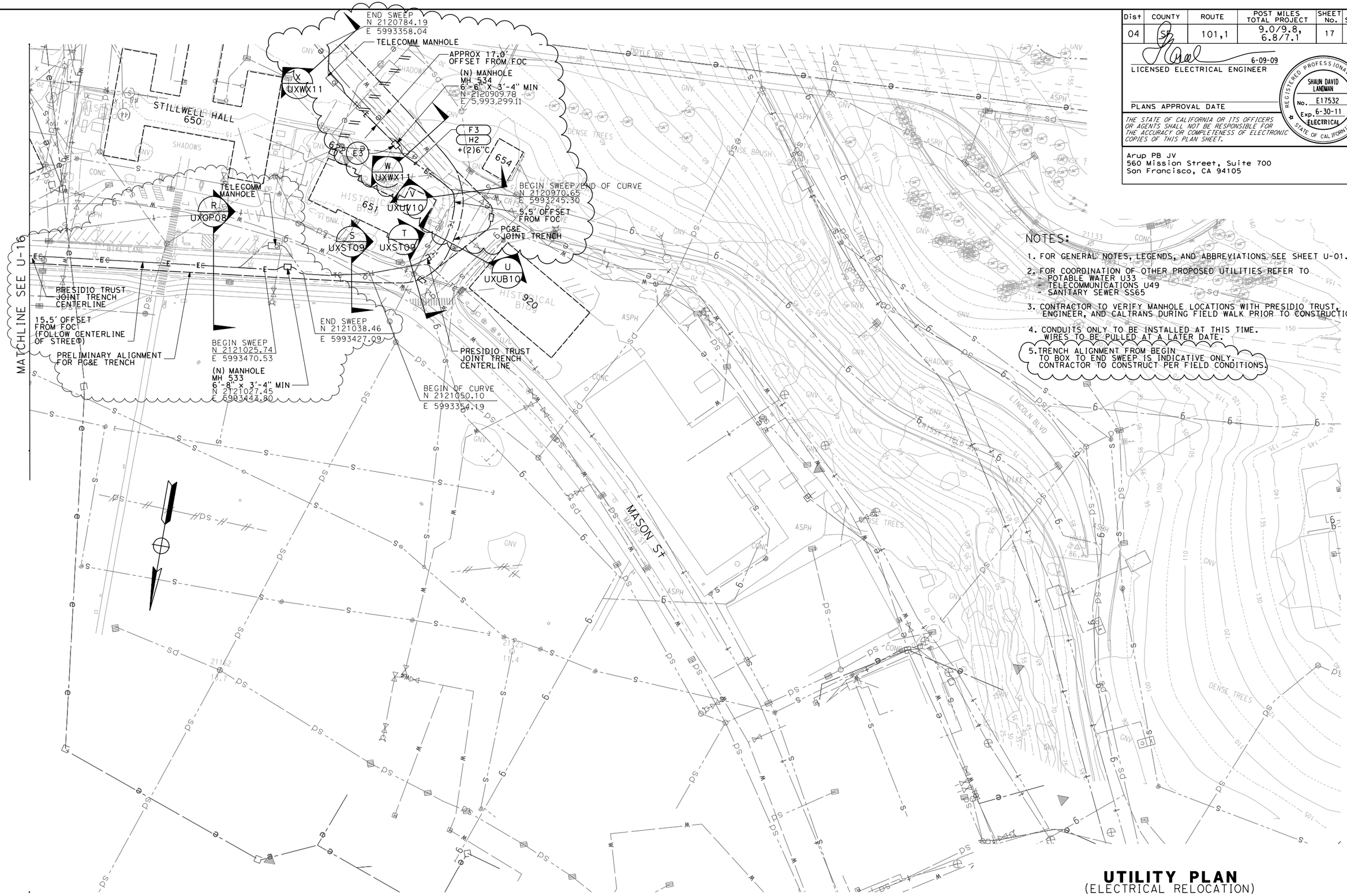

NOTES:

1. FOR GENERAL NOTES, LEGENDS, AND ABBREVIATIONS SEE SHEET U-01.
2. FOR COORDINATION OF OTHER PROPOSED UTILITIES REFER TO
   - POTABLE WATER U33
   - TELECOMMUNICATIONS U49
   - SANITARY SEWER SS65
3. CONTRACTOR TO VERIFY MANHOLE LOCATIONS WITH PRESIDIO TRUST, ENGINEER, AND CALTRANS DURING FIELD WALK PRIOR TO CONSTRUCTION.
4. CONDUITS ONLY TO BE INSTALLED AT THIS TIME. WIRES TO BE PULLED AT A LATER DATE.
5. TRENCH ALIGNMENT FROM BEGIN TO BOX TO END SWEEP IS INDICATIVE ONLY. CONTRACTOR TO CONSTRUCT PER FIELD CONDITIONS.

UTILITY PLAN
(ELECTRICAL RELOCATION)

SCALE: 1"=50'

THIS PLAN APPLIES TO ELECTRICAL WORK ONLY.

U-17

REVISED BY	DATE REVISED
MD	02/02/10
ML	12/10/09
MD	11/13/09

GEOFF GUNN
SHAUN LANDMAN
CALCULATED-DESIGNED BY
CHECKED BY
FUNCTIONAL SUPERVISOR
DUANNE GILMORE

STATE OF CALIFORNIA - DEPARTMENT OF TRANSPORTATION
Caltrans

LAST REVISION
DATE PLOTTED => 2/2/2010
TIME PLOTTED => 5:57:27 PM

Dist	COUNTY	ROUTE	POST MILES TOTAL PROJECT	SHEET No.	TOTAL SHEETS
04	SF	101.1	9.0/9.8, 6.8/7.1		

6-09-09
LICENSED CIVIL ENGINEER

REGISTERED PROFESSIONAL ENGINEER
ALISDAIR IAIN MCGREGOR
No. M27439
Exp. 6-30-11
MECHANICAL
STATE OF CALIFORNIA

PLANS APPROVAL DATE

THE STATE OF CALIFORNIA OR ITS OFFICERS OR AGENTS SHALL NOT BE RESPONSIBLE FOR THE ACCURACY OR COMPLETENESS OF ELECTRONIC COPIES OF THIS PLAN SHEET.

Arup PB JV
560 Mission Street, Suite 700
San Francisco, CA 94105

GENERAL NOTES:

1. LOCATION OF UTILITIES AND FACILITIES SHOWN ON THESE PLANS WERE OBTAINED FROM OWNER'S RECORDS,FIELD MEASUREMENTS, AND POTHOLE INFORMATION; LOCATIONS ARE APPROXIMATE ONLY. AN INDEPENDENT INVESTIGATION IS TO BE CARRIED OUT BY THE CONTRACTOR TO VERIFY LOCATIONS AND DEPTHS OF EXISTING UTILITIES.
2. NEW AND RELOCATED UTILITIES MAY BE OTHER THAN SHOWN, CONTRACTOR SHALL NOTIFY UNDERGROUND SERVICE ALERT (USA) AT 1-(800) 227-2600 48 HOURS BEFORE DIGGING, TRENCHING, OR GRADING.
3. THIS SET OF DRAWINGS, AS PART OF THE CONSTRUCTION DOCUMENT, IS A DIAGRAMMATIC REPRESENTATION OF THE DESIGN INTENT. CONTRACTOR SHALL COORDINATE PRECISE LOCATIONS OF ALL COMPONENTS DEPICTED HEREIN WITH ALL OTHER UTILITIES AND OTHER ENGINEERING DRAWINGS. INSTALLATION DETAILS SHALL BE COORDINATED WITH RESPECTIVE VENDORS AND SUBMITTED FOR REVIEW DURING THE CONSTRUCTION PROCESS.
4. EXISTING UTILITY MATERIALS FOR DUCTS, PIPE & CONDUIT MAY CONTAIN HAZARDOUS MATERIALS. HAZARDOUS MATERIALS ARE TO BE VERIFIED WITH PRESIDIO TRUST STAFF AND BE PROTECTED IN PLACE OR REMOVED WITH NECESSARY SAFETY REQUIREMENTS.
5. RESIDENT ENGINEER IS TO COORDINATE THE CONSTRUCTION SCHEDULE OF ALL PROPOSED UTILITIES ON SITE.
6. ALL WORKS ARE TO BE CARRIED OUT ACCORDING TO PRESIDIO TRUST STANDARD SPECIFICATIONS. FOR WORKS NOT DESCRIBED IN THE PRESIDIO TRUST STANDARD SPECIFICATIONS, CALTRANS OR CITY OF SAN FRANCISCO STANDARD SPECIFICATIONS WILL BE APPLIED AT THE SATISFACTION OF THE RESIDENT ENGINEER AND PRESIDIO TRUST.
7. COORDINATES SHOWN ARE CALIFORNIA STATE PLANE ZONE 3. COORDINATES SHALL BE VERIFIED WITH THE RESIDENT ENGINEER RELATIVE TO PERMANENT SURVEY MARK.
8. COORDINATES SHOWN ON MAINTENANCE HOLES ARE TO THE CENTER OF COVER.
9. REINSTATEMENT IS TO BE CONDUCTED PER PRESIDIO TRUST STANDARD SPECIFICATIONS AND OPERATIONS DEPARTMENT WORK APPLICATION STANDARDS.
10. EXISTING UTILITIES IN CONFLICT WITH FUTURE ALIGNMENT TO BE RELOCATED.
11. ALL UTILITIES SHOWN IN THESE PLANS ARE BASED UPON RECORD INFORMATION OBTAINED FROM UTILITY OWNERS, AND/OR FIELD SURVEYS OF EXISTING UTILITY SURFACE FEATURES.
12. LOCATION OF UTILITY FACILITIES SHOWN ON THESE PLANS ARE APPROXIMATE AND SHALL BE VERIFIED BY THE CONTRACTOR PRIOR TO CONSTRUCTION.
13. FUTURE COLUMN, ABUTMENT AND SURFACE STRUCTURES WILL BE STAKED AND VERIFIED BY THE RESIDENT ENGINEER IN THE FIELD PRIOR TO RELOCATION WORKS
14. DESIGN STRATEGIES AND CONSTRUCTION OF ALL PROPOSED NEW OR REPLACEMENT UTILITY LINES, MANHOLES AND APPRUTENANCES WILL CONFORM TO PRESIDIO TRUST CONSTRUCTION GUIDELINES AND BE ADJUSTED AS NEEDED BY PROJECT TO MATCH INTERIM AND PROPOSED, CONSTRUCTED LANDSCAPED/HARDSCAPE FEATURES/CONDITIONS COSTS ARE TO BE BORNE BY THE PROJECT. ALL PROPOSED NEW OR REPLACEMENT UTILITY WORK AND CONSTRUCTED PRIOR TO COMPLETION OF A GRADING AND LANDSCPE/HARDSCAPE PLAN THAT IS ACCEPTABLE TO THE PRESIDIO TRUST IS AT RISK.
15. ANY WORK IN THE VICINITY OF TREES SHALL BE LIMITED TO SPECIFIC ZONES APPROVED FOR CONSTRUCTION ACTIVITIES, INCLUIDING TREE REMOVAL. ANY PROPOSED WORK APPROVED WITHIN THE ROOT ZONE (OR DRIPLINE) OF ANY TO BE RETAINED TREE SHALL BE PERFORMED UNDER THE DIRECTION OF THE PROJECT ARBORIST AND SUBJECT TO PRESIDIO TRUST REVIEW.
16. THE RESIDENT ENGINEER IS TO ENSURE THAT ALL WORKS CARRIED OUT IN LAND USE CONTROL AREAS ARE TO THE SATISFACTION OF THE GEOTECHNICAL ENGINEER AND METHODOLOGY IS TO BE TO THE SATISFACTION OF THE PRESIDIO TRUST.
17. CONSTRUCTION THAT OCCURS OUTSIDE THE TEMPORARY CONSTRUCTION EASEMENT AND NOT WITHIN ROADWAYS SHOULD PROCEED WITH CONSENT FROM THE PRESIDIO TRUST AND VETERANS ADMINISTRATION (WHERE APPROPRIATE) TO AVOID MISTREATMENT OF SENSITIVE AREAS AND PLANT SPECIES.
18. FOR REINSTATEMENT OF ELATH SLOPE AREAS:
    - -MATERIAL THAT HAS BEEN PLACED ON THE SLOPE BE REMOVED AND REPLACED WITH SUITABLE FILL TO 98% COMPACTION.
    - -THE FILL MATERIAL SHOULD SATISFY ALL PRESIDIO TRUST TESTING CRITERIA FOR CONTAMINATED SOILS.
    - -THE SLOPE SHOULD BE PLACED AT NO STEEPER THAN 2H:1V
    - -CONTINUOUS MONITORING SHOULD BE CARRIED OUT TO ENSURE THE INTEGRITY OF THE SLOPE IS MAINTAINED FOR THE INTENDED TEMPORARY EXPOSED LIFE THE SLOPE WILL STAY COVERED WITH IMPERVIOUS MATERIALS (PLASTIC) DURING THE WET SEASON TO ENSURE A CONSTANT MOISTURE CONTENT UNTIL SEEDING AND APPROPRIATE VEGETATION CAN BE EFFECTIVELY PLACED.
    - -SHOULD SLOPE MOVEMENT BE OBSERVED, APPROPRIATE REMEDIATION WORK SHOULD BE CARRIED OUT AS A PRIORITY.

POTABLE WATER UTILITY

- (P1) - ABANDON IN PLACE
- (P2) - CONNECT TO EXISTING PIPE
- (P3) - ASBESTOS CONCRETE PIPE
- (P4) - EXISTING POTABLE WATER LINE
- (P5) - PIPE REMOVAL TO CONTINUE TO FIRE HYDRANT 250ft BEYOND
- (P6) - DUCTILE IRON PIPE
- (P7) - ABANDON IN PLACE
- (P8) - WATER MAIN IS TO BE PLACED AT A TYPICAL OFFSET OF 5' FROM EXISTING CURB LINE.
- (P9) - EXISTING ELECTRICAL LINE DEPTH TO BE VARIFIED BY CONTRACTOR AND PROTECTED IN PLACE

LEGEND:

—e— —e—	EX ELECTRICAL LINE
—e— —e—	ABANDON ELECTRICAL LINE
—E— —E—	NEW ELECTRICAL LINE
—t— —t—	EX TELECOMMUNICATIONS LINE
—t— —t—	ABANDON TELECOMMUNICATIONS CABLE AND CONDUIT
—TC— —TC—	NEW TELECOMMUNICATIONS LINE
—w— —w—	EX WATER LINE
—w— —w—	ABANDON WATER LINE
—W— —W—	NEW WATER LINE
RC—w— RC—w—	EX RECLAIMED WATER LINE
—s— —s—	EX SANITARY SEWER LINE
—s— —s—	ABANDON SANITARY SEWER LINE
—e— —(or	EX OVERHEAD ELECTRIC LINE
—g— —g—	EX GAS LINE
— — — —	ENVIROMENTALLY/CULTURALLY SENSITIVE AREA
⋈	VALVE
▭ OR ⊗	TELECOMMUNICATIONS MAINTENANCE HOLE
E1	DETAIL CALLOUT
	FUTURE COLUMN LOCATION
	FUTURE COLUMN LOCATION
	FUTURE COLUMN LOCATION

POTABLE WATER GENERAL NOTES & LEGEND

NO SCALE

UNW-01

ML	ML	ML	REVISED BY
02/02/10	01/13/10	12/21/09	DATE REVISED

CIARAN O'DONOVAN — MANISH DALIA — CALCULATED-DESIGNED BY — CHECKED BY

DUANNE GILMORE — FUNCTIONAL SUPERVISOR

STATE OF CALIFORNIA - DEPARTMENT OF TRANSPORTATION — Caltrans

LAST REVISION 08-19-09 — DATE PLOTTED => 2/2/2010 — TIME PLOTTED => 5:48:41 PM

Dist	COUNTY	ROUTE	POST MILES TOTAL PROJECT	SHEET No.	TOTAL SHEETS
				20	

6-09-09
LICENSED CIVIL ENGINEER

REGISTERED PROFESSIONAL ENGINEER
ALISDAIR IAIN MCGREGOR
No. M27439
Exp. 6-30-11
MECHANICAL
STATE OF CALIFORNIA

PLANS APPROVAL DATE

THE STATE OF CALIFORNIA OR ITS OFFICERS OR AGENTS SHALL NOT BE RESPONSIBLE FOR THE ACCURACY OR COMPLETENESS OF ELECTRONIC COPIES OF THIS PLAN SHEET.

Arup PB JV
560 Mission Street, Suite 700
San Francisco, CA 94105

NOTES:

1. FOR GENERAL NOTES, LEGENDS, AND ABBREVIATIONS SEE SHEET U-01.
2. FOR COORDINATION OF OTHER PROPOSED UTILITIES REFER TO
   - ELECTRICAL U04
   - TELECOMMUNICATIONS U36
   - SANITARY SEWER SS52

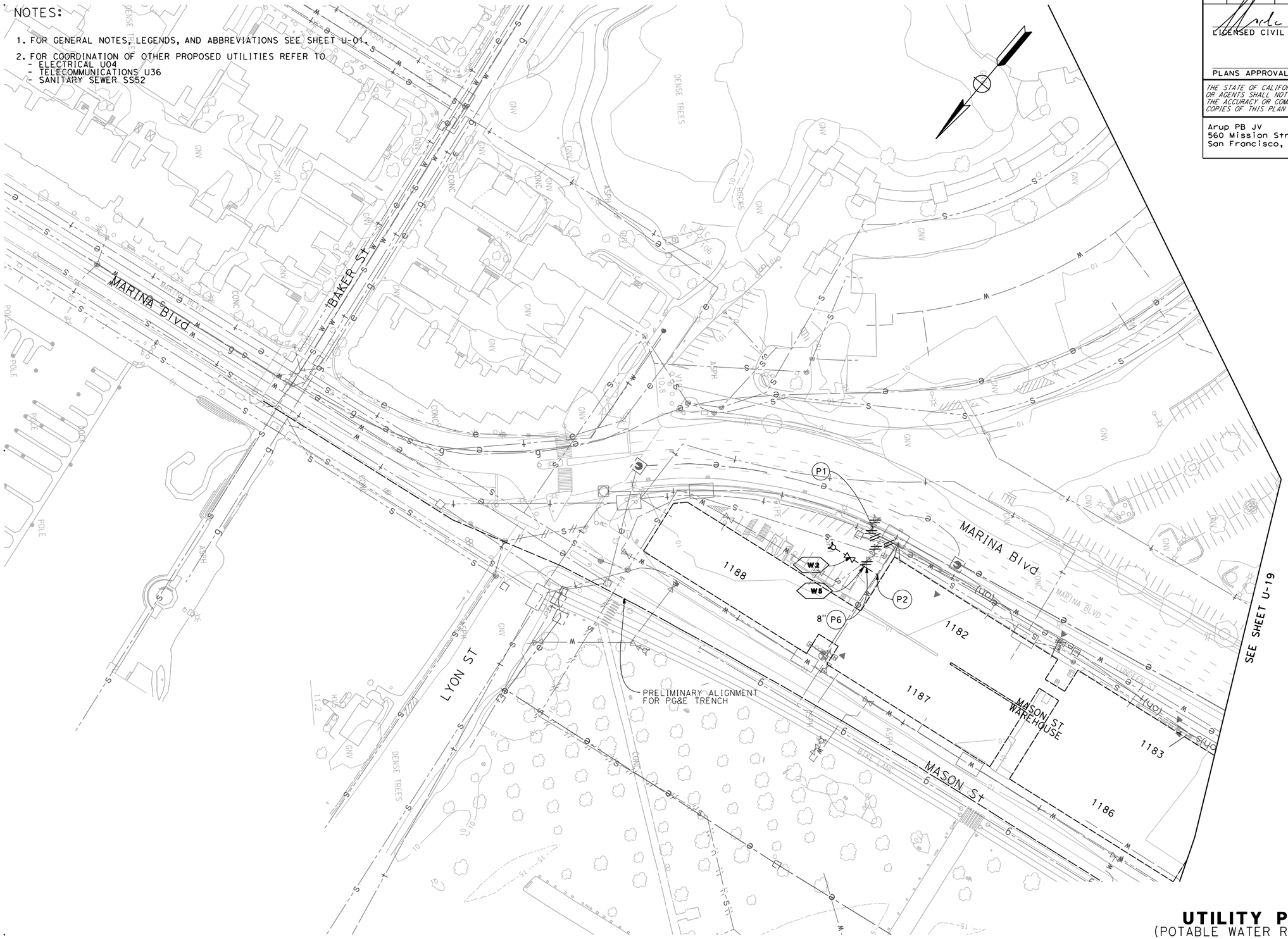

UTILITY PLAN
(POTABLE WATER RELOCATION)

SCALE 1" - 50'

THIS PLAN APPLIES TO POTABLE WATER WORK ONLY.

U-20

CALCULATED-DESIGNED BY	CIARAN O'DONOVAN
CHECKED BY	MANISH DALIA
FUNCTIONAL SUPERVISOR	DUANNE GILMORE
REVISED BY	ML
DATE REVISED	12/21/09
	MD
	01/13/10

STATE OF CALIFORNIA - DEPARTMENT OF TRANSPORTATION
Caltrans

LAST REVISION
DATE PLOTTED => 2/2/2010
TIME PLOTTED => 4:29:33 PM

BORDER LAST REVISED 3/1/2007

RELATIVE BORDER SCALE IS IN INCHES 0 1 2 3

USERNAME => manish.dalia
DGN FILE => $FILE$

CU 00000

EA 04-16372X

Dist	COUNTY	ROUTE	POST MILES TOTAL PROJECT	SHEET No.	TOTAL SHEETS
04	SF	101	8.0/9.8		

6-09-09
LICENSED CIVIL ENGINEER

REGISTERED PROFESSIONAL ENGINEER
ALISDAIR IAIN MCGREGOR
No. M27439
Exp. 6-30-11
MECHANICAL
STATE OF CALIFORNIA

PLANS APPROVAL DATE

THE STATE OF CALIFORNIA OR ITS OFFICERS OR AGENTS SHALL NOT BE RESPONSIBLE FOR THE ACCURACY OR COMPLETENESS OF ELECTRONIC COPIES OF THIS PLAN SHEET.

Arup PB JV
560 Mission Street, Suite 700
San Francisco, CA 94105

NOTES:

1. FOR GENERAL NOTES, LEGENDS, AND ABBREVIATIONS SEE SHEET U-01.
2. FOR COORDINATION OF OTHER PROPOSED UTILITIES REFER TO
   - ELECTRICAL U06
   - TELECOMMUNICATIONS U38
   - SANITARY SEWER SS54
3. FOR COORDINATES NOT SHOWN SEE U-23, U-29, U-30, AND U-31.

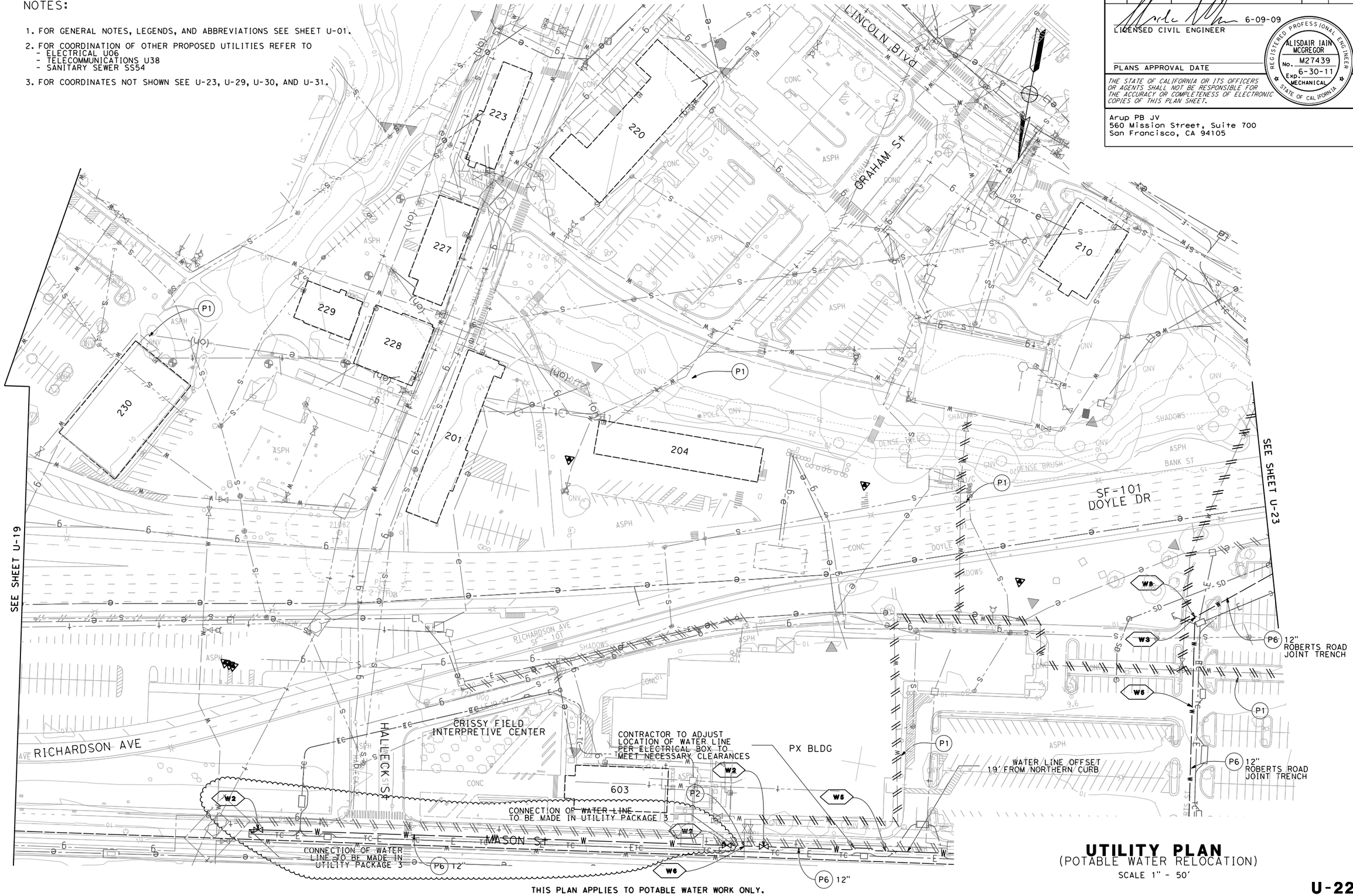

UTILITY PLAN
(POTABLE WATER RELOCATION)
SCALE 1" - 50'

THIS PLAN APPLIES TO POTABLE WATER WORK ONLY.

U-22

MD	01/13/10	CIARAN O'DONOVAN	CALCULATED-DESIGNED BY
MD	01/06/10	MANISH DALIA	CHECKED BY
ML	12/21/09	DUANNE GILMORE	FUNCTIONAL SUPERVISOR
REVISED BY	DATE REVISED		

STATE OF CALIFORNIA - DEPARTMENT OF TRANSPORTATION
Caltrans

LAST REVISION
DATE PLOTTED => 2/2/2010
TIME PLOTTED => 4:29:52 PM

Dist	COUNTY	ROUTE	POST MILES TOTAL PROJECT	SHEET No.	TOTAL SHEETS
				23	

LICENSED CIVIL ENGINEER 6-09-09

PLANS APPROVAL DATE

REGISTERED PROFESSIONAL ENGINEER ALISDAIR IAIN MCGREGOR No. M27439 Exp. 6-30-11 MECHANICAL STATE OF CALIFORNIA

THE STATE OF CALIFORNIA OR ITS OFFICERS OR AGENTS SHALL NOT BE RESPONSIBLE FOR THE ACCURACY OR COMPLETENESS OF ELECTRONIC COPIES OF THIS PLAN SHEET.

Arup PB JV
560 Mission Street, Suite 700
San Francisco, CA 94105

S A N F R A N C I S C O

NOTES:

1. FOR GENERAL NOTES, LEGENDS, AND ABBREVIATIONS SEE SHEET U-01
2. FOR COORDINATION OF OTHER PROPOSED UTILITIES REFER TO
   - ELECTRICAL U07
   - TELECOMMUNICATIONS U39
   - SANITARY SEWER SS55
3. FOR COORDINATES NOT SHOWN SEE U-22, U-29, U-30, AND U-31.

THIS PLAN APPLIES TO POTABLE WATER WORK ONLY.

UTILITY PLAN
(POTABLE WATER RELOCATION)

SCALE 1" - 50'

U-23

DG	05/28/10		
MD	05/19/10		
MD	04/14/10		
REVISED BY	DATE REVISED		
CIARAN O'DONOVAN	MANISH DALIA		
CALCULATED-DESIGNED BY	CHECKED BY		
FUNCTIONAL SUPERVISOR	DUANNE GILMORE		

STATE OF CALIFORNIA - DEPARTMENT OF TRANSPORTATION

Caltrans

LAST REVISION DATE PLOTTED => 5/28/2010 TIME PLOTTED => 11:30:31 AM

Dist	COUNTY	ROUTE	POST MILES TOTAL PROJECT	SHEET No.	TOTAL SHEETS
04	SF	101,1	9.0/9.8, 6.8/7.1		

LICENSED CIVIL ENGINEER 8-19-09

PLANS APPROVAL DATE

REGISTERED PROFESSIONAL ENGINEER ALISDAIR IAIN MCGREGOR No. M27439 Exp. 6-30-11 MECHANICAL STATE OF CALIFORNIA

THE STATE OF CALIFORNIA OR ITS OFFICERS OR AGENTS SHALL NOT BE RESPONSIBLE FOR THE ACCURACY OR COMPLETENESS OF ELECTRONIC COPIES OF THIS PLAN SHEET.

Arup PB JV
560 Mission Street, Suite 700
San Francisco, CA 94105

NOTES:

1. FOR GENERAL NOTES, LEGENDS, AND ABBREVIATIONS SEE SHEET U-01.
2. FOR COORDINATION OF OTHER PROPOSED UTILITIES REFER TO
   - ELECTRICAL U09
   - TELECOMMUNICATIONS U41
   - SANITARY SEWER SS57

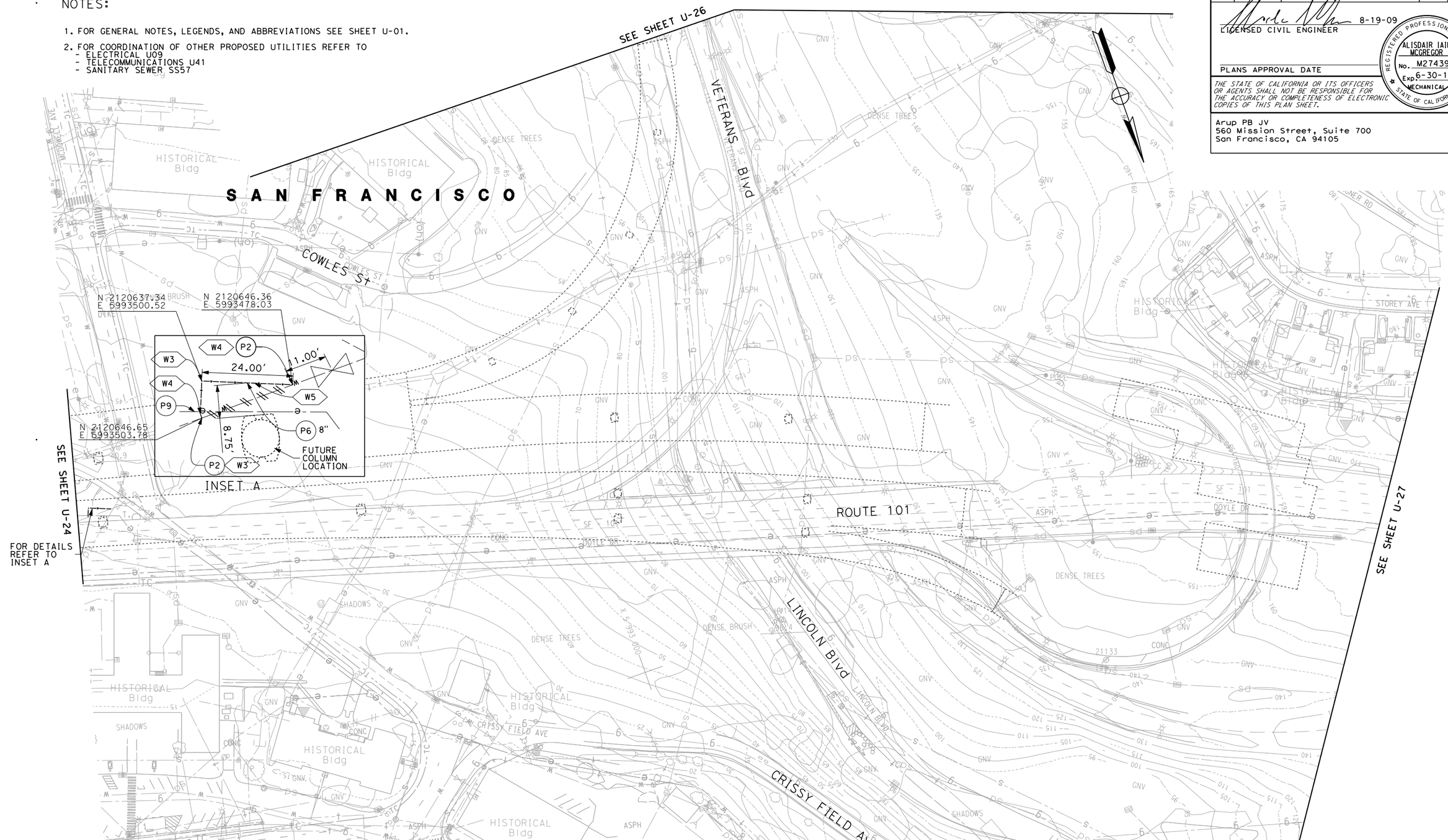

UTILITY PLAN
(POTABLE WATER RELOCATION)
SCALE 1" - 50'

THIS PLAN APPLIES TO POTABLE WATER WORK ONLY.

U-25

CIARAN O'DONOVAN	MANISH DAHLIA	REVISED BY ML	DATE REVISED 08/14/09
		ML	08/19/09

CALCULATED-DESIGNED BY
CHECKED BY

FUNCTIONAL SUPERVISOR DUANNE GILMORE

STATE OF CALIFORNIA - DEPARTMENT OF TRANSPORTATION
Caltrans

LAST REVISION 08-19-09 DATE PLOTTED => 8/19/2009 TIME PLOTTED => 5:50:46 PM

Dist	COUNTY	ROUTE	POST MILES TOTAL PROJECT	SHEET No.	TOTAL SHEETS
				29	

LICENSED CIVIL ENGINEER 6-09-09

PLANS APPROVAL DATE

REGISTERED PROFESSIONAL ENGINEER ALISDAIR IAIN MCGREGOR No. M27439 Exp. 6-30-11 MECHANICAL STATE OF CALIFORNIA

THE STATE OF CALIFORNIA OR ITS OFFICERS OR AGENTS SHALL NOT BE RESPONSIBLE FOR THE ACCURACY OR COMPLETENESS OF ELECTRONIC COPIES OF THIS PLAN SHEET.

Arup PB JV
560 Mission Street, Suite 700
San Francisco, CA 94105

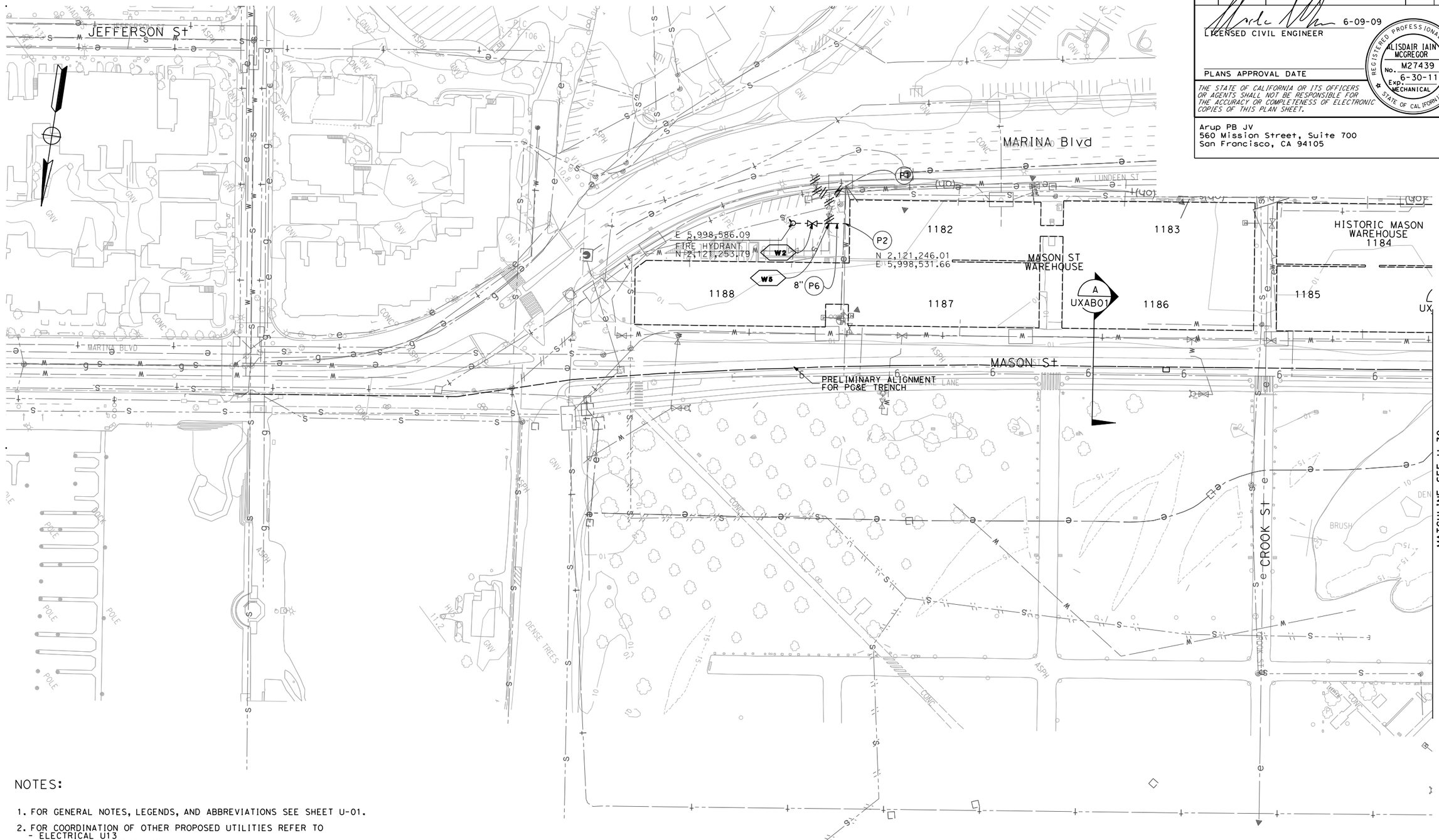

NOTES:

1. FOR GENERAL NOTES, LEGENDS, AND ABBREVIATIONS SEE SHEET U-01.
2. FOR COORDINATION OF OTHER PROPOSED UTILITIES REFER TO
   - ELECTRICAL U13
   - TELECOMMUNICATIONS U45
   - SANITARY SEWER SS61
3. FOR COORDINATES NOT SHOWN SEE U-22, U-23, U-30, AND U-31.

UTILITY PLAN
(POTABLE WATER RELOCATION)

SCALE: 1"=50'

THIS PLAN APPLIES TO POTABLE WATER WORK ONLY.

U-29

MD	01/13/10		
ML	12/21/09		
REVISED BY	DATE REVISED		
CIARAN O'DONOVAN			
MANISH DALIA			
CALCULATED-DESIGNED BY			
CHECKED BY			
FUNCTIONAL SUPERVISOR			
DUANNE GILMORE			

STATE OF CALIFORNIA - DEPARTMENT OF TRANSPORTATION

Caltrans

LAST REVISION DATE PLOTTED => 2/2/2010
TIME PLOTTED => 4:30:14 PM

Dist	COUNTY	ROUTE	POST MILES TOTAL PROJECT	SHEET No.	TOTAL SHEETS
				30	

6-09-09
LICENSED CIVIL ENGINEER

PLANS APPROVAL DATE

REGISTERED PROFESSIONAL ENGINEER
ALISDAIR IAIN MCGREGOR
No. M27439
Exp. 6-30-11
MECHANICAL
STATE OF CALIFORNIA

THE STATE OF CALIFORNIA OR ITS OFFICERS OR AGENTS SHALL NOT BE RESPONSIBLE FOR THE ACCURACY OR COMPLETENESS OF ELECTRONIC COPIES OF THIS PLAN SHEET.

Arup PB JV
560 Mission Street, Suite 700
San Francisco, CA 94105

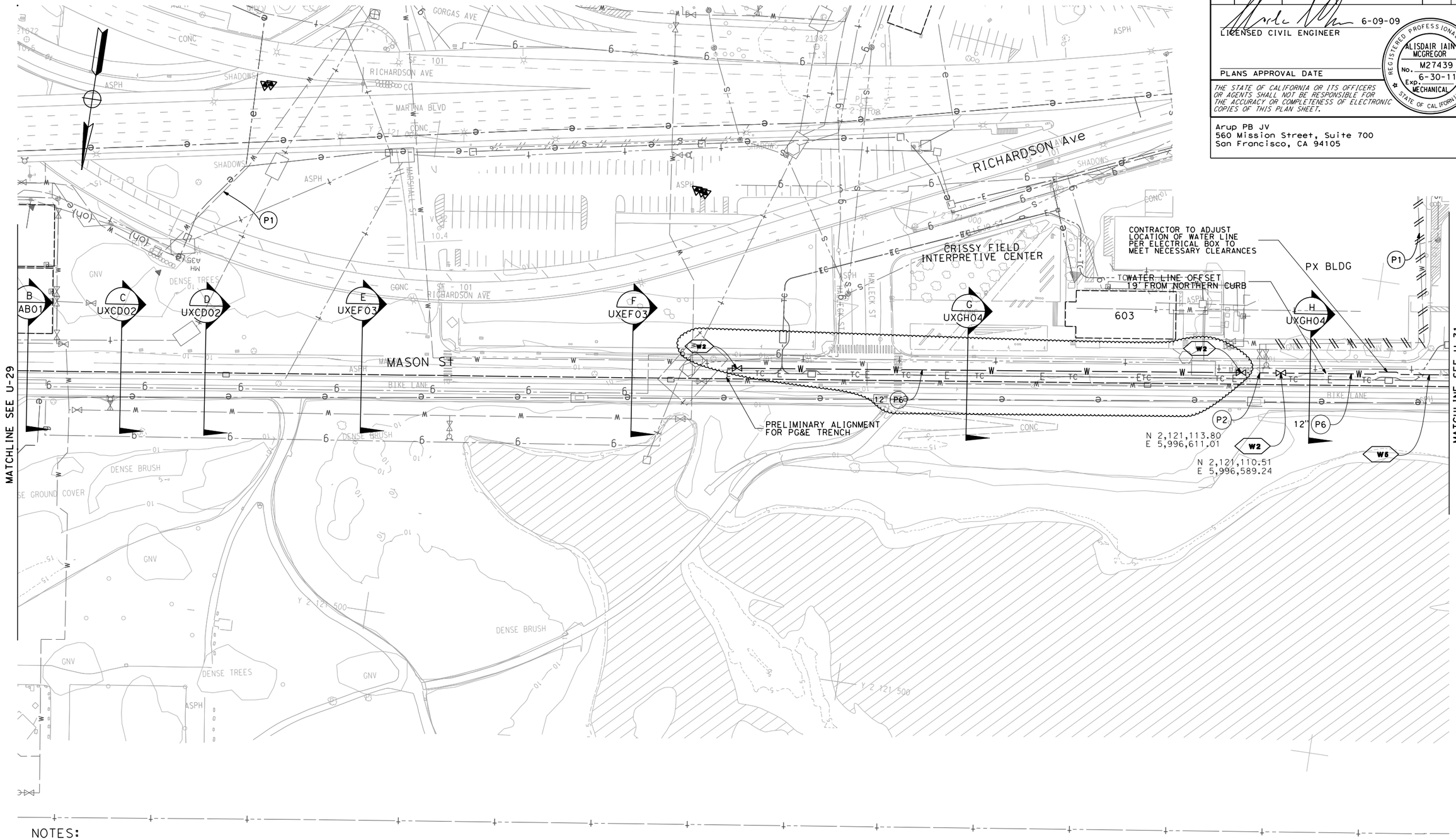

NOTES:

1. FOR GENERAL NOTES, LEGENDS, AND ABBREVIATIONS SEE SHEET U-01.
2. FOR COORDINATION OF OTHER PROPOSED UTILITIES REFER TO
   - ELECTRICAL U14
   - TELECOMMUNICATIONS U46
   - SANITARY SEWER SS62
3. FOR COORDINATES NOT SHOWN SEE U-22, U-23, U-29, AND U-31.

THIS PLAN APPLIES TO POTABLE WATER WORK ONLY.

UTILITY PLAN
(POTABLE WATER RELOCATION)

SCALE: 1"=50'

U-30

	REVISED BY	DATE REVISED
MD	MD	ML
MD	MD	01/13/10
	01/06/10	12/21/09

CALCULATED-DESIGNED BY: CIARAN O'DONOVAN
CHECKED BY: MANISH DALIA
FUNCTIONAL SUPERVISOR: DUANNE GILMORE

STATE OF CALIFORNIA - DEPARTMENT OF TRANSPORTATION
Caltrans

LAST REVISION
DATE PLOTTED => 2/2/2010
TIME PLOTTED => 4:30:19 PM

Dist	COUNTY	ROUTE	POST MILES TOTAL PROJECT	SHEET No.	TOTAL SHEETS
				31	

LICENSED CIVIL ENGINEER 6-09-09

REGISTERED PROFESSIONAL ENGINEER ALISDAIR IAIN MCGREGOR No. M27439 Exp. 6-30-11 MECHANICAL STATE OF CALIFORNIA

PLANS APPROVAL DATE

THE STATE OF CALIFORNIA OR ITS OFFICERS OR AGENTS SHALL NOT BE RESPONSIBLE FOR THE ACCURACY OR COMPLETENESS OF ELECTRONIC COPIES OF THIS PLAN SHEET.

Arup PB JV
560 Mission Street, Suite 700
San Francisco, CA 94105

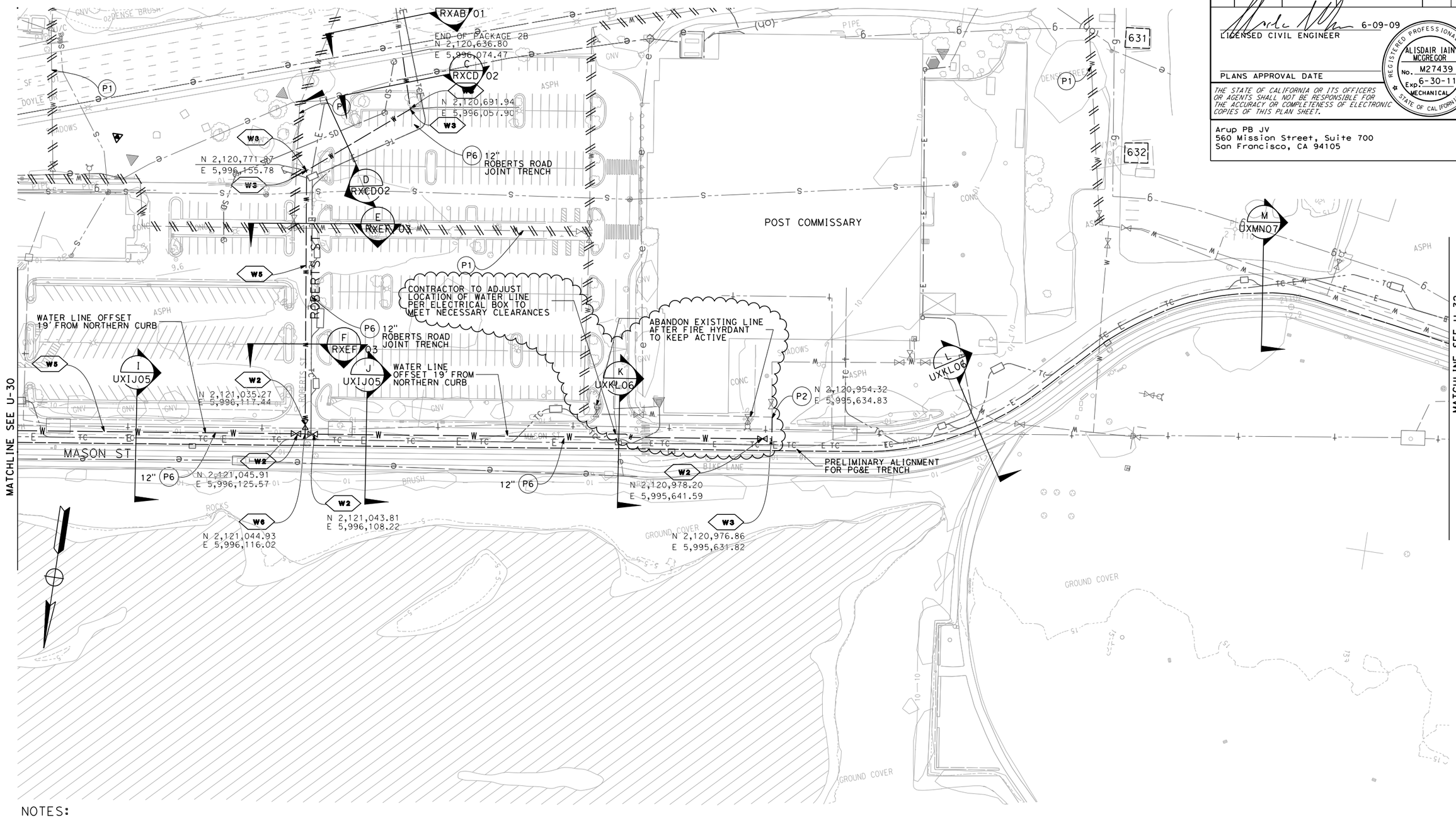

NOTES:

1. FOR GENERAL NOTES, LEGENDS, AND ABBREVIATIONS SEE SHEET U-01.
2. FOR COORDINATION OF OTHER PROPOSED UTILITIES REFER TO
   - ELECTRICAL U15
   - TELECOMMUNICATIONS U47
   - SANITARY SEWER SS63
3. FOR COORDINATES NOT SHOWN SEE U-22, U-23, U-29, AND U-30.

UTILITY PLAN
(POTABLE WATER RELOCATION)

SCALE: 1"=50'

THIS PLAN APPLIES TO POTABLE WATER WORK ONLY.

U-31

	MD	01/06/10	
	ML	12/21/09	
REVISED BY		DATE REVISED	
CIARAN O'DONOVAN		MANISH DALIA	
CALCULATED-DESIGNED BY		CHECKED BY	
FUNCTIONAL SUPERVISOR		DUANNE GILMORE	

STATE OF CALIFORNIA - DEPARTMENT OF TRANSPORTATION

Caltrans

LAST REVISION | DATE PLOTTED => 2/2/2010 | TIME PLOTTED => 4:30:23 PM

Dist	COUNTY	ROUTE	POST MILES TOTAL PROJECT	SHEET No.	TOTAL SHEETS
04	SF	101,1	9.0/9.8, 6.8/7.1	01	23

8-19-09
LICENSED ELECTRICAL ENGINEER

PLANS APPROVAL DATE

REGISTERED PROFESSIONAL ENGINEER
TYLER KELLY
No. E18769
Exp. 6-30-11
ELEC
STATE OF CALIFORNIA

THE STATE OF CALIFORNIA OR ITS OFFICERS OR AGENTS SHALL NOT BE RESPONSIBLE FOR THE ACCURACY OR COMPLETENESS OF ELECTRONIC COPIES OF THIS PLAN SHEET.

Arup PB JV
560 Mission Street, Suite 700
San Francisco, CA 94105

GENERAL NOTES:

1. LOCATION OF UTILITIES AND FACILITIES SHOWN ON THESE PLANS WERE OBTAINED FROM OWNER'S RECORDS,FIELD MEASUREMENTS, AND POTHOLE INFORMATION; LOCATIONS ARE APPROXIMATE ONLY. AN INDEPENDENT INVESTIGATION IS TO BE CARRIED OUT BY THE CONTRACTOR TO VERIFY LOCATIONS AND DEPTHS OF EXISTING UTILITIES.
2. NEW AND RELOCATED UTILITIES MAY BE OTHER THAN SHOWN, CONTRACTOR SHALL NOTIFY UNDERGROUND SERVICE ALERT (USA) AT 1-(800) 227-2600 48 HOURS BEFORE DIGGING, TRENCHING, OR GRADING.
3. THIS SET OF DRAWINGS, AS PART OF THE CONSTRUCTION DOCUMENT, IS A DIAGRAMMATIC REPRESENTATION OF THE DESIGN INTENT. CONTRACTOR SHALL COORDINATE PRECISE LOCATIONS OF ALL COMPONENTS DEPICTED HEREIN WITH ALL OTHER UTILITIES AND OTHER ENGINEERING DRAWINGS. INSTALLATION DETAILS SHALL BE COORDINATED WITH RESPECTIVE VENDORS AND SUBMITTED FOR REVIEW DURING THE CONSTRUCTION PROCESS.
4. EXISTING UTILITY MATERIALS FOR DUCTS, PIPE & CONDUIT MAY CONTAIN HAZARDOUS MATERIALS. HAZARDOUS MATERIALS ARE TO BE VERIFIED WITH PRESIDIO TRUST STAFF AND BE PROTECTED IN PLACE OR REMOVED WITH NECESSARY SAFETY REQUIREMENTS.
5. RESIDENT ENGINEER IS TO COORDINATE THE CONSTRUCTION SCHEDULE OF ALL PROPOSED UTILITIES ON SITE.
6. ALL WORKS ARE TO BE CARRIED OUT ACCORDING TO PRESIDIO TRUST STANDARD SPECIFICATIONS. FOR WORKS NOT DESCRIBED IN THE PRESIDIO TRUST STANDARD SPECIFICATIONS, CALTRANS OR CITY OF SAN FRANCISCO STANDARD SPECIFICATIONS WILL BE APPLIED AT THE SATISFACTION OF THE RESIDENT ENGINEER AND PRESIDIO TRUST.
7. COORDINATES SHOWN ARE CALIFORNIA STATE PLANE ZONE 3. COORDINATES SHALL BE VERIFIED WITH THE RESIDENT ENGINEER RELATIVE TO PERMANENT SURVEY MARK.
8. COORDINATES SHOWN ON MAINTENANCE HOLES ARE TO THE CENTER OF COVER.
9. REINSTATEMENT IS TO BE CONDUCTED PER PRESIDIO TRUST STANDARD SPECIFICATIONS AND OPERATIONS DEPARTMENT WORK APPLICATION STANDARDS.
10. EXISTING UTILITIES IN CONFLICT WITH FUTURE ALIGNMENT TO BE RELOCATED.
11. ALL UTILITIES SHOWN IN THESE PLANS ARE BASED UPON RECORD INFORMATION OBTAINED FROM UTILITY OWNERS, AND/OR FIELD SURVEYS OF EXISTING UTILITY SURFACE FEATURES.
12. LOCATION OF UTILITY FACILITIES SHOWN ON THESE PLANS ARE APPROXIMATE AND SHALL BE VERIFIED BY THE CONTRACTOR PRIOR TO CONSTRUCTION.
13. FUTURE COLUMN, ABUTMENT AND SURFACE STRUCTURES WILL BE STAKED AND VERIFIED BY THE RESIDENT ENGINEER IN THE FIELD PRIOR TO RELOCATION WORKS
14. DESIGN STRATEGIES AND CONSTRUCTION OF ALL PROPOSED NEW OR REPLACEMENT UTILITY LINES, MANHOLES AND APPRUTENANCES WILL CONFORM TO PRESIDIO TRUST CONSTRUCTION GUIDELINES AND BE ADJUSTED AS NEEDED BY PROJECT TO MATCH INTERIM AND PROPOSED, CONSTRUCTED LANDSCAPED/HARDSCAPE FEATURES/CONDITIONS COSTS ARE TO BE BORNE BY THE PROJECT. ALL PROPOSED NEW OR REPLACEMENT UTILITY WORK AND CONSTRUCTED PRIOR TO COMPLETION OF A GRADING AND LANDSCPE/HARDSCAPE PLAN THAT IS ACCEPTABLE TO THE PRESIDIO TRUST IS AT RISK.
15. ANY WORK IN THE VICINITY OF TREES SHALL BE LIMITED TO SPECIFIC ZONES APPROVED FOR CONSTRUCTION ACTIVITIES, INCLUIDING TREE REMOVAL. ANY PROPOSED WORK APPROVED WITHIN THE ROOT ZONE (OR DRIPLINE) OF ANY TO BE RETAINED TREE SHALL BE PERFORMED UNDER THE DIRECTION OF THE PROJECT ARBORIST AND SUBJECT TO PRESIDIO TRUST REVIEW.
16. THE RESIDENT ENGINEER IS TO ENSURE THAT ALL WORKS CARRIED OUT IN LAND USE CONTROL AREAS ARE TO THE SATISFACTION OF THE GEOTECHNICAL ENGINEER AND METHODOLOGY IS TO BE TO THE SATISFACTION OF THE PRESIDIO TRUST.
17. CONSTRUCTION THAT OCCURS OUTSIDE THE TEMPORARY CONSTRUCTION EASEMENT AND NOT WITHIN ROADWAYS SHOULD PROCEED WITH CONSENT FROM THE PRESIDIO TRUST AND VETERANS ADMINISTRATION (WHERE APPROPRIATE) TO AVOID MISTREATMENT OF SENSITIVE AREAS AND PLANT SPECIES.
18. FOR REINSTATEMENT OF ELATH SLOPE AREAS:
    - MATERIAL THAT HAS BEEN PLACED ON THE SLOPE BE REMOVED AND REPLACED WITH SUITABLE FILL TO 98% COMPACTION.
    - THE FILL MATERIAL SHOULD SATISFY ALL PRESIDIO TRUST TESTING CRITERIA FOR CONTAMINATED SOILS.
    - THE SLOPE SHOULD BE PLACED AT NO STEEPER THAN 2H:1V
    - CONTINUOUS MONITORING SHOULD BE CARRIED OUT TO ENSURE THE INTEGRITY OF THE SLOPE IS MAINTAINED FOR THE INTENDED TEMPORARY EXPOSED LIFE THE SLOPE WILL STAY COVERED WITH IMPERVIOUS MATERIALS (PLASTIC) DURING THE WET SEASON TO ENSURE A CONSTANT MOISTURE CONTENT UNTIL SEEDING AND APPROPRIATE VEGETATION CAN BE EFFECTIVELY PLACED.
    - SHOULD SLOPE MOVEMENT BE OBSERVED, APPROPRIATE REMEDIATION WORK SHOULD BE CARRIED OUT AS A PRIORITY.

TELECOM INFORMATION CALLOUTS

(T1) - PULL EXISTING CABLE BACK TO THE LAST MAINTENANCE HOLE AND COIL FOR FUTURE USE AFTER THE CUT OVER IS COMPLETE.

(T2) - CONNECT NEW CONDUIT TO EXISTING MAINTENANCE HOLE.

(T3) - PULL NEW CABLE THROUGH EXISTING CONDUIT AND MAINTENANCE HOLE INFRASTRUCTURE.

(T4) - AT&T INFRASTRUCTURE - PROTECT IN PLACE.

(T5) - PROVIDE NEW SPLICE FROM EXISTING CABLE TO NEW CABLE IN THIS MAINTENANCE HOLE. SEE THE CABLE SCHEDULE OR MH BUTTERFLY DIAGRAM FOR SPLICE LOCATIONS AND CABLE NUMBERS.

(T6) - DEMOLISH/ABANDON EXISTING MAINTENANCE HOLE.

(T7) - THE LIMIT OF WORK IS AT THIS MAINTENANCE HOLE. ALL INFRASTRUCTURE ASSOCIATED WITH THIS MAINTENANCE HOLE WILL BE INCLUDED IN THIS CONTRACT.

TELECOMMUNICATION NOTES

1. THE "D" SERIES MAINTENANCE HOLES ARE NEW AND ARE TO BE INSTALLED BY THE CONTRACTOR.
2. SEE MAINTENANCE HOLE BUTTERFLY DIAGRAMS FOR CABLE NUMBERS, SPLICE LOCATIONS, PAIR NUMBERS AND CONDUIT CONFIGURATIONS.
3. ALL CONDUITS ARE TO LEAVE A PULL ROPE IN THE CONDUIT FOR THE CABLING CONTRACTOR TO PULL CABLE WITH.
4. ALL MAINTENANCE HOLES ARE TO HAVE RACK MOUNTS FOR SPLICE CASES.
5. SEE MAINTENANCE HOLE DETAILS FOR CORRECT DIMENSIONS, KNOCK OUT LOCATIONS, SUMP LOCATIONS AND SPLICE CASE MOUNTING. NOTE, ALL DIMENSIONS ON MAINTENANCE HOLE BUTTERFLY DIAGRAMS ARE INTERNAL DIMENSIONS.
6. CONTRACTOR IS TO VERIFY ALL EXISTING CONDITIONS PRIOR TO CONSTRUCTION.
7. ALL CUTOVERS ARE TO BE COORDINATED WITH THE TRUST AND TENANT PRIOR TO SPLICING AND FIBER AND PULLING OUT ANY COPPER AFTER ALL HALF BRIDGE SPLICES ARE COMPLETE.
8. ALL MAINTENANCE HOLE AND CONDUIT DUCT LOCATIONS ARE TO BE COORDINATED WITH BOTH EXISTING AND NEW UTILITIES.
9. ALL COPPER CABLE HAS CABLE NUMBERS ASSOCIATED WITH THE CABLE.
10. ALL FIBER CABLE DOES NOT HAVE CABLE NUMBERS. EXISTING FIBER CABLE IS NOT ACCURATELY LABELED AND ALL ROUTING IS TO BE FOLLOWED USING THE BUTTERFLY DIAGRAMS.
11. FINAL ALIGNMENT OF CONDUITS TO BE COORDINATED WITH PLANNED IMPROVEMENTS(E.G. PRESIDIO PARKING LOTS, CALTRANS SUBSTATION, EXISTING AND PLANNED UTILITIES ETC.)
12. TELECOMMUNICATIONS BUTTERFLY DIAGRAMS ARE DIAGRAMTIC AND ALL CABLE AND SPLICES ARE NOT INTENDED TO SHOW LOCATIONS BUT RATHER THE CABLING LOGIC.

LEGEND:

-e-	EX ELECTRICAL LINE
-e-	ABANDON ELECTRICAL LINE
-E-	NEW ELECTRICAL LINE
-t-	EX TELECOM LINE
-t-	ABANDON TELECOM CABLE AND CONDUIT
TC	NEW TELECOM LINE
-w-	EX WATER LINE
-w-	ABANDON WATER LINE
-W-	NEW WATER LINE
RC- w RC- w	EX RECLAIMED WATER LINE
-S-	EX SANITARY SEWER LINE
-s-	ABANDON SANITARY SEWER LINE
-e-	EX OVERHEAD ELECTRIC LINE
-g-	EX GAS LINE
	ENVIROMENTALLY/CULTURALLY SENSITIVE AREA
	VALVE
	TELECOM MAINTENANCE HOLE SYMBOL
	TELECOM MAINTENANCE HOLE REFER TO DETAIL T5.
TX	DETAIL CALLOUT
TX	INFORMATION CALLOUT
	EX. PIEZOMETER

GENERAL NOTES & LEGEND

NO SCALE

UNT-01

MD	MD	ML	REVISED BY
02/02/10	01/13/10	12/21/09	DATE REVISED

TYLER KELLY — BILL LIZOTTE — CALCULATED-DESIGNED BY — CHECKED BY

FUNCTIONAL SUPERVISOR: DUANNE GILMORE

STATE OF CALIFORNIA - DEPARTMENT OF TRANSPORTATION — Caltrans

LAST REVISION 08-19-09 — DATE PLOTTED => 2/2/2010 — TIME PLOTTED => 5:50:17 PM

Dist	COUNTY	ROUTE	POST MILES TOTAL PROJECT	SHEET No.	TOTAL SHEETS
				38	

LICENSED CIVIL ENGINEER 8-10-09

PLANS APPROVAL DATE

REGISTERED PROFESSIONAL ENGINEER TYLER KELLY No. E18769 Exp. 6-30-11 CIVIL STATE OF CALIFORNIA

THE STATE OF CALIFORNIA OR ITS OFFICERS OR AGENTS SHALL NOT BE RESPONSIBLE FOR THE ACCURACY OR COMPLETENESS OF ELECTRONIC COPIES OF THIS PLAN SHEET.

Arup PB JV
560 Mission Street, Suite 700
San Francisco, CA 94105

NOTES:

1. FOR GENERAL NOTES, LEGENDS, AND ABBREVIATIONS SEE SHEET U-01.
2. FOR COORDINATION OF OTHER PROPOSED UTILITIES REFER TO
   - ELECTRICAL U08
   - POTABLE WATER U24
   - SANITARY SEWER U56
3. CONTRACTOR TO VERIFY MANHOLE LOCATIONS WITH PRESIDIO TRUST, ENGINEER, AND CALTRANS DURING FIELD WALK PRIOR TO CONSTRUCTION.
4. CONNECT CONDUIT TO EXISTING BOX ON OUTISDE OF BUILDING. IF ALL CABLING TERMINATIONS ARE TO BE COORDINATED WITH THE PRESIDIO PRIOR TO INSTALLATION.
5. TRENCH ALIGNMENTS FROM BEGIN SWEEP TO BOX TO END SWEEP IS INDICATIVE ONLY. CONTRACTOR TO CONSTRUCT PER FIELD CONDITIONS.
6. FOR COORDINATES NOT SHOWN SEE U-39, U-46, AND U-47.
7. CONTRACTOR AND PRESIDIO TRUST HAVE AGREED THAT 750' LENGTH OF CONDUIT BETWEEN MH D10 AND MH D11 IS ACCEPTABLE. CONDUIT IS AVAILABLE FOR FUTURE FIBER OPTIC CONNECTION FROM PROPOSED HALLECK STREET.

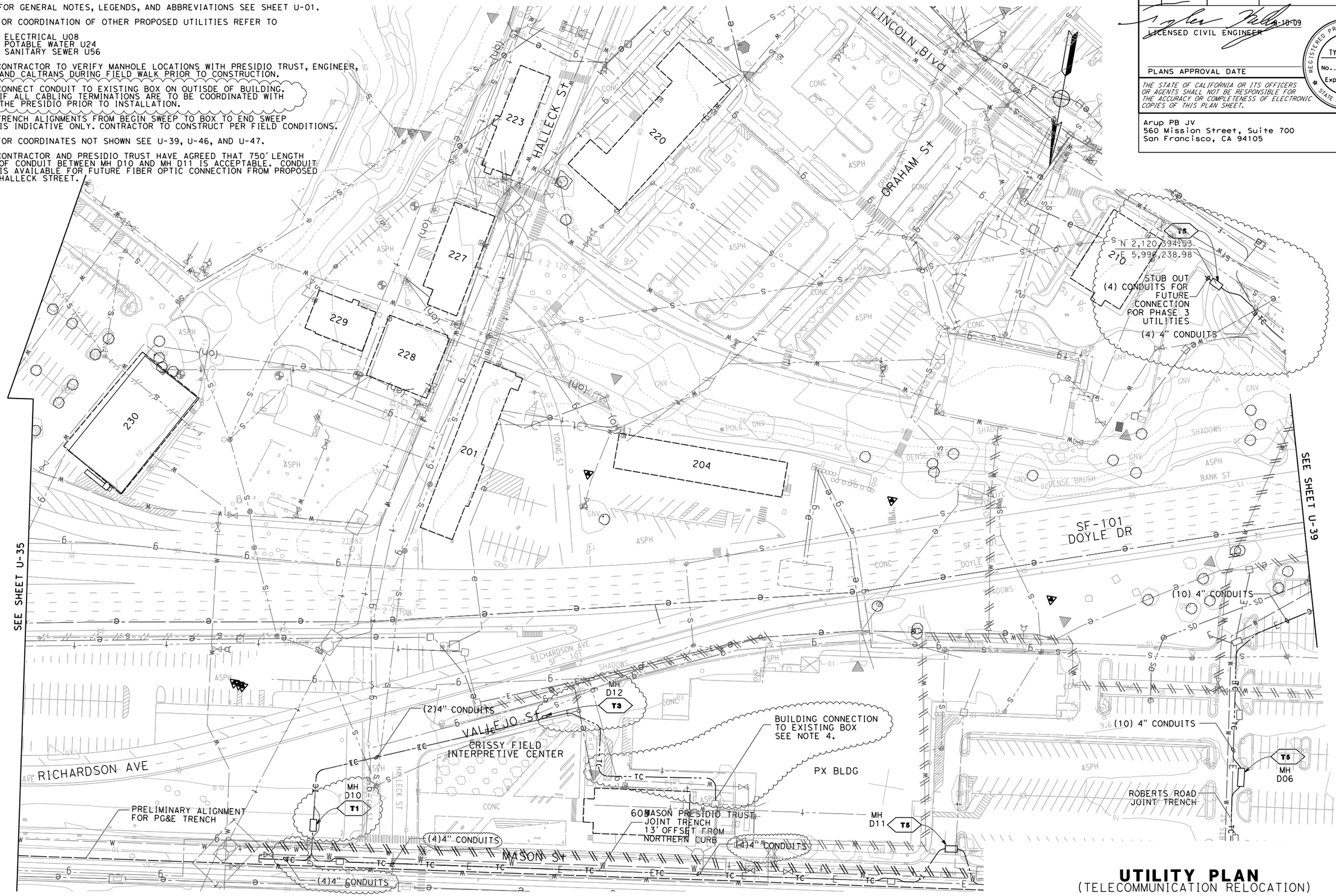

THIS PLAN APPLIES TO TELECOMMUNICATION WORK ONLY.

UTILITY PLAN
(TELECOMMUNICATION RELOCATION)

SCALE 1" - 50'

U-38

	REVISED BY	DATE REVISED
	MD	01/13/10
	MD	01/06/10
	ML	12/21/09

TYLER KELLY — CALCULATED-DESIGNED BY
BILL LIZOTTE — CHECKED BY
DUANNE GILMORE — FUNCTIONAL SUPERVISOR

STATE OF CALIFORNIA - DEPARTMENT OF TRANSPORTATION
Caltrans

LAST REVISION — DATE PLOTTED => 2/2/2010 TIME PLOTTED => 4:30:42 PM

Dist	COUNTY	ROUTE	POST MILES TOTAL PROJECT	SHEET No.	TOTAL SHEETS
				39	

LICENSED CIVIL ENGINEER 6-10-09

PLANS APPROVAL DATE

REGISTERED PROFESSIONAL ENGINEER TYLER KELLY No. E18769 Exp. 6-30-11 CIVIL STATE OF CALIFORNIA

THE STATE OF CALIFORNIA OR ITS OFFICERS OR AGENTS SHALL NOT BE RESPONSIBLE FOR THE ACCURACY OR COMPLETENESS OF ELECTRONIC COPIES OF THIS PLAN SHEET.

Arup PB JV
560 Mission Street, Suite 700
San Francisco, CA 94105

NOTES:

1. FOR GENERAL NOTES, LEGENDS, AND ABBREVIATIONS SEE SHEET U-01.
2. FOR COORDINATION OF OTHER PROPOSED UTILITIES REFER TO
   - ELECTRICAL U08
   - POTABLE WATER U24
   - SANITARY SEWER U56
3. CONTRACTOR TO VERIFY MANHOLE LOCATIONS WITH PRESIDIO TRUST ENGINEER, AND CALTRANS DURING FIELD WALK PRIOR TO CONSTRUCTION.
4. CONNECT CONDUIT TO EXISTING BOX ON OUTISDE OF BUILDING. IF THERE ISN'T AN EXISTING BOX STUB CONDUIT INTO BUILDING. ALL CABLING TERMINATIONS ARE TO BE COORDINATED WITH THE PRESIDIO PRIOR TO INSTALLATION.
5. TRENCH ALIGNMENTS FROM BEGIN SWEEP TO BOX TO END SWEEP IS INDICATIVE ONLY. CONTRACTOR TO CONSTRUCT PER FIELD CONDITIONS.
6. FOR COORDINATES NOT SHOWN SEE U-38, U-46, AND U-47.

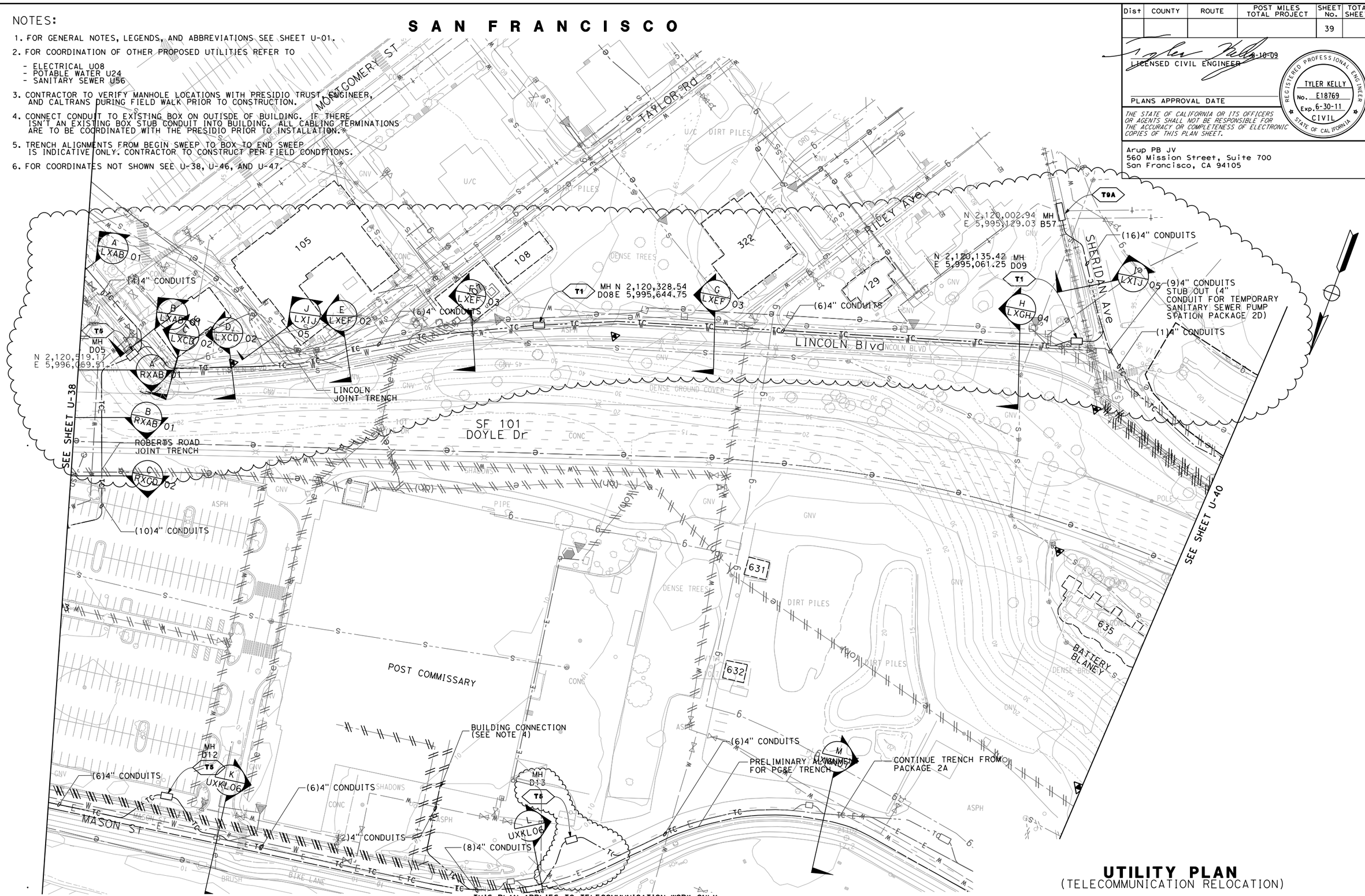

UTILITY PLAN
(TELECOMMUNICATION RELOCATION)

SCALE 1" - 50'

U-39

MD	MD	MD	REVISED BY
02/02/10	01/13/10	01/06/10	DATE REVISED
TYLER KELLY			
BILL LIZOTTE			
CALCULATED-DESIGNED BY			
CHECKED BY			
FUNCTIONAL SUPERVISOR			
DUANE GILMORE			

STATE OF CALIFORNIA - DEPARTMENT OF TRANSPORTATION

Caltrans

LAST REVISION DATE PLOTTED => 2/2/2010 TIME PLOTTED => 4:30:49 PM

NOTES:

1. FOR GENERAL NOTES, LEGENDS, AND ABBREVIATIONS SEE SHEET U-01.
2. FOR COORDINATION OF OTHER PROPOSED UTILITIES REFER TO
   - ELECTRICAL U08
   - POTABLE WATER U24
   - SANITARY SEWER U56
3. CONTRACTOR TO VERIFY MANHOLE LOCATIONS WITH PRESIDIO TRUST, ENGINEER, AND CALTRANS DURING FIELD WALK PRIOR TO CONSTRUCTION.
4. CONNECT CONDUIT TO EXISTING BOX ON OUTISDE OF BUILDING. IF THERE ISN'T AN EXISTING BOX STUB CONDUIT INTO BUILDING. ALL CABLING TERMINATIONS ARE TO BE COORDINATED WITH THE PRESIDIO PRIOR TO INSTALLATION.

Dist	COUNTY	ROUTE	POST MILES TOTAL PROJECT	SHEET No.	TOTAL SHEETS
04	SF	101,1	9.0/9.8, 6.8/7.1		

8-19-09
LICENSED ELECTRICAL ENGINEER

PLANS APPROVAL DATE

REGISTERED PROFESSIONAL ENGINEER — TYLER KELLY — No. E18769 — Exp. 6-30-11 — ELEC — STATE OF CALIFORNIA

THE STATE OF CALIFORNIA OR ITS OFFICERS OR AGENTS SHALL NOT BE RESPONSIBLE FOR THE ACCURACY OR COMPLETENESS OF ELECTRONIC COPIES OF THIS PLAN SHEET.

Arup PB JV
560 Mission Street, Suite 700
San Francisco, CA 94105

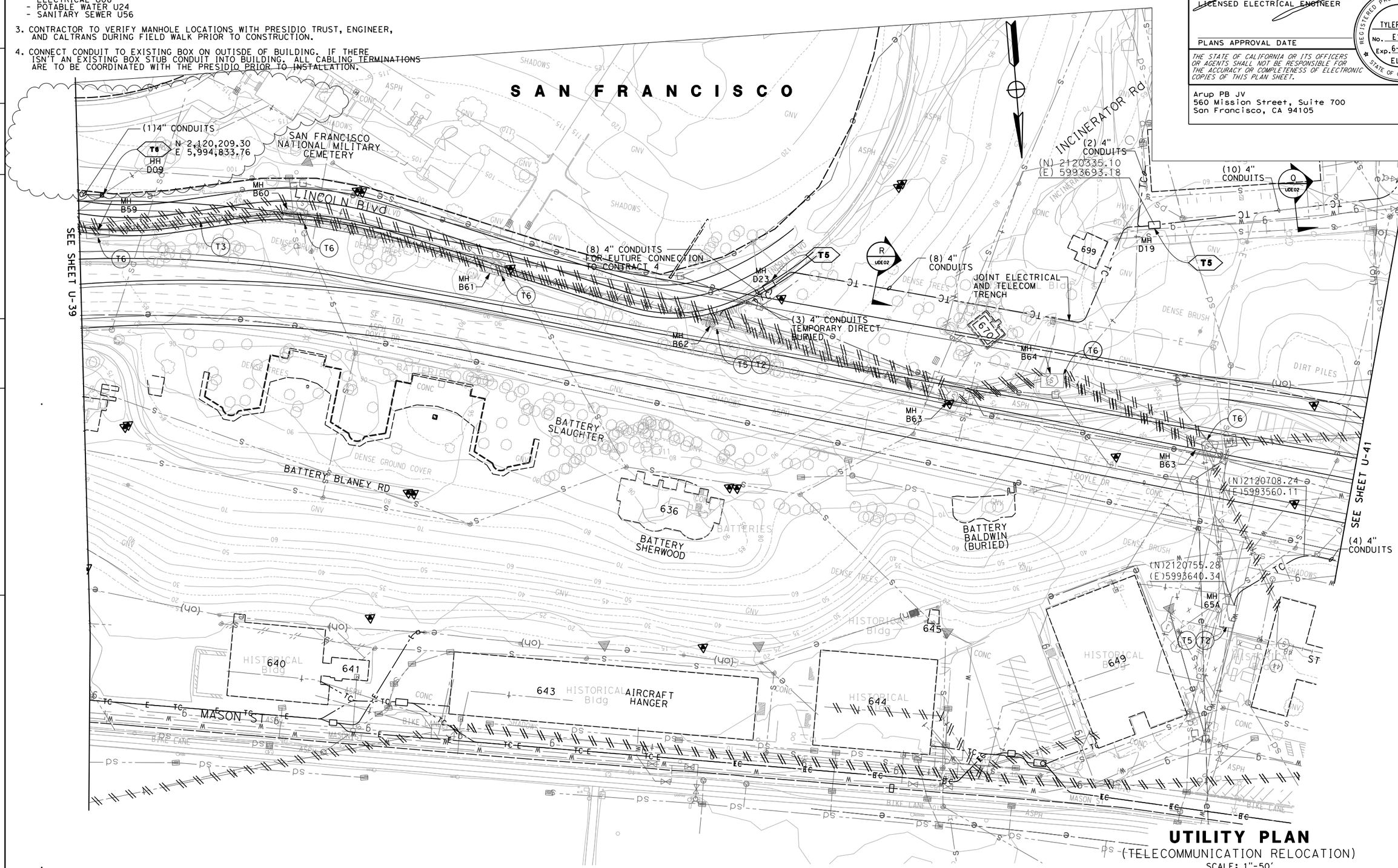

UTILITY PLAN
(TELECOMMUNICATION RELOCATION)
SCALE: 1"-50'

THIS PLAN APPLIES TO TELECOMMUNICATION WORK ONLY.

U-40

DATE REVISED	REVISED BY	TYLER KELLY	CALCULATED-DESIGNED BY	FUNCTIONAL SUPERVISOR
02/02/10	MD	BILL LIZOTTE	CHECKED BY	DUANNE GILMORE
01/13/10	MD			
11/05/09	ES			

STATE OF CALIFORNIA - DEPARTMENT OF TRANSPORTATION
Caltrans

LAST REVISION 11-05-09 | DATE PLOTTED => 2/2/2010 | TIME PLOTTED => 4:30:56 PM

Dist	COUNTY	ROUTE	POST MILES TOTAL PROJECT	SHEET No.	TOTAL SHEETS
04	SF	101,1	9.0/9.8, 6.8/7.1	41	

LICENSED ELECTRICAL ENGINEER 8-19-09

PLANS APPROVAL DATE

REGISTERED PROFESSIONAL ENGINEER TYLER KELLY No. E18769 Exp. 6-30-11 ELEC STATE OF CALIFORNIA

THE STATE OF CALIFORNIA OR ITS OFFICERS OR AGENTS SHALL NOT BE RESPONSIBLE FOR THE ACCURACY OR COMPLETENESS OF ELECTRONIC COPIES OF THIS PLAN SHEET.

Arup PB JV
560 Mission Street, Suite 700
San Francisco, CA 94105

NOTES:

1. FOR GENERAL NOTES, LEGENDS, AND ABBREVIATIONS SEE SHEET U-01.
2. FOR COORDINATION OF OTHER PROPOSED UTILITIES REFER TO
   - ELECTRICAL U09
   - POTABLE WATER U25
   - SANITARY SEWER U51
3. CONTRACTOR TO VERIFY MANHOLE LOCATIONS WITH PRESIDIO TRUST, ENGINEER, AND CALTRANS DURING FIELD WALK PRIOR TO CONSTRUCTION.
4. TRENCH ALIGNMENT FROM BEGIN SWEEP TO BOX TO END SWEEP IS INDICATIVE ONLY. CONTRACTOR TO CONSTRUCT FIELD CONDITIONS.

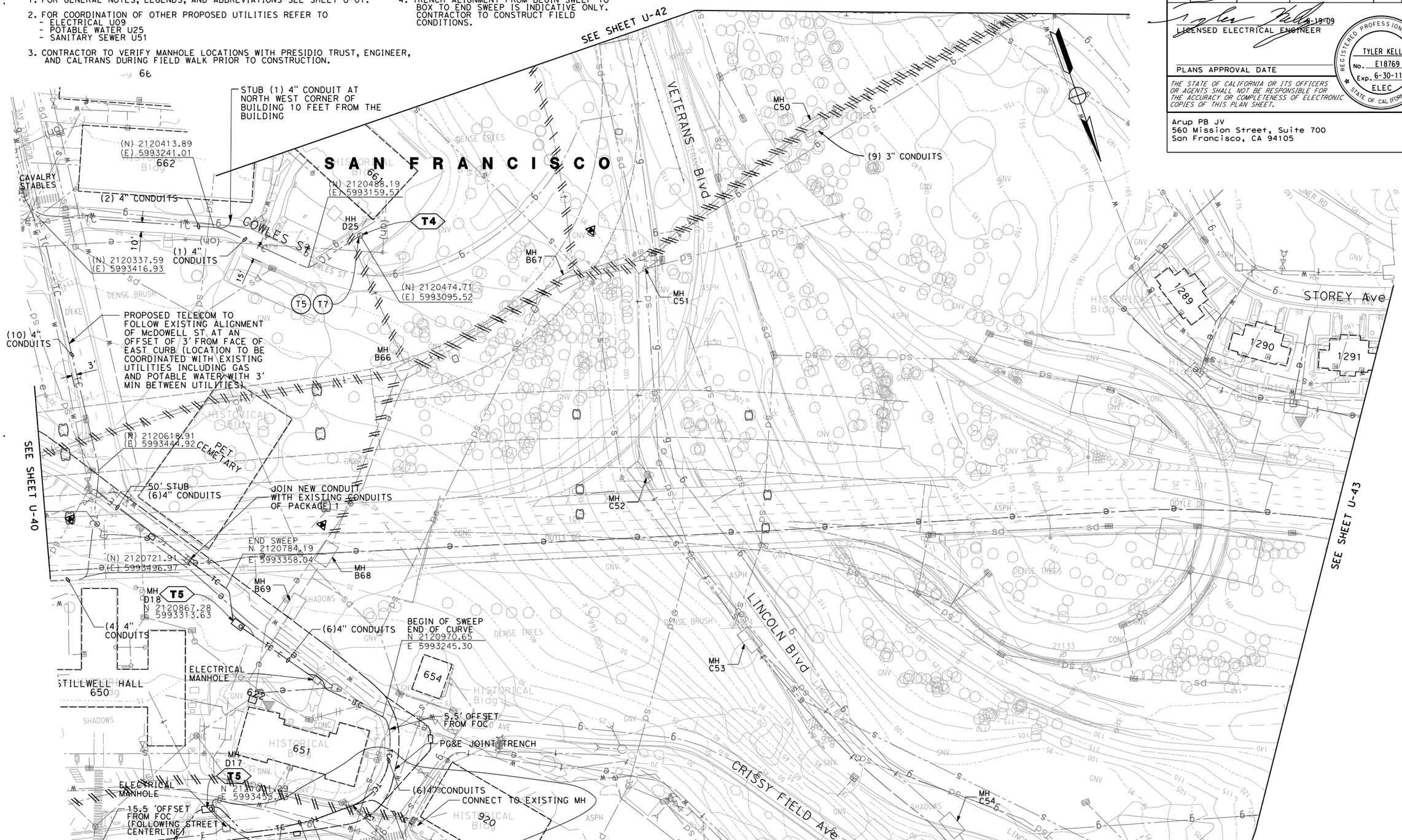

THIS PLAN APPLIES TO TELECOMMUNICATION WORK ONLY.

UTILITY PLAN
(TELECOMMUNICATION RELOCATION)
SCALE 1" - 50'

U-41

MD	01/08/10		
ML	12/10/09		
MD	11/13/09	REVISED BY	DATE REVISED
TYLER KELLY			
BILL LIZOTTE			
CALCULATED-DESIGNED BY			
CHECKED BY			
FUNCTIONAL SUPERVISOR			
DUANNE GILMORE			

STATE OF CALIFORNIA - DEPARTMENT OF TRANSPORTATION
Caltrans

LAST REVISION 11-05-09 DATE PLOTTED => 2/2/2010 TIME PLOTTED => 4:31:03 PM

Dist	COUNTY	ROUTE	POST MILES TOTAL PROJECT	SHEET No.	TOTAL SHEETS
04	SF	101,1	9.0/9.8, 6.8/7.1	42	

8-19-09
LICENSED ELECTRICAL ENGINEER

REGISTERED PROFESSIONAL ENGINEER
TYLER KELLY
No. E18769
Exp. 6-30-11
ELEC
STATE OF CALIFORNIA

PLANS APPROVAL DATE

THE STATE OF CALIFORNIA OR ITS OFFICERS OR AGENTS SHALL NOT BE RESPONSIBLE FOR THE ACCURACY OR COMPLETENESS OF ELECTRONIC COPIES OF THIS PLAN SHEET.

Arup PB JV
560 Mission Street, Suite 700
San Francisco, CA 94105

NOTES:

1. FOR GENERAL NOTES, LEGENDS, AND ABBREVIATIONS SEE SHEET U-01.
2. FOR COORDINATION OF OTHER PROPOSED UTILITIES REFER TO
   - ELECTRICAL U10
   - POTABLE WATER U26
   - SANITARY SEWER SS58

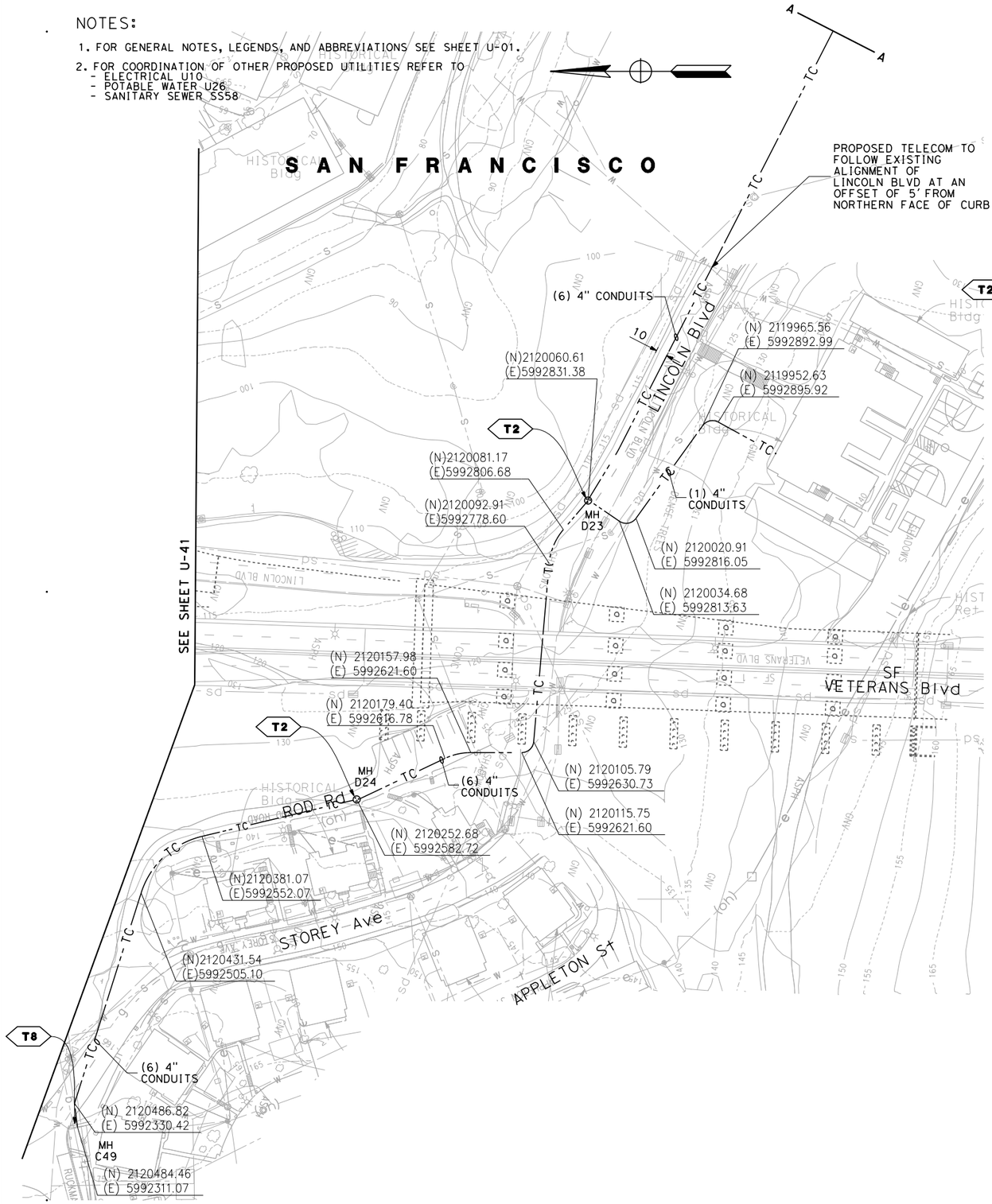

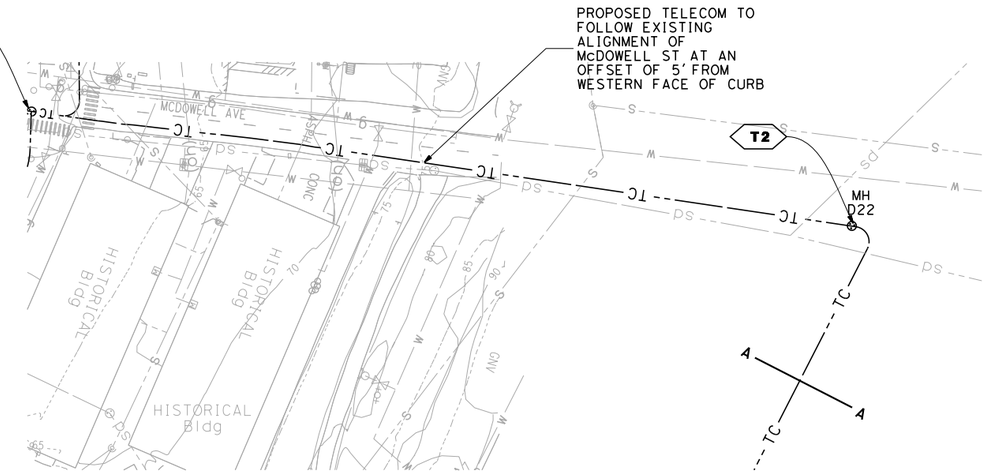

THIS PLAN APPLIES TO TELECOMMUNICATIONS WORK ONLY.

UTILITY PLAN
(TELECOMMUNICATIONS RELOCATION)
SCALE 1" - 50'

U-42

REVISED BY	ML
DATE REVISED	08/19/09
TYLER KELLY	
BILL LIZOTTE	
CALCULATED-DESIGNED BY	
CHECKED BY	
FUNCTIONAL SUPERVISOR	
DUANNE GILMORE	

STATE OF CALIFORNIA - DEPARTMENT OF TRANSPORTATION
Caltrans

LAST REVISION 08-19-09
DATE PLOTTED => 8/20/2009
TIME PLOTTED => 5:25:49 PM

Dist	COUNTY	ROUTE	POST MILES TOTAL PROJECT	SHEET No.	TOTAL SHEETS
04	SF	101,1	9.0/9.8, 6.8/7.1	42A	

8-19-09
LICENSED ELECTRICAL ENGINEER

REGISTERED PROFESSIONAL ENGINEER
TYLER KELLY
No. E18769
Exp. 6-30-11
ELEC
STATE OF CALIFORNIA

PLANS APPROVAL DATE

THE STATE OF CALIFORNIA OR ITS OFFICERS OR AGENTS SHALL NOT BE RESPONSIBLE FOR THE ACCURACY OR COMPLETENESS OF ELECTRONIC COPIES OF THIS PLAN SHEET.

Arup PB JV
560 Mission Street, Suite 700
San Francisco, CA 94105

NOTES:

1. FOR GENERAL NOTES, LEGENDS, AND ABBREVIATIONS SEE SHEET U-01.

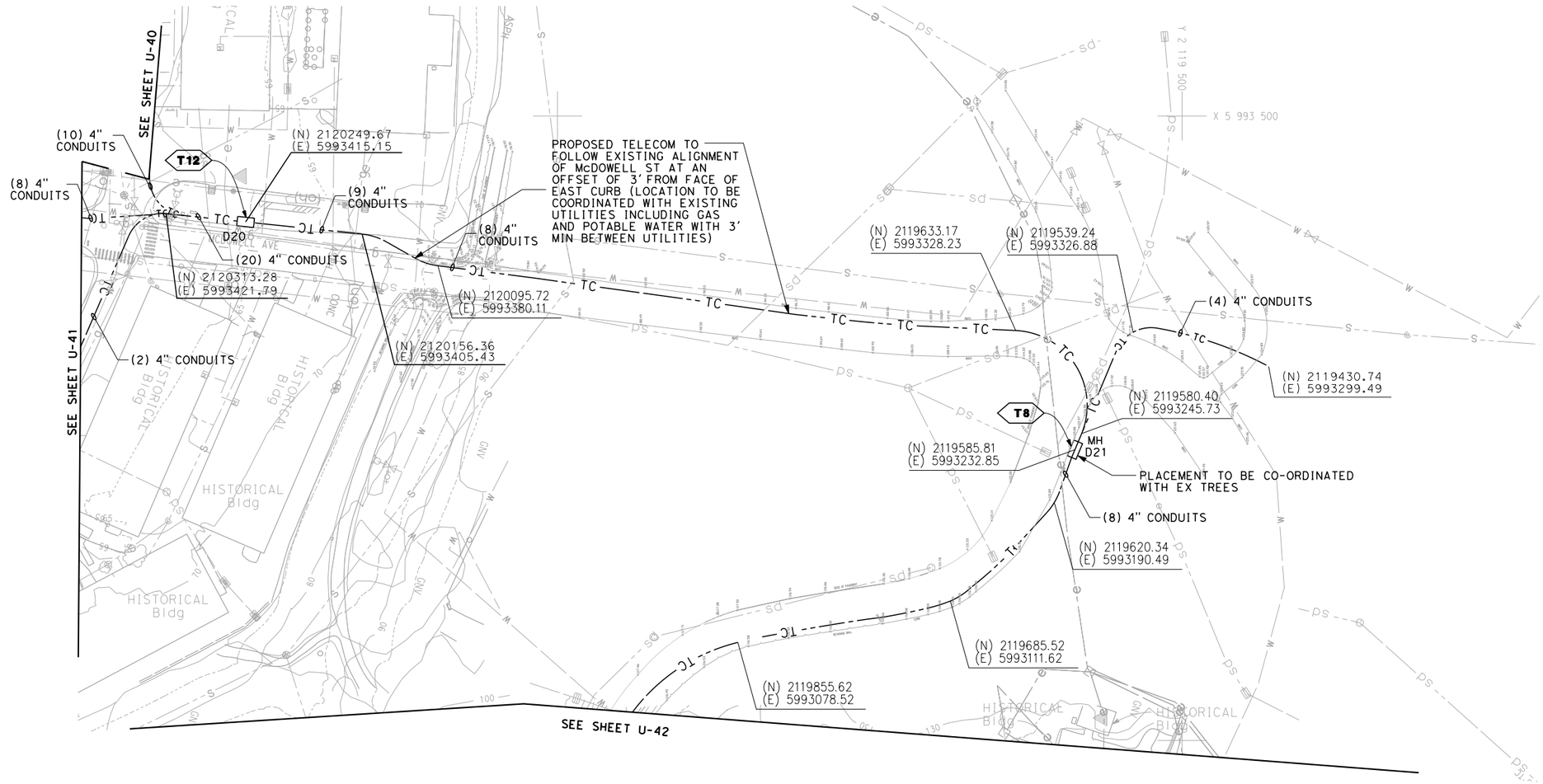

THIS PLAN APPLIES TO TELECOMMUNICATIONS WORK ONLY.

UTILITY PLAN
(TELECOMMUNICATIONS RELOCATION)
SCALE 1" - 50'

U-42A

REVISED BY	JAK
DATE REVISED	10/02/09
CALCULATED-DESIGNED BY	TYLER KELLY
CHECKED BY	BILL LIZOTTE
FUNCTIONAL SUPERVISOR	DUANNE GILMORE

STATE OF CALIFORNIA - DEPARTMENT OF TRANSPORTATION
Caltrans

LAST REVISION DATE PLOTTED => 10/2/2009
TIME PLOTTED => 7:27:54 PM

Dist	COUNTY	ROUTE	POST MILES TOTAL PROJECT	SHEET No.	TOTAL SHEETS
04	SF	101,1	9.0/9.8, 6.8/7.1	43	

8-19-09
LICENSED ELECTRICAL ENGINEER

PLANS APPROVAL DATE

REGISTERED PROFESSIONAL ENGINEER
TYLER KELLY
No. E18769
Exp. 6-30-11
ELEC
STATE OF CALIFORNIA

THE STATE OF CALIFORNIA OR ITS OFFICERS OR AGENTS SHALL NOT BE RESPONSIBLE FOR THE ACCURACY OR COMPLETENESS OF ELECTRONIC COPIES OF THIS PLAN SHEET.

Arup PB JV
560 Mission Street, Suite 700
San Francisco, CA 94105

· NOTES:

1. FOR GENERAL NOTES, LEGENDS, AND ABBREVIATIONS SEE SHEET U-01.
2. FOR COORDINATION OF OTHER PROPOSED UTILITIES REFER TO
   - ELECTRICAL U11
   - POTABLE WATER U27
   - SANITARY SEWER SS59

THIS PLAN ACCURATE FOR TELECOMMUNICATION WORK ONLY.

UTILITY PLAN

SCALE 1" - 50'

U-43

STATE OF CALIFORNIA - DEPARTMENT OF TRANSPORTATION	FUNCTIONAL SUPERVISOR	REVISED BY	ML
Caltrans	DUANNE GILMORE	DATE REVISED	08/19/09
	TYLER KELLY	CALCULATED-DESIGNED BY	
	BILL LIZOTTE	CHECKED BY	

LAST REVISION 08-19-09 | DATE PLOTTED => 8/19/2009 | TIME PLOTTED => 5:51:40 PM

Dist	COUNTY	ROUTE	POST MILES TOTAL PROJECT	SHEET No.	TOTAL SHEETS
				46	

LICENSED CIVIL ENGINEER 8-10-09

PLANS APPROVAL DATE

REGISTERED PROFESSIONAL ENGINEER TYLER KELLY No. E18769 Exp. 6-30-11 CIVIL STATE OF CALIFORNIA

THE STATE OF CALIFORNIA OR ITS OFFICERS OR AGENTS SHALL NOT BE RESPONSIBLE FOR THE ACCURACY OR COMPLETENESS OF ELECTRONIC COPIES OF THIS PLAN SHEET.

Arup PB JV
560 Mission Street, Suite 700
San Francisco, CA 94105

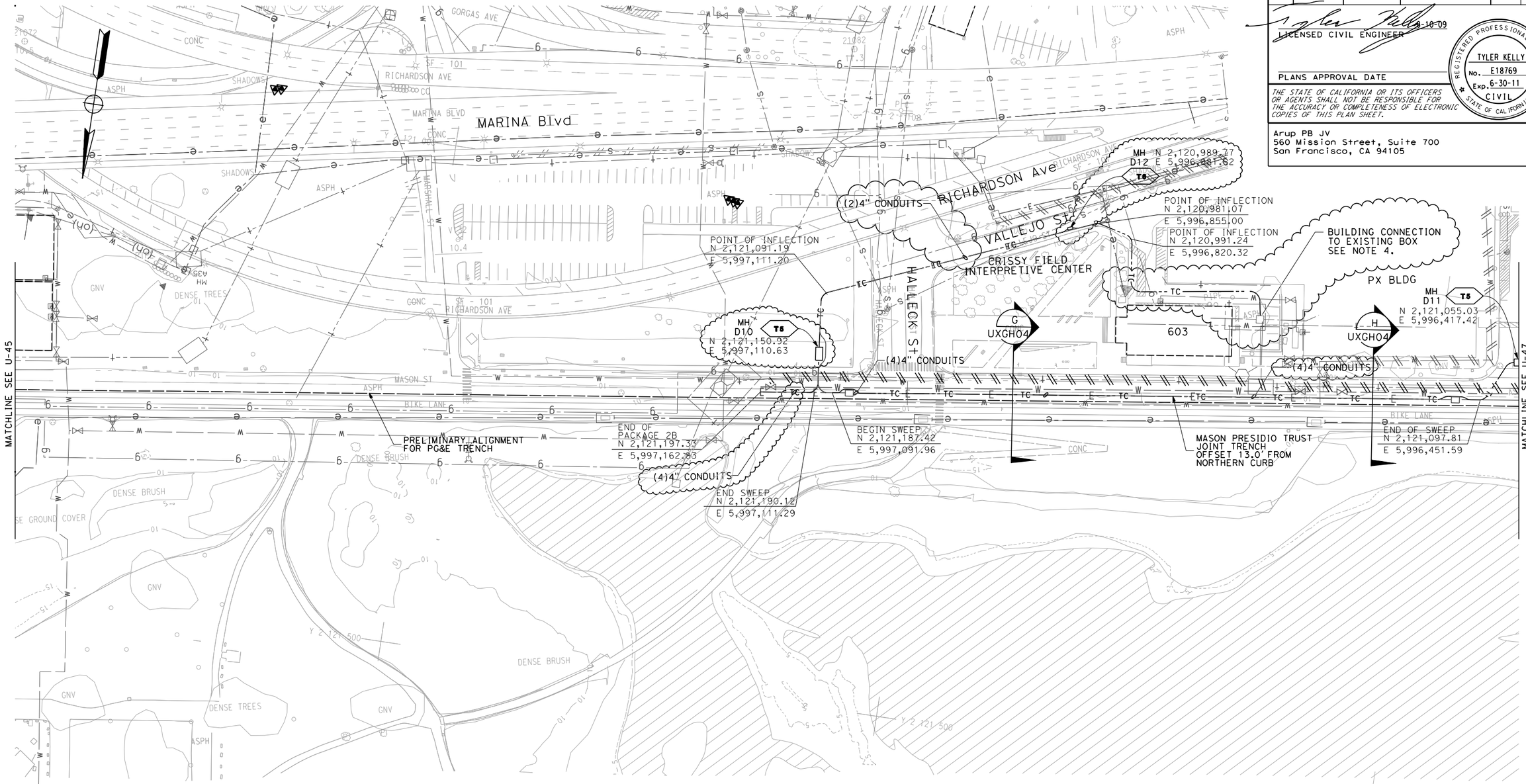

NOTES:

1. FOR GENERAL NOTES, LEGENDS, AND ABBREVIATIONS SEE SHEET U-01.
2. FOR COORDINATION OF OTHER PROPOSED UTILITIES REFER TO
   - ELECTRICAL U08
   - POTABLE WATER U24
   - SANITARY SEWER U56
3. CONTRACTOR TO VERIFY MANHOLE LOCATIONS WITH PRESIDIO TRUST, ENGINEER, AND CALTRANS DURING FIELD WALK PRIOR TO CONSTRUCTION.
4. CONNECT CONDUIT TO EXISTING BOX ON OUTISDE OF BUILDING. ALL CABLING TERMINATIONS ARE TO BE COORDINATED WITH THE PRESIDIO PRIOR TO INSTALLATION.
5. TRENCH ALIGNMENTS FROM BEGIN SWEEP TO BOX TO END SWEEP IS INDICATIVE ONLY. CONTRACTOR TO CONSTRUCT PER FIELD CONDITIONS.
6. FOR COORDINATES NOT SHOWN SEE U-38, U-39, U-46, AND U-47.
7. CONTRACTOR AND PRESIDIO TRUST HAVE AGREED THAT 750' LENGTH OF CONDUIT BETWEEN MH D10 AND MH D11 IS ACCEPTABLE. CONDUIT IS AVAILABLE FOR FUTURE FIBER OPTIC CONNECTION FROM PROPOSED HALLECK STREET.

THIS PLAN APPLIES TO TELECOMMUNICATION WORK ONLY.

UTILITY PLAN
(TELECOMMUNICATION RELOCATION)

SCALE: 1"-50'

U-46

MD	MD	MD	REVISED BY
02/02/10	01/13/10	01/06/10	DATE REVISED

TYLER KELLY — CALCULATED-DESIGNED BY
BILL LIZOTTE — CHECKED BY
FUNCTIONAL SUPERVISOR: DUANNE GILMORE

STATE OF CALIFORNIA - DEPARTMENT OF TRANSPORTATION
Caltrans

LAST REVISION — DATE PLOTTED => 2/2/2010 TIME PLOTTED => 4:31:11 PM

Dist	COUNTY	ROUTE	POST MILES TOTAL PROJECT	SHEET No.	TOTAL SHEETS
				47	

LICENSED CIVIL ENGINEER 8-10-09

PLANS APPROVAL DATE

REGISTERED PROFESSIONAL ENGINEER TYLER KELLY No. E18769 Exp. 6-30-11 CIVIL STATE OF CALIFORNIA

THE STATE OF CALIFORNIA OR ITS OFFICERS OR AGENTS SHALL NOT BE RESPONSIBLE FOR THE ACCURACY OR COMPLETENESS OF ELECTRONIC COPIES OF THIS PLAN SHEET.

Arup PB JV
560 Mission Street, Suite 700
San Francisco, CA 94105

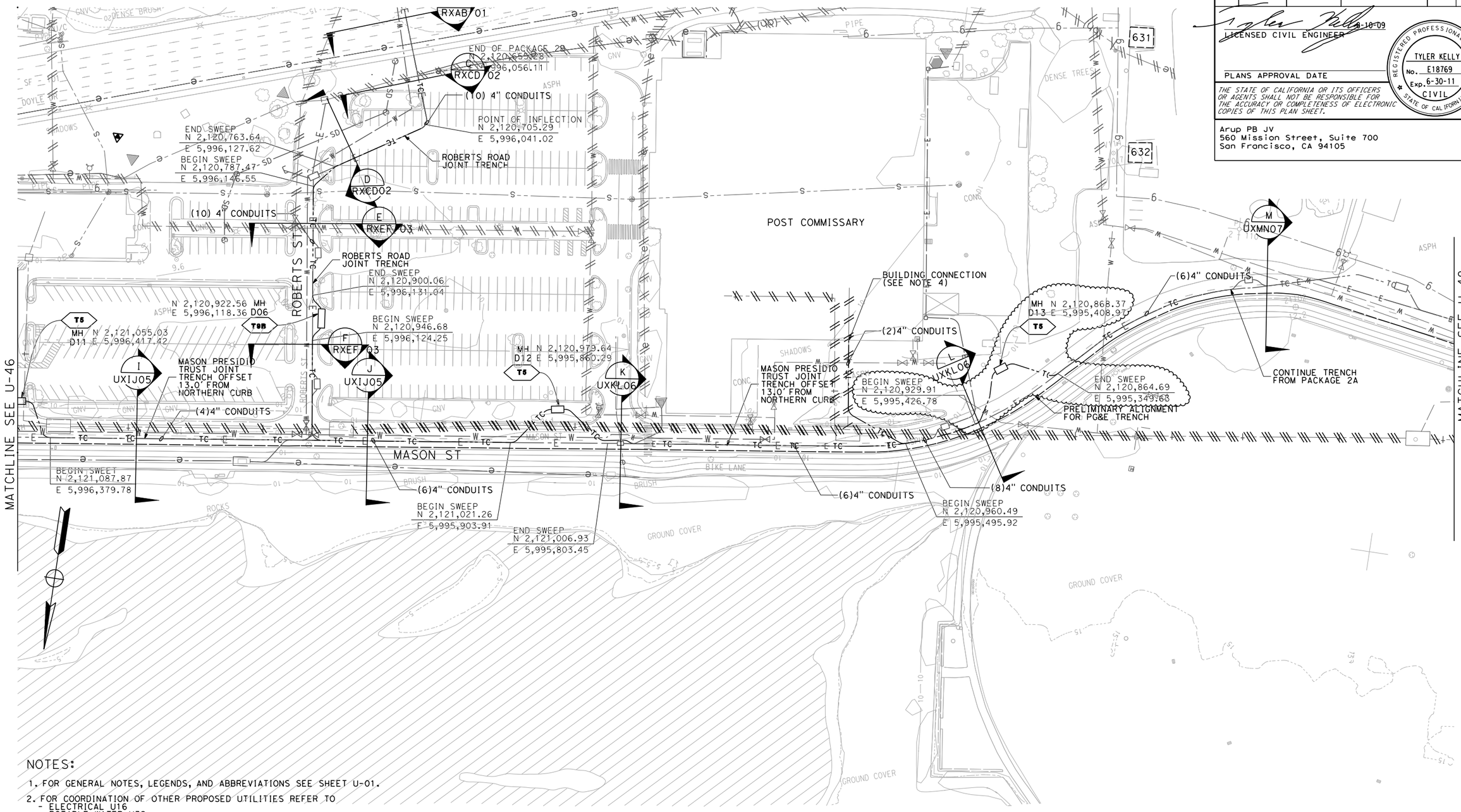

NOTES:

1. FOR GENERAL NOTES, LEGENDS, AND ABBREVIATIONS SEE SHEET U-01.
2. FOR COORDINATION OF OTHER PROPOSED UTILITIES REFER TO
   - ELECTRICAL U16
   - POTABLE WATER U32
   - SANITARY SEWER SS64
3. CONTRACTOR TO VERIFY MANHOLE LOCATIONS WITH PRESIDIO TRUST, ENGINEER, AND CALTRANS DURING FIELD WALK PRIOR TO CONSTRUCTION.
4. CONNECT CONDUIT TO EXISTING BOX ON OUTISDE OF BUILDING. IF THERE ISN'T AN EXISTING BOX STUB CONDUIT INTO BUILDING. ALL CABLING TERMINATIONS ARE TO BE COORDINATED WITH THE PRESIDIO PRIOR TO INSTALLATION.
5. TRENCH ALIGNMENTS FROM BEGIN SWEEP TO BOX TO END SWEEP IS INDICATIVE ONLY. CONTRACTOR TO CONSTRUCT PER FIELD CONDITIONS.
6. FOR COORDINATES NOT SHOWN SEE U-38, U-39, U-46, AND U-47.

THIS PLAN APPLIES TO TELECOMMUNICATION WORK ONLY.

UTILITY PLAN
(TELECOMMUNICATION RELOCATION)

SCALE: 1"=50'

U-47

MD	MD	TYLER KELLY	BILL LIZOTTE
01/06/10	12/21/09		
REVISED BY	DATE REVISED	CALCULATED-DESIGNED BY	CHECKED BY

FUNCTIONAL SUPERVISOR: DUANNE GILMORE

STATE OF CALIFORNIA - DEPARTMENT OF TRANSPORTATION

Caltrans

LAST REVISION | DATE PLOTTED => 2/2/2010 | TIME PLOTTED => 4:31:16 PM

Dist	COUNTY	ROUTE	POST MILES TOTAL PROJECT	SHEET No.	TOTAL SHEETS

LICENSED CIVIL ENGINEER 8-10-09

PLANS APPROVAL DATE

REGISTERED PROFESSIONAL ENGINEER TYLER KELLY No. E18769 Exp. 6-30-11 CIVIL STATE OF CALIFORNIA

THE STATE OF CALIFORNIA OR ITS OFFICERS OR AGENTS SHALL NOT BE RESPONSIBLE FOR THE ACCURACY OR COMPLETENESS OF ELECTRONIC COPIES OF THIS PLAN SHEET.

Arup PB JV
560 Mission Street, Suite 700
San Francisco, CA 94105

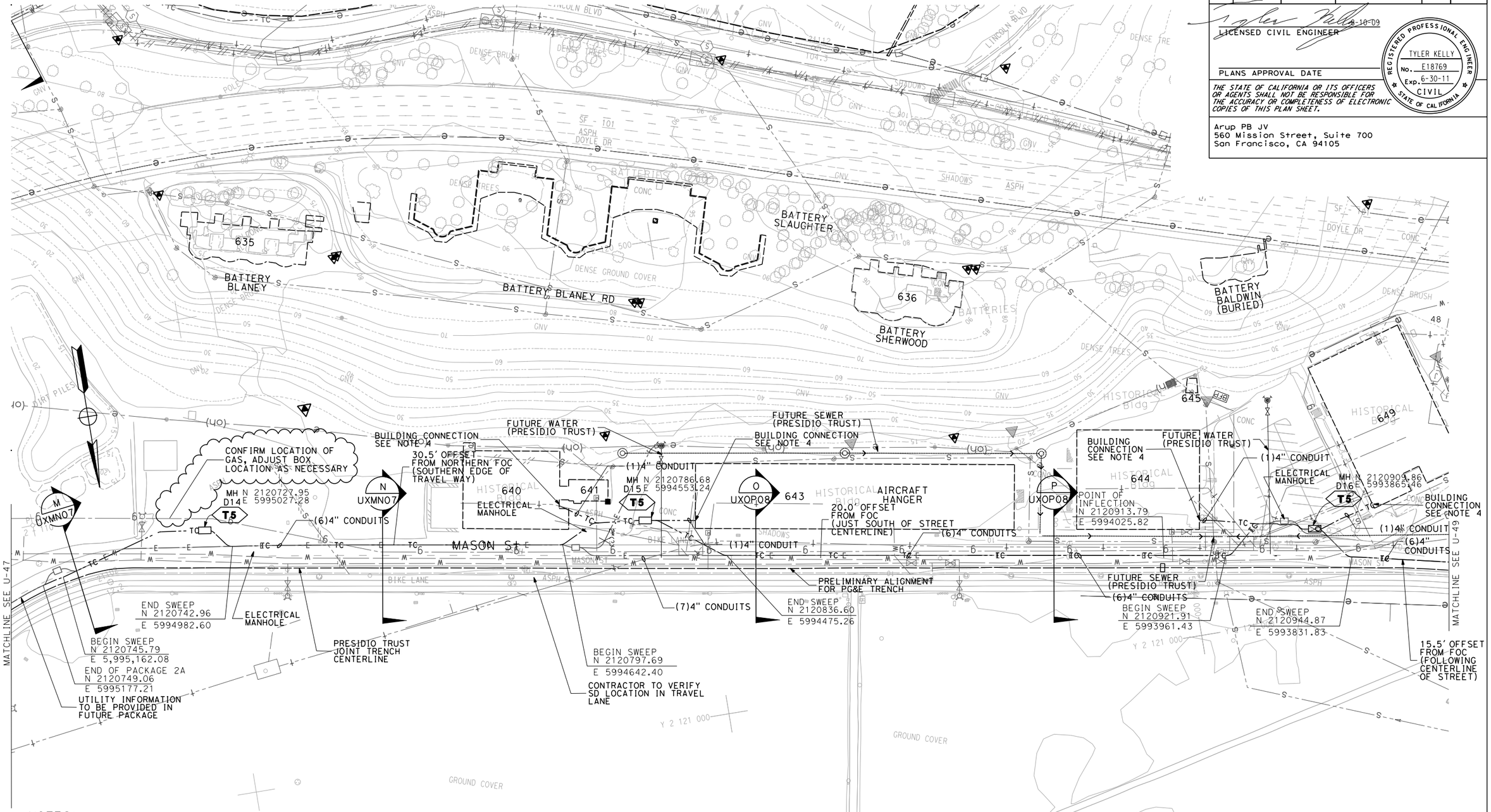

NOTES:

1. FOR GENERAL NOTES, LEGENDS, AND ABBREVIATIONS SEE SHEET U-01.
2. FOR COORDINATION OF OTHER PROPOSED UTILITIES REFER TO
   - ELECTRICAL U16
   - POTABLE WATER U32
   - SANITARY SEWER SS64
3. CONTRACTOR TO VERIFY MANHOLE LOCATIONS WITH PRESIDIO TRUST, ENGINEER, AND CALTRANS DURING FIELD WALK PRIOR TO CONSTRUCTION.
4. CONNECT CONDUIT TO EXISTING BOX ON OUTISDE OF BUILDING. IF THERE ISN'T AN EXISTING BOX STUB CONDUIT INTO BUILDING. ALL CABLING TERMINATIONS ARE TO BE COORDINATED WITH THE PRESIDIO PRIOR TO INSTALLATION.
5. TRENCH ALIGNMENT FROM BEGIN SWEEP TO BOX TO END SWEEP IS INDICATIVE ONLY. CONTRACTOR TO CONSTRUCT PER FIELD CONDITIONS.

THIS PLAN APPLIES TO TELECOMMUNICATION WORK ONLY.

UTILITY PLAN
(TELECOMMUNICATION RELOCATION)
SCALE:1"=50'

U-48

CALCULATED-DESIGNED BY	TYLER KELLY	REVISED BY	ML
CHECKED BY	BILL LIZOTTE	DATE REVISED	12/10/09
FUNCTIONAL SUPERVISOR	DUANNE GILMORE	MD	11/13/09

STATE OF CALIFORNIA - DEPARTMENT OF TRANSPORTATION
Caltrans

LAST REVISION
DATE PLOTTED => 2/2/2010
TIME PLOTTED => 4:31:38 PM

Dist	COUNTY	ROUTE	POST MILES TOTAL PROJECT	SHEET No.	TOTAL SHEETS
				49	

LICENSED CIVIL ENGINEER 8-10-09

PLANS APPROVAL DATE

REGISTERED PROFESSIONAL ENGINEER
TYLER KELLY
No. E18769
Exp. 6-30-11
CIVIL
STATE OF CALIFORNIA

THE STATE OF CALIFORNIA OR ITS OFFICERS OR AGENTS SHALL NOT BE RESPONSIBLE FOR THE ACCURACY OR COMPLETENESS OF ELECTRONIC COPIES OF THIS PLAN SHEET.

Arup PB JV
560 Mission Street, Suite 700
San Francisco, CA 94105

NOTES:

1. FOR GENERAL NOTES, LEGENDS, AND ABBREVIATIONS SEE SHEET U-01.
2. FOR COORDINATION OF OTHER PROPOSED UTILITIES REFER TO
   - ELECTRICAL U17
   - POTABLE WATER U33
   - SANITARY SEWER SS65
3. CONTRACTOR TO VERIFY MANHOLE LOCATIONS WITH PRESIDIO TRUST, ENGINEER, AND CALTRANS DURING FIELD WALK PRIOR TO CONSTRUCTION.
4. TRENCH ALIGNMENTS FROM BEGIN SWEEP TO BOX TO END SWEEP IS INDICATIVE ONLY. CONTRACTOR TO CONSTRUCT PER FIELD CONDITIONS.

UTILITY PLAN
(TELECOMMUNICATION RELOCATION)

SCALE: 1"-50'

THIS PLAN APPLIES TO TELECOMMUNICATION WORK ONLY.

U-49

MD	01/08/10		
ML	12/10/09		
MD	11/13/09		
REVISED BY	DATE REVISED		
TYLER KELLY		CALCULATED-DESIGNED BY	
BILL LIZOTTE		CHECKED BY	
FUNCTIONAL SUPERVISOR			
DUANNE GILMORE			

STATE OF CALIFORNIA - DEPARTMENT OF TRANSPORTATION
Caltrans

LAST REVISION
DATE PLOTTED => 2/2/2010
TIME PLOTTED => 5:59:13 PM

Dist	COUNTY	ROUTE	POST MILES TOTAL PROJECT	SHEET No.	TOTAL SHEETS
04	SF	101.1	9.0/9.8, 6.8/7.1		

Anna Liu 8-19-09
LICENSED CIVIL ENGINEER

PLANS APPROVAL DATE

REGISTERED PROFESSIONAL ENGINEER
LIU, ANNA HO-YAN
No. C59068
Exp. 6-30-11
CIVIL
STATE OF CALIFORNIA

THE STATE OF CALIFORNIA OR ITS OFFICERS OR AGENTS SHALL NOT BE RESPONSIBLE FOR THE ACCURACY OR COMPLETENESS OF ELECTRONIC COPIES OF THIS PLAN SHEET.

Arup PB JV
560 Mission Street, Suite 700
San Francisco, CA 94105

GENERAL NOTES:

1. LOCATION OF UTILITIES AND FACILITIES SHOWN ON THESE PLANS WERE OBTAINED FROM OWNER'S RECORDS,FIELD MEASUREMENTS, AND POTHOLE INFORMATION; LOCATIONS ARE APPROXIMATE ONLY. AN INDEPENDENT INVESTIGATION IS TO BE CARRIED OUT BY THE CONTRACTOR TO VERIFY LOCATIONS AND DEPTHS OF EXISTING UTILITIES.
2. NEW AND RELOCATED UTILITIES MAY BE OTHER THAN SHOWN, CONTRACTOR SHALL NOTIFY UNDERGROUND SERVICE ALERT (USA) AT 1-(800) 227-2600 48 HOURS BEFORE DIGGING, TRENCHING, OR GRADING.
3. THIS SET OF DRAWINGS, AS PART OF THE CONSTRUCTION DOCUMENT, IS A DIAGRAMMATIC REPRESENTATION OF THE DESIGN INTENT. CONTRACTOR SHALL COORDINATE PRECISE LOCATIONS OF ALL COMPONENTS DEPICTED HEREIN WITH ALL OTHER UTILITIES AND OTHER ENGINEERING DRAWINGS. INSTALLATION DETAILS SHALL BE COORDINATED WITH RESPECTIVE VENDORS AND SUBMITTED FOR REVIEW DURING THE CONSTRUCTION PROCESS.
4. EXISTING UTILITY MATERIALS FOR DUCTS, PIPE & CONDUIT MAY CONTAIN HAZARDOUS MATERIALS. HAZARDOUS MATERIALS ARE TO BE VERIFIED WITH PRESIDIO TRUST STAFF AND BE PROTECTED IN PLACE OR REMOVED WITH NECESSARY SAFETY REQUIREMENTS.
5. RESIDENT ENGINEER IS TO COORDINATE THE CONSTRUCTION SCHEDULE OF ALL PROPOSED UTILITIES ON SITE.
6. ALL WORKS ARE TO BE CARRIED OUT ACCORDING TO PRESIDIO TRUST STANDARD SPECIFICATIONS. FOR WORKS NOT DESCRIBED IN THE PRESIDIO TRUST STANDARD SPECIFICATIONS, CALTRANS OR CITY OF SAN FRANCISCO STANDARD SPECIFICATIONS WILL BE APPLIED AT THE SATISFACTION OF THE RESIDENT ENGINEER AND PRESIDIO TRUST.
7. COORDINATES SHOWN ARE CALIFORNIA STATE PLANE ZONE 3. COORDINATES SHALL BE VERIFIED WITH THE RESIDENT ENGINEER RELATIVE TO PERMANENT SURVEY MARK.
8. COORDINATES SHOWN ON MAINTENANCE HOLES ARE TO THE CENTER OF COVER.
9. REINSTATEMENT IS TO BE CONDUCTED PER PRESIDIO TRUST STANDARD SPECIFICATIONS AND OPERATIONS DEPARTMENT WORK APPLICATION STANDARDS.
10. EXISTING UTILITIES IN CONFLICT WITH FUTURE ALIGNMENT TO BE RELOCATED.
11. ALL UTILITIES SHOWN IN THESE PLANS ARE BASED UPON RECORD INFORMATION OBTAINED FROM UTILITY OWNERS, AND/OR FIELD SURVEYS OF EXISTING UTILITY SURFACE FEATURES.
12. LOCATION OF UTILITY FACILITIES SHOWN ON THESE PLANS ARE APPROXIMATE AND SHALL BE VERIFIED BY THE CONTRACTOR PRIOR TO CONSTRUCTION.
13. FUTURE COLUMN, ABUTMENT AND SURFACE STRUCTURES WILL BE STAKED AND VERIFIED BY THE RESIDENT ENGINEER IN THE FIELD PRIOR TO RELOCATION WORKS
14. DESIGN STRATEGIES AND CONSTRUCTION OF ALL PROPOSED NEW OR REPLACEMENT UTILITY LINES, MANHOLES AND APPRUTENANCES WILL CONFORM TO PRESIDIO TRUST CONSTRUCTION GUIDELINES AND BE ADJUSTED AS NEEDED BY PROJECT TO MATCH INTERIM AND PROPOSED, CONSTRUCTED LANDSCAPED/HARDSCAPE FEATURES/CONDITIONS COSTS ARE TO BE BORNE BY THE PROJECT. ALL PROPOSED NEW OR REPLACEMENT UTILITY WORK AND CONSTRUCTED PRIOR TO COMPLETION OF A GRADING AND LANDSCPE/HARDSCAPE PLAN THAT IS ACCEPTABLE TO THE PRESIDIO TRUST IS AT RISK.
15. ANY WORK IN THE VICINITY OF TREES SHALL BE LIMITED TO SPECIFIC ZONES APPROVED FOR CONSTRUCTION ACTIVITIES, INCLUIDING TREE REMOVAL. ANY PROPOSED WORK APPROVED WITHIN THE ROOT ZONE (OR DRIPLINE) OF ANY TO BE RETAINED TREE SHALL BE PERFORMED UNDER THE DIRECTION OF THE PROJECT ARBORIST AND SUBJECT TO PRESIDIO TRUST REVIEW.
16. THE RESIDENT ENGINEER IS TO ENSURE THAT ALL WORKS CARRIED OUT IN LAND USE CONTROL AREAS ARE TO THE SATISFACTION OF THE GEOTECHNICAL ENGINEER AND METHODOLOGY IS TO BE TO THE SATISFACTION OF THE PRESIDIO TRUST.
17. CONSTRUCTION THAT OCCURS OUTSIDE THE TEMPORARY CONSTRUCTION EASEMENT AND NOT WITHIN ROADWAYS SHOULD PROCEED WITH CONSENT FROM THE PRESIDIO TRUST AND VETERANS ADMINISTRATION (WHERE APPROPRIATE) TO AVOID MISTREATMENT OF SENSITIVE AREAS AND PLANT SPECIES.
18. FOR REINSTATEMENT OF ELATH SLOPE AREAS:
    - MATERIAL THAT HAS BEEN PLACED ON THE SLOPE BE REMOVED AND REPLACED WITH SUITABLE FILL TO 98% COMPACTION.
    - THE FILL MATERIAL SHOULD SATISFY ALL PRESIDIO TRUST TESTING CRITERIA FOR CONTAMINATED SOILS.
    - THE SLOPE SHOULD BE PLACED AT NO STEEPER THAN 2H:1V
    - CONTINUOUS MONITORING SHOULD BE CARRIED OUT TO ENSURE THE INTEGRITY OF THE SLOPE IS MAINTAINED FOR THE INTENDED TEMPORARY EXPOSED LIFE THE SLOPE WILL STAY COVERED WITH IMPERVIOUS MATERIALS (PLASTIC) DURING THE WET SEASON TO ENSURE A CONSTANT MOISTURE CONTENT UNTIL SEEDING AND APPROPRIATE VEGETATION CAN BE EFFECTIVELY PLACED.
    - SHOULD SLOPE MOVEMENT BE OBSERVED, APPROPRIATE REMEDIATION WORK SHOULD BE CARRIED OUT AS A PRIORITY.

SANITARY SEWER NOTES

1. REFER TO SANITARY SEWER PROFILES FOR SANITARY SEWER UNIT STATION, OFFSET AND SSMH RIM ELEVATIONS; AND PIPE SLOPE AND INVERTS.
2. STATION AND OFFSET TIES OF SANITARY SEWER STRUCTURES ARE MEASURED TO THE CENTER OF SSMH COVER UNLESS OTHERWISE NOTED.

SANITARY SEWER

(S1) PROVIDE NEW MANHOLE OR PULLBOX AS INDICATED ON DRAWINGS.

(S8) - STUB (N) DUCT BANK TO WITHIN 12" OF (E) MANHOLE PROVIDE MARKER PER DETAIL E2.

(S10) - 12KV PG&E ELECTRIC.

LEGEND:

—e— —e—	EX ELECTRICAL LINE
—e— —e—	ABANDON ELECTRICAL LINE
—E— —E—	NEW ELECTRICAL LINE
—t— —t—	EX TELECOMMUNICATIONS LINE
—t— —t—	ABANDON TELECOMMUNICATIONS CABLE AND CONDUIT
—TC— —TC—	NEW TELECOMMUNICATIONS LINE
—w— —w—	EX WATER LINE
—w— —w—	ABANDON WATER LINE
—W— —W—	NEW WATER LINE
RC—w— RC—w—	EX RECLAIMED WATER LINE
—s— —s—	EX SANITARY SEWER LINE
—s— —s—	ABANDON SANITARY SEWER LINE
—e— —e—	EX OVERHEAD ELECTRIC LINE
—g— —g—	EX GAS LINE
— — — —	ENVIROMENTALLY/CULTURALLY SENSITIVE AREA
⋈	VALVE
OR	TELECOMMUNICATIONS MAINTENANCE HOLE
E1	DETAIL CALLOUT
	FUTURE COLUMN LOCATION
	FUTURE COLUMN LOCATION
	FUTURE COLUMN LOCATION
\ \ \ \ \ \ \ \ \ \	ABANDON SANITARY SEWER LINE
—S— —S—	NEW SANITARY SEWER LINE
	NEW MH
	NEW SS PUMP STATION
	DIRECTION OF FLOW
XX	SANITARY SEWER SYSTEM NO
X	SANITARY SEWER UNIT

ABBREVIATIONS:

AC	ASPHALT CONCRETE
APC	ALTERNATE PIPE CULVERT
AVE	AVENUE
BLVD	BOULEVARD
BOT	BOTTOM
CL, ℄	CENTERLINE
DIA, Ø	DIAMETER
DWG	DRAWING
E	EASTING
EL	ELEVATION
FF	FINISHED FLOOR
FG	FINISHED GRADE
FL	FLOW LINE
FS	FINISHED SURFACE
FT	FEET
GPM	GALLONS PER MINUTE
HDPE	HIGH DENSITY POLYETHYLENE
INV	INVERT
KW	KILOWATTS
MAX	MAXIMUM
MH	MANHOLE
MIN	MINIMUM
N	NORTHING
NTS	NOT TO SCALE
RCP	REINFORCED CONCRETE PIPE
RD	ROAD
RPM	REVOLUTIONS PER MINUTE
RT	RIGHT
S	SLOPE
SIM	SIMILAR
SS	SANITARY SEWER
SSMH	SANITARY SEWER MANHOLE
STA	STATION
TC	TOP OF CURB/TOP OF STRUCTURE
TDH	TOTAL DYNAMIC HEAD
TOC	TOP OF CONCRETE
TYP	TYPICAL

EQUIPMENT SCHEDULE

EQUIPMENT	PUMP RATE (GPM)	TDH (FT)	SPEED (RPM) (SYNC)	POWER (HP)	HERTZ	VOLTS	PHASE
TEMPORARY DUPLEX PUMP	250	50	1750	75	60	460	3

SANITARY SEWER GENERAL NOTES & LEGEND

NO SCALE

UNSS-01

REVISED BY	MD	FUNCTIONAL SUPERVISOR	DUANNE GILMORE
DATE REVISED	04/01/10		
CALCULATED-DESIGNED BY		STATE OF CALIFORNIA - DEPARTMENT OF TRANSPORTATION	Caltrans
CHECKED BY			

LAST REVISION | DATE PLOTTED => 4/1/2010 | TIME PLOTTED => 4:40:37 PM

Dist	COUNTY	ROUTE	POST MILES TOTAL PROJECT	SHEET No.	TOTAL SHEETS
				54	

LICENSED CIVIL ENGINEER

PLANS APPROVAL DATE

REGISTERED PROFESSIONAL ENGINEER No. Exp. CIVIL STATE OF CALIFORNIA

THE STATE OF CALIFORNIA OR ITS OFFICERS OR AGENTS SHALL NOT BE RESPONSIBLE FOR THE ACCURACY OR COMPLETENESS OF ELECTRONIC COPIES OF THIS PLAN SHEET.

Arup PB JV
560 Mission Street, Suite 700
San Francisco, CA 94105

NOTES:

1. FOR GENERAL NOTES, LEGENDS, AND ABBREVIATIONS SEE SHEET U-01.
2. FOR COORDINATION OF OTHER PROPOSED UTILITIES REFER TO
   - ELECTRICAL U06
   - POTABLE WATER U22
   - TELECOMMUNICATION U38

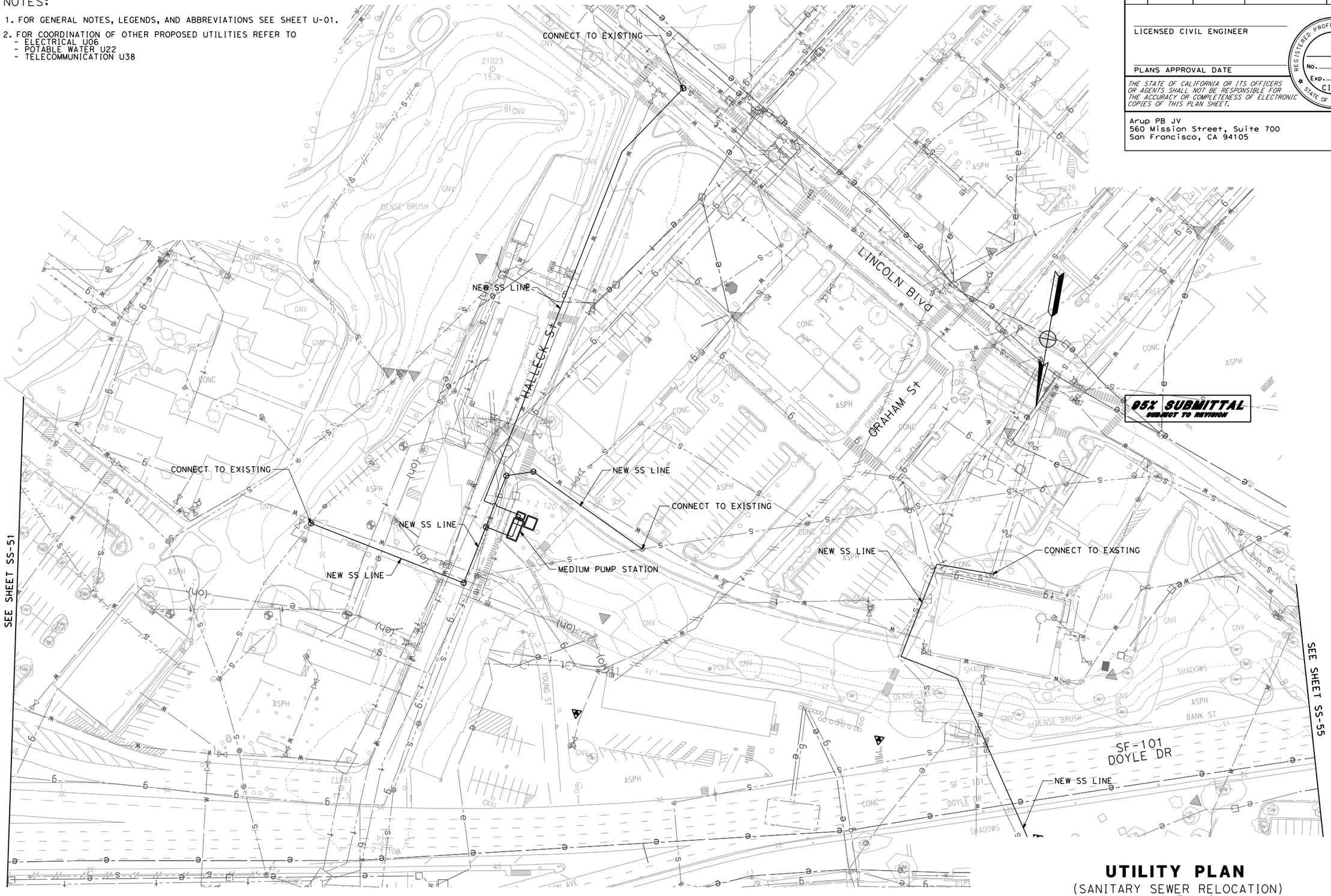

THIS PLAN APPLIES TO SANITARY SEWER WORK ONLY.

UTILITY PLAN

(SANITARY SEWER RELOCATION)
SCALE 1" - 50'

SS-54A

STATE OF CALIFORNIA - DEPARTMENT OF TRANSPORTATION

Caltrans

FUNCTIONAL SUPERVISOR

CALCULATED-DESIGNED BY

CHECKED BY

REVISED BY

DATE REVISED

LAST REVISION

DATE PLOTTED => 4/22/2010
TIME PLOTTED => 10:37:24 AM

BORDER LAST REVISED 3/1/2007

RELATIVE BORDER SCALE IS IN INCHES 0 1 2 3

USERNAME => manish.dalia
DGN FILE => $FILE$

CU 00000

EA 04-16372X

S A N F R A N C I S C O

NOTES:

1. FOR GENERAL NOTES, LEGENDS, AND ABBREVIATIONS SEE SHEET U-01.
2. FOR COORDINATION OF OTHER PROPOSED UTILITIES REFER TO
   - ELECTRICAL U07
   - POTABLE WATER U23
   - TELECOMMUNICATION U39
3. INSTALL SHALLOW-COVER PORTIONS OF HDPE PIPE WITH MINIMUM OF 12" OF COVER. HDPE PIPE MAY BE INSTALLED ON-GRADE AND COVERED WITH AN EARTHERN BERM. ALTERNATIVELY, HDPE PIPE MAY BE INSTALLED EXPOSED ON-GRADE, AND STRAPPED AT REGULAR INTERVALS TO CONCRETE THRUST BLOCKS, AUGERED ANCHORS, OR STRAPPED AND SECURED TO THE EXISTING DOYLE STRUCTURE VIA ANCHOR BOLTS. HDPE PIPE ANCHOR STRAPS TO BE INSTALLED IN THE VALLEYS BETWEEN THE CORRUGATIONS OF THE PIPE. AUGERED ANCHORS TO BE INSTALLED AT LEAST 18 INCHES DEEP AND AT A MINIMUM OF 8 FOOT INTERVALS ON-CENTER.

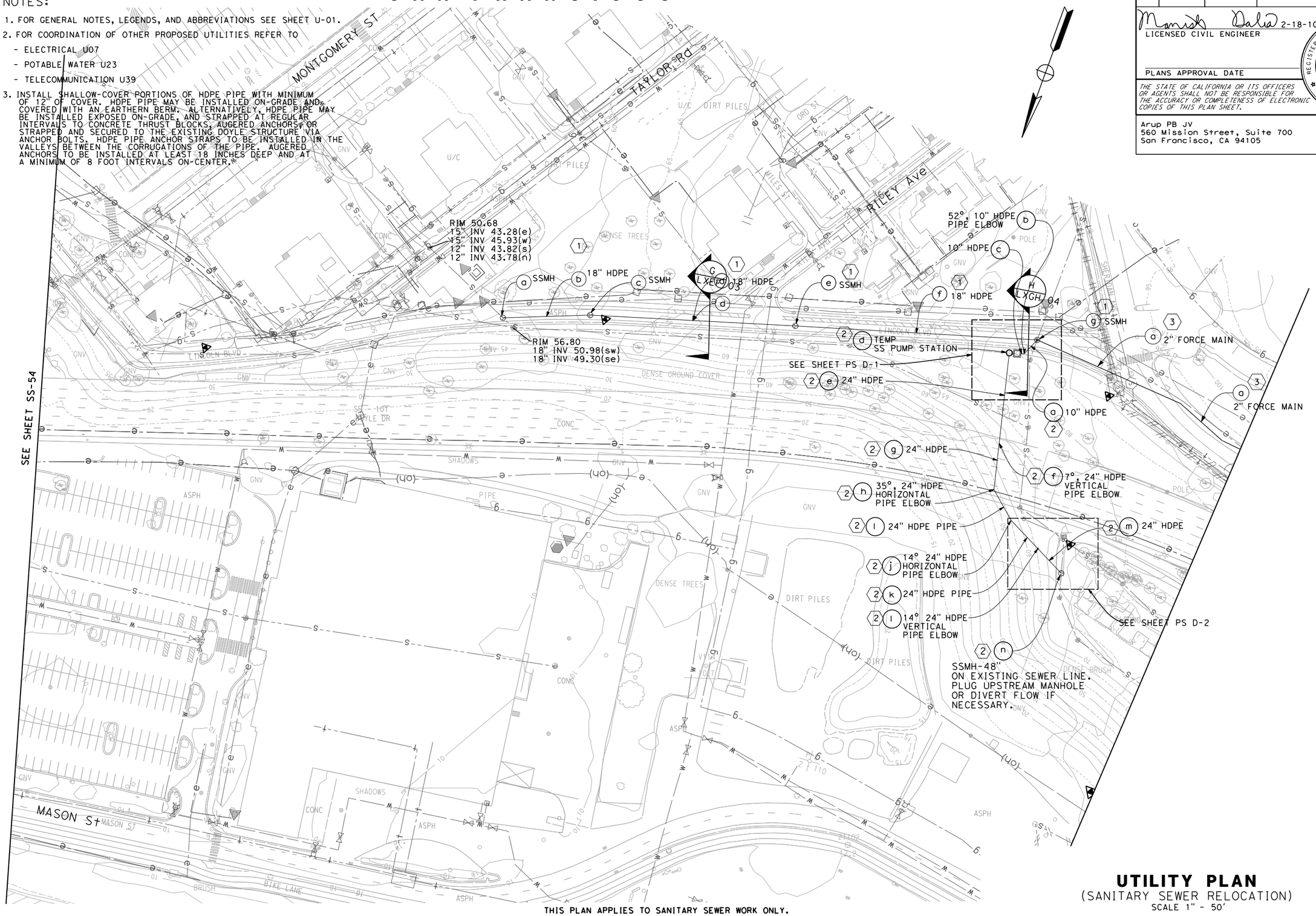

THIS PLAN APPLIES TO SANITARY SEWER WORK ONLY.

UTILITY PLAN
(SANITARY SEWER RELOCATION)
SCALE 1" - 50'

SS-55

Dist	COUNTY	ROUTE	POST MILES TOTAL PROJECT	SHEET No.	TOTAL SHEETS
				55	

Manish Dalia 2-18-10
LICENSED CIVIL ENGINEER

PLANS APPROVAL DATE

REGISTERED PROFESSIONAL ENGINEER MANISH M. DALIA No. C74016 Exp. 6-30-11 CIVIL STATE OF CALIFORNIA

THE STATE OF CALIFORNIA OR ITS OFFICERS OR AGENTS SHALL NOT BE RESPONSIBLE FOR THE ACCURACY OR COMPLETENESS OF ELECTRONIC COPIES OF THIS PLAN SHEET.

Arup PB JV
560 Mission Street, Suite 700
San Francisco, CA 94105

REVISED BY	DATE REVISED
MD	04/01/10
MD	04/08/10
MD	04/23/10

CALCULATED-DESIGNED BY
CHECKED BY
FUNCTIONAL SUPERVISOR

STATE OF CALIFORNIA - DEPARTMENT OF TRANSPORTATION
Caltrans

LAST REVISION
DATE PLOTTED => 4/22/2010
TIME PLOTTED => 11:22:25 PM

Dist	COUNTY	ROUTE	POST MILES TOTAL PROJECT	SHEET No.	TOTAL SHEETS
04	SF	101,1	9.0/9.8, 6.8/7.1	56	

LICENSED CIVIL ENGINEER

PLANS APPROVAL DATE

REGISTERED PROFESSIONAL ENGINEER No. Exp. CIVIL STATE OF CALIFORNIA

THE STATE OF CALIFORNIA OR ITS OFFICERS OR AGENTS SHALL NOT BE RESPONSIBLE FOR THE ACCURACY OR COMPLETENESS OF ELECTRONIC COPIES OF THIS PLAN SHEET.

Arup PB JV
560 Mission Street, Suite 700
San Francisco, CA 94105

NOTES:

1. FOR GENERAL NOTES, LEGENDS, AND ABBREVIATIONS SEE SHEET U-01.
2. FOR COORDINATION OF OTHER PROPOSED UTILITIES REFER TO
   - ELECTRICAL U08
   - POTABLE WATER U24
   - TELECOMMUNICATION U40
3. FIELD ENGINEER TO VERIFY THE PROPOSED SANITARY SEWER LINE WILL HAVE A MINIMUM HORIZONTAL CLEARANCE OF 5' TO THE FUTURE ABUTMENT FOUNDATION.
4. FILL LIMIT IS APPROXIMATE BASED ON SLOPE OF 2H:1V. REFER TO SHEET SSP-01 FOR FILL DEPTH.

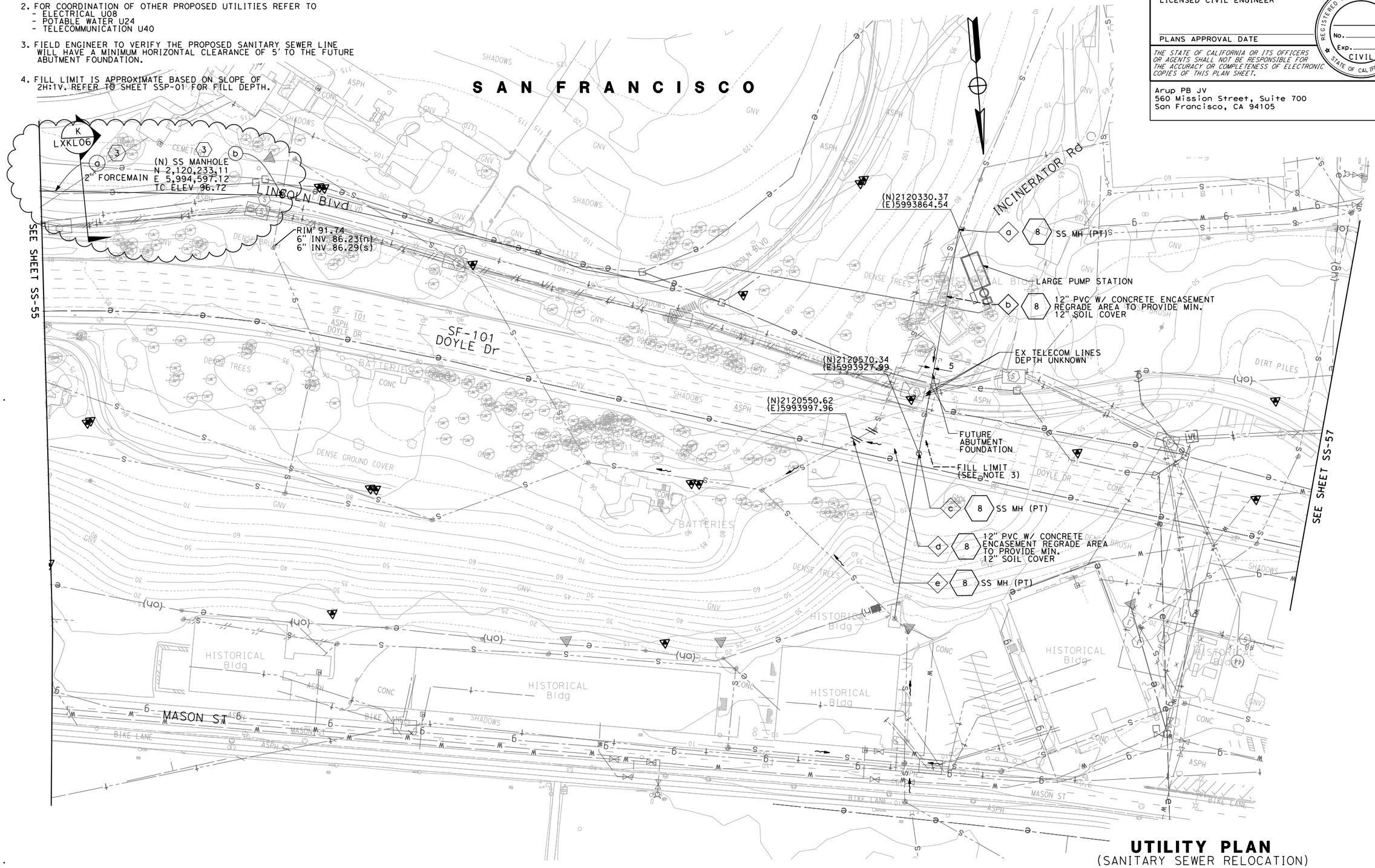

THIS PLAN APPLIES TO SANITARY SEWER WORK ONLY.

UTILITY PLAN
(SANITARY SEWER RELOCATION)

SCALE: 1"=50'

SS-56

REVISED BY	DATE REVISED
MD	04/08/10
MD	04/01/10
ML	08/19/09

CALCULATED-DESIGNED BY

CHECKED BY

FUNCTIONAL SUPERVISOR: DUANNE GILMORE

STATE OF CALIFORNIA - DEPARTMENT OF TRANSPORTATION

Caltrans

LAST REVISION — DATE PLOTTED => 4/22/2010 TIME PLOTTED => 10:17:45 AM

BORDER LAST REVISED 3/1/2007 | RELATIVE BORDER SCALE IS IN INCHES 0 1 2 3 | USERNAME => manish.dalia DGN FILE => $FILE$ | CU 04242 | EA 416372

Dist	COUNTY	ROUTE	POST MILES TOTAL PROJECT	SHEET No.	TOTAL SHEETS
04	SF	101.1	9.0/9.8, 6.8/7.1	58	

Anna Liu 8-10-09
LICENSED CIVIL ENGINEER

PLANS APPROVAL DATE

REGISTERED PROFESSIONAL ENGINEER
LIU, ANNA HO-YAN
No. C59068
Exp. 6-30-11
CIVIL
STATE OF CALIFORNIA

THE STATE OF CALIFORNIA OR ITS OFFICERS OR AGENTS SHALL NOT BE RESPONSIBLE FOR THE ACCURACY OR COMPLETENESS OF ELECTRONIC COPIES OF THIS PLAN SHEET.

Arup PB JV
560 Mission Street, Suite 700
San Francisco, CA 94105

NOTES:

1. FOR GENERAL NOTES, LEGENDS, AND ABBREVIATIONS SEE SHEET U-02.
2. FOR COORDINATION OF OTHER PROPOSED UTILITIES REFER TO
   - ELECTRICAL U10
   - POTABLE WATER U26
   - TELECOMMUNICATIONS U42

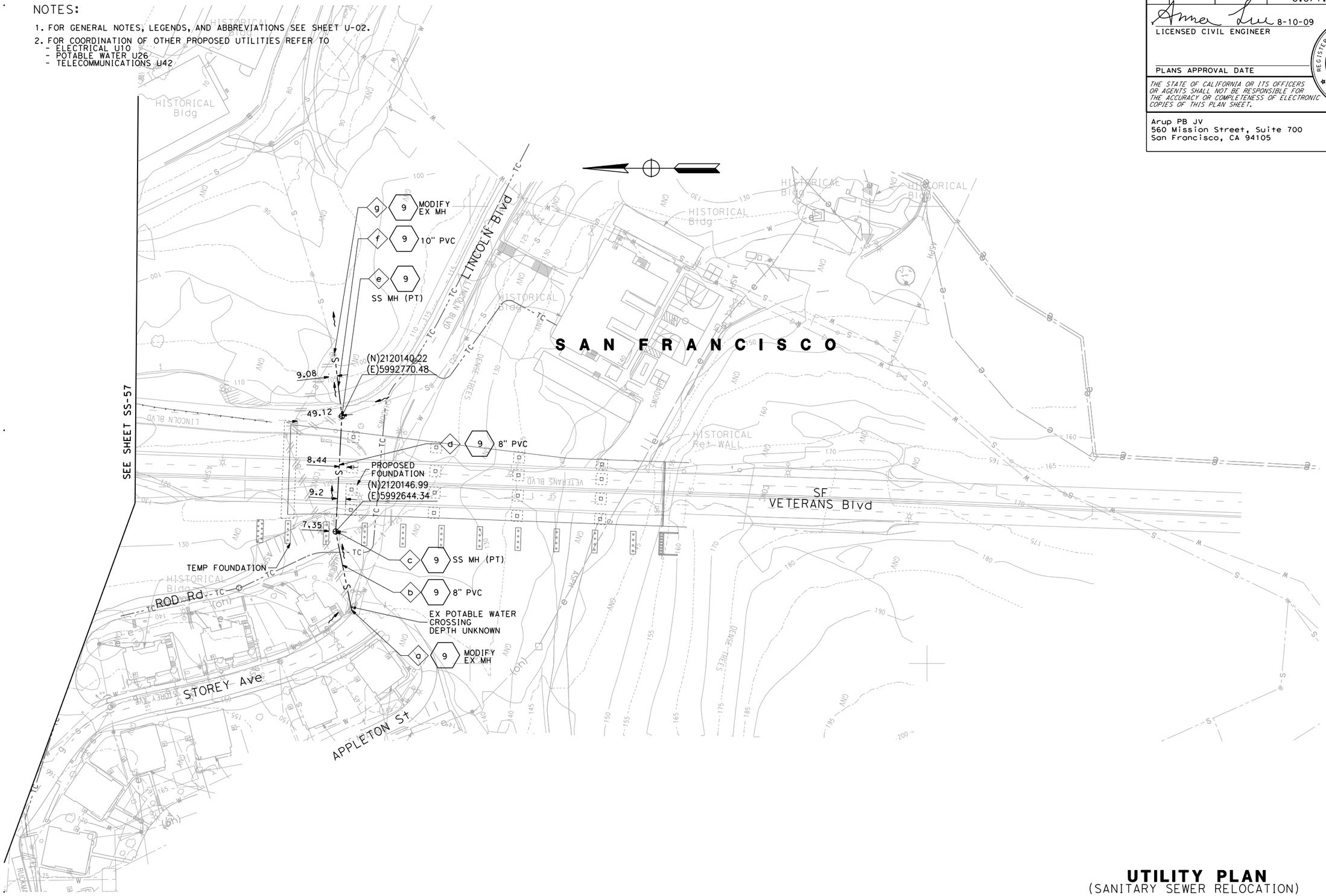

THIS PLAN APPLIES TO SANITARY SEWER WORK ONLY.

UTILITY PLAN
(SANITARY SEWER RELOCATION)

SCALE 1" - 50'

SS-58

CALCULATED-DESIGNED BY	ANNA H. LIU	REVISED BY	ML
CHECKED BY	JACK MONG	DATE REVISED	08/14/09 08/19/09
FUNCTIONAL SUPERVISOR	DUANNE GILMORE		

STATE OF CALIFORNIA - DEPARTMENT OF TRANSPORTATION
Caltrans

LAST REVISION 08-19-09
DATE PLOTTED => 8/19/2009
TIME PLOTTED => 5:51:03 PM

Dist	COUNTY	ROUTE	POST MILES TOTAL PROJECT	SHEET No.	TOTAL SHEETS
04	SF	101.1	9.0/9.8, 6.8/7.1		

Anna Liu 8-10-09
LICENSED CIVIL ENGINEER

PLANS APPROVAL DATE

REGISTERED PROFESSIONAL ENGINEER
LIU, ANNA HO-YAN
No. C59068
Exp 6-30-11
CIVIL
STATE OF CALIFORNIA

THE STATE OF CALIFORNIA OR ITS OFFICERS OR AGENTS SHALL NOT BE RESPONSIBLE FOR THE ACCURACY OR COMPLETENESS OF ELECTRONIC COPIES OF THIS PLAN SHEET.

Arup PB JV
560 Mission Street, Suite 700
San Francisco, CA 94105

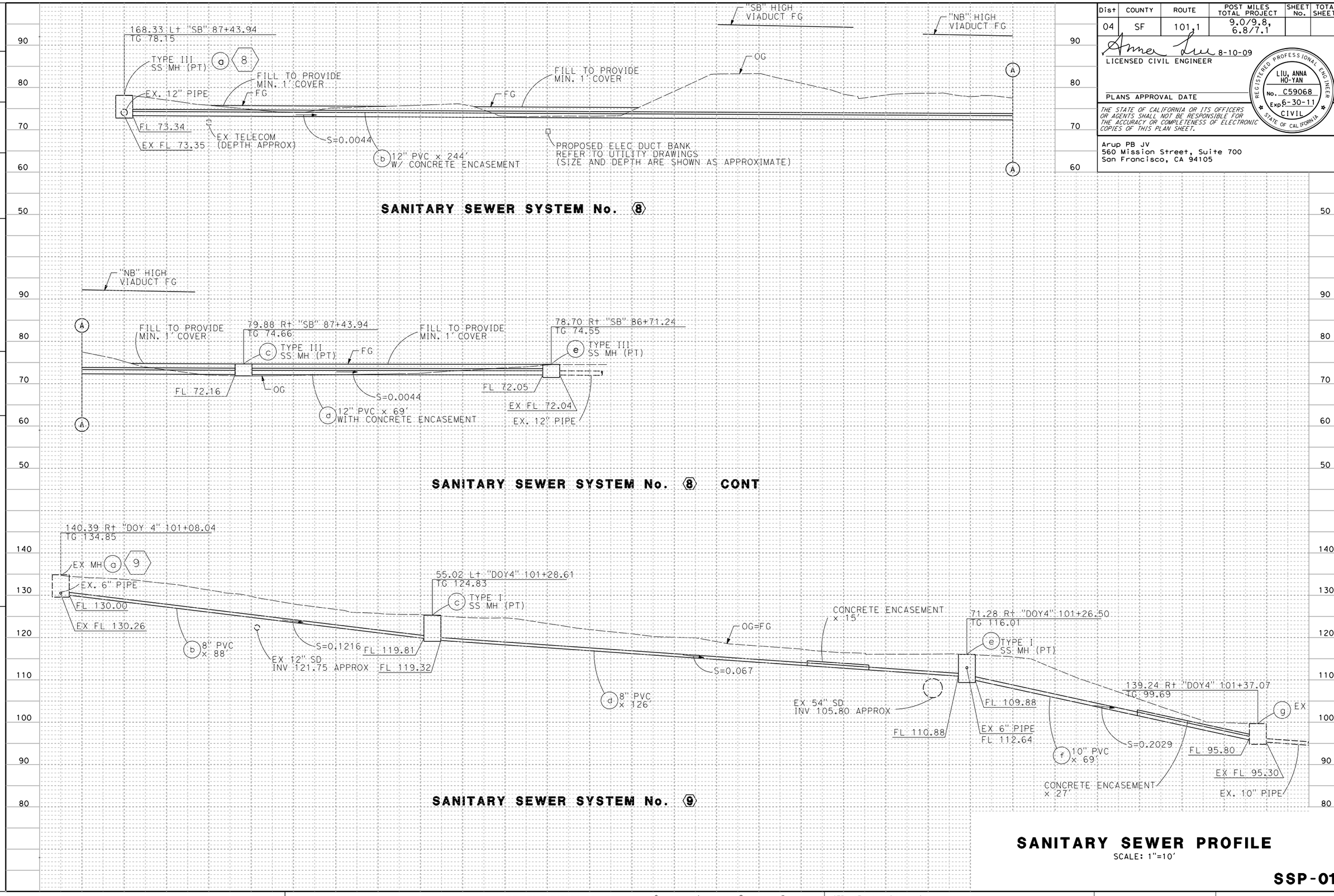

SANITARY SEWER PROFILE

SCALE: 1"=10'

SSP-01

REVISED BY	DATE REVISED
ML	08/19/09
ML	08/14/09

ANNA H. LIU — CALCULATED-DESIGNED BY
JACK MONG — CHECKED BY
DUANNE GILMORE — FUNCTIONAL SUPERVISOR

STATE OF CALIFORNIA - DEPARTMENT OF TRANSPORTATION
Caltrans

LAST REVISION 7-15-09
DATE PLOTTED => 7/20/2010
TIME PLOTTED => 4:01:18 PM

Dist	COUNTY	ROUTE	POST MILES TOTAL PROJECT	SHEET No.	TOTAL SHEETS
04	SF	101,1	9.0/9.8, 6.8/7.1		

Manish Dalia 2-18-10
LICENSED CIVIL ENGINEER

PLANS APPROVAL DATE

REGISTERED PROFESSIONAL ENGINEER
MANISH M. DALIA
No. C74016
Exp. 6-30-11
CIVIL
STATE OF CALIFORNIA

THE STATE OF CALIFORNIA OR ITS OFFICERS OR AGENTS SHALL NOT BE RESPONSIBLE FOR THE ACCURACY OR COMPLETENESS OF ELECTRONIC COPIES OF THIS PLAN SHEET.

Arup PB JV
560 Mission Street, Suite 700
San Francisco, CA 94105

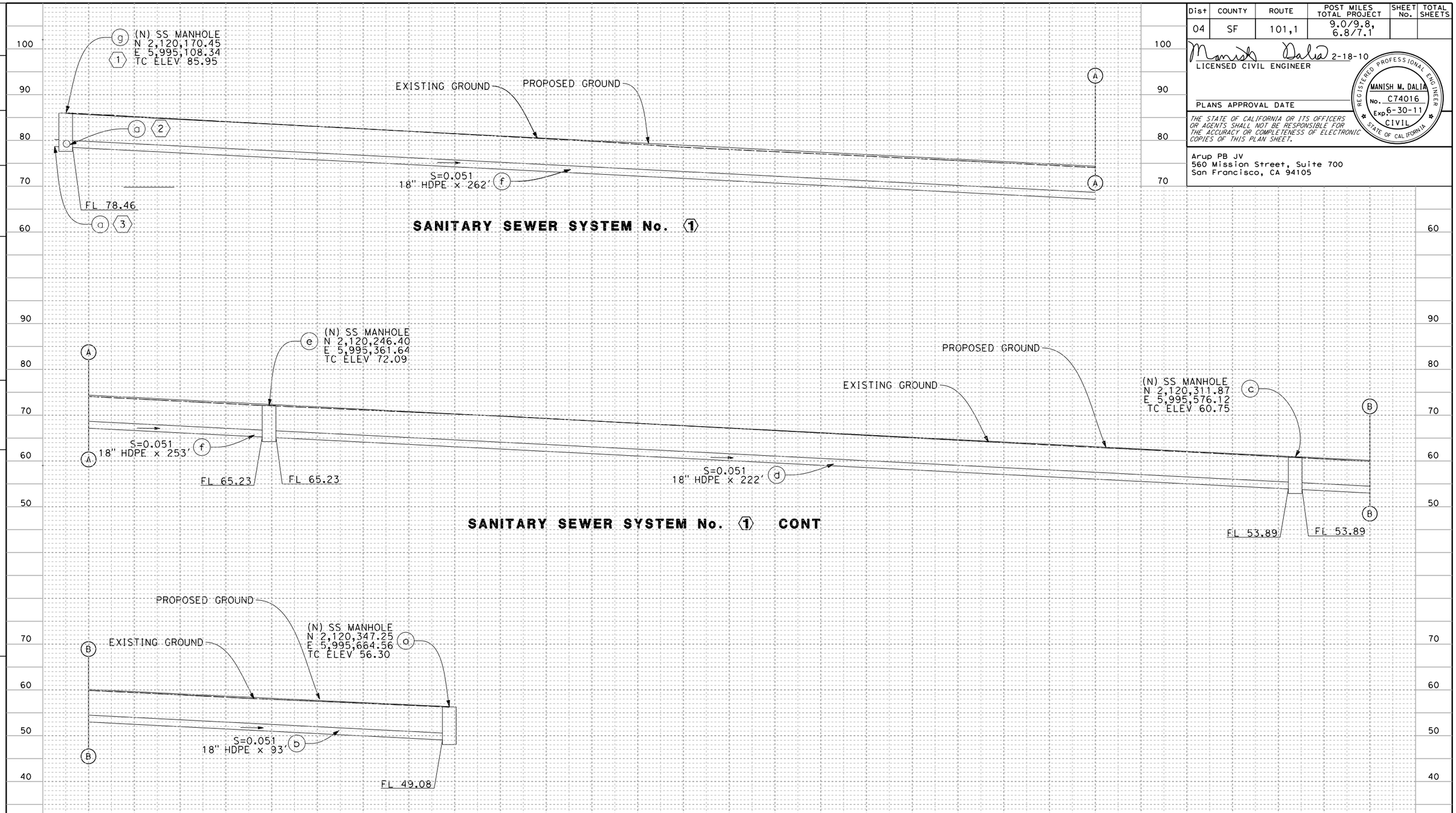

SANITARY SEWER PROFILE

SCALE: 1"=10'

SSP-02

MD	04/23/10	
MD	04/01/10	
REVISED BY	DATE REVISED	
ANNA H. LIU	JACK MONG	
CALCULATED-DESIGNED BY	CHECKED BY	
FUNCTIONAL SUPERVISOR	DUANNE GILMORE	

STATE OF CALIFORNIA - DEPARTMENT OF TRANSPORTATION
Caltrans

LAST REVISION 7-15-09
DATE PLOTTED => 4/22/2010
TIME PLOTTED => 1:26:56 PM

Dist	COUNTY	LOCATION CODE	POST MILES TOTAL PROJECT	SHEET No.	TOTAL SHEETS
04	SF	101, 1	9.0/9.8 6.8/7.1		

REGISTERED CIVIL ENGINEER DATE 4/01/10

PLANS APPROVAL DATE

REGISTERED PROFESSIONAL ENGINEER
MARK GRODZKI
No. C65594
Exp. 9/30/11
CIVIL
STATE OF CALIFORNIA

THE STATE OF CALIFORNIA OR ITS OFFICERS OR AGENTS SHALL NOT BE RESPONSIBLE FOR THE ACCURACY OR COMPLETENESS OF ELECTRONIC COPIES OF THIS PLAN SHEET.

ARUP PB JV
303 2nd St, Suite 700 North
San Francisco, CA 94107-1317

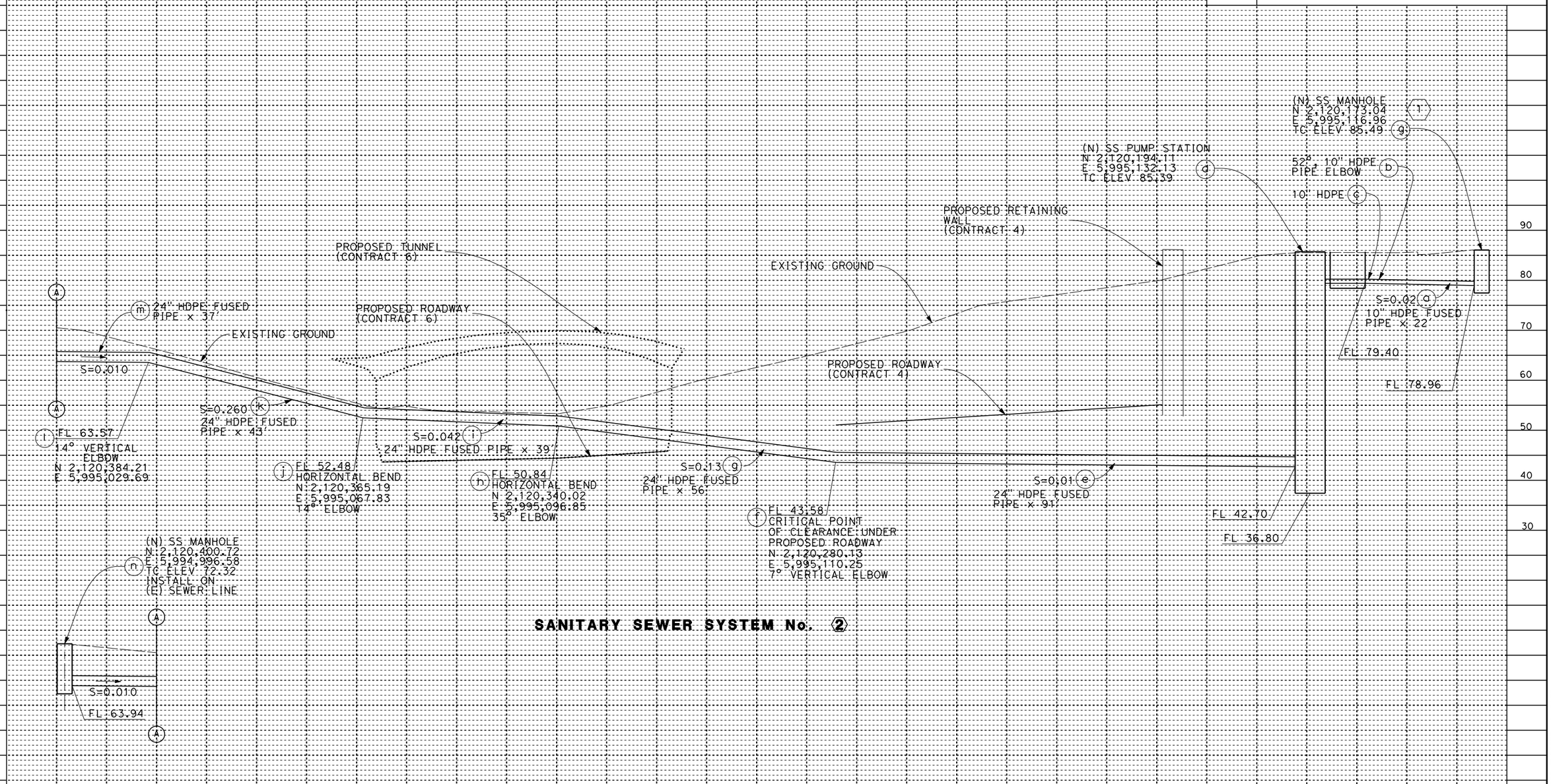

SANITARY SEWER SYSTEM No. 2

SANITARY SEWER PROFILE

SCALE: 1"=10'

SSP-03

REVISED BY | DATE REVISED

CALCULATED-DESIGNED BY | CHECKED BY

FUNCTIONAL SUPERVISOR

STATE OF CALIFORNIA - DEPARTMENT OF TRANSPORTATION

Caltrans

LAST REVISION 00-00-00

DATE PLOTTED => $DATE
TIME PLOTTED => $TIME

BORDER LAST REVISED 3/1/2007

RELATIVE BORDER SCALE IS IN INCHES 0 1 2 3

USERNAME => $USER
DGN FILE => $REQUEST

CU 00000

EA 000000

Dist	COUNTY	ROUTE	POST MILES TOTAL PROJECT	SHEET No.	TOTAL SHEETS
04	SF	101,1	9.0/9.8, 6.8/7.1		

Manish Dalia 2-18-10
LICENSED CIVIL ENGINEER

PLANS APPROVAL DATE

REGISTERED PROFESSIONAL ENGINEER
MANISH M. DALIA
No. C74016
Exp. 6-30-11
CIVIL
STATE OF CALIFORNIA

THE STATE OF CALIFORNIA OR ITS OFFICERS OR AGENTS SHALL NOT BE RESPONSIBLE FOR THE ACCURACY OR COMPLETENESS OF ELECTRONIC COPIES OF THIS PLAN SHEET.

Arup PB JV
560 Mission Street, Suite 700
San Francisco, CA 94105

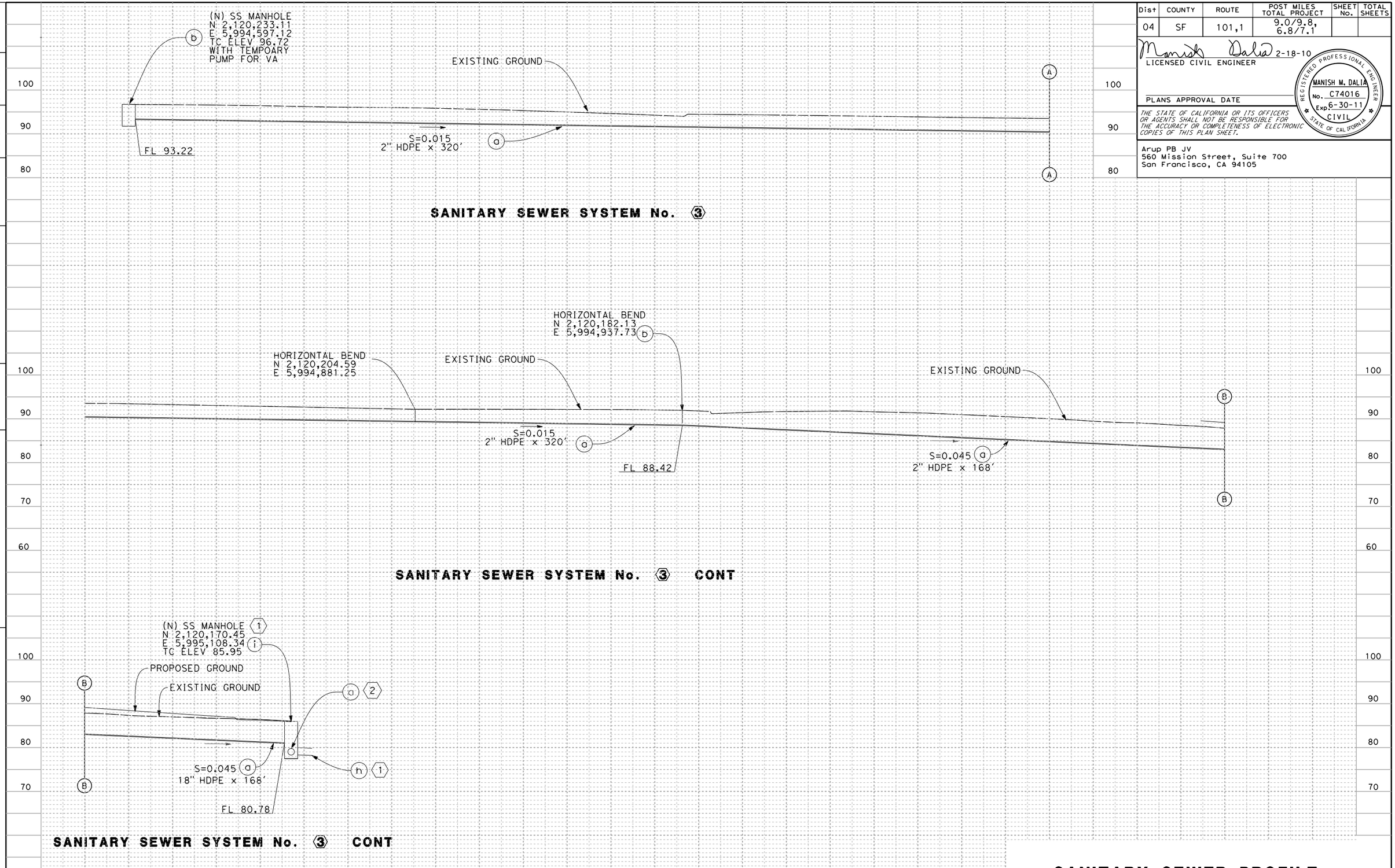

SANITARY SEWER PROFILE

SCALE: 1"=10'

SSP-04

REVISED BY	DATE REVISED
MD	04/08/10
MD	04/01/10

ANNA H. LIU — JACK MONG

CALCULATED-DESIGNED BY — CHECKED BY

FUNCTIONAL SUPERVISOR: DUANNE GILMORE

STATE OF CALIFORNIA - DEPARTMENT OF TRANSPORTATION — Caltrans

LAST REVISION 7-15-09 — DATE PLOTTED => 4/8/2010 — TIME PLOTTED => 1:11:47 PM

Dist	COUNTY	ROUTE	POST MILES TOTAL PROJECT	SHEET No.	TOTAL SHEETS
04	SF	101,1	9.0/9.8, 6.8/7.1		

8-19-09
LICENSED ELECTRICAL ENGINEER

PLANS APPROVAL DATE

REGISTERED PROFESSIONAL ENGINEER
SHAUN DAVID LANDMAN
No. E17532
Exp. 6-30-11
ELEC
STATE OF CALIFORNIA

THE STATE OF CALIFORNIA OR ITS OFFICERS OR AGENTS SHALL NOT BE RESPONSIBLE FOR THE ACCURACY OR COMPLETENESS OF ELECTRONIC COPIES OF THIS PLAN SHEET.

Arup PB JV
560 Mission Street, Suite 700
San Francisco, CA 94105

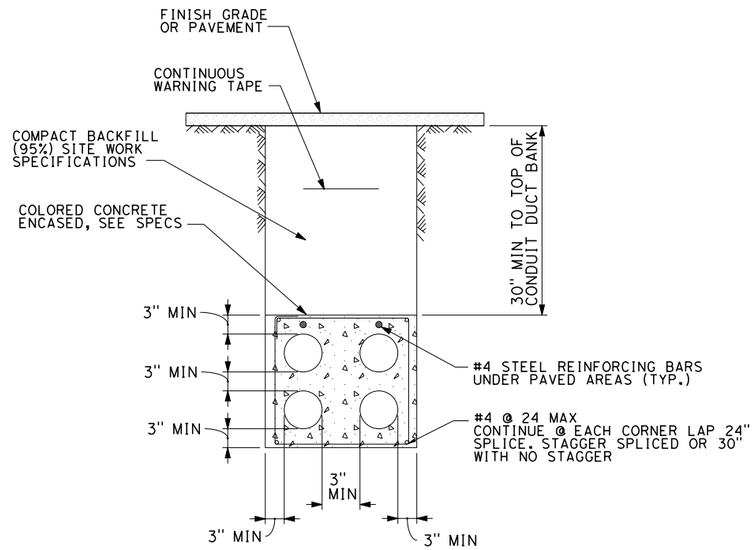

E1 TYPICAL UNDERGROUND DUCT BANK

SCALE: NTS

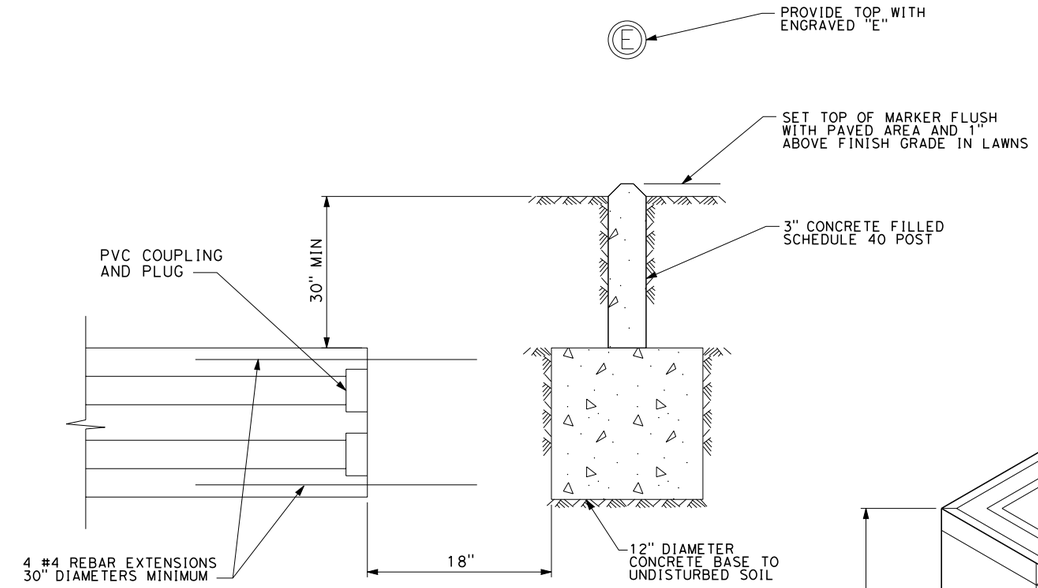

E2 TYPICAL DUCT STUB AND MARKER

SCALE: NTS

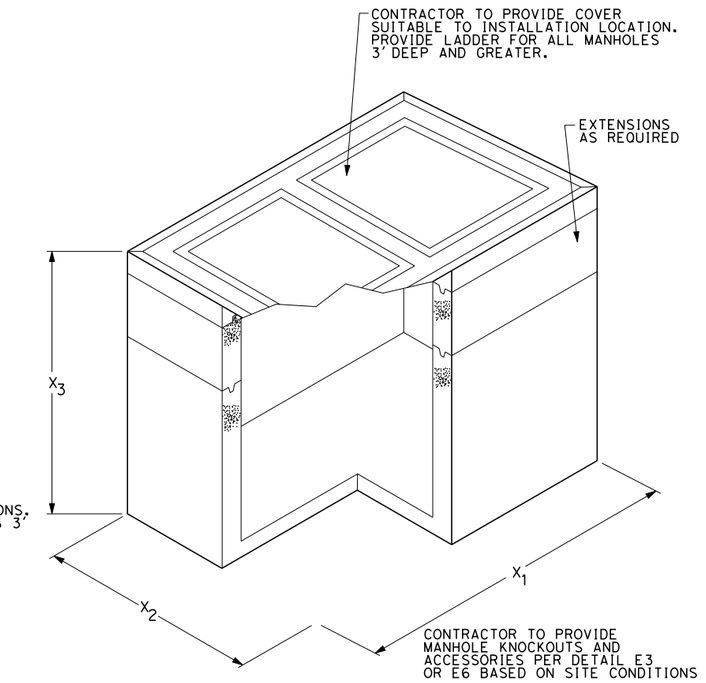

DIMENSIONS (INTERNAL) X_1, X_2, X_3 AS INDICATED ON DRAWINGS OR REQUIRED BY CODE.
IF DIMENSION X_3 IS OMITTED, CONTRACTOR TO PROVIDE MANHOLE HEIGHT AS REQUIRED BASED ON SITE CONDITIONS. MINIMUM DIMENSIONS 4'x3'x3'.

E5 TYPICAL PULLBOX DETAIL

SCALE: NTS

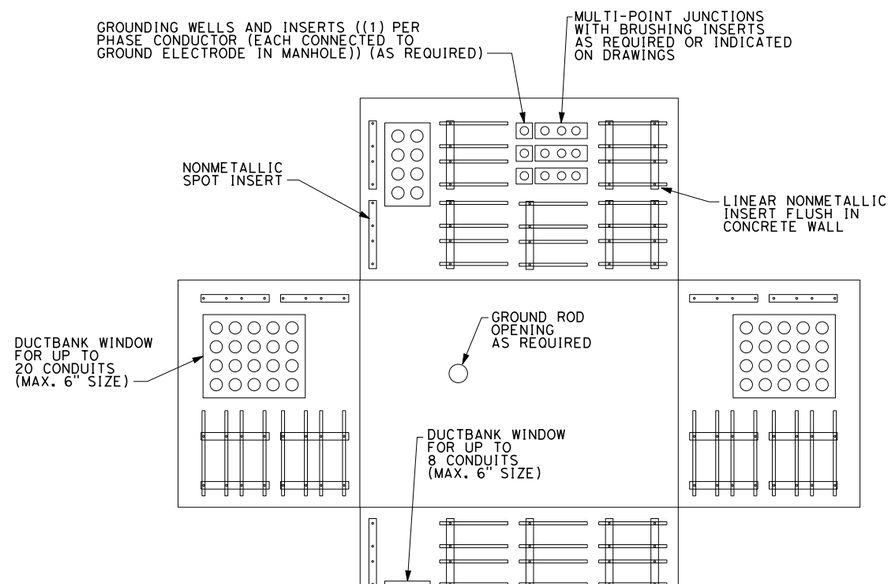

E3 TYPICAL MANHOLE BUTTERFLY DIAGRAM

SCALE: NTS

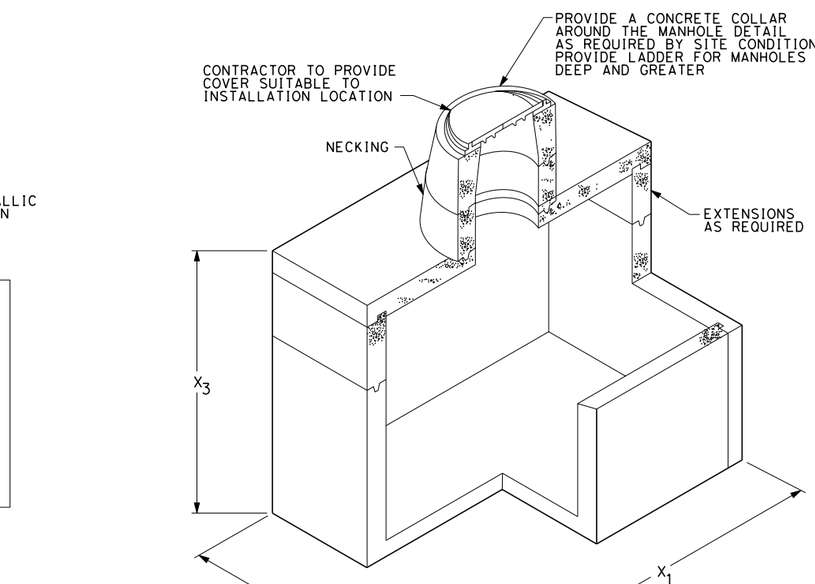

DIMENSIONS (INTERNAL) X_1, X_2, X_3 AS INDICATED ON DRAWINGS OR REQUIRED BY CODE.
IF DIMENSION X_3 IS OMITTED, CONTRACTOR TO PROVIDE MANHOLE HEIGHT AS REQUIRED BASED ON SITE CONDITIONS. MINIMUM DIMENSIONS 4'x3'x3'.

E4 TYPICAL MANHOLE

SCALE: NTS

UTILITY DETAILS

NO SCALE

UDE-01

REVISED BY	DATE REVISED
ML	12/21/09
ML	12/10/09
MD	11/13/09

GEOFF GUNN
SHAUN LANDMAN

CALCULATED-DESIGNED BY
CHECKED BY

FUNCTIONAL SUPERVISOR
DUANNE GILMORE

STATE OF CALIFORNIA - DEPARTMENT OF TRANSPORTATION
Caltrans

LAST REVISION 09-02-09
DATE PLOTTED => 2/2/2010
TIME PLOTTED => 4:28:46 PM

Dist	COUNTY	ROUTE	POST MILES TOTAL PROJECT	SHEET No.	TOTAL SHEETS
04	SF	101,1	9.0/9.8, 6.8/7.1		

8-19-09
LICENSED ELECTRICAL ENGINEER

REGISTERED PROFESSIONAL ENGINEER
SHAUN DAVID LANDMAN
No. E17532
Exp. 6-30-11
ELEC
STATE OF CALIFORNIA

PLANS APPROVAL DATE

THE STATE OF CALIFORNIA OR ITS OFFICERS OR AGENTS SHALL NOT BE RESPONSIBLE FOR THE ACCURACY OR COMPLETENESS OF ELECTRONIC COPIES OF THIS PLAN SHEET.

Arup PB JV
560 Mission Street, Suite 700
San Francisco, CA 94105

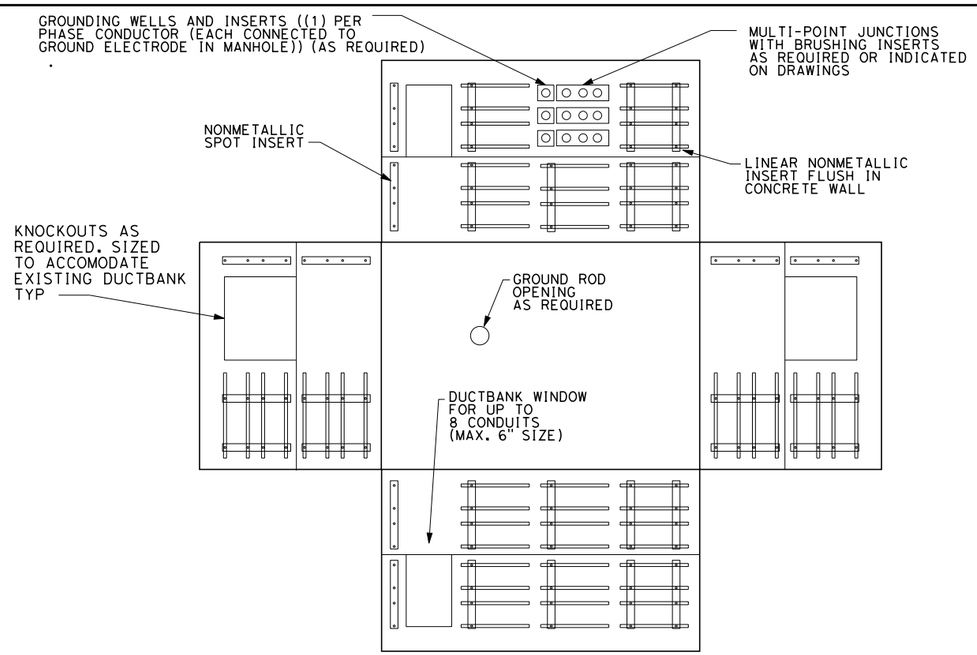

E6 **TYPICAL INTERCEPT MANHOLE BUTTERFLY DIAGRAM**
SCALE: NTS

NOTES

1) THE STRUCTURAL INTEGRITY OF BUILDING 610 HAS NOT BEEN ASSESSED. THE ELECTRICAL CONDUIT AND ASSOCIATED FITTINGS DOES NOT MODIFY STRENGTH CHARACTERISTICS ASSOCIATED WITH THE BUILDING. THE BUILDING OWNER(S) MAINTAIN RESPONSIBILITY FOR THE ELECTRICAL ATTACHMENT TO BUILDING 610 FOLLOWING THE CONSTRUCTION DEFECTS LIABILITY PERIOD.

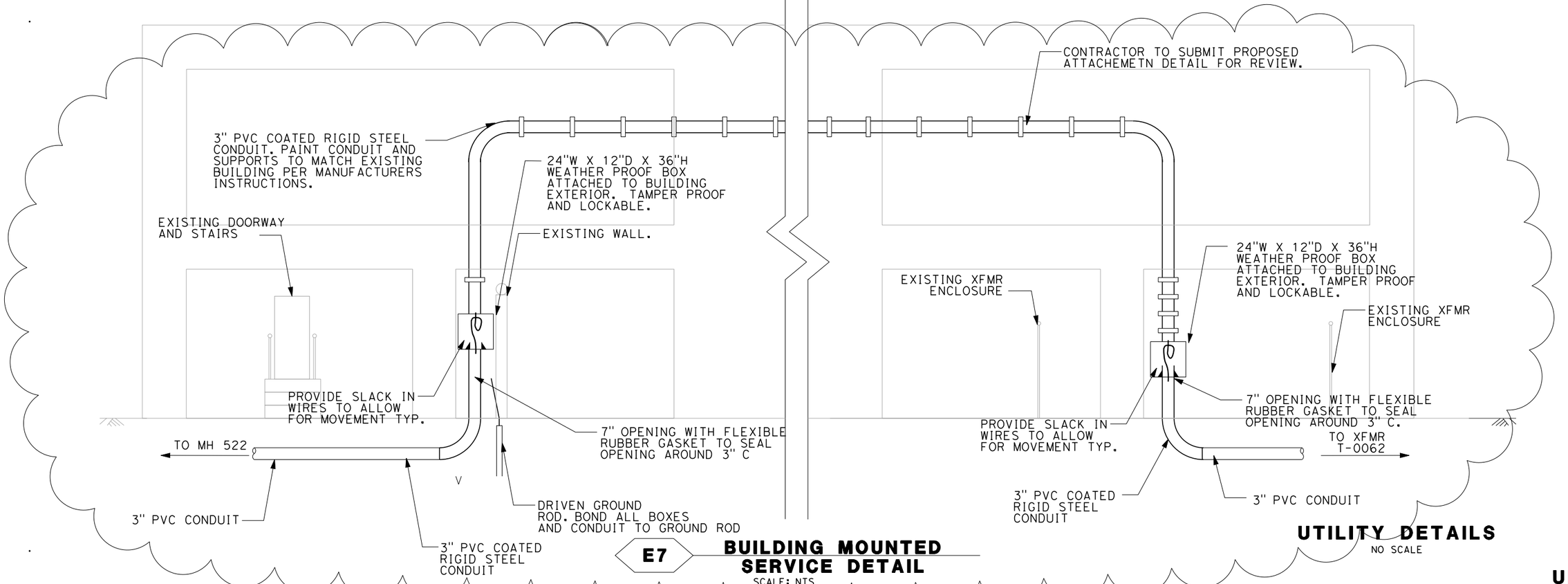

E7 **BUILDING MOUNTED SERVICE DETAIL**
SCALE: NTS

UTILITY DETAILS
NO SCALE

UDE-02

MD	04/23/10	
MD	03/23/10	
MD	02/02/10	
REVISED BY	DATE REVISED	
GEOFF GUNN	SHAUN LANDMAN	
CALCULATED-DESIGNED BY	CHECKED BY	
FUNCTIONAL SUPERVISOR	DUANNE GILMORE	

STATE OF CALIFORNIA - DEPARTMENT OF TRANSPORTATION
Caltrans

LAST REVISION 09-02-09 | DATE PLOTTED => 4/23/2010 | TIME PLOTTED => 11:57:46 AM

Dist	COUNTY	ROUTE	POST MILES TOTAL PROJECT	SHEET No.	TOTAL SHEETS
04	SF	101,1	9.0/9.8, 6.8/7.1		

8-19-09
LICENSED ELECTRICAL ENGINEER

REGISTERED PROFESSIONAL ENGINEER
SHAUN DAVID LANDMAN
No. E17532
Exp. 6-30-11
ELEC
STATE OF CALIFORNIA

PLANS APPROVAL DATE

THE STATE OF CALIFORNIA OR ITS OFFICERS OR AGENTS SHALL NOT BE RESPONSIBLE FOR THE ACCURACY OR COMPLETENESS OF ELECTRONIC COPIES OF THIS PLAN SHEET.

Arup PB JV
560 Mission Street, Suite 700
San Francisco, CA 94105

. LEGEND

(T) PRESIDIO TRUST 4" TELECOM CONDUIT

(E6) PRESIDIO TRUST 6" ELECTRICAL CONDUIT

(W12) PRESIDIO TRUST 12" WATER PIPE

1

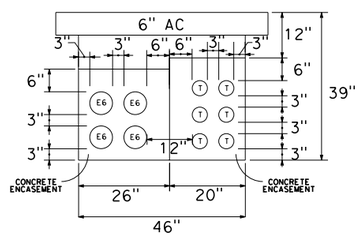

TYPICAL MASON SHALLOW JOINT TRENCH DETAIL

SCALE: NTS

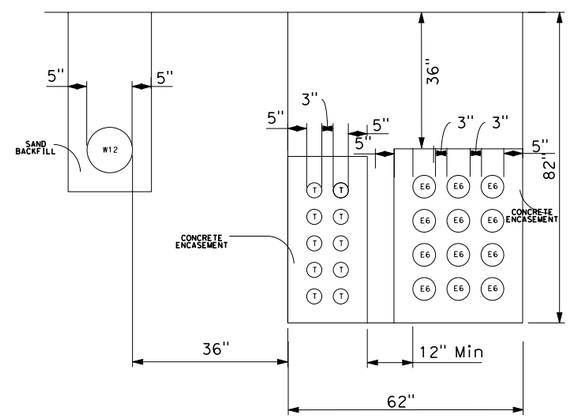

TYPICAL ROBERTS ROAD JOINT TRENCH DETAIL

SCALE: NTS

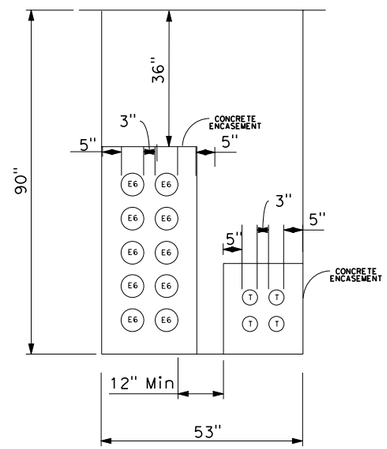

TYPICAL LINCOLN JOINT TRENCH DETAIL

SCALE: NTS

1

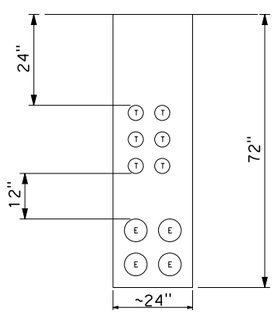

TYPICAL CHRISSY FIELD AVE JOINT TRENCH DETAIL

SCALE: NTS

NOTE: LOCATED IN SOFTSCPE AREA ALONG CRISSY FIELD AVE BETWEEN MASON ST. AND McDOWELL AV.

UTILITY DETAILS

NO SCALE

UDE-03

REVISED BY	DATE REVISED
ML	12/21/09
ML	12/10/09

GEOFF GUNN — CALCULATED-DESIGNED BY
SHAUN LANDMAN — CHECKED BY
DUANNE GILMORE — FUNCTIONAL SUPERVISOR

STATE OF CALIFORNIA - DEPARTMENT OF TRANSPORTATION
Caltrans

LAST REVISION
DATE PLOTTED => 2/2/2010
TIME PLOTTED => 4:28:52 PM

Dist	COUNTY	ROUTE	POST MILES TOTAL PROJECT	SHEET No.	TOTAL SHEETS
04	SF	101,1	9.0/9.8, 6.8/7.1		

8-19-09
LICENSED ELECTRICAL ENGINEER

PLANS APPROVAL DATE

REGISTERED PROFESSIONAL ENGINEER
SHAUN DAVID LANDMAN
No. E17532
Exp. 6-30-11
ELEC
STATE OF CALIFORNIA

THE STATE OF CALIFORNIA OR ITS OFFICERS OR AGENTS SHALL NOT BE RESPONSIBLE FOR THE ACCURACY OR COMPLETENESS OF ELECTRONIC COPIES OF THIS PLAN SHEET.

Arup PB JV
560 Mission Street, Suite 700
San Francisco, CA 94105

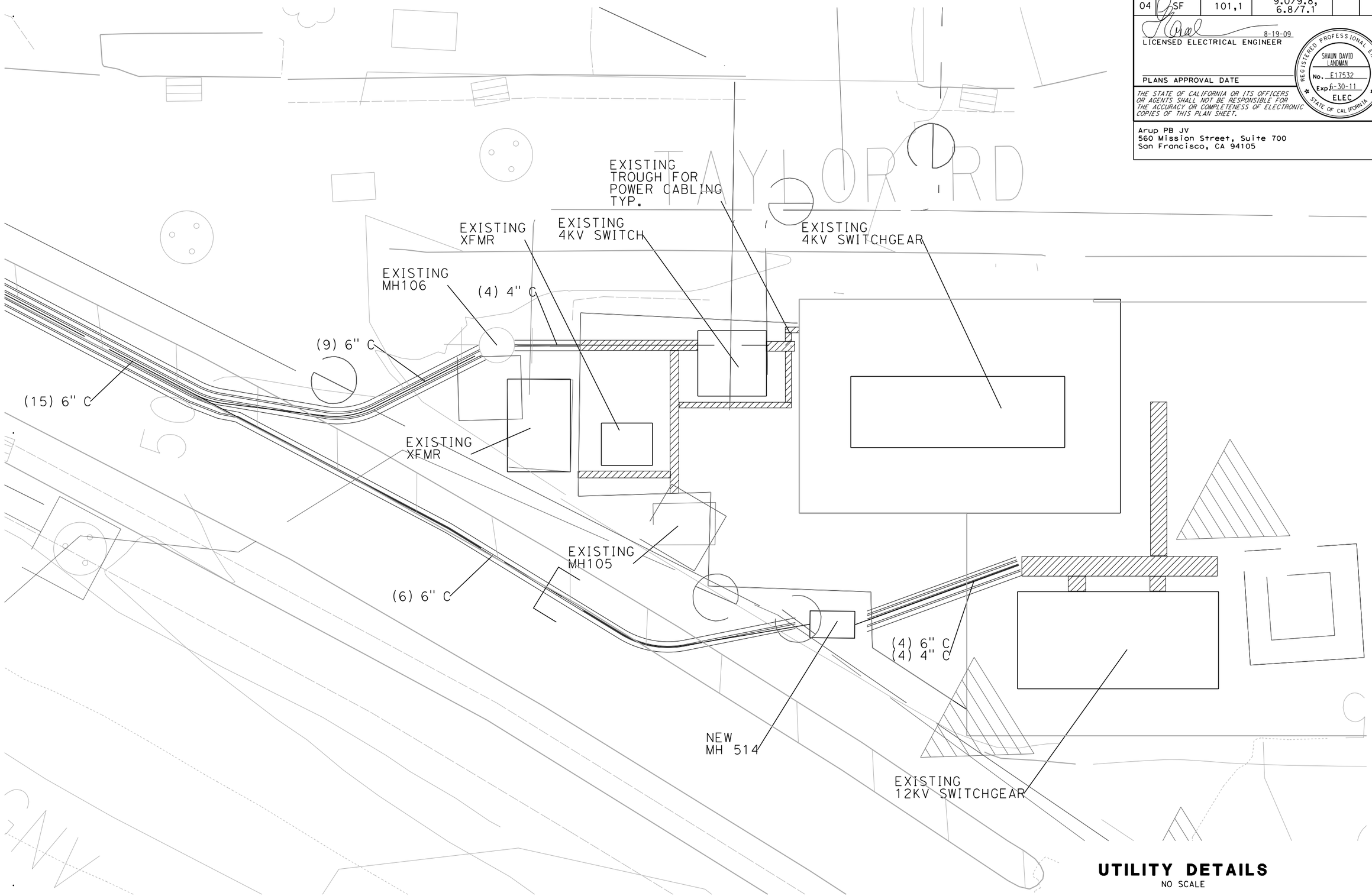

UTILITY DETAILS
NO SCALE

UDE-04

REVISED BY	DATE REVISED
MD	03/23/10

CALCULATED-DESIGNED BY: GEOFF GUNN
CHECKED BY: SHAUN LANDMAN
FUNCTIONAL SUPERVISOR: DUANNE GILMORE

STATE OF CALIFORNIA - DEPARTMENT OF TRANSPORTATION
Caltrans

LAST REVISION
DATE PLOTTED => 3/23/2010
TIME PLOTTED => 5:21:26 PM

Dist	COUNTY	ROUTE	POST MILES TOTAL PROJECT	SHEET No.	TOTAL SHEETS
04	SF	101,1	9.0/9.8, 6.8/7.1		

8-19-09
LICENSED ELECTRICAL ENGINEER

REGISTERED PROFESSIONAL ENGINEER
SHAUN DAVID LANDMAN
No. E17532
Exp. 6-30-11
ELEC
STATE OF CALIFORNIA

PLANS APPROVAL DATE

THE STATE OF CALIFORNIA OR ITS OFFICERS OR AGENTS SHALL NOT BE RESPONSIBLE FOR THE ACCURACY OR COMPLETENESS OF ELECTRONIC COPIES OF THIS PLAN SHEET.

Arup PB JV
560 Mission Street, Suite 700
San Francisco, CA 94105

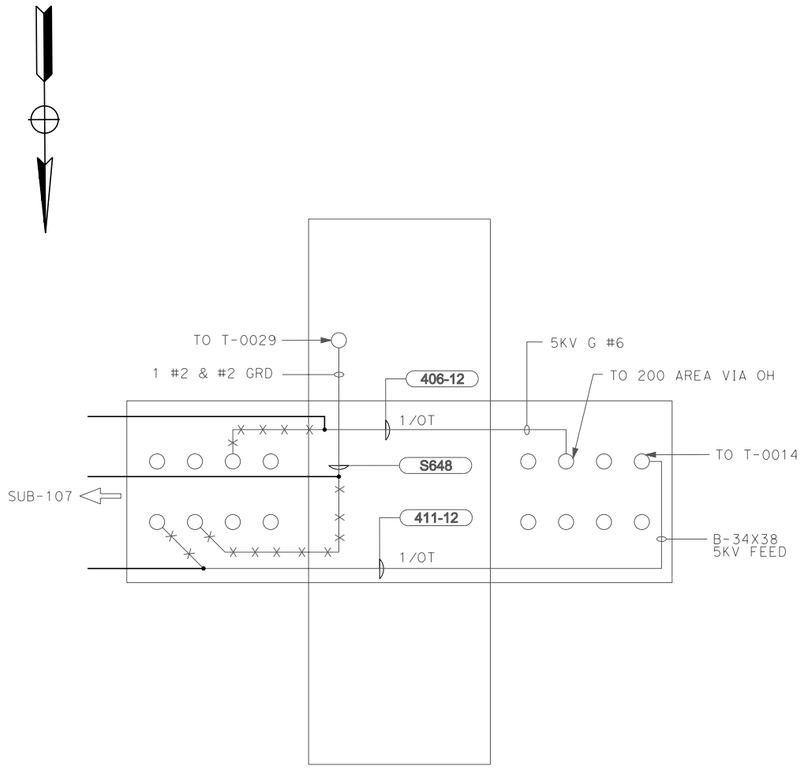

E8 **MH 302**
SCALE: NTS

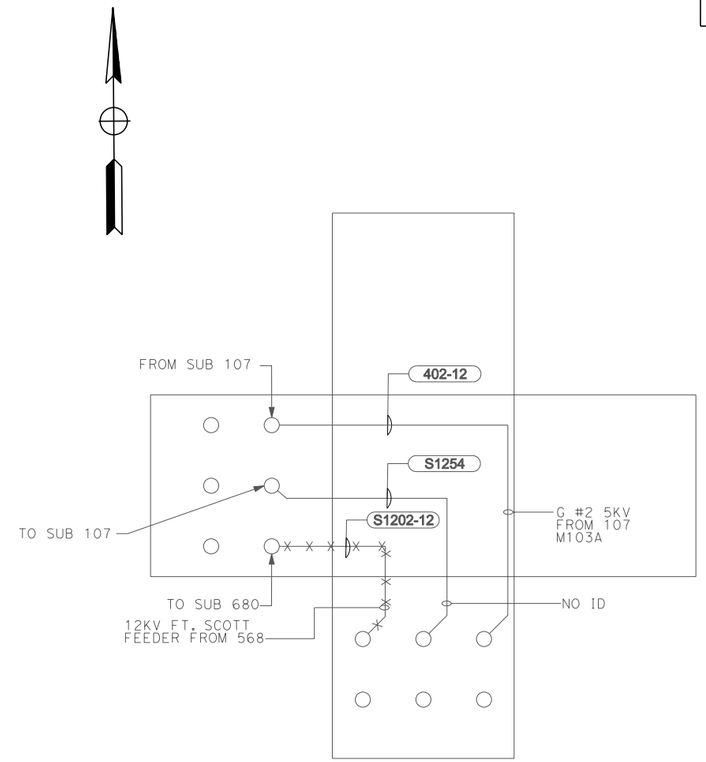

E9 **MH 303**
SCALE: NTS

UTILITY DETAILS
NO SCALE

UDE05

STATE OF CALIFORNIA - DEPARTMENT OF TRANSPORTATION
Caltrans

FUNCTIONAL SUPERVISOR: DUANNE GILMORE
CALCULATED-DESIGNED BY: GEOFF GUNN
CHECKED BY: SHAUN LANDMAN
REVISED BY: MD
DATE REVISED: 04/23/10

LAST REVISION
DATE PLOTTED => 4/23/2010
TIME PLOTTED => 12:50:28 PM

Dist	COUNTY	ROUTE	POST MILES TOTAL PROJECT	SHEET No.	TOTAL SHEETS
04	SF	101,1	9.0/9.8, 6.8/7.1		

8-19-09
LICENSED ELECTRICAL ENGINEER

REGISTERED PROFESSIONAL ENGINEER
SHAUN DAVID LANDMAN
No. E17532
Exp. 6-30-11
ELEC
STATE OF CALIFORNIA

PLANS APPROVAL DATE

THE STATE OF CALIFORNIA OR ITS OFFICERS OR AGENTS SHALL NOT BE RESPONSIBLE FOR THE ACCURACY OR COMPLETENESS OF ELECTRONIC COPIES OF THIS PLAN SHEET.

Arup PB JV
560 Mission Street, Suite 700
San Francisco, CA 94105

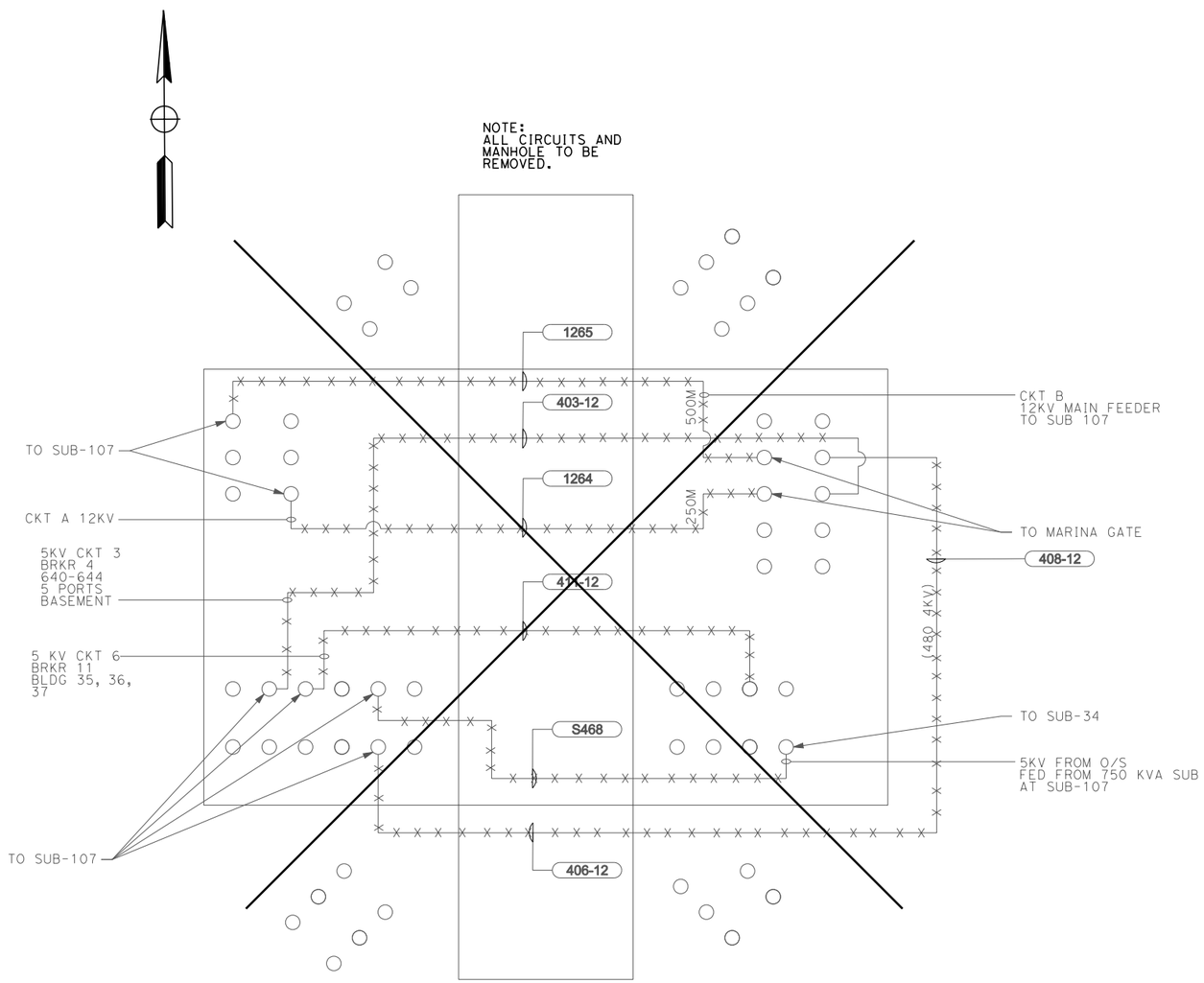

E10 **MH 304**
SCALE: NTS

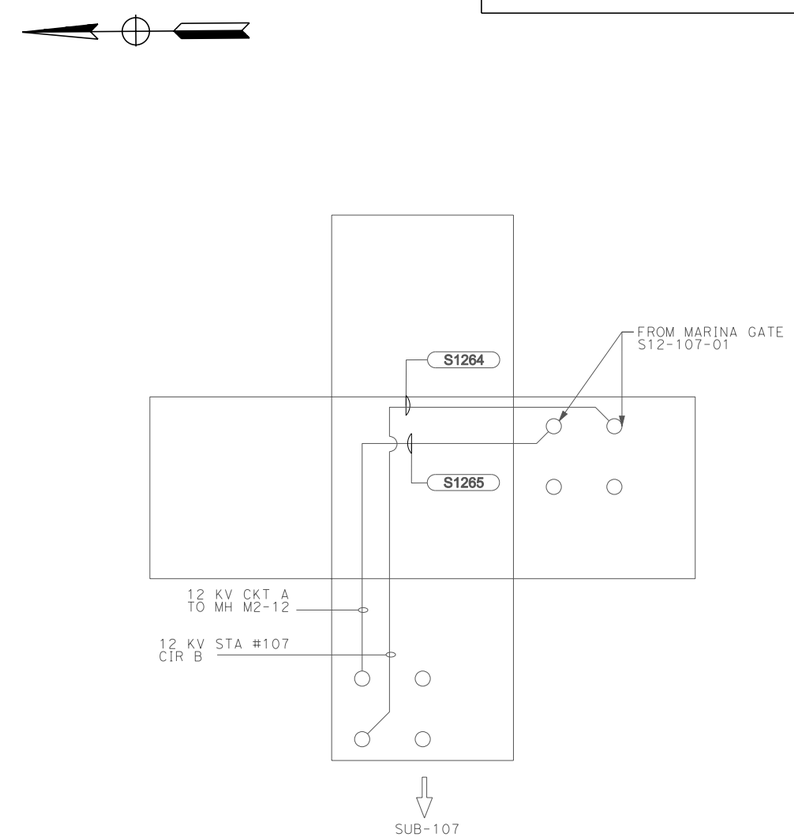

E11 **MH 307**
SCALE: NTS

UTILITY DETAILS
NO SCALE

UDE06

REVISED BY	MD
DATE REVISED	04/23/10
CALCULATED-DESIGNED BY	GEOFF GUNN
CHECKED BY	SHAUN LANDMAN
FUNCTIONAL SUPERVISOR	DUANNE GILMORE

STATE OF CALIFORNIA - DEPARTMENT OF TRANSPORTATION
Caltrans

LAST REVISION | DATE PLOTTED => 4/23/2010 | TIME PLOTTED => 12:51:02 PM

Dist	COUNTY	ROUTE	POST MILES TOTAL PROJECT	SHEET No.	TOTAL SHEETS
04	SF	101,1	9.0/9.8, 6.8/7.1		

8-19-09
LICENSED ELECTRICAL ENGINEER

REGISTERED PROFESSIONAL ENGINEER
SHAUN DAVID LANDMAN
No. E17532
Exp. 6-30-11
ELEC
STATE OF CALIFORNIA

PLANS APPROVAL DATE

THE STATE OF CALIFORNIA OR ITS OFFICERS OR AGENTS SHALL NOT BE RESPONSIBLE FOR THE ACCURACY OR COMPLETENESS OF ELECTRONIC COPIES OF THIS PLAN SHEET.

Arup PB JV
560 Mission Street, Suite 700
San Francisco, CA 94105

NOTE:
ALL CIRCUITS AND MANHOLE TO BE REMOVED.

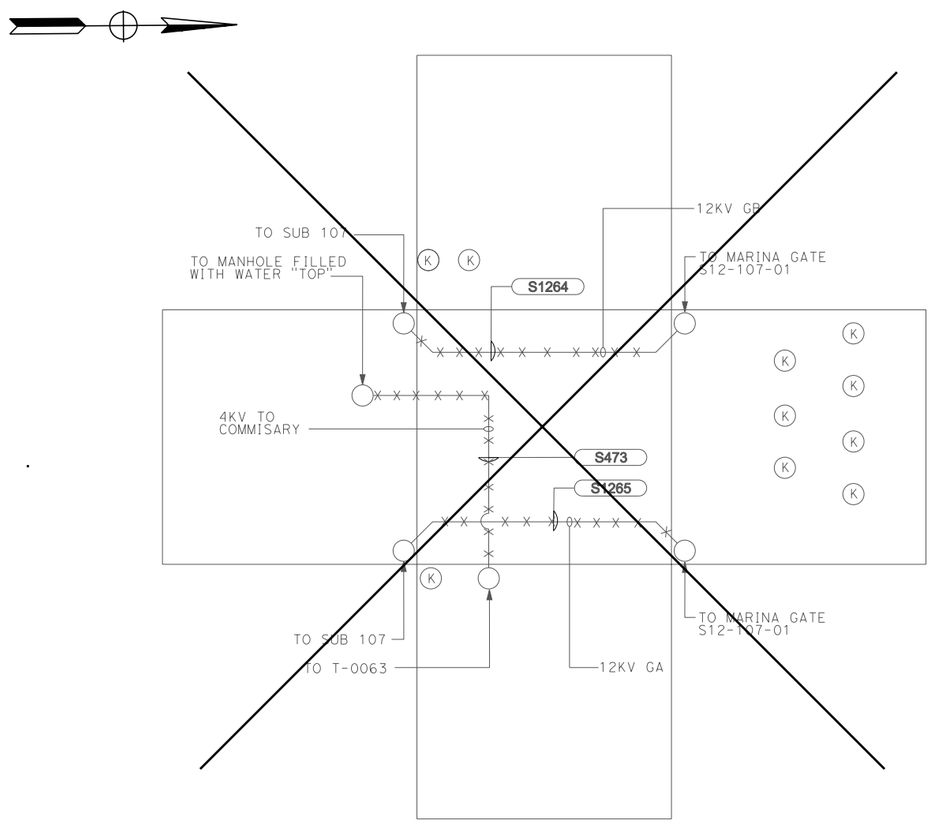

E12 **MH 316**
SCALE: NTS

NOTE:
ALL CIRCUITS AND MANHOLE TO BE REMOVED.

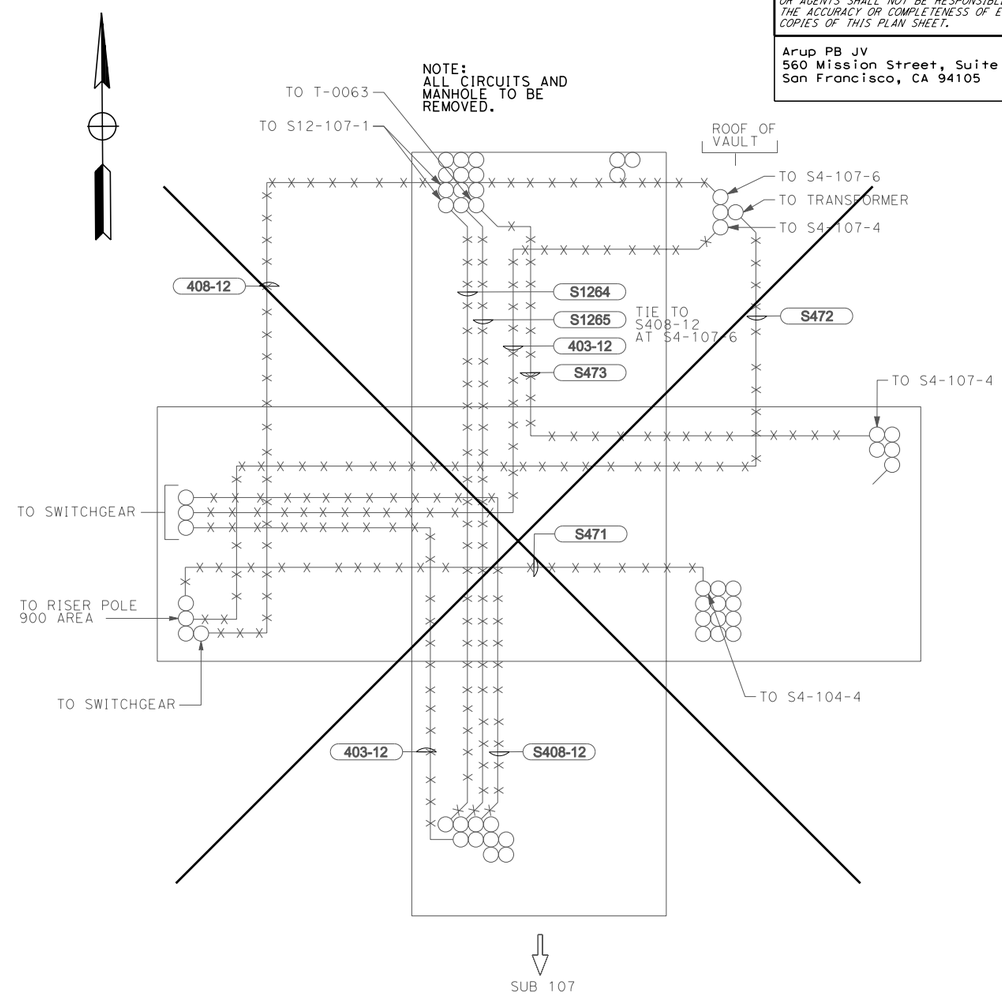

E13 **MH 317**
SCALE: NTS

UTILITY DETAILS
NO SCALE

UDE07

STATE OF CALIFORNIA - DEPARTMENT OF TRANSPORTATION
Caltrans

FUNCTIONAL SUPERVISOR	CALCULATED-DESIGNED BY	CHECKED BY	REVISED BY	DATE REVISED
DUANNE GILMORE	GEOFF GUNN	SHAUN LANDMAN	MD	04/23/10

LAST REVISION
DATE PLOTTED => 4/23/2010
TIME PLOTTED => 2:30:31 PM

Dist	COUNTY	ROUTE	POST MILES TOTAL PROJECT	SHEET No.	TOTAL SHEETS
04	SF	101,1	9.0/9.8, 6.8/7.1		

8-19-09
LICENSED ELECTRICAL ENGINEER

PLANS APPROVAL DATE

REGISTERED PROFESSIONAL ENGINEER
SHAUN DAVID LANDMAN
No. E17532
Exp. 6-30-11
ELEC
STATE OF CALIFORNIA

THE STATE OF CALIFORNIA OR ITS OFFICERS OR AGENTS SHALL NOT BE RESPONSIBLE FOR THE ACCURACY OR COMPLETENESS OF ELECTRONIC COPIES OF THIS PLAN SHEET.

Arup PB JV
560 Mission Street, Suite 700
San Francisco, CA 94105

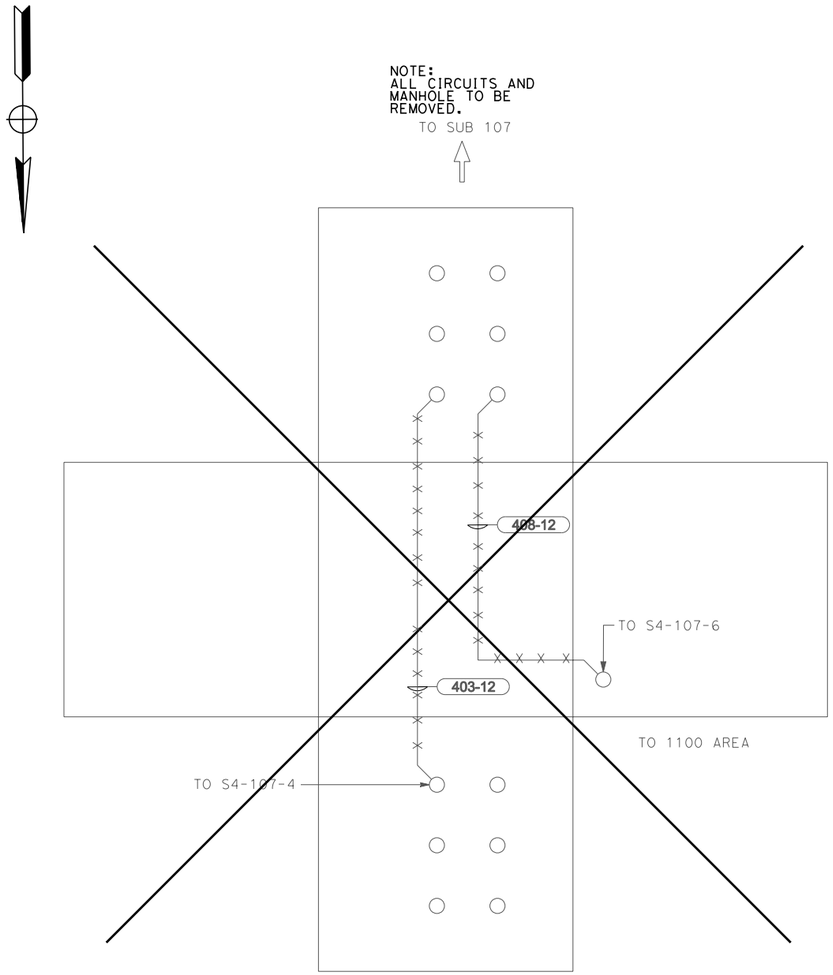

E14 **MH 318**
SCALE: NTS

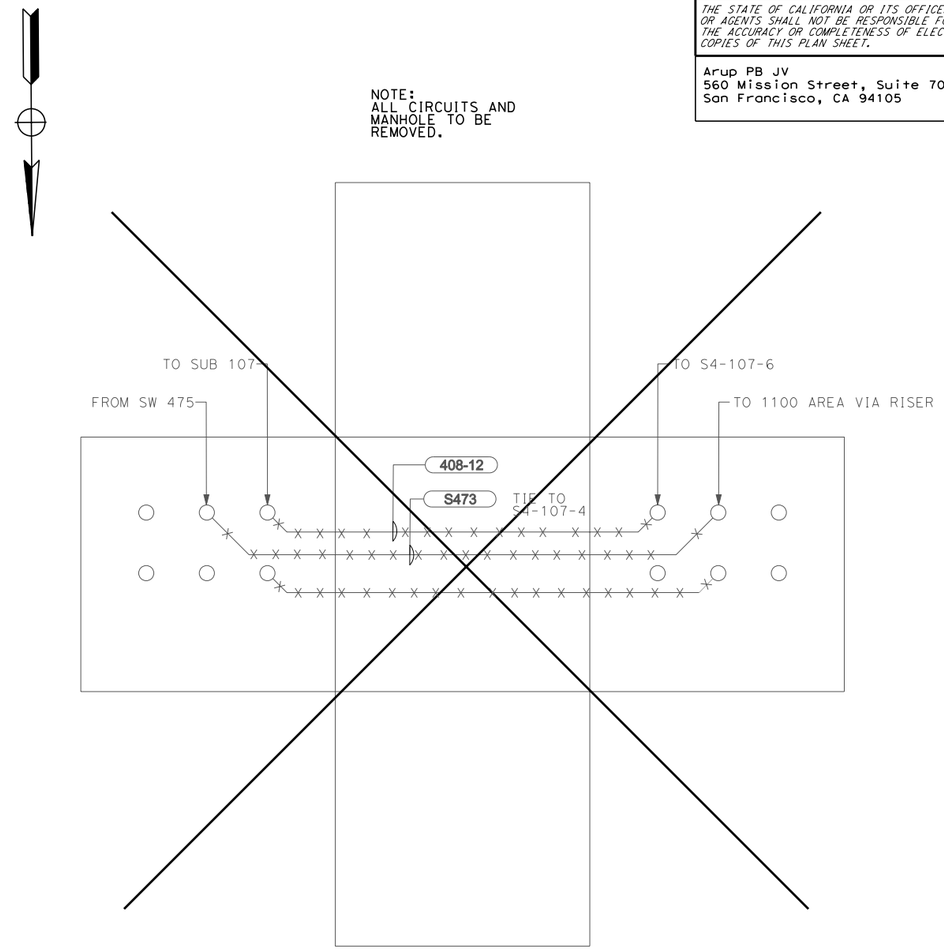

E15 **MH 319**
SCALE: NTS

UTILITY DETAILS
NO SCALE

UDE08

CALCULATED-DESIGNED BY		REVISED BY	MD
CHECKED BY		DATE REVISED	04/23/10
GEOFF GUNN			
SHAUN LANDMAN			
FUNCTIONAL SUPERVISOR			
DUANNE GILMORE			

STATE OF CALIFORNIA - DEPARTMENT OF TRANSPORTATION
Caltrans

LAST REVISION DATE PLOTTED => 4/23/2010
TIME PLOTTED => 12:51:54 PM

Dist	COUNTY	ROUTE	POST MILES TOTAL PROJECT	SHEET No.	TOTAL SHEETS
04	SF	101,1	9.0/9.8, 6.8/7.1		

8-19-09
LICENSED ELECTRICAL ENGINEER

REGISTERED PROFESSIONAL ENGINEER
SHAUN DAVID LANDMAN
No. E17532
Exp. 6-30-11
ELEC
STATE OF CALIFORNIA

PLANS APPROVAL DATE

THE STATE OF CALIFORNIA OR ITS OFFICERS OR AGENTS SHALL NOT BE RESPONSIBLE FOR THE ACCURACY OR COMPLETENESS OF ELECTRONIC COPIES OF THIS PLAN SHEET.

Arup PB JV
560 Mission Street, Suite 700
San Francisco, CA 94105

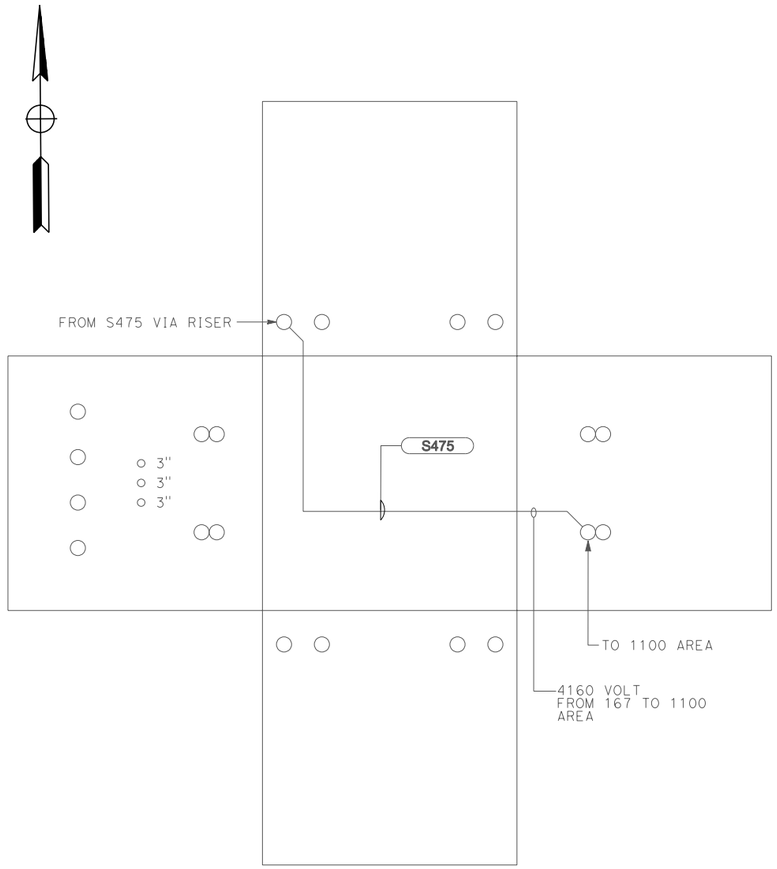

E16 **MH 320**
SCALE: NTS

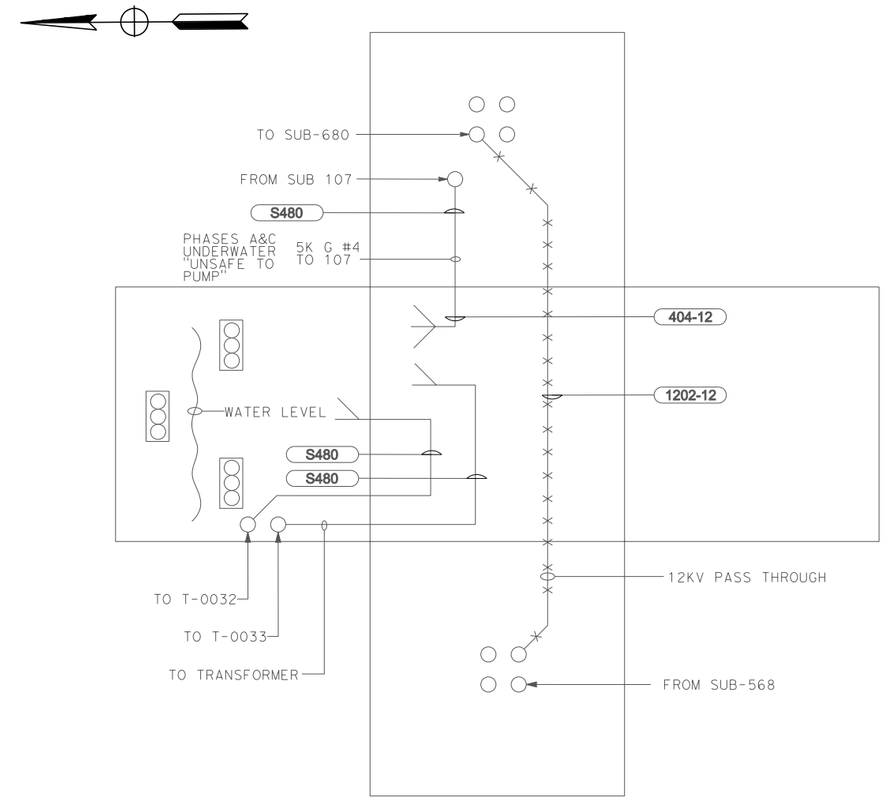

E17 **MH 340**
SCALE: NTS

UTILITY DETAILS
NO SCALE

UDE09

STATE OF CALIFORNIA - DEPARTMENT OF TRANSPORTATION
Caltrans

FUNCTIONAL SUPERVISOR: DUANNE GILMORE
CALCULATED-DESIGNED BY: GEOFF GUNN
CHECKED BY: SHAUN LANDMAN
REVISED BY: MD
DATE REVISED: 04/23/10

LAST REVISION
DATE PLOTTED => 4/23/2010
TIME PLOTTED => 12:52:26 PM

BORDER LAST REVISED 3/1/2007
RELATIVE BORDER SCALE IS IN INCHES 0 1 2 3
USERNAME => manish.dalia
DGN FILE => $FILE$
CU 04242
EA 416372

Dist	COUNTY	ROUTE	POST MILES TOTAL PROJECT	SHEET No.	TOTAL SHEETS
04	SF	101,1	9.0/9.8, 6.8/7.1		

8-19-09
LICENSED ELECTRICAL ENGINEER

REGISTERED PROFESSIONAL ENGINEER
SHAUN DAVID LANDMAN
No. E17532
Exp. 6-30-11
ELEC
STATE OF CALIFORNIA

PLANS APPROVAL DATE

THE STATE OF CALIFORNIA OR ITS OFFICERS OR AGENTS SHALL NOT BE RESPONSIBLE FOR THE ACCURACY OR COMPLETENESS OF ELECTRONIC COPIES OF THIS PLAN SHEET.

Arup PB JV
560 Mission Street, Suite 700
San Francisco, CA 94105

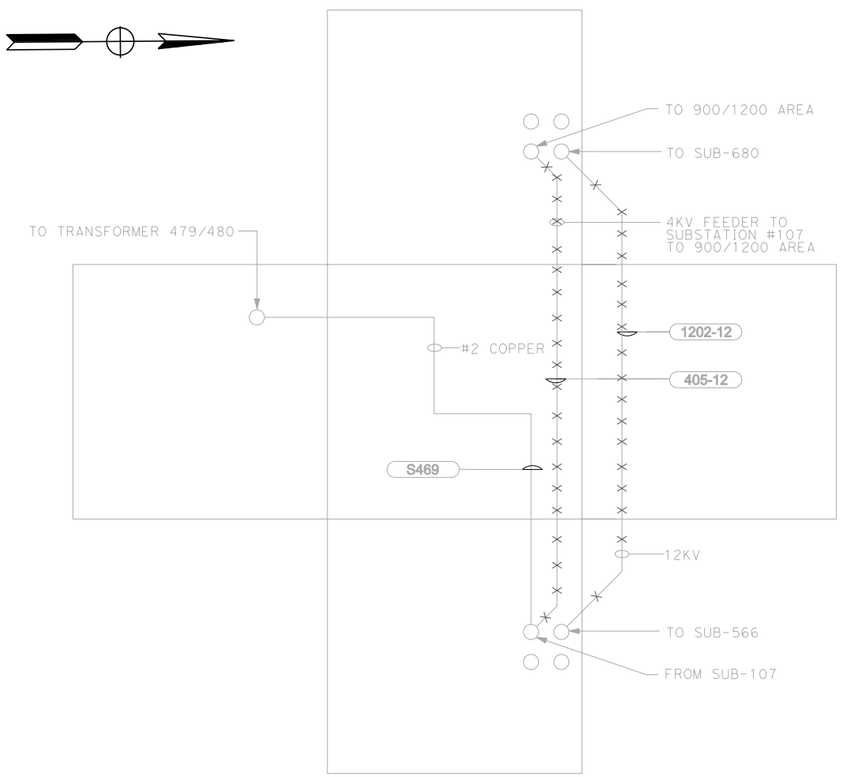

E18 **MH 341**
SCALE: NTS

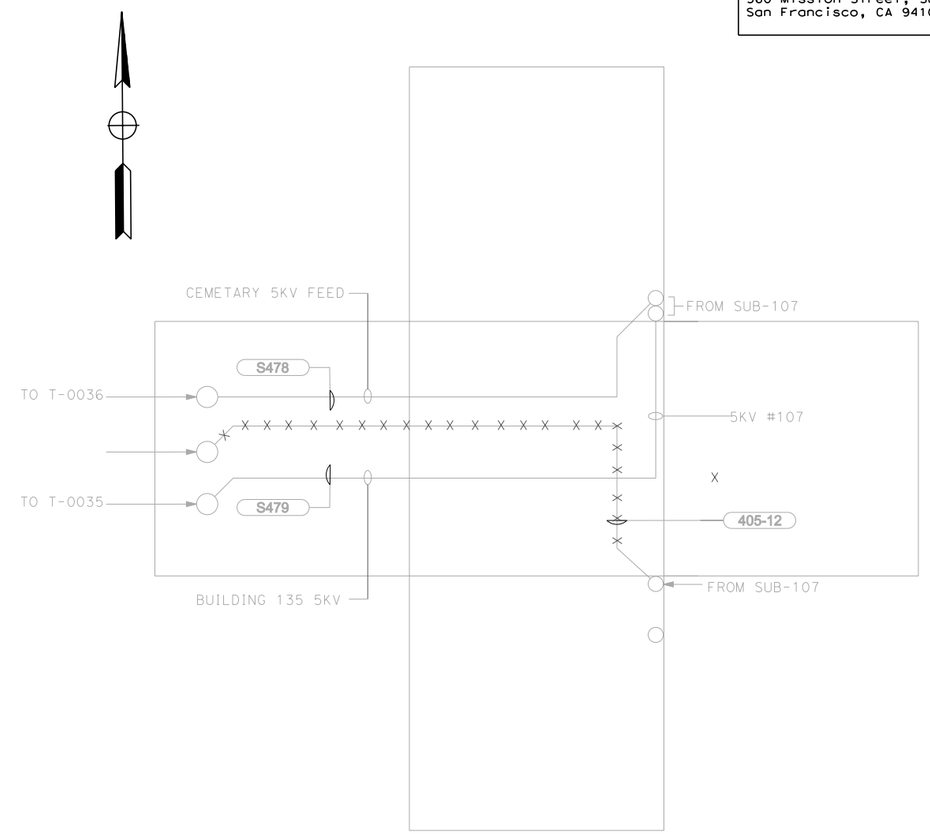

E19 **MH 342**
SCALE: NTS

UTILITY DETAILS
NO SCALE

UDE10

STATE OF CALIFORNIA - DEPARTMENT OF TRANSPORTATION
Caltrans

FUNCTIONAL SUPERVISOR: DUANNE GILMORE
CALCULATED-DESIGNED BY: GEOFF GUNN
CHECKED BY: SHAUN LANDMAN
REVISED BY: MD
DATE REVISED: 04/23/10

LAST REVISION
DATE PLOTTED => 4/23/2010
TIME PLOTTED => 12:53:08 PM

Dist	COUNTY	ROUTE	POST MILES TOTAL PROJECT	SHEET No.	TOTAL SHEETS
04	SF	101,1	9.0/9.8, 6.8/7.1		

8-19-09
LICENSED ELECTRICAL ENGINEER

REGISTERED PROFESSIONAL ENGINEER
SHAUN DAVID LANDMAN
No. E17532
Exp. 6-30-11
ELEC
STATE OF CALIFORNIA

PLANS APPROVAL DATE

THE STATE OF CALIFORNIA OR ITS OFFICERS OR AGENTS SHALL NOT BE RESPONSIBLE FOR THE ACCURACY OR COMPLETENESS OF ELECTRONIC COPIES OF THIS PLAN SHEET.

Arup PB JV
560 Mission Street, Suite 700
San Francisco, CA 94105

NOTE:
ALL CIRCUITS AND MANHOLE TO BE REMOVED.

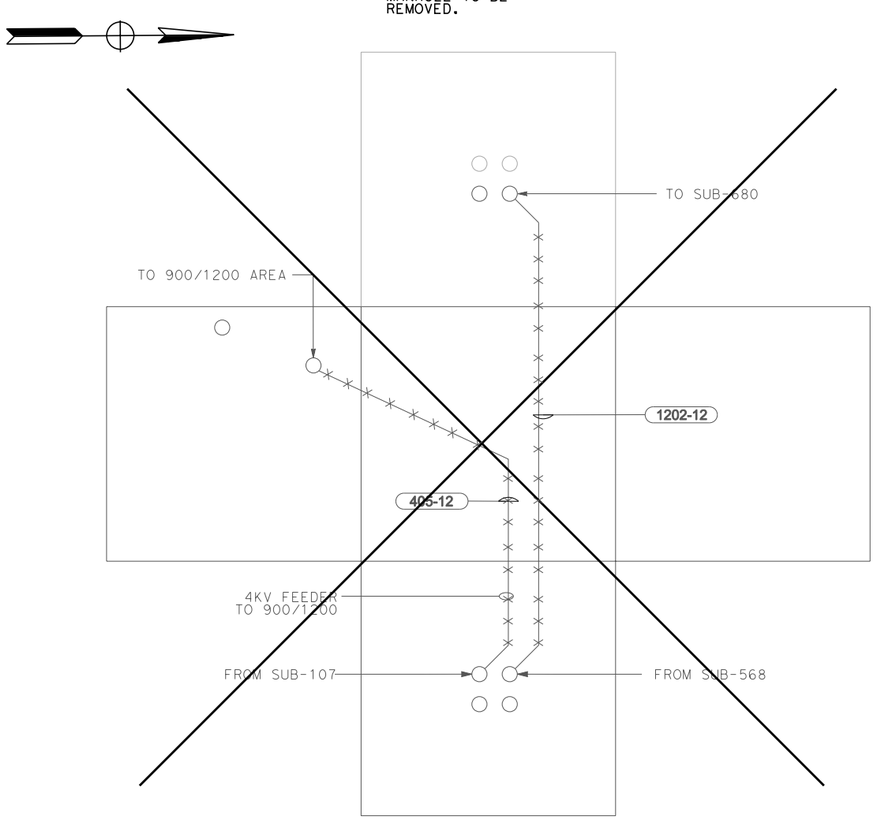

E20 **MH 343**
SCALE: NTS

NOTE:
ALL CIRCUITS AND MANHOLE TO BE REMOVED.

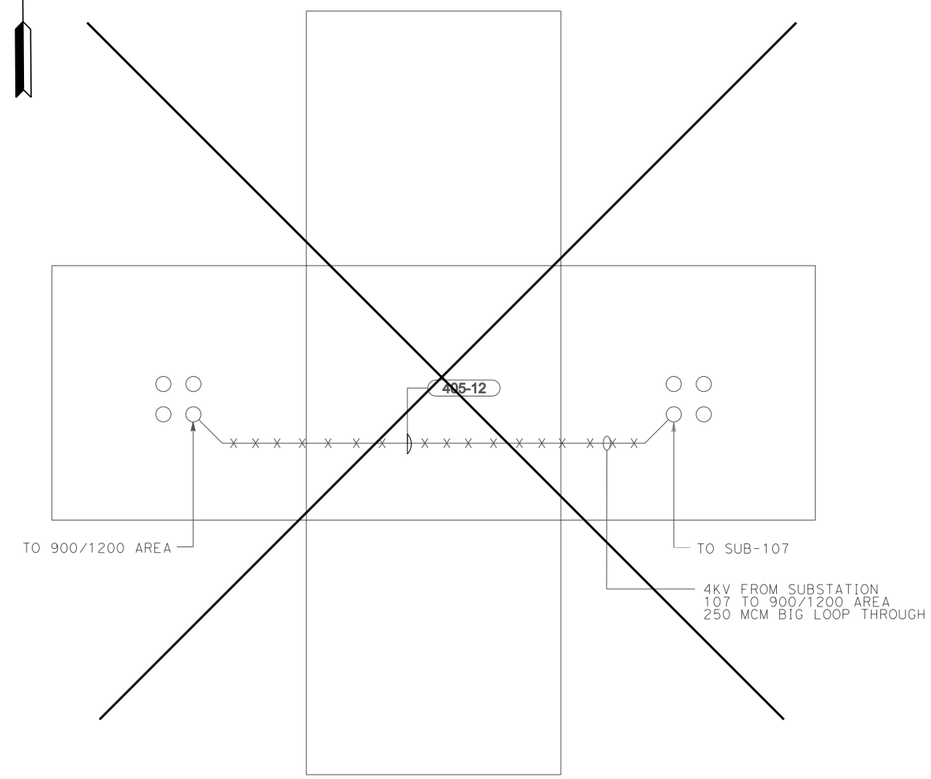

E21 **MH 344**
SCALE: NTS

UTILITY DETAILS
NO SCALE

UDE11

STATE OF CALIFORNIA - DEPARTMENT OF TRANSPORTATION
Caltrans

FUNCTIONAL SUPERVISOR: DUANNE GILMORE
CALCULATED-DESIGNED BY: GEOFF GUNN
CHECKED BY: SHAUN LANDMAN
REVISED BY: MD
DATE REVISED: 04/23/10

LAST REVISION
DATE PLOTTED => 4/23/2010
TIME PLOTTED => 12:53:35 PM

Dist	COUNTY	ROUTE	POST MILES TOTAL PROJECT	SHEET No.	TOTAL SHEETS
04	SF	101,1	9.0/9.8, 6.8/7.1		

8-19-09
LICENSED ELECTRICAL ENGINEER

REGISTERED PROFESSIONAL ENGINEER
SHAUN DAVID LANDMAN
No. E17532
Exp. 6-30-11
ELEC
STATE OF CALIFORNIA

PLANS APPROVAL DATE

THE STATE OF CALIFORNIA OR ITS OFFICERS OR AGENTS SHALL NOT BE RESPONSIBLE FOR THE ACCURACY OR COMPLETENESS OF ELECTRONIC COPIES OF THIS PLAN SHEET.

Arup PB JV
560 Mission Street, Suite 700
San Francisco, CA 94105

NOTE:
ALL CIRCUITS AND MANHOLES TO BE REMOVED.

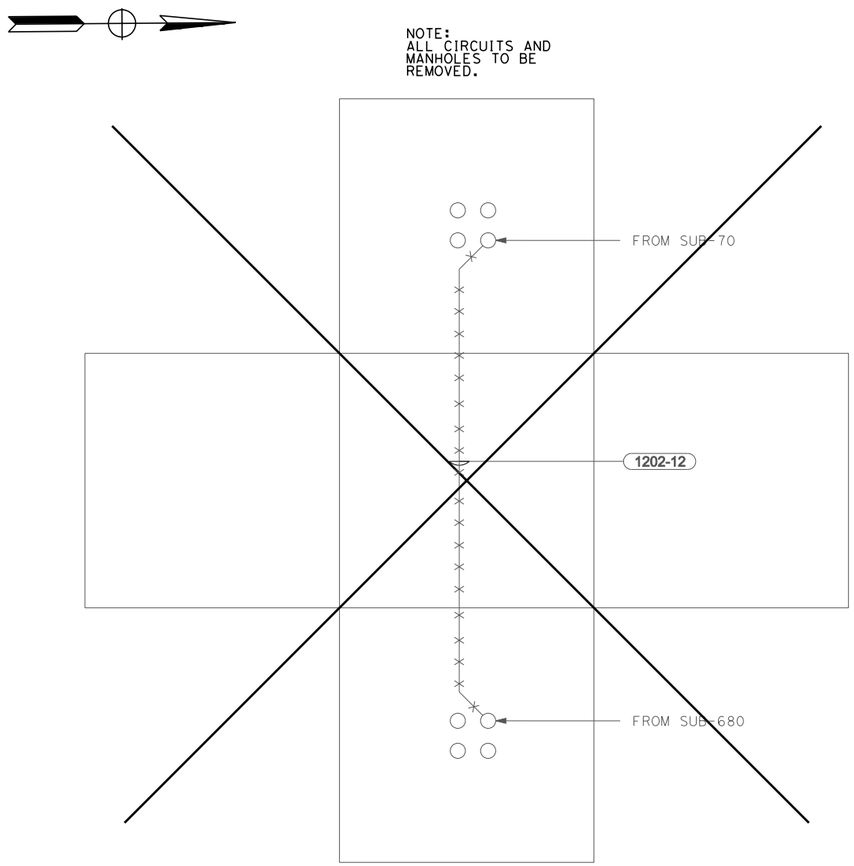

E22 **MH 360**
SCALE: NTS

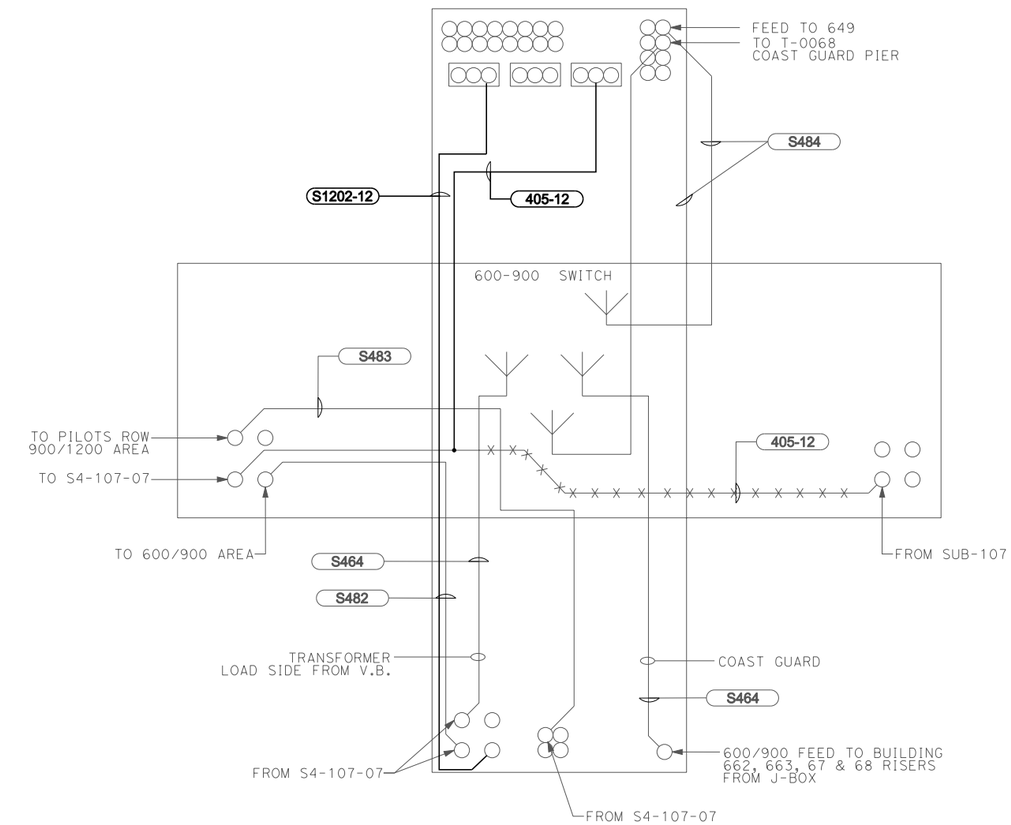

402-12

E23 **MH 365**
SCALE: NTS

UTILITY DETAILS
NO SCALE

UDE12

REVISED BY	DATE REVISED
MD	04/23/10

GEOFF GUNN
SHAUN LANDMAN
CALCULATED-DESIGNED BY
CHECKED BY
FUNCTIONAL SUPERVISOR
DUANNE GILMORE

STATE OF CALIFORNIA - DEPARTMENT OF TRANSPORTATION
Caltrans

LAST REVISION
DATE PLOTTED => 4/23/2010
TIME PLOTTED => 12:53:56 PM

Dist	COUNTY	ROUTE	POST MILES TOTAL PROJECT	SHEET No.	TOTAL SHEETS
04	SF	101,1	9.0/9.8, 6.8/7.1		

8-19-09
LICENSED ELECTRICAL ENGINEER

REGISTERED PROFESSIONAL ENGINEER
SHAUN DAVID LANDMAN
No. E17532
Exp. 6-30-11
ELEC
STATE OF CALIFORNIA

PLANS APPROVAL DATE

THE STATE OF CALIFORNIA OR ITS OFFICERS OR AGENTS SHALL NOT BE RESPONSIBLE FOR THE ACCURACY OR COMPLETENESS OF ELECTRONIC COPIES OF THIS PLAN SHEET.

Arup PB JV
560 Mission Street, Suite 700
San Francisco, CA 94105

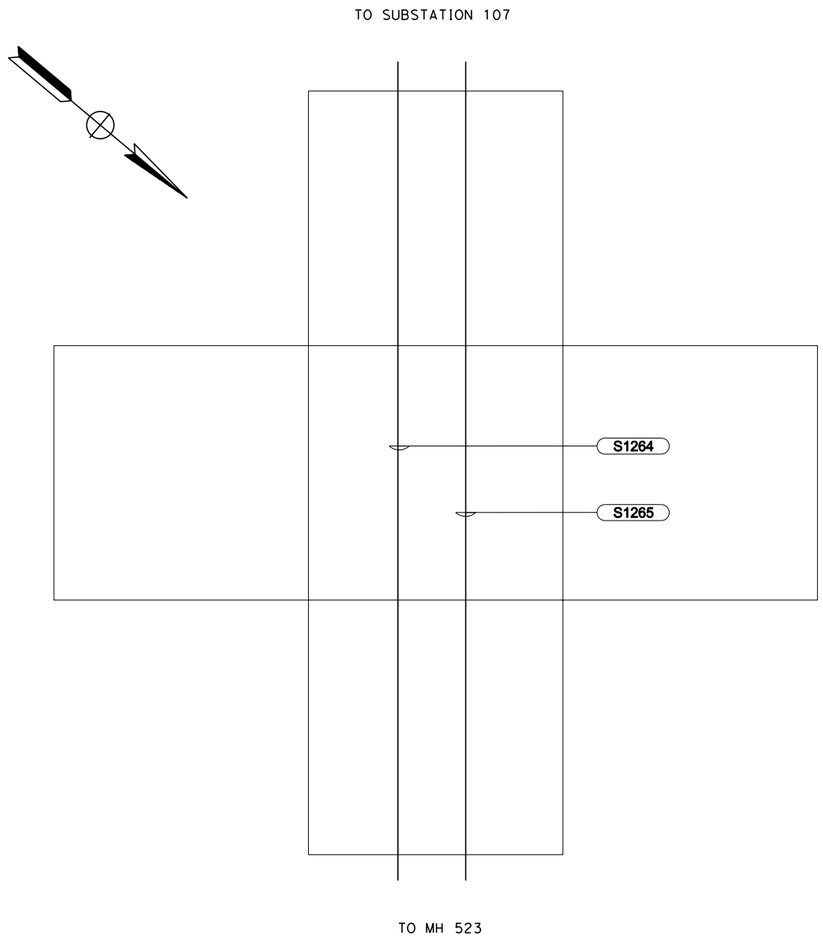

E24 **MH 514**
SCALE: NTS

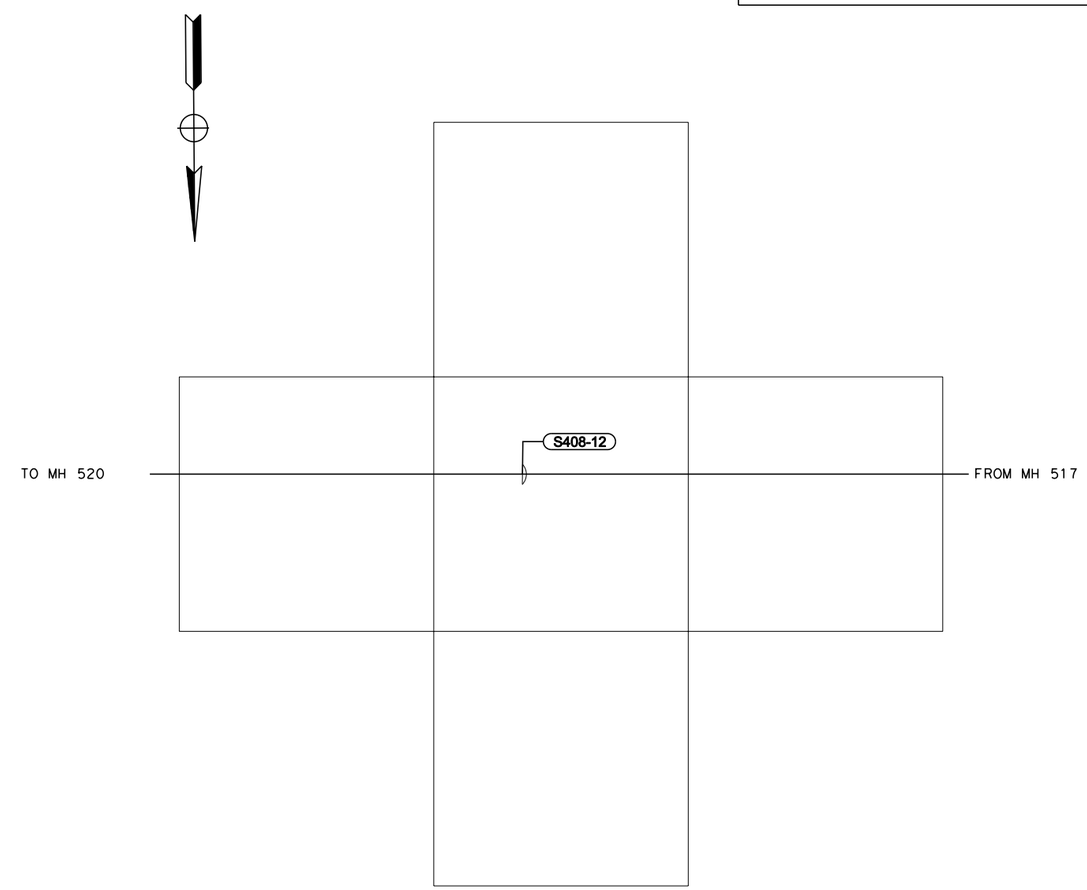

E25 **MH 515**
SCALE: NTS

UTILITY DETAILS
NO SCALE

UDE13

STATE OF CALIFORNIA - DEPARTMENT OF TRANSPORTATION
Caltrans

FUNCTIONAL SUPERVISOR: DUANNE GILMORE

CALCULATED-DESIGNED BY: GEOFF GUNN
CHECKED BY: SHAUN LANDMAN

REVISED BY: MD
DATE REVISED: 04/23/10

LAST REVISION
DATE PLOTTED => 4/23/2010
TIME PLOTTED => 12:55:21 PM

Dist	COUNTY	ROUTE	POST MILES TOTAL PROJECT	SHEET No.	TOTAL SHEETS
04	SF	101,1	9.0/9.8, 6.8/7.1		

8-19-09
LICENSED ELECTRICAL ENGINEER

REGISTERED PROFESSIONAL ENGINEER
SHAUN DAVID LANDMAN
No. E17532
Exp. 6-30-11
ELEC
STATE OF CALIFORNIA

PLANS APPROVAL DATE

THE STATE OF CALIFORNIA OR ITS OFFICERS OR AGENTS SHALL NOT BE RESPONSIBLE FOR THE ACCURACY OR COMPLETENESS OF ELECTRONIC COPIES OF THIS PLAN SHEET.

Arup PB JV
560 Mission Street, Suite 700
San Francisco, CA 94105

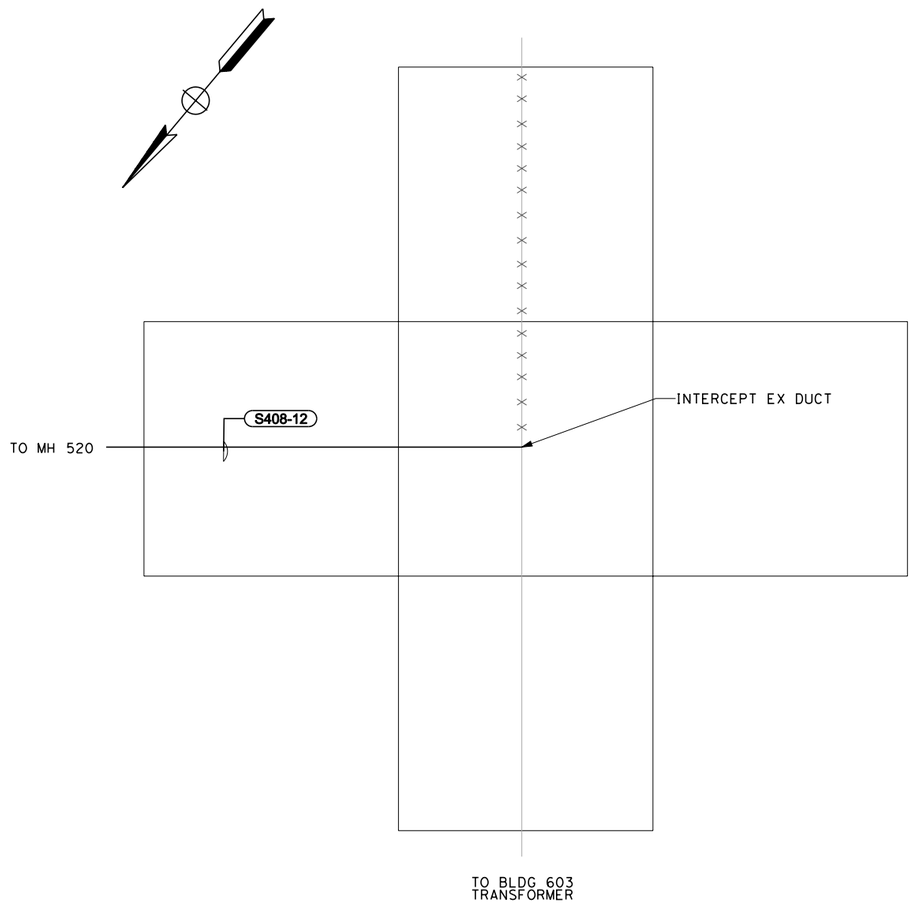

E26 **MH 516**
SCALE: NTS

UTILITY DETAILS
NO SCALE

UDE14

STATE OF CALIFORNIA - DEPARTMENT OF TRANSPORTATION	Caltrans
FUNCTIONAL SUPERVISOR	DUANNE GILMORE
CALCULATED-DESIGNED BY	GEOFF GUNN
CHECKED BY	SHAUN LANDMAN
REVISED BY	MD
DATE REVISED	04/23/10

LAST REVISION
DATE PLOTTED => 4/23/2010
TIME PLOTTED => 12:56:51 PM

Dist	COUNTY	ROUTE	POST MILES TOTAL PROJECT	SHEET No.	TOTAL SHEETS
04	SF	101,1	9.0/9.8, 6.8/7.1		

8-19-09
LICENSED ELECTRICAL ENGINEER

REGISTERED PROFESSIONAL ENGINEER
SHAUN DAVID LANDMAN
No. E17532
Exp. 6-30-11
ELEC
STATE OF CALIFORNIA

PLANS APPROVAL DATE

THE STATE OF CALIFORNIA OR ITS OFFICERS OR AGENTS SHALL NOT BE RESPONSIBLE FOR THE ACCURACY OR COMPLETENESS OF ELECTRONIC COPIES OF THIS PLAN SHEET.

Arup PB JV
560 Mission Street, Suite 700
San Francisco, CA 94105

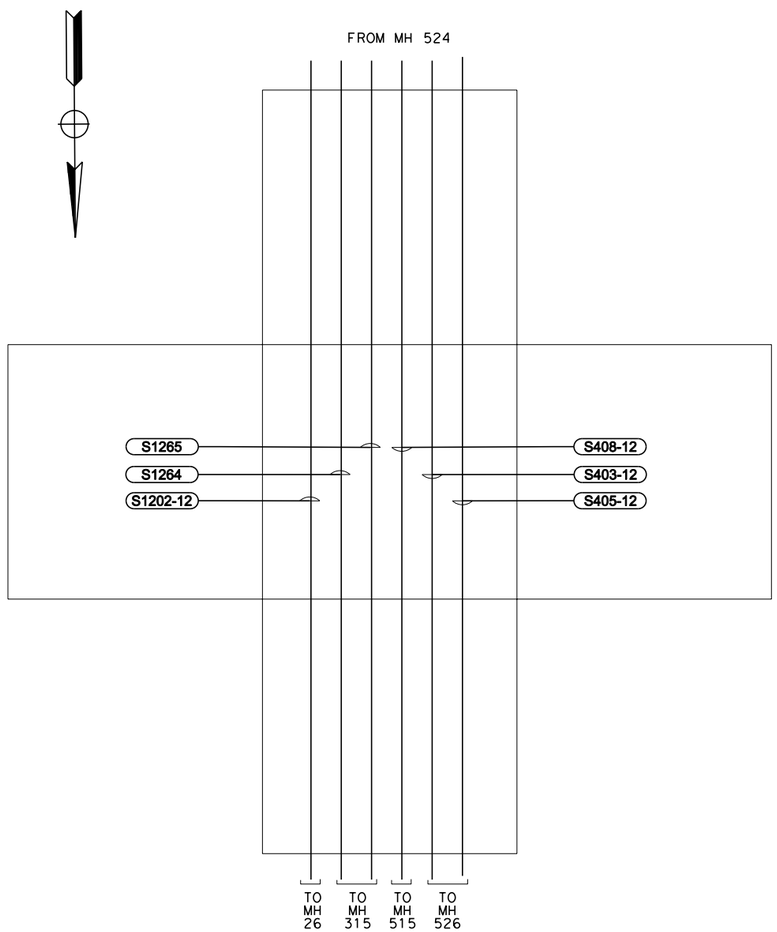

E27 **MH 517**
SCALE: NTS

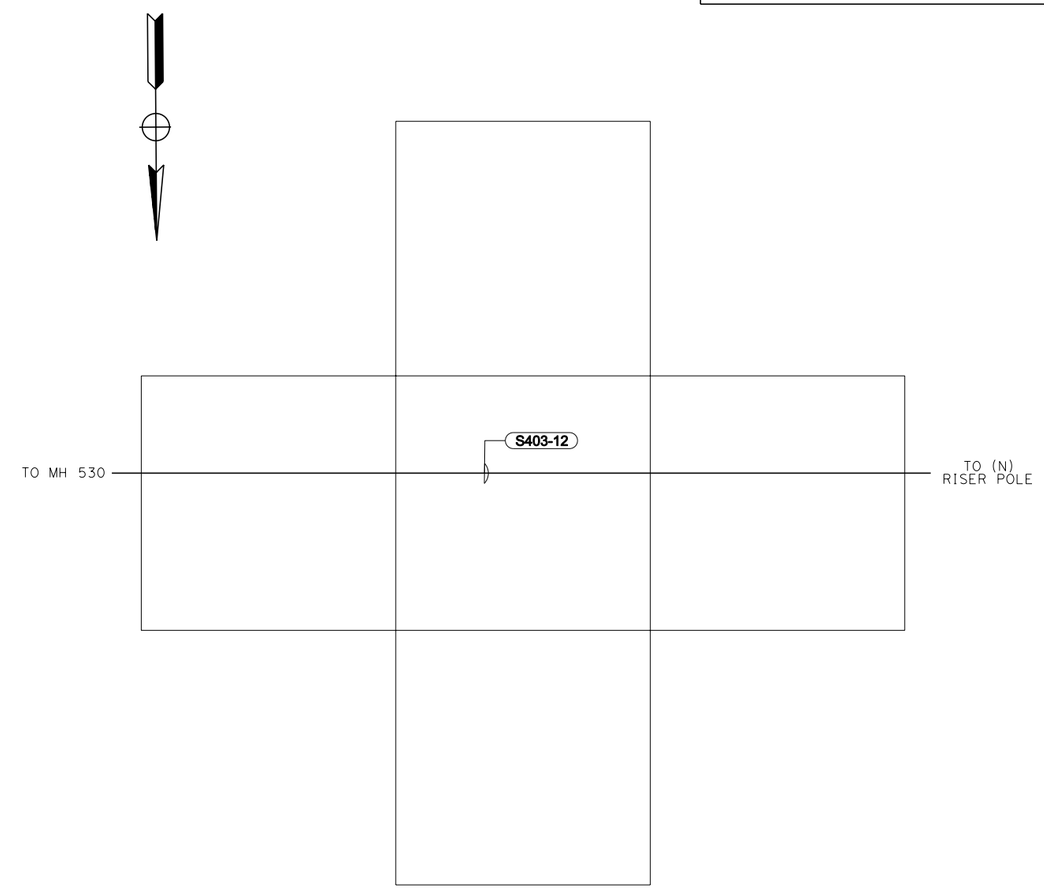

E28 **MH 518**
SCALE: NTS

UTILITY DETAILS
NO SCALE

UDE15

STATE OF CALIFORNIA - DEPARTMENT OF TRANSPORTATION
Caltrans

FUNCTIONAL SUPERVISOR: DUANNE GILMORE
CALCULATED-DESIGNED BY: GEOFF GUNN
CHECKED BY: SHAUN LANDMAN
REVISED BY: MD
DATE REVISED: 04/23/10

LAST REVISION
DATE PLOTTED => 4/23/2010
TIME PLOTTED => 1:00:48 PM

Dist	COUNTY	ROUTE	POST MILES TOTAL PROJECT	SHEET No.	TOTAL SHEETS
04	SF	101,1	9.0/9.8, 6.8/7.1		

8-19-09
LICENSED ELECTRICAL ENGINEER

REGISTERED PROFESSIONAL ENGINEER
SHAUN DAVID LANDMAN
No. E17532
Exp. 6-30-11
ELEC
STATE OF CALIFORNIA

PLANS APPROVAL DATE

THE STATE OF CALIFORNIA OR ITS OFFICERS OR AGENTS SHALL NOT BE RESPONSIBLE FOR THE ACCURACY OR COMPLETENESS OF ELECTRONIC COPIES OF THIS PLAN SHEET.

Arup PB JV
560 Mission Street, Suite 700
San Francisco, CA 94105

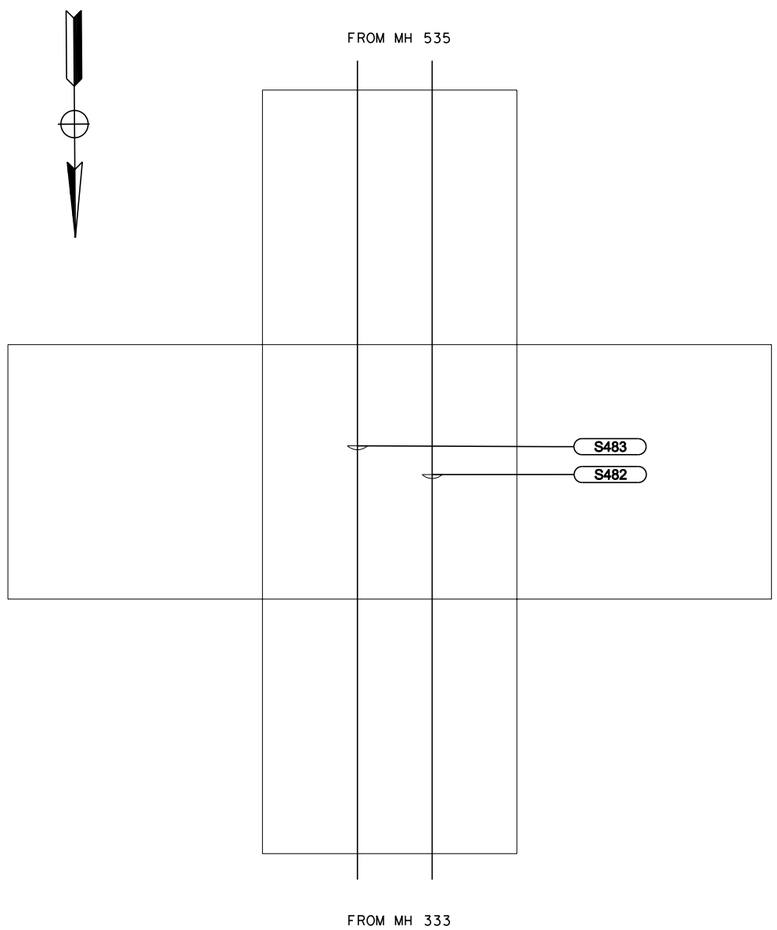

E29 **MH 519**
SCALE: NTS

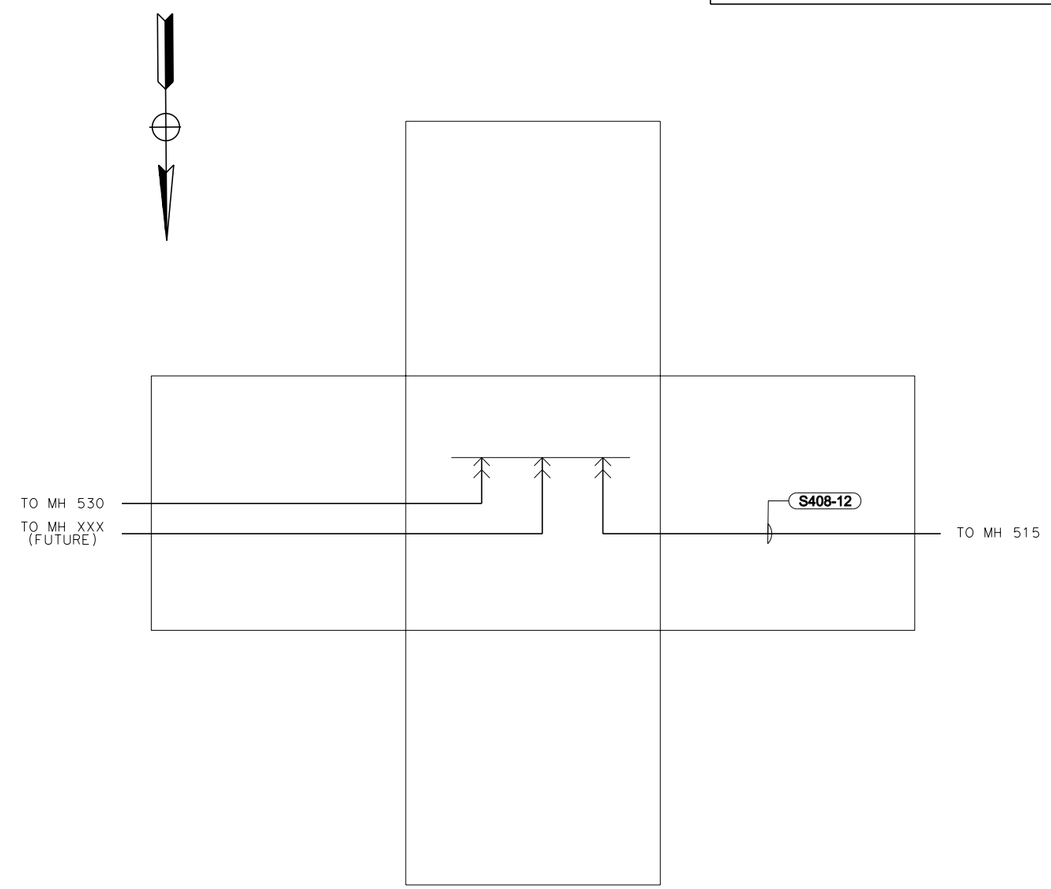

E30 **MH 520**
SCALE: NTS

UTILITY DETAILS
NO SCALE

UDE16

REVISED BY	DATE REVISED
MD	04/23/10

GEOFF GUNN
SHAUN LANDMAN
CALCULATED-DESIGNED BY
CHECKED BY
FUNCTIONAL SUPERVISOR
DUANNE GILMORE

STATE OF CALIFORNIA - DEPARTMENT OF TRANSPORTATION
Caltrans

LAST REVISION
DATE PLOTTED => 4/23/2010
TIME PLOTTED => 1:52:07 PM

Dist	COUNTY	ROUTE	POST MILES TOTAL PROJECT	SHEET No.	TOTAL SHEETS
04	SF	101,1	9.0/9.8, 6.8/7.1		

8-19-09
LICENSED ELECTRICAL ENGINEER

REGISTERED PROFESSIONAL ENGINEER
SHAUN DAVID LANDMAN
No. E17532
Exp. 6-30-11
ELEC
STATE OF CALIFORNIA

PLANS APPROVAL DATE

THE STATE OF CALIFORNIA OR ITS OFFICERS OR AGENTS SHALL NOT BE RESPONSIBLE FOR THE ACCURACY OR COMPLETENESS OF ELECTRONIC COPIES OF THIS PLAN SHEET.

Arup PB JV
560 Mission Street, Suite 700
San Francisco, CA 94105

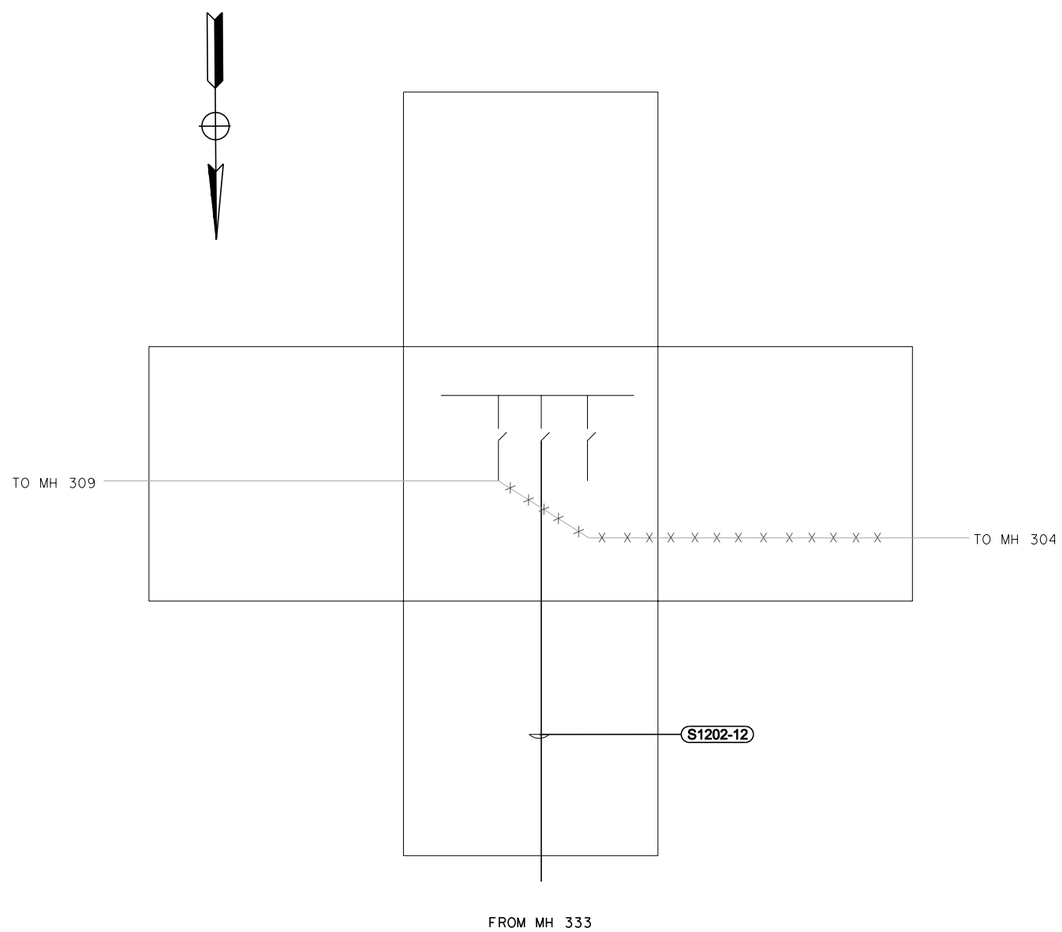

E31 **MH 521**
SCALE: NTS

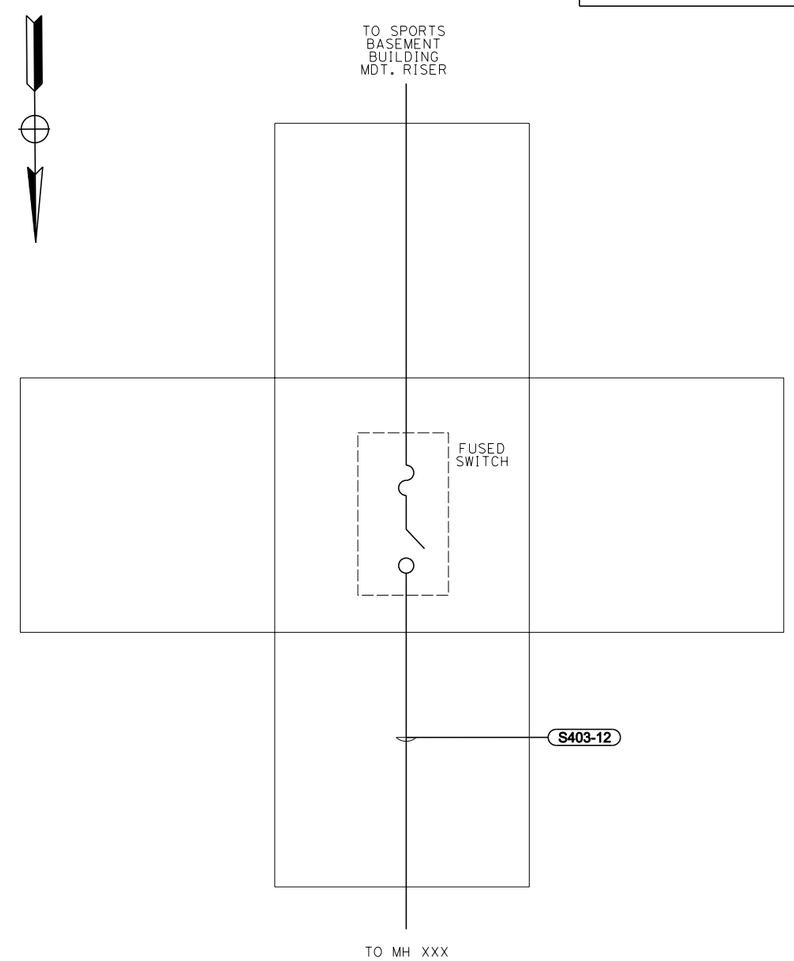

E32 **MH 522**
SCALE: NTS

UTILITY DETAILS
NO SCALE

UDE17

CALCULATED-DESIGNED BY	GEOFF GUNN
CHECKED BY	SHAUN LANDMAN
REVISED BY	MD
DATE REVISED	04/23/10
FUNCTIONAL SUPERVISOR	DUANNE GILMORE

STATE OF CALIFORNIA - DEPARTMENT OF TRANSPORTATION
Caltrans

LAST REVISION
DATE PLOTTED => 4/23/2010
TIME PLOTTED => 2:30:57 PM

Dist	COUNTY	ROUTE	POST MILES TOTAL PROJECT	SHEET No.	TOTAL SHEETS
04	SF	101,1	9.0/9.8, 6.8/7.1		

8-19-09
LICENSED ELECTRICAL ENGINEER

REGISTERED PROFESSIONAL ENGINEER
SHAUN DAVID LANDMAN
No. E17532
Exp. 6-30-11
ELEC
STATE OF CALIFORNIA

PLANS APPROVAL DATE

THE STATE OF CALIFORNIA OR ITS OFFICERS OR AGENTS SHALL NOT BE RESPONSIBLE FOR THE ACCURACY OR COMPLETENESS OF ELECTRONIC COPIES OF THIS PLAN SHEET.

Arup PB JV
560 Mission Street, Suite 700
San Francisco, CA 94105

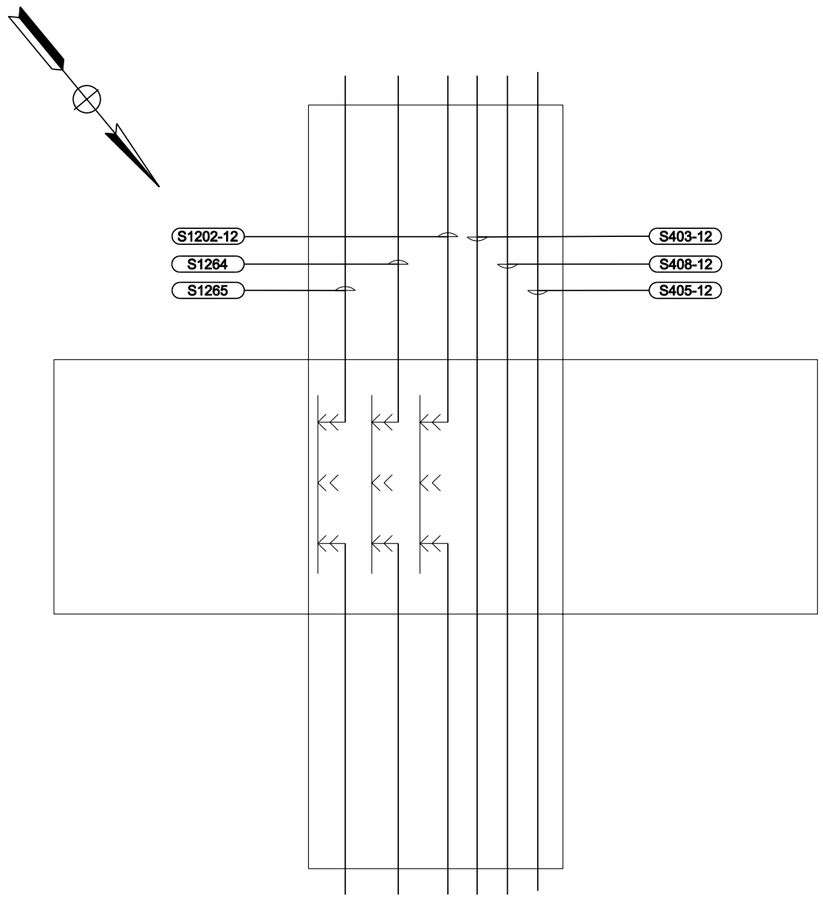

E33 **MH 523**
SCALE: NTS

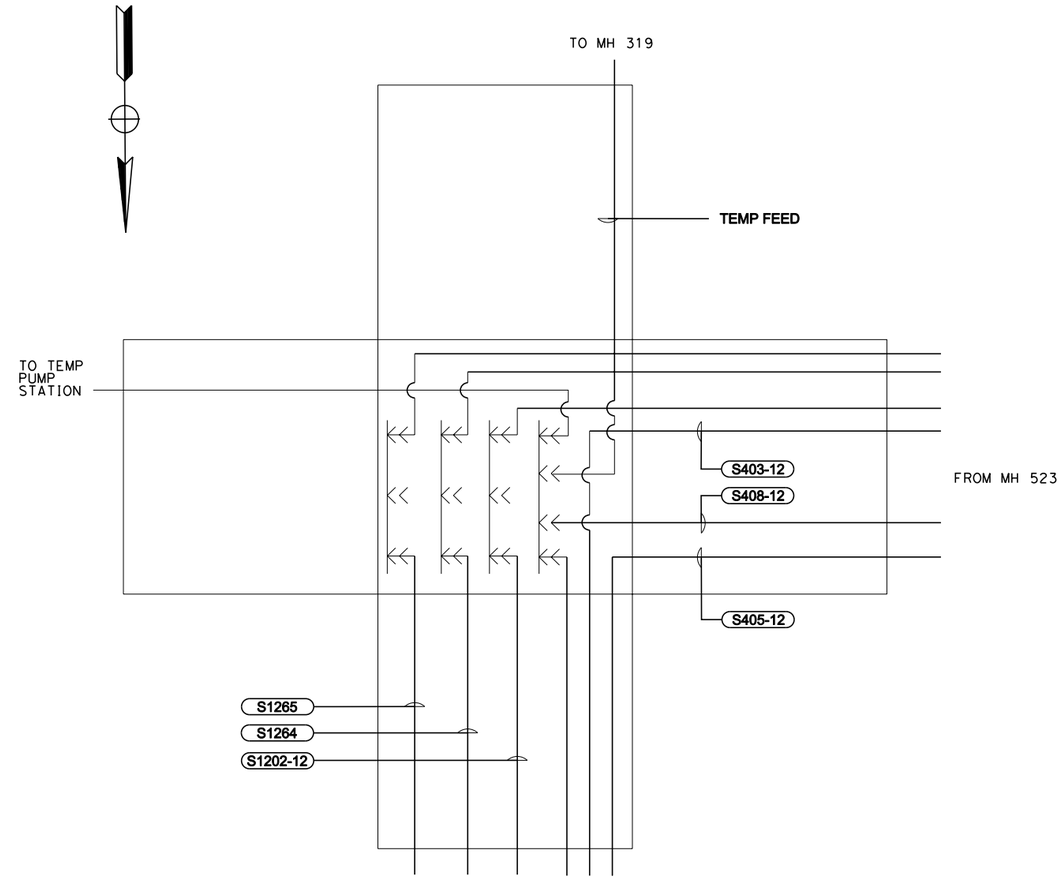

E34 **MH 524**
SCALE: NTS

UTILITY DETAILS
NO SCALE

UDE18

STATE OF CALIFORNIA - DEPARTMENT OF TRANSPORTATION
Caltrans

CALCULATED-DESIGNED BY	GEOFF GUNN	FUNCTIONAL SUPERVISOR	REVISED BY	MD
CHECKED BY	SHAUN LANDMAN	DUANNE GILMORE	DATE REVISED	04/23/10

LAST REVISION
DATE PLOTTED => 4/23/2010
TIME PLOTTED => 1:13:58 PM

Dist	COUNTY	ROUTE	POST MILES TOTAL PROJECT	SHEET No.	TOTAL SHEETS
04	SF	101,1	9.0/9.8, 6.8/7.1		

8-19-09
LICENSED ELECTRICAL ENGINEER

REGISTERED PROFESSIONAL ENGINEER
SHAUN DAVID LANDMAN
No. E17532
Exp. 6-30-11
ELEC
STATE OF CALIFORNIA

PLANS APPROVAL DATE

THE STATE OF CALIFORNIA OR ITS OFFICERS OR AGENTS SHALL NOT BE RESPONSIBLE FOR THE ACCURACY OR COMPLETENESS OF ELECTRONIC COPIES OF THIS PLAN SHEET.

Arup PB JV
560 Mission Street, Suite 700
San Francisco, CA 94105

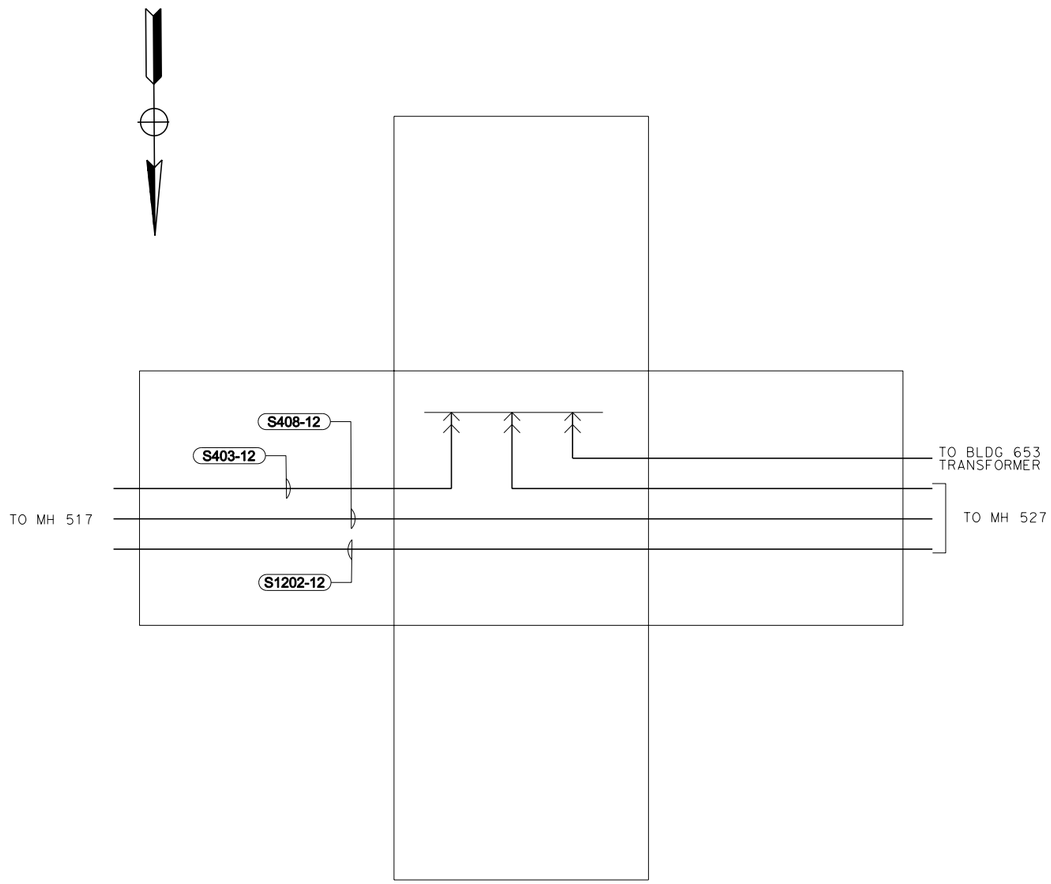

E35 **MH 526**
SCALE: NTS

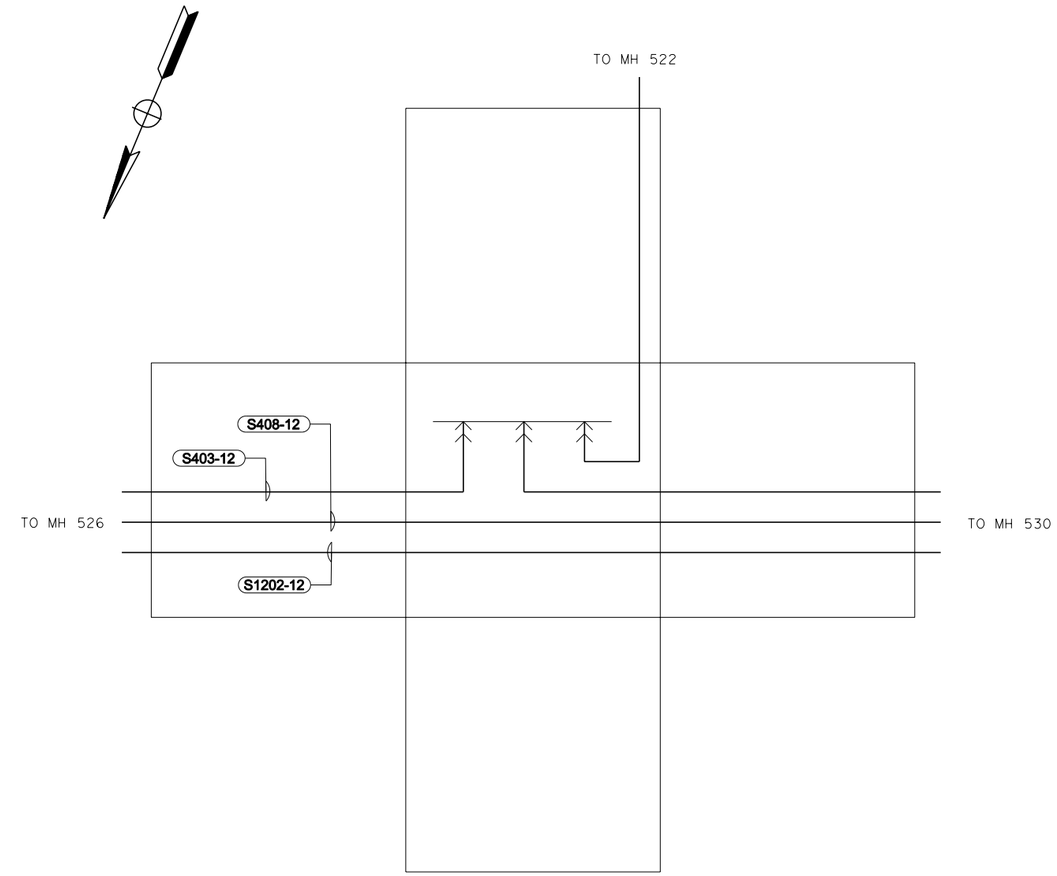

E36 **MH 527**
SCALE: NTS

UTILITY DETAILS
NO SCALE

UDE19

STATE OF CALIFORNIA - DEPARTMENT OF TRANSPORTATION
Caltrans

FUNCTIONAL SUPERVISOR: DUANNE GILMORE
CALCULATED-DESIGNED BY: GEOFF GUNN
CHECKED BY: SHAUN LANDMAN
REVISED BY: MD
DATE REVISED: 04/23/10

LAST REVISION
DATE PLOTTED => 4/23/2010
TIME PLOTTED => 1:15:34 PM

Dist	COUNTY	ROUTE	POST MILES TOTAL PROJECT	SHEET No.	TOTAL SHEETS
04	SF	101,1	9.0/9.8, 6.8/7.1		

8-19-09
LICENSED ELECTRICAL ENGINEER

PLANS APPROVAL DATE

REGISTERED PROFESSIONAL ENGINEER
SHAUN DAVID LANDMAN
No. E17532
Exp. 6-30-11
ELEC
STATE OF CALIFORNIA

THE STATE OF CALIFORNIA OR ITS OFFICERS OR AGENTS SHALL NOT BE RESPONSIBLE FOR THE ACCURACY OR COMPLETENESS OF ELECTRONIC COPIES OF THIS PLAN SHEET.

Arup PB JV
560 Mission Street, Suite 700
San Francisco, CA 94105

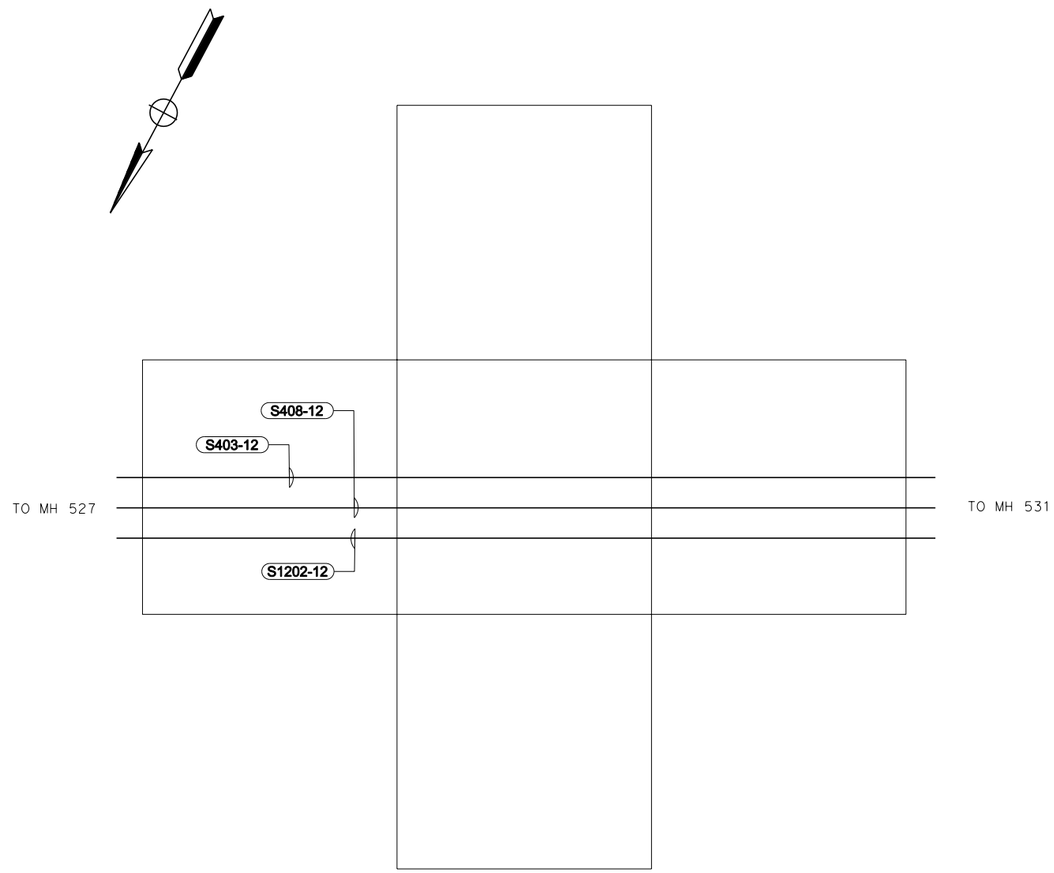

E37 **MH 530**
SCALE: NTS

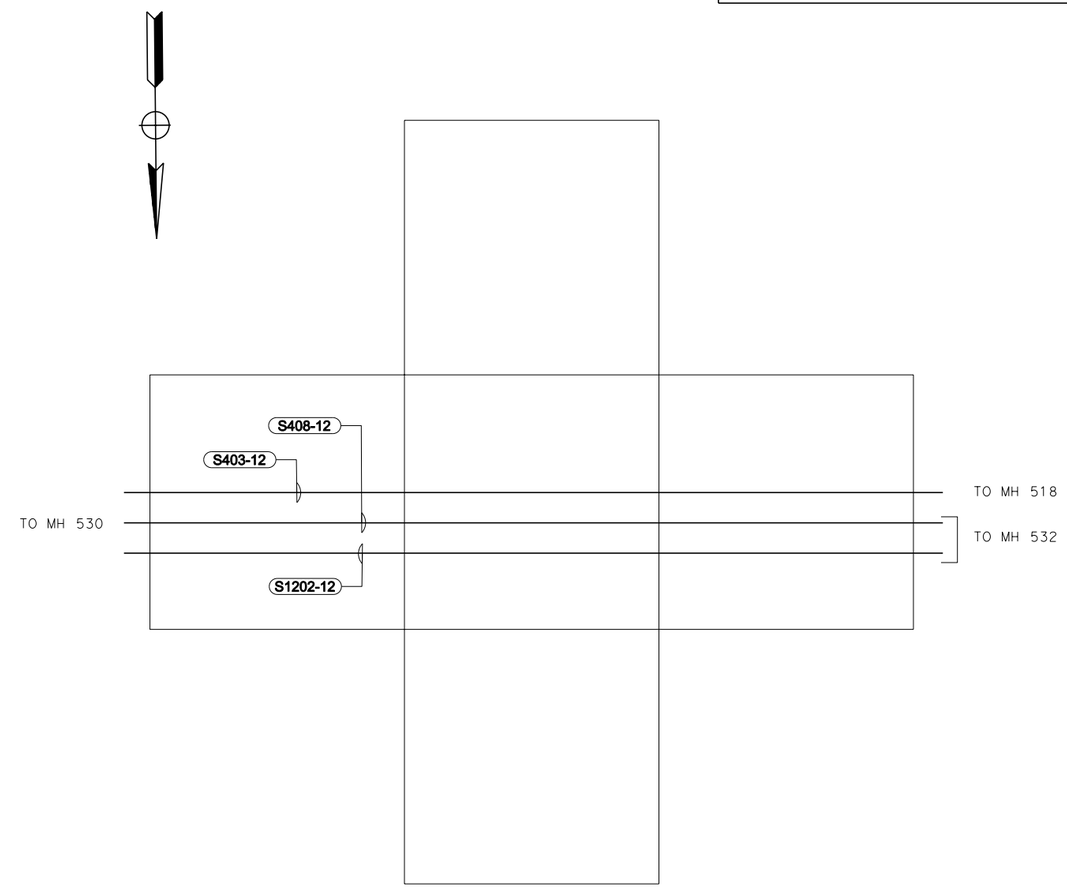

E38 **MH 531**
SCALE: NTS

UTILITY DETAILS
NO SCALE

UDE20

STATE OF CALIFORNIA - DEPARTMENT OF TRANSPORTATION
Caltrans

FUNCTIONAL SUPERVISOR: DUANNE GILMORE

CALCULATED-DESIGNED BY: GEOFF GUNN
CHECKED BY: SHAUN LANDMAN

REVISED BY: MD
DATE REVISED: 04/23/10

LAST REVISION
DATE PLOTTED => 4/23/2010
TIME PLOTTED => 1:16:18 PM

Dist	COUNTY	ROUTE	POST MILES TOTAL PROJECT	SHEET No.	TOTAL SHEETS
04	SF	101,1	9.0/9.8, 6.8/7.1		

8-19-09
LICENSED ELECTRICAL ENGINEER

PLANS APPROVAL DATE

REGISTERED PROFESSIONAL ENGINEER
SHAUN DAVID LANDMAN
No. E17532
Exp. 6-30-11
ELEC
STATE OF CALIFORNIA

THE STATE OF CALIFORNIA OR ITS OFFICERS OR AGENTS SHALL NOT BE RESPONSIBLE FOR THE ACCURACY OR COMPLETENESS OF ELECTRONIC COPIES OF THIS PLAN SHEET.

Arup PB JV
560 Mission Street, Suite 700
San Francisco, CA 94105

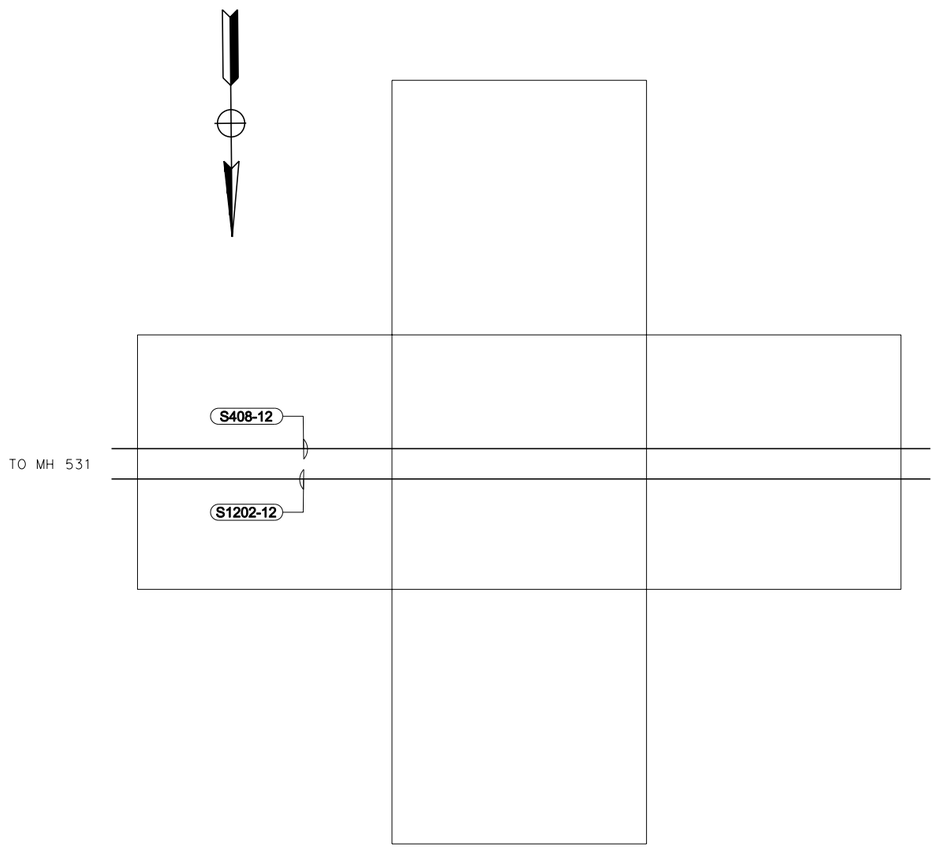

E39 **MH 532**
SCALE: NTS

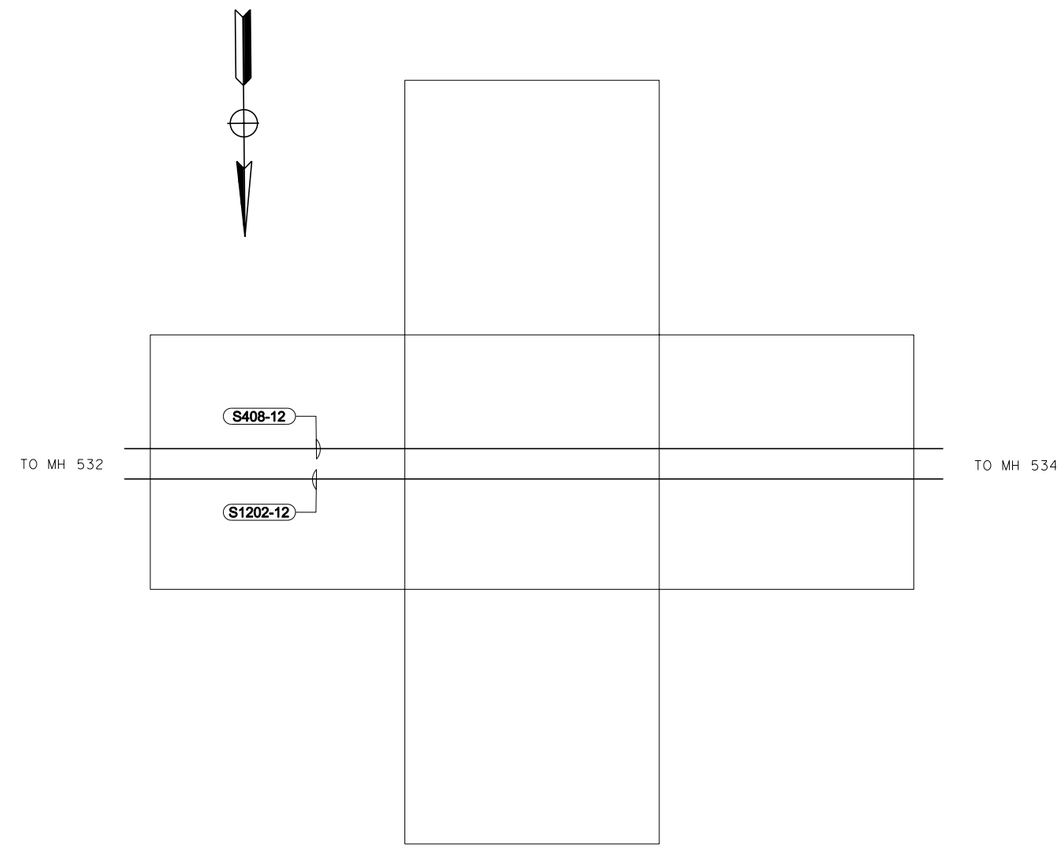

E40 **MH 533**
SCALE: NTS

UTILITY DETAILS
NO SCALE

UDE21

CALCULATED-DESIGNED BY	GEOFF GUNN
CHECKED BY	SHAUN LANDMAN
FUNCTIONAL SUPERVISOR	DUANNE GILMORE
REVISED BY	MD
DATE REVISED	04/23/10

STATE OF CALIFORNIA - DEPARTMENT OF TRANSPORTATION
Caltrans

LAST REVISION DATE PLOTTED => 4/23/2010
TIME PLOTTED => 1:19:33 PM

Dist	COUNTY	ROUTE	POST MILES TOTAL PROJECT	SHEET No.	TOTAL SHEETS
04	SF	101,1	9.0/9.8, 6.8/7.1		

8-19-09
LICENSED ELECTRICAL ENGINEER

PLANS APPROVAL DATE

REGISTERED PROFESSIONAL ENGINEER
SHAUN DAVID LANDMAN
No. E17532
Exp. 6-30-11
ELEC
STATE OF CALIFORNIA

THE STATE OF CALIFORNIA OR ITS OFFICERS OR AGENTS SHALL NOT BE RESPONSIBLE FOR THE ACCURACY OR COMPLETENESS OF ELECTRONIC COPIES OF THIS PLAN SHEET.

Arup PB JV
560 Mission Street, Suite 700
San Francisco, CA 94105

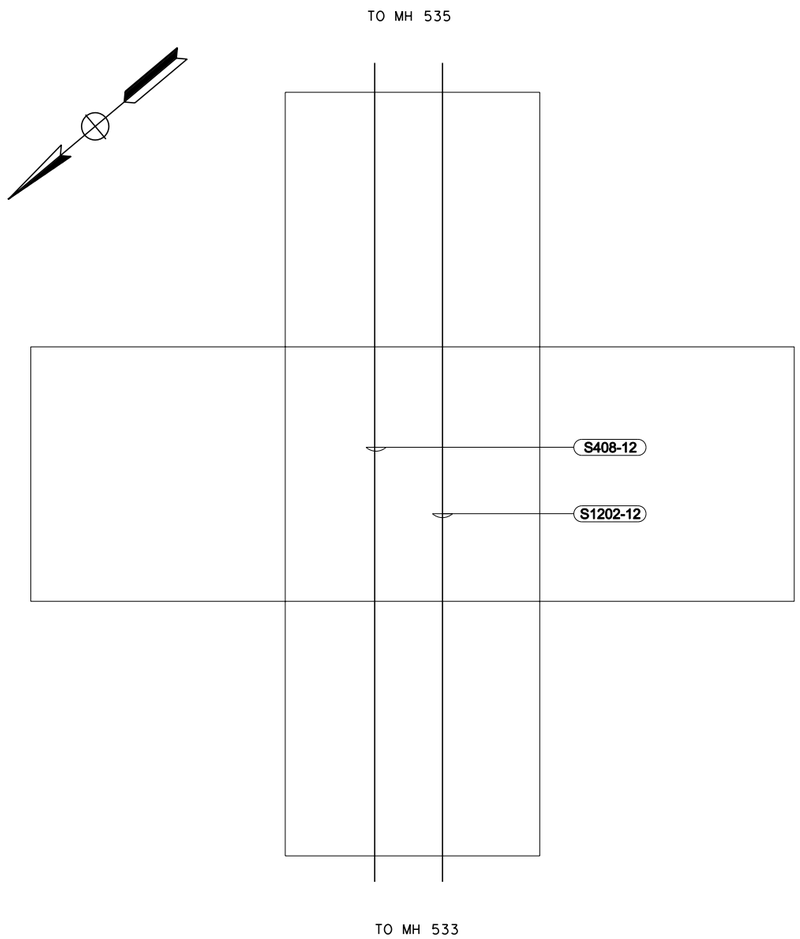

E41 **MH 534**
SCALE: NTS

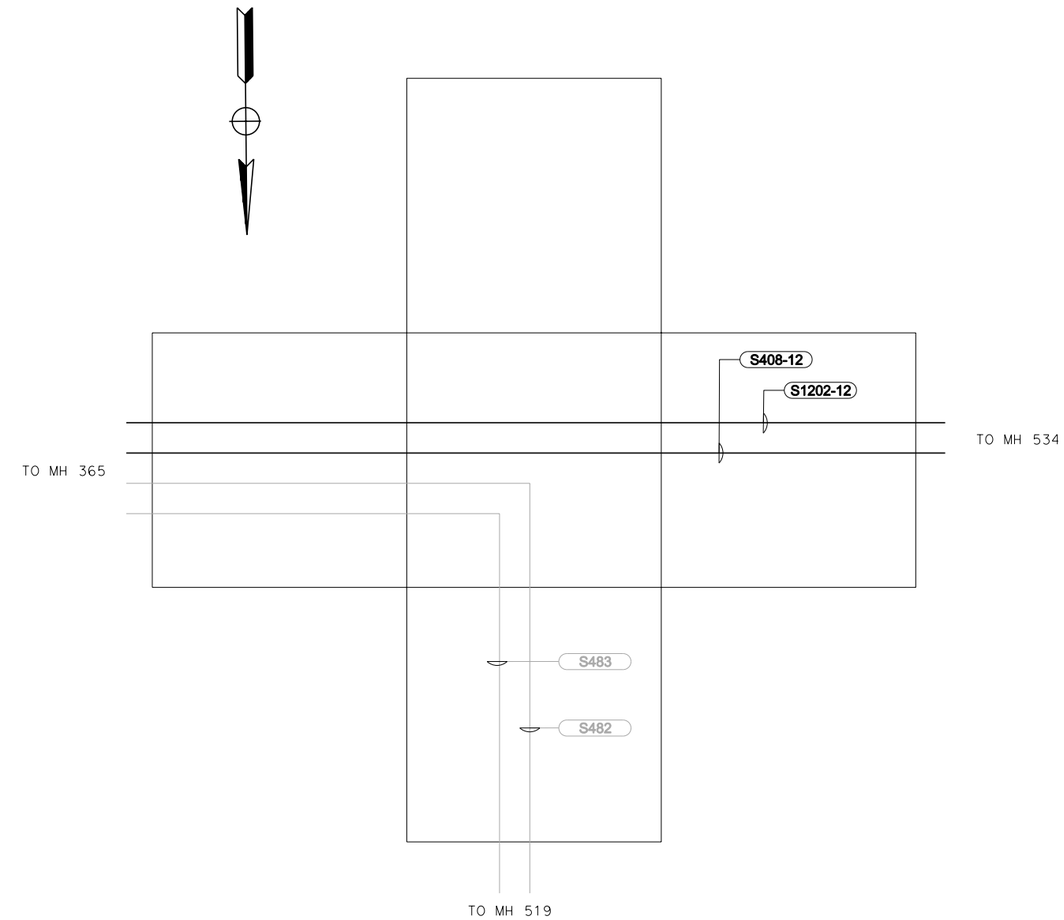

E42 **MH 535**
SCALE: NTS

UTILITY DETAILS
NO SCALE

UDE22

STATE OF CALIFORNIA - DEPARTMENT OF TRANSPORTATION
Caltrans

FUNCTIONAL SUPERVISOR: DUANNE GILMORE
CALCULATED-DESIGNED BY: GEOFF GUNN
CHECKED BY: SHAUN LANDMAN
REVISED BY: MD
DATE REVISED: 04/23/10

LAST REVISION
DATE PLOTTED => 4/23/2010
TIME PLOTTED => 1:18:08 PM

Dist	COUNTY	ROUTE	POST MILES TOTAL PROJECT	SHEET No.	TOTAL SHEETS
04	SF	101,1	9.0/9.8, 6.8/7.1		

8-19-09
LICENSED ELECTRICAL ENGINEER

REGISTERED PROFESSIONAL ENGINEER
SHAUN DAVID LANDMAN
No. E17532
Exp. 6-30-11
ELEC
STATE OF CALIFORNIA

PLANS APPROVAL DATE

THE STATE OF CALIFORNIA OR ITS OFFICERS OR AGENTS SHALL NOT BE RESPONSIBLE FOR THE ACCURACY OR COMPLETENESS OF ELECTRONIC COPIES OF THIS PLAN SHEET.

Arup PB JV
560 Mission Street, Suite 700
San Francisco, CA 94105

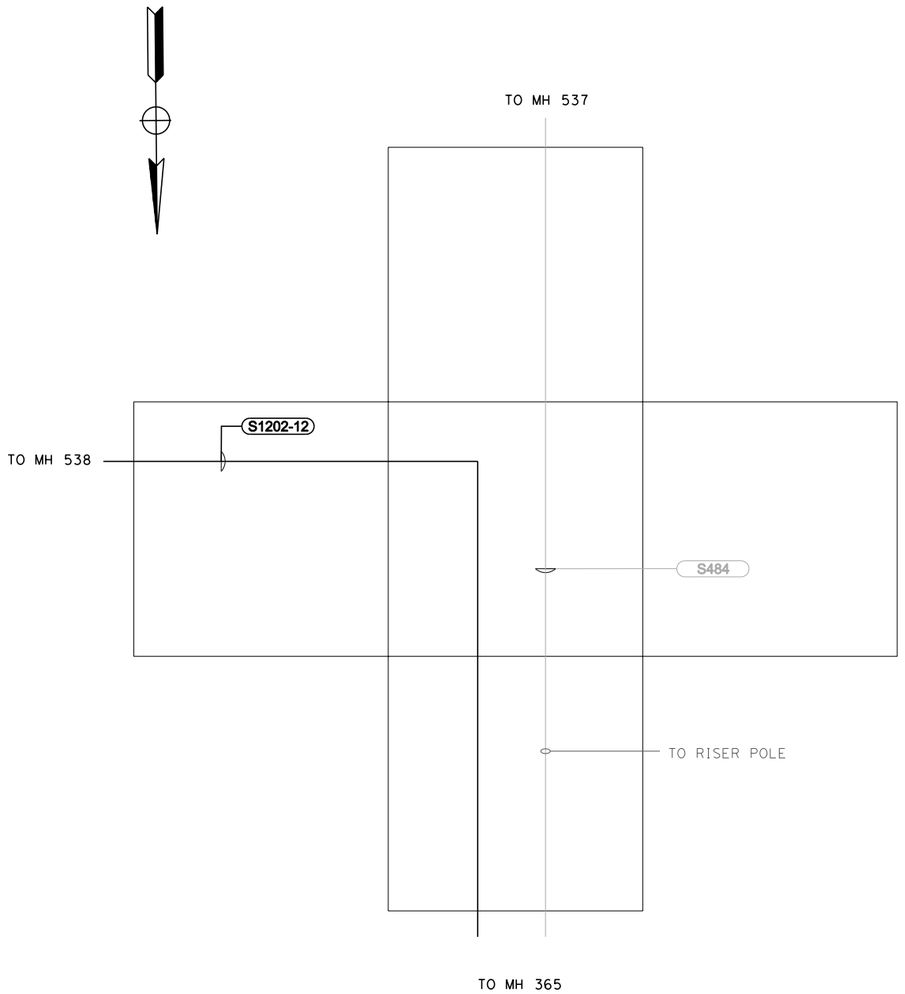

E43 **MH 536**
SCALE: NTS

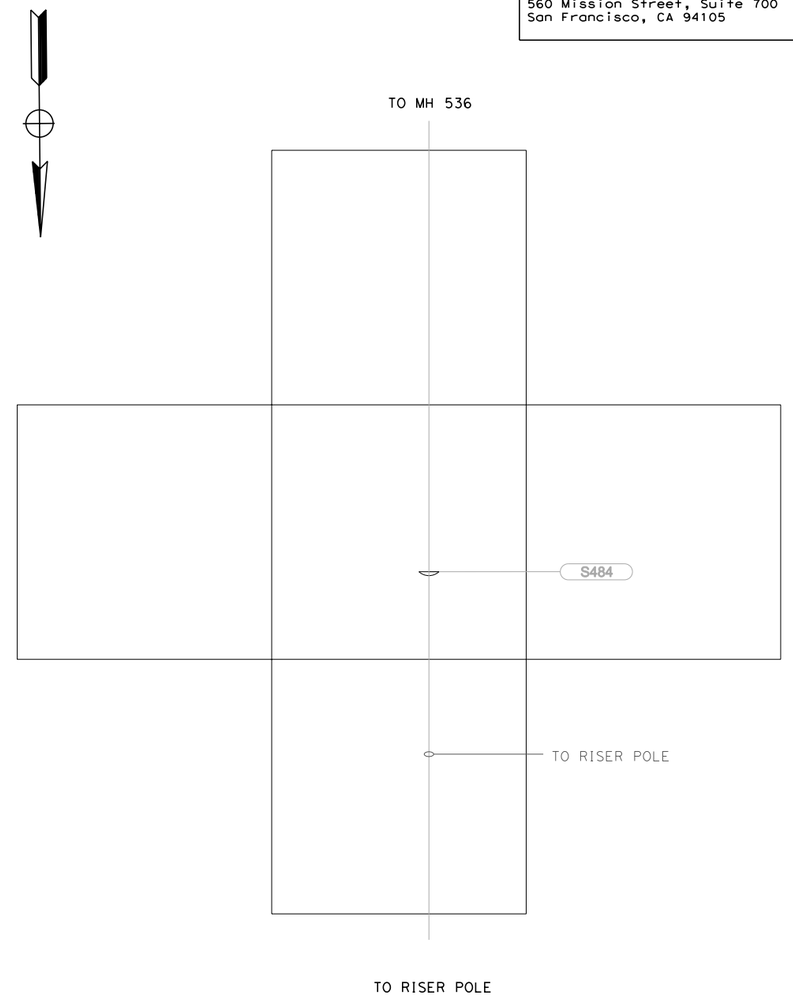

E44 **MH 537**
SCALE: NTS

UTILITY DETAILS
NO SCALE

UDE23

REVISED BY	MD
DATE REVISED	04/23/10
CALCULATED-DESIGNED BY	GEOFF GUNN
CHECKED BY	SHAUN LANDMAN
FUNCTIONAL SUPERVISOR	DUANNE GILMORE

STATE OF CALIFORNIA - DEPARTMENT OF TRANSPORTATION
Caltrans

LAST REVISION | DATE PLOTTED => 4/23/2010 | TIME PLOTTED => 11:19:12 PM

Dist	COUNTY	ROUTE	POST MILES TOTAL PROJECT	SHEET No.	TOTAL SHEETS
04	SF	101,1	9.0/9.8, 6.8/7.1		

8-19-09
LICENSED ELECTRICAL ENGINEER

REGISTERED PROFESSIONAL ENGINEER
SHAUN DAVID LANDMAN
No. E17532
Exp. 6-30-11
ELEC
STATE OF CALIFORNIA

PLANS APPROVAL DATE

THE STATE OF CALIFORNIA OR ITS OFFICERS OR AGENTS SHALL NOT BE RESPONSIBLE FOR THE ACCURACY OR COMPLETENESS OF ELECTRONIC COPIES OF THIS PLAN SHEET.

Arup PB JV
560 Mission Street, Suite 700
San Francisco, CA 94105

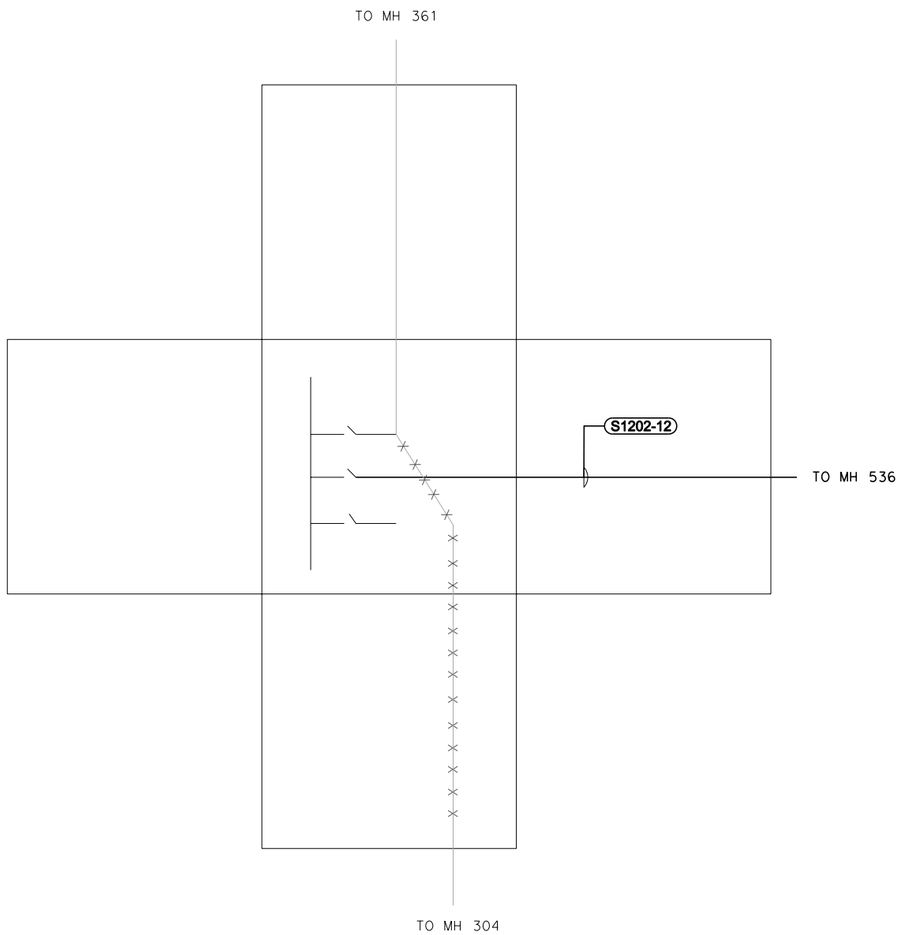

E45 **MH 528**
SCALE: NTS

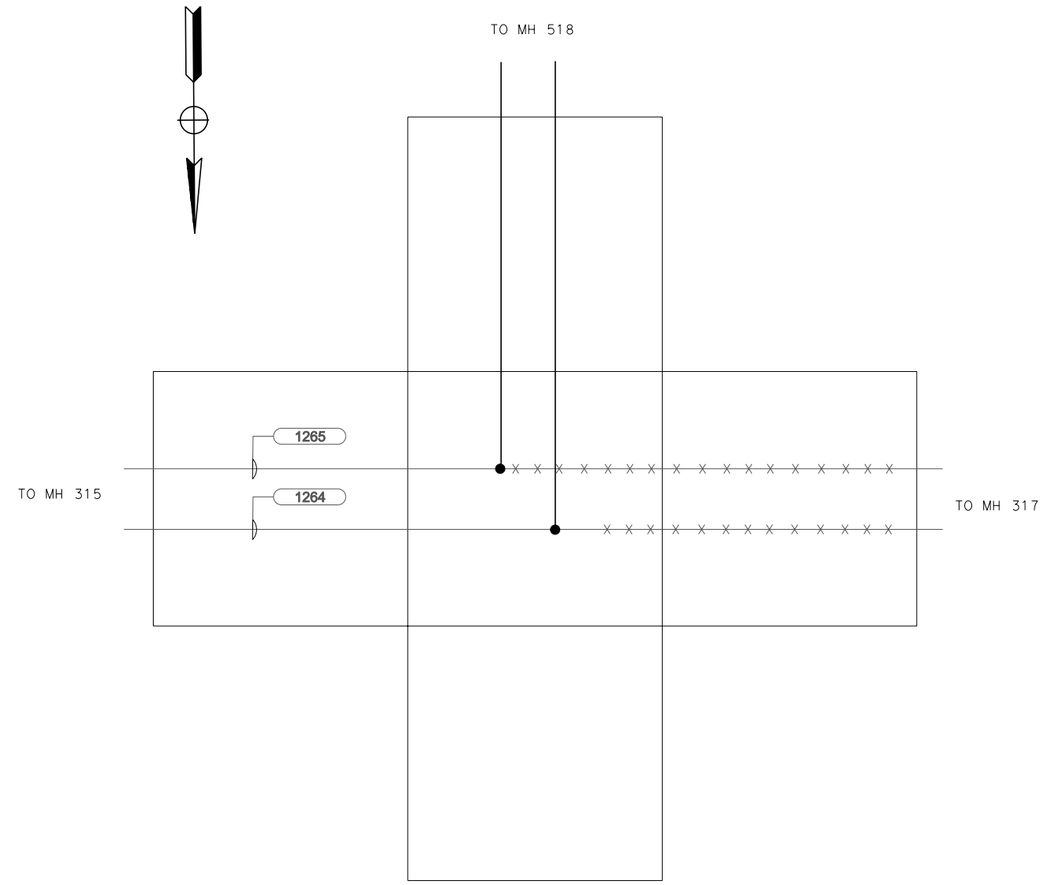

E46 **MH 316**
SCALE: NTS

UTILITY DETAILS
NO SCALE

UDE24

STATE OF CALIFORNIA - DEPARTMENT OF TRANSPORTATION
Caltrans

FUNCTIONAL SUPERVISOR: DUANNE GILMORE
CALCULATED-DESIGNED BY: GEOFF GUNN
CHECKED BY: SHAUN LANDMAN
REVISED BY: MD
DATE REVISED: 04/23/10

LAST REVISION
DATE PLOTTED => 4/23/2010
TIME PLOTTED => 1:27:10 PM

Dist	COUNTY	ROUTE	POST MILES TOTAL PROJECT	SHEET No.	TOTAL SHEETS
04	SF	101,1	9.0/9.8, 6.8/7.1		

8-19-09
LICENSED ELECTRICAL ENGINEER

REGISTERED PROFESSIONAL ENGINEER
SHAUN DAVID LANDMAN
No. E17532
Exp. 6-30-11
ELEC
STATE OF CALIFORNIA

PLANS APPROVAL DATE

THE STATE OF CALIFORNIA OR ITS OFFICERS OR AGENTS SHALL NOT BE RESPONSIBLE FOR THE ACCURACY OR COMPLETENESS OF ELECTRONIC COPIES OF THIS PLAN SHEET.

Arup PB JV
560 Mission Street, Suite 700
San Francisco, CA 94105

NOTES:

1. BUTTERFLY DIAGRAMS ARE DIAGRAMMATIC TO SHOW DESIGN INTENT ONLY. CIRCUITS MAY NOT BE EXACTLY AS SHOWN. CONTRACTOR TO VERIFY EXISTING CONDITIONS IN FIELD PRIOR TO STARTING ANY WORK.

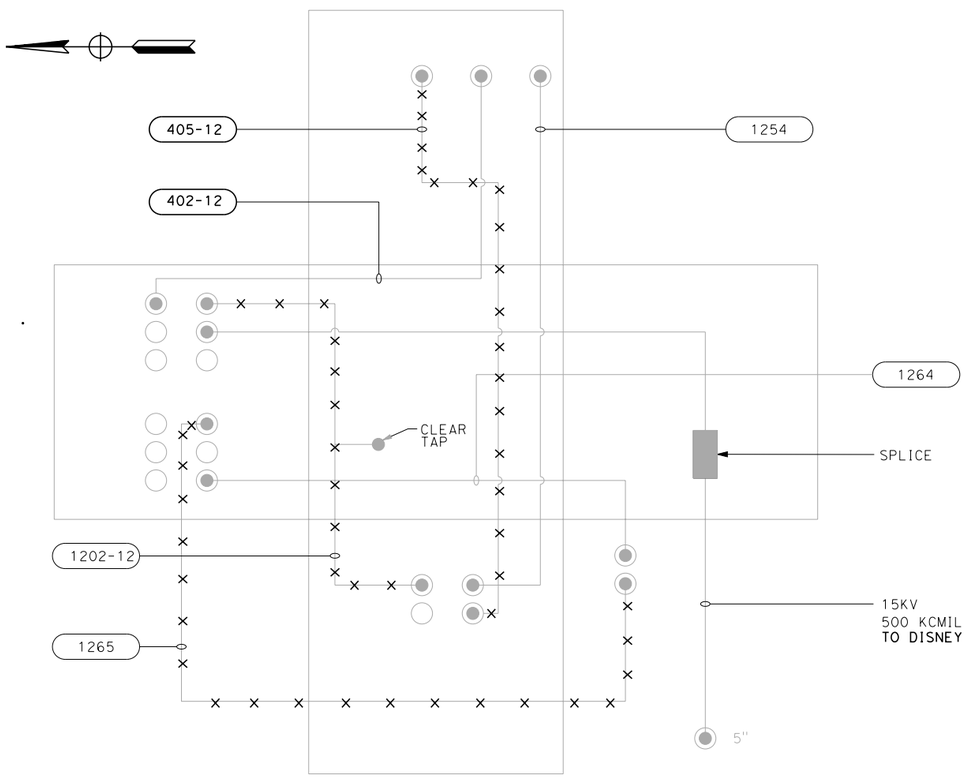

E47 **MH 305**
SCALE: NTS

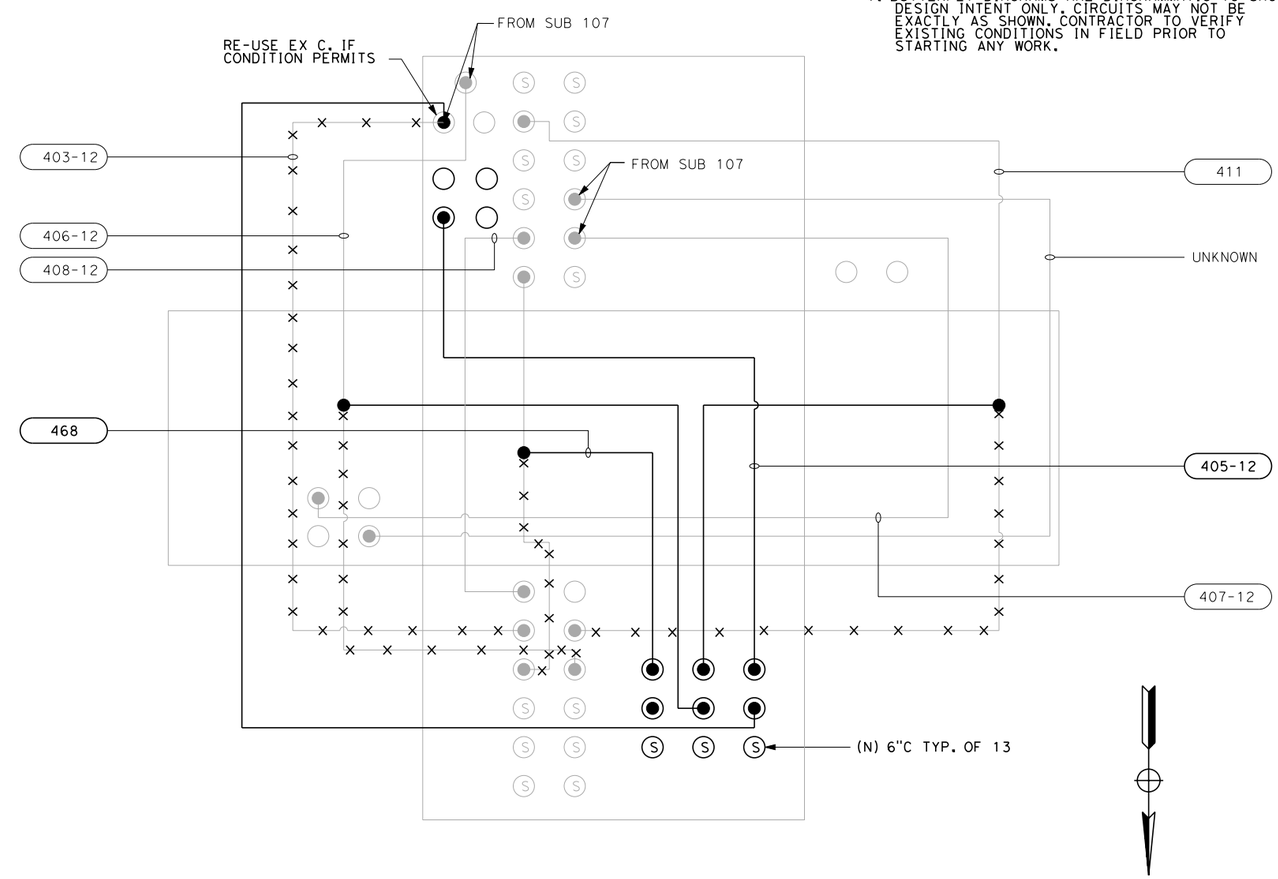

E48 **MH 306**
SCALE: NTS

UTILITY DETAILS
NO SCALE

UDE25

STATE OF CALIFORNIA - DEPARTMENT OF TRANSPORTATION
Caltrans

FUNCTIONAL SUPERVISOR: DUANNE GILMORE
CALCULATED-DESIGNED BY: GEOFF GUNN
CHECKED BY: SHAUN LANDMAN
REVISED BY: MD
DATE REVISED: 04/23/10

LAST REVISION
DATE PLOTTED => 4/23/2010
TIME PLOTTED => 1:46:59 PM

Dist	COUNTY	ROUTE	POST MILES TOTAL PROJECT	SHEET No.	TOTAL SHEETS
04	SF	101,1	9.0/9.8, 6.8/7.1		

8-19-09
LICENSED ELECTRICAL ENGINEER

REGISTERED PROFESSIONAL ENGINEER
SHAUN DAVID LANDMAN
No. E17532
Exp. 6-30-11
ELEC
STATE OF CALIFORNIA

PLANS APPROVAL DATE

THE STATE OF CALIFORNIA OR ITS OFFICERS OR AGENTS SHALL NOT BE RESPONSIBLE FOR THE ACCURACY OR COMPLETENESS OF ELECTRONIC COPIES OF THIS PLAN SHEET.

Arup PB JV
560 Mission Street, Suite 700
San Francisco, CA 94105

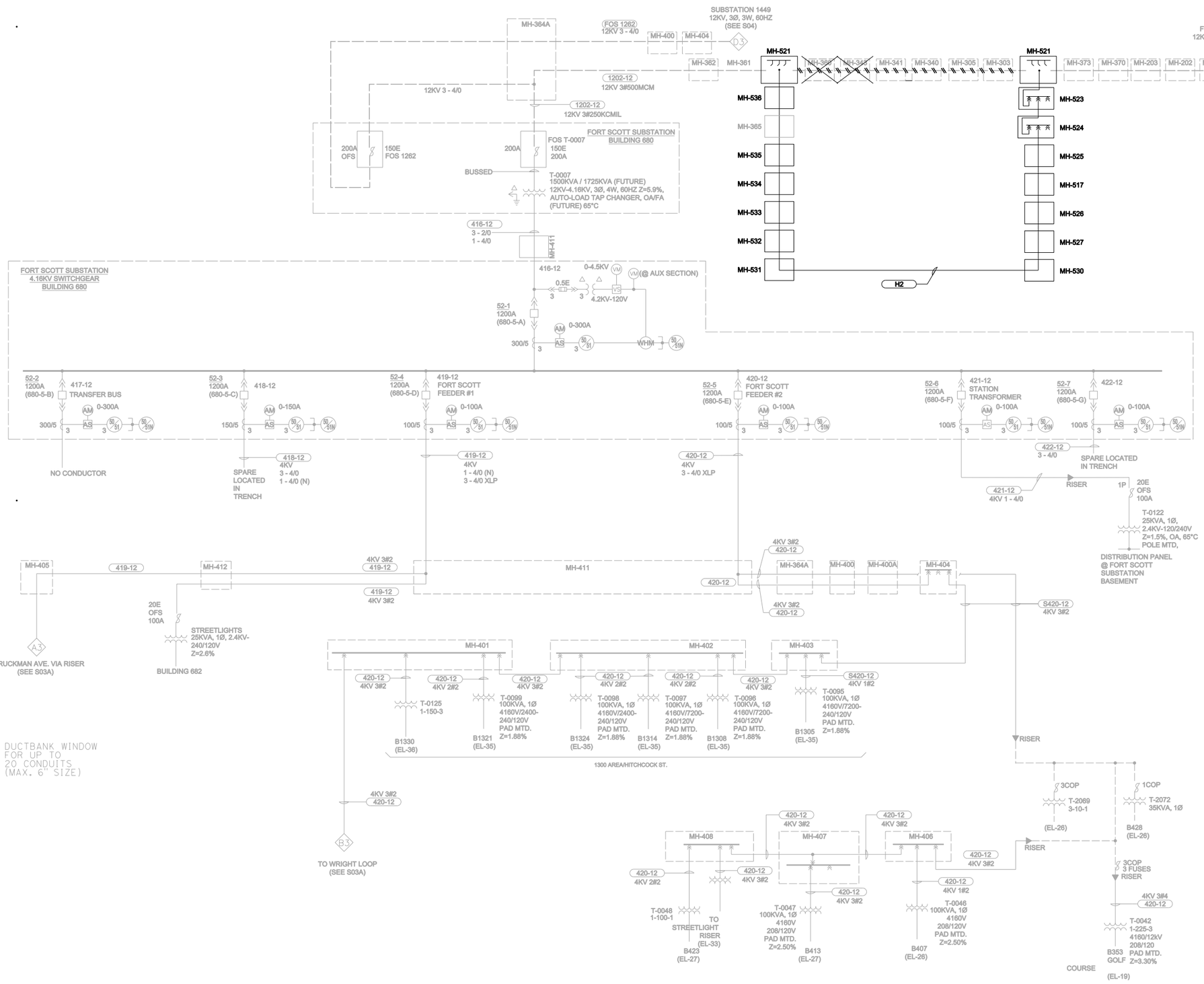

BKR NO.	RELAY NO.	MFR & MODEL NOTE 3	RELAY SETTING - NOTE 3 TIME ELEMENT TAP	TIME DIAL	INST. ELEM.	REMARKS
52-1	27 50/51 50/51N	GE-12IAV54E1A GE-12IAC53B104A GE-12IAC53B23A	93V 5A 1A	2.8 3 5	-- 20A 20A	INCOMING
52-2	50/51 50/51N	GE-12IAC53B104A GE-12IAC53B23A	4A 0.5A	2 0.5	20A 20A	
52-3	50/51 50/51N	GE-12IAC53B104A GE-12IAC53B23A	8A 1.5A	1.5 4	20A 20A	SPARE
52-4	50/51 50/51N	GE-12IAC53B104A GE-12IAC53B23A	8A 1.5A	1.5 (ØA,ØB) 1.2 (ØC) 4	20A 20A	FORT SCOTT FEEDER #1
52-5	50/51 50/51N	GE-12IAC53B104A GE-12IAC53B23A	16A 2A	6 6	20A 20A	FORT SCOTT FEEDER #2
52-6	50/51 50/51N	GE-12IAC53B104A GE-12IAC53B23A	4A 1A	1 4	20A 20A	STATION TRANSFORMER
52-7	50/51 50/51N	GE-12IAC53B104A GE-12IAC53B23A	4A 0.8A	0.5 5	20A 20A	SPARE

DIAGRAM NOTES

1. ALL EXISTING WORK IS SHOWN IN GRAY AND SHALL BE CONFIRMED BY CONTRACTOR PRIOR TO START OF NEW WORK.
2. ALL NEW WORK IS SHOWN IN BLACK NEW SHOWN ON THESE DRAWINGS INDICATES CABLING ONLY. REFER TO SITE PLAN FOR CONDUIT COUNTS AND ROUTING INFORMATION.
3. THIS DIAGRAM CONTAINS DUPLICATE MANHOLE NUMBERS CONTRACTOR TO COORDINATE REQUIREMENTS WITH PLAN DRAWINGS.

UTILITY DETAILS

NO SCALE

SCALE: NTS

USE-01

REVISED BY	DATE REVISED
MD	02/02/10
MD	01/13/09
ML	12/21/09

CALCULATED-DESIGNED BY: GEOFF GUNN
CHECKED BY: SHAUN LANDMAN
FUNCTIONAL SUPERVISOR: DUANNE GILMORE

STATE OF CALIFORNIA - DEPARTMENT OF TRANSPORTATION
Caltrans

LAST REVISION 09-02-09
DATE PLOTTED => 2/2/2010
TIME PLOTTED => 4:28:55 PM

	BKR NO.	RELAY NO.	MFR & MODEL NOTE 3	RELAY SETTING - NOTE 3 TIME ELEMENT TAP	TIME DIAL	INST. ELEM.	REMARKS
12KV SWITCHGEAR LINE-UP	52-1	50/51 50/51N 27	GE-12IAC53B806A GE-12IAC53B803A GE-12IAV54E1A	3A 0.5A 93V	10 10 1.5	MIN MIN —	FEEDER 'A' BKR (F1101-1)
	52-2	50/51 50/51N 27	GE-12IAC51B2A NOT PROVIDED GE-12IAV54E1A	3A — 93V	10 — 0.5	MIN — —	FEEDER 'B' BKR (F1101-2)
	52-3	50/51 50/51N	GE-12IAC53B806A GE-12IAC53B803A	5A 0.5A	5 1.5	MIN MIN	2500KVA TRANSFORMER NO. 1
	52-4	50/51 50/51N	GE-12IAC53B806A GE-12IAC53B803A	5A 0.5A	5 15	MIN MIN	2500KVA TRANSFORMER NO. 2
	52-5	50/51 50/51N	GE-12IAC53B806A GE-12IAC53B803A	2A 0.5A	9 2	MIN MIN	750KVA TRANSFORMER
	52-5A	50/51 50/51N	GE-12IAC53B811A GE-12IAC53B805A	1.5A 0.5A	1.5 2	MIN MIN	SPARE (NOTE 5)
4.16KV SWITCHGEAR LINE-UP	52-1	← SPACE →					
	52-2	50/51 50/51N	GE-12IAC53B4A GE-12IAC53B2A	5A 5A	2 3	20A 20A	CKT #1 600-900 AREA
	52-3	50/51 50/51N		6A 2.5A	1 1	20A 20A	CKT #2, MAIN POST 200 AREA, BLDG 50-39
	52-4	50/51 50/51N		5A 3A	2 2	20A 20A	CKT #3 CRISSY FIELD-1 NORTH
	52-5	50/51 50/51N		5A 1.5A	5 6	20A 20A	CKT #4 CEMETERY BLDG 105-135
	52-6	50/51 50/51N		4A 1.5A	1.5 3	40A 20A	MAIN BKR #1
	52-7	← TIE BREAKER →					
	52-8	50/51 50/51N	GE-12IAC53B4A GE-12IAC53B2A	4A 1.5A	1.5 3	40A 20A	MAIN BKR #2
	52-9	50/51 50/51N		5A 5A	1 2	20A 20A	STREET LIGHTING
	52-10	50/51 50/51N		8A 3A	1 1	20A 20A	CKT #5, BLDG 70 CKT 100-300-400 AREA
	52-11	50/51 50/51N		5A 2A	1 1	20A 20A	CKT #6, BLDG 35-38, 218, 1040 & 1047
	52-12	50/51 50/51N		1A 1.5A	1 1	20A 20A	CKT #7, FIELD MAINTENANCE SHOP AREA
	52-13	50/51 50/51N		4A 2A	1 1	20A 20A	CKT #8 CRISSY FIELD-2 SOUTH

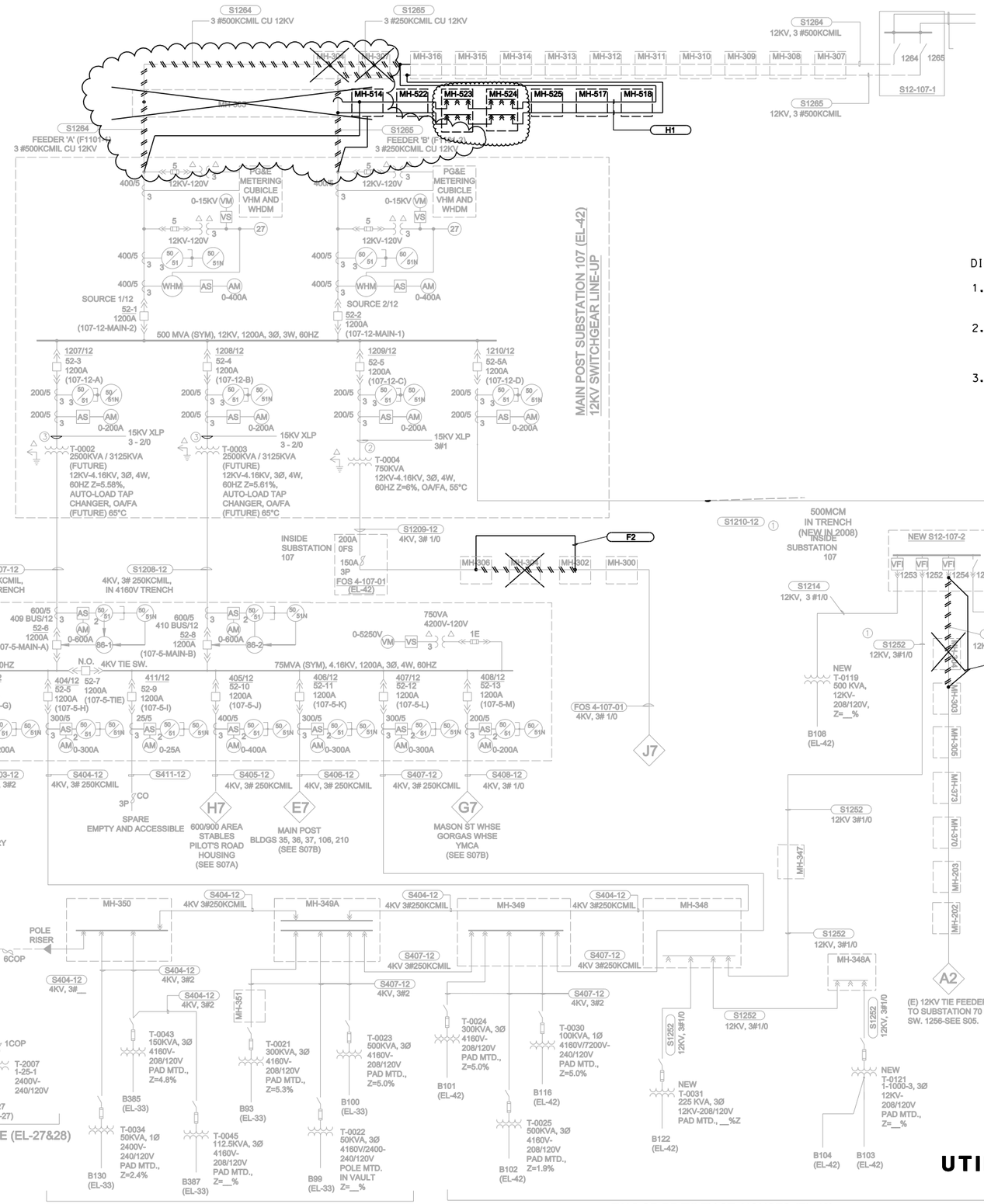

Dist	COUNTY	ROUTE	POST MILES TOTAL PROJECT	SHEET No.	TOTAL SHEETS
04	SF	101,1	9.0/9.8, 6.8/7.1		

TO P&G VAULT (MARINA) 8-19-09

LICENSED ELECTRICAL ENGINEER

PLANS APPROVAL DATE

REGISTERED PROFESSIONAL ENGINEER SHAUN DAVID LANDMAN No. E17532 Exp. 6-30-11 ELEC STATE OF CALIFORNIA

THE STATE OF CALIFORNIA OR ITS OFFICERS OR AGENTS SHALL NOT BE RESPONSIBLE FOR THE ACCURACY OR COMPLETENESS OF ELECTRONIC COPIES OF THIS PLAN SHEET.

Arup PB JV
560 Mission Street, Suite 700
San Francisco, CA 94105

DIAGRAM NOTES

1. ALL EXISTING WORK IS SHOWN IN GRAY AND SHALL BE CONFIRMED BY CONTRACTOR PRIOR TO START OF NEW WORK.
2. ALL NEW WORK IS SHOWN IN BLACK NEW SHOWN ON THESE DRAWINGS INDICATES CABLING ONLY. REFER TO SITE PLAN FOR CONDUIT COUNTS AND ROUTING INFORMATION.
3. THIS DIAGRAM CONTAINS DUPLICATE MANHOLE NUMBERS CONTRACTOR TO COORDINATE REQUIREMENTS WITH PLAN DRAWINGS.

UTILITY DETAILS

NO SCALE

SCALE: NTS

USE-02

	MD	MD	ML	REVISED BY	CALCULATED-DESIGNED BY	FUNCTIONAL SUPERVISOR
	02/02/10	01/13/09	12/21/09	DATE REVISED	CHECKED BY	
			GEOFF GUNN		SHAUN LANDMAN	DUANNE GILMORE

STATE OF CALIFORNIA - DEPARTMENT OF TRANSPORTATION

Caltrans

LAST REVISION 09-02-09 DATE PLOTTED => 2/2/2010 TIME PLOTTED => 5:57:46 PM

Dist	COUNTY	ROUTE	POST MILES TOTAL PROJECT	SHEET No.	TOTAL SHEETS
04	SF	101,1	9.0/9.8, 6.8/7.1		

LICENSED ELECTRICAL ENGINEER

REGISTERED PROFESSIONAL ENGINEER — SHAUN DAVID LANDMAN — No. E17532 — Exp. 6-30-11 — ELEC — STATE OF CALIFORNIA

PLANS APPROVAL DATE 8-19-09

THE STATE OF CALIFORNIA OR ITS OFFICERS OR AGENTS SHALL NOT BE RESPONSIBLE FOR THE ACCURACY OR COMPLETENESS OF ELECTRONIC COPIES OF THIS PLAN SHEET.

Arup PB JV
560 Mission Street, Suite 700
San Francisco, CA 94105

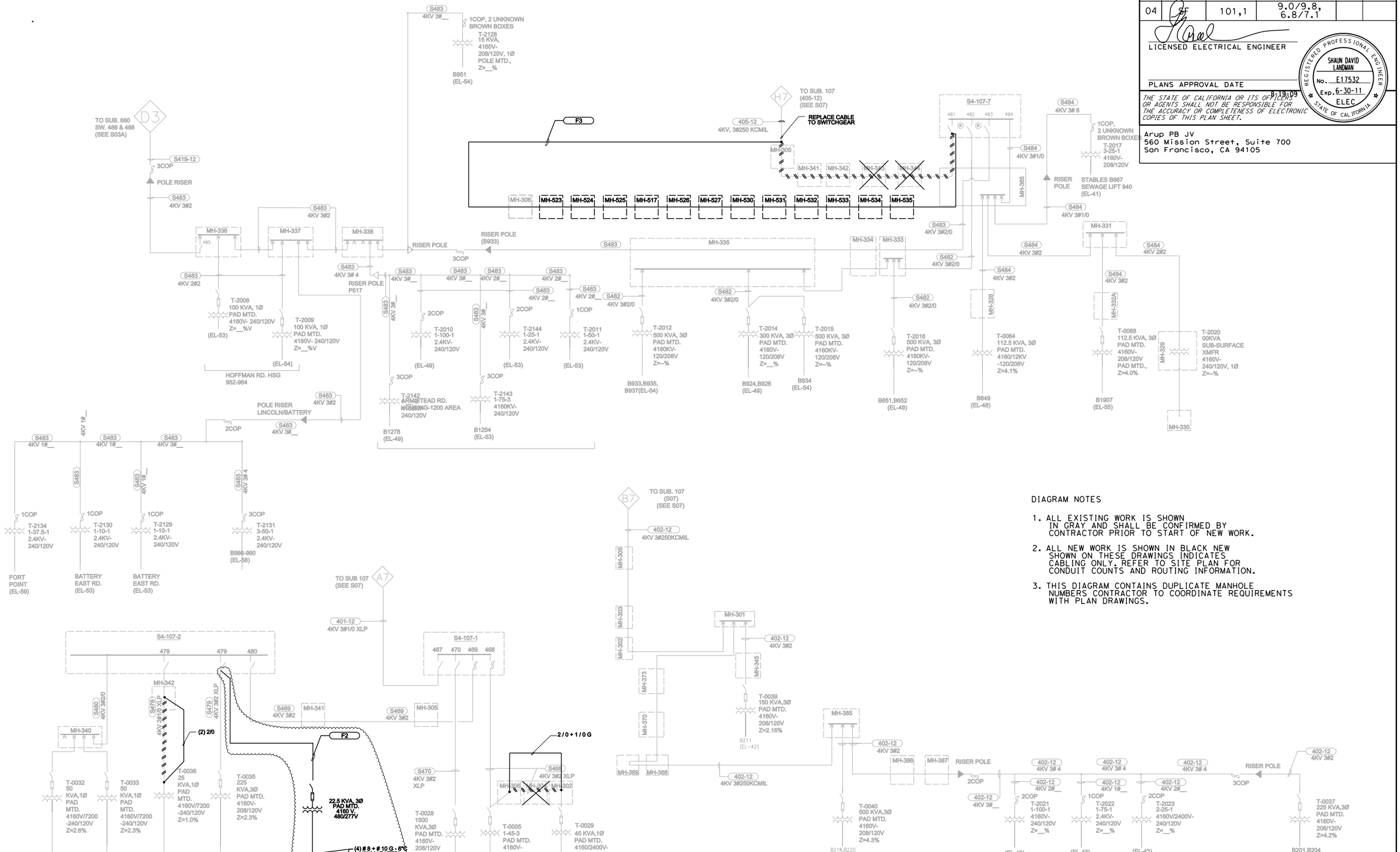

DIAGRAM NOTES

1. ALL EXISTING WORK IS SHOWN IN GRAY AND SHALL BE CONFIRMED BY CONTRACTOR PRIOR TO START OF NEW WORK.
2. ALL NEW WORK IS SHOWN IN BLACK NEW SHOWN ON THESE DRAWINGS INDICATES CABLING ONLY. REFER TO SITE PLAN FOR CONDUIT COUNTS AND ROUTING INFORMATION.
3. THIS DIAGRAM CONTAINS DUPLICATE MANHOLE NUMBERS CONTRACTOR TO COORDINATE REQUIREMENTS WITH PLAN DRAWINGS.

UTILITY DETAILS

NO SCALE

USE-03

MD	MD	MD	MD
04/23/10	03/23/10	02/02/10	DATE REVISED
REVISED BY			
GEOFF GUNN			
SHAUN LANDMAN			
CALCULATED-DESIGNED BY			
CHECKED BY			
FUNCTIONAL SUPERVISOR			
DUANNE GILMORE			

STATE OF CALIFORNIA - DEPARTMENT OF TRANSPORTATION

Caltrans

LAST REVISION 09-02-09

DATE PLOTTED => 4/23/2010
TIME PLOTTED => 11:54:13 AM

Dist	COUNTY	ROUTE	POST MILES TOTAL PROJECT	SHEET No.	TOTAL SHEETS
04	SF	101,1	9.0/9.8, 6.8/7.1		

LICENSED ELECTRICAL ENGINEER

REGISTERED PROFESSIONAL ENGINEER — SHAUN DAVID LANDMAN — No. E17532 — Exp. 6-30-11 — ELEC — STATE OF CALIFORNIA

PLANS APPROVAL DATE 8-19-09

THE STATE OF CALIFORNIA OR ITS OFFICERS OR AGENTS SHALL NOT BE RESPONSIBLE FOR THE ACCURACY OR COMPLETENESS OF ELECTRONIC COPIES OF THIS PLAN SHEET.

Arup PB JV
560 Mission Street, Suite 700
San Francisco, CA 94105

DIAGRAM NOTES

A. REFER TO DRAWING S01 FOR GENERAL NOTES.

B. "EL" AT EQUIPMENT REFERS TO "EL" GRID MAP SHEET.

C. DIAGRAM MAY INDICATE DUPLICATE MANHOLE NUMBERS. REFER TO MANHOLE FOLDOUTS TO REFLECT ALL CIRCUITS BEING ROUTED THROUGH THE SAME MANHOLE.

D. ALL WIRE IS COPPER, EPR UNLESS OTHERWISE NOTED. CONDITIONS WHERE 15KV CABLE BEING USED ON A 5KV SYSTEM ARE NOT NOTED.

E. OVERHEAD WIRE SIZES WERE PROVIDED BY THE PRESIDIO; ONLY QUANTITIES WERE CONFIRMED BY G&B

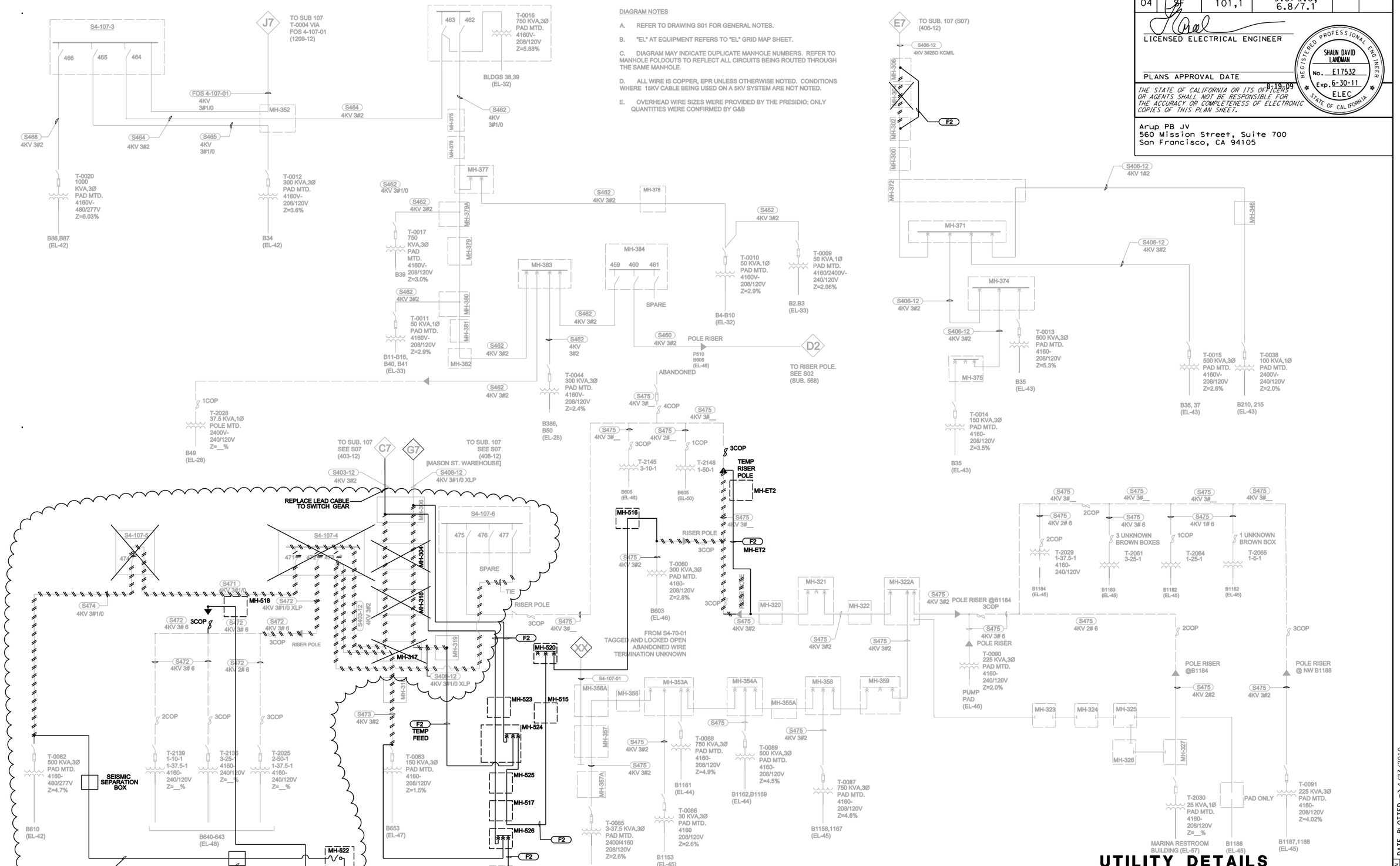

UTILITY DETAILS

NO SCALE

USE-04

MD	MD	MD	REVISED BY
04/23/10	03/23/10	02/02/10	DATE REVISED
GEOFF GUNN			CALCULATED-DESIGNED BY
SHAUN LANDMAN			CHECKED BY
FUNCTIONAL SUPERVISOR			
DUANNE GILMORE			

STATE OF CALIFORNIA - DEPARTMENT OF TRANSPORTATION

Caltrans

LAST REVISION DATE PLOTTED => 4/23/2010
09-02-09 TIME PLOTTED => 11:54:48 AM

Dist	COUNTY	ROUTE	POST MILES TOTAL PROJECT	SHEET No.	TOTAL SHEETS
04	SF	101.1	9.0/9.8, 6.8/7.1		

LICENSED CIVIL ENGINEER 6-09-09

PLANS APPROVAL DATE

REGISTERED PROFESSIONAL ENGINEER ALISDAIR IAIN MCGREGOR No. M27439 Exp. 6-30-11 MECHANICAL STATE OF CALIFORNIA

THE STATE OF CALIFORNIA OR ITS OFFICERS OR AGENTS SHALL NOT BE RESPONSIBLE FOR THE ACCURACY OR COMPLETENESS OF ELECTRONIC COPIES OF THIS PLAN SHEET.

Arup PB JV
560 Mission Street, Suite 700
San Francisco, CA 94105

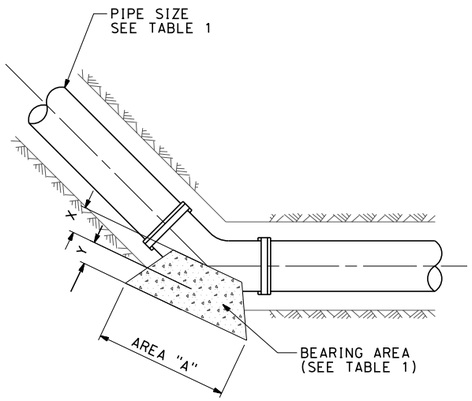

W1 PLAN VIEW 45° BEND
SCALE: NTS

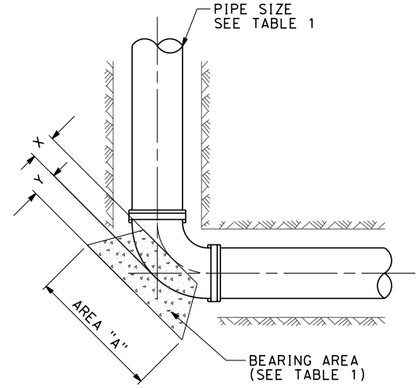

W3 PLAN VIEW 90° BEND
SCALE: NTS

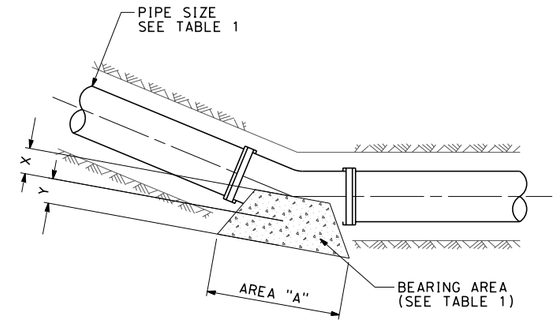

W4 PLAN VIEW 22.5° BEND
SCALE: NTS

AREA "A" IN SQUARE FT									
PIPE SIZE	11.25°	22.5°	30.0°	45.0°	60.0°	90.0°	TEE	X	Y
6"	1	2	3	3	5	5	4	3"	18"
8"	2	3	5	5	8	8	6	4"	18"
10"	2	4	7	7	13	13	9	5"	18"
12"	4	7	13	13	24	24	18	6"	18"

TABLE 1

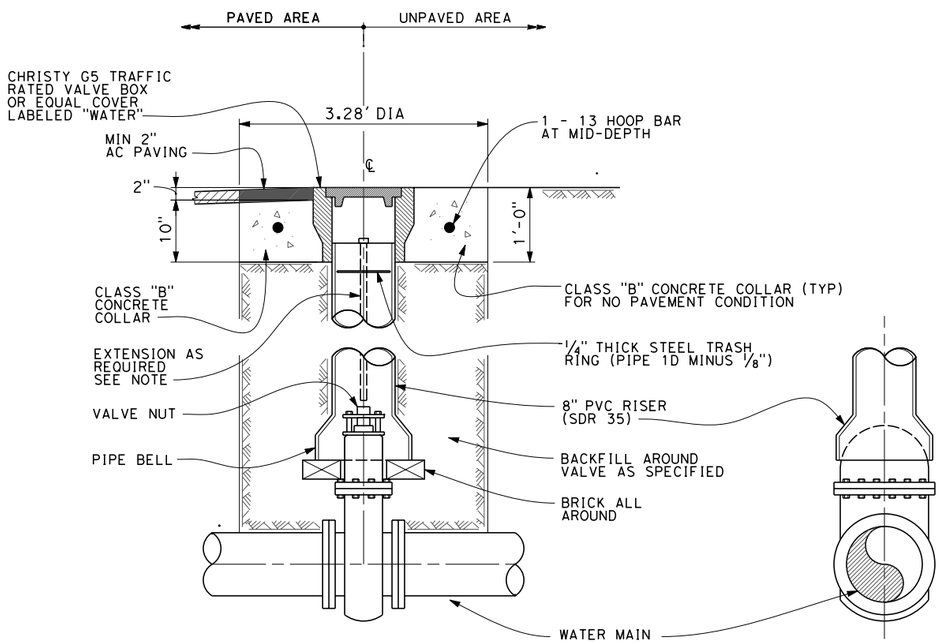

W2 BURIED VALVE
SCALE: NTS

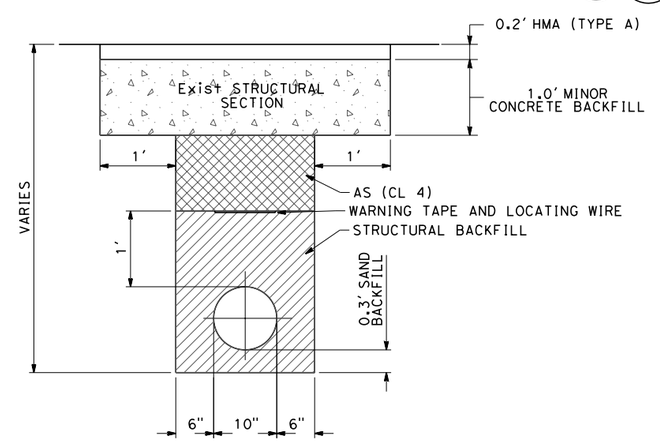

NOTE:

1. IF SLURRY CEMENT BACKFILL IS USED, 0.5' FOR PIPES UP TO 42", OR 1' PIPES OR PIPES OVER 42" DIAMETER.

W5 TRENCH DETAIL
SCALE: NTS

UTILITY DETAILS
NO SCALE

UDW-01

CALCULATED-DESIGNED BY	CIARAN O'DONOVAN	REVISED BY	ML ML ML ML
CHECKED BY	MANISH DALIA	DATE REVISED	12/21/09 08/19/09 08/14/09
FUNCTIONAL SUPERVISOR	DUANNE GILMORE		

STATE OF CALIFORNIA - DEPARTMENT OF TRANSPORTATION
Caltrans

LAST REVISION 08-19-09 DATE PLOTTED => 2/2/2010 TIME PLOTTED => 4:29:17 PM

Dist	COUNTY	ROUTE	POST MILES TOTAL PROJECT	SHEET No.	TOTAL SHEETS
04	SF	101,1	9.0/9.8, 6.8/7.1		

6-09-09
LICENSED CIVIL ENGINEER

PLANS APPROVAL DATE

REGISTERED PROFESSIONAL ENGINEER
ALISDAIR IAIN MCGREGOR
No. M27439
Exp. 6-30-11
MECHANICAL
STATE OF CALIFORNIA

THE STATE OF CALIFORNIA OR ITS OFFICERS OR AGENTS SHALL NOT BE RESPONSIBLE FOR THE ACCURACY OR COMPLETENESS OF ELECTRONIC COPIES OF THIS PLAN SHEET.

Arup PB JV
560 Mission Street, Suite 700
San Francisco, CA 94105

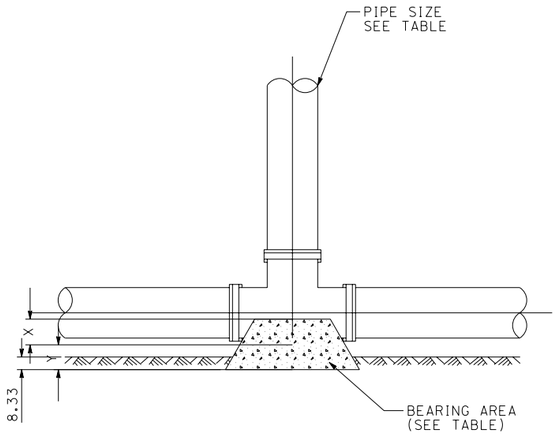

W6 PLAN VIEW TEE
SCALE: NTS

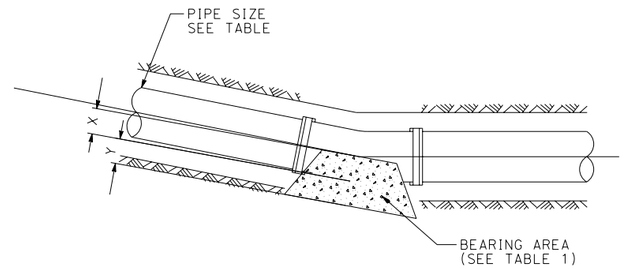

W7 PLAN VIEW 11.25° BEND
SCALE: NTS

AREA "A" IN SQUARE FT									
PIPE SIZE	11.25°	22.5°	30.0°	45.0°	60.0°	90.0°	TEE	X	Y
6"	1	2	3	3	5	5	4	3"	18"
8"	2	3	5	5	8	8	6	4"	18"
10"	2	4	7	7	13	13	9	5"	18"
12"	4	7	13	13	24	24	18	6"	18"

TABLE 1

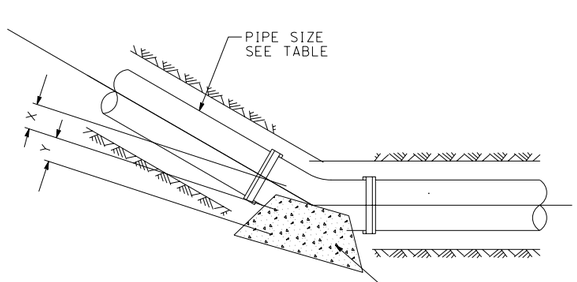

W8 PLAN VIEW 30° BEND
SCALE: NTS

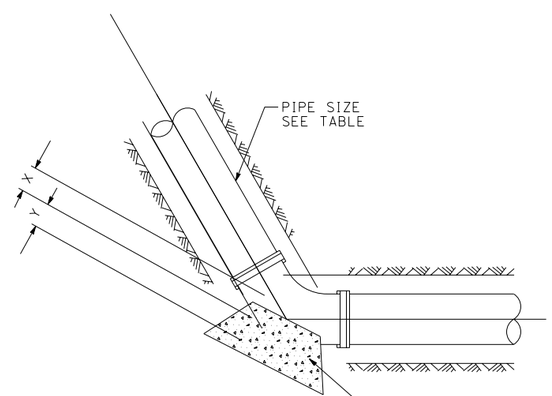

W9 PLAN VIEW 60° BEND
SCALE: NTS

POTABLE WATER DETAILS
NO SCALE

UDW-02

STATE OF CALIFORNIA - DEPARTMENT OF TRANSPORTATION
Caltrans

FUNCTIONAL SUPERVISOR: DUANNE GILMORE
CALCULATED-DESIGNED BY: CIARAN O'DONOVAN
CHECKED BY: MANISH DALIA
REVISED BY: ML
DATE REVISED: 08/19/09 12/21/09

LAST REVISION 08-19-09
DATE PLOTTED => 2/2/2010
TIME PLOTTED => 4:29:20 PM

BORDER LAST REVISED 3/1/2007
RELATIVE BORDER SCALE IS IN INCHES 0 1 2 3
USERNAME => manish.dalia
DGN FILE => $FILE$
CU 04242
EA 416372

Dist	COUNTY	ROUTE	POST MILES TOTAL PROJECT	SHEET No.	TOTAL SHEETS
04	SF	101,1	9.0/9.8, 6.8/7.1		

LICENSED CIVIL ENGINEER 6-09-09

PLANS APPROVAL DATE

REGISTERED PROFESSIONAL ENGINEER ALISDAIR IAIN MCGREGOR No. M27439 Exp. 6-30-11 MECHANICAL STATE OF CALIFORNIA

THE STATE OF CALIFORNIA OR ITS OFFICERS OR AGENTS SHALL NOT BE RESPONSIBLE FOR THE ACCURACY OR COMPLETENESS OF ELECTRONIC COPIES OF THIS PLAN SHEET.

Arup PB JV
560 Mission Street, Suite 700
San Francisco, CA 94105

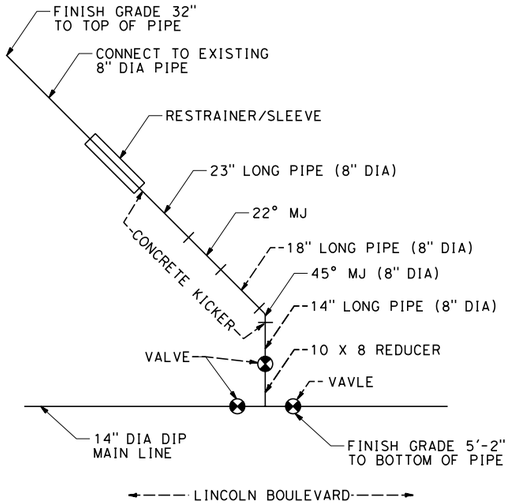

NOTE: USING 8" DIA DUCTILE IRON PIPE (DIP).

W10 **PLAN VIEW**
(BETWEEN BUILDINGS 105 & 106)
SCALE: NTS

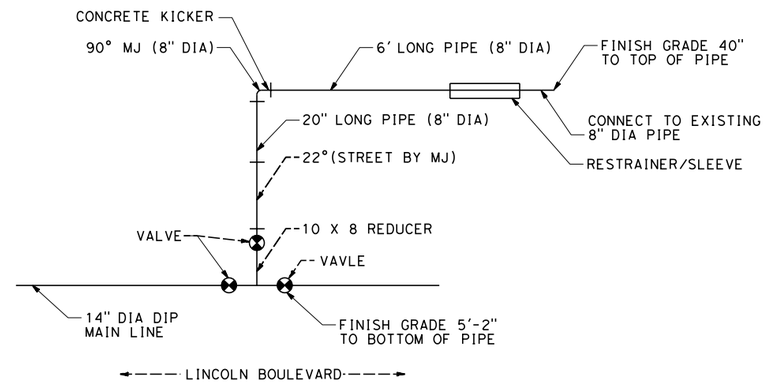

NOTE: USING 8" DIA DUCTILE IRON PIPE (DIP).

W11 **PLAN VIEW**
(TAYLOR ROAD)
SCALE: NTS

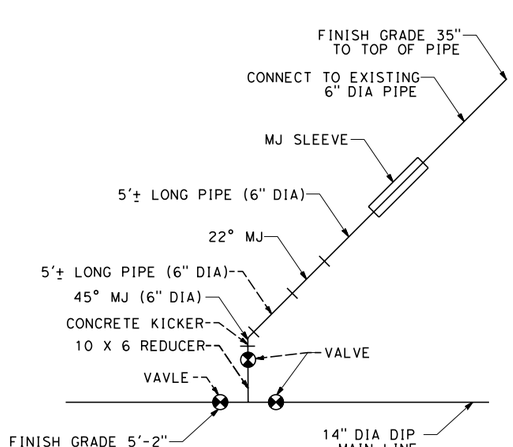

NOTE: USING 6" DIA DUCTILE IRON PIPE (DIP).

W12 **PLAN VIEW**
(RILEY AVENUE)
SCALE: NTS

POTABLE WATER DETAILS

NO SCALE

UDW-03

STATE OF CALIFORNIA - DEPARTMENT OF TRANSPORTATION
Caltrans

FUNCTIONAL SUPERVISOR: DUANNE GILMORE

CALCULATED-DESIGNED BY: CIARAN O'DONOVAN
CHECKED BY: MANISH DALIA
REVISED BY
DATE REVISED

LAST REVISION 08-19-09
DATE PLOTTED => 5/28/2010
TIME PLOTTED => 11:28:56 AM

Dist	COUNTY	ROUTE	POST MILES TOTAL PROJECT	SHEET No.	TOTAL SHEETS
04	SF	101,1	9.0/9.8, 6.8/7.1		

LICENSED ELECTRICAL ENGINEER 8-19-09

REGISTERED PROFESSIONAL ENGINEER TYLER KELLY No. E18769 Exp. 6-30-11 ELEC STATE OF CALIFORNIA

PLANS APPROVAL DATE

THE STATE OF CALIFORNIA OR ITS OFFICERS OR AGENTS SHALL NOT BE RESPONSIBLE FOR THE ACCURACY OR COMPLETENESS OF ELECTRONIC COPIES OF THIS PLAN SHEET.

Arup PB JV
560 Mission Street, Suite 700
San Francisco, CA 94105

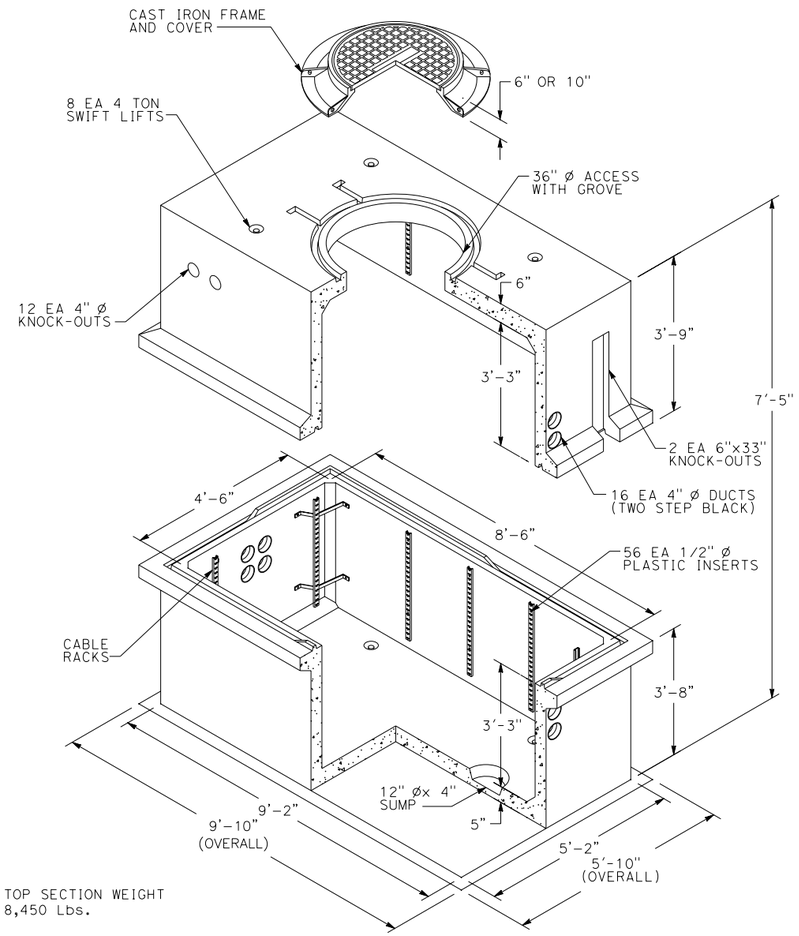

TOP SECTION WEIGHT
8,450 Lbs.

BASE SECTION WEIGHT
8,640 Lbs.

OPTIONAL: GRADE RINGS AVAILABLE IN 6" AND 12"
Drawing May Not Conform To The Most Current Specification

T1 4'-6" x 8'-6" x 6'-6" I.D. MAINTENANCE HOLE

SCALE: NTS

TELEPHONE BOX
No. P36BOX
172 lbs.

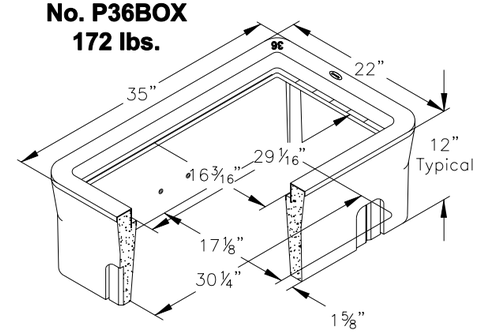

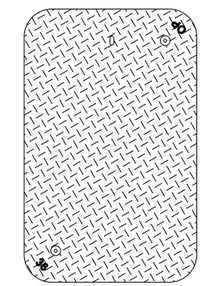

N36-61J

A HIGH DENSITY REINFORCED CONCRETE BOX WITH NON-SETTLING SHOULDERS POSITIONED TO MAINTAIN GRADE AND FACILITATE BACK FILLING. APPROXIMATE DIMENSIONS AND WEIGHT SHOWN.

ORDERING CODE	ITEM BOX	APPROX SHIPPING WEIGHT	DESCRIPTION
P36BOX		172	P36 Telephone Box (17 1/8" x 30 1/4")- 8 per pallet
N36-61J	COVER	56	Steel checker plate, bolt down (order bolts separate)
GALVANIZING AVAILABLE ON ALL STEEL COVERS			

T2 17 1/8" x 30 1/4" TELEPHONE BOX

SCALE: NTS

UTILITY DETAILS

NO SCALE

UDT-01

STATE OF CALIFORNIA - DEPARTMENT OF TRANSPORTATION	FUNCTIONAL SUPERVISOR	CALCULATED-DESIGNED BY	REVISED BY
Caltrans	DUANNE GILMORE	CHECKED BY	DATE REVISED
	TYLER KELLY	BILL LIZOTTE	ML 12/10/09 ML 12/21/09

LAST REVISION | DATE PLOTTED => 2/2/2010 | TIME PLOTTED => 4:31:46 PM

BORDER LAST REVISED 3/1/2007 | RELATIVE BORDER SCALE IS IN INCHES 0 1 2 3 | USERNAME => manish.dalia | DGN FILE => $FILE$ | CU 04242 | EA 416372

Dist	COUNTY	ROUTE	POST MILES TOTAL PROJECT	SHEET No.	TOTAL SHEETS
04	SF	101,1	9.0/9.8, 6.8/7.1		

LICENSED ELECTRICAL ENGINEER 8-19-09

PLANS APPROVAL DATE

REGISTERED PROFESSIONAL ENGINEER TYLER KELLY No. E18769 Exp. 6-30-11 ELEC STATE OF CALIFORNIA

THE STATE OF CALIFORNIA OR ITS OFFICERS OR AGENTS SHALL NOT BE RESPONSIBLE FOR THE ACCURACY OR COMPLETENESS OF ELECTRONIC COPIES OF THIS PLAN SHEET.

Arup PB JV
560 Mission Street, Suite 700
San Francisco, CA 94105

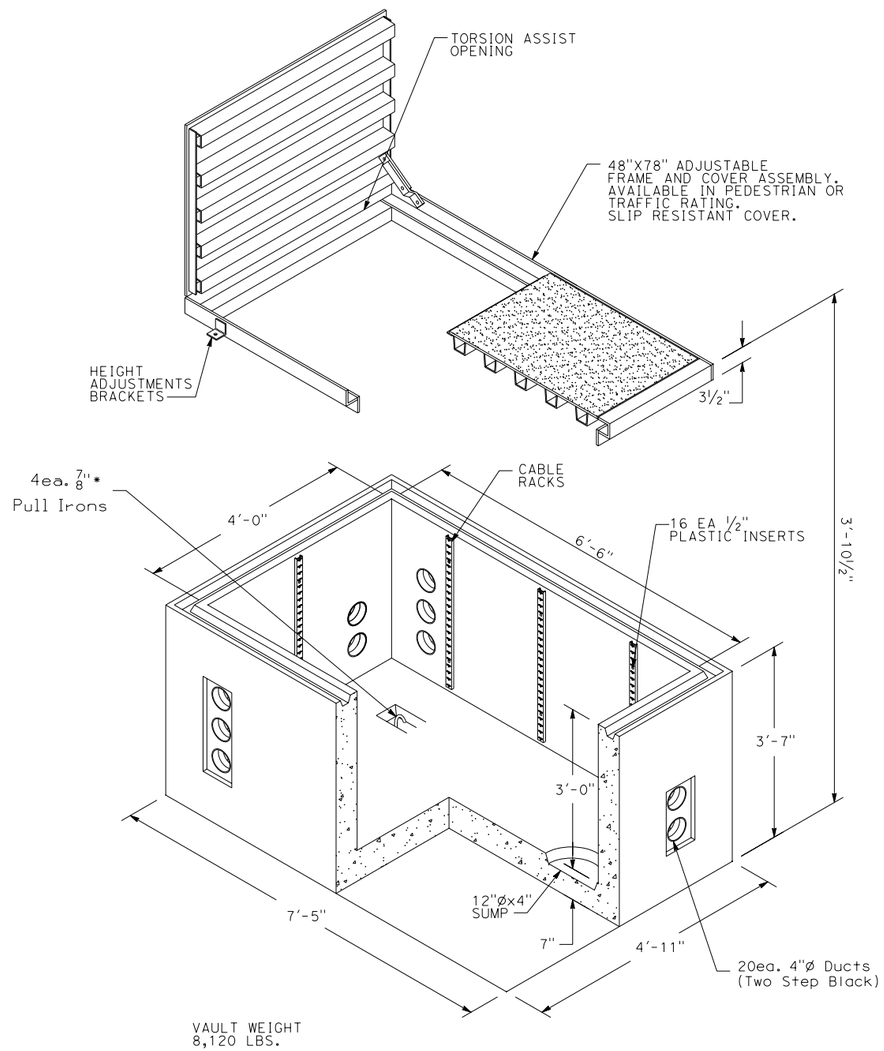

T3 **4' x 6'-6" x 3' I.D. SUBSURFACE ENCLOSURE**
SCALE: NTS

TELEPHONE BOX
No. P44BOX
290 lbs.

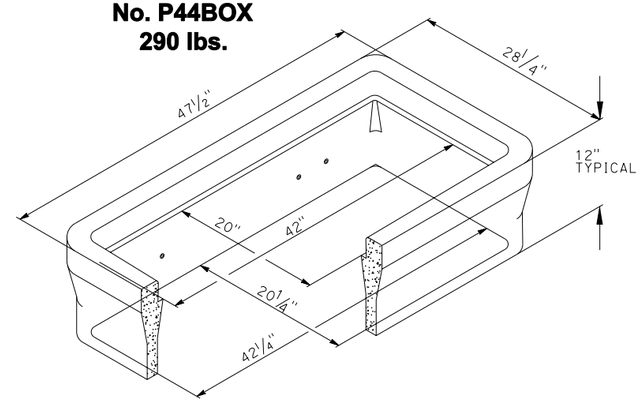

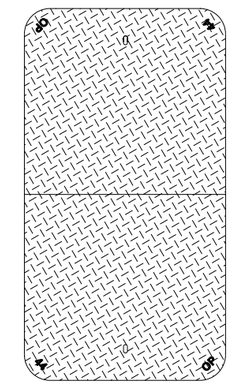

B44-62D

A HIGH DENSITY REINFORCED CONCRETE BOX WITH NON-SETTING SHOULDERS POSITIONED TO MAINTAIN GRADE AND FACILITATE BACK FILLING. SUPPLIED WITH INSERTS TO SUPPORT BRACKETS. APPROXIMATE DIMENSIONS AND WEIGHT SHOWN.

ORDERING CODE	ITEM	APPROX. SHIPPING WEIGHT	DESCRIPTION
P44BOX	BOX	290	P44 TELEPHONE BOX (20 1/4" x 42 1/4")– 6 per pallet
B44–62D	COVER	96	2 PC. STEEL CHECKER PLATE
GALVANIZING AVAILABLE ON ALL STEEL COVERS			

T4 **TELEPHONE BOX 20-1/4" x 42-1/4"**
SCALE: NTS

UTILITY DETAILS
NO SCALE

UDT-02

REVISED BY	DATE REVISED
ML	12/21/09
ML	12/10/09

TYLER KELLY — CALCULATED-DESIGNED BY
BILL LIZOTTE — CHECKED BY
DUANNE GILMORE — FUNCTIONAL SUPERVISOR

STATE OF CALIFORNIA - DEPARTMENT OF TRANSPORTATION
Caltrans

LAST REVISION — DATE PLOTTED => 2/2/2010 TIME PLOTTED => 4:31:48 PM

Dist	COUNTY	ROUTE	POST MILES TOTAL PROJECT	SHEET No.	TOTAL SHEETS
04	SF	101,1	9.0/9.8, 6.8/7.1		

12-19-09
LICENSED ELECTRICAL ENGINEER

REGISTERED PROFESSIONAL ENGINEER
TYLER KELLY
No. E18769
Exp. 6-30-11
ELEC
STATE OF CALIFORNIA

PLANS APPROVAL DATE

THE STATE OF CALIFORNIA OR ITS OFFICERS OR AGENTS SHALL NOT BE RESPONSIBLE FOR THE ACCURACY OR COMPLETENESS OF ELECTRONIC COPIES OF THIS PLAN SHEET.

Arup PB JV
560 Mission Street, Suite 700
San Francisco, CA 94105

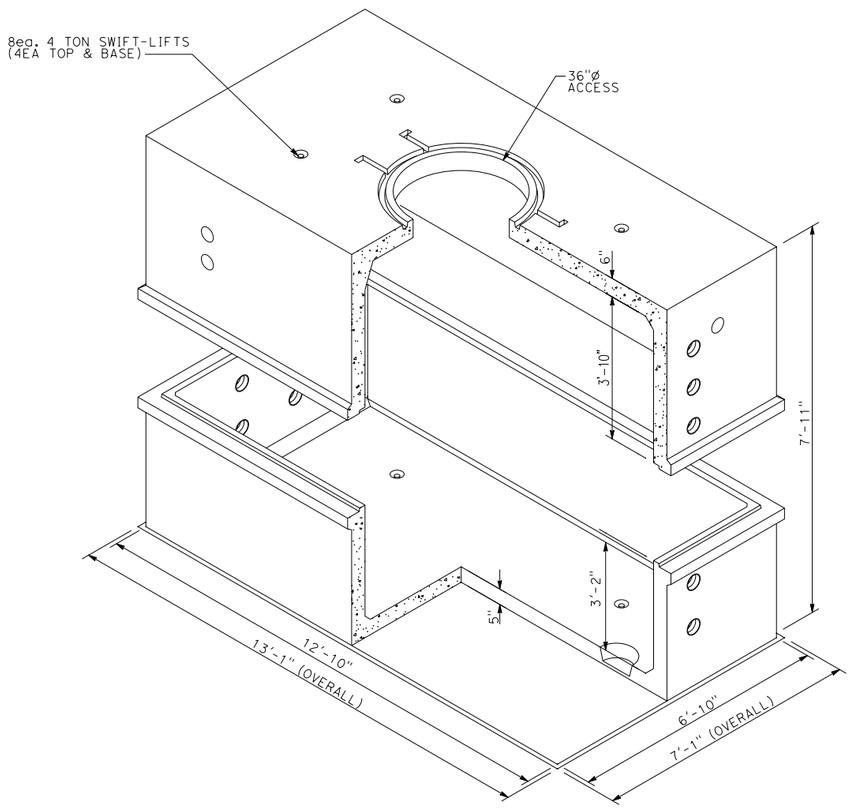

TOP WEIGHT: 16,380
BASE WEIGHT: 14,500

T5 **6'-10" x 7' x 12'-10"**
SUBSURFACE ENCLOSURE

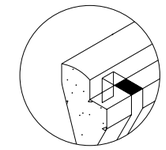

"T" BOX

TELEPHONE BOX
No. P52BOX
454 lbs.

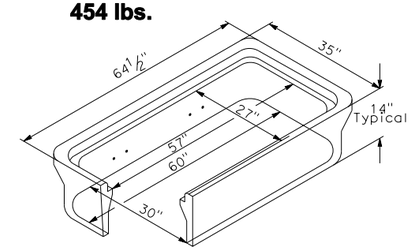

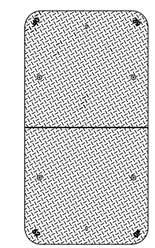

N52-62J

A HIGH DENSITY REINFORCED CONCRETE BOX WITH END KNOCKOUTS AND NON-SETTLING SHOULDERS POSITIONED TO MAINTAIN GRADE AND FACILITATE BACK FILLING. SUPPLIED WITH INSERTS TO SUPPORT BRACKETS. APPROXIMATE DIMENSIONS AND WEIGHT SHOWN.

ORDERING CODE	ITEM	APPROX. SHIPPING WEIGHT	DESCRIPTION
P52TBOX*	BOX	454	P52T TELEPHONE BOX (30" x 60")- 3 PER PALLET WITH BOLT DOWN PROVISIONS
BOXES PROVIDED WITH BOLD DOWN PROVISIONS FOR USE WITH BOLT DOWN LIDS			
GALVANIZING AVAILABLE ON ALL STEEL COVERS			

T6 **30"x 60"**
TELEPHONE BOX

UTILITY DETAILS
NO SCALE

UDT-03

TYLER KELLY	REVISED BY	ML	ML
BILL LIZOTTE	DATE REVISED	12/10/09	12/21/09
CALCULATED-DESIGNED BY			
CHECKED BY			
FUNCTIONAL SUPERVISOR			
DUANNE GILMORE			

STATE OF CALIFORNIA - DEPARTMENT OF TRANSPORTATION
Caltrans

LAST REVISION
DATE PLOTTED => 2/2/2010
TIME PLOTTED => 4:31:51 PM

Dist	COUNTY	ROUTE	POST MILES TOTAL PROJECT	SHEET No.	TOTAL SHEETS
04	SF	101,1	9.0/9.8, 6.8/7.1		

8-19-09
LICENSED ELECTRICAL ENGINEER

REGISTERED PROFESSIONAL ENGINEER
TYLER KELLY
No. E18769
Exp. 6-30-11
ELEC
STATE OF CALIFORNIA

PLANS APPROVAL DATE

THE STATE OF CALIFORNIA OR ITS OFFICERS OR AGENTS SHALL NOT BE RESPONSIBLE FOR THE ACCURACY OR COMPLETENESS OF ELECTRONIC COPIES OF THIS PLAN SHEET.

Arup PB JV
560 Mission Street, Suite 700
San Francisco, CA 94105

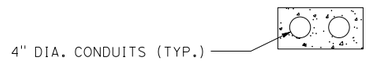

2 CONDUITS 14" x 21"

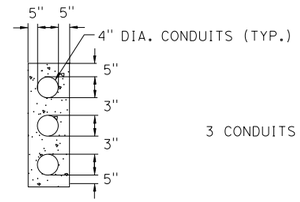

3 CONDUITS 14" x 27"

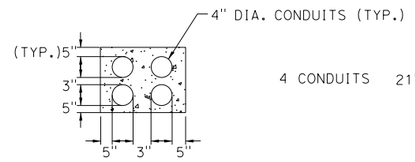

4 CONDUITS 21" x 21"

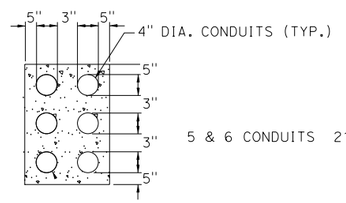

5 & 6 CONDUITS 21" x 28"

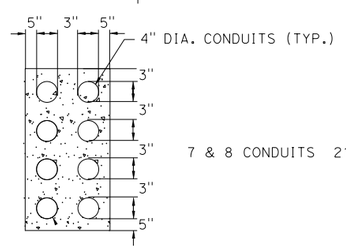

7 & 8 CONDUITS 21" x 35"

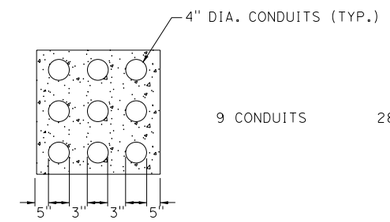

9 CONDUITS 28" x 28"

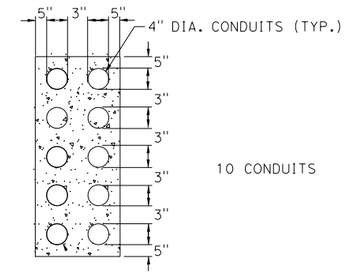

10 CONDUITS 21" x 42"

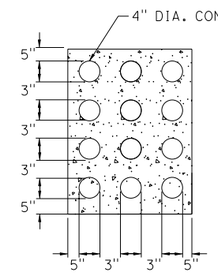

11 or 12 CONDUITS 28" x 35"

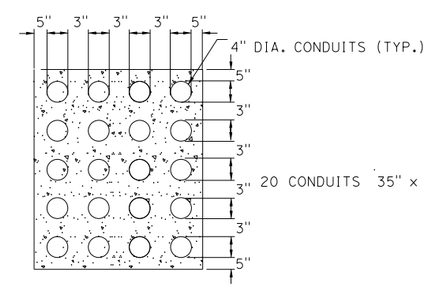

20 CONDUITS 35" x 42"

NOTES

1. PROVIDE TAPE MARKER.
2. DUCT BANK SHALL BE MINIMUM OF 36" DEEP FROM FINISHED SURFACE TO THE TOP OF THE DUCT.
3. ALL CONDUITS SHALL HAVE 5" OF CONCRETE BETWEEN THE CONDUITS IN THE DUCT AND EXTERIOR OF THE DUCT.
4. ALL CONDUTS SHALL HAVE A MINIMUM SPACING OF 3".
5. ALL DUCT CONFIGURATIONS MAY BE ROTATED 90° TO ADJUST TO EXISTING SITE CONDITIONS. ALL ROTATIONS ARE SUBJECT TO SITE ENGINEER AND TRUST REPRESENTATIVE FOR APPROVAL.

T7 TYPICAL DUCT CONFIGURATION

UTILITY DETAILS
NO SCALE

UDT-04

REVISED BY	ML	ML	ML
DATE REVISED	12/10/09	12/21/09	
CALCULATED-DESIGNED BY	TYLER KELLY		
CHECKED BY	BILL LIZOTTE		
FUNCTIONAL SUPERVISOR	DUANNE GILMORE		

STATE OF CALIFORNIA - DEPARTMENT OF TRANSPORTATION
Caltrans

LAST REVISION DATE PLOTTED => 2/2/2010
TIME PLOTTED => 4:31:53 PM

Dist	COUNTY	ROUTE	POST MILES TOTAL PROJECT	SHEET No.	TOTAL SHEETS
04	SF	101,1	9.0/9.8, 6.8/7.1		

8-19-09
LICENSED ELECTRICAL ENGINEER

REGISTERED PROFESSIONAL ENGINEER
TYLER KELLY
No. E18769
Exp. 6-30-11
ELEC
STATE OF CALIFORNIA

PLANS APPROVAL DATE

THE STATE OF CALIFORNIA OR ITS OFFICERS OR AGENTS SHALL NOT BE RESPONSIBLE FOR THE ACCURACY OR COMPLETENESS OF ELECTRONIC COPIES OF THIS PLAN SHEET.

Arup PB JV
560 Mission Street, Suite 700
San Francisco, CA 94105

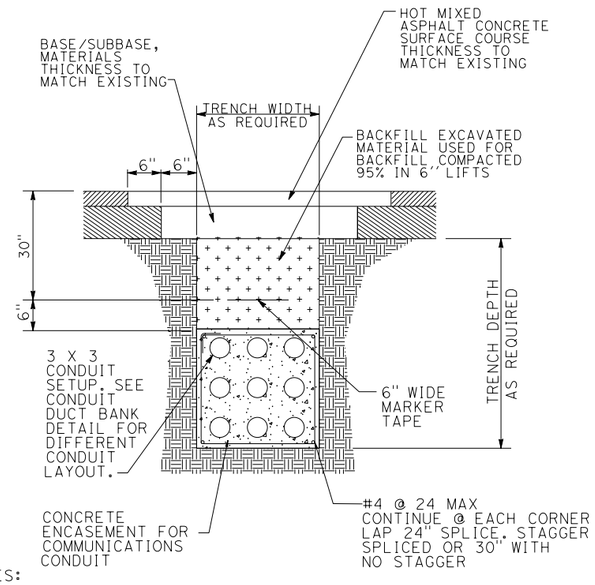

NOTES:

1. ALL EXISTING PAVEMENT SURFACES SHALL BE SAW CUT IN A STRAIGHT LINE.
2. CONTRACTOR SHALL USE CUT AND COVER FOR ALL TRENCHES.
3. FOR DUCT BANK SIZING SEE "DUCT BANK CONFIGURATION" DETAIL

T8A TYPICAL TRENCHING DETAIL PAVED AREAS

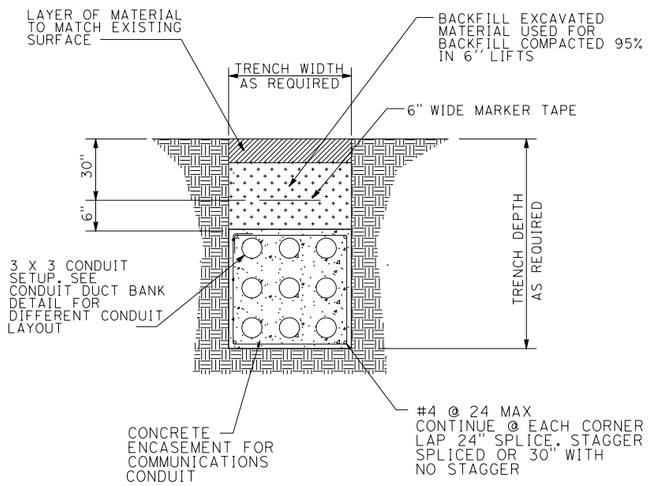

NOTES:

1. FOR DUCT BANK SIZING SEE "DUCT BANK CONFIGURATION" DETAIL
2. CONTRACTOR SHALL USE CUT AND COVER FOR ALL TRENCHES.

T8B TYPICAL TRENCHING DETAIL UNPAVED AREAS

UTILITY DETAILS

NO SCALE

UDT-05

STATE OF CALIFORNIA - DEPARTMENT OF TRANSPORTATION
Caltrans

FUNCTIONAL SUPERVISOR: DUANNE GILMORE
CALCULATED-DESIGNED BY: TYLER KELLY
CHECKED BY: BILL LIZOTTE
REVISED BY: ML ML
DATE REVISED: 12/21/09 12/10/09

LAST REVISION
DATE PLOTTED => 2/2/2010
TIME PLOTTED => 4:31:56 PM

Dist	COUNTY	ROUTE	POST MILES TOTAL PROJECT	SHEET No.	TOTAL SHEETS
04	SF	101,1	9.0/9.8, 6.8/7.1		

LICENSED ELECTRICAL ENGINEER 12-19-09

PLANS APPROVAL DATE

REGISTERED PROFESSIONAL ENGINEER TYLER KELLY No. E18769 Exp. 6-30-11 ELEC STATE OF CALIFORNIA

THE STATE OF CALIFORNIA OR ITS OFFICERS OR AGENTS SHALL NOT BE RESPONSIBLE FOR THE ACCURACY OR COMPLETENESS OF ELECTRONIC COPIES OF THIS PLAN SHEET.

Arup PB JV
560 Mission Street, Suite 700
San Francisco, CA 94105

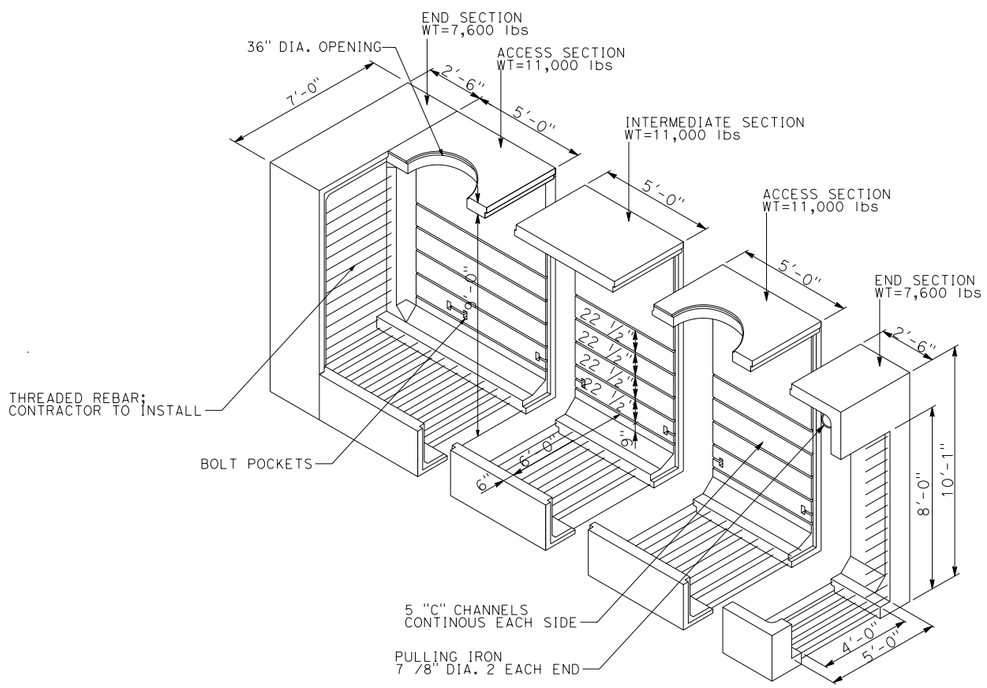

T9A **INTERCEPT TUNNEL VAULT**
9'-0" HEADROOM
6'-0" WIDE
VARIABLE LENGTH

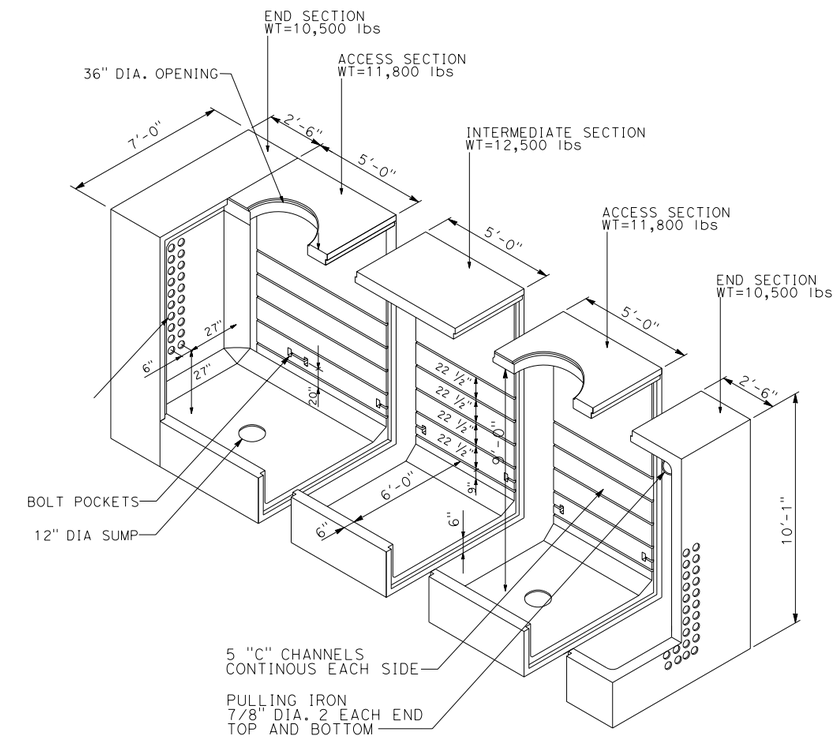

T9B **NEW TUNNEL VAULT**
9'-0" HEADROOM
6'-0" WIDE
VARIABLE LENGTH

UTILITY DETAILS
NO SCALE

UDT-06

STATE OF CALIFORNIA - DEPARTMENT OF TRANSPORTATION
Caltrans

FUNCTIONAL SUPERVISOR: DUANNE GILMORE
CALCULATED-DESIGNED BY: TYLER KELLY
CHECKED BY: BILL LIZOTTE
REVISED BY: ES ML ML
DATE REVISED: 11/05/09 12/10/09 12/21/09

LAST REVISION 11-05-09
DATE PLOTTED => 2/2/2010
TIME PLOTTED => 4:31:58 PM

BORDER LAST REVISED 3/1/2007
RELATIVE BORDER SCALE IS IN INCHES 0 1 2 3
USERNAME => manish.dalia
DGN FILE => $FILE$
CU 04242
EA 416372

Dist	COUNTY	ROUTE	POST MILES TOTAL PROJECT	SHEET No.	TOTAL SHEETS
04	SF	101,1	9.0/9.8, 6.8/7.1		

8-19-09
LICENSED ELECTRICAL ENGINEER

PLANS APPROVAL DATE

REGISTERED PROFESSIONAL ENGINEER
TYLER KELLY
No. E18769
Exp. 6-30-11
ELEC
STATE OF CALIFORNIA

THE STATE OF CALIFORNIA OR ITS OFFICERS OR AGENTS SHALL NOT BE RESPONSIBLE FOR THE ACCURACY OR COMPLETENESS OF ELECTRONIC COPIES OF THIS PLAN SHEET.

Arup PB JV
560 Mission Street, Suite 700
San Francisco, CA 94105

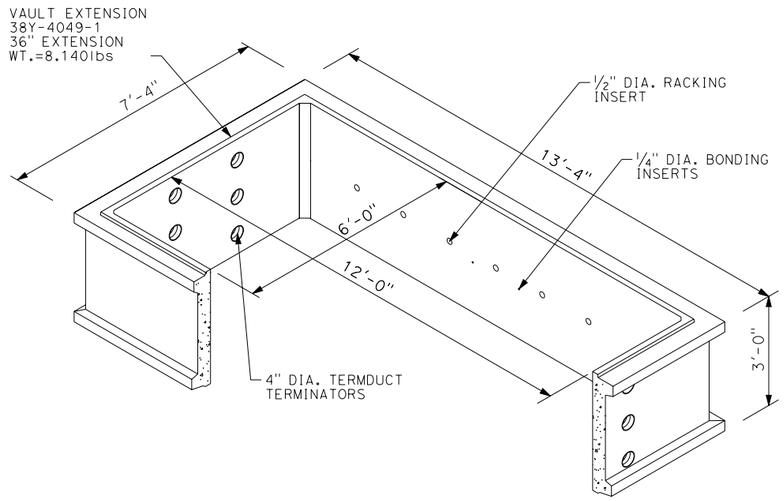

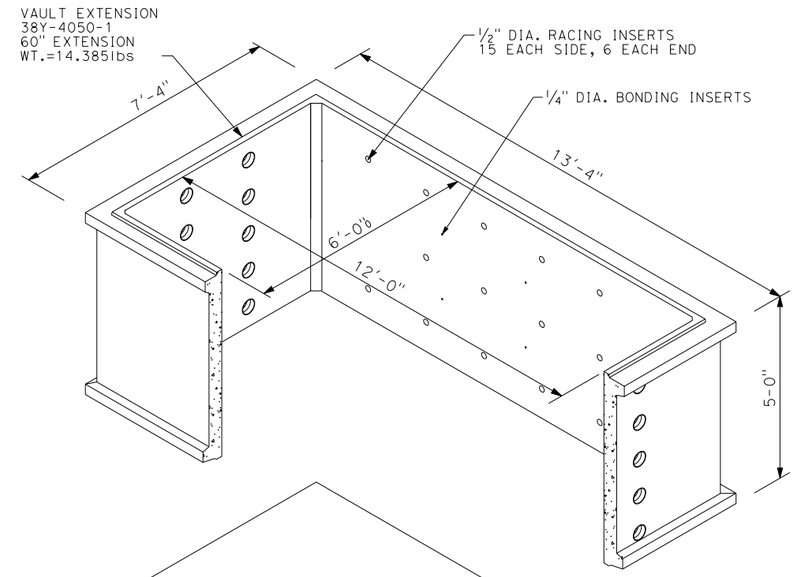

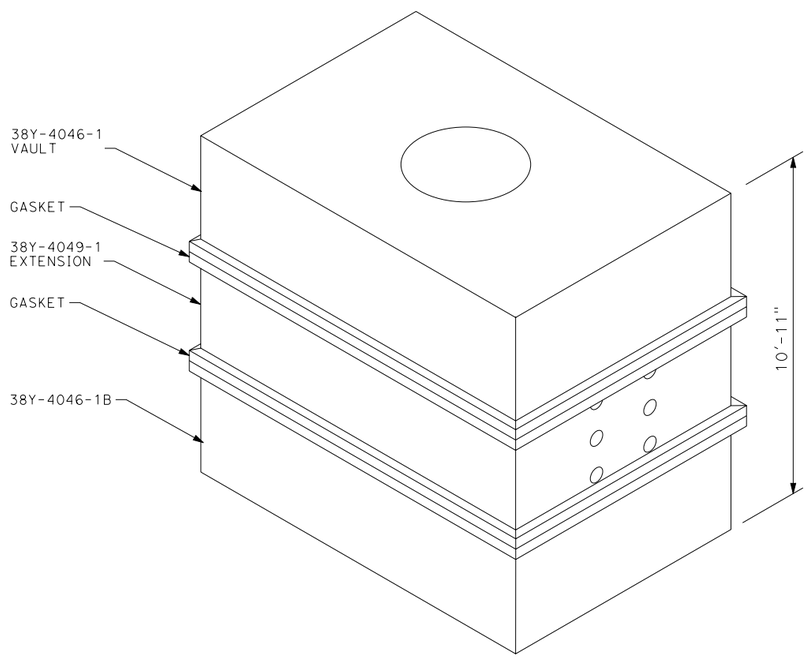

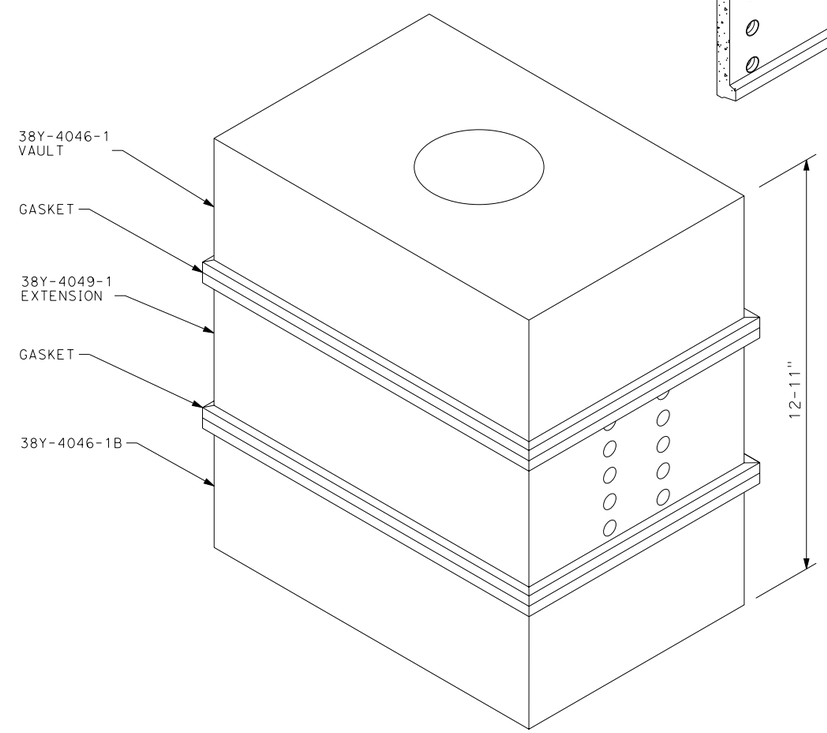

T10 **38Y-4049-1 VAULT EXTENSION**

T11 **38Y-4050-1 VAULT EXTENSION**

UTILITY DETAILS
NO SCALE

UDT-07

TYLER KELLY	ML	12/21/09	
BILL LIZOTTE	ML	12/10/09	
CALCULATED-DESIGNED BY	REVISED BY	DATE REVISED	
CHECKED BY			
FUNCTIONAL SUPERVISOR			
DUANNE GILMORE			

STATE OF CALIFORNIA - DEPARTMENT OF TRANSPORTATION
Caltrans

LAST REVISION
DATE PLOTTED => 2/2/2010
TIME PLOTTED => 4:32:01 PM

Dist	COUNTY	ROUTE	POST MILES TOTAL PROJECT	SHEET No.	TOTAL SHEETS
04	SF	101,1	9.0/9.8, 6.8/7.1	8	12

1-13-10
LICENSED ELECTRICAL ENGINEER

REGISTERED PROFESSIONAL ENGINEER
TYLER KELLY
No. E18769
Exp. 6-30-11
ELEC
STATE OF CALIFORNIA

PLANS APPROVAL DATE

THE STATE OF CALIFORNIA OR ITS OFFICERS OR AGENTS SHALL NOT BE RESPONSIBLE FOR THE ACCURACY OR COMPLETENESS OF ELECTRONIC COPIES OF THIS PLAN SHEET.

Arup PB JV
560 Mission Street, Suite 700
San Francisco, CA 94105

NOTES:

1. ALL CONDUIT PENETRATIONS ARE FOR 4" CONDUITS.
2. SEE MAINTENANCE HOLE DETAILS FOR INFORMATION REGARDING KNOCK OUTS, SUMPS, DIMENSIONS AND OTHER DETAILS.

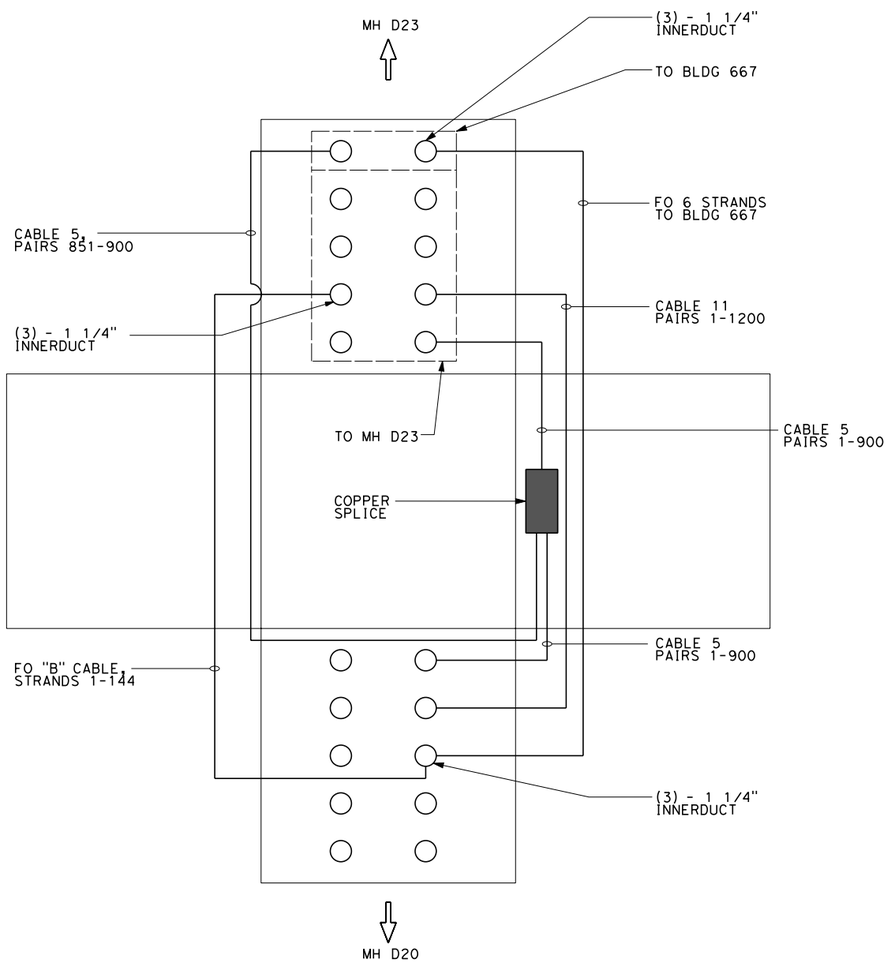

T12 **MH D19 (NEW)**
SCALE: NTS

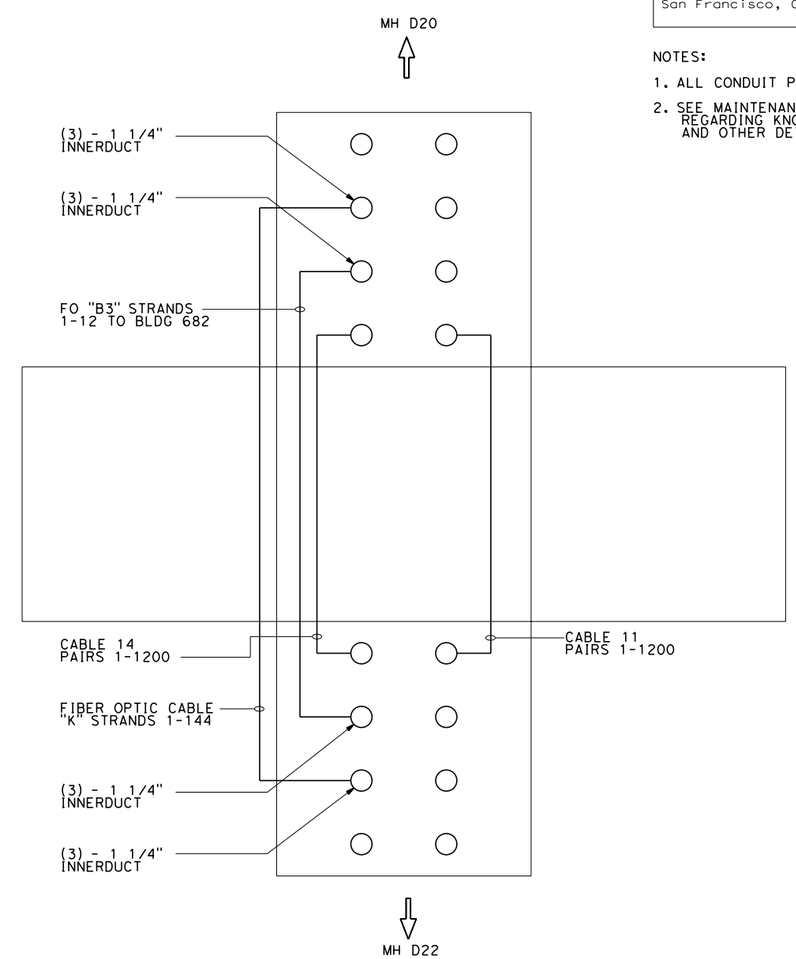

T13 **MH D21 (NEW)**
SCALE: NTS

UTILITY DETAILS
NO SCALE

UDT-08

STATE OF CALIFORNIA - DEPARTMENT OF TRANSPORTATION
Caltrans

FUNCTIONAL SUPERVISOR: DUANNE GILMORE
CALCULATED-DESIGNED BY: TYLER KELLY
CHECKED BY: BILL LIZOTTE
REVISED BY: MD
DATE REVISED: 01/13/10

LAST REVISION
DATE PLOTTED => 2/2/2010
TIME PLOTTED => 4:32:03 PM

Dist	COUNTY	ROUTE	POST MILES TOTAL PROJECT	SHEET No.	TOTAL SHEETS
04	SF	101,1	9.0/9.8, 6.8/7.1	9	12

1-13-10
LICENSED ELECTRICAL ENGINEER

REGISTERED PROFESSIONAL ENGINEER
TYLER KELLY
No. E18769
Exp. 6-30-11
ELEC
STATE OF CALIFORNIA

PLANS APPROVAL DATE

THE STATE OF CALIFORNIA OR ITS OFFICERS OR AGENTS SHALL NOT BE RESPONSIBLE FOR THE ACCURACY OR COMPLETENESS OF ELECTRONIC COPIES OF THIS PLAN SHEET.

Arup PB JV
560 Mission Street, Suite 700
San Francisco, CA 94105

NOTES:

1. ALL CONDUIT PENETRATIONS ARE FOR 4" CONDUITS.
2. SEE MAINTENANCE HOLE DETAILS FOR INFORMATION REGARDING KNOCK OUTS, SUMPS, DIMENSIONS AND OTHER DETAILS.

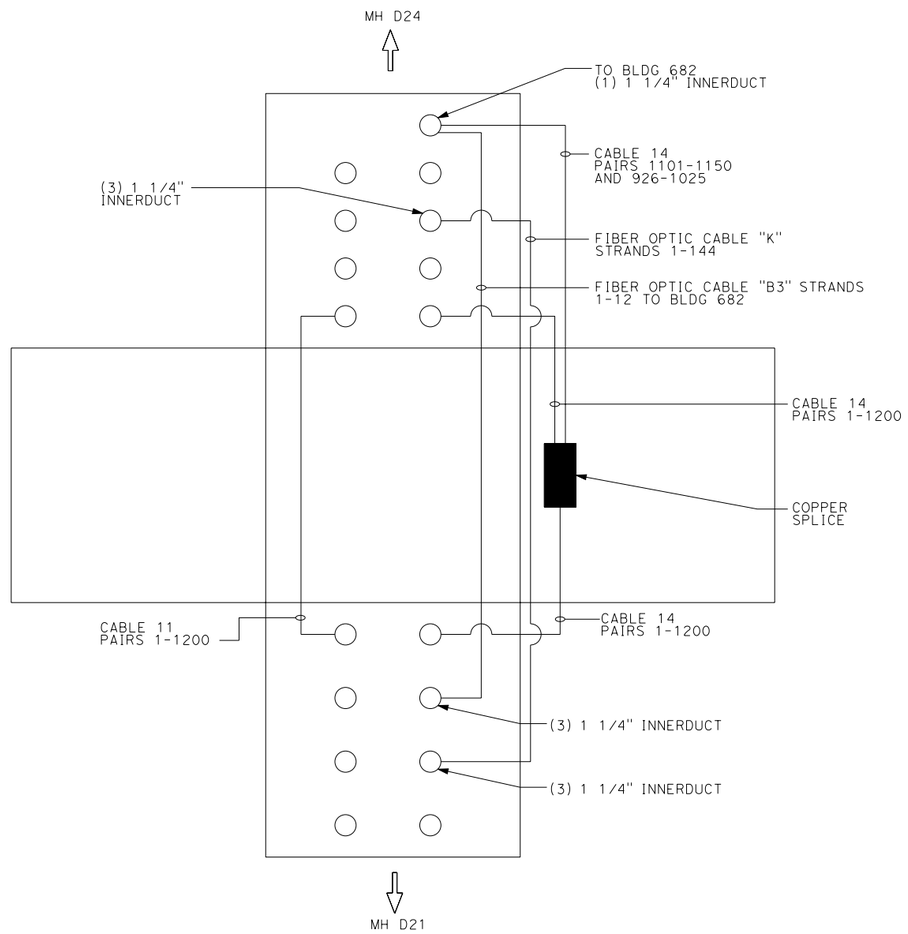

T14 **MH D22 (NEW)**
SCALE: NTS

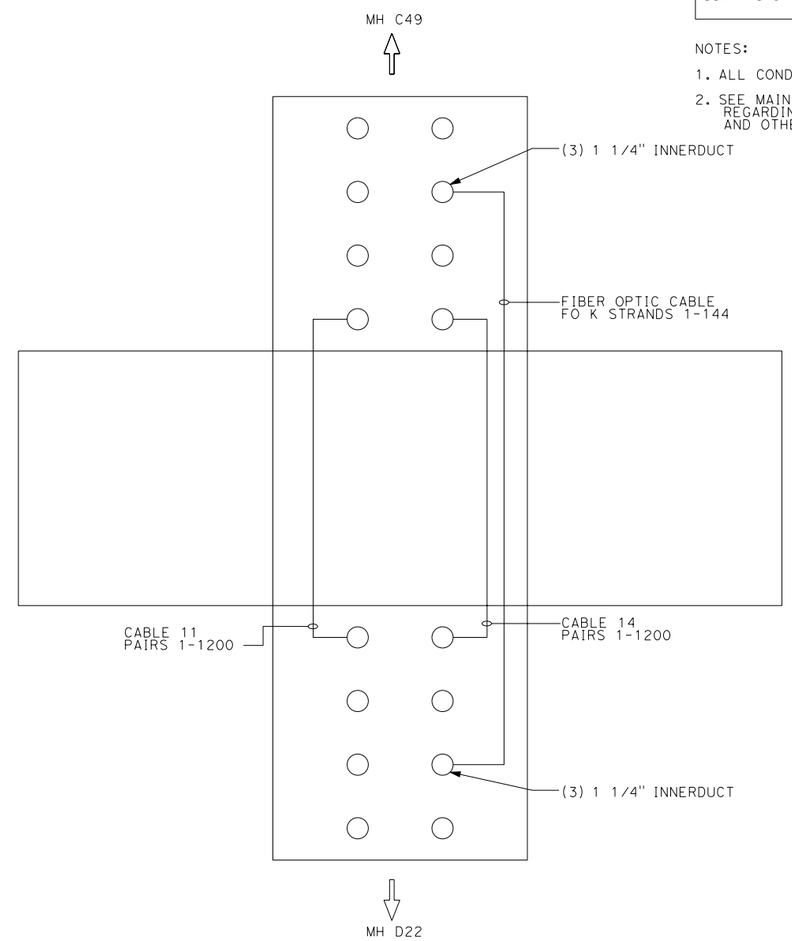

T15 **MH D24 (NEW)**
SCALE: NTS

UTILITY DETAILS
NO SCALE

UDT-09

REVISED BY	MD	TYLER KELLY	FUNCTIONAL SUPERVISOR
DATE REVISED	01/13/10	BILL LIZOTTE	DUANNE GILMORE
CALCULATED-DESIGNED BY		STATE OF CALIFORNIA - DEPARTMENT OF TRANSPORTATION	
CHECKED BY		Caltrans	

LAST REVISION | DATE PLOTTED => 2/2/2010 | TIME PLOTTED => 4:32:05 PM

Dist	COUNTY	ROUTE	POST MILES TOTAL PROJECT	SHEET No.	TOTAL SHEETS
04	SF	101,1	9.0/9.8, 6.8/7.1	10	12

1-13-10
LICENSED ELECTRICAL ENGINEER

REGISTERED PROFESSIONAL ENGINEER
TYLER KELLY
No. E18769
Exp. 6-30-11
ELEC
STATE OF CALIFORNIA

PLANS APPROVAL DATE

THE STATE OF CALIFORNIA OR ITS OFFICERS OR AGENTS SHALL NOT BE RESPONSIBLE FOR THE ACCURACY OR COMPLETENESS OF ELECTRONIC COPIES OF THIS PLAN SHEET.

Arup PB JV
560 Mission Street, Suite 700
San Francisco, CA 94105

NOTES:

1. ALL CONDUIT PENETRATIONS ARE FOR 4" CONDUITS.
2. SEE MAINTENANCE HOLE DETAILS FOR INFORMATION REGARDING KNOCK OUTS, SUMPS, DIMENSIONS AND OTHER DETAILS.

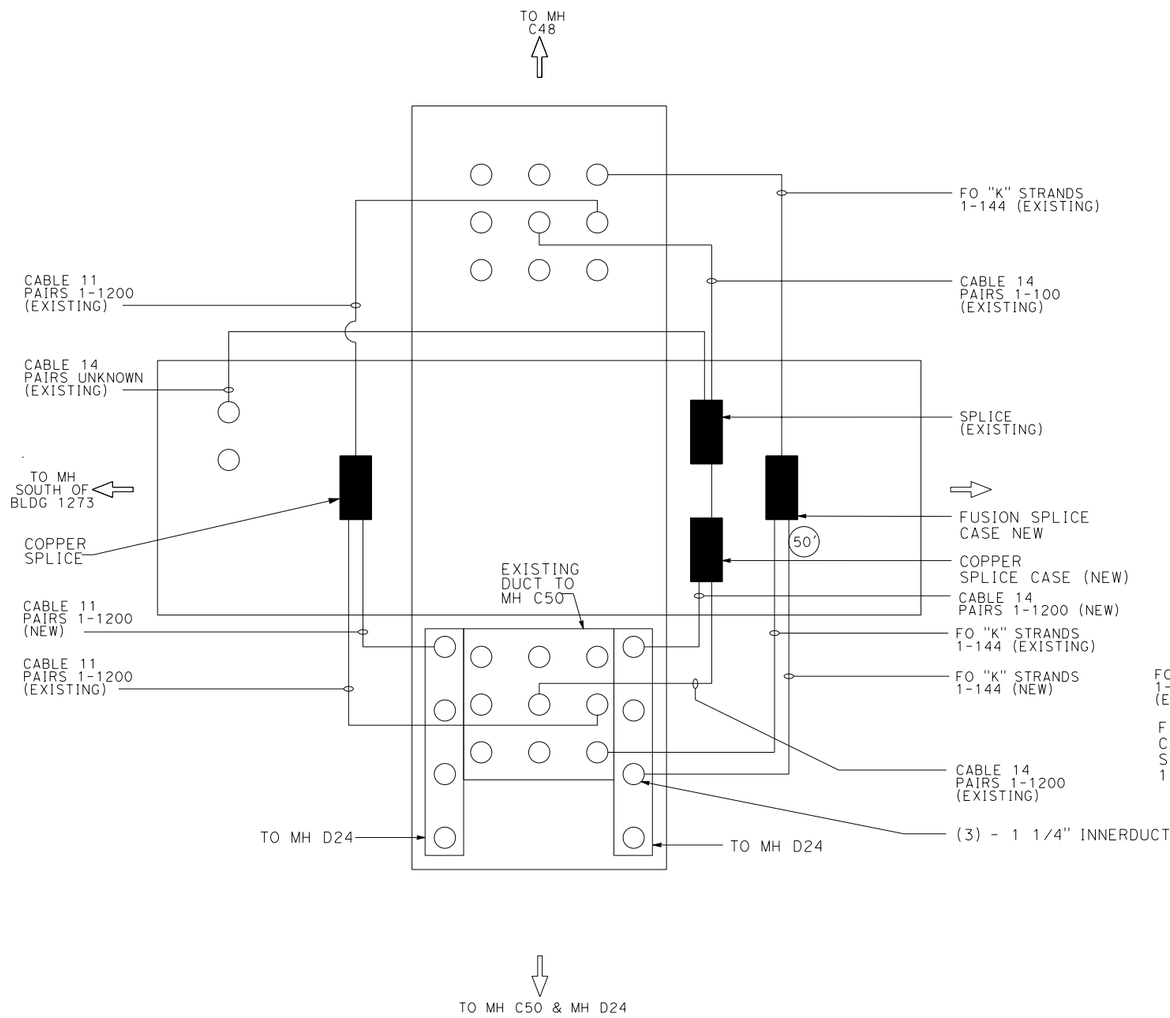

T16 **MH C49 INTERCEPT (NEW)**
SCALE: NTS

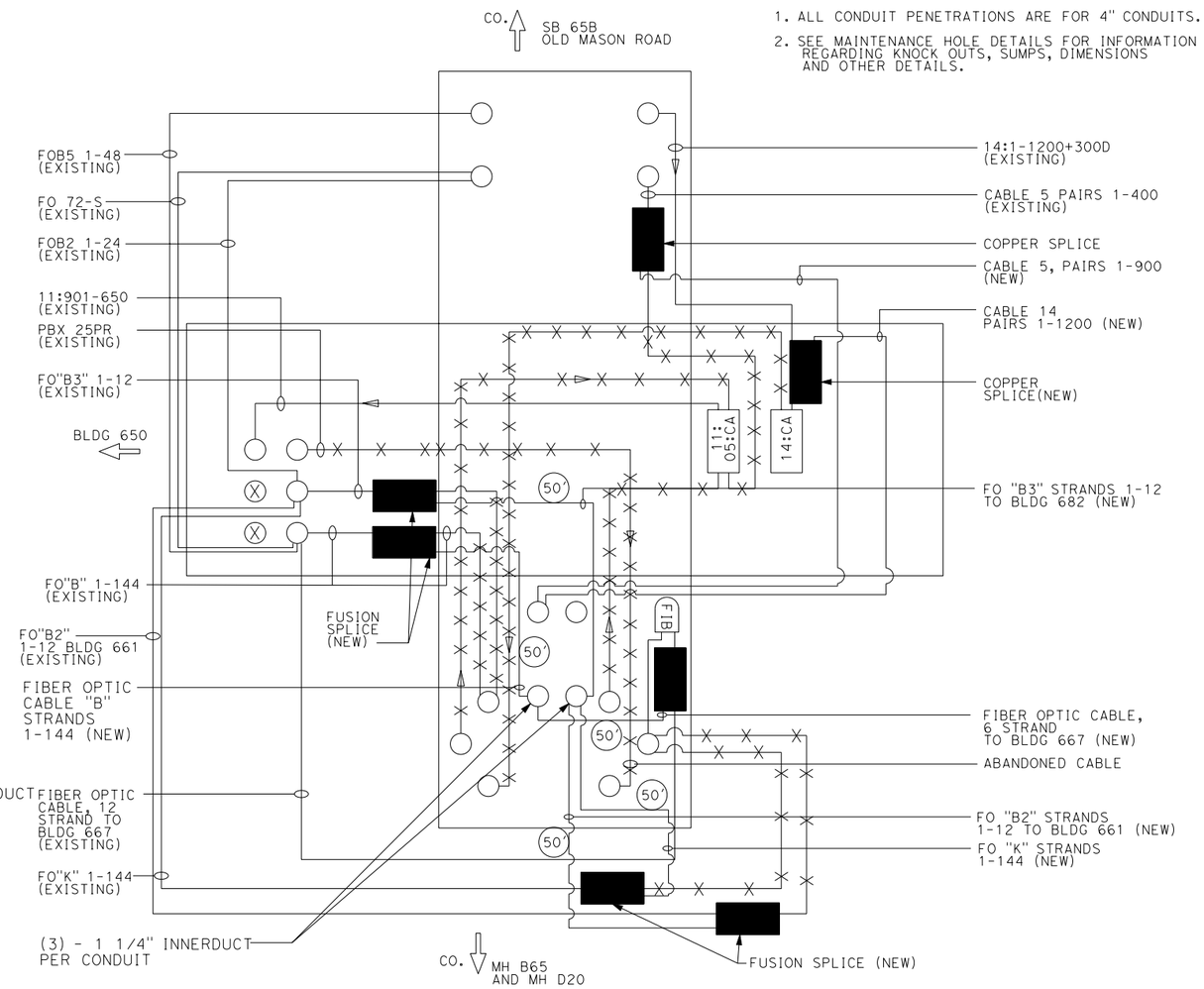

T17 **MH 65A (EXISTING)**
SCALE: NTS

UTILITY DETAILS
NO SCALE

UDT-10

REVISED BY	DATE REVISED
MD	01/13/10

CALCULATED-DESIGNED BY: TYLER KELLY
CHECKED BY: BILL LIZOTTE
FUNCTIONAL SUPERVISOR: DUANNE GILMORE

STATE OF CALIFORNIA - DEPARTMENT OF TRANSPORTATION
Caltrans

LAST REVISION
DATE PLOTTED => 2/2/2010
TIME PLOTTED => 4:32:06 PM

Dist	COUNTY	ROUTE	POST MILES TOTAL PROJECT	SHEET No.	TOTAL SHEETS
04	SF	101,1	9.0/9.8, 6.8/7.1	11	12

1-13-10
LICENSED ELECTRICAL ENGINEER

REGISTERED PROFESSIONAL ENGINEER
TYLER KELLY
No. E18769
Exp. 6-30-11
ELEC
STATE OF CALIFORNIA

PLANS APPROVAL DATE

THE STATE OF CALIFORNIA OR ITS OFFICERS OR AGENTS SHALL NOT BE RESPONSIBLE FOR THE ACCURACY OR COMPLETENESS OF ELECTRONIC COPIES OF THIS PLAN SHEET.

Arup PB JV
560 Mission Street, Suite 700
San Francisco, CA 94105

NOTES:

1. ALL CONDUIT PENETRATIONS ARE FOR 4" CONDUITS.
2. SEE MAINTENANCE HOLE DETAILS FOR INFORMATION REGARDING KNOCK OUTS, SUMPS, DIMENSIONS AND OTHER DETAILS.

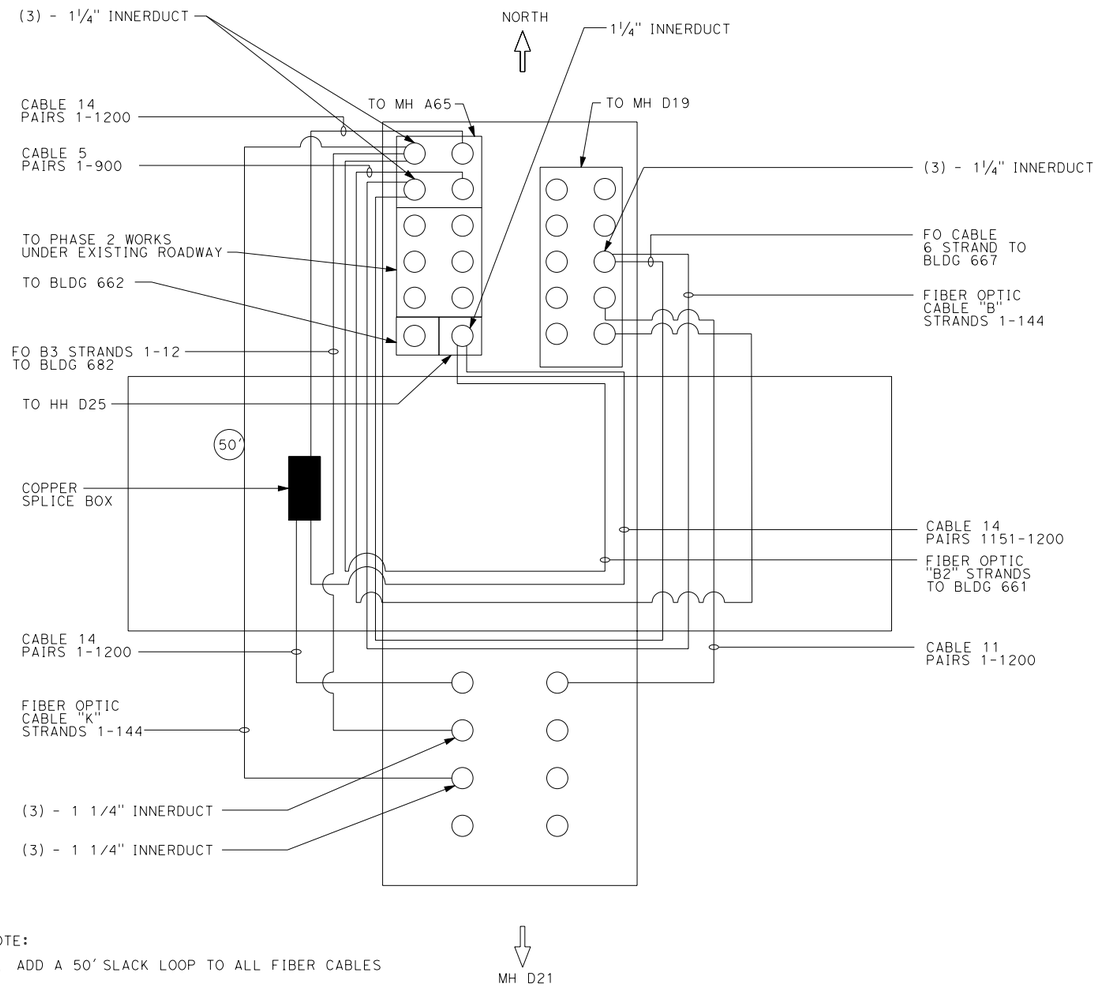

NOTE:

1. ADD A 50' SLACK LOOP TO ALL FIBER CABLES

T18 **MH D20 (NEW)**
SCALE: NTS

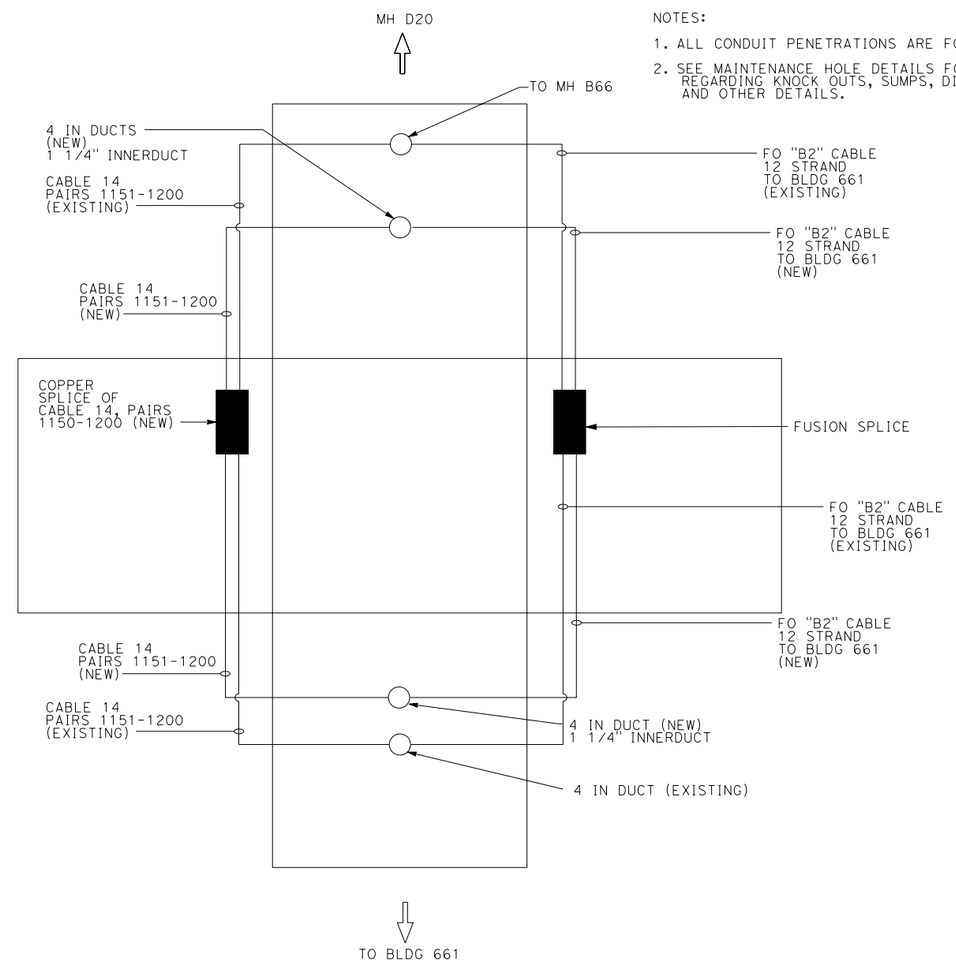

T19 **HH D25 (NEW)**
SCALE: NTS

UTILITY DETAILS
NO SCALE

UDT-11

STATE OF CALIFORNIA - DEPARTMENT OF TRANSPORTATION
Caltrans

FUNCTIONAL SUPERVISOR: DUANNE GILMORE
CALCULATED-DESIGNED BY: TYLER KELLY
CHECKED BY: BILL LIZOTTE
REVISED BY: MD
DATE REVISED: 01/13/10

LAST REVISION
DATE PLOTTED => 2/2/2010
TIME PLOTTED => 4:32:09 PM

Dist	COUNTY	ROUTE	POST MILES TOTAL PROJECT	SHEET No.	TOTAL SHEETS
04	SF	101,1	9.0/9.8, 6.8/7.1	12	12

1-13-10
LICENSED ELECTRICAL ENGINEER

REGISTERED PROFESSIONAL ENGINEER
TYLER KELLY
No. E18769
Exp. 6-30-11
ELEC
STATE OF CALIFORNIA

PLANS APPROVAL DATE

THE STATE OF CALIFORNIA OR ITS OFFICERS OR AGENTS SHALL NOT BE RESPONSIBLE FOR THE ACCURACY OR COMPLETENESS OF ELECTRONIC COPIES OF THIS PLAN SHEET.

Arup PB JV
560 Mission Street, Suite 700
San Francisco, CA 94105

NOTES:

1. ALL CONDUIT PENETRATIONS ARE FOR 4" CONDUITS.
2. SEE MAINTENANCE HOLE DETAILS FOR INFORMATION REGARDING KNOCK OUTS, SUMPS, DIMENSIONS AND OTHER DETAILS.

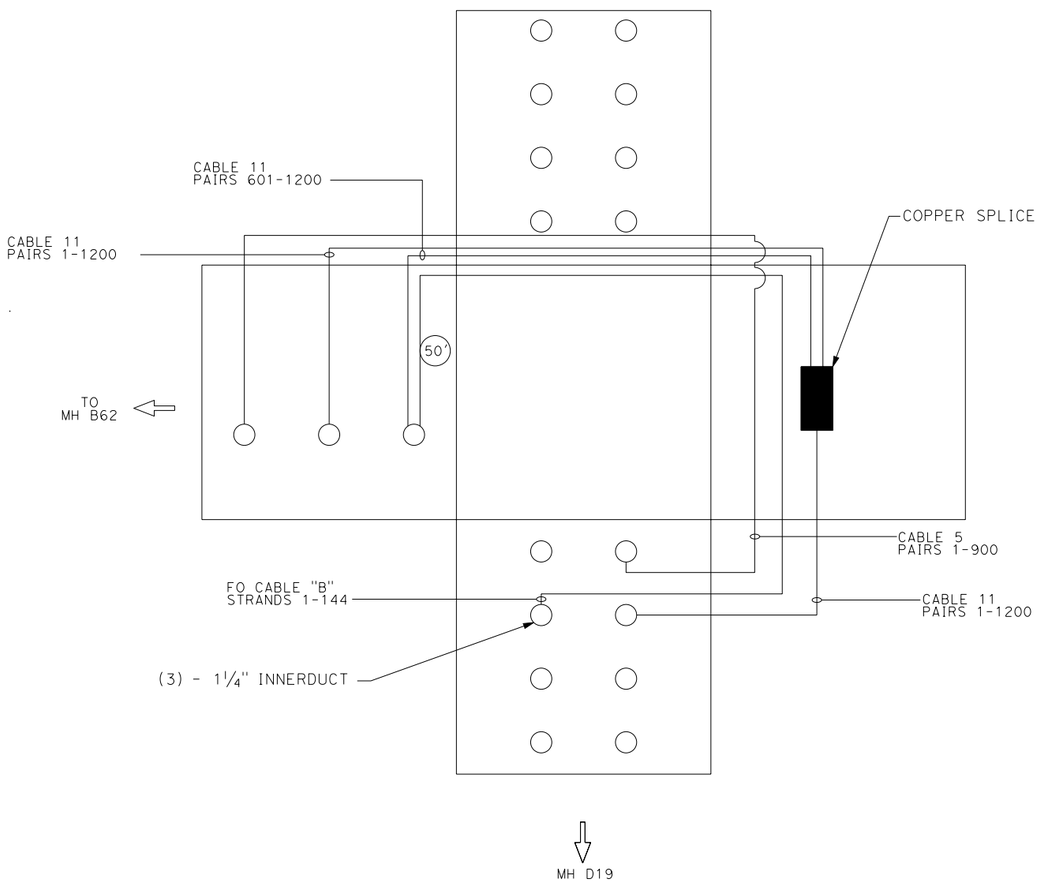

T20 **MH D23 (NEW)**
SCALE: NTS

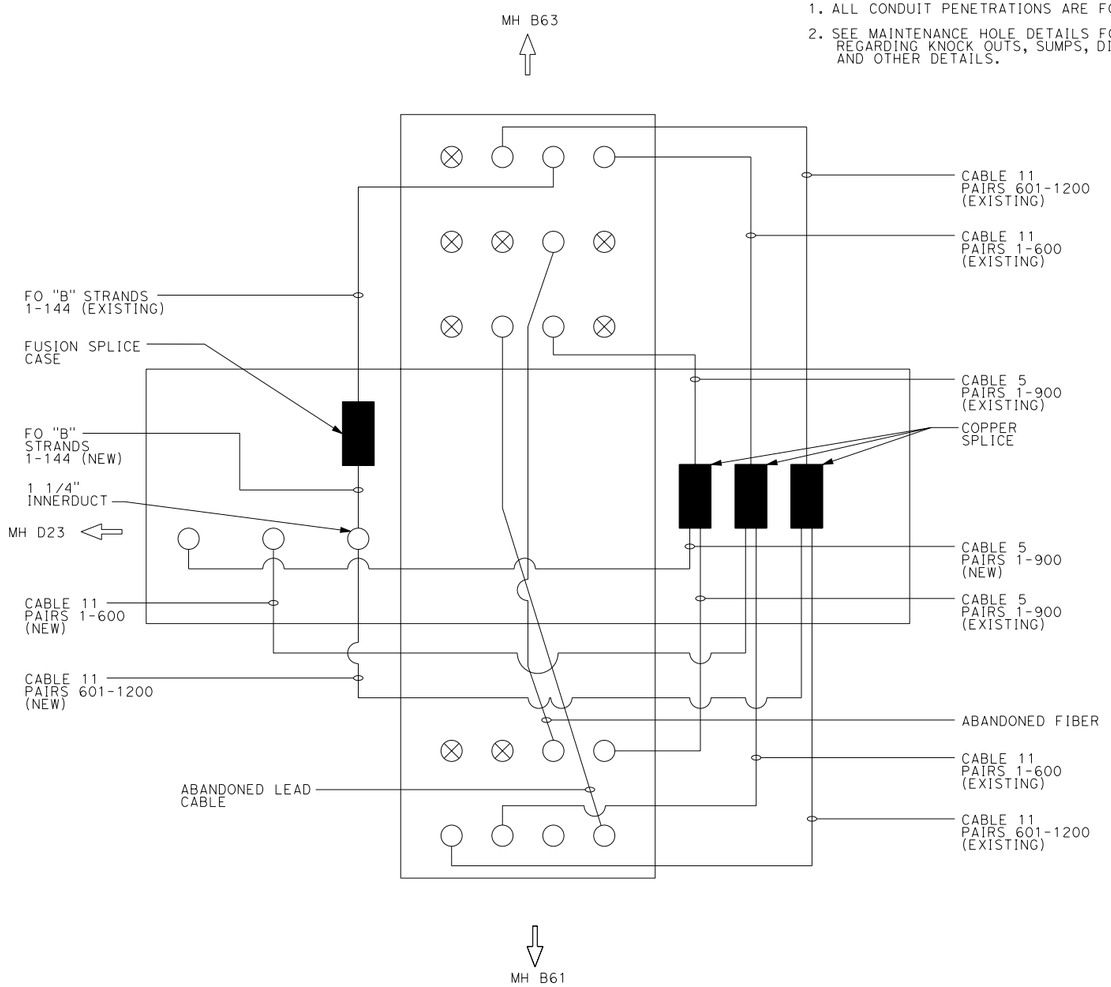

T21 **MH B62 (EXISTING)**
SCALE: NTS

UTILITY DETAILS
NO SCALE

UDT-12

STATE OF CALIFORNIA - DEPARTMENT OF TRANSPORTATION	FUNCTIONAL SUPERVISOR	TYLER KELLY	REVISED BY MD
Caltrans	DUANNE GILMORE	BILL LIZOTTE	DATE REVISED 01/13/10
		CALCULATED-DESIGNED BY	
		CHECKED BY	

LAST REVISION | DATE PLOTTED => 2/2/2010 | TIME PLOTTED => 4:32:11 PM

BORDER LAST REVISED 3/1/2007 | RELATIVE BORDER SCALE IS IN INCHES 0 1 2 3 | USERNAME => manish.dalia | DGN FILE => $FILE$ | CU 04242 | EA 416372

NOTES:

1. ALL CONDUIT PENETRATIONS ARE FOR 4" CONDUITS.
2. SEE MAINTENANCE HOLE DETAILS FOR INFORMATION REGARDING KNOCK OUTS, SUMPS, DIMENSIONS AND OTHER DETAILS.

Dist	COUNTY	ROUTE	POST MILES TOTAL PROJECT	SHEET No.	TOTAL SHEETS
04	SF	101,1	9.0/9.8, 6.8/7.1	9	12

8-19-00
LICENSED ELECTRICAL ENGINEER

REGISTERED PROFESSIONAL ENGINEER
TYLER KELLY
No. E18769
Exp. 6-30-11
ELEC
STATE OF CALIFORNIA

PLANS APPROVAL DATE

THE STATE OF CALIFORNIA OR ITS OFFICERS OR AGENTS SHALL NOT BE RESPONSIBLE FOR THE ACCURACY OR COMPLETENESS OF ELECTRONIC COPIES OF THIS PLAN SHEET.

Arup PB JV
560 Mission Street, Suite 700
San Francisco, CA 94105

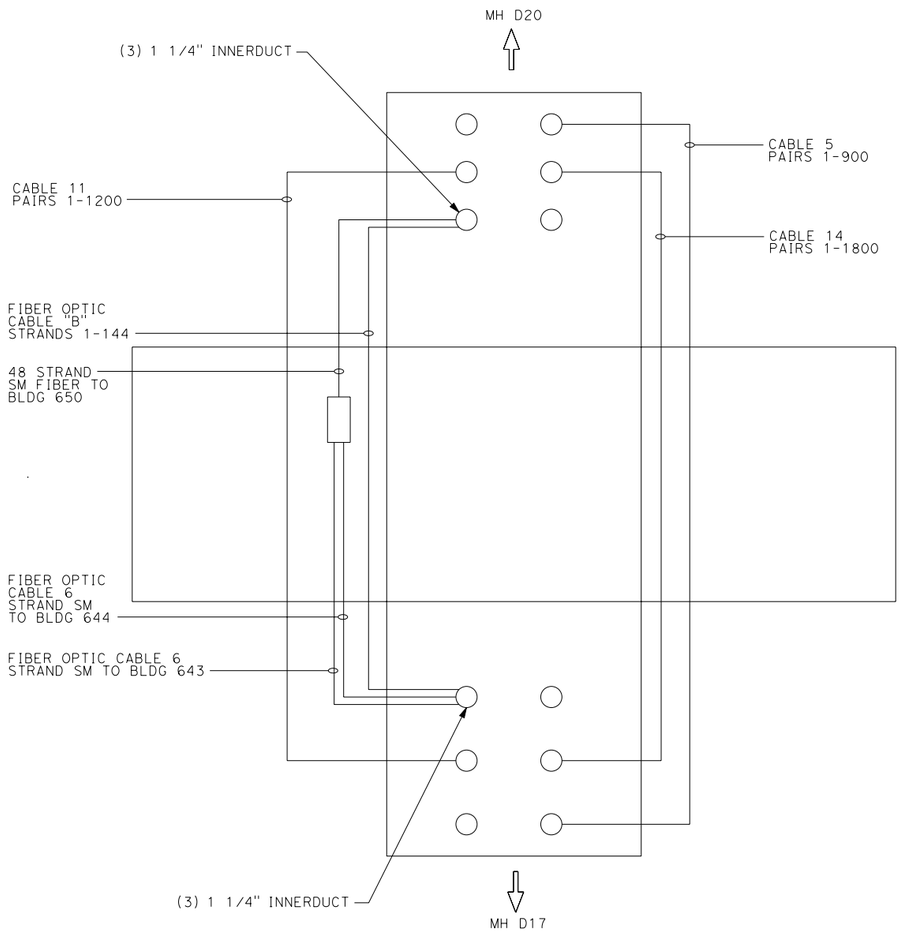

T22 **MH D18 (NEW)**
SCALE: NTS

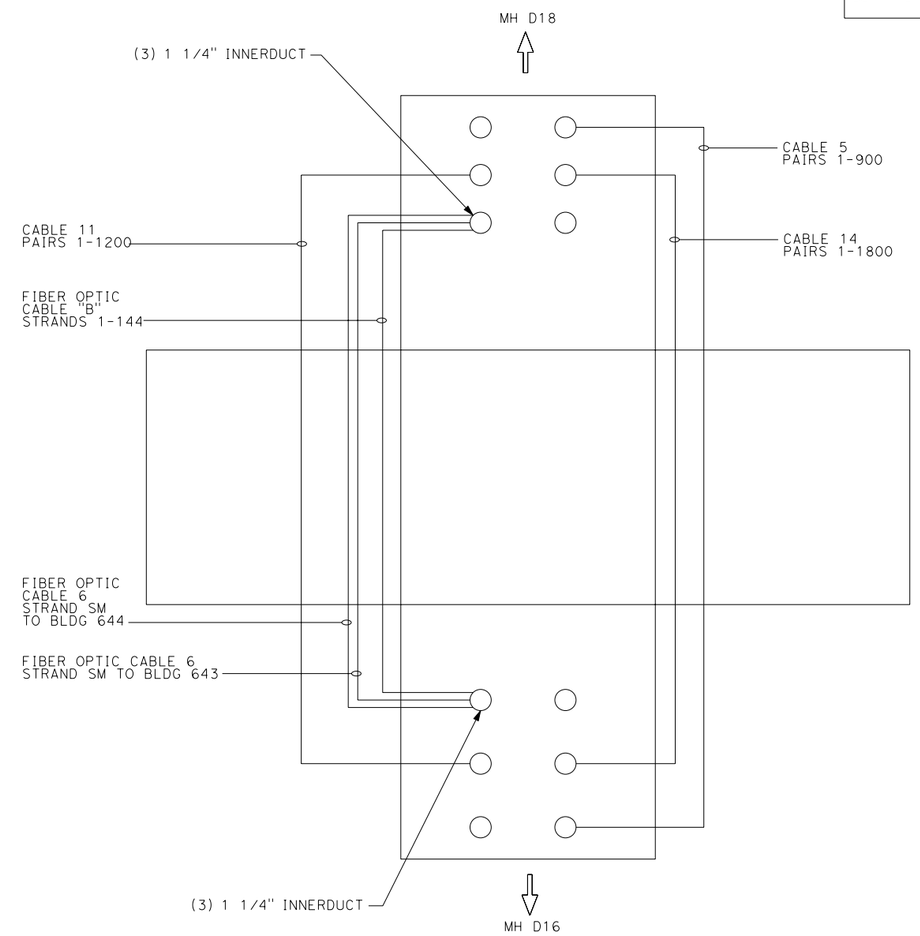

T23 **MH D17 (NEW)**
SCALE: NTS

UTILITY DETAILS
NO SCALE

UDT-13

REVISED BY	DATE REVISED
MD	01/13/10

TYLER KELLY — CALCULATED-DESIGNED BY
BILL LIZOTTE — CHECKED BY
DUANNE GILMORE — FUNCTIONAL SUPERVISOR
STATE OF CALIFORNIA - DEPARTMENT OF TRANSPORTATION
Caltrans

LAST REVISION — DATE PLOTTED => 2/2/2010
TIME PLOTTED => 4:32:13 PM

NOTES:

1. ALL CONDUIT PENETRATIONS ARE FOR 4" CONDUITS.
2. SEE MAINTENANCE HOLE DETAILS FOR INFORMATION REGARDING KNOCK OUTS, SUMPS, DIMENSIONS AND OTHER DETAILS.

Dist	COUNTY	ROUTE	POST MILES TOTAL PROJECT	SHEET No.	TOTAL SHEETS
04	SF	101,1	9.0/9.8, 6.8/7.1	9	12

1-13-10
LICENSED ELECTRICAL ENGINEER

REGISTERED PROFESSIONAL ENGINEER
TYLER KELLY
No. E18769
Exp. 6-30-11
ELEC
STATE OF CALIFORNIA

PLANS APPROVAL DATE

THE STATE OF CALIFORNIA OR ITS OFFICERS OR AGENTS SHALL NOT BE RESPONSIBLE FOR THE ACCURACY OR COMPLETENESS OF ELECTRONIC COPIES OF THIS PLAN SHEET.

Arup PB JV
560 Mission Street, Suite 700
San Francisco, CA 94105

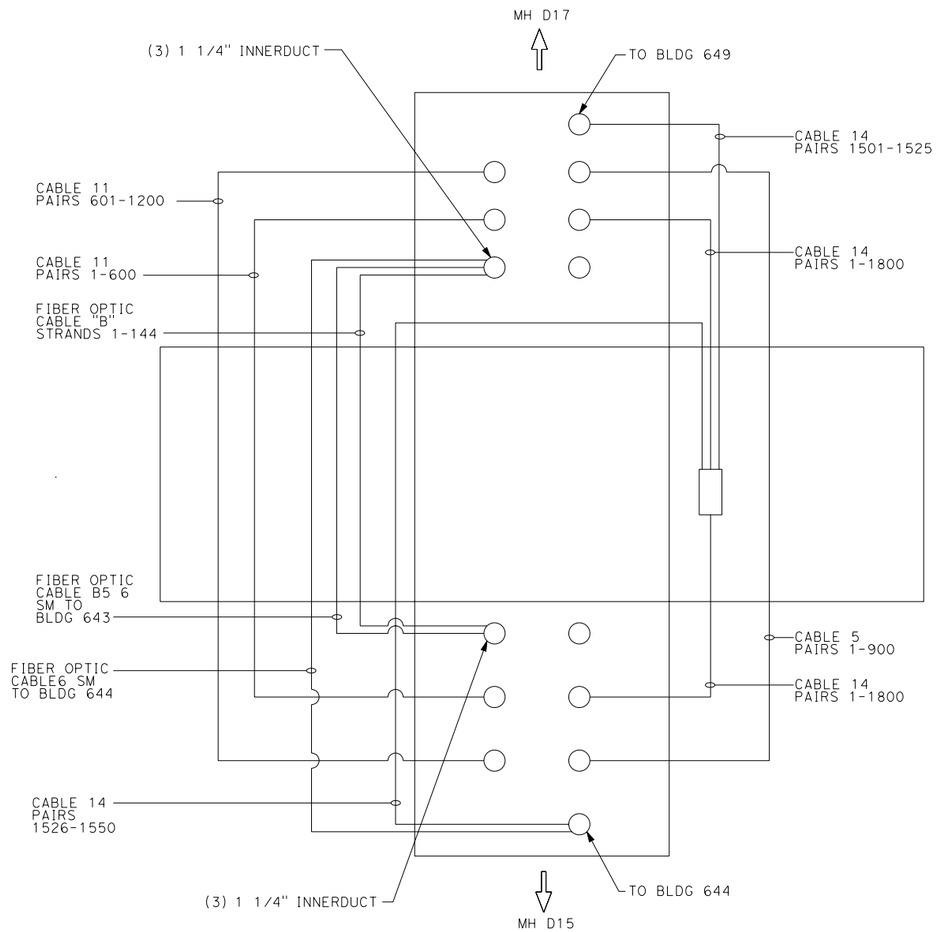

T24 **MH D16 (NEW)**
SCALE: NTS

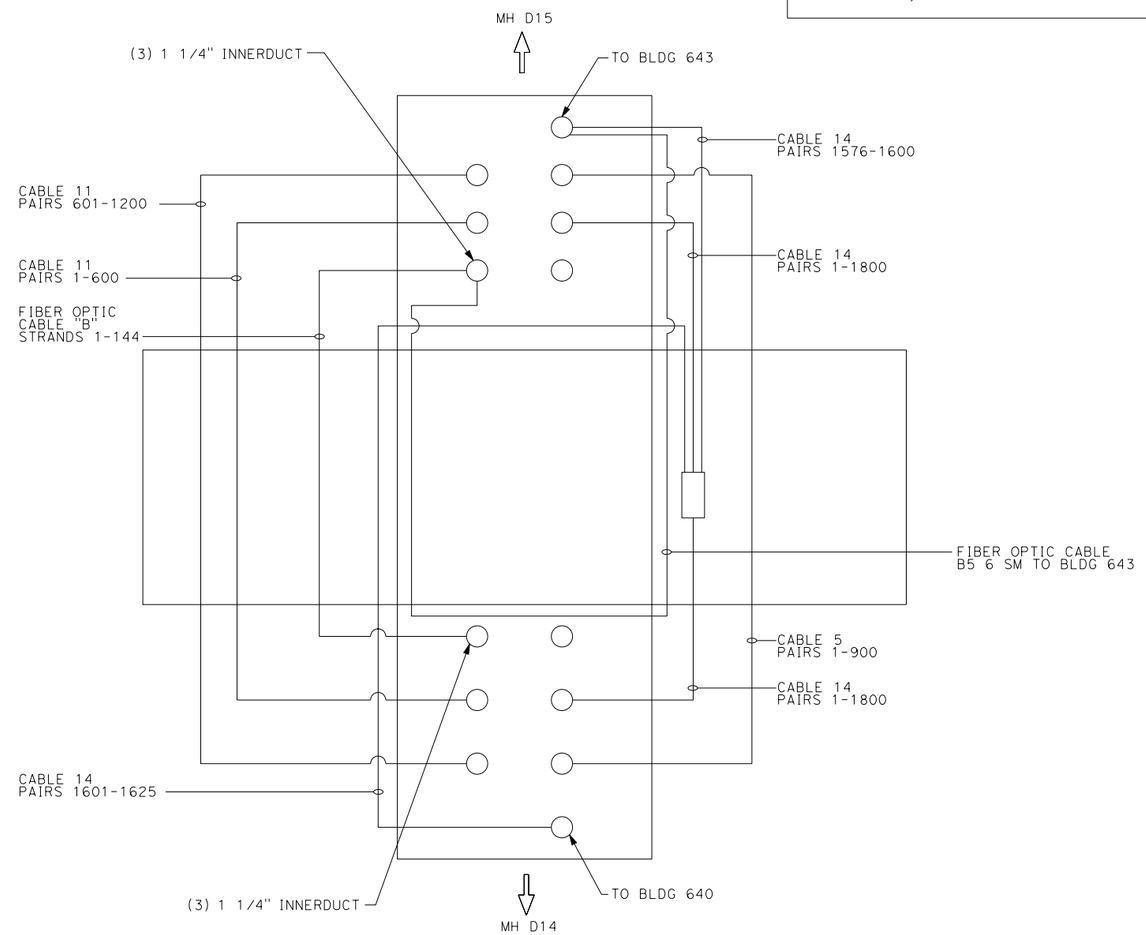

T25 **MH D15 (NEW)**
SCALE: NTS

UTILITY DETAILS
NO SCALE

UDT-14

MD	01/13/10
REVISED BY	DATE REVISED
TYLER KELLY	
BILL LIZOTTE	
CALCULATED-DESIGNED BY	
CHECKED BY	
FUNCTIONAL SUPERVISOR	
DUANNE GILMORE	

STATE OF CALIFORNIA - DEPARTMENT OF TRANSPORTATION
Caltrans

LAST REVISION | DATE PLOTTED => 2/2/2010
TIME PLOTTED => 4:32:15 PM

Dist	COUNTY	ROUTE	POST MILES TOTAL PROJECT	SHEET No.	TOTAL SHEETS
04	SF	101,1	9.0/9.8, 6.8/7.1	9	12

NOTES:

1. ALL CONDUIT PENETRATIONS ARE FOR 4" CONDUITS.
2. SEE MAINTENANCE HOLE DETAILS FOR INFORMATION REGARDING KNOCK OUTS, SUMPS, DIMENSIONS AND OTHER DETAILS.

1-13-10
LICENSED ELECTRICAL ENGINEER

REGISTERED PROFESSIONAL ENGINEER
TYLER KELLY
No. E18769
Exp. 6-30-11
ELEC
STATE OF CALIFORNIA

PLANS APPROVAL DATE

THE STATE OF CALIFORNIA OR ITS OFFICERS OR AGENTS SHALL NOT BE RESPONSIBLE FOR THE ACCURACY OR COMPLETENESS OF ELECTRONIC COPIES OF THIS PLAN SHEET.

Arup PB JV
560 Mission Street, Suite 700
San Francisco, CA 94105

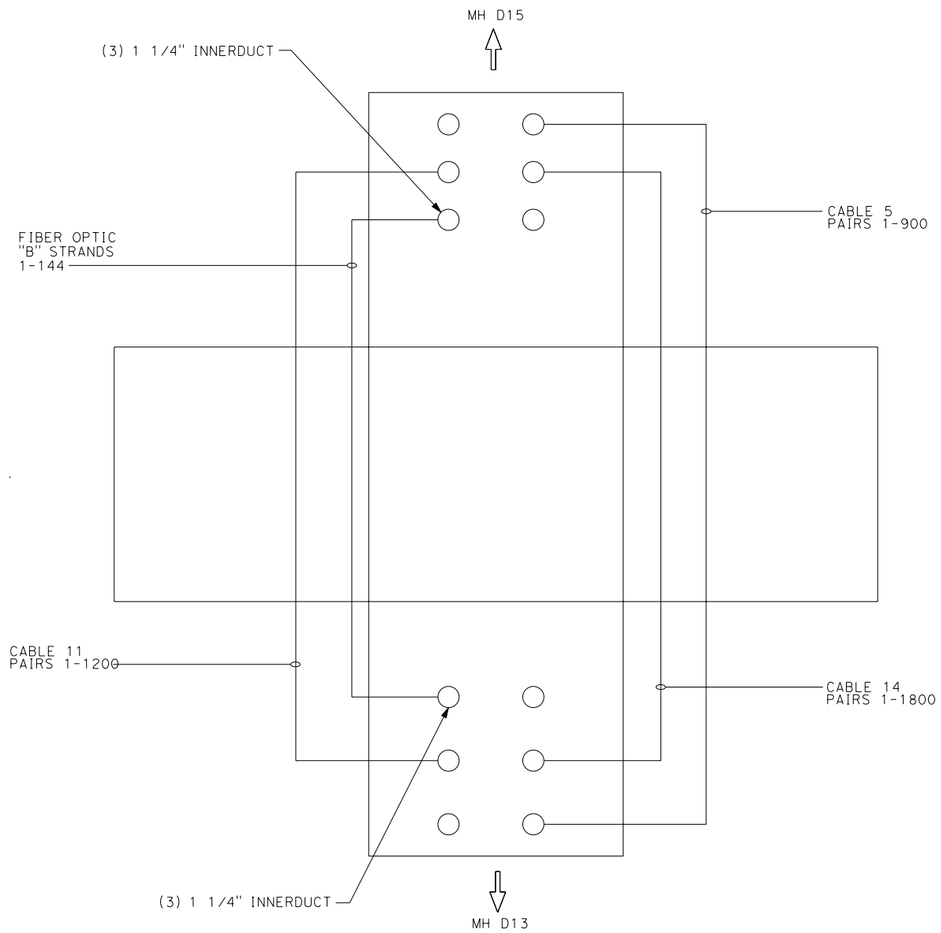

T26 **MH D14 (NEW)**
SCALE: NTS

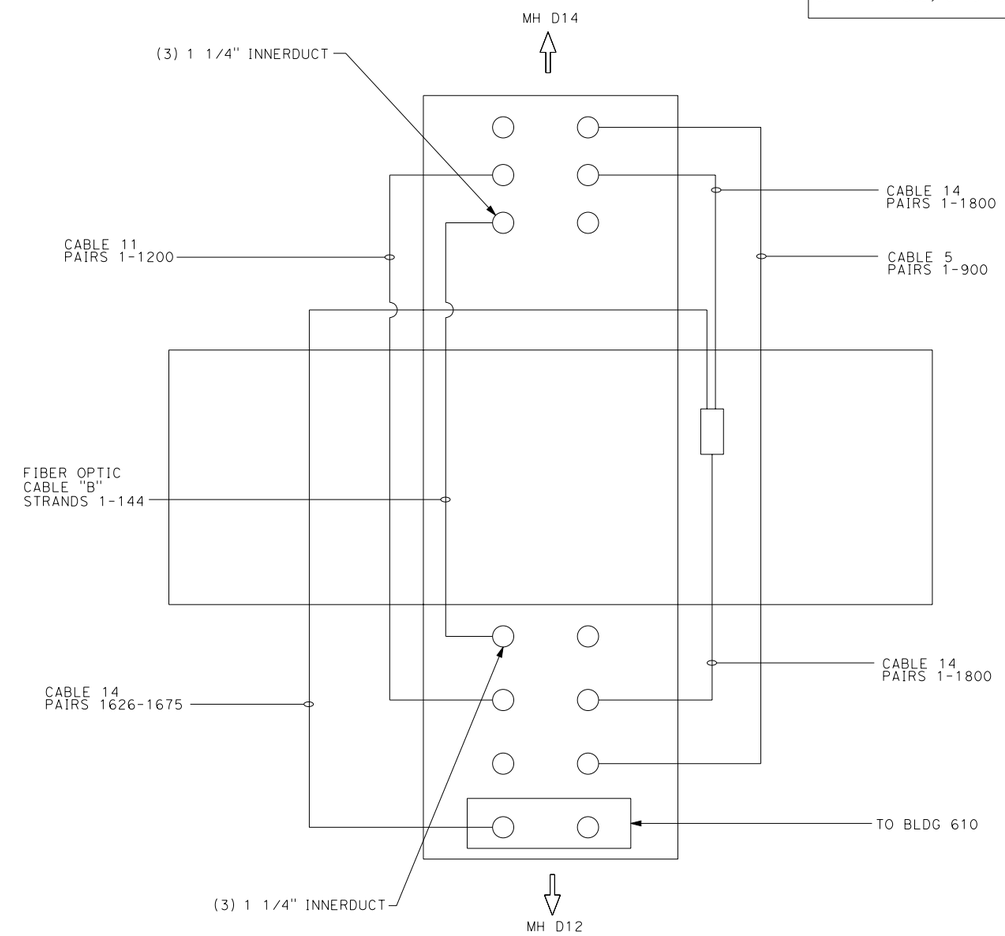

T27 **MH D13 (NEW)**
SCALE: NTS

UTILITY DETAILS
NO SCALE

UDT-15

STATE OF CALIFORNIA - DEPARTMENT OF TRANSPORTATION
Caltrans

FUNCTIONAL SUPERVISOR: DUANNE GILMORE
CALCULATED-DESIGNED BY: TYLER KELLY
CHECKED BY: BILL LIZOTTE
REVISED BY: MD
DATE REVISED: 01/13/10

LAST REVISION
DATE PLOTTED => 2/2/2010
TIME PLOTTED => 4:32:17 PM

Dist	COUNTY	ROUTE	POST MILES TOTAL PROJECT	SHEET No.	TOTAL SHEETS
04	SF	101,1	9.0/9.8, 6.8/7.1	9	12

1-13-10
LICENSED ELECTRICAL ENGINEER

REGISTERED PROFESSIONAL ENGINEER
TYLER KELLY
No. E18769
Exp. 6-30-11
ELEC
STATE OF CALIFORNIA

PLANS APPROVAL DATE

THE STATE OF CALIFORNIA OR ITS OFFICERS OR AGENTS SHALL NOT BE RESPONSIBLE FOR THE ACCURACY OR COMPLETENESS OF ELECTRONIC COPIES OF THIS PLAN SHEET.

Arup PB JV
560 Mission Street, Suite 700
San Francisco, CA 94105

NOTES:

1. ALL CONDUIT PENETRATIONS ARE FOR 4" CONDUITS.
2. SEE MAINTENANCE HOLE DETAILS FOR INFORMATION REGARDING KNOCK OUTS, SUMPS, DIMENSIONS AND OTHER DETAILS.

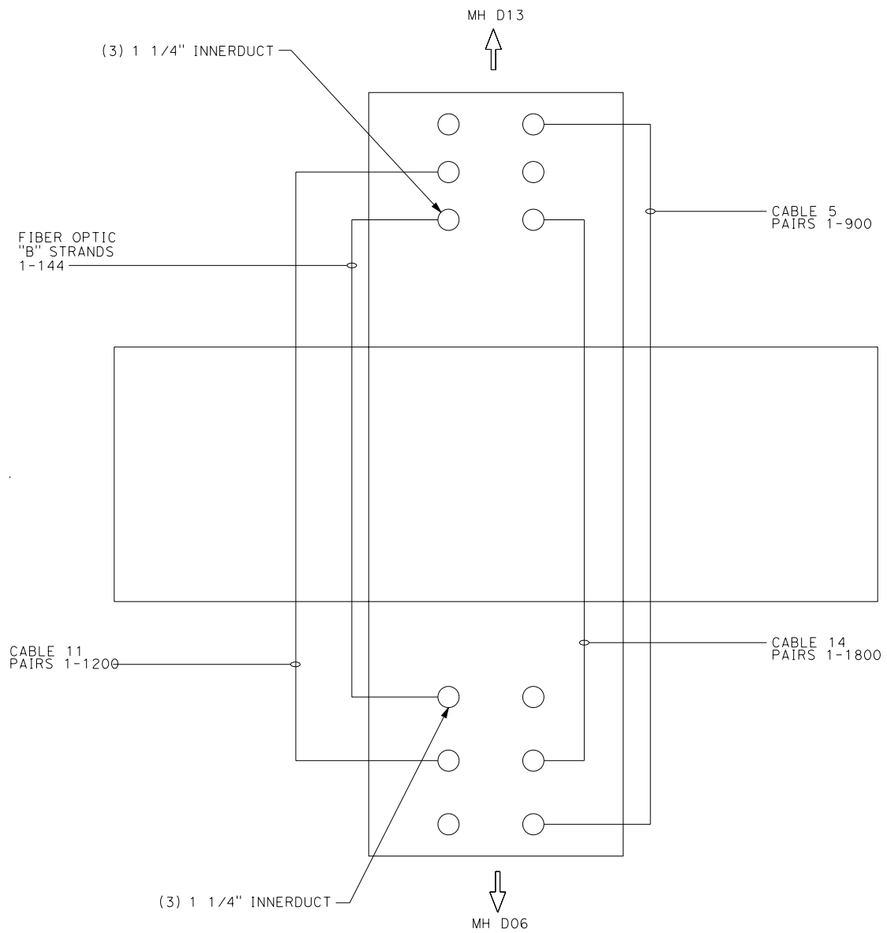

T28 **MH D12 (NEW)**
SCALE: NTS

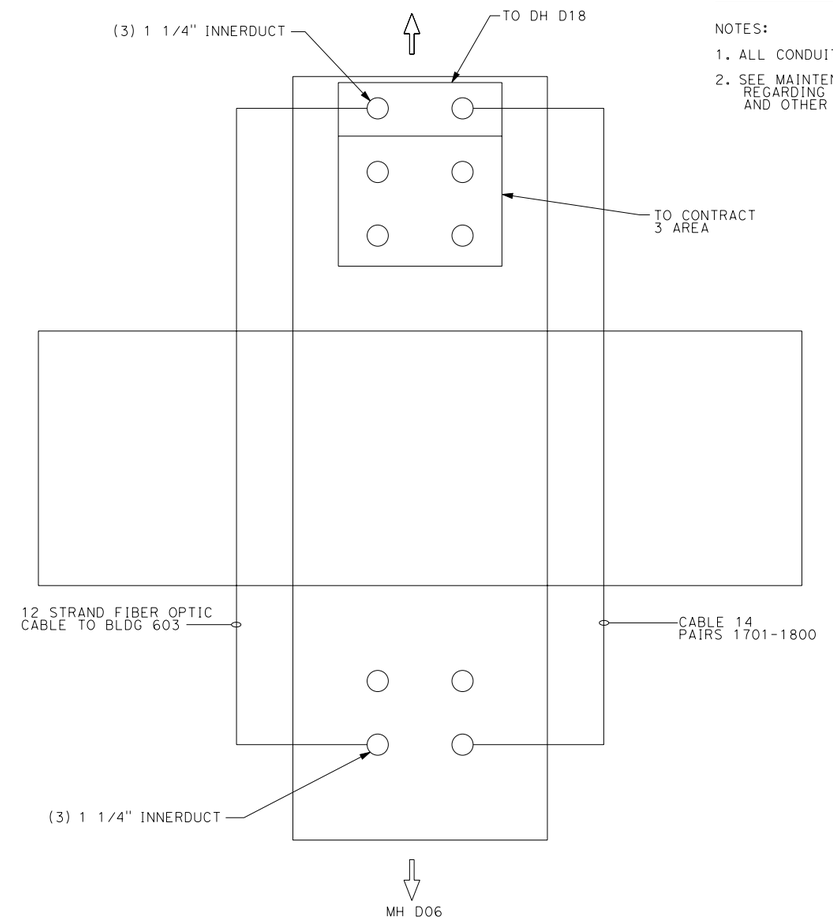

T29 **MH D11 (NEW)**
SCALE: NTS

UTILITY DETAILS
NO SCALE

UDT-16

REVISED BY	MD
DATE REVISED	01/13/10
TYLER KELLY	
BILL LIZOTTE	
CALCULATED-DESIGNED BY	
CHECKED BY	
FUNCTIONAL SUPERVISOR	
DUANNE GILMORE	
STATE OF CALIFORNIA - DEPARTMENT OF TRANSPORTATION	
Caltrans	

LAST REVISION
DATE PLOTTED => 2/2/2010
TIME PLOTTED => 4:32:18 PM

Dist	COUNTY	ROUTE	POST MILES TOTAL PROJECT	SHEET No.	TOTAL SHEETS
04	SF	101,1	9.0/9.8, 6.8/7.1	9	12

NOTES:

1. ALL CONDUIT PENETRATIONS ARE FOR 4" CONDUITS.
2. SEE MAINTENANCE HOLE DETAILS FOR INFORMATION REGARDING KNOCK OUTS, SUMPS, DIMENSIONS AND OTHER DETAILS.

1-13-10
LICENSED ELECTRICAL ENGINEER

REGISTERED PROFESSIONAL ENGINEER
TYLER KELLY
No. E18769
Exp. 6-30-11
ELEC
STATE OF CALIFORNIA

PLANS APPROVAL DATE

THE STATE OF CALIFORNIA OR ITS OFFICERS OR AGENTS SHALL NOT BE RESPONSIBLE FOR THE ACCURACY OR COMPLETENESS OF ELECTRONIC COPIES OF THIS PLAN SHEET.

Arup PB JV
560 Mission Street, Suite 700
San Francisco, CA 94105

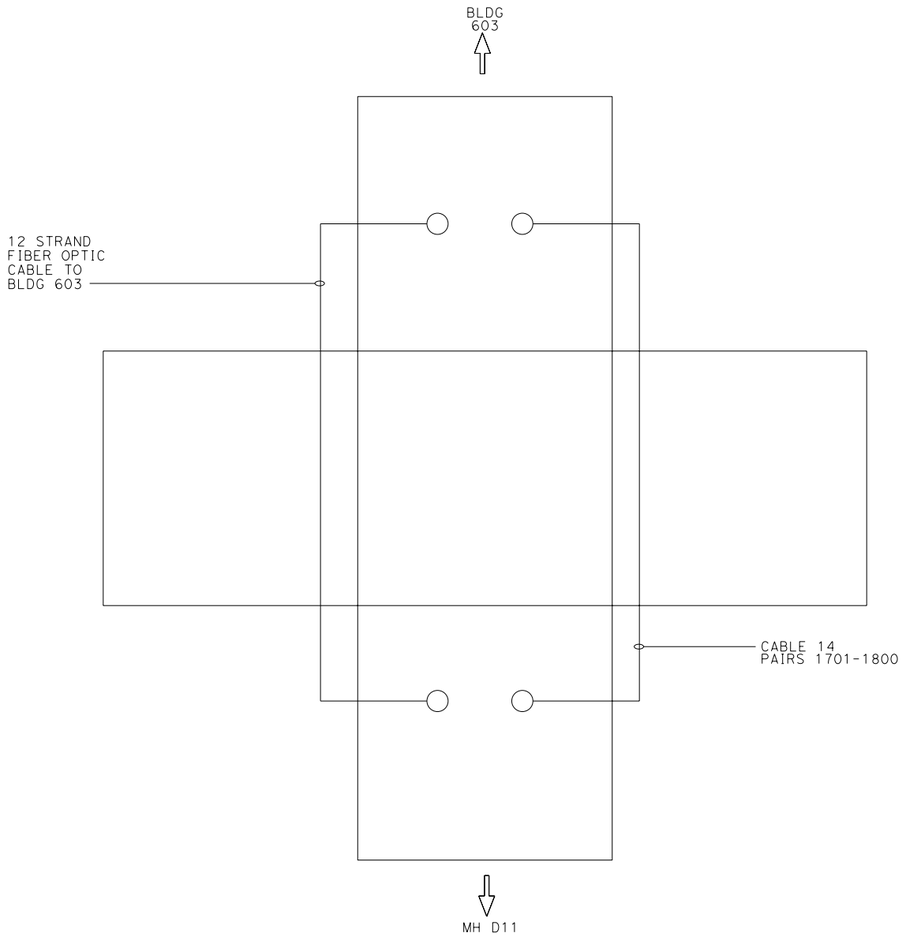

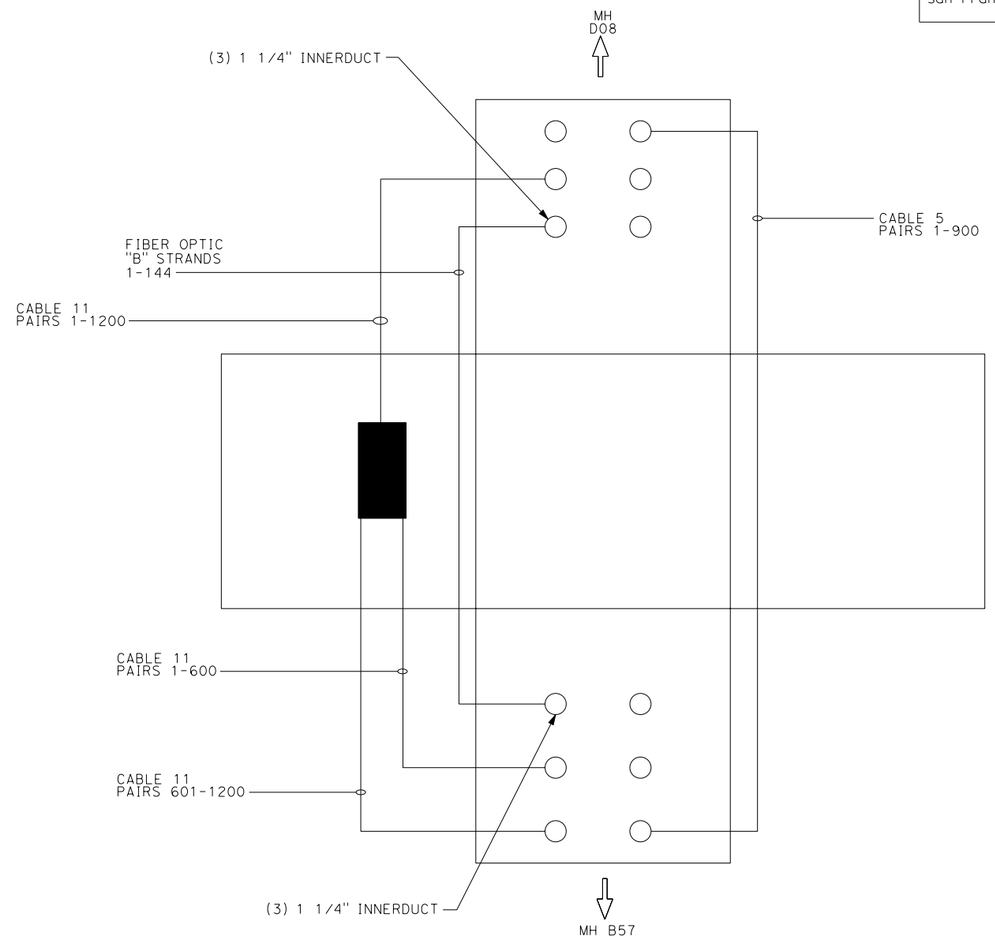

NOTES:

1. THE DUCT GOING TOWARDS BUILDING 603 SHOULD UTILIZE THE BOTTOM TWO KNOCKOUTS IN ORDER TO ACCOMODATE A FUTURE DUCT DOWN HALLECK.

T30 **MH D10 (NEW)**
SCALE: NTS

T31 **MH D09 (NEW)**
SCALE: NTS

UTILITY DETAILS
NO SCALE

UDT-17

REVISED BY	DATE REVISED
MD	01/13/10

TYLER KELLY — CALCULATED-DESIGNED BY
BILL LIZOTTE — CHECKED BY
DUANNE GILMORE — FUNCTIONAL SUPERVISOR

STATE OF CALIFORNIA - DEPARTMENT OF TRANSPORTATION
Caltrans

LAST REVISION
DATE PLOTTED => 2/2/2010
TIME PLOTTED => 4:32:20 PM

Dist	COUNTY	ROUTE	POST MILES TOTAL PROJECT	SHEET No.	TOTAL SHEETS
04	SF	101,1	9.0/9.8, 6.8/7.1	9	12

1-13-10
LICENSED ELECTRICAL ENGINEER

REGISTERED PROFESSIONAL ENGINEER
TYLER KELLY
No. E18769
Exp. 6-30-11
ELEC
STATE OF CALIFORNIA

PLANS APPROVAL DATE

THE STATE OF CALIFORNIA OR ITS OFFICERS OR AGENTS SHALL NOT BE RESPONSIBLE FOR THE ACCURACY OR COMPLETENESS OF ELECTRONIC COPIES OF THIS PLAN SHEET.

Arup PB JV
560 Mission Street, Suite 700
San Francisco, CA 94105

NOTES:

1. ALL CONDUIT PENETRATIONS ARE FOR 4" CONDUITS.
2. SEE MAINTENANCE HOLE DETAILS FOR INFORMATION REGARDING KNOCK OUTS, SUMPS, DIMENSIONS AND OTHER DETAILS.

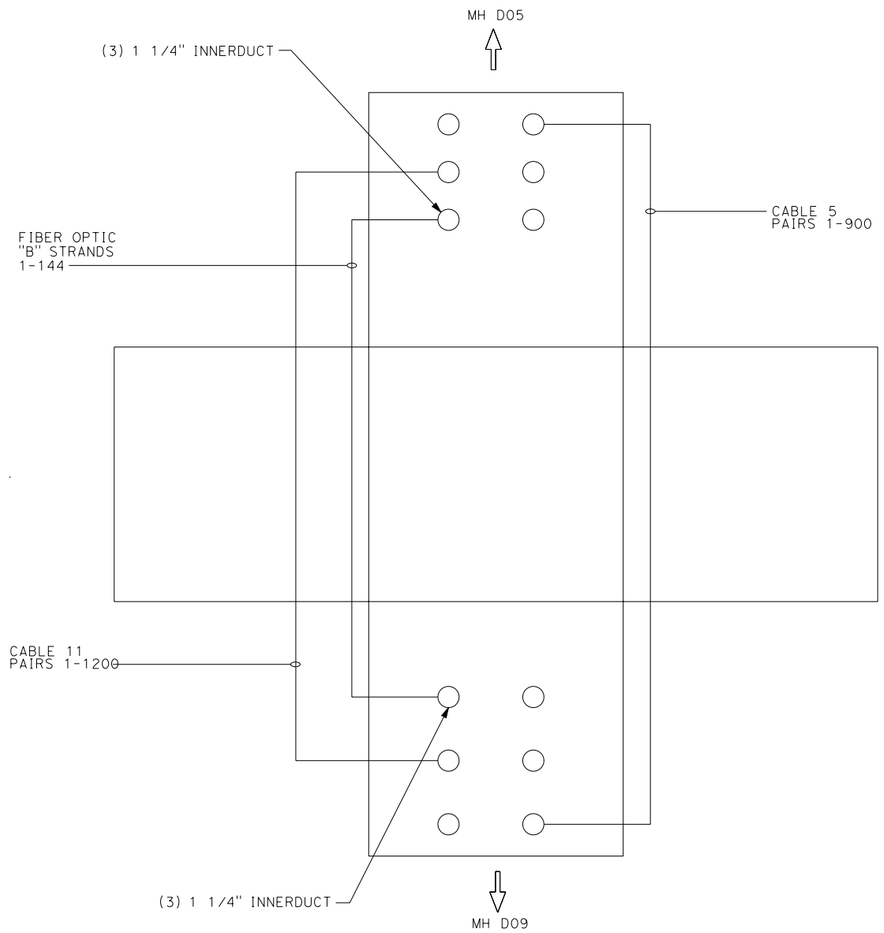

T32 **MH D08 (NEW)**
SCALE: NTS

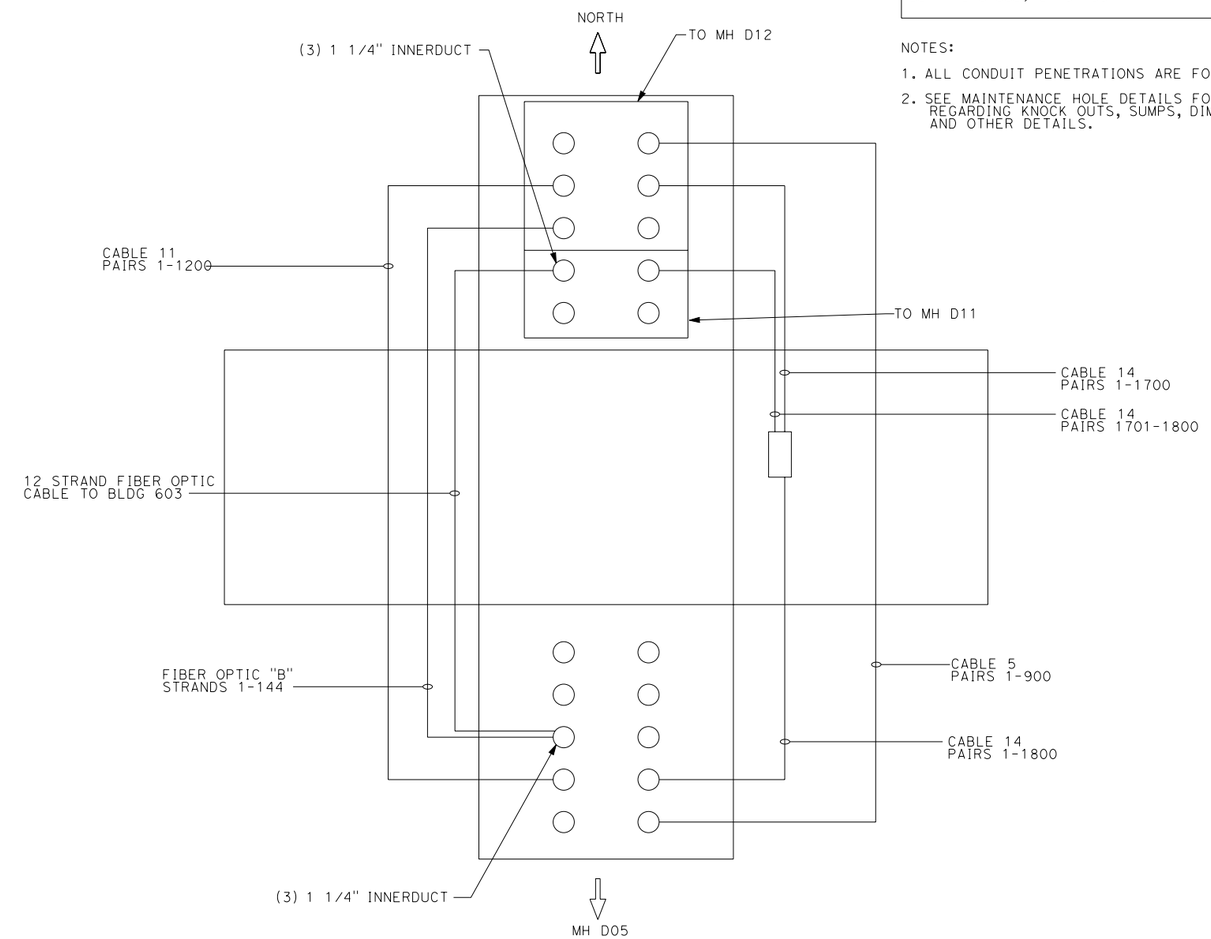

T33 **MH D06 (NEW)**
SCALE: NTS

UTILITY DETAILS
NO SCALE

UDT-18

STATE OF CALIFORNIA - DEPARTMENT OF TRANSPORTATION
Caltrans

FUNCTIONAL SUPERVISOR: DUANNE GILMORE
CALCULATED-DESIGNED BY: TYLER KELLY
CHECKED BY: BILL LIZOTTE
REVISED BY: MD
DATE REVISED: 01/13/10

LAST REVISION
DATE PLOTTED => 2/2/2010
TIME PLOTTED => 4:32:22 PM

BORDER LAST REVISED 3/1/2007
RELATIVE BORDER SCALE IS IN INCHES 0 1 2 3
USERNAME => manish.dalia
DGN FILE => $FILE$
CU 04242
EA 416372

Dist	COUNTY	ROUTE	POST MILES TOTAL PROJECT	SHEET No.	TOTAL SHEETS
04	SF	101,1	9.0/9.8, 6.8/7.1	9	12

NOTES:

1. ALL CONDUIT PENETRATIONS ARE FOR 4" CONDUITS.
2. SEE MAINTENANCE HOLE DETAILS FOR INFORMATION REGARDING KNOCK OUTS, SUMPS, DIMENSIONS AND OTHER DETAILS.

1-13-10
LICENSED ELECTRICAL ENGINEER

REGISTERED PROFESSIONAL ENGINEER
TYLER KELLY
No. E18769
Exp. 6-30-11
ELEC
STATE OF CALIFORNIA

PLANS APPROVAL DATE

THE STATE OF CALIFORNIA OR ITS OFFICERS OR AGENTS SHALL NOT BE RESPONSIBLE FOR THE ACCURACY OR COMPLETENESS OF ELECTRONIC COPIES OF THIS PLAN SHEET.

Arup PB JV
560 Mission Street, Suite 700
San Francisco, CA 94105

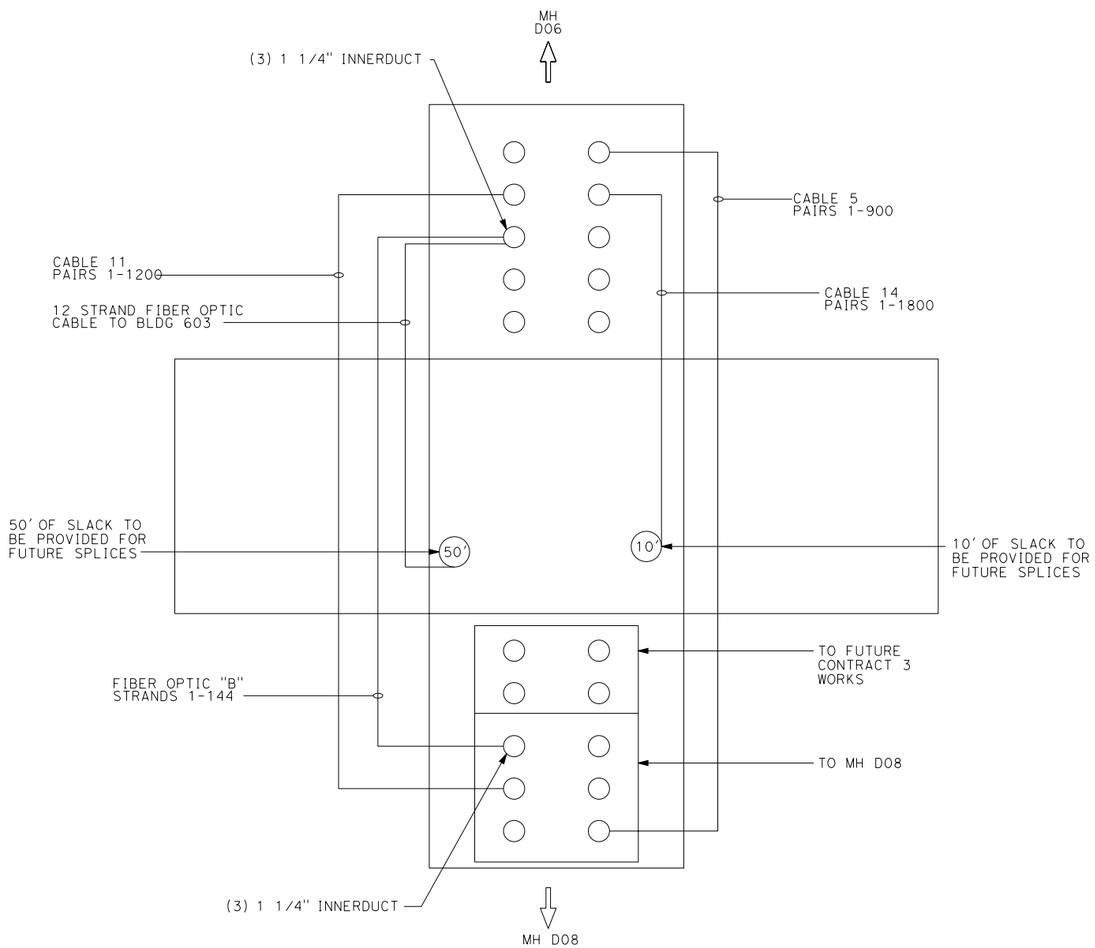

NOTES:

1. Provide a 3' extension to the maintenance hole for extra head room and space on the wall for mounting of splice racks.

T34 **MH D05 (NEW)**
SCALE: NTS

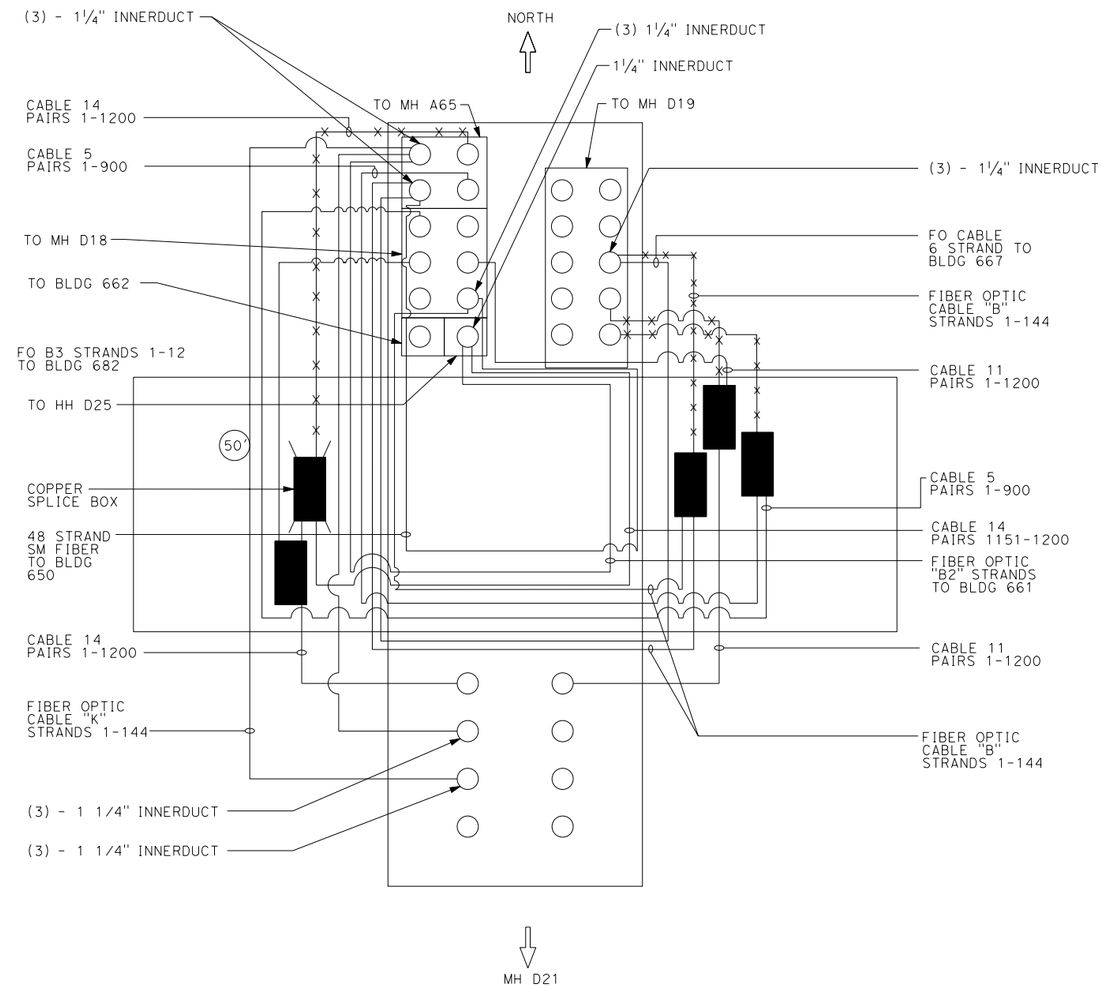

T35 **MH D20 (NEW)**
SCALE: NTS

UTILITY DETAILS
NO SCALE

UDT-19

STATE OF CALIFORNIA - DEPARTMENT OF TRANSPORTATION
Caltrans

FUNCTIONAL SUPERVISOR: DUANNE GILMORE
CALCULATED-DESIGNED BY: TYLER KELLY
CHECKED BY: BILL LIZOTTE
REVISED BY: MD
DATE REVISED: 01/13/10

LAST REVISION
DATE PLOTTED => 2/2/2010
TIME PLOTTED => 4:32:24 PM

Dist	COUNTY	ROUTE	POST MILES TOTAL PROJECT	SHEET No.	TOTAL SHEETS
04	SF	101,1	9.0/9.8, 6.8/7.1	9	12

NOTES:

1. ALL CONDUIT PENETRATIONS ARE FOR 4" CONDUITS.
2. SEE MAINTENANCE HOLE DETAILS FOR INFORMATION REGARDING KNOCK OUTS, SUMPS, DIMENSIONS AND OTHER DETAILS.

1-13-10
LICENSED ELECTRICAL ENGINEER

REGISTERED PROFESSIONAL ENGINEER
TYLER KELLY
No. E18769
Exp. 6-30-11
ELEC
STATE OF CALIFORNIA

PLANS APPROVAL DATE

THE STATE OF CALIFORNIA OR ITS OFFICERS OR AGENTS SHALL NOT BE RESPONSIBLE FOR THE ACCURACY OR COMPLETENESS OF ELECTRONIC COPIES OF THIS PLAN SHEET.

Arup PB JV
560 Mission Street, Suite 700
San Francisco, CA 94105

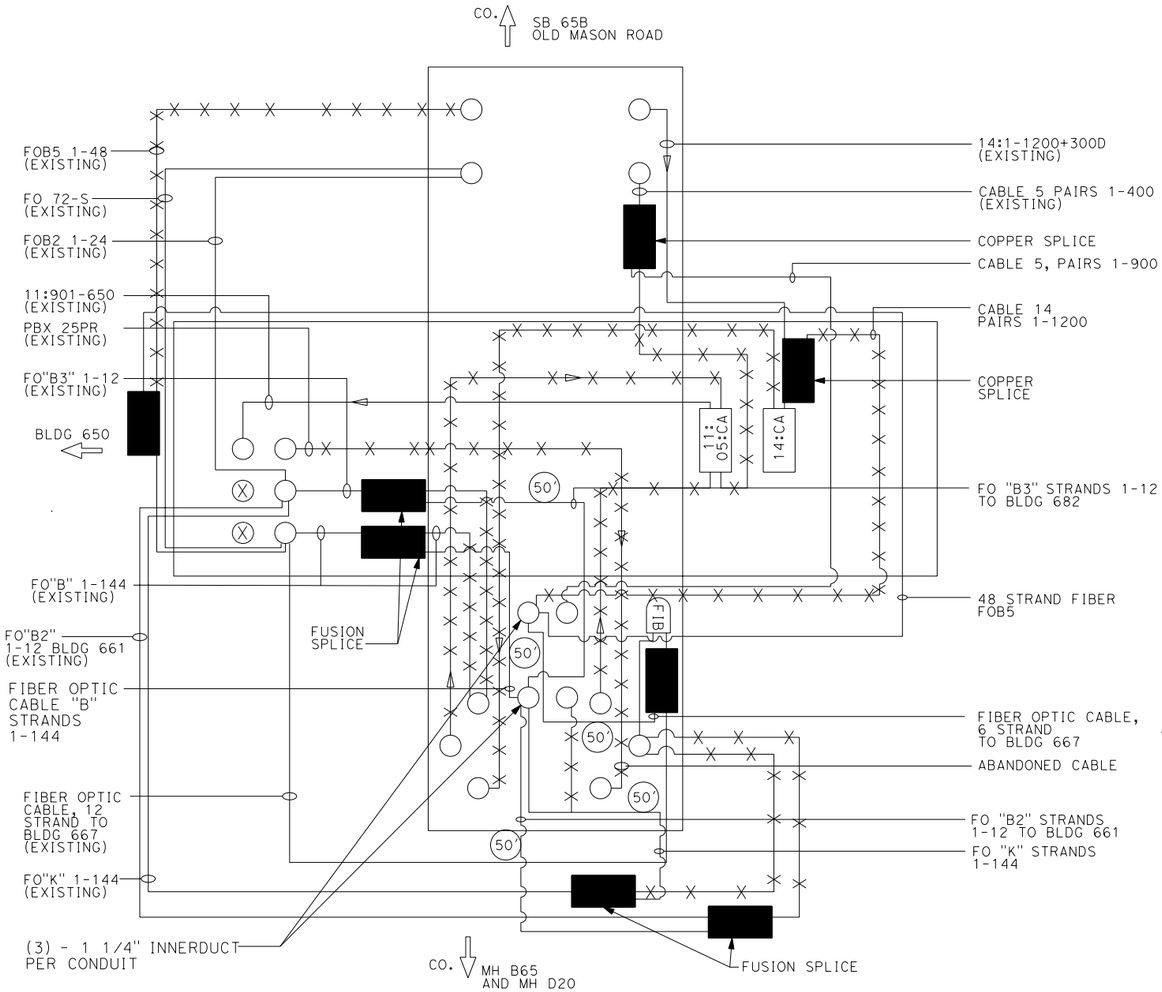

NOTES:

1. LEAVE A GROUP OF (8) 4" CONDUITS UNTOUCHED FOR FUTURE EXPANSION

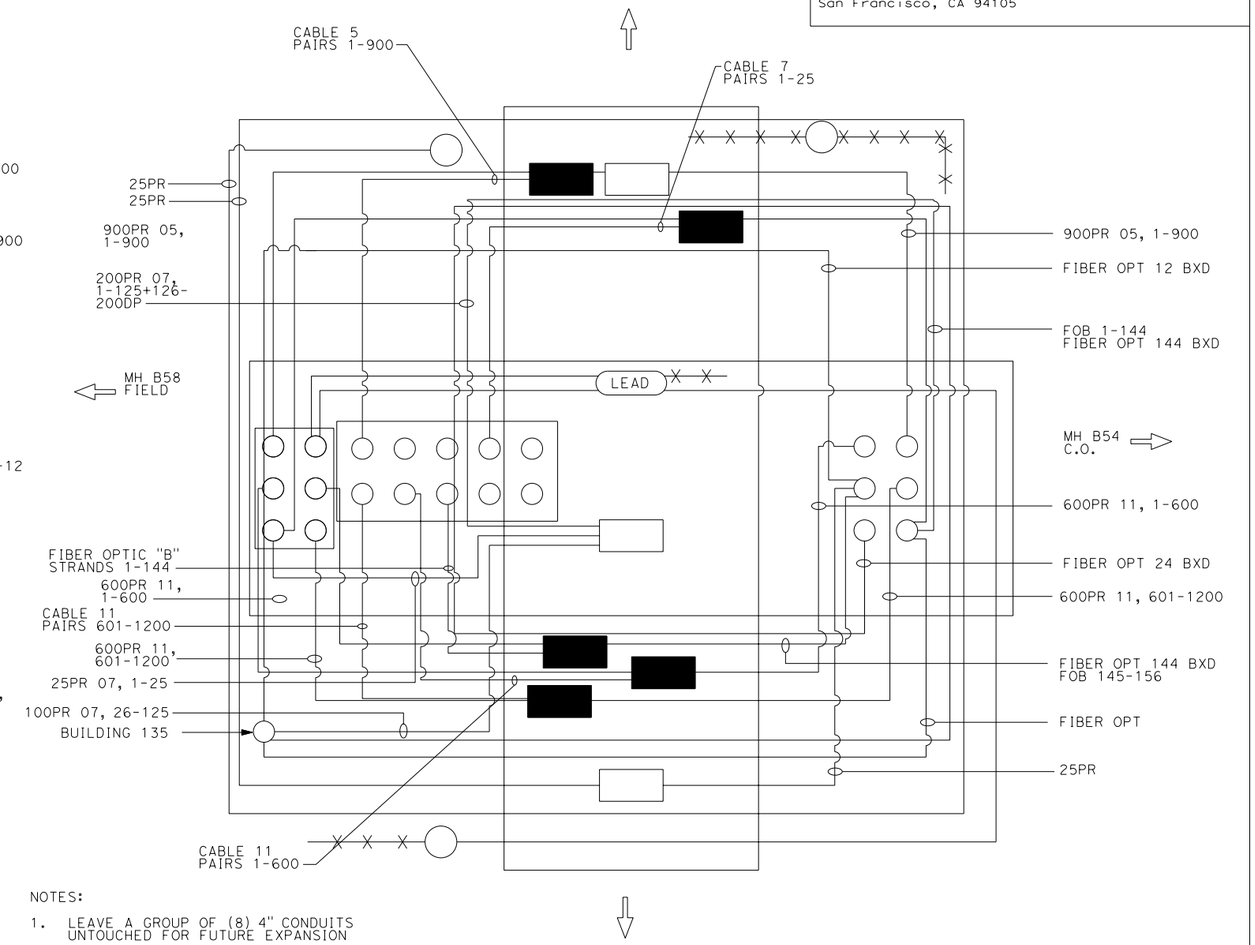

NOTE:

1. ORIGINAL MH B57 IS SIZED AT 6'L X 4'W X 5'HR

T36 MH 65A (EXISTING)
SCALE: NTS

T37 MH B57 (EXISTING)
SCALE: NTS

UTILITY DETAILS
NO SCALE

UDT-20

TYLER KELLY	REVISED BY
BILL LIZOTTE	DATE REVISED
DUANNE GILMORE	MD
	01/13/10
CALCULATED-DESIGNED BY	FUNCTIONAL SUPERVISOR
CHECKED BY	

STATE OF CALIFORNIA - DEPARTMENT OF TRANSPORTATION
Caltrans

LAST REVISION
DATE PLOTTED => 2/2/2010
TIME PLOTTED => 4:32:25 PM

Dist	COUNTY	ROUTE	POST MILES TOTAL PROJECT	SHEET No.	TOTAL SHEETS
04	SF	101,1	9.0/9.8, 6.8/7.1	9	12

NOTES:

1. ALL CONDUIT PENETRATIONS ARE FOR 4" CONDUITS.
2. SEE MAINTENANCE HOLE DETAILS FOR INFORMATION REGARDING KNOCK OUTS, SUMPS, DIMENSIONS AND OTHER DETAILS.

1-13-10
LICENSED ELECTRICAL ENGINEER

REGISTERED PROFESSIONAL ENGINEER
TYLER KELLY
No. E18769
Exp. 6-30-11
ELEC
STATE OF CALIFORNIA

PLANS APPROVAL DATE

THE STATE OF CALIFORNIA OR ITS OFFICERS OR AGENTS SHALL NOT BE RESPONSIBLE FOR THE ACCURACY OR COMPLETENESS OF ELECTRONIC COPIES OF THIS PLAN SHEET.

Arup PB JV
560 Mission Street, Suite 700
San Francisco, CA 94105

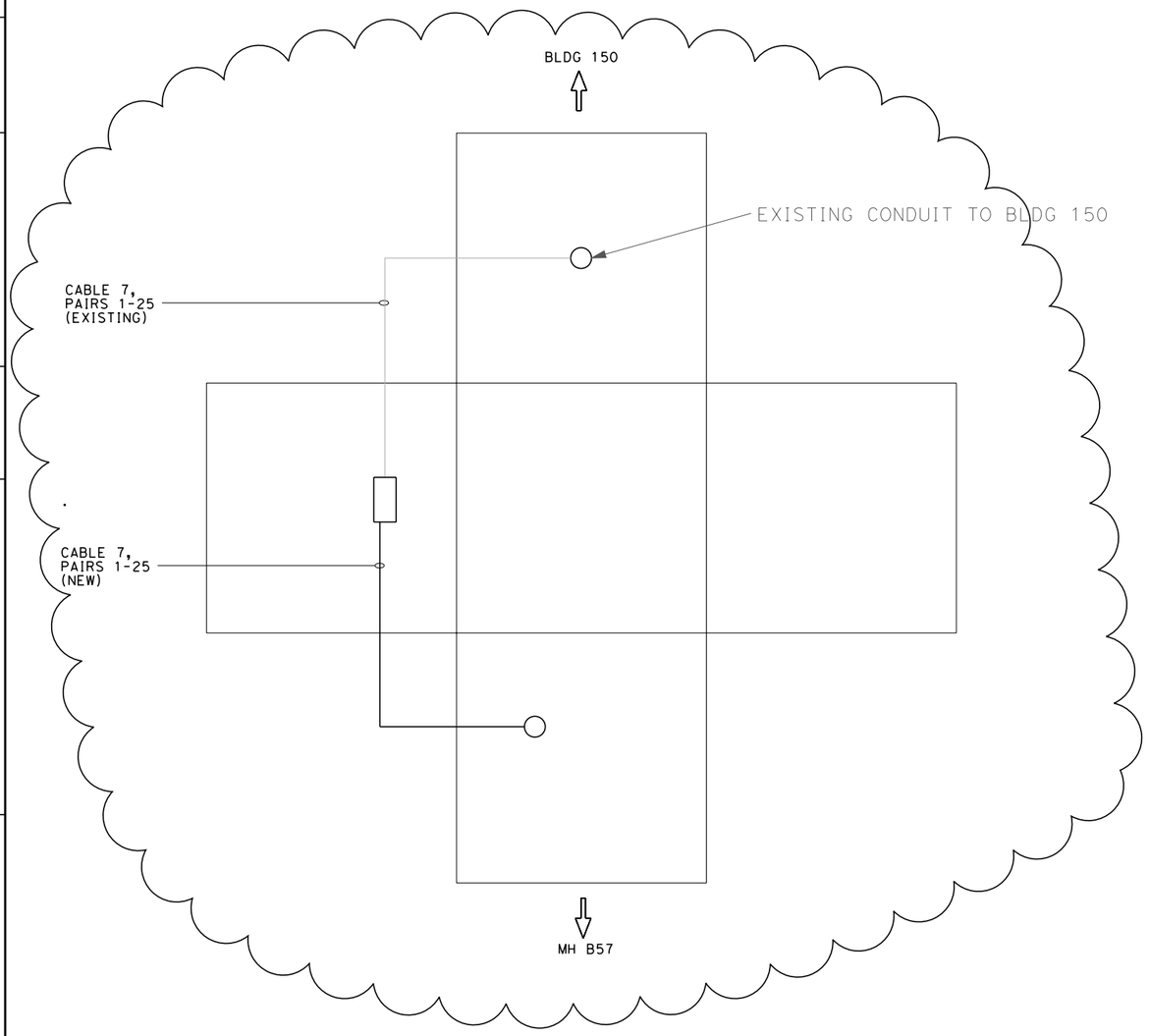

T38 **HH D09 (NEW)**
SCALE: NTS

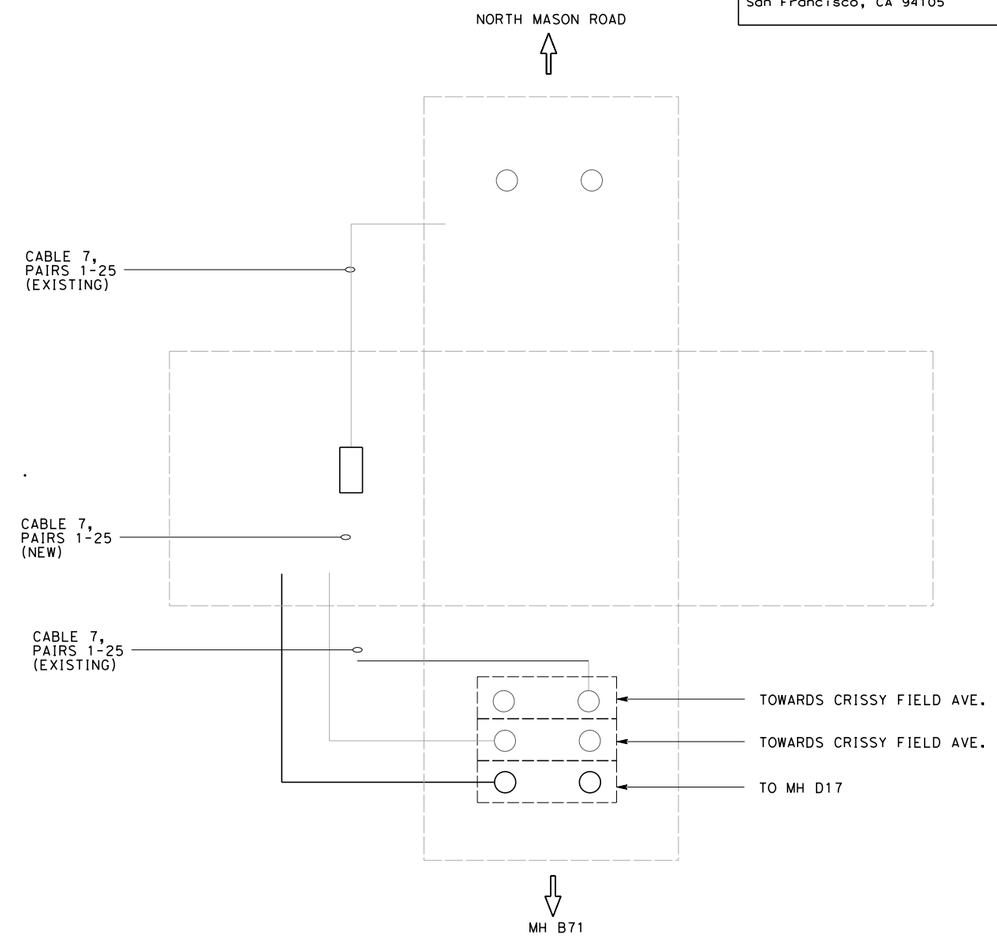

T39 **MH IN FRONT OF BLDG 920 (EXISTING)**
SCALE: NTS

UTILITY DETAILS
NO SCALE

UDT-21

TYLER KELLY	REVISED BY	TK	
BILL LIZOTTE	DATE REVISED	04/01/10	
CALCULATED-DESIGNED BY	MD		
CHECKED BY	01/13/10		
FUNCTIONAL SUPERVISOR			
DUANNE GILMORE			

STATE OF CALIFORNIA - DEPARTMENT OF TRANSPORTATION
Caltrans

LAST REVISION
DATE PLOTTED => 4/1/2010
TIME PLOTTED => 2:47:16 PM

Dist	COUNTY	ROUTE	POST MILES TOTAL PROJECT	SHEET No.	TOTAL SHEETS
04	SF	101.1	9.0/9.8, 6.8/7.1		

LICENSED CIVIL ENGINEER 8-10-09

PLANS APPROVAL DATE

REGISTERED PROFESSIONAL ENGINEER LIU, ANNA HO-YAN No. C59068 Exp. 6-30-11 CIVIL STATE OF CALIFORNIA

THE STATE OF CALIFORNIA OR ITS OFFICERS OR AGENTS SHALL NOT BE RESPONSIBLE FOR THE ACCURACY OR COMPLETENESS OF ELECTRONIC COPIES OF THIS PLAN SHEET.

Arup PB JV
560 Mission Street, Suite 700
San Francisco, CA 94105

MANHOLE MAXIMUM DEPTH NOTES:

MAXIMUM DEPTH FOR TYPE I MANHOLE: 15 FT
MAXIMUM DEPTH FOR TYPE II MANHOLE: 22 FT
MAXIMUM DEPTH FOR TYPE III MANHOLE: 4 FT

NOTES:

1. MANHOLE LADDER SHALL BE PROVIDED WHERE THE DEPTH OF THE MANHOLE EXCEEDS 12 FEET.
2. DROP MANHOLE SHALL BE EITHER TYPE I OR TYPE II DEPENDING ON THE DEPTH. REFER TO OUTSIDE DROP STANDARD DETAIL ON SSD-02.
3. UNLESS OTHERWISE SPECIFIED FALL ACROSS MANHOLE SHALL BE 0.2' MIN.

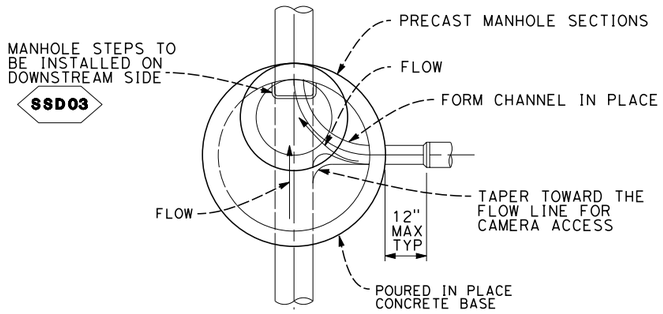

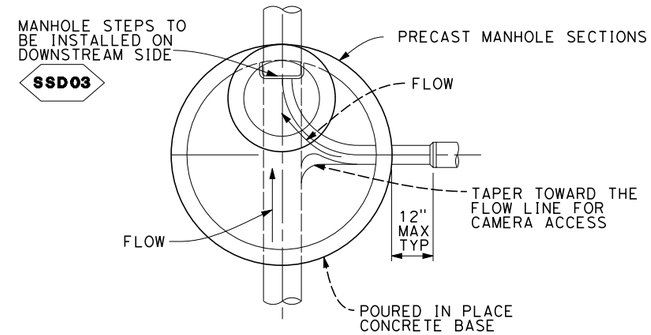

SECTIONAL PLAN

SCALE: NTS

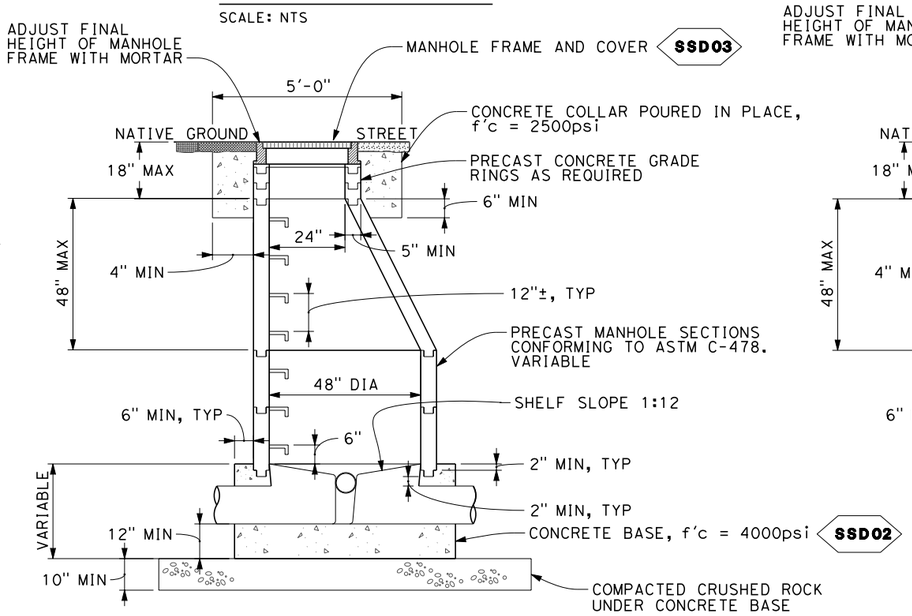

SANITARY SEWER MANHOLE TYPE I STANDARD DETAIL

SCALE: NTS

SECTIONAL PLAN

SCALE: NTS

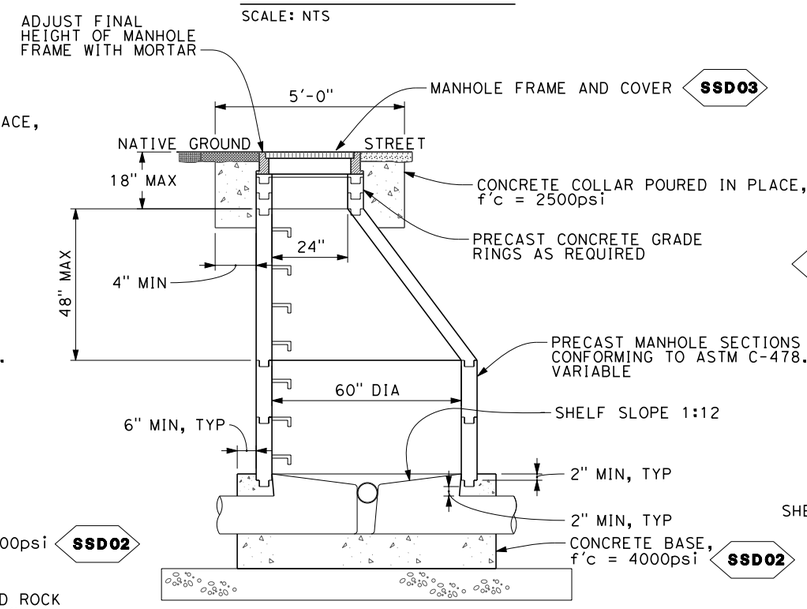

SANITARY SEWER MANHOLE TYPE II STANDARD DETAIL

SCALE: NTS

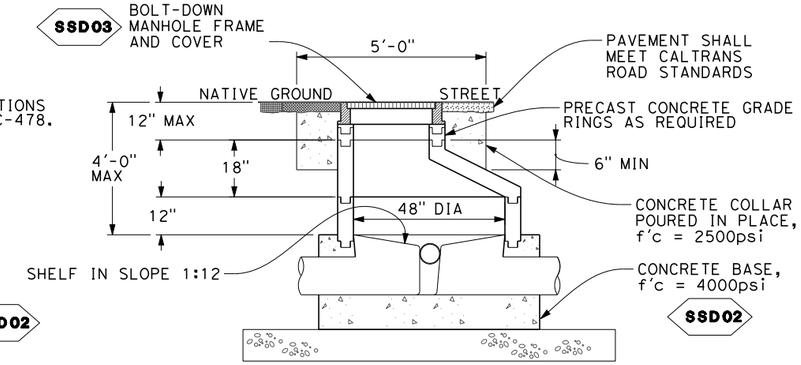

SANITARY SEWER SHALLOW MANHOLE TYPE III STANDARD DETAIL

SCALE: NTS

SANITARY SEWER DETAILS

SCALE: ½" - 1'-0"

SSD-01

REVISED BY	DATE REVISED
ML	08/19/09
	08/14/09

CALCULATED-DESIGNED BY
CHECKED BY
FUNCTIONAL SUPERVISOR DUANNE GILMORE

STATE OF CALIFORNIA - DEPARTMENT OF TRANSPORTATION
Caltrans

LAST REVISION
DATE PLOTTED => 4/8/2010
TIME PLOTTED => 1:34:29 PM

Dist	COUNTY	ROUTE	POST MILES TOTAL PROJECT	SHEET No.	TOTAL SHEETS
04	SF	101.1	9.0/9.8, 6.8/7.1		

Anna Liu 8-10-09
LICENSED CIVIL ENGINEER

PLANS APPROVAL DATE

REGISTERED PROFESSIONAL ENGINEER
LIU, ANNA HO-YAN
No. C59068
Exp 6-30-11
CIVIL
STATE OF CALIFORNIA

THE STATE OF CALIFORNIA OR ITS OFFICERS OR AGENTS SHALL NOT BE RESPONSIBLE FOR THE ACCURACY OR COMPLETENESS OF ELECTRONIC COPIES OF THIS PLAN SHEET.

Arup PB JV
560 Mission Street, Suite 700
San Francisco, CA 94105

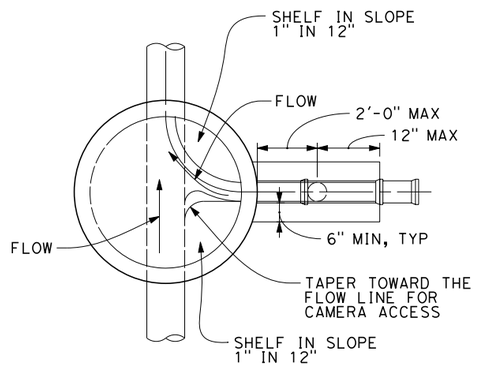

SECTIONAL PLAN

SCALE: NTS

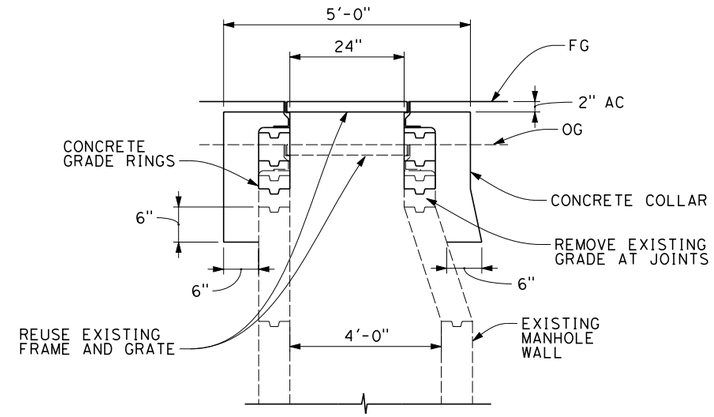

ADJUST MANHOLE TO GRADE

SCALE: NTS

NOTES:

1. CONCRETE ENCASEMENT SHALL BE CLASS 565-C-3250 PER SSWPC
2. MANHOLE JOINTS SHALL BE SEALED WITH JOINT SEALANT PER THE DISTRICT DESIGN AND CONSTRUCTION STANDARDS
3. INTERIOR OF MANHOLE SHALL BE LINED IN ACCORDANCE WITH DISTRICT DESIGN AND CONSTRUCTION STANDARDS

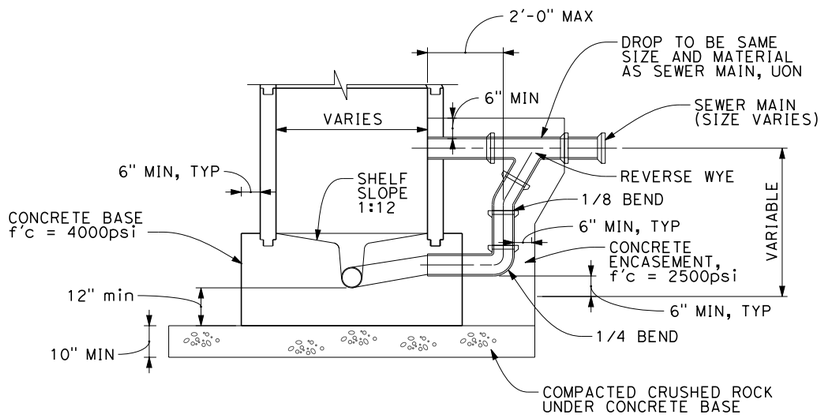

OUTSIDE DROP STANDARD DETAIL

SCALE: NTS

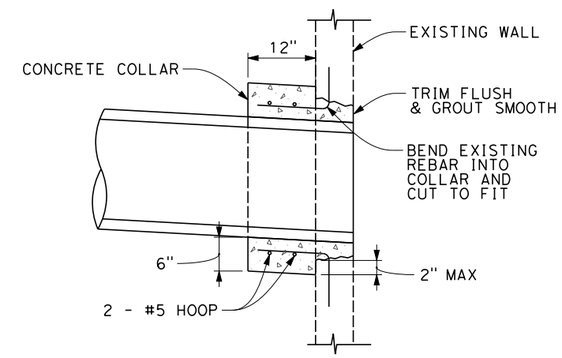

PIPE CONNECTION TO EXISTING MANHOLE/INLET

NOT TO SCALE

NOTE:
PIPE CONNECTION TO MANHOLE SHALL BE SMOOTH INSIDE

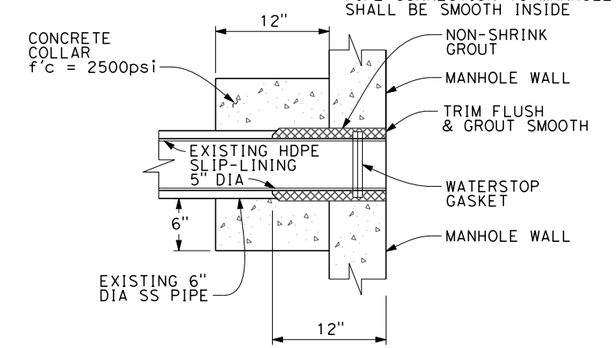

HDPE SLIP-LINED PIPE CONNECTION TO MANHOLE

SCALE: 1 1/2" = 1'-0"

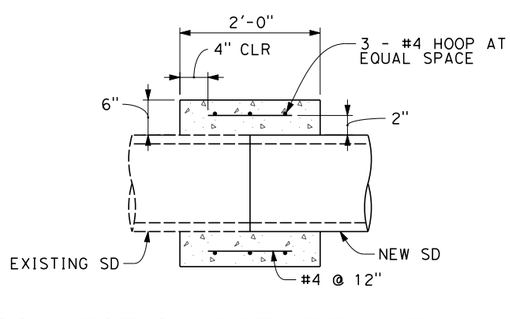

CONNECTION BETWEEN NEW AND EXISTING STORM DRAIN CONCRETE COLLAR

NOT TO SCALE

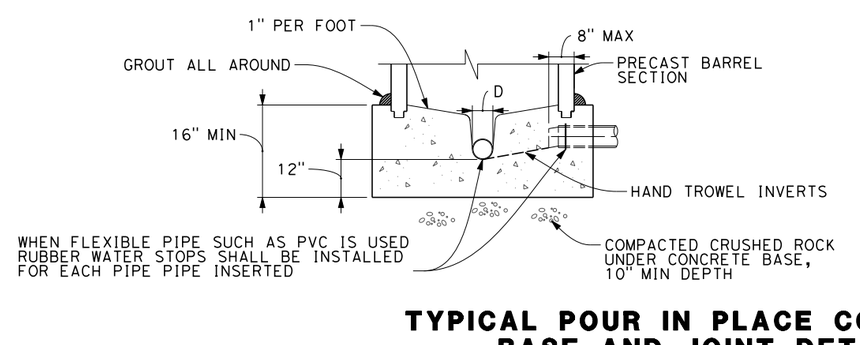

TYPICAL POUR IN PLACE CONCRETE BASE AND JOINT DETAIL

SCALE: NTS

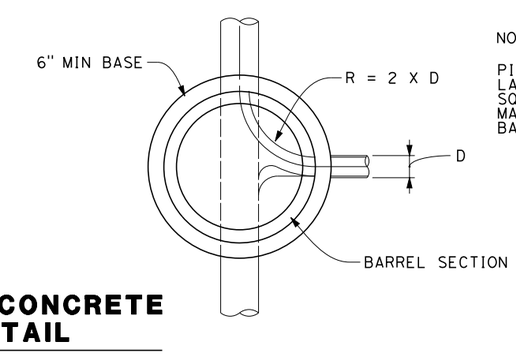

NOTE:

PIPE SHALL BE LAID WITH END SQUARE INTO MANHOLE BASE, UON

SANITARY SEWER DETAILS

SCALE: ½" - 1'-0"

SSD-02

REVISED BY	DATE REVISED
ML	08/19/09
	08/14/09

CALCULATED-DESIGNED BY
CHECKED BY
FUNCTIONAL SUPERVISOR
DUANNE GILMORE

STATE OF CALIFORNIA - DEPARTMENT OF TRANSPORTATION
Caltrans

LAST REVISION
DATE PLOTTED => 4/8/2010
TIME PLOTTED => 1:33:39 PM

Dist	COUNTY	ROUTE	POST MILES TOTAL PROJECT	SHEET No.	TOTAL SHEETS
04	SF	101.1	9.0/9.8, 6.8/7.1		

Anna Liu 8-10-09
LICENSED CIVIL ENGINEER

PLANS APPROVAL DATE

REGISTERED PROFESSIONAL ENGINEER
LIU, ANNA HO-YAN
No. C59068
Exp. 6-30-11
CIVIL
STATE OF CALIFORNIA

THE STATE OF CALIFORNIA OR ITS OFFICERS OR AGENTS SHALL NOT BE RESPONSIBLE FOR THE ACCURACY OR COMPLETENESS OF ELECTRONIC COPIES OF THIS PLAN SHEET.

Arup PB JV
560 Mission Street, Suite 700
San Francisco, CA 94105

NOTES:

1. MANHOLE COVERS,FRAME, AND STEP SHALL CONFORM WITH U.S. GENERAL SERVICES ADMINISTATION (GSA) FS A-A-60005
2. BOLT-DOWN MANHOLE COVERS SHALL BE WITHOUT PICKHOLE, AND PROVIDED WITH TWO LIFTING RECEPTACLES PER COVER.

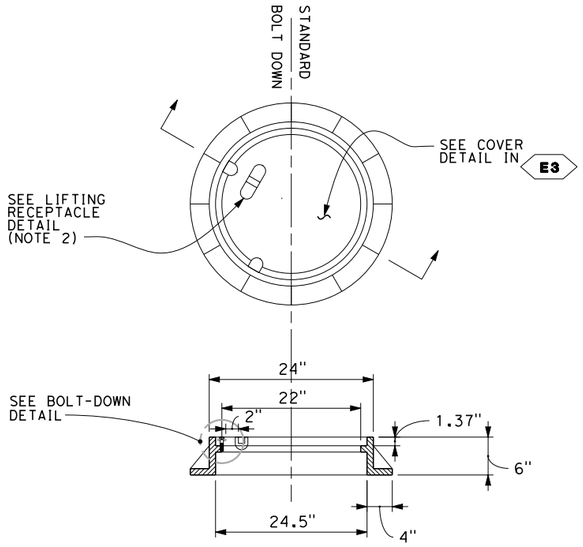

REF: FS A-A-60005, FIGURE 1

MANHOLE FRAME AND COVER TYPE I, STYLE A, SIZE 22A MANHOLE FRAME TRAFFIC

SCALE: NTS

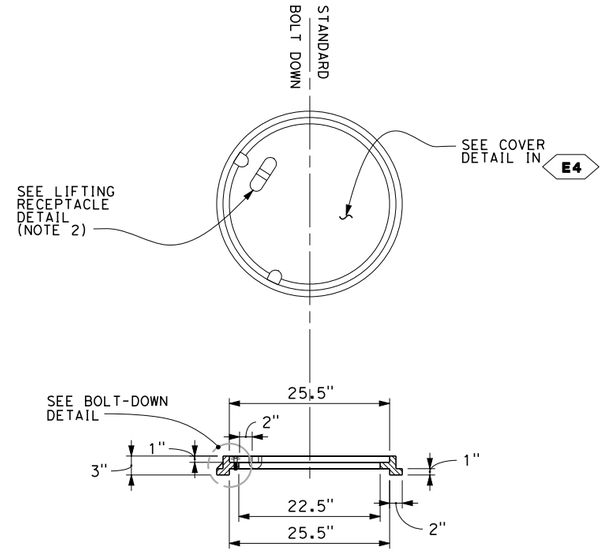

REF: FS A-A-60005, FIGURE 4

MANHOLE FRAME AND COVER TYPE IV, SIZE 22 MANHOLE FRAME NONTRAFFIC

SCALE: NTS

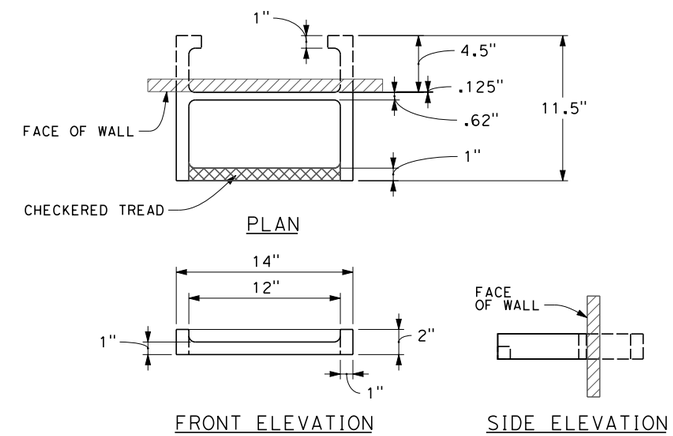

REF: FS A-A-60005, FIGURE 19

STANDARD MANHOLE STEP

SCALE: 2" = 1'-0"

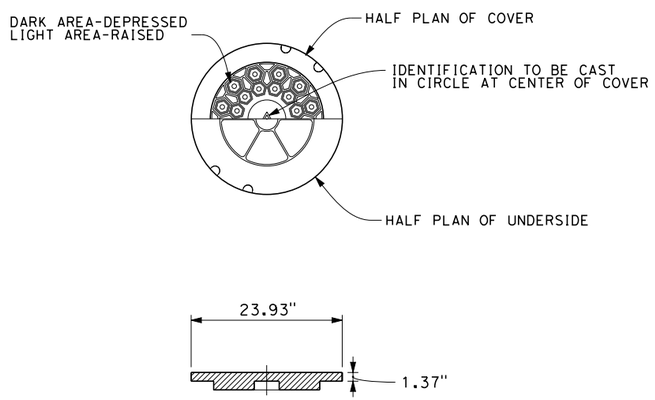

REF: FS A-A-60005, FIGURE 8

TYPE A, SIZE 22A MANHOLE COVER TRAFFIC

SCALE: NTS

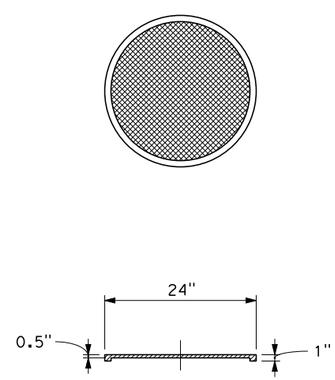

REF: FS A-A-60005, FIGURE 12

TYPE E, SIZE 22 MANHOLE COVER NONTRAFFIC

SCALE: NTS

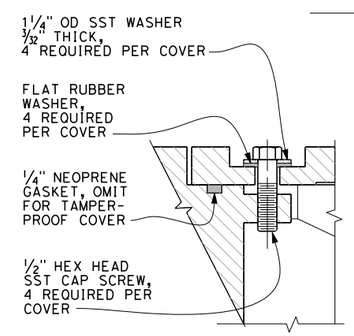

BOLT-DOWN DETAIL

SCALE: 6" = 1'-0"

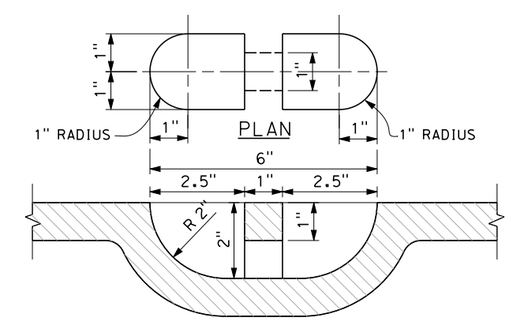

LIFTING RECEPTACLE DETAIL

SCALE: 6" = 1'-0"

MANHOLE COVER, FRAME AND STEP DETAILS

SCALE 1" - 1'-0"

SSD-03

ML	08/19/09	
	08/14/09	
REVISED BY	DATE REVISED	
CALCULATED-DESIGNED BY	CHECKED BY	
FUNCTIONAL SUPERVISOR	DUANNE GILMORE	

STATE OF CALIFORNIA - DEPARTMENT OF TRANSPORTATION
Caltrans

LAST REVISION | DATE PLOTTED => 4/8/2010 | TIME PLOTTED => 1:34:56 PM

DIST	COUNTY	ROUTE	POST MILES TOTAL PROJECT	SHEET No	TOTAL SHEETS
04	SF	101, 1	9.0/9.8 6.8/7.1		

REGISTERED CIVIL ENGINEER — 4/01/10 DATE

PLANS APPROVAL DATE

REGISTERED PROFESSIONAL ENGINEER — MARK GRODZKI — No. C65594 — Exp. 9/30/11 — CIVIL — STATE OF CALIFORNIA

The State of California or its officers or agents shall not be responsible for the accuracy or completeness of scanned copies of this plan sheet.

ARUP PB JV
303 2nd St, Suite 700 North
San Francisco, CA 94107-1317

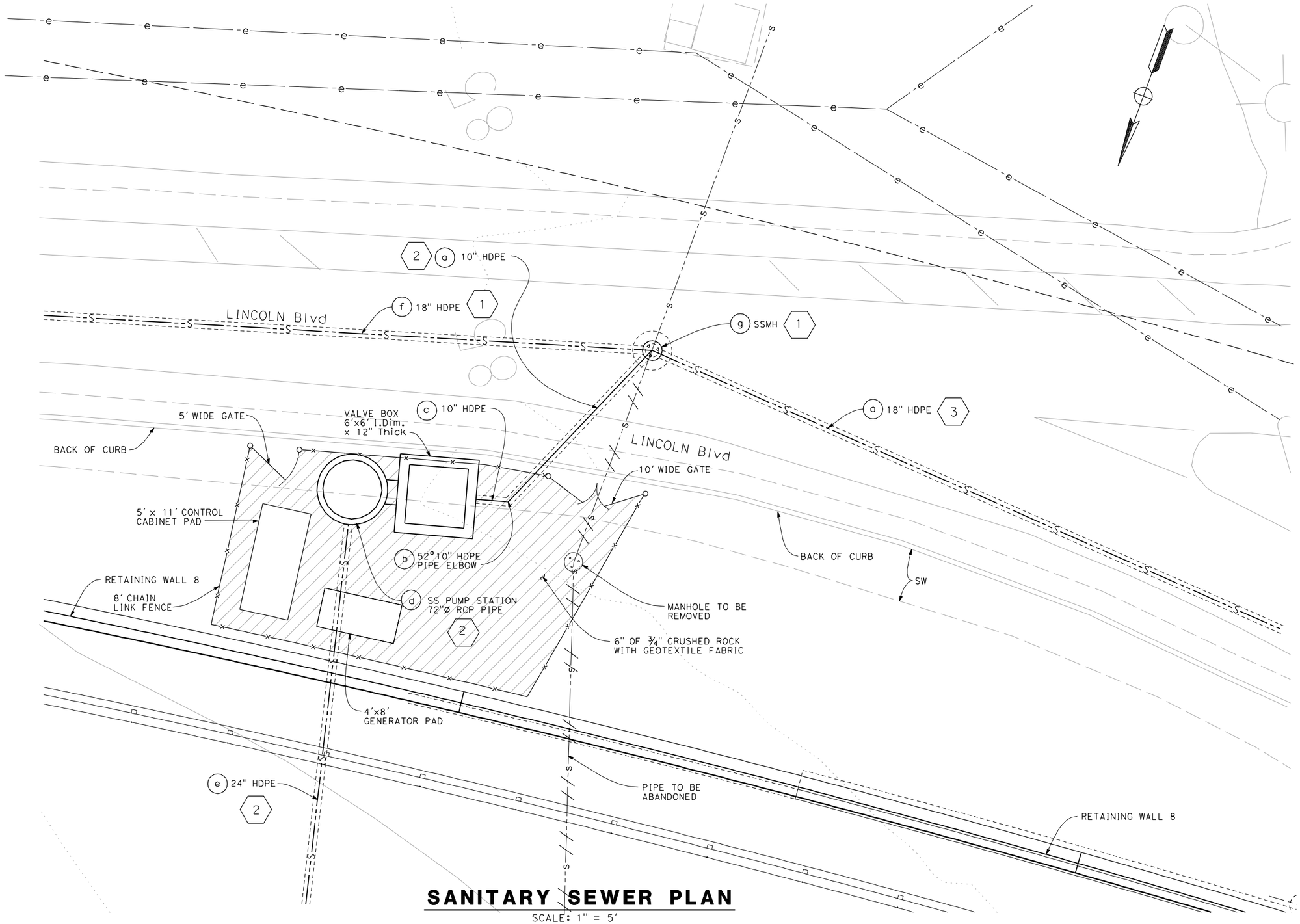

SANITARY SEWER PLAN

SCALE: 1" = 5'

PS D-01

DESIGN	BY	CHECKED	
DETAILS	BY	CHECKED	
QUANTITIES	BY	CHECKED	

DESIGN OVERSIGHT

SIGN OFF DATE

PREPARED FOR THE STATE OF CALIFORNIA DEPARTMENT OF TRANSPORTATION

PROJECT ENGINEER

BRIDGE NO.

POST MILE

TEMPORARY SS PUMP STATION
SANITARY SEWER DETAILS

DESIGN DETAIL SHEET (ENGLISH) (REV. 06-01-09)

ORIGINAL SCALE IN INCHES FOR REDUCED PLANS 0 1 2 3

CU
EA

DISREGARD PRINTS BEARING EARLIER REVISION DATES

REVISION DATES (PRELIMINARY STAGE ONLY) 04-23-10

SHEET OF

FILE => T:\13269 Doyle Dr GEC\Con2D\tssps-jc02.dgn

USERNAME => contiilerDATE PLOTTED => 4/23/2010 TIME PLOTTED => 9:44:05 AM

DIST	COUNTY	ROUTE	POST MILES TOTAL PROJECT	SHEET No	TOTAL SHEETS
04	SF	101, 1	9.0/9.8 6.8/7.1		

REGISTERED CIVIL ENGINEER 4/01/10 DATE

PLANS APPROVAL DATE

REGISTERED PROFESSIONAL ENGINEER
MARK GRODZKI
No. C65594
Exp. 9/30/11
CIVIL
STATE OF CALIFORNIA

The State of California or its officers or agents shall not be responsible for the accuracy or completeness of scanned copies of this plan sheet.

ARUP PB JV
303 2nd St, Suite 700 North
San Francisco, CA 94107-1317

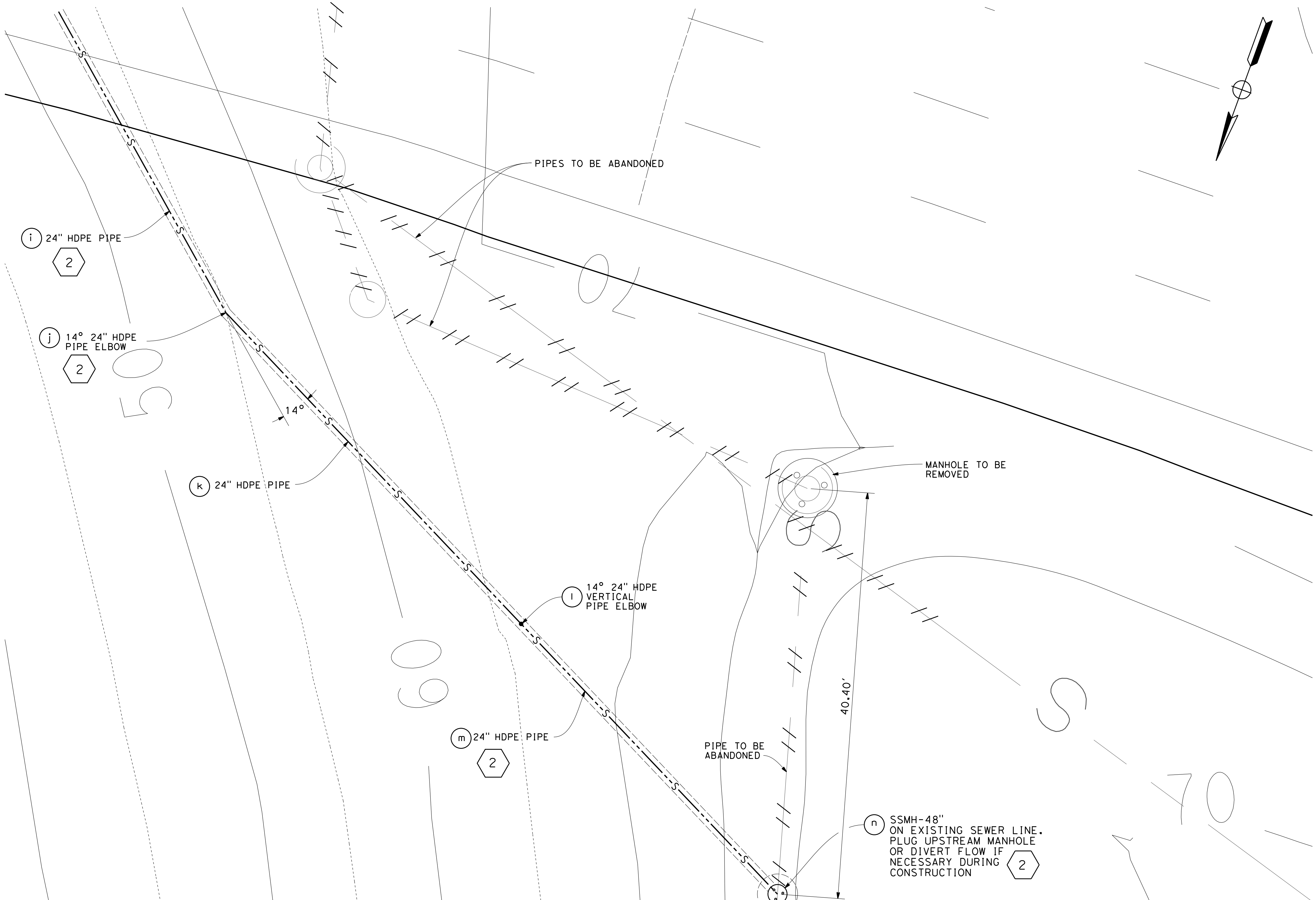

SANITARY SEWER PLAN

SCALE: 1" = 5'

PS D-02

DESIGN OVERSIGHT

SIGN OFF DATE

DESIGN	BY	CHECKED
DETAILS	BY	CHECKED
QUANTITIES	BY	CHECKED

PREPARED FOR THE
STATE OF CALIFORNIA
DEPARTMENT OF TRANSPORTATION

PROJECT ENGINEER

BRIDGE NO.

POST MILE

TEMPORARY SS PUMP STATION
SANITARY SEWER DETAILS

DESIGN DETAIL SHEET (ENGLISH) (REV. 06-01-09)

ORIGINAL SCALE IN INCHES FOR REDUCED PLANS 0 1 2 3

CU
EA

DISREGARD PRINTS BEARING EARLIER REVISION DATES

REVISION DATES (PRELIMINARY STAGE ONLY) SHEET OF

FILE => $REQUEST

USERNAME => $USER DATE PLOTTED => $DATE TIME PLOTTED => $TIME

DIST	COUNTY	ROUTE	POST MILES TOTAL PROJECT	SHEET No	TOTAL SHEETS
04	SF	101, 1	9.0/9.8 6.8/7.1		

REGISTERED CIVIL ENGINEER — 4/01/10 DATE

PLANS APPROVAL DATE

REGISTERED PROFESSIONAL ENGINEER — MARK GRODZKI — No. C65594 — Exp. 9/30/11 — CIVIL — STATE OF CALIFORNIA

The State of California or its officers or agents shall not be responsible for the accuracy or completeness of scanned copies of this plan sheet.

ARUP PB JV
303 2nd St, Suite 700 North
San Francisco, CA 94107-1317

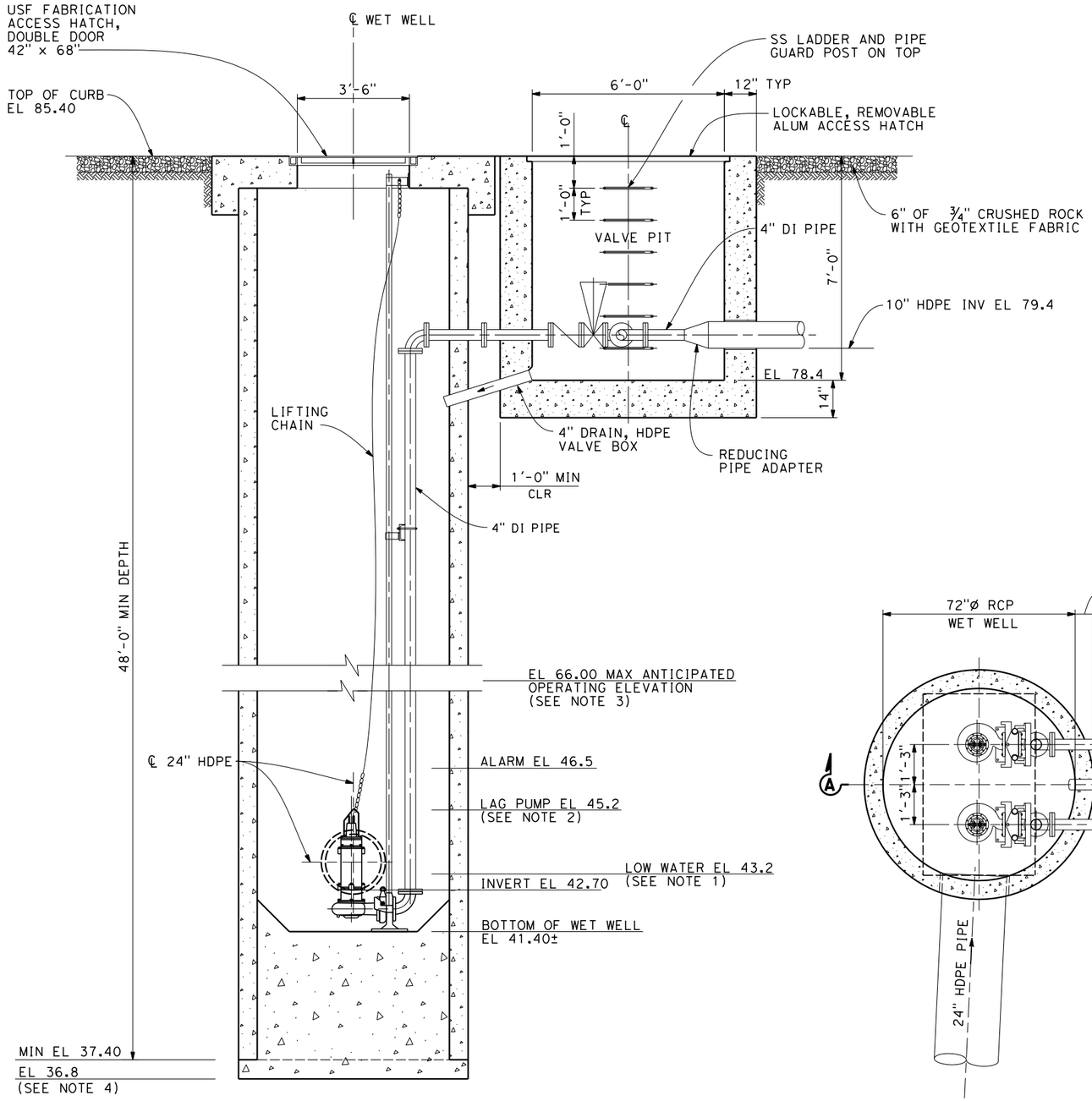

SECTION A-A
SCALE: ½" = 1'-0"

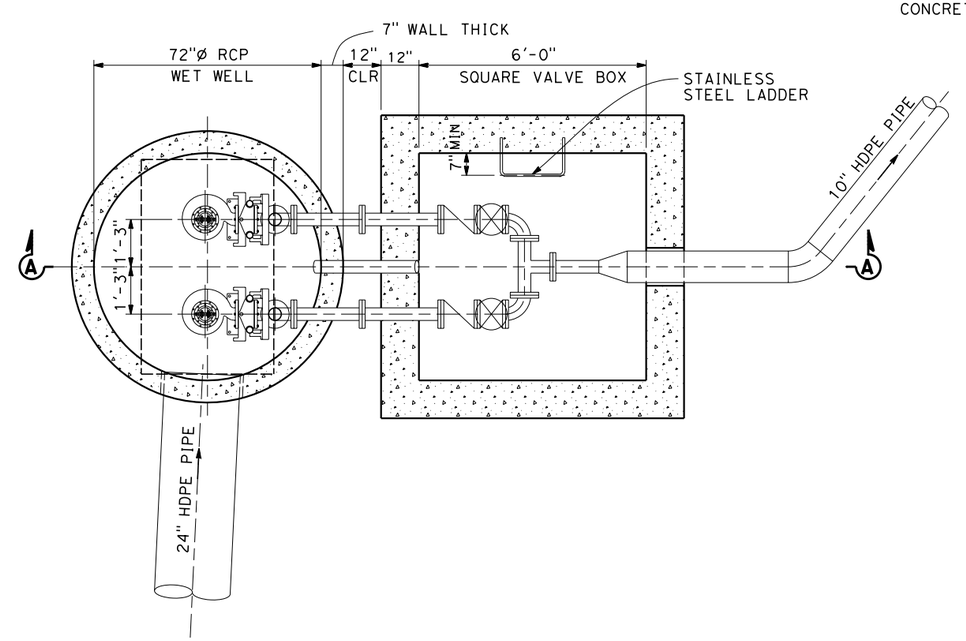

LIFT STATION PUMP PLAN
SCALE: ½" = 1'-0"

NOTES:

1. LOW WATER ELEVATION IS 43.2'. BELOW ELEVATION 43.2' NO PUMPS WILL OPERATE. ABOVE ELEVATION 43.2' THE LEAD PUMP WILL TURN ON. ELEVATION 43.2 IS 0.5 FEET ABOVE THE INVERT OF THE 24" PIPE INLET PIPE. PLACING THE INLET AT ELEVATION 43.5' WILL ALLOW FOR A MIN. INFLOW OF 0.5 FEET WITHOUT CONTINUOUSLY RECYCLING LEAD PUMP.
2. LOW WATER ELEVATION FOR LAG PUMP IS 45.2'. BELOW ELEVATION 45.2' ONLY THE LEAD PUMP WILL OPERATE. ABOVE ELEVATION 45.2' THE LAG PUMP WILL TURN ON AND BOTH PUMPS WILL OPERATE.
3. THE MAX. OPERATING ELEVATION IS 66.0'. IN ORDER TO ALLOW SOME OPERATIONAL FLEXIBILITY, THE ALARM ELEVATION WILL BE SET TO 46.5'.
4. THE BOTTOM OF THE CONCRETE IN THE SUMP WILL BE EXCAVATED 0.6 FOOT BELOW THE BOTTOM OF THE 72" CONCRETE PIPE. THE OBJECTIVE IS TO KEY THE BACKFILL CONCRETE UNDER THE PIPE.

PS D-03

DESIGN OVERSIGHT
SIGN OFF DATE

DESIGN	BY	CHECKED
DETAILS	BY	CHECKED
QUANTITIES	BY	CHECKED

PREPARED FOR THE STATE OF CALIFORNIA DEPARTMENT OF TRANSPORTATION

PROJECT ENGINEER

BRIDGE NO.
POST MILE

TEMPORARY SS PUMP STATION
SECTION DETAILS

DESIGN DETAIL SHEET (ENGLISH) (REV. 06-01-09)

ORIGINAL SCALE IN INCHES FOR REDUCED PLANS 0 1 2 3

CU
EA

DISREGARD PRINTS BEARING EARLIER REVISION DATES

REVISION DATES (PRELIMINARY STAGE ONLY) — SHEET — OF

FILE => $REQUEST

USERNAME => $USER — DATE PLOTTED => $DATE — TIME PLOTTED => $TIME

DIST	COUNTY	ROUTE	POST MILES TOTAL PROJECT	SHEET No	TOTAL SHEETS
04	SF	101, 1	9.0/9.8 6.8/7.1		

REGISTERED CIVIL ENGINEER — 4/01/10 DATE

PLANS APPROVAL DATE

REGISTERED PROFESSIONAL ENGINEER — MARK GRODZKI — No. C65594 — Exp. 9/30/11 — CIVIL — STATE OF CALIFORNIA

The State of California or its officers or agents shall not be responsible for the accuracy or completeness of scanned copies of this plan sheet.

ARUP PB JV
303 2nd St, Suite 700 North
San Francisco, CA 94107-1317

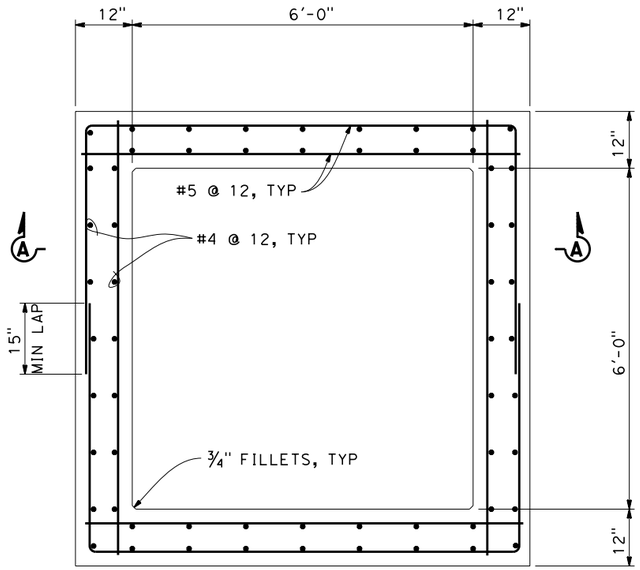

VALVE PIT PLAN
SCALE: ¾" = 1'-0"

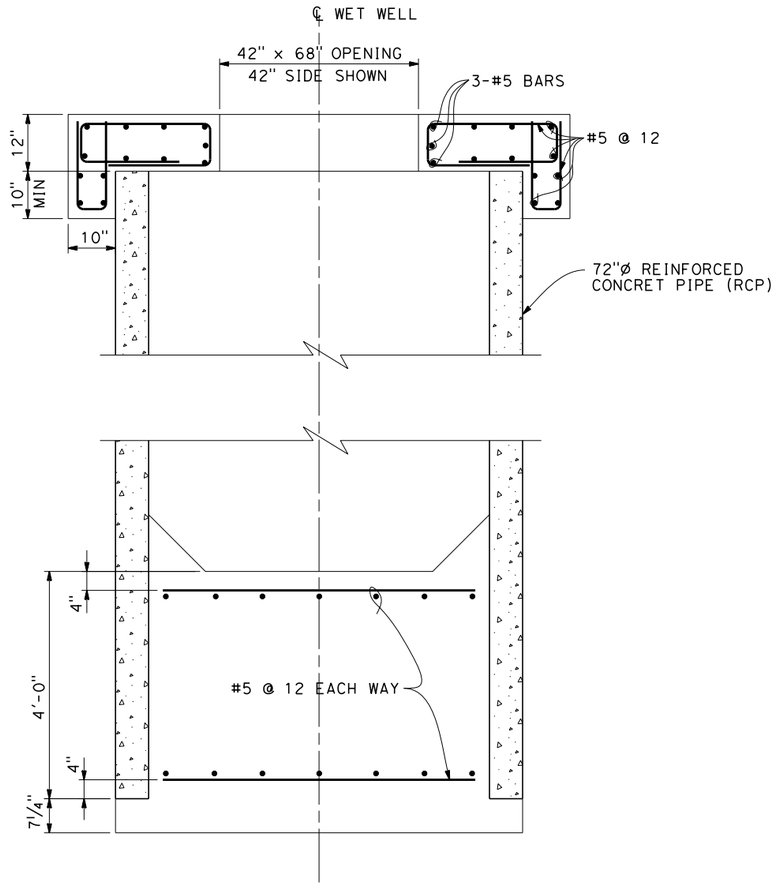

WET WELL
SCALE: ¾" = 1'-0"

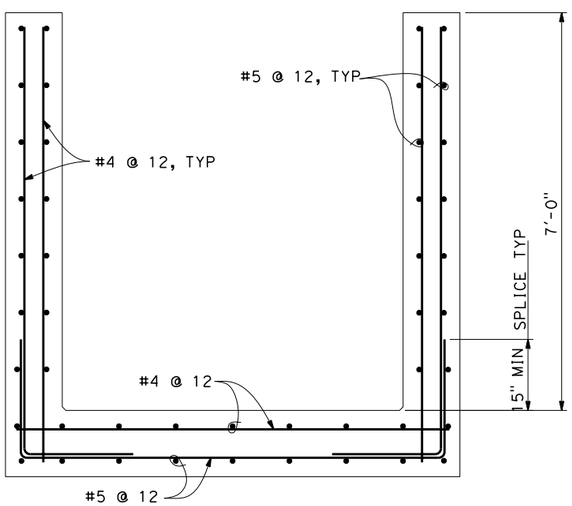

SECTION A-A
SCALE: ¾" = 1'-0"

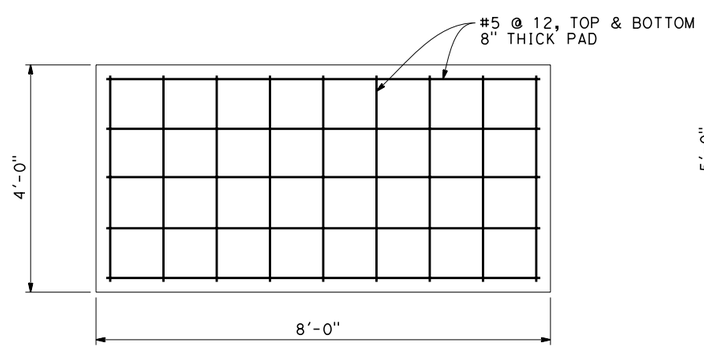

GENERATOR PAD
SCALE: ¾" = 1'-0"

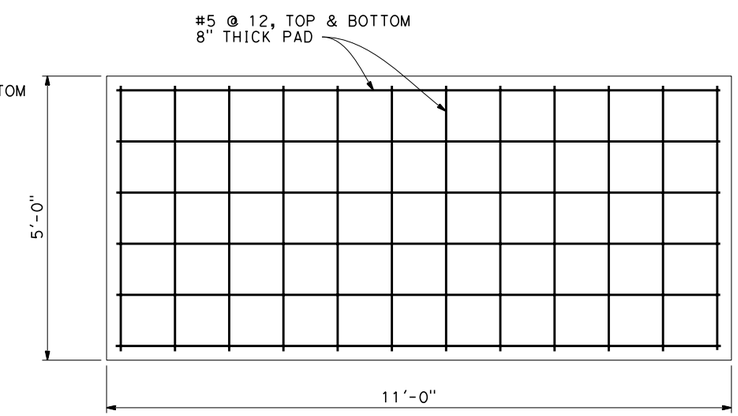

CONTROL CABINET PAD
SCALE: ¾" = 1'-0"

PS D-04

DESIGN OVERSIGHT	DESIGN	BY	CHECKED
SIGN OFF DATE	DETAILS	BY	CHECKED
	QUANTITIES	BY	CHECKED

PREPARED FOR THE STATE OF CALIFORNIA DEPARTMENT OF TRANSPORTATION

PROJECT ENGINEER

BRIDGE NO.

POST MILE

TEMPORARY SS PUMP STATION REINFORCEMENT DETAILS

DESIGN DETAIL SHEET (ENGLISH) (REV. 06-01-09)

ORIGINAL SCALE IN INCHES FOR REDUCED PLANS 0 1 2 3

CU
EA

DISREGARD PRINTS BEARING EARLIER REVISION DATES

REVISION DATES (PRELIMINARY STAGE ONLY) — SHEET — OF

FILE => $REQUEST

USERNAME => $USER — DATE PLOTTED => $DATE — TIME PLOTTED => $TIME

DIST	COUNTY	ROUTE	POST MILES TOTAL PROJECT	SHEET No	TOTAL SHEETS
04	SF	101, 1	9.0/9.8 6.8/7.1		

REGISTERED CIVIL ENGINEER 4/01/10 DATE

PLANS APPROVAL DATE

REGISTERED PROFESSIONAL ENGINEER MARK GRODZKI No. C65594 Exp. 9/30/11 CIVIL STATE OF CALIFORNIA

The State of California or its officers or agents shall not be responsible for the accuracy or completeness of scanned copies of this plan sheet.

ARUP PB JV
303 2nd St, Suite 700 North
San Francisco, CA 94107-1317

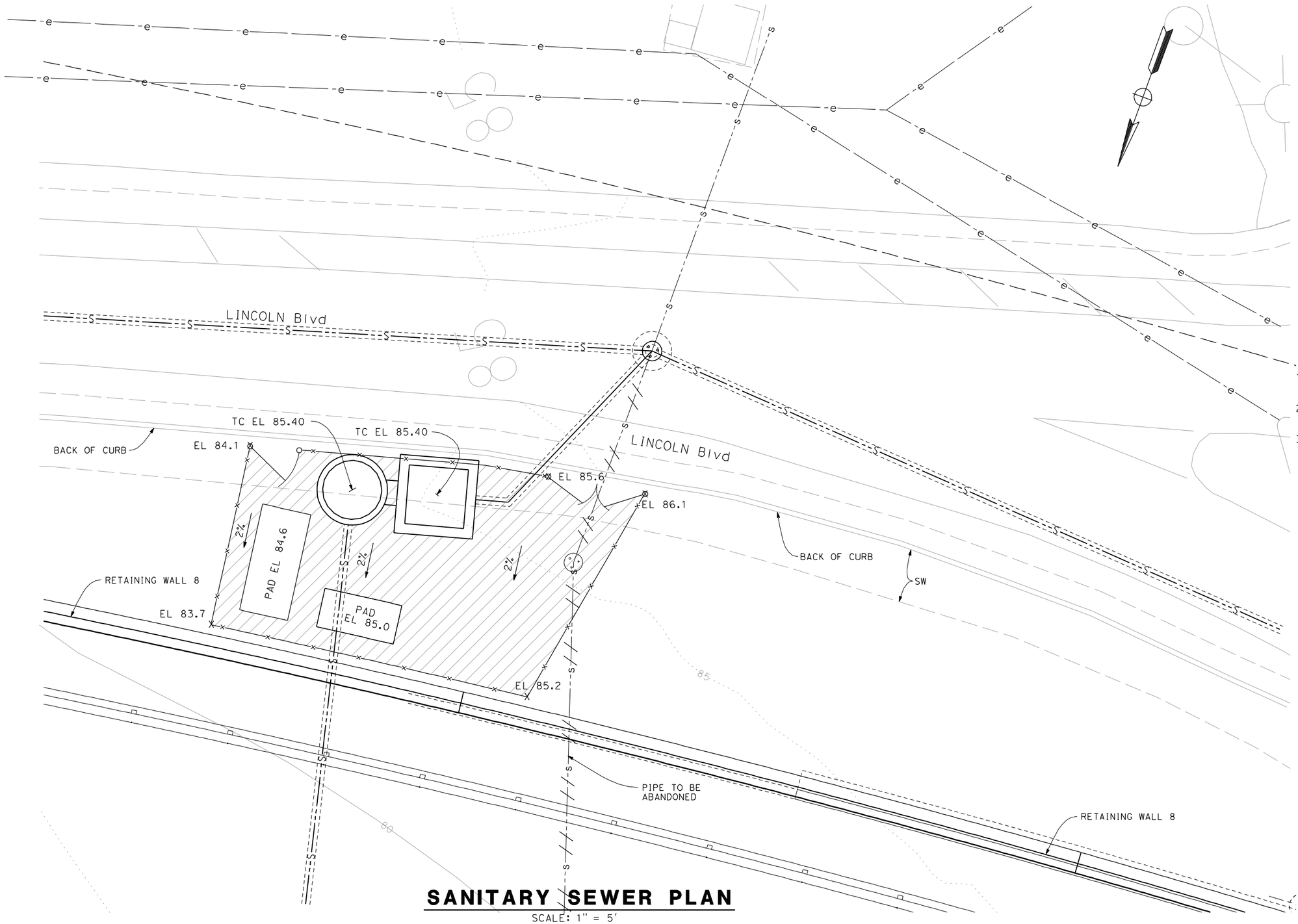

NOTES:

1. GRADE SITE AT 2% DOWN SLOPE BACK FROM TOP OF EXISTING CURB.
2. SET PAD ELEVATION A MINIMUM OF 6" ABOVE GRADE.
3. PROPOSED GRADE SHOWN ARE APPROXIMATE. FIELD CONDITIONS WILL DICTATE FINAL ELEVATIONS.

SANITARY SEWER PLAN

SCALE: 1" = 5'

PS G-1

DESIGN OVERSIGHT

SIGN OFF DATE

	BY	CHECKED
DESIGN		
DETAILS		
QUANTITIES		

PREPARED FOR THE STATE OF CALIFORNIA DEPARTMENT OF TRANSPORTATION

PROJECT ENGINEER

BRIDGE NO.

POST MILE

TEMPORARY SS PUMP STATION GRADING PLAN

DESIGN DETAIL SHEET (ENGLISH) (REV. 06-01-09)

ORIGINAL SCALE IN INCHES FOR REDUCED PLANS 0 1 2 3

CU
EA

DISREGARD PRINTS BEARING EARLIER REVISION DATES

REVISION DATES (PRELIMINARY STAGE ONLY) 04-23-10

SHEET OF

FILE => T:\13269 Doyle Dr GEC\Con2D\tssps-a-g01.dgn

USERNAME => contiller DATE PLOTTED => 4/23/2010 TIME PLOTTED => 9:59:28 AM

DIST	COUNTY	ROUTE	POST MILES TOTAL PROJECT	SHEET No	TOTAL SHEETS
04	SF	101, 1	9.0/9.8 6.8/7.1		

REGISTERED CIVIL ENGINEER — DATE 4/01/10

PLANS APPROVAL DATE

REGISTERED PROFESSIONAL ENGINEER — MARK GRODZKI — No. C65594 — Exp. 9/30/11 — CIVIL — STATE OF CALIFORNIA

The State of California or its officers or agents shall not be responsible for the accuracy or completeness of scanned copies of this plan sheet.

ARUP PB JV
303 2nd St, Suite 700 North
San Francisco, CA 94107-1317

SYMBOLS

(SEE ES-1A, ES-B AND ES-1C FOR ADDITIONAL CALTRANS STANDARD SYMBOLS)

LAYOUT PLAN

- 1,2,3... — Equipment or Material Designation A=Sequential description
- (1) — Sheet Notes, applicable only to the Drawing 1=Sequential number
- (J) — Junction Box, Conduit Fitting
- Electrical Equipment or Indicated on Plan Drawings
- Conduit turned up
- Conduit turned down
- Conduit or Cable run, exposed
- Conduit run concealed in wall, concrete barrier, slab or routed underground duct bank
- Flexible Conduit
- Ground Bare Copper Wire, Stranded
- Cable To Cable Ground Connections
- Cable Ground Connection to Equipment, Compression Type
- Cable with Pigtail Ground Connections (see plan for length)

ELEMENTARY/CONNECTION DIAGRAMS

- Bk, W — Signal Cable with Shield
- (M) or — Relay, Mechanical
  - M = Motor
  - C = Contactor
  - X = Auxiliary
  - R = Industrial
  - TD = Time Delay
- OL — Motor Starter Overload Relay Thermal Bimetallic Element (OL-Overload)
- ON/OFF Switch
- 6, 7 — Terminal Block
- Duplex Receptacle
- Cabinet Fluorescent Light
- INDICATES FIELD WIRING
- INDICATES LOCAL MOUNTED PANEL TERMINAL BLOCK

SINGLE LINE DIAGRAM

- 2500 kVA, 12.47 kV, 480 V — Transformer, Distribution, Dry Type
  - 12.47 kV = Delta Primary
  - 480 V = Wye Secondary
  - 2500 kVA = Size
- MCP — Combination Motor Starter
  - MCP = Motor Circuit Protector
- 30 A — Safety Switch, 30 A = Frame Size
- (3) — Rotating Motor, 3 = HP Rating
- 50 AT / 150 AF — Molded Case Circuit Breaker
  - 50 AT = Trip Rating
  - 150 AF = Frame Size
- Package Equipment or Panelboard
- 50 — Fuse, A sized indicated
- Three Single #4 AWG and one #6 AWG — 3-#4 AWG + #6 G

GENERAL NOTES

1. Conduit routing is diagrammatic. Pull box locations shall be located as shown on plan drawings. The Contractor shall provide additional pull boxes as required. Exact locations of equipment and devices may be adjusted depending on field conditions as directed by Engineer.
2. Minimum size of conduits shall be ¾". Conduits shall be rigid galvanized steel (RGS) unless noted otherwise. Exposed conduits are RGS, PVC coated.
3. Conduit 90° elbows for 3" conduits and larger shall have a 2 ft minimum bending radius.
4. All conduits, including spares, shall be provided with pull wires prior to cable installations.
5. All equipment and devices shall be provided with nameplate tags per drawings.
6. All 480 V/120V circuits shall be provided with ground wire for equipment bonding.
7. Contractor shall label all conductors and cables per wiring diagrams.
8. All electrical sheets are accurate for electrical work only.

DESCRIPTION

1. The incoming power feeder is wired through a manually-operated fused main disconnect switch, at 480 Volt 3-phase. Station energy is totaled by a KWHr meter.
2. The system is duplex with two pumps, 7-1/2 hp each, alternating in service. Normal operation uses only one pump. Two pumps come on in tandem for large flows. The control panel uses individual HOA (hand-off-auto) switches and has indicating lights for operation. A PLC is used for control functions, logging, and operations display. Pumps can be operated locally manually for periodic cleaning (snoring), testing. Each pump running draws approximately 11 A at 480 V, three-phase.
3. A panel-top alarm dome light is used to show a general station alarm, indicating that operator attention is required. Alarm conditions are also telephone reported by the auto-dialer.
4. An automatic transfer switch (ATS) will switch to gen-set power (standby rated 27.5 kVA) after a pre-set time delay, upon loss of utility.
5. The stand-by diesel engine-generator set will automatically start and run for operation of both pumps during a sustained utility power outage. A timing delay before starting is required to remain outside of the typical utility reclosing time window (may be up to 90 seconds). If the generator fails to start and transfer, a relay will actuate in the ATS and send the auto-dialer an alert for loss of power. Fuel tank capacity will allow for approximately 50+ hours of single pump operation. The fuel system will require periodic maintenance for re-filling. Alarm conditions will include high sump level (ultrasonic transducer), and two redundant float switches, and loss of power (generator failure to run). The telephone auto-dialer calls selected numbers with specific messages to announce the various alarms.
6. An ultrasonic detector furnishes pit water level information to the PLC. The lowest level is for "all pumps off". The second higher level is to turn on the first pump "lead pump on", pumps alternate in operation after shutting down. Ordinary lift station cycling operation is performed between the lowest two levels. The next higher level turns the "lag pump on", both pumps will be running. This happens when the inflow rate becomes greater than the capacity of a single pump. The fourth and highest level is set to indicate "high water alarm". This is the most important indication of lift station trouble; immediate attention is needed when this alarm comes in. Separate float switches are wired into the PLC for backup/redundant reporting of levels. The auto-dialer will independently report loss of power after 5 minutes. Failure of the PLC will allow for pump operation, additional redundancy.
7. The control panel at the site is equipped with indicators to provide operating information including such items as pump run lights, level readings, motor moisture intrusion, and pump motor overload. The stand-by generator panel is similarly equipped with status indicators and meter readings.
8. The lift station and its component parts need regular inspection and/or maintenance. Unattended, automatic station operation is the design intent.
9. A separate transformer is used to provide local site/service power to a 20 A GFI receptacle.

ABBREVIATIONS

A, AMP	Ampere
AC	Alternating Current
AF	Ampere Frame Rating
AHJ	Authority Having Jurisdiction
AT	Ampere Trip Rating
ATS	Automatic Transfer switch
AUX	Auxiliary
BKR	Breaker
COM	Communication
CPT/CCT	Control Power Transformer
CS	Control Switch
CU	Copper
DPDT	Double Pole Double Throw
DC	Direct Current
DISC, Disc	Disconnect
FLA	Full Load Amp
G, GND, Gnd	Ground
GEN	Generator Set
RGS	Rigid Galvanized Steel
HP	Horse Power
IND, Ind	Indication
JB	Junction Box
kcmil	Kilo Circular Mil
kV	Kilovolt
kW	Kilowatt
kWHR	Kilowatt Hour Meter
kVA	KiloVolt Ampere
MTR	Motor
PH	Phase
PWR	Power
PLC	Programmable Logic Controller
PVC	Polyvinyl Chloride Coated
SW	Switch
TELCO	Telephone System
TB	Terminal Box
UG	Underground
V	Volt
VAC	Volts Alternating Current
WP	Weatherproof
XFMR	Transformer

PS E-1

DESIGN OVERSIGHT

SIGN OFF DATE

	BY	CHECKED
DESIGN		
DETAILS		
QUANTITIES		

PREPARED FOR THE STATE OF CALIFORNIA DEPARTMENT OF TRANSPORTATION

PROJECT ENGINEER

BRIDGE NO.

POST MILE

TEMPORARY SS PUMP STATION
ELECTRICAL GENERAL NOTES

DESIGN DETAIL SHEET (ENGLISH) (REV. 06-01-09)

ORIGINAL SCALE IN INCHES FOR REDUCED PLANS 0 1 2 3

CU
EA

DISREGARD PRINTS BEARING EARLIER REVISION DATES

REVISION DATES (PRELIMINARY STAGE ONLY)

SHEET OF

FILE => $REQUEST

USERNAME => $USER DATE PLOTTED => $DATE TIME PLOTTED => $TIME

DIST	COUNTY	ROUTE	POST MILES TOTAL PROJECT	SHEET No	TOTAL SHEETS
04	SF	101, 1	9.0/9.8 6.8/7.1		

Eric C. Roseen 4/01/10
REGISTERED ELECTRICAL ENGINEER DATE

REGISTERED PROFESSIONAL ENGINEER
ERIC ROSEEN
No. E-7944
Exp. 9-30-10
ELECTRICAL
STATE OF CALIFORNIA

PLANS APPROVAL DATE

The State of California or its officers or agents shall not be responsible for the accuracy or completeness of scanned copies of this plan sheet.

ARUP PB JV
303 2nd St, Suite 700 North
San Francisco, CA 94107-1317

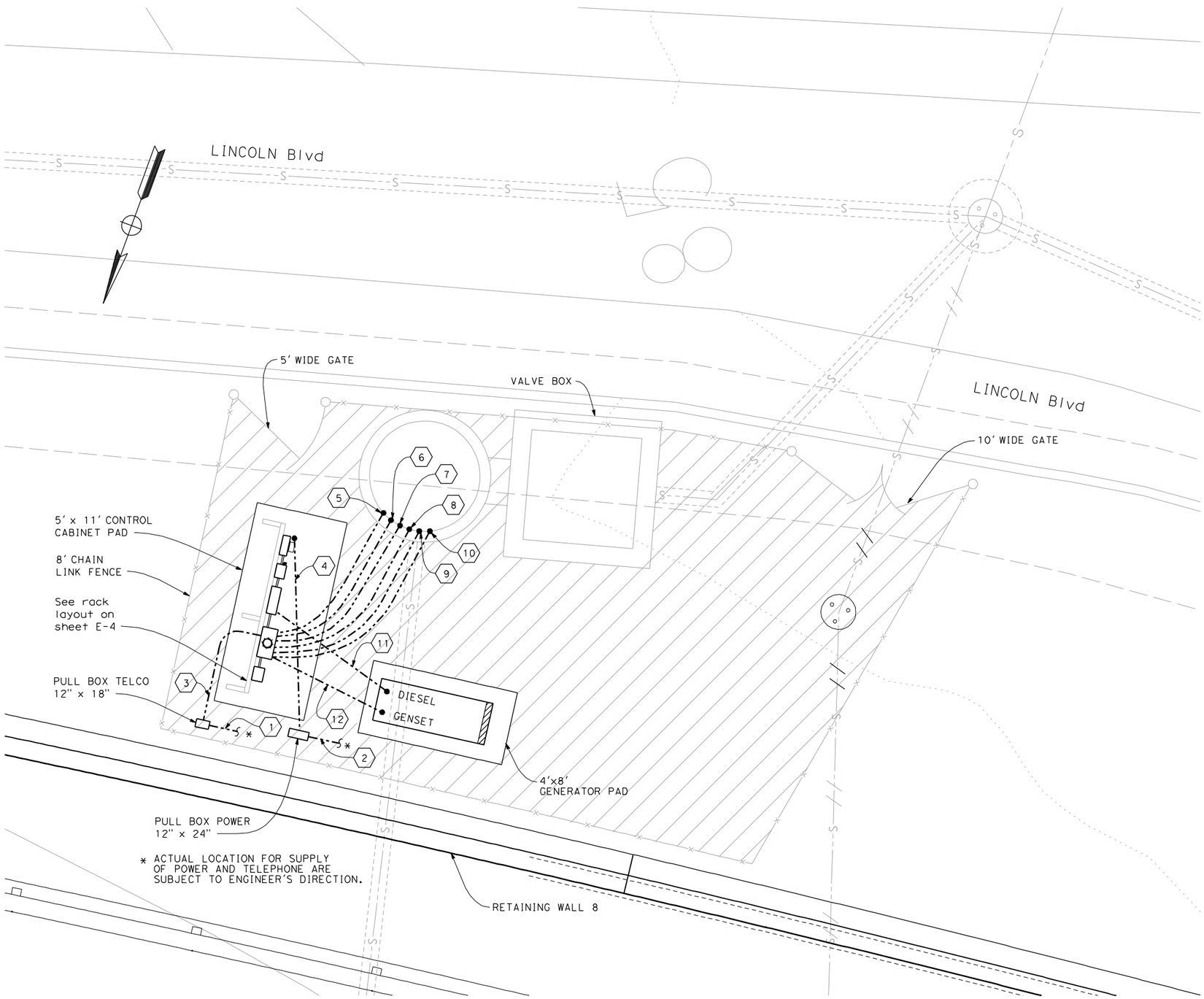

NOTES:

1. Exposed conduits shall be PVC coated RGS. On-site UG conduit is RGS.
2. Conduits in pipe sleeves, or in pit shall be stainless steel, see detail sheet E-7.
3. Equip pullboxes with traffic rated covers.
4. Conduit stub-ups shall be wrapped, with pvc tape if passing through concrete.

SHEET NOTES:

1. 4" PVC, SCH. 40; 4 PR. CAT 3 TELCO Cable
2. 4" PVC, SCH. 40; 4-#6 AWG + #8 GND
3. 1" PVC, SCH. 40; 4 PR. CAT 3 TELCO Cable
4. 1½" C; 4-#6 AWG + #8 G
5. 1" C; Two cords with two float switches, intrinsically safe
6. 1" C; Cord with ultrasonic transducer
7. 1" C; Signal cord to pump motor #1
8. 1" C; Signal cord to pump motor #2
9. 1½" C; Power cord to pump motor #1 See Sheet E-7 for other routing options
10. 1½" C; Power cord to pump motor #2 See Sheet E-7 for other routing options
11. 1½" C; 4-#6 AWG + #8 G
12. 1" C; 2-#14 + #14 G

PS E-2

DESIGN OVERSIGHT

SIGN OFF DATE

	BY	CHECKED
DESIGN	ER	FSW
DETAILS		
QUANTITIES		

PREPARED FOR THE STATE OF CALIFORNIA DEPARTMENT OF TRANSPORTATION

PROJECT ENGINEER

BRIDGE NO.

POST MILE

TEMPORARY SS PUMP STATION SITE/CONDUIT PLAN

DESIGN DETAIL SHEET (ENGLISH) (REV. 06-01-09)

ORIGINAL SCALE IN INCHES FOR REDUCED PLANS 0 1 2 3

CU
EA

DISREGARD PRINTS BEARING EARLIER REVISION DATES

REVISION DATES (PRELIMINARY STAGE ONLY) 04-23-10

SHEET OF

FILE => T:\13269 Doyle Dr GEC\Con2D\tssps-a-elec02.dgn

USERNAME => cantiller DATE PLOTTED => 4/23/2010 TIME PLOTTED => 10:06:45 AM

DIST	COUNTY	ROUTE	POST MILES TOTAL PROJECT	SHEET No	TOTAL SHEETS
04	SF	101, 1	9.0/9.8 6.8/7.1		

Eric C. Roseen 4/01/10
REGISTERED ELECTRICAL ENGINEER DATE

REGISTERED PROFESSIONAL ENGINEER
ERIC ROSEEN
No. E-7944
Exp. 9-30-10
ELECTRICAL
STATE OF CALIFORNIA

PLANS APPROVAL DATE

The State of California or its officers or agents shall not be responsible for the accuracy or completeness of scanned copies of this plan sheet.

ARUP PB JV
303 2nd St, Suite 700 North
San Francisco, CA 94107-1317

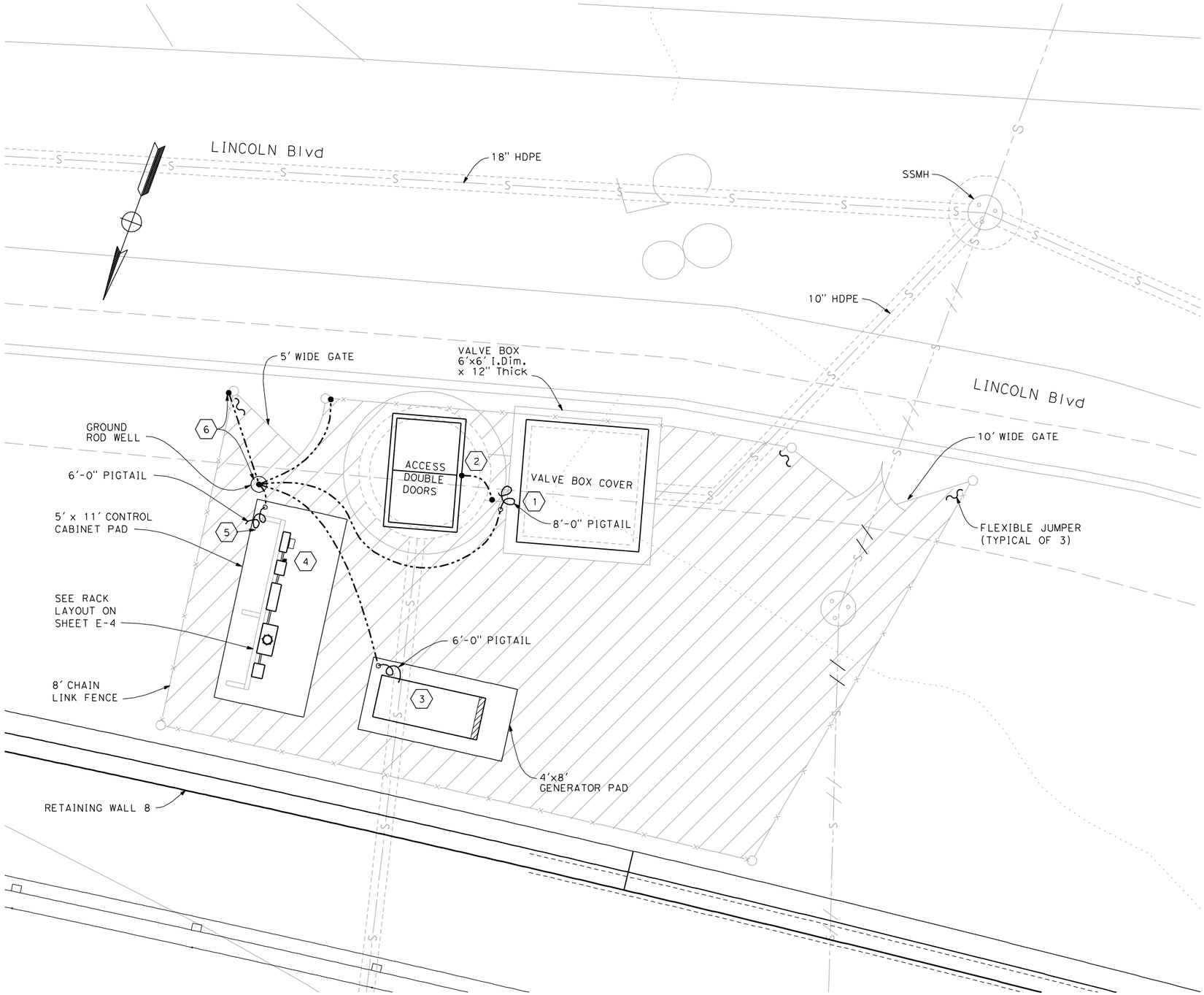

NOTES:

1. COVERED GROUND WELL USES 1-3/4" x 10' COPPER CLAD STEEL DRIVEN ROD.
2. ALL CONNECTIONS USE STANDARD CLAMP FROM GROUND ROD TO #4 AWG BARE SOFT COPPER WIRE.
3. MOVABLE GATE SECTIONS ARE CONNECTED BY FLEXIBLE JUMPERS, MINIMUM EQUIVALENT #4 AWG CROSS SECTIONAL AREA.
4. POST CLAMPS CONNECT #4 AWG TO STEEL FENCE POSTS.

SHEET NOTES:

(1) PIGTAIL CONNECTS TO STEEL DISCHARGE PIPING WITH CLAMP.

(2) WET WELL ACCESS DOORS TO BE GROUND BONDED TO INSIDE STEEL PIPING FOR SAFETY, USE MIN. #6 AWG HIGHLY FLEXIBLE STRANDED CONDUCTOR.

(3) GENERATOR NEUTRAL AND FRAME SHALL BE SOLIDLY CONNECTED TO THE STATION GROUNDING SYSTEM PIGTAIL.

(4) NEUTRAL OF INCOMING UTILITY POWER SERVICE TO BE SOLIDLY GROUNDED INSIDE MAIN SAFETY DISCONNECT SWITCH.

(5) COMPONENT SUPPORT RACK TO BE SOLIDLY BONDED TO GROUNDING SYSTEM.

(6) GROUND ROD WELL AND FENCE BONDING TO GROUND SYSTEM SHOWN ON DETAILS SHEET E-8.

PS E-3

DESIGN OVERSIGHT
SIGN OFF DATE

	BY	CHECKED
DESIGN	ER	FSW
DETAILS		
QUANTITIES		

PREPARED FOR THE
STATE OF CALIFORNIA
DEPARTMENT OF TRANSPORTATION

PROJECT ENGINEER

BRIDGE NO.
POST MILE

TEMPORARY SS PUMP STATION
GROUNDING PLAN

DESIGN DETAIL SHEET (ENGLISH) (REV. 06-01-09)

ORIGINAL SCALE IN INCHES FOR REDUCED PLANS 0 1 2 3

CU
EA

DISREGARD PRINTS BEARING EARLIER REVISION DATES

REVISION DATES (PRELIMINARY STAGE ONLY) 04-23-10

SHEET OF

FILE => T:\13269 Doyle Dr GEC\Con2D\tssps-a-elec03.dgn

USERNAME => contiller DATE PLOTTED => 4/23/2010 TIME PLOTTED => 10:08:28 AM

DIST	COUNTY	ROUTE	POST MILES TOTAL PROJECT	SHEET No	TOTAL SHEETS
04	SF	101, 1	9.0/9.8 6.8/7.1		

Eric C. Roseen 4/01/10
REGISTERED ELECTRICAL ENGINEER DATE

PLANS APPROVAL DATE

REGISTERED PROFESSIONAL ENGINEER
ERIC ROSEEN
No. E-7944
Exp. 9-30-10
ELECTRICAL
STATE OF CALIFORNIA

The State of California or its officers or agents shall not be responsible for the accuracy or completeness of scanned copies of this plan sheet.

ARUP PB JV
303 2nd St, Suite 700 North
San Francisco, CA 94107-1317

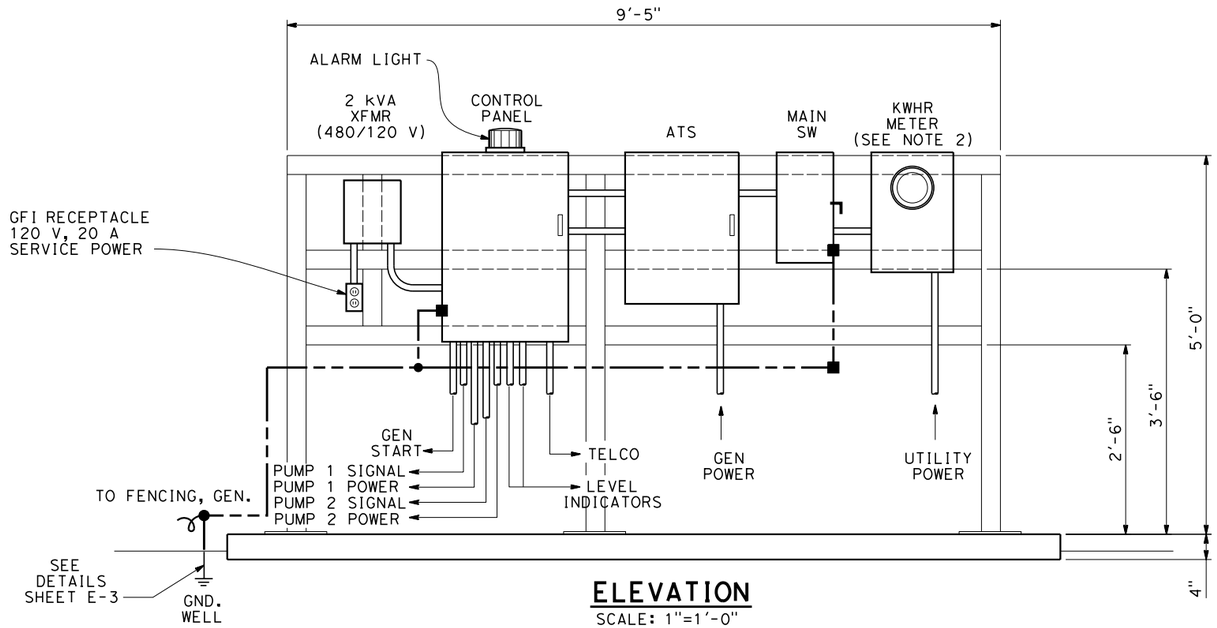

ELEVATION

SCALE: 1"=1'-0"

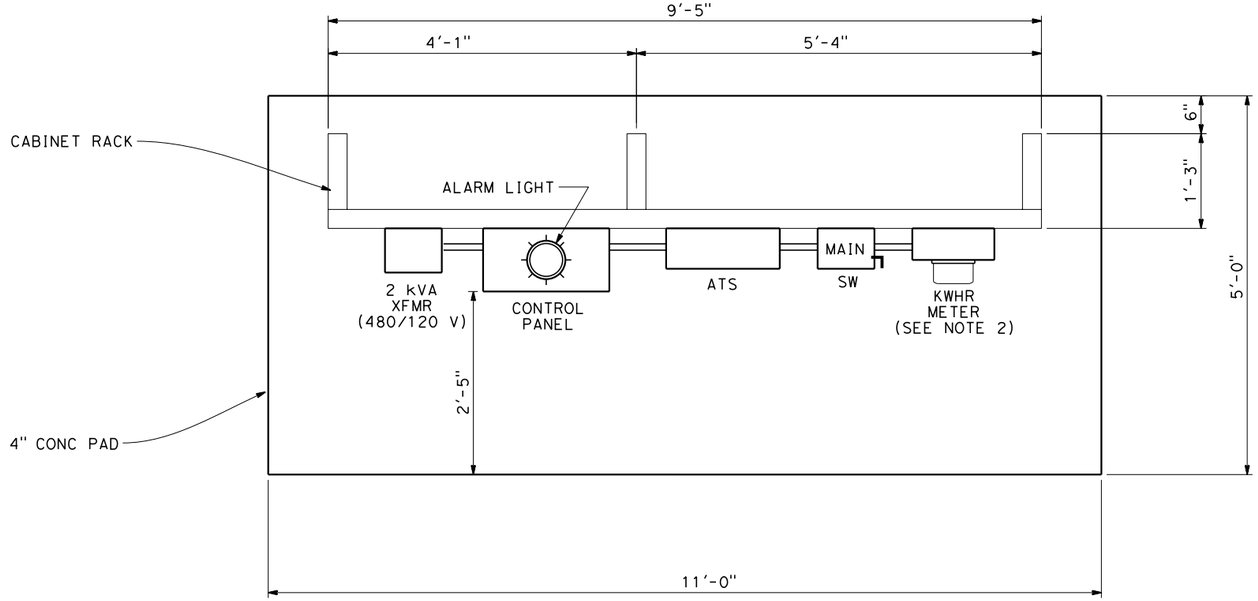

PLAN

SCALE: 1"=1'-0"

NOTES:

1. CONDUITS SHOWN ARE NOT SHOWN TO SCALE, SEE SHEET E-2 FOR SIZES.
2. UTILITY POWER AND KWHR METERING REQUIREMENTS ARE UNDER THE AHJ, LOCAL AUTHORITY HAVING JURISDICTION.
3. EQUIPMENT AND CABINET DIMENSIONS SHOWN ARE APPROXIMATE. MANUFACTURED ASSEMBLIES MAY VARY SLIGHTLY. CONTRACTOR TO ADJUST FIT ACCORDINGLY.

PS E-4

DESIGN OVERSIGHT

SIGN OFF DATE

	BY	CHECKED
DESIGN	ER	FSW
DETAILS		
QUANTITIES		

PREPARED FOR THE STATE OF CALIFORNIA DEPARTMENT OF TRANSPORTATION

PROJECT ENGINEER

BRIDGE NO.

POST MILE

TEMPORARY SS PUMP STATION EQUIPMENT LAYOUT

DESIGN DETAIL SHEET (ENGLISH) (REV. 06-01-09)

ORIGINAL SCALE IN INCHES FOR REDUCED PLANS 0 1 2 3

CU
EA

DISREGARD PRINTS BEARING EARLIER REVISION DATES

REVISION DATES (PRELIMINARY STAGE ONLY)

SHEET OF

FILE => $REQUEST

USERNAME => $USER DATE PLOTTED => $DATE TIME PLOTTED => $TIME

DIST	COUNTY	ROUTE	POST MILES TOTAL PROJECT	SHEET No	TOTAL SHEETS
04	SF	101, 1	9.0/9.8 6.8/7.1		

Eric C. Roseen 4/01/10
REGISTERED ELECTRICAL ENGINEER DATE

PLANS APPROVAL DATE

REGISTERED PROFESSIONAL ENGINEER
ERIC ROSEEN
No. E-7944
Exp. 9-30-10
ELECTRICAL
STATE OF CALIFORNIA

The State of California or its officers or agents shall not be responsible for the accuracy or completeness of scanned copies of this plan sheet.

ARUP PB JV
303 2nd St, Suite 700 North
San Francisco, CA 94107-1317

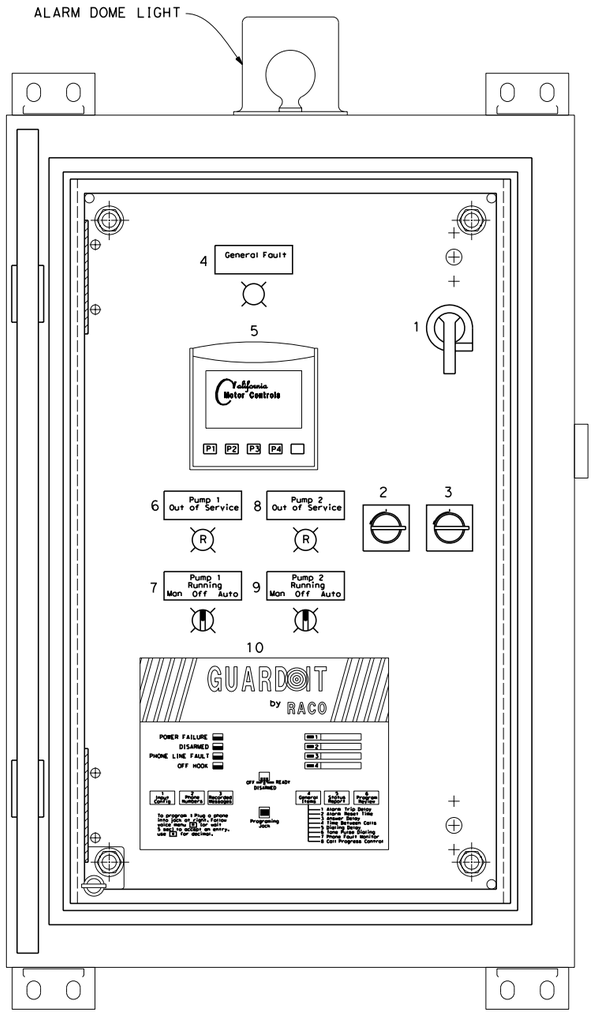

OUTER DOOR OPEN

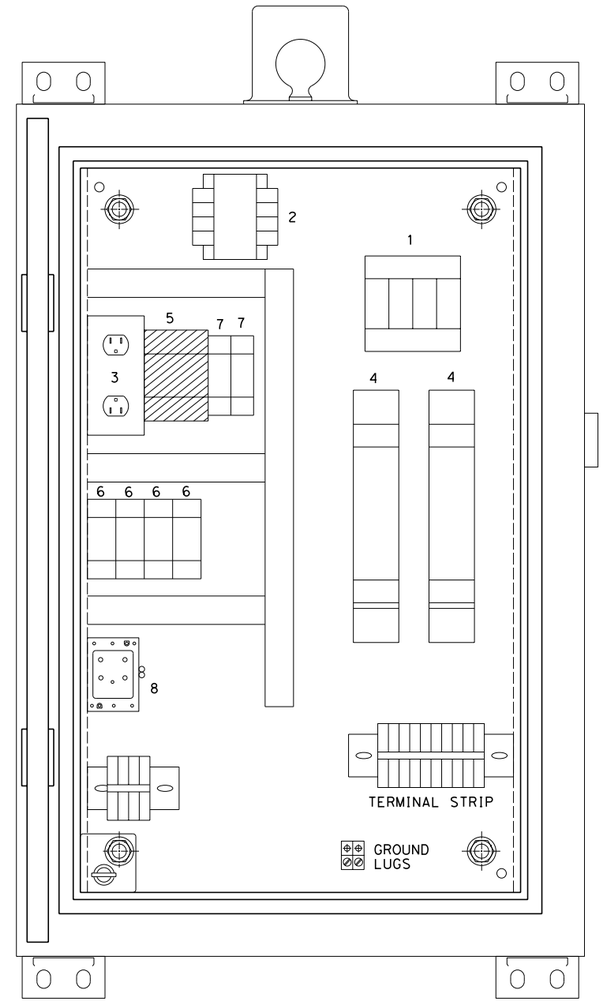

INNER DOOR OPEN

REF	COMPONENT	NAMEPLATE
1	MAIN DISCONNECT SWITCH	PUMP POWER DISCONNECT
2	INTEGRATED STARTER HANDLE (MS1)	
3	INTEGRATED STARTER HANDLE (MS2)	
4	7/8", LIGHT, RED	GENERAL FAULT
5	PUMP VISION TOUCHSCREEN PLC	
6	7/8", LIGHT, RED	PUMP 1 OUT OF SERVICE
7	7/8", H-O-A SW-ILLUMINATED, GREEN	PUMP1 RUNNING HAND OFF AUTO
8	7/8", LIGHT, RED	PUMP 2 OUT OF SERVICE
9	7/8", H-O-A SW-ILLUMINATED, GREEN	PUMP 2 RUNNING HAND OFF AUTO
10	AUTODIALER	

REF	COMPONENT	NAMEPLATE
1	30A MAIN DISCONNECT	DSI
2	TRANSFORMER: 480V:120V, 150 VA	CCT
3	OUTLET, INTERNAL USE	
4	12A INTEGRATED STARTER	MS1, MS2
5	24V DC POWER SUPPLY	PS
6	CONTROL RELAYS	CR1, 2, 3, 4, 5, 6
7	MOISTURE RELAY	SFR1, SFR2
8	INTRINSICALLY SAFE RELAY	ISR

NOTE:

1. LAYOUT OF PANEL IN ACCORDANCE WITH THE MANUFACTURERS SUBMITTAL DRAWING.

PS E-5

DESIGN OVERSIGHT

SIGN OFF DATE

	BY	CHECKED
DESIGN	ER	FSW
DETAILS		
QUANTITIES		

PREPARED FOR THE STATE OF CALIFORNIA DEPARTMENT OF TRANSPORTATION

PROJECT ENGINEER

BRIDGE NO.

POST MILE

TEMPORARY SS PUMP STATION DUPLEX PUMP CONTROL PANEL

DESIGN DETAIL SHEET (ENGLISH) (REV. 06-01-09)

ORIGINAL SCALE IN INCHES FOR REDUCED PLANS 0 1 2 3

CU
EA

DISREGARD PRINTS BEARING EARLIER REVISION DATES

REVISION DATES (PRELIMINARY STAGE ONLY)

SHEET OF

FILE => $REQUEST

USERNAME => $USER DATE PLOTTED => $DATE TIME PLOTTED => $TIME

DIST	COUNTY	ROUTE	POST MILES TOTAL PROJECT	SHEET No	TOTAL SHEETS
04	SF	101, 1	9.0/9.8 6.8/7.1		

Eric C. Roseen 4/01/10
REGISTERED ELECTRICAL ENGINEER DATE

PLANS APPROVAL DATE

REGISTERED PROFESSIONAL ENGINEER ERIC ROSEEN No. E-7944 Exp. 9-30-10 ELECTRICAL STATE OF CALIFORNIA

The State of California or its officers or agents shall not be responsible for the accuracy or completeness of scanned copies of this plan sheet.

ARUP PB JV
303 2nd St, Suite 700 North
San Francisco, CA 94107-1317

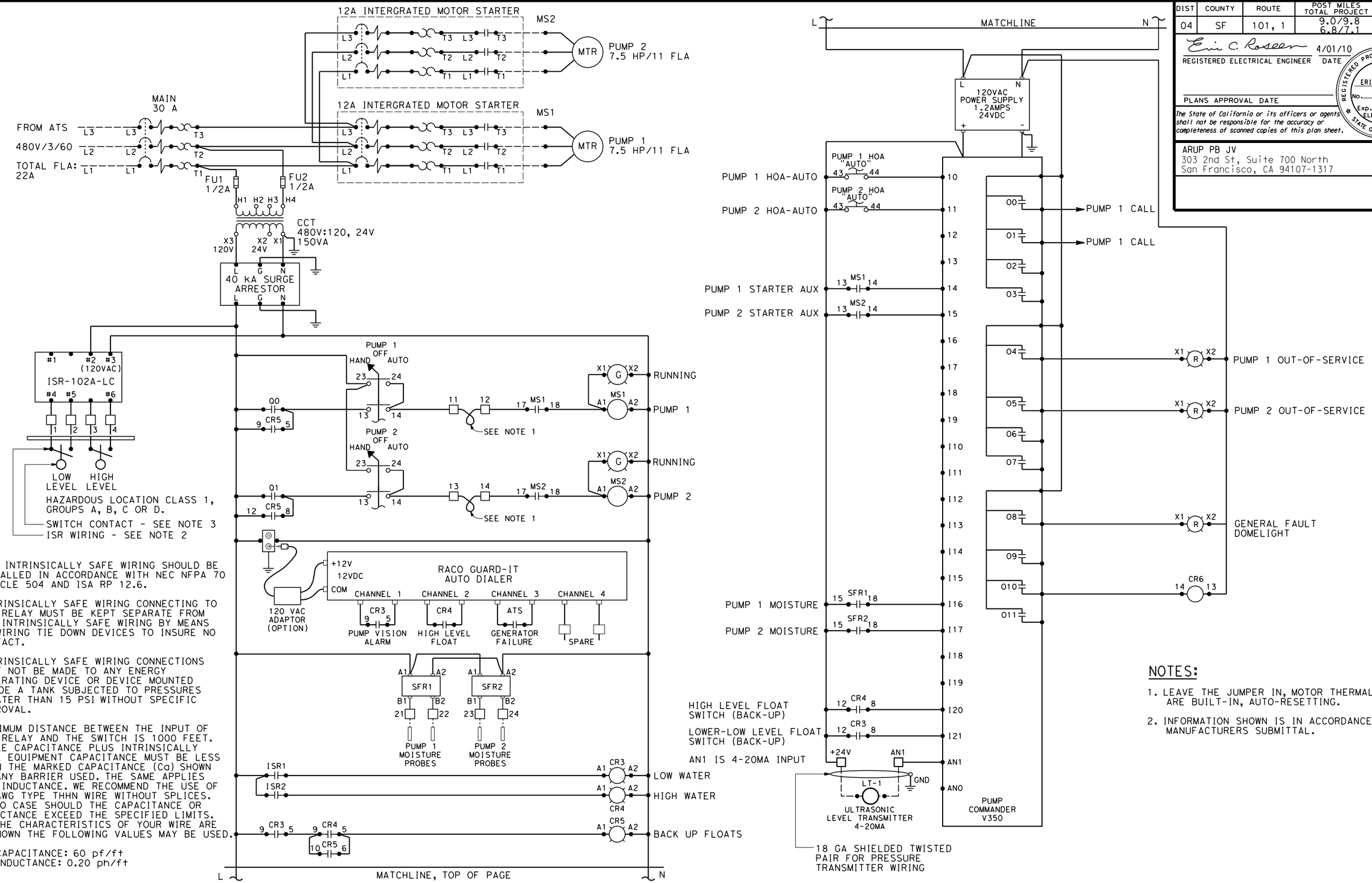

NOTE:

1. ALL INTRINSICALLY SAFE WIRING SHOULD BE INSTALLED IN ACCORDANCE WITH NEC NFPA 70 ARTICLE 504 AND ISA RP 12.6.
2. INTRINSICALLY SAFE WIRING CONNECTING TO THE RELAY MUST BE KEPT SEPARATE FROM NON-INTRINSICALLY SAFE WIRING BY MEANS OF WIRING TIE DOWN DEVICES TO INSURE NO CONTACT.
3. INTRINSICALLY SAFE WIRING CONNECTIONS MUST NOT BE MADE TO ANY ENERGY GENERATING DEVICE OR DEVICE MOUNTED INSIDE A TANK SUBJECTED TO PRESSURES GREATER THAN 15 PSI WITHOUT SPECIFIC APPROVAL.
4. MAXIMUM DISTANCE BETWEEN THE INPUT OF THE RELAY AND THE SWITCH IS 1000 FEET. CABLE CAPACITANCE PLUS INTRINSICALLY SAFE EQUIPMENT CAPACITANCE MUST BE LESS THAN THE MARKED CAPACITANCE (Ca) SHOWN ON ANY BARRIER USED. THE SAME APPLIES FOR INDUCTANCE. WE RECOMMEND THE USE OF 14 AWG TYPE THHN WIRE WITHOUT SPLICES. IN NO CASE SHOULD THE CAPACITANCE OR INDUCTANCE EXCEED THE SPECIFIED LIMITS. IF THE CHARACTERISTICS OF YOUR WIRE ARE UNKNOWN THE FOLLOWING VALUES MAY BE USED.

CAPACITANCE: 60 pf/ft
INDUCTANCE: 0.20 ph/ft

NOTES:

1. LEAVE THE JUMPER IN, MOTOR THERMAL CUTOUTS ARE BUILT-IN, AUTO-RESETTING.
2. INFORMATION SHOWN IS IN ACCORDANCE WITH MANUFACTURERS SUBMITTAL.

PS E-6

DESIGN	BY ER	CHECKED FSW	
DETAILS	BY	CHECKED	
QUANTITIES	BY	CHECKED	

DESIGN OVERSIGHT
SIGN OFF DATE

PREPARED FOR THE STATE OF CALIFORNIA DEPARTMENT OF TRANSPORTATION

PROJECT ENGINEER

BRIDGE NO.
POST MILE

TEMPORARY SS PUMP STATION CONTROL WIRING/CONNECTIONS

DESIGN DETAIL SHEET (ENGLISH) (REV. 06-01-09)

ORIGINAL SCALE IN INCHES FOR REDUCED PLANS 0 1 2 3

CU
EA

DISREGARD PRINTS BEARING EARLIER REVISION DATES

REVISION DATES (PRELIMINARY STAGE ONLY) SHEET OF

FILE => $REQUEST

USERNAME => $USER DATE PLOTTED => $DATE TIME PLOTTED => $TIME

DIST	COUNTY	ROUTE	POST MILES TOTAL PROJECT	SHEET No	TOTAL SHEETS
04	SF	101, 1	9.0/9.8 6.8/7.1		

Eric C. Roseen 4/01/10
REGISTERED ELECTRICAL ENGINEER DATE

PLANS APPROVAL DATE

REGISTERED PROFESSIONAL ENGINEER
ERIC ROSEEN
No. E-7944
Exp. 9-30-10
ELECTRICAL
STATE OF CALIFORNIA

The State of California or its officers or agents shall not be responsible for the accuracy or completeness of scanned copies of this plan sheet.

ARUP PB JV
303 2nd St, Suite 700 North
San Francisco, CA 94107-1317

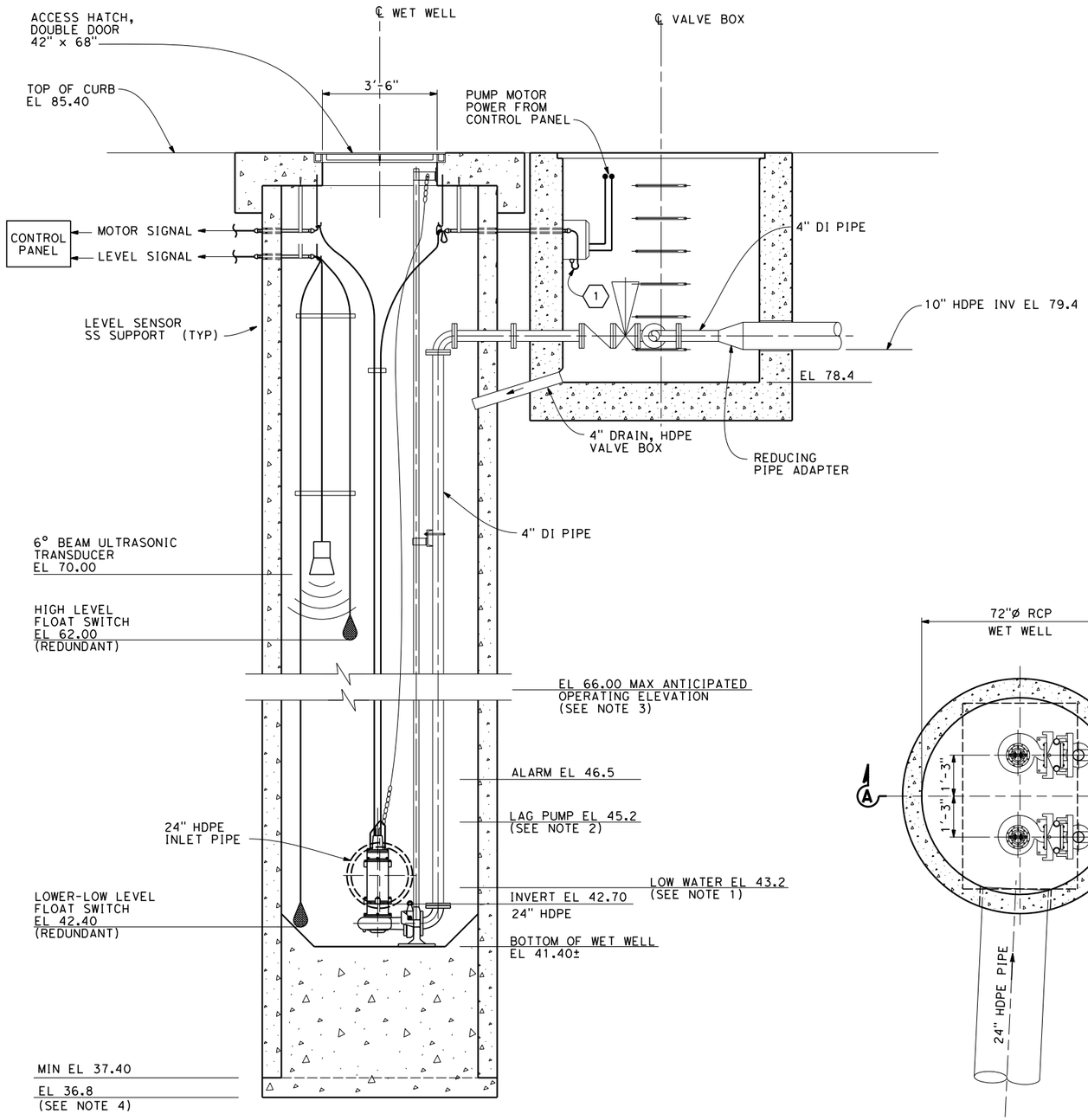

SECTION A-A

SCALE: ½" = 1'-0"

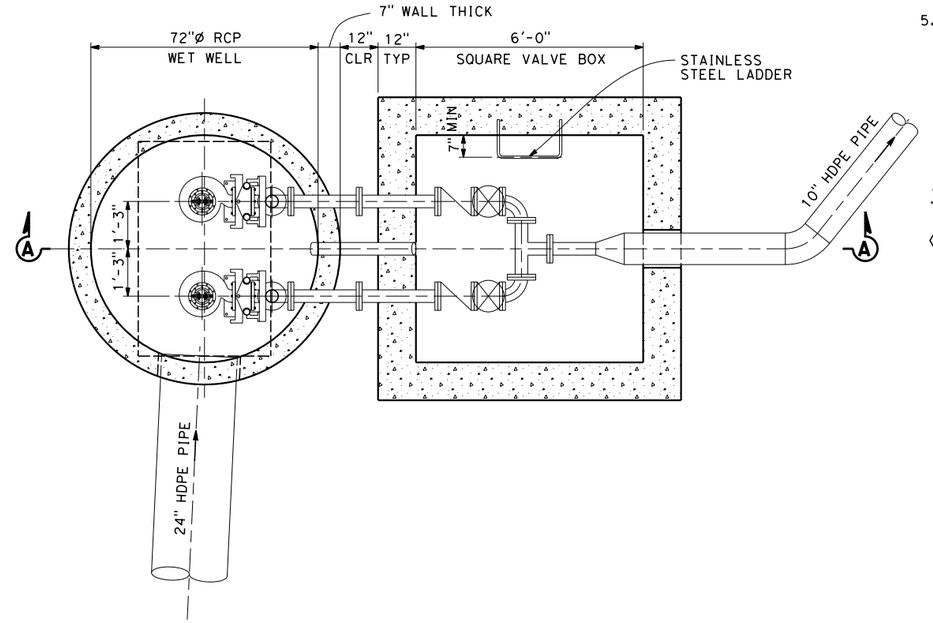

LIFT STATION PUMP PLAN

SCALE: ½" = 1'-0"

NOTES:

1. LOW WATER ELEVATION IS 43.2'. BELOW ELEVATION 43.2' NO PUMPS WILL OPERATE. ABOVE ELEVATION 43.2' THE LEAD PUMP WILL TURN ON. ELEVATION 43.2 IS 0.5 FEET ABOVE THE INVERT OF THE 24" PIPE INLET PIPE. PLACING THE INLET AT ELEVATION 43.5' WILL ALLOW FOR A MIN. INFLOW OF 0.5 FEET WITHOUT CONTINUOUSLY RECYLING LEAD PUMP.
2. LOW WATER ELEVATION FOR LAG PUMP IS 45.2'. BELOW ELEVATION 45.2' ONLY THE LEAD PUMP WILL OPERATE. ABOVE ELEVATION 45.2' THE LAG PUMP WILL TURN ON AND BOTH PUMPS WILL OPERATE.
3. THE MAX. OPERATING ELEVATION IS 66.0'. IN ORDER TO ALLOW SOME OPERATIONAL FLEXIBILITY, THE HIGH ALARM FROM THE ULTRASONIC TRANSDUCER WILL BE SET TO 46.5' ELEVATION. THE HIGH LEVEL FLOAT SWITCH (REDUNDANT) WILL BE LOCATED TO ALARM AT 62.0' ELEVATION. THE SETTINGS ARE ADJUSTABLE VIA THE PLC.
4. THE BOTTOM OF THE CONCRETE IN THE SUMP WILL BE EXCAVATED 0.6 FOOT BELOW THE BOTTOM OF THE 72" CONCRETE PIPE. THE OBJECTIVE IS TO KEY THE BACKFILL CONCRETE UNDER THE PIPE.
5. SEAL FITTINGS ARE REQUIRED ON THE CONDUITS THAT SERVE THE PIT (WET WELL).

SHEET NOTES:

(1) THE POWER CORDS (ALSO CONTROL CORDS) FROM THE PUMP MOTORS SHALL BE CONTINUOUS, WITHOUT SPLICING OR TERMINATING, INTO THE CONTROL PANEL. TRANSDUCER WIRING ALSO SHALL BE CONTINUOUS. POWER CORD LOCATIONS CAN BE RE-ARRANGED DEPENDING ON FIELD CONDITIONS OR AS DIRECTED BY ENGINEER.

PS E-7.

DESIGN OVERSIGHT
SIGN OFF DATE

	BY	CHECKED
DESIGN	ER	FSW
DETAILS		
QUANTITIES		

PREPARED FOR THE STATE OF CALIFORNIA DEPARTMENT OF TRANSPORTATION

PROJECT ENGINEER

BRIDGE NO.
POST MILE

TEMPORARY SS PUMP STATION SECTION DETAILS

DESIGN DETAIL SHEET (ENGLISH) (REV. 06-01-09)

ORIGINAL SCALE IN INCHES FOR REDUCED PLANS 0 1 2 3

CU
EA

DISREGARD PRINTS BEARING EARLIER REVISION DATES

REVISION DATES (PRELIMINARY STAGE ONLY) SHEET OF

FILE => $REQUEST

USERNAME => $USER DATE PLOTTED => $DATE TIME PLOTTED => $TIME

DIST	COUNTY	ROUTE	POST MILES TOTAL PROJECT	SHEET No	TOTAL SHEETS
04	SF	101, 1	9.0/9.8 6.8/7.1		

Eric C. Roseen 4/01/10
REGISTERED ELECTRICAL ENGINEER DATE

PLANS APPROVAL DATE

REGISTERED PROFESSIONAL ENGINEER ERIC ROSEEN No. E-7944 Exp. 9-30-10 ELECTRICAL STATE OF CALIFORNIA

The State of California or its officers or agents shall not be responsible for the accuracy or completeness of scanned copies of this plan sheet.

ARUP PB JV
303 2nd St, Suite 700 North
San Francisco, CA 94107-1317

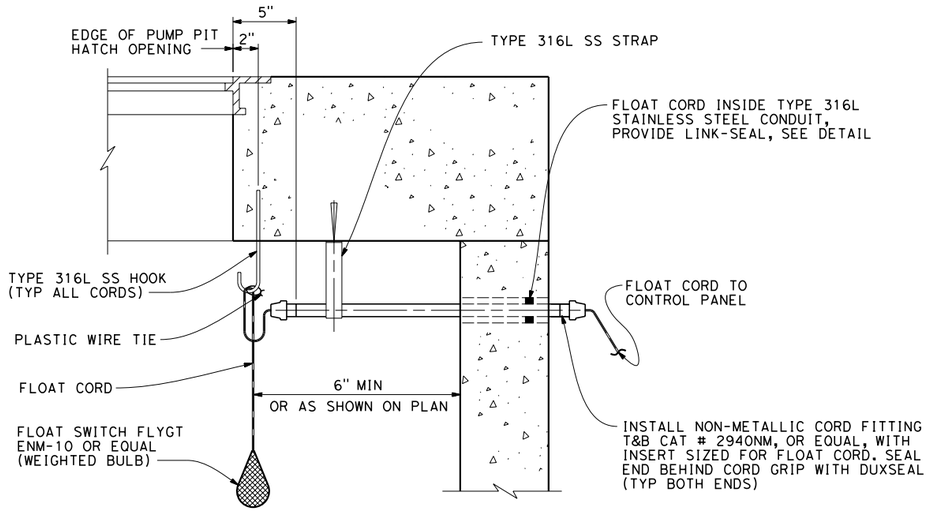

FLOAT SWITCH MOUNTING

NOT TO SCALE

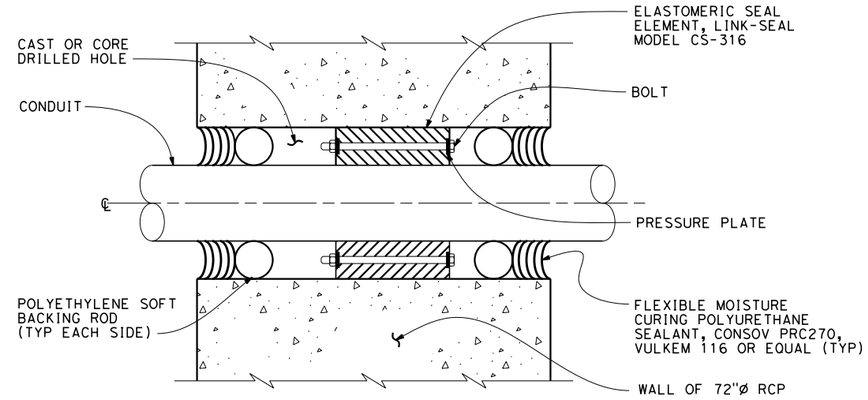

LINKSEAL DETAIL

NOT TO SCALE

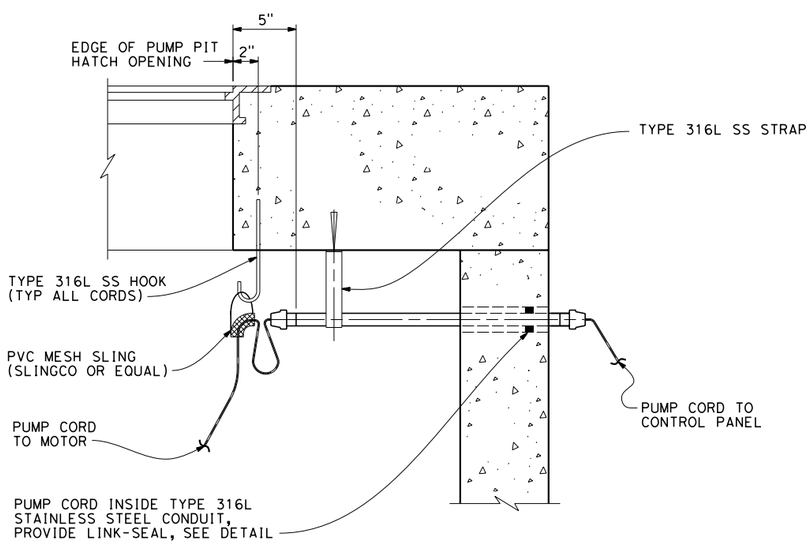

PUMP CORD MOUNTING

NOT TO SCALE

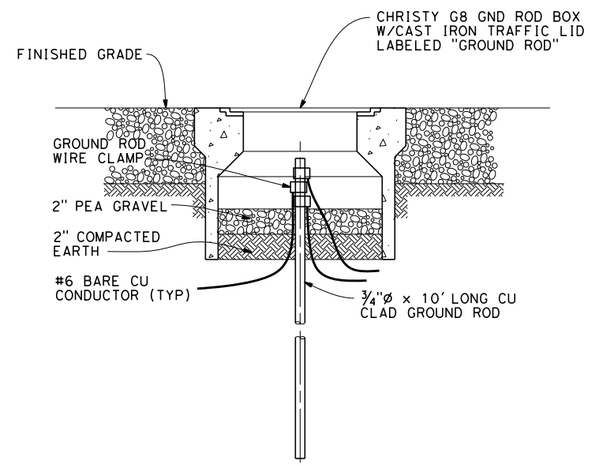

GROUND ROD BOX

NOT TO SCALE

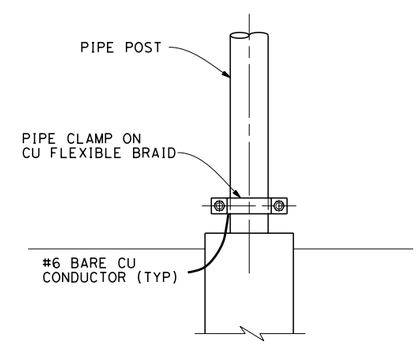

FENCE GROUNDING CONNECTIONS

NOT TO SCALE

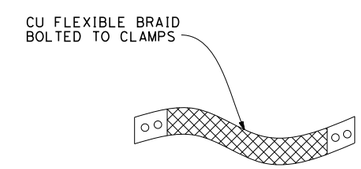

GATE STRAP

NOT TO SCALE

PS E-8

DESIGN OVERSIGHT SIGN OFF DATE	DESIGN	BY ER	CHECKED FSW	PREPARED FOR THE STATE OF CALIFORNIA DEPARTMENT OF TRANSPORTATION	PROJECT ENGINEER
	DETAILS	BY	CHECKED		
	QUANTITIES	BY	CHECKED		

BRIDGE NO.
POST MILE

TEMPORARY SS PUMP STATION
ELECTRICAL DETAILS

DESIGN DETAIL SHEET (ENGLISH) (REV. 06-01-09)

ORIGINAL SCALE IN INCHES FOR REDUCED PLANS 0 1 2 3

CU
EA

DISREGARD PRINTS BEARING EARLIER REVISION DATES

REVISION DATES (PRELIMINARY STAGE ONLY) SHEET OF

FILE => $REQUEST

USERNAME => $USER DATE PLOTTED => $DATE TIME PLOTTED => $TIME

Dist	COUNTY	ROUTE	POST MILES TOTAL PROJECT	SHEET No.	TOTAL SHEETS
04	SF	101	8.0/9.8	4	12

LICENSED CIVIL ENGINEER 6-09-09

PLANS APPROVAL DATE

REGISTERED PROFESSIONAL ENGINEER JOHN EDWARD KARN JR No. C66743 Exp. 9-30-10 CIVIL STATE OF CALIFORNIA

THE STATE OF CALIFORNIA OR ITS OFFICERS OR AGENTS SHALL NOT BE RESPONSIBLE FOR THE ACCURACY OR COMPLETENESS OF ELECTRONIC COPIES OF THIS PLAN SHEET.

Arup PB JV
560 Mission Street, Suite 700
San Francisco, CA 94105

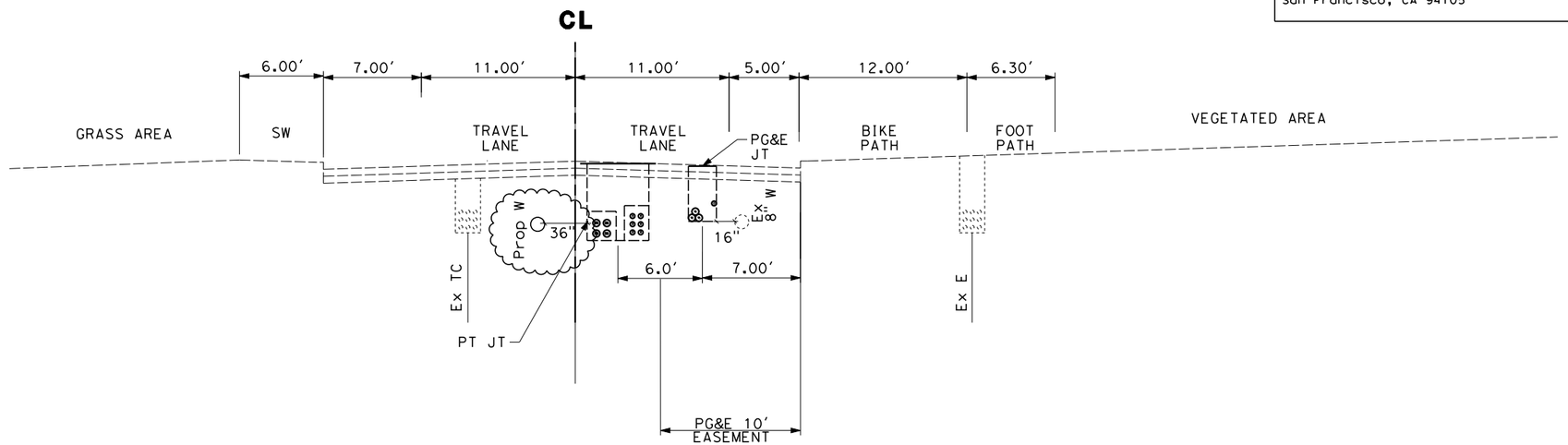

SECTION G-G

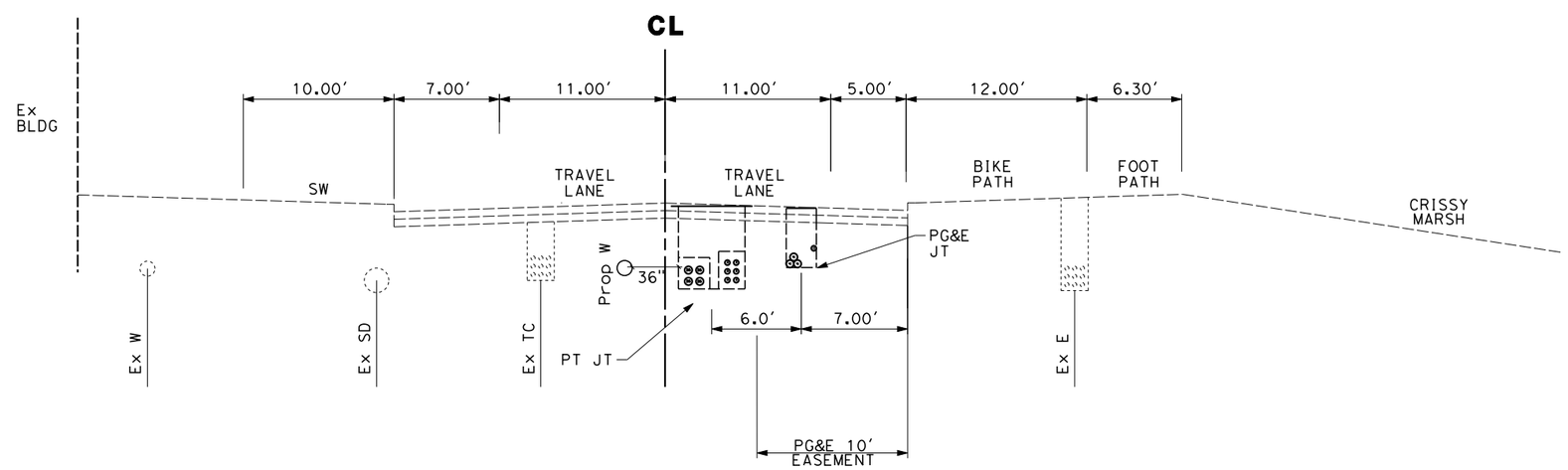

SECTION H-H

MASON STREET SECTIONS
SCALE 1" - 5'

UX-GH04

THIS PLAN ACCURATE FOR UTILITY WORK ONLY.

REVISED BY	MD
DATE REVISED	12/21/09
CALCULATED-DESIGNED BY	JACK MONG
CHECKED BY	MANISH DALIA
FUNCTIONAL SUPERVISOR	DUANNE GILMORE

STATE OF CALIFORNIA - DEPARTMENT OF TRANSPORTATION
Caltrans

LAST REVISION DATE PLOTTED => 2/2/2010
TIME PLOTTED => 4:32:51 PM

Dist	COUNTY	ROUTE	POST MILES TOTAL PROJECT	SHEET No.	TOTAL SHEETS
04	SF	101	8.0/9.8	4	12

6-09-09
LICENSED CIVIL ENGINEER

PLANS APPROVAL DATE

REGISTERED PROFESSIONAL ENGINEER
JOHN EDWARD KARN JR
No. C66743
Exp. 9-30-10
CIVIL
STATE OF CALIFORNIA

THE STATE OF CALIFORNIA OR ITS OFFICERS OR AGENTS SHALL NOT BE RESPONSIBLE FOR THE ACCURACY OR COMPLETENESS OF ELECTRONIC COPIES OF THIS PLAN SHEET.

Arup PB JV
560 Mission Street, Suite 700
San Francisco, CA 94105

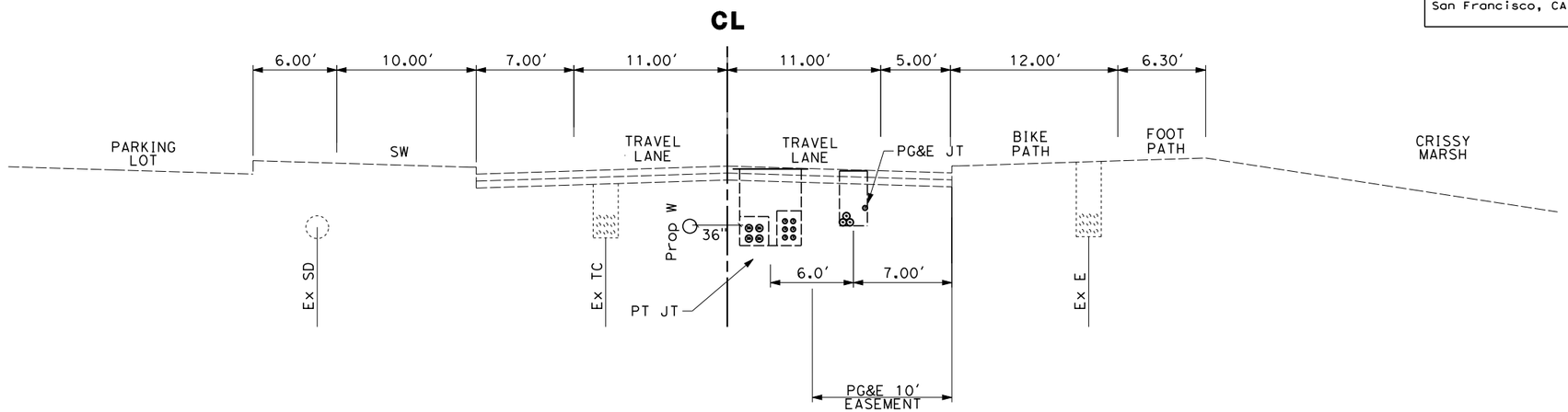

SECTION I-I

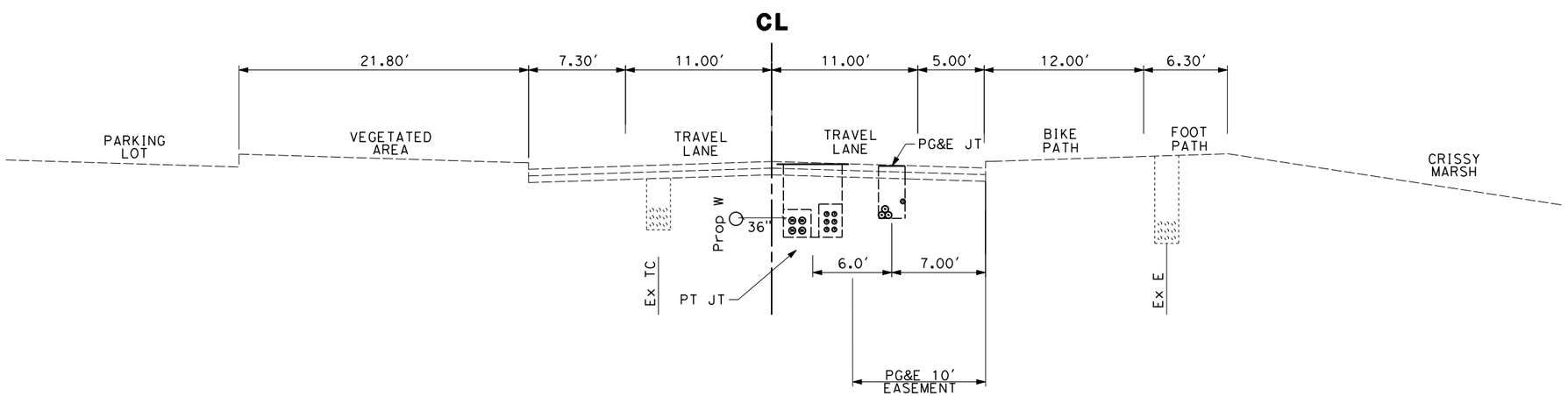

SECTION J-J

THIS PLAN ACCURATE FOR UTILITY WORK ONLY.

MASON STREET SECTIONS

SCALE 1" - 5'

UX-IJ05

REVISED BY	DATE REVISED
MD	12/21/09

CALCULATED-DESIGNED BY: JACK MONG
CHECKED BY: MANISH DALIA
FUNCTIONAL SUPERVISOR: DUANNE GILMORE

STATE OF CALIFORNIA - DEPARTMENT OF TRANSPORTATION
Caltrans

LAST REVISION
DATE PLOTTED => 2/2/2010
TIME PLOTTED => 4:32:53 PM

Dist	COUNTY	ROUTE	POST MILES TOTAL PROJECT	SHEET No.	TOTAL SHEETS
04	SF	101	8.0/9.8	4	12

LICENSED CIVIL ENGINEER 6-09-09

PLANS APPROVAL DATE

REGISTERED PROFESSIONAL ENGINEER
JOHN EDWARD KARN JR
No. C66743
Exp. 9-30-10
CIVIL
STATE OF CALIFORNIA

THE STATE OF CALIFORNIA OR ITS OFFICERS OR AGENTS SHALL NOT BE RESPONSIBLE FOR THE ACCURACY OR COMPLETENESS OF ELECTRONIC COPIES OF THIS PLAN SHEET.

Arup PB JV
560 Mission Street, Suite 700
San Francisco, CA 94105

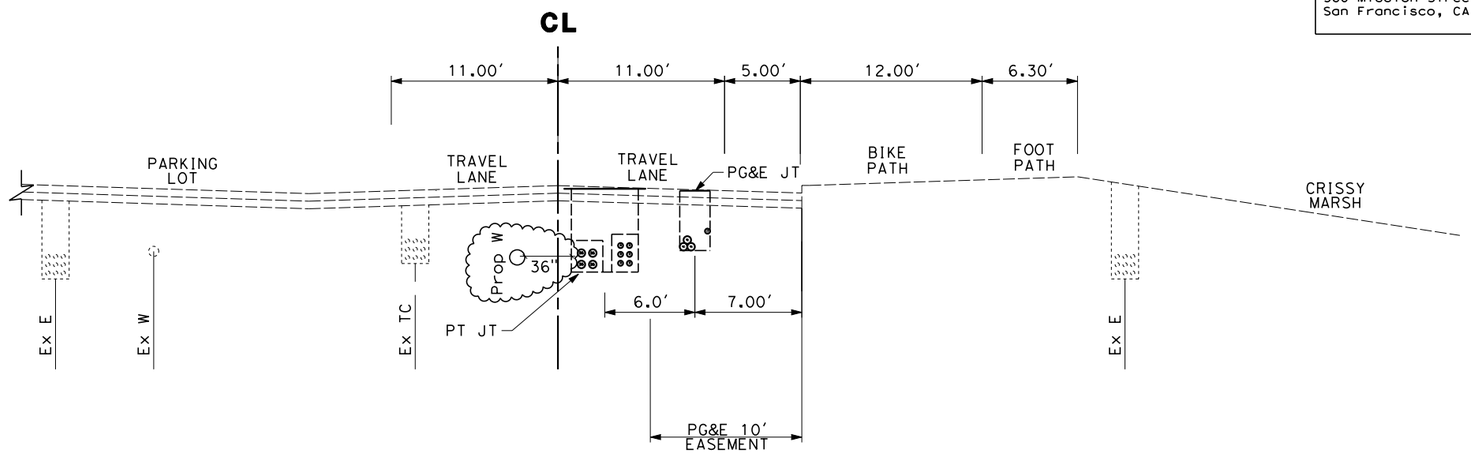

SECTION K-K

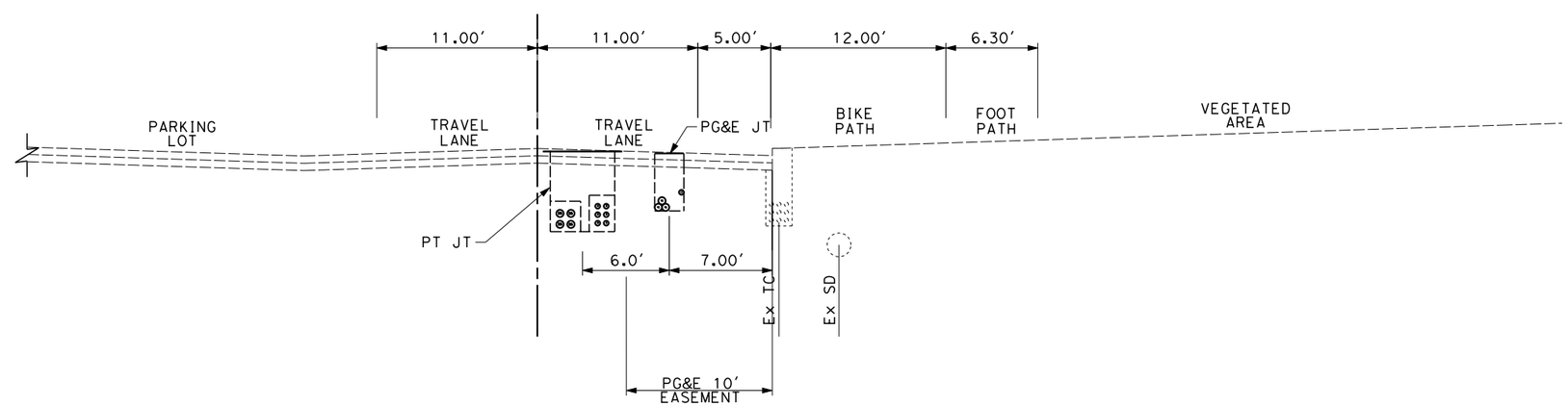

SECTION L-L

MASON STREET SECTIONS
SCALE 1" - 5'

UX-KL06

THIS PLAN ACCURATE FOR UTILITY WORK ONLY.

REVISED BY	DATE REVISED
MD	12/21/09

CALCULATED-DESIGNED BY: JACK MONG
CHECKED BY: MANISH DALIA
FUNCTIONAL SUPERVISOR: DUANNE GILMORE

STATE OF CALIFORNIA - DEPARTMENT OF TRANSPORTATION
Caltrans

LAST REVISION
DATE PLOTTED => 2/2/2010
TIME PLOTTED => 4:32:54 PM

Dist	COUNTY	ROUTE	POST MILES TOTAL PROJECT	SHEET No.	TOTAL SHEETS
04	SF	101	8.0/9.8	4	12

LICENSED CIVIL ENGINEER 6-09-09

PLANS APPROVAL DATE

REGISTERED PROFESSIONAL ENGINEER JOHN EDWARD KARN JR No. C66743 Exp. 9-30-10 CIVIL STATE OF CALIFORNIA

THE STATE OF CALIFORNIA OR ITS OFFICERS OR AGENTS SHALL NOT BE RESPONSIBLE FOR THE ACCURACY OR COMPLETENESS OF ELECTRONIC COPIES OF THIS PLAN SHEET.

Arup PB JV
560 Mission Street, Suite 700
San Francisco, CA 94105

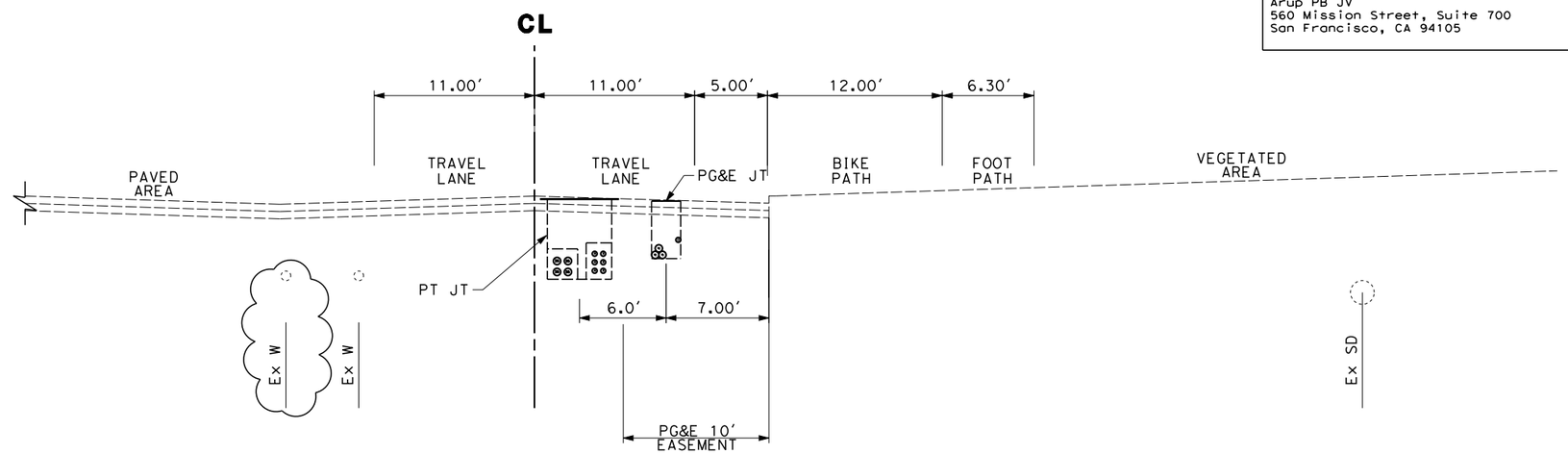

SECTION M-M

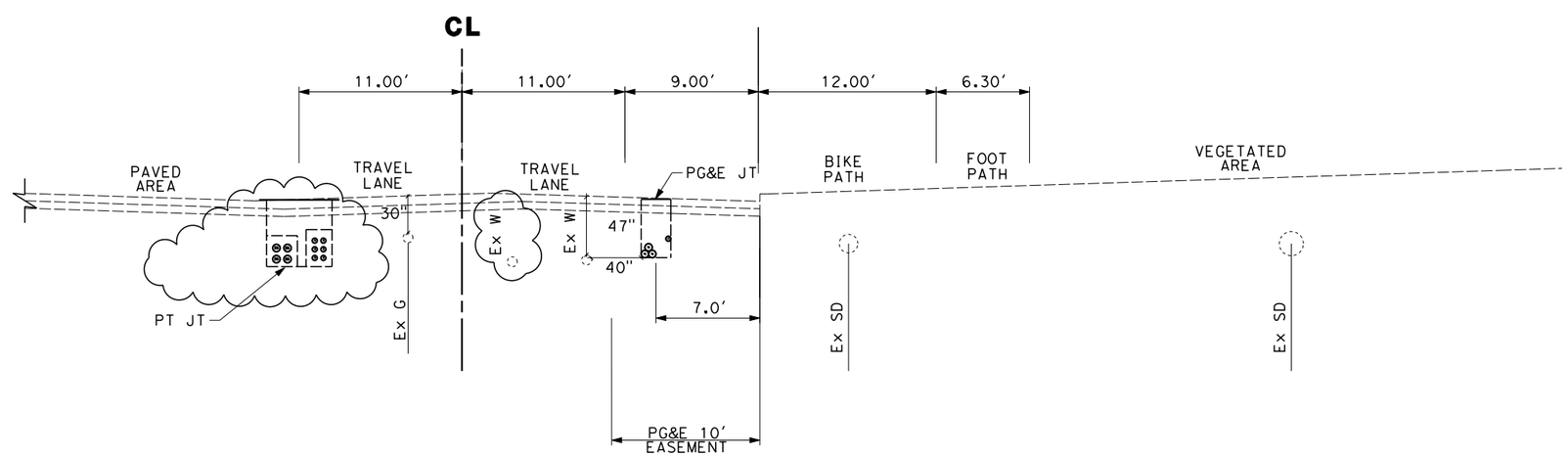

SECTION N-N

MASON STREET SECTIONS

SCALE 1" - 5'

UX-MN07

THIS PLAN ACCURATE FOR UTILITY WORK ONLY.

CALCULATED-DESIGNED BY	JACK MONG	MD 12/21/09
CHECKED BY	MANISH DALIA	MD 12/10/09
FUNCTIONAL SUPERVISOR	DUANNE GILMORE	MD 11/13/09
		REVISED BY / DATE REVISED

STATE OF CALIFORNIA - DEPARTMENT OF TRANSPORTATION

Caltrans

LAST REVISION DATE PLOTTED => 2/2/2010 TIME PLOTTED => 4:32:56 PM

Dist	COUNTY	ROUTE	POST MILES TOTAL PROJECT	SHEET No.	TOTAL SHEETS

LICENSED CIVIL ENGINEER 6-09-09

PLANS APPROVAL DATE

REGISTERED PROFESSIONAL ENGINEER JOHN EDWARD KARN JR No. C66743 Exp. 9-30-10 CIVIL STATE OF CALIFORNIA

THE STATE OF CALIFORNIA OR ITS OFFICERS OR AGENTS SHALL NOT BE RESPONSIBLE FOR THE ACCURACY OR COMPLETENESS OF ELECTRONIC COPIES OF THIS PLAN SHEET.

Arup PB JV
560 Mission Street, Suite 700
San Francisco, CA 94105

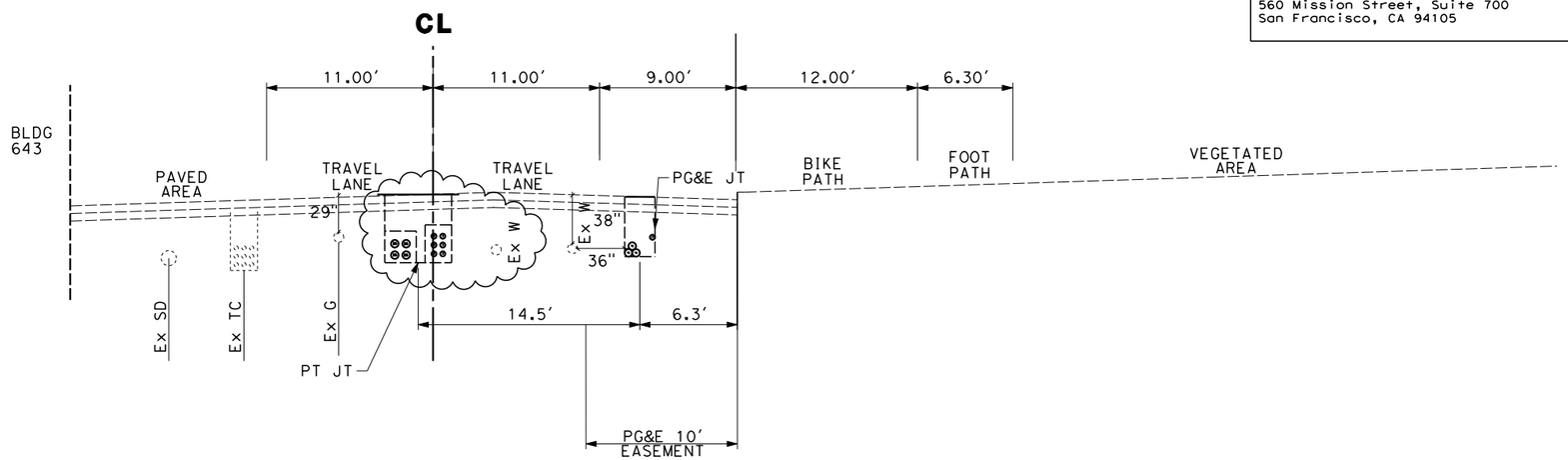

SECTION O-O

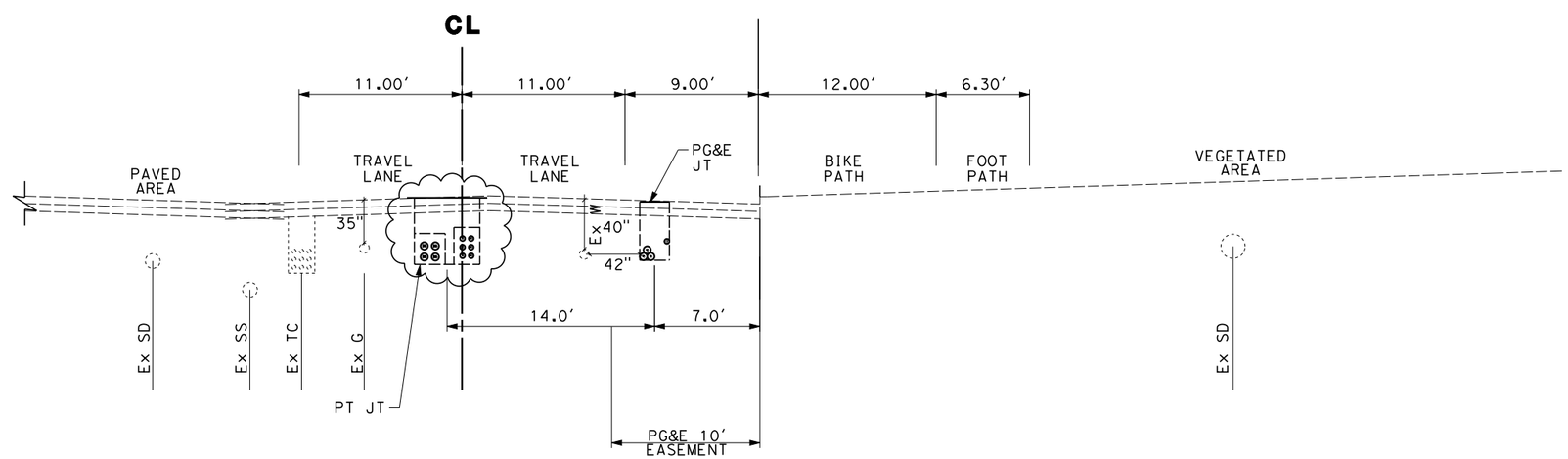

SECTION P-P

THIS PLAN ACCURATE FOR UTILITY WORK ONLY.

MASON STREET SECTIONS

SCALE 1" - 5′

UX-OP08

REVISED BY	DATE REVISED
MD	12/10/09
MD	11/13/09

JACK MONG — CALCULATED-DESIGNED BY
MANISH DALIA — CHECKED BY
DUANNE GILMORE — FUNCTIONAL SUPERVISOR

STATE OF CALIFORNIA - DEPARTMENT OF TRANSPORTATION
Caltrans

LAST REVISION — DATE PLOTTED => 2/2/2010 TIME PLOTTED => 4:32:58 PM

Dist	COUNTY	ROUTE	POST MILES TOTAL PROJECT	SHEET No.	TOTAL SHEETS

LICENSED CIVIL ENGINEER 6-09-09

PLANS APPROVAL DATE

REGISTERED PROFESSIONAL ENGINEER JOHN EDWARD KARN JR No. C66743 Exp. 9-30-10 CIVIL STATE OF CALIFORNIA

THE STATE OF CALIFORNIA OR ITS OFFICERS OR AGENTS SHALL NOT BE RESPONSIBLE FOR THE ACCURACY OR COMPLETENESS OF ELECTRONIC COPIES OF THIS PLAN SHEET.

Arup PB JV
560 Mission Street, Suite 700
San Francisco, CA 94105

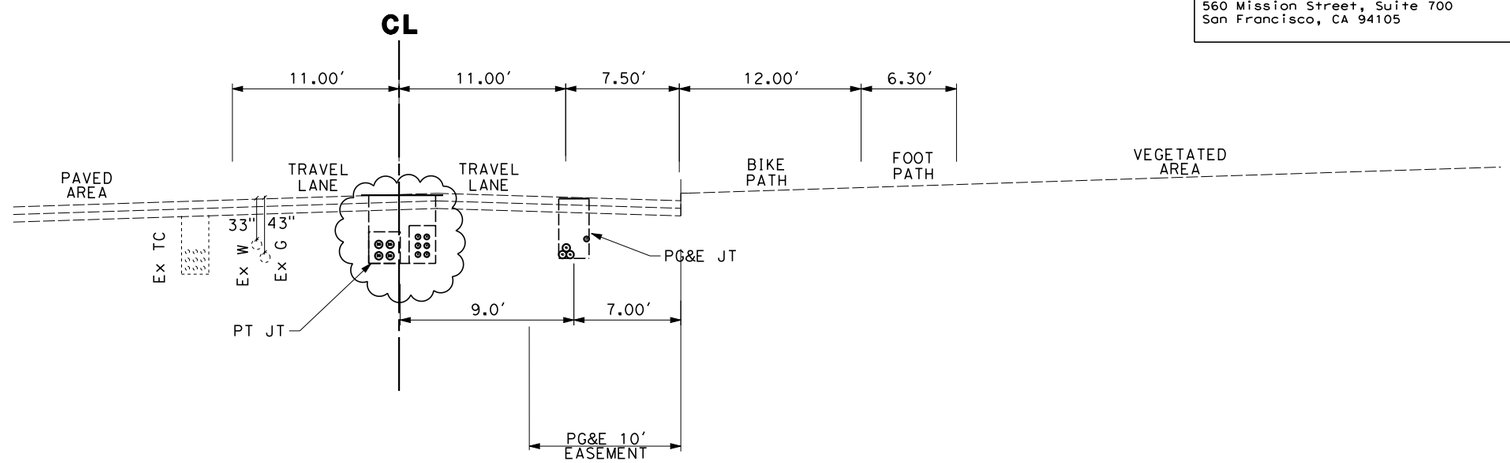

SECTION Q-Q

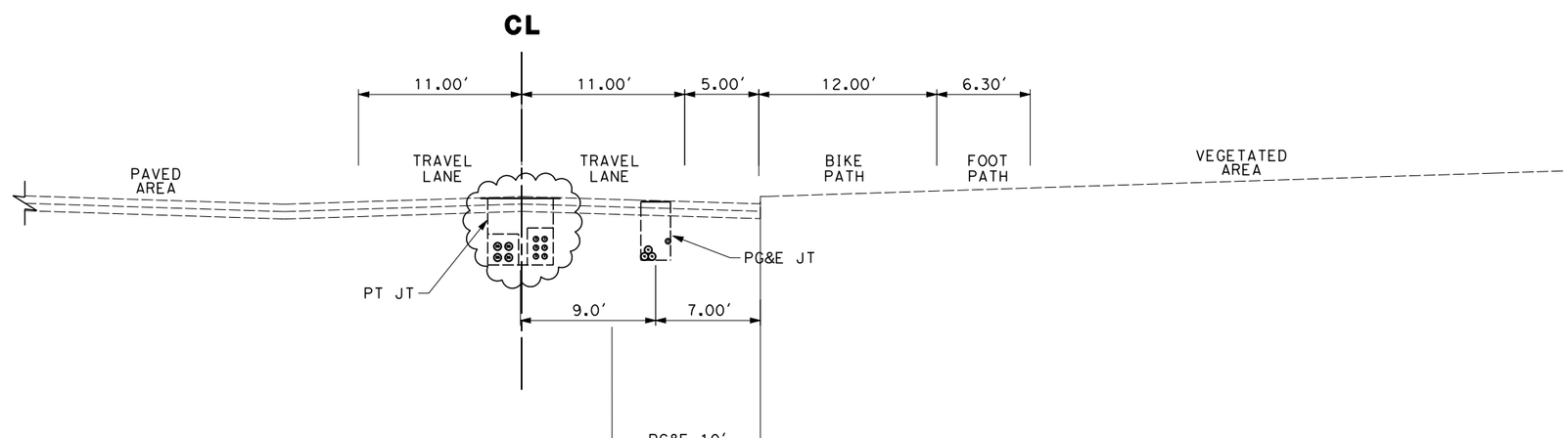

SECTION R-R

THIS PLAN ACCURATE FOR UTILITY WORK ONLY.

MASON STREET SECTIONS

SCALE 1" - 5′

UX-QR09

REVISED BY	DATE REVISED
MD	11/13/09
MD	12/10/09

CALCULATED-DESIGNED BY: JACK MONG
CHECKED BY: MANISH DALIA
FUNCTIONAL SUPERVISOR: DUANNE GILMORE

STATE OF CALIFORNIA - DEPARTMENT OF TRANSPORTATION
Caltrans

LAST REVISION
DATE PLOTTED => 2/2/2010
TIME PLOTTED => 4:33:00 PM

Dist	COUNTY	ROUTE	POST MILES TOTAL PROJECT	SHEET No.	TOTAL SHEETS

LICENSED CIVIL ENGINEER 6-09-09

PLANS APPROVAL DATE

REGISTERED PROFESSIONAL ENGINEER JOHN EDWARD KARN JR No. C66743 Exp. 9-30-10 CIVIL STATE OF CALIFORNIA

THE STATE OF CALIFORNIA OR ITS OFFICERS OR AGENTS SHALL NOT BE RESPONSIBLE FOR THE ACCURACY OR COMPLETENESS OF ELECTRONIC COPIES OF THIS PLAN SHEET.

Arup PB JV
560 Mission Street, Suite 700
San Francisco, CA 94105

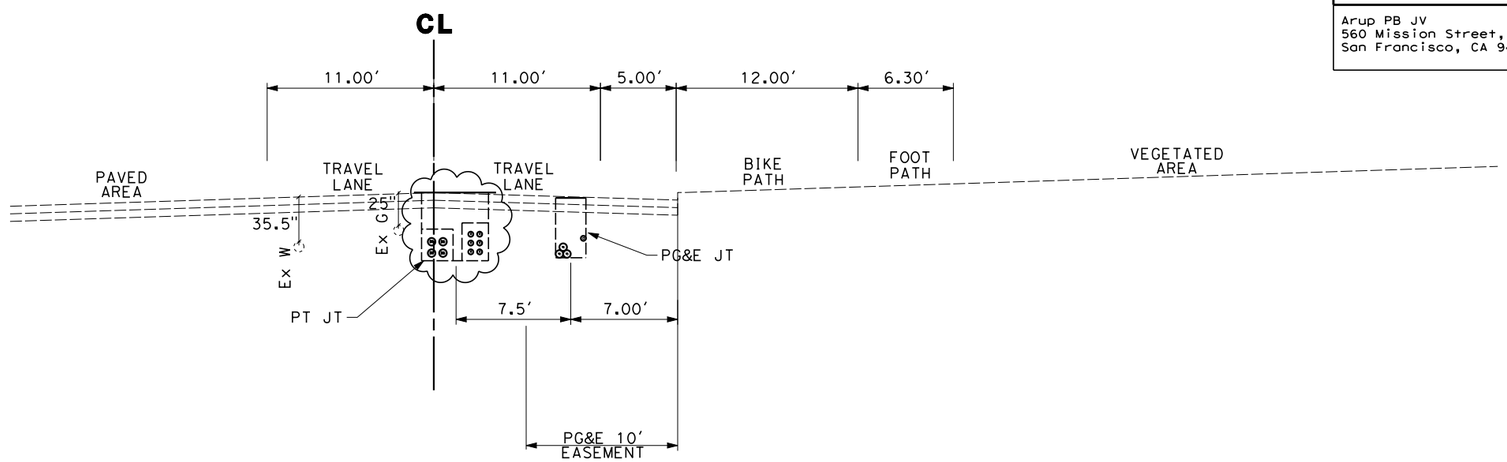

SECTION S-S

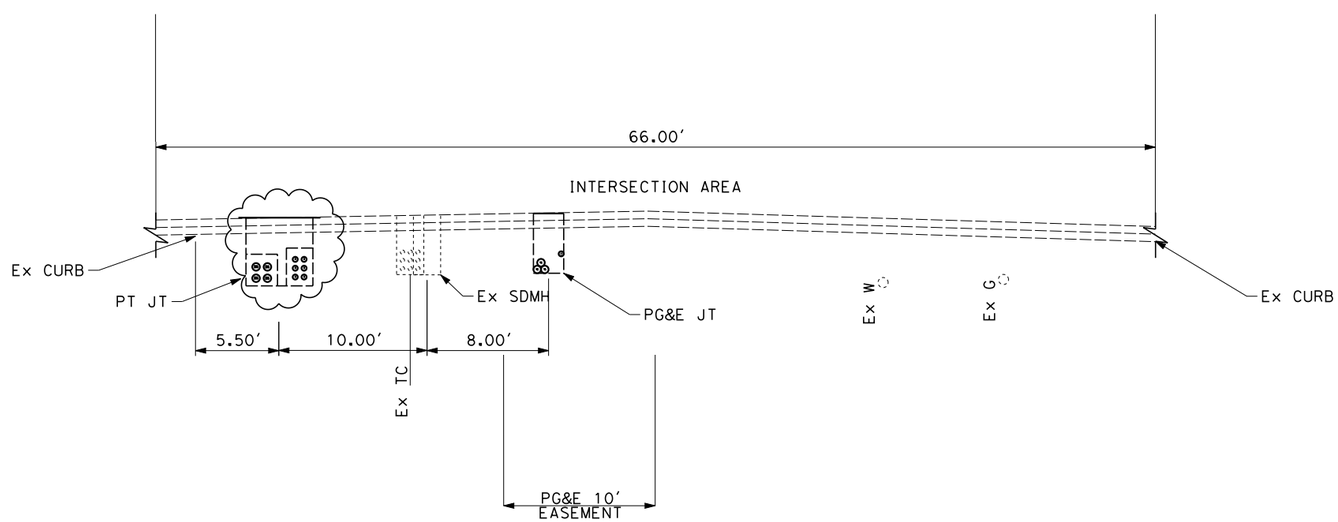

SECTION T-T

THIS PLAN ACCURATE FOR UTILITY WORK ONLY.

MASON STREET SECTIONS

SCALE 1" - 5′

UX-ST10

CALCULATED-DESIGNED BY	JACK MONG	REVISED BY	MD	MD	MD
CHECKED BY	MANISH DALIA	DATE REVISED	11/13/09	12/10/09	

FUNCTIONAL SUPERVISOR: DUANNE GILMORE

STATE OF CALIFORNIA - DEPARTMENT OF TRANSPORTATION

Caltrans

LAST REVISION | DATE PLOTTED => 2/2/2010 | TIME PLOTTED => 4:33:02 PM

Dist	COUNTY	ROUTE	POST MILES TOTAL PROJECT	SHEET No.	TOTAL SHEETS

LICENSED CIVIL ENGINEER 6-09-09

PLANS APPROVAL DATE

REGISTERED PROFESSIONAL ENGINEER JOHN EDWARD KARN JR No. C66743 Exp. 9-30-10 CIVIL STATE OF CALIFORNIA

THE STATE OF CALIFORNIA OR ITS OFFICERS OR AGENTS SHALL NOT BE RESPONSIBLE FOR THE ACCURACY OR COMPLETENESS OF ELECTRONIC COPIES OF THIS PLAN SHEET.

Arup PB JV
560 Mission Street, Suite 700
San Francisco, CA 94105

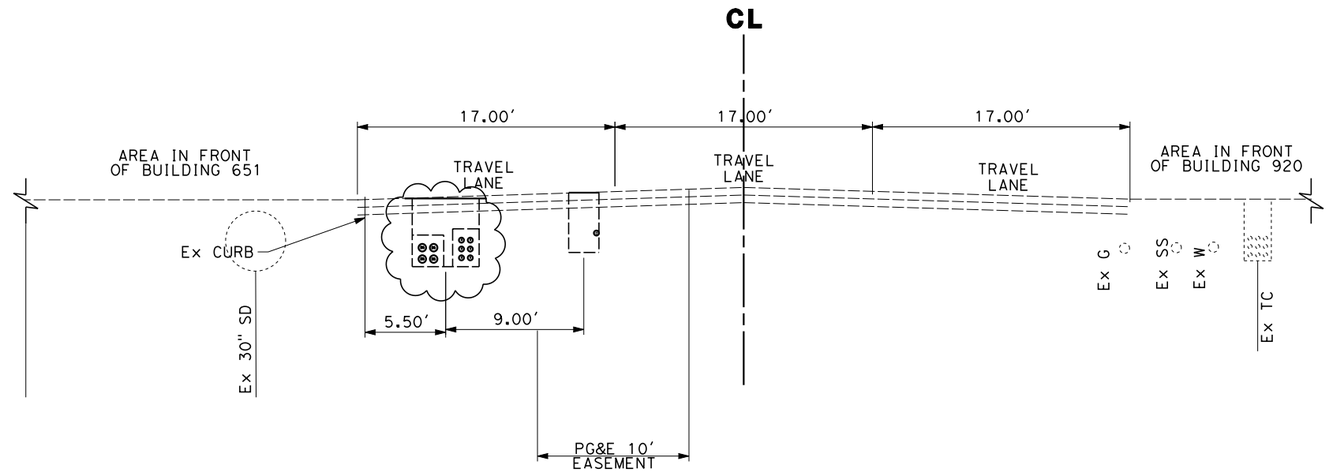

SECTION U-U

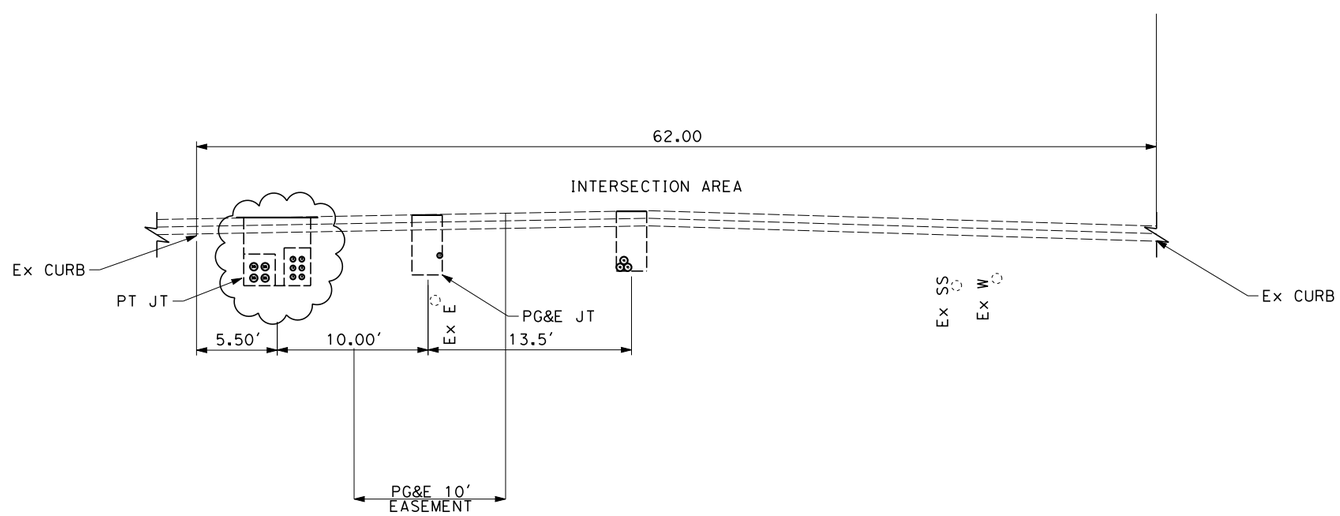

SECTION V-V

THIS PLAN ACCURATE FOR UTILITY WORK ONLY.

MASON STREET SECTIONS

SCALE 1" - 5′

UX-UV11

CALCULATED-DESIGNED BY	JACK MONG	REVISED BY	MD	MD	MD
CHECKED BY	MANISH DALIA	DATE REVISED	11/13/09	12/10/09	

FUNCTIONAL SUPERVISOR: DUANNE GILMORE

STATE OF CALIFORNIA - DEPARTMENT OF TRANSPORTATION

Caltrans

LAST REVISION | DATE PLOTTED => 2/2/2010 | TIME PLOTTED => 4:33:04 PM

Dist	COUNTY	ROUTE	POST MILES TOTAL PROJECT	SHEET No.	TOTAL SHEETS

LICENSED CIVIL ENGINEER 6-09-09

PLANS APPROVAL DATE

REGISTERED PROFESSIONAL ENGINEER JOHN EDWARD KARN JR No. C66743 Exp. 9-30-10 CIVIL STATE OF CALIFORNIA

THE STATE OF CALIFORNIA OR ITS OFFICERS OR AGENTS SHALL NOT BE RESPONSIBLE FOR THE ACCURACY OR COMPLETENESS OF ELECTRONIC COPIES OF THIS PLAN SHEET.

Arup PB JV
560 Mission Street, Suite 700
San Francisco, CA 94105

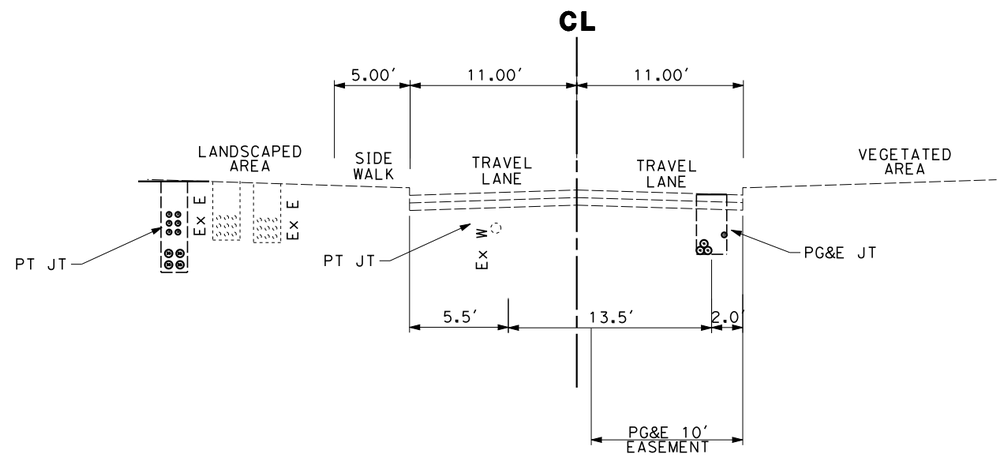

SECTION W-W

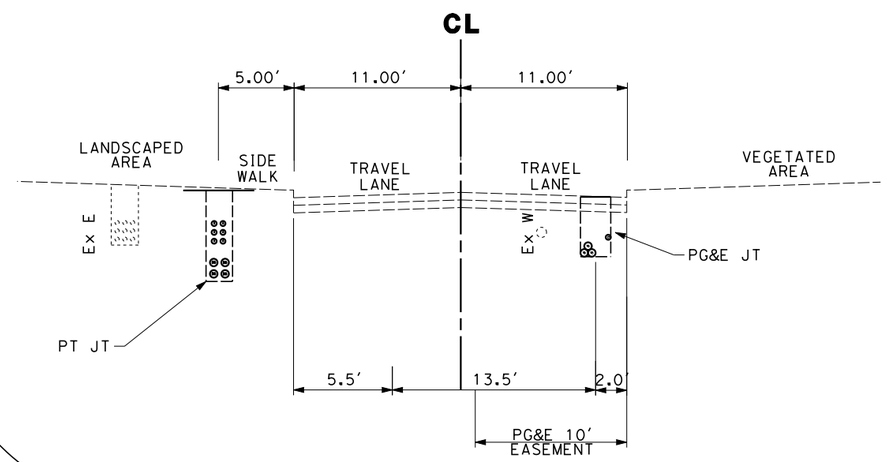

SECTION X-X

THIS PLAN ACCURATE FOR UTILITY WORK ONLY.

MASON STREET SECTIONS

SCALE 1" - 5'

UX-WX12

REVISED BY	DATE REVISED
MD	11/13/09
MD	12/10/09

JACK MONG — MANISH DALIA

CALCULATED-DESIGNED BY — CHECKED BY

FUNCTIONAL SUPERVISOR — DUANNE GILMORE

STATE OF CALIFORNIA - DEPARTMENT OF TRANSPORTATION

Caltrans

LAST REVISION — DATE PLOTTED => 2/2/2010 TIME PLOTTED => 4:33:05 PM

Dist	COUNTY	ROUTE	POST MILES TOTAL PROJECT	SHEET No.	TOTAL SHEETS
04	SF	101	8.0/9.8	4	12

6-09-09
LICENSED CIVIL ENGINEER

PLANS APPROVAL DATE

REGISTERED PROFESSIONAL ENGINEER
JOHN EDWARD KARN JR
No. C66743
Exp. 9-30-10
CIVIL
STATE OF CALIFORNIA

THE STATE OF CALIFORNIA OR ITS OFFICERS OR AGENTS SHALL NOT BE RESPONSIBLE FOR THE ACCURACY OR COMPLETENESS OF ELECTRONIC COPIES OF THIS PLAN SHEET.

Arup PB JV
560 Mission Street, Suite 700
San Francisco, CA 94105

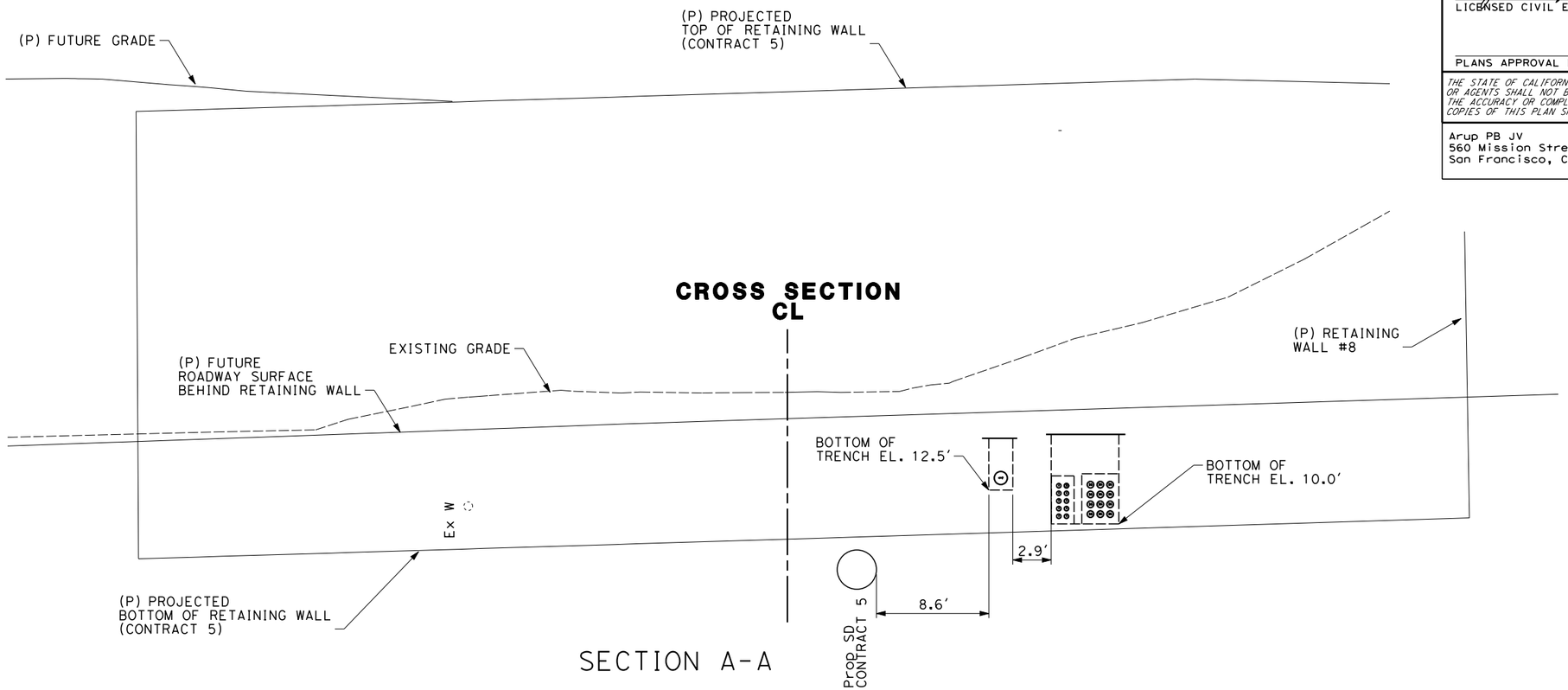

SECTION A-A

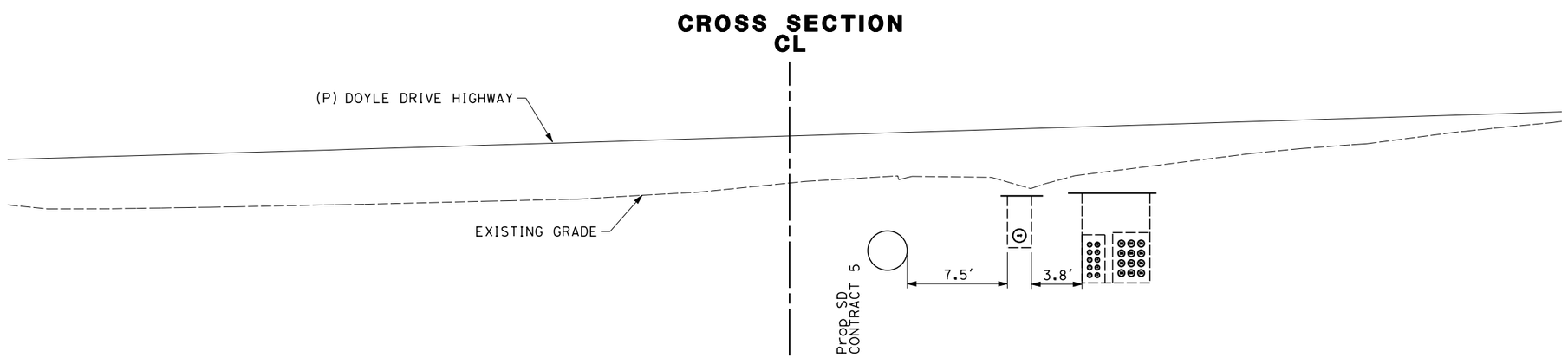

SECTION B-B

THIS PLAN ACCURATE FOR UTILITY WORK ONLY.

ROBERTS ROAD SECTIONS

SCALE 1" - 5'

RX-AB01

	REVISED BY	DATE REVISED
MD	MD	01/13/10
		12/21/09

CALCULATED-DESIGNED BY: MANISH DALIA
CHECKED BY: DUANNE GILMORE
FUNCTIONAL SUPERVISOR: DUANNE GILMORE

STATE OF CALIFORNIA - DEPARTMENT OF TRANSPORTATION
Caltrans

LAST REVISION
DATE PLOTTED => 2/2/2010
TIME PLOTTED => 4:33:08 PM

Dist	COUNTY	ROUTE	POST MILES TOTAL PROJECT	SHEET No.	TOTAL SHEETS
04	SF	101	8.0/9.8	4	12

6-09-09
LICENSED CIVIL ENGINEER

PLANS APPROVAL DATE

REGISTERED PROFESSIONAL ENGINEER
JOHN EDWARD KARN JR
No. C66743
Exp. 9-30-10
CIVIL
STATE OF CALIFORNIA

THE STATE OF CALIFORNIA OR ITS OFFICERS OR AGENTS SHALL NOT BE RESPONSIBLE FOR THE ACCURACY OR COMPLETENESS OF ELECTRONIC COPIES OF THIS PLAN SHEET.

Arup PB JV
560 Mission Street, Suite 700
San Francisco, CA 94105

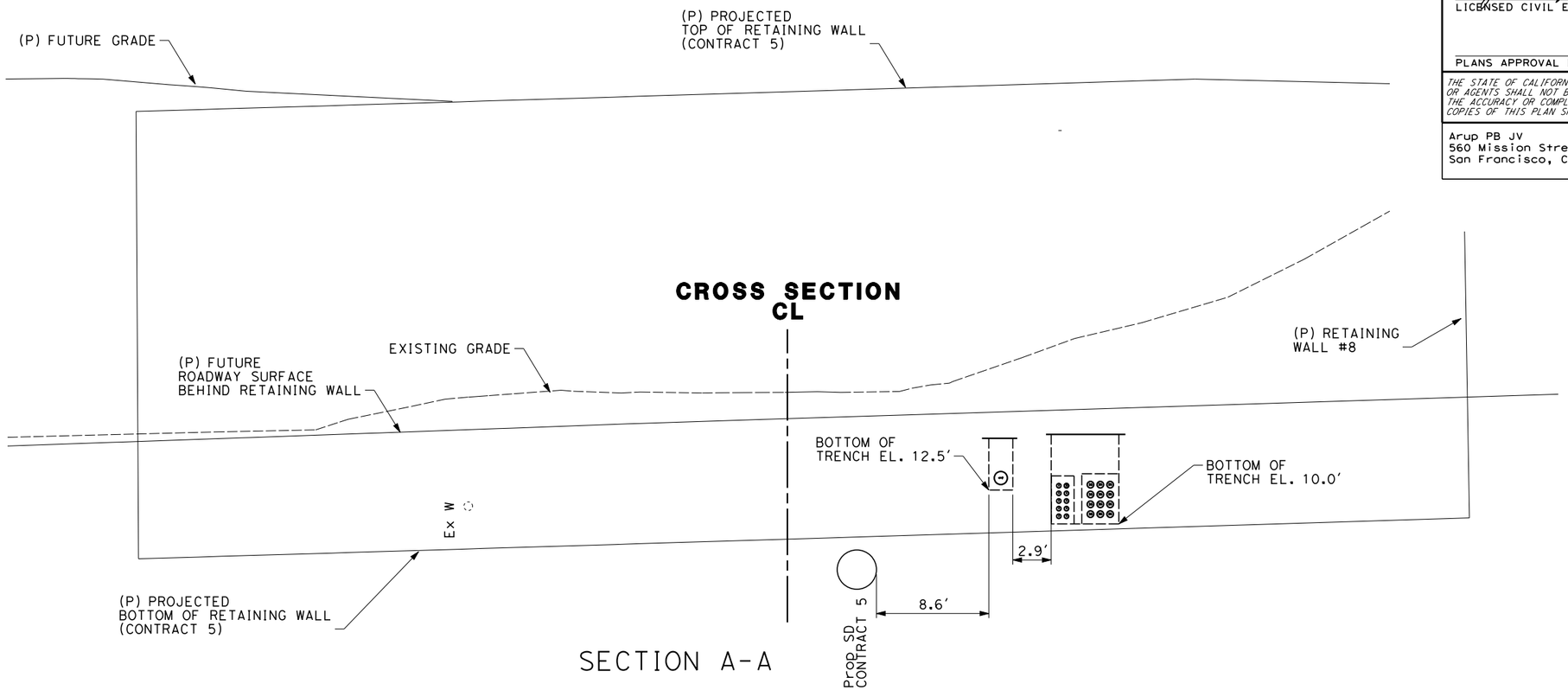

SECTION A-A

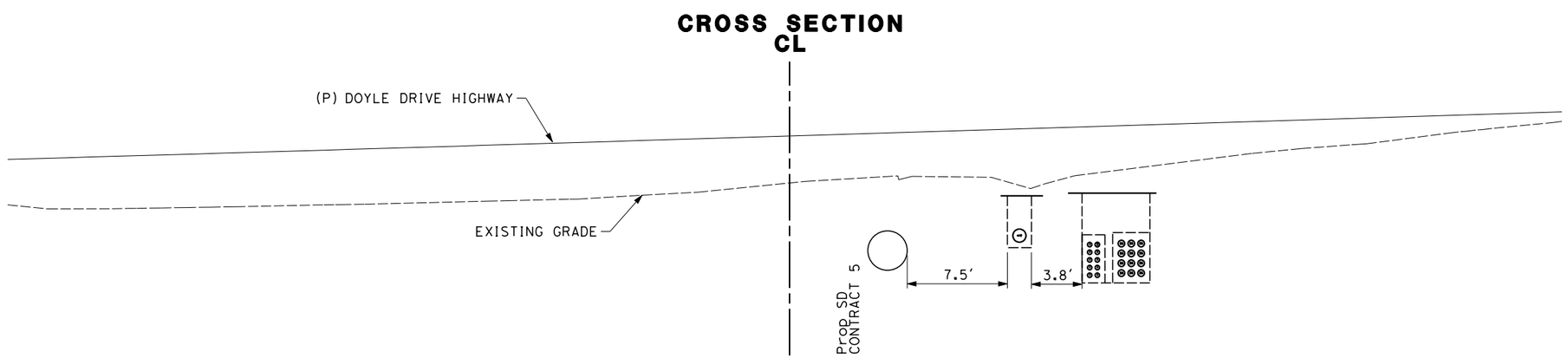

SECTION B-B

THIS PLAN ACCURATE FOR UTILITY WORK ONLY.

ROBERTS ROAD SECTIONS

SCALE 1" - 5'

RX-AB01

	REVISED BY	DATE REVISED
MD	MD	01/13/10
		12/21/09

CALCULATED-DESIGNED BY: MANISH DALIA
CHECKED BY: DUANNE GILMORE
FUNCTIONAL SUPERVISOR: DUANNE GILMORE

STATE OF CALIFORNIA - DEPARTMENT OF TRANSPORTATION
Caltrans

LAST REVISION
DATE PLOTTED => 2/2/2010
TIME PLOTTED => 4:33:08 PM

Dist	COUNTY	ROUTE	POST MILES TOTAL PROJECT	SHEET No.	TOTAL SHEETS
04	SF	101	8.0/9.8		

LICENSED CIVIL ENGINEER 6-09-09

PLANS APPROVAL DATE

REGISTERED PROFESSIONAL ENGINEER
JOHN EDWARD KARN JR
No. C66743
Exp. 9-30-10
CIVIL
STATE OF CALIFORNIA

THE STATE OF CALIFORNIA OR ITS OFFICERS OR AGENTS SHALL NOT BE RESPONSIBLE FOR THE ACCURACY OR COMPLETENESS OF ELECTRONIC COPIES OF THIS PLAN SHEET.

Arup PB JV
560 Mission Street, Suite 700
San Francisco, CA 94105

CROSS SECTION CL

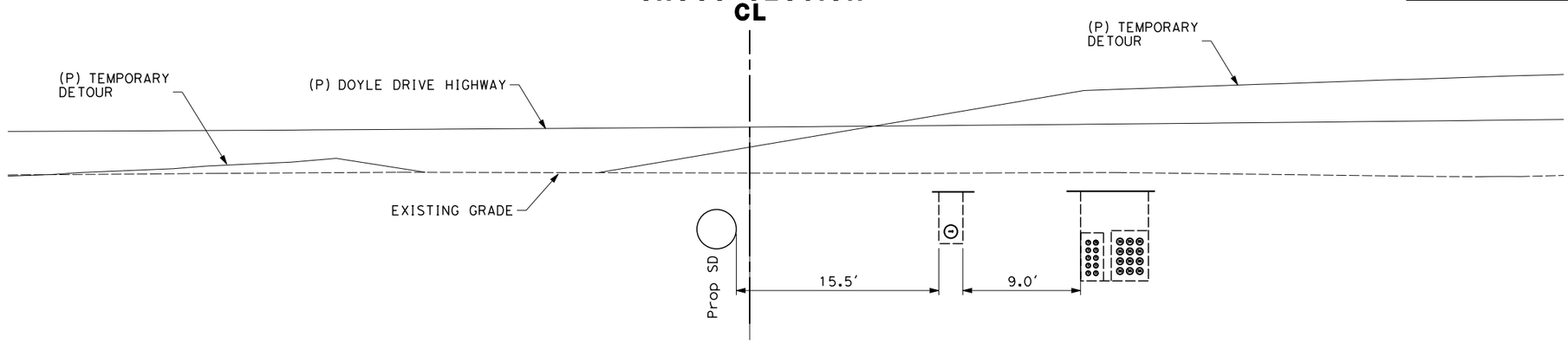

SECTION C-C

CROSS SECTION CL

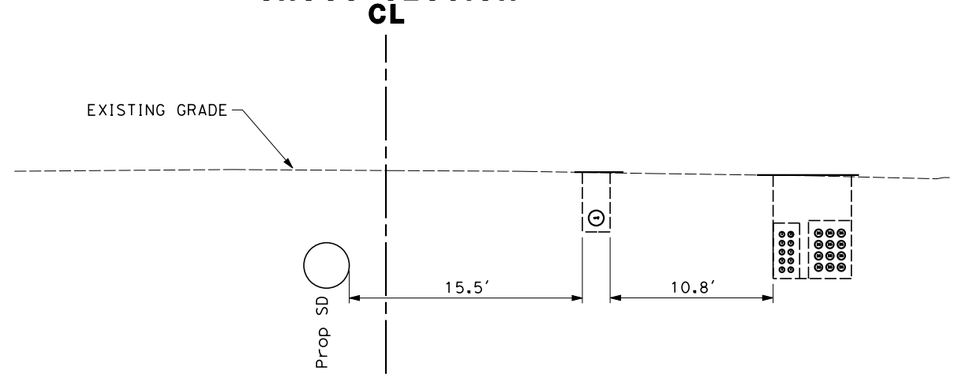

SECTION D-D

THIS PLAN ACCURATE FOR UTILITY WORK ONLY.

ROBERTS ROAD SECTIONS

SCALE 1" - 5'

RX-CD02

REVISED BY	DATE REVISED
MD	01/13/10
MD	12/21/09

CALCULATED-DESIGNED BY: MANISH DALIA
CHECKED BY: DUANNE GILMORE
FUNCTIONAL SUPERVISOR: DUANNE GILMORE

STATE OF CALIFORNIA - DEPARTMENT OF TRANSPORTATION
Caltrans

LAST REVISION DATE PLOTTED => 2/2/2010
TIME PLOTTED => 4:33:10 PM

Dist	COUNTY	ROUTE	POST MILES TOTAL PROJECT	SHEET No.	TOTAL SHEETS
04	SF	101	8.0/9.8	4	12

LICENSED CIVIL ENGINEER 6-09-09

PLANS APPROVAL DATE

REGISTERED PROFESSIONAL ENGINEER
JOHN EDWARD KARN JR
No. C66743
Exp. 9-30-10
CIVIL
STATE OF CALIFORNIA

THE STATE OF CALIFORNIA OR ITS OFFICERS OR AGENTS SHALL NOT BE RESPONSIBLE FOR THE ACCURACY OR COMPLETENESS OF ELECTRONIC COPIES OF THIS PLAN SHEET.

Arup PB JV
560 Mission Street, Suite 700
San Francisco, CA 94105

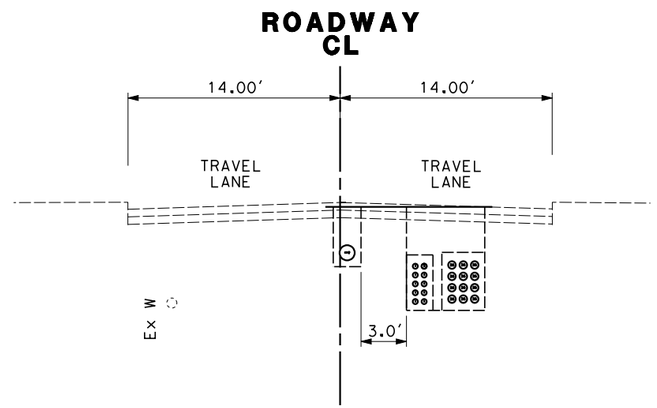

SECTION E-E

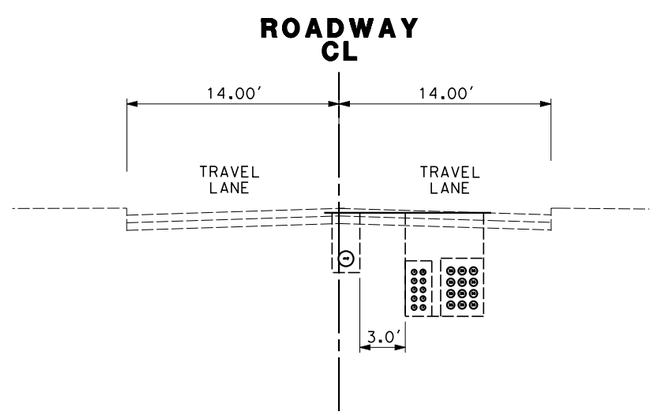

SECTION F-F

THIS PLAN ACCURATE FOR UTILITY WORK ONLY.

ROBERTS ROAD SECTIONS

SCALE 1" - 5'

RX-EF03

CALCULATED-DESIGNED BY	MANISH DALIA
CHECKED BY	DUANNE GILMORE
REVISED BY	MD
DATE REVISED	12/21/09

FUNCTIONAL SUPERVISOR: DUANNE GILMORE

STATE OF CALIFORNIA - DEPARTMENT OF TRANSPORTATION

Caltrans

LAST REVISION
DATE PLOTTED => 2/2/2010
TIME PLOTTED => 4:33:12 PM

Dist	COUNTY	ROUTE	POST MILES TOTAL PROJECT	SHEET No.	TOTAL SHEETS
04	SF	101	8.0/9.8	4	12

LICENSED CIVIL ENGINEER 6-09-09

PLANS APPROVAL DATE

REGISTERED PROFESSIONAL ENGINEER
JOHN EDWARD KARN JR
No. C66743
Exp. 9-30-10
CIVIL
STATE OF CALIFORNIA

THE STATE OF CALIFORNIA OR ITS OFFICERS OR AGENTS SHALL NOT BE RESPONSIBLE FOR THE ACCURACY OR COMPLETENESS OF ELECTRONIC COPIES OF THIS PLAN SHEET.

Arup PB JV
560 Mission Street, Suite 700
San Francisco, CA 94105

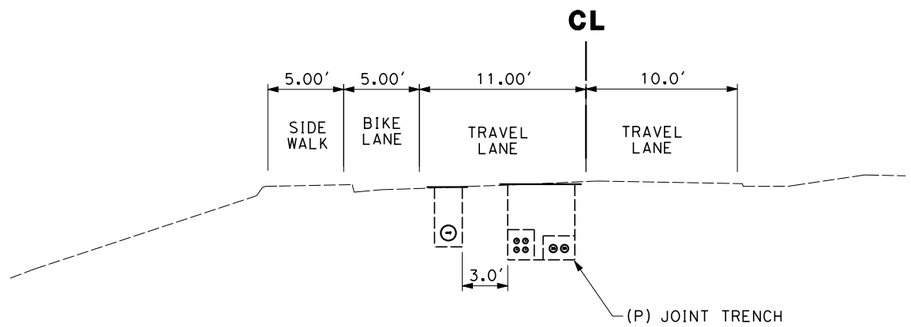

SECTION A-A

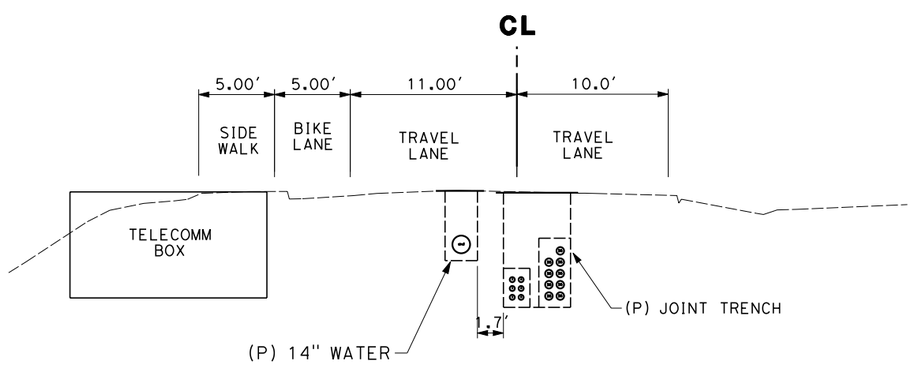

SECTION B-B

THIS PLAN ACCURATE FOR UTILITY WORK ONLY.

LINCOLN BLVD SECTIONS

SCALE 1" - 5'

LX-AB01

CALCULATED-DESIGNED BY	MANISH DALIA
CHECKED BY	DUANNE GILMORE
REVISED BY	MD
DATE REVISED	01/13/10
FUNCTIONAL SUPERVISOR	DUANNE GILMORE

STATE OF CALIFORNIA - DEPARTMENT OF TRANSPORTATION
Caltrans

LAST REVISION DATE PLOTTED => 2/2/2010
TIME PLOTTED => 4:33:16 PM

Dist	COUNTY	ROUTE	POST MILES TOTAL PROJECT	SHEET No.	TOTAL SHEETS
04	SF	101	8.0/9.8	4	12

LICENSED CIVIL ENGINEER 6-09-09

PLANS APPROVAL DATE

REGISTERED PROFESSIONAL ENGINEER JOHN EDWARD KARN JR No. C66743 Exp. 9-30-10 CIVIL STATE OF CALIFORNIA

THE STATE OF CALIFORNIA OR ITS OFFICERS OR AGENTS SHALL NOT BE RESPONSIBLE FOR THE ACCURACY OR COMPLETENESS OF ELECTRONIC COPIES OF THIS PLAN SHEET.

Arup PB JV
560 Mission Street, Suite 700
San Francisco, CA 94105

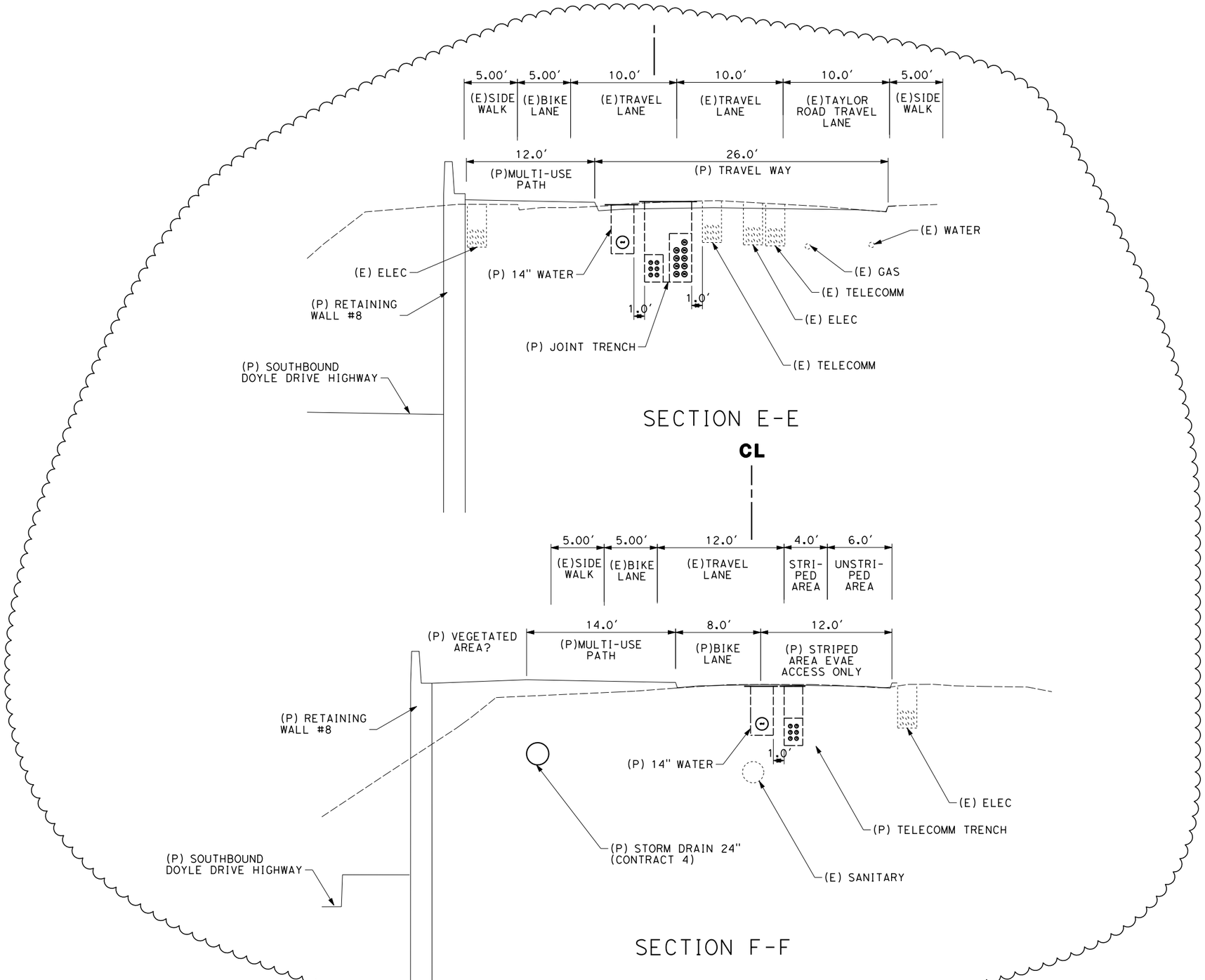

THIS PLAN ACCURATE FOR UTILITY WORK ONLY.

LINCOLN BLVD SECTIONS

SCALE 1" - 5′

LX-EF03

MANISH DALIA	MD	01/13/10	02/02/10
DUANNE GILMORE	MD		

CALCULATED-DESIGNED BY / CHECKED BY

FUNCTIONAL SUPERVISOR: DUANNE GILMORE

REVISED BY / DATE REVISED

STATE OF CALIFORNIA - DEPARTMENT OF TRANSPORTATION

Caltrans

LAST REVISION: DATE PLOTTED => 2/2/2010 TIME PLOTTED => 4:33:19 PM

BORDER LAST REVISED 3/1/2007 | RELATIVE BORDER SCALE IS IN INCHES 0 1 2 3 | USERNAME => manish.dalia DGN FILE => $FILE$ | CU 00000 | EA 04-16372X

Dist	COUNTY	ROUTE	POST MILES TOTAL PROJECT	SHEET No.	TOTAL SHEETS
04	SF	101	8.0/9.8	4	12

LICENSED CIVIL ENGINEER 6-09-09

PLANS APPROVAL DATE

REGISTERED PROFESSIONAL ENGINEER JOHN EDWARD KARN JR No. C66743 Exp. 9-30-10 CIVIL STATE OF CALIFORNIA

THE STATE OF CALIFORNIA OR ITS OFFICERS OR AGENTS SHALL NOT BE RESPONSIBLE FOR THE ACCURACY OR COMPLETENESS OF ELECTRONIC COPIES OF THIS PLAN SHEET.

Arup PB JV
560 Mission Street, Suite 700
San Francisco, CA 94105

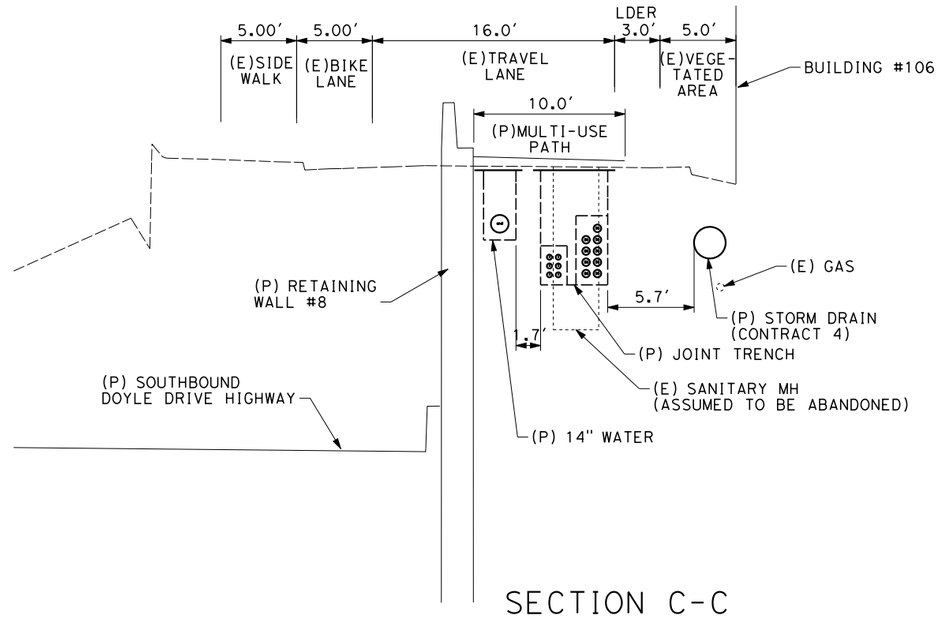

SECTION C-C

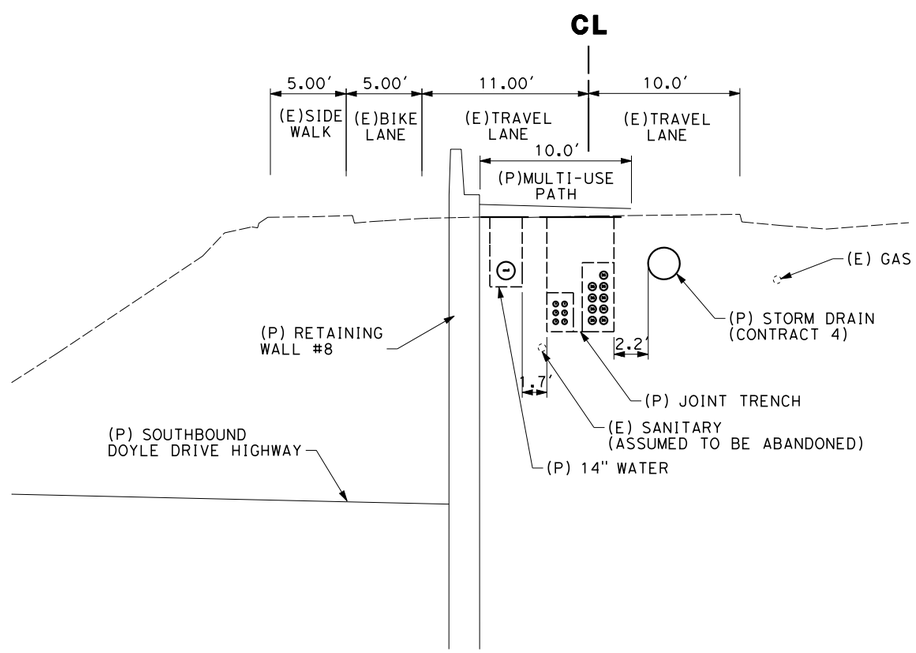

SECTION D-D

THIS PLAN ACCURATE FOR UTILITY WORK ONLY.

LINCOLN BLVD SECTIONS

SCALE 1" - 5′

LX-CD02

REVISED BY	MD
DATE REVISED	01/13/10
CALCULATED-DESIGNED BY	MANISH DALIA
CHECKED BY	DUANNE GILMORE
FUNCTIONAL SUPERVISOR	DUANNE GILMORE

STATE OF CALIFORNIA - DEPARTMENT OF TRANSPORTATION

Caltrans

LAST REVISION DATE PLOTTED => 2/2/2010 TIME PLOTTED => 4:33:17 PM

Dist	COUNTY	ROUTE	POST MILES TOTAL PROJECT	SHEET No.	TOTAL SHEETS
04	SF	101	8.0/9.8	4	12

LICENSED CIVIL ENGINEER 6-09-09

PLANS APPROVAL DATE

REGISTERED PROFESSIONAL ENGINEER JOHN EDWARD KARN JR No. C66743 Exp. 9-30-10 CIVIL STATE OF CALIFORNIA

THE STATE OF CALIFORNIA OR ITS OFFICERS OR AGENTS SHALL NOT BE RESPONSIBLE FOR THE ACCURACY OR COMPLETENESS OF ELECTRONIC COPIES OF THIS PLAN SHEET.

Arup PB JV
560 Mission Street, Suite 700
San Francisco, CA 94105

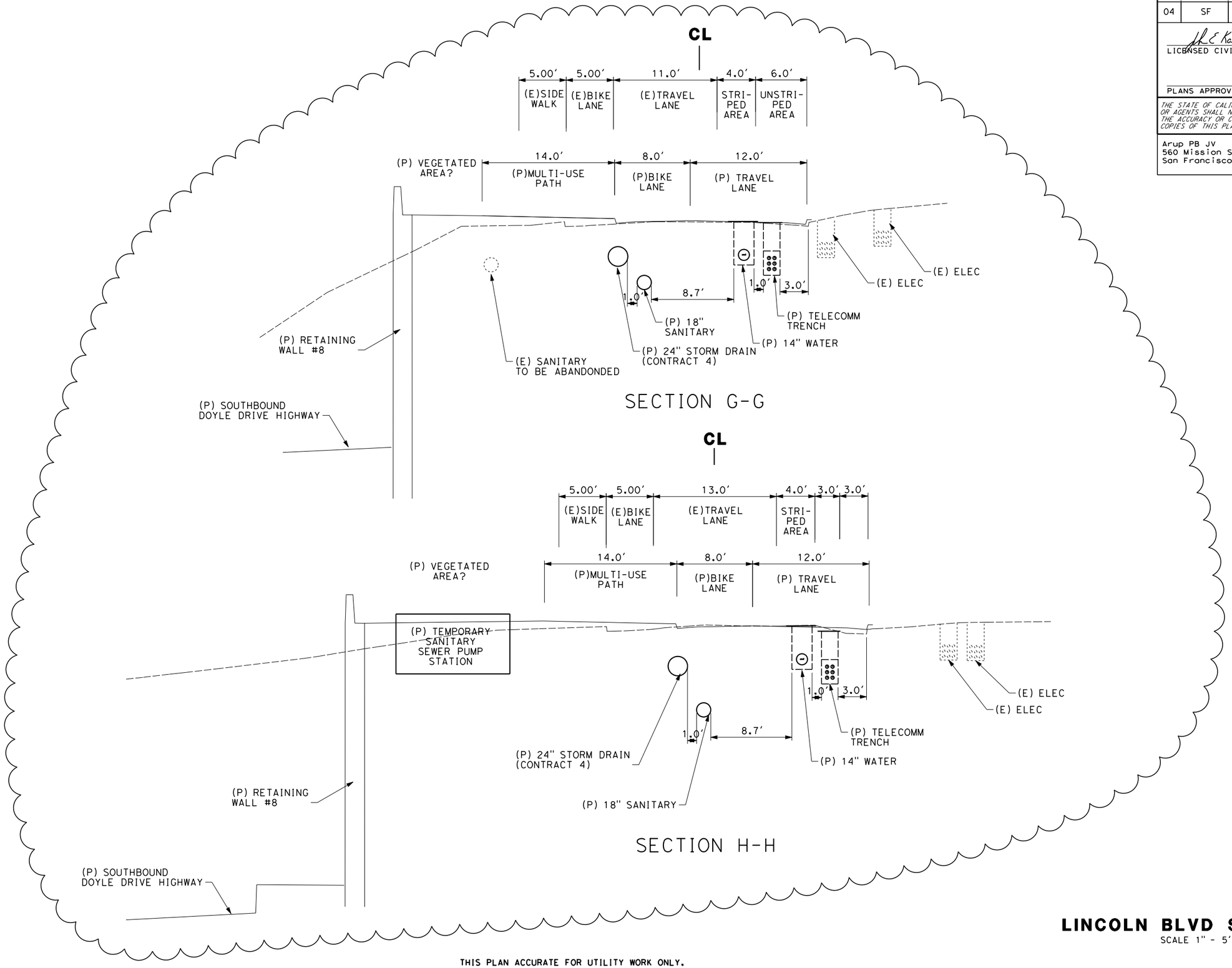

THIS PLAN ACCURATE FOR UTILITY WORK ONLY.

LINCOLN BLVD SECTIONS

SCALE 1" - 5′

LX-GH04

MANISH DALIA	REVISED BY	MD	MD
DUANNE GILMORE	DATE REVISED	01/13/10	02/02/10
CALCULATED-DESIGNED BY			
CHECKED BY			
FUNCTIONAL SUPERVISOR			
DUANNE GILMORE			

STATE OF CALIFORNIA - DEPARTMENT OF TRANSPORTATION

Caltrans

LAST REVISION | DATE PLOTTED => 2/2/2010 TIME PLOTTED => 4:33:21 PM

Dist	COUNTY	ROUTE	POST MILES TOTAL PROJECT	SHEET No.	TOTAL SHEETS
04	SF	101	8.0/9.8	4	12

LICENSED CIVIL ENGINEER 6-09-09

PLANS APPROVAL DATE

REGISTERED PROFESSIONAL ENGINEER JOHN EDWARD KARN JR No. C66743 Exp. 9-30-10 CIVIL STATE OF CALIFORNIA

THE STATE OF CALIFORNIA OR ITS OFFICERS OR AGENTS SHALL NOT BE RESPONSIBLE FOR THE ACCURACY OR COMPLETENESS OF ELECTRONIC COPIES OF THIS PLAN SHEET.

Arup PB JV
560 Mission Street, Suite 700
San Francisco, CA 94105

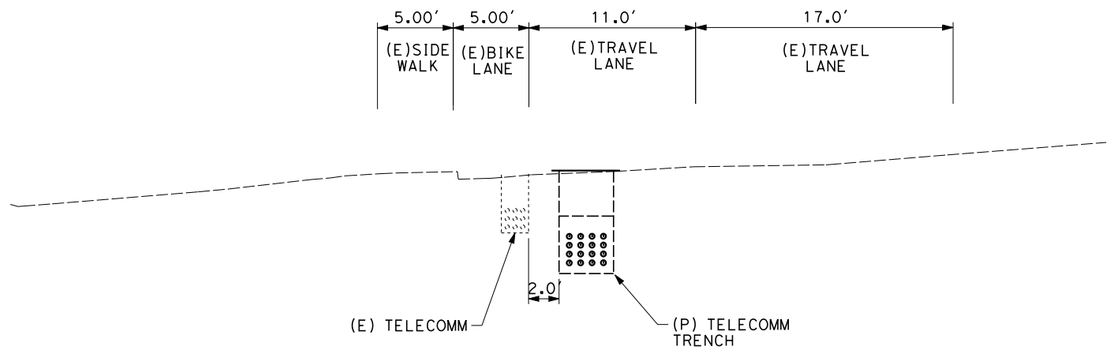

SECTION I-I

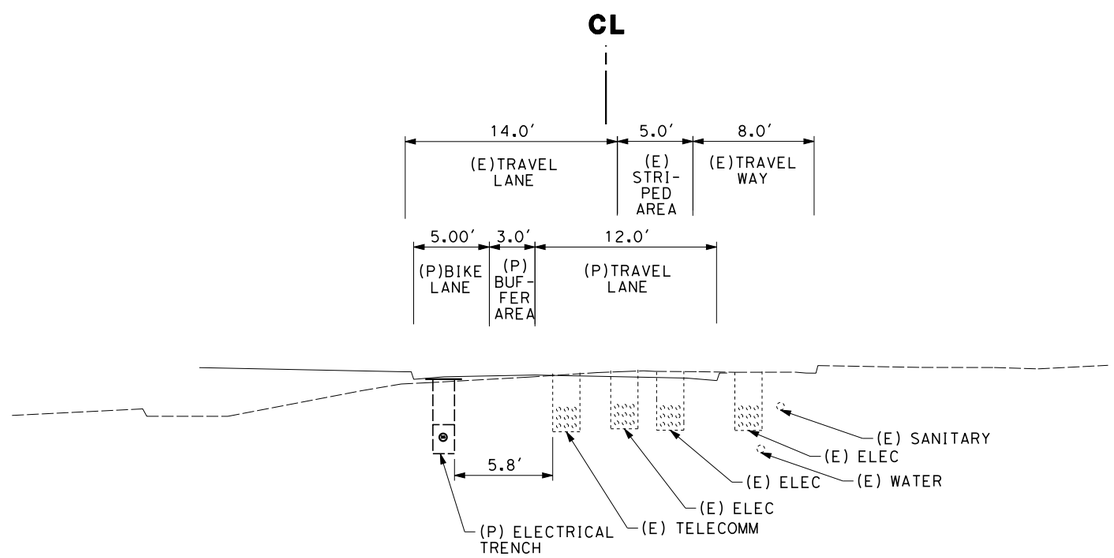

SECTION J-J

THIS PLAN ACCURATE FOR UTILITY WORK ONLY.

LINCOLN BLVD SECTIONS

SCALE 1" - 5′

LX-IJ05

REVISED BY	DATE REVISED
MD	01/13/10

CALCULATED-DESIGNED BY	CHECKED BY
MANISH DALIA	DUANNE GILMORE

FUNCTIONAL SUPERVISOR: DUANNE GILMORE

STATE OF CALIFORNIA - DEPARTMENT OF TRANSPORTATION

Caltrans

LAST REVISION DATE PLOTTED => 2/2/2010 TIME PLOTTED => 4:33:23 PM

BORDER LAST REVISED 3/1/2007 | RELATIVE BORDER SCALE IS IN INCHES 0 1 2 3 | USERNAME => manish.dalia DGN FILE => $FILE$ | CU 00000 | EA 04-16372X

Dist	COUNTY	ROUTE	POST MILES TOTAL PROJECT	SHEET No.	TOTAL SHEETS
04	SF	101	8.0/9.8	4	12

LICENSED CIVIL ENGINEER 6-09-09

PLANS APPROVAL DATE

REGISTERED PROFESSIONAL ENGINEER
JOHN EDWARD KARN JR
No. C66743
Exp. 9-30-10
CIVIL
STATE OF CALIFORNIA

THE STATE OF CALIFORNIA OR ITS OFFICERS OR AGENTS SHALL NOT BE RESPONSIBLE FOR THE ACCURACY OR COMPLETENESS OF ELECTRONIC COPIES OF THIS PLAN SHEET.

Arup PB JV
560 Mission Street, Suite 700
San Francisco, CA 94105

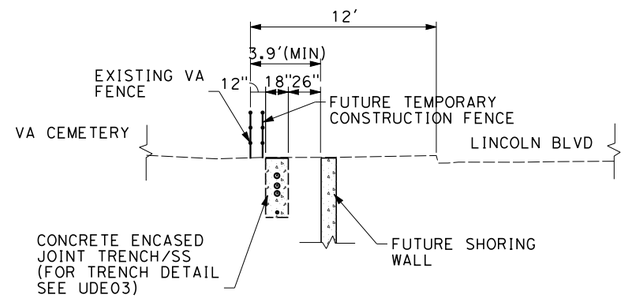

SECTION K-K

THIS PLAN ACCURATE FOR UTILITY WORK ONLY.

LINCOLN BLVD SECTIONS
SCALE 1" - 5'

LX-KL06

REVISED BY	MD
DATE REVISED	03/23/10
CALCULATED-DESIGNED BY	MANISH DALIA
CHECKED BY	DUANNE GILMORE
FUNCTIONAL SUPERVISOR	DUANNE GILMORE

STATE OF CALIFORNIA - DEPARTMENT OF TRANSPORTATION
Caltrans

LAST REVISION DATE PLOTTED => 3/23/2010
TIME PLOTTED => 6:48:48 PM