DIST	COUNTY	ROUTE	POST MILES TOTAL PROJECT	SHEET No	TOTAL SHEETS
04	SF	1,101			

REGISTERED CIVIL ENGINEER X DATE

PLANS APPROVAL DATE

REGISTERED PROFESSIONAL ENGINEER AHMED M M IBRAHIM No. S 4865 Exp. 9-30-10 STRUCTURE STATE OF CALIFORNIA

The State of California or its officers or agents shall not be responsible for the accuracy or completeness of electronic copies of this plan sheet.

To get to the Caltrans web site, go to: http://www.dot.ca.gov

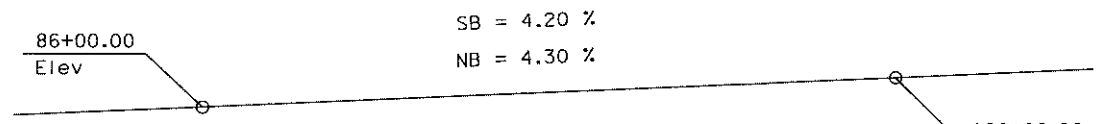

PROFILE
No Scale

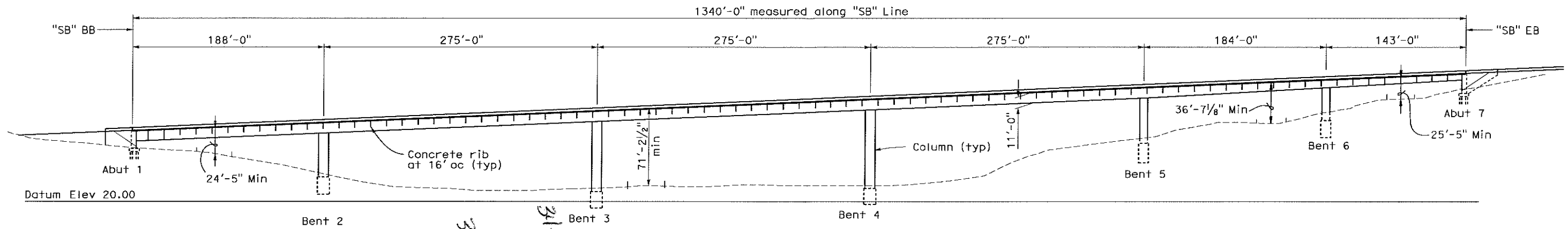

ELEVATION
1" = 50'

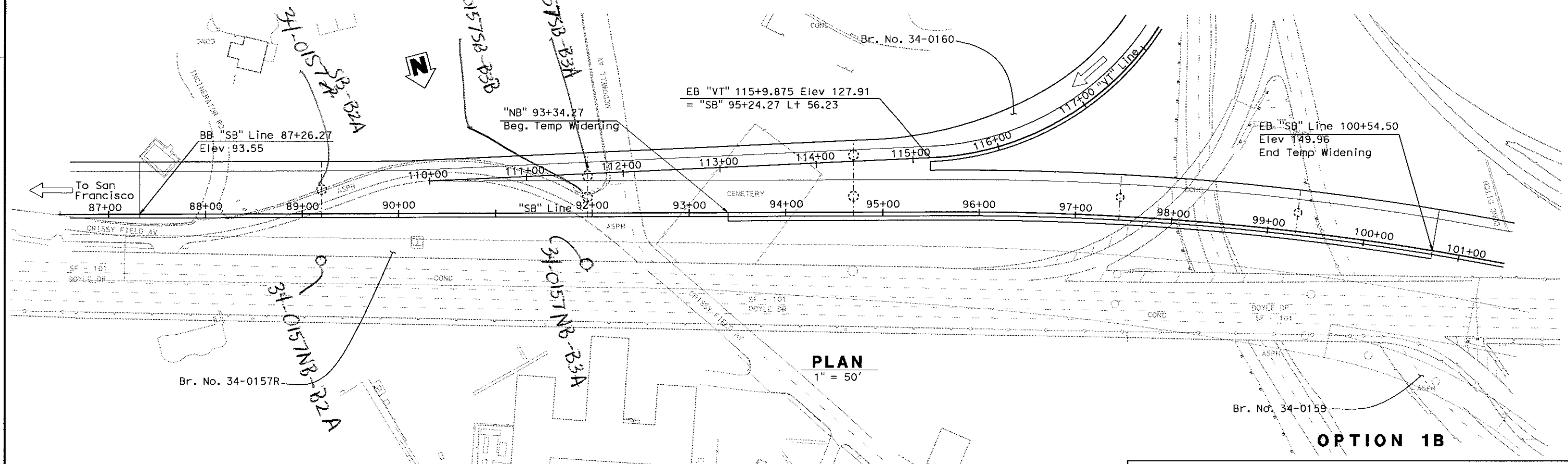

PLAN
1" = 50'

OPTION 1B

DESIGN	BY X	CHECKED X	LOAD & RESISTANCE FACTOR DESIGN	LIVE LOADING: HL93 W/"LOW-BOY"; PERMIT DESIGN VEHICLE	
DETAILS	BY JFCasarino	CHECKED X	LAYOUT	BY X	CHECKED X
QUANTITIES	BY X	CHECKED X	SPECIFICATIONS	BY X	PLANS AND SPECS COMPARED X

X
DESIGN ENGINEER

STATE OF CALIFORNIA
DEPARTMENT OF TRANSPORTATION

DIVISION OF ENGINEERING SERVICES
STRUCTURE DESIGN
DESIGN BRANCH 4

BRIDGE NO. 34-0157L
POST MILE X

SOUTH ACCESS TO THE GOLDEN GATE BRIDGE
PRESIDIO VIADUCT - SOUTHBOUND
GENERAL PLAN NO. 1

STRUCTURES DESIGN GENERAL PLAN SHEET (ENGLISH) (REV. 10/25/05)

ORIGINAL SCALE IN INCHES FOR REDUCED PLANS 0 1 2 3

CU 04
EA 163700

DISREGARD PRINTS BEARING EARLIER REVISION DATES

REVISION DATES 1-7-09

SHEET 1 OF X

FILE => 34-0157I_01gpa1t1b.dgn

STRUCTURES DESIGN GENERAL PLAN SHEET (ENGLISH) (REV.07-24-06)

USERNAME => qzhao DATE PLOTTED => 12-JAN-2009 TIME PLOTTED => 17:45