SHEET No	TOTAL SHEETS
1	

PRESIDIO PARKWAY PROJECT, PUBLIC PRIVATE AGREEMENT
INDICATIVE PRELIMINARY DESIGN
MAIN POST TUNNELS,
NORTHBOUND BATTERY TUNNEL,
GIRARD INTERCHANGE,
AND NORTHBOUND HIGH VIADUCT

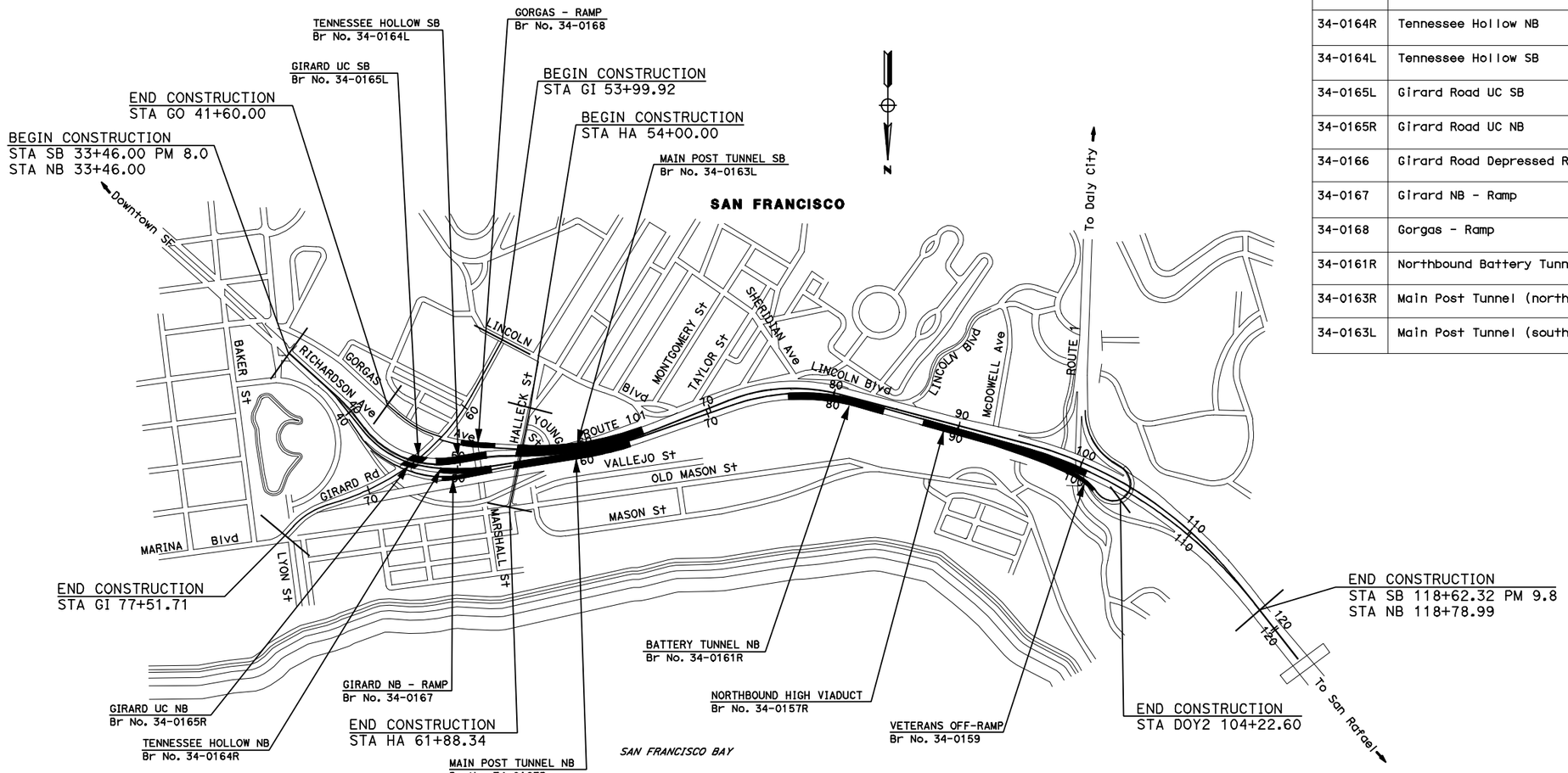

BR. NO.	STRUCTURE	BEGIN STN	END STN
34-0157R	Northbound High Viaduct	"NB" Line BB 87+16.68	"NB" Line EB 101+15.68
34-0159	Veterans Off-Ramp	"DOY 2" Line BB 99+98.47	"DOY 2" Line EB 101+95.47
34-0164R	Tennessee Hollow NB	"NB" Line" BB 48+48.71	"NB" Line" EB 52+60.00
34-0164L	Tennessee Hollow SB	"SB" Line BB 48+14.38	"SB" Line EB 52+04.38
34-0165L	Girard Road UC SB	"SB" Line BB 45+31.38	"SB Line EB 47+56.39
34-0165R	Girard Road UC NB	"NB" Line BB 45+25.36	"NB" Line EB 47+49.14
34-0166	Girard Road Depressed RW	"GI" Line TBD	"GI" Line TBD
34-0167	Girard NB - Ramp	"GN" Line BB 48+89.83	"GN" Line EB 50+85.58
34-0168	Gorgas - Ramp	"DOY 3" Line BB 51+33.52	"DOY 3" Line EB 53+07.52
34-0161R	Northbound Battery Tunnel	"NB" Line 76+00±	"NB" Line 84+55±
34-0163R	Main Post Tunnel (northbound)	"NB" Line 53+95±	"NB" Line 63+95±
34-0163L	Main Post Tunnel (southbound)	"SB" Line 54+05±	"NB" Line 65+00±

PRESIDIO PARKWAY P3 PROJECT
INDICATIVE PRELIMINARY DESIGN

DGN FILE => Cover_Sheet.dgn
DATE PLOTTED => 18-MAY-2010
TIME PLOTTED => 17:24

SHEET No	TOTAL SHEETS
2	

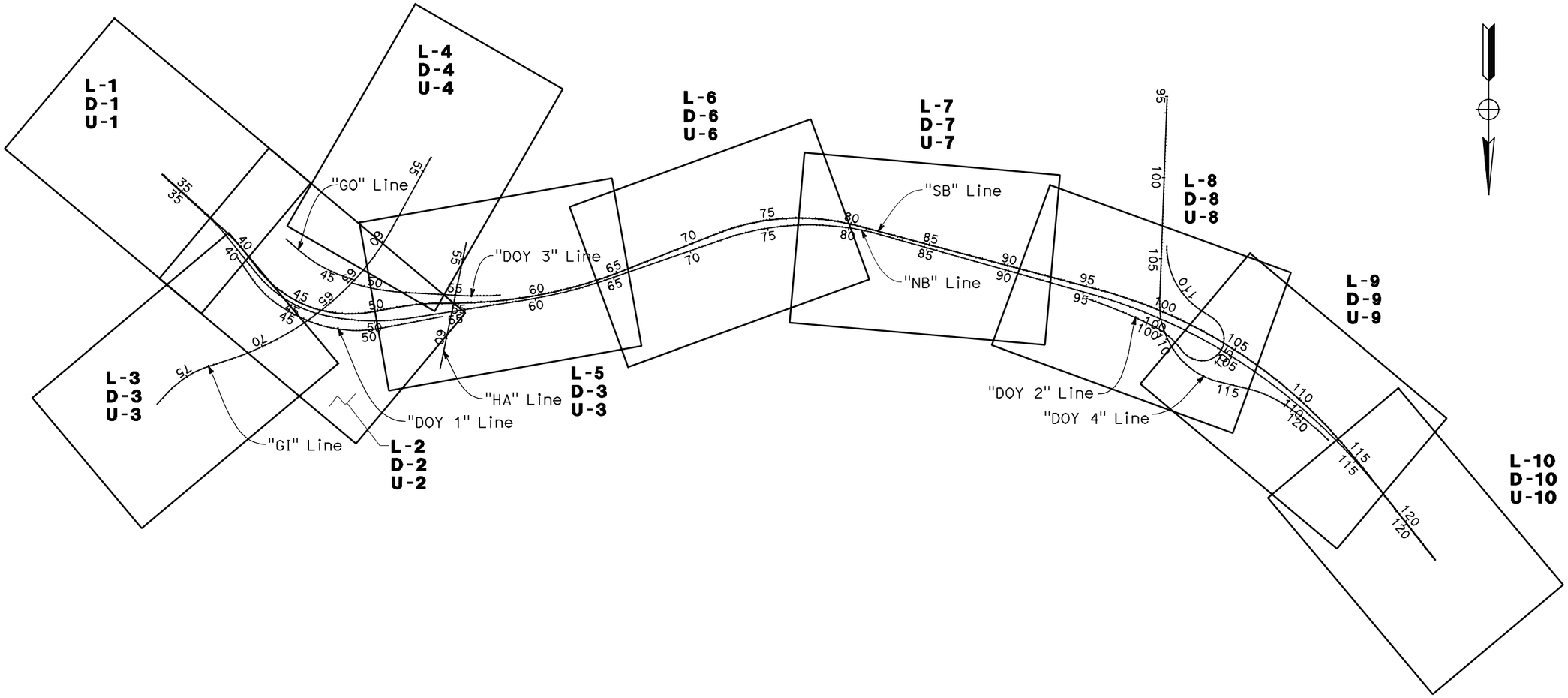

DGN FILE => P3_keymap.dgn

DATE PLOTTED => 17-MAY-2010
TIME PLOTTED => 16:49

PRESIDIO PARKWAY P3 PROJECT
INDICATIVE PRELIMINARY DESIGN

KEY MAP AND LINE INDEX

NO SCALE

K-1

SHEET No	TOTAL SHEETS
3	

CURVE DATA

No.	R	Δ	T	L	N-COORDINATE	E-COORDINATE
①	1000′	09° 15′ 01″	80.90′	161.45′	2120999.393	5999253.822

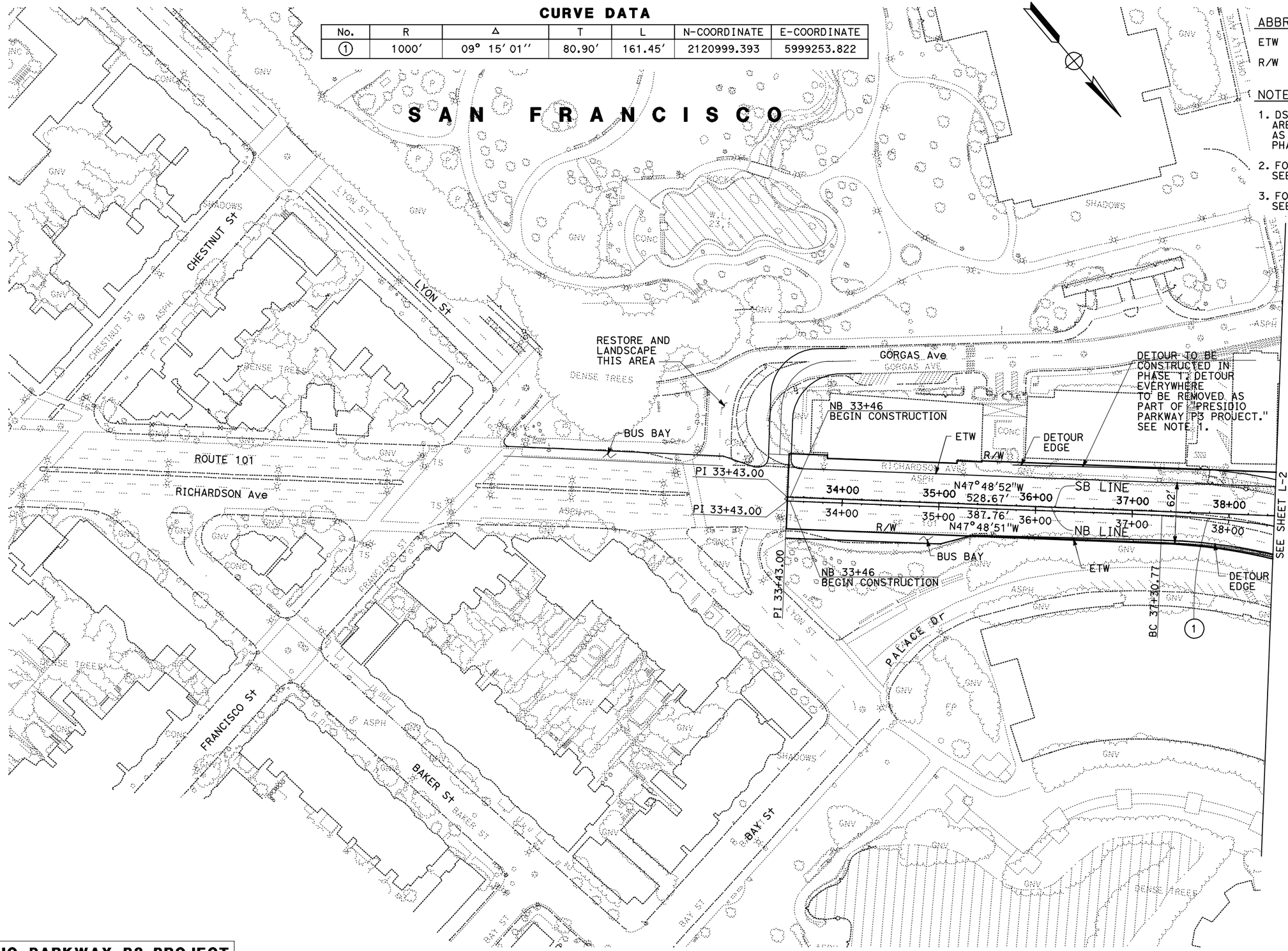

ABBREVIATION

ETW EDGE OF TRAVEL WAY

R/W PERMANENT PROPERTY LINE

NOTES:

1. DS LINE AND DN LINE ARE THE DETOUR ALIGNMENTS AS DEFINED IN THE PHASE 1 DOCUMENTS.
2. FOR LOCATIONS OF RAILING, SEE SHEETS RL-1 TO RL-8.
3. FOR LANE WIDTHS, SEE SHEET S-1 TO S-10.

PRESIDIO PARKWAY P3 PROJECT
INDICATIVE PRELIMINARY DESIGN

LAYOUT
SCALE 1″ = 50′

L-1

DGN FILE => P3LAYOUT001.dgn
DATE PLOTTED => 18-MAY-2010
TIME PLOTTED => 17:18

SHEET No	TOTAL SHEETS
4	

CURVE DATA

No.	R	Δ	T	L	N-COORDINATE	E-COORDINATE
1	568′	19° 02′ 48″	95.29′	188.82′	2120323.862	5997841.498
2	984′	13° 36′ 11″	117.36′	233.62′	2119987.410	5997596.844
3	790′	33° 25′ 16″	237.17′	460.81′	2120168.203	5997667.330
4	759′	39° 33′ 50″	272.98′	524.10′	2120125.010	5997701.322
5	1440′	20° 45′ 51″	263.82′	521.86′	2119458.577	5997561.219
6	968′	10° 09′ 39″	86.06′	171.66′	2121067.337	5999125.244
7	725′	62° 25′ 25″	439.28′	789.88′	2120130.931	5997709.384
8	1834′	28° 55′ 53″	473.13′	926.07′	2119393.232	5999021.958
9	853′	25° 53′ 50″	196.12′	385.55′	2119822.675	5997462.657
10	1312′	14° 19′ 24″	164.85′	327.99′	2119414.082	5997302.688

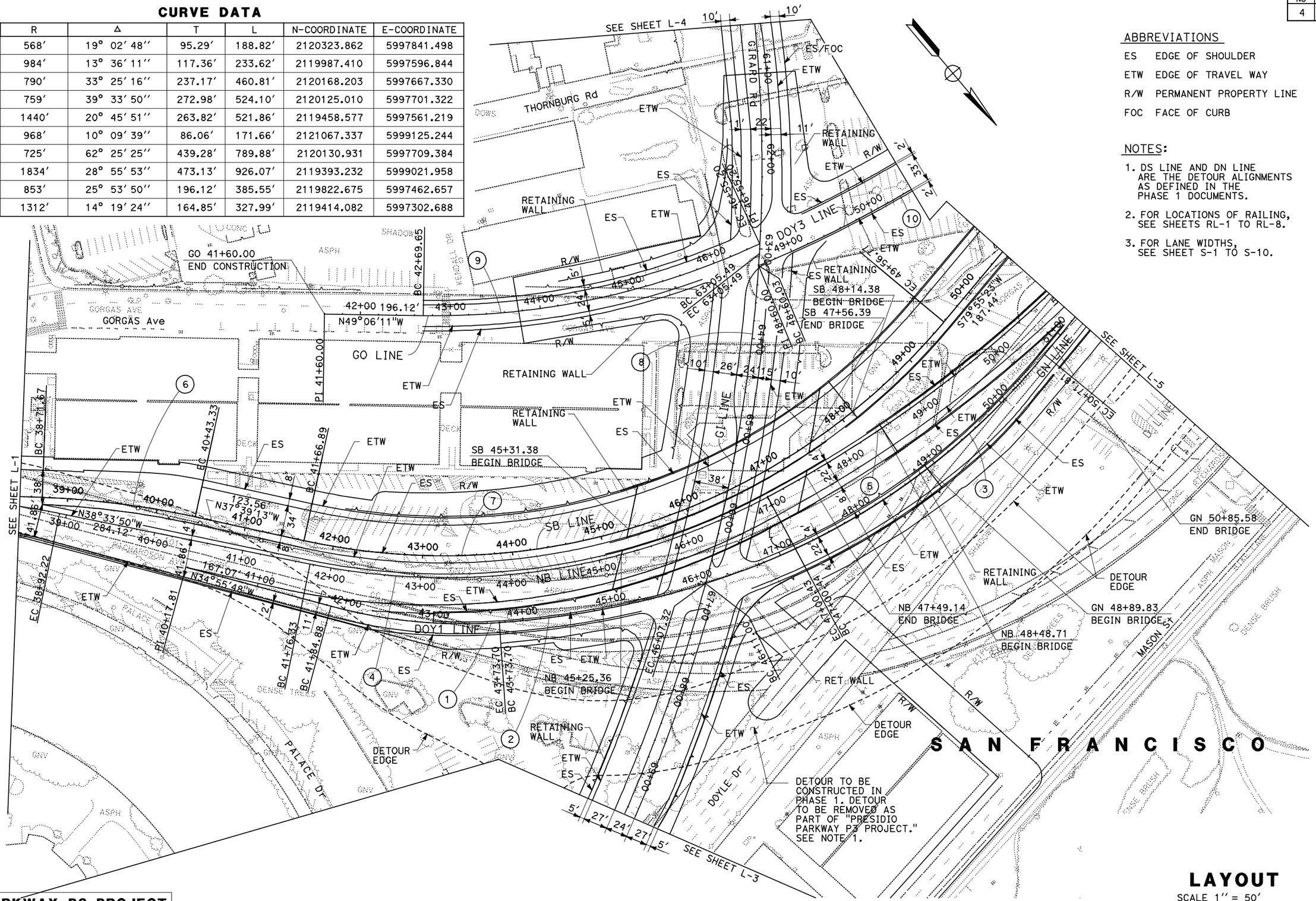

ABBREVIATIONS

ES EDGE OF SHOULDER
ETW EDGE OF TRAVEL WAY
R/W PERMANENT PROPERTY LINE
FOC FACE OF CURB

NOTES:

1. DS LINE AND DN LINE ARE THE DETOUR ALIGNMENTS AS DEFINED IN THE PHASE 1 DOCUMENTS.
2. FOR LOCATIONS OF RAILING, SEE SHEETS RL-1 TO RL-8.
3. FOR LANE WIDTHS, SEE SHEET S-1 TO S-10.

PRESIDIO PARKWAY P3 PROJECT
INDICATIVE PRELIMINARY DESIGN

LAYOUT

SCALE 1″ = 50′

L-2

DGN FILE => P3LAYOUT002.dgn
DATE PLOTTED => 18-MAY-2010
TIME PLOTTED => 17:18

SHEET No	TOTAL SHEETS
5	

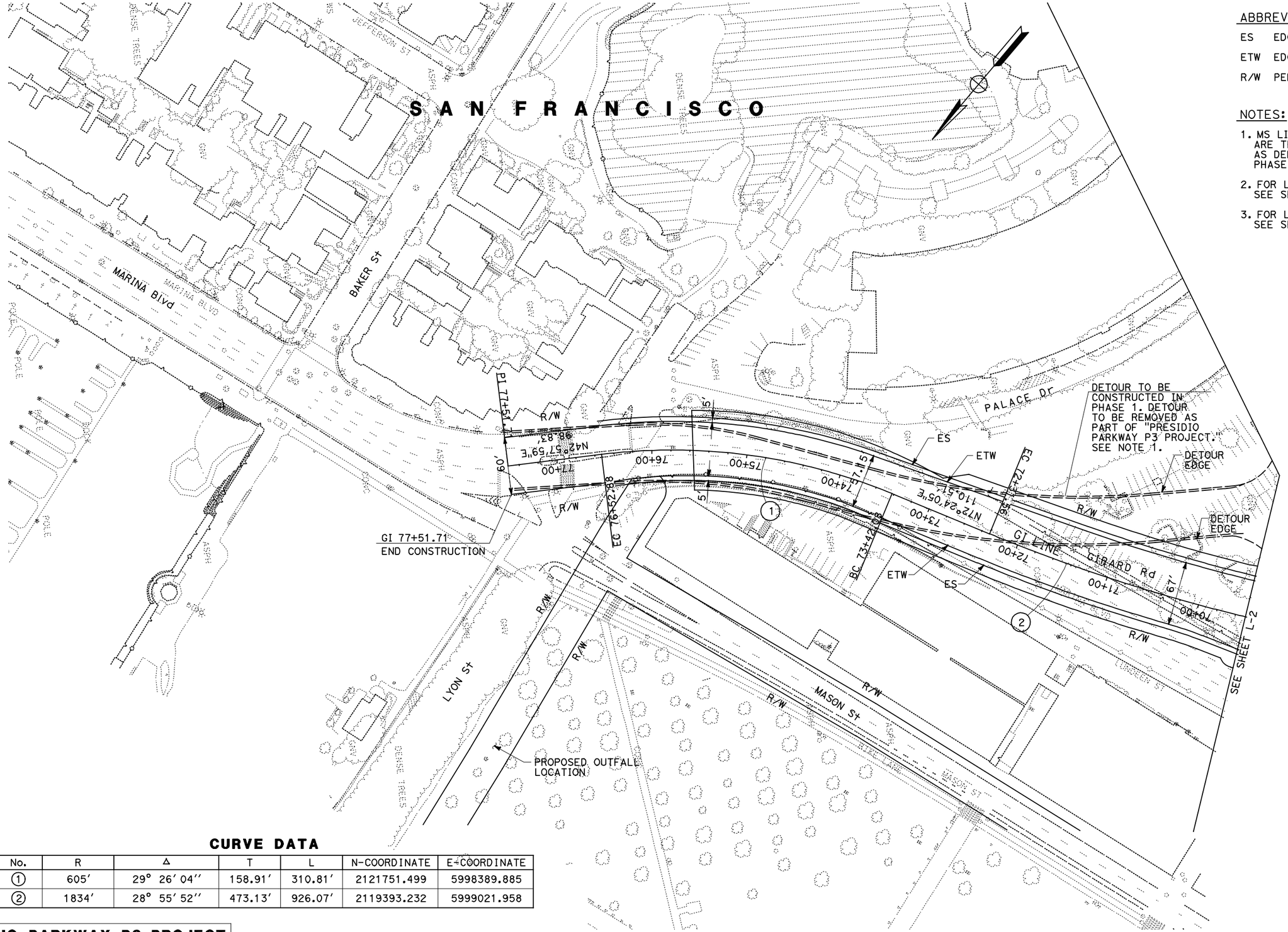

ABBREVIATIONS

ES EDGE OF SHOULDER

ETW EDGE OF TRAVEL WAY

R/W PERMANENT PROPERTY LINE

NOTES:

1. MS LINE AND MN LINE ARE THE DETOUR ALIGNMENTS AS DEFINED IN THE PHASE 1 DOCUMENTS.
2. FOR LOCATIONS OF RAILING, SEE SHEETS RL-1 TO RL-8.
3. FOR LANE WIDTHS, SEE SHEET S-1 TO S-10.

CURVE DATA

No.	R	Δ	T	L	N-COORDINATE	E-COORDINATE
①	605′	29° 26′ 04″	158.91′	310.81′	2121751.499	5998389.885
②	1834′	28° 55′ 52″	473.13′	926.07′	2119393.232	5999021.958

PRESIDIO PARKWAY P3 PROJECT
INDICATIVE PRELIMINARY DESIGN

LAYOUT

SCALE 1″ = 50′

L-3

DGN FILE => P3LAYOUT003.dgn

DATE PLOTTED => 18-MAY-2010

TIME PLOTTED => 17:18

SHEET No	TOTAL SHEETS
6	

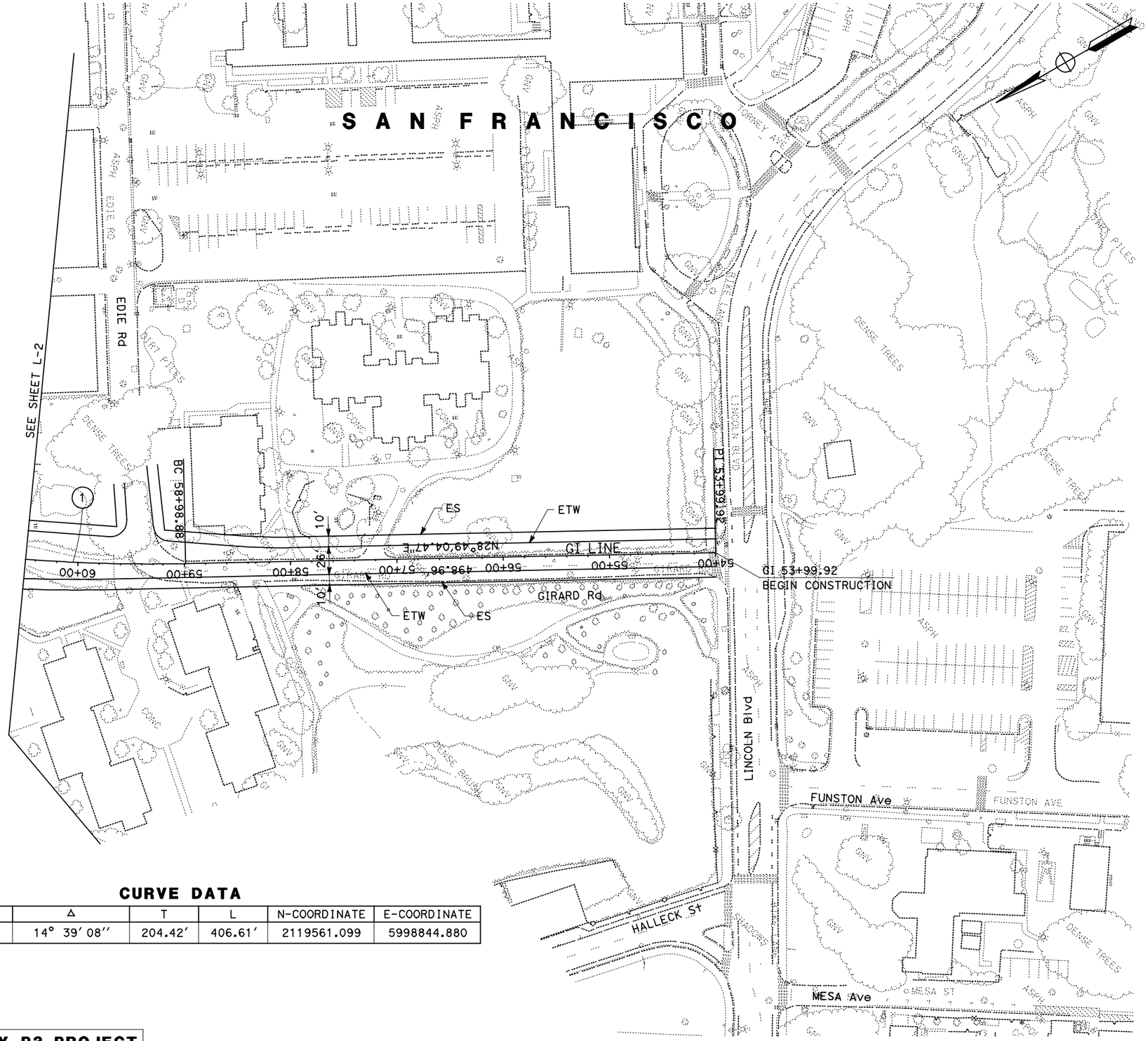

CURVE DATA

No.	R	Δ	T	L	N-COORDINATE	E-COORDINATE
①	1590′	14° 39′ 08″	204.42′	406.61′	2119561.099	5998844.880

ABBREVIATIONS

ES	EDGE OF SHOULDER
ETW	EDGE OF TRAVEL WAY
R/W	PERMANENT PROPERTY LINE

NOTE:

1. DS LINE AND DN LINE ARE THE DETOUR ALIGNMENTS AS DEFINED IN THE PHASE 1 DOCUMENTS.
2. FOR LOCATIONS OF RAILING, SEE SHEETS RL-1 TO RL-8.
3. FOR LANE WIDTHS, SEE SHEET S-1 TO S-10.

PRESIDIO PARKWAY P3 PROJECT
INDICATIVE PRELIMINARY DESIGN

LAYOUT

SCALE 1″ = 50′

L-4

DGN FILE => P3LAYOUT004.dgn
DATE PLOTTED => 18-MAY-2010
TIME PLOTTED => 17:18

SHEET No	TOTAL SHEETS
7	

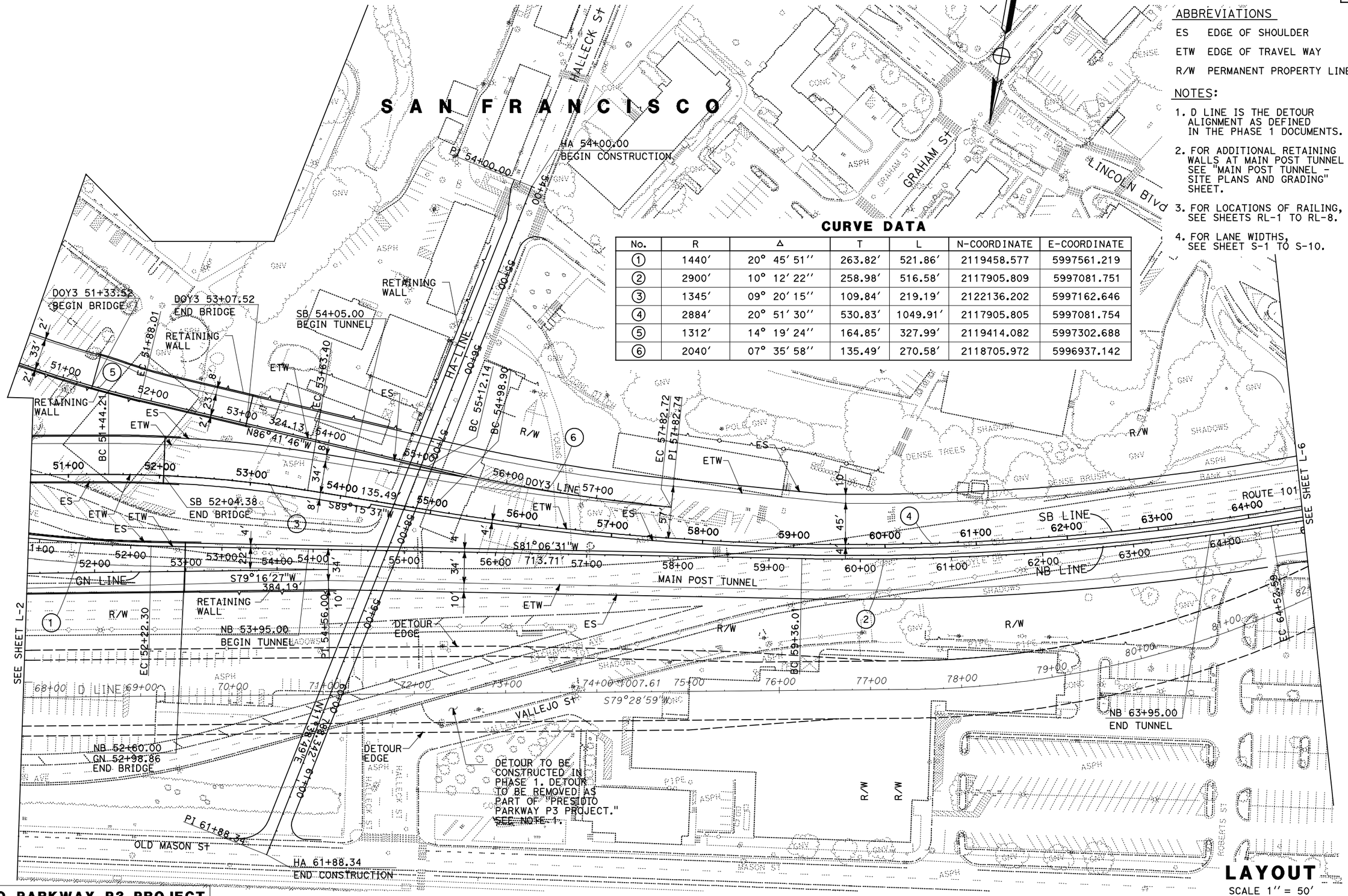

CURVE DATA

No.	R	Δ	T	L	N-COORDINATE	E-COORDINATE
①	1440′	20° 45′ 51″	263.82′	521.86′	2119458.577	5997561.219
②	2900′	10° 12′ 22″	258.98′	516.58′	2117905.809	5997081.751
③	1345′	09° 20′ 15″	109.84′	219.19′	2122136.202	5997162.646
④	2884′	20° 51′ 30″	530.83′	1049.91′	2117905.805	5997081.754
⑤	1312′	14° 19′ 24″	164.85′	327.99′	2119414.082	5997302.688
⑥	2040′	07° 35′ 58″	135.49′	270.58′	2118705.972	5996937.142

ABBREVIATIONS

ES EDGE OF SHOULDER

ETW EDGE OF TRAVEL WAY

R/W PERMANENT PROPERTY LINE

NOTES:

1. D LINE IS THE DETOUR ALIGNMENT AS DEFINED IN THE PHASE 1 DOCUMENTS.
2. FOR ADDITIONAL RETAINING WALLS AT MAIN POST TUNNEL SEE "MAIN POST TUNNEL - SITE PLANS AND GRADING" SHEET.
3. FOR LOCATIONS OF RAILING, SEE SHEETS RL-1 TO RL-8.
4. FOR LANE WIDTHS, SEE SHEET S-1 TO S-10.

LAYOUT

SCALE 1″ = 50′

PRESIDIO PARKWAY P3 PROJECT
INDICATIVE PRELIMINARY DESIGN

DGN FILE => P3LAYOUT005.dgn

DATE PLOTTED => 18-MAY-2010
TIME PLOTTED => 17:18

SHEET No	TOTAL SHEETS
8	

CURVE DATA

No.	R	Δ	T	L	N-COORDINATE	E-COORDINATE
①	1639′	34° 52′ 11″	514.73′	997.48′	2121946.901	5994880.147
②	1380′	36° 24′ 25″	453.81′	876.88′	2121646.104	5994945.576

ABBREVIATIONS

ES EDGE OF SHOULDER

ETW EDGE OF TRAVEL WAY

R/W PERMANENT PROPERTY LINE

NOTE:

1. D LINE IS THE DETOUR ALIGNMENT AS DEFINED IN THE PHASE 1 DOCUMENTS.
2. FOR LOCATIONS OF RAILING, SEE SHEETS RL-1 TO RL-8.
3. FOR LANE WIDTHS, SEE SHEET S-1 TO S-10.

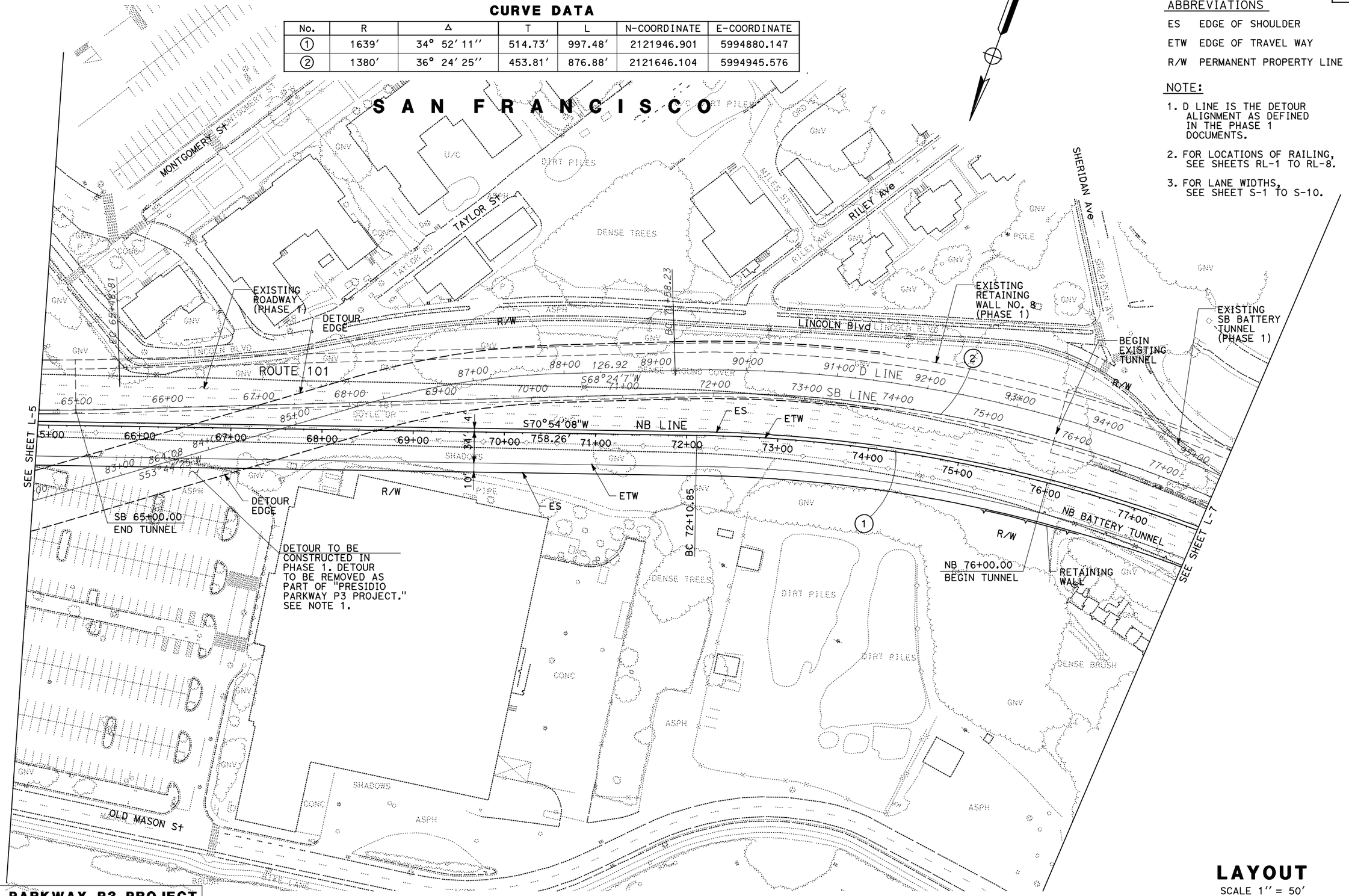

PRESIDIO PARKWAY P3 PROJECT
INDICATIVE PRELIMINARY DESIGN

LAYOUT
SCALE 1″ = 50′

L-6

DGN FILE => P3LAYOUT006.dgn
DATE PLOTTED => 18-MAY-2010
TIME PLOTTED => 17:18

SHEET No	TOTAL SHEETS
9	

ABBREVIATIONS

ES EDGE OF SHOULDER

ETW EDGE OF TRAVEL WAY

R/W PERMANENT PROPERTY LINE

NOTE:

1. FOR LOCATIONS OF RAILING, SEE SHEETS RL-1 TO RL-8.
2. FOR LANE WIDTHS, SEE SHEET S-1 TO S-10.

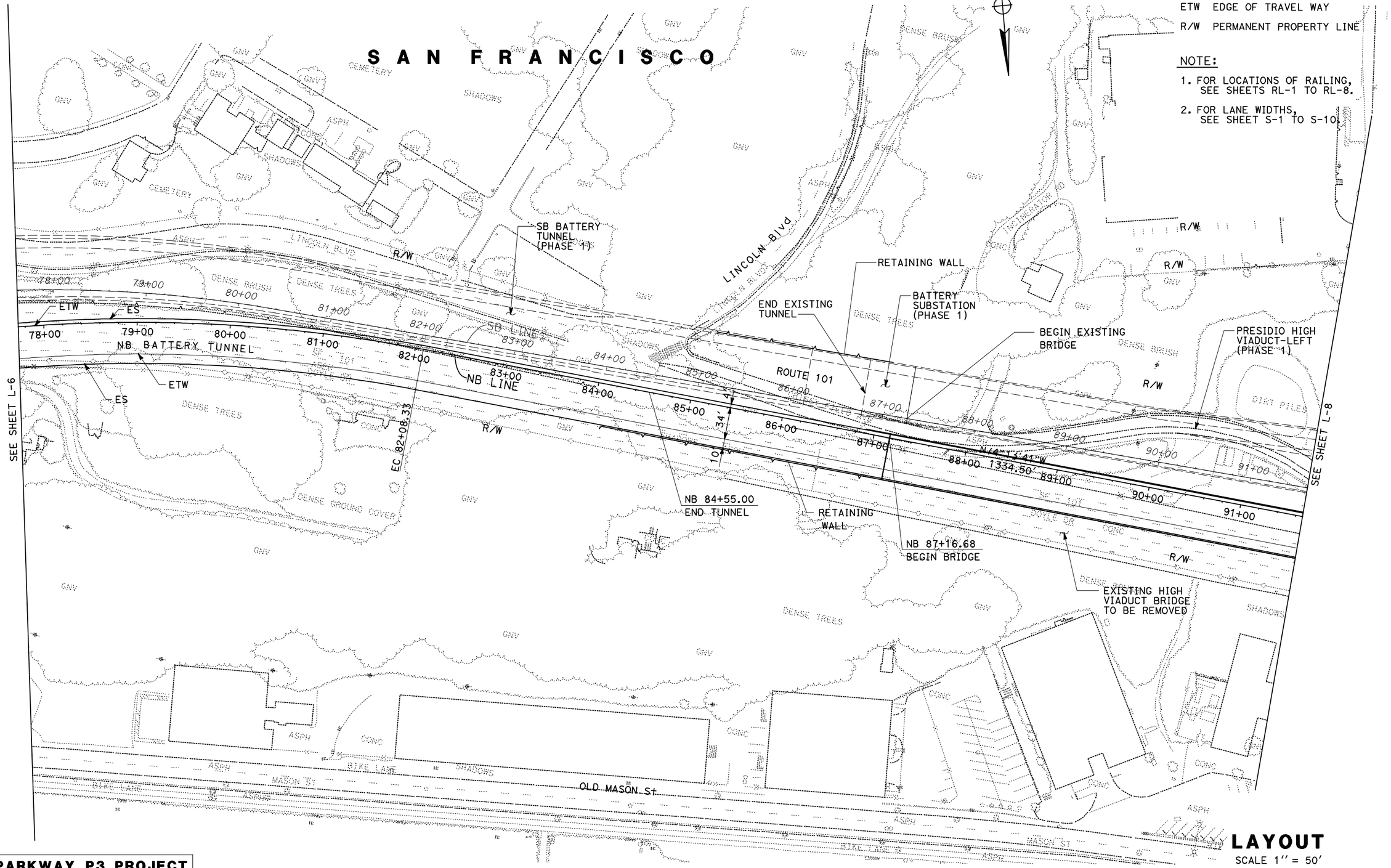

LAYOUT

SCALE 1'' = 50'

PRESIDIO PARKWAY P3 PROJECT
INDICATIVE PRELIMINARY DESIGN

L-7

DGN FILE => P3LAYOUT007.dgn
DATE PLOTTED => 18-MAY-2010
TIME PLOTTED => 17:18

SHEET No	TOTAL SHEETS
10	

ABBREVIATIONS

ES EDGE OF SHOULDER

ETW EDGE OF TRAVEL WAY

R/W PERMANENT PROPERTY LINE

NOTE:

1. FOR LOCATIONS OF RAILING, SEE SHEETS RL-1 TO RL-8.
2. FOR LANE WIDTHS, SEE SHEET S-1 TO S-10.

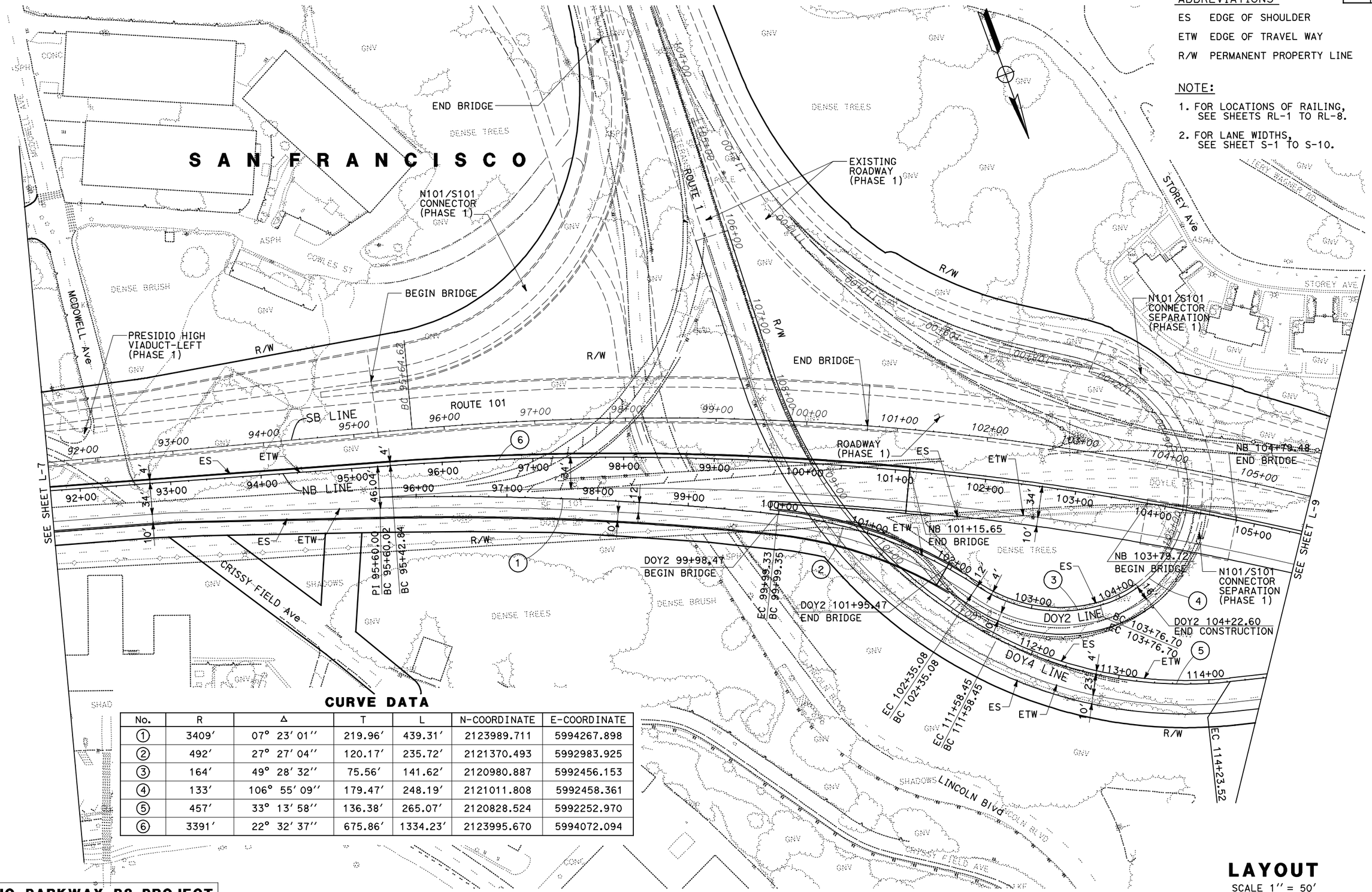

CURVE DATA

No.	R	Δ	T	L	N-COORDINATE	E-COORDINATE
①	3409′	07° 23′ 01″	219.96′	439.31′	2123989.711	5994267.898
②	492′	27° 27′ 04″	120.17′	235.72′	2121370.493	5992983.925
③	164′	49° 28′ 32″	75.56′	141.62′	2120980.887	5992456.153
④	133′	106° 55′ 09″	179.47′	248.19′	2121011.808	5992458.361
⑤	457′	33° 13′ 58″	136.38′	265.07′	2120828.524	5992252.970
⑥	3391′	22° 32′ 37″	675.86′	1334.23′	2123995.670	5994072.094

PRESIDIO PARKWAY P3 PROJECT
INDICATIVE PRELIMINARY DESIGN

LAYOUT

SCALE 1″ = 50′

DGN FILE => P3LAYOUT008.dgn
DATE PLOTTED => 18-MAY-2010
TIME PLOTTED => 17:18

SHEET No	TOTAL SHEETS
11	

ABBREVIATIONS

ES EDGE OF SHOULDER

ETW EDGE OF TRAVEL WAY

R/W PERMANENT PROPERTY LINE

NOTES:

1. FOR LOCATIONS OF RAILING, SEE SHEETS RL-1 TO RL-8.
2. FOR LANE WIDTHS, SEE SHEET S-1 TO S-10.

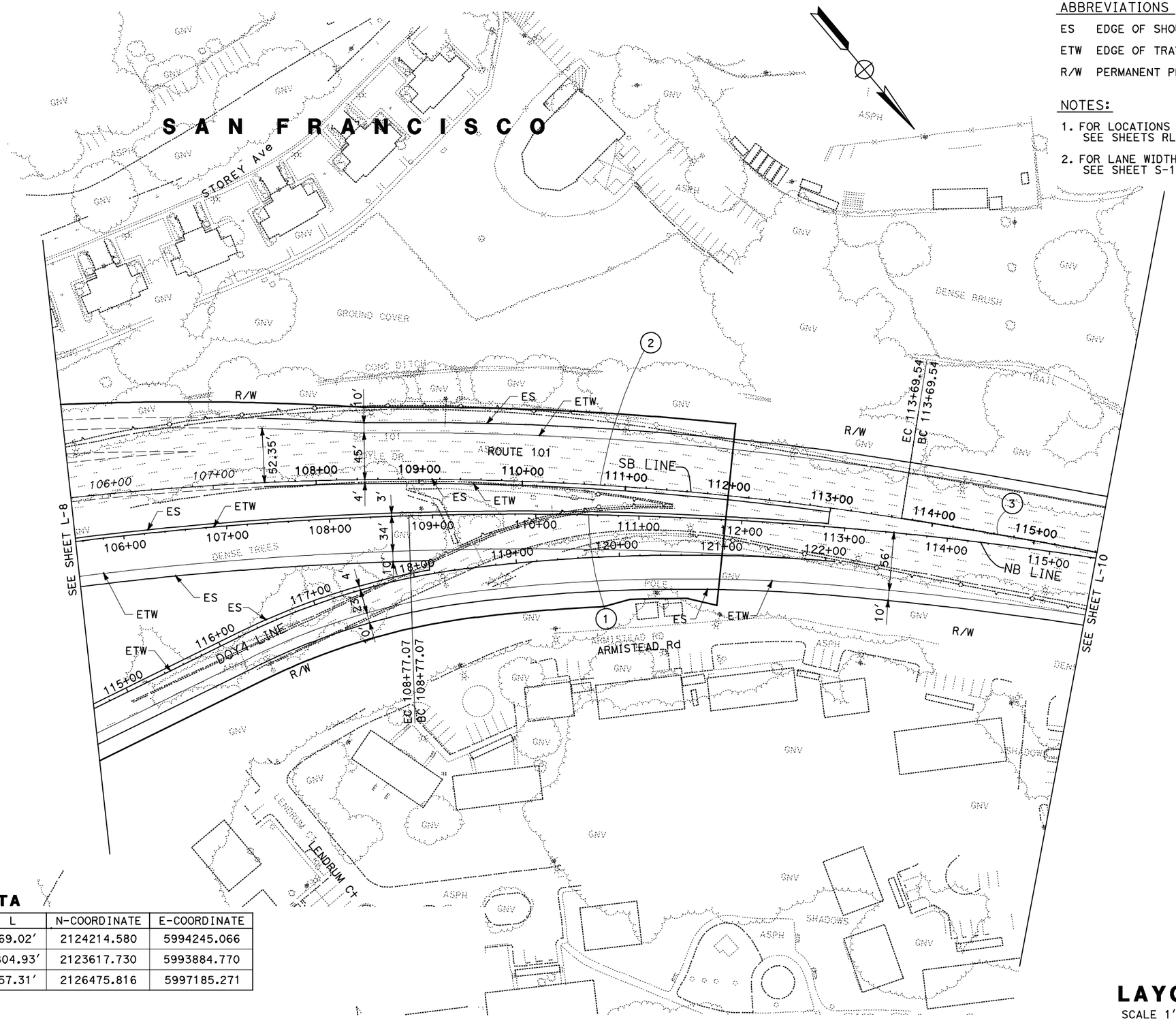

CURVE DATA

No.	R	Δ	T	L	N-COORDINATE	E-COORDINATE
①	3670′	13° 34′ 02″	436.55′	869.02′	2124214.580	5994245.066
②	3051′	34° 18′ 00″	930.42′	1804.93′	2123617.730	5993884.770
③	7381′	02° 46′ 26″	178.71′	357.31′	2126475.816	5997185.271

PRESIDIO PARKWAY P3 PROJECT
INDICATIVE PRELIMINARY DESIGN

LAYOUT

SCALE 1″ = 50′

L-9

DGN FILE => P3LAYOUT009.dgn

DATE PLOTTED => 18-MAY-2010

TIME PLOTTED => 17:18

SHEET No	TOTAL SHEETS
12	

ABBREVIATIONS

ES EDGE OF SHOULDER

ETW EDGE OF TRAVEL WAY

R/W PERMANENT PROPERTY LINE

NOTES:

1. FOR LOCATIONS OF RAILING, SEE SHEETS RL-1 TO RL-8.
2. FOR LANE WIDTHS, SEE SHEET S-1 TO S-10.

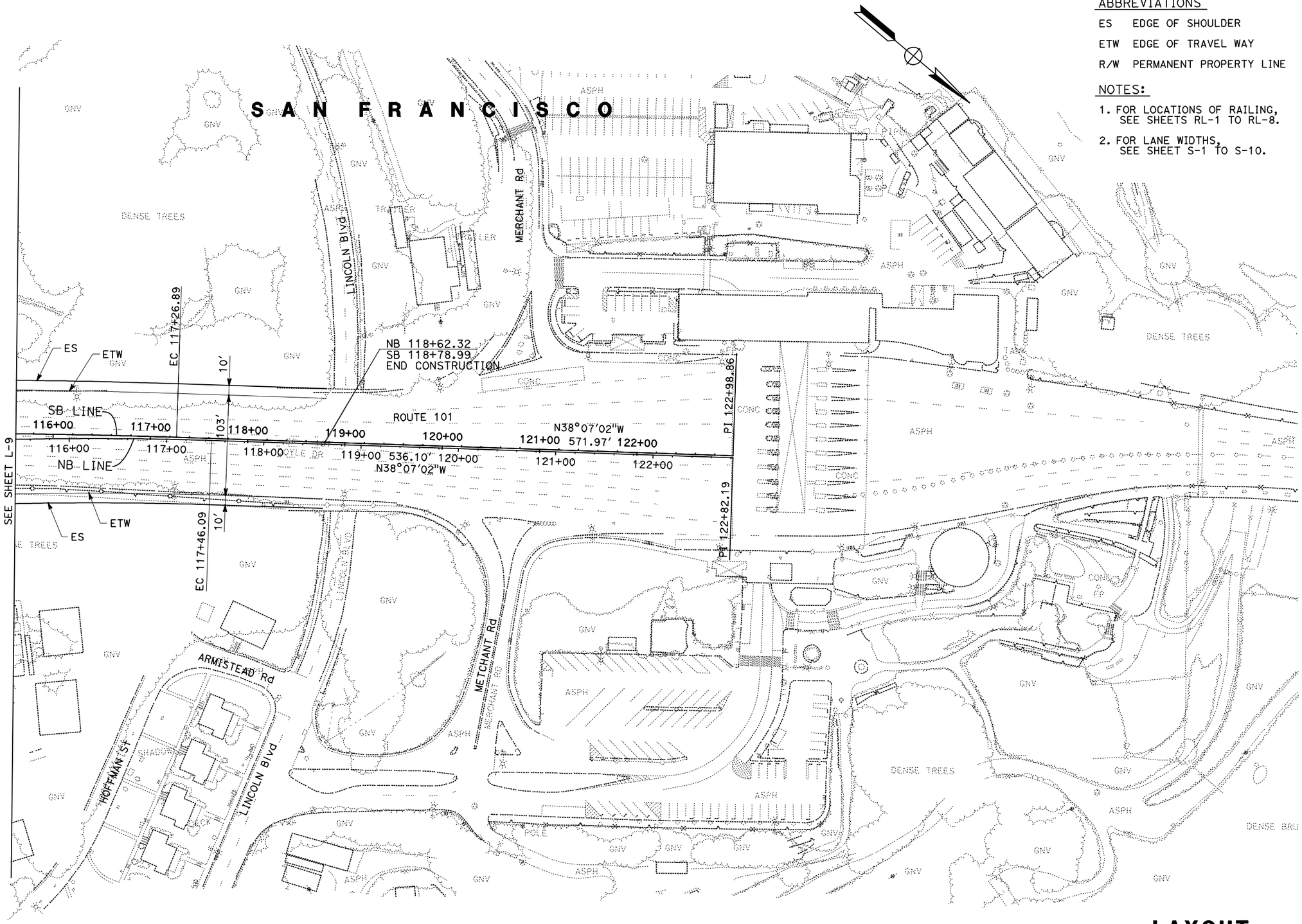

LAYOUT

SCALE 1'' = 50'

L-10

PRESIDIO PARKWAY P3 PROJECT
INDICATIVE PRELIMINARY DESIGN

DGN FILE => P3LAYOUT010.dgn

DATE PLOTTED => 18-MAY-2010
TIME PLOTTED => 17:18

SHEET No	TOTAL SHEETS
13	

(#) PARKING LOCATION NUMBER

RESTRICTED PARKING

GORGAS AVENUE WAREHOUSES AREA

THORNBURG AREA

NORTH HALLECK AREA

PALACE OF FINE ARTS AREA

PX/COMMISSARY AREA

MASON STREET WAREHOUSES AREA

1151 1152 1160 1161 1170 1162 1169 1163 1167 1158 1051 1050 1056 1061 1076 1059 1060 47 1040 1030 1062 1063 1029 1182 1183 1184 1186 1185 1187 1188 230 231 201 204 205 610 631 632 633 606 605 603 653

1 2 3 4 5 6 7 8 9 10 11 12 13 14 15 16 17 18 19 20 21 22 24 25

PARKING LOCATIONS

NO SCALE

PK-1

PRESIDIO PARKWAY P3 PROJECT
INDICATIVE PRELIMINARY DESIGN

DGN FILE => P3_Parking.dgn

DATE PLOTTED => 17-MAY-2010
TIME PLOTTED => 16:56

SHEET No	TOTAL SHEETS
14	

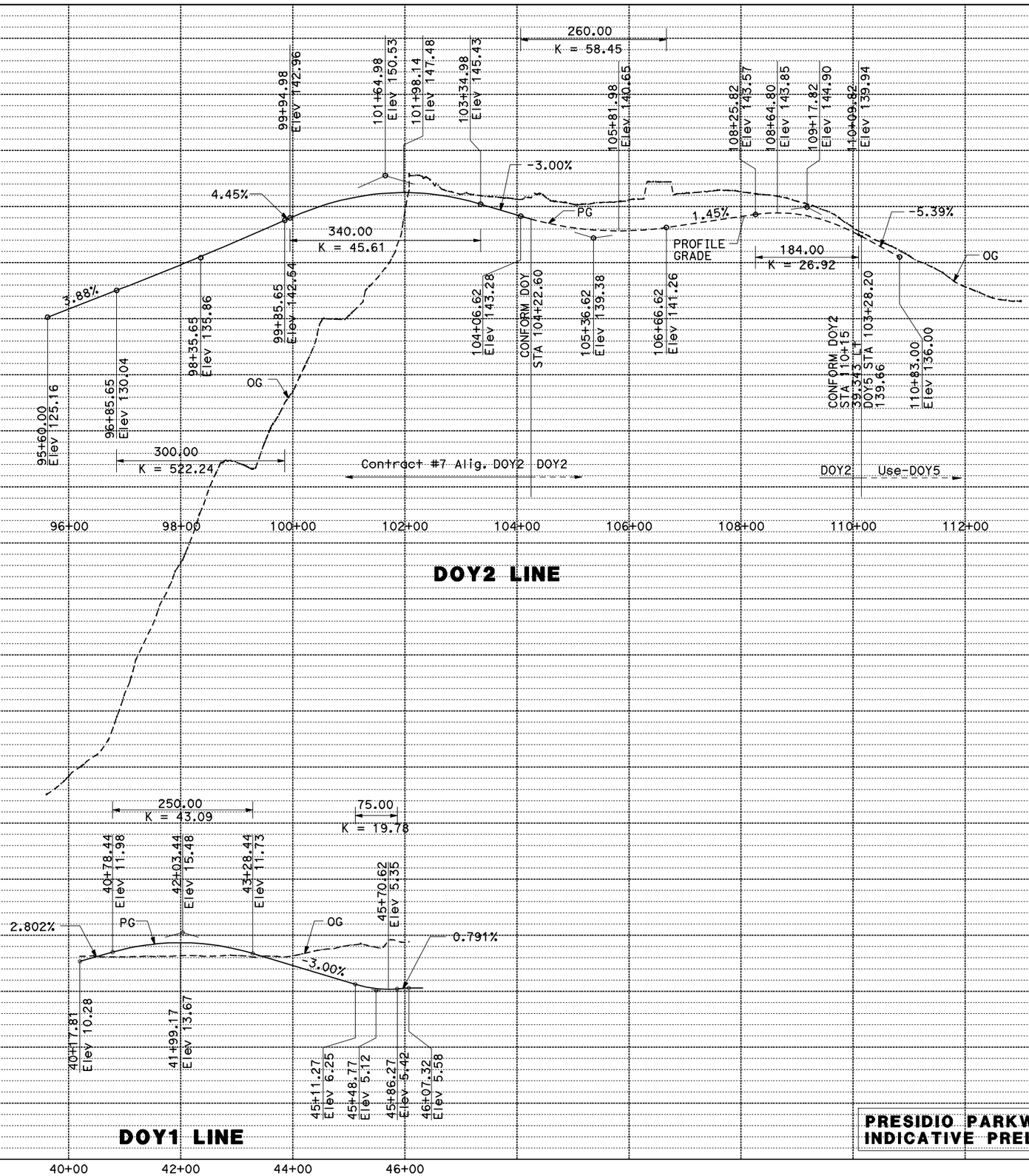

DGN FILE => P3_prof001.dgn

DATE PLOTTED => 17-MAY-2010
TIME PLOTTED => 16:51

PROFILE

SCALE HORIZ 1" = 100'
VERT 1" = 10'

PRESIDIO PARKWAY P3 PROJECT
INDICATIVE PRELIMINARY DESIGN

P-1

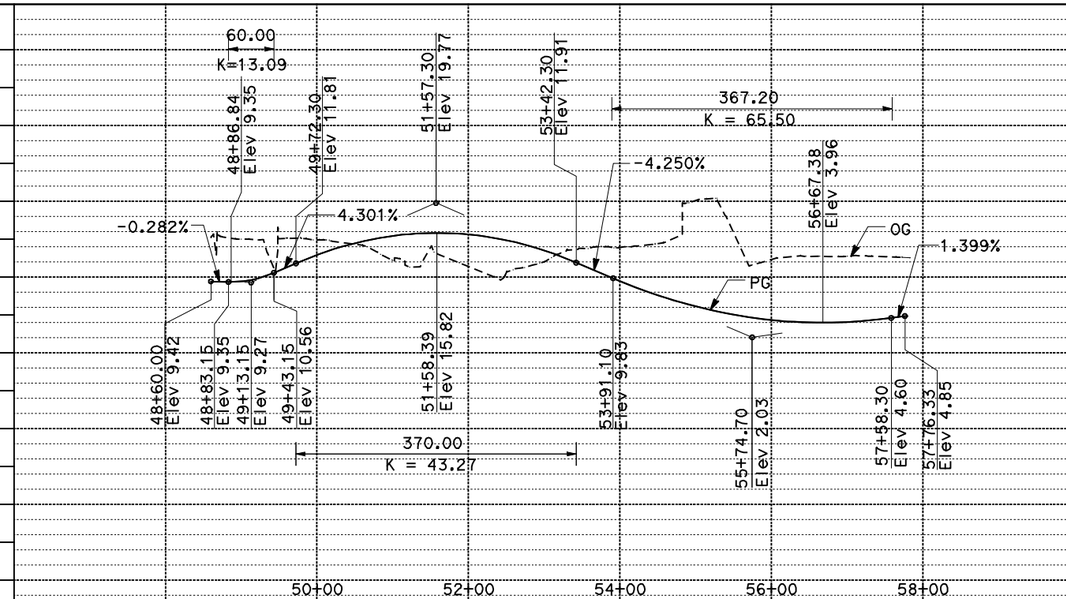

DOY3 LINE

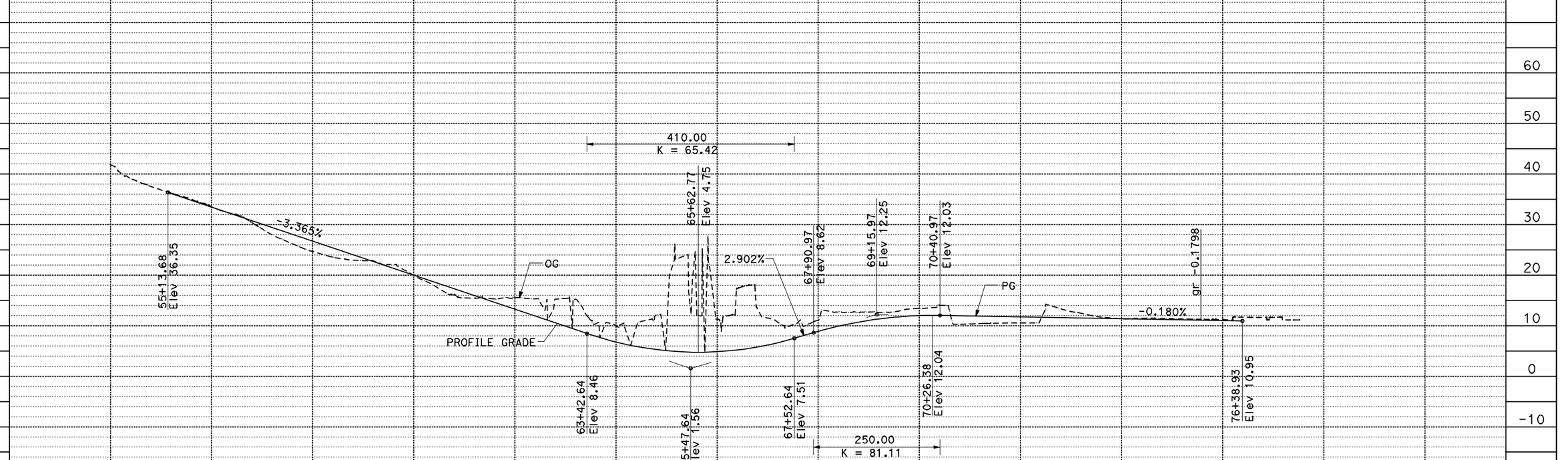

PROPOSED GIRARD ROAD PROFILE

PRESIDIO PARKWAY P3 PROJECT
INDICATIVE PRELIMINARY DESIGN

PROFILE
SCALE HORIZ 1" = 100'
VERT 1" = 10'

P-2

DGN FILE => P3_prof002.dgn
DATE PLOTTED => 17-MAY-2010
TIME PLOTTED => 16:51

PHASE 1 ◄ ► **PHASE 2**

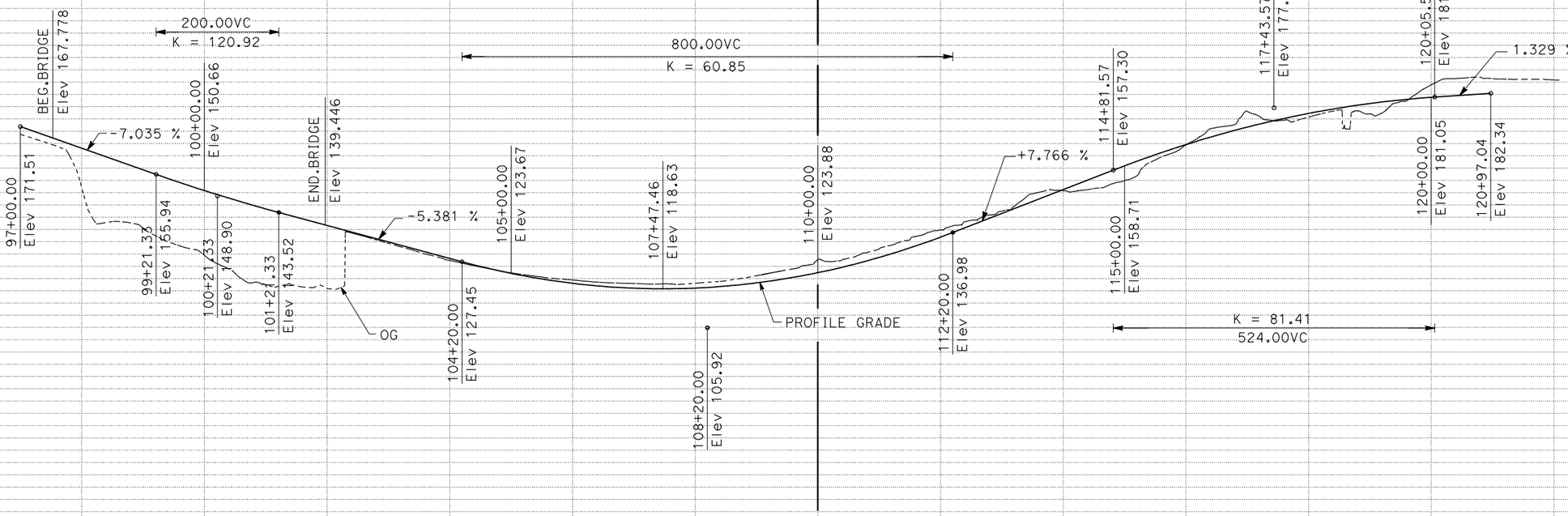

DOY4 LINE

DGN FILE => $REQUEST

DATE PLOTTED => $DATE
TIME PLOTTED => $TIME

STATION 96+00 98+00 100+00 102+00 104+00 106+00 108+00 110+00 112+00 114+00 116+00 118+00 120+00 122+00

200 180 160 140 120 100 80 60

PROFILE

SCALE HORIZ 1'' = 100'
VERT 1" = 10'

PRESIDIO PARKWAY P3 PROJECT
INDICATIVE PRELIMINARY DESIGN

P-2A

SHEET No	TOTAL SHEETS
16	

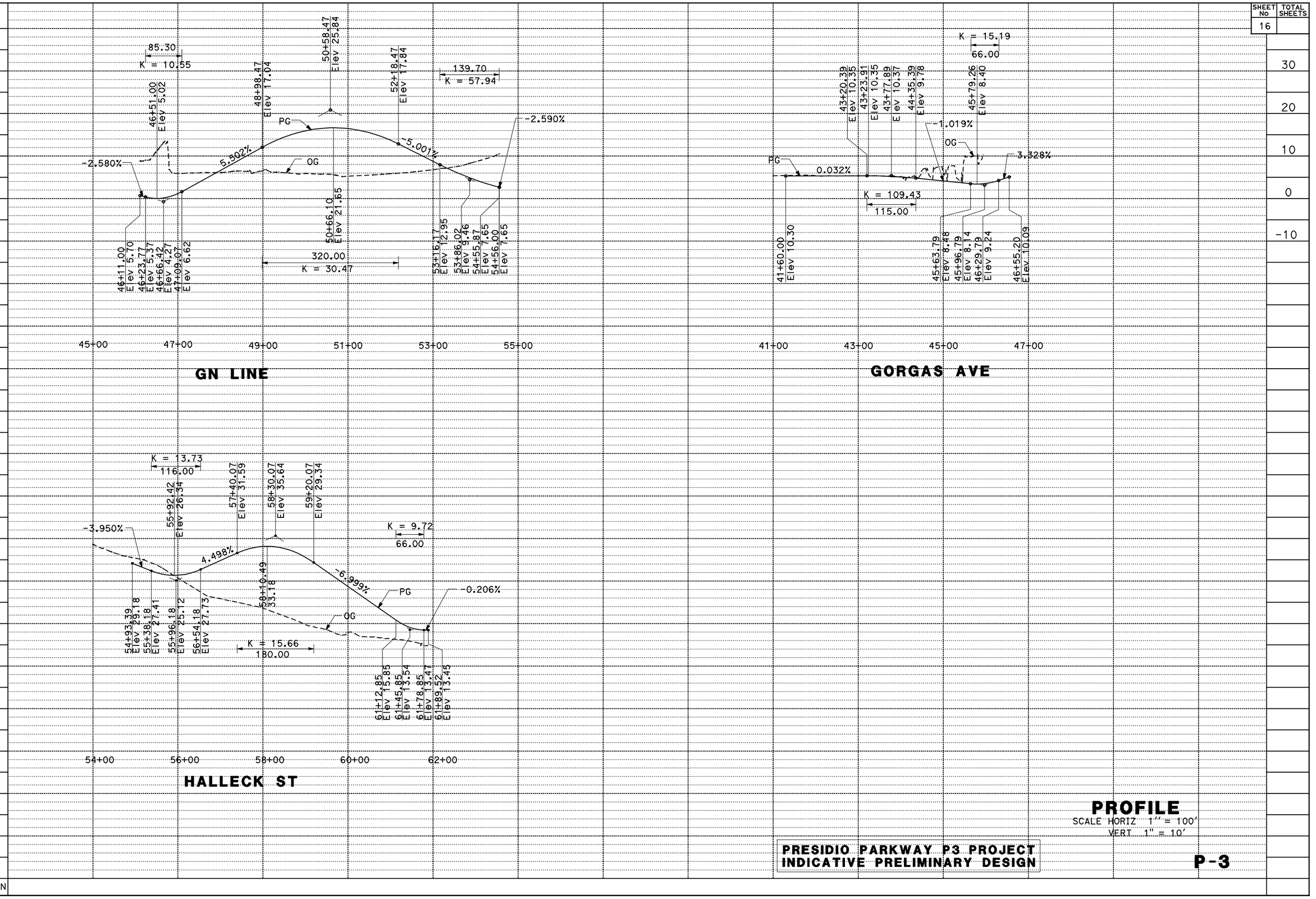

DGN FILE => P3_prof003.dgn

DATE PLOTTED => 17-MAY-2010
TIME PLOTTED => 16:51

STATION

PROFILE

SCALE HORIZ 1" = 100'
VERT 1" = 10'

PRESIDIO PARKWAY P3 PROJECT
INDICATIVE PRELIMINARY DESIGN

P-3

SHEET No 17 | TOTAL SHEETS

50
40
30
20
10
0

400.00
K = 86.22

39+58.50
Elev 10.38

44+23.24
Elev 20.24

47+44.87
Elev 24.90

47+98.24
Elev 31.11

PG

51+73.24
Elev 16.63

495.00
K = 97.78

OG

MATCH LINE

-1.740%

2.900%

-3.862

35+43.50
Elev 16.30

38+08.60
Elev 11.69

40+08.50
Elev 8.21

42+08.50
Elev 14.01

750.00
K = 110.92

52+87.16
Elev 12.23

55+34.66
Elev 2.67

56+64.79
Elev 4.94

57+82.16
Elev 5.64

34+00 36+00 38+00 40+00 42+00 44+00 46+00 48+00 50+00 52+00 54+00 56+00 58+00 60+00

NB LINE

90
80
70
60
50
40
30
20
10
0

OG

PG

74+41.95
Elev 42.29

80+41.95
Elev 62.09

SEE SHEET P-5

400.00
K = 190.53

MATCH LINE

3.300%

1.200%

1200.00
K = 1199.55

64+45.18
Elev 13.60

66+45.18
Elev 16.00

68+45.18
Elev 22.60

NB LINE

PROFILE
SCALE HORIZ 1" = 100'
VERT 1" = 10'

PRESIDIO PARKWAY P3 PROJECT
INDICATIVE PRELIMINARY DESIGN

P-4

STATION 60+00 62+00 64+00 66+00 68+00 70+00 72+00 74+00 76+00 78+00 80+00 82+00 84+00 86+00

DGN FILE => P3_prof004.dgn
DATE PLOTTED => 17-MAY-2010
TIME PLOTTED => 16:51

SHEET No	TOTAL SHEETS
18	

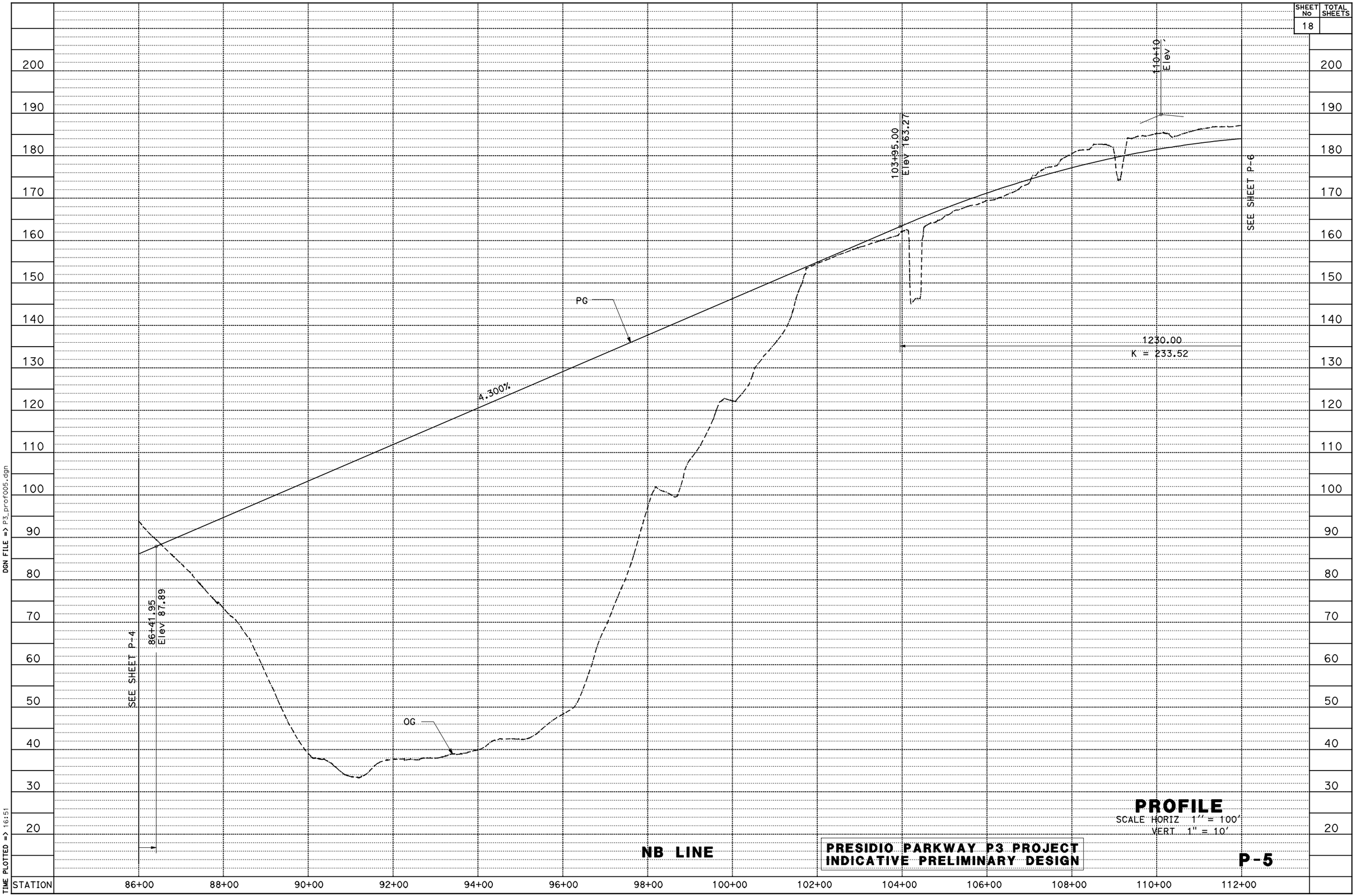

DGN FILE => P3_prof005.dgn

DATE PLOTTED => 17-MAY-2010
TIME PLOTTED => 16:51

NB LINE

PRESIDIO PARKWAY P3 PROJECT
INDICATIVE PRELIMINARY DESIGN

PROFILE

SCALE HORIZ 1" = 100'
VERT 1" = 10'

P-5

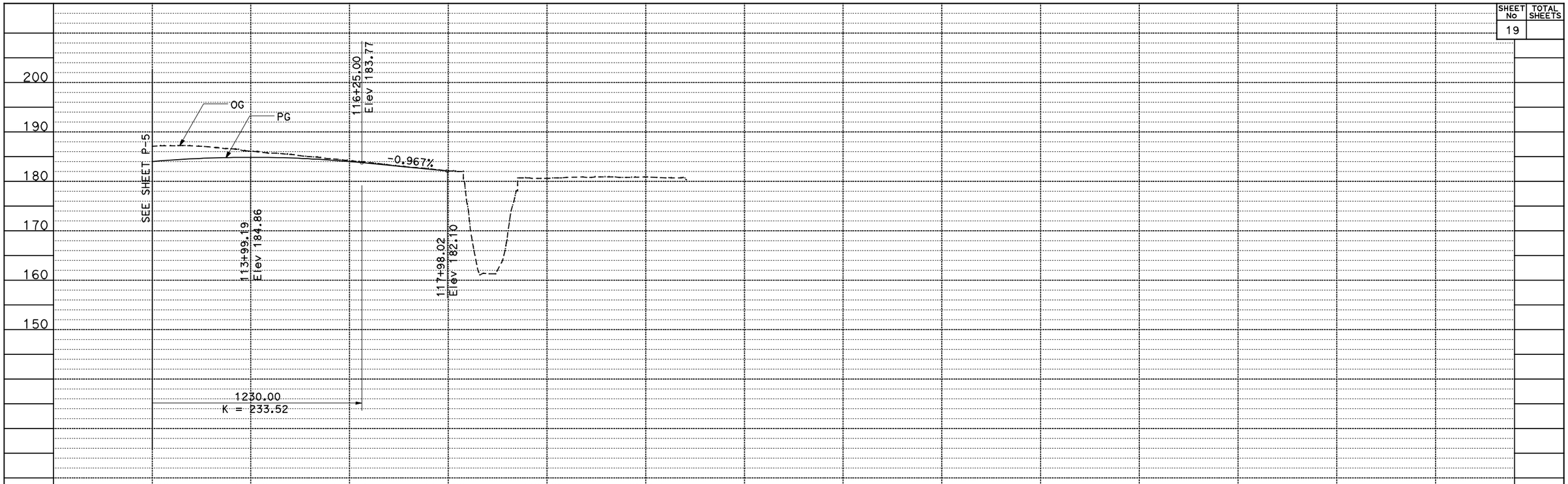

DGN FILE => P3_prof006.dgn

DATE PLOTTED => 17-MAY-2010
TIME PLOTTED => 16:51

STATION

PROFILE
SCALE HORIZ 1" = 100'
VERT 1" = 10'

PRESIDIO PARKWAY P3 PROJECT
INDICATIVE PRELIMINARY DESIGN

P-6

SHEET No	TOTAL SHEETS
20	

50
40
30
20
10
0
-10

400.00
K = 81.60

47+20.14
Elev 33.55

43+40.14
Elev 20.25

39+39.05
Elev 11.21

PG

OG

3.500%

540.00
K = 98.16

51+00.14
Elev 17.97
gr -4.1002

56+21.36
Elev 4.85

1.402%

46+90.11
Elev 26.38

35+31.88
Elev 16.12

38+24.62
Elev 12.01

40+24.62
Elev 9.21

42+24.62
Elev 16.21

K = 100.00
760.00

52+18.88
Elev 3.10

1.401%

MATCH LINE

54+88.88
Elev 2.03

57+58.88
Elev 5.81

34+00 36+00 38+00 40+00 42+00 44+00 46+00 48+00 50+00 52+00 54+00 56+00 58+00 60+00

SB LINE

80
70
60
50
40
30
20
10
0

OG

MATCH LINE

400.00
K = 235.46

3.100%

PG

80+05.24
Elev 66.57

600.00
K = 545.31

83+05.24
Elev 75.87

MATCH LINE SEE SHEET P-8

60+81.21
Elev 10.33

62+81.21
Elev 13.13

64+81.21
Elev 19.33

STATION 60+00 62+00 64+00 66+00 68+00 70+00 72+00 74+00 76+00 78+00 80+00 82+00 84+00 86+00

SB LINE

PROFILE

SCALE HORIZ 1" = 100'
VERT 1" = 10'

PRESIDIO PARKWAY P3 PROJECT
INDICATIVE PRELIMINARY DESIGN

P-7

DGN FILE => P3_prof007.dgn
DATE PLOTTED => 17-MAY-2010
TIME PLOTTED => 16:51

SHEET No	TOTAL SHEETS
21	

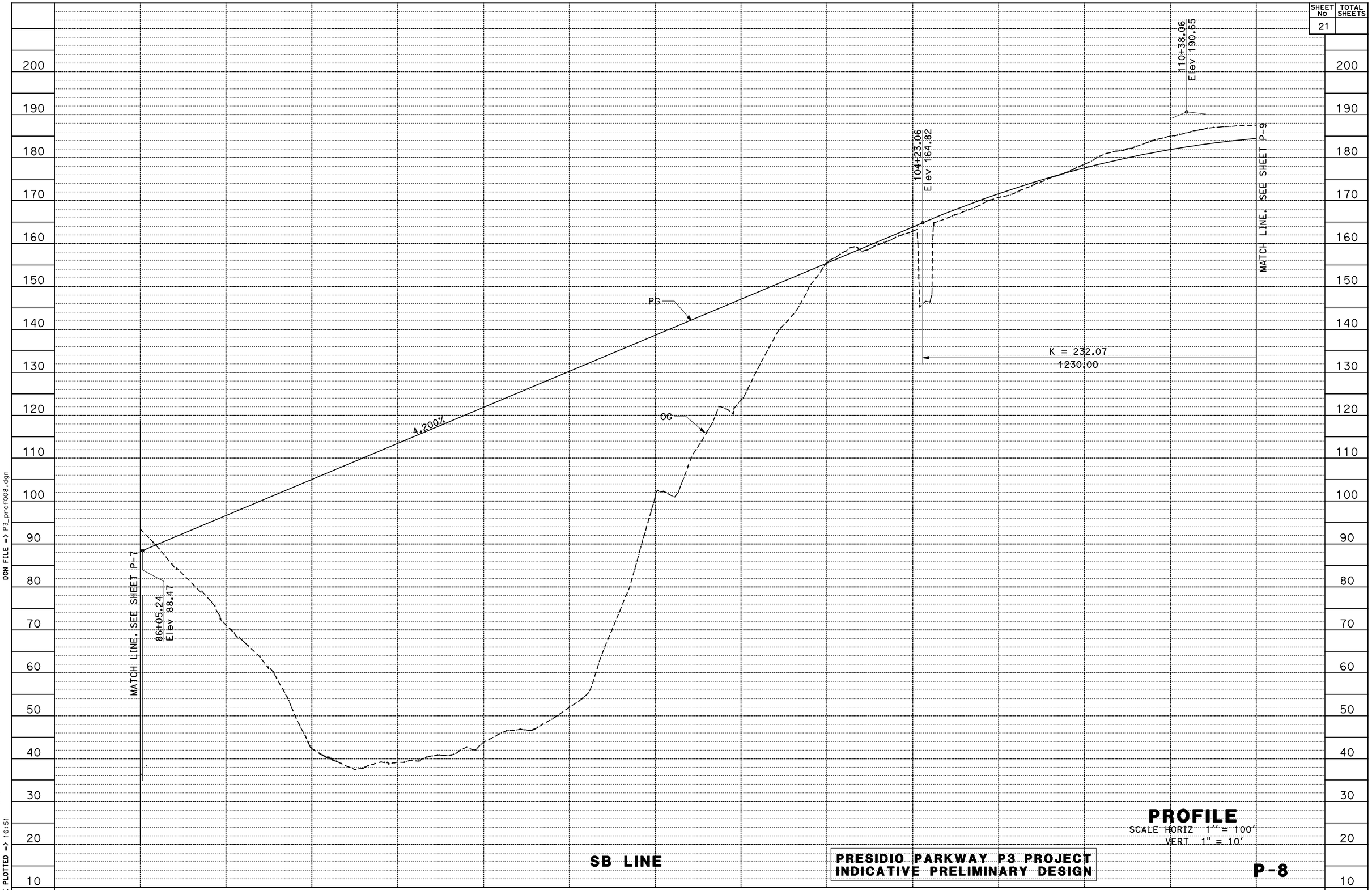

SB LINE

PROFILE
SCALE HORIZ 1" = 100'
VERT 1" = 10'

PRESIDIO PARKWAY P3 PROJECT
INDICATIVE PRELIMINARY DESIGN

P-8

DGN FILE => P3_prof008.dgn
DATE PLOTTED => 17-MAY-2010
TIME PLOTTED => 16:51

200
190
180
170
160
150

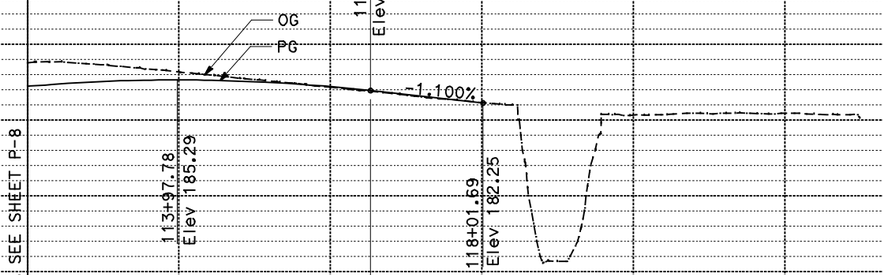

112+00 114+00 116+00 118+00 120+00

SB LINE

DGN FILE => P3_prof009.dgn

DATE PLOTTED => 17-MAY-2010
TIME PLOTTED => 16:51

STATION

PROFILE
SCALE HORIZ 1" = 100'
VERT 1" = 10'

PRESIDIO PARKWAY P3 PROJECT
INDICATIVE PRELIMINARY DESIGN

P-9

SHEET No	TOTAL SHEETS
23	

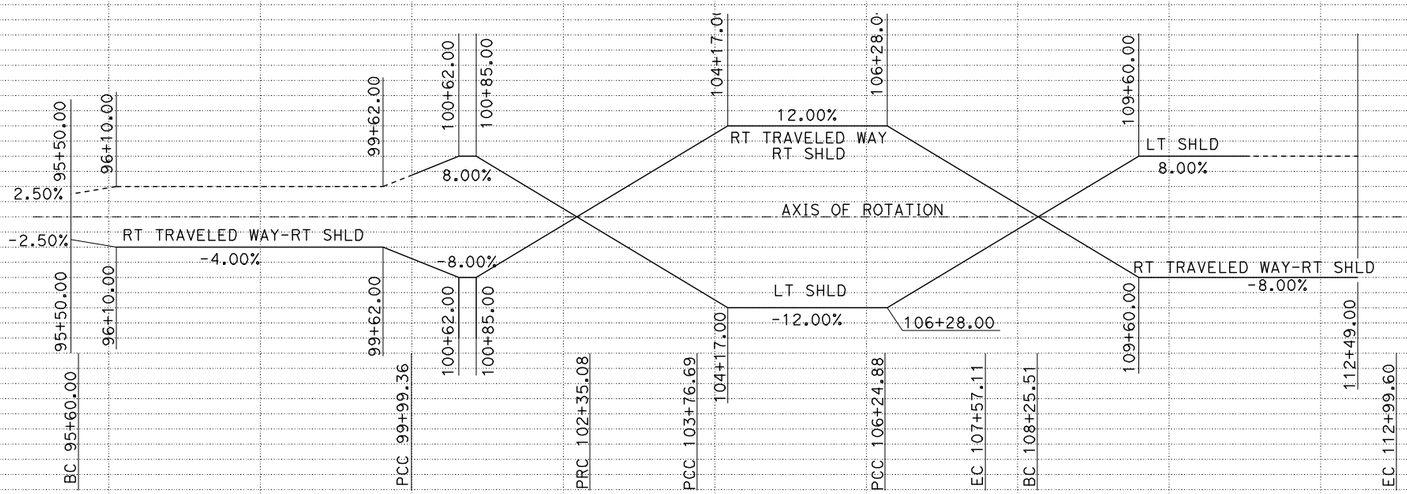

DOY2 LINE

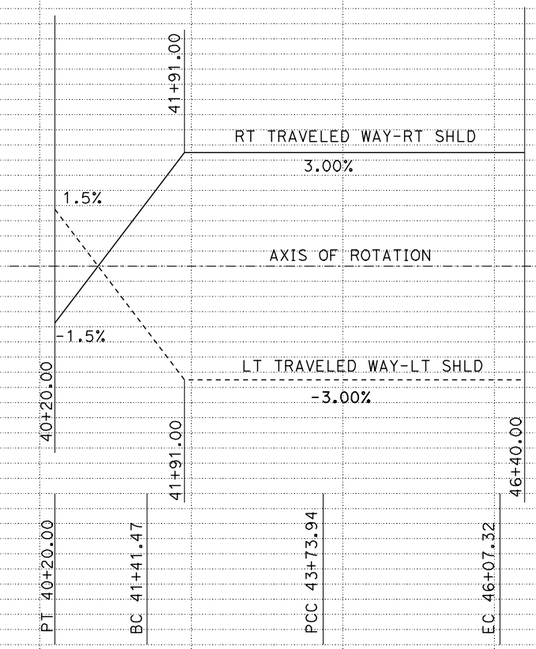

DOY1 LINE

DGN FILE => $REQUEST

DATE PLOTTED => $DATE

TIME PLOTTED => $TIME

SUPERELEVATION

SCALE HORIZ 1" = 100'
VERT NO SCALE

PRESIDIO PARKWAY P3 PROJECT
INDICATIVE PRELIMINARY DESIGN

SE-1

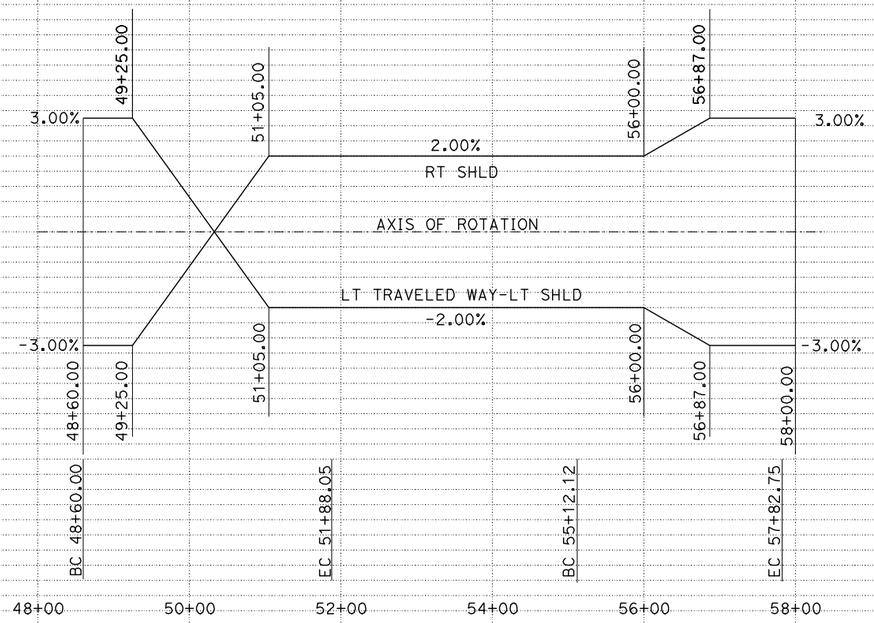

DOY3 LINE

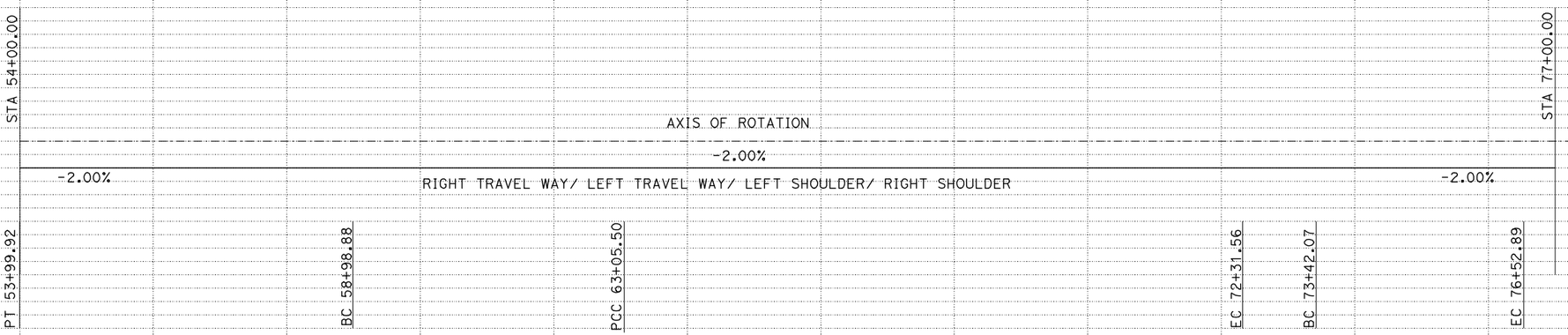

GIRARD ROAD

SUPERELEVATION

SCALE HORIZ 1" = 100'
VERT NO SCALE

PRESIDIO PARKWAY P3 PROJECT
INDICATIVE PRELIMINARY DESIGN

SE-2

DGN FILE => $REQUEST
DATE PLOTTED => $DATE
TIME PLOTTED => $TIME

STATION 54+00 56+00 58+00 60+00 62+00 64+00 66+00 68+00 70+00 72+00 74+00 76+00

PHASE 1 ← → **PHASE 2**

8% 6% 4% 2% 0% -2% -4% -6% -8%

97+00.00 105+79.00 108+27.00 113+58.00 116+88.00 118+53.00 120+03.00 122+09.00

LT SHLD 2.00%

-2.00% RT TRAVELED WAY-RT SHLD

8.00% RT TRAVELED WAY-RT SHLD

8.00% LT SHLD

AXIS OF ROTATION

RT TRAVELED WAY & RT SHLD -4.00%

RT TRAVELED WAY & RT SHLD -8.00%

LT SHLD -8.00%

PT 97+00.00 BC 107+61.42 PCC 111+58.45 EC 114+23.52 BC 116+22.15 PCC 118+52.88 EC 122+08.68

DOY4 LINE

STATION 98+00 100+00 102+00 104+00 106+00 108+00 110+00 112+00 114+00 116+00 118+00 120+00

DGN FILE => $REQUEST

DATE PLOTTED => $DATE

TIME PLOTTED => $TIME

SUPERELEVATION

SCALE HORIZ 1'' = 100'

VERT NO SCALE

PRESIDIO PARKWAY P3 PROJECT
INDICATIVE PRELIMINARY DESIGN

SE-2A

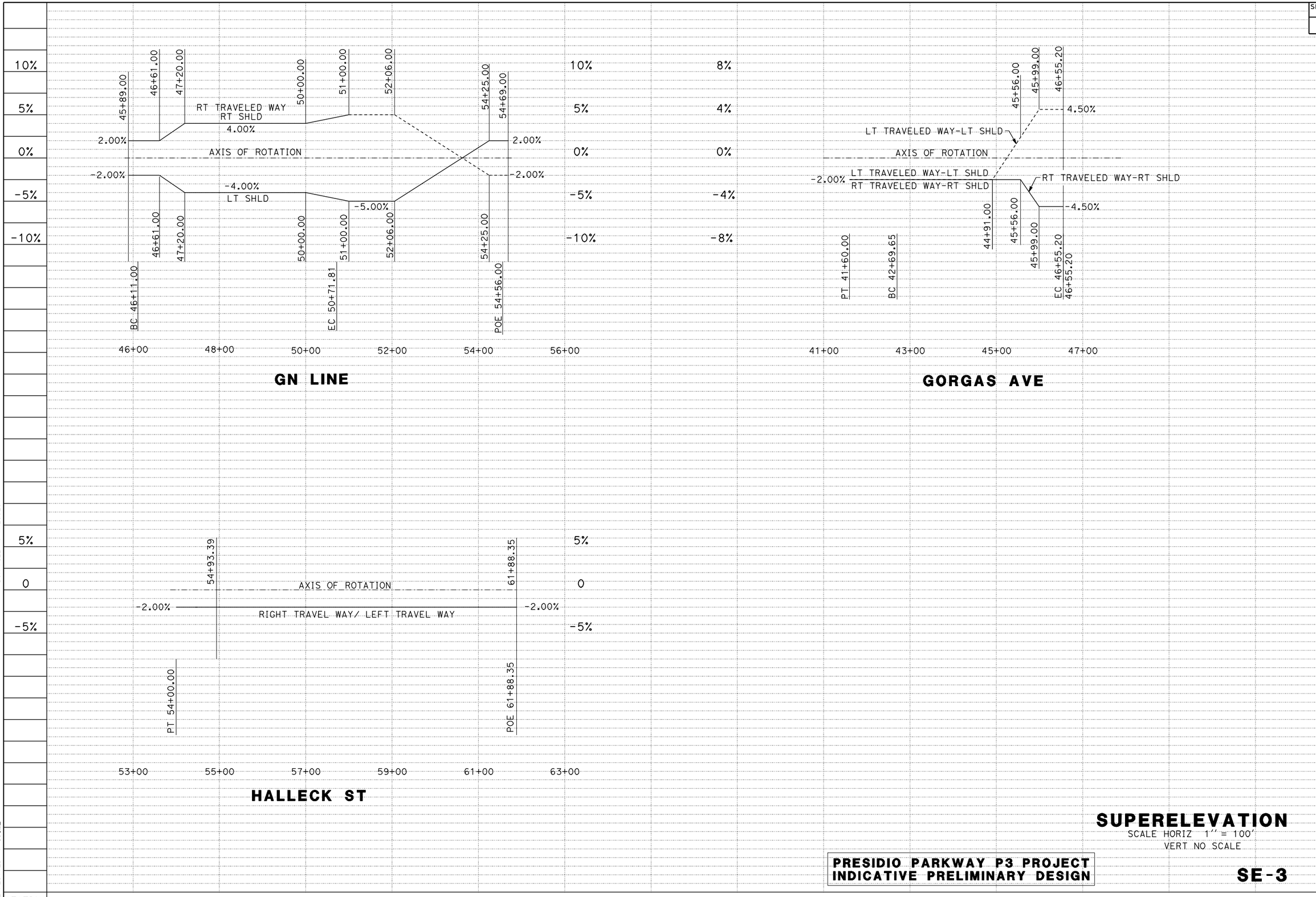

DGN FILE => $REQUEST

DATE PLOTTED => $DATE
TIME PLOTTED => $TIME

STATION

SUPERELEVATION

SCALE HORIZ 1" = 100'
VERT NO SCALE

PRESIDIO PARKWAY P3 PROJECT
INDICATIVE PRELIMINARY DESIGN

SE-3

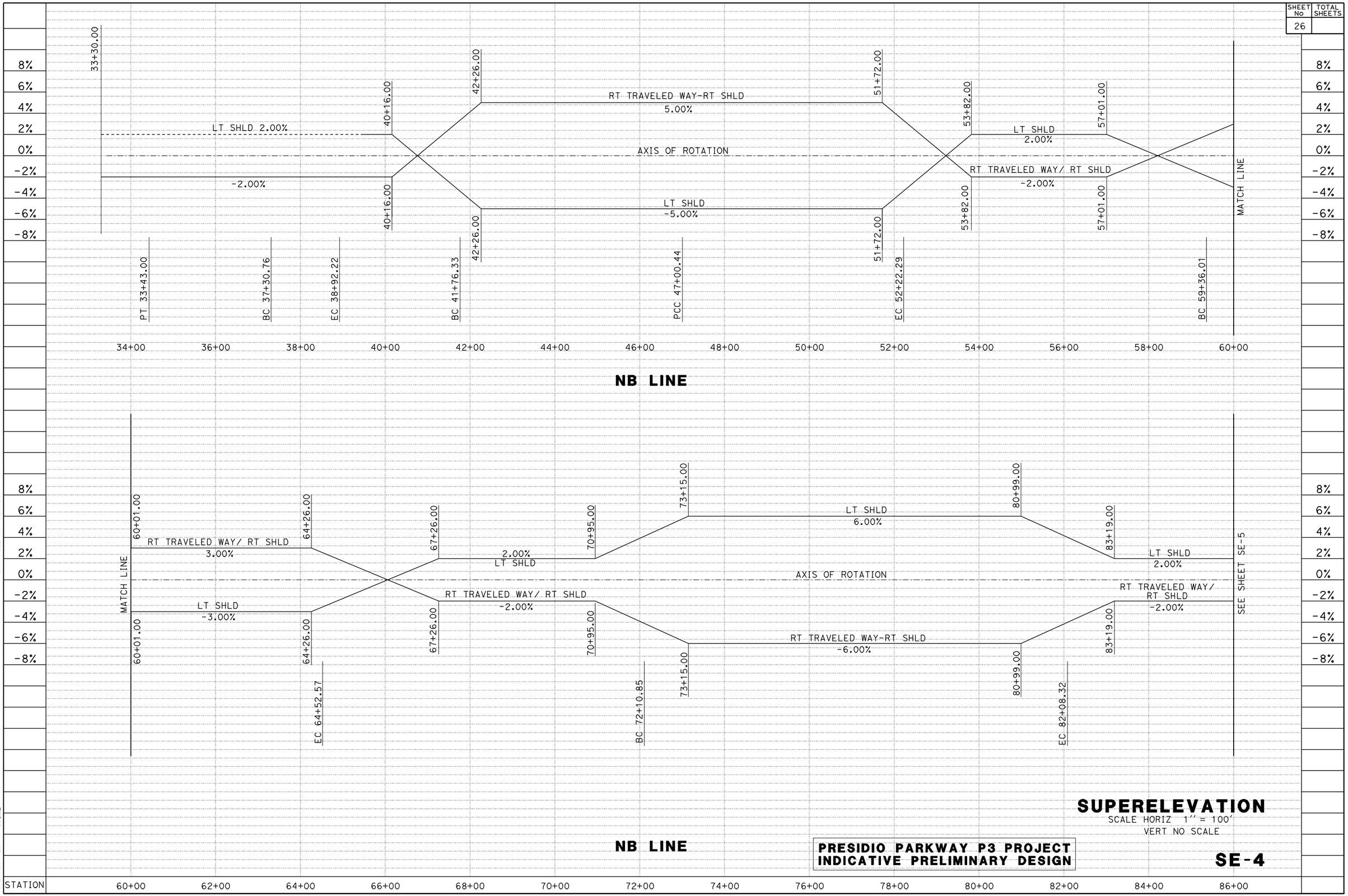

DGN FILE => $REQUEST

DATE PLOTTED => $DATE
TIME PLOTTED => $TIME

SUPERELEVATION

SCALE HORIZ 1'' = 100'
VERT NO SCALE

PRESIDIO PARKWAY P3 PROJECT
INDICATIVE PRELIMINARY DESIGN

SE-4

SHEET No	TOTAL SHEETS
27	

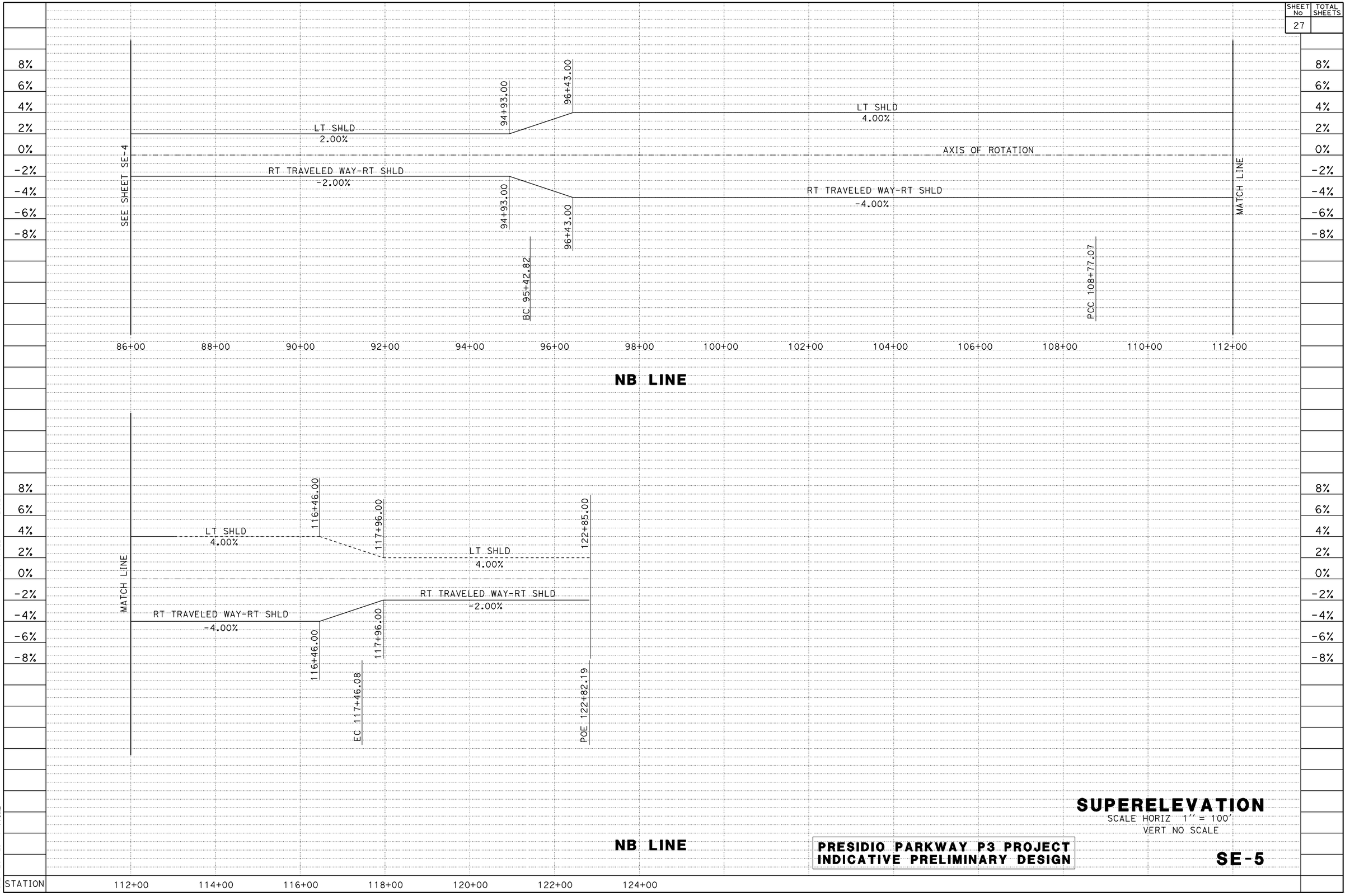

DGN FILE => $REQUEST

DATE PLOTTED => $DATE

TIME PLOTTED => $TIME

SUPERELEVATION

SCALE HORIZ 1'' = 100'

VERT NO SCALE

PRESIDIO PARKWAY P3 PROJECT
INDICATIVE PRELIMINARY DESIGN

SE-5

SHEET No	TOTAL SHEETS
28	

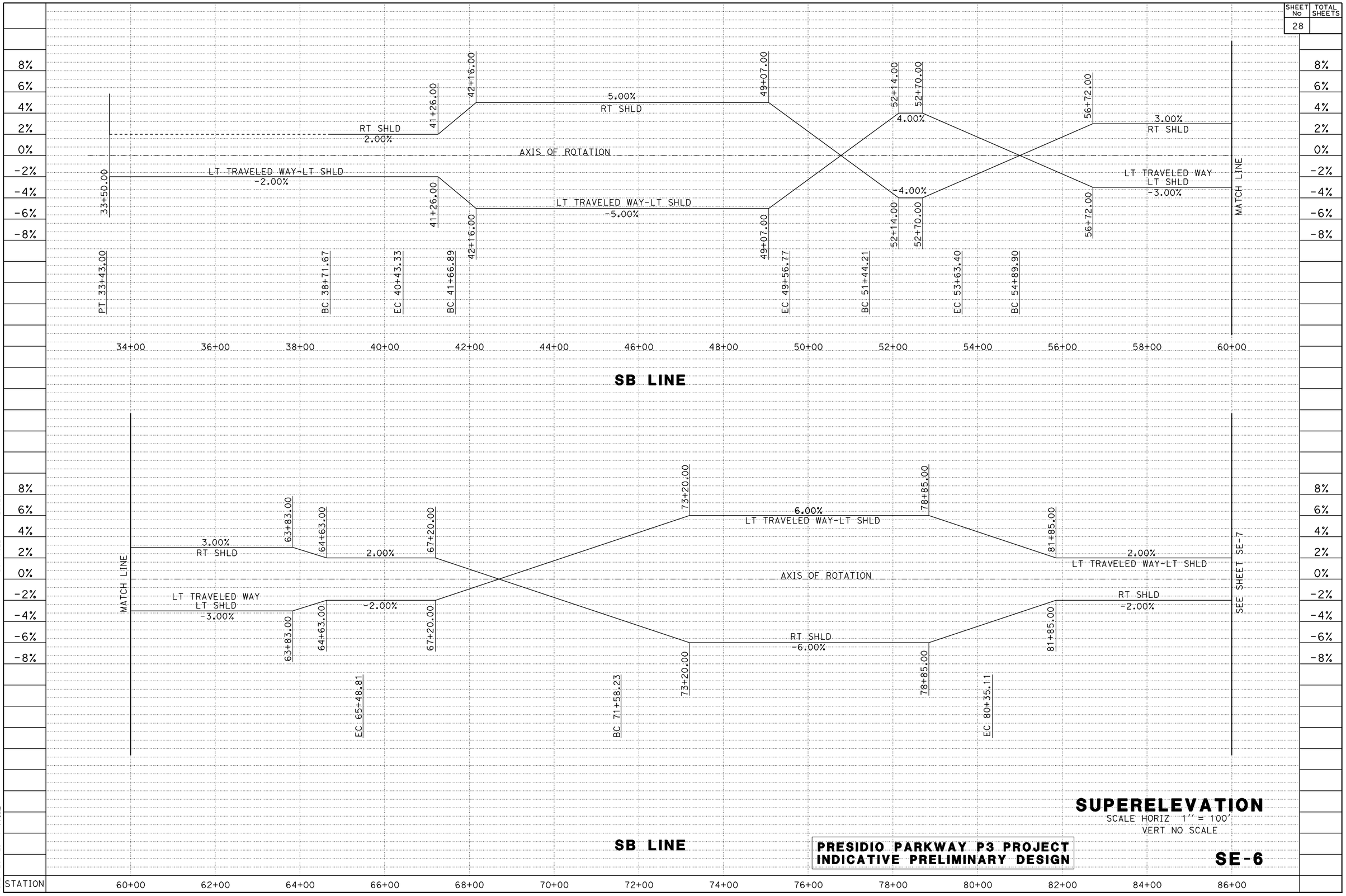

SB LINE

SB LINE

DGN FILE => $REQUEST

DATE PLOTTED => $DATE
TIME PLOTTED => $TIME

STATION

SUPERELEVATION

SCALE HORIZ 1'' = 100'
VERT NO SCALE

PRESIDIO PARKWAY P3 PROJECT
INDICATIVE PRELIMINARY DESIGN

SE-6

SHEET No	TOTAL SHEETS
29	

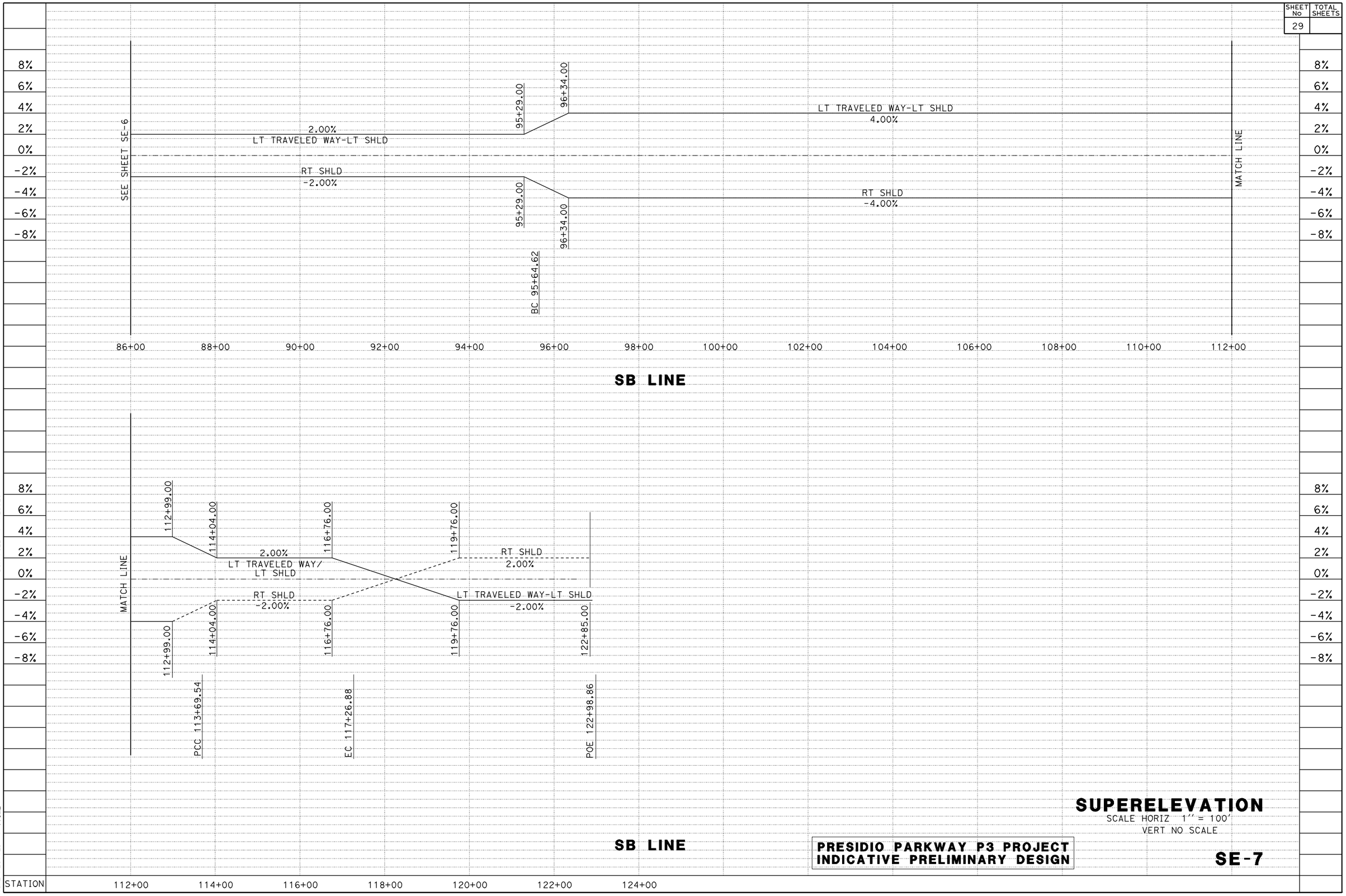

DGN FILE => $REQUEST

DATE PLOTTED => $DATE

TIME PLOTTED => $TIME

SUPERELEVATION

SCALE HORIZ 1'' = 100'

VERT NO SCALE

PRESIDIO PARKWAY P3 PROJECT
INDICATIVE PRELIMINARY DESIGN

SE-7

SHEET No	TOTAL SHEETS
30	

DGN FILE => $REQUEST

DATE PLOTTED => $DATE
TIME PLOTTED => $TIME

PRESIDIO PARKWAY P3 PROJECT
INDICATIVE PRELIMINARY DESIGN

GRADING PLAN

SCALE 1'' = 50'

G-1

SHEET No	TOTAL SHEETS
31	

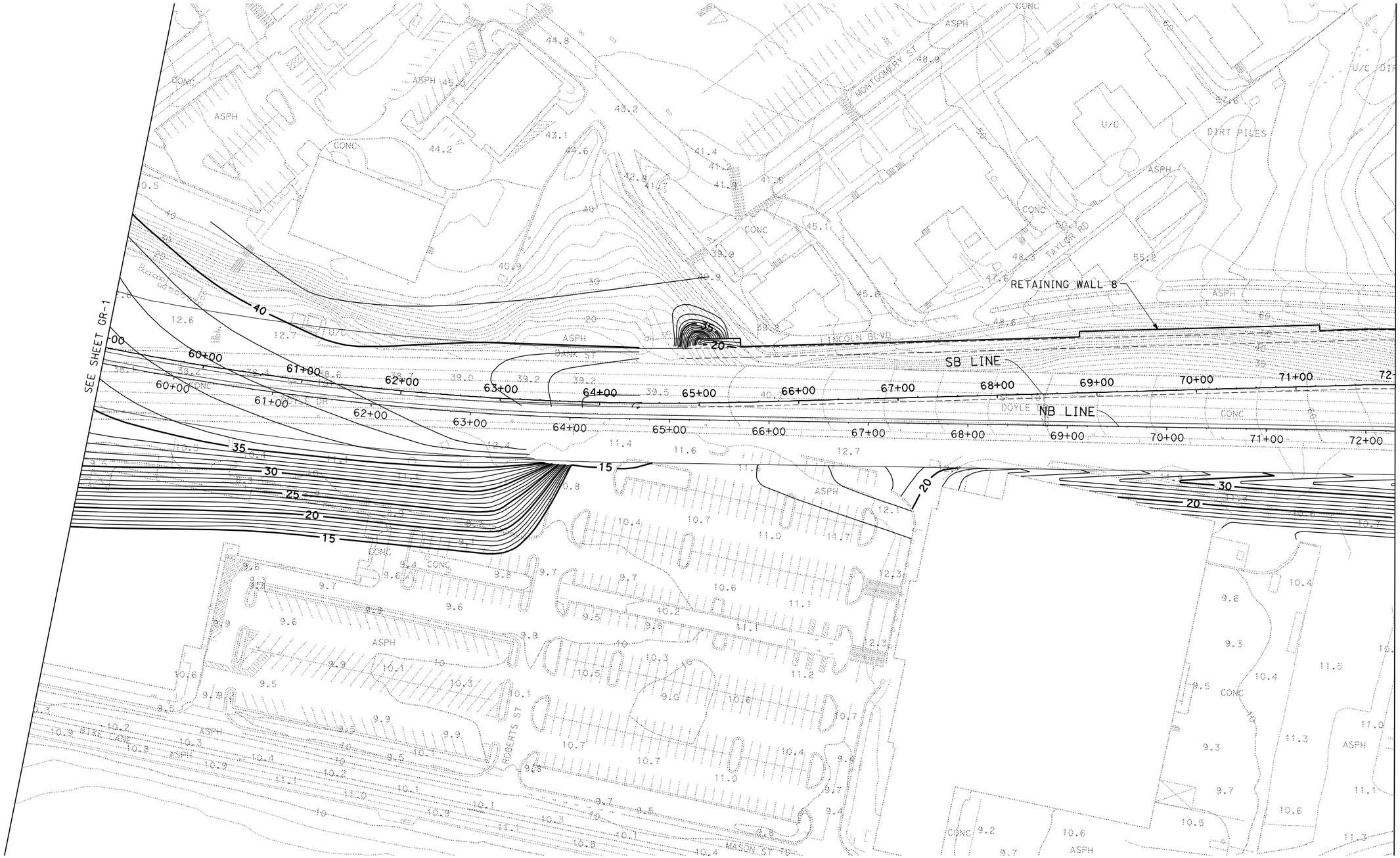

DGN FILE => $REQUEST

DATE PLOTTED => $DATE
TIME PLOTTED => $TIME

PRESIDIO PARKWAY P3 PROJECT
INDICATIVE PRELIMINARY DESIGN

GRADING PLAN

SCALE 1'' = 50'

G-2

SHEET No	TOTAL SHEETS
32	

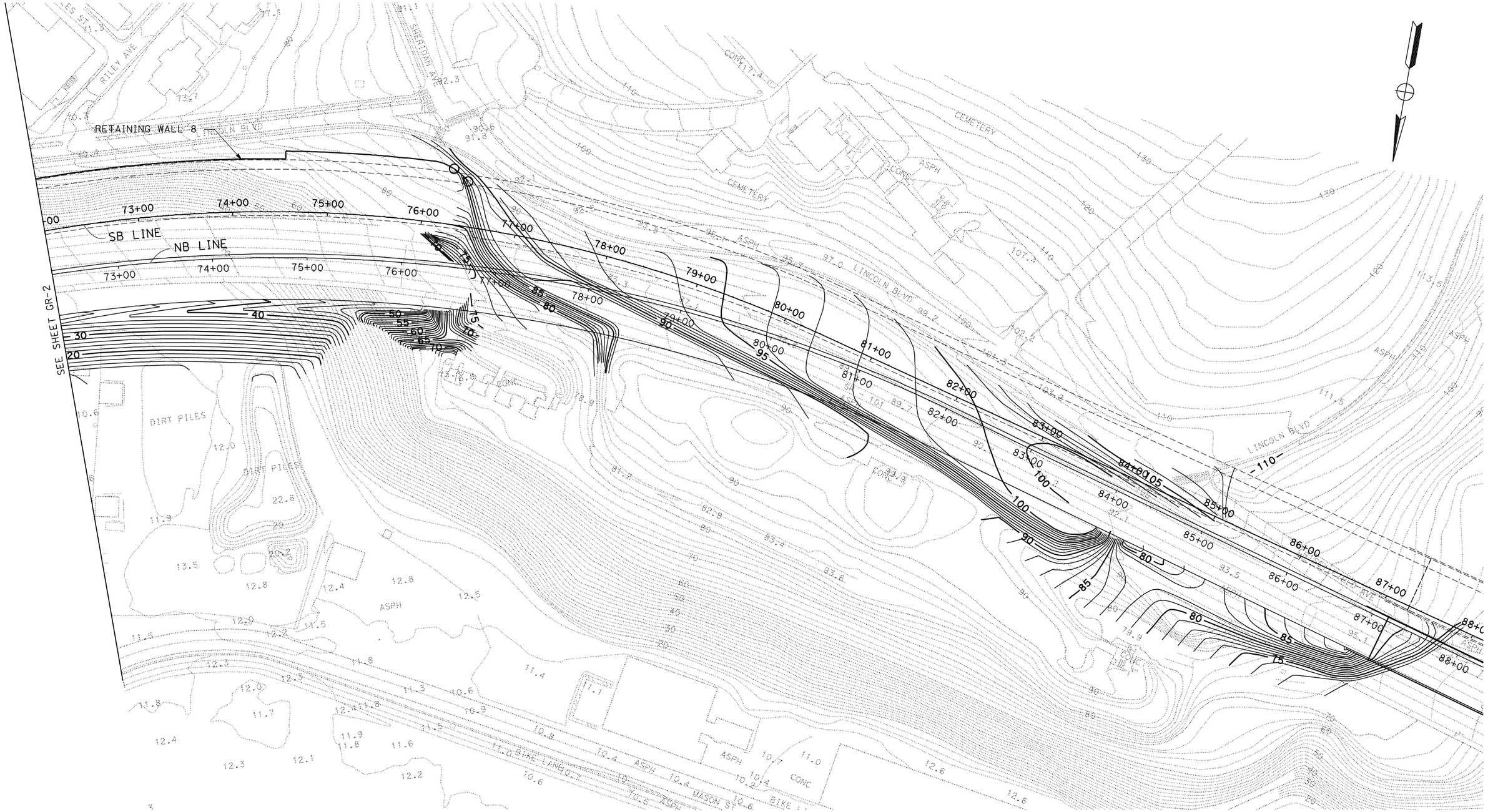

GRADING PLAN

SCALE 1'' = 50'

G-3

PRESIDIO PARKWAY P3 PROJECT
INDICATIVE PRELIMINARY DESIGN

DATE PLOTTED => $DATE
TIME PLOTTED => $TIME
DGN FILE => $REQUEST

SHEET No	TOTAL SHEETS
33	

S A N F R A N C I S C O

LEGEND:

- SD — EXISTING STORM DRAIN LINE (PHASE 1)
- SD — PROPOSED ROADWAY STORM DRAIN (PHASE 2)
- SD — PROPOSED PRESIDIO STORM DRAIN (PHASE 2)

CHESTNUT St
LYON St
CHESTNUT ST
ASPH
LYON ST
GORGAS Ave
GORGAS AVE
ROUTE 101
RICHARDSON Ave
RICHARDSON AVE
SB LINE
NB LINE
34+00
35+00
36+00
37+00
38+00
SB 33+46
BEGIN CONSTRUCTION
SEE SHEET D-2
PALACE Dr
FRANCISCO St
FRANCISCO ST
BAKER St
BAKER ST
BAY ST

DRAINAGE PLAN

SCALE 1'' = 50'

D-1

PRESIDIO PARKWAY P3 PROJECT
INDICATIVE PRELIMINARY DESIGN

DGN FILE => P3-DRAINAGE001_V8.dgn

DATE PLOTTED => 18-MAY-2010
TIME PLOTTED => 17:28

SHEET No	TOTAL SHEETS
34	

SAN FRANCISCO

SEE SHEET D-4

SEE SHEET D-1

SEE SHEET D-5

SEE SHEET D-3

THORNBURG Rd

GORGAS Ave

PALACE Dr

DOYLE Dr

GIRARD Rd

ROUTE 10

GO LINE

DOY3 LINE

DOY1 LINE

GI LINE

GN LINE

NB LINE

SB LINE

NOTE:

1. FOR LEGEND SEE D-1.

DRAINAGE PLAN

SCALE 1'' = 50'

D-2

PRESIDIO PARKWAY P3 PROJECT
INDICATIVE PRELIMINARY DESIGN

DGN FILE => P3-DRAINAGE002_V8.dgn

DATE PLOTTED => 18-MAY-2010
TIME PLOTTED => 17:29

SHEET No	TOTAL SHEETS
35	

NOTE:

1. FOR LEGEND SEE D-1.

SAN FRANCISCO

JEFFERSON ST

MARINA Blvd

MARINA BLVD

BAKER St

Sd

PALACE Dr

PS

GI LINE

GI 77+51.71
END CONSTRUCTION

77+00
76+00
75+00
74+00
73+00
72+00
71+00
70+00

18"

24"

LYON St

OUTFALL TO
SAN FRANCISCO BAY

MASON St

GIRARD Rd

SEE SHEET D-2

DRAINAGE PLAN

SCALE 1'' = 50'

D-3

PRESIDIO PARKWAY P3 PROJECT
INDICATIVE PRELIMINARY DESIGN

DGN FILE => P3-DRAINAGE003_V8.dgn

DATE PLOTTED => 18-MAY-2010
TIME PLOTTED => 17:29

SHEET No	TOTAL SHEETS
36	

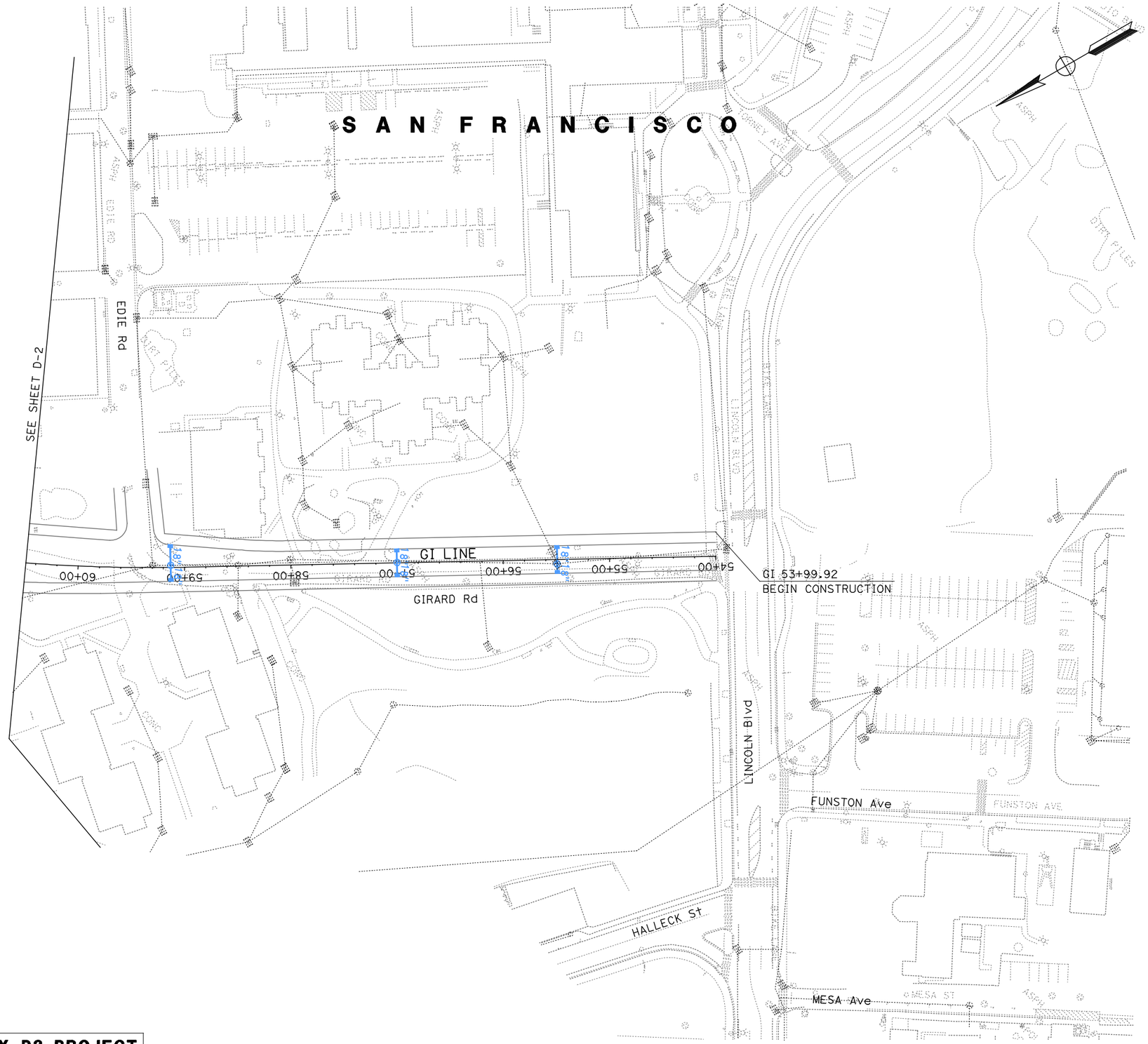

NOTE:

1. FOR LEGEND SEE D-1.

PRESIDIO PARKWAY P3 PROJECT
INDICATIVE PRELIMINARY DESIGN

DRAINAGE PLAN

SCALE 1'' = 50'

D-4

DGN FILE => P3-DRAINAGE004_V8.dgn
DATE PLOTTED => 18-MAY-2010
TIME PLOTTED => 17:29

SHEET No	TOTAL SHEETS
37	

NOTE:

1. FOR LEGEND SEE D-1.

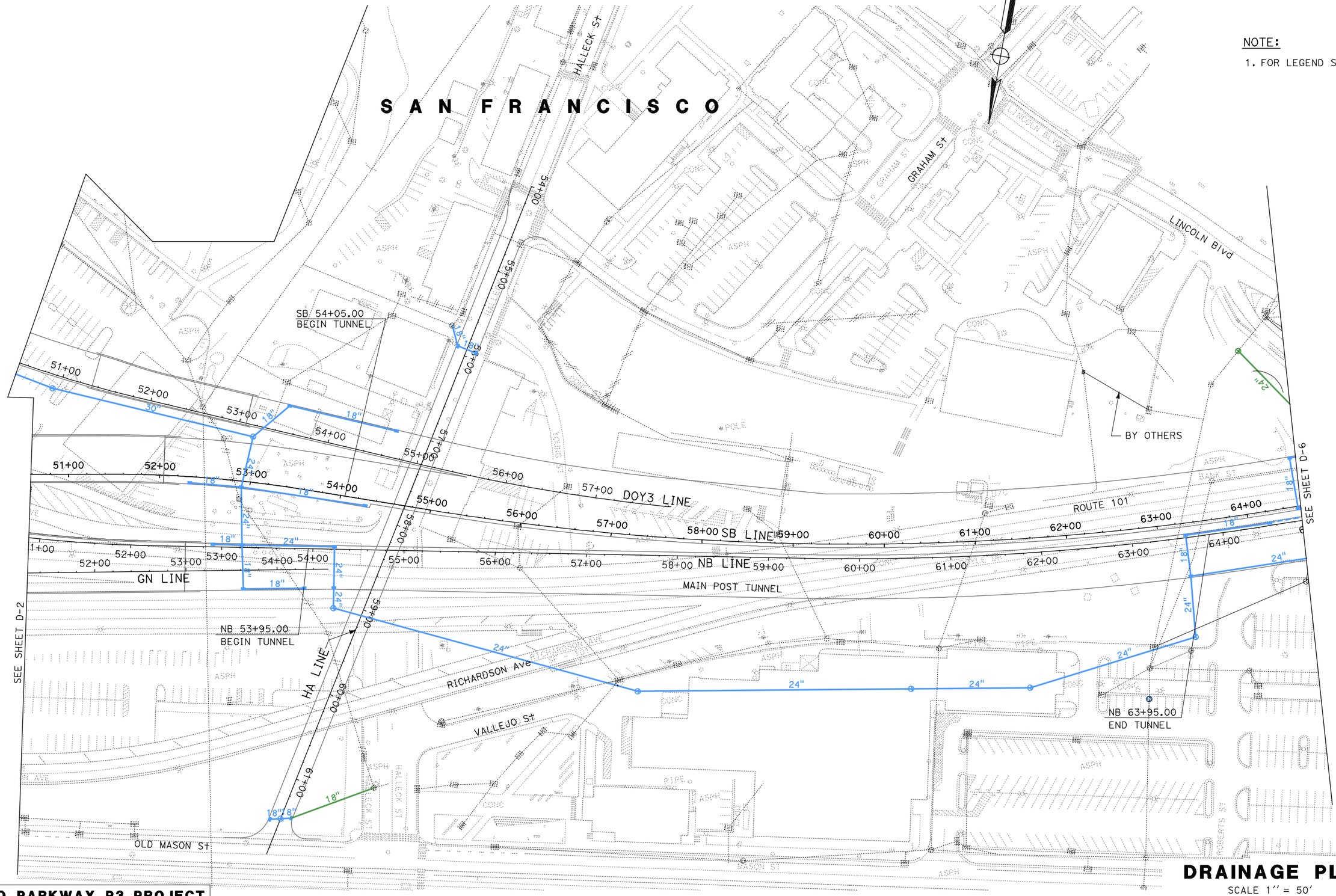

DRAINAGE PLAN

SCALE 1'' = 50'

PRESIDIO PARKWAY P3 PROJECT
INDICATIVE PRELIMINARY DESIGN

D-5

DGN FILE => P3-DRAINAGE005_V8.dgn
DATE PLOTTED => 18-MAY-2010
TIME PLOTTED => 17:29

SHEET No	TOTAL SHEETS
38	

NOTE:

1. FOR LEGEND SEE D-1.

PRESIDIO PARKWAY P3 PROJECT
INDICATIVE PRELIMINARY DESIGN

DRAINAGE PLAN

SCALE 1'' = 50'

D-6

DGN FILE => P3-DRAINAGE006_V8.dgn
DATE PLOTTED => 18-MAY-2010
TIME PLOTTED => 17:29

SHEET No	TOTAL SHEETS
39	

NOTE:

1. FOR LEGEND SEE D-1.

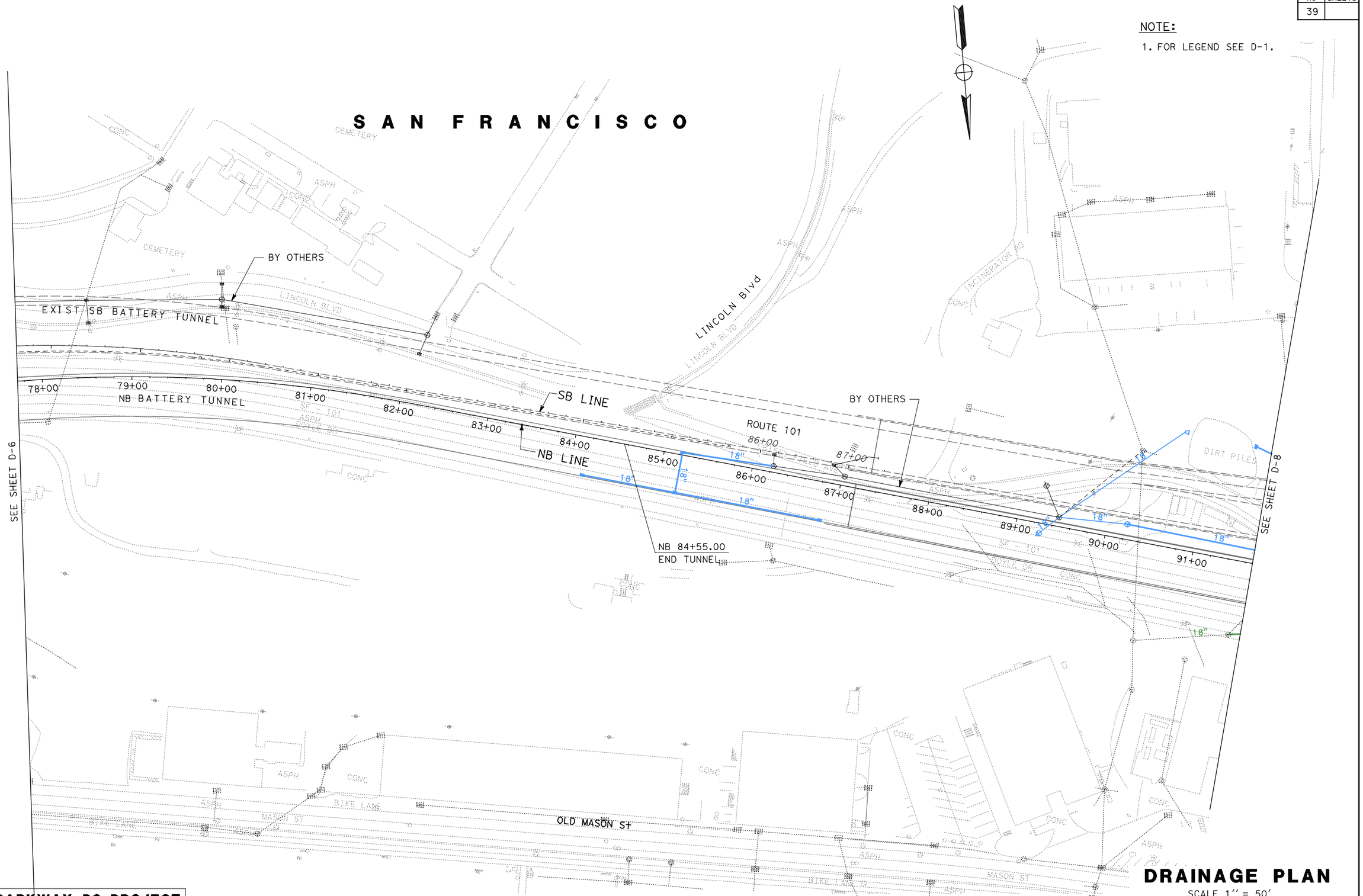

DRAINAGE PLAN

SCALE 1'' = 50'

PRESIDIO PARKWAY P3 PROJECT
INDICATIVE PRELIMINARY DESIGN

D-7

DGN FILE => P3-DRAINAGE007_V8.dgn

DATE PLOTTED => 18-MAY-2010
TIME PLOTTED => 17:29

SHEET No	TOTAL SHEETS
40	

NOTE:

1. FOR LEGEND SEE D-1.

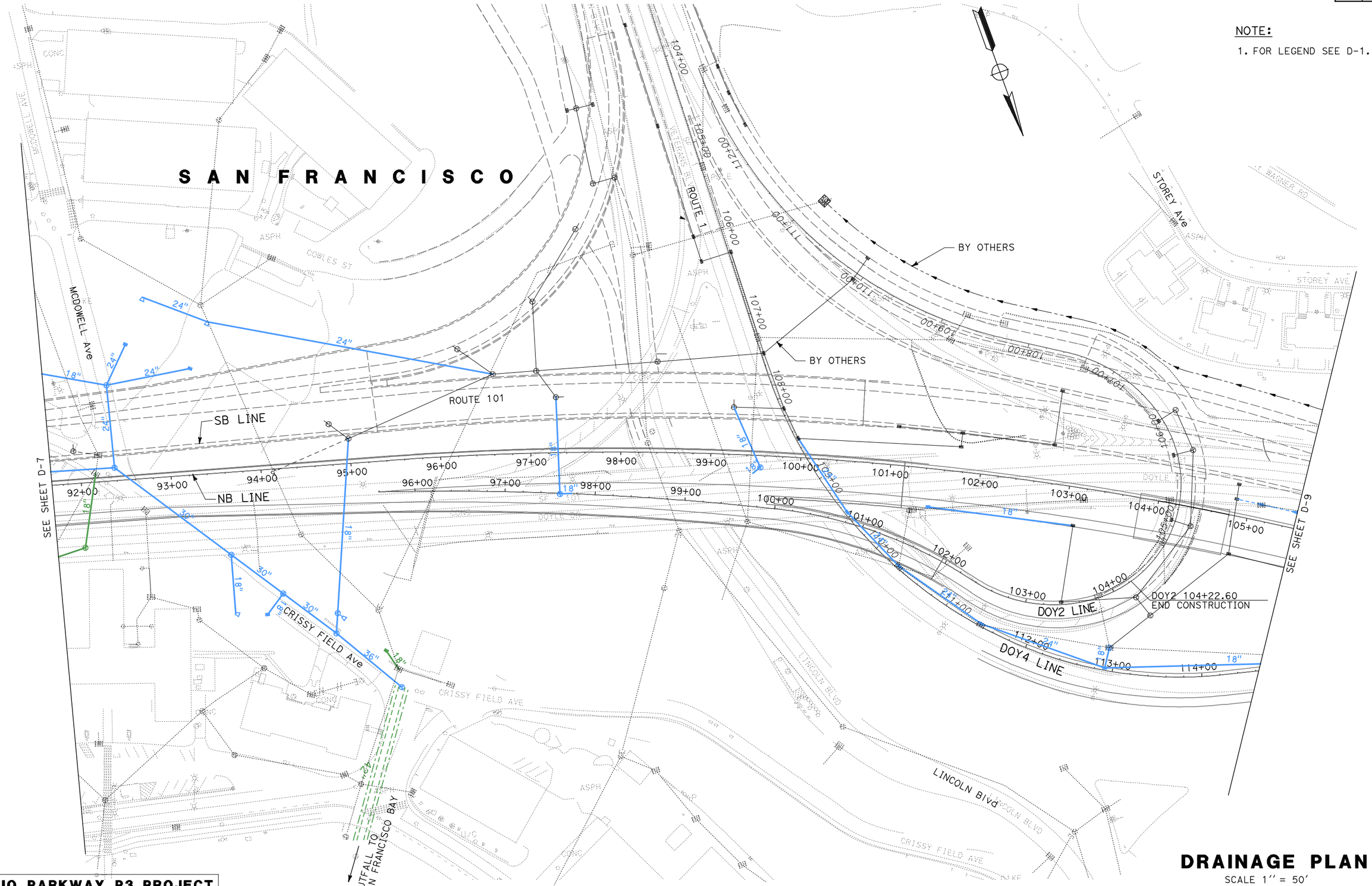

DRAINAGE PLAN

SCALE 1'' = 50'

D-8

PRESIDIO PARKWAY P3 PROJECT
INDICATIVE PRELIMINARY DESIGN

DGN FILE => P3-DRAINAGE008_V8.dgn

DATE PLOTTED => 18-MAY-2010
TIME PLOTTED => 17:29

SHEET No	TOTAL SHEETS
41	

NOTE:

1. FOR LEGEND SEE D-1.

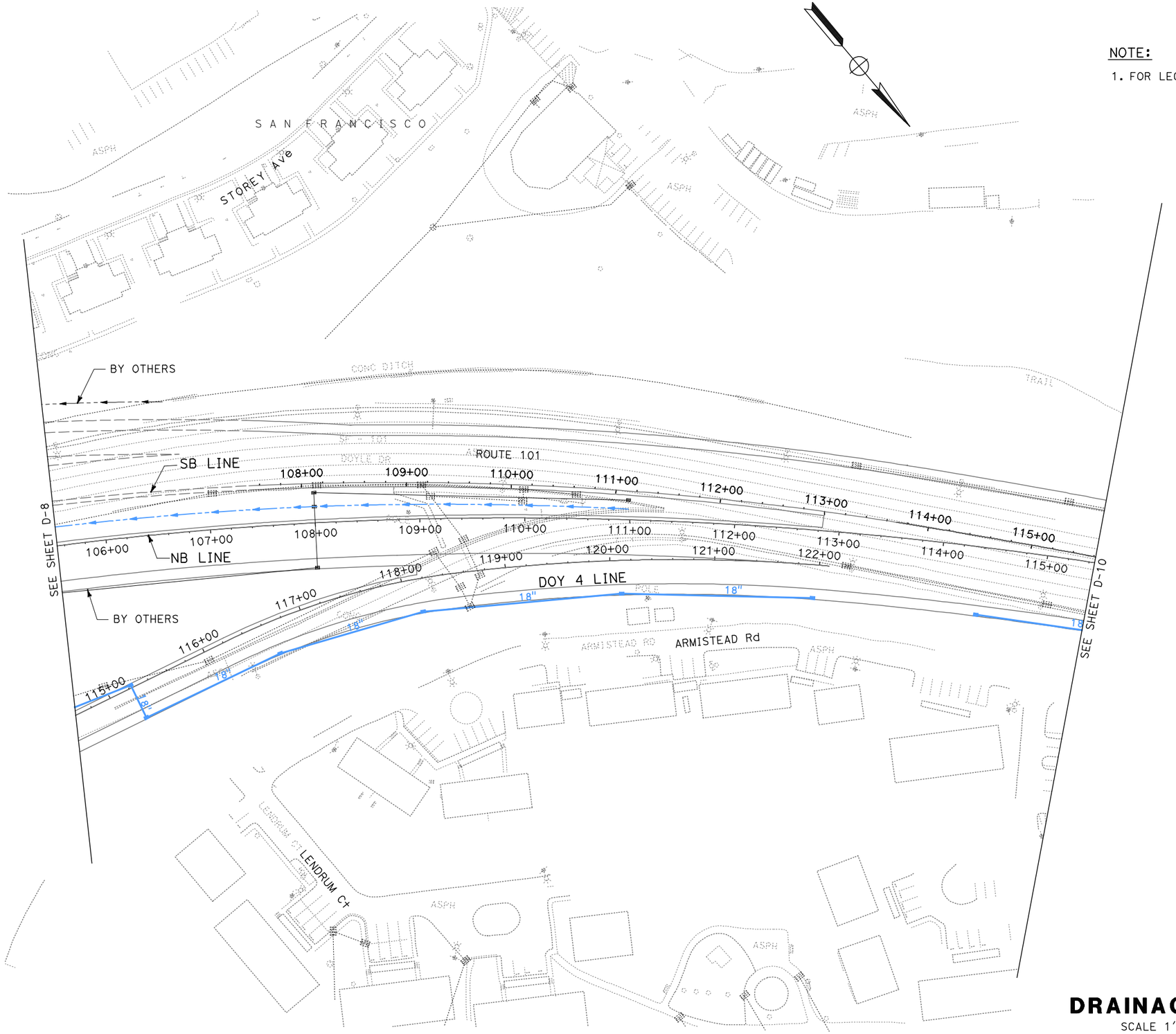

DGN FILE => P3-DRAINAGE009_V8.dgn

DATE PLOTTED => 18-MAY-2010
TIME PLOTTED => 17:30

PRESIDIO PARKWAY P3 PROJECT
INDICATIVE PRELIMINARY DESIGN

DRAINAGE PLAN

SCALE 1'' = 50'

D-9

SHEET No	TOTAL SHEETS
42	

NOTE:

1. FOR LEGEND SEE D-1.

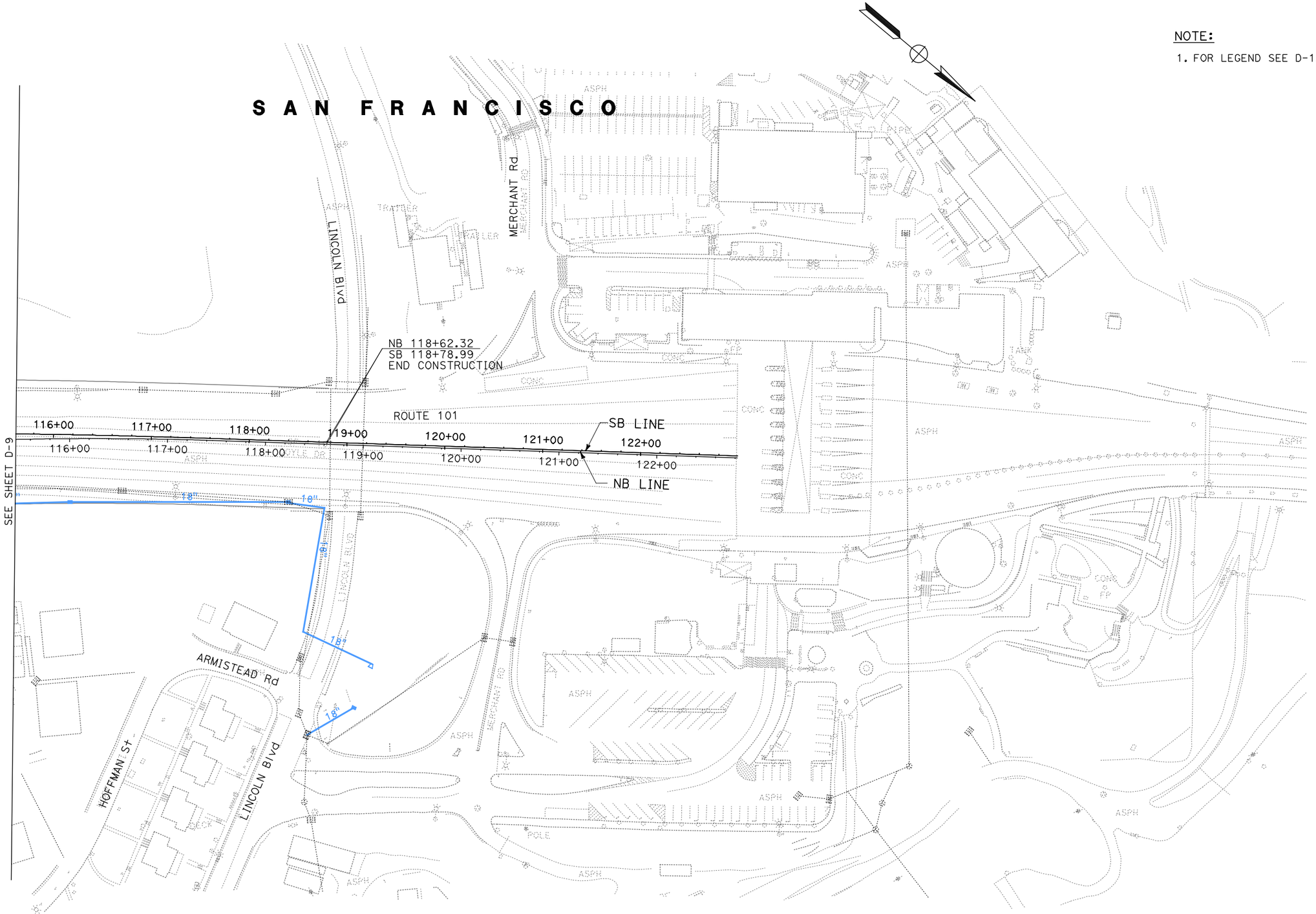

DRAINAGE PLAN

SCALE 1'' = 50'

D-10

PRESIDIO PARKWAY P3 PROJECT
INDICATIVE PRELIMINARY DESIGN

DGN FILE => P3-DRAINAGE010_V8.dgn
DATE PLOTTED => 18-MAY-2010
TIME PLOTTED => 17:30

SHEET No	TOTAL SHEETS
43	

LEGEND:

- UTILITY ABANDONED IN PLACE
- EXIST ELECTRICAL
- EXIST TELEPHONE
- EXIST WATER
- EXIST SEWER
- EXIST NATURAL GAS
- UTILITY TO BE ABANDONED
- WATER 1
- ELECTRICAL
- SEWER LINE
- TELECOMMUNICATION

NOTES:

1. UTILITIES SHOWN HEREIN REPRESENT THE ANTICIPATED BALANCE OF UTILITY RELOCATION FOLLOWING COMPLETION OF CONTRACT 2 (UTILITY RELOCATION CONTRACT).
2. AS BUILT DRAWINGS TO BE REFERED TO AS CONFIRMATION OF EXISTING UTILITY SCHEME.
3. ALIGNMENTS SHOWN ARE INDICATIVE ONLY AND REQUIRES APPROVAL FROM THE APPROPRIATE ASSET OWNER AND/OR APPROVING AUTHORITY.

1 REVISION 1; JULY 21, 2010

PRESIDIO PARKWAY P3 PROJECT
INDICATIVE PRELIMINARY DESIGN

UTILITY PLAN

SCALE 1'' = 50'

U-1

DGN FILE => P3UTILITY001_v8.dgn

DATE PLOTTED => 21-JUL-2010
TIME PLOTTED => 16:30

SHEET No	TOTAL SHEETS
44	

NOTE:

1. FOR LEGENDS SEE U-1.

SAN FRANCISCO

SEE SHEET E-4

THORNBURG Rd

GIRARD Rd

DOY3 LINE

GORGAS Ave

GO LINE

GI LINE

GN LINE

DOYLE Dr

SEE SHEET U-5

SEE SHEET U-1

ROUTE 101

SB LINE

NB LINE

DOY1 LINE

PALACE Dr

SEE SHEET U-3

PRESIDIO PARKWAY P3 PROJECT
INDICATIVE PRELIMINARY DESIGN

UTILITY PLAN

SCALE 1'' = 50'

U-2

DGN FILE => P3UTILITY002_v8.dgn

DATE PLOTTED => 17-MAY-2010
TIME PLOTTED => 16:38

SHEET No	TOTAL SHEETS
45	

SAN FRANCISCO

MARINA Blvd

BAKER ST

LYON St

PALACE DR

GI LINE

GIRARD Rd

MASON St

SEE SHEET U-2

NOTE:

1. FOR LEGENDS SEE U-1.

PRESIDIO PARKWAY P3 PROJECT
INDICATIVE PRELIMINARY DESIGN

UTILITY PLAN

SCALE 1'' = 50'

U-3

DGN FILE => P3UTILITY003_v8.dgn

DATE PLOTTED => 17-MAY-2010
TIME PLOTTED => 16:38

NOTE:

1. FOR LEGENDS SEE U-1.

UTILITY PLAN

SCALE 1'' = 50'

PRESIDIO PARKWAY P3 PROJECT
INDICATIVE PRELIMINARY DESIGN

U-4

DGN FILE => P3UTILITY004_v8.dgn

DATE PLOTTED => 17-MAY-2010
TIME PLOTTED => 16:38

SHEET No	TOTAL SHEETS
47	

NOTE:

1. FOR LEGENDS SEE U-1.

1 REVISION 1; JULY 21, 2010

SAN FRANCISCO

HALLECK St

HA LINE

GRAHAM St

LINCOLN Blvd

FORCE MAIN

SANITARY SEWER PUMP STATION

SB 54+05.00
BEGIN TUNNEL

SB LINE

DOY3 LINE

ROUTE 101

GN LINE

NB LINE

MAIN POST TUNNEL

NB 53+95.00
BEGIN TUNNEL

RICHARDSON Ave

VALLEJO St

OLD MASON St

SEE SHEET U-2

SEE SHEET U-6

DGN FILE => P3UTILITY005_v8.dgn

DATE PLOTTED => 21-JUL-2010
TIME PLOTTED => 16:30

PRESIDIO PARKWAY P3 PROJECT
INDICATIVE PRELIMINARY DESIGN

UTILITY PLAN

SCALE 1'' = 50'

U-5

SHEET No	TOTAL SHEETS
48	

NOTE:

1. FOR LEGENDS SEE U-1.

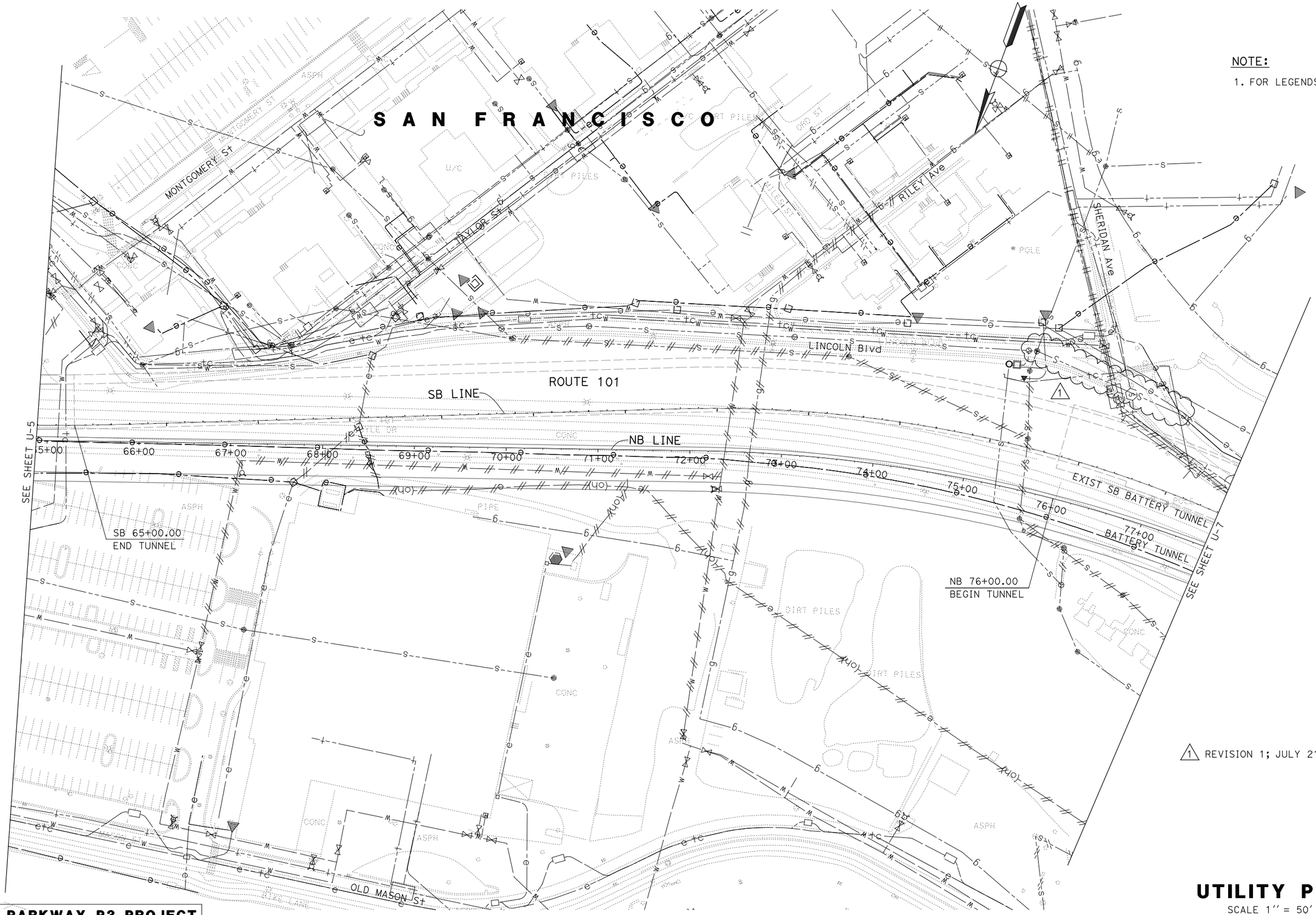

1 REVISION 1; JULY 21, 2010

PRESIDIO PARKWAY P3 PROJECT
INDICATIVE PRELIMINARY DESIGN

UTILITY PLAN

SCALE 1'' = 50'

U-6

DGN FILE => P3UTILITY006_v8.dgn
DATE PLOTTED => 21-JUL-2010
TIME PLOTTED => 16:30

SHEET No	TOTAL SHEETS
49	

NOTE:

1. FOR LEGENDS SEE U-1.

1 REVISION 1; JULY 21, 2010

SAN FRANCISCO

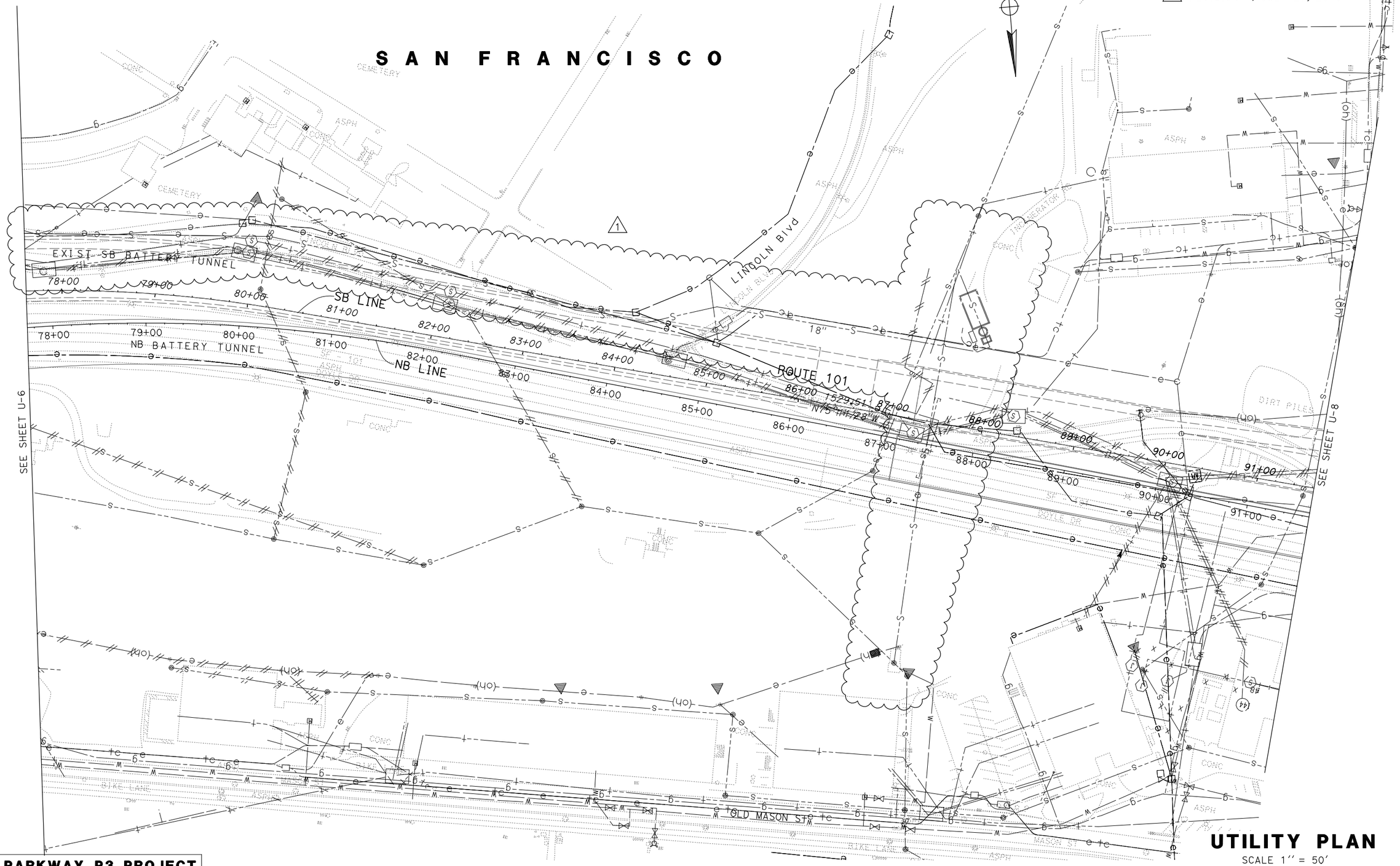

UTILITY PLAN

SCALE 1'' = 50'

PRESIDIO PARKWAY P3 PROJECT
INDICATIVE PRELIMINARY DESIGN

U-7

DGN FILE => P3UTILITY007_v8.dgn
DATE PLOTTED => 21-JUL-2010
TIME PLOTTED => 16:31

SHEET No	TOTAL SHEETS
50	

S A N F R A N C I S C O

NOTE:

1. FOR LEGENDS SEE U-1.

ROUTE 101

SB LINE

NB LINE

ROUTE 1

MCDOWELL Ave

CRISSY FIELD Ave

STOREY Ave

LINCOLN Blvd

RELOCATION OF ELECTRICAL LINE BY OTHERS

DOY2 LINE

DOY2 104+22.60
END CONSTRUCTION

DOY4 LINE

SEE SHEET U-7

SEE SHEET U-9

92+00 93+00 94+00 95+00 96+00 97+00 98+00 99+00 100+00 101+00 102+00 103+00 104+00 105+00 106+00 107+00 108+00 109+00 110+00 111+00 112+00 113+00 114+00

UTILITY PLAN

SCALE 1'' = 50'

PRESIDIO PARKWAY P3 PROJECT
INDICATIVE PRELIMINARY DESIGN

U-8

DGN FILE => P3UTILITY008_v8.dgn

DATE PLOTTED => 17-MAY-2010
TIME PLOTTED => 16:39

SHEET No	TOTAL SHEETS
51	

NOTE:

1. FOR LEGENDS SEE U-1.

UTILITY PLAN

SCALE 1'' = 50'

U-9

PRESIDIO PARKWAY P3 PROJECT
INDICATIVE PRELIMINARY DESIGN

DGN FILE => P3UTILITY009_v8.dgn

DATE PLOTTED => 17-MAY-2010
TIME PLOTTED => 16:39

SHEET No	TOTAL SHEETS
52	

NOTE:

1. FOR LEGENDS SEE U-1.

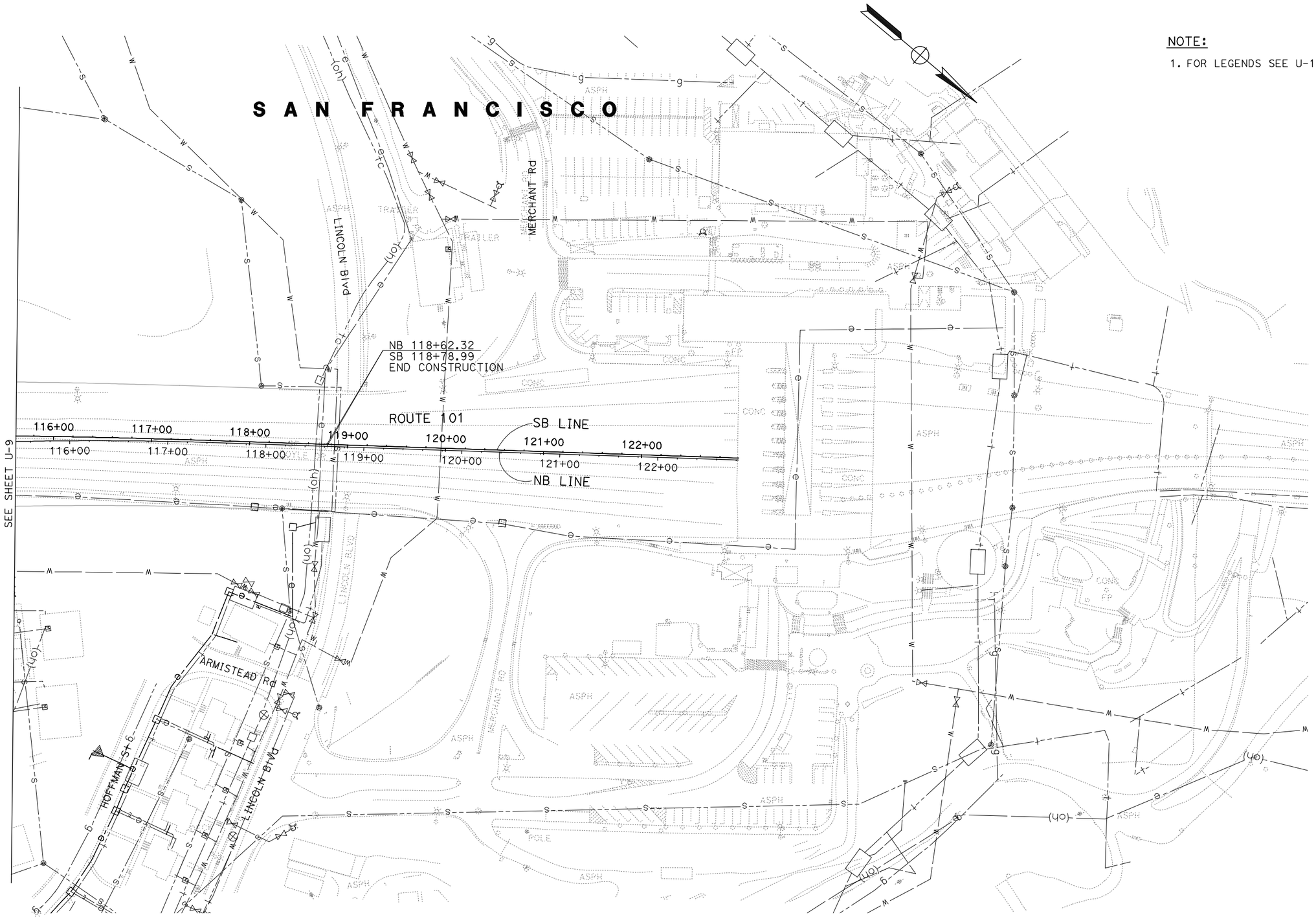

UTILITY PLAN

SCALE 1'' = 50'

U-10

PRESIDIO PARKWAY P3 PROJECT
INDICATIVE PRELIMINARY DESIGN

DGN FILE => P3UTILITY010_v8.dgn

DATE PLOTTED => 17-MAY-2010
TIME PLOTTED => 16:39

SHEET No	TOTAL SHEETS
53	

NO.	SIGN NOMENCLATURE	SIZE	STATION
1	R2-1	36" X 48"	NB 35+15.00
2	R4-7	36" X 36"	NB 39+00.00
	OM1-3(Mrk)	18" X 18"	
3	R5-1	36" X 36"	NB 39+65.00
4	R5-1a	36" X 24"	NB 39+65.00
5	R5-10c	24" X 12"	NB 40+10.00
6	W4-2	48" X 48"	NB 41+25.00
7	R5-10a	30" X 36"	NB 41+85.00
8	G84-2(CA)	54" X 48"	DOY1 43+50.00
9	R5-10c	24" X 12"	DOY1 45+00.00
10	R6-1 (RT)	36" X 12"	DOY1 45+25.00
11	R6-1 (RT)	36" X 12"	DOY1 45+50.00
12	R5-1	36" X 36"	DOY1 44+75.00
13	R5-1a	36" X 24"	DOY1 45+25.00
14	C26-2 (CA)	28" X 24"	DOY1 46+50.00
	M3-1	24" X 12"	
	M6-2	21" X 15"	
15	R5-10a	30" X 36"	DOY1 47+00.00
16	R5-10a	30" X 36"	DOY1 50+75.00
17	R6-1 (RT)	36" X 12"	DOY3 49+00.00
	R5-1a (LT)	36" X 12"	
18	R6-1 (RT)	36" X 12"	DOY3 49+00.00
	R5-1a (LT)	36" X 12"	
19	R5-1	36" X 36"	DOY3 49+50.00
20	R5-1a	36" X 24"	DOY3 49+50.00
21	R61 (CA)	48" X 30"	DOY3 51+10.00
22	R61 (CA)	48" X 30"	DOY3 51+10.00
23	W3-3	48" x 48"	DOY3 53+20.00
24	W3-3	48" x 48"	DOY3 53+20.00
25	G26-2 (CA)	28" X 24"	SB 53+10.00
	M3-3	24" X 12"	
26	G84-2(CA)	54" x 48"	SB 54+40.00
27	W13-2 (25)	36" X 48"	SB 58+20.00
28	R18A (CA)	66" x 48"	SB 59+95.00
29	W4-7	48" X 48"	SB 63+00.00
30	R2-1 (45)	36" X 48"	NB 66+50.00
31	M3-3	28" X 24"	NB 74+25.00
	G26-2 (CA)	24" X 12"	
32	R2-1 (45)	36" X 48"	SB 86+70.00
33	M3-3	24" X 12"	SB 88+80.00
	G26-2 (CA)	28" X 24"	
34	G84-2(CA)	54" X 48"	DOY2 100+10.00
35	W4-10 (CA)	48" X 48"	DOY2 100+90.00
36	W1-8L	24" X 30"	DOY2 100+50.00
37	W1-8L	24" X 30"	DOY2 103+00.00
38	W1-8L	24" X 30"	DOY2 103+80.00
39	W1-8L	24" X 30"	DOY2 104+20.00
40	W1-8L	24" X 30"	DOY2 104+80.00
41	W1-8L	24" X 30"	DOY2 105+60.00
42	W1-8L	24" X 30"	DOY2 106+20.00
43	W1-8L	24" X 30"	DOY4 111+00.00
44	W1-8L	24" X 30"	DOY4 111+75.00
45	W1-8L	24" X 30"	DOY4 112+30.00
46	W1-8L	24" X 30"	DOY4 112+90.00
47	W1-8L	24" X 30"	DOY4 113+50.00
48	W1-8L	24" X 30"	DOY4 114+20.00
49	W4-3R	48" X 48"	DOY2 109+50.00
50	W1-2a L (35)	48" X 48"	DOY4 106+80.00
51	W4-3R	48" X 48"	SB 95+40.00
52	W1-2a R	48" X 48"	DOY4 104+00.00
53	W9-3 R	48" X 48"	DOY4 116+80.00
54	W13-3 (35)	36" X 48"	SB 107+00.00
55	R2-1 (45)	36" X 48"	SB 112+10.00
56	R18A R (CA)	66" X 48"	SB 114+10.00
57	W 4-7 L	48" X 48"	SB 114+50.00
58	SW48 (CA) (30)	48" X 36"	SB 115+00.00
	SW48-2 (CA) (6)	48" X 12"	
59	R2-1 (35)	36" X 48"	NB 115+60.00
60	R2-1 (45)	36" X 48"	SB 118+20.00
61	R5-1a	30" X 36"	SB 118+80.00

NO.	SIGN PICTURE	SIZE	STATION
62	Marina Blvd Presidio Crissy Field	96" X 48"	NB STA 36+70.00
63	19th Ave Golden Gate Ave	102" X 42"	DOY1 STA 46+80.00
64	←Presidio Crissy Field Marina Blvd →	96" X 48"	DOY1 STA 44+90.00
65	←Marina Blvd Presidio →	66" X 36"	DOY3 STA 50+50.00
66	Marina Blvd | Presidio NO TRUCKS OR BUSES EXIT ONLY B/W B/Y W/G (Illuminated)	192" X 100"	SB STA 66+30.00
67	Exploratorium NEXT EXIT	60" X 30"	SB STA 72+70.00
68	SOUTH EXIT 438 1 19th Ave	72" X 54"	NB STA 94+05.00
69	LAST SF EXIT 1/4MILE	72" X 48"	NB STA 105+40.00
70	SOUTH Marina Blvd 101 SOUTH EXIT 438 19th AVE 1 Golden Gate Park ONLY OH (ILLUMINATED)	216" X 100" 264" X 100"	SB STA 108+00.00
71	Downtown SF 1 SOUTH 19th Ave 2 RIGHT LANES	114" X 84"	SB STA 115+60.00
72	TRUCKS RV'S TRAILER USE 2 RIGHT LANES B/Y	84" X 36"	NB STA 118+60.00
73	LAST SF EXIT→ View Area Presidio Golden Gate NRA W/G	96" X 66"	NB STA 119+05.00

NOTES:

1. ROADSIDE AND OVERHEAD SIGN DETAIL CONVENTION IS PER THE CALTRANS "CALIFORNIA MANUAL ON UNIFORM TRAFFIC CONTROL DEVICES FOR STREETS AND HIGHWAYS".

PRESIDIO PARKWAY P3 PROJECT
INDICATIVE PRELIMINARY DESIGN

SIGN SUMMARY SHEET

S-1

DGN FILE => P3SIGNSUMMARY01.dgn
DATE PLOTTED => 17-MAY-2010
TIME PLOTTED => 17:10

EVC 86+41.95
Elev 87.89

+4.300%

BVC 103+95.00
Elev 163.27

"NB" Line PROFILE
No Scale

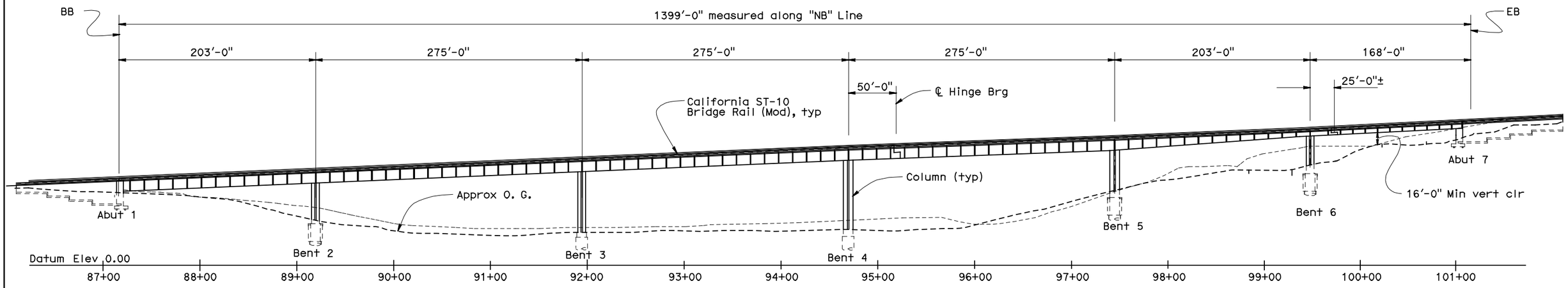

ELEVATION
1" = 50'

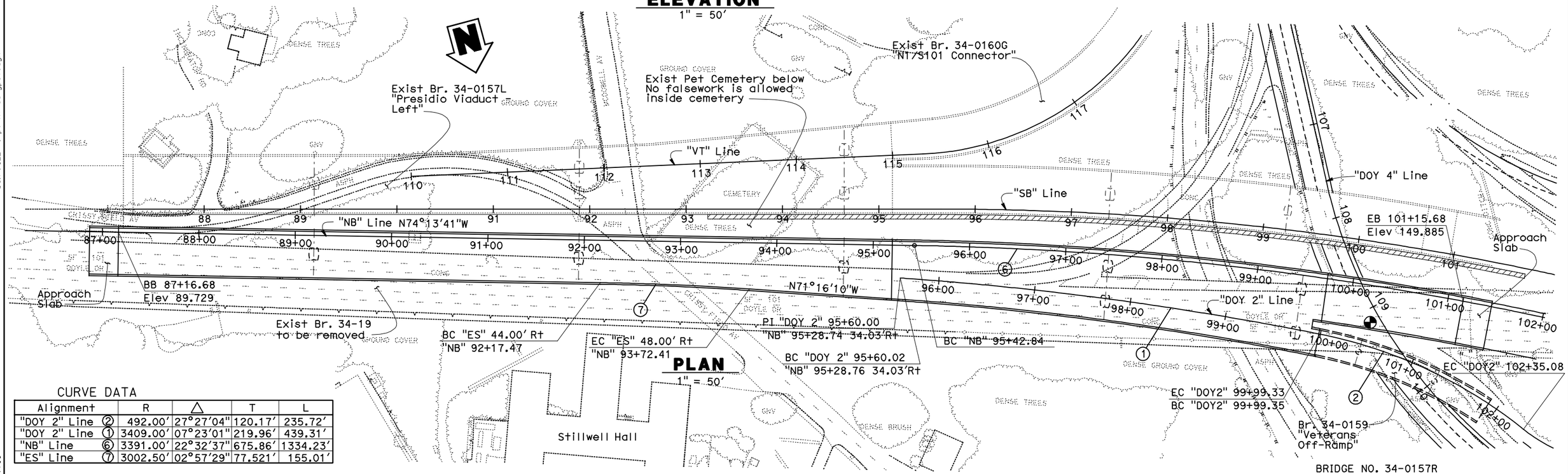

PLAN
1" = 50'

CURVE DATA

Alignment		R	△	T	L
"DOY 2" Line	②	492.00'	27°27'04"	120.17'	235.72'
"DOY 2" Line	①	3409.00'	07°23'01"	219.96'	439.31'
"NB" Line	⑥	3391.00'	22°32'37"	675.86'	1334.23'
"ES" Line	⑦	3002.50'	02°57'29"	77.521'	155.01'

LEGEND

Point of minimum vertical clearance

Indicates Existing Temporary Bridge Widening constructed in Phase 1. Widening to to be removed and California ST-10 Bridge Rail (Mod) constructed.

PRESIDIO PARKWAY P3 PROJECT
INDICATIVE PRELIMINARY DESIGN

BRIDGE NO. 34-0157R

NORTHBOUND HIGH VIADUCT

GENERAL PLAN

SCALE AS SHOWN

ST-1

DGN FILE => p3-hv-aa-gp01.dgn
DATE PLOTTED => 18-MAY-2010
TIME PLOTTED => 17:08

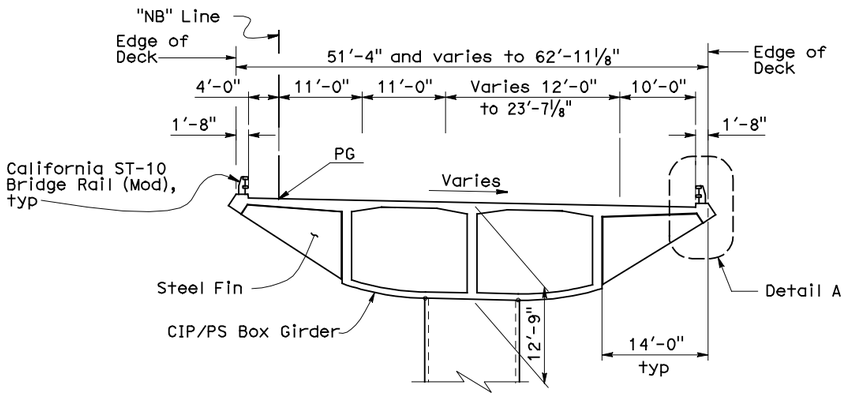

TYPICAL SECTION - STA 87+16.68 TO 95+19.68

1" = 10'

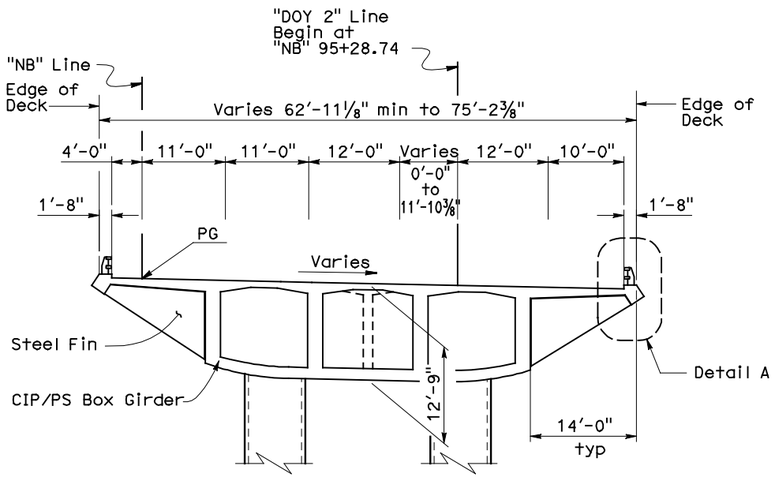

TYPICAL SECTION - STA 95+19.68 TO 97+44.68

1" = 10'

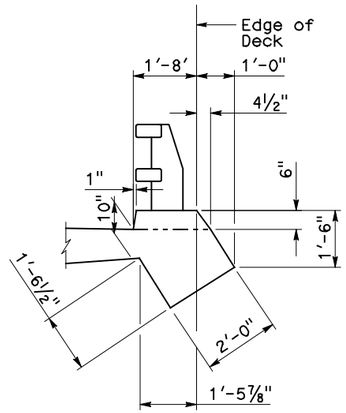

DETAIL A

1" = 1'-0"

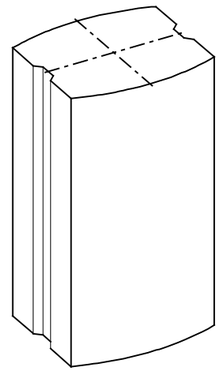

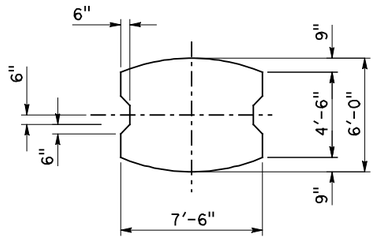

SMALL COLUMN SECTION

COLUMN ARCHITECTURAL DETAILS

NO SCALE

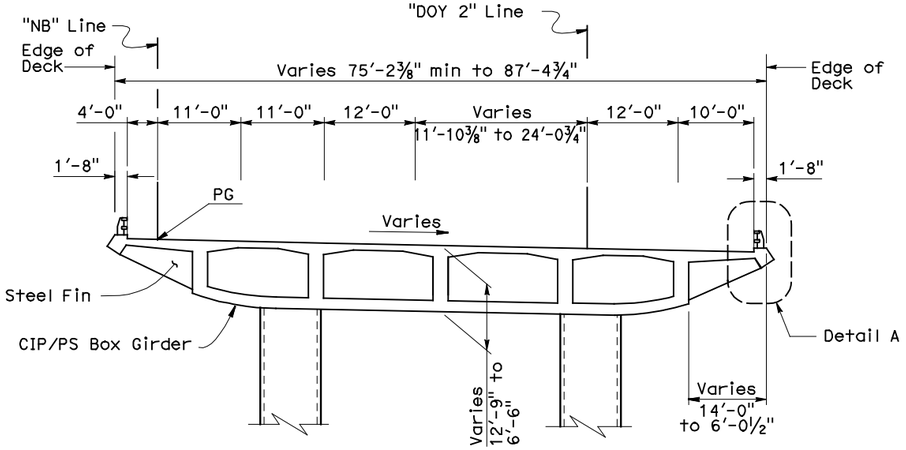

TYPICAL SECTION - STA 97+44.68 TO 99+72.68

1" = 10'

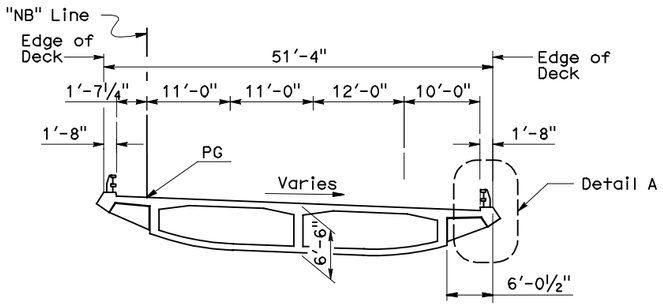

TYPICAL SECTION - STA 99+72.68 to 101+15.65

1" = 10'

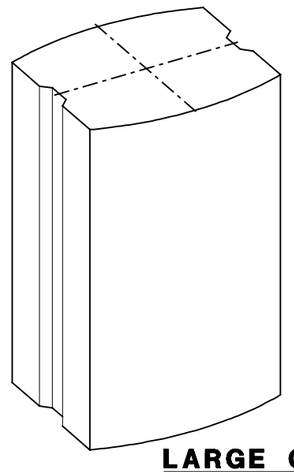

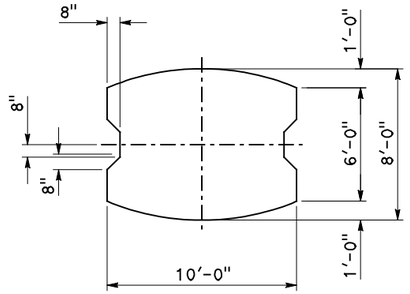

LARGE COLUMN SECTION

COLUMN ARCHITECTURAL DETAILS

NO SCALE

BRIDGE NO. 34-0157R

NORTHBOUND HIGH VIADUCT

TYPICAL SECTIONS

SCALE AS SHOWN

ST-2

PRESIDIO PARKWAY P3 PROJECT
INDICATIVE PRELIMINARY DESIGN

DGN FILE => p3-hv-ga-gp02.dgn
DATE PLOTTED => 18-MAY-2010
TIME PLOTTED => 17:08

SHEET No	TOTAL SHEETS
56	

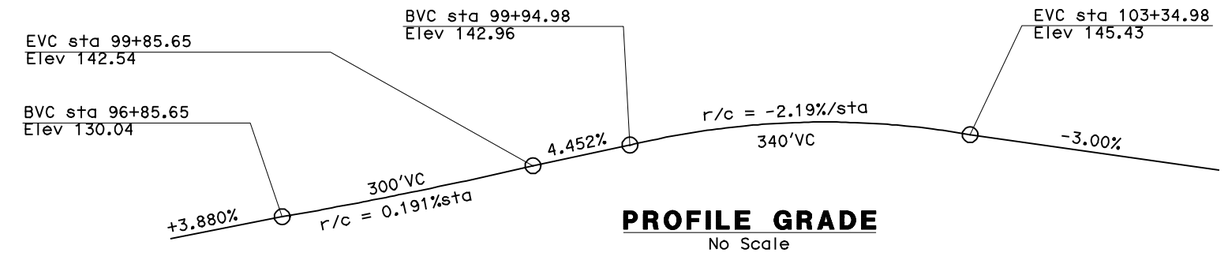

PROFILE GRADE
No Scale

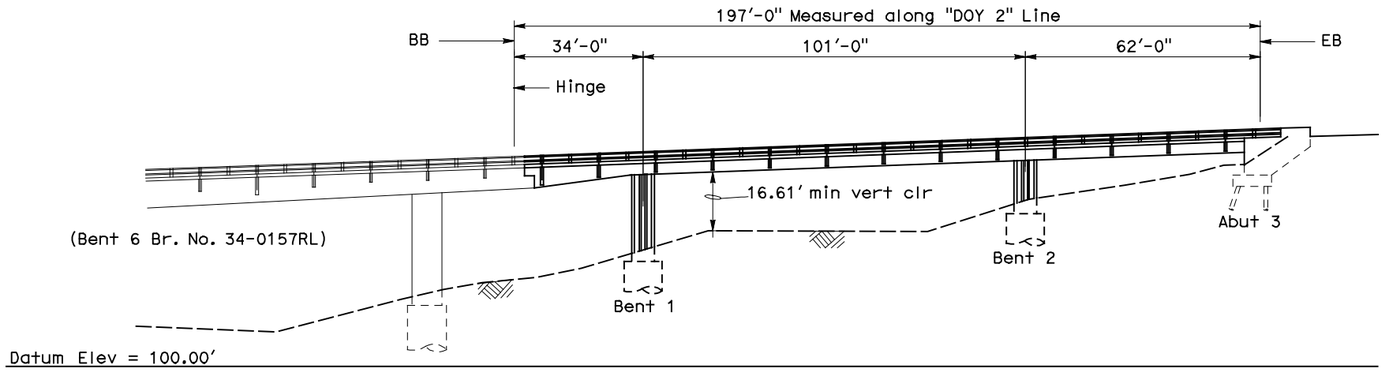

ELEVATION
1" = 20'

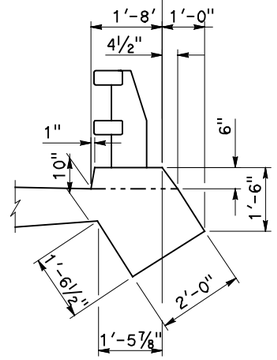

DETAIL A
½" = 1'-0"

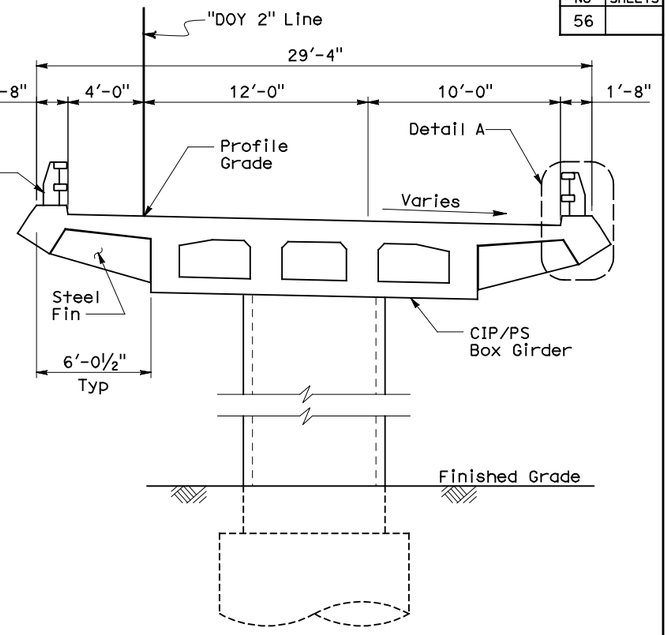

TYPICAL SECTION
¼" = 1'-0"

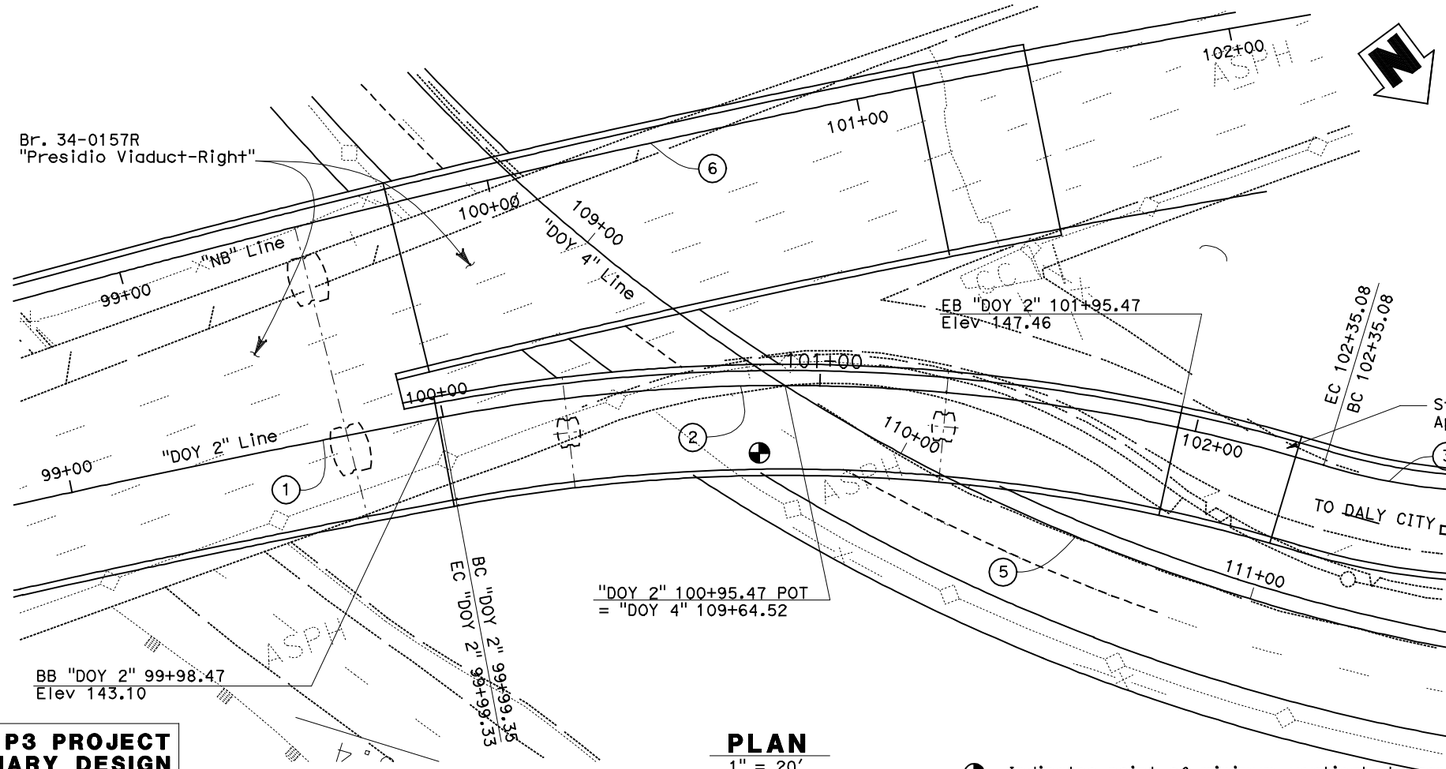

PLAN
1" = 20'

Indicates point of minimum vertical clearance

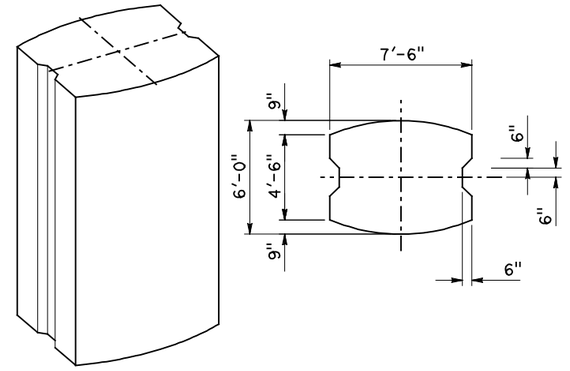

COLUMN ARCHITECTURAL DETAILS
NO SCALE

CURVE DATA

Alignment		R	△	T	L
"DOY 2" Line	①	3409.00'	07°23'01"	219.96'	439.31'
"DOY 2" Line	②	492.00'	27°27'04"	120.17'	235.72'
"DOY 2" Line	③	164.00'	49°28'32"	75.56'	141.61'
"DOY 4" Line	⑤	457.00'	33°13'58"	136.38'	265.07'
"NB" Line	⑥	3391.00'	22°32'37"	675.86'	1334.23'

BRIDGE NO. 34-0159
VETERANS OFF RAMP
GENERAL PLAN
SCALE AS SHOWN

ST-3

PRESIDIO PARKWAY P3 PROJECT
INDICATIVE PRELIMINARY DESIGN

DGN FILE => 34-0159.dgn
DATE PLOTTED => 18-MAY-2010
TIME PLOTTED => 12:04

SHEET No	TOTAL SHEETS
57	

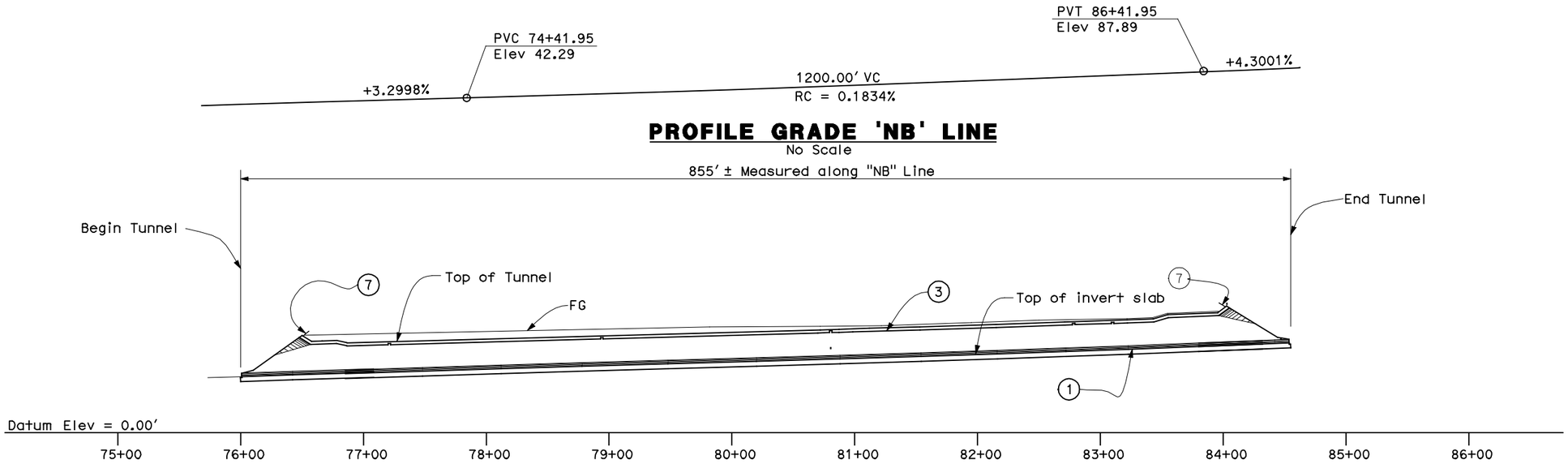

PROFILE GRADE 'NB' LINE

No Scale

ELEVATION

Scale: 1"=50'

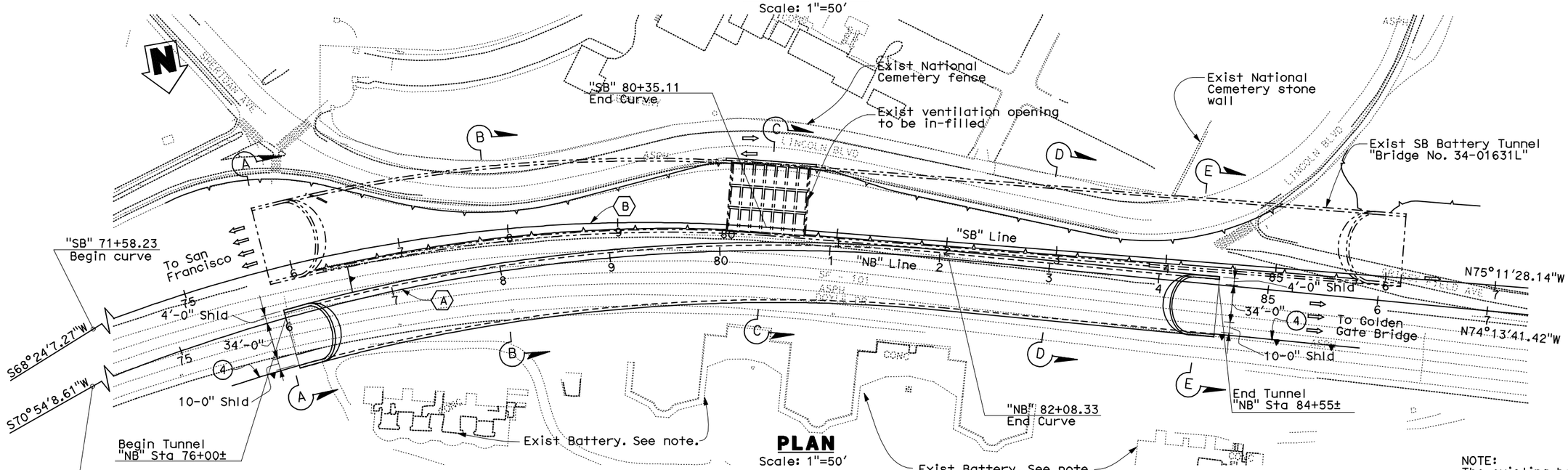

PLAN

Scale: 1"=50'

NOTE:
The existing batteries shall not be impacted by the tunnel design or tunnel construction.

LEGEND:

⇦ Direction of traffic

(1) Cast-in-place concrete tunnel invert slab

(3) Cast-in-place concrete tunnel roof slab

(4) Retaining Wall

(7) Safety railing

(A) "NB" Line Curve Data
R = 1639.00'
Δ = 34°52'11"
T = 514.73'
L = 997.48'

(B) "SB" Line Curve Data
R = 1380.00'
Δ = 36°24'25"
T = 453.81'
L = 876.88'

PRESIDIO PARKWAY P3 PROJECT
INDICATIVE PRELIMINARY DESIGN

BRIDGE NO. 34-0161R

NORTHBOUND BATTERY TUNNEL

GENERAL PLAN

SCALE AS SHOWN

ST-4

DGN FILE => p3-nbbt-st001.dgn
DATE PLOTTED => 18-MAY-2010
TIME PLOTTED => 11:56

SHEET No	TOTAL SHEETS
58	

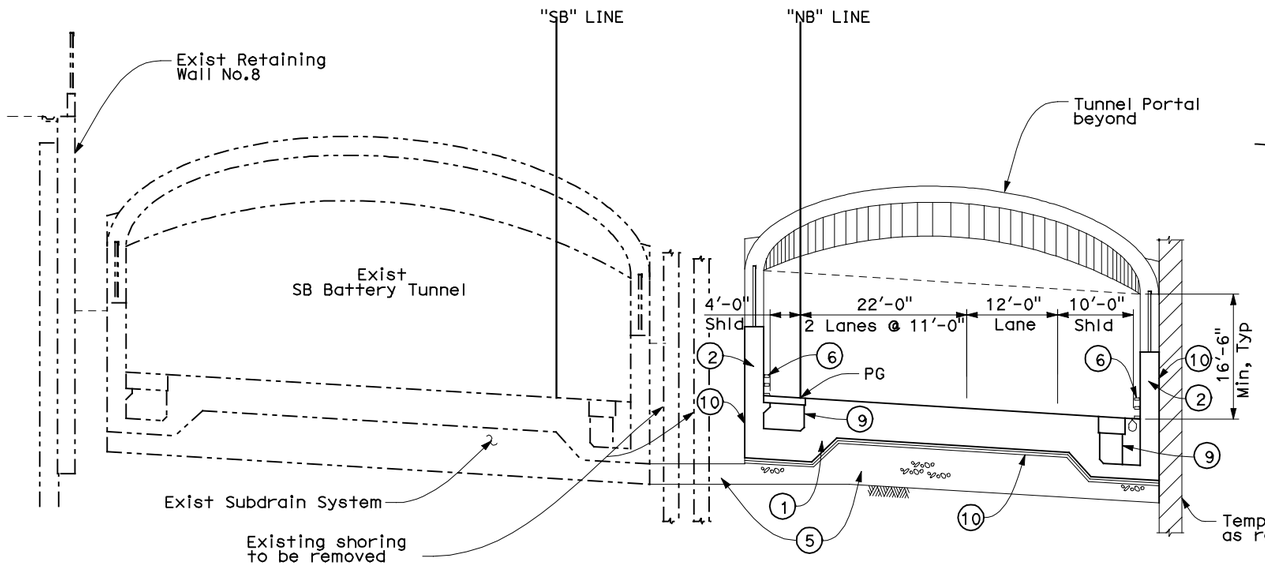

SECTION A-A
Scale: 1"=10'

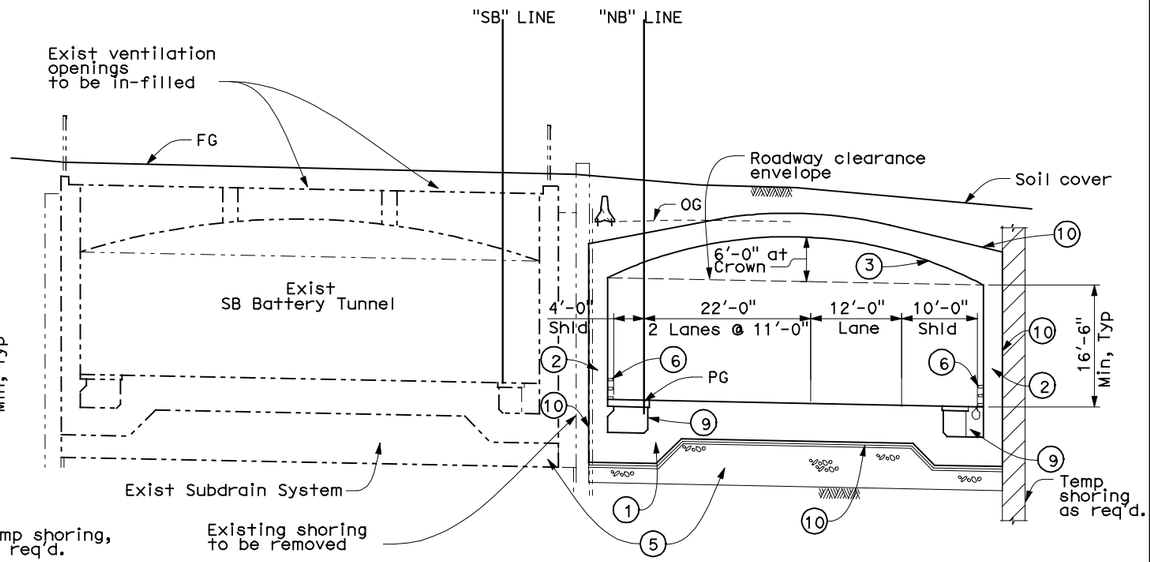

SECTION C-C
Scale: 1"=10'

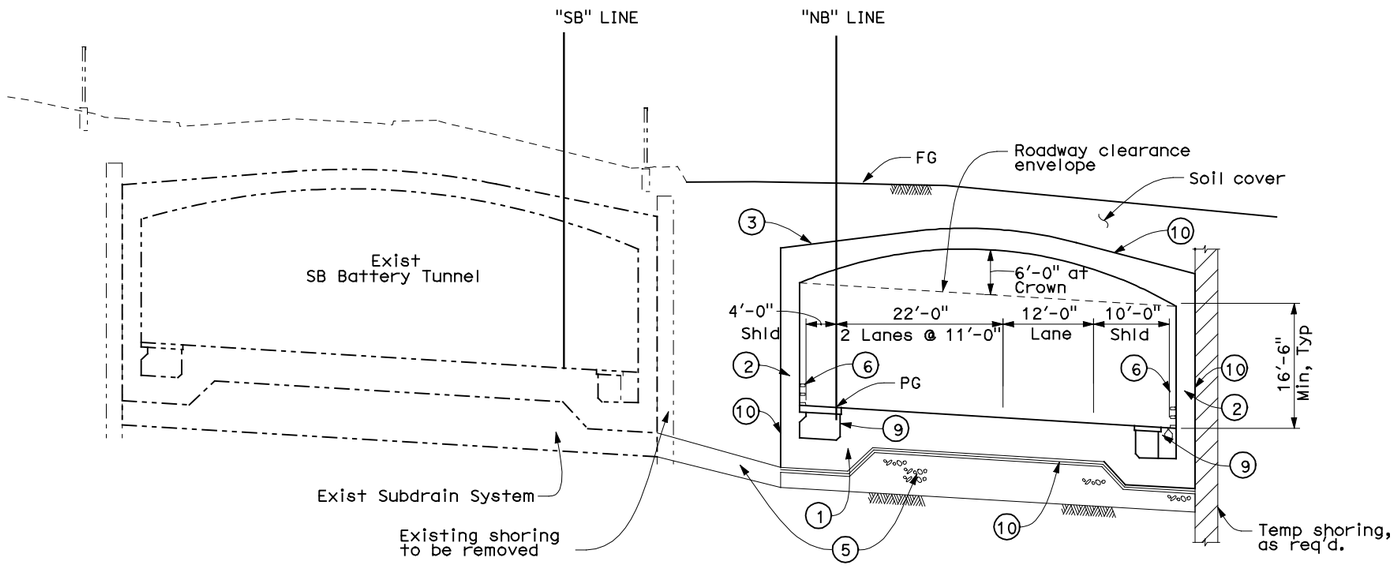

SECTION B-B
Scale: 1"=10'

LEGEND:

1. Cast-In-Place Concrete Tunnel invert slab
2. Cast-In-Place Concrete Tunnel wall
3. Cast-In-Place Concrete Tunnel roof slab
5. Sub-drain system
6. Wall Mounted California ST-10 Bridge Rail
8. Architectural fence
9. Utility ductbank
10. Waterproofing system and geocomposite drain

BRIDGE NO. 34-0161R

NORTHBOUND BATTERY TUNNEL

TYPICAL SECTIONS No.1

SCALE AS SHOWN

ST-5

PRESIDIO PARKWAY P3 PROJECT
INDICATIVE PRELIMINARY DESIGN

DGN FILE => p3-nbbt-st002.dgn
DATE PLOTTED => 18-MAY-2010
TIME PLOTTED => 10:48

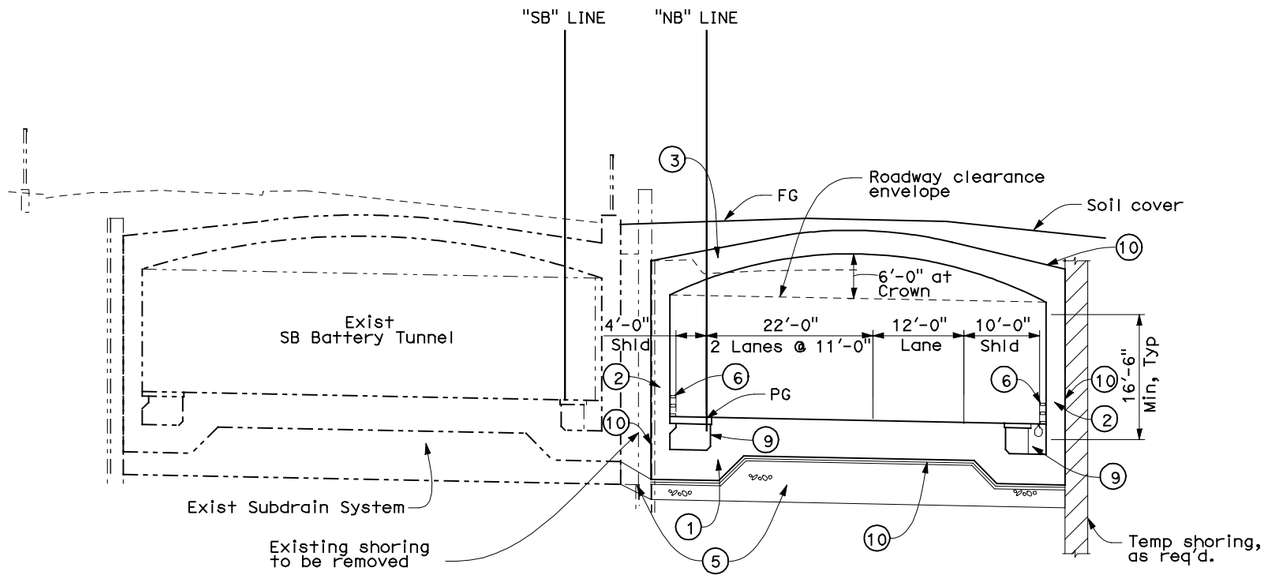

SECTION D-D

Scale: 1"=10'

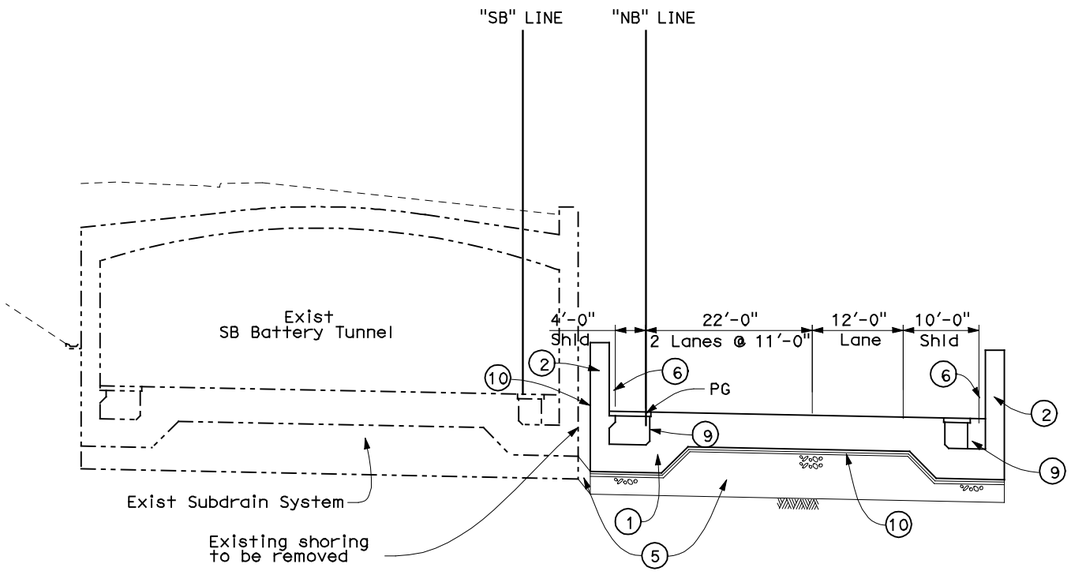

SECTION E-E

Scale: 1"=10'

LEGEND:

1. Cast-In-Place Concrete Tunnel invert slab
2. Cast-In-Place Concrete Tunnel wall
3. Cast-In-Place Concrete Tunnel roof slab
5. Sub-drain system
6. Wall Mounted California ST-10 Bridge Rail
8. Architectural fence
9. Utility ductbank
10. Waterproofing system and geocomposite drain

BRIDGE NO. 34-0161R

NORTHBOUND BATTERY TUNNEL

TYPICAL SECTIONS No.2

SCALE AS SHOWN

ST-6

PRESIDIO PARKWAY P3 PROJECT
INDICATIVE PRELIMINARY DESIGN

DGN FILE => p3-nbbt-st003.dgn
DATE PLOTTED => 18-MAY-2010
TIME PLOTTED => 10:47

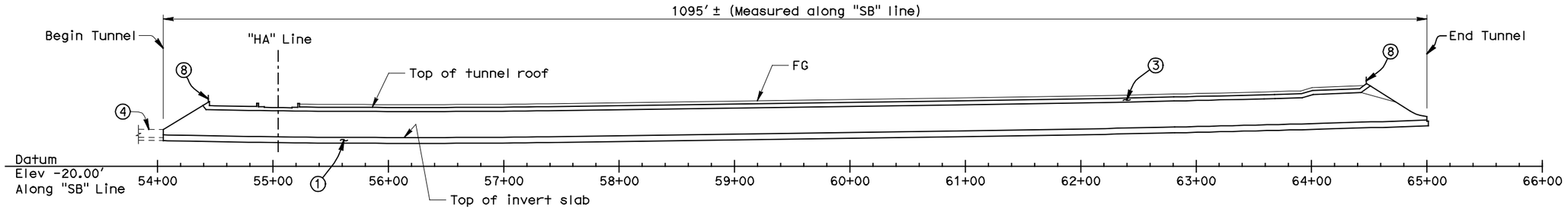

ALONG "SB" TUNNEL

ELEVATION

1" = 50′

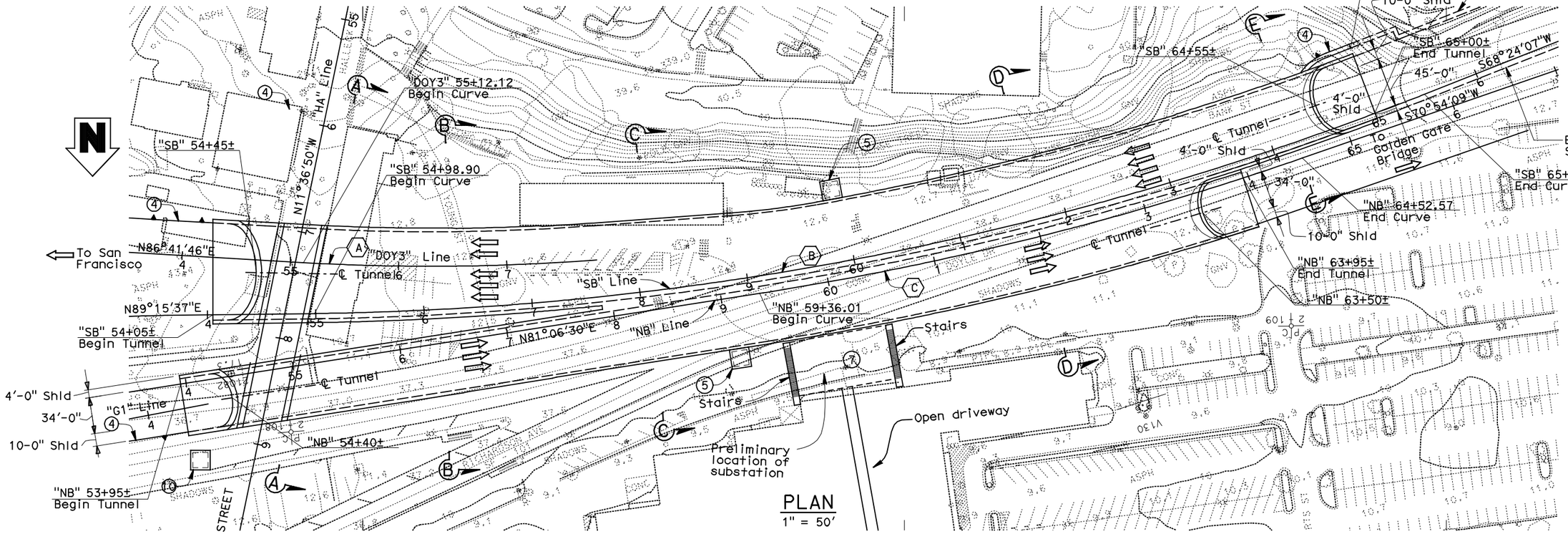

PLAN

1" = 50′

Note: For profile grades of alignments, see "Typical Sections 1" and "Typical Sections 3" sheets.

(A) "DOY3" Line Curve Data	(B) "SB" Line Curve Data	(C) "NB" Line Curve Data
R = 2040.00′	R = 2884.00′	R = 2900.00′
△ = 7°36′02"	△ = 20°51′30"	△ = 10°12′21"
T = 135.51′	T = 530.83′	T = 258.97′
L = 270.62	L = 1049.91	L = 516.57′

PRESIDIO PARKWAY P3 PROJECT
INDICATIVE PRELIMINARY DESIGN

LEGEND:

- ⇦ Direction of traffic
- (1) Cast-in-place concrete tunnel invert slab
- (3) Cast-in-place concrete tunnel roof slab
- (4) Retaining Wall
- (5) Emergency Tunnel Egress
- (7) Substation (Preliminary Location)
- (8) Architectural Fence
- (10) Drainage Sump

BRIDGE NO. 34-0163L/R

MAIN POST TUNNEL

GENERAL PLAN

SCALE AS SHOWN

ST-7

DGN FILE => p3-mpt-st01.dgn
DATE PLOTTED => 18-MAY-2010
TIME PLOTTED => 11:57

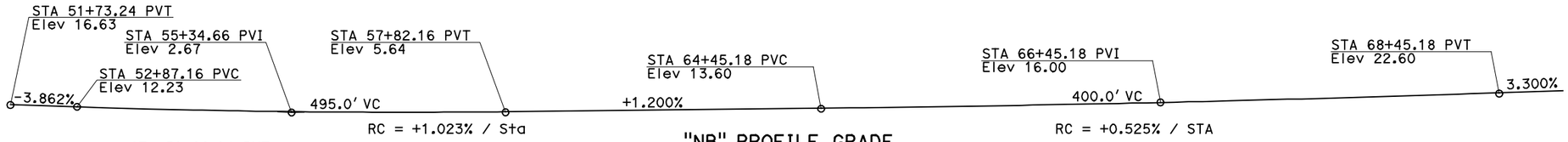

"NB" PROFILE GRADE
NO SCALE

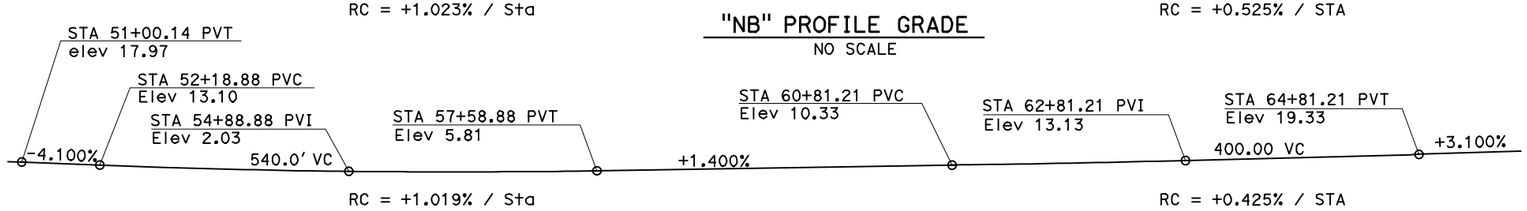

"SB" PROFILE GRADE
NO SCALE

LEGEND:

1. Cast-In-Place Concrete Tunnel invert slab
2. Cast-In-Place Concrete Tunnel wall
3. Cast-In-Place Concrete Tunnel roof slab
6. Wall Mounted California ST-10 Bridge Rail
8. Architectural fence
9. Utility ductbank
11. Waterproofing system
12. Drain System

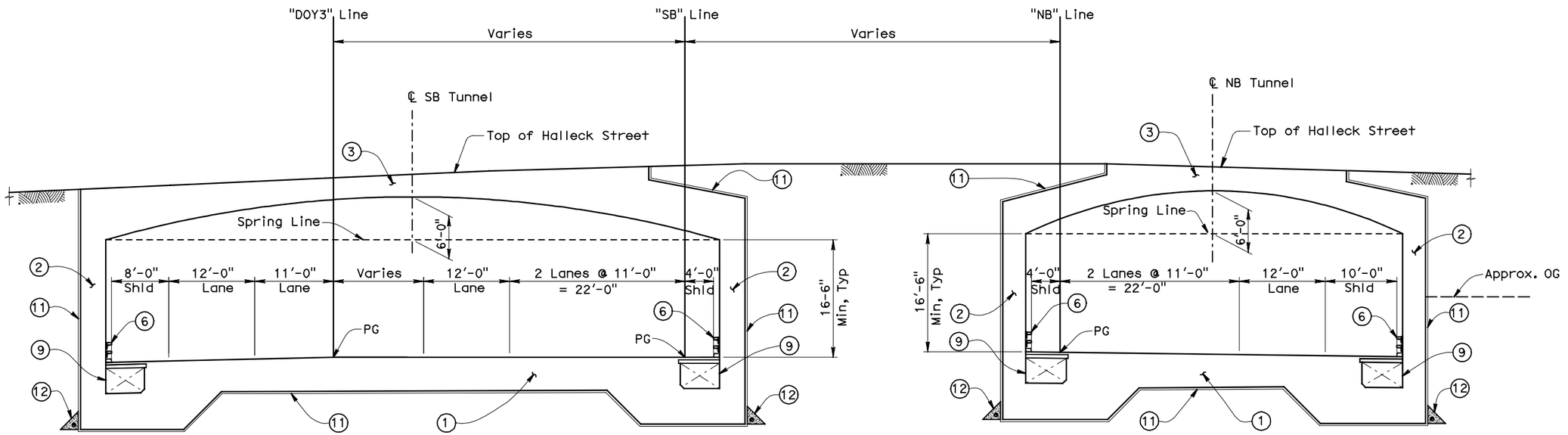

BRIDGE No. 34-0163L

BRIDGE No. 34-0163R

SECTION A-A at HALLECK STREET
1/8" = 1'-0"

MAIN POST TUNNEL

TYPICAL SECTIONS 1

SCALE AS SHOWN

ST-8

PRESIDIO PARKWAY P3 PROJECT
INDICATIVE PRELIMINARY DESIGN

DGN FILE => p3-mpt-st02.dgn
DATE PLOTTED => 18-MAY-2010
TIME PLOTTED => 10:47
USERNAME => reyesl

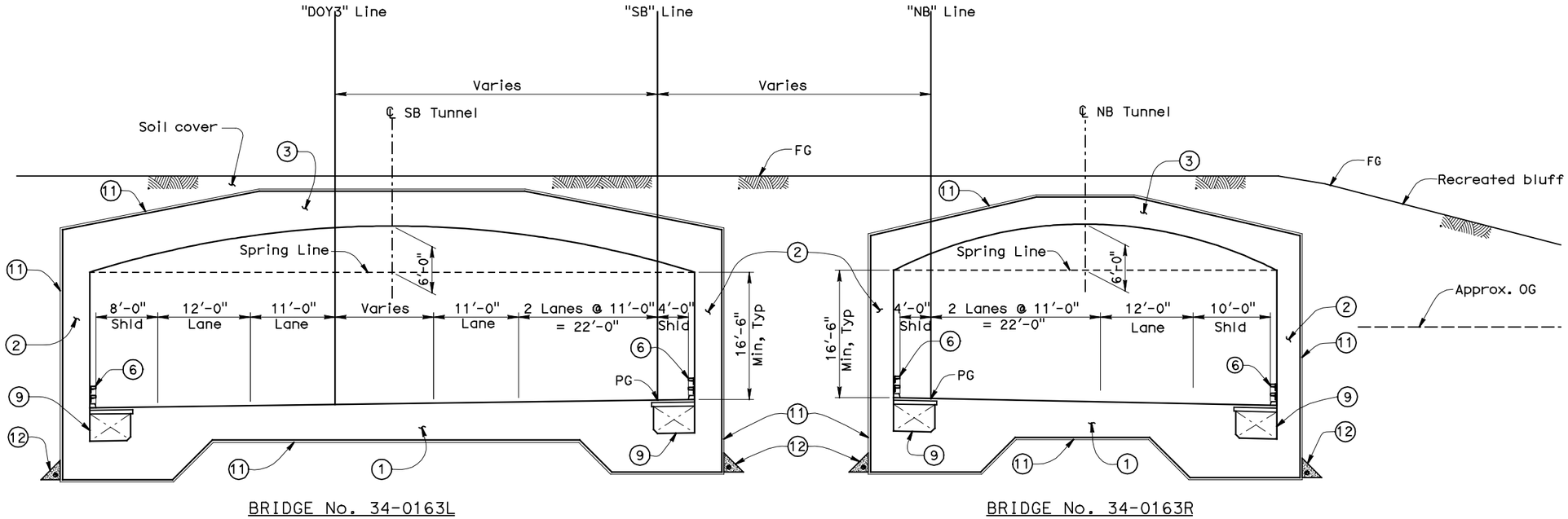

SECTION B-B
1/8" = 1'-0"

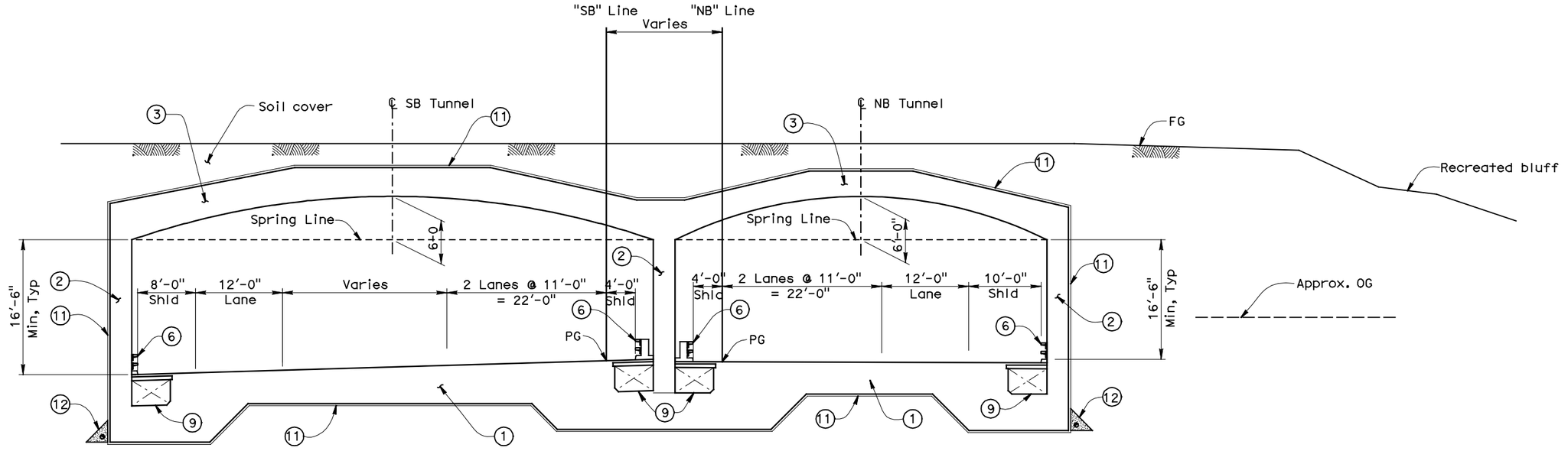

SECTION C-C
1/8" = 1'-0"

LEGEND:

1. Cast-In-Place Concrete Tunnel invert slab
2. Cast-In-Place Concrete Tunnel wall
3. Cast-In-Place Concrete Tunnel roof slab
6. Wall Mounted California ST-10 Bridge Rail
8. Architectural fence
9. Utility ductbank
11. Waterproofing system
12. Drain System

BRIDGE NO. 34-0163L/R

MAIN POST TUNNEL

TYPICAL SECTIONS 2

SCALE AS SHOWN

ST-9

PRESIDIO PARKWAY P3 PROJECT
INDICATIVE PRELIMINARY DESIGN

DGN FILE => p3-mpt-st03.dgn
DATE PLOTTED => 18-MAY-2010
TIME PLOTTED => 10:46

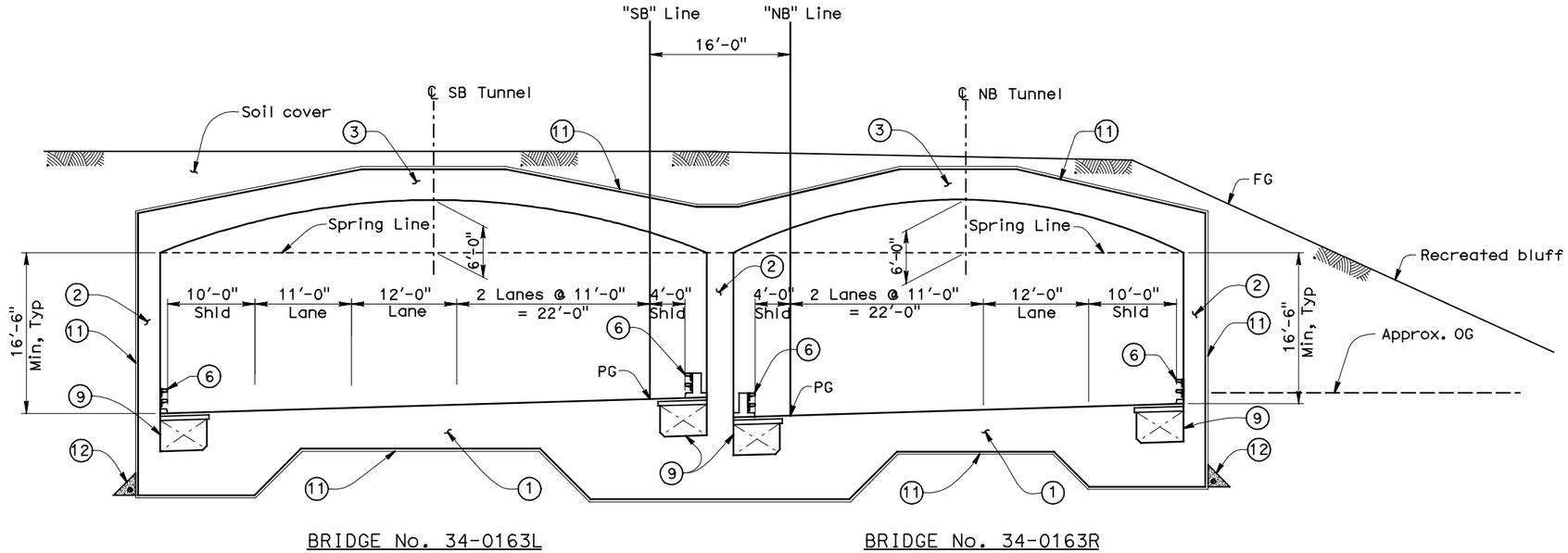

BRIDGE No. 34-0163L BRIDGE No. 34-0163R

SECTION D-D

1/8" = 1'-0"

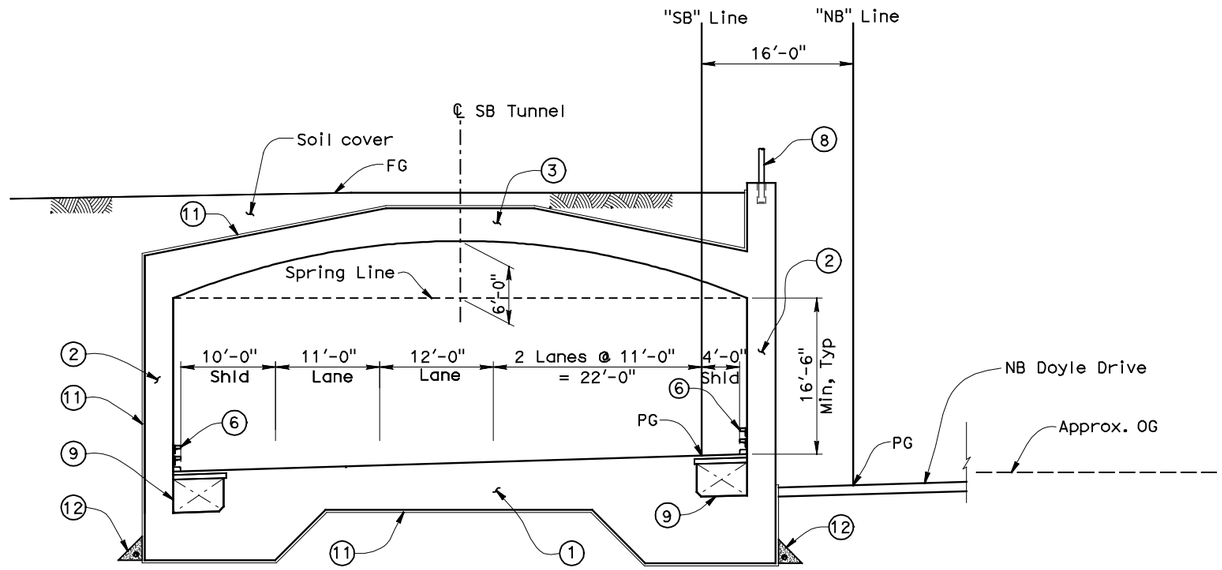

BRIDGE No. 34-0163L

SECTION E-E

1/8" = 1'-0"

LEGEND:

1. Cast-In-Place Concrete Tunnel invert slab
2. Cast-In-Place Concrete Tunnel wall
3. Cast-In-Place Concrete Tunnel roof slab
6. Wall Mounted California ST-10 Bridge Rail
8. Architectural fence
9. Utility ductbank
11. Waterproofing system
12. Drain System

"DOY3" PROFILE GRADE

NO SCALE

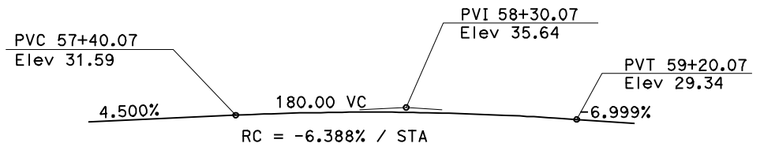

"HA" PROFILE GRADE

NO SCALE

BRIDGE NO. 34-0163L/R

MAIN POST TUNNEL

TYPICAL SECTIONS 3

SCALE AS SHOWN

ST-10

PRESIDIO PARKWAY P3 PROJECT
INDICATIVE PRELIMINARY DESIGN

DGN FILE => p3-mpt-st04.dgn
DATE PLOTTED => 18-MAY-2010
TIME PLOTTED => 10:46

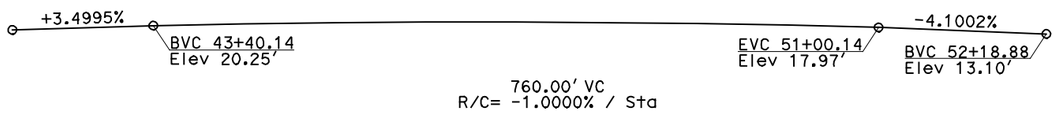

PROFILE GRADE
No Scale

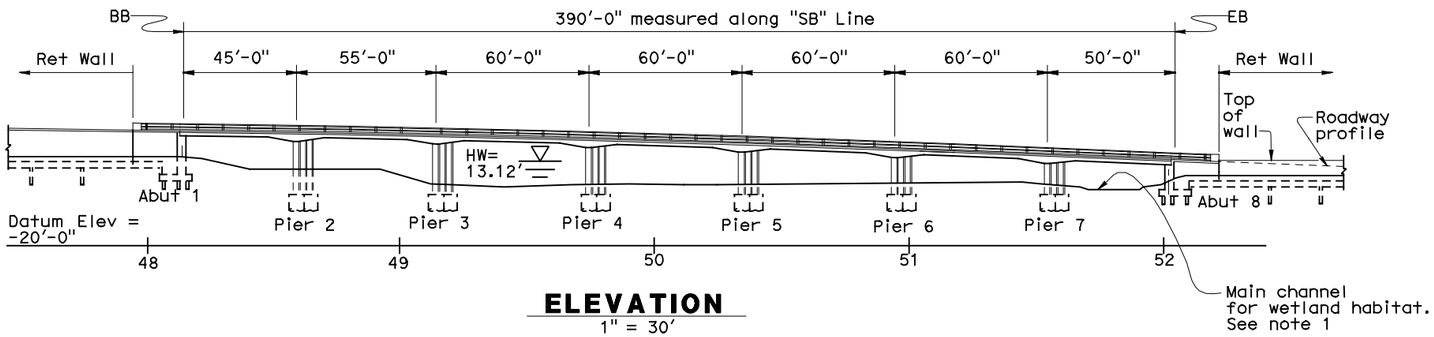

ELEVATION
1" = 30'

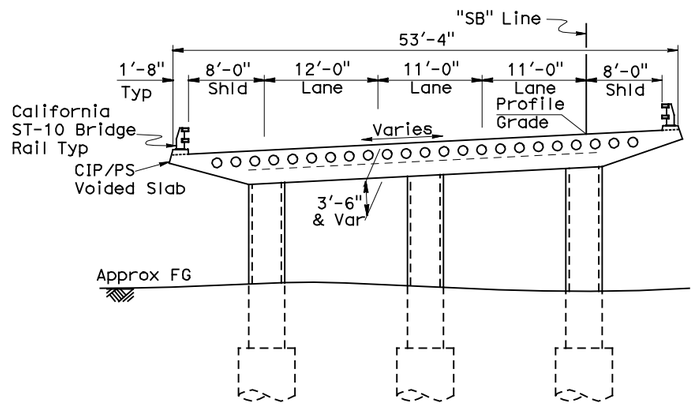

TYPICAL SECTION
1/8" = 1'-0"

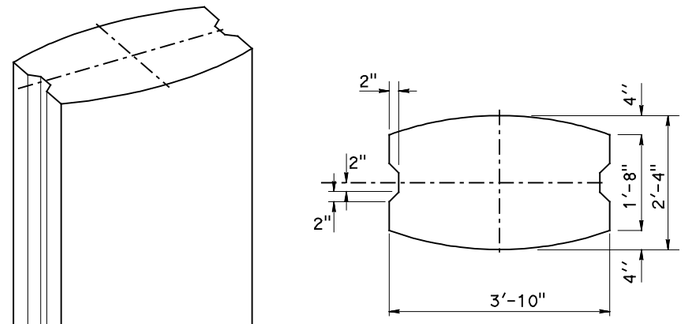

SECTION

COLUMN ARCHITECTURAL DETAILS
NO SCALE

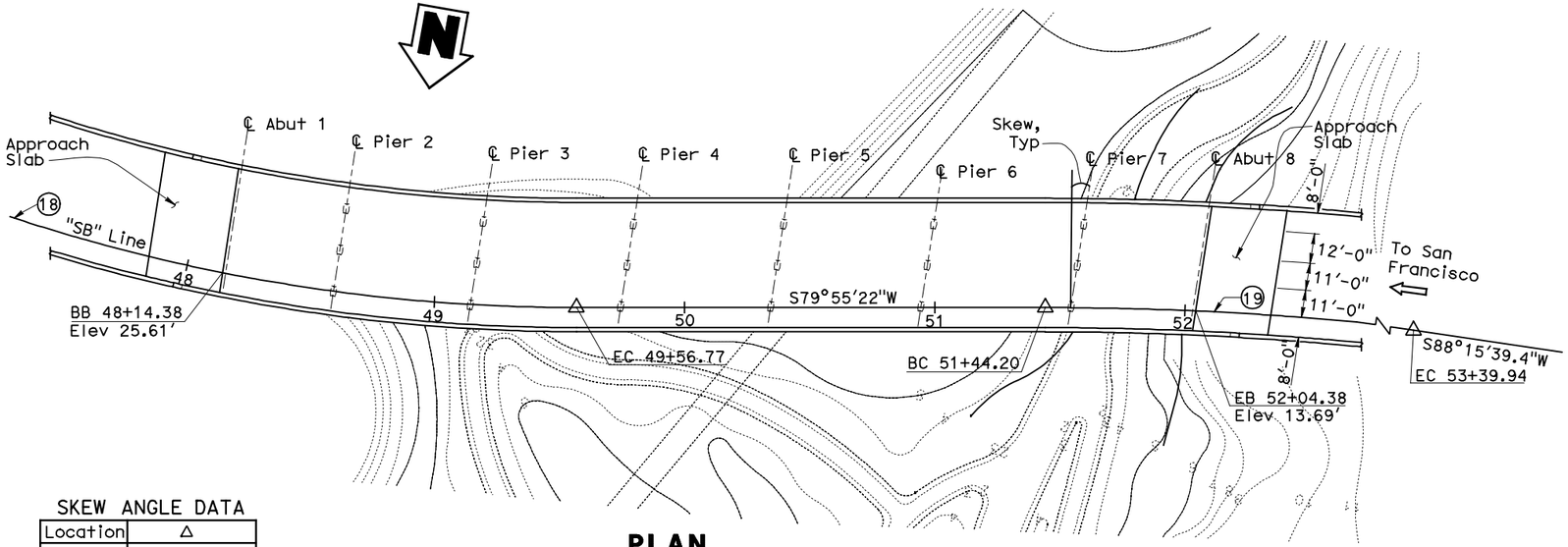

PLAN
1" = 30'

SKEW ANGLE DATA

Location	Δ
Abut 1	2°19'57"
Pier 2	1°7'30"
Pier 3	5°28'18"
Piers 4 thru 6	8°49'18"
Pier 7	8°23'17"
Abut 8	6°18'42"

CURVE DATA

Curve	R	Δ	T	L
18	725.00'	62°25'24.65"	439.28'	789.88'
19	1345.00'	8°20'16.99"	98.04'	195.73'

NOTES:

1. The Presidio Trust has plans to develop independently of this project a future wetland habitat and trail system to be located beneath the bridge. The bridge design shall accommodate Presidio Trust plans for the future wetland habitat and trail system.

PRESIDIO PARKWAY P3 PROJECT
INDICATIVE PRELIMINARY DESIGN

BRIDGE NO. 34-0164L

TENNESSEE HOLLOW - SB

GENERAL PLAN

SCALE AS SHOWN

ST-11

DGN FILE => 34-0164L.dgn
DATE PLOTTED => 18-MAY-2010
TIME PLOTTED => 11:37

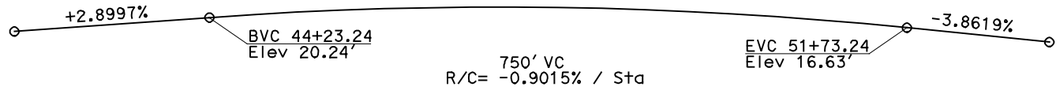

PROFILE GRADE
No Scale

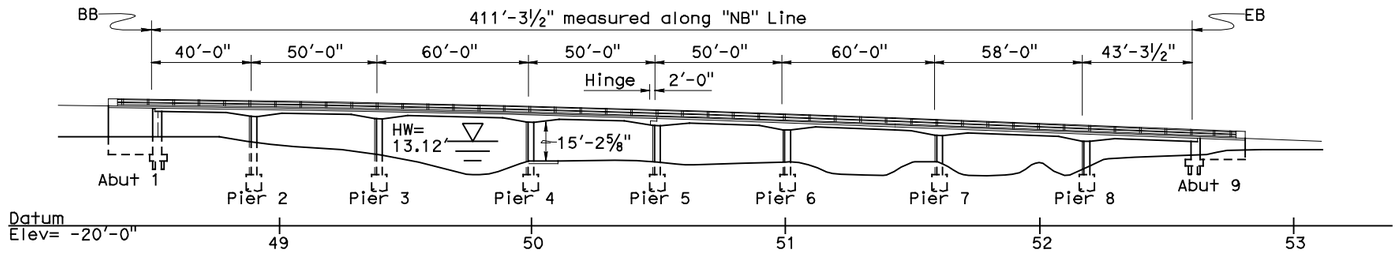

ELEVATION
1" = 30'

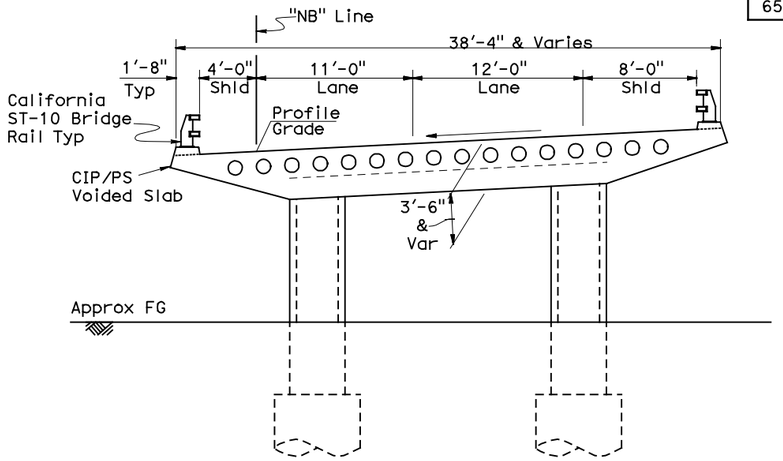

SECTION AT PIER 2
3/16" = 1'-0"

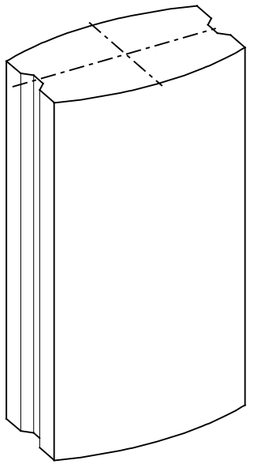

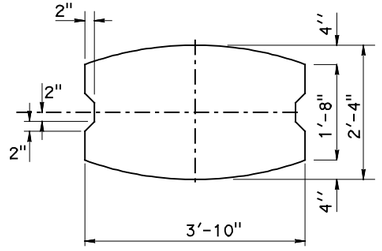

SECTION

COLUMN ARCHITECTURAL DETAILS
NO SCALE

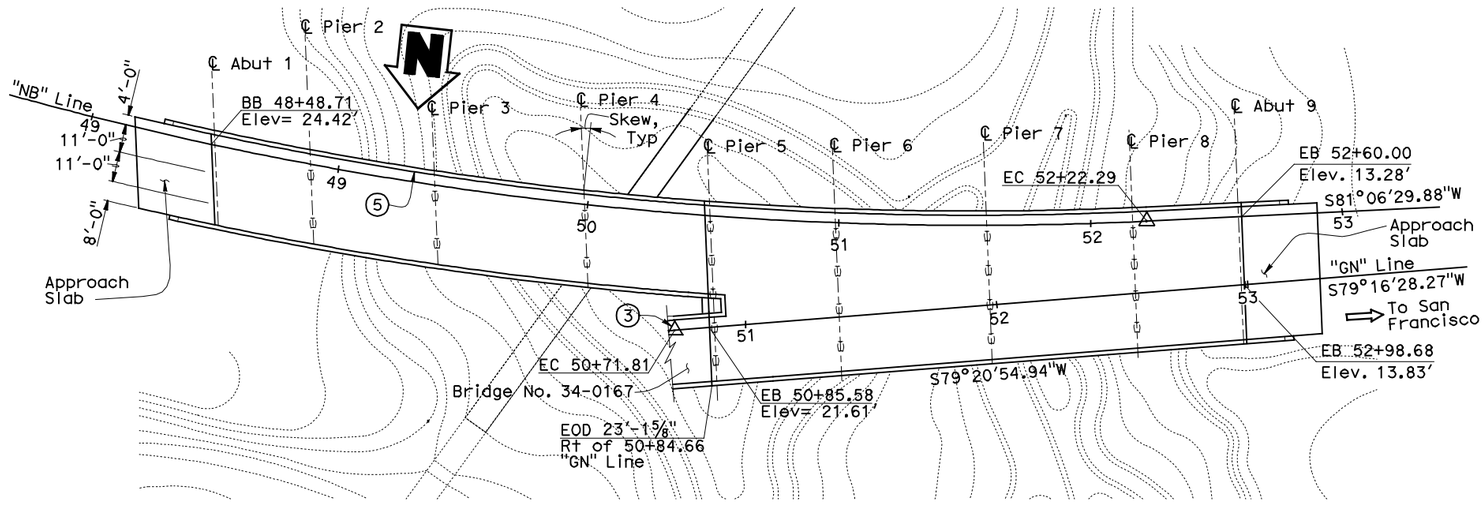

PLAN
1" = 30'

SKEW ANGLE DATA

Location	Δ
Abut 1	14°24'53"
Pier 2	12°52'29"
Pier 3	10°53'07"
Pier 4	8°29'52"
Pier 5	6°30'30"

SKEW ANGLE DATA

Location	Δ
Pier 6	4°31'08"
Pier 7	2°07'54"
Pier 8	0°10'34"
Abut 9	0°23'53"

CURVE DATA

Line	R	Δ	T	L
⑤	1440.00'	20°45'51"	263.82'	521.86'
③	790.00'	33°25'16"	237.17'	460.81'

NOTES:

1. The Presidio Trust has plans to develop independently of this project a future wetland habitat and trail system to be located beneath the bridge. The bridge design shall accommodate Presidio Trust plans for the future wetland habitat and trail system.

PRESIDIO PARKWAY P3 PROJECT
INDICATIVE PRELIMINARY DESIGN

BRIDGE NO. 34-0164R

TENNESSEE HOLLOW - NB

GENERAL PLAN

SCALE AS SHOWN

ST-12

DGN FILE => 34-0164R.dgn
DATE PLOTTED => 18-MAY-2010
TIME PLOTTED => 11:38

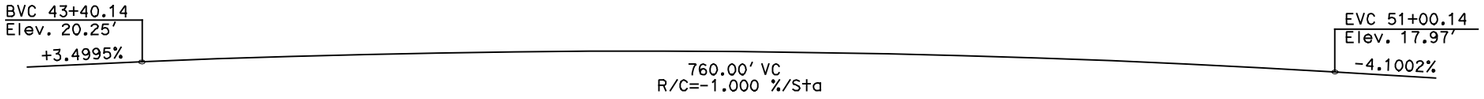

PROFILE GRADE
No Scale

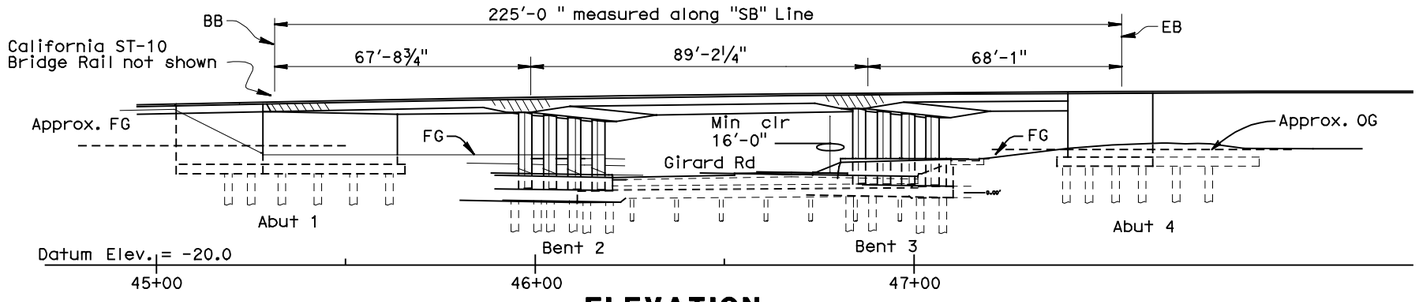

ELEVATION
1" = 20'

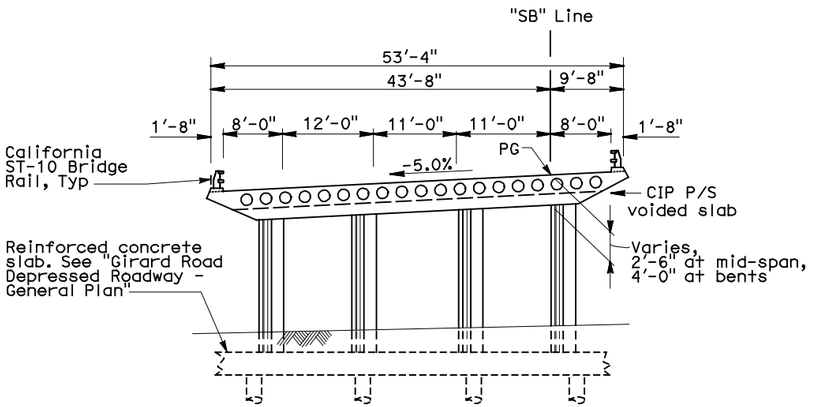

TYPICAL SECTION
1"=10'-0"

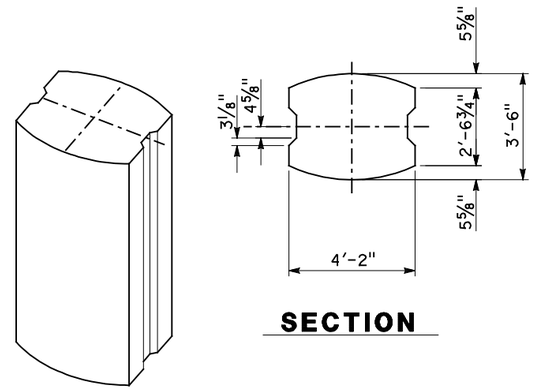

SECTION

COLUMN ARCHITECTURAL DETAILS
No Scale

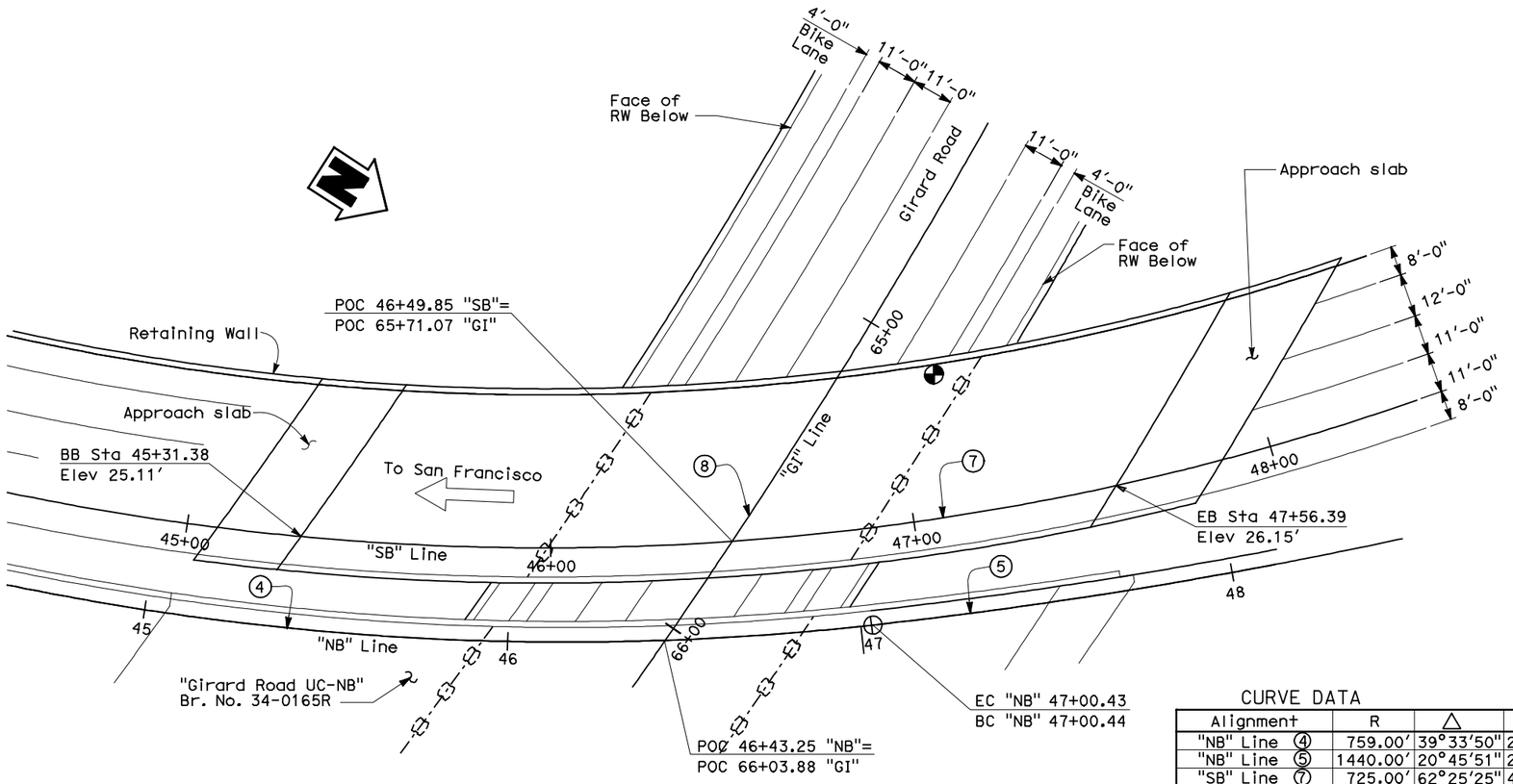

PLAN
1" = 20'

CURVE DATA

Alignment	R	△	T	L
"NB" Line ④	759.00'	39°33'50"	272.98'	524.10'
"NB" Line ⑤	1440.00'	20°45'51"	263.82'	521.86'
"SB" Line ⑦	725.00'	62°25'25"	439.28'	789.88'
"GI" Line ⑧	1834.00'	28°55'53"	473.13'	926.07'

LEGEND

◓ Denotes point of minimum vertical clearance

BRIDGE NO. 34-0165L

GIRARD ROAD UNDERCROSSING - SB

GENERAL PLAN

SCALE AS SHOWN

ST-13

PRESIDIO PARKWAY P3 PROJECT
INDICATIVE PRELIMINARY DESIGN

DGN FILE => 34-0165L.dgn
DATE PLOTTED => 18-MAY-2010
TIME PLOTTED => 10:50

SHEET No	TOTAL SHEETS
67	

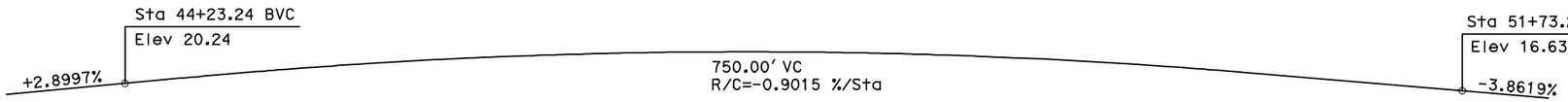

PROFILE GRADE
No Scale

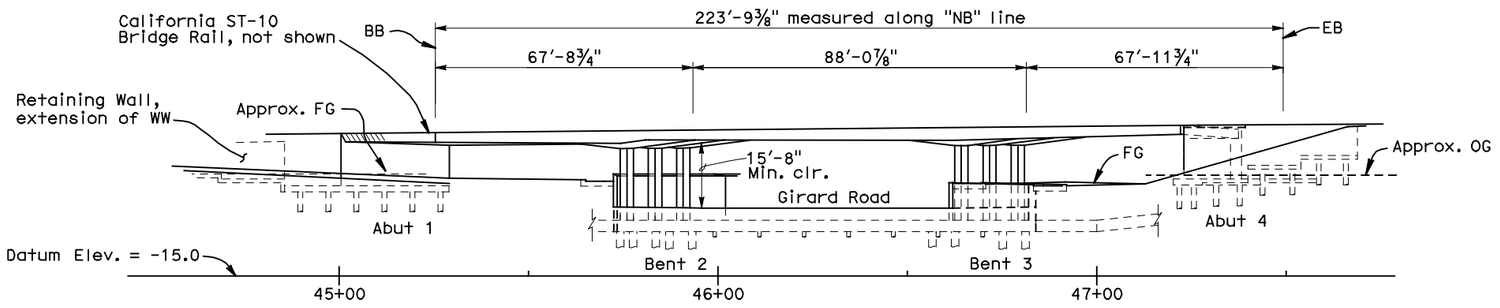

ELEVATION
1" = 20'

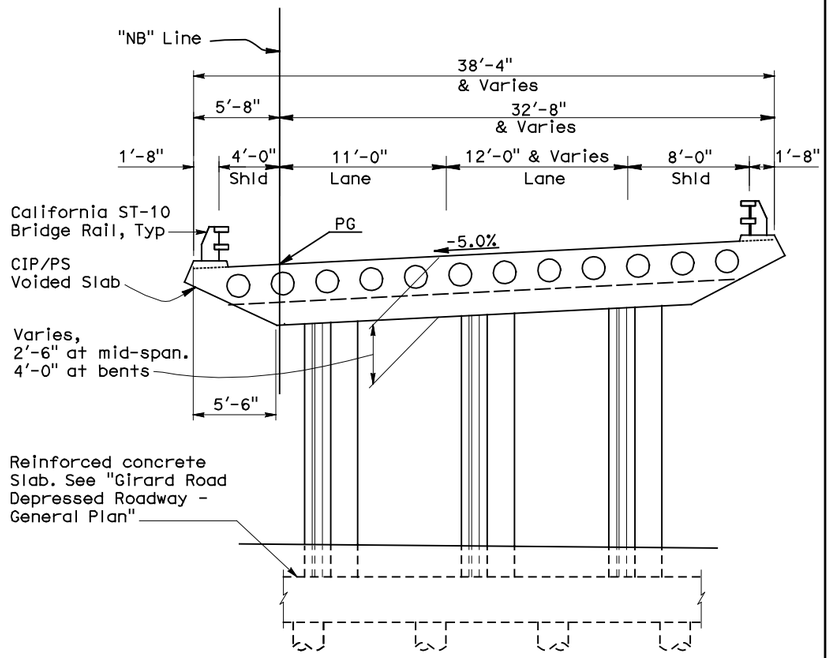

TYPICAL SECTION
1" = 5'

SECTION

COLUMN ARCHITECTURAL DETAILS
No Scale

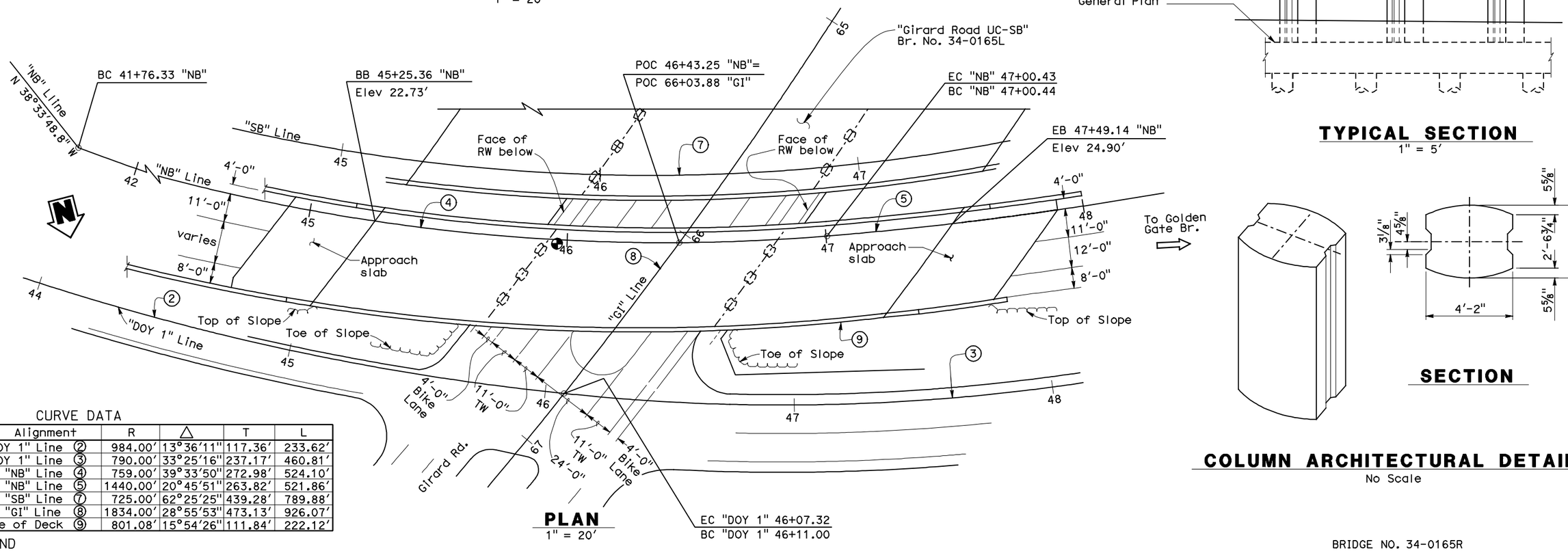

PLAN
1" = 20'

CURVE DATA

Alignment	R	△	T	L
"DOY 1" Line ②	984.00'	13°36'11"	117.36'	233.62'
"DOY 1" Line ③	790.00'	33°25'16"	237.17'	460.81'
"NB" Line ④	759.00'	39°33'50"	272.98'	524.10'
"NB" Line ⑤	1440.00'	20°45'51"	263.82'	521.86'
"SB" Line ⑦	725.00'	62°25'25"	439.28'	789.88'
"GI" Line ⑧	1834.00'	28°55'53"	473.13'	926.07'
Edge of Deck ⑨	801.08'	15°54'26"	111.84'	222.12'

LEGEND

Denotes point of minimum vertical clearance

PRESIDIO PARKWAY P3 PROJECT
INDICATIVE PRELIMINARY DESIGN

BRIDGE NO. 34-0165R

GIRARD ROAD UNDERCROSSING - NB

GENERAL PLAN

SCALE AS SHOWN

ST-14

DGN FILE => 34-0165R.dgn
DATE PLOTTED => 18-MAY-2010
TIME PLOTTED => 12:04

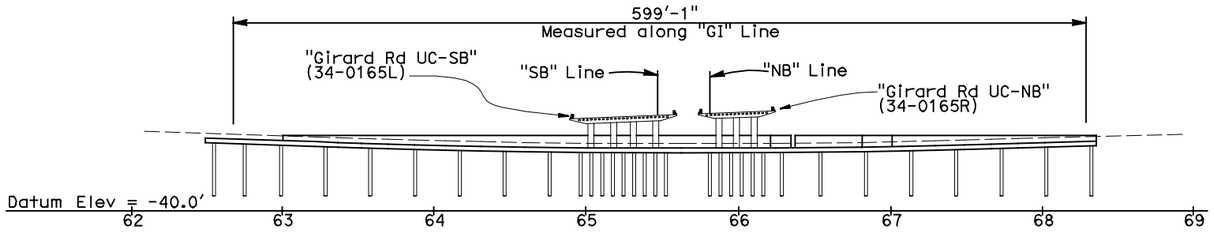

NORTH WALL SECTION-ELEVATION VIEW
1"=50'

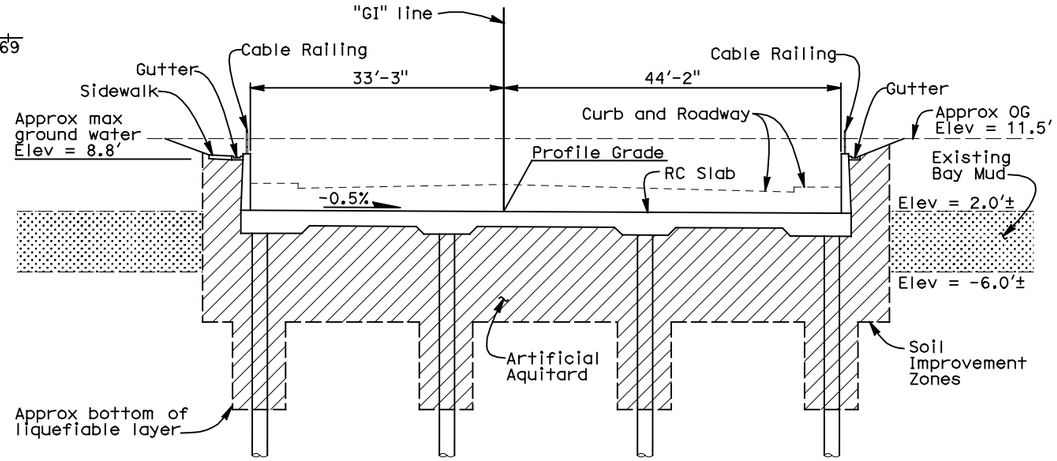

TYPICAL SECTION
1" = 10'

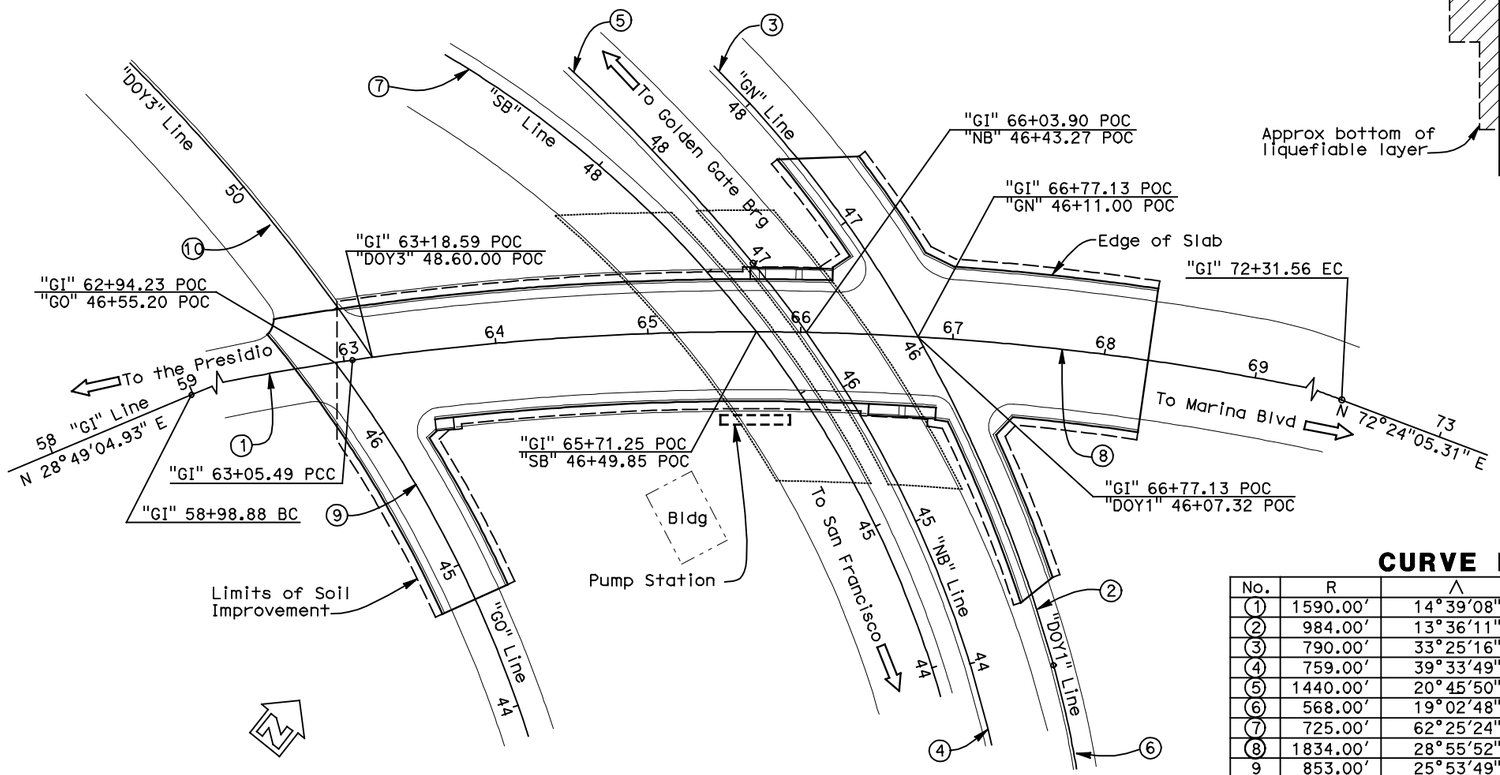

PLAN
1"=50'

CURVE DATA

No.	R	Δ	T	L
①	1590.00'	14°39'08"	204.42'	406.61'
②	984.00'	13°36'11"	117.36'	233.62'
③	790.00'	33°25'16"	237.17'	460.81'
④	759.00'	39°33'49"	272.98'	524.10'
⑤	1440.00'	20°45'50"	263.84'	521.85'
⑥	568.00'	19°02'48"	95.29'	188.82'
⑦	725.00'	62°25'24"	439.28'	789.88'
⑧	1834.00'	28°55'52"	473.13'	926.07'
9	853.00'	25°53'49"	196.12'	385.55'
⑩	1312.00'	14°19'24"	164.85'	327.98'

BRIDGE NO. 34-0166

GIRARD ROAD DEPRESSED ROADWAY

GENERAL PLAN

SCALE AS SHOWN

ST-15

PRESIDIO PARKWAY P3 PROJECT
INDICATIVE PRELIMINARY DESIGN

DGN FILE => 34-0166.dgn
DATE PLOTTED => 18-MAY-2010
TIME PLOTTED => 10:44

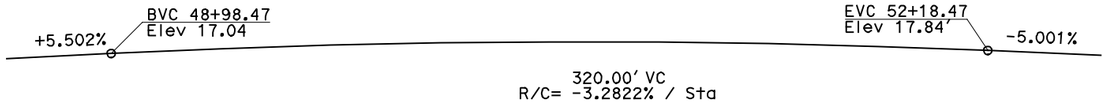

PROFILE GRADE
No Scale

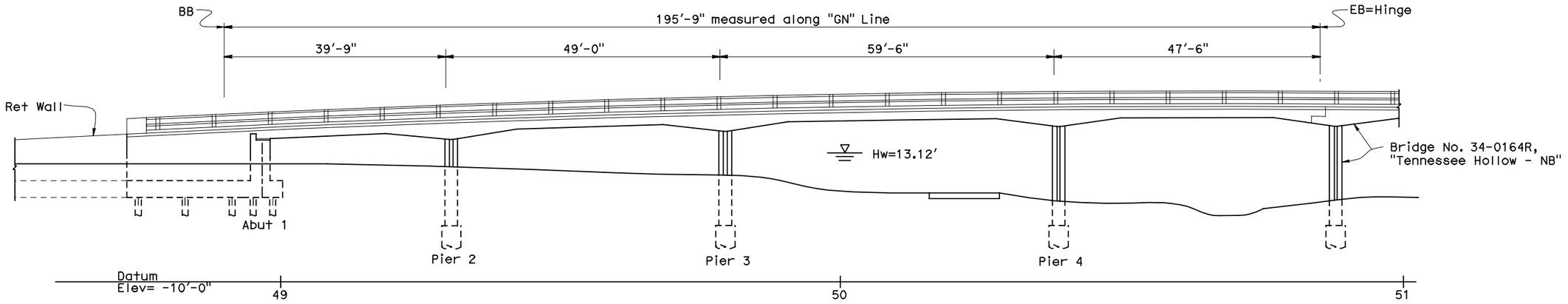

ELEVATION
1" = 10'

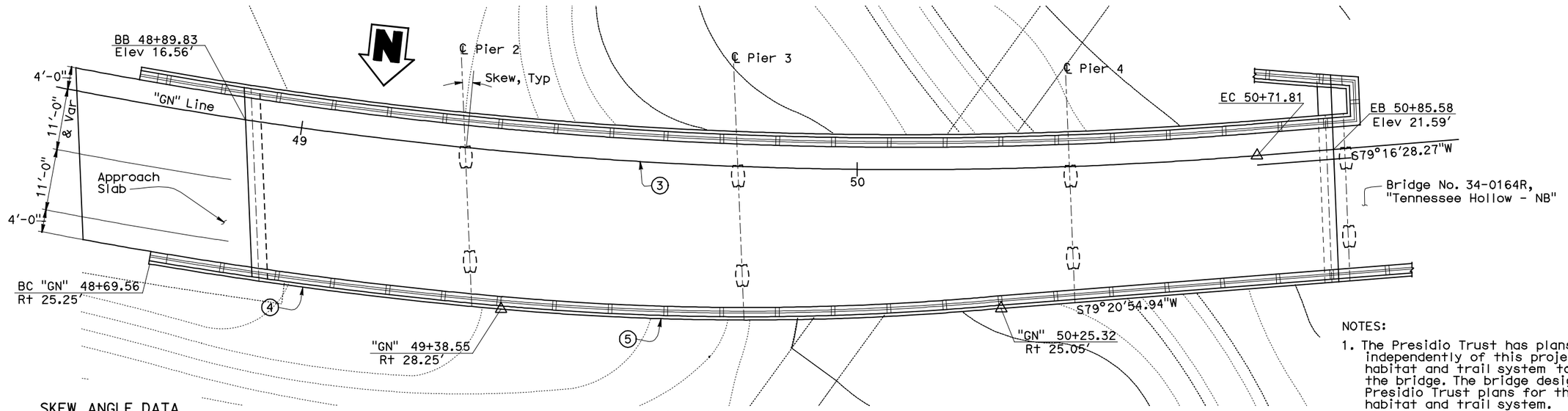

PLAN
1" = 10'

SKEW ANGLE DATA

Location	Δ
Abut 1	10°52'27"
Pier 2	8°05'01"
Pier 3	4°31'47"
Pier 4	0°12'52"
℄ Hinge	2°13'55"

CURVE DATA

Line		R	Δ	T	L
"GN" Line	(3)	790.00'	33°25'16"	237.17'	460.81'
Edge of deck	(4)	818.25'	4°28'12"	31.94'	63.84'
Edge of deck	(5)	496.25'	10°22'21"	45.04'	89.84'

NOTES:
1. The Presidio Trust has plans to develop independently of this project a future wetland habitat and trail system to be located beneath the bridge. The bridge design shall accommodate Presidio Trust plans for the future wetland habitat and trail system.
2. For "Sections" see "General Plan No. 2"

PRESIDIO PARKWAY P3 PROJECT
INDICATIVE PRELIMINARY DESIGN

BRIDGE NO. 34-0167

GIRARD NORTHBOUND-RAMP

GENERAL PLAN No.1

SCALE AS SHOWN

ST-16

DGN FILE => 34-0167.dgn
DATE PLOTTED => 18-MAY-2010
TIME PLOTTED => 12:23

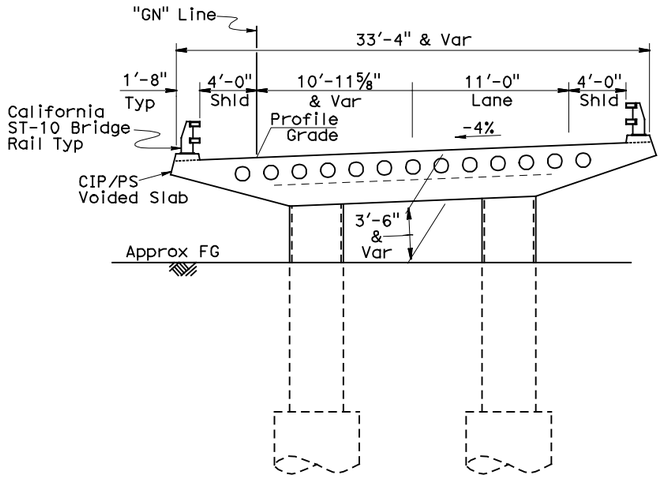

SECTION AT PIER 2
3/16" = 1'-0"

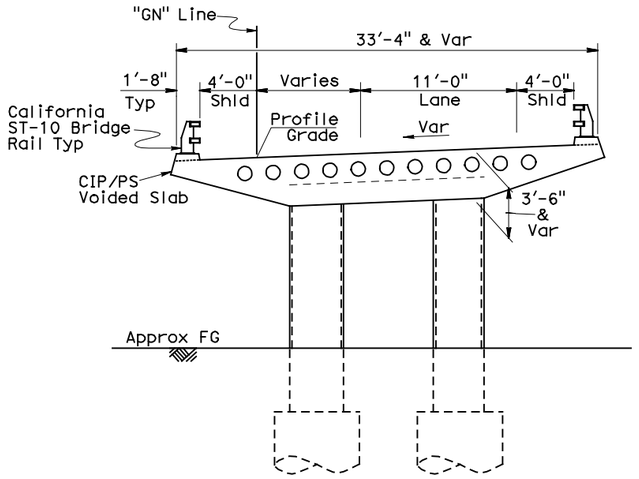

SECTION AT PIER 4
3/16" = 1'-0"

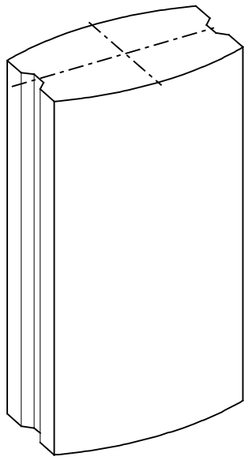

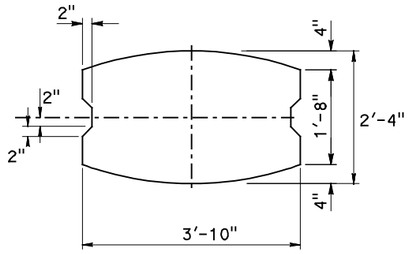

SECTION

COLUMN ARCHITECTURAL DETAILS
NO SCALE

BRIDGE NO. 34-0167

GIRARD NORTHBOUND-RAMP

GENERAL PLAN No.2

SCALE AS SHOWN

ST-17

PRESIDIO PARKWAY P3 PROJECT
INDICATIVE PRELIMINARY DESIGN

DGN FILE => 34-0167d.dgn
DATE PLOTTED => 18-MAY-2010
TIME PLOTTED => 11:35

SHEET No	TOTAL SHEETS
71	

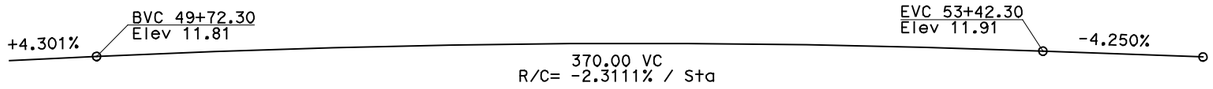

PROFILE GRADE
No Scale

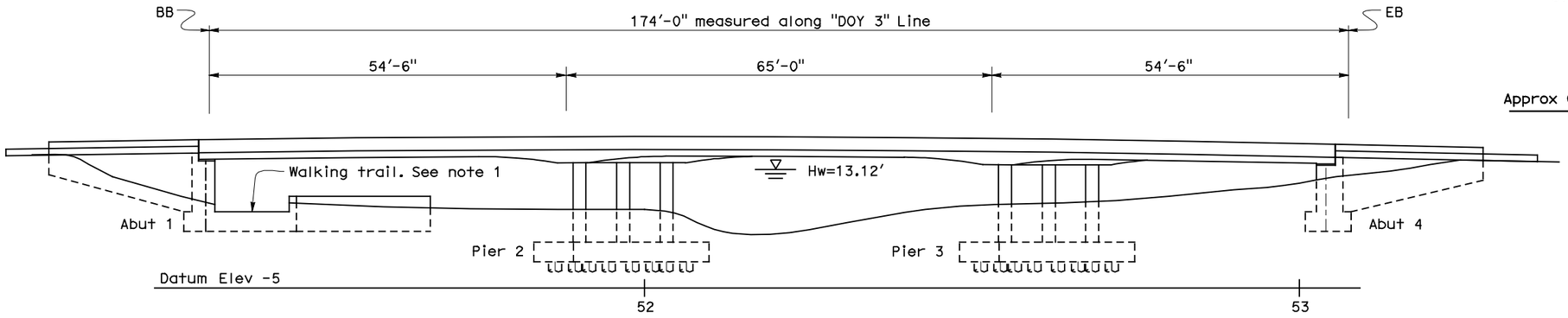

ELEVATION
1" = 10'

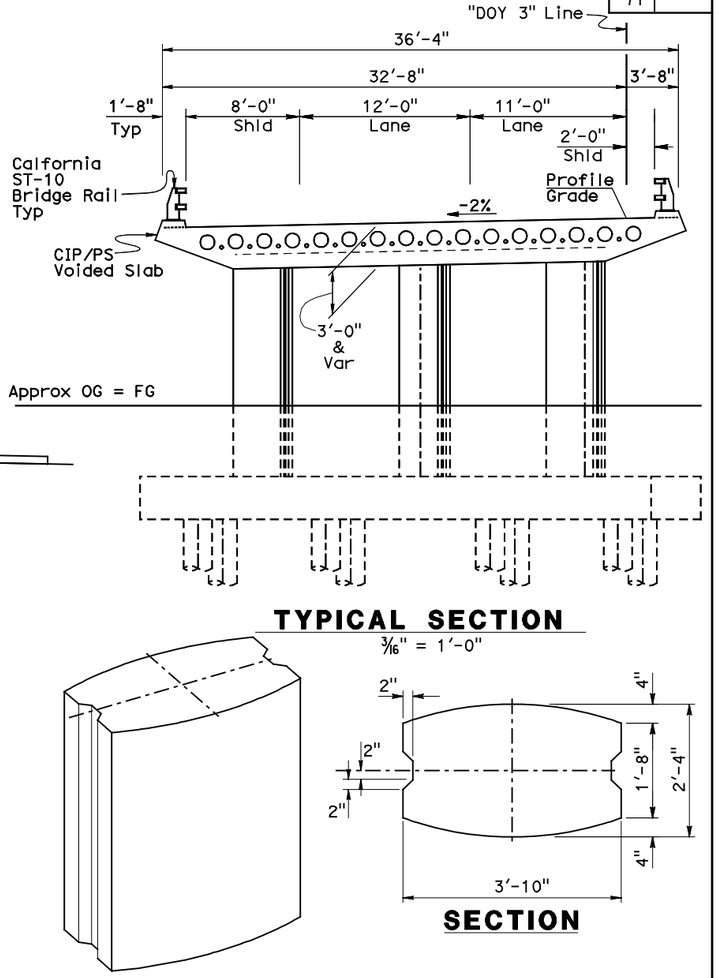

TYPICAL SECTION
3/16" = 1'-0"

SECTION

COLUMN ARCHITECTURAL DETAILS
NO SCALE

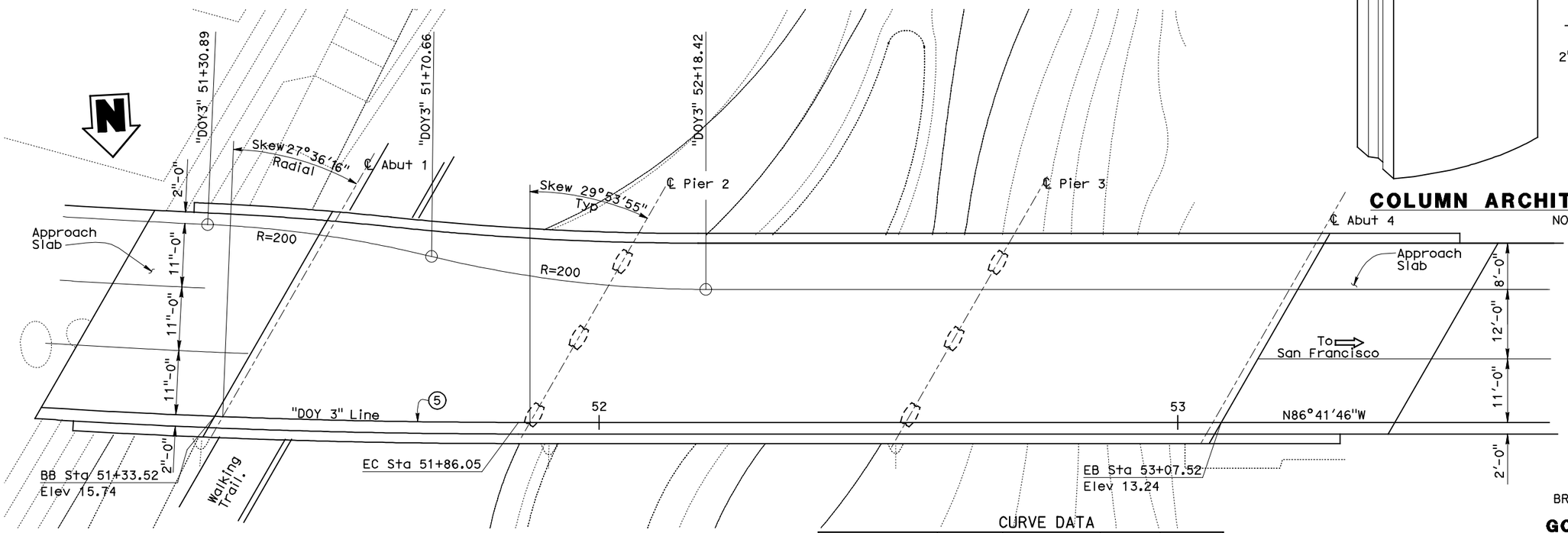

PLAN
1" = 10'

CURVE DATA

Line	R	Δ	T	L
"DOY 3" Line (5)	1312.00'	14°19'24"	164.85'	327.99'

NOTES:

1. The Presidio Trust has plans to develop independently of this project a future wetland habitat and trail system to be located beneath the bridge. The bridge design shall accommodate Presidio Trust plans for the future wetland habitat and trail system.

BRIDGE NO. 34-0168

GORGAS RAMP

GENERAL PLAN

SCALE AS SHOWN

ST-18

PRESIDIO PARKWAY P3 PROJECT
INDICATIVE PRELIMINARY DESIGN

DGN FILE => 34-0168.dgn
DATE PLOTTED => 18-MAY-2010
TIME PLOTTED => 12:05

SHEET No	TOTAL SHEETS
72	

ARCHITECTURAL RENDERINGS
MAIN POST TUNNELS

A-1

PRESIDIO PARKWAY P3 PROJECT
INDICATIVE PRELIMINARY DESIGN

DATE PLOTTED => 5/17/2010
TIME PLOTTED => 5:12:22 PM
DGN FILE => T:\13269 Doyle Dr GEC\p3\architectural\A-1.dgn

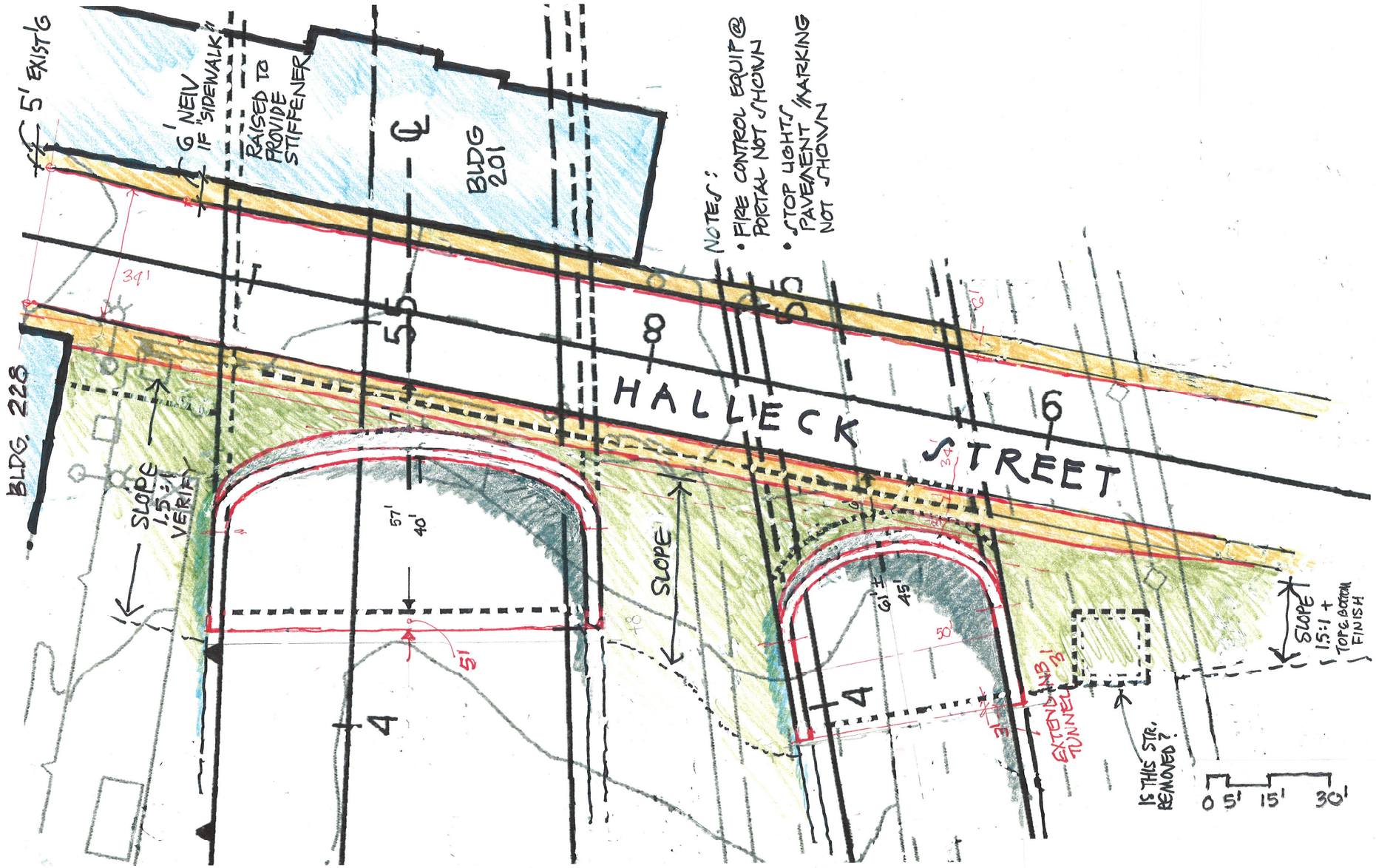

ARCHITECTURAL RENDERINGS
MAIN POST TUNNELS
PLAN VIEW

A-2

PRESIDIO PARKWAY P3 PROJECT
INDICATIVE PRELIMINARY DESIGN

DGN FILE => T:\13269 Doyle Dr GEC\p3\architectural\A-2.dgn
DATE PLOTTED => 5/17/2010
TIME PLOTTED => 5:13:01 PM

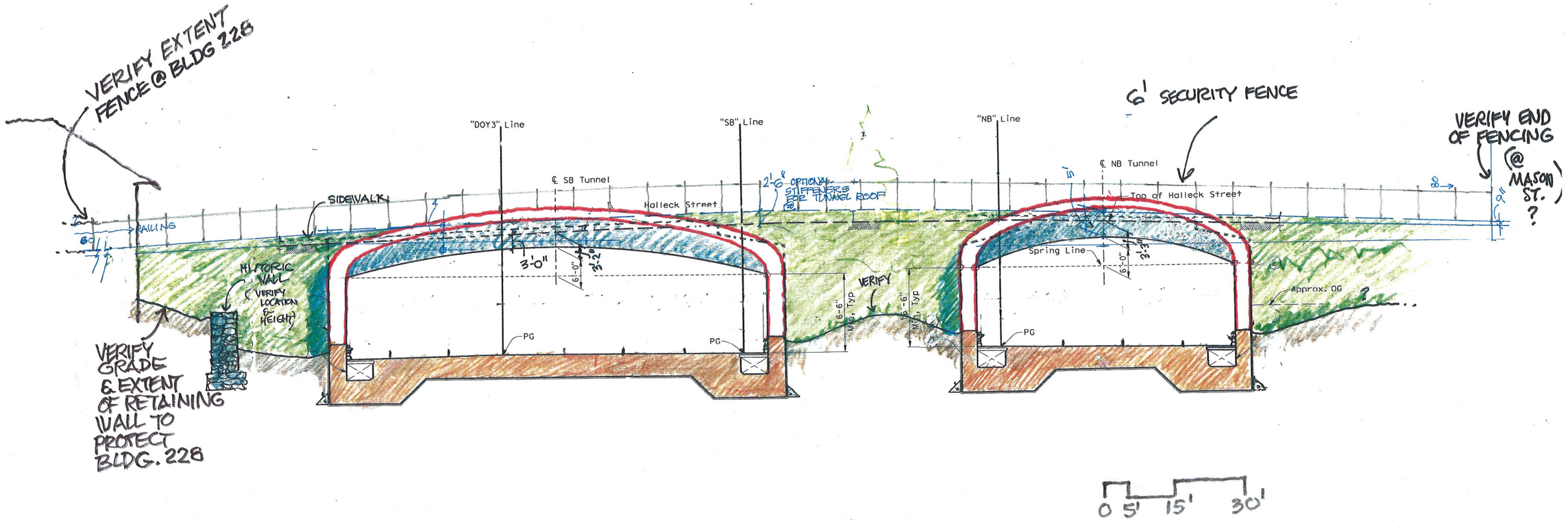

ARCHITECTURAL RENDERINGS
MAIN POST TUNNELS
ELEVATION VIEW

A-3

PRESIDIO PARKWAY P3 PROJECT
INDICATIVE PRELIMINARY DESIGN

DGN FILE => T:\13269 Doyle Dr GEC\p3\architectural\A-3.dgn
DATE PLOTTED => 5/17/2010
TIME PLOTTED => 5:14:06 PM

SHEET No	TOTAL SHEETS
75	

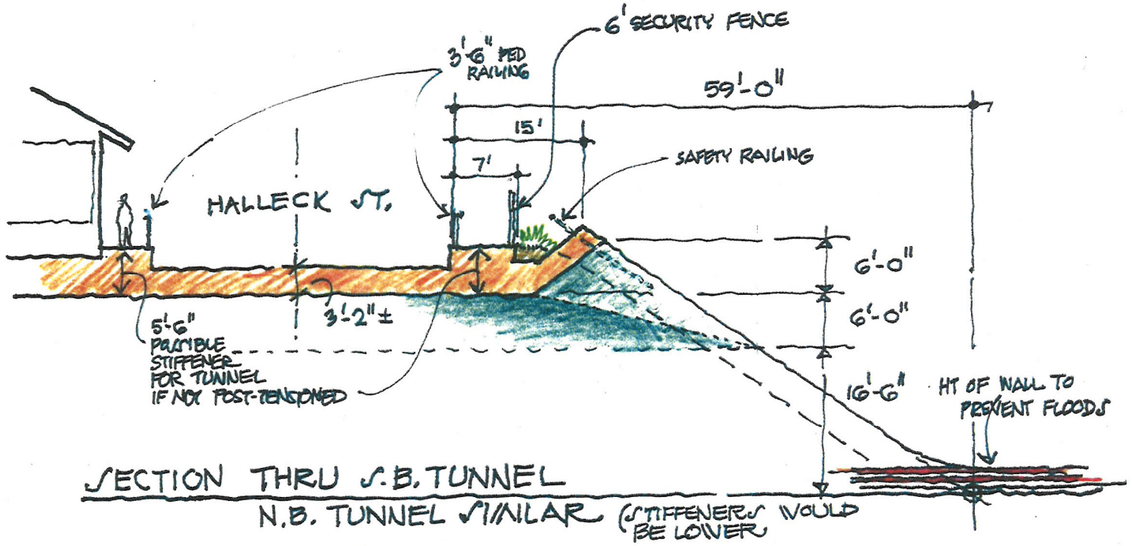

SECTION THRU S.B. TUNNEL

N.B. TUNNEL SIMILAR (STIFFENERS WOULD BE LOWER)

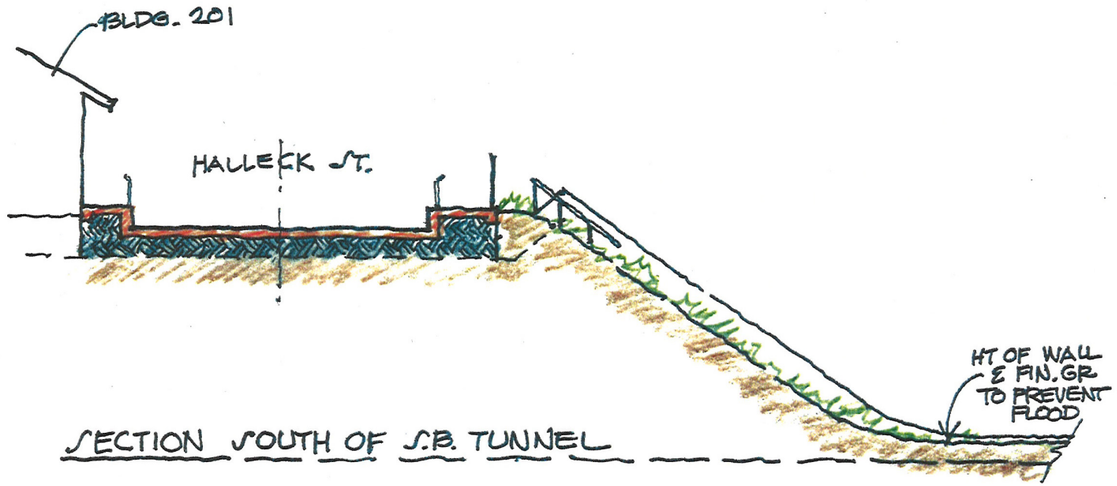

SECTION SOUTH OF S.B. TUNNEL

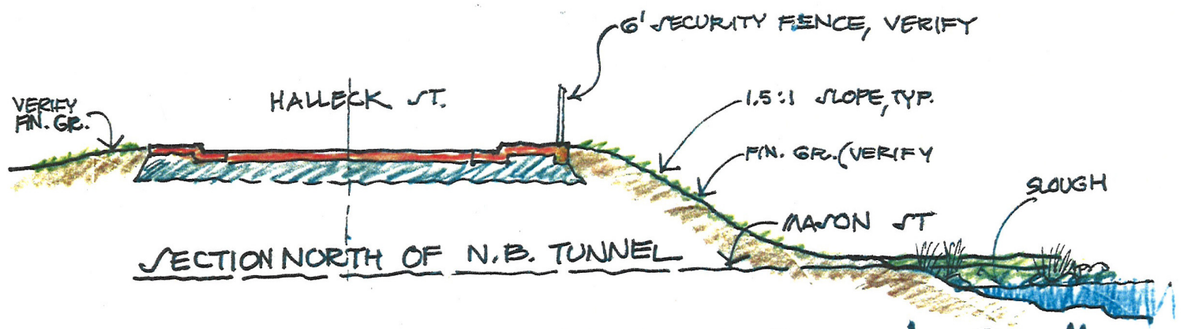

SECTION NORTH OF N.B. TUNNEL

MISC. SECTIONS 1" = 3/32"

PRESIDIO PARKWAY P3 PROJECT
INDICATIVE PRELIMINARY DESIGN

ARCHITECTURAL RENDERINGS
MAIN POST TUNNELS
MISC. SECTIONS

A-4

DGN FILE => T:\13269 Doyle Dr GEC\p3\architectural\A-4.dgn
DATE PLOTTED => 5/17/2010
TIME PLOTTED => 5:15:01 PM

ARCHITECTURAL RENDERINGS
BATTERY TUNNELS
EAST PORTALS

A-5

PRESIDIO PARKWAY P3 PROJECT
INDICATIVE PRELIMINARY DESIGN

DGN FILE => T:\13269 Doyle Dr GEC\p3\architectural\A-5.dgn
DATE PLOTTED => 5/17/2010
TIME PLOTTED => 5:15:29 PM

SHEET No	TOTAL SHEETS
77	

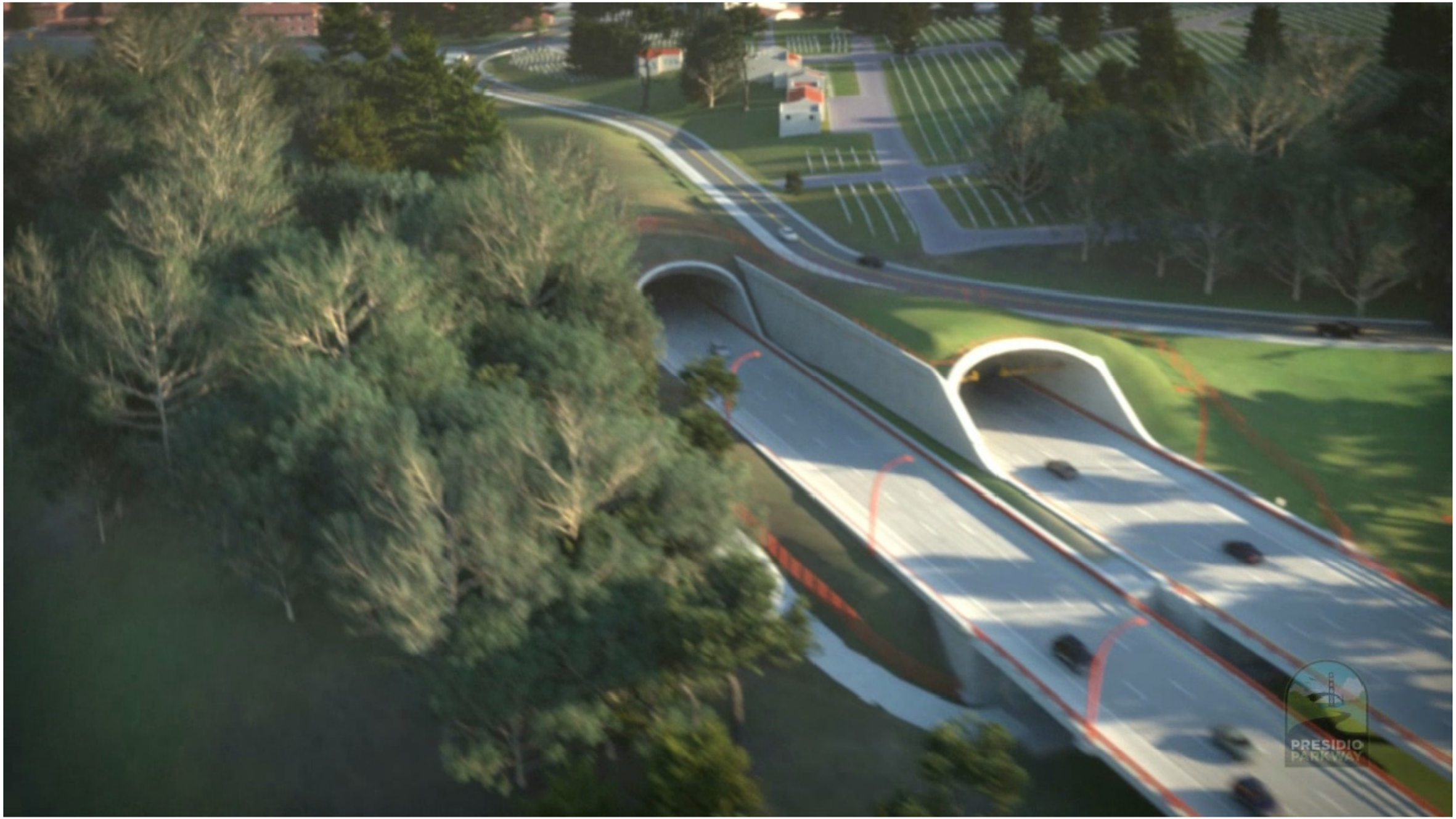

ARCHITECTURAL RENDERINGS
BATTERY TUNNELS
WEST PORTALS

A-6

PRESIDIO PARKWAY P3 PROJECT
INDICATIVE PRELIMINARY DESIGN

DATE PLOTTED => 5/17/2010
TIME PLOTTED => 5:15:59 PM
DGN FILE => T:\13269 Doyle Dr GEC\p3\architectural\A-6.dgn

SHEET No	TOTAL SHEETS
78	

ARCHITECTURAL RENDERINGS
GIRARD ROAD INTERCHANGE

A-7

PRESIDIO PARKWAY P3 PROJECT
INDICATIVE PRELIMINARY DESIGN

DATE PLOTTED => 5/17/2010
TIME PLOTTED => 5:16:20 PM
DGN FILE => T:\13269 Doyle Dr GEC\p3\architectural\A-7.dgn

SHEET No	TOTAL SHEETS
79	

ARCHITECTURAL RENDERINGS
HIGH VIADUCT

A-8

PRESIDIO PARKWAY P3 PROJECT
INDICATIVE PRELIMINARY DESIGN

DGN FILE => T:\13269 Doyle Dr GEC\p3\architectural\A-8.dgn
DATE PLOTTED => 5/17/2010
TIME PLOTTED => 5:16:49 PM