DIST	COUNTY	ROUTE	KILOMETER POST TOTAL PROJECT	SHEET No	TOTAL SHEETS
04	SF	101, 1	12.8/5.7 6.8/7.1	1	

PLANS FOR PROJECT REPORT

DOYLE DRIVE

IN THE CITY AND COUNTY OF SAN FRANCISCO ON ROUTE 101, DOYLE DRIVE AND RICHARDSON AVENUE FROM BRODERICK STREET TO THE GOLDEN GATE BRIDGE TOLL PLAZA AND, ON ROUTE 1, FROM THE RUCKMAN UNDERCROSSING TO ROUTE 101

BEGIN PROJECT (ROUTE 101)
STA "DD" 2+40 KP 15.7
PM 9.8

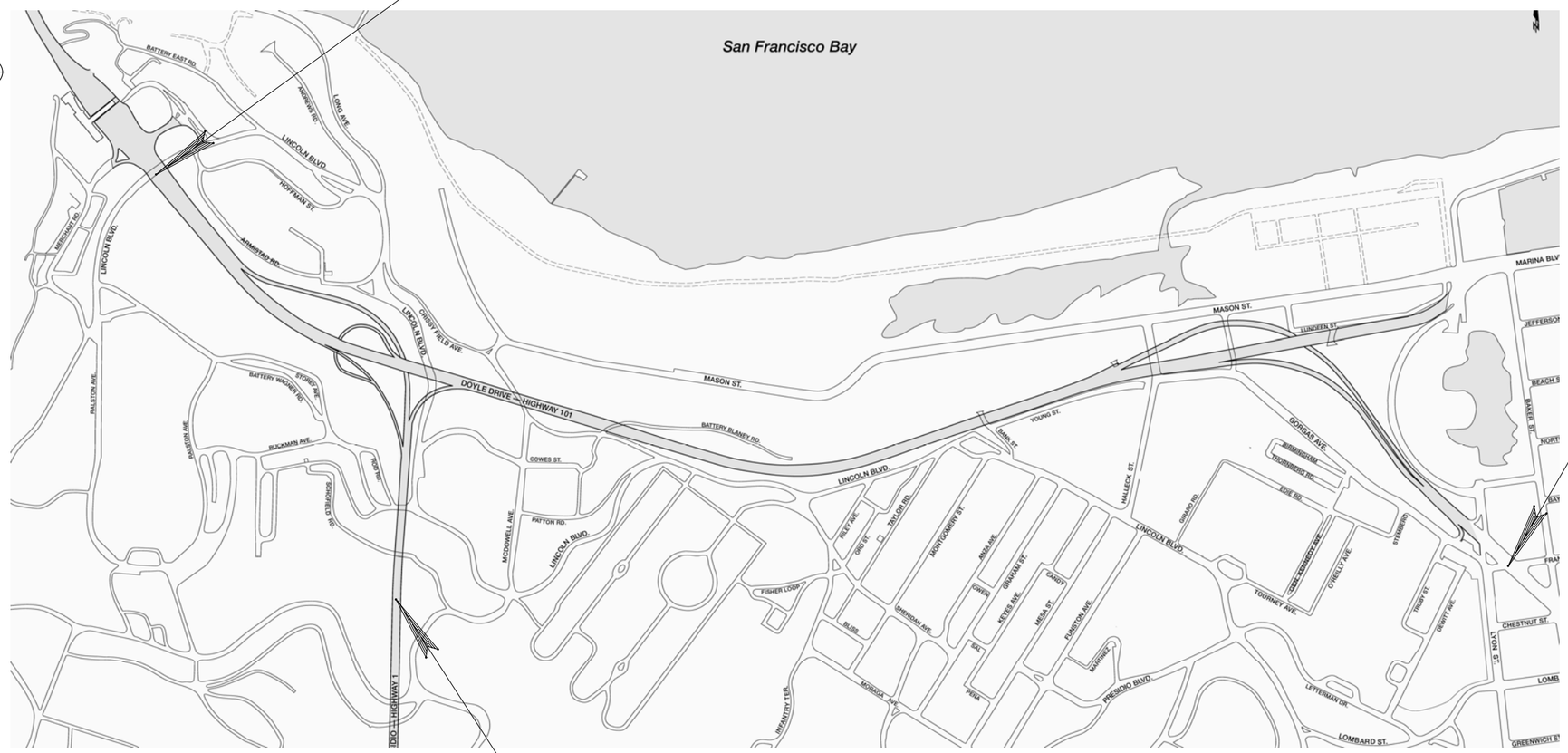

END PROJECT (ROUTE 1)
STA "C" 04+00 KP 10.9
PM 6.8

LOCATION MAP

Caltrans

The State of California or its officers or agents shall not be responsible for the accuracy or completeness of electronic copies of this plan sheet.

Caltrans Metric

END PROJECT (ROUTE 101)
STA "DD" 30+40 KP 12.8
PM 8.0

JANUARY 2009

VOLUME II

Approved as to impact on State facilities and conformance with applicable State standards and practices and that technical oversight was performed as described in the California department of Transportation A & E Consultant Service Manual.

PROJECT ENGINEER	DESIGN OVERSIGHT APPROVAL		
PRINTED NAME	SIGNATURE	REGISTRATION NO.	DATE
		C-38994	

Project Engineer Date
Registered Civil Engineer

REGISTERED PROFESSIONAL ENGINEER
No.
Exp.
CIVIL
STATE OF CALIFORNIA

Plans Approval Date

PARSONS BRINCKERHOFF
303 SECOND STREET, SUITE 700 NORTH
SAN FRANCISCO, CA 94107

Contract No.

LAST REVISION 00-00-00

TIME PLOTTED => $$$$$$$$SYTIME$$$$$$

FORM DC-OE-93-PF (REV. 3/88)

FOR REDUCED PLANS ORIGINAL SCALE IS IN MILLIMETERS 0 20 40 60 80

USERNAME => lilly
DGN FILE => J:\13145 Doyle Drive\Project Report\Project Report January 2009\Attachments for PR 2009-01\Misc\

RU 04242 EA 165700

ATTACHMENT C

Preferred Alternative
Project Plans

South Access to the Golden Gate Bridge
Doyle Drive Project Report

DIST	COUNTY	ROUTE	KILOMETER POST TOTAL PROJECT	SHEET No	TOTAL SHEETS
4	SF	04-SF-101 04-SF-001	KP 12.8-15.7 KP 10.9-11.4		

REGISTERED CIVIL ENGINEER

PLANS APPROVAL DATE

REGISTERED PROFESSIONAL ENGINEER NO. EXP. CIVIL STATE OF CALIFORNIA

The State of California or its officers or agents shall not be responsible for the accuracy or completeness of electronic copies of this plan sheet.

Caltrans now has a web site! To get to the web site, go to: http://www.dot.ca.gov

ARUP
901 MARKET STREET, SUITE 260
SAN FRANCISCO, CA 94103

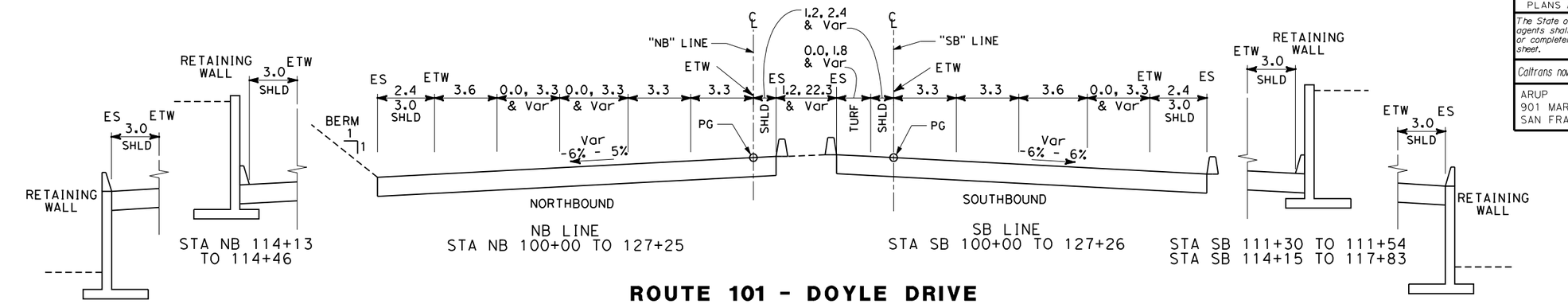

ROUTE 101 - DOYLE DRIVE

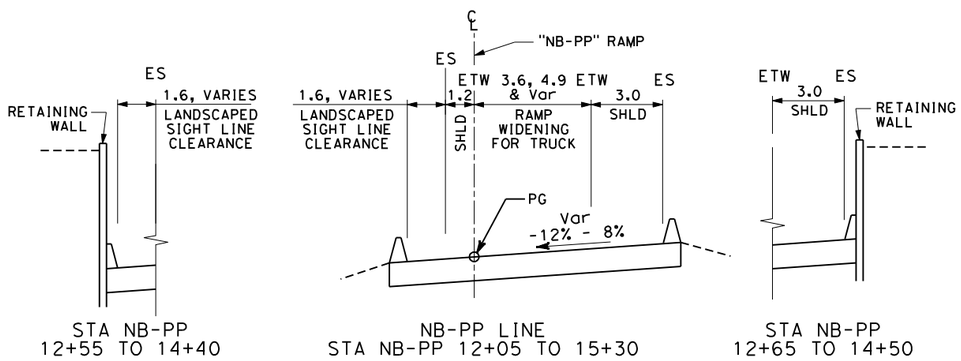

NB DOYLE DRIVE TO SB PARK PRESIDIO

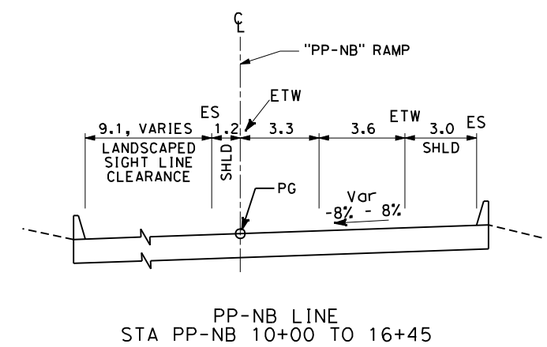

PARK PRESIDIO TO NORTHBOUND DOYLE DRIVE

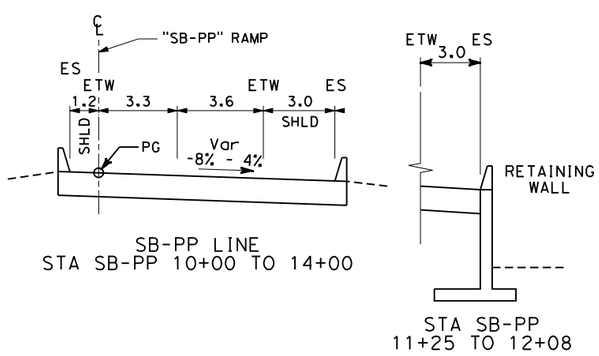

SOUTHBOUND DOYLE DRIVE OFF RAMP TO PARK PRESIDIO

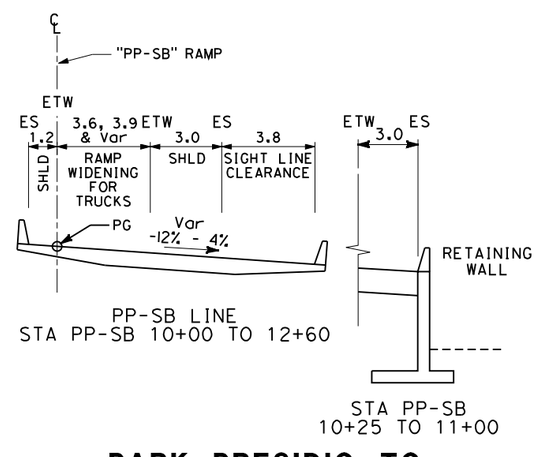

PARK PRESIDIO TO SOUTHBOUND DOYLE DRIVE

NOTE:
ALL STRUCTURAL SECTIONS SHALL BE AS FOLLOWS UNLESS NOTED OTHERWISE:
T1=11, R=10
30 mm RHMA-O-HB
185 mm HMA-A
195 mm AB(CI3)
370 mm AS(CI4)

ALL DIMENSIONS ARE IN METERS UNLESS OTHERWISE SHOWN

PREFERRED ALTERNATIVE REFINED PRESIDIO PARKWAY TYPICAL CROSS SECTIONS

NO SCALE

X-1

	DATE	REVISED BY	DATE	REVISED
CALCULATED/DESIGNED BY	E. LAM		06/07	
CHECKED BY	J. KARN			

DESIGN OVERSIGHT

STATE OF CALIFORNIA - DEPARTMENT OF TRANSPORTATION
Caltrans PROJECT DEVELOPMENT

LAST REVISION 00-00-00
DATE PLOTTED => $DATE$
TIME PLOTTED => $TIME$

RELATIVE BORDER SCALE IS IN MILLIMETERS 0 20 40 60 80

USERNAME => $USER$
DGN FILE => $FILES$

RU 04242

EA 163700

DIST	COUNTY	ROUTE	KILOMETER POST TOTAL PROJECT	SHEET No	TOTAL SHEETS
4	SF	04-SF-101 04-SF-001	KP 12.8-15.7 KP 10.9-11.4		

REGISTERED CIVIL ENGINEER

PLANS APPROVAL DATE

REGISTERED PROFESSIONAL ENGINEER No. Exp. CIVIL STATE OF CALIFORNIA

The State of California or its officers or agents shall not be responsible for the accuracy or completeness of electronic copies of this plan sheet.

Caltrans now has a web site! To get to the web site, go to: http://www.dot.ca.gov

ARUP
901 MARKET STREET, SUITE 260
SAN FRANCISCO, CA 94103

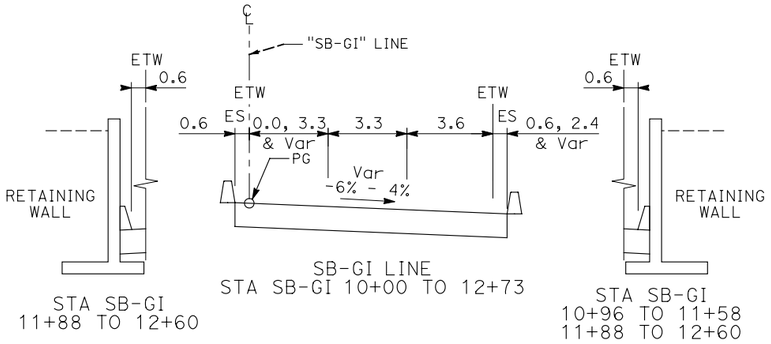

SOUTHBOUND DOYLE DRIVE OFF-RAMP TO GIRARD ROAD

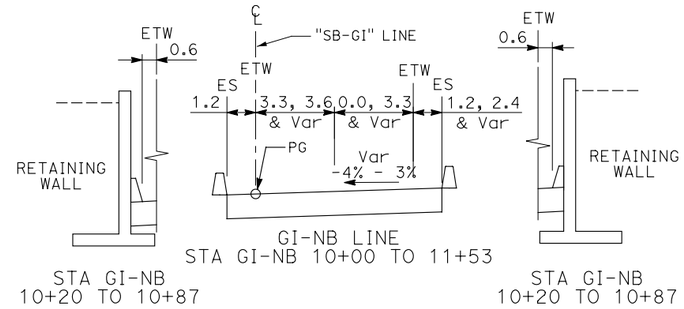

GIRARD ROAD ON-RAMP TO NORTHBOUND DOYLE DRIVE

NOTE:
ALL STRUCTURAL SECTIONS
SHALL BE AS FOLLOWS
UNLESS NOTED OTHERWISE:
T1=11, R=10
30 mm RHMA-O-HB
185 mm HMA-A
195 mm AB(CI3)
370 mm AS(CI4)

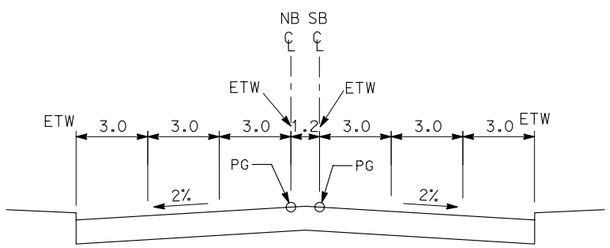

STA NB 125+63 TO NB 127+25 (SB 127+26)

RICHARDSON AVENUE

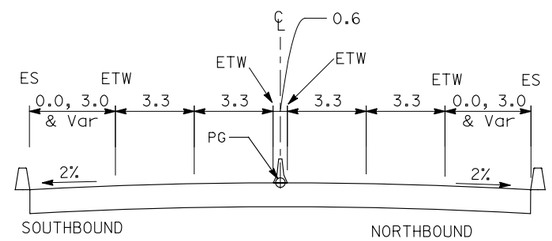

STA PP-NB 10+00 TO 12+15

PARK PRESIDIO

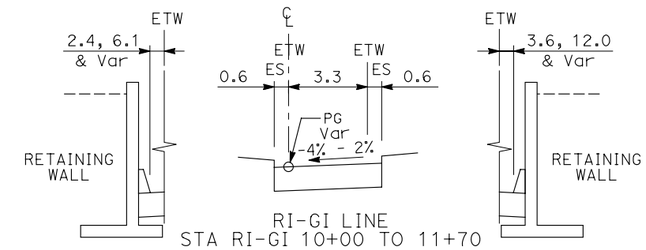

STA RI-GI
10+72 TO 11+60

STA RI-GI
11+31 TO 11+60

RICHARDSON OFF RAMP TO GIRARD

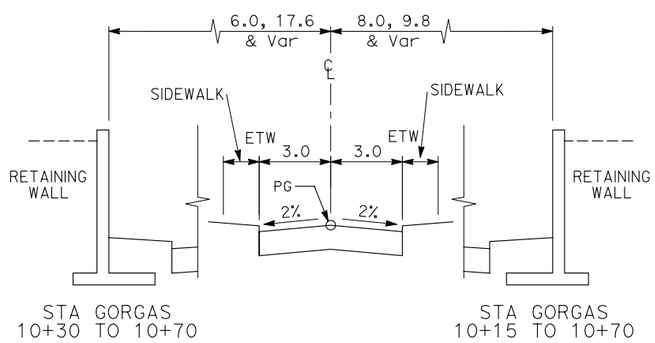

STA GORGAS
10+30 TO 10+70

STA GORGAS
10+15 TO 10+70

STA GORGAS 10+00 TO 11+50

GORGAS AVENUE

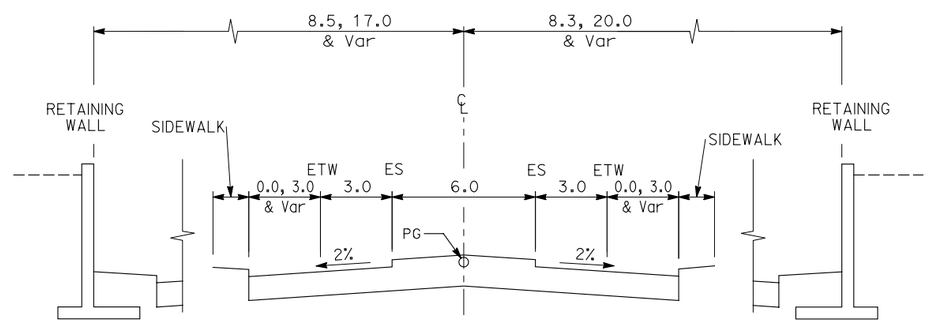

STA GI 12+43 TO 14+86

STA GI 10+00 TO 17+16

GIRARD ROAD

STA GI 12+43 TO 14+86

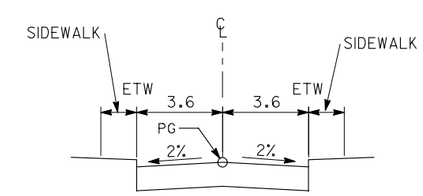

STA HALLECK 10+00 TO 12+25

HALLECK STREET

ALL DIMENSIONS ARE IN
METERS UNLESS OTHERWISE SHOWN

PREFERRED ALTERNATIVE REFINED PRESIDIO PARKWAY TYPICAL CROSS SECTIONS

NO SCALE

X-2

STATE OF CALIFORNIA - DEPARTMENT OF TRANSPORTATION
Caltrans PROJECT DEVELOPMENT

DESIGN OVERSIGHT
CALCULATED/DESIGNED BY E. LAM
CHECKED BY J. KARN
DATE REVISED BY 06/07 DATE REVISED

LAST REVISION 00-00-00
DATE PLOTTED => $DATE$
TIME PLOTTED => $TIME$

RELATIVE BORDER SCALE IS IN MILLIMETERS 0 20 40 60 80

USERNAME => $USER$
DGN FILE => $FILES$

RU 04242

EA 163700

DIST	COUNTY	ROUTE	KILOMETER POST TOTAL PROJECT	SHEET No	TOTAL SHEETS
4	SF	04-SF-101 04-SF-001	KP 12.8-15.7 KP 10.9-11.4		

REGISTERED CIVIL ENGINEER

PLANS APPROVAL DATE

REGISTERED PROFESSIONAL ENGINEER No. Exp. STATE OF CALIFORNIA

The State of California or its officers or agents shall not be responsible for the accuracy or completeness of electronic copies of this plan sheet.

Caltrans now has a web site! To get to the web site, go to: http://www.dot.ca.gov

MGE ENGINEERING, INC.
1330 BROADWAY, SUITE 1410
OAKLAND, CA 94612

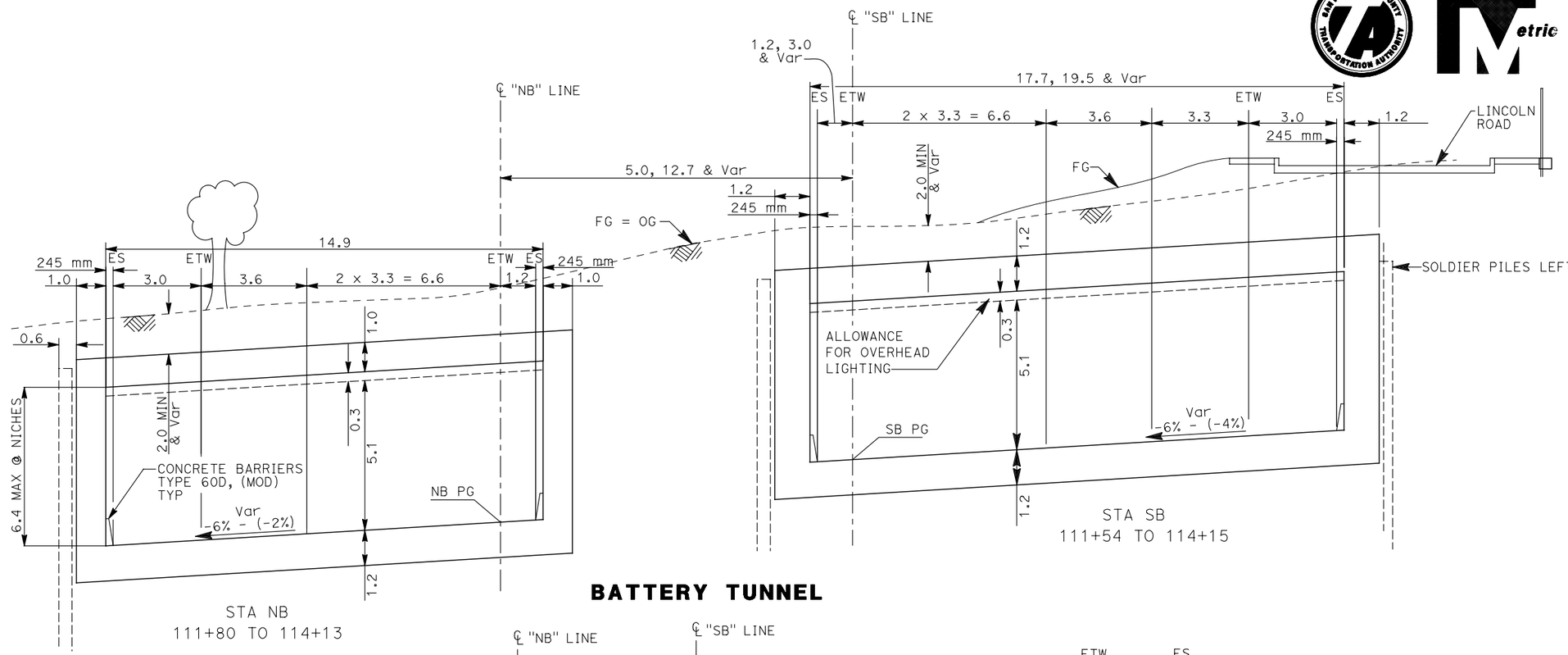

BATTERY TUNNEL

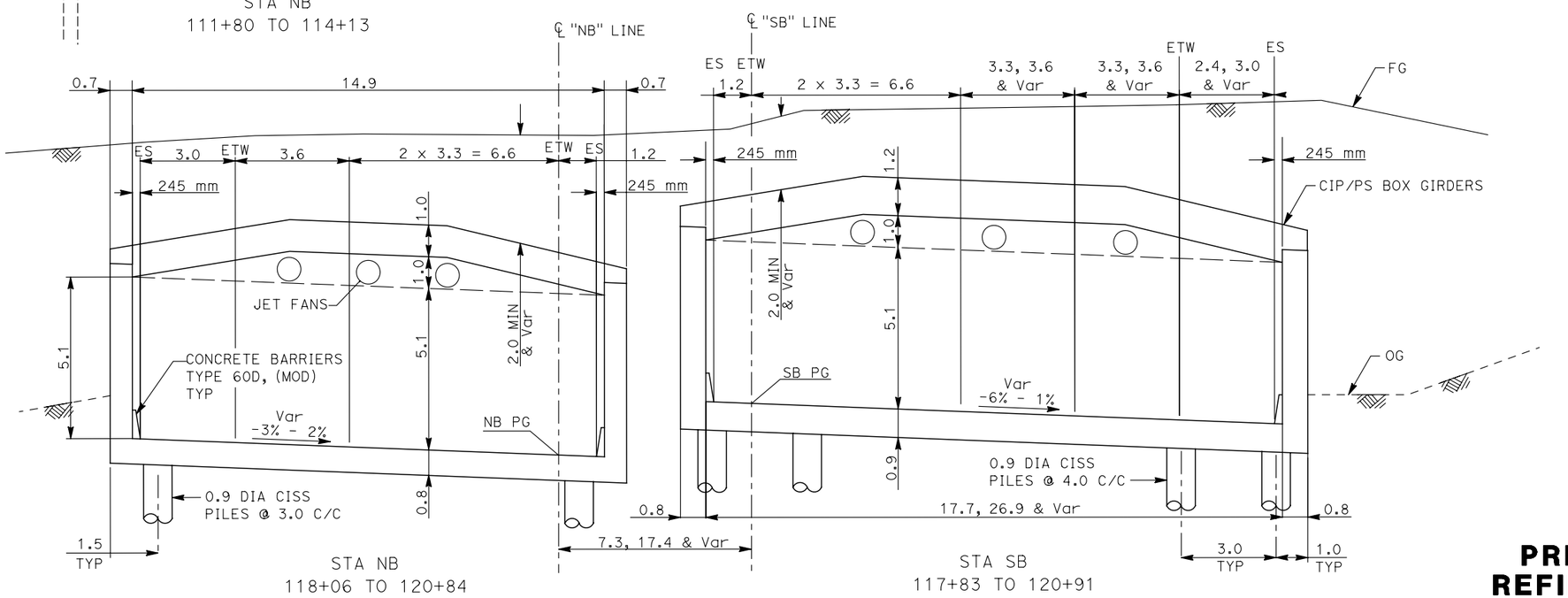

MAIN POST TUNNEL

ALL DIMENSIONS ARE IN METERS UNLESS OTHERWISE SHOWN

PREFERRED ALTERNATIVE REFINED PRESIDIO PARKWAY TYPICAL CROSS SECTIONS

NO SCALE

X-3

DATE	REVISED BY	DATE REVISED
06/07		

CALCULATED/DESIGNED BY: D. AN
CHECKED BY: X. SUN

DESIGN OVERSIGHT

STATE OF CALIFORNIA - DEPARTMENT OF TRANSPORTATION
Caltrans PROJECT DEVELOPMENT

LAST REVISION 00-00-00 | DATE PLOTTED => $DATE | TIME PLOTTED => $TIME

RELATIVE BORDER SCALE IS IN MILLIMETERS 0 20 40 60 80

DGN FILE => $REQUEST
USERNAME => $USER

RU 04242 | EA 163700

DIST	COUNTY	ROUTE	KILOMETER POST TOTAL PROJECT	SHEET No	TOTAL SHEETS
4	SF	04-SF-101 04-SF-001	KP 12.8-15.7 KP 10.9-11.4		

REGISTERED CIVIL ENGINEER

PLANS APPROVAL DATE

REGISTERED PROFESSIONAL ENGINEER No. Exp. STATE OF CALIFORNIA

The State of California or its officers or agents shall not be responsible for the accuracy or completeness of electronic copies of this plan sheet.

Caltrans now has a web site! To get to the web site, go to: http://www.dot.ca.gov

ARUP
901 MARKET STREET, SUITE 260
SAN FRANCISCO, CA 94103

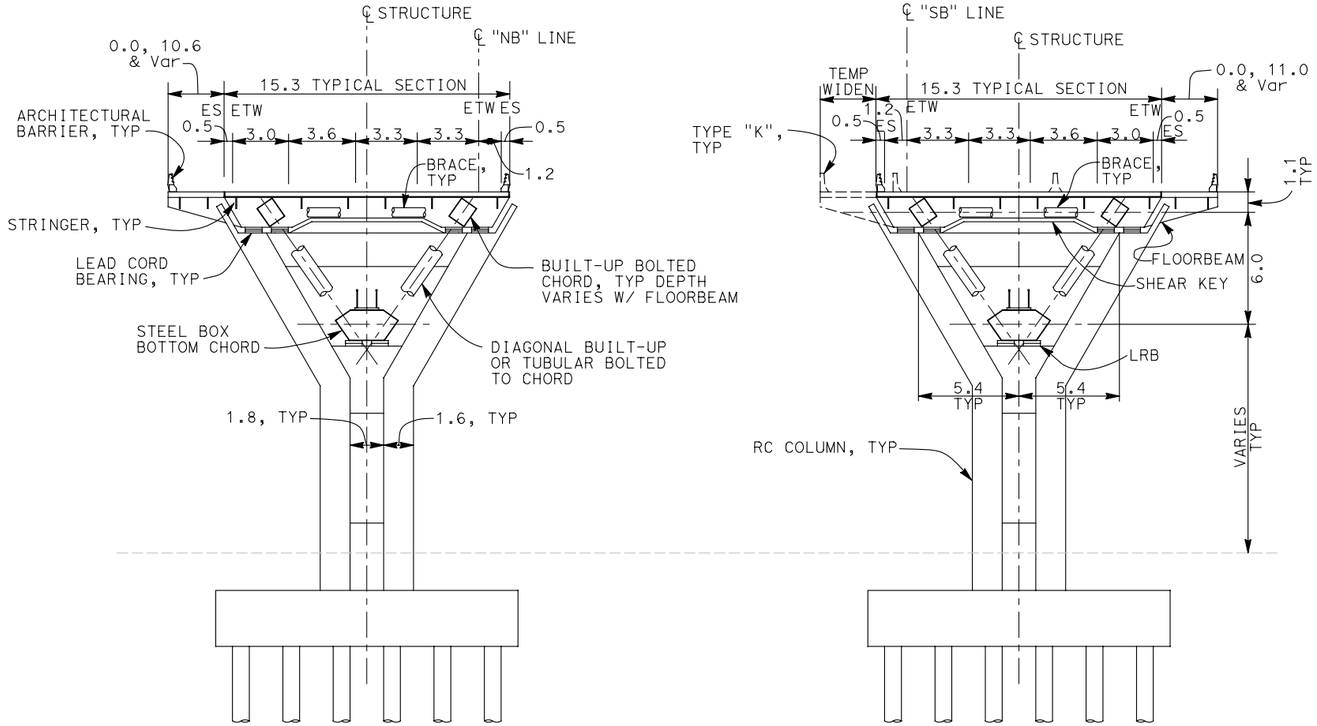

STA NB
106+77 TO 110+82

HIGH VIADUCT

STA SB
106+99 TO 110+89

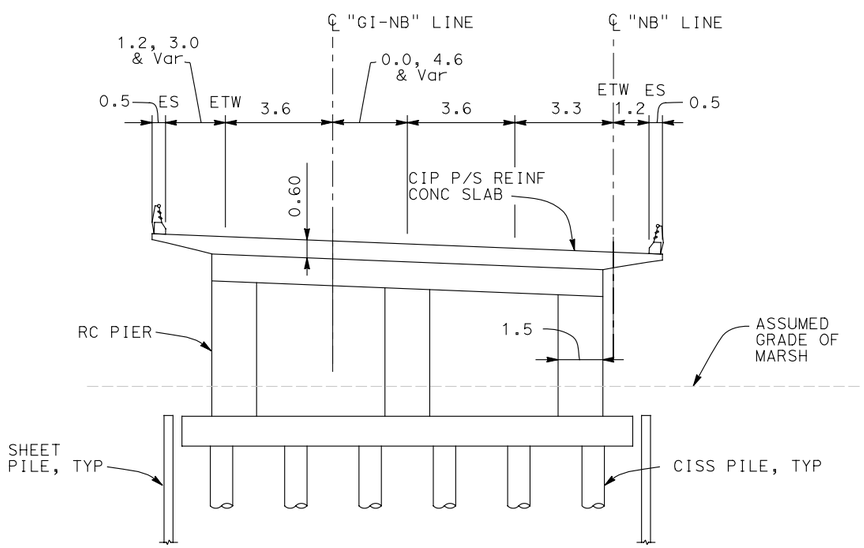

STA NB 121+70

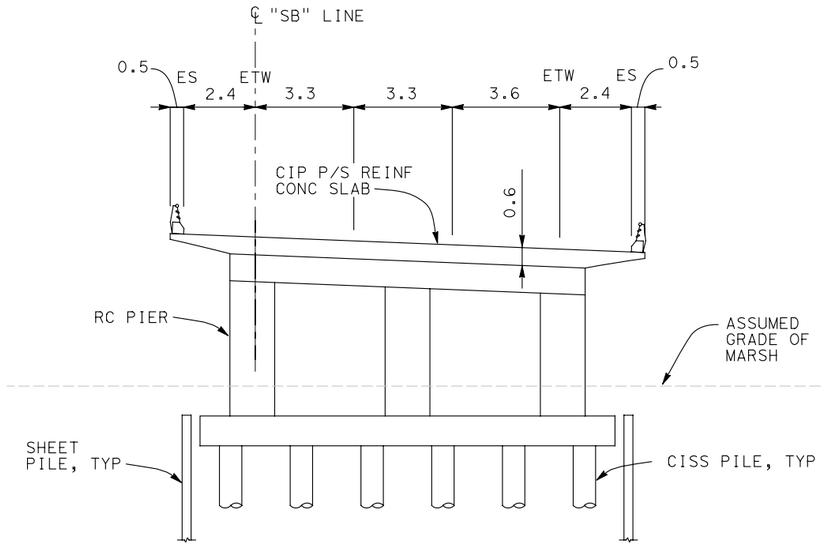

STA SB 122+20

TENNESSEE HOLLOW CAUSEWAY

ALL DIMENSIONS ARE IN METERS UNLESS OTHERWISE SHOWN

PREFERRED ALTERNATIVE REFINED PRESIDIO PARKWAY TYPICAL CROSS SECTIONS

NO SCALE

X-4

CALCULATED/DESIGNED BY	C. SUBRIZI	DATE REVISED BY
CHECKED BY	E. LAM	06/07 DATE REVISED

DESIGN OVERSIGHT

STATE OF CALIFORNIA - DEPARTMENT OF TRANSPORTATION
Caltrans PROJECT DEVELOPMENT

LAST REVISION 00-00-00 DATE PLOTTED => $DATE TIME PLOTTED => $TIME

RELATIVE BORDER SCALE IS IN MILLIMETERS 0 20 40 60 80

DGN FILE => $REQUEST
USERNAME => $USER

RU 04242 EA 163700

DIST	COUNTY	ROUTE	KILOMETER POST TOTAL PROJECT	SHEET No	TOTAL SHEETS
4	SF	04-SF-101 04-SF-001	KP 12.8-15.7 KP 10.9-11.4		

REGISTERED CIVIL ENGINEER

PLANS APPROVAL DATE

REGISTERED PROFESSIONAL ENGINEER No. Exp. STATE OF CALIFORNIA

The State of California or its officers or agents shall not be responsible for the accuracy or completeness of electronic copies of this plan sheet.

Caltrans now has a web site! To get to the web site, go to: http://www.dot.ca.gov

PB
303 SECOND STREET, SUITE 700N
SAN FRANCISCO, CA 94107

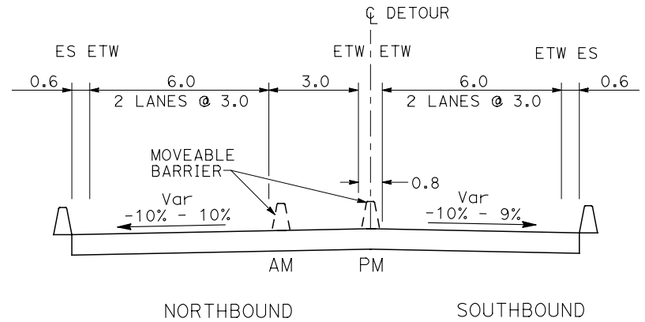

STA 13+00 TO 17+20
TEMPORARY CONSTRUCTION DETOUR

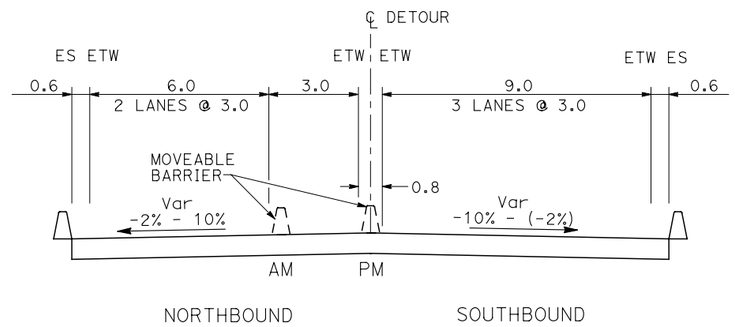

STA 17+20 TO 22+04
TEMPORARY CONSTRUCTION DETOUR

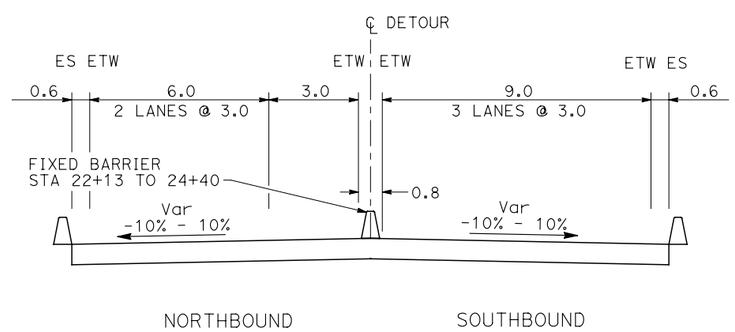

STA 22+04 TO 24+40
TEMPORARY CONSTRUCTION DETOUR

NOTE:
TI = 11, R = 10
ALL STRUCTURAL SECTIONS
SHALL BE AS FOLLOWS:
120 mm HMA-A
195 mm AB (CI3)
370 mm AS (CI4)

ALL DIMENSIONS ARE IN
METERS UNLESS OTHERWISE SHOWN

PREFERRED ALTERNATIVE
REFINED PRESIDIO PARKWAY
TYPICAL CROSS SECTIONS

NO SCALE

X-5

CALCULATED/DESIGNED BY	E. LILLY	DATE REVISED BY
CHECKED BY	G. KENNERLEY	07/07 DATE REVISED

DESIGN OVERSIGHT

STATE OF CALIFORNIA - DEPARTMENT OF TRANSPORTATION
Caltrans **PROJECT DEVELOPMENT**

LAST REVISION 00-00-00 | DATE PLOTTED => $DATE | TIME PLOTTED => $TIME

RELATIVE BORDER SCALE IS IN MILLIMETERS 0 20 40 60 80

DGN FILE => $REQUEST
USERNAME => $USER

RU 04242 | EA 163700

DIST	COUNTY	ROUTE	KILOMETER POST TOTAL PROJECT	SHEET No	TOTAL SHEETS
4	SF	04-SF-101 04-SF-001	KP 12.8-15.7 KP 10.9-11.4		

REGISTERED CIVIL ENGINEER

PLANS APPROVAL DATE

REGISTERED PROFESSIONAL ENGINEER NO. EXP. CIVIL STATE OF CALIFORNIA

The State of California or its officers or agents shall not be responsible for the accuracy or completeness of electronic copies of this plan sheet.

Caltrans now has a web site! To get to the web site, go to: http://www.dot.ca.gov

ARUP
901 MARKET STREET, SUITE 260
SAN FRANCISCO, CA 94103

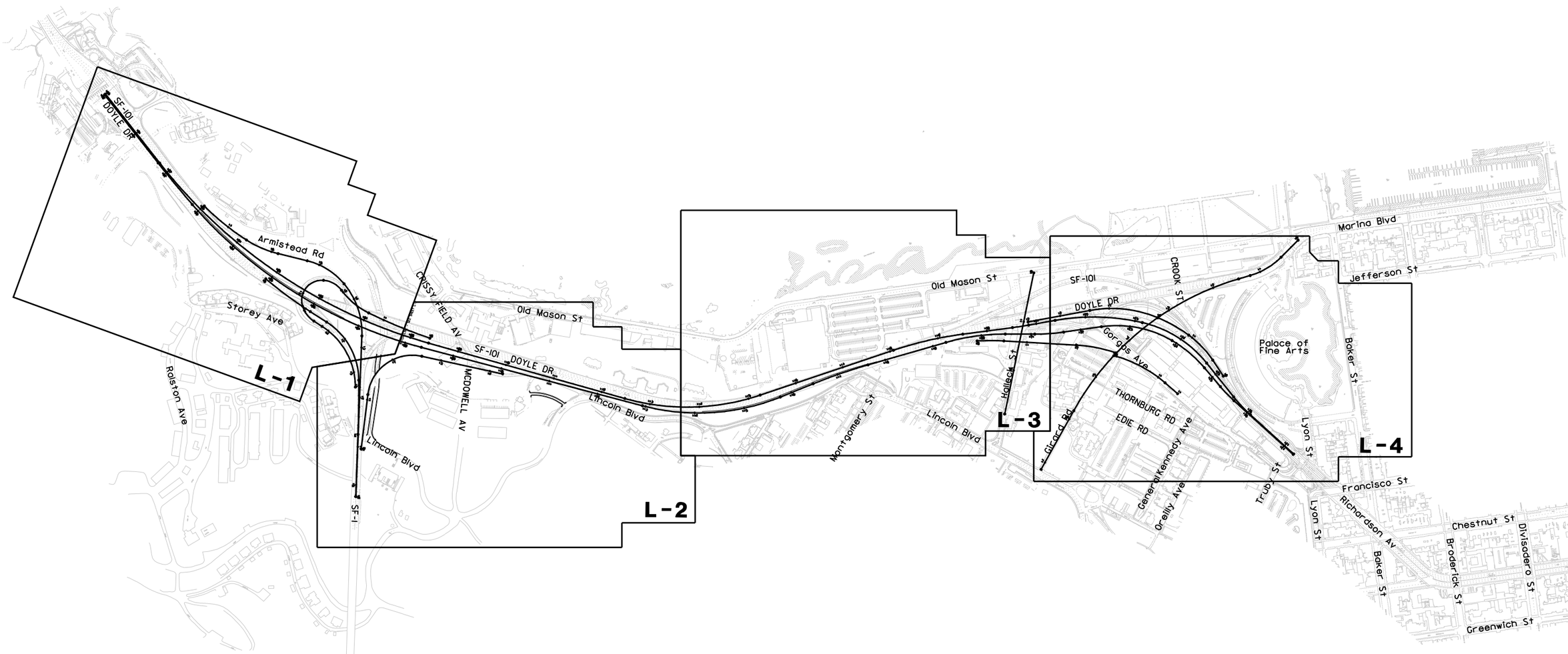

ALL DIMENSIONS ARE IN METERS UNLESS OTHERWISE SHOWN

PREFERRED ALTERNATIVE REFINED PRESIDIO PARKWAY KEYMAP

SCALE 1:4000

K-1

STATE OF CALIFORNIA - DEPARTMENT OF TRANSPORTATION
Caltrans PROJECT DEVELOPMENT

DESIGN OVERSIGHT

CALCULATED/DESIGNED BY: E. LAM
CHECKED BY: J. KARN

DATE	REVISED BY
06/07	DATE REVISED

LAST REVISION 00-00-00
DATE PLOTTED => $DATE$
TIME PLOTTED => $TIME$

RELATIVE BORDER SCALE IS IN MILLIMETERS 0 20 40 60 80

USERNAME => $USER$
DGN FILE => $FILES$

RU 04242

EA 163700

DIST	COUNTY	ROUTE	KILOMETER POST TOTAL PROJECT	SHEET No	TOTAL SHEETS
4	SF	04-SF-101 04-SF-001	KP 12.8-15.7 KP 10.9-11.4		

REGISTERED CIVIL ENGINEER

PLANS APPROVAL DATE

REGISTERED PROFESSIONAL ENGINEER NO. EXP. CIVIL STATE OF CALIFORNIA

The State of California or its officers or agents shall not be responsible for the accuracy or completeness of electronic copies of this plan sheet.

Caltrans now has a web site! To get to the web site, go to: http://www.dot.ca.gov

ARUP
901 MARKET STREET, SUITE 260
SAN FRANCISCO, CA 94103

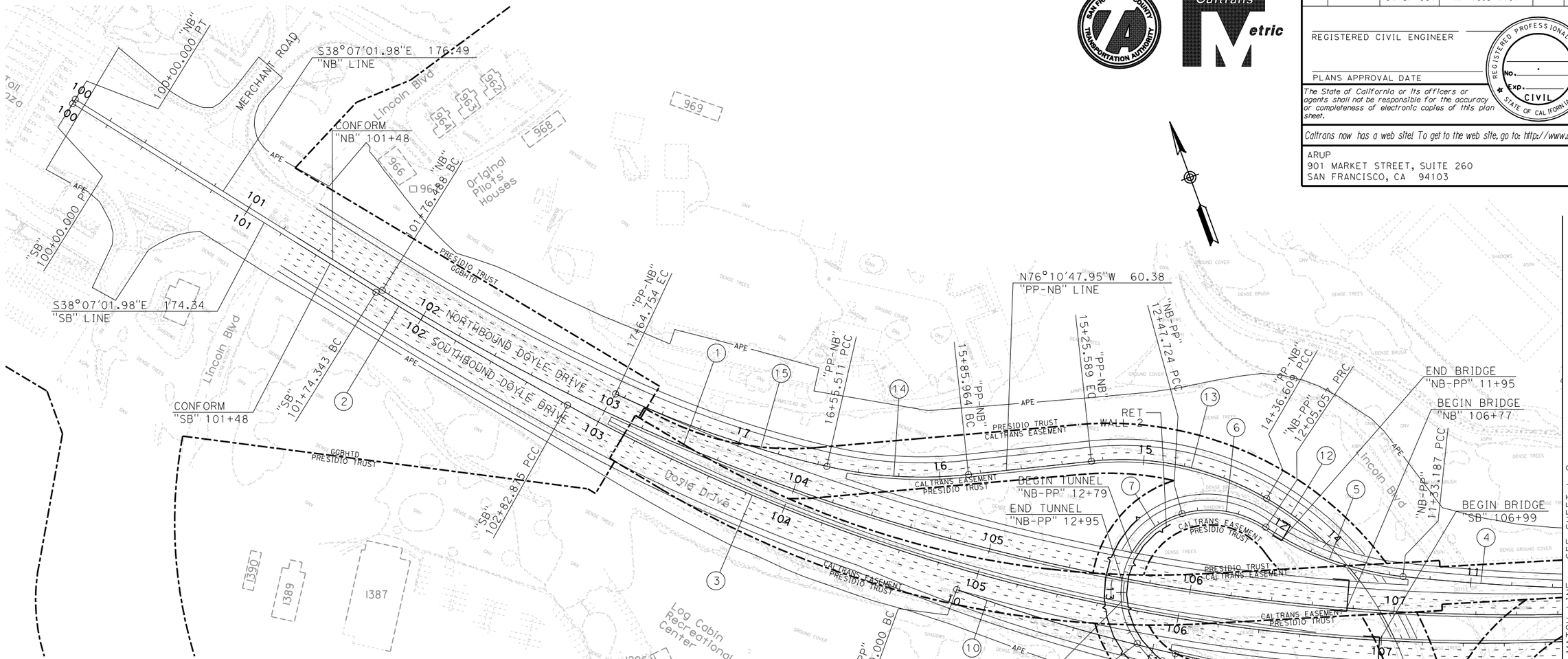

CURVE DATA				
No.	R	Δ	T	L
1	1050.00	36°06'40"	342.29	661.77
2	2250.00	2°45'50"	54.28	108.53
3	920.00	34°18'38"	284.00	550.93
4	1040.00	7°20'15"	66.68	133.19
5	150.00	27°27'08"	36.64	71.87
6	50.00	48°53'34"	22.73	42.67
7	40.60	111°08'41"	59.23	78.76
8	54.00	40°55'13"	20.15	38.57
9	145.00	57°18'53"	79.24	145.05
10	850.00	7°30'05"	55.72	111.28
11	140.00	57°00'02"	76.01	139.28
12	155.00	41°51'46"	59.29	113.25
13	140.00	36°24'56"	46.05	88.98
14	210.00	18°58'30"	35.10	69.55
15	510.00	12°16'22"	54.83	109.24

NOTES:

1. Historical building numbers shown refer to the actual building number in the Presidio.
2. Coordinates, distances and bearings are based on CCS 83, ZONE 3, EPOCH 1991.35.
3. The contractor shall be prohibited from performing any ground disturbing activities outside of the APE boundary.

ALL DIMENSIONS ARE IN METERS UNLESS OTHERWISE SHOWN

PREFERRED ALTERNATIVE REFINED PRESIDIO PARKWAY LAYOUT

SCALE 1:1000

L-1

	DATE	REVISED BY	DATE	REVISED
CALCULATED/DESIGNED BY	E. LAM		06/07	
CHECKED BY	J. KARN			

DESIGN OVERSIGHT

STATE OF CALIFORNIA - DEPARTMENT OF TRANSPORTATION

Caltrans PROJECT DEVELOPMENT

LAST REVISION 00-00-00 | DATE PLOTTED => $DATE$ | TIME PLOTTED => $TIME$

RELATIVE BORDER SCALE IS IN MILLIMETERS 0 20 40 60 80

USERNAME => $USER$
DGN FILE => $FILES$

RU 04242

EA 163700

DIST	COUNTY	ROUTE	KILOMETER POST TOTAL PROJECT	SHEET No	TOTAL SHEETS
4	SF	04-SF-101 04-SF-001	KP 12.8-15.7 KP 10.9-11.4		

REGISTERED CIVIL ENGINEER

PLANS APPROVAL DATE

REGISTERED PROFESSIONAL ENGINEER NO. EXP. CIVIL STATE OF CALIFORNIA

The State of California or its officers or agents shall not be responsible for the accuracy or completeness of electronic copies of this plan sheet.

Caltrans now has a web site! To get to the web site, go to: http://www.dot.ca.gov

ARUP
901 MARKET STREET, SUITE 260
SAN FRANCISCO, CA 94103

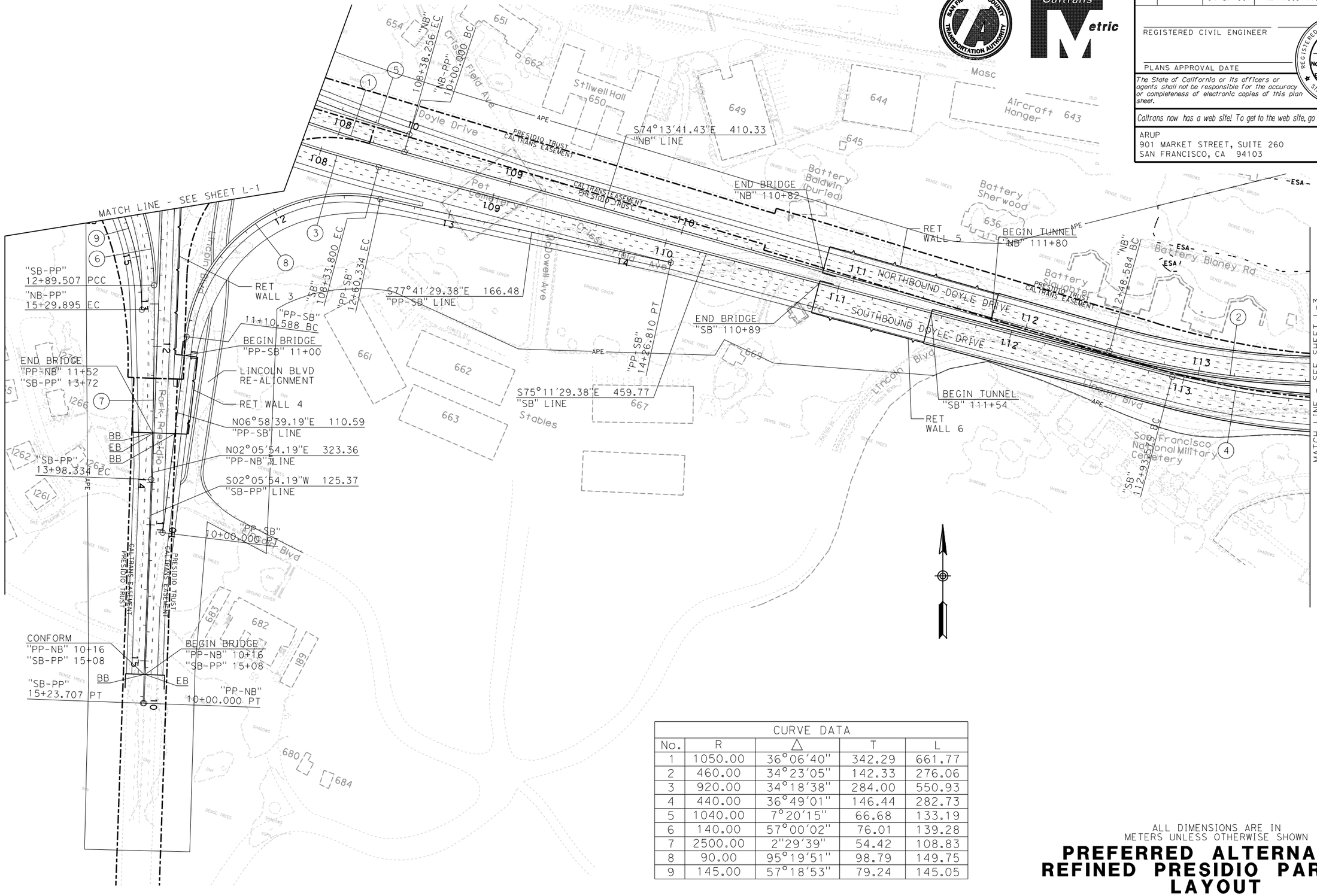

CURVE DATA				
No.	R	△	T	L
1	1050.00	36°06'40"	342.29	661.77
2	460.00	34°23'05"	142.33	276.06
3	920.00	34°18'38"	284.00	550.93
4	440.00	36°49'01"	146.44	282.73
5	1040.00	7°20'15"	66.68	133.19
6	140.00	57°00'02"	76.01	139.28
7	2500.00	2°29'39"	54.42	108.83
8	90.00	95°19'51"	98.79	149.75
9	145.00	57°18'53"	79.24	145.05

ALL DIMENSIONS ARE IN METERS UNLESS OTHERWISE SHOWN

PREFERRED ALTERNATIVE REFINED PRESIDIO PARKWAY LAYOUT

SCALE 1:1000

L-2

	DATE	REVISED BY	DATE	REVISED
CALCULATED/DESIGNED BY	E. LAM		06/07	
CHECKED BY	J. KARN			

DESIGN OVERSIGHT

STATE OF CALIFORNIA - DEPARTMENT OF TRANSPORTATION
Caltrans PROJECT DEVELOPMENT

LAST REVISION 00-00-00
DATE PLOTTED => $DATE$
TIME PLOTTED => $TIME$

RELATIVE BORDER SCALE IS IN MILLIMETERS 0 20 40 60 80

USERNAME => $USER$
DGN FILE => $FILES$

RU 04242

EA 163700

DIST	COUNTY	ROUTE	KILOMETER POST TOTAL PROJECT	SHEET No	TOTAL SHEETS
4	SF	04-SF-101 04-SF-001	KP 12.8-15.7 KP 10.9-11.4		

REGISTERED CIVIL ENGINEER

PLANS APPROVAL DATE

REGISTERED PROFESSIONAL ENGINEER NO. EXP. CIVIL STATE OF CALIFORNIA

The State of California or its officers or agents shall not be responsible for the accuracy or completeness of electronic copies of this plan sheet.

Caltrans now has a web site! To get to the web site, go to: http://www.dot.ca.gov

ARUP
901 MARKET STREET, SUITE 260
SAN FRANCISCO, CA 94103

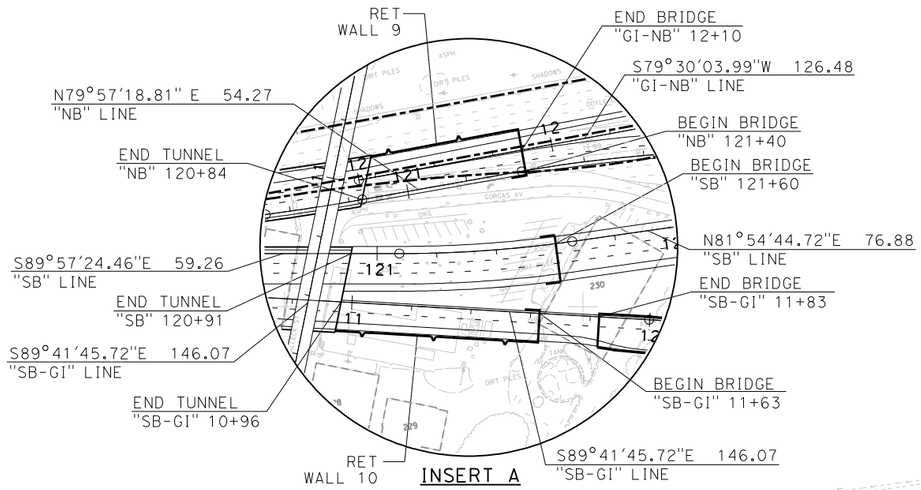

CURVE DATA				
No.	R	Δ	T	L
1	460.00	34°23'05"	142.33	276.06
2	740.00	11°04'18"	71.72	142.99
3	750.00	2°30'12"	16.39	32.77
4	440.00	36°49'01"	146.44	282.73
5	1130.00	5°56'25"	58.63	117.16
6	430.00	16°06'41"	60.86	120.91
7	410.00	8°07'51"	29.14	58.18
8	440.00	6°59'31"	26.88	53.69

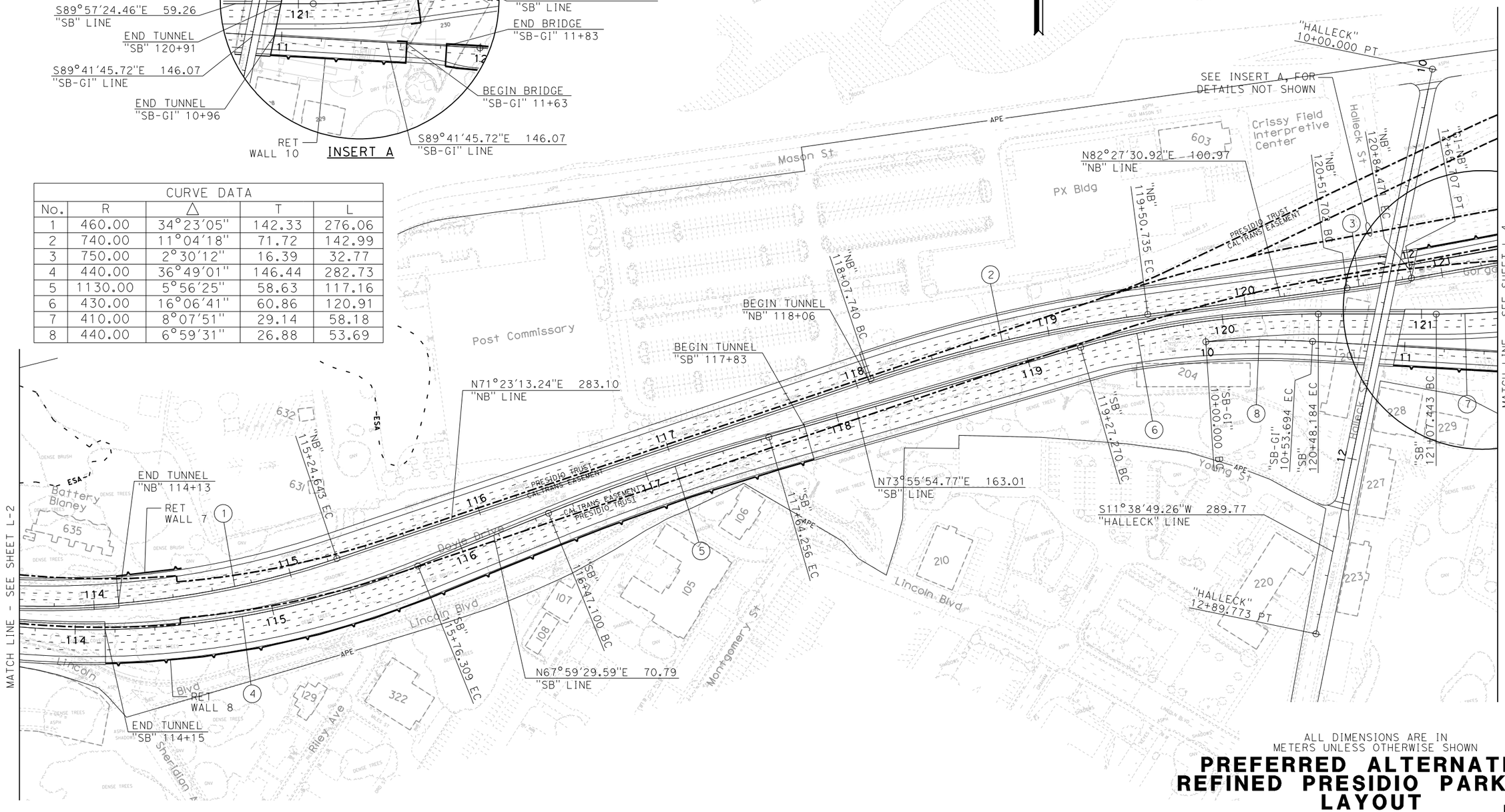

ALL DIMENSIONS ARE IN METERS UNLESS OTHERWISE SHOWN

PREFERRED ALTERNATIVE REFINED PRESIDIO PARKWAY LAYOUT

SCALE 1:1000

L-3

DATE	REVISED BY	DATE	REVISED
		06/07	

CALCULATED/DESIGNED BY: E. LAM
CHECKED BY: J. KARN

DESIGN OVERSIGHT

STATE OF CALIFORNIA - DEPARTMENT OF TRANSPORTATION
Caltrans PROJECT DEVELOPMENT

LAST REVISION 00-00-00
DATE PLOTTED => $DATE$
TIME PLOTTED => $TIME$

RELATIVE BORDER SCALE IS IN MILLIMETERS 0 20 40 60 80

USERNAME => $USER$
DGN FILE => $FILES$

RU 04242

EA 163700

DIST	COUNTY	ROUTE	KILOMETER POST TOTAL PROJECT	SHEET No	TOTAL SHEETS
4	SF	04-SF-101 04-SF-001	KP 12.8-15.7 KP 10.9-11.4		

REGISTERED CIVIL ENGINEER

PLANS APPROVAL DATE

REGISTERED PROFESSIONAL ENGINEER NO. Exp. CIVIL STATE OF CALIFORNIA

The State of California or its officers or agents shall not be responsible for the accuracy or completeness of electronic copies of this plan sheet.

Caltrans now has a web site! To get to the web site, go to: http://www.dot.ca.gov

ARUP
901 MARKET STREET, SUITE 260
SAN FRANCISCO, CA 94103

Caltrans Metric

SAN FRANCISCO COUNTY TRANSPORTATION AUTHORITY

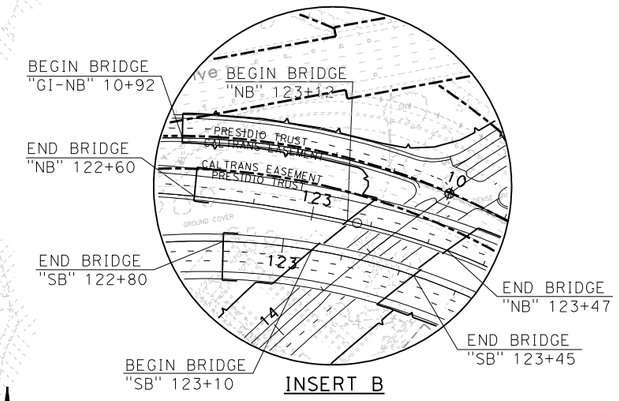

INSERT B

CURVE DATA				
No.	R	Δ	T	L
1	440.00	22°59'49"	89.51	176.60
2	232.00	38°29'08"	80.99	155.83
3	305.00	9°15'07"	24.68	49.25
4	410.00	8°07'51"	29.14	58.18
5	220.00	38°26'22"	76.70	147.60
6	252.00	19°26'00"	43.15	85.47
7	295.00	7°35'58"	19.59	39.13
8	240.00	33°14'20"	71.64	139.23
9	303.60	15°32'14"	41.42	82.33
10	200.00	20°07'09"	35.48	70.23
11	300.00	13°41'03"	36.00	71.65
12	260.00	25°53'48"	59.78	117.51

ALL DIMENSIONS ARE IN METERS UNLESS OTHERWISE SHOWN

PREFERRED ALTERNATIVE REFINED PRESIDIO PARKWAY LAYOUT

SCALE 1:1000

L-4

	DATE	REVISED BY	DATE	REVISED
CALCULATED/DESIGNED BY	E. LAM		06/07	
CHECKED BY	J. KARN			

DESIGN OVERSIGHT

STATE OF CALIFORNIA - DEPARTMENT OF TRANSPORTATION

Caltrans PROJECT DEVELOPMENT

LAST REVISION 00-00-00 | DATE PLOTTED => $DATE$ | TIME PLOTTED => $TIME$

RELATIVE BORDER SCALE IS IN MILLIMETERS 0 20 40 60 80

USERNAME => $USER$
DGN FILE => $FILES$

RU 04242

EA 163700

DIST	COUNTY	ROUTE	KILOMETER POST TOTAL PROJECT	SHEET No	TOTAL SHEETS

REGISTERED CIVIL ENGINEER

PLANS APPROVAL DATE

REGISTERED PROFESSIONAL ENGINEER NO. EXP. CIVIL STATE OF CALIFORNIA

The State of California or its officers or agents shall not be responsible for the accuracy or completeness of electronic copies of this plan sheet.

Caltrans now has a web site! To get to the web site, go to: http://www.dot.ca.gov

ARUP
901 MARKET STREET, SUITE 260
SAN FRANCISCO, CA 94103

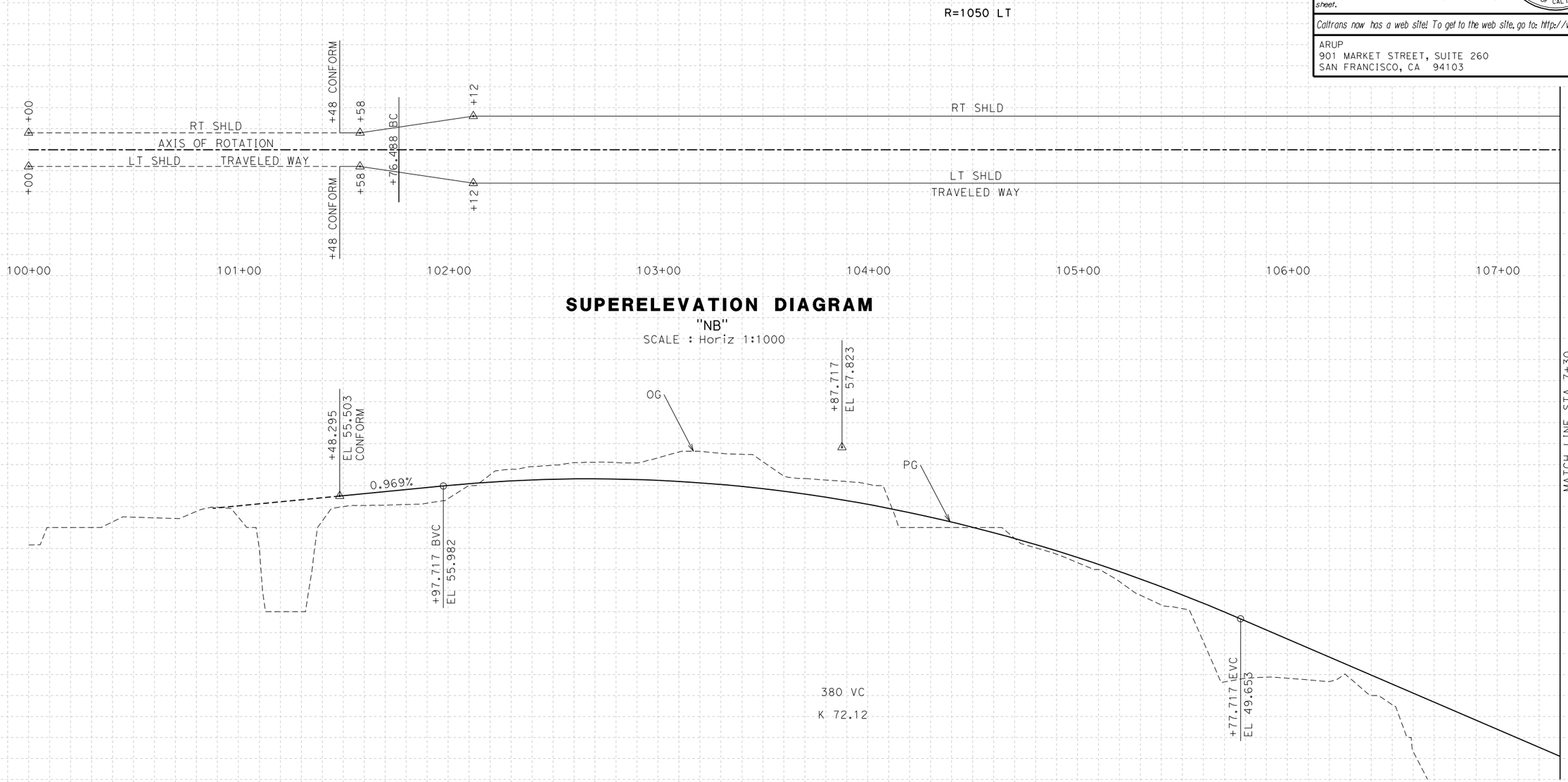

SUPERELEVATION DIAGRAM

"NB"

SCALE : Horiz 1:1000

PROFILE

"NB"

SCALE Horiz 1:1000
Vert 1:100

NOTE:

1. Elevation is based on 1988 North American Vertical Datum (NAVD 88).

ALL DIMENSIONS ARE IN METERS UNLESS OTHERWISE SHOWN

PREFERRED ALTERNATIVE
REFINED PRESIDIO PARKWAY
PROFILE

SCALE AS SHOWN

P-1

Station	100+00	+20	+40	+60	+80	101+00	+20	+40	+60	+80	102+00	+20	+40	+60	+80	103+00	+20	+40	+60	+80	104+00	+20	+40	+60	+80	105+00	+20	+40	+60	+80	106+00	+20	+40	+60	+80	107+00	+20
Cu																																					
M Exc																																					
M Emb																																					

STATE OF CALIFORNIA - DEPARTMENT OF TRANSPORTATION

Caltrans

DESIGN OVERSIGHT

CALCULATED/DESIGNED BY	E. LAM	DATE REVISED BY
CHECKED BY	J. KARN	DATE REVISED 06/07

LAST REVISION 00-00-00

DATE PLOTTED => $DATE
TIME PLOTTED => $TIME

RELATIVE BORDER SCALE IS IN MILLIMETERS 0 20 40 60 80

USERNAME => $USER
DGN FILE => $REQUEST

RU 04242

EA 163700

DIST	COUNTY	ROUTE	KILOMETER POST TOTAL PROJECT	SHEET No	TOTAL SHEETS

REGISTERED CIVIL ENGINEER

PLANS APPROVAL DATE

REGISTERED PROFESSIONAL ENGINEER NO. EXP. CIVIL STATE OF CALIFORNIA

The State of California or its officers or agents shall not be responsible for the accuracy or completeness of electronic copies of this plan sheet.

Caltrans now has a web site! To get to the web site, go to: http://www.dot.ca.gov

ARUP
901 MARKET STREET, SUITE 260
SAN FRANCISCO, CA 94103

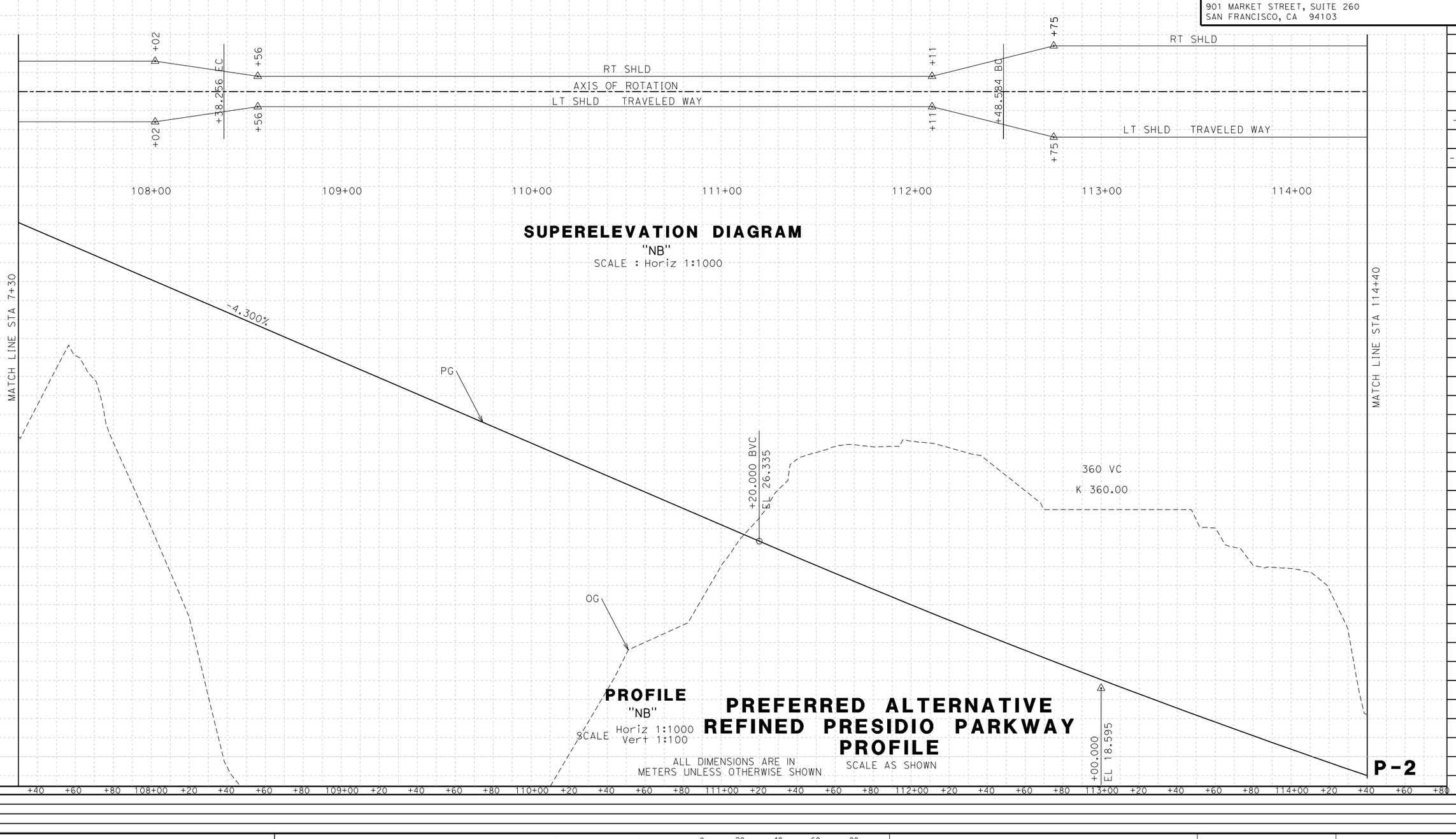

SUPERELEVATION DIAGRAM

"NB"

SCALE : Horiz 1:1000

PROFILE

"NB"

SCALE Horiz 1:1000
Vert 1:100

PREFERRED ALTERNATIVE
REFINED PRESIDIO PARKWAY
PROFILE

ALL DIMENSIONS ARE IN METERS UNLESS OTHERWISE SHOWN

SCALE AS SHOWN

P-2

DATE	REVISED BY	DATE	REVISED
		06/07	

CALCULATED/DESIGNED BY	E. LAM
CHECKED BY	J. KARN

DESIGN OVERSIGHT

STATE OF CALIFORNIA - DEPARTMENT OF TRANSPORTATION

Caltrans

LAST REVISION 00-00-00

DATE PLOTTED => 11/13/2007
TIME PLOTTED => 3:28:42 PM

RELATIVE BORDER SCALE IS IN MILLIMETERS 0 20 40 60 80

USERNAME => mike.lamagna
DGN FILE => q:\130168\4_project_data\4-03_drawings\sketches\fact_sheet_2007-07\Sheets - Profile\P-02.dgn

RU 04242

EA 163700

DIST	COUNTY	ROUTE	KILOMETER POST TOTAL PROJECT	SHEET No	TOTAL SHEETS

REGISTERED CIVIL ENGINEER

PLANS APPROVAL DATE

REGISTERED PROFESSIONAL ENGINEER NO. EXP. CIVIL STATE OF CALIFORNIA

The State of California or its officers or agents shall not be responsible for the accuracy or completeness of electronic copies of this plan sheet.

Caltrans now has a web site! To get to the web site, go to: http://www.dot.ca.gov

ARUP
901 MARKET STREET, SUITE 260
SAN FRANCISCO, CA 94103

DATE	REVISED BY
06/07	DATE REVISED

CALCULATED/DESIGNED BY: E. LAM
CHECKED BY: J. KARN

DESIGN OVERSIGHT

STATE OF CALIFORNIA - DEPARTMENT OF TRANSPORTATION

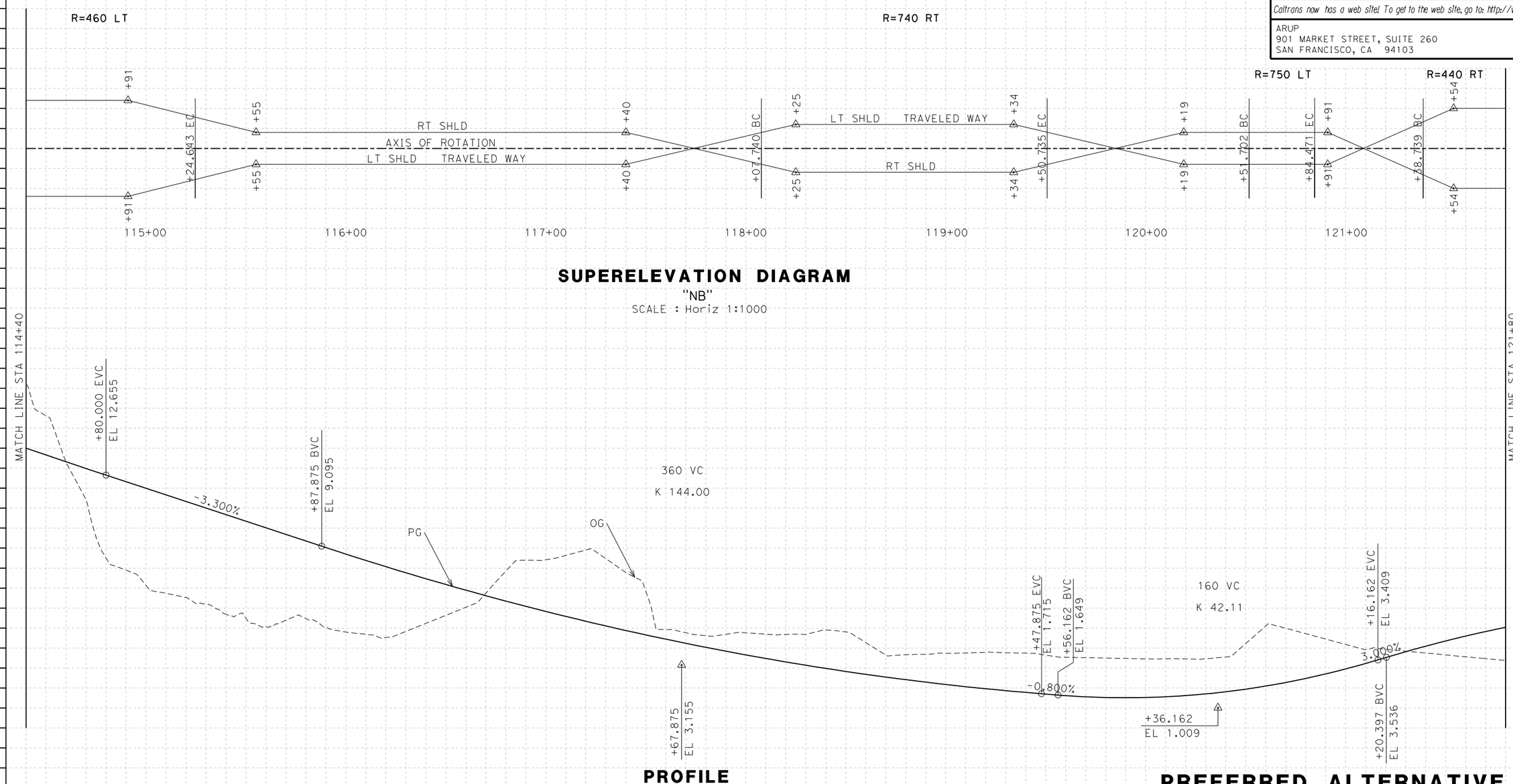

SUPERELEVATION DIAGRAM

"NB"

SCALE : Horiz 1:1000

PROFILE

"NB"

SCALE Horiz 1:1000
Vert 1:100

ALL DIMENSIONS ARE IN METERS UNLESS OTHERWISE SHOWN

PREFERRED ALTERNATIVE
REFINED PRESIDIO PARKWAY
PROFILE

SCALE AS SHOWN

P-3

Station	+40	+60	+80	115+00	+20	+40	+60	+80	116+00	+20	+40	+60	+80	117+00	+20	+40	+60	+80	118+00	+20	+40	+60	+80	119+00	+20	+40	+60	+80	120+00	+20	+40	+60	+80	121+00	+20	+40	+60	+80
Cu																																						
M Exc																																						
M Emb																																						

LAST REVISION 00-00-00

DATE PLOTTED => 11/13/2007
TIME PLOTTED => 3:28:43 PM

RELATIVE BORDER SCALE IS IN MILLIMETERS 0 20 40 60 80

USERNAME => mike.lamagna
DGN FILE => q:\130168\4_project_data\4-03_drawings\sketches\fact_sheet_2007-07\Sheets - Profile\P-03.dgn

RU 04242 | EA 163700

DIST	COUNTY	ROUTE	KILOMETER POST TOTAL PROJECT	SHEET No	TOTAL SHEETS

REGISTERED CIVIL ENGINEER

PLANS APPROVAL DATE

REGISTERED PROFESSIONAL ENGINEER NO. EXP. CIVIL STATE OF CALIFORNIA

The State of California or its officers or agents shall not be responsible for the accuracy or completeness of electronic copies of this plan sheet.

Caltrans now has a web site! To get to the web site, go to: http://www.dot.ca.gov

ARUP
901 MARKET STREET, SUITE 260
SAN FRANCISCO, CA 94103

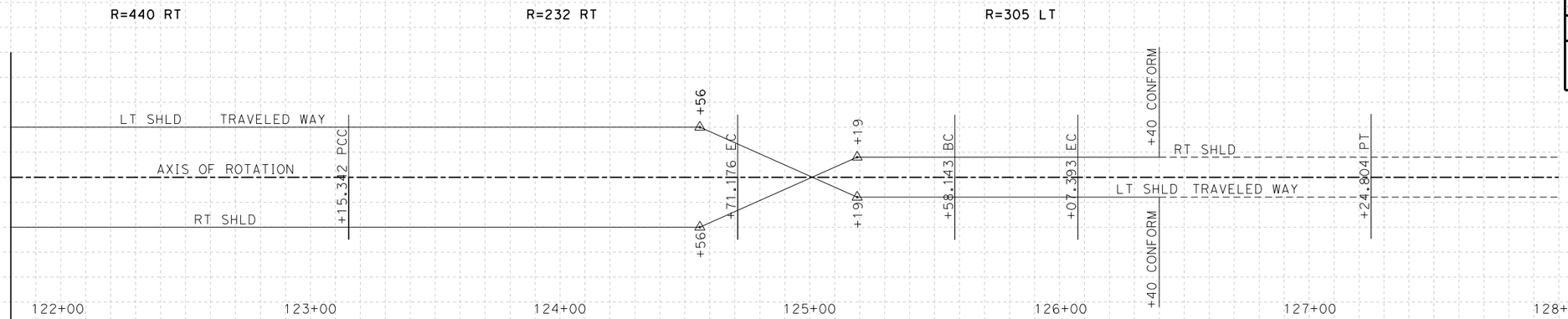

SUPERELEVATION DIAGRAM

"NB"

SCALE : Horiz 1:1000

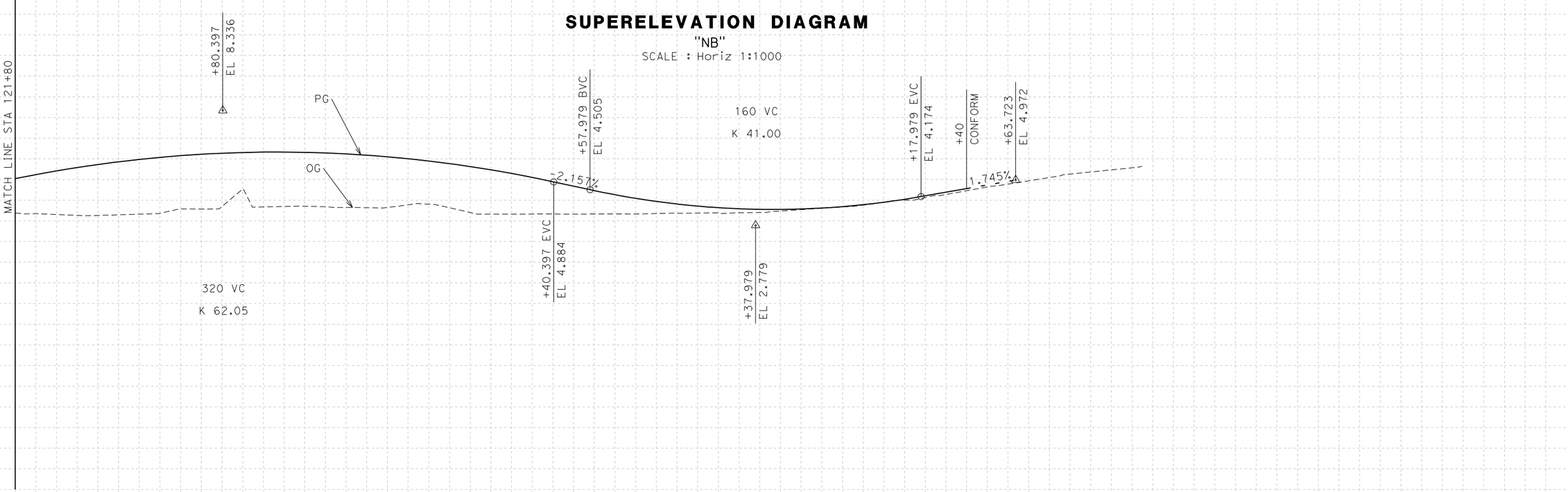

PROFILE

"NB"

SCALE Horiz 1:1000
Vert 1:100

ALL DIMENSIONS ARE IN METERS UNLESS OTHERWISE SHOWN

PREFERRED ALTERNATIVE
REFINED PRESIDIO PARKWAY
PROFILE

SCALE AS SHOWN

P-4

Station	+80	122+00	+20	+40	+60	+80	123+00	+20	+40	+60	+80	124+00	+20	+40	+60	+80	125+00	+20	+40	+60	+80	126+00	+20	+40	+60	+80	127+00	+20	+40	+60	+80	128+00
Cu																																
M Exc Emb																																

STATE OF CALIFORNIA - DEPARTMENT OF TRANSPORTATION

Caltrans

DESIGN OVERSIGHT

CALCULATED/DESIGNED BY	E. LAM	DATE REVISED BY
CHECKED BY	J. KARN	DATE REVISED 06/07

LAST REVISION 00-00-00

DATE PLOTTED => 11/13/2007
TIME PLOTTED => 3:28:45 PM

RELATIVE BORDER SCALE IS IN MILLIMETERS 0 20 40 60 80

USERNAME => mike.lamagna
DGN FILE => q:\130168\4_project_data\4-03_drawings\sketches\fact_sheet_2007-07\Sheets - Profile - 04.dgn

RU 04242 EA 163700

DIST	COUNTY	ROUTE	KILOMETER POST TOTAL PROJECT	SHEET No	TOTAL SHEETS

REGISTERED CIVIL ENGINEER

PLANS APPROVAL DATE

REGISTERED PROFESSIONAL ENGINEER NO. EXP. CIVIL STATE OF CALIFORNIA

The State of California or its officers or agents shall not be responsible for the accuracy or completeness of electronic copies of this plan sheet.

Caltrans now has a web site! To get to the web site, go to: http://www.dot.ca.gov

ARUP
901 MARKET STREET, SUITE 260
SAN FRANCISCO, CA 94103

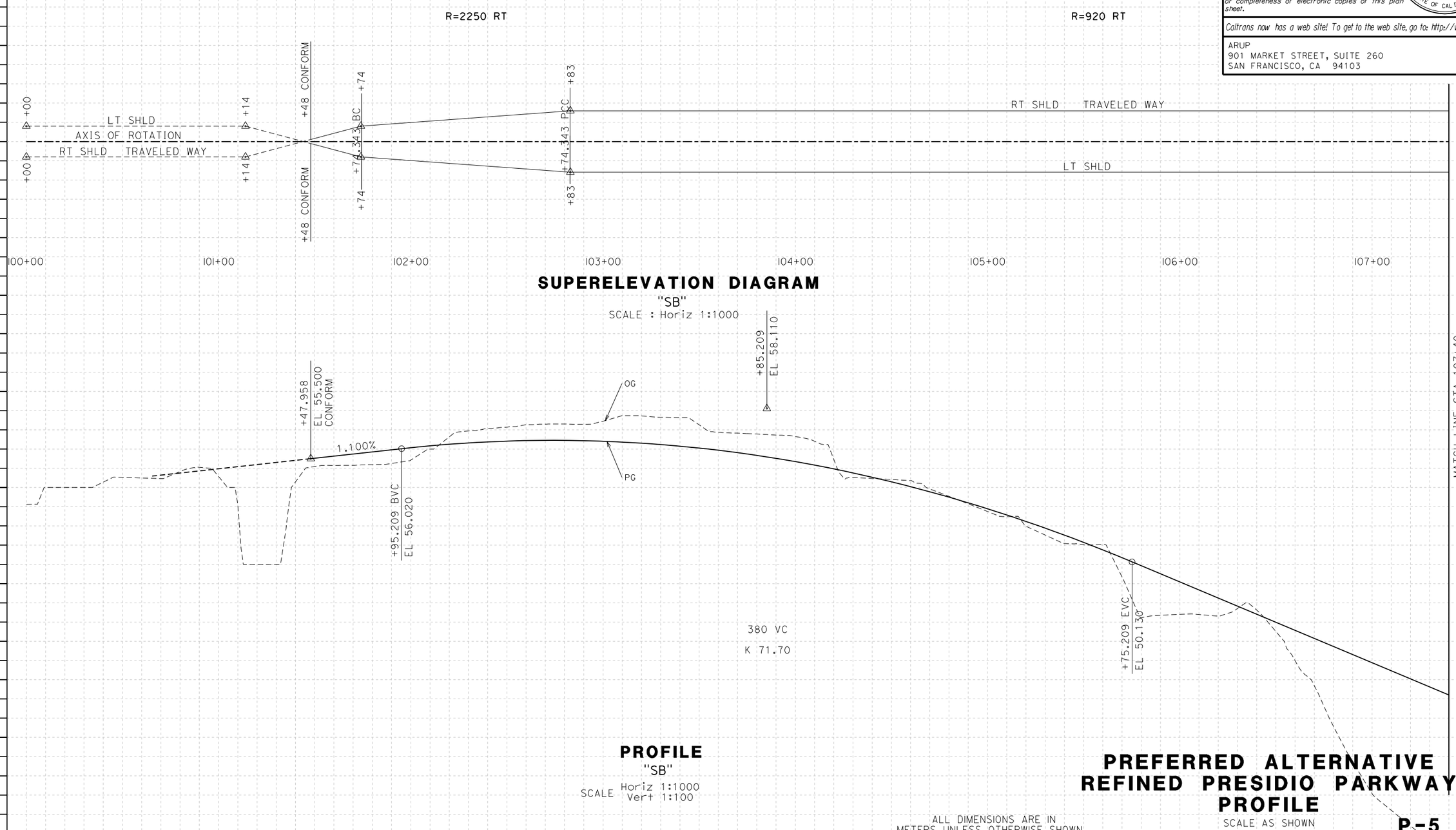

DATE	REVISED BY
06/07	

CALCULATED/DESIGNED BY: E. LAM
CHECKED BY: J. KARN

DESIGN OVERSIGHT

STATE OF CALIFORNIA - DEPARTMENT OF TRANSPORTATION

Caltrans

LAST REVISION 00-00-00

DATE PLOTTED => 11/13/2007
TIME PLOTTED => 3:28:47 PM

RELATIVE BORDER SCALE IS IN MILLIMETERS 0 20 40 60 80

USERNAME => mike.lamagna
DGN FILE => g:\130168\4_project_data\4-03_drawings\sketches\fact_sheet_2007-07\Sheets - Profile & Plan.dgn

RU.04242

EA 163700

DIST	COUNTY	ROUTE	KILOMETER POST TOTAL PROJECT	SHEET No	TOTAL SHEETS

REGISTERED CIVIL ENGINEER

PLANS APPROVAL DATE

REGISTERED PROFESSIONAL ENGINEER NO. EXP. CIVIL STATE OF CALIFORNIA

The State of California or its officers or agents shall not be responsible for the accuracy or completeness of electronic copies of this plan sheet.

Caltrans now has a web site! To get to the web site, go to: http://www.dot.ca.gov

ARUP
901 MARKET STREET, SUITE 260
SAN FRANCISCO, CA 94103

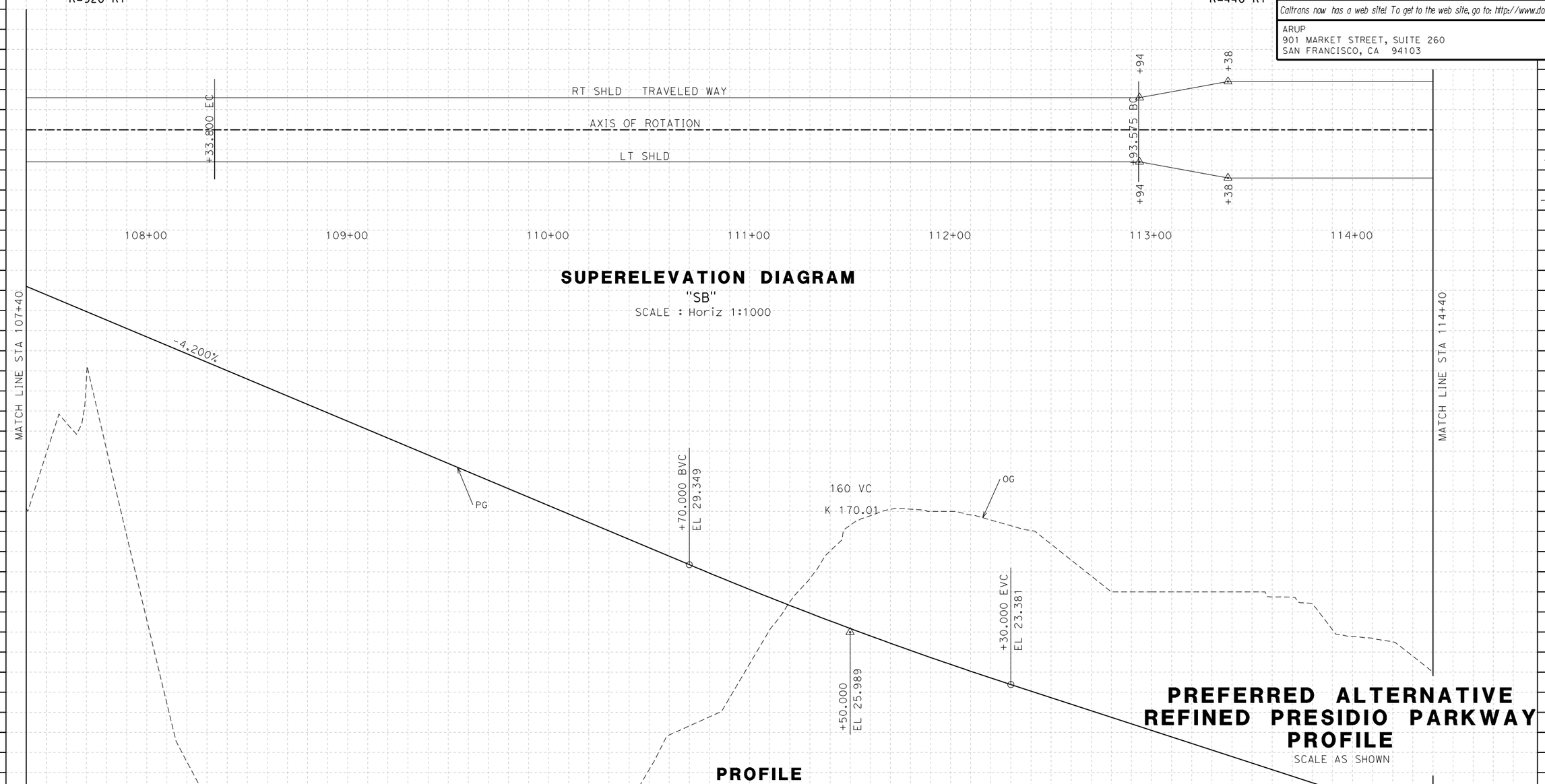

SUPERELEVATION DIAGRAM

"SB"

SCALE : Horiz 1:1000

PROFILE

"SB"

SCALE Horiz 1:1000 Vert 1:100

PREFERRED ALTERNATIVE
REFINED PRESIDIO PARKWAY
PROFILE

SCALE AS SHOWN

ALL DIMENSIONS ARE IN METERS UNLESS OTHERWISE SHOWN

P-6

Station	+40	+60	+80	108+00	+20	+40	+60	+80	109+00	+20	+40	+60	+80	110+00	+20	+40	+60	+80	111+00	+20	+40	+60	+80	112+00	+20	+40	+60	+80	113+00	+20	+40	+60	+80	114+00	+20	+40
Cu																																				
M Exc																																				
M Emb																																				

DATE	REVISED BY	DATE	REVISED
		06/07	

CALCULATED/DESIGNED BY: E. LAM
CHECKED BY: J. KARN

DESIGN OVERSIGHT

STATE OF CALIFORNIA - DEPARTMENT OF TRANSPORTATION

Caltrans

RELATIVE BORDER SCALE IS IN MILLIMETERS 0 20 40 60 80

USERNAME => mike.lamagna
DGN FILE => q:\130168\4_project_data\4-03_drawings\sketches\fact_sheet_06-07-07\Sheets - Profile\P-06.dgn

RU 04242 | EA 163700

LAST REVISION 00-00-00

DATE PLOTTED => 11/13/2007
TIME PLOTTED => 3:28:49 PM

DIST	COUNTY	ROUTE	KILOMETER POST TOTAL PROJECT	SHEET No	TOTAL SHEETS

REGISTERED CIVIL ENGINEER

PLANS APPROVAL DATE

REGISTERED PROFESSIONAL ENGINEER NO. EXP. CIVIL STATE OF CALIFORNIA

The State of California or its officers or agents shall not be responsible for the accuracy or completeness of electronic copies of this plan sheet.

Caltrans now has a web site! To get to the web site, go to: http://www.dot.ca.gov

ARUP
901 MARKET STREET, SUITE 260
SAN FRANCISCO, CA 94103

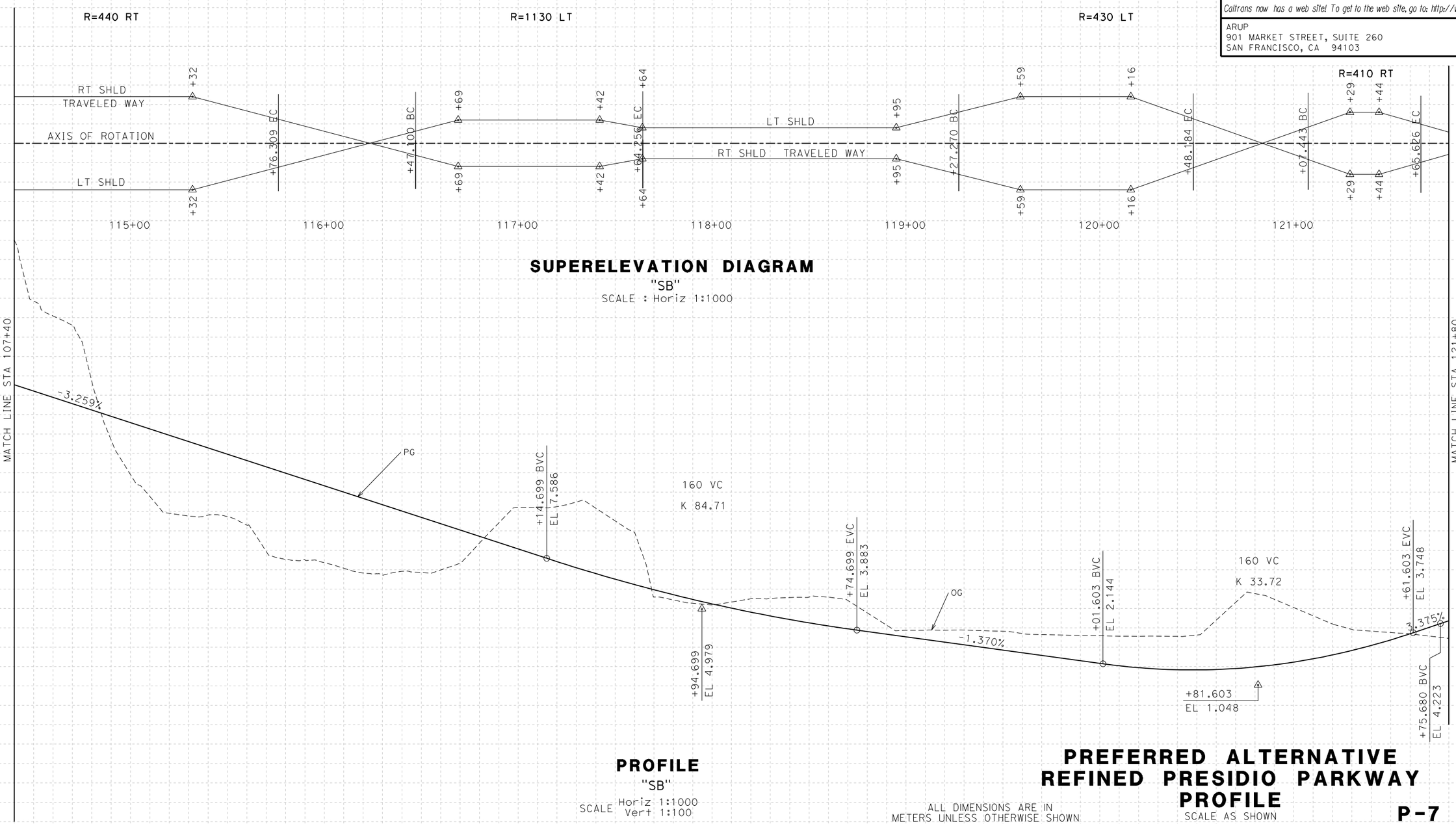

SUPERELEVATION DIAGRAM

"SB"

SCALE : Horiz 1:1000

PROFILE

"SB"

SCALE Horiz 1:1000 Vert 1:100

ALL DIMENSIONS ARE IN METERS UNLESS OTHERWISE SHOWN

PREFERRED ALTERNATIVE REFINED PRESIDIO PARKWAY PROFILE

SCALE AS SHOWN

P-7

DATE	REVISED BY	DATE	REVISED
		06/07	

CALCULATED/DESIGNED BY: E. LAM
CHECKED BY: J. KARN

DESIGN OVERSIGHT

STATE OF CALIFORNIA - DEPARTMENT OF TRANSPORTATION

Caltrans

LAST REVISION 00-00-00

DATE PLOTTED => 11/13/2007
TIME PLOTTED => 3:28:50 PM

RELATIVE BORDER SCALE IS IN MILLIMETERS 0 20 40 60 80

USERNAME => mike.lamagna
DGN FILE => q:\130168\4_project_data\4-03_drawings\sketches\fact_sheet_2007\07\Sheets - Profile\P-07.dgn

RU 04242

EA 163700

DIST	COUNTY	ROUTE	KILOMETER POST TOTAL PROJECT	SHEET No	TOTAL SHEETS

REGISTERED CIVIL ENGINEER

PLANS APPROVAL DATE

REGISTERED PROFESSIONAL ENGINEER NO. EXP. CIVIL STATE OF CALIFORNIA

The State of California or its officers or agents shall not be responsible for the accuracy or completeness of electronic copies of this plan sheet.

Caltrans now has a web site! To get to the web site, go to: http://www.dot.ca.gov

ARUP
901 MARKET STREET, SUITE 260
SAN FRANCISCO, CA 94103

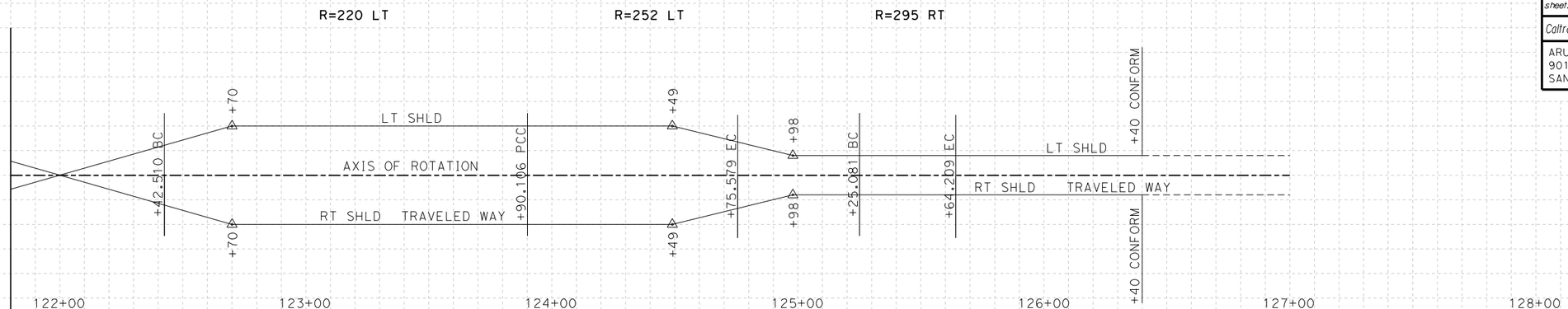

SUPERELEVATION DIAGRAM

"SB"

SCALE : Horiz 1:1000

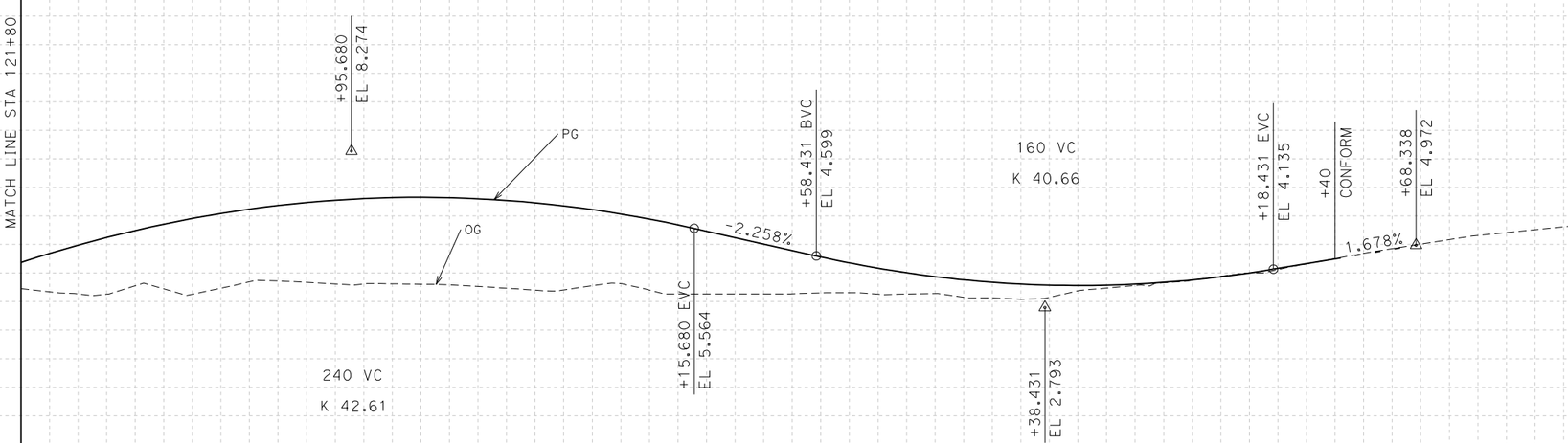

PROFILE

"SB"

SCALE Horiz 1:1000
Vert 1:100

ALL DIMENSIONS ARE IN METERS UNLESS OTHERWISE SHOWN

PREFERRED ALTERNATIVE REFINED PRESIDIO PARKWAY PROFILE

SCALE AS SHOWN

P-8

Station: +80 122+00 +20 +40 +60 +80 123+00 +20 +40 +60 +80 124+00 +20 +40 +60 +80 125+00 +20 +40 +60 +80 126+00 +20 +40 +60 +80 127+00 +20 +40 +60 +80 128+00

Cu

M Exc Emb

DATE	REVISED BY	DATE	REVISED
		06/07	

CALCULATED/DESIGNED BY: E. LAM
CHECKED BY: J. KARN

DESIGN OVERSIGHT

STATE OF CALIFORNIA - DEPARTMENT OF TRANSPORTATION

Caltrans

LAST REVISION 00-00-00

DATE PLOTTED => 11/13/2007
TIME PLOTTED => 3:28:52 PM

RELATIVE BORDER SCALE IS IN MILLIMETERS 0 20 40 60 80

USERNAME => mike.lamagna
DGN FILE => q:\130168\4_project_data\4-03_drawings\sketches\fact_sheet_2007-07\Sheets - Profile\P-08.dgn

RU 04242 EA 163700

DIST	COUNTY	ROUTE	KILOMETER POST TOTAL PROJECT	SHEET No	TOTAL SHEETS

REGISTERED CIVIL ENGINEER

PLANS APPROVAL DATE

REGISTERED PROFESSIONAL ENGINEER NO. EXP. CIVIL STATE OF CALIFORNIA

The State of California or its officers or agents shall not be responsible for the accuracy or completeness of electronic copies of this plan sheet.

Caltrans now has a web site! To get to the web site, go to: http://www.dot.ca.gov

ARUP
901 MARKET STREET, SUITE 260
SAN FRANCISCO, CA 94103

DATE	REVISED BY	DATE	REVISED

CALCULATED/DESIGNED BY: E. LAM
CHECKED BY: J. KARN

DESIGN OVERSIGHT

STATE OF CALIFORNIA - DEPARTMENT OF TRANSPORTATION

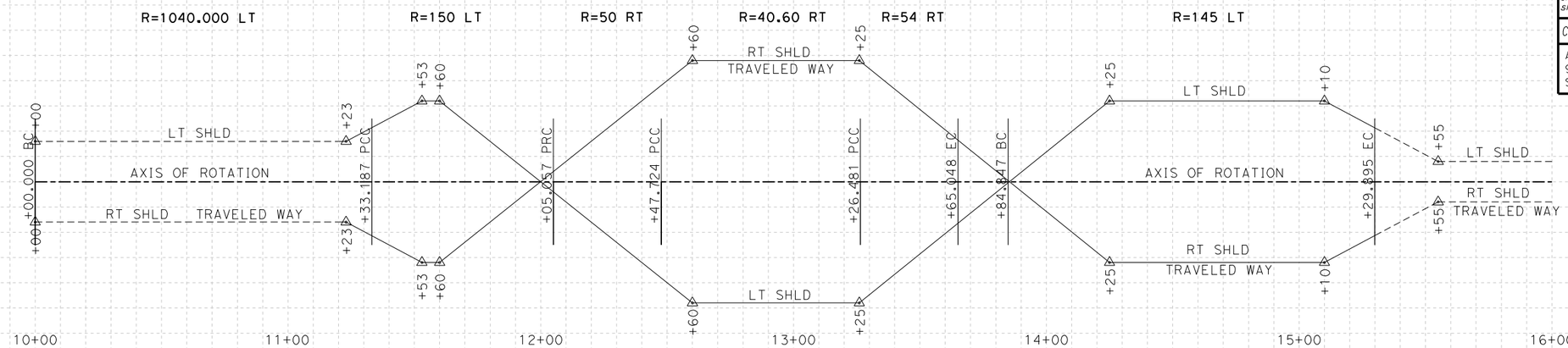

SUPERELEVATION DIAGRAM

"NB-PP"

SCALE : Horiz 1:1000

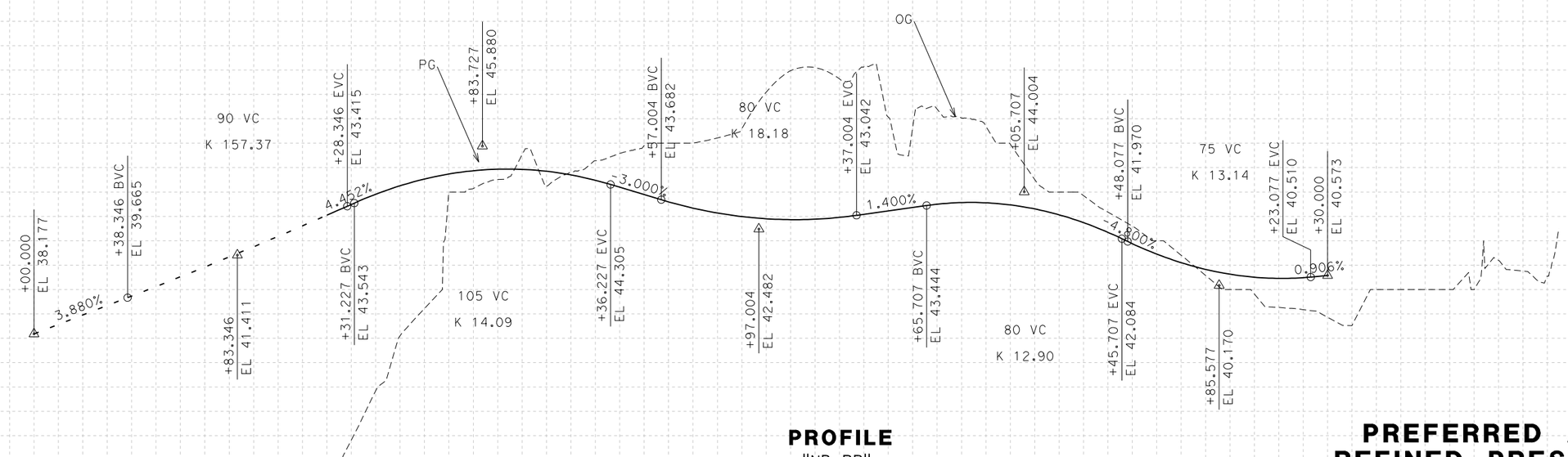

PROFILE

"NB-PP"

SCALE Horiz 1:1000
Vert 1:100

ALL DIMENSIONS ARE IN METERS UNLESS OTHERWISE SHOWN

PREFERRED ALTERNATIVE
REFINED PRESIDIO PARKWAY
PROFILE

SCALE AS SHOWN

P-9

Station	10+00	+20	+40	+60	+80	11+00	+20	+40	+60	+80	12+00	+20	+40	+60	+80	13+00	+20	+40	+60	+80	14+00	+20	+40	+60	+80	15+00	+20	+40	+60	+80	16+00	+20	+40	+60	+80	17+00
Cu																																				
M Exc																																				
M Emb																																				

LAST REVISION 00-00-00

DATE PLOTTED => 11/13/2007
TIME PLOTTED => 3:28:54 PM

RELATIVE BORDER SCALE IS IN MILLIMETERS 0 20 40 60 80

USERNAME => mike.lamagna
DGN FILE => q:\130168\4_project_data\4-03_drawings\sketches\fact_sheet_2007-07\Sheets - Profile\P-09.dgn

RU 04242 EA 163700

DIST	COUNTY	ROUTE	KILOMETER POST TOTAL PROJECT	SHEET No	TOTAL SHEETS

REGISTERED CIVIL ENGINEER

PLANS APPROVAL DATE

REGISTERED PROFESSIONAL ENGINEER NO. Exp. CIVIL STATE OF CALIFORNIA

The State of California or its officers or agents shall not be responsible for the accuracy or completeness of electronic copies of this plan sheet.

Caltrans now has a web site! To get to the web site, go to: http://www.dot.ca.gov

ARUP
901 MARKET STREET, SUITE 260
SAN FRANCISCO, CA 94103

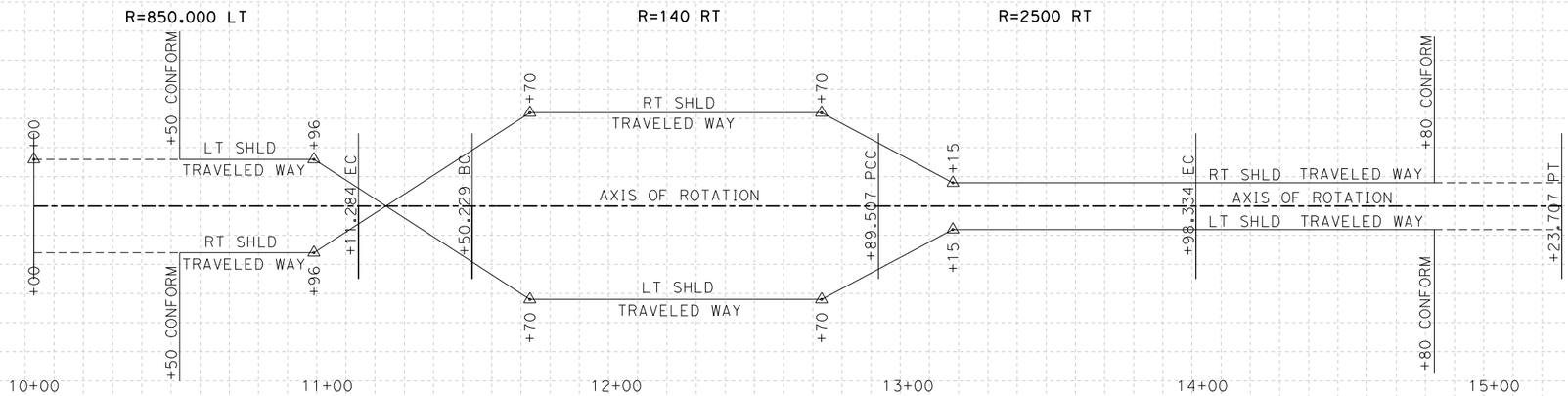

SUPERELEVATION DIAGRAM

"SB-PP"

SCALE : Horiz 1:1000

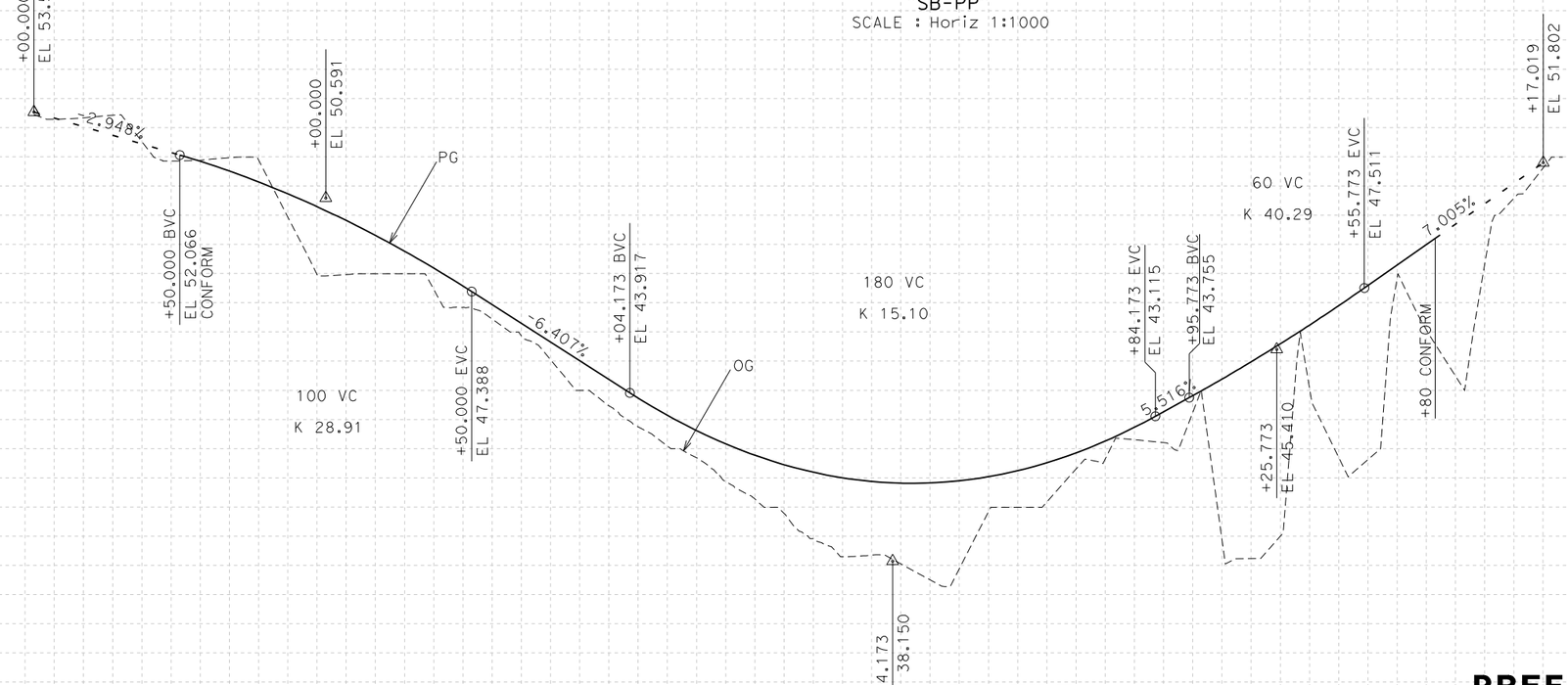

PROFILE

"SB-PP"

SCALE Horiz 1:1000
Vert 1:100

ALL DIMENSIONS ARE IN METERS UNLESS OTHERWISE SHOWN

PREFERRED ALTERNATIVE REFINED PRESIDIO PARKWAY PROFILE

SCALE AS SHOWN

P-10

Station	10+00	+20	+40	+60	+80	11+00	+20	+40	+60	+80	12+00	+20	+40	+60	+80	13+00	+20	+40	+60	+80	14+00	+20	+40	+60	+80	15+00	+20	+40	+60	+80	16+00
Cu																															
M Exc / Emb																															

STATE OF CALIFORNIA - DEPARTMENT OF TRANSPORTATION

Caltrans

DESIGN OVERSIGHT

CALCULATED/DESIGNED BY E. LAM

CHECKED BY J. KARN

DATE REVISED BY 06/07 DATE REVISED

10% 5% 0% -5% -10% 60 50 40 30

LAST REVISION 00-00-00

DATE PLOTTED => 11/13/2007
TIME PLOTTED => 3:28:56 PM

RELATIVE BORDER SCALE IS IN MILLIMETERS 0 20 40 60 80

USERNAME => mike.lamagna
DGN FILE => q:\130168\4_project_data\4-03_drawings\sketches\fact_sheet_2007-07\Sheets - Profile\P10.dgn

RU 04242

EA 163700

DIST	COUNTY	ROUTE	KILOMETER POST TOTAL PROJECT	SHEET No	TOTAL SHEETS

REGISTERED CIVIL ENGINEER

PLANS APPROVAL DATE

REGISTERED PROFESSIONAL ENGINEER NO. EXP. CIVIL STATE OF CALIFORNIA

The State of California or its officers or agents shall not be responsible for the accuracy or completeness of electronic copies of this plan sheet.

Caltrans now has a web site! To get to the web site, go to: http://www.dot.ca.gov

ARUP
901 MARKET STREET, SUITE 260
SAN FRANCISCO, CA 94103

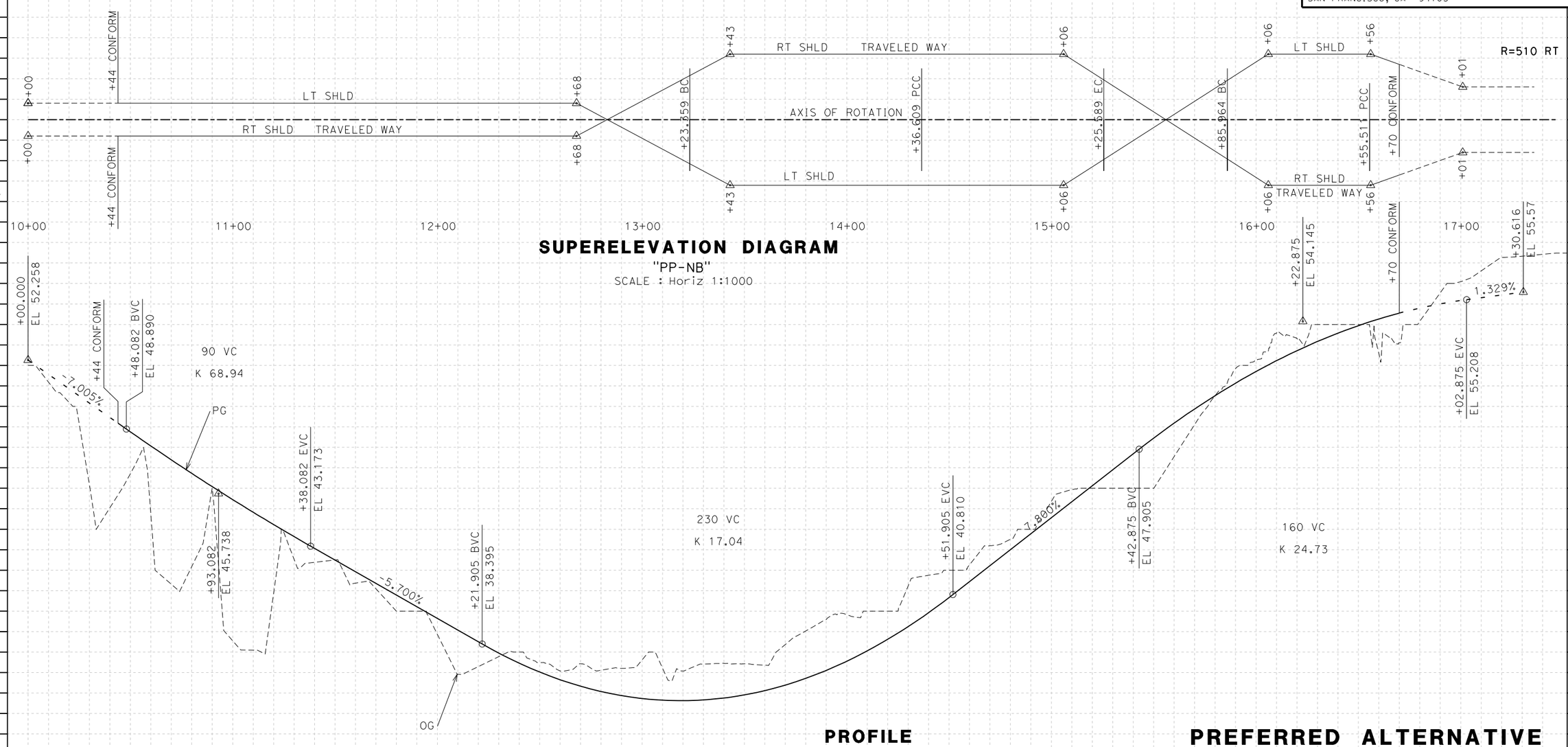

SUPERELEVATION DIAGRAM

"PP-NB"

SCALE : Horiz 1:1000

PROFILE

"PP-NB"

SCALE Horiz 1:1000
Vert 1:100

ALL DIMENSIONS ARE IN METERS UNLESS OTHERWISE SHOWN

PREFERRED ALTERNATIVE
REFINED PRESIDIO PARKWAY
PROFILE

SCALE AS SHOWN

P-11

Station	10+00	+20	+40	+60	+80	11+00	+20	+40	+60	+80	12+00	+20	+40	+60	+80	13+00	+20	+40	+60	+80	14+00	+20	+40	+60	+80	15+00	+20	+40	+60	+80	16+00	+20	+40	+60	+80	17+00	+20	+40
Cu																																						
M Exc																																						
M Emb																																						

DATE	REVISED BY	DATE	REVISED
		06/07	

CALCULATED/DESIGNED BY: E. LAM
CHECKED BY: J. KARN

DESIGN OVERSIGHT

STATE OF CALIFORNIA - DEPARTMENT OF TRANSPORTATION

Caltrans

RELATIVE BORDER SCALE IS IN MILLIMETERS 0 20 40 60 80

USERNAME => mike.lamagna
DGN FILE => q:\130168\4_project_data\4-03_drawings\sketches\fact_sheet_2007\07\Sheets - Profile v4.11.dgn

RU.04242 | EA 163700

LAST REVISION 00-00-00

DATE PLOTTED => 11/13/2007
TIME PLOTTED => 3:28:58 PM

DIST	COUNTY	ROUTE	KILOMETER POST TOTAL PROJECT	SHEET No	TOTAL SHEETS

REGISTERED CIVIL ENGINEER

PLANS APPROVAL DATE

REGISTERED PROFESSIONAL ENGINEER NO. EXP. CIVIL STATE OF CALIFORNIA

The State of California or its officers or agents shall not be responsible for the accuracy or completeness of electronic copies of this plan sheet.

Caltrans now has a web site! To get to the web site, go to: http://www.dot.ca.gov

ARUP
901 MARKET STREET, SUITE 260
SAN FRANCISCO, CA 94103

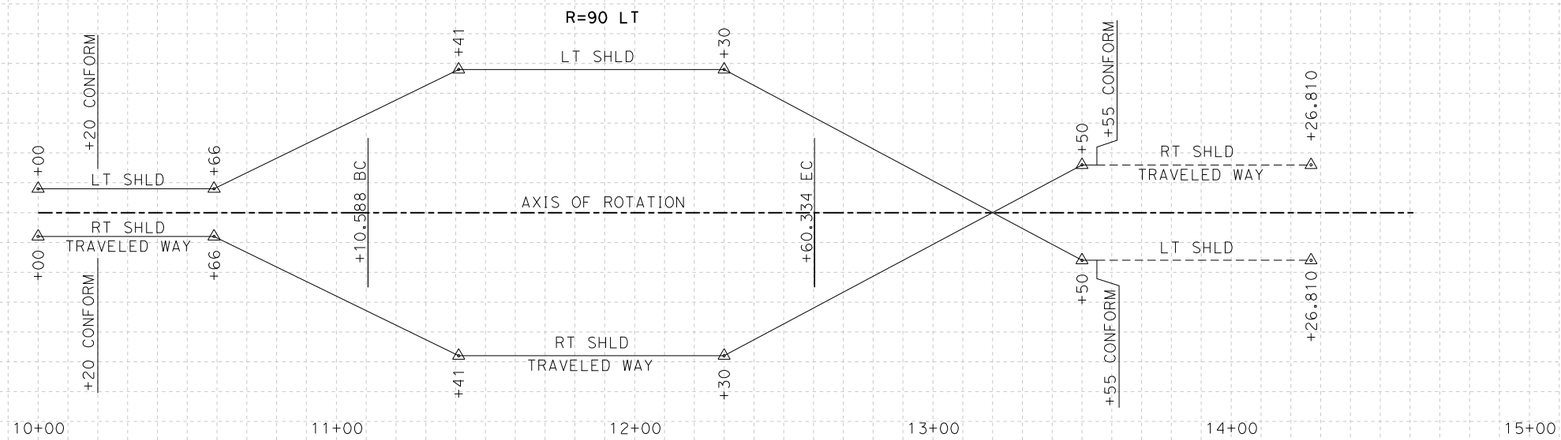

SUPERELEVATION DIAGRAM

"PP-SB"

SCALE : Horiz 1:1000

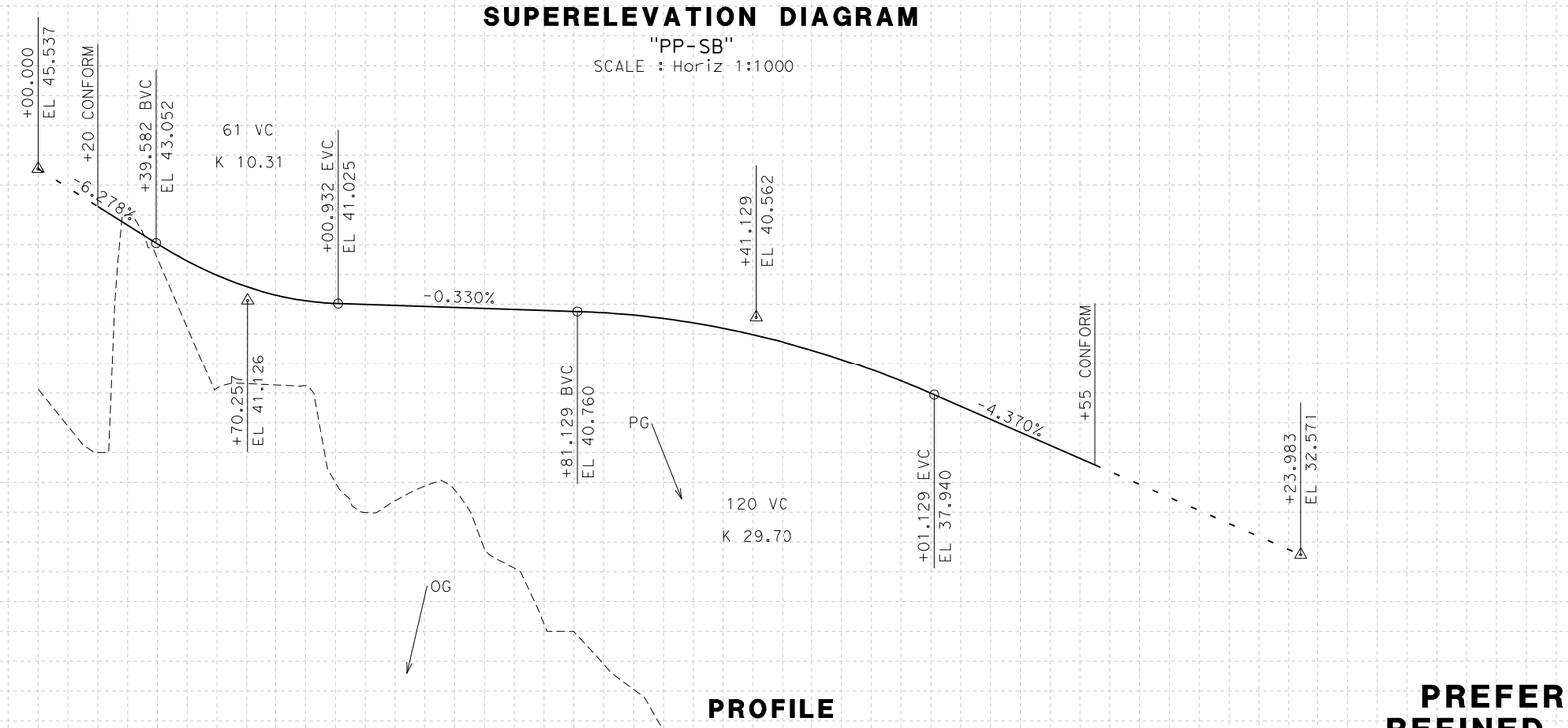

PROFILE

"PP-SB"

SCALE Horiz 1:1000
Vert 1:100

ALL DIMENSIONS ARE IN METERS UNLESS OTHERWISE SHOWN

PREFERRED ALTERNATIVE
REFINED PRESIDIO PARKWAY
PROFILE

SCALE AS SHOWN

P-12

Station	10+00	+20	+40	+60	+80	11+00	+20	+40	+60	+80	12+00	+20	+40	+60	+80	13+00	+20	+40	+60	+80	14+00	+20	+40	+60	+80	15+00
Cu																										
M Exc																										
M Emb																										

DATE	REVISED BY	DATE	REVISED
06/07			

CALCULATED/DESIGNED BY: E. LAM
CHECKED BY: J. KARN

DESIGN OVERSIGHT

STATE OF CALIFORNIA - DEPARTMENT OF TRANSPORTATION

Caltrans

RELATIVE BORDER SCALE IS IN MILLIMETERS 0 20 40 60 80

USERNAME => mike.lamagna
DGN FILE => q:\130168\4_project_data\4-03_drawings\sketches\fact_sheet_2007-07\Sheets - Profile & Plan.dgn

RU 04242

EA 163700

LAST REVISION 00-00-00

DATE PLOTTED => 11/13/2007
TIME PLOTTED => 3:29:00 PM

DIST	COUNTY	ROUTE	KILOMETER POST TOTAL PROJECT	SHEET No	TOTAL SHEETS

REGISTERED CIVIL ENGINEER

PLANS APPROVAL DATE

REGISTERED PROFESSIONAL ENGINEER NO. EXP. CIVIL STATE OF CALIFORNIA

The State of California or its officers or agents shall not be responsible for the accuracy or completeness of electronic copies of this plan sheet.

Caltrans now has a web site! To get to the web site, go to: http://www.dot.ca.gov

ARUP
901 MARKET STREET, SUITE 260
SAN FRANCISCO, CA 94103

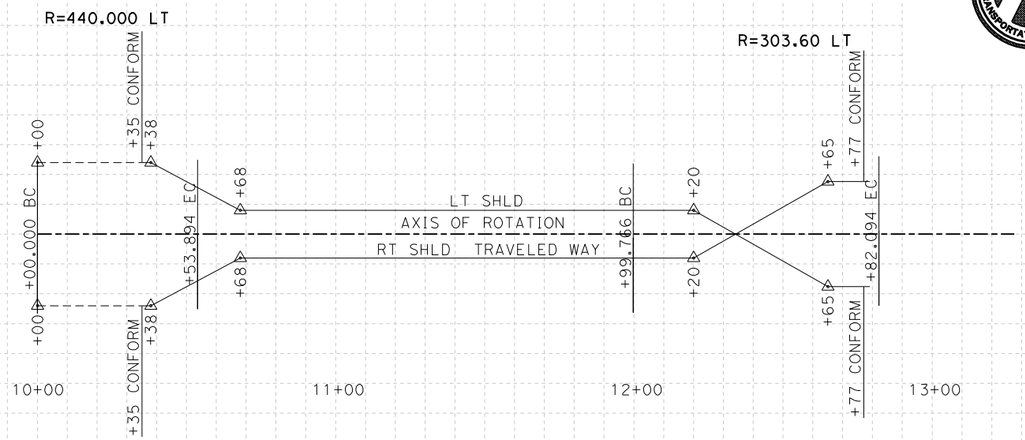

SUPERELEVATION DIAGRAM

"SB-GI"

SCALE : Horiz 1:1000

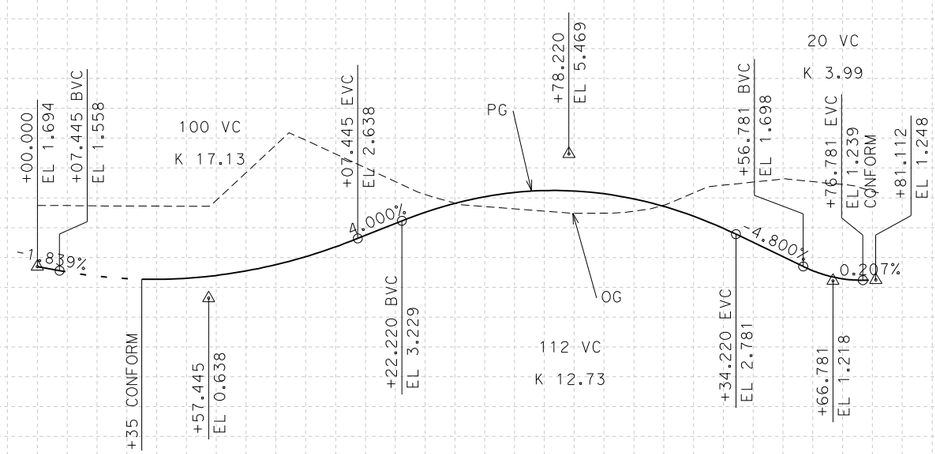

PROFILE

"SB-GI"

SCALE Horiz 1:1000 Vert 1:100

ALL DIMENSIONS ARE IN METERS UNLESS OTHERWISE SHOWN

PREFERRED ALTERNATIVE REFINED PRESIDIO PARKWAY PROFILE

SCALE AS SHOWN

P-13

Station: 10+00 +20 +40 +60 +80 11+00 +20 +40 +60 +80 12+00 +20 +40 +60 +80 13+00

Cu

M Exc Emb

DATE	REVISED BY
06/07	

CALCULATED/DESIGNED BY: E. LAM

CHECKED BY: J. KARN

DESIGN OVERSIGHT

STATE OF CALIFORNIA - DEPARTMENT OF TRANSPORTATION

Caltrans

RELATIVE BORDER SCALE IS IN MILLIMETERS 0 20 40 60 80

USERNAME => mike.lamagna
DGN FILE => q:\130168\4_project_data\4-03_drawings\sketches\fact_sheet_2007\07\Sheets - Profile.dgn

RU 04242

EA 163700

DATE PLOTTED => 11/13/2007
TIME PLOTTED => 3:29:02 PM

LAST REVISION 00-00-00

DIST	COUNTY	ROUTE	KILOMETER POST TOTAL PROJECT	SHEET No	TOTAL SHEETS

REGISTERED CIVIL ENGINEER

PLANS APPROVAL DATE

REGISTERED PROFESSIONAL ENGINEER NO. EXP. CIVIL STATE OF CALIFORNIA

The State of California or its officers or agents shall not be responsible for the accuracy or completeness of electronic copies of this plan sheet.

Caltrans now has a web site! To get to the web site, go to: http://www.dot.ca.gov

ARUP
901 MARKET STREET, SUITE 260
SAN FRANCISCO, CA 94103

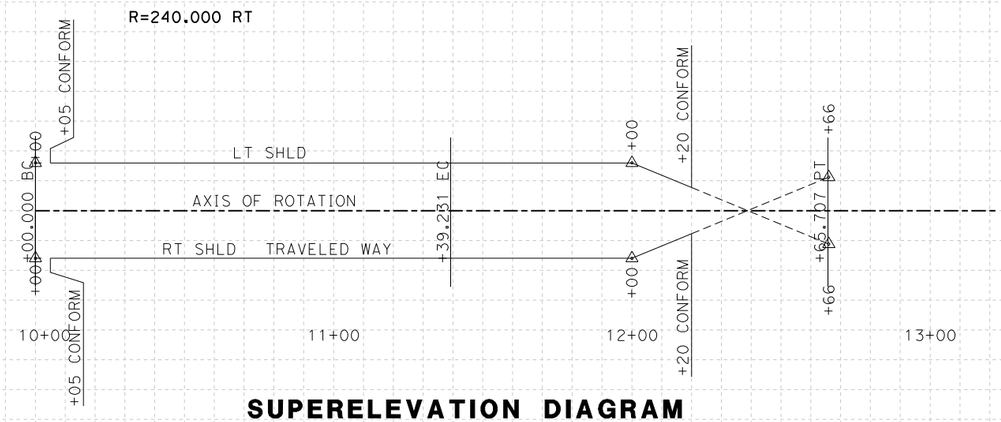

SUPERELEVATION DIAGRAM

"GI-NB" LINE

SCALE : Horiz 1:1000

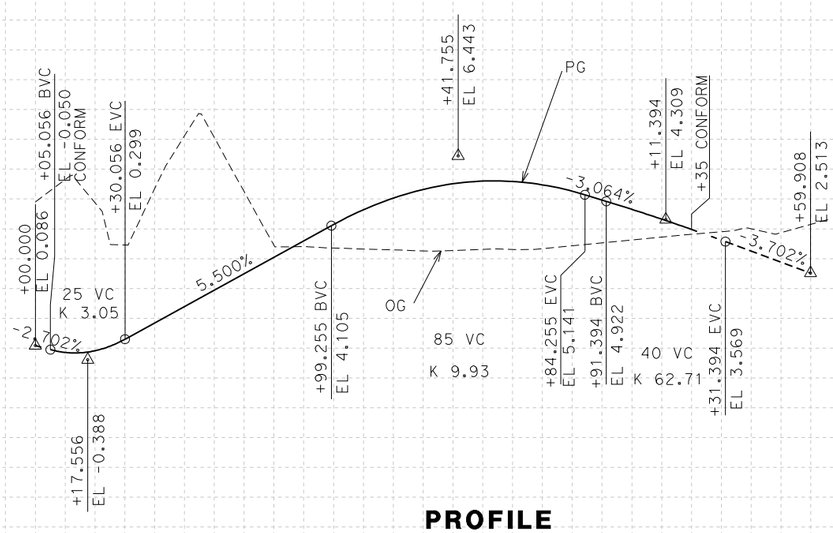

PROFILE

"GI-NB" LINE

SCALE Horiz 1:1000
Vert 1:100

ALL DIMENSIONS ARE IN METERS UNLESS OTHERWISE SHOWN

PREFERRED ALTERNATIVE REFINED PRESIDIO PARKWAY PROFILE

SCALE AS SHOWN

P-14

Station: 10+00 +20 +40 +60 +80 11+00 +20 +40 +60 +80 12+00 +20 +40 +60 +80 13+00

Cu

M Exc Emb

DATE	REVISED BY	DATE	REVISED
06/07			

CALCULATED/DESIGNED BY: E. LAM
CHECKED BY: J. KARN

DESIGN OVERSIGHT

STATE OF CALIFORNIA - DEPARTMENT OF TRANSPORTATION

Caltrans

RELATIVE BORDER SCALE IS IN MILLIMETERS 0 20 40 60 80

USERNAME => mike.lamagna
DGN FILE => q:\130168\4_project_data\4-03_drawings\sketches\fact_sheet_2007\07\Sheets - Profile\P-14.dgn

RU 04242

EA 163700

LAST REVISION 00-00-00

DATE PLOTTED => 11/13/2007
TIME PLOTTED => 3:29:03 PM

DIST	COUNTY	ROUTE	KILOMETER POST TOTAL PROJECT	SHEET No	TOTAL SHEETS

REGISTERED CIVIL ENGINEER

PLANS APPROVAL DATE

REGISTERED PROFESSIONAL ENGINEER NO. EXP. CIVIL STATE OF CALIFORNIA

The State of California or its officers or agents shall not be responsible for the accuracy or completeness of electronic copies of this plan sheet.

Caltrans now has a web site! To get to the web site, go to: http://www.dot.ca.gov

ARUP
901 MARKET STREET, SUITE 260
SAN FRANCISCO, CA 94103

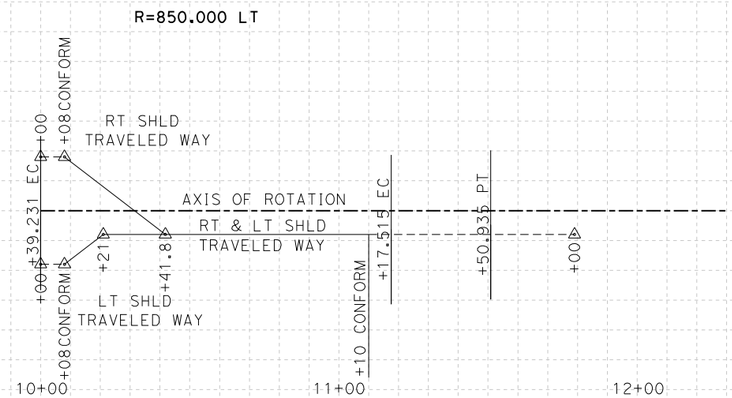

SUPERELEVATION DIAGRAM

"GI-GO" LINE

SCALE : Horiz 1:1000

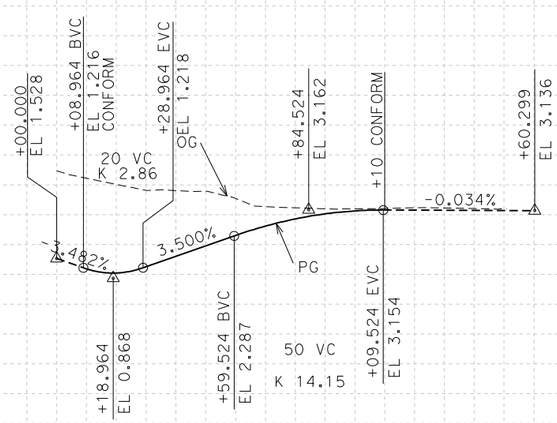

PROFILE

"GI-GO" LINE

SCALE Horiz 1:1000
Vert 1:100

ALL DIMENSIONS ARE IN METERS UNLESS OTHERWISE SHOWN

PREFERRED ALTERNATIVE REFINED PRESIDIO PARKWAY PROFILE

SCALE AS SHOWN

P-15

Station	10+00	+20	+40	+60	+80	11+00	+20	+40	+60	+80	12+00
Cu											
M Exc											
M Emb											

DATE	REVISED BY	DATE	REVISED
		06/07	

CALCULATED/DESIGNED BY: E. LAM
CHECKED BY: J. KARN

DESIGN OVERSIGHT

STATE OF CALIFORNIA - DEPARTMENT OF TRANSPORTATION

Caltrans

RELATIVE BORDER SCALE IS IN MILLIMETERS 0 20 40 60 80

USERNAME => mike.lamagna
DGN FILE => q:\130168\4_project_data\4-03_drawings\sketches\fact_sheet_2007-07\Sheets - Profile\P-15.dgn

RU 04242 EA 163700

LAST REVISION 00-00-00

DATE PLOTTED => 11/13/2007
TIME PLOTTED => 3:29:05 PM

DIST	COUNTY	ROUTE	KILOMETER POST TOTAL PROJECT	SHEET No	TOTAL SHEETS

REGISTERED CIVIL ENGINEER

PLANS APPROVAL DATE

REGISTERED PROFESSIONAL ENGINEER NO. EXP. CIVIL STATE OF CALIFORNIA

The State of California or its officers or agents shall not be responsible for the accuracy or completeness of electronic copies of this plan sheet.

Caltrans now has a web site! To get to the web site, go to: http://www.dot.ca.gov

ARUP
901 MARKET STREET, SUITE 260
SAN FRANCISCO, CA 94103

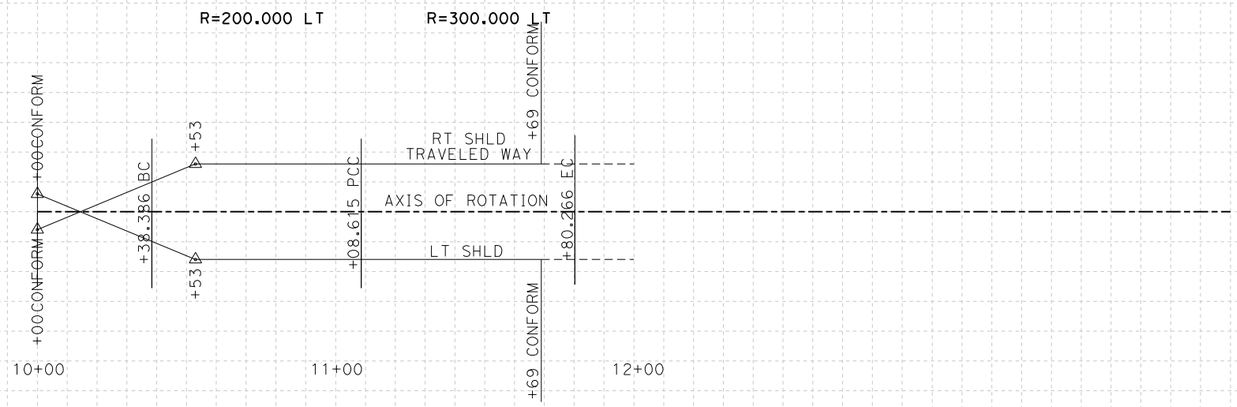

SUPERELEVATION DIAGRAM

"R1-G1"

SCALE : Horiz 1:1000

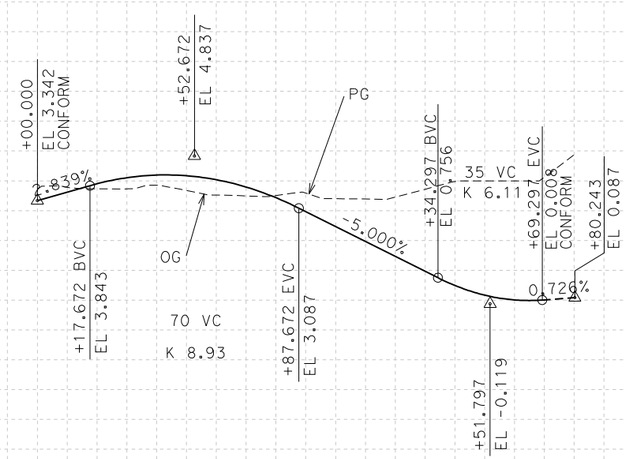

PROFILE

"R1-G1"

SCALE Horiz 1:1000
Vert 1:100

ALL DIMENSIONS ARE IN METERS UNLESS OTHERWISE SHOWN

PREFERRED ALTERNATIVE
REFINED PRESIDIO PARKWAY
PROFILE

SCALE AS SHOWN

P-16

Station	10+00	+20	+40	+60	+80	11+00	+20	+40	+60	+80	12+00
Cu											
M Exc											
M Emb											

DATE	REVISED BY	DATE	REVISED
		06/07	

CALCULATED/DESIGNED BY: E. LAM
CHECKED BY: J. KARN

DESIGN OVERSIGHT

STATE OF CALIFORNIA - DEPARTMENT OF TRANSPORTATION

Caltrans

RELATIVE BORDER SCALE IS IN MILLIMETERS 0 20 40 60 80

USERNAME => mike.lamagna
DGN FILE => q:\130168\4_project_data\4-03_drawings\sketches\fact_sheet_2007-07\Sheets - Profile\R1-G1.dgn

RU 04242

EA 163700

LAST REVISION 00-00-00

DATE PLOTTED => 11/13/2007
TIME PLOTTED => 3:29:07 PM

DIST	COUNTY	ROUTE	KILOMETER POST TOTAL PROJECT	SHEET No	TOTAL SHEETS

REGISTERED CIVIL ENGINEER

PLANS APPROVAL DATE

REGISTERED PROFESSIONAL ENGINEER NO. Exp. CIVIL STATE OF CALIFORNIA

The State of California or its officers or agents shall not be responsible for the accuracy or completeness of electronic copies of this plan sheet.

Caltrans now has a web site! To get to the web site, go to: http://www.dot.ca.gov

ARUP
901 MARKET STREET, SUITE 260
SAN FRANCISCO, CA 94103

DATE	REVISED BY	DATE	REVISED
		06/07	

CALCULATED/DESIGNED BY: E. LAM
CHECKED BY: J. KARN

DESIGN OVERSIGHT

STATE OF CALIFORNIA - DEPARTMENT OF TRANSPORTATION

Caltrans

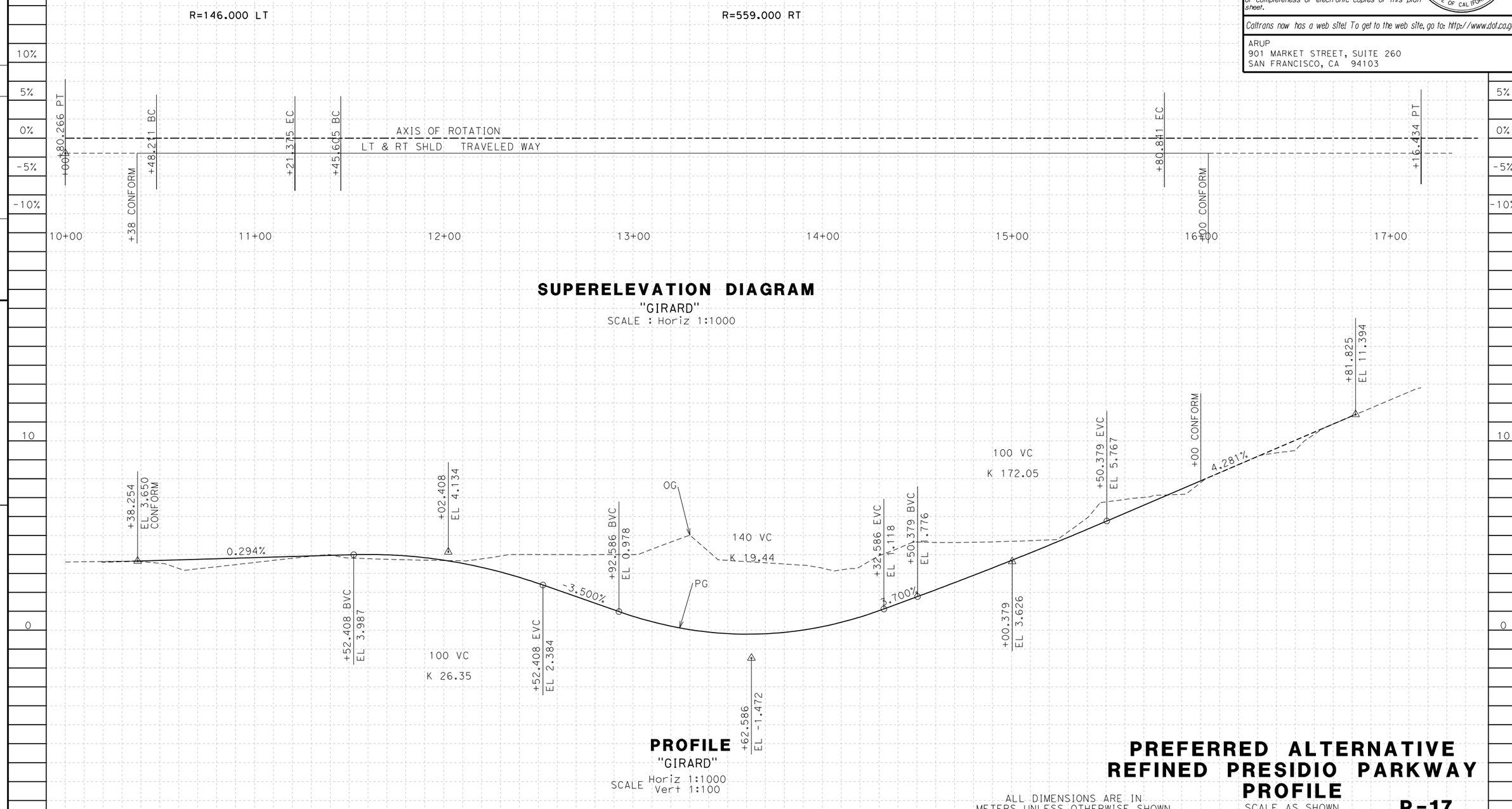

SUPERELEVATION DIAGRAM

"GIRARD"

SCALE : Horiz 1:1000

PROFILE

"GIRARD"

SCALE Horiz 1:1000
Vert 1:100

ALL DIMENSIONS ARE IN METERS UNLESS OTHERWISE SHOWN

PREFERRED ALTERNATIVE
REFINED PRESIDIO PARKWAY
PROFILE

SCALE AS SHOWN

P-17

LAST REVISION 00-00-00

DATE PLOTTED => 11/13/2007
TIME PLOTTED => 3:29:08 PM

RELATIVE BORDER SCALE IS IN MILLIMETERS 0 20 40 60 80

USERNAME => mike.lamagna
DGN FILE => q:\130168\4_project_data\4-03_drawings\sketches\fact_sheet_2007-07\Sheets - Profile\P-17.dgn

RU 04242 EA 163700

DIST	COUNTY	ROUTE	KILOMETER POST TOTAL PROJECT	SHEET No	TOTAL SHEETS

REGISTERED CIVIL ENGINEER

PLANS APPROVAL DATE

REGISTERED PROFESSIONAL ENGINEER NO. EXP. CIVIL STATE OF CALIFORNIA

The State of California or its officers or agents shall not be responsible for the accuracy or completeness of electronic copies of this plan sheet.

Caltrans now has a web site! To get to the web site, go to: http://www.dot.ca.gov

ARUP
901 MARKET STREET, SUITE 260
SAN FRANCISCO, CA 94103

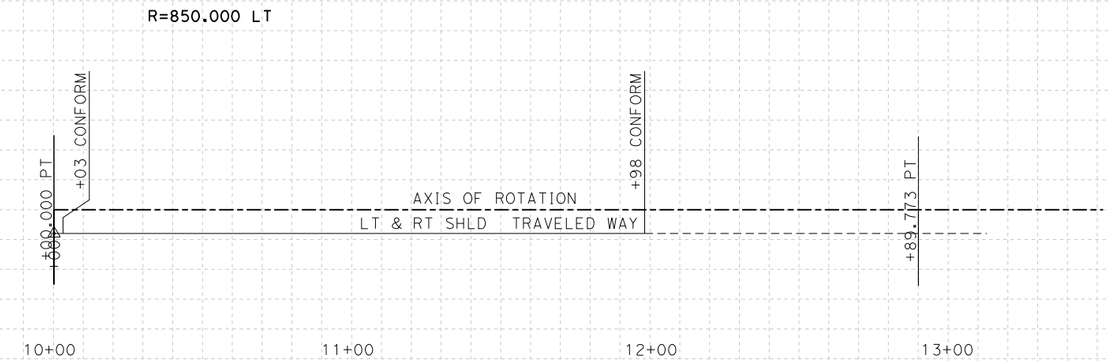

SUPERELEVATION DIAGRAM

"HALLECK"

SCALE : Horiz 1:1000

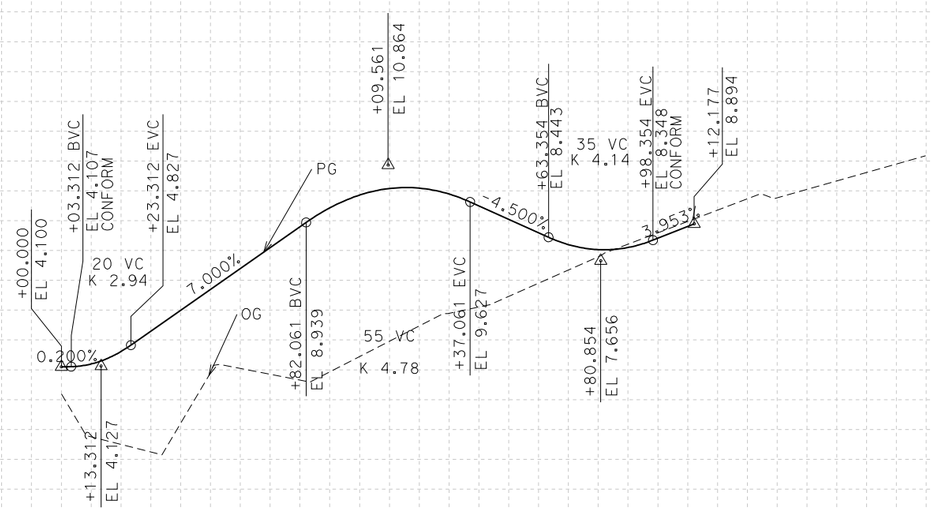

PROFILE

"HALLECK"

SCALE Horiz 1:1000
Vert 1:100

PREFERRED ALTERNATIVE
REFINED PRESIDIO PARKWAY
PROFILE

ALL DIMENSIONS ARE IN METERS UNLESS OTHERWISE SHOWN

SCALE AS SHOWN

P-18

Station	10+00	+20	+40	+60	+80	11+00	+20	+40	+60	+80	12+00	+80	8+00	+20	+40	13+00
Cu																
M Exc																
M Emb																

DATE	REVISED BY	DATE	REVISED
06/07			

CALCULATED/DESIGNED BY: E. LAM
CHECKED BY: J. KARN

DESIGN OVERSIGHT

STATE OF CALIFORNIA - DEPARTMENT OF TRANSPORTATION

Caltrans

RELATIVE BORDER SCALE IS IN MILLIMETERS 0 20 40 60 80

USERNAME => mike.lamagna
DGN FILE => q:\130168\4_project_data\4-03_drawings\sketches\fact_sheet_2007-07\Sheets - Profile.dgn

RU.04242

EA 163700

LAST REVISION 00-00-00

DATE PLOTTED => 11/13/2007
TIME PLOTTED => 3:29:10 PM

ATTACHMENT D

Preferred Alternative
Stage Construction Diagrams

South Access to the Golden Gate Bridge
Doyle Drive Project Report

DIST	COUNTY	ROUTE	KILOMETER POST TOTAL PROJECT	SHEET No	TOTAL SHEETS
4	SF	04-SF-101 04-SF-001	KP 12.8-15.7 KP 10.9-11.4		

REGISTERED CIVIL ENGINEER

PLANS APPROVAL DATE

REGISTERED PROFESSIONAL ENGINEER NO. EXP. CIVIL STATE OF CALIFORNIA

The State of California or its officers or agents shall not be responsible for the accuracy or completeness of electronic copies of this plan sheet.

Caltrans now has a web site! To get to the web site, go to: http://www.dot.ca.gov

ARUP
901 MARKET STREET, SUITE 260
SAN FRANCISCO, CA 94103

Caltrans Metric

SAN FRANCISCO COUNTY TRANSPORTATION AUTHORITY

TRAFFIC HANDLING
STAGE 1, PHASE 1

A	CLOSE LINCOLN BLVD AT VICINTY OF SAN FRANCISCO NATIONAL MILITARY CEMETERY AND DETOUR TRAFFIC VIA WASHINGTON AVE (SOUTH OF CEMETERY)
B	CLOSE LINCOLN FOR RETAINING WALL CONSTRUCTION WITH CANTILEVER AND DETOUR TRAFFIC VIA EXISTING ROAD SOUTH OF BLDG #106
C	CLOSE NB VETERANS BLVD TO SB DOYLE DRIVE FOR PERMANENT SB DOYLE DRIVE CONSTRUCTION & DETOUR TRAFFIC VIA GEARY BLVD TO VAN NESS BLVD
D	CLOSE LINCOLN BLVD AT BUILDING #106 AND DETOUR TRAFFIC VIA SHERIDIAN AVE AND MONTGOMERY STREET

TRAFFIC HANDLING - STAGE 1, PHASE 1
DURING HOURS OF LOW TRAFFIC VOLUME

AA	TRAFFIC REMAINS ON EXISTING LANES WITH LANE CLOSURES DURING ALLOWABLE HOURS
BB	CLOSE LINCOLN BLVD FOR BRIDGE CONSTRUCTION OVER ROADWAY AND DETOUR TRAFFIC VIA MCDOWELL TO CRISSY FIELD AVE TO LINCOLN AND VIA STOREY TO RUCKMAN TO LINCOLN
CC	CLOSE MCDOWELL AND CRISSY FIELD AVE FOR BRIDGE CONSTRUCTION OVER ROADWAY AND DETOUR TRAFFIC VIA LINCOLN BLVD, HALLECK ST AND OLD MASON ST
DD	CLOSE NB VETERANS BLVD FOR BRIDGE CONSTRUCTION OVER ROADWAY AND DETOUR TRAFFIC VIA GEARY BLVD TO VAN NESS AVE TO LOMBARD ST TO NB DOYLE DRIVE
EE	CLOSE NB DOYLE DRIVE TO SB VETERANS BLVD FOR BRIDGE CONSTRUCTION OVER ROADWAY AND DETOUR TRAFFIC VIA MERCHANT RD EXIT RAMP TO LINCOLN BLVD TO SB DOYLE DR TO SB VETERANS BLVD
FF	CLOSE RUCKMAN AVE FOR BRIDGE CONSTRUCTION OVER ROADWAY AND DETOUR TRAFFIC VIA LINCOLN BLVD, PARK BLVD, KOBBE AVE & UPTON AVE

LEGEND:

- PERMANENT CONSTRUCTION
- TEMPORARY CONSTRUCTION
- REMOVAL

NOTE:

1. RUCKMAN UC REPLACEMENT TO OCCUR PRIOR TO COMMENCING OTHER ACTIVITIES IN STAGE 1, PHASE 1 CONSTRUCTION.

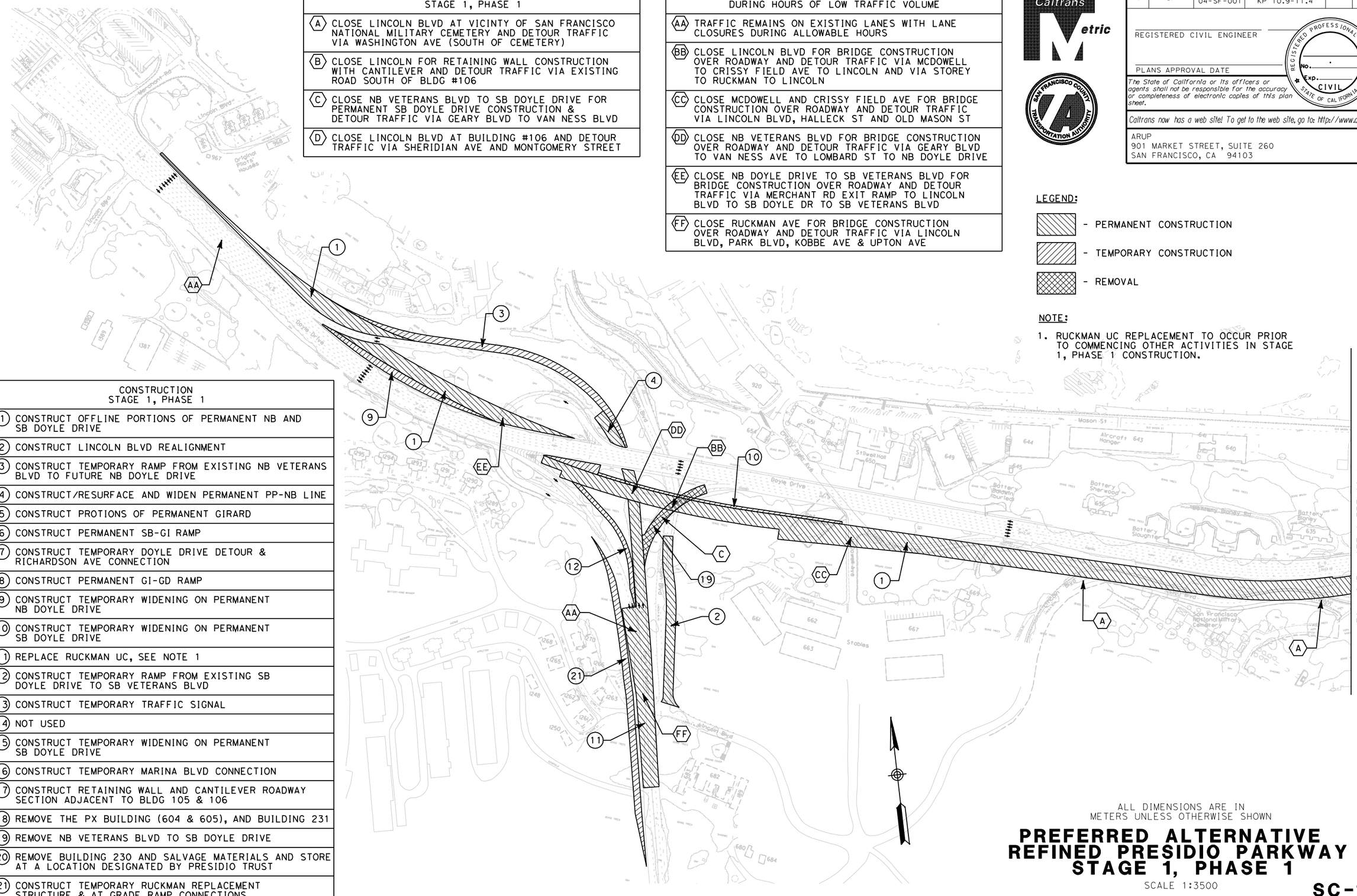

CONSTRUCTION
STAGE 1, PHASE 1

1	CONSTRUCT OFFLINE PORTIONS OF PERMANENT NB AND SB DOYLE DRIVE
2	CONSTRUCT LINCOLN BLVD REALIGNMENT
3	CONSTRUCT TEMPORARY RAMP FROM EXISTING NB VETERANS BLVD TO FUTURE NB DOYLE DRIVE
4	CONSTRUCT/RESURFACE AND WIDEN PERMANENT PP-NB LINE
5	CONSTRUCT PROTIONS OF PERMANENT GIRARD
6	CONSTRUCT PERMANENT SB-GI RAMP
7	CONSTRUCT TEMPORARY DOYLE DRIVE DETOUR & RICHARDSON AVE CONNECTION
8	CONSTRUCT PERMANENT GI-GD RAMP
9	CONSTRUCT TEMPORARY WIDENING ON PERMANENT NB DOYLE DRIVE
10	CONSTRUCT TEMPORARY WIDENING ON PERMANENT SB DOYLE DRIVE
11	REPLACE RUCKMAN UC, SEE NOTE 1
12	CONSTRUCT TEMPORARY RAMP FROM EXISTING SB DOYLE DRIVE TO SB VETERANS BLVD
13	CONSTRUCT TEMPORARY TRAFFIC SIGNAL
14	NOT USED
15	CONSTRUCT TEMPORARY WIDENING ON PERMANENT SB DOYLE DRIVE
16	CONSTRUCT TEMPORARY MARINA BLVD CONNECTION
17	CONSTRUCT RETAINING WALL AND CANTILEVER ROADWAY SECTION ADJACENT TO BLDG 105 & 106
18	REMOVE THE PX BUILDING (604 & 605), AND BUILDING 231
19	REMOVE NB VETERANS BLVD TO SB DOYLE DRIVE
20	REMOVE BUILDING 230 AND SALVAGE MATERIALS AND STORE AT A LOCATION DESIGNATED BY PRESIDIO TRUST
21	CONSTRUCT TEMPORARY RUCKMAN REPLACEMENT STRUCTURE & AT GRADE RAMP CONNECTIONS

ALL DIMENSIONS ARE IN METERS UNLESS OTHERWISE SHOWN

PREFERRED ALTERNATIVE
REFINED PRESIDIO PARKWAY
STAGE 1, PHASE 1

SCALE 1:3500

SC-1

	DATE	REVISED BY
	06/07	

		DATE REVISED

CALCULATED/DESIGNED BY: E. LAM
CHECKED BY: J. KARN

STATE OF CALIFORNIA - DEPARTMENT OF TRANSPORTATION
Caltrans PROJECT DEVELOPMENT
DESIGN OVERSIGHT

LAST REVISION 00-00-00
DATE PLOTTED => $DATE$
TIME PLOTTED => $TIME$

RELATIVE BORDER SCALE IS IN MILLIMETERS 0 20 40 60 80

USERNAME => $USER$
DGN FILE => $FILES$

RU 04242

EA 163700

DIST	COUNTY	ROUTE	KILOMETER POST TOTAL PROJECT	SHEET No	TOTAL SHEETS
4	SF	04-SF-101 04-SF-001	KP 12.8-15.7 KP 10.9-11.4		

REGISTERED CIVIL ENGINEER

PLANS APPROVAL DATE

REGISTERED PROFESSIONAL ENGINEER NO. EXP. CIVIL STATE OF CALIFORNIA

The State of California or its officers or agents shall not be responsible for the accuracy or completeness of electronic copies of this plan sheet.

Caltrans now has a web site! To get to the web site, go to: http://www.dot.ca.gov

ARUP
901 MARKET STREET, SUITE 260
SAN FRANCISCO, CA 94103

CONSTRUCTION STAGE 1, PHASE 1
(1) CONSTRUCT OFFLINE PORTIONS OF PERMANENT NB AND SB DOYLE DRIVE
(2) CONSTRUCT LINCOLN BLVD REALIGNMENT
(3) CONSTRUCT TEMPORARY RAMP FROM EXISTING NB VETERANS BLVD TO FUTURE NB DOYLE DRIVE
(4) CONSTRUCT/RESURFACE AND WIDEN PERMANENT PP-NB LINE
(5) CONSTRUCT PROTIONS OF PERMANENT GIRARD
(6) CONSTRUCT PERMANENT SB-GI RAMP
(7) CONSTRUCT TEMPORARY DOYLE DRIVE DETOUR & RICHARDSON AVE CONNECTION
(8) CONSTRUCT PERMANENT GI-GD RAMP
(9) CONSTRUCT TEMPORARY WIDENING ON PERMANENT NB DOYLE DRIVE
(10) CONSTRUCT TEMPORARY WIDENING ON PERMANENT SB DOYLE DRIVE
(11) REPLACE RUCKMAN UC, SEE NOTE 1
(12) CONSTRUCT TEMPORARY RAMP FROM EXISTING SB DOYLE DRIVE TO SB VETERANS BLVD
(13) CONSTRUCT TEMPORARY TRAFFIC SIGNAL
(14) NOT USED
(15) CONSTRUCT TEMPORARY WIDENING ON PERMANENT SB DOYLE DRIVE
(16) CONSTRUCT TEMPORARY MARINA BLVD CONNECTION
(17) CONSTRUCT RETAINING WALL AND CANTILEVER ROADWAY SECTION ADJACENT TO BLDG 105 & 106
(18) REMOVE THE PX BUILDING (604 & 605), AND BUILDING 231
(19) REMOVE NB VETERANS BLVD TO SB DOYLE DRIVE
(20) REMOVE BUILDING 230 AND SALVAGE MATERIALS AND STORE AT A LOCATION DESIGNATED BY PRESIDIO TRUST
(21) CONSTRUCT TEMPORARY RUCKMAN REPLACEMENT STRUCTURE & AT GRADE RAMP CONNECTIONS

TRAFFIC HANDLING - STAGE 1, PHASE 1 DURING HOURS OF LOW TRAFFIC VOLUME
(AA) TRAFFIC REMAINS ON EXISTING LANES WITH LANE CLOSURES DURING ALLOWABLE HOURS
(BB) CLOSE LINCOLN BLVD FOR BRIDGE CONSTRUCTION OVER ROADWAY AND DETOUR TRAFFIC VIA MCDOWELL TO CRISSY FIELD AVE TO LINCOLN AND VIA STOREY TO RUCKMAN TO LINCOLN
(CC) CLOSE MCDOWELL AND CRISSY FIELD AVE FOR BRIDGE CONSTRUCTION OVER ROADWAY AND DETOUR TRAFFIC VIA LINCOLN BLVD, HALLECK ST AND OLD MASON ST
(DD) CLOSE NB VETERANS BLVD FOR BRIDGE CONSTRUCTION OVER ROADWAY AND DETOUR TRAFFIC VIA GEARY BLVD TO VAN NESS AVE TO LOMBARD ST TO NB DOYLE DRIVE
(EE) CLOSE NB DOYLE DRIVE TO SB VETERANS BLVD FOR BRIDGE CONSTRUCTION OVER ROADWAY AND DETOUR TRAFFIC VIA MERCHANT RD EXIT RAMP TO LINCOLN BLVD TO SB DOYLE DR TO SB VETERANS BLVD
(FF) CLOSE RUCKMAN AVE FOR BRIDGE CONSTRUCTION OVER ROADWAY AND DETOUR TRAFFIC VIA LINCOLN BLVD, PARK BLVD, KOBBE AVE & UPTON AVE

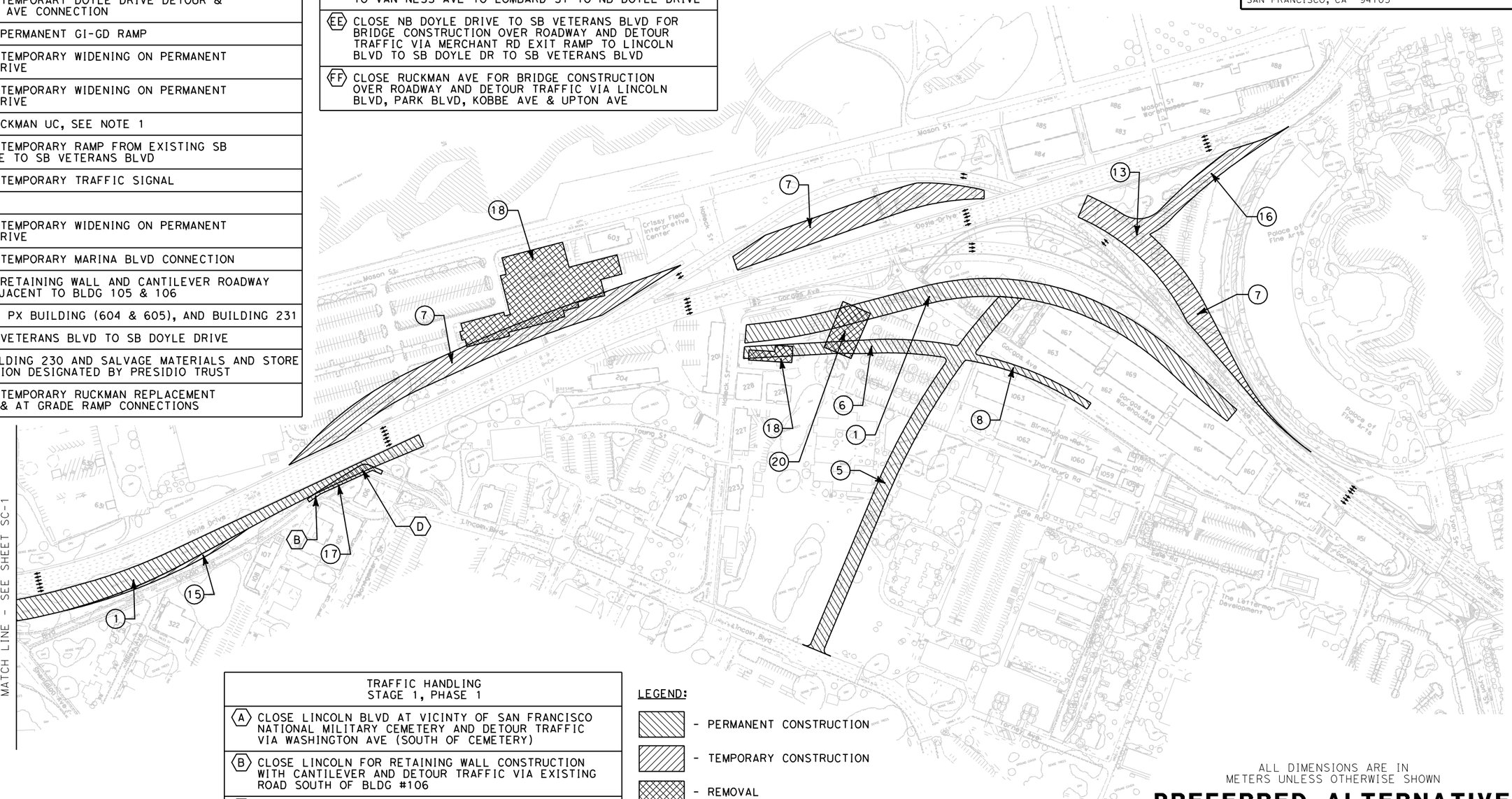

TRAFFIC HANDLING STAGE 1, PHASE 1
(A) CLOSE LINCOLN BLVD AT VICINTY OF SAN FRANCISCO NATIONAL MILITARY CEMETERY AND DETOUR TRAFFIC VIA WASHINGTON AVE (SOUTH OF CEMETERY)
(B) CLOSE LINCOLN FOR RETAINING WALL CONSTRUCTION WITH CANTILEVER AND DETOUR TRAFFIC VIA EXISTING ROAD SOUTH OF BLDG #106
(C) CLOSE NB VETERANS BLVD TO SB DOYLE DRIVE FOR PERMANENT SB DOYLE DRIVE CONSTRUCTION & DETOUR TRAFFIC VIA GEARY BLVD TO VAN NESS BLVD
(D) CLOSE LINCOLN BLVD AT BUILDING #106 AND DETOUR TRAFFIC VIA SHERIDIAN AVE AND MONTGOMERY STREET

LEGEND:

- PERMANENT CONSTRUCTION
- TEMPORARY CONSTRUCTION
- REMOVAL

NOTE:

1. RUCKMAN UC REPLACEMENT TO OCCUR PRIOR TO COMMENCING OTHER ACTIVITIES IN STAGE 1, PHASE 1 CONSTRUCTION.

ALL DIMENSIONS ARE IN METERS UNLESS OTHERWISE SHOWN

PREFERRED ALTERNATIVE REFINED PRESIDIO PARKWAY STAGE 1, PHASE 1

SCALE 1:3500

SC-2

DATE	REVISED BY	DATE REVISED
06/07		

CALCULATED/DESIGNED BY: E. LAM
CHECKED BY: J. KARN

DESIGN OVERSIGHT

STATE OF CALIFORNIA - DEPARTMENT OF TRANSPORTATION
Caltrans PROJECT DEVELOPMENT

LAST REVISION 00-00-00
DATE PLOTTED => $DATE$
TIME PLOTTED => $TIME$

RELATIVE BORDER SCALE IS IN MILLIMETERS 0 20 40 60 80

USERNAME => $USER$
DGN FILE => $FILES$

RU 04242

EA 163700

DIST	COUNTY	ROUTE	KILOMETER POST TOTAL PROJECT	SHEET No	TOTAL SHEETS
4	SF	04-SF-101 04-SF-001	KP 12.8-15.7 KP 10.9-11.4		

REGISTERED CIVIL ENGINEER

PLANS APPROVAL DATE

REGISTERED PROFESSIONAL ENGINEER NO. EXP. CIVIL STATE OF CALIFORNIA

The State of California or its officers or agents shall not be responsible for the accuracy or completeness of electronic copies of this plan sheet.

Caltrans now has a web site! To get to the web site, go to: http://www.dot.ca.gov

ARUP
901 MARKET STREET, SUITE 260
SAN FRANCISCO, CA 94103

Caltrans Metric

SAN FRANCISCO COUNTY TRANSPORTATION AUTHORITY

LEGEND:

- PERMANENT CONSTRUCTION
- TEMPORARY CONSTRUCTION
- REMOVAL

CONSTRUCTION STAGE 1, PHASE 2
(1) CONSTRUCT PERMANENT SB DOYLE DRIVE
(2) CONSTRUCT PERMANENT SB-PP RAMP
(3) CONSTRUCT PERMANENT NB-PP RAMP
(4) CONSTRUCT PERMANENT PP-NB RAMP
(5) REMOVE BUILDING 204 AND SALVAGE MATERIALS AND STORE AT LOCATION DESIGNATED BY PRESIDIO TRUST
(6) REMOVE TEMPORARY RUCKMAN REPLACEMENT STRUCTURE
(7) REMOVE NB DOYLE DRIVE TO SB VETERANS BLVD
(8) CONSTRUCT PERMANENT PP-SB RAMP

NOTE:

1. TEMPORARILY RELOCATE BUILDING 201 PRIOR TO CONSTRUCTION OF MAIN POST TUNNEL

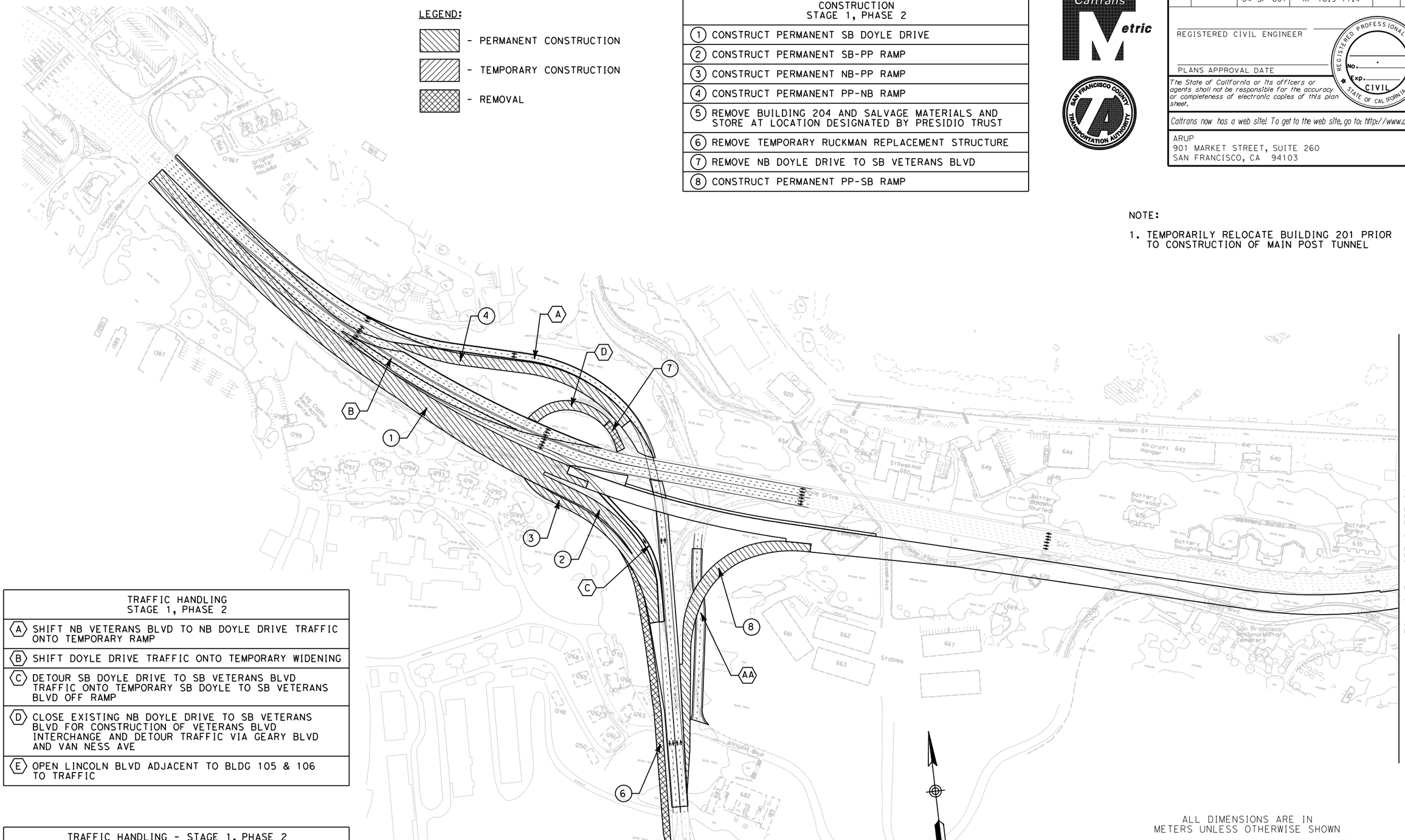

TRAFFIC HANDLING STAGE 1, PHASE 2
(A) SHIFT NB VETERANS BLVD TO NB DOYLE DRIVE TRAFFIC ONTO TEMPORARY RAMP
(B) SHIFT DOYLE DRIVE TRAFFIC ONTO TEMPORARY WIDENING
(C) DETOUR SB DOYLE DRIVE TO SB VETERANS BLVD TRAFFIC ONTO TEMPORARY SB DOYLE TO SB VETERANS BLVD OFF RAMP
(D) CLOSE EXISTING NB DOYLE DRIVE TO SB VETERANS BLVD FOR CONSTRUCTION OF VETERANS BLVD INTERCHANGE AND DETOUR TRAFFIC VIA GEARY BLVD AND VAN NESS AVE
(E) OPEN LINCOLN BLVD ADJACENT TO BLDG 105 & 106 TO TRAFFIC

TRAFFIC HANDLING - STAGE 1, PHASE 2 DURING HOURS OF LOW TRAFFIC VOLUME
(AA) CLOSE LINCOLN BLVD FOR BRIDGE CONSTRUCTION OVER ROADWAY AND DETOUR TRAFFIC VIA MCDOWELL TO CRISSY FIELD AVE TO LINCOLN AND VIA STOREY TO RUCKMAN TO LINCOLN

ALL DIMENSIONS ARE IN METERS UNLESS OTHERWISE SHOWN

PREFERRED ALTERNATIVE REFINED PRESIDIO PARKWAY STAGE 1, PHASE 2

SCALE 1:3500

SC-3

	DATE	REVISED BY
	06/07	DATE REVISED

CALCULATED/DESIGNED BY: E. LAM
CHECKED BY: J. KARN

DESIGN OVERSIGHT

STATE OF CALIFORNIA - DEPARTMENT OF TRANSPORTATION
Caltrans PROJECT DEVELOPMENT

LAST REVISION 00-00-00
DATE PLOTTED => $DATE$
TIME PLOTTED => $TIME$

RELATIVE BORDER SCALE IS IN MILLIMETERS 0 20 40 60 80

USERNAME => $USER$
DGN FILE => $FILES$

RU 04242

EA 163700

DIST	COUNTY	ROUTE	KILOMETER POST TOTAL PROJECT	SHEET No	TOTAL SHEETS
4	SF	04-SF-101 04-SF-001	KP 12.8-15.7 KP 10.9-11.4		

REGISTERED CIVIL ENGINEER

PLANS APPROVAL DATE

REGISTERED PROFESSIONAL ENGINEER NO. EXP. CIVIL STATE OF CALIFORNIA

The State of California or its officers or agents shall not be responsible for the accuracy or completeness of electronic copies of this plan sheet.

Caltrans now has a web site! To get to the web site, go to: http://www.dot.ca.gov

ARUP
901 MARKET STREET, SUITE 260
SAN FRANCISCO, CA 94103

TRAFFIC HANDLING STAGE 1, PHASE 2
(A) SHIFT NB VETERANS BLVD TO NB DOYLE DRIVE TRAFFIC ONTO TEMPORARY RAMP
(B) SHIFT DOYLE DRIVE TRAFFIC ONTO TEMPORARY WIDENING
(C) DETOUR SB DOYLE DRIVE TO SB VETERANS BLVD TRAFFIC ONTO TEMPORARY SB DOYLE TO SB VETERANS BLVD OFF RAMP
(D) CLOSE EXISTING NB DOYLE DRIVE TO SB VETERANS BLVD FOR CONSTRUCTION OF VETERANS BLVD INTERCHANGE AND DETOUR TRAFFIC VIA GEARY BLVD AND VAN NESS AVE
(E) OPEN LINCOLN BLVD ADJACENT TO BLDG 105 & 106 TO TRAFFIC

TRAFFIC HANDLING - STAGE 1, PHASE 2 DURING HOURS OF LOW TRAFFIC VOLUME
(AA) CLOSE LINCOLN BLVD FOR BRIDGE CONSTRUCTION OVER ROADWAY AND DETOUR TRAFFIC VIA MCDOWELL TO CRISSY FIELD AVE TO LINCOLN AND VIA STOREY TO RUCKMAN TO LINCOLN

CONSTRUCTION STAGE 1, PHASE 2
(1) CONSTRUCT PERMANENT SB DOYLE DRIVE
(2) CONSTRUCT PERMANENT SB-PP RAMP
(3) CONSTRUCT PERMANENT NB-PP RAMP
(4) CONSTRUCT PERMANENT PP-NB RAMP
(5) REMOVE BUILDING 204 AND SALVAGE MATERIALS AND STORE AT LOCATION DESIGNATED BY PRESIDIO TRUST
(6) REMOVE TEMPORARY RUCKMAN REPLACEMENT STRUCTURE
(7) REMOVE NB DOYLE DRIVE TO SB VETERANS BLVD
(8) CONSTRUCT PERMANENT PP-SB RAMP

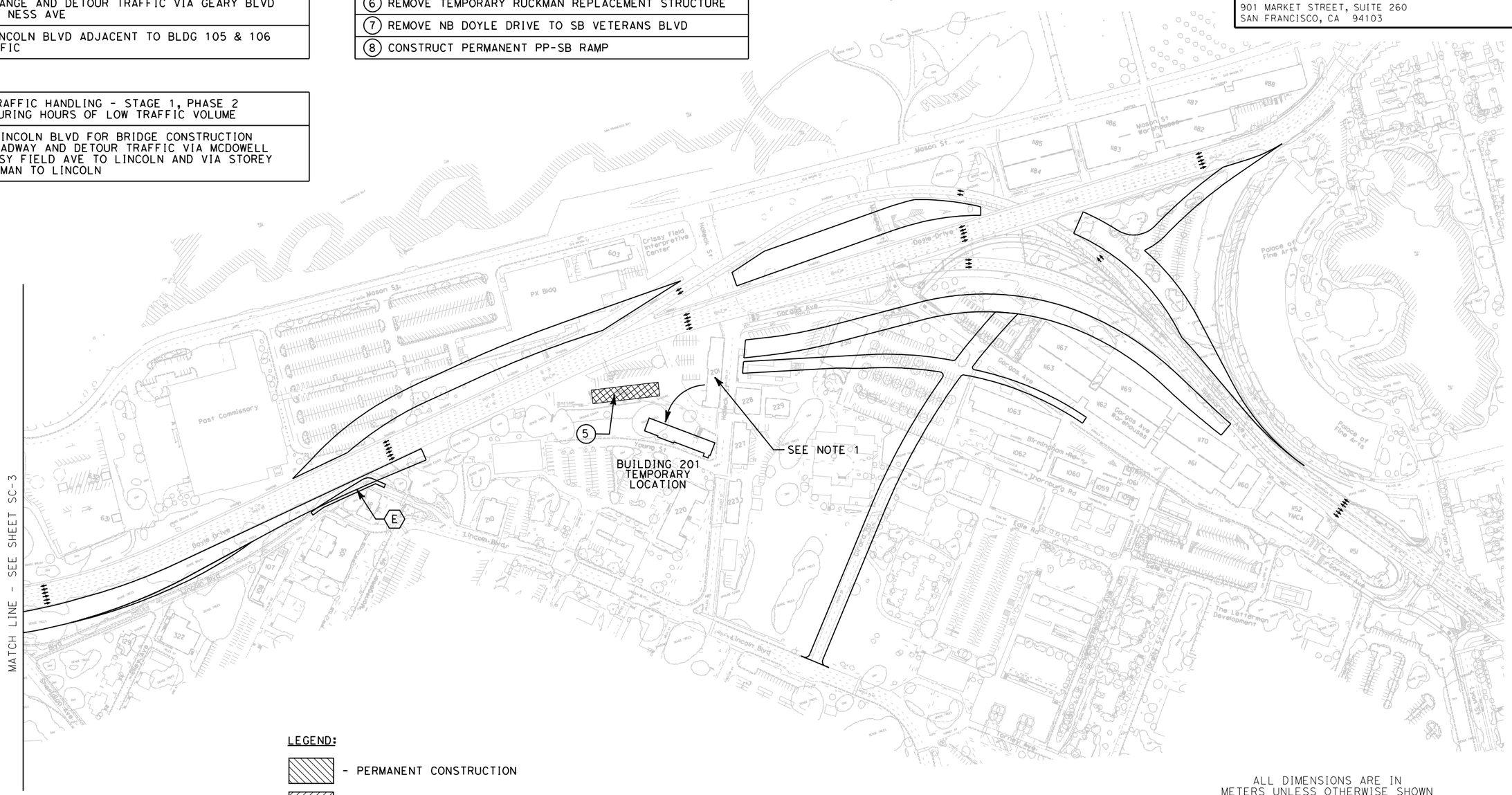

LEGEND:

- PERMANENT CONSTRUCTION
- TEMPORARY CONSTRUCTION
- REMOVAL

NOTE:

1. TEMPORARILY RELOCATE BUILDING 201 PRIOR TO CONSTRUCTION OF MAIN POST TUNNEL

ALL DIMENSIONS ARE IN METERS UNLESS OTHERWISE SHOWN

PREFERRED ALTERNATIVE REFINED PRESIDIO PARKWAY STAGE 1, PHASE 2

SCALE 1:3500

SC-4

DATE	REVISED BY	DATE	REVISED
		06/07	

CALCULATED/DESIGNED BY: E. LAM
CHECKED BY: J. KARN

DESIGN OVERSIGHT

STATE OF CALIFORNIA - DEPARTMENT OF TRANSPORTATION
Caltrans PROJECT DEVELOPMENT

LAST REVISION 00-00-00
DATE PLOTTED => $DATE$
TIME PLOTTED => $TIME$

RELATIVE BORDER SCALE IS IN MILLIMETERS 0 20 40 60 80

USERNAME => $USER$
DGN FILE => $FILES$

RU 04242

EA 163700

DIST	COUNTY	ROUTE	KILOMETER POST TOTAL PROJECT	SHEET No	TOTAL SHEETS
4	SF	04-SF-101 04-SF-001	KP 12.8-15.7 KP 10.9-11.4		

REGISTERED CIVIL ENGINEER

PLANS APPROVAL DATE

REGISTERED PROFESSIONAL ENGINEER NO. EXP. CIVIL STATE OF CALIFORNIA

The State of California or its officers or agents shall not be responsible for the accuracy or completeness of electronic copies of this plan sheet.

Caltrans now has a web site! To get to the web site, go to: http://www.dot.ca.gov

ARUP
901 MARKET STREET, SUITE 260
SAN FRANCISCO, CA 94103

CONSTRUCTION STAGE 1, PHASE 3
(1) CONSTRUCT RICHARDSON TO NB & SB DOYLE DRIVE DETOUR
(2) CONSTRUCT PORTIONS OF SB DOYLE DRIVE
(3) REMOVE PORTION OF EXISTING DOYLE DRIVE
(4) REMOVE PORTIONS OF EXISTING RICHARDSON TO NB DOYLE DRIVE RAMP
(5) REMOVE PORTIONS OF EXISTING DOYLE DRIVE

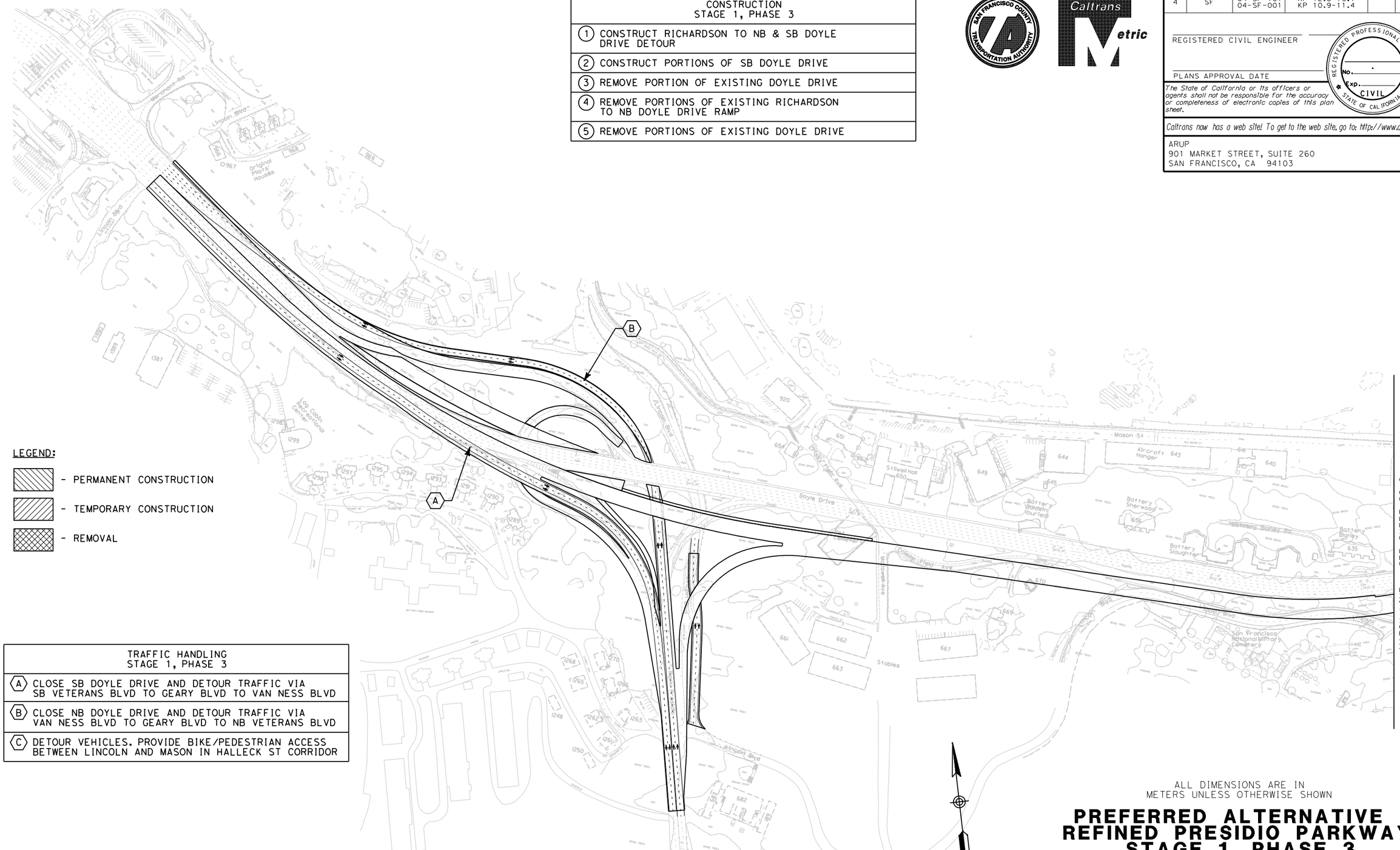

LEGEND:

- PERMANENT CONSTRUCTION
- TEMPORARY CONSTRUCTION
- REMOVAL

TRAFFIC HANDLING STAGE 1, PHASE 3
(A) CLOSE SB DOYLE DRIVE AND DETOUR TRAFFIC VIA SB VETERANS BLVD TO GEARY BLVD TO VAN NESS BLVD
(B) CLOSE NB DOYLE DRIVE AND DETOUR TRAFFIC VIA VAN NESS BLVD TO GEARY BLVD TO NB VETERANS BLVD
(C) DETOUR VEHICLES. PROVIDE BIKE/PEDESTRIAN ACCESS BETWEEN LINCOLN AND MASON IN HALLECK ST CORRIDOR

ALL DIMENSIONS ARE IN METERS UNLESS OTHERWISE SHOWN

PREFERRED ALTERNATIVE REFINED PRESIDIO PARKWAY STAGE 1, PHASE 3 (WEEKEND CLOSURE STAGE)

SCALE 1:3500

SC-5

CALCULATED/DESIGNED BY	E. LAM
CHECKED BY	J. KARN
DATE REVISED BY	06/07
DATE REVISED	

DESIGN OVERSIGHT

STATE OF CALIFORNIA - DEPARTMENT OF TRANSPORTATION
Caltrans PROJECT DEVELOPMENT

LAST REVISION 00-00-00
DATE PLOTTED => $DATE$
TIME PLOTTED => $TIME$

RELATIVE BORDER SCALE IS IN MILLIMETERS 0 20 40 60 80

USERNAME => $USER$
DGN FILE => $FILES$

RU 04242

EA 163700

DIST	COUNTY	ROUTE	KILOMETER POST TOTAL PROJECT	SHEET No	TOTAL SHEETS
4	SF	04-SF-101 04-SF-001	KP 12.8-15.7 KP 10.9-11.4		

REGISTERED CIVIL ENGINEER

PLANS APPROVAL DATE

REGISTERED PROFESSIONAL ENGINEER NO. EXP. CIVIL STATE OF CALIFORNIA

The State of California or its officers or agents shall not be responsible for the accuracy or completeness of electronic copies of this plan sheet.

Caltrans now has a web site! To get to the web site, go to: http://www.dot.ca.gov

ARUP
901 MARKET STREET, SUITE 260
SAN FRANCISCO, CA 94103

SAN FRANCISCO COUNTY TRANSPORTATION AUTHORITY

Caltrans Metric

CONSTRUCTION STAGE 1, PHASE 3
(1) CONSTRUCT RICHARDSON TO NB & SB DOYLE DRIVE DETOUR
(2) CONSTRUCT PORTIONS OF SB DOYLE DRIVE
(3) REMOVE PORTION OF EXISTING DOYLE DRIVE
(4) REMOVE PORTIONS OF EXISTING RICHARDSON TO NB DOYLE DRIVE RAMP
(5) REMOVE PORTIONS OF EXISTING DOYLE DRIVE

TRAFFIC HANDLING STAGE 1, PHASE 3
(A) CLOSE SB DOYLE DRIVE AND DETOUR TRAFFIC VIA SB VETERANS BLVD TO GEARY BLVD TO VAN NESS BLVD
(B) CLOSE NB DOYLE DRIVE AND DETOUR TRAFFIC VIA VAN NESS BLVD TO GEARY BLVD TO NB VETERANS BLVD
(C) DETOUR VEHICLES. PROVIDE BIKE/PEDESTRIAN ACCESS BETWEEN LINCOLN AND MASON IN HALLECK ST CORRIDOR

LEGEND:

- PERMANENT CONSTRUCTION
- TEMPORARY CONSTRUCTION
- REMOVAL

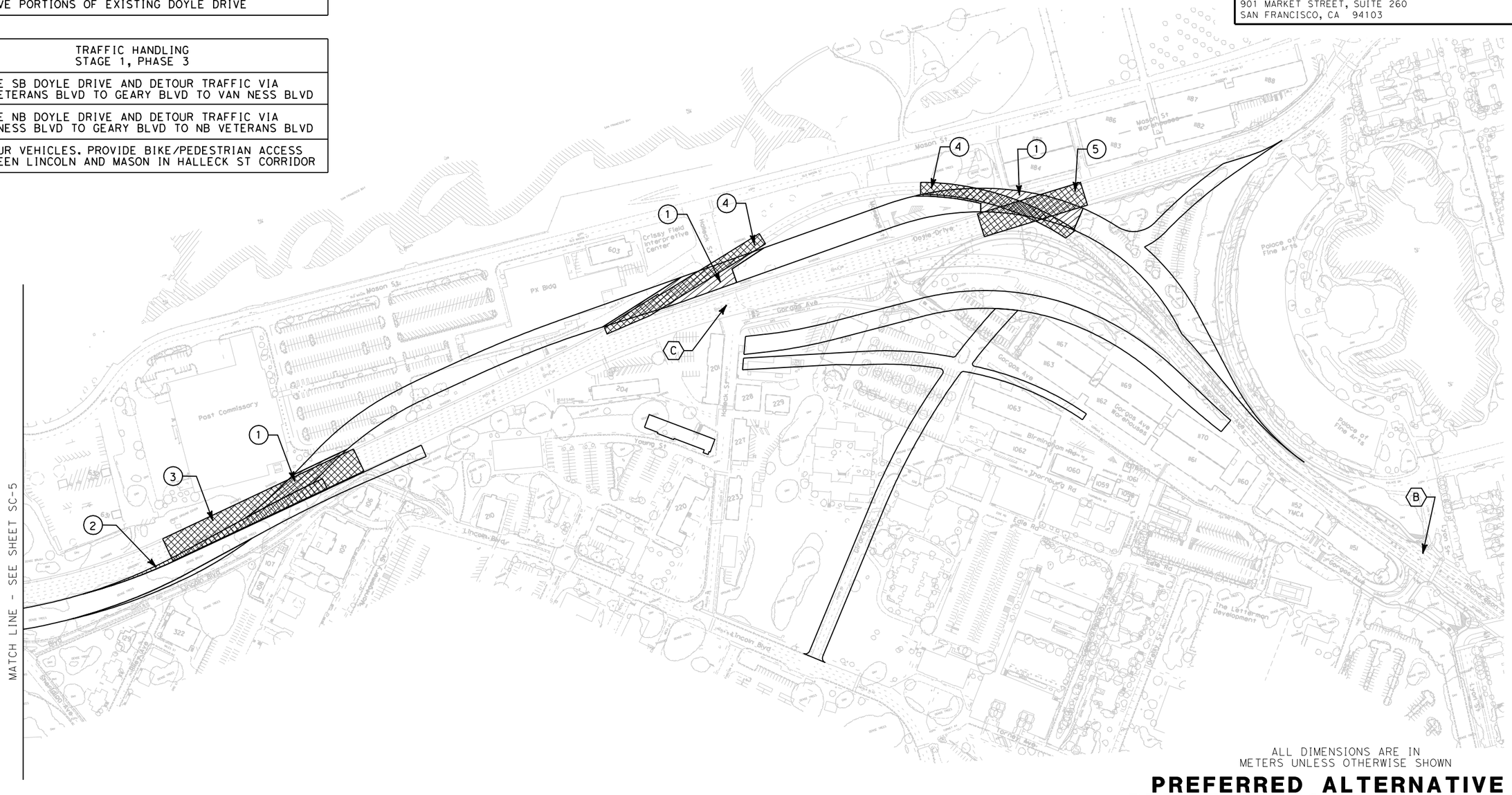

ALL DIMENSIONS ARE IN METERS UNLESS OTHERWISE SHOWN

PREFERRED ALTERNATIVE REFINED PRESIDIO PARKWAY STAGE 1, PHASE 3 (WEEKEND CLOSURE STAGE)

SCALE 1:3500

SC-6

	DATE	REVISED BY
	06/07	DATE REVISED

CALCULATED/DESIGNED BY: E. LAM
CHECKED BY: J. KARN

DESIGN OVERSIGHT

STATE OF CALIFORNIA - DEPARTMENT OF TRANSPORTATION
Caltrans PROJECT DEVELOPMENT

LAST REVISION 00-00-00
DATE PLOTTED => $DATE$
TIME PLOTTED => $TIME$

RELATIVE BORDER SCALE IS IN MILLIMETERS 0 20 40 60 80

USERNAME => $USER$
DGN FILE => $FILES$

RU 04242

EA 163700

DIST	COUNTY	ROUTE	KILOMETER POST TOTAL PROJECT	SHEET No	TOTAL SHEETS
4	SF	04-SF-101 04-SF-001	KP 12.8-15.7 KP 10.9-11.4		

REGISTERED CIVIL ENGINEER

PLANS APPROVAL DATE

REGISTERED PROFESSIONAL ENGINEER NO. EXP. CIVIL STATE OF CALIFORNIA

The State of California or its officers or agents shall not be responsible for the accuracy or completeness of electronic copies of this plan sheet.

Caltrans now has a web site! To get to the web site, go to: http://www.dot.ca.gov

ARUP
901 MARKET STREET, SUITE 260
SAN FRANCISCO, CA 94103

CONSTRUCTION STAGE 2, PHASE 1
(1) CONSTRUCT PORTIONS OF NB DOYLE DRIVE
(2) CONSTRUCT PORTIONS OF SB DOYLE DRIVE
(3) CONSTRUCT GIRARD ROAD TO MARINA CONNECTION
(4) CONSTRUCT GI-NB RAMP
(5) CONSTRUCT RI-GI RAMP
(6) CONSTRUCT PORTIONS OF NB-PP RAMP
(7) REMOVE EXISTING DOYLE DRIVE
(8) REMOVE TEMPORARY SB DOYLE TO SB VETERANS BLVD RAMP
(9) REMOVE EXISTING RICHARDSON TO NB DOYLE DRIVE RAMP
(10) REMOVE TEMPORARY RAMP FROM EXISTING NB VETERANS BLVD TO FUTURE NB DOYLE DRIVE
(11) REMOVE TEMPORARY WIDENING ON PERMANENT NB DOYLE DRIVE
(12) REMOVE NB RICHARDSON AVE SLIP RAMP

LEGEND:

- PERMANENT CONSTRUCTION
- TEMPORARY CONSTRUCTION
- REMOVAL

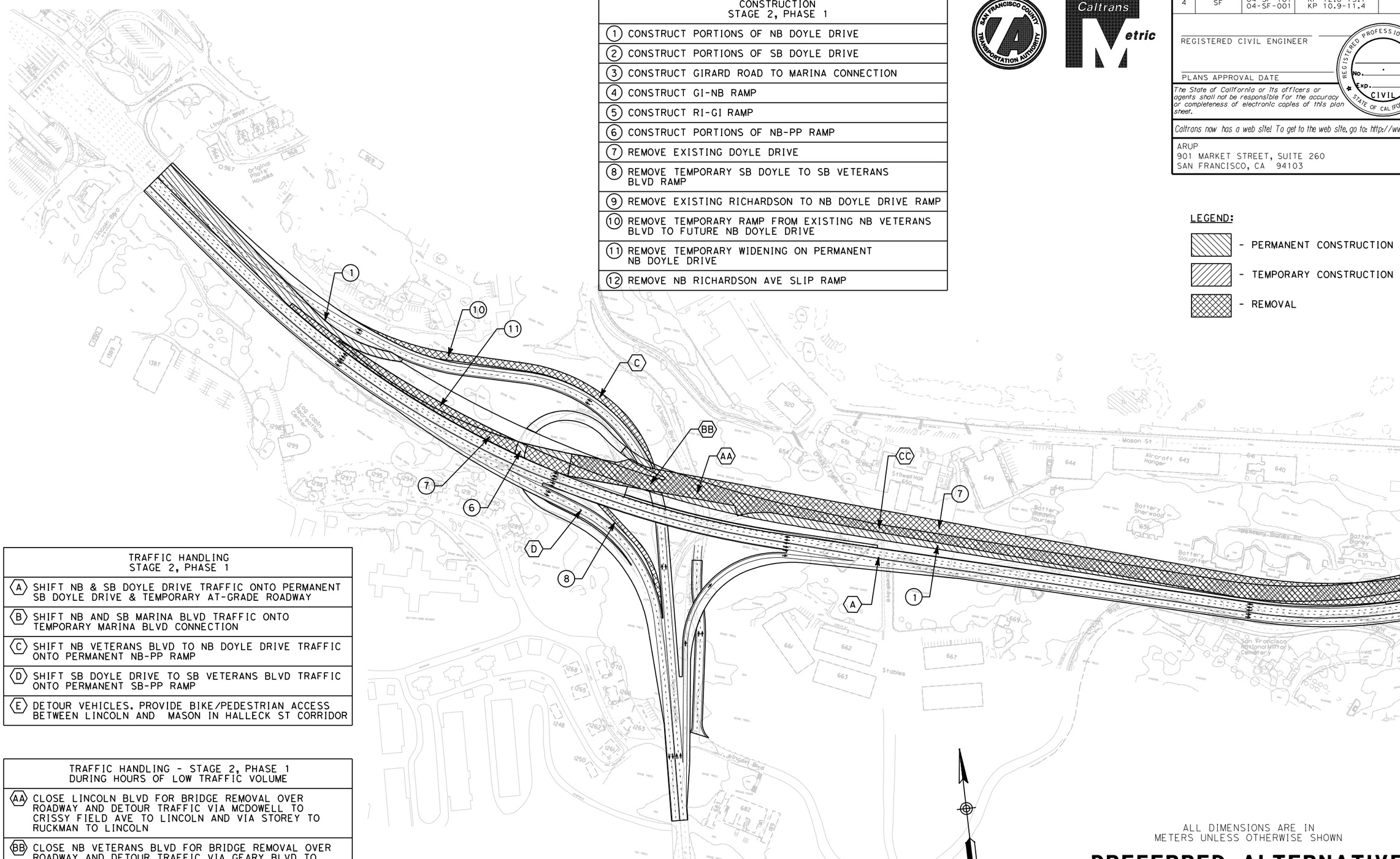

TRAFFIC HANDLING STAGE 2, PHASE 1
(A) SHIFT NB & SB DOYLE DRIVE TRAFFIC ONTO PERMANENT SB DOYLE DRIVE & TEMPORARY AT-GRADE ROADWAY
(B) SHIFT NB AND SB MARINA BLVD TRAFFIC ONTO TEMPORARY MARINA BLVD CONNECTION
(C) SHIFT NB VETERANS BLVD TO NB DOYLE DRIVE TRAFFIC ONTO PERMANENT NB-PP RAMP
(D) SHIFT SB DOYLE DRIVE TO SB VETERANS BLVD TRAFFIC ONTO PERMANENT SB-PP RAMP
(E) DETOUR VEHICLES. PROVIDE BIKE/PEDESTRIAN ACCESS BETWEEN LINCOLN AND MASON IN HALLECK ST CORRIDOR

TRAFFIC HANDLING - STAGE 2, PHASE 1 DURING HOURS OF LOW TRAFFIC VOLUME
(AA) CLOSE LINCOLN BLVD FOR BRIDGE REMOVAL OVER ROADWAY AND DETOUR TRAFFIC VIA MCDOWELL TO CRISSY FIELD AVE TO LINCOLN AND VIA STOREY TO RUCKMAN TO LINCOLN
(BB) CLOSE NB VETERANS BLVD FOR BRIDGE REMOVAL OVER ROADWAY AND DETOUR TRAFFIC VIA GEARY BLVD TO VAN NESS AVE TO LOMBARD ST TO NB DOYLE DRIVE
(CC) CLOSE MCDOWELL AND CRISSY FIELD AVE FOR BRIDGE CONSTRUCTION AND REMOVAL OVER ROADWAY AND DETOUR TRAFFIC VIA LINCOLN BLVD, HALLECK ST AND OLD MASON ST

ALL DIMENSIONS ARE IN METERS UNLESS OTHERWISE SHOWN

PREFERRED ALTERNATIVE REFINED PRESIDIO PARKWAY STAGE 2, PHASE 1

SCALE 1:3500

SC-7

CALCULATED/DESIGNED BY	E. LAM	DATE	REVISED BY
CHECKED BY	J. KARN	06/07	DATE REVISED

STATE OF CALIFORNIA - DEPARTMENT OF TRANSPORTATION
Caltrans PROJECT DEVELOPMENT
DESIGN OVERSIGHT

LAST REVISION 00-00-00
DATE PLOTTED => $DATE$
TIME PLOTTED => $TIME$

RELATIVE BORDER SCALE IS IN MILLIMETERS 0 20 40 60 80

USERNAME => $USER$
DGN FILE => $FILES$

RU 04242

EA 163700

DIST	COUNTY	ROUTE	KILOMETER POST TOTAL PROJECT	SHEET No	TOTAL SHEETS
4	SF	04-SF-101 04-SF-001	KP 12.8-15.7 KP 10.9-11.4		

REGISTERED CIVIL ENGINEER

PLANS APPROVAL DATE

REGISTERED PROFESSIONAL ENGINEER NO. EXP. CIVIL STATE OF CALIFORNIA

The State of California or its officers or agents shall not be responsible for the accuracy or completeness of electronic copies of this plan sheet.

Caltrans now has a web site! To get to the web site, go to: http://www.dot.ca.gov

ARUP
901 MARKET STREET, SUITE 260
SAN FRANCISCO, CA 94103

CONSTRUCTION STAGE 2, PHASE 1
(1) CONSTRUCT PORTIONS OF NB DOYLE DRIVE
(2) CONSTRUCT PORTIONS OF SB DOYLE DRIVE
(3) CONSTRUCT GIRARD ROAD TO MARINA CONNECTION
(4) CONSTRUCT GI-NB RAMP
(5) CONSTRUCT RI-GI RAMP
(6) CONSTRUCT PORTIONS OF NB-PP RAMP
(7) REMOVE EXISTING DOYLE DRIVE
(8) REMOVE TEMPORARY SB DOYLE TO SB VETERANS BLVD RAMP
(9) REMOVE EXISTING RICHARDSON TO NB DOYLE DRIVE RAMP
(10) REMOVE TEMPORARY RAMP FROM EXISTING NB VETERANS BLVD TO FUTURE NB DOYLE DRIVE
(11) REMOVE TEMPORARY WIDENING ON PERMANENT NB DOYLE DRIVE
(12) REMOVE NB RICHARDSON AVE SLIP RAMP

TRAFFIC HANDLING STAGE 2, PHASE 1
(A) SHIFT NB & SB DOYLE DRIVE TRAFFIC ONTO PERMANENT SB DOYLE DRIVE & TEMPORARY AT-GRADE ROADWAY
(B) SHIFT NB AND SB MARINA BLVD TRAFFIC ONTO TEMPORARY MARINA BLVD CONNECTION
(C) SHIFT NB VETERANS BLVD TO NB DOYLE DRIVE TRAFFIC ONTO PERMANENT NB-PP RAMP
(D) SHIFT SB DOYLE DRIVE TO SB VETERANS BLVD TRAFFIC ONTO PERMANENT SB-PP RAMP
(E) DETOUR VEHICLES. PROVIDE BIKE/PEDESTRIAN ACCESS BETWEEN LINCOLN AND MASON IN HALLECK ST CORRIDOR

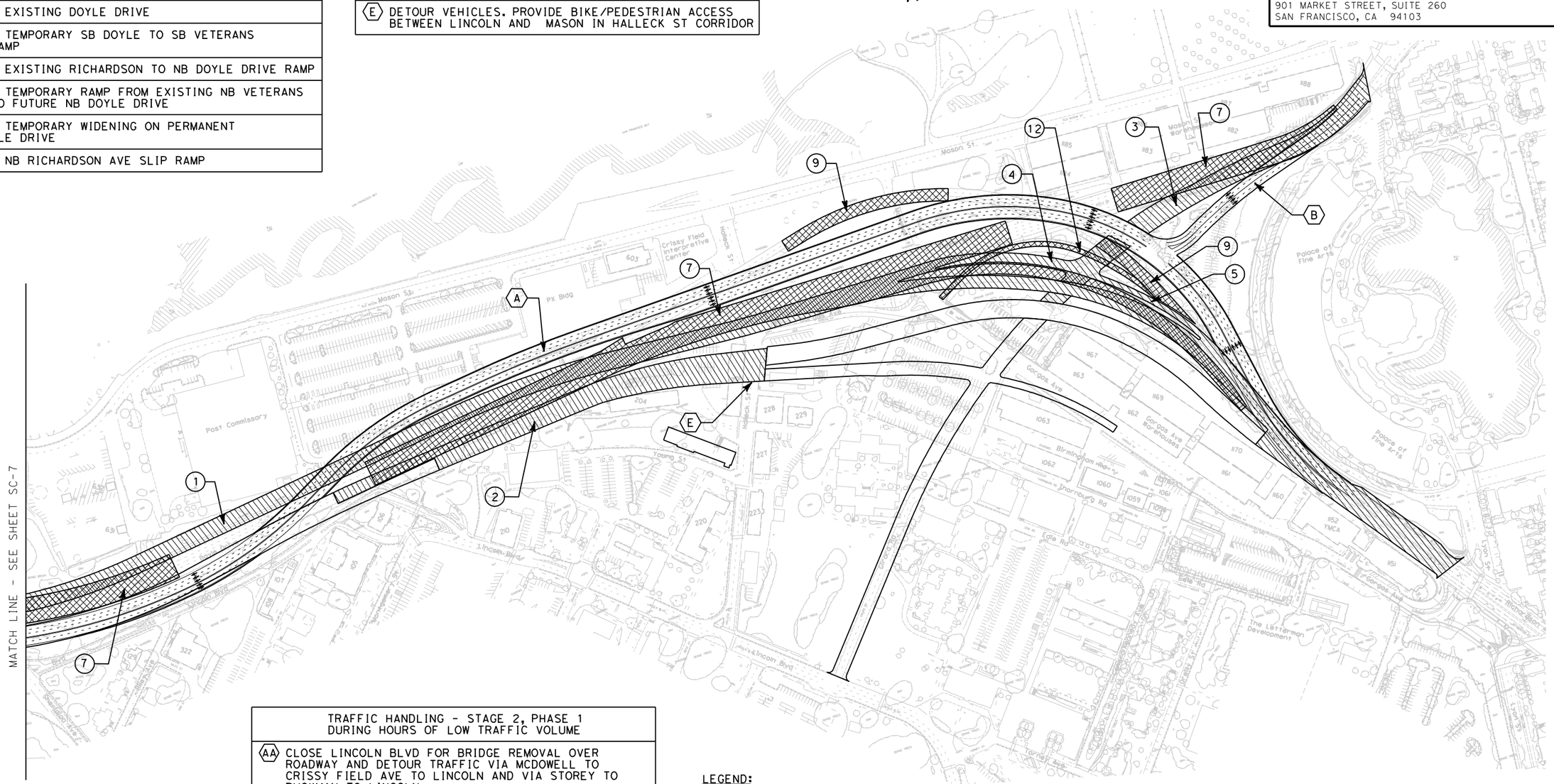

TRAFFIC HANDLING - STAGE 2, PHASE 1 DURING HOURS OF LOW TRAFFIC VOLUME
(AA) CLOSE LINCOLN BLVD FOR BRIDGE REMOVAL OVER ROADWAY AND DETOUR TRAFFIC VIA MCDOWELL TO CRISSY FIELD AVE TO LINCOLN AND VIA STOREY TO RUCKMAN TO LINCOLN
(BB) CLOSE NB VETERANS BLVD FOR BRIDGE REMOVAL OVER ROADWAY AND DETOUR TRAFFIC VIA GEARY BLVD TO VAN NESS AVE TO LOMBARD ST TO NB DOYLE DRIVE
(CC) CLOSE MCDOWELL AND CRISSY FIELD AVE FOR BRIDGE CONSTRUCTION AND REMOVAL OVER ROADWAY AND DETOUR TRAFFIC VIA LINCOLN BLVD, HALLECK ST AND OLD MASON ST

LEGEND:

- PERMANENT CONSTRUCTION
- TEMPORARY CONSTRUCTION
- REMOVAL

ALL DIMENSIONS ARE IN METERS UNLESS OTHERWISE SHOWN

PREFERRED ALTERNATIVE REFINED PRESIDIO PARKWAY STAGE 2, PHASE 1

SCALE 1:3500

SC-8

DATE	REVISED BY	DATE REVISED

CALCULATED/DESIGNED BY: E. LAM
CHECKED BY: J. KARN

STATE OF CALIFORNIA - DEPARTMENT OF TRANSPORTATION
Caltrans PROJECT DEVELOPMENT
DESIGN OVERSIGHT

LAST REVISION 00-00-00
DATE PLOTTED => $DATE$
TIME PLOTTED => $TIME$

RELATIVE BORDER SCALE IS IN MILLIMETERS 0 20 40 60 80

USERNAME => $USER$
DGN FILE => $FILES$

RU 04242

EA 163700

DIST	COUNTY	ROUTE	KILOMETER POST TOTAL PROJECT	SHEET No	TOTAL SHEETS
4	SF	04-SF-101 04-SF-001	KP 12.8-15.7 KP 10.9-11.4		

REGISTERED CIVIL ENGINEER

PLANS APPROVAL DATE

REGISTERED PROFESSIONAL ENGINEER NO. EXP. CIVIL STATE OF CALIFORNIA

The State of California or its officers or agents shall not be responsible for the accuracy or completeness of electronic copies of this plan sheet.

Caltrans now has a web site! To get to the web site, go to: http://www.dot.ca.gov

ARUP
901 MARKET STREET, SUITE 260
SAN FRANCISCO, CA 94103

CONSTRUCTION STAGE 2, PHASE 2
(1) REMOVE TEMPORARY AT GRADE ROADWAY

TRAFFIC HANDLING STAGE 2, PHASE 2
(A) CLOSE SB DOYLE DRIVE AND DETOUR TRAFFIC VIA SB VETERANS BLVD TO GEARY BLVD TO VAN NESS BLVD
(B) CLOSE NB DOYLE DRIVE AND DETOUR TRAFFIC VIA VAN NESS BLVD TO GEARY BLVD TO NB VETERANS BLVD
(C) DETOUR VEHICLES. PROVIDE BIKE/PEDESTRIAN ACCESS BETWEEN LINCOLN AND MASON IN HALLECK ST CORRIDOR

LEGEND:

- PERMANENT CONSTRUCTION
- TEMPORARY CONSTRUCTION
- REMOVAL

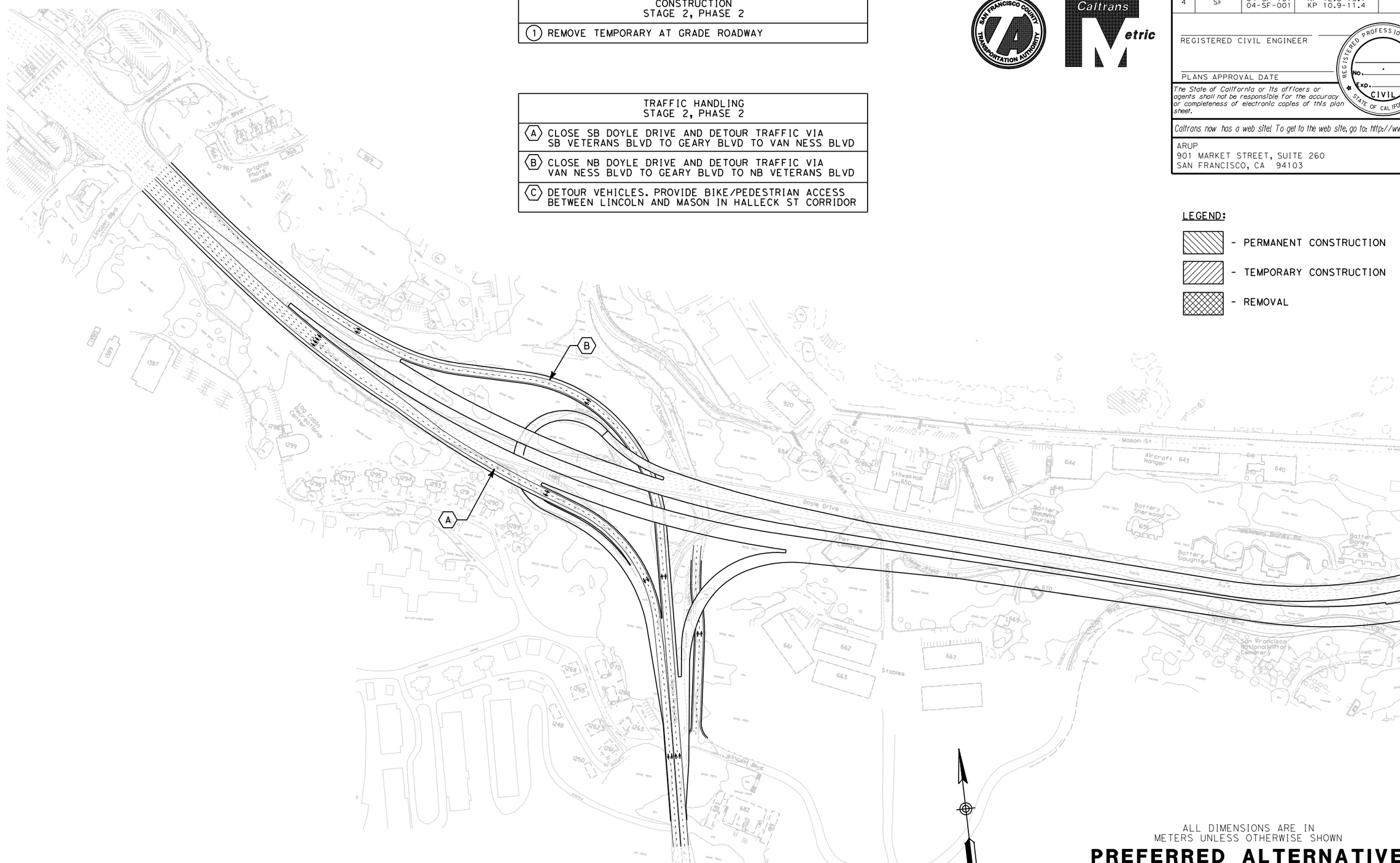

ALL DIMENSIONS ARE IN METERS UNLESS OTHERWISE SHOWN

PREFERRED ALTERNATIVE REFINED PRESIDIO PARKWAY STAGE 2, PHASE 2 (WEEKEND CLOSURE STAGE)

SCALE 1:3500

SC-9

CALCULATED/DESIGNED BY	E. LAM	06/07
CHECKED BY	J. KARN	

DATE	REVISED BY	DATE	REVISED

STATE OF CALIFORNIA - DEPARTMENT OF TRANSPORTATION
Caltrans PROJECT DEVELOPMENT

DESIGN OVERSIGHT

LAST REVISION 00-00-00 | DATE PLOTTED => $DATE$ | TIME PLOTTED => $TIME$

RELATIVE BORDER SCALE IS IN MILLIMETERS 0 20 40 60 80

USERNAME => $USER$
DGN FILE => $FILES$

RU 04242

EA 163700

DIST	COUNTY	ROUTE	KILOMETER POST TOTAL PROJECT	SHEET No	TOTAL SHEETS
4	SF	04-SF-101 04-SF-001	KP 12.8-15.7 KP 10.9-11.4		

REGISTERED CIVIL ENGINEER

PLANS APPROVAL DATE

REGISTERED PROFESSIONAL ENGINEER NO. EXP. CIVIL STATE OF CALIFORNIA

The State of California or its officers or agents shall not be responsible for the accuracy or completeness of electronic copies of this plan sheet.

Caltrans now has a web site! To get to the web site, go to: http://www.dot.ca.gov

ARUP
901 MARKET STREET, SUITE 260
SAN FRANCISCO, CA 94103

CONSTRUCTION STAGE 2, PHASE 2
(1) REMOVE TEMPORARY AT GRADE ROADWAY

TRAFFIC HANDLING STAGE 2, PHASE 2
(A) CLOSE SB DOYLE DRIVE AND DETOUR TRAFFIC VIA SB VETERANS BLVD TO GEARY BLVD TO VAN NESS BLVD
(B) CLOSE NB DOYLE DRIVE AND DETOUR TRAFFIC VIA VAN NESS BLVD TO GEARY BLVD TO NB VETERANS BLVD
(C) DETOUR VEHICLES. PROVIDE BIKE/PEDESTRIAN ACCESS BETWEEN LINCOLN AND MASON IN HALLECK ST CORRIDOR

LEGEND:

- PERMANENT CONSTRUCTION
- TEMPORARY CONSTRUCTION
- REMOVAL

ALL DIMENSIONS ARE IN METERS UNLESS OTHERWISE SHOWN

PREFERRED ALTERNATIVE REFINED PRESIDIO PARKWAY STAGE 2, PHASE 2 (WEEKEND CLOSURE STAGE)

SCALE 1:3500

SC-10

	DATE	REVISED BY
	06/07	DATE REVISED

CALCULATED/DESIGNED BY: E. LAM
CHECKED BY: J. KARN

DESIGN OVERSIGHT

STATE OF CALIFORNIA - DEPARTMENT OF TRANSPORTATION
Caltrans PROJECT DEVELOPMENT

LAST REVISION 00-00-00
DATE PLOTTED => $DATE$
TIME PLOTTED => $TIME$

RELATIVE BORDER SCALE IS IN MILLIMETERS 0 20 40 60 80

USERNAME => $USER$
DGN FILE => $FILES$

RU 04242

EA 163700

DIST	COUNTY	ROUTE	KILOMETER POST TOTAL PROJECT	SHEET No	TOTAL SHEETS
4	SF	04-SF-101 04-SF-001	KP 12.8-15.7 KP 10.9-11.4		

REGISTERED CIVIL ENGINEER

PLANS APPROVAL DATE

REGISTERED PROFESSIONAL ENGINEER NO. EXP. CIVIL STATE OF CALIFORNIA

The State of California or its officers or agents shall not be responsible for the accuracy or completeness of electronic copies of this plan sheet.

Caltrans now has a web site! To get to the web site, go to: http://www.dot.ca.gov

ARUP
901 MARKET STREET, SUITE 260
SAN FRANCISCO, CA 94103

CONSTRUCTION STAGE 3
(1) CONSTRUCT HALLECK STREET
(2) REMOVE SB DOYLE DRIVE TEMPORARY WIDENING
(3) REMOVE TEMPORARY AT-GRADE ROADWAY
(4) REMOVE TEMPORARY MARINA BLVD CONNECTION
(5) CONSTRUCT GORGAS AVE CONNECTION TO RICHARDSON AVE & ASSOCIATED IMPROVEMENTS
(6) CONSTRUCT PERMANENT RETAINING WALL FINISH

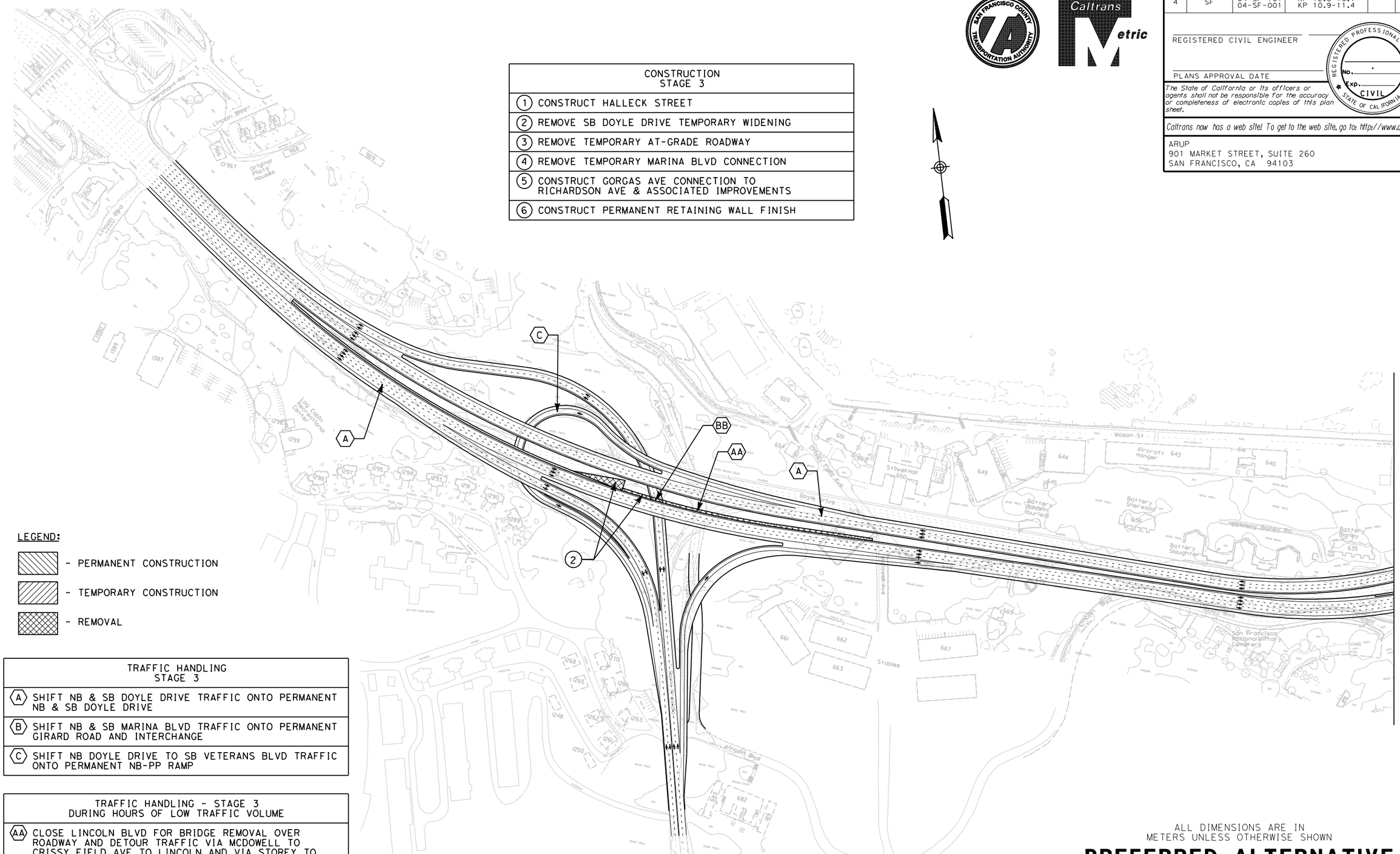

LEGEND:

- PERMANENT CONSTRUCTION
- TEMPORARY CONSTRUCTION
- REMOVAL

TRAFFIC HANDLING STAGE 3
(A) SHIFT NB & SB DOYLE DRIVE TRAFFIC ONTO PERMANENT NB & SB DOYLE DRIVE
(B) SHIFT NB & SB MARINA BLVD TRAFFIC ONTO PERMANENT GIRARD ROAD AND INTERCHANGE
(C) SHIFT NB DOYLE DRIVE TO SB VETERANS BLVD TRAFFIC ONTO PERMANENT NB-PP RAMP

TRAFFIC HANDLING - STAGE 3 DURING HOURS OF LOW TRAFFIC VOLUME
(AA) CLOSE LINCOLN BLVD FOR BRIDGE REMOVAL OVER ROADWAY AND DETOUR TRAFFIC VIA MCDOWELL TO CRISSY FIELD AVE TO LINCOLN AND VIA STOREY TO RUCKMAN TO LINCOLN
(BB) CLOSE NB VETERANS BLVD FOR BRIDGE REMOVAL OVER ROADWAY AND DETOUR TRAFFIC VIA GEARY BLVD TO VAN NESS AVE TO LOMBARD ST TO NB DOYLE DRIVE

ALL DIMENSIONS ARE IN METERS UNLESS OTHERWISE SHOWN

PREFERRED ALTERNATIVE REFINED PRESIDIO PARKWAY STAGE 3

SCALE 1:3500

SC-11

CALCULATED/DESIGNED BY	E. LAM	DATE REVISED BY	
CHECKED BY	J. KARN	06/07	DATE REVISED

DESIGN OVERSIGHT

STATE OF CALIFORNIA - DEPARTMENT OF TRANSPORTATION
Caltrans PROJECT DEVELOPMENT

LAST REVISION 00-00-00
DATE PLOTTED => $DATE$
TIME PLOTTED => $TIME$

RELATIVE BORDER SCALE IS IN MILLIMETERS 0 20 40 60 80

USERNAME => $USER$
DGN FILE => $FILES$

RU 04242

EA 163700

DIST	COUNTY	ROUTE	KILOMETER POST TOTAL PROJECT	SHEET No	TOTAL SHEETS
4	SF	04-SF-101 04-SF-001	KP 12.8-15.7 KP 10.9-11.4		

REGISTERED CIVIL ENGINEER

PLANS APPROVAL DATE

REGISTERED PROFESSIONAL ENGINEER NO. EXP. CIVIL STATE OF CALIFORNIA

The State of California or its officers or agents shall not be responsible for the accuracy or completeness of electronic copies of this plan sheet.

Caltrans now has a web site! To get to the web site, go to: http://www.dot.ca.gov

ARUP
901 MARKET STREET, SUITE 260
SAN FRANCISCO, CA 94103

CONSTRUCTION STAGE 3
(1) CONSTRUCT HALLECK STREET
(2) REMOVE SB DOYLE DRIVE TEMPORARY WIDENING
(3) REMOVE TEMPORARY AT-GRADE ROADWAY
(4) REMOVE TEMPORARY MARINA BLVD CONNECTION
(5) CONSTRUCT GORGAS AVE CONNECTION TO RICHARDSON AVE & ASSOCIATED IMPROVEMENTS
(6) CONSTRUCT PERMANENT RETAINING WALL FINISH

LEGEND:

- PERMANENT CONSTRUCTION
- TEMPORARY CONSTRUCTION
- REMOVAL

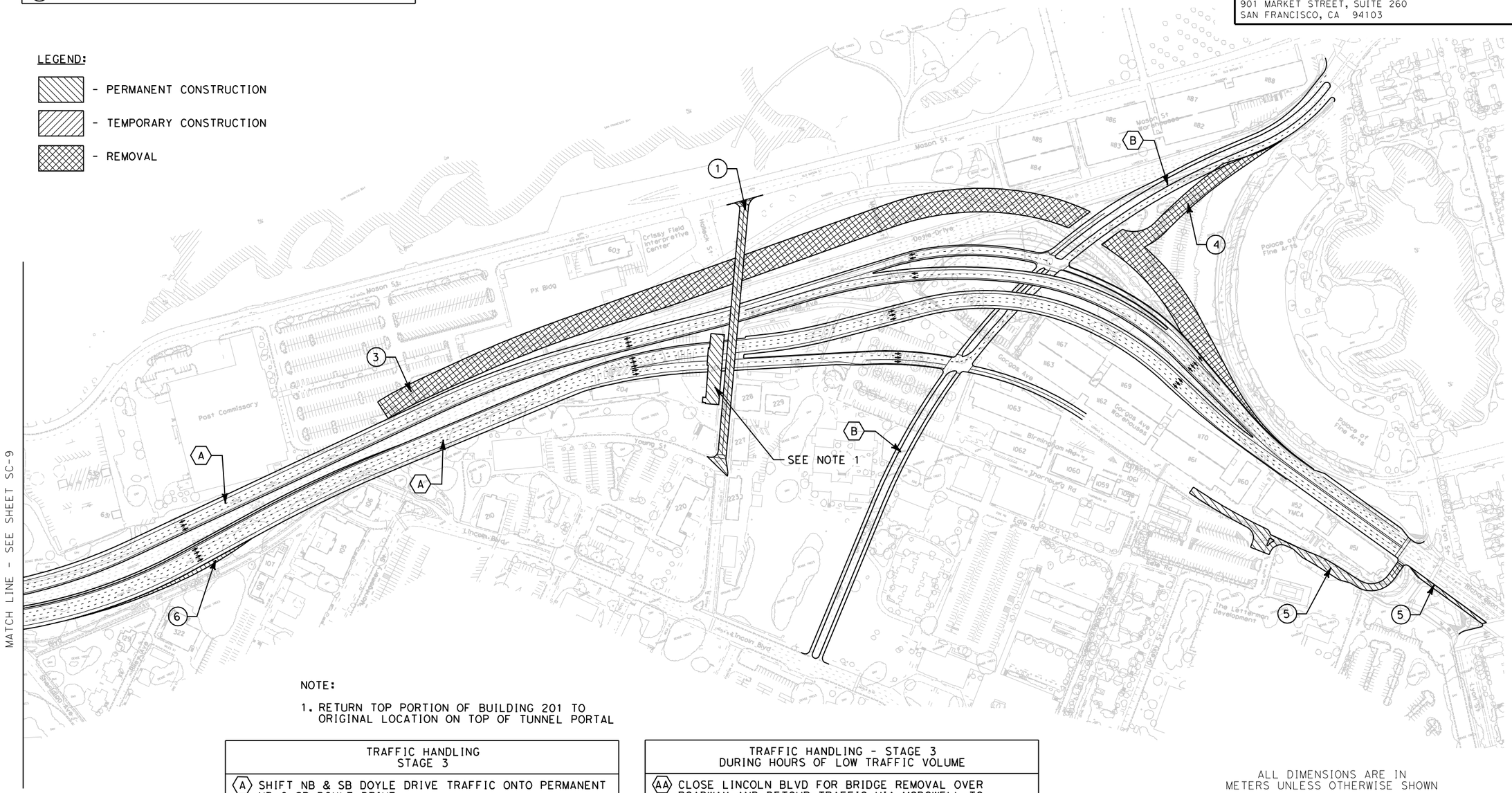

NOTE:

1. RETURN TOP PORTION OF BUILDING 201 TO ORIGINAL LOCATION ON TOP OF TUNNEL PORTAL

TRAFFIC HANDLING STAGE 3
(A) SHIFT NB & SB DOYLE DRIVE TRAFFIC ONTO PERMANENT NB & SB DOYLE DRIVE
(B) SHIFT NB & SB MARINA BLVD TRAFFIC ONTO PERMANENT GIRARD ROAD AND INTERCHANGE
(C) SHIFT NB DOYLE DRIVE TO SB VETERANS BLVD TRAFFIC ONTO PERMANENT NB-PP RAMP

TRAFFIC HANDLING - STAGE 3 DURING HOURS OF LOW TRAFFIC VOLUME
(AA) CLOSE LINCOLN BLVD FOR BRIDGE REMOVAL OVER ROADWAY AND DETOUR TRAFFIC VIA MCDOWELL TO CRISSY FIELD AVE TO LINCOLN AND VIA STOREY TO RUCKMAN TO LINCOLN
(BB) CLOSE NB VETERANS BLVD FOR BRIDGE REMOVAL OVER ROADWAY AND DETOUR TRAFFIC VIA GEARY BLVD TO VAN NESS AVE TO LOMBARD ST TO NB DOYLE DRIVE

ALL DIMENSIONS ARE IN METERS UNLESS OTHERWISE SHOWN

PREFERRED ALTERNATIVE REFINED PRESIDIO PARKWAY STAGE 3

SCALE 1:3500

SC-12

STATE OF CALIFORNIA - DEPARTMENT OF TRANSPORTATION
Caltrans PROJECT DEVELOPMENT
DESIGN OVERSIGHT

CALCULATED/DESIGNED BY: E. LAM
CHECKED BY: J. KARN
DATE REVISED BY: 06/07
DATE REVISED

LAST REVISION 00-00-00
DATE PLOTTED => $DATE$
TIME PLOTTED => $TIME$

RELATIVE BORDER SCALE IS IN MILLIMETERS 0 20 40 60 80

USERNAME => $USER$
DGN FILE => $FILES$

RU 04242

EA 163700

ATTACHMENT E

Preferred Alternative
Advanced Planning Studies

South Access to the Golden Gate Bridge
Doyle Drive Project Report

PREPARED FOR THE STATE OF CALIFORNIA - DEPARTMENT OF TRANSPORTATION- DIVISION OF STRUCTURES

DIST.	COUNTY	ROUTE	KILOMETER POST TOTAL PROJECT
4	SF	04-SF-101 04-SF-001	KP 12.8-15.7 KP 10.9-11.4

REVISION 6
JUNE 2007

ARUP
901 MARKET STREET, SUITE 260
SAN FRANCISCO, CA 94103

Caltrans Metric

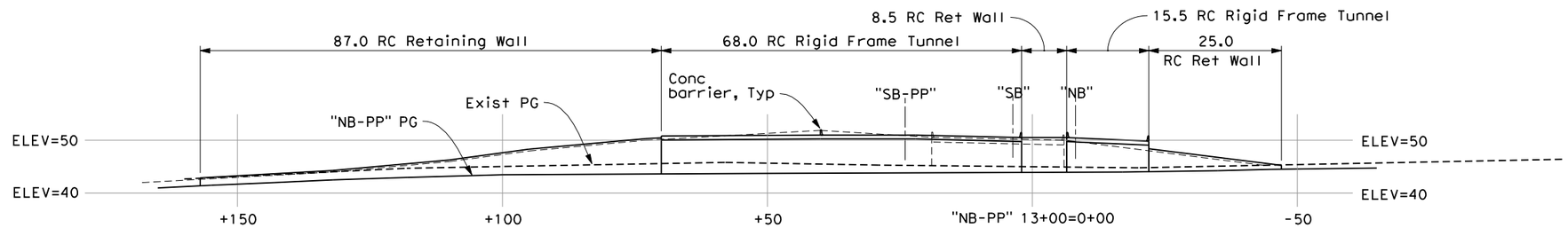

DEVELOPED ELEVATION RW2

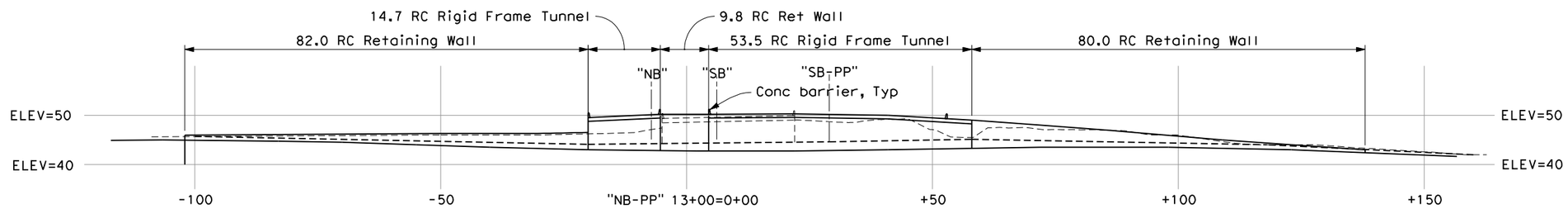

DEVELOPED ELEVATION RW1

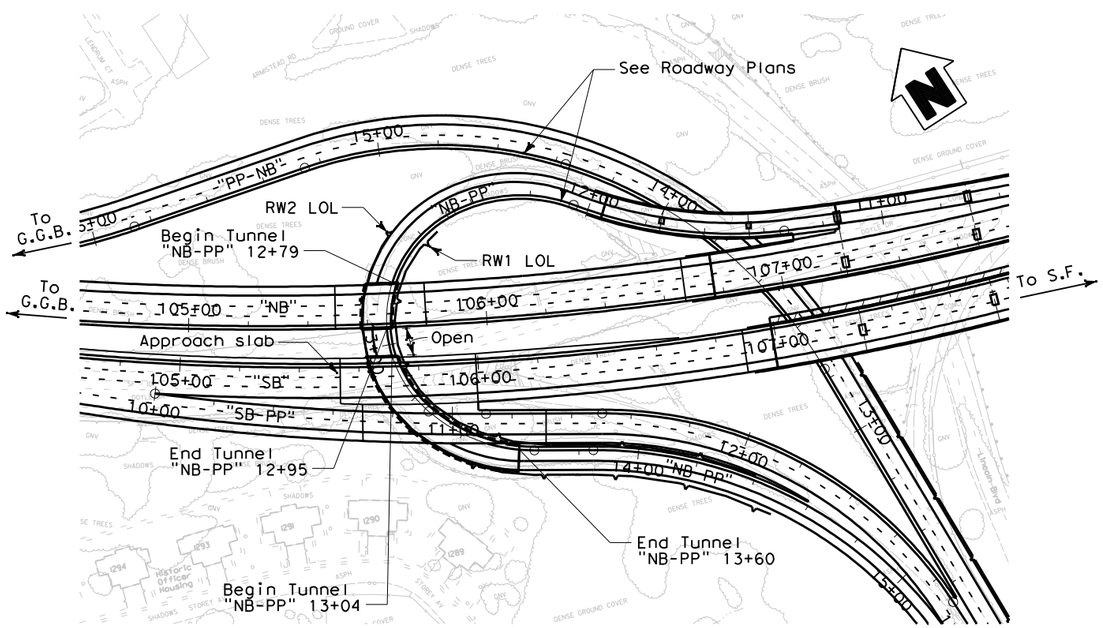

PLAN

Scale: 1:1000

Date of Estimate	05-16-07
Bridge Removal	-
Str. Depth	0.75 m
Length	222.0 m
Width	12 m
Area	2,664.0 m²
Cost / sq m including 10 % Mobilization & 25 % Contingency	$ 7,045
Total Cost (including retaining walls)	$ 18,767,000

NOTES:

1. Applicable for overcrossing structures:
   "NB" Line, "PP-NB" Line, "SB" Line, "SB-PP" Line.
2. Minimum vertical clearances are:
   "PP-NB" Line over "NB-PP" Line - 5.1 m
   "NB" Line over "NB-PP" Line - 5.1 m
   "SB" Line over "NB-PP" Line - 6.0 m
   "SB-PP" Line over "NB-PP" Line - 5.2 m
3. Total cost includes rigid frame and retaining wall
4. Typical Section is applicable to 3 Overpasses
5. For Stage Construction, see Sheet 01-2.

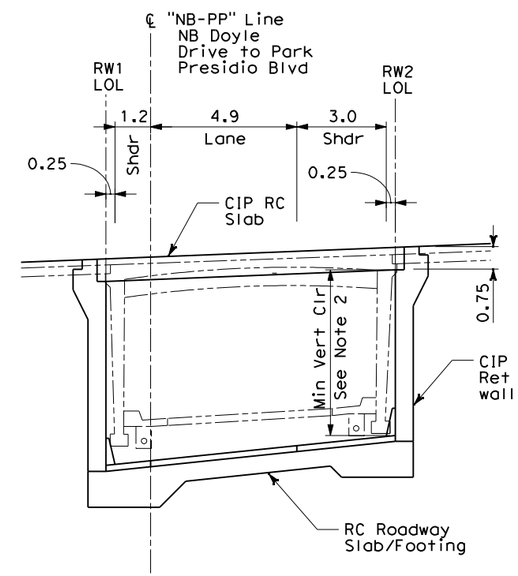

TYPICAL SECTION (See Note 1)

Scale 1:100

ALL DIMENSIONS ARE IN METERS UNLESS OTHERWISE SHOWN

PREFERRED ALTERNATIVE
REFINED PRESIDIO PARKWAY

DESIGNED BY	Q. Liu	DATE	4/2/07
DRAWN BY	B. Mason	DATE	4/2/07
CHECKED BY	E. Lam	DATE	4/2/07
APPROVED	J. Karn	DATE	4/2/07

*
PROJECT ENGINEER
01-1

PLANNING STUDY

NB & SB at PPI UC

BRIDGE NO.	34-19H	RU	04242
SCALE:	AS NOTED	EA	163700

TIME PLOTTED => $TIME$
DATE PLOTTED => $DATE$
USERNAME => $USER$

DIST.	COUNTY	ROUTE	KILOMETER POST TOTAL PROJECT
4	SF	04-SF-101 04-SF-001	KP 12.8-15.7 KP 10.9-11.4

REVISION 6
JUNE 2007

ARUP
901 MARKET STREET, SUITE 260
SAN FRANCISCO, CA 94103

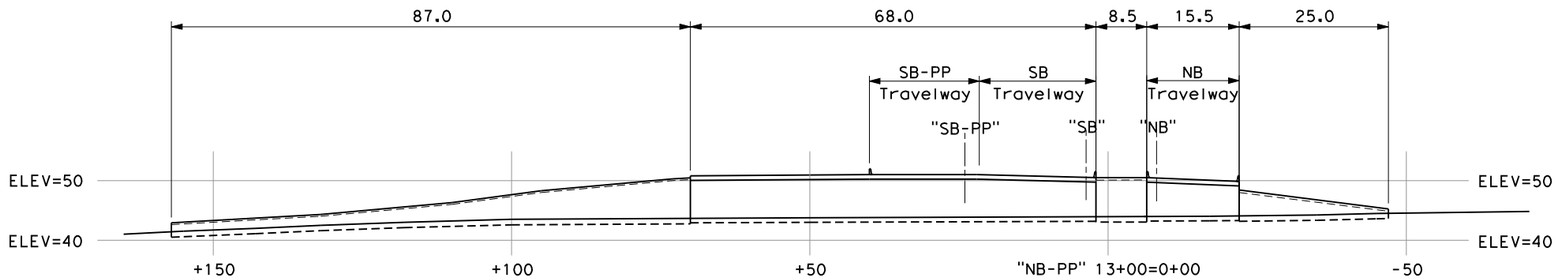

RW2 STAGE C

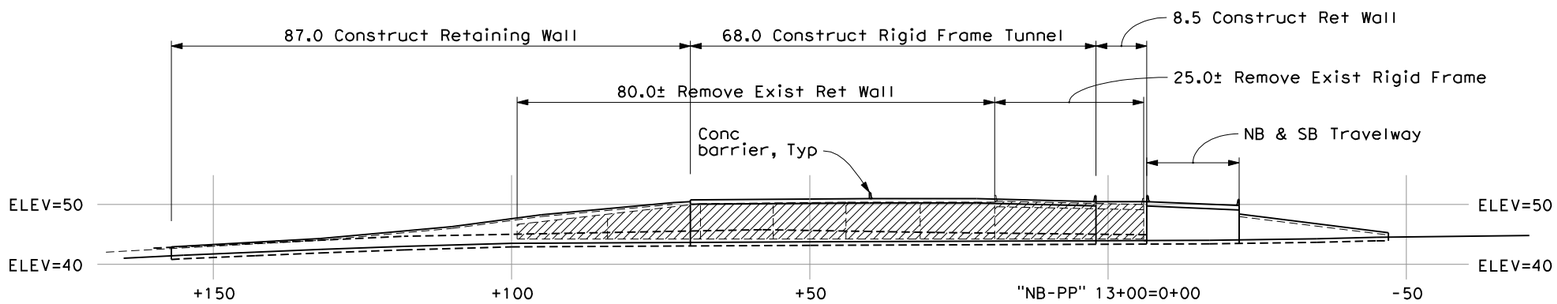

RW2 STAGE B

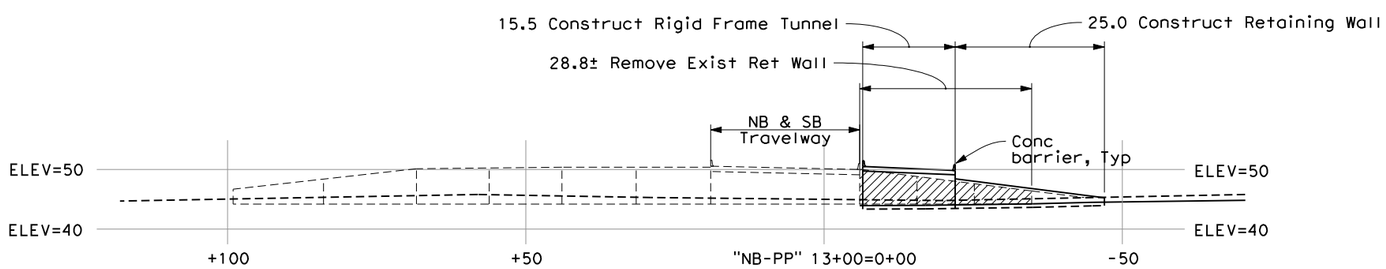

RW2 STAGE A

LEGEND:
Indicates Concrete Removal

ALL DIMENSIONS ARE IN METERS UNLESS OTHERWISE SHOWN

PREFERRED ALTERNATIVE REFINED PRESIDIO PARKWAY

DESIGNED BY	Q. Liu	DATE	4/2/07
DRAWN BY	B. Mason	DATE	4/2/07
CHECKED BY	E. Lam	DATE	4/2/07
APPROVED	J. Karn	DATE	4/2/07

*
PROJECT ENGINEER
01-2

PLANNING STUDY

NB & SB at PPI UC Staging

BRIDGE NO.	34-19H	RU	04242
SCALE:	AS NOTED	EA	163700

PREPARED FOR THE STATE OF CALIFORNIA - DEPARTMENT OF TRANSPORTATION- DIVISION OF STRUCTURES

TIME PLOTTED => $TIME$
DATE PLOTTED => $DATE$
USERNAME => $USER$

PREPARED FOR THE STATE OF CALIFORNIA - DEPARTMENT OF TRANSPORTATION- DIVISION OF STRUCTURES

DIST.	COUNTY	ROUTE	KILOMETER POST TOTAL PROJECT
4	SF	04-SF-101 04-SF-001	KP 12.8-15.7 KP 10.9-11.4

REVISION 6
JUNE 2007

ARUP
901 MARKET STREET, SUITE 260
SAN FRANCISCO, CA 94103

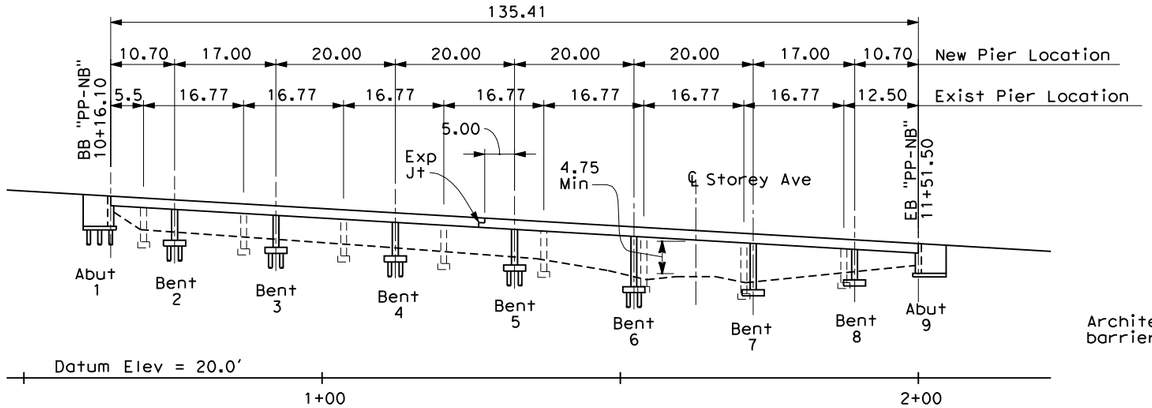

ELEVATION
1:500

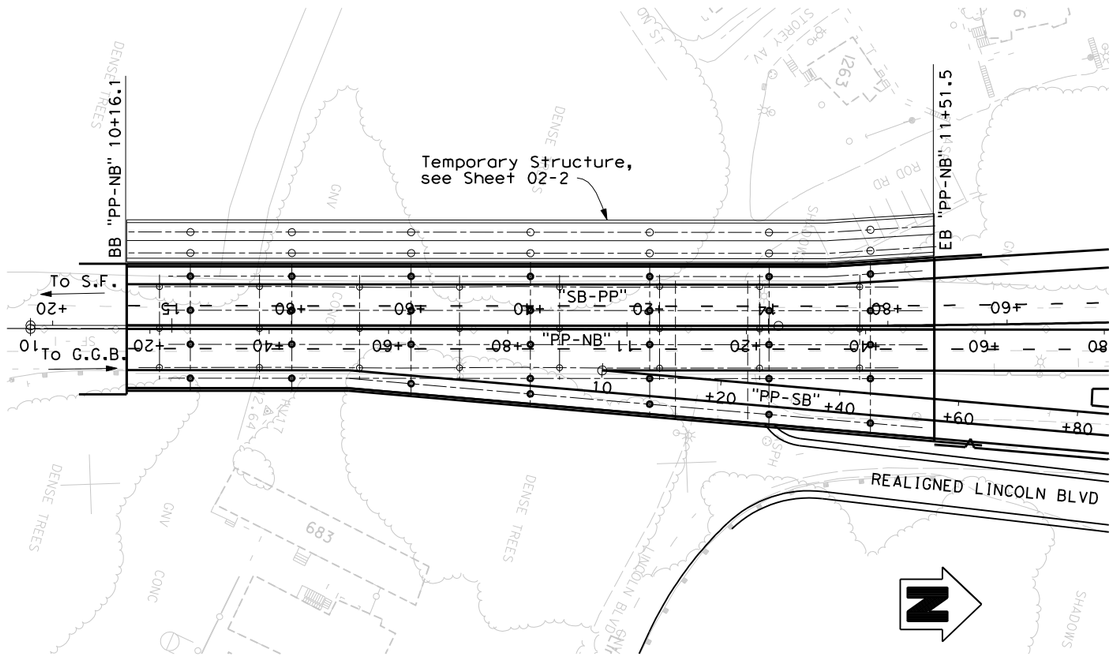

PLAN
1:500

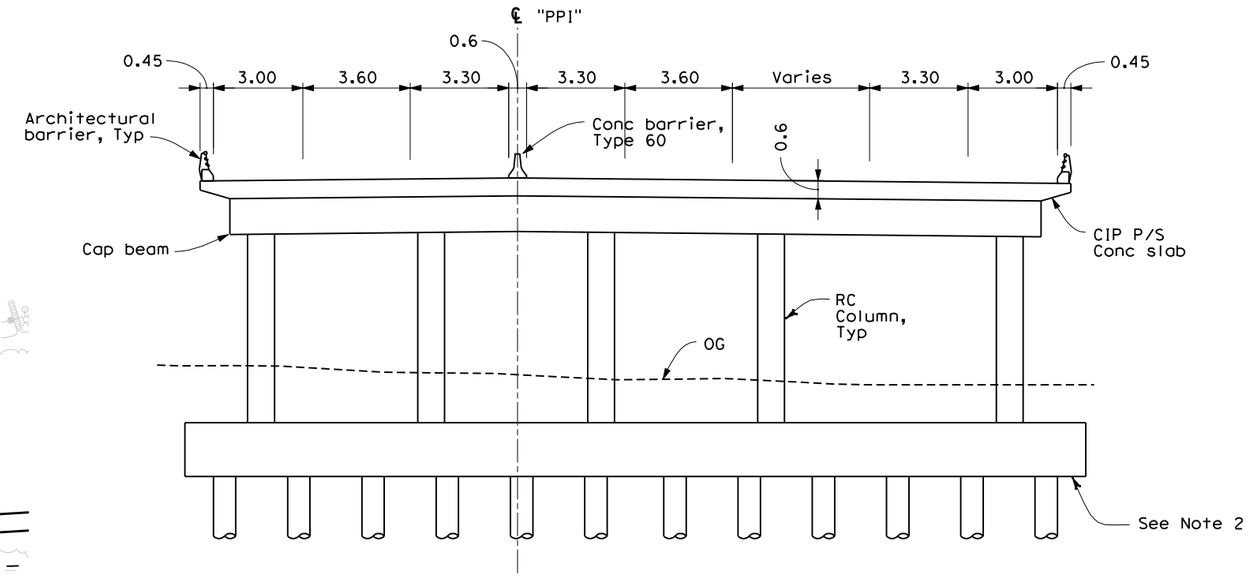

TYPICAL SECTION
1:100

Date of Estimate	05-16-07
Bridge Removal	-
Str. Depth	1.60 m
Length	135.4 m
Width	Varies
Area	3,305.0 m²
Cost / sq m including 10 % Mobilization & 25 % Contingency	$ 5,503
Retrofit Allowance	Included
Total Cost	$ 18,186,000

NOTES:

1. Traffic will pass through construction.

2. See Sheet 02-2 for Stage Construction & Traffic Handling.

ALL DIMENSIONS ARE IN METERS UNLESS OTHERWISE SHOWN

PREFERRED ALTERNATIVE REFINED PRESIDIO PARKWAY

DESIGNED BY	Q. Liu	DATE	4/2/07
DRAWN BY	B. Mason	DATE	4/2/07
CHECKED BY	E. Lam	DATE	4/2/07
APPROVED	J. Karn	DATE	4/2/07

*
PROJECT ENGINEER
02-1

PLANNING STUDY

Ruckman/Storey UC

BRIDGE NO.	A2	RU	04242
SCALE:	AS NOTED	EA	163700

USERNAME => $USER$ DATE PLOTTED => $DATE$ TIME PLOTTED => $TIME$

PREPARED FOR THE STATE OF CALIFORNIA - DEPARTMENT OF TRANSPORTATION- DIVISION OF STRUCTURES

DIST.	COUNTY	ROUTE	KILOMETER POST TOTAL PROJECT
4	SF	04-SF-101 04-SF-001	KP 12.8-15.7 KP 10.9-11.4

REVISION 6
JUNE 2007

ARUP
901 MARKET STREET, SUITE 260
SAN FRANCISCO, CA 94103

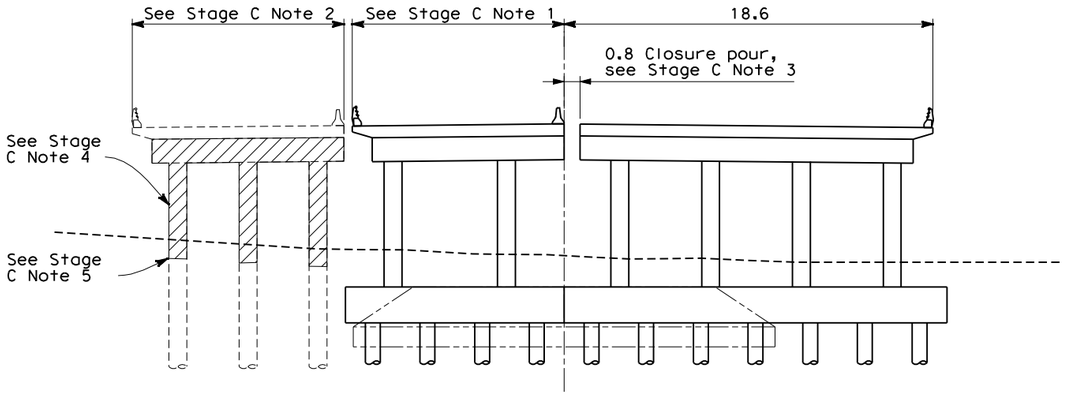

TYPICAL SECTION STAGE C
1:150

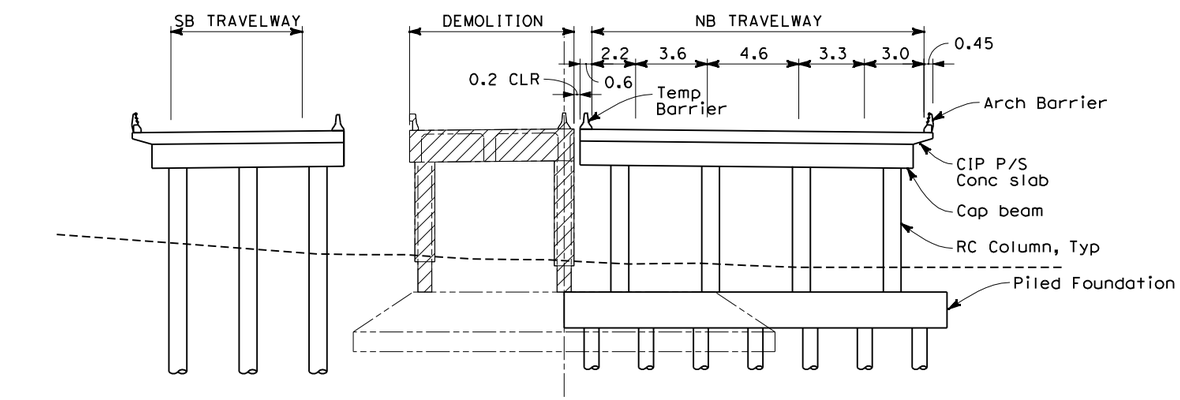

TYPICAL SECTION STAGE B
1:150

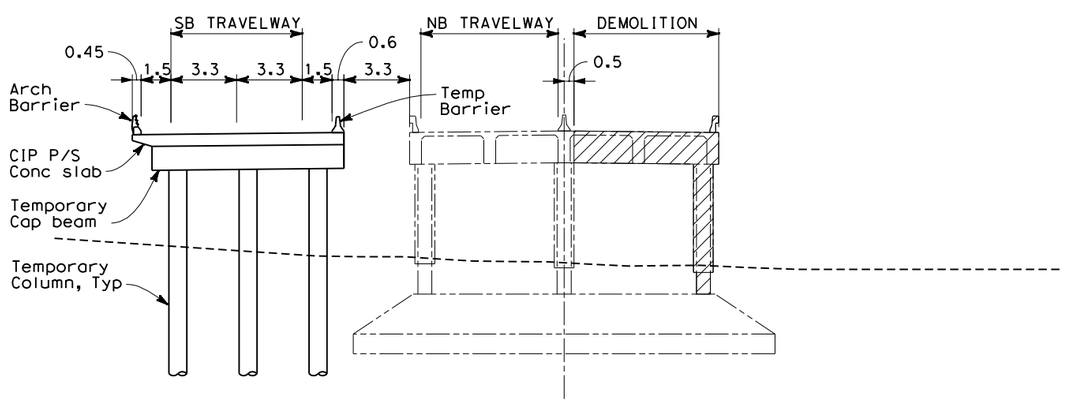

TYPICAL SECTION STAGE A
1:150

Stage C Notes:

1. Construct Piled Foundation, RC Columns, and Cap beam for final NB position.
2. Jack CIP P/S Conc slab off of temporary columns and cap beam into final SB position.
3. Construct closure pour and move barrier into final postion.
4. Remove temporary cap beam and temporary columns.
5. Cut off temporary columns 0.9m below grade.

LEGEND:

Existing and Temporary Structure to be removed.

ALL DIMENSIONS ARE IN METERS UNLESS OTHERWISE SHOWN

PREFERRED ALTERNATIVE REFINED PRESIDIO PARKWAY

DESIGNED BY	Q. Liu	DATE	4/2/07
DRAWN BY	B. Mason	DATE	4/2/07
CHECKED BY	E. Lam	DATE	4/2/07
APPROVED	J. Karn	DATE	4/2/07

*
PROJECT ENGINEER
02-2

PLANNING STUDY

Ruckman/Storey UC Staging

BRIDGE NO.	A2	RU	04242
SCALE:	AS NOTED	EA	163700

TIME PLOTTED => $TIME$
DATE PLOTTED => $DATE$
USERNAME => $USER$

PREPARED FOR THE STATE OF CALIFORNIA - DEPARTMENT OF TRANSPORTATION- DIVISION OF STRUCTURES

DIST.	COUNTY	ROUTE	KILOMETER POST TOTAL PROJECT
4	SF	04-SF-101 04-SF-001	KP 12.8-15.7 KP 10.9-11.4

REVISION 6
JUNE 2007

ARUP
901 MARKET STREET, SUITE 260
SAN FRANCISCO, CA 94103

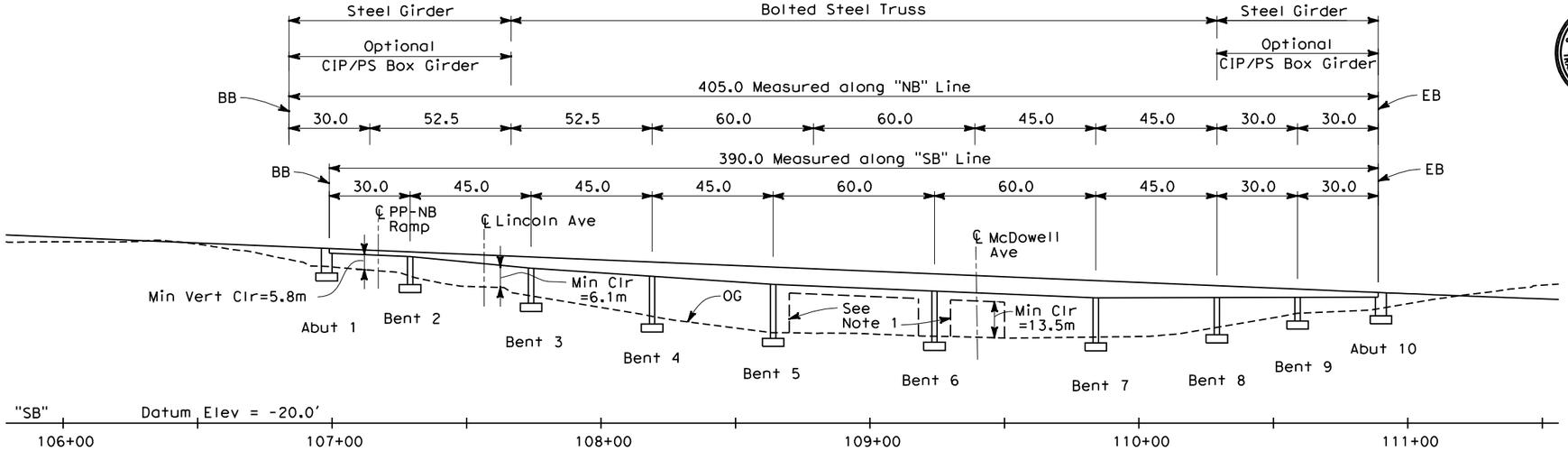

ELEVATION
1:1000

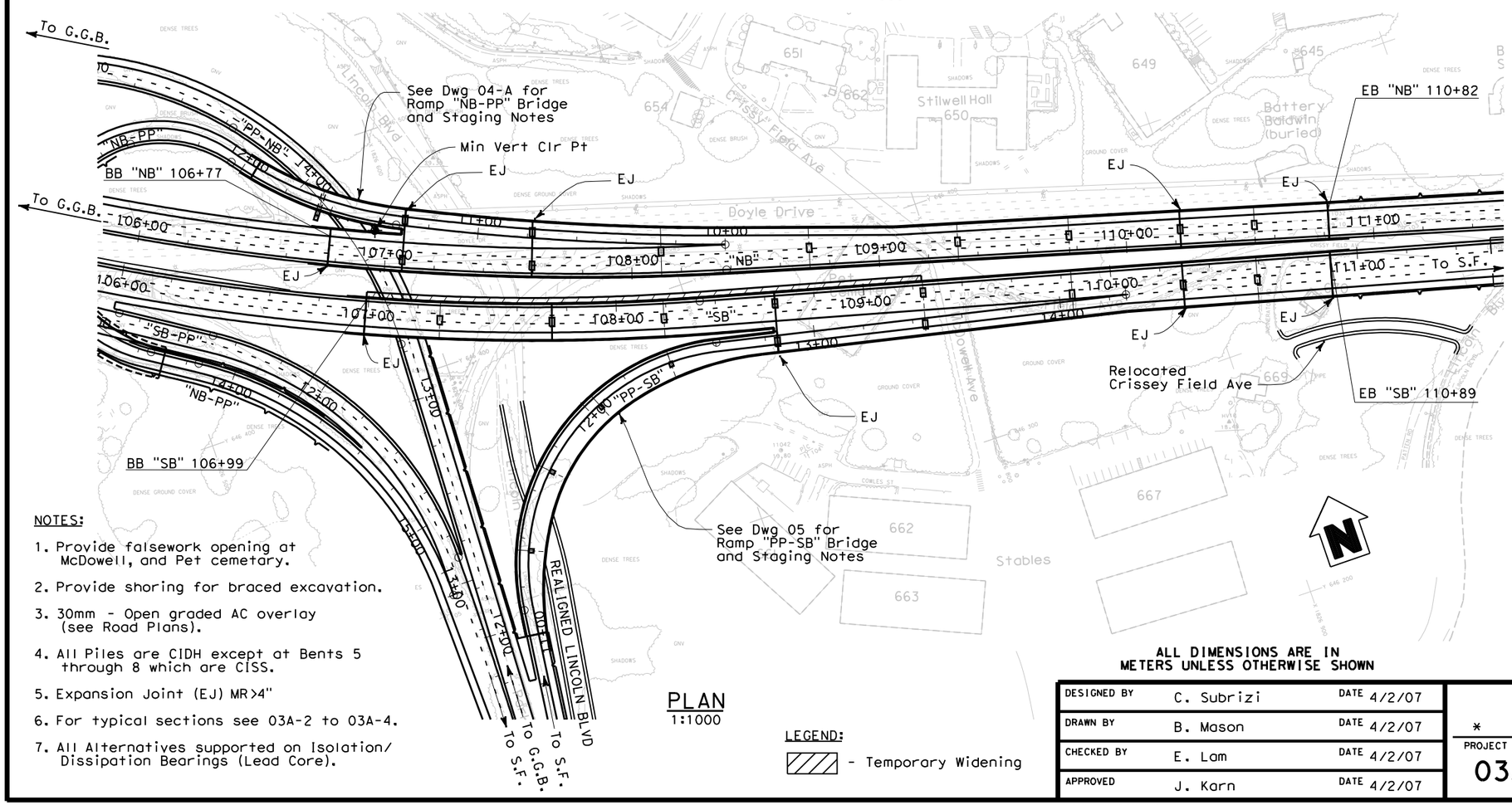

PLAN
1:1000

NOTES:

1. Provide falsework opening at McDowell, and Pet cemetary.
2. Provide shoring for braced excavation.
3. 30mm - Open graded AC overlay (see Road Plans).
4. All Piles are CIDH except at Bents 5 through 8 which are CISS.
5. Expansion Joint (EJ) MR>4"
6. For typical sections see 03A-2 to 03A-4.
7. All Alternatives supported on Isolation/ Dissipation Bearings (Lead Core).

LEGEND:

- Temporary Widening

ALL DIMENSIONS ARE IN METERS UNLESS OTHERWISE SHOWN

BOLTED STEEL TRUSS ESTIMATE

Date of Estimate	05-16-07
Bridge Removal	-
Str. Depth	6.2 max, Varies
Length	405 m
Width	Varies
Area	14,291 m²
Cost / sq m including 10 % Mobilization & 25 % Contingency	$ 10,044
Total Cost	$ 143,537,000

CIP/PS COMPOSITE BOX GIRDER (WARREN TRUSS)

Date of Estimate	05-16-07
Bridge Removal	-
Str. Depth	5 max, Varies
Length	405 m
Width	Varies
Area	14,291 m²
Cost / sq m including 10 % Mobilization & 25 % Contingency	$ 9,398
Total Cost	$ 134,309,000

CIP/PS BOX GIRDER ESTIMATE

Date of Estimate	05-16-07
Bridge Removal	-
Str. Depth	5 max, Varies
Length	405 m
Width	Varies
Area	14,291 m²
Cost / sq m including 10 % Mobilization & 25 % Contingency	$ 7,473
Total Cost	$ 106,792,000

PREFERRED ALTERNATIVE REFINED PRESIDIO PARKWAY

DESIGNED BY	C. Subrizi	DATE	4/2/07
DRAWN BY	B. Mason	DATE	4/2/07
CHECKED BY	E. Lam	DATE	4/2/07
APPROVED	J. Karn	DATE	4/2/07

*
PROJECT ENGINEER
03A-1

PLANNING STUDY

High Viaduct - Option A

BRIDGE NO.	34-19	RU	04242
SCALE:	AS NOTED	EA	163700

ADVANCE PLANNING STUDY SHEET (METRIC) (REV. 3/1/99)

FILE => $FILES$

USERNAME => $USER$ DATE PLOTTED => $DATE$ TIME PLOTTED => $TIME$

DIST.	COUNTY	ROUTE	KILOMETER POST TOTAL PROJECT
4	SF	04-SF-101 04-SF-001	KP 12.8-15.7 KP 10.9-11.4

REVISION 6
JUNE 2007

ARUP
901 MARKET STREET, SUITE 260
SAN FRANCISCO, CA 94103

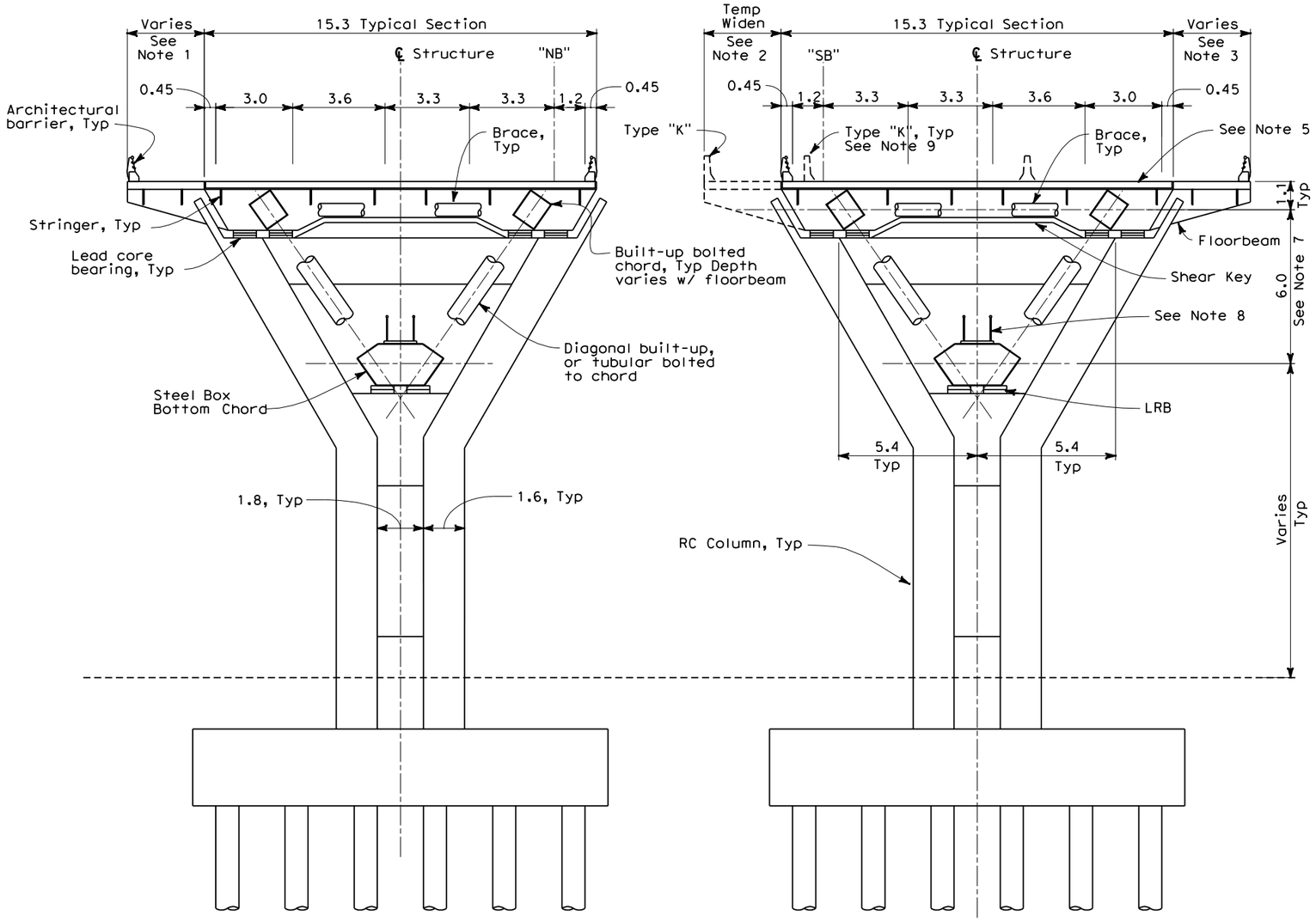

"NB"

TRANSVERSE

"SB"

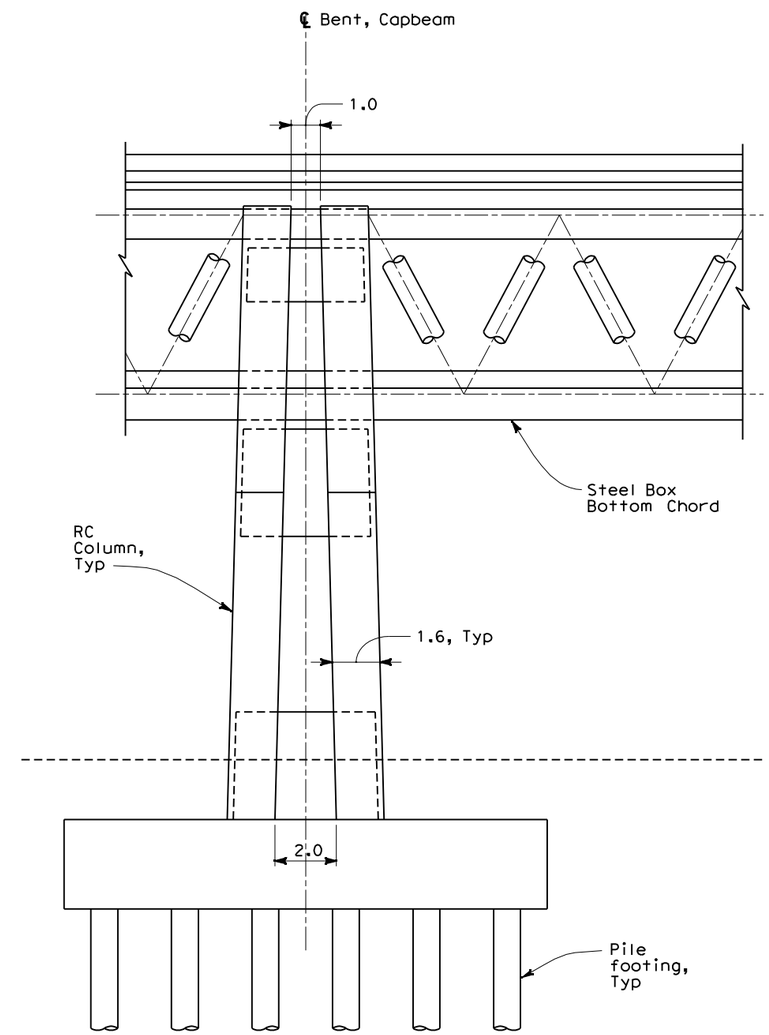

LONGITUDINAL

NOTES:

1. At Span 4.
2. At Spans 1-5, to be removed.
3. At Span 5, 6 & 7.
4. See 03A-3 & 03A-4 for additional Sections.
5. CIP Conc deck used for estimate, type selection to consider exodermic and orthotropic.
6. Transport limitation: pieces must fit in 4m x 6m x 45m
7. Varies at Spans 3 & 7.
8. Maintenance & Inspection path on chord.
9. For Construction Staging, see Road Plans.

ALL DIMENSIONS ARE IN METERS UNLESS OTHERWISE SHOWN

PREFERRED ALTERNATIVE REFINED PRESIDIO PARKWAY

DESIGNED BY	C. Subrizi	DATE	4/2/07
DRAWN BY	B. Mason	DATE	4/2/07
CHECKED BY	E. Lam	DATE	4/2/07
APPROVED	J. Karn	DATE	4/2/07

*
PROJECT ENGINEER
03A-2

PLANNING STUDY

HV Option A, Section 1

BRIDGE NO.	34-19	RU	04242
SCALE:	AS NOTED	EA	163700

PREPARED FOR THE STATE OF CALIFORNIA - DEPARTMENT OF TRANSPORTATION- DIVISION OF STRUCTURES

PREPARED FOR THE STATE OF CALIFORNIA - DEPARTMENT OF TRANSPORTATION- DIVISION OF STRUCTURES

DIST.	COUNTY	ROUTE	KILOMETER POST TOTAL PROJECT
4	SF	04-SF-101 04-SF-001	KP 12.8-15.7 KP 10.9-11.4

REVISION 6
JUNE 2007

ARUP
901 MARKET STREET, SUITE 260
SAN FRANCISCO, CA 94103

NOTES:

1. Concrete option shown, steel girder would use same pier.

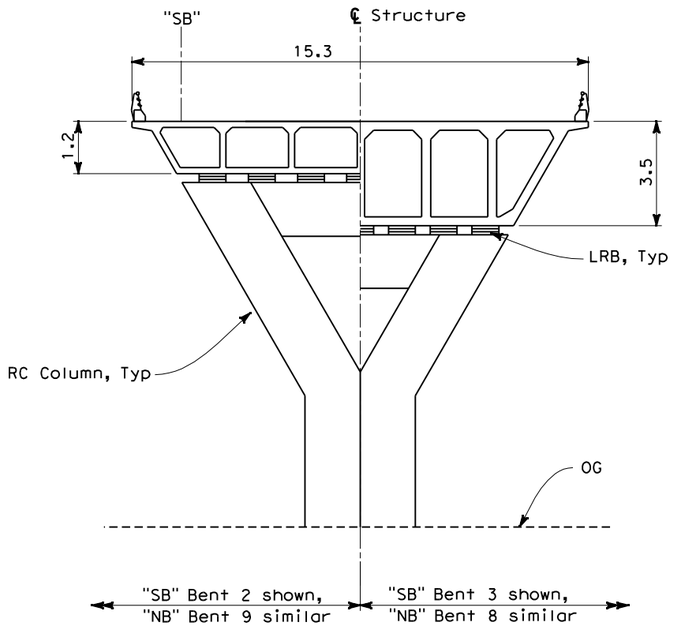

SECTION AT "SB" BENT 2 & 3 (See Note 1)
1:100

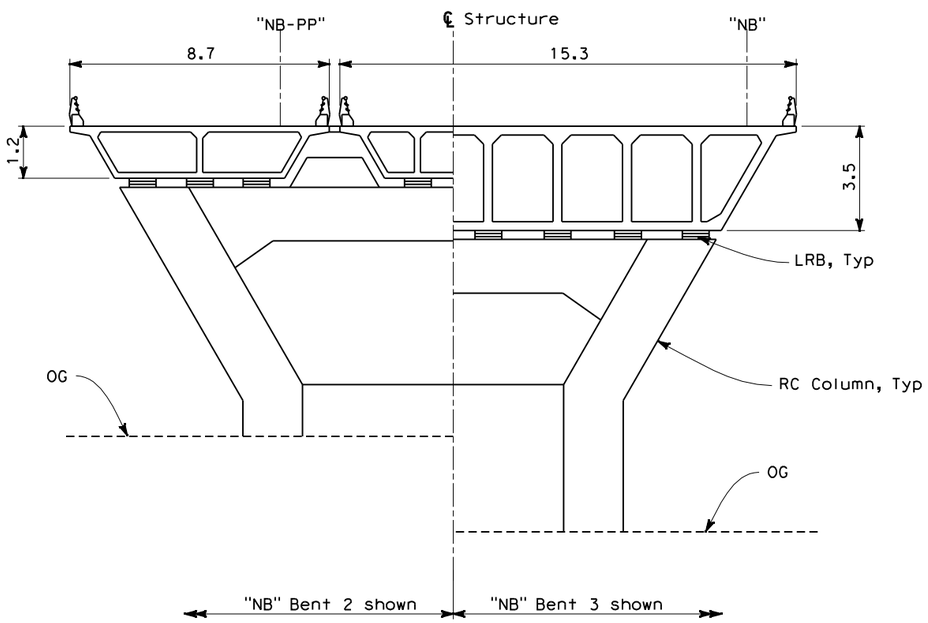

SECTION AT "NB" BENT 2 & 3 (See Note 1)
1:100

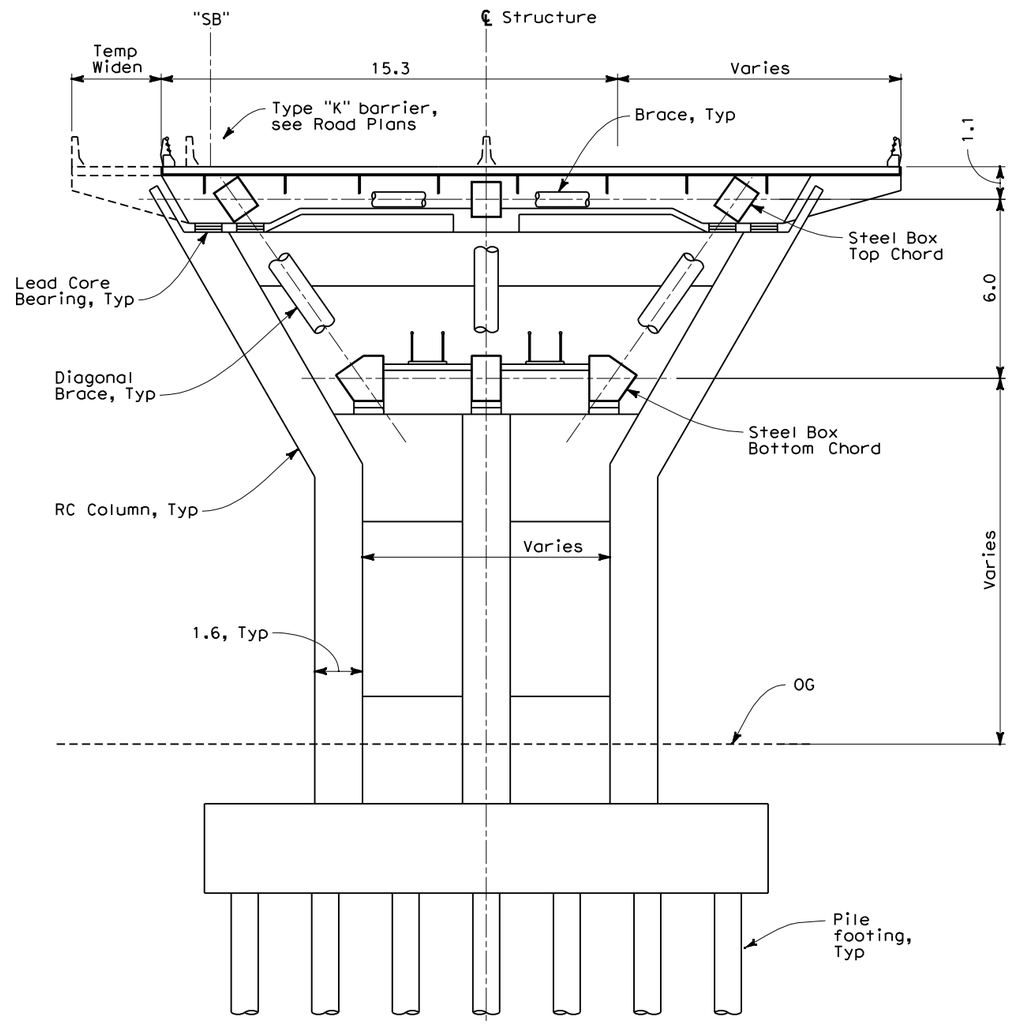

SECTION AT BENT 5 & 6
1:100

ALL DIMENSIONS ARE IN METERS UNLESS OTHERWISE SHOWN

PREFERRED ALTERNATIVE REFINED PRESIDIO PARKWAY

DESIGNED BY	C. Subrizi	DATE	4/2/07
DRAWN BY	B. Mason	DATE	4/2/07
CHECKED BY	E. Lam	DATE	4/2/07
APPROVED	J. Karn	DATE	4/2/07

*
PROJECT ENGINEER
03A-3

PLANNING STUDY

HV Option A, Section 2

BRIDGE NO.	34-19	RU	04242
SCALE:	AS NOTED	EA	163700

TIME PLOTTED => $TIME$
DATE PLOTTED => $DATE$
USERNAME => $USER$

ADVANCE PLANNING STUDY SHEET (METRIC) (REV. 3/1/99)

FILE => $FILES$

DIST.	COUNTY	ROUTE	KILOMETER POST TOTAL PROJECT
4	SF	04-SF-101 04-SF-001	KP 12.8-15.7 KP 10.9-11.4

REVISION 6
JUNE 2007

ARUP
901 MARKET STREET, SUITE 260
SAN FRANCISCO, CA 94103

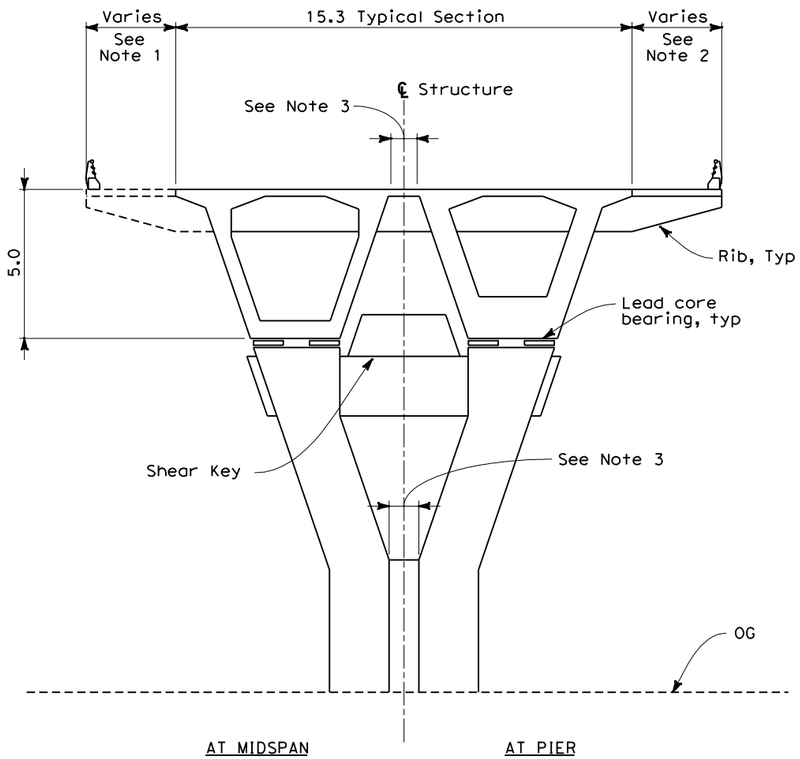

TRANSVERSE CIP/PS BOX GIRDER
1:100

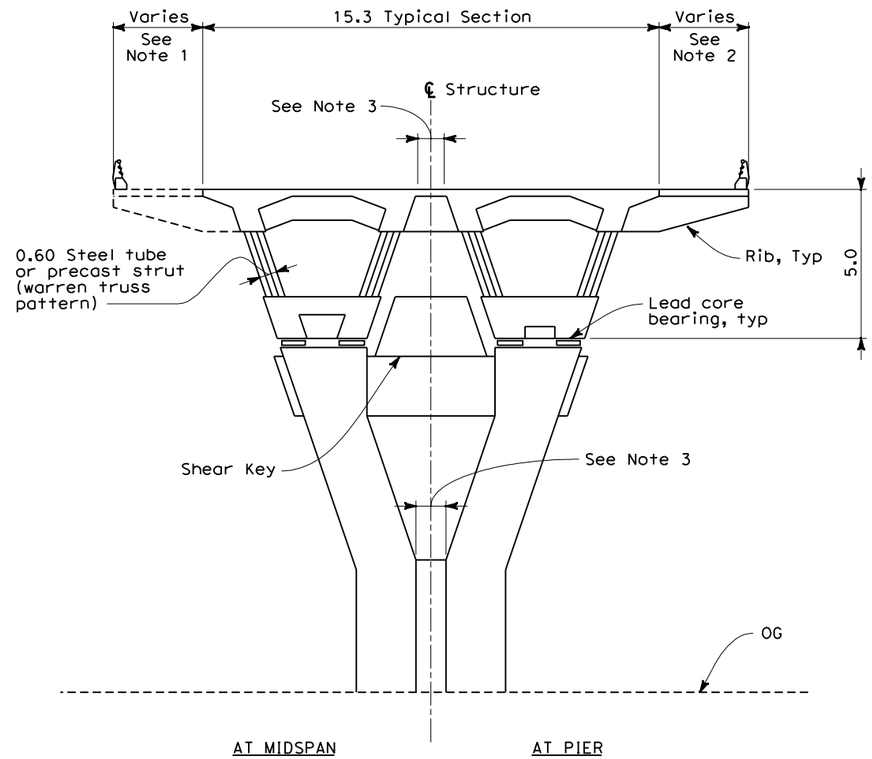

TRANSVERSE CIP/PS COMPOSITE BOX GIRDER (WARREN TRUSS)
1:100

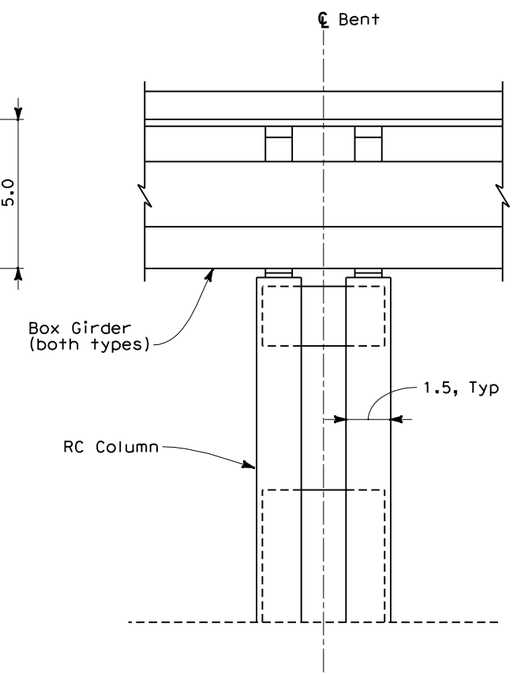

LONGITUDINAL SECTION
1:100

NOTES:

1. Temporary at "SB" Span 1-5, Permanent at "NB" Span 3 & 4.
2. At "SB" 6, 7 & 8.
3. Space between girders varies at "SB" Bent 5, 6 & 7 and "NB" Bent 4 & 5.

ALL DIMENSIONS ARE IN METERS UNLESS OTHERWISE SHOWN

PREFERRED ALTERNATIVE REFINED PRESIDIO PARKWAY

DESIGNED BY	C. Subrizi	DATE	4/2/07
DRAWN BY	B. Mason	DATE	4/2/07
CHECKED BY	E. Lam	DATE	4/2/07
APPROVED	J. Karn	DATE	4/2/07

*
PROJECT ENGINEER
03A-4

PLANNING STUDY

HV Option A, Section 3

BRIDGE NO.	34-19	RU	04242
SCALE:	AS NOTED	EA	163700

PREPARED FOR THE STATE OF CALIFORNIA - DEPARTMENT OF TRANSPORTATION- DIVISION OF STRUCTURES

TIME PLOTTED => $TIME$
DATE PLOTTED => $DATE$
USERNAME => $USER$

PREPARED FOR THE STATE OF CALIFORNIA - DEPARTMENT OF TRANSPORTATION- DIVISION OF STRUCTURES

DIST.	COUNTY	ROUTE	KILOMETER POST TOTAL PROJECT
4	SF	04-SF-101 04-SF-001	KP 12.8-15.7 KP 10.9-11.4

REVISION 6
JUNE 2007

ARUP
901 MARKET STREET, SUITE 260
SAN FRANCISCO, CA 94103

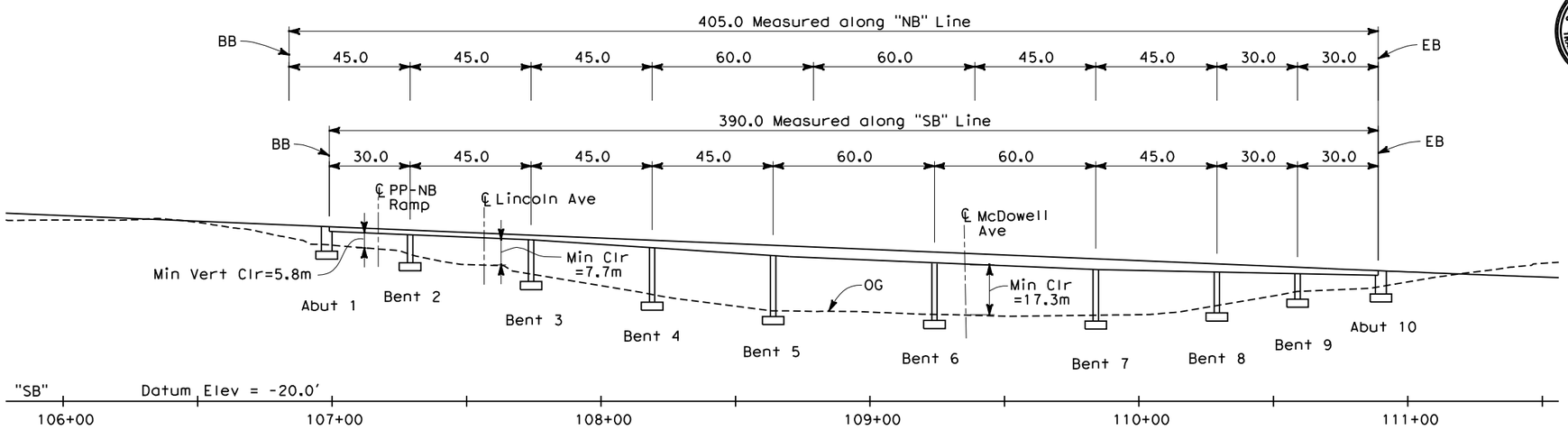

ELEVATION
1:1000

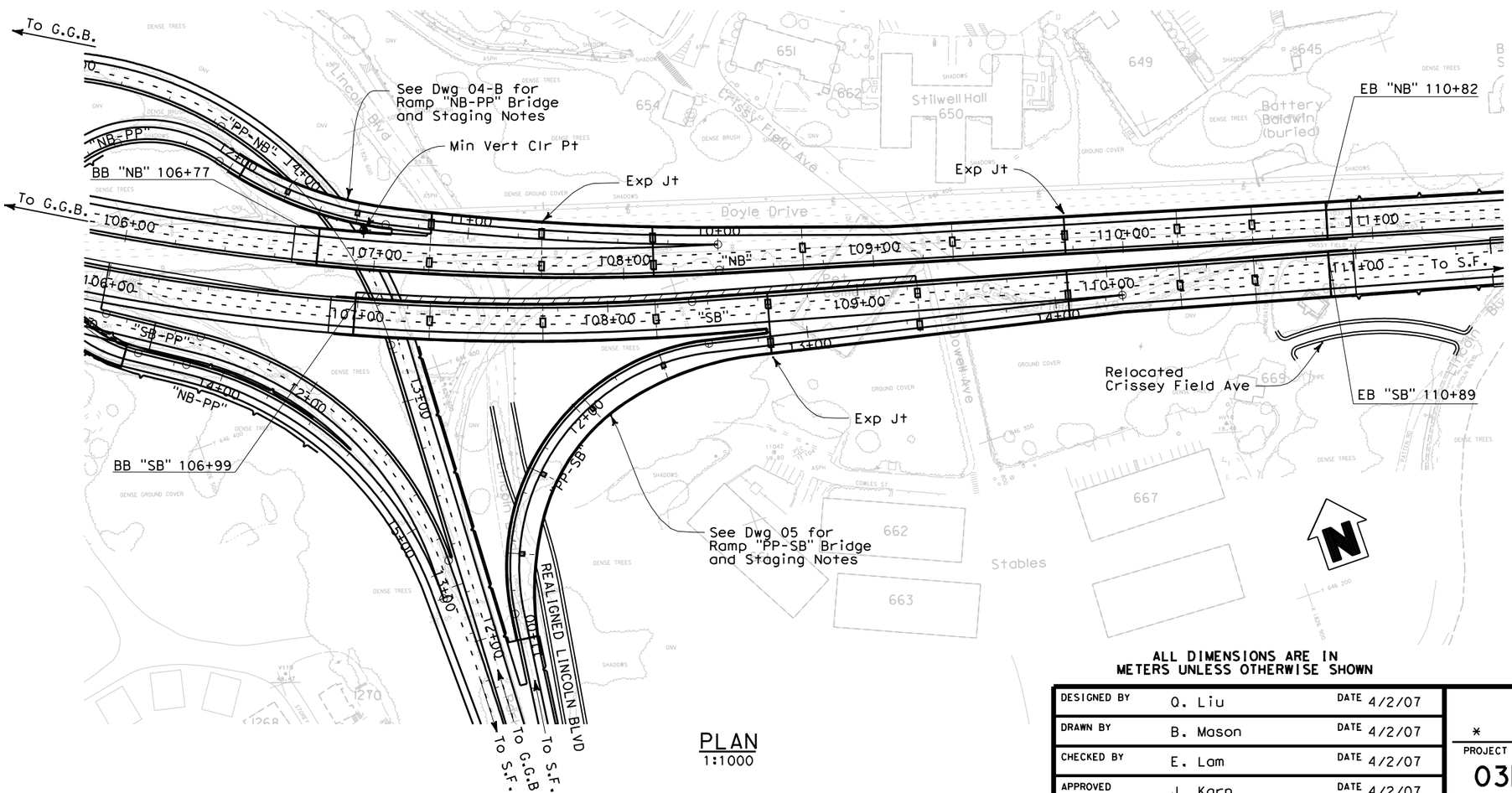

PLAN
1:1000

TUBULAR STEEL TRUSS ESTIMATE

Date of Estimate	05-16-07
Bridge Removal	-
Str. Depth	1.75 min, 3.9 max
Length	405, 390 m
Width	Varies
Area	14,221 m^2
Cost / sq m including 10 % Mobilization & 25 % Contingency	$ 13,403
Total Cost	$ 191,540,000

NOTES:

1. Provide falsework towers at McDowell, Pet cemetary must be spared.
2. Provide shoring for braced excavation.
3. All Piles are CIDH except at Bents 5 through 8 which are CISS.

LEGEND:

- Temporary Widening

ALL DIMENSIONS ARE IN METERS UNLESS OTHERWISE SHOWN

PREFERRED ALTERNATIVE
REFINED PRESIDIO PARKWAY

DESIGNED BY	Q. Liu	DATE	4/2/07
DRAWN BY	B. Mason	DATE	4/2/07
CHECKED BY	E. Lam	DATE	4/2/07
APPROVED	J. Karn	DATE	4/2/07

*
PROJECT ENGINEER
03B-1

PLANNING STUDY

High Viaduct - Option B

BRIDGE NO.	34-19	RU	04242
SCALE:	AS NOTED	EA	163700

ADVANCE PLANNING STUDY SHEET (METRIC) (REV. 3/1/99)

FILE => $FILES$

USERNAME => $USER$ DATE PLOTTED => $DATE$ TIME PLOTTED => $TIME$

DIST.	COUNTY	ROUTE	KILOMETER POST TOTAL PROJECT
4	SF	04-SF-101 04-SF-001	KP 12.8-15.7 KP 10.9-11.4

REVISION 6
JUNE 2007

ARUP
901 MARKET STREET, SUITE 260
SAN FRANCISCO, CA 94103

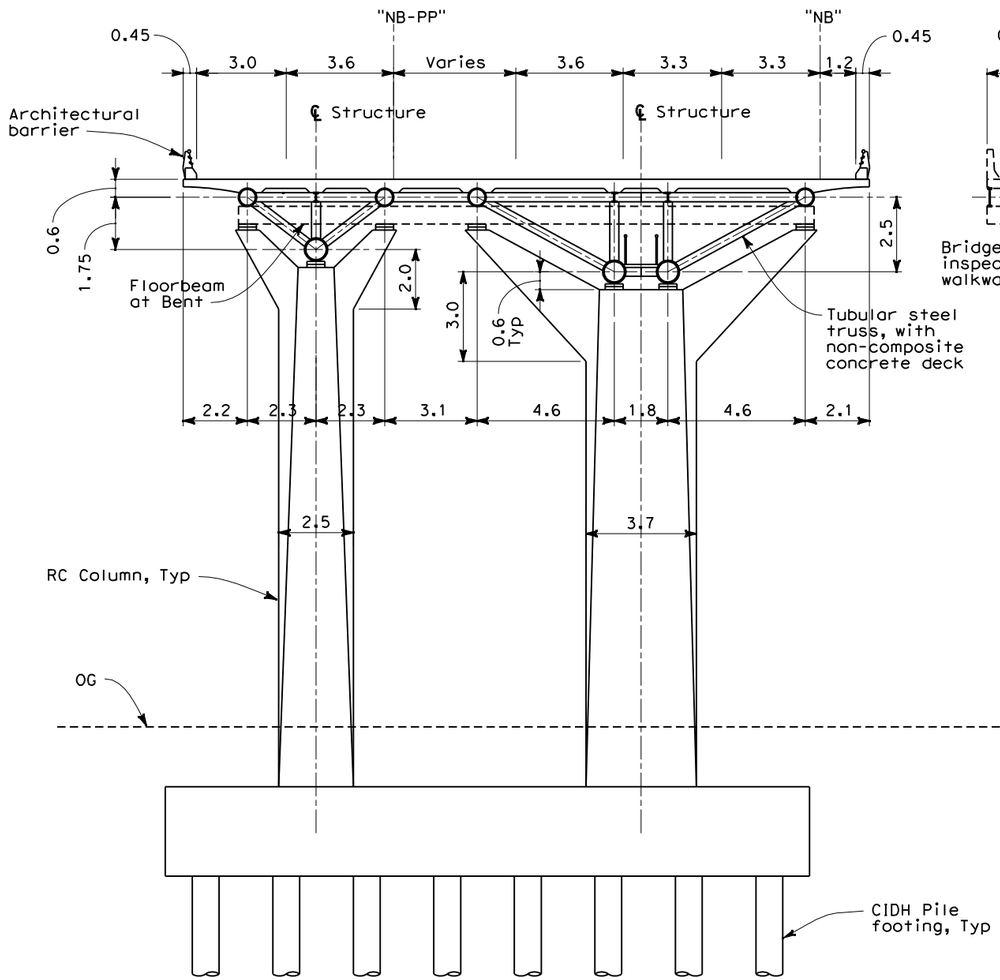

TRANSVERSE SECTION @ "NB" BENT 2

For dimensions not shown, see "SB" Bent 5
1:100

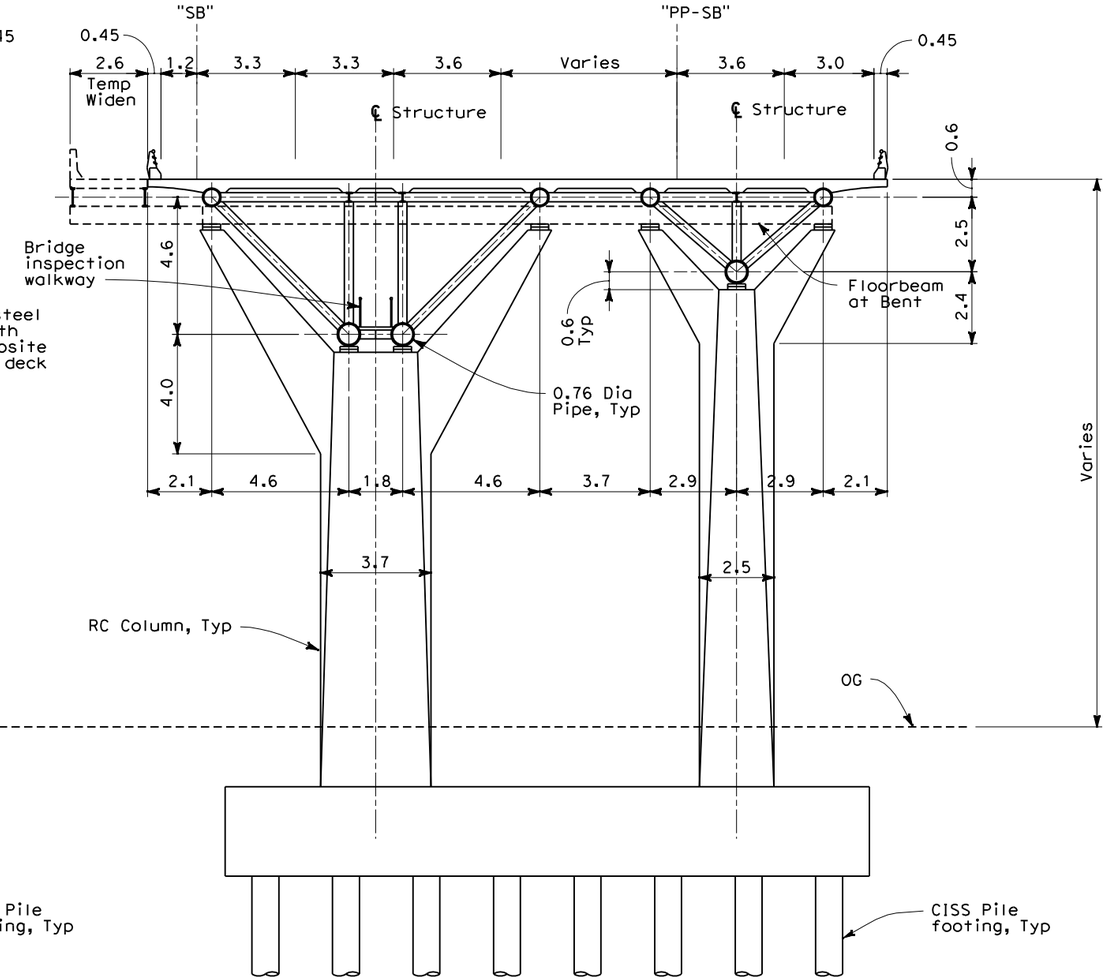

TRANSVERSE SECTION @ "SB" BENT 5

For dimensions not shown, see "NB" Bent 2
1:100

NOTES:

1. Deck width varies at entry/exit ramps.
2. CIP Conc deck used for estimate, type selection to consider PS, exodermic and orthotropic.
3. Truss top chord alternative: open-top steel u-sections filled with concrete.

ALL DIMENSIONS ARE IN METERS UNLESS OTHERWISE SHOWN

PREFERRED ALTERNATIVE REFINED PRESIDIO PARKWAY

DESIGNED BY	Q. Liu	DATE	4/2/07
DRAWN BY	B. Mason	DATE	4/2/07
CHECKED BY	E. Lam	DATE	4/2/07
APPROVED	J. Karn	DATE	4/2/07

*
PROJECT ENGINEER
03B-2

PLANNING STUDY

HV Option B, Section 1

BRIDGE NO.	34-19	RU	04242
SCALE:	AS NOTED	EA	163700

PREPARED FOR THE STATE OF CALIFORNIA - DEPARTMENT OF TRANSPORTATION- DIVISION OF STRUCTURES

TIME PLOTTED => $TIME$
DATE PLOTTED => $DATE$
USERNAME => $USER$

ADVANCE PLANNING STUDY SHEET (METRIC) (REV. 3/1/99)

FILE => $FILES$

DIST.	COUNTY	ROUTE	KILOMETER POST TOTAL PROJECT
4	SF	04-SF-101 04-SF-001	KP 12.8-15.7 KP 10.9-11.4

REVISION 6
JUNE 2007

ARUP
901 MARKET STREET, SUITE 260
SAN FRANCISCO, CA 94103

Caltrans Metric

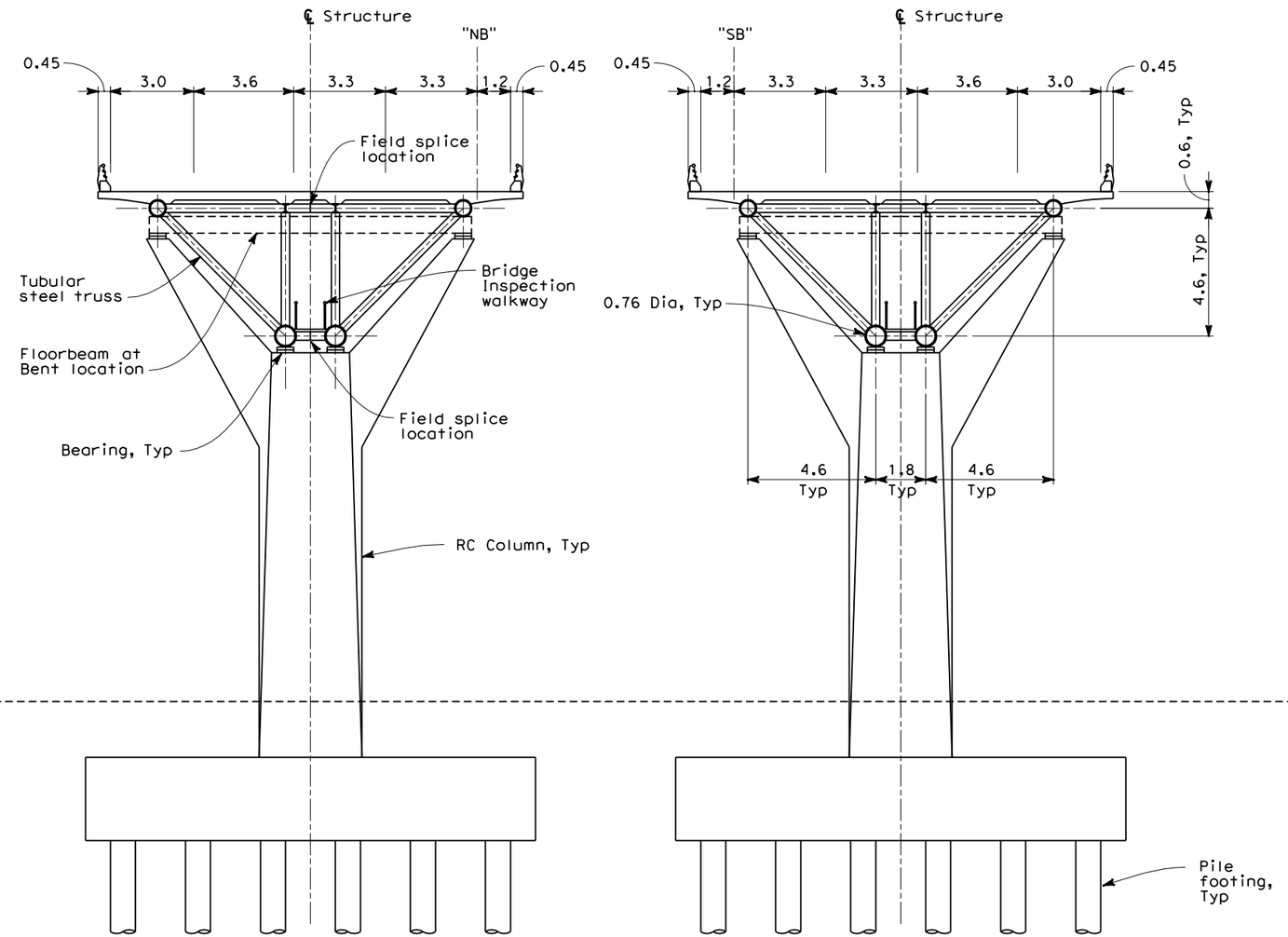

TYPICAL TRANSVERSE SECTION
1:100

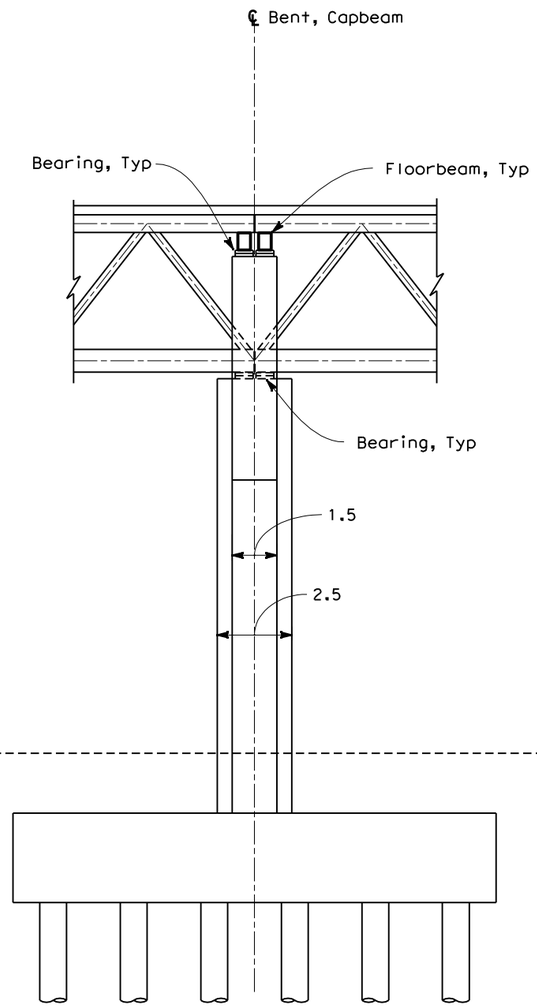

TYPICAL LONGITUDINAL SECTION
1:100

NOTES:

1. See 03B-2 for information not shown.
2. Provide shoring for braced excavation.
3. Truss top chord alternative: open-top steel u-sections filled with concrete.

ALL DIMENSIONS ARE IN METERS UNLESS OTHERWISE SHOWN

PREFERRED ALTERNATIVE REFINED PRESIDIO PARKWAY

DESIGNED BY	Q. Liu	DATE	4/2/07
DRAWN BY	B. Mason	DATE	4/2/07
CHECKED BY	E. Lam	DATE	4/2/07
APPROVED	J. Karn	DATE	4/2/07

*
PROJECT ENGINEER
03B-3

PLANNING STUDY

HV Option B, Section 2

BRIDGE NO.	34-19	RU	04242
SCALE:	AS NOTED	EA	163700

PREPARED FOR THE STATE OF CALIFORNIA - DEPARTMENT OF TRANSPORTATION- DIVISION OF STRUCTURES

TIME PLOTTED => $TIME$
DATE PLOTTED => $DATE$
USERNAME => $USER$

ADVANCE PLANNING STUDY SHEET (METRIC) (REV. 3/1/99)

FILE => $FILES$

PREPARED FOR THE STATE OF CALIFORNIA - DEPARTMENT OF TRANSPORTATION- DIVISION OF STRUCTURES

DIST.	COUNTY	ROUTE	KILOMETER POST TOTAL PROJECT
4	SF	04-SF-101 04-SF-001	KP 12.8-15.7 KP 10.9-11.4

REVISION 6
JUNE 2007

ARUP
901 MARKET STREET, SUITE 260
SAN FRANCISCO, CA 94103

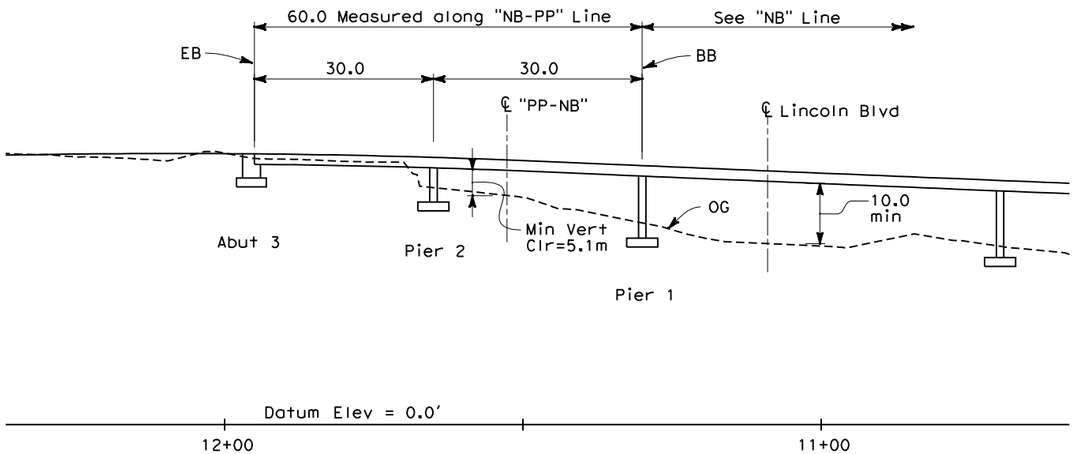

ELEVATION
1:500

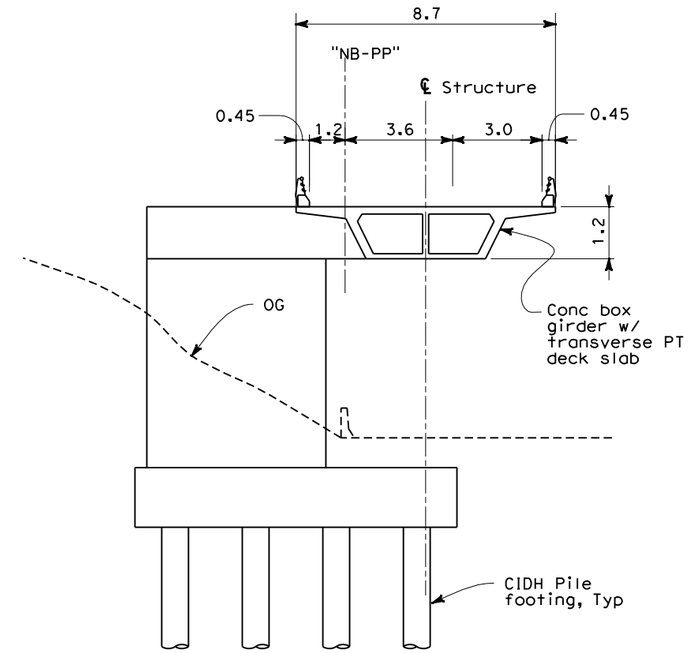

TYPICAL SECTION
CONC BOX GIRDER
1:100

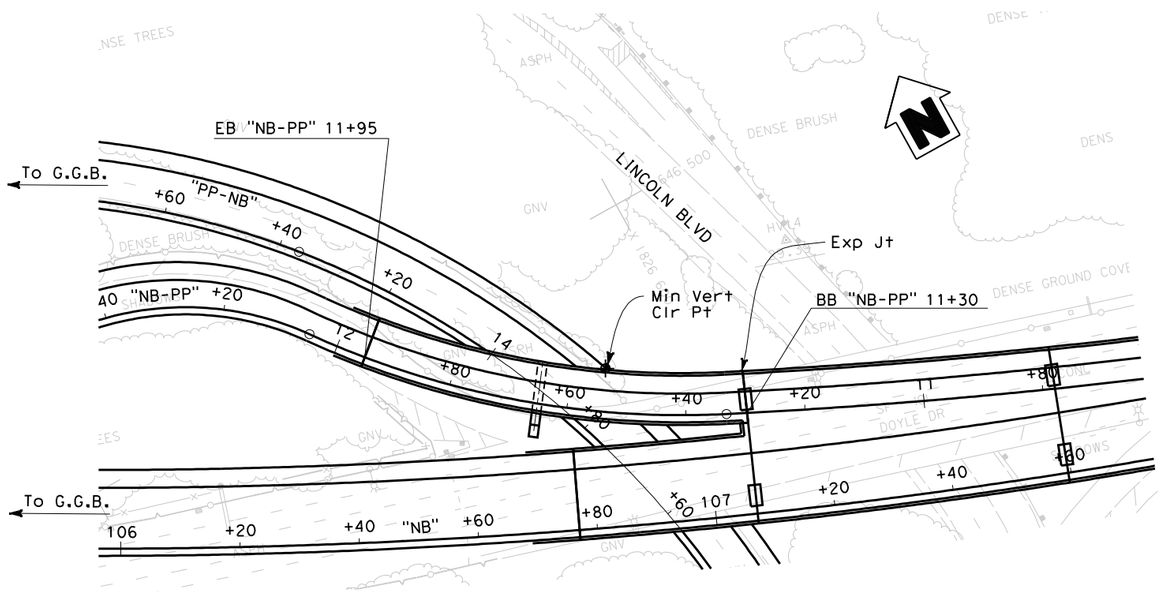

PLAN
1:500

CONCRETE BOX GIRDER ESTIMATE

Date of Estimate	05-16-07
Bridge Removal	-
Str. Depth	1.2 m
Length	60.0 m
Width	8.7 m
Area	522.0 m^2
Cost / sq m including 10 % Mobilization & 25 % Contingency	$ 6,416
Total Cost	$ 3,349,000

NOTES:

1. Pier 1 is Bent 3 of "NB" Line.
2. Provide shoring for braced excavation.
3. 30mm - Open graded AC overlay. (see Road Plans)

ALL DIMENSIONS ARE IN METERS UNLESS OTHERWISE SHOWN

PREFERRED ALTERNATIVE
REFINED PRESIDIO PARKWAY

DESIGNED BY	C. Subrizi	DATE	4/2/07
DRAWN BY	B. Mason	DATE	4/2/07
CHECKED BY	E. Lam	DATE	4/2/07
APPROVED	J. Karn	DATE	4/2/07

*
PROJECT ENGINEER
04A

PLANNING STUDY

Ramp "NB-PP" Option A

BRIDGE NO.	34-19E	RU	04242
SCALE:	AS NOTED	EA	163700

ADVANCE PLANNING STUDY SHEET (METRIC) (REV. 3/1/99)

FILE => $FILES$

USERNAME => $USER$ DATE PLOTTED => $DATE$ TIME PLOTTED => $TIME$

PREPARED FOR THE STATE OF CALIFORNIA - DEPARTMENT OF TRANSPORTATION- DIVISION OF STRUCTURES

DIST.	COUNTY	ROUTE	KILOMETER POST TOTAL PROJECT
4	SF	04-SF-101 04-SF-001	KP 12.8-15.7 KP 10.9-11.4

REVISION 6
JUNE 2007

ARUP
901 MARKET STREET, SUITE 260
SAN FRANCISCO, CA 94103

Caltrans Metric

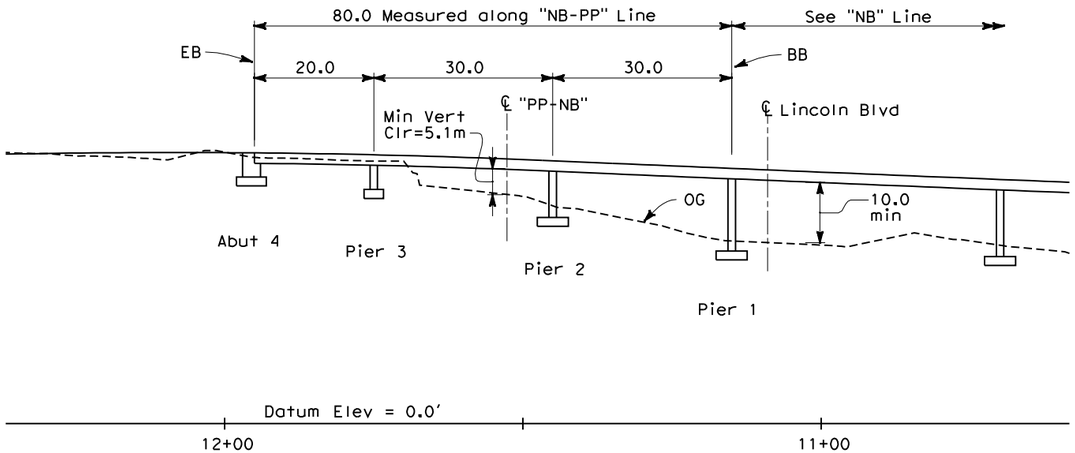

ELEVATION
1:500

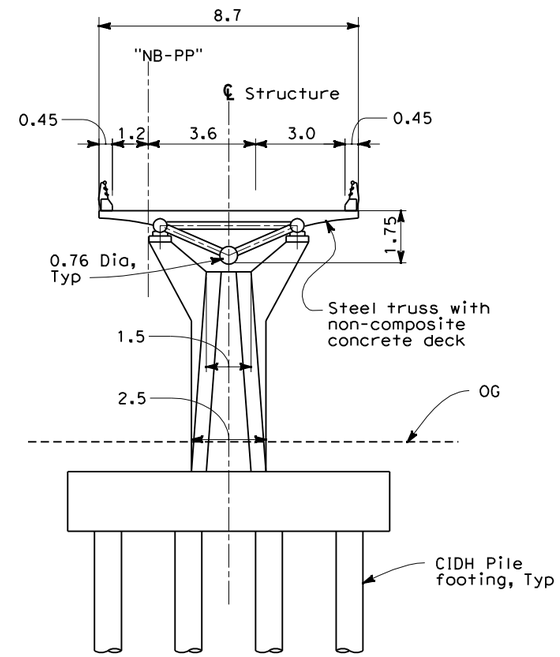

TYPICAL SECTION
TUBULAR STEEL TRUSS
1:100

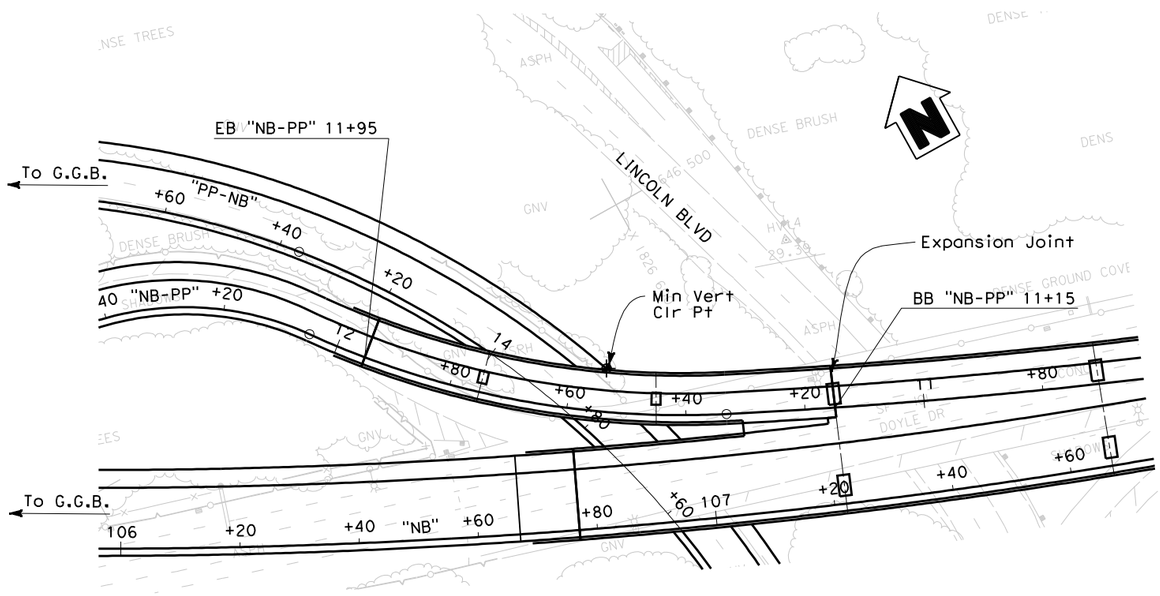

PLAN
1:500

TUBULAR STEEL TRUSS ESTIMATE

Date of Estimate	05-16-07
Bridge Removal	-
Str. Depth	1.75 m
Length	80.0 m
Width	8.7 m
Area	696 m^2
Cost / sq m including 10 % Mobilization & 25 % Contingency	$ 20,218
Total Cost	$ 14,072,000

NOTES:

1. Pier 1 is Bent 3 of "NB" Line.

ALL DIMENSIONS ARE IN METERS UNLESS OTHERWISE SHOWN

PREFERRED ALTERNATIVE
REFINED PRESIDIO PARKWAY

DESIGNED BY	Q. Liu	DATE	4/2/07
DRAWN BY	B. Mason	DATE	4/2/07
CHECKED BY	E. Lam	DATE	4/2/07
APPROVED	J. Karn	DATE	4/2/07

*
PROJECT ENGINEER
04B

PLANNING STUDY

Ramp "NB-PP" Option B

BRIDGE NO.	34-19E	RU	04242
SCALE:	AS NOTED	EA	163700

TIME PLOTTED => $TIME$
DATE PLOTTED => $DATE$
USERNAME => $USER$

PREPARED FOR THE STATE OF CALIFORNIA - DEPARTMENT OF TRANSPORTATION- DIVISION OF STRUCTURES

DIST.	COUNTY	ROUTE	KILOMETER POST TOTAL PROJECT
4	SF	04-SF-101 04-SF-001	KP 12.8-15.7 KP 10.9-11.4

REVISION 6
JUNE 2007

ARUP
901 MARKET STREET, SUITE 260
SAN FRANCISCO, CA 94103

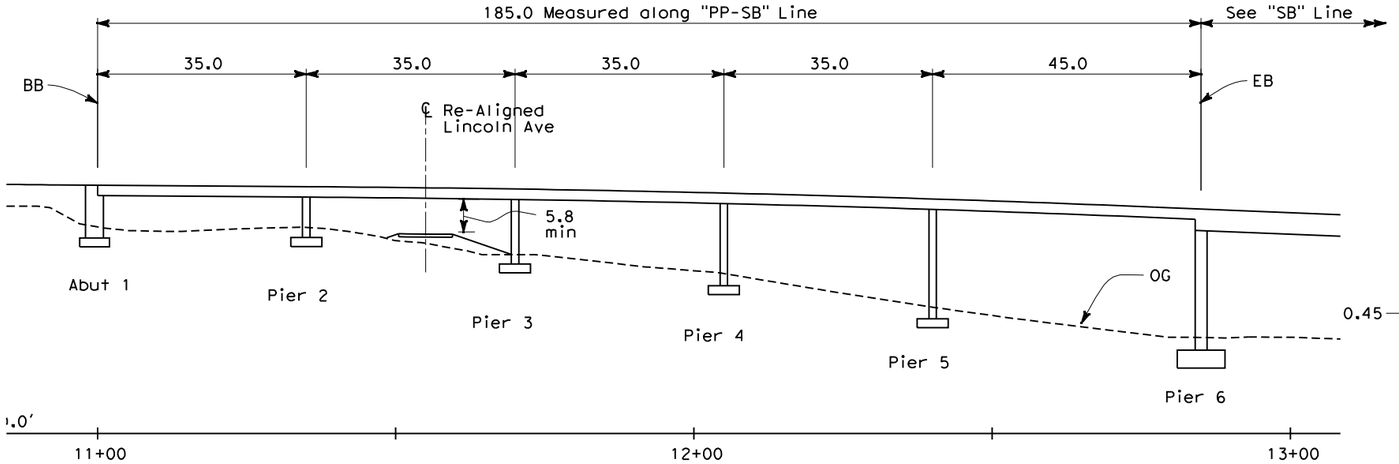

ELEVATION
1:500

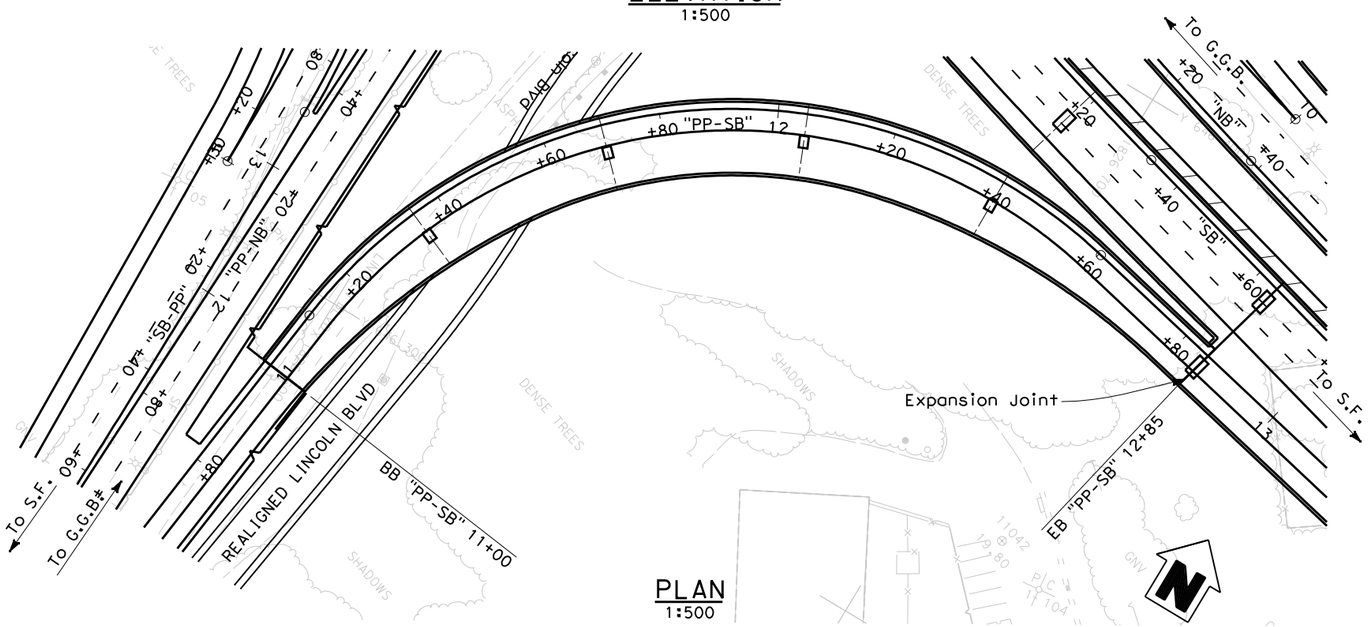

PLAN
1:500

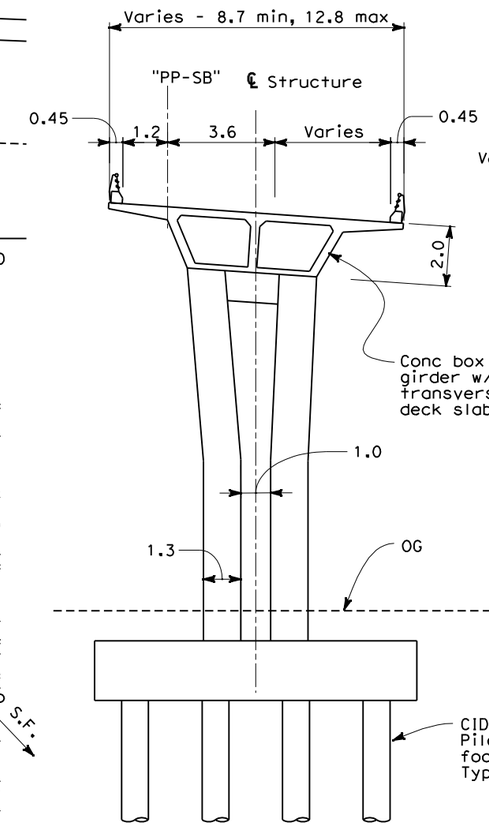

TYPICAL SECTION
CONC. BOX GIRDER
1:100

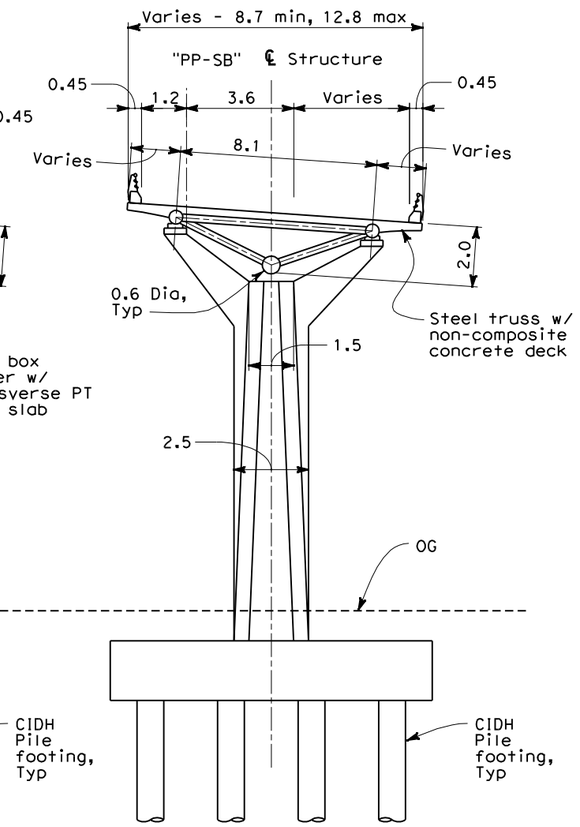

TYPICAL SECTION
TUBULAR STEEL TRUSS
1:100

CONCRETE BOX GIRDER ESTIMATE

Date of Estimate	05-16-07
Bridge Removal	-
Str. Depth	2.0 m
Length	185.0 m
Width	Varies, 8.7 min
Area	2070.0 m²
Cost / sq m including 10 % Mobilization & 25 % Contingency	$ 7,704
Total Cost	$ 15,948,000

TUBULAR STEEL TRUSS ESTIMATE

Date of Estimate	05-16-07
Bridge Removal	-
Str. Depth	2.0 m
Length	185.0 m
Width	Varies, 8.7 min
Area	2070.0 m²
Cost / sq m including 10 % Mobilization & 25 % Contingency	$ 14,120
Total Cost	$ 29,229,000

NOTES:

1. Pier 6 is Bent 5 of "SB" Line.
2. Provide shoring for braced excavation.
3. 30mm - Open graded AC

ALL DIMENSIONS ARE IN METERS UNLESS OTHERWISE SHOWN

PREFERRED ALTERNATIVE REFINED PRESIDIO PARKWAY

DESIGNED BY	Q. Liu	DATE	4/2/07
DRAWN BY	B. Mason	DATE	4/2/07
CHECKED BY	E. Lam	DATE	4/2/07
APPROVED	J. Karn	DATE	4/2/07

*
PROJECT ENGINEER
05

PLANNING STUDY
Ramp "PP-SB"

BRIDGE NO.	34-19G	RU	04242
SCALE:	AS NOTED	EA	163700

ADVANCE PLANNING STUDY SHEET (METRIC) (REV. 3/1/99)

FILE => $FILES$

USERNAME => $USER$ DATE PLOTTED => $DATE$ TIME PLOTTED => $TIME$

PREPARED FOR THE STATE OF CALIFORNIA - DEPARTMENT OF TRANSPORTATION- DIVISION OF STRUCTURES

DIST.	COUNTY	ROUTE	KILOMETER POST TOTAL PROJECT
04	SF	101	12.8-15.7

REVISION 6

JUNE 2007

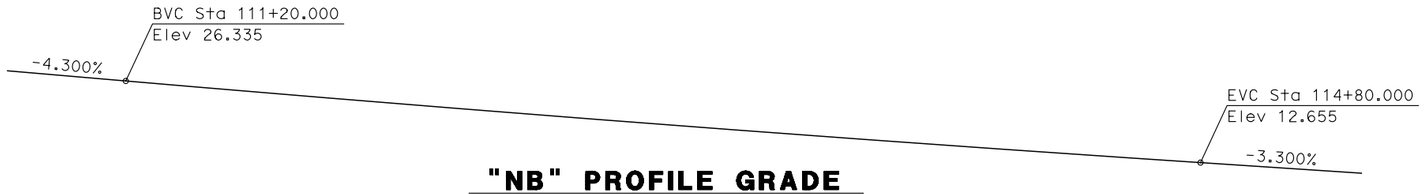

"NB" PROFILE GRADE

No Scale

"SB" PROFILE GRADE

No Scale

SUBTOTAL		$52,358,556
MOBILIZATION	10%	$5,759,441
SUBTOTAL CONTRACT ITEMS		$58,117,997
CONTINGENCIES	25%	$14,529,499
TOTAL		$72,647,496
FOR BUDGET PURPOSES USE		$72,647,000

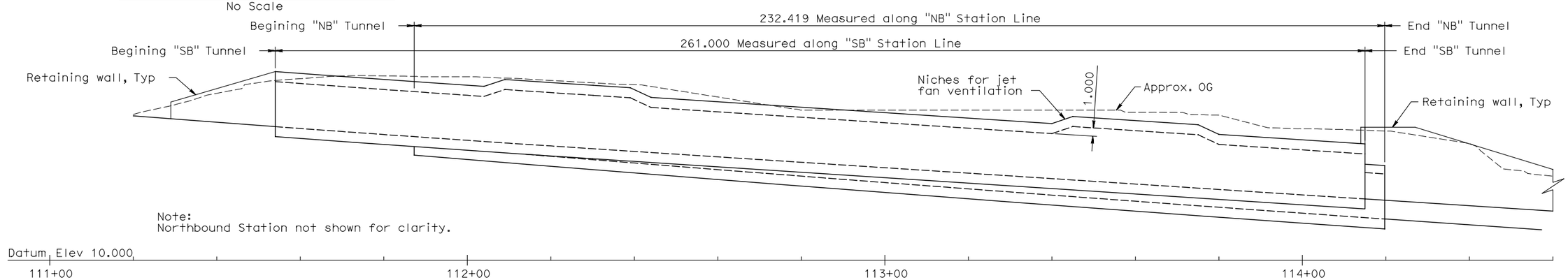

Note:
Northbound Station not shown for clarity.

DEVELOPED ELEVATION

1:500 (H)
1:250 (V)

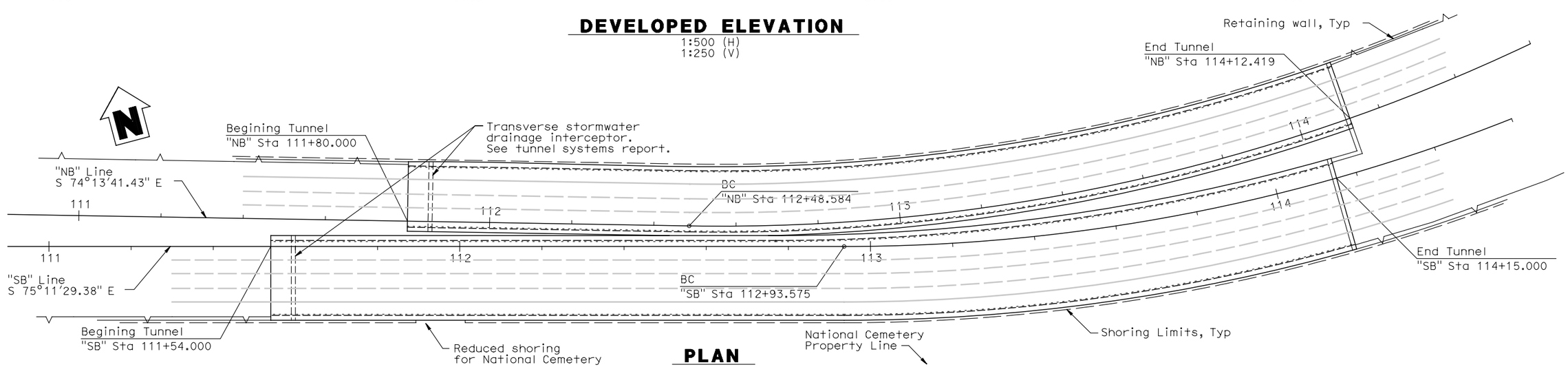

PLAN

1:500

Notes:
1. Locations of switch gear room, ventilation and lighting to be determined. See "Tunnel Systems Report" for details.
2. Evacuation stairs from the tunnel are not necessary. Emergency egress shall be via the shoulder through the portals. Access to surface grade is to be determined but shall be incorporated into the landscaping.
3. Refer to "Road Plans" for construction staging.
4. Sump is to be located at the Main Post Tunnel.

ALL DIMENSIONS ARE IN METERS UNLESS OTHERWISE SHOWN

DESIGNED BY	D. An	DATE	12/07/06
DRAWN BY	X. Sun	DATE	12/07/06
CHECKED BY	K. Chen	DATE	12/07/06
APPROVED		DATE	

PROJECT ENGINEER

PLANNING STUDY

DOYLE DRIVE BATTERY TUNNEL (1 OF 2)

BRIDGE NO.		RU	04242
SCALE:	AS NOTED	EA	163700

TIME PLOTTED => 11:24:03 AM
DATE PLOTTED => 6/12/2007
USERNAME => reyesl

ADVANCE PLANNING STUDY SHEET (METRIC) (REV. 3/1/99)

FILE => T:\13145\June 2007 APS\Tunnel Sheets\Battery-1.dgn

PREPARED FOR THE STATE OF CALIFORNIA - DEPARTMENT OF TRANSPORTATION- DIVISION OF STRUCTURES

DIST.	COUNTY	ROUTE	KILOMETER POST TOTAL PROJECT
04	SF	101	12.8-15.7

REVISION 6

JUNE 2007

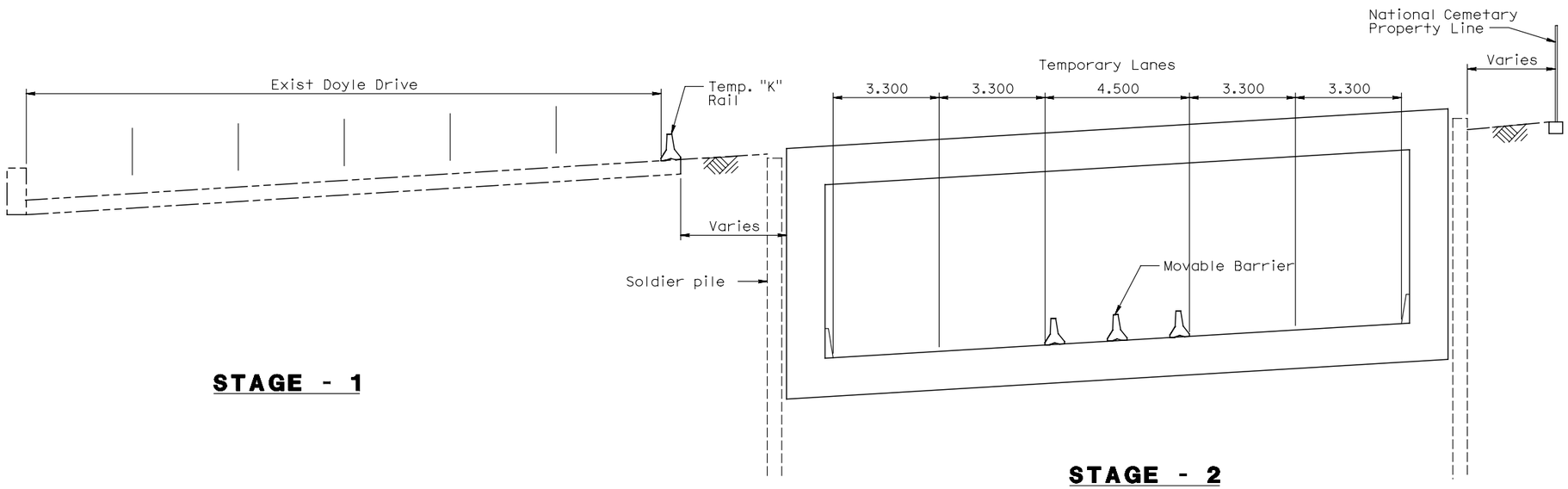

TRAFFIC STAGE
NO SCALE

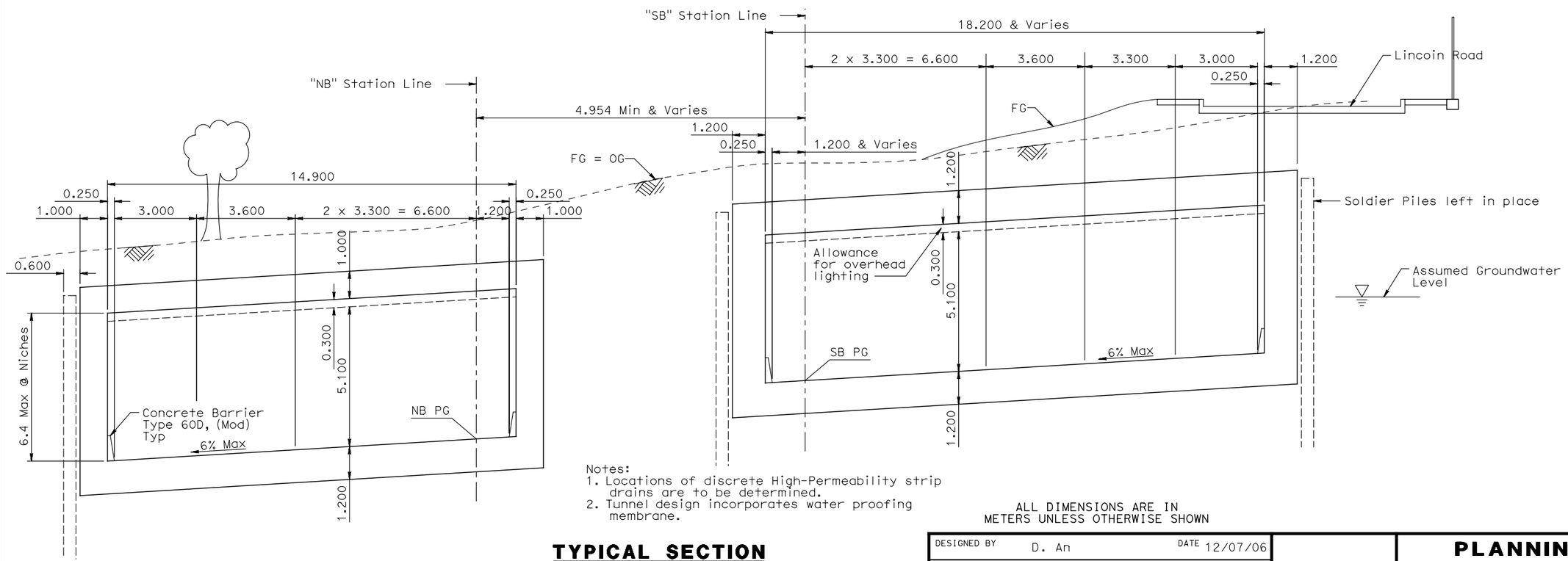

Notes:
1. Locations of discrete High-Permeability strip drains are to be determined.
2. Tunnel design incorporates water proofing membrane.

ALL DIMENSIONS ARE IN METERS UNLESS OTHERWISE SHOWN

TYPICAL SECTION
1:80

DESIGNED BY	D. An	DATE	12/07/06
DRAWN BY	X. Sun	DATE	12/07/06
CHECKED BY	K. Chen	DATE	12/07/06
APPROVED		DATE	

PROJECT ENGINEER

PLANNING STUDY

DOYLE DRIVE BATTERY TUNNEL (2 OF 2)

BRIDGE NO.		RU	04242
SCALE:	AS NOTED	EA	163700

USERNAME => reyesl DATE PLOTTED => 6/12/2007 TIME PLOTTED => 11:28:00 AM

ADVANCE PLANNING STUDY SHEET (METRIC) (REV. 3/1/99)

FILE => T:\13145\June 2007 APS\Tunnel Sheets\Battery-2.dgn

PREPARED FOR THE STATE OF CALIFORNIA - DEPARTMENT OF TRANSPORTATION- DIVISION OF STRUCTURES

DIST.	COUNTY	ROUTE	KILOMETER POST TOTAL PROJECT
4	SF	04-SF-101 04-SF-001	KP 12.8-15.7 KP 10.9-11.4

REVISION 6
JUNE 2007

ARUP
901 MARKET STREET, SUITE 260
SAN FRANCISCO, CA 94103

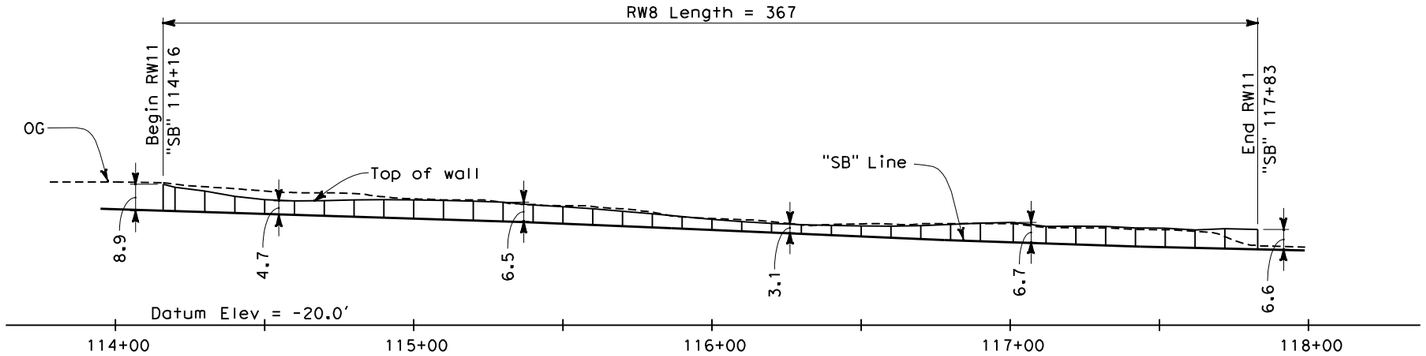

ELEVATION
1:1000

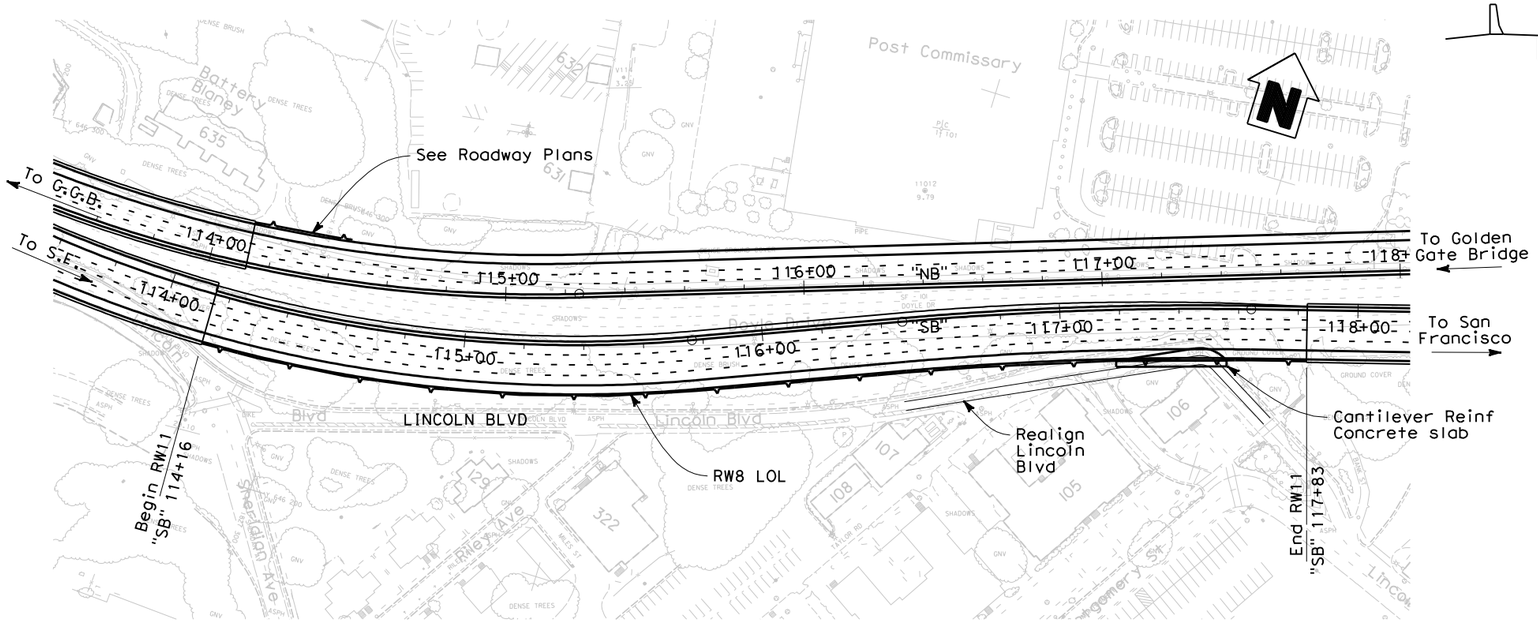

PLAN
1:1000

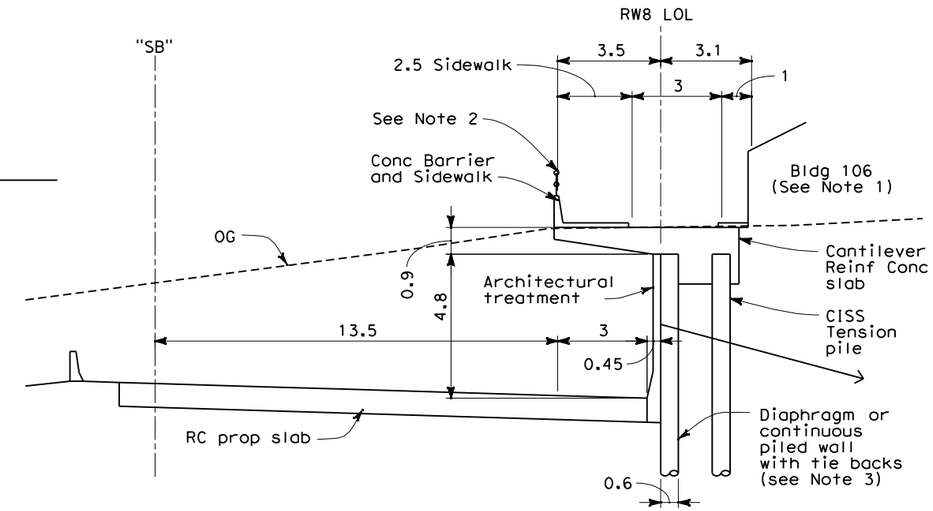

SECTION @ BLDG 106
1:100

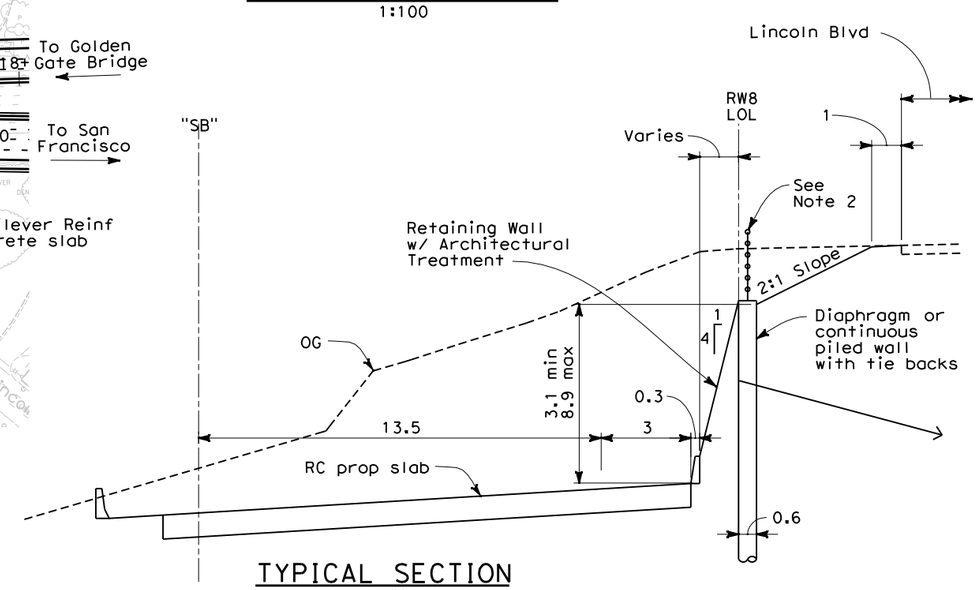

TYPICAL SECTION
1:100

PREFERRED ALTERNATIVE
REFINED PRESIDIO PARKWAY

Date of Estimate	05-16-07
Bridge Removal	-
Wall Height	3.1 min, 8.9 max
Length	367.0 m
Width	N/A
Area	2,080 m^2
Cost / sq m including 10 % Mobilization & 25 % Contingency	$ 4,462
Total Cost	$ 9,281,000

NOTES:

1. Wall Construction adjacent to Bldg 106 may require underpinning of the bldg foundation. Retaining wall to be prestressed with tiebacks as shown. Provide continuous settlement monitoring during construction.
2. Provide pedestrian fence at top of wall.
3. Diaphragm or continuous piled wall to be designed to resist wertical loads.

ALL DIMENSIONS ARE IN METERS UNLESS OTHERWISE SHOWN

DESIGNED BY	O. Liu	DATE	4/2/07
DRAWN BY	B. Mason	DATE	4/2/07
CHECKED BY	E. Lam	DATE	4/2/07
APPROVED	J. Karn	DATE	4/2/07

*
PROJECT ENGINEER
07

PLANNING STUDY

Retaining Wall

BRIDGE NO.	34-14A	RU	04242
SCALE:	AS NOTED	EA	163700

USERNAME => $USER$ DATE PLOTTED => $DATE$ TIME PLOTTED => $TIME$

DIST.	COUNTY	ROUTE	KILOMETER POST TOTAL PROJECT
04	SF	101	12.8-15.7

REVISION 6

JUNE 2007

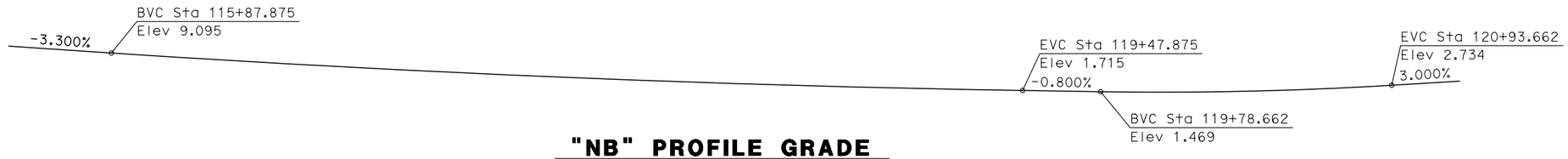

"NB" PROFILE GRADE

No Scale

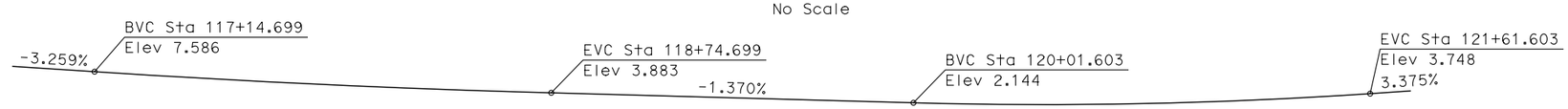

"SB" PROFILE GRADE

No Scale

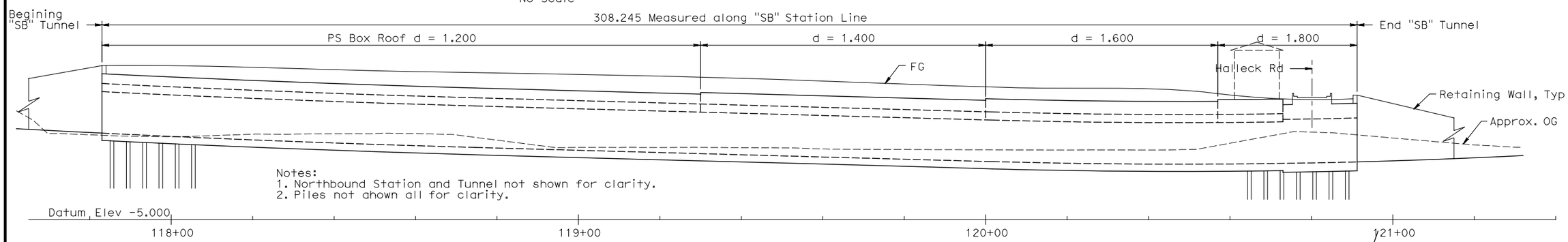

DEVELOPED ELEVATION

1:500 (H)
1:250 (V)

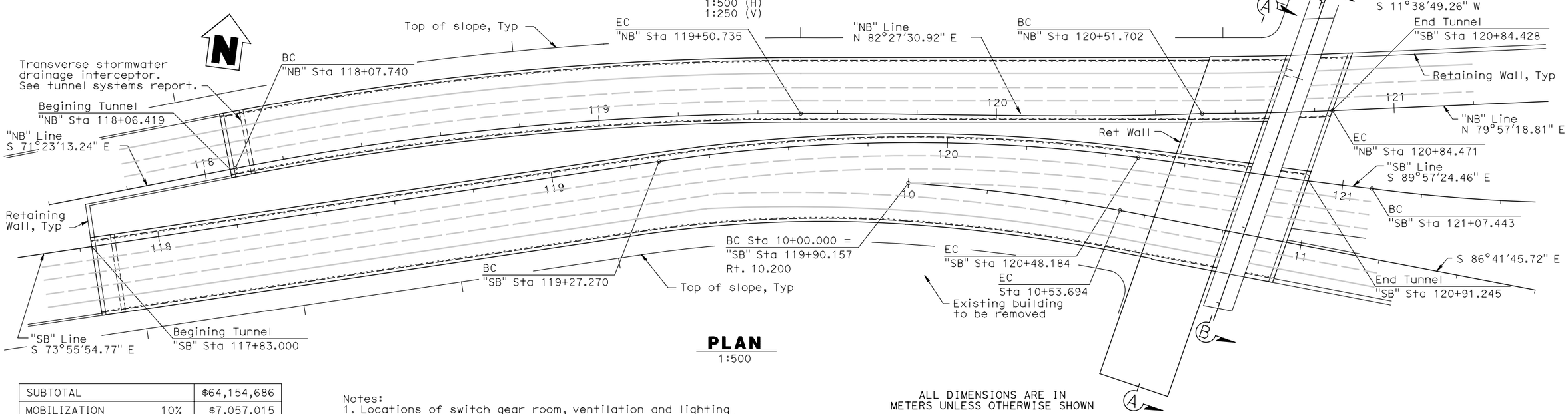

PLAN

1:500

ALL DIMENSIONS ARE IN METERS UNLESS OTHERWISE SHOWN

SUBTOTAL		$64,154,686
MOBILIZATION	10%	$7,057,015
SUBTOTAL CONTRACT ITEMS		$71,211,701
CONTINGENCIES	25%	$17,802,925
TOTAL		$89,014,626
FOR BUDGET PURPOSES USE		$89,015,000

Notes:
1. Locations of switch gear room, ventilation and lighting to be determined. See "Tunnel Systems Report" for details.
2. Evacuation stairs from the tunnel are not necessary. Emergency egress shall be via the shoulder through the portals. Access to surface grade is to be determined but shall be incorporated into the landscaping.
3. Refer to "Road Plans" for construction staging.
4. Sump is to be located at the Main Post Tunnel.

DESIGNED BY	D. An	DATE	12/07/06
DRAWN BY	X. Sun	DATE	12/07/06
CHECKED BY	K. Chen	DATE	12/07/06
APPROVED		DATE	

PROJECT ENGINEER

PLANNING STUDY

DOYLE DRIVE MAIN POST TUNNEL (1 OF 3)

BRIDGE NO.		RU	04242
SCALE:	AS NOTED	EA	163700

PREPARED FOR THE STATE OF CALIFORNIA - DEPARTMENT OF TRANSPORTATION- DIVISION OF STRUCTURES

USERNAME => reyesi DATE PLOTTED => 6/12/2007 TIME PLOTTED => 11:30:24 AM

DIST.	COUNTY	ROUTE	KILOMETER POST TOTAL PROJECT
04	SF	101	12.8-15.7

REVISION 6

JUNE 2007

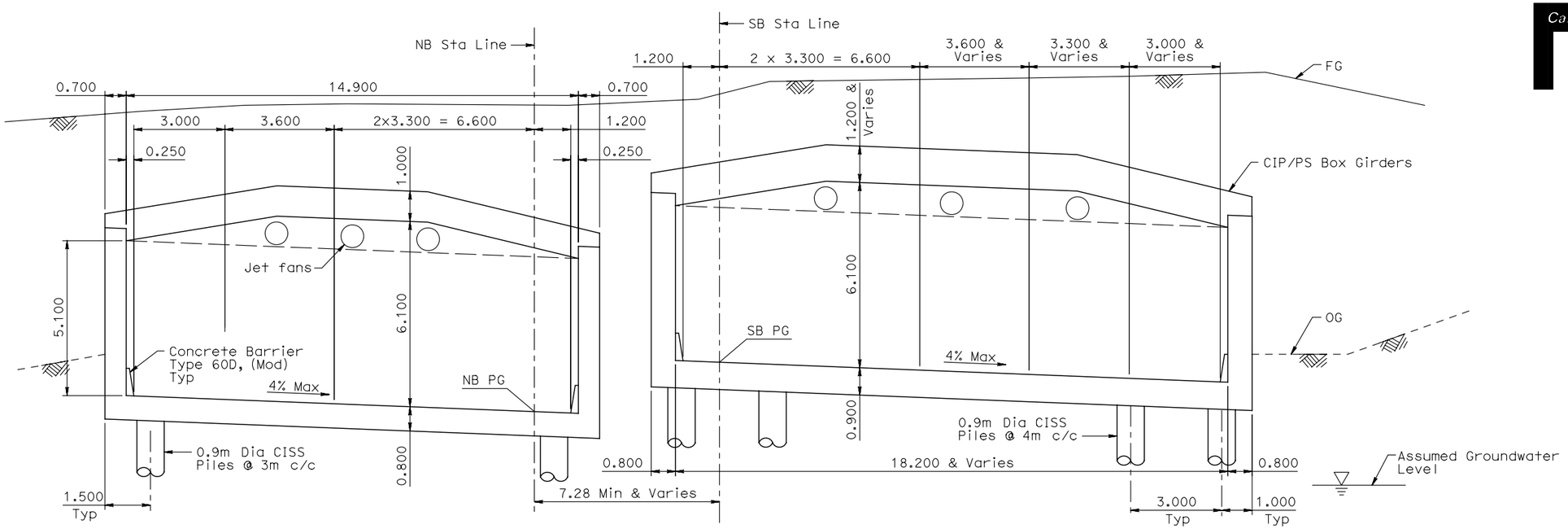

TYPICAL SECTION

1:80

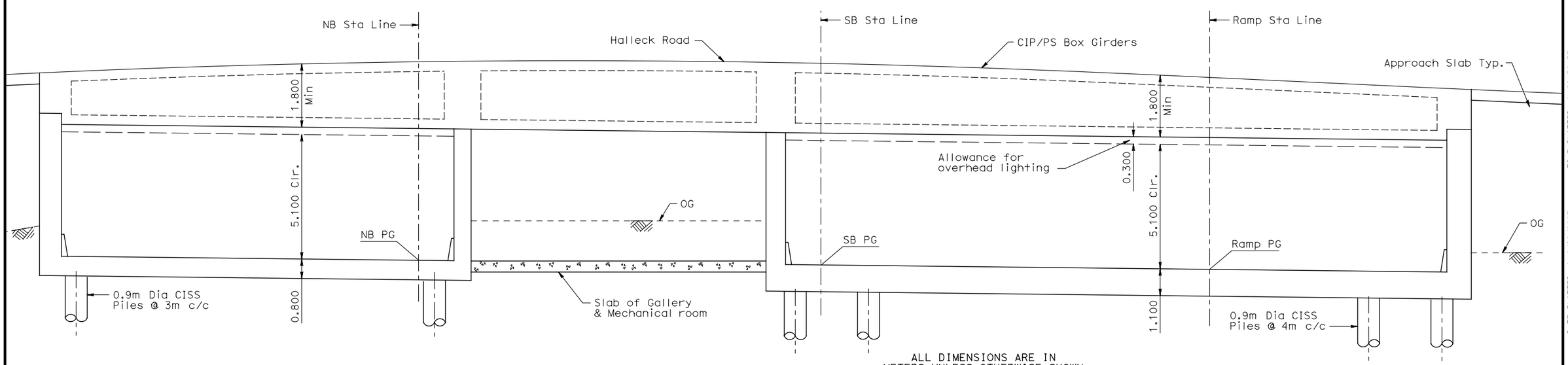

SECTION B-B

1:80

ALL DIMENSIONS ARE IN METERS UNLESS OTHERWISE SHOWN

DESIGNED BY	D. An	DATE	12/07/06
DRAWN BY	X. Sun	DATE	12/07/06
CHECKED BY	K. Chen	DATE	12/07/06
APPROVED		DATE	

PROJECT ENGINEER

PLANNING STUDY

DOYLE DRIVE MAIN POST TUNNEL (2 OF 3)

BRIDGE NO.		RU	04242
SCALE:	AS NOTED	EA	163700

PREPARED FOR THE STATE OF CALIFORNIA - DEPARTMENT OF TRANSPORTATION- DIVISION OF STRUCTURES

USERNAME => reyesl DATE PLOTTED => 6/12/2007 TIME PLOTTED => 11:31:33 AM

ADVANCE PLANNING STUDY SHEET (METRIC) (REV. 3/1/99)

FILE => T:\13145\June 2007 APS\Tunnel Sheets\MainPost-2.dgn

PREPARED FOR THE STATE OF CALIFORNIA - DEPARTMENT OF TRANSPORTATION- DIVISION OF STRUCTURES

Caltrans Metric

DIST.	COUNTY	ROUTE	KILOMETER POST TOTAL PROJECT
04	SF	101	12.8-15.7

REVISION 6

JUNE 2007

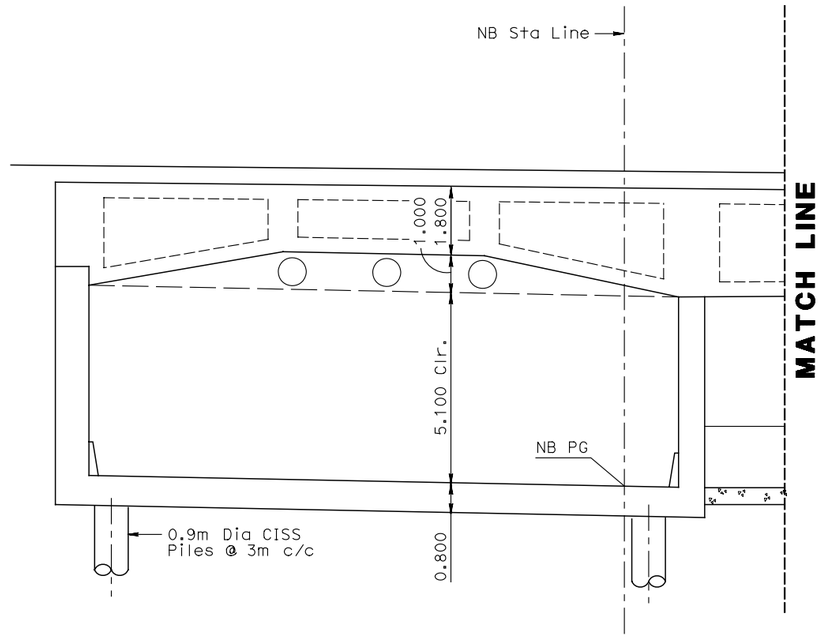

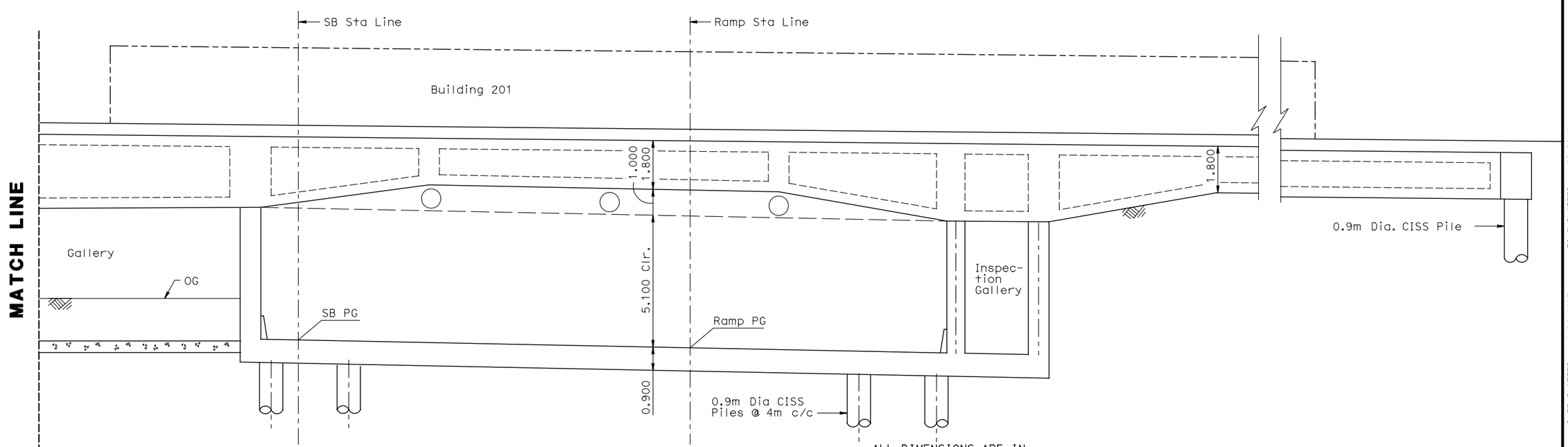

SECTION A-A
1:80

ALL DIMENSIONS ARE IN
METERS UNLESS OTHERWISE SHOWN

DESIGNED BY	D. An	DATE	12/07/06
DRAWN BY	X. Sun	DATE	12/07/06
CHECKED BY	K. Chen	DATE	12/07/06
APPROVED		DATE	

PROJECT ENGINEER

PLANNING STUDY

DOYLE DRIVE MAIN POST TUNNEL (3 OF 3)

BRIDGE NO.		RU	04242
SCALE:	AS NOTED	EA	163700

TIME PLOTTED => 11:32:26 AM
DATE PLOTTED => 6/12/2007
USERNAME => reyesl

ADVANCE PLANNING STUDY SHEET (METRIC) (REV. 3/1/99)

FILE => T:\13145\June 2007 APS\Tunnel Sheets\Mainpost-3.dgn

PREPARED FOR THE STATE OF CALIFORNIA - DEPARTMENT OF TRANSPORTATION- DIVISION OF STRUCTURES

DIST.	COUNTY	ROUTE	KILOMETER POST TOTAL PROJECT
4	SF	04-SF-101 04-SF-001	KP 12.8-15.7 KP 10.9-11.4

REVISION 6
JUNE 2007

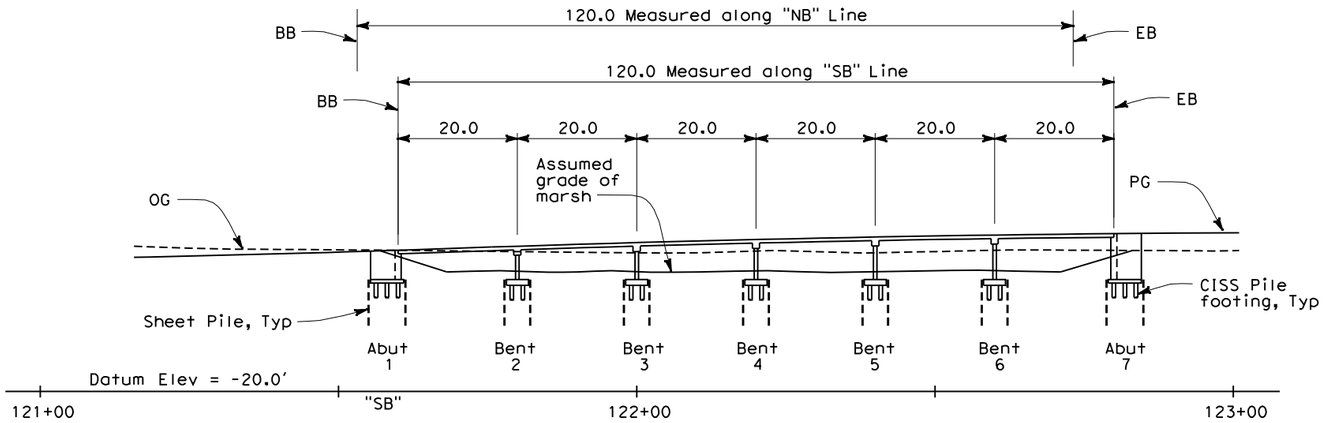

ELEVATION
1:500

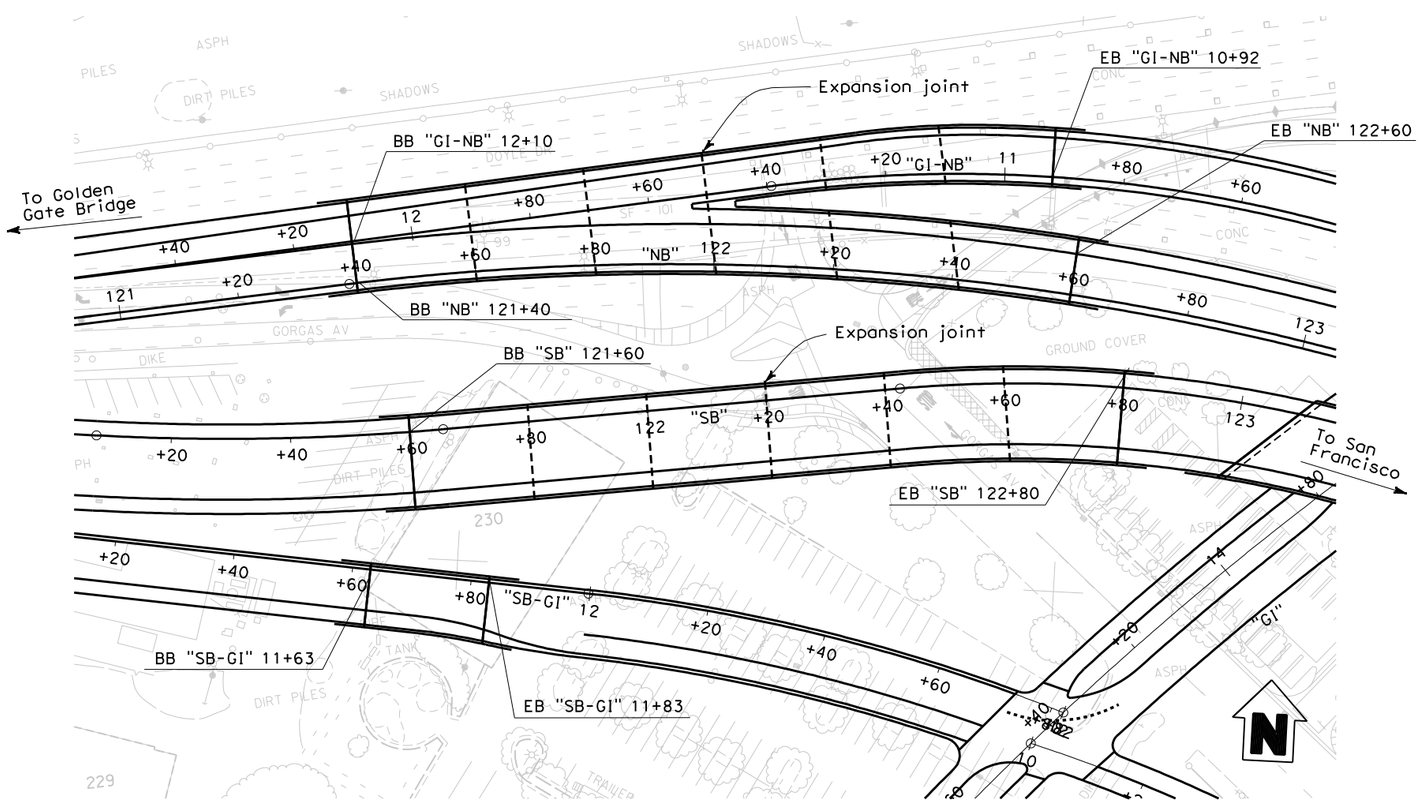

PLAN
1:500

Date of Estimate	05-16-07
Bridge Removal	-
Str. Depth	0.60 m
Length	120.0 m
Width	Varies
Area	4,405.0 m^2
Cost / sq m including 10 % Mobilization & 25 % Contingency	$ 6,389
Total Cost	$ 28,143,000

NOTES:

1. The 100-Year Extreme High Tide is at Elev 2.6 m.
2. Limits of Planned Crissy Marsh Expansion not shown.

ALL DIMENSIONS ARE IN METERS UNLESS OTHERWISE SHOWN

PREFERRED ALTERNATIVE
REFINED PRESIDIO PARKWAY

DESIGNED BY	Q. Liu	DATE	4/2/07
DRAWN BY	B. Mason	DATE	4/2/07
CHECKED BY	E. Lam	DATE	4/2/07
APPROVED	J. Karn	DATE	4/2/07

*
PROJECT ENGINEER
09-1

PLANNING STUDY

Tennessee Hollow Causeway

BRIDGE NO.	D	RU	04242
SCALE:	AS NOTED	EA	163700

TIME PLOTTED => $TIME$
DATE PLOTTED => $DATE$
USERNAME => $USER$

PREPARED FOR THE STATE OF CALIFORNIA - DEPARTMENT OF TRANSPORTATION- DIVISION OF STRUCTURES

DIST.	COUNTY	ROUTE	KILOMETER POST TOTAL PROJECT
4	SF	04-SF-101 04-SF-001	KP 12.8-15.7 KP 10.9-11.4

REVISION 6
JUNE 2007

ARUP
901 MARKET STREET, SUITE 260
SAN FRANCISCO, CA 94103

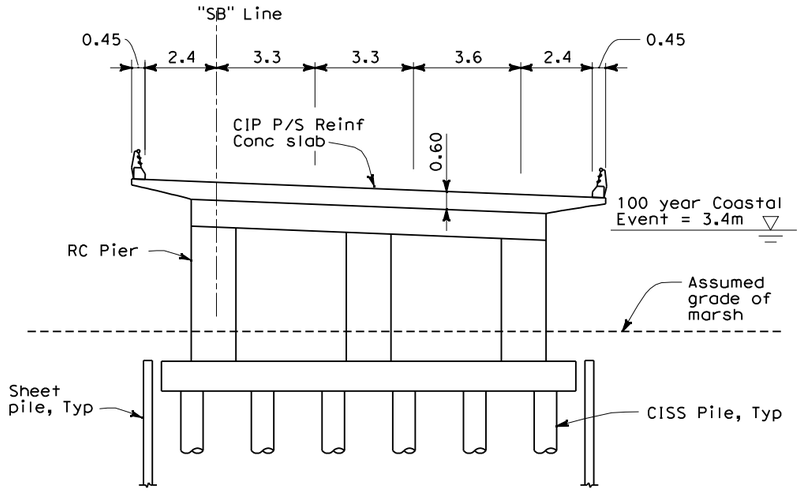

SECTION @ "SB" 122+20
1:100

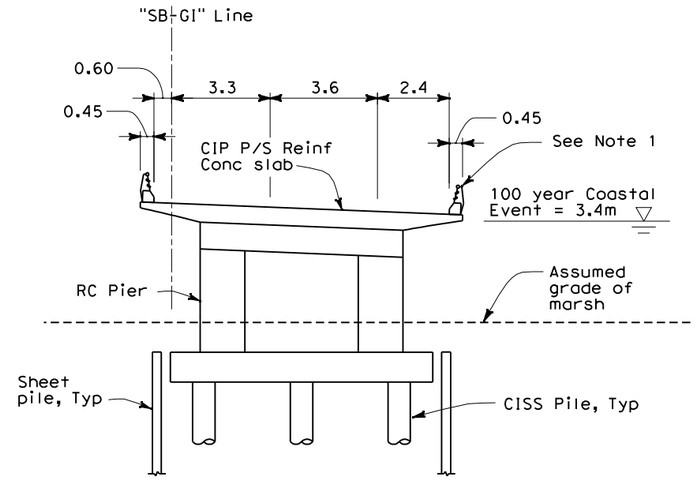

SECTION @ "SB-GI" 11+70
1:100

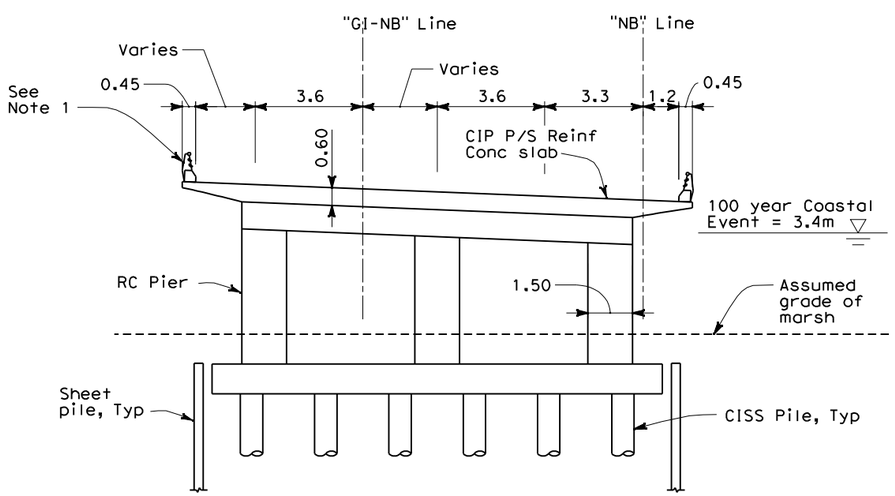

SECTION @ "NB" 121+70
1:100

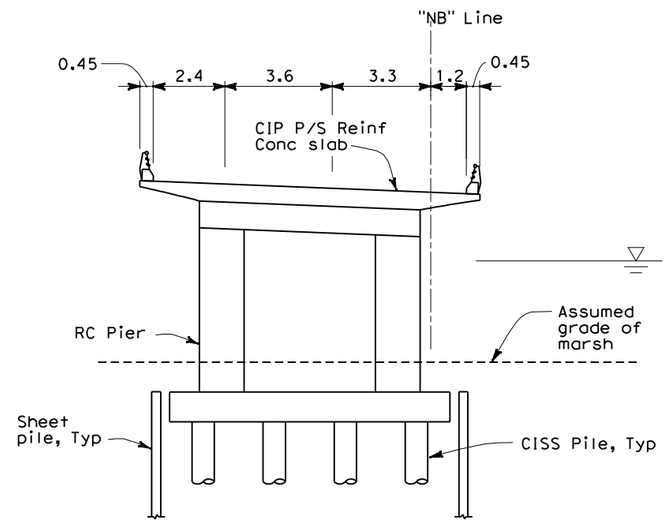

SECTION @ "NB" 122+20
1:100

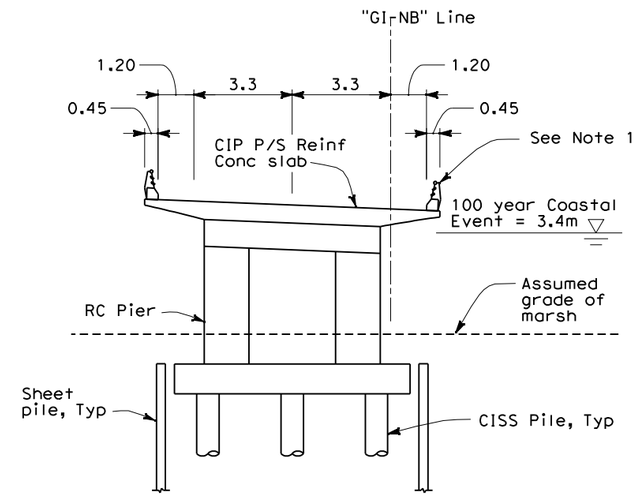

SECTION @ "GI-NB" 11+00
1:100

NOTES:

1. Concrete bridge railing with architectural treatment.
2. Pier thickness in longitudinal direction equal 0.6 m.

ALL DIMENSIONS ARE IN
METERS UNLESS OTHERWISE SHOWN

PREFERRED ALTERNATIVE
REFINED PRESIDIO PARKWAY

DESIGNED BY	Q. Liu	DATE	4/2/07
DRAWN BY	B. Mason	DATE	4/2/07
CHECKED BY	E. Lam	DATE	4/2/07
APPROVED	J. Karn	DATE	4/2/07

*
PROJECT ENGINEER
09-2

PLANNING STUDY

Tennessee Hollow Sections

BRIDGE NO.	D	RU	04242
SCALE:	AS NOTED	EA	163700

TIME PLOTTED => $TIME$
DATE PLOTTED => $DATE$
USERNAME => $USER$

DIST.	COUNTY	ROUTE	KILOMETER POST TOTAL PROJECT
4	SF	04-SF-101 04-SF-001	KP 12.8-15.7 KP 10.9-11.4

REVISION 6
JUNE 2007

ARUP
901 MARKET STREET, SUITE 260
SAN FRANCISCO, CA 94103

Caltrans Metric

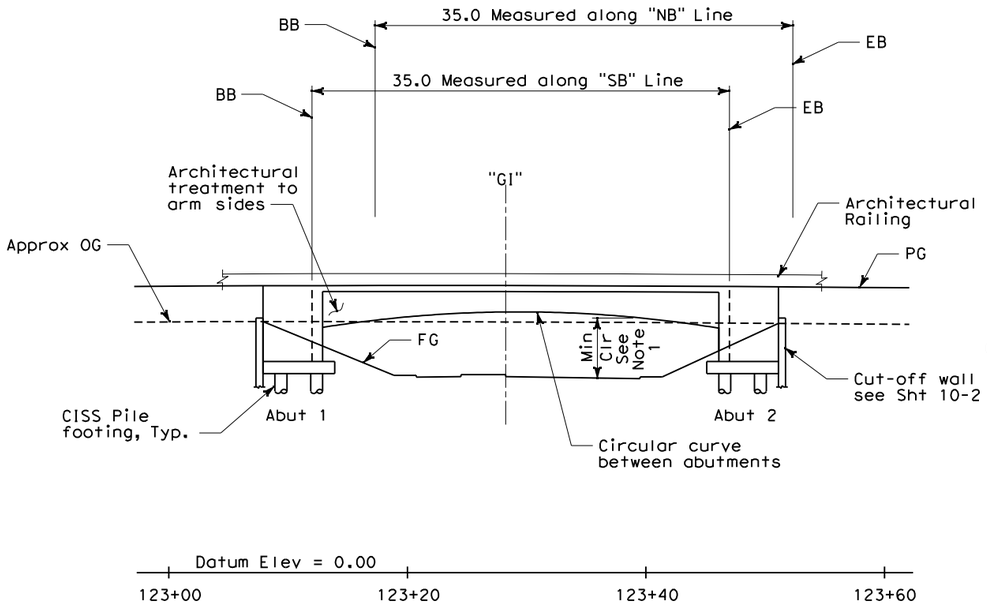

ELEVATION
Scale: 1:250

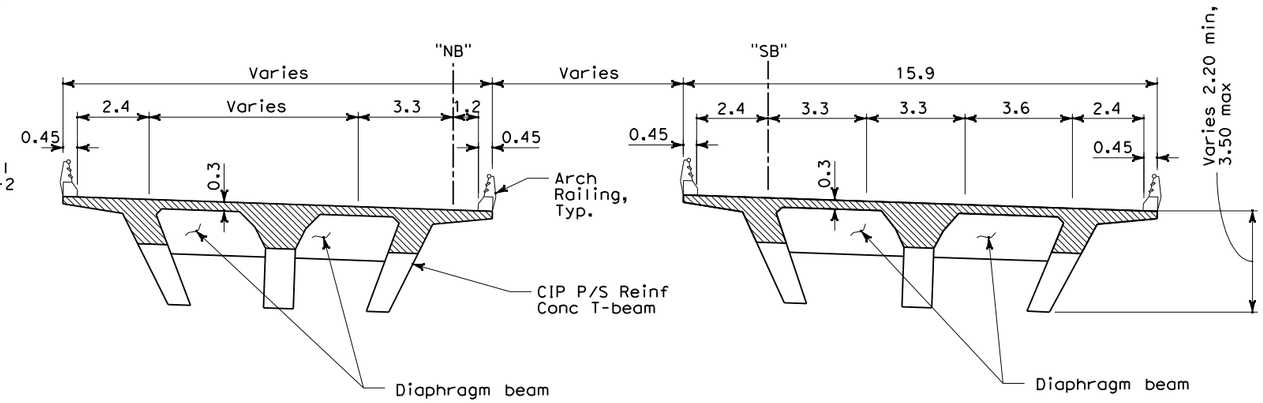

"NB" "SB"

TYPICAL SECTION
Scale: 1:100

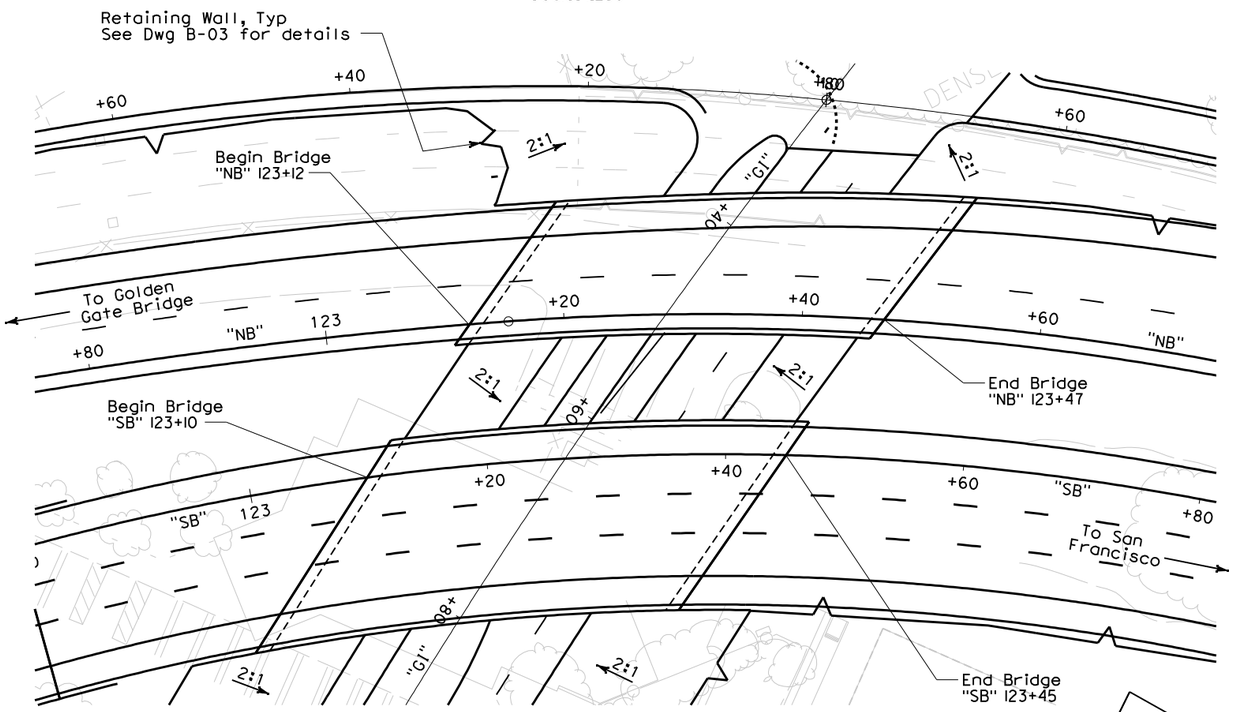

PLAN
Scale: 1:250

Date of Estimate	05-16-07
Bridge Removal	-
Str. Depth	2.2-3.5 m
Length	35.0 m
Width	15.9 m & Varies
Area	975.0 m²
Cost / sq m including 10 % Mobilization & 25 % Contingency	$ 7,758
Total Cost	$ 7,564,000

NOTES:

1. Minimum vertical clearances are:
   NB Line over Girard Road: 5.8 m
   SB Line over Girard Road: 5.5 m

ALL DIMENSIONS ARE IN METERS UNLESS OTHERWISE SHOWN

PREFERRED ALTERNATIVE REFINED PRESIDIO PARKWAY

DESIGNED BY	Q. Liu	DATE	4/2/07
DRAWN BY	B. Mason	DATE	4/2/07
CHECKED BY	E. Lam	DATE	4/2/07
APPROVED	J. Karn	DATE	4/2/07

*
PROJECT ENGINEER
10-1

PLANNING STUDY

Girard Road U.C.

BRIDGE NO.	E	RU	04242
SCALE:	AS NOTED	EA	163700

PREPARED FOR THE STATE OF CALIFORNIA - DEPARTMENT OF TRANSPORTATION- DIVISION OF STRUCTURES

ADVANCE PLANNING STUDY SHEET (METRIC) (REV. 3/1/99)

FILE => $FILES$

USERNAME => $USER$ DATE PLOTTED => $DATE$ TIME PLOTTED => $TIME$

PREPARED FOR THE STATE OF CALIFORNIA - DEPARTMENT OF TRANSPORTATION- DIVISION OF STRUCTURES

DIST.	COUNTY	ROUTE	KILOMETER POST TOTAL PROJECT
4	SF	04-SF-101 04-SF-001	KP 12.8-15.7 KP 10.9-11.4

REVISION 6
JUNE 2007

ARUP
901 MARKET STREET, SUITE 260
SAN FRANCISCO, CA 94103

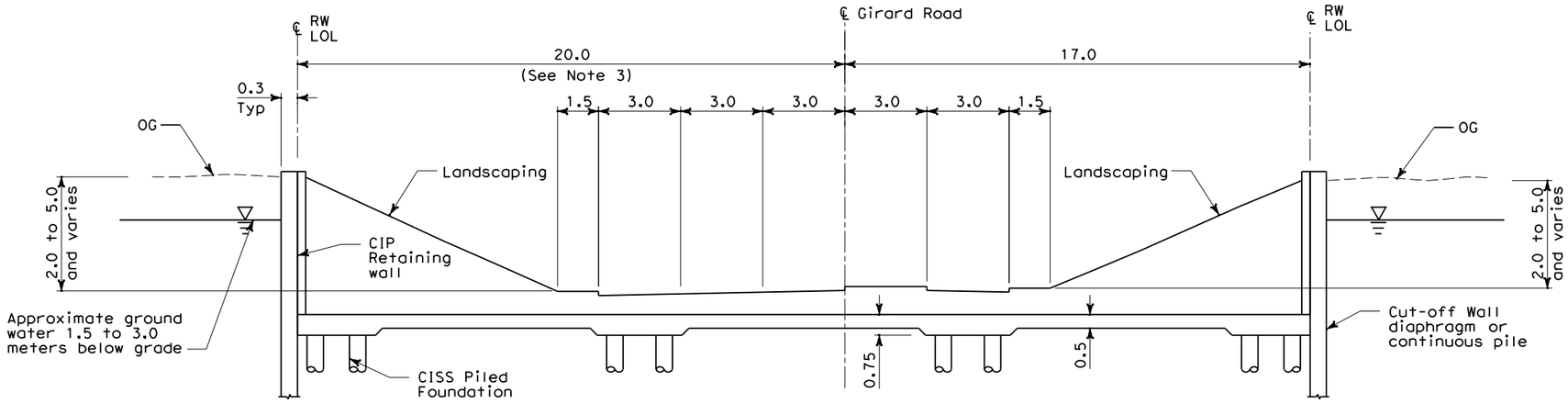

SECTION A-A
Scale: 1:100

Date of Estimate	05-16-07
Bridge Removal	-
Str. Depth	N/A
Length	N/A
Width	Varies
Area	10,404 m^2
Cost / sq m including 10 % Mobilization & 25 % Contingency	$ 4,586
Total Cost	$ 47,709,000

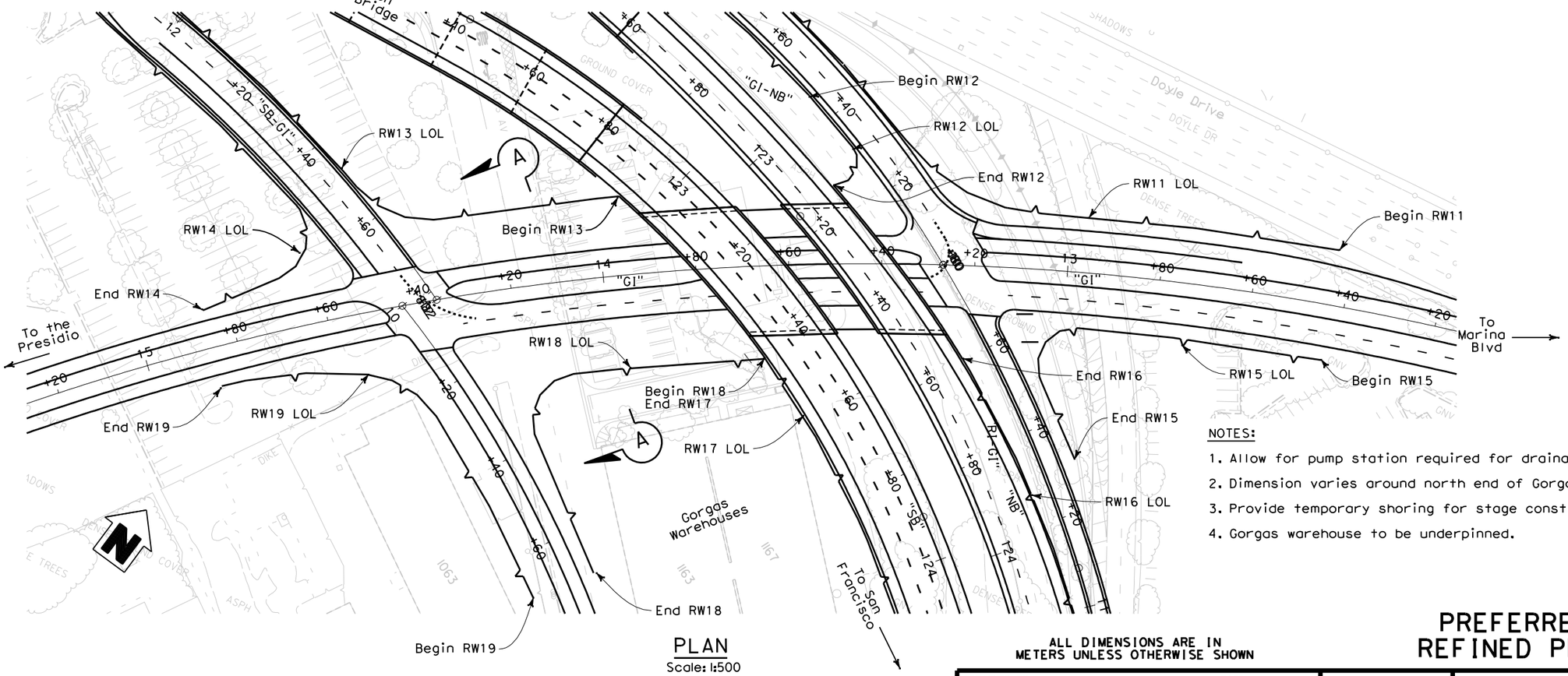

PLAN
Scale: 1:500

NOTES:

1. Allow for pump station required for drainage location to be determined.
2. Dimension varies around north end of Gorgas Warehouses.
3. Provide temporary shoring for stage construction.
4. Gorgas warehouse to be underpinned.

ALL DIMENSIONS ARE IN METERS UNLESS OTHERWISE SHOWN

PREFERRED ALTERNATIVE
REFINED PRESIDIO PARKWAY

DESIGNED BY	Q. Liu	DATE	4/2/07
DRAWN BY	B. Mason	DATE	4/2/07
CHECKED BY	E. Lam	DATE	4/2/07
APPROVED	J. Karn	DATE	4/2/07

*
PROJECT ENGINEER
10-2

PLANNING STUDY

Girard Road Depressed Section

BRIDGE NO.	F	RU	04242
SCALE:	AS NOTED	EA	163700

TIME PLOTTED => $TIME$
DATE PLOTTED => $DATE$
USERNAME => $USER$