| DIST | COUNTY | ROUTE | POST MILES TOTAL PROJECT | SHEET NO. | TOTAL SHEETS |
|---|---|---|---|---|---|
| 04 | SF | 1.35 | 6.2/6.9.2.1 | 30 | 34 |

REGISTERED CIVIL ENGINEER

5-2-94

PLANS APPROVAL DATE

REGISTERED PROFESSIONAL ENGINEER — P.E. BACH — No. C40130 — Exp. 06/30/96 — STATE OF CALIFORNIA

BEN C. GERWICK, INC.
601 MONTGOMERY ST, SUITE 1400
SAN FRANCISCO, CALIFORNIA 94111

## NOTES:

1. PAINT BRIDGE NUMBER AND COLUMN NUMBER ON COLUMN CASING.
2. FOR EXISTING UTILITIES AND TRAFFIC CONTROL, SEE ROAD PLANS.
3. FOR SECTION E-E, SEE "HINGE RETROFIT DETAILS" SHT.
4. LOCATION OF CORED AND DRILLED HOLES SHOWN IN THE PLANS ARE APPROXIMATE. PRIOR TO PLACING HOLES IN CONCRETE THE CONTRACTOR SHALL LOCATE ALL REINFORCING STEEL AND ADJUST THE LOCATION OF THE HOLES TO CLEAR ALL REINFORCING BARS (EXCEPT AS NOTED). FINAL HOLE LOCATIONS ARE SUBJECT TO THE APPROVAL OF THE ENGINEER.
5. PAT SLAB AT EX. COL LOC

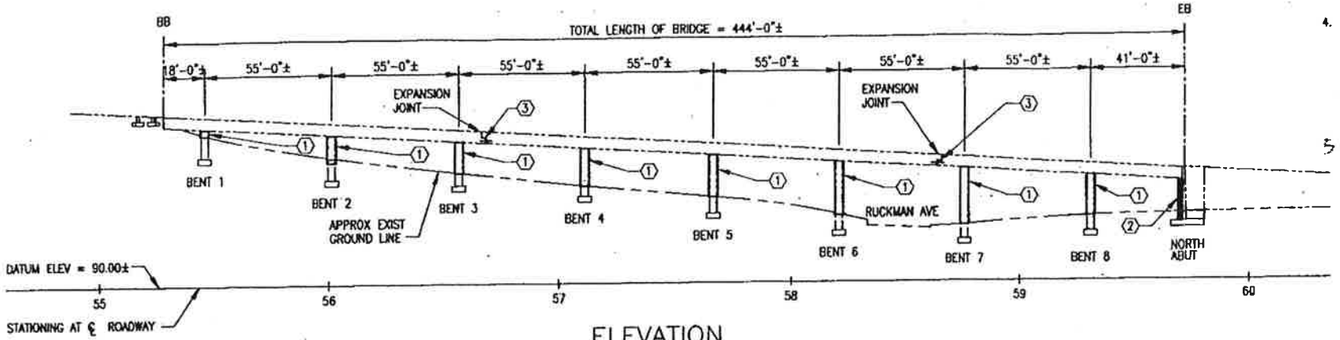


## ELEVATION
SCALE: 1"=30'

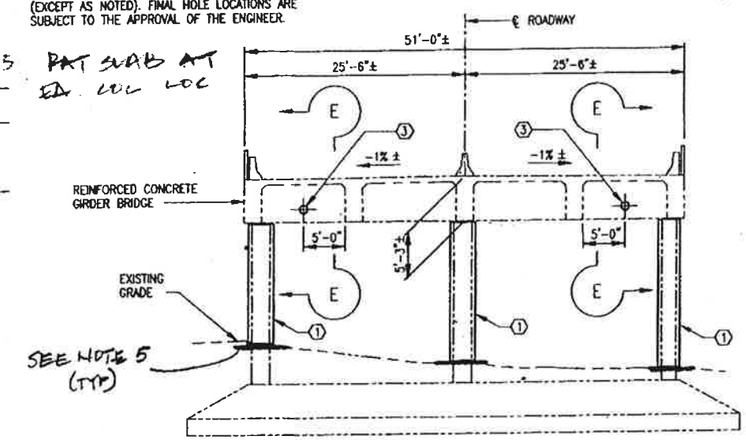


## TYPICAL SECTION
SCALE: 1/8"=1'-0"

STANDARD PLANS
DATED JULY 1992

A-10A ABBREVIATIONS

A-10B SYMBOLS

## LEGEND

1. CLASS P/F STEEL CASING
2. ABUTMENT SEAT EXTENSION
3. PIPE RESTRAINERS

INDICATES EXISTING STRUCTURE

INDICATES NEW CONSTRUCTION

INDICATES DIRECTION OF TRAFFIC

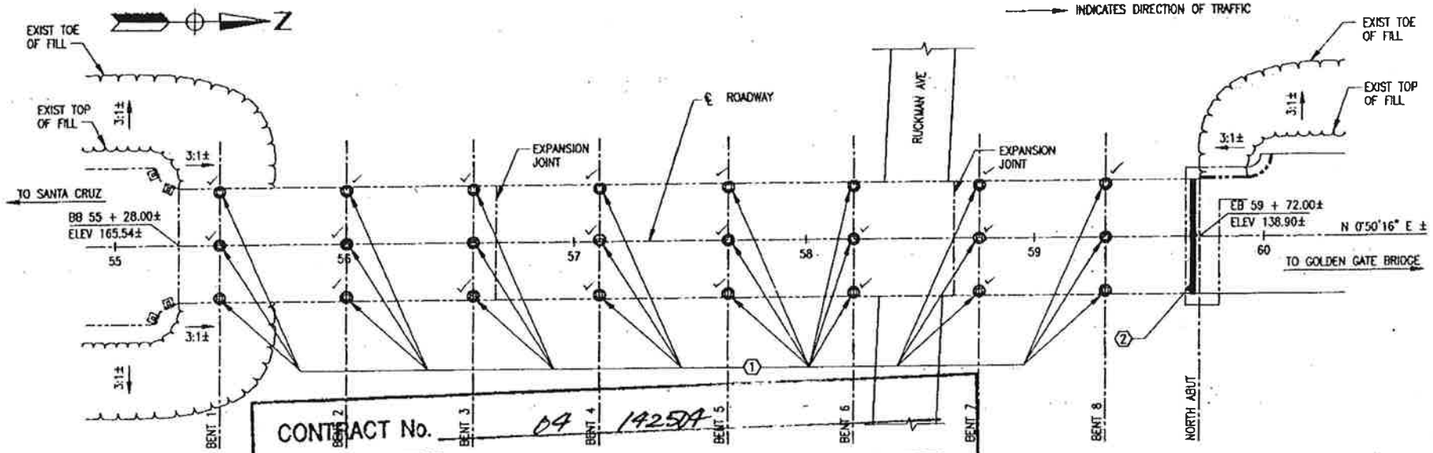


## PLAN
SCALE: 1"=30'

CONTRACT No. 04 142501

DATE ACCEPTED

AS BUILT

Structure Representative
~~RESIDENT ENGINEER~~ JOHN S. UDELMI

REVISIONS BY DATE APRIL 1995

NOTE:
THE CONTRACTOR SHALL VERIFY ALL CONTROLLING FIELD DIMENSIONS BEFORE ORDERING OR FABRICATING ANY MATERIAL

QUANTITIES

| | | |
|---|---|---|
| STRUCTURE EXCAVATION (BRIDGE) | 160 | CY |
| STRUCTURE BACKFILL (BRIDGE) | 140 | CY |
| STRUCTURAL CONCRETE, BRIDGE | 58 | CY |
| DRILL AND BOND DOWEL | 600 | LF |
| CORE CONCRETE (6") | 11 | LF |
| BAR REINFORCING STEEL (BRIDGE) | 11,500 | LB |
| ASPHALT MEMBRANE WATERPROOFING | 700 | SQFT |
| COLUMN CASING | 50,300 | LB |
| MISCELLANEOUS METAL (RESTRAINER) | 680 | LB |

## GENERAL NOTES
### LOAD FACTOR DESIGN

DESIGN: BRIDGE DESIGN SPECIFICATIONS (1983 AASHTO WITH INTERIMS AND REVISIONS BY CALTRANS)

REINFORCED CONCRETE: NEW CONSTRUCTION
$f_y$ = 60,000 PSI
$f'_c$ = 3,250 PSI
EXISTING (ASSUMED FOR RETROFIT EVALUATION)
$f_y$ = 44,000 PSI
$f'_c$ = 5,000 PSI

STRUCTURAL STEEL: ASTM A36
$f_y$ = 36,000 PSI (UNLESS OTHERWISE NOTED)

SEISMIC LOADING: PEAK BEDROCK ACCELERATION = 0.6g
DEPTH OF ALLUVIUM = 10 FT TO 80 FT

## INDEX TO BRIDGE PLAN


1. GENERAL PLAN
2. ABUTMENT RETROFIT DETAILS
3. BENT RETROFIT DETAILS
4. HINGE RETROFIT DETAILS
5. STEEL COLUMN CASINGS


EARTHQUAKE RETROFIT PROJECT NO. 300

RUCKMAN AVENUE UNDERCROSSING

GENERAL PLAN

| | | | | | |
|---|---|---|---|---|---|
| M. CULLEN (M J Cullen) DESIGN OVERSIGHT 3-29-94 | DESIGN | BY G. FOTINOS | CHECKED P. BACH | LOAD FACTOR DESIGN | |
| SIGNOFF DATE | DETAILS | BY B. CARPENTER | CHECKED C. REDFIELD | LAYOUT | BY C. REDFIELD — CHECKED K. SHUSHKEWICH |
| | QUANTITIES | BY C. REDFIELD | CHECKED P. DURNAL | SPECIFICATIONS | BY C. R. FIRTH — PLANS AND SPECS COMPARED C. R. FIRTH |

PREPARED FOR THE STATE OF CALIFORNIA DEPARTMENT OF TRANSPORTATION

P. E. BACH, PROJECT ENGINEER

BRIDGE NO. 34-18

POST MILE 6.1

CU 04
EA 142501

ORIGINAL SCALE IN INCHES FOR REDUCED PLANS 0 1 2 3

DISREGARD PRINTS BEARING EARLIER REVISION DATES → 12-10-92

SHEET 1 OF 5

FILE NAME : 9220-561
PLOT SCALE : 1"=1"

59Q042-10

ClibPDF - www.fastio.com

| DIST | COUNTY | ROUTE | POST MILES TOTAL PROJECT | SHEET NO. | TOTAL SHEETS |
|---|---|---|---|---|---|
| 04 | SF | 1.35 | 6.2/6.9, 2.1 | 31 | 34 |

REGISTERED CIVIL ENGINEER

5-2-94
PLANS APPROVAL DATE

REGISTERED PROFESSIONAL ENGINEER — P.E. BACH — C48130 — Exp. 06/30/96 — CIVIL — STATE OF CALIFORNIA

BEN C. GERWICK, INC.
601 MONTGOMERY ST, SUITE 1400
SAN FRANCISCO, CALIFORNIA 94111

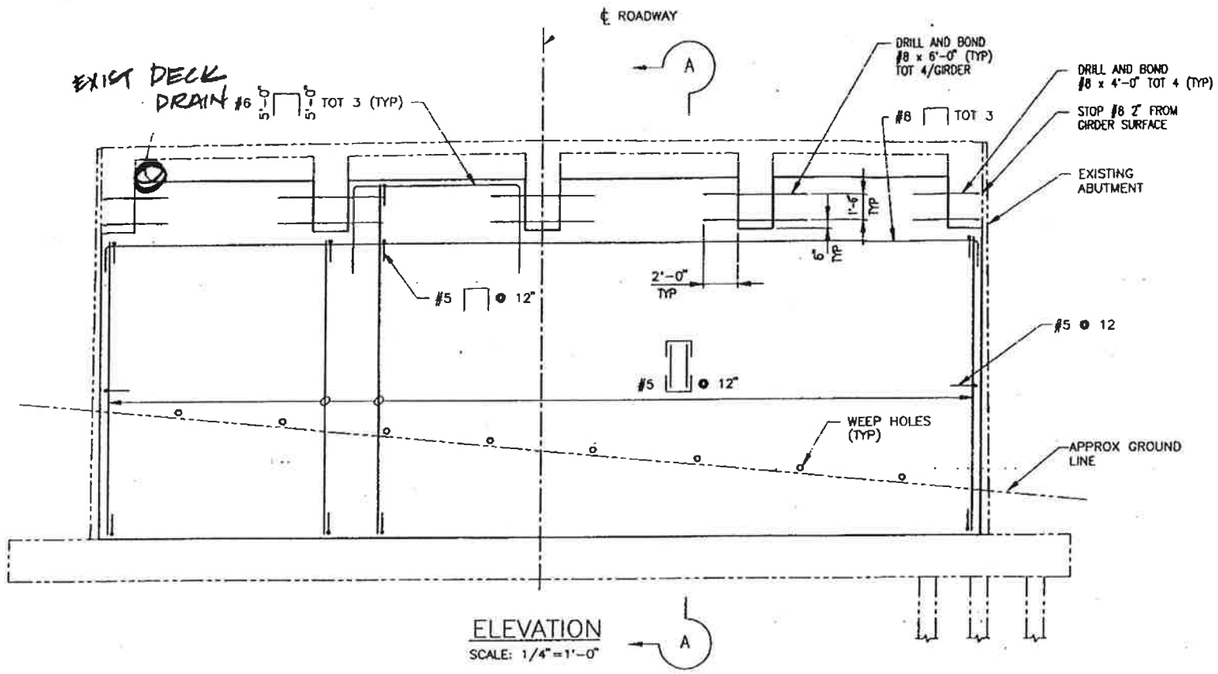


ELEVATION
SCALE: 1/4" = 1'-0"

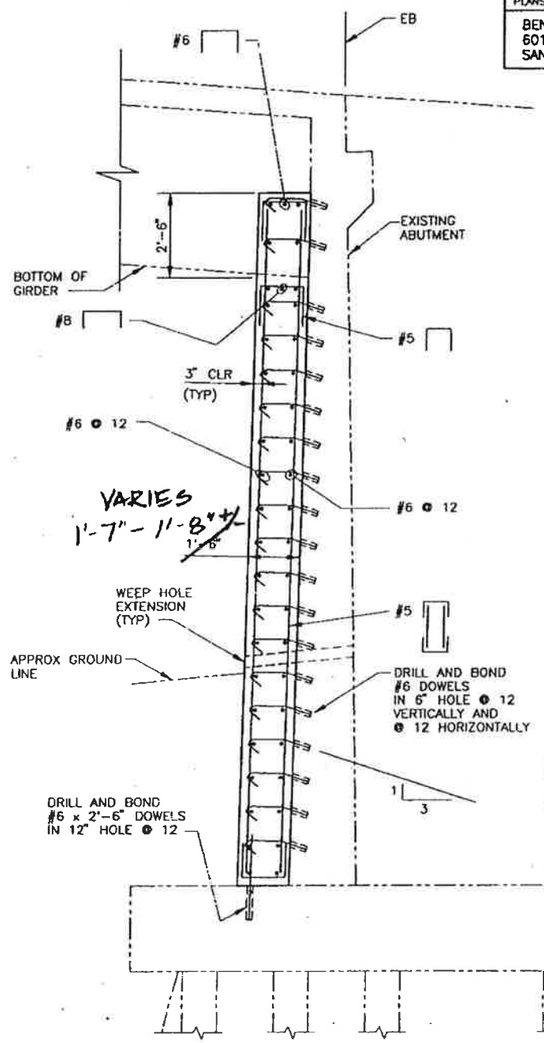


SECTION A–A
SCALE: 1/2" = 1'-0"

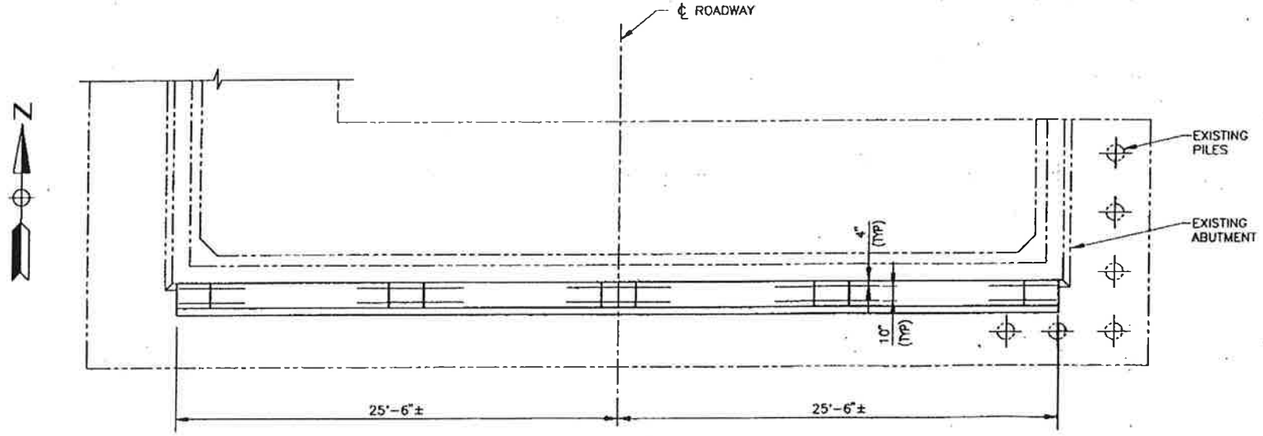


PLAN – NORTH ABUTMENT
SCALE: 1/4" = 1'-0"

NOTE:
THE CONTRACTOR SHALL VERIFY ALL CONTROLLING FIELD DIMENSIONS BEFORE ORDERING OR FABRICATING ANY MATERIAL

CONTRACT No. 04-142504
DATE ACCEPTED
AS BUILT
Structure Representative
RESIDENT ENGINEER
REVISIONS BY
DATE APRIL 1995

PLOT DATE : 02-14-94
FILE NAME : 9220-562
PLOT SCALE : 1"=1"

M. CULLEN — M J Cullen — 3-29-94
DESIGN OVERSIGHT — SIGNOFF DATE

| | | | |
|---|---|---|---|
| DESIGN | G. FOTINOS | CHECKED | P. BACH |
| DETAILS | B. CARPENTER | CHECKED | C. REDFIELD |
| QUANTITIES | C. REDFIELD | CHECKED | P. DURNAL |

ORIGINAL SCALE IN INCHES FOR REDUCED PLANS 0 1 2 3

PREPARED FOR THE
STATE OF CALIFORNIA
DEPARTMENT OF TRANSPORTATION

P.E. BACH
PROJECT ENGINEER

CU 04
EA 142501

BRIDGE NO. 34-18
POST MILE 6.1

DISREGARD PRINTS BEARING EARLIER REVISION DATES

EARTHQUAKE RETROFIT PROJECT NO. 3C0
RUCKMAN AVENUE UNDERCROSSING
ABUTMENT RETROFIT DETAILS

2 5

ClibPDF - www.fastio.com

| | | | | SHEET NO. | TOTAL SHEETS |
|---|---|---|---|---|---|
| 04 | SF | 1.35 | 6.2/6.9.2.1 | 33 | 34 |

REGISTERED CIVIL ENGINEER

5-2-94
PLANS APPROVAL DATE

REGISTERED PROFESSIONAL ENGINEER
P.E. BACH
No. C48130
Exp. 06/30/96
CIVIL
STATE OF CALIFORNIA

BEN C. GERWICK, INC.
601 MONTGOMERY ST, SUITE 1400
SAN FRANCISCO, CALIFORNIA 94111

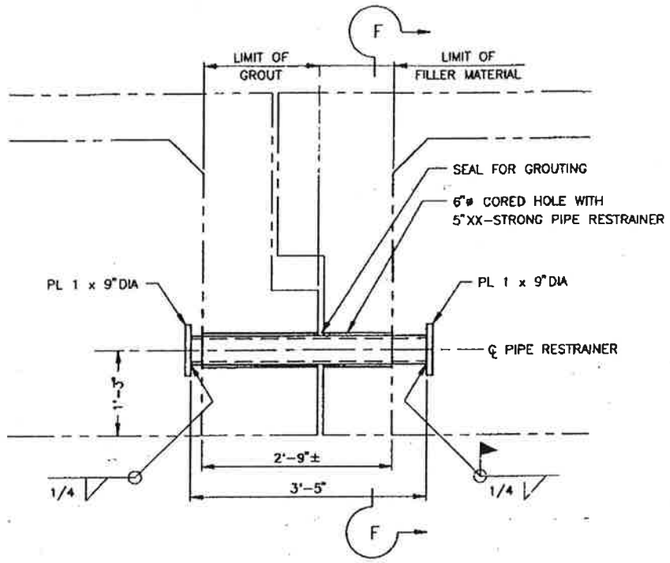


SECTION E-E
SCALE: 1"=1'-0"

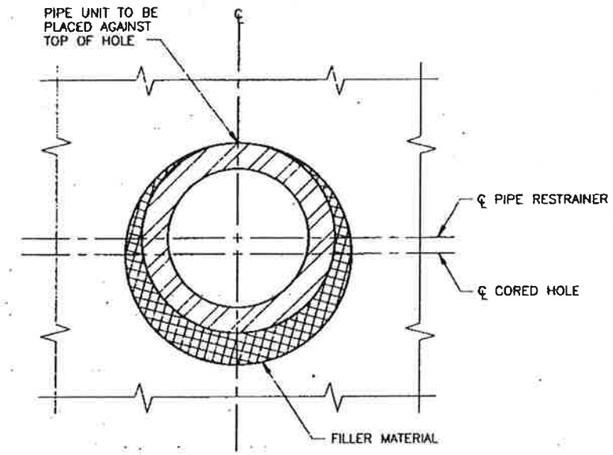


SECTION F-F
NO SCALE

NOTES:

1. FOR LOCATION OF SECTION E-E, SEE "GENERAL PLAN" SHT.

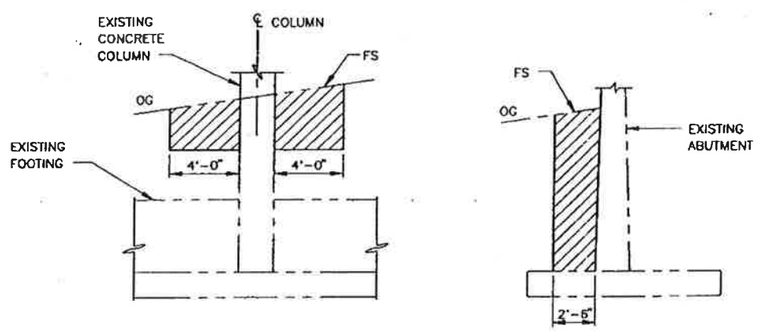


STRUCTURE EXCAVATION

EXCAVATION LIMITS
SCALE: 1/4"=1'-0"

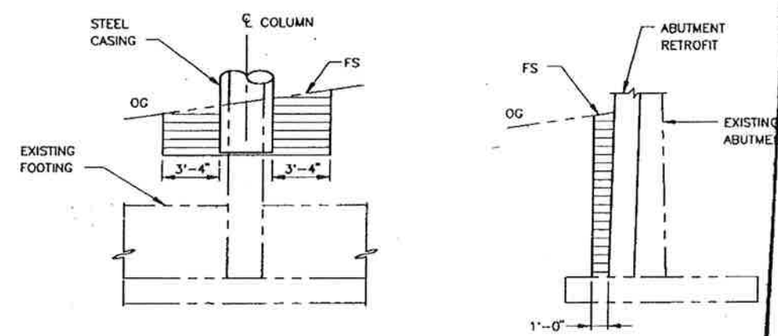


STRUCTURE BACKFILL

BACKFILL LIMITS
SCALE: 1/4"=1'-0"

NOTE:
THE CONTRACTOR SHALL VERIFY ALL CONTROLLING FIELD DIMENSIONS BEFORE ORDERING OR FABRICATING ANY MATERIAL

CONTRACT No. 04-142504
DATE ACCEPTED
AS BUILT
Structure Representative
RESIDENT ENGINEER
REVISIONS BY
DATE JULY 5, MONTH APRIL 1995

PLOT DATE : 02-14-94
FILE NAME : 9220-S64
PLOT SCALE : 1"=1"

| | | | | | |
|---|---|---|---|---|---|
| M. CULLEN M J Cullen 3-29-99 DESIGN OVERSIGHT / SIGNOFF DATE | DESIGN | BY G. FOTINOS | CHECKED P. BACH | PREPARED FOR THE STATE OF CALIFORNIA DEPARTMENT OF TRANSPORTATION | P. E. BACH PROJECT ENGINEER |
| | DETAILS | BY B. CARPENTER | CHECKED K. SHUSHKEWICH | | |
| | QUANTITIES | BY K. SHUSHKEWICH | CHECKED P. DURNAL | | |

ORIGINAL SCALE IN INCHES FOR REDUCED PLANS 0 1 2 3

CU 04
EA 142501

BRIDGE NO. 34-18
POST MILE 6.1

DISREGARD PRINTS BEARING EARLIER REVISION DATES

EARTHQUAKE RETROFIT PROJECT NO. 300
RUCKMAN AVENUE UNDERCROSSING
HINGE RETROFIT DETAILS

SHEET 4 OF 5

ClibPDF - www.fastio.com

RELEASED 8-12-93

| DIST. | COUNTY | ROUTE | POST MILES TOTAL | SHEET TOTAL |
|---|---|---|---|---|
| 04 | SF | 1,35 | 6.2/6.9.2. | 34 34 |

REGISTERED ENGINEER - CIVIL

P.E. BACH No. C48130 Exp. 06/30/96 CIVIL STATE OF CALIFORNIA

5-2-94
PLANS APPROVAL DATE

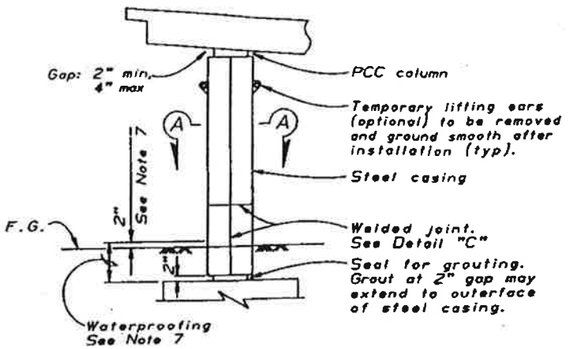


## CLASS F COLUMN

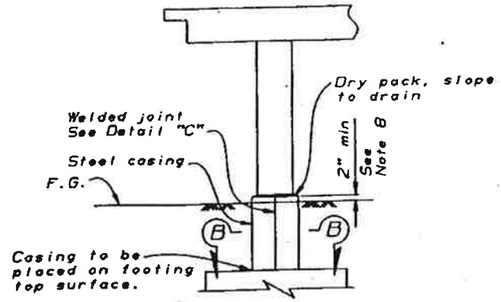


## CLASS P COLUMN

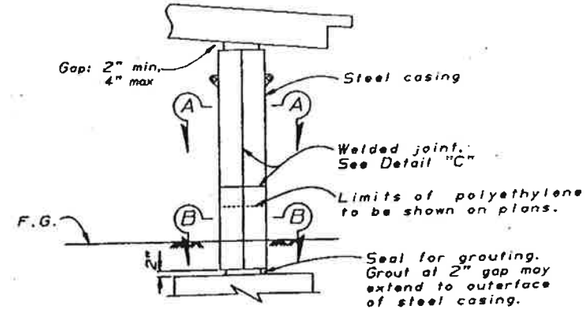


## CLASS P/F COLUMN

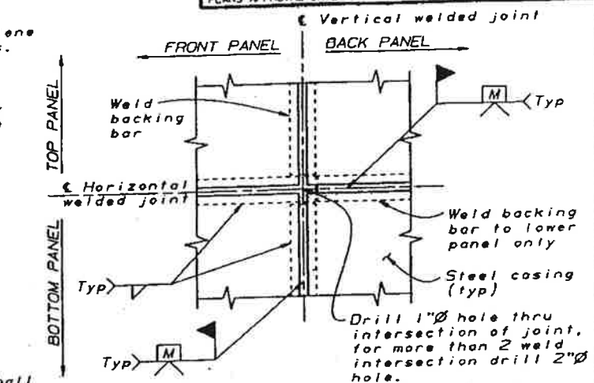


(TWO WELDED INTERSECTION JOINT)

## DETAIL C

No scale

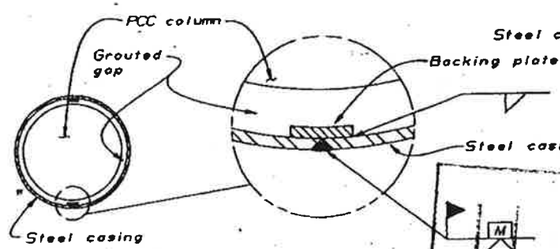


Minimum inside diameter of steel casing = 2" greater than nominal column diameter for Class P and 2½" for Class P/F.

## SECTION A-A
## ROUND COLUMN

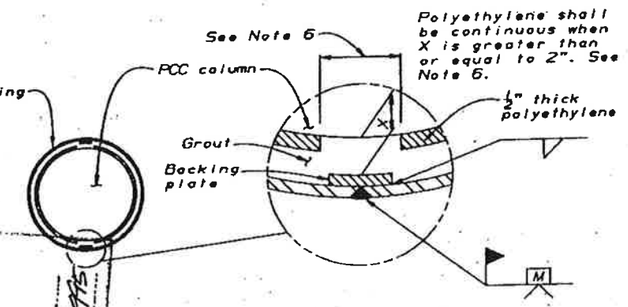


Minimum inside diameter of steel casing = 2½" greater than nominal column diameter for Class P and Class P/F.

## SECTION B-B
## ROUND COLUMN

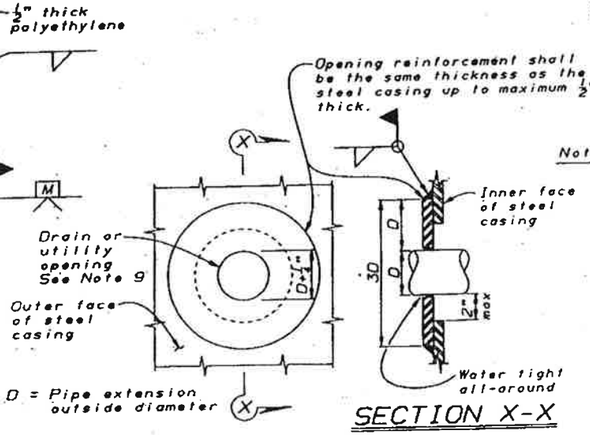


## SECTION X-X

Note: Opening reinforcement required for drain or utility openings larger than 4".

## CASING OPENING

No scale

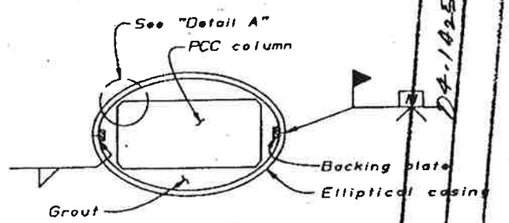


## SECTION A-A
## RECTANGULAR COLUMN

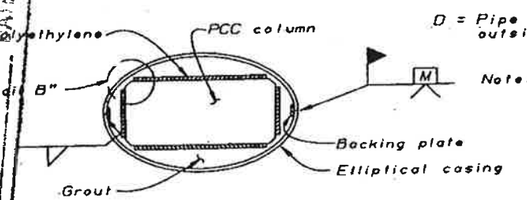


## SECTION B-B
## RECTANGULAR COLUMN

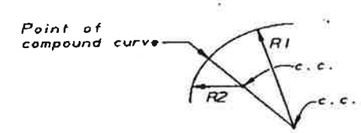


Radii R1 & R2 to be determined by the Contractor subject to the approval of the Engineer.

## ELLIPTICAL CASING DETAIL
## CLASS P, F AND P/F COLUMN

## DETAIL A

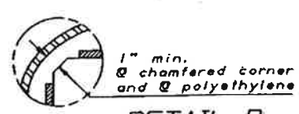


## DETAIL B

Notes:

1) For varying thickness steel casing inside surface to remain flush. Minimum clearance from PCC column to casing shall be maintained.

2) Appropriate injection nozzles to be provided on casing, but removed and ground flush following completion of grouting operation.

3) All voids between steel casing and polyethylene (Class P and Class P/F), and steel casing and PCC column (Class F) to be filled with grout.

4) Location and number of vertical and horizontal welds to be determined by the Contractor, and subject to the approval of the Engineer. The location of casing welds are for illustration. No skip welds allowed.

5) Circular steel casing to be ¼" thick minimum for casings with a 4'-4" diameter or less; all other steel casings to be ⅜" thick unless noted differently on contract plans. Backing plates to be the same thickness as casing up to maximum ½" thick.

6) Contractor shall remove 12" polyethylene strip behind backing plate if backing plate is closer than 1½" from polyethylene.

7) Waterproof limits for steel casings. Typical for Types "P", "F" and "P/F".

8) Minimum length of Types "P" and "F" casing shall be 1.50 times the largest dimension of prismatic section of column, or 2" above finished grade whichever is greater. Lengths other than the specified minimum shall be shown on Detail sheets.

9) For pipe extensions, opening shall be no more than ¼" greater than the pipe extension diameter. For other openings, the opening diameter to be determined by the Engineer.

AS BUILT
Structure Representative
Judy Sullivan
DATE APRIL 1994
CONTRACT No. 04-142501
DATE ACCEPTED
RESIDENT ENGINEER
REVISIONS BY

STANDARD DRAWING

| FILE NO. XS 12-77 | DESIGN BY BRIAN MARONEY | CHECKED R.J.ZELINSKI | MATERIAL RECOMMENDED BY |
|---|---|---|---|
| DRAWING DATE 8/93 | DETAILS BY K. CHRISTOPHER | CHECKED PAT HIPLEY | DESIGN SUPERVISOR |
| | SUBMITTED BY R.J.ZELINSKI | | |

DS 0SD 2147A (CADD 5/88)

ORIGINAL SCALE IN INCHES FOR REDUCED PLANS 0 1 2 3

STATE OF CALIFORNIA
DEPARTMENT OF TRANSPORTATION

DIVISION OF STRUCTURES
STRUCTURE DESIGN

CU 04
EA 142501

BRIDGE NO. 34-18
POST MILE 6.1

DISREGARD PRINTS BEARING EARLIER REVISION DATES 3-10-93

REVISION DATES (PRELIMINARY STAGE ONLY)

SHEET 5 OF 5

EARTHQUAKE RETROFIT PROJECT NO. 300
RUCKMAN AVENUE UNDERCROSSING
STEEL COLUMN CASINGS

ClibPDF - www.fastio.com

| DIST | COUNTY | ROUTE | POST MILES TOTAL PROJECT | SHEET NO. | TOTAL SHEETS |
|---|---|---|---|---|---|
| 04 | SF | 1,35 | 6.2/6.9,2.1 | 25 | 34 |

REGISTERED CIVIL ENGINEER

5-2-94
PLANS APPROVAL DATE

REGISTERED PROFESSIONAL ENGINEER P.E.BACH C48130 Exp. 06/30/96 STATE OF CALIFORNIA

BEN C. GERWICK, INC.
601 MONTGOMERY ST, SUITE 1400
SAN FRANCISCO, CALIFORNIA 94111

## NOTES:

1. [redacted]
2. FOR EXISTING UTILITIES AND TRAFFIC CONTROL, SEE ROAD PLANS.
3. FOR SECTION E-E, SEE "HINGE RETROFIT DETAILS" SHT.
4. LOCATION OF CORED AND DRILLED HOLES SHOWN IN THE PLANS ARE APPROXIMATE. PRIOR TO PLACING HOLES IN CONCRETE THE CONTRACTOR SHALL LOCATE ALL REINFORCING STEEL AND ADJUST THE LOCATION OF THE HOLES TO CLEAR ALL REINFORCING BARS (EXCEPT AS NOTED). FINAL HOLE LOCATIONS ARE SUBJECT TO THE APPROVAL OF THE ENGINEER.

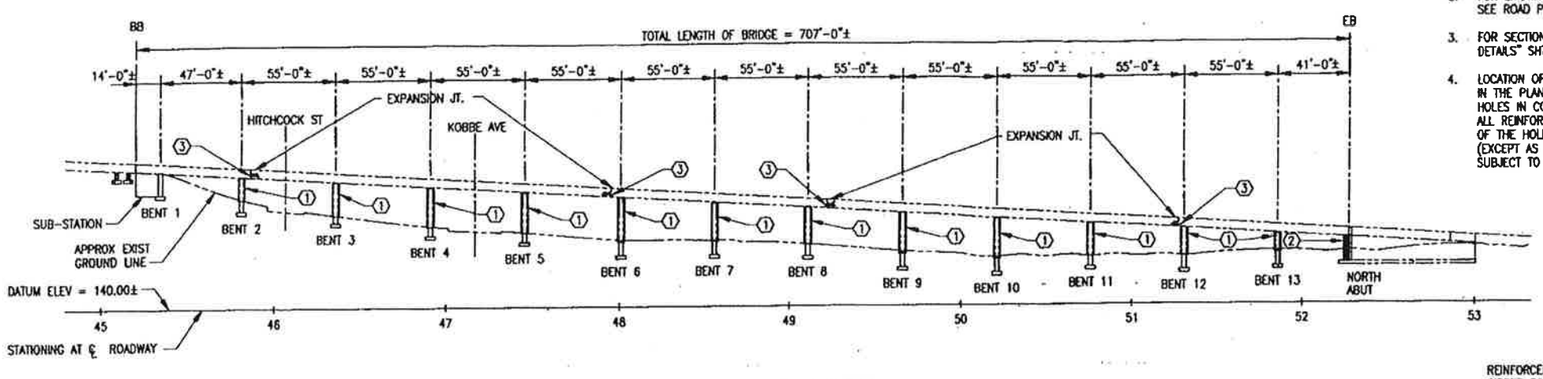


## ELEVATION
SCALE: 1"=40'

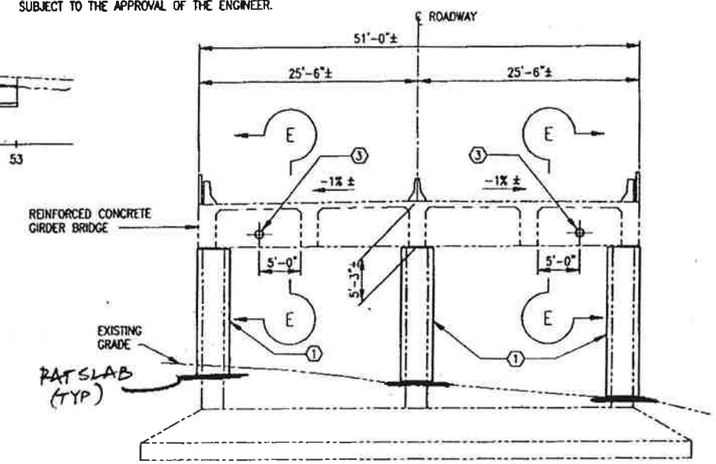


## TYPICAL SECTION
SCALE: 1/8"=1'-0"

STANDARD PLANS
DATED JULY 1992

A-10A ABBREVIATIONS
A-10B SYMBOLS

CONTRACT No. 04-142504
DATE ACCEPTED
AS BUILT
Structure Representative
~~RESIDENT ENGINEER~~ JOHN S. UDZUMI
REVISIONS BY
DATE APRIL 1995

LEGEND:

1. CLASS P/F STEEL CASING
2. ABUTMENT SEAT EXTENSION
3. PIPE RESTRAINERS

INDICATES EXISTING STRUCTURE
INDICATES NEW CONSTRUCTION
INDICATES DIRECTION OF TRAFFIC

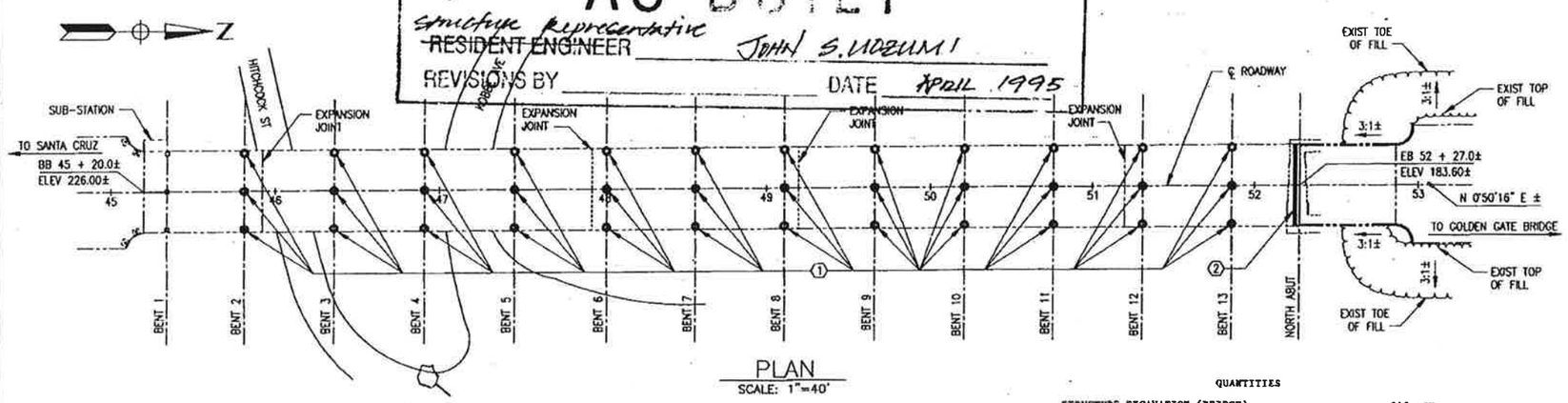


## PLAN
SCALE: 1"=40'

## GENERAL NOTES
## LOAD FACTOR DESIGN

DESIGN: BRIDGE DESIGN SPECIFICATIONS (1983 AASHTO WITH INTERIMS AND REVISIONS BY CALTRANS)

REINFORCED CONCRETE:
NEW CONSTRUCTION
fy = 60,000 PSI
f'c = 3,250 PSI
EXISTING (ASSUMED FOR RETROFIT EVALUATION)
fy = 44,000 PSI
f'c = 5,000 PSI

STRUCTURAL STEEL: ASTM A36
fy = 36,000 PSI (UNLESS OTHERWISE NOTED)

SEISMIC LOADING: PEAK BEDROCK ACCELERATION = 0.6g
DEPTH OF ALLUVIUM = 10 FT TO 80 FT

## INDEX TO BRIDGE PLANS


1. GENERAL PLAN
2. ABUTMENT RETROFIT DETAILS
3. BENT RETROFIT DETAILS
4. HINGE RETROFIT DETAILS
5. STEEL COLUMN CASINGS


QUANTITIES

| | | |
|---|---|---|
| STRUCTURE EXCAVATION (BRIDGE) | 340 | CY |
| STRUCTURE BACKFILL (BRIDGE) | 310 | CY |
| STRUCTURAL CONCRETE, BRIDGE | 39 | CY |
| DRILL AND BOND DOWEL | 420 | LF |
| CORE CONCRETE (6") | 22 | LF |
| BAR REINFORCING STEEL (BRIDGE) | 8,100 | LB |
| ASPHALT MEMBRANE WATERPROOFING | 1,390 | SQFT |
| COLUMN CASING | 93,000 | LB |
| MISCELLANEOUS METAL (RESTRAINER) | 1,350 | LB |

NOTE:
THE CONTRACTOR SHALL VERIFY ALL CONTROLLING FIELD DIMENSIONS BEFORE ORDERING OR FABRICATING ANY MATERIAL

PLOT DATE : 12-10-93
FILE NAME : 9220-551
PLOT SCALE : 1"=1"

| | | | | | | | |
|---|---|---|---|---|---|---|---|
| M. CULLEN (DESIGN OVERSIGHT) | M J Cullen 3-29-94 (SIGNOFF DATE) | DESIGN | BY G. FOTINOS | CHECKED P. BACH | LOAD FACTOR DESIGN | | |
| | | DETAILS | BY B. CARPENTER | CHECKED C. REDFIELD | LAYOUT | BY C. REDFIELD | CHECKED K. SHUSHKEWICH |
| | | QUANTITIES | BY C. REDFIELD | CHECKED P. DURNAL | SPECIFICATIONS | BY C. R. FIRTH | PLANS AND SPECS COMPARED C. R. FIRTH |

ORIGINAL SCALE IN INCHES FOR REDUCED PLANS 0 1 2 3

PREPARED FOR THE STATE OF CALIFORNIA DEPARTMENT OF TRANSPORTATION

P. E. BACH
PROJECT ENGINEER

CU 04
EA 142501

BRIDGE NO. 34-17
POST MILE 6.1

EARTHQUAKE RETROFIT PROJECT NO. 300
KOBBE AVENUE UNDERCROSSING
GENERAL PLAN

DISREGARD PRINTS BEARING EARLIER REVISION DATES → 12-10-93

SHEET 1 OF 5

590042-1D

ClibPDF - www.fastio.com

| DIST | COUNTY | ROUTE | POST MILES TOTAL PROJECT | SHEET NO. | TOTAL SHEETS |
|---|---|---|---|---|---|
| 04 | SF | 1,35 | 6.2/6.8,2.1 | 26 | 34 |

REGISTERED CIVIL ENGINEER

5-2-94
PLANS APPROVAL DATE

REGISTERED PROFESSIONAL ENGINEER — P.E. BACH — No. C48130 — Exp. 06/30/96 — CIVIL — STATE OF CALIFORNIA

BEN C. GERWICK, INC.
601 MONTGOMERY ST, SUITE 1400
SAN FRANCISCO, CALIFORNIA 94111

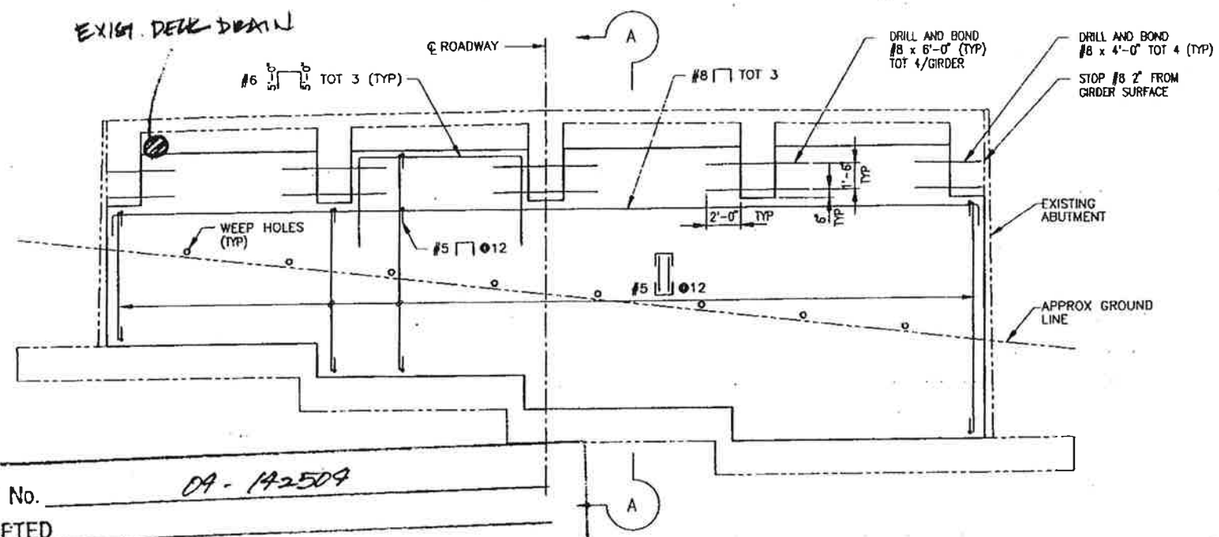


ELEVATION
SCALE: 1/4"=1'-0"

CONTRACT No. 04-142504
DATE ACCEPTED

AS BUILT

structure Representative
~~RESIDENT ENGINEER~~ JOHN S. UDENNI
REVISIONS BY
DATE APRIL 1995

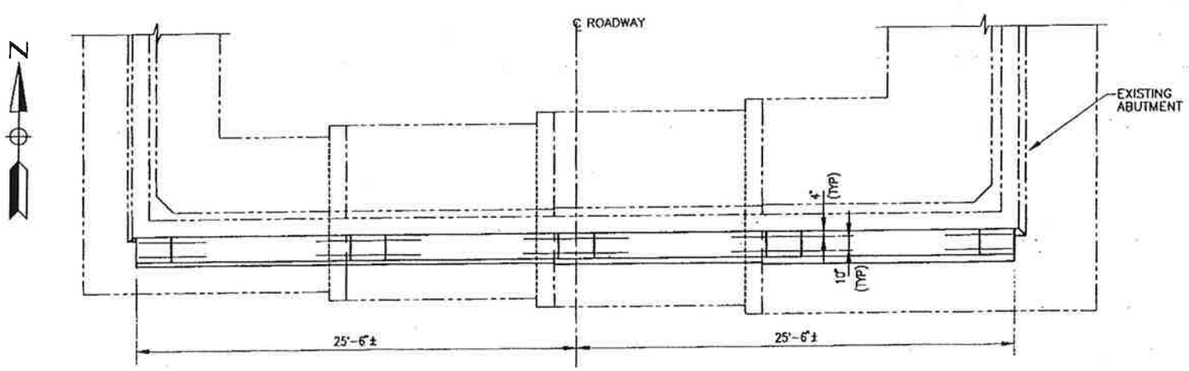


PLAN – NORTH ABUTMENT
SCALE: 1/4"=1'-0"

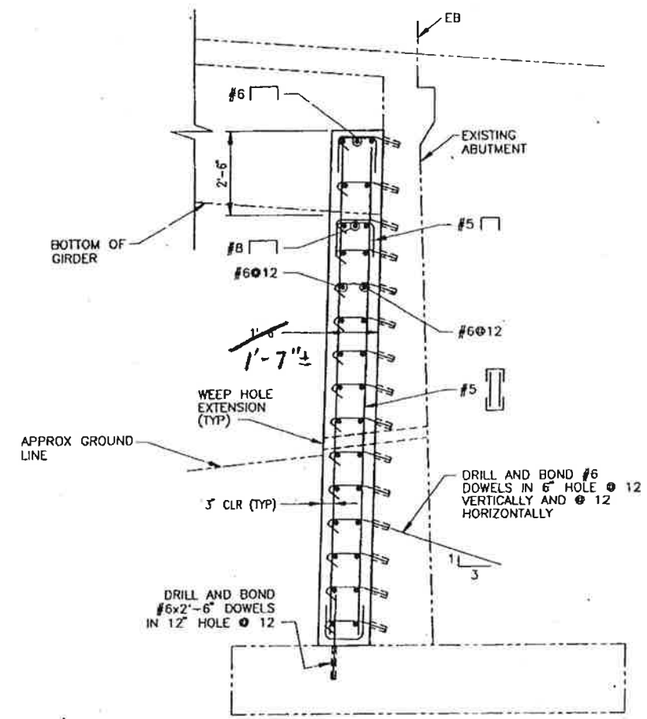


SECTION A–A
SCALE: 1/2"=1'-0"

NOTE:
THE CONTRACTOR SHALL VERIFY ALL CONTROLLING FIELD DIMENSIONS BEFORE ORDERING OR FABRICATING ANY MATERIAL

EARTHQUAKE RETROFIT PROJECT NO. 300
KOBBE AVENUE UNDERCROSSING
ABUTMENT RETROFIT DETAILS

| | | | | |
|---|---|---|---|---|
| M. CULLEN — M J Cullen — DESIGN OVERSIGHT — 3-29-94 — SIGNOFF DATE | DESIGN | BY G. FOTINOS | CHECKED P. BACH | |
| | DETAILS | BY B. CARPENTER | CHECKED C. REDFIELD | |
| | QUANTITIES | BY C. REDFIELD | CHECKED P. DURNAL | |

PREPARED FOR THE STATE OF CALIFORNIA DEPARTMENT OF TRANSPORTATION

P.E. BACH — PROJECT ENGINEER

CU 04
EA 142501

BRIDGE NO. 34-17
POST MILE 6.1

DISREGARD PRINTS BEARING EARLIER REVISION DATES

SHEET 2 OF 5

ORIGINAL SCALE IN INCHES FOR REDUCED PLANS 0 1 2 3

FILE NAME : 9220-552
PLOT SCALE : 1"=1"

ClibPDF - www.fastio.com

| DIST | COUNTY | ROUTE | POST MILES TOTAL PROJECT | SHEET NO. | TOTAL SHEETS |
|---|---|---|---|---|---|
| 04 | SF | 1,35 | 6.2/6.9,2.1 | 27 | 34 |

REGISTERED CIVIL ENGINEER

5-2-94
PLANS APPROVAL DATE

REGISTERED PROFESSIONAL ENGINEER — P.E.BACH — No. C46130 — Exp. 06/30/96 — CIVIL — STATE OF CALIFORNIA

BEN C. GERWICK, INC.
601 MONTGOMERY ST, SUITE 1400
SAN FRANCISCO, CALIFORNIA 94111

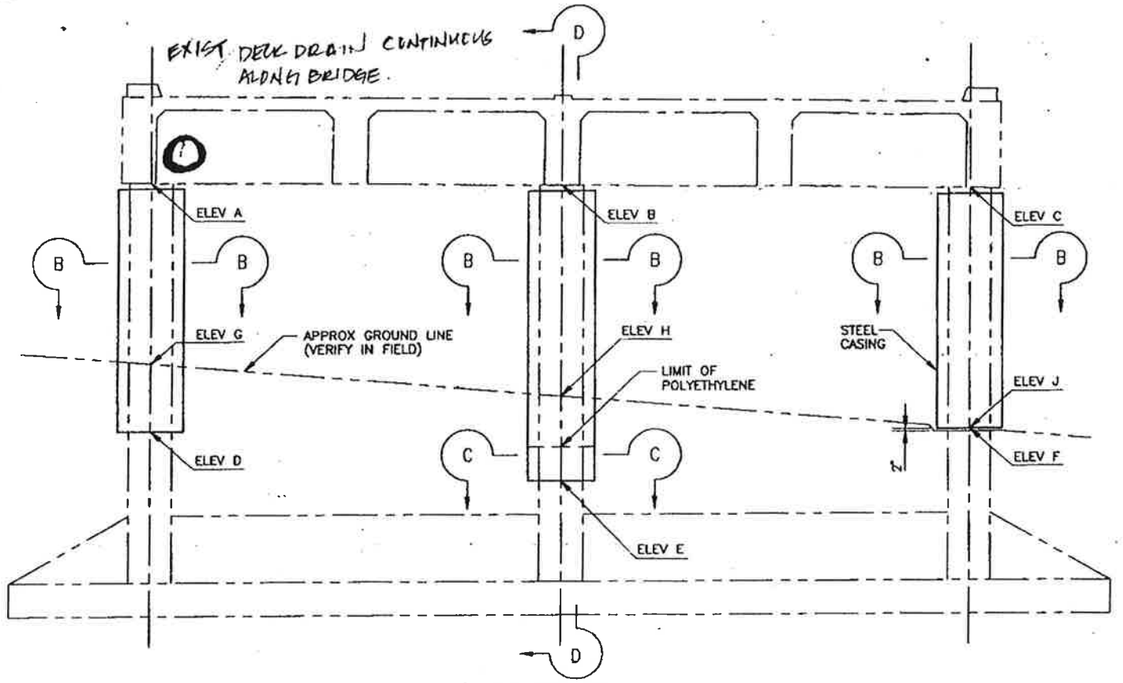


ELEVATION
SCALE: 1/4"=1'-0"
ELEVATION LOOKING UP-STATION

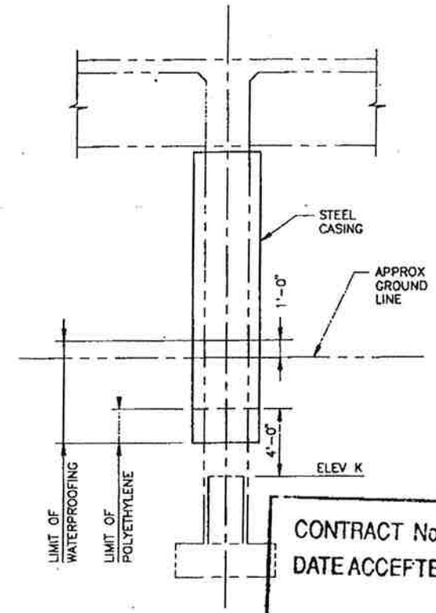


SECTION D–D
SCALE: 1/4"=1'-0"

NOTES:

1. THE INFORMATION SHOWN ON THIS DRAWING TAKES PRECEDENCE OVER INFORMATION SHOWN ON THE "STEEL COLUMN CASING" SHT.

CONTRACT No. 04-142504
DATE ACCEPTED

AS BUILT
Structure Representative
~~RESIDENT ENGINEER~~ JOHN S. UDELLHI
REVISIONS BY _____ DATE APRIL 1995

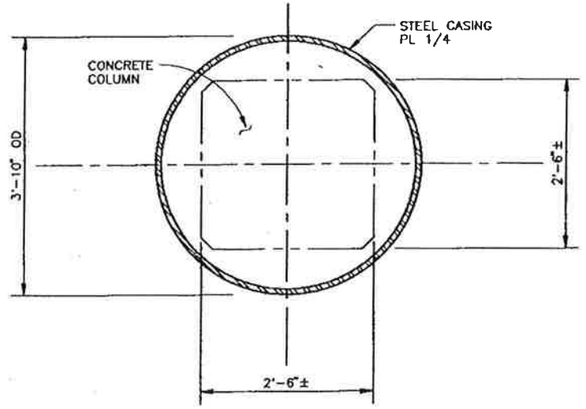


SECTION B–B
SCALE: 1"=1'-0"

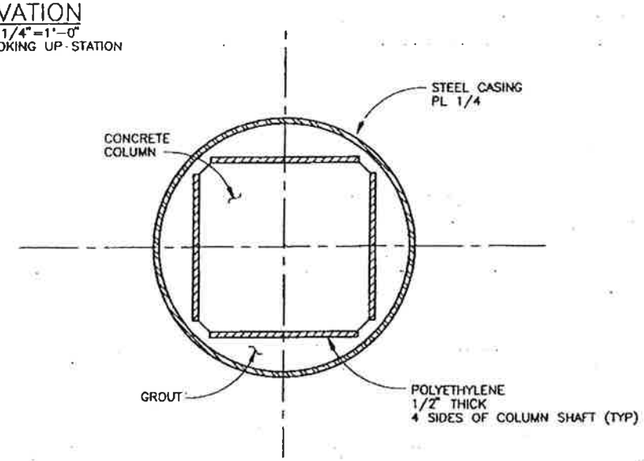


SECTION C–C
SCALE: 1"=1'-0"
SEE SECTION B–B FOR DIMENSIONS

SCHEDULE OF APPROXIMATE ELEVATIONS (FT)

| BENT NO. | A | B | C | D | E | F | G | H | J | K |
|---|---|---|---|---|---|---|---|---|---|---|
| 2 | 217.1 | 217.4 | 217.1 | 201.0 | 201.0 | 201.0 | 201.0 | 201.9 | 202.8 | 201.0 |
| 3 | 213.8 | 214.1 | 213.8 | 196.7 | 194.0 | 194.0 | 199.6 | 197.5 | 195.1 | 194.0 |
| 4 | 210.5 | 210.8 | 210.5 | 191.3 | 191.4 | 186.0 | 193.1 | 191.4 | 187.3 | 186.0 |
| 5 | 207.2 | 207.5 | 207.2 | 186.1 | 182.0 | 182.0 | 187.1 | 185.0 | 184.6 | 182.0 |
| 6 | 203.9 | 204.2 | 203.9 | 178.6 | 179.0 | 178.6 | 182.8 | 180.8 | 180.0 | 174.0 |
| 7 | 200.6 | 200.9 | 200.6 | 179.0 | 178.5 | 174.0 | 181.2 | 178.5 | 176.9 | 174.0 |
| 8 | 197.3 | 197.6 | 197.3 | 176.5 | 173.0 | 173.0 | 178.1 | 174.9 | 173.1 | 173.0 |
| 9 | 194.0 | 194.3 | 194.0 | 172.0 | 171.2 | 166.0 | 173.5 | 171.2 | 168.7 | 166.0 |
| 10 | 190.7 | 191.0 | 190.7 | 170.2 | 169.1 | 163.0 | 171.1 | 169.1 | 166.8 | 163.0 |
| 11 | 187.4 | 187.7 | 187.4 | 168.6 | 166.0 | 166.0 | 171.7 | 169.8 | 168.6 | 166.0 |
| 12 | 184.1 | 184.4 | 184.1 | 168.0 | 168.4 | 165.0 | 172.4 | 170.0 | 168.1 | 165.0 |
| 13 | 180.8 | 181.1 | 180.8 | 166.0 | 166.0 | 166.0 | 174.0 | 171.3 | 168.5 | 166.0 |

ELEV A,B & C ARE AT SOFFIT OF SUPERSTRUCTURE AT CENTERLINE OF COLUMN
ALL VALUES IN TABLE ARE ±

NOTE:
THE CONTRACTOR SHALL VERIFY ALL CONTROLLING FIELD DIMENSIONS BEFORE ORDERING OR FABRICATING ANY MATERIAL

PLOT DATE : 02-14-94
FILE NAME : 9220-553
PLOT SCALE : 1"=1'

| | | | | |
|---|---|---|---|---|
| M. CULLEN — DESIGN OVERSIGHT | M J Cullen 3-29-94 — SIGNOFF DATE | DESIGN | G. FOTINOS | P. BACH |
| | | DETAILS | B. CARPENTER | K. SHUSHKEWICH |
| | | QUANTITIES | K. SHUSHKEWICH | P. DURNAL |

PREPARED FOR THE STATE OF CALIFORNIA DEPARTMENT OF TRANSPORTATION

P. E. BACH — PROJECT ENGINEER

ORIGINAL SCALE IN INCHES FOR REDUCED PLANS 0 1 2 3

CU 04
EA 142501

BRIDGE NO. 34-17
POST MILE 6.1

EARTHQUAKE RETROFIT PROJECT NO. 300
KOBBE AVENUE UNDERCROSSING
BENT RETROFIT DETAILS

DISREGARD PRINTS BEARING EARLIER REVISION DATES → 12-16-93 12-18-94

SHEET 3 OF 5

ClibPDF - www.fastio.com

| DIST | COUNTY | ROUTE | POST MILES TOTAL PROJECT | SHEET NO. | TOTAL SHEETS |
|---|---|---|---|---|---|
| 04 | SF | 1,35 | 6.2/6.9,2.1 | 28 | 34 |

REGISTERED CIVIL ENGINEER

5-2-94
PLANS APPROVAL DATE

REGISTERED PROFESSIONAL ENGINEER
P.E. BACH
No. C48130
Exp. 08/30/96
CIVIL
STATE OF CALIFORNIA

BEN C. GERWICK, INC.
601 MONTGOMERY ST, SUITE 1400
SAN FRANCISCO, CALIFORNIA 94111

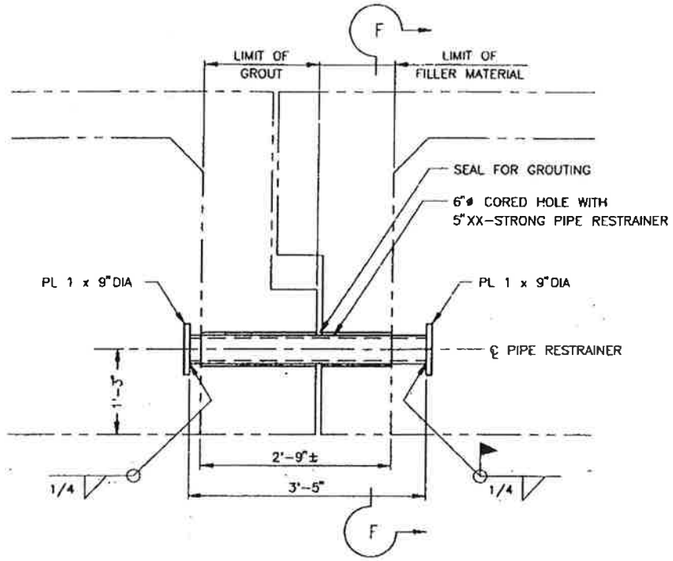


SECTION E-E
SCALE: 1"=1'-0"

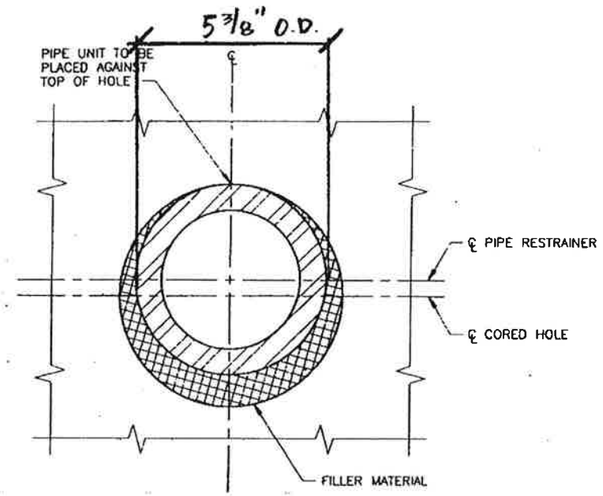


SECTION F-F
NO SCALE

NOTES:

1. FOR LOCATION OF SECTION E-E, SEE "GENERAL PLAN" SHT.

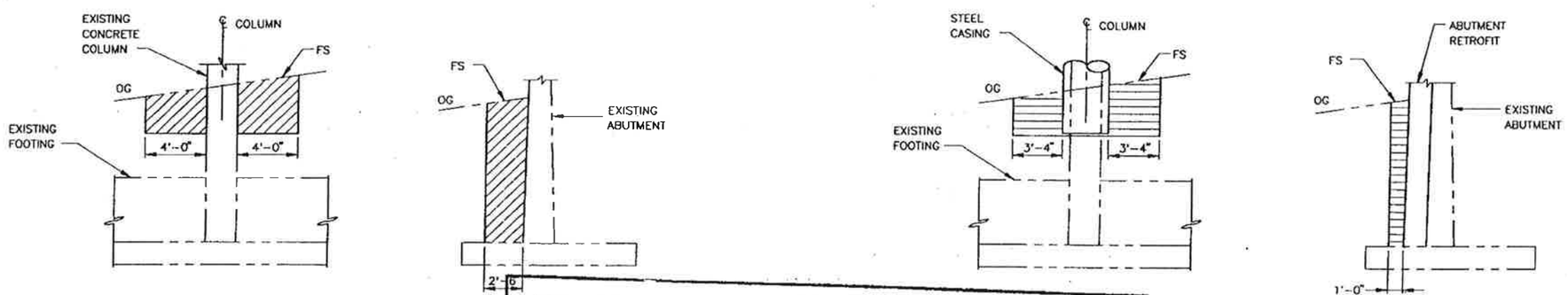


STRUCTURE EXCAVATION

EXCAVATION LIMITS
SCALE: 1/4"=1'-0"

STRUCTURE BACKFILL

BACKFILL LIMITS
SCALE: 1/4"=1'-0"

CONTRACT No. 04-142504
DATE ACCEPTED

AS BUILT

Structure Representative
~~RESIDENT ENGINEER~~ JOHN S. UOZUMI
REVISIONS BY
DATE APRIL 1995

NOTE:
THE CONTRACTOR SHALL VERIFY ALL CONTROLLING FIELD DIMENSIONS BEFORE ORDERING OR FABRICATING ANY MATERIAL

FILE NAME : 142501-300
PLOT SCALE : 1"=1'

M. CULLEN — M J Cullen — 3-29-94
DESIGN OVERSIGHT — SIGNOFF DATE

| | | | |
|---|---|---|---|
| DESIGN | G. FOTINOS | P. BACH | |
| DETAILS | B. CARPENTER | K. SHUSHKEWICH | |
| QUANTITIES | K. SHUSHKEWICH | P. DURNAL | |

ORIGINAL SCALE IN INCHES FOR REDUCED PLANS 0 1 2 3

PREPARED FOR THE
STATE OF CALIFORNIA
DEPARTMENT OF TRANSPORTATION

P. E. BACH
PROJECT ENGINEER

CU 04
EA 142501

BRIDGE NO. 34-17
POST MILE 6.1

DISREGARD PRINTS BEARING EARLIER REVISION DATES →

EARTHQUAKE RETROFIT PROJECT NO. 300
KOBBE AVENUE UNDERCROSSING
HINGE RETROFIT DETAILS

SHEET 4 OF 5

ClibPDF - www.fastio.com

RELEASED 8-12-94

| DIST. | COUNTY | ROUTE | PM | SHEET NO. | TOTAL SHEETS |
|---|---|---|---|---|---|
| 04 | SF | 1,35 | 6.2/6.9,2.1 | 29 | 34 |

REGISTERED ENGINEER - CIVIL

REGISTERED PROFESSIONAL ENGINEER P.E. BACH No. C48130 Exp. 06/30/96 CIVIL STATE OF CALIFORNIA

5-2-94
PLANS APPROVAL DATE

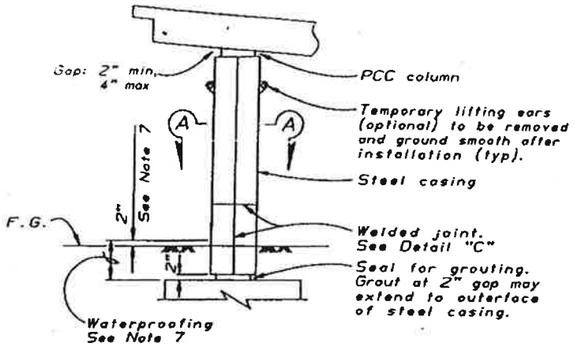


CLASS F COLUMN

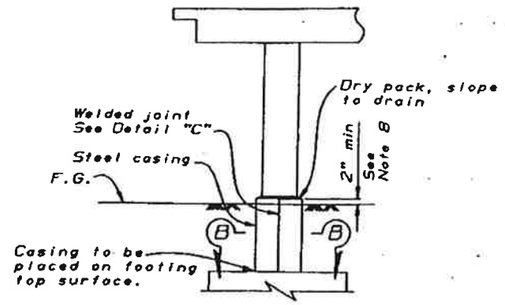


CLASS P COLUMN

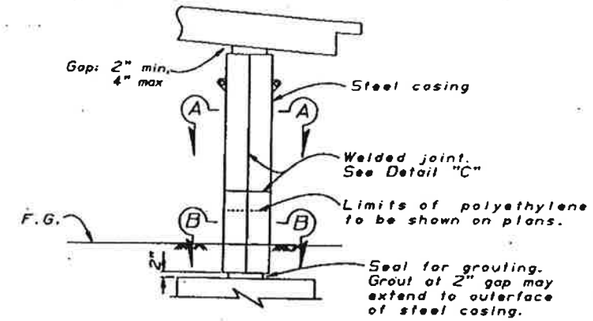


CLASS P/F COLUMN

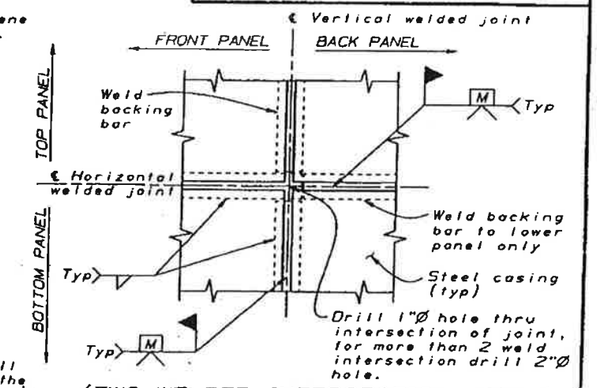


(TWO WELDED INTERSECTION JOINT)

DETAIL C

No scale

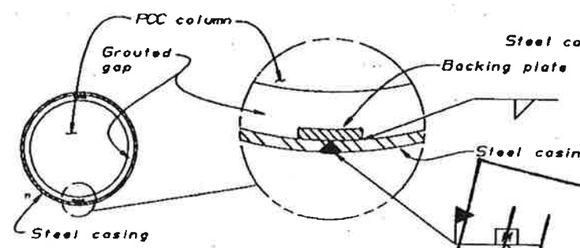


Minimum inside diameter of steel casing = 1½" greater than nominal column diameter for Class F and 2½" for Class P/F.

SECTION A-A

ROUND COLUMN

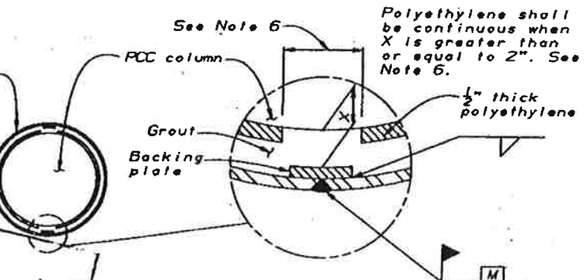


Minimum inside diameter of steel casing = 2½" greater than nominal column diameter for Class P and Class P/F.

SECTION B-B

ROUND COLUMN

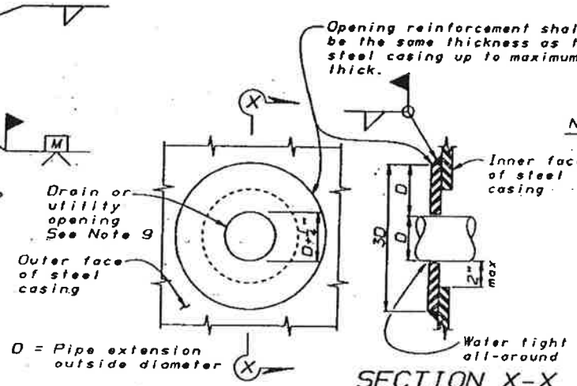


SECTION X-X

Note: Opening reinforcement required for drain or utility openings larger than 4".

CASING OPENING

No scale

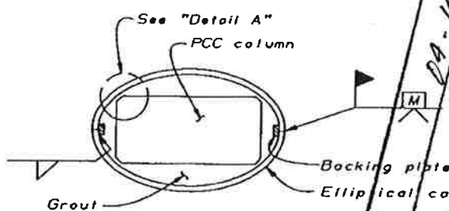


SECTION A-A

RECTANGULAR COLUMN

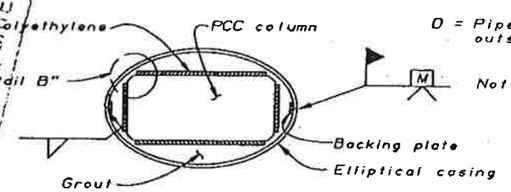


SECTION B-B

RECTANGULAR COLUMN

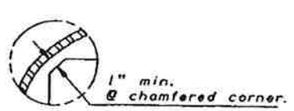


DETAIL A

DETAIL B

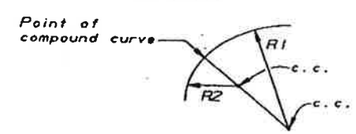


Radii R1 & R2 to be determined by the Contractor subject to the approval of the Engineer.

ELLIPTICAL CASING DETAIL

CLASS P, F AND P/F COLUMN

Notes:

1) For varying thickness steel casing inside surface to remain flush. Minimum clearance from PCC column to casing shall be maintained.

2) Appropriate injection nozzles to be provided on casing, but removed and ground flush following completion of grouting operation.

3) All voids between steel casing and polyethylene (Class P and Class P/F), and steel casing and PCC column (Class F) to be filled with grout.

4) Location and number of vertical and horizontal welds to be determined by the Contractor, and subject to the approval of the Engineer. The location of casing welds are for illustration. No skip welds allowed.

5) Circular steel casing to be ¼" thick minimum for casings with a 4'-4" diameter or less; all other steel casings to be ⅜" thick unless noted differently on contract plans. Backing plates to be the same thickness as casing up to maximum ½" thick.

6) Contractor shall remove 12" polyethylene strip behind backing plate if backing plate is closer than 1½" from polyethylene.

7) Waterproof limits for steel casings. Typical for Types "P", "F" and "P/F".

8) Minimum length of Types "P" and "F" casing shall be 1.50 times the largest dimension of prismatic section of column, or 2" above finished grade whichever is greater. Lengths other than the specified minimum shall be shown on Detail sheets.

9) For pipe extensions, opening shall be no more than ¼" greater than the pipe extension diameter. For other openings, the opening diameter to be determined by the Engineer.

AS BUILT
Signature furnished
RESIDENT ENGINEER
DATE APRIL 1994
PA-142501
CONTRACT NO.
DATE ACCEPTED
REVISIONS BY

STANDARD DRAWING

| FILE NO. XS 12-77 | DESIGN BY BRIAN MARONEY | CHECKED R.J. ZELINSKI | APPROVAL RECOMMENDED BY |
|---|---|---|---|
| DRAWING DATE 8/93 | DETAILS BY K. CHRISTOPHER | CHECKED PAT HIPLEY | DESIGN SUPERVISOR |
| | SUBMITTED BY R.J. ZELINSKI | | |

DS DSD 2147A (CADD 5/89)

ORIGINAL SCALE IN INCHES FOR REDUCED PLANS 0 1 2 3

STATE OF CALIFORNIA
DEPARTMENT OF TRANSPORTATION

DIVISION OF STRUCTURES
STRUCTURE DESIGN

CU 04
EA 142501

BRIDGE NO. 34-17
POST MILE 6.1

DISREGARD PRINTS BEARING EARLIER REVISION DATES 12-10-93

REVISION DATES (PRELIMINARY STAGE ONLY)

SHEET 5 OF 5

EARTHQUAKE RETROFIT PROJECT NO. 300

KOBBE AVENUE UNDERCROSSING

STEEL COLUMN CASINGS

ClibPDF - www.fastio.com