Dist	COUNTY	ROUTE	POST MILES TOTAL PROJECT	SHEET No.	TOTAL SHEETS
04	SF	101	8.2/9.2	1	654

SARRA-0101(153)N
ACNH-0101(164)N

STATE OF CALIFORNIA

DEPARTMENT OF TRANSPORTATION

PROJECT PLANS FOR CONSTRUCTION ON

STATE HIGHWAY

IN THE CITY AND COUNTY OF SAN FRANCISCO FROM 1.3 MILE TO 0.3 MILE SOUTH OF ROUTE 101/1 SEPARATION

TO BE SUPPLEMENTED BY STANDARD PLANS DATED MAY 2006

INDEX OF PLANS

SHEET No.	DESCRIPTION
1	TITLE AND LOCATION MAP
2-5	TYPICAL CROSS SECTIONS
6-9	LAYOUT AND CONTOUR GRADING
10-29	PROFILE AND SUPERELEVATION DIAGRAMS
30-38	CONSTRUCTION DETAILS
39-44	EROSION CONTROL PLAN, DETAILS AND QUANTITIES
45-86	DRAINAGE PLAN, PROFILES, DETAILS AND QUANTITIES
87-93	UTILITY PLAN, DETAILS AND QUANTITIES
94-104	CONSTRUCTION AREA SIGNS
105-122	STAGE CONSTRUCTION AND TRAFFIC HANDLING PLANS
123-127	DETOUR LAYOUT AND CONTOUR GRADING PLAN
128-140	PAVEMENT DELINEATION PLAN AND QUANTITIES
141-148	SIGN PLAN, DETAILS AND QUANTITIES
149-151	SUMMARY OF QUANTITIES
152-155	RETAINING WALL NO. 3, 4 AND 7A PLAN, TYPICAL, DETAILS, QUANTITIES
156-162	DETOUR ROAD LOG OF TEST BORINGS
163-359	ELECTRICAL PLANS
360-412	REVISED AND NEW STANDARD PLANS

STRUCTURE PLANS

413-416	MARINA VIADUCT Br No. 34-0014
417-436	BATTERY SUBSTATION (BRIDGE) Br No. 34-0157W
437-508	SOUTHBOUND BATTERY TUNNEL Br No. 34-0161L
509-545	RETAINING WALL A AND B Br No. 34-0161RL
546-568	SOUTHBOUND BATTERY TUNNEL SYSTEMS Br No. 34-0161L
569-633	RETAINING WALL No. 8 Br No. 34E-0014
634-654	BATTERY SUBSTATION Br No. 34-0157W

THE STANDARD PLANS LIST APPLICABLE TO THIS CONTRACT IS INCLUDED IN THE NOTICE TO BIDDERS AND SPECIAL PROVISIONS BOOK.

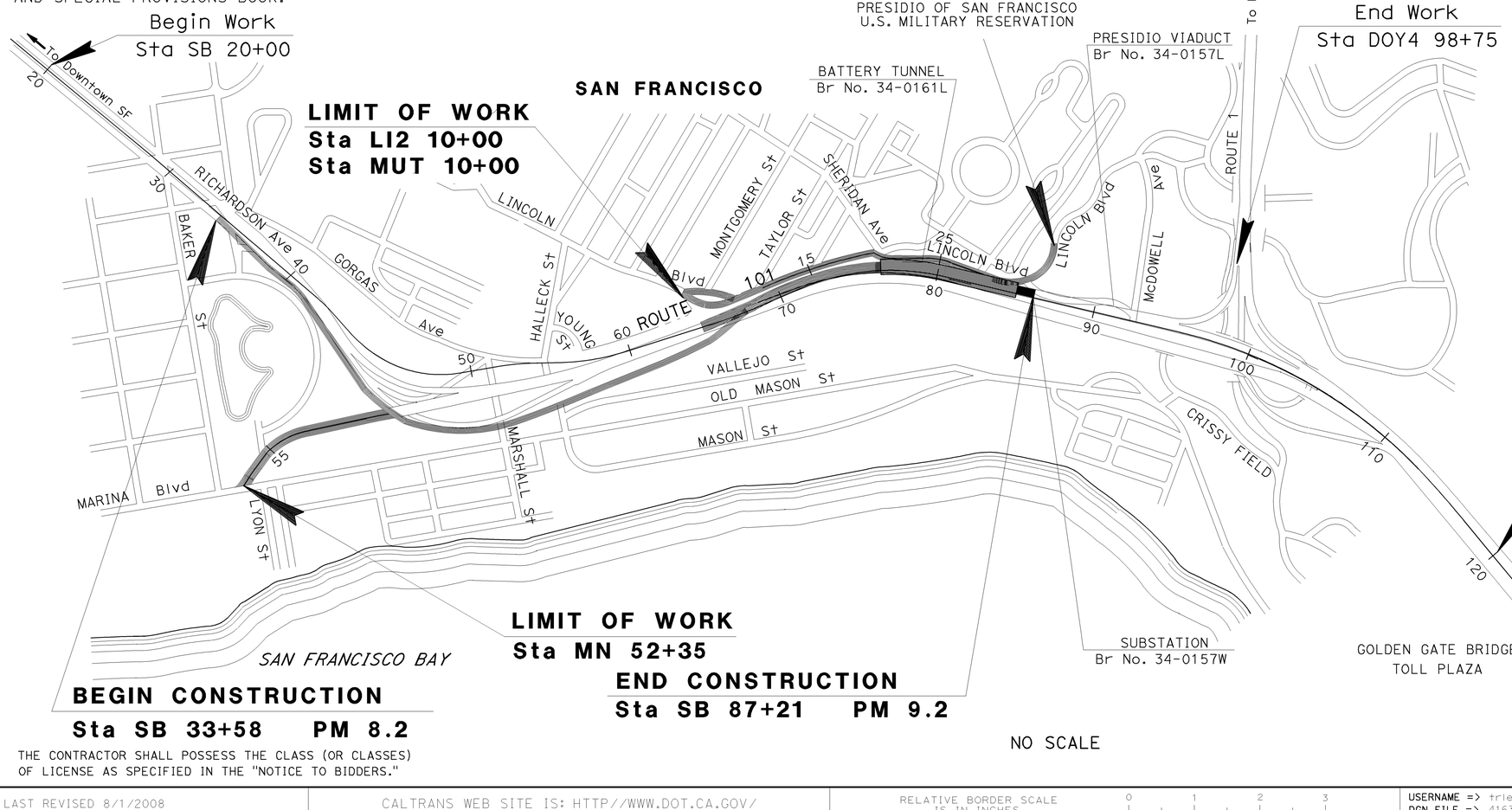

NO SCALE

THE CONTRACTOR SHALL POSSESS THE CLASS (OR CLASSES) OF LICENSE AS SPECIFIED IN THE "NOTICE TO BIDDERS."

LOCATION MAP

DEFFERED APPROVALS

1. FIRE ALARM
2. FIRE SPRINKLER SYSTEM
3. STANDPIPE SYSTEM

CALIFORNIA STATE FIRE MARSHAL
APPROVED
Approval of this plan does not authorize or approve any omission or deviation from applicable regulations. Final approval is subject to field inspection. One set of approved plans shall be available on the project site at all times.
Reviewed by: STEPHEN GUARINO
Approval date: 12-14-09

8-10-09
PROJECT ENGINEER DATE
REGISTERED CIVIL ENGINEER

Hossein Khodabakhsh
No. 71650
Exp. 12-31-09
CIVIL
REGISTERED PROFESSIONAL ENGINEER
STATE OF CALIFORNIA

December 14, 2009
PLANS APPROVAL DATE

THE STATE OF CALIFORNIA OR ITS OFFICERS OR AGENTS SHALL NOT BE RESPONSIBLE FOR THE ACCURACY OR COMPLETENESS OF SCANNED COPIES OF THIS PLAN SHEET.

PROJECT MANAGER: NIDAL TUQAN
DESIGN ENGINEER: ABOLFAZL EMADZADEH

LAST REVISION 12-09-09 DATE PLOTTED => 15-DEC-2009 TIME PLOTTED => 04:45

CONTRACT No. 04-163744

BORDER LAST REVISED 8/1/2008 | CALTRANS WEB SITE IS: HTTP//WWW.DOT.CA.GOV/ | RELATIVE BORDER SCALE IS IN INCHES 0 1 2 3 | USERNAME => trienard DGN FILE => 416374ab001.dgn | CU 04242 | EA 163741

Dist	COUNTY	ROUTE	POST MILES TOTAL PROJECT	SHEET No.	TOTAL SHEETS
04	SF	101	8.2/9.2	2	654

REGISTERED CIVIL ENGINEER — 8-10-09 DATE

12-14-09
PLANS APPROVAL DATE

Hossein Khodabakhsh, No. 71650, Exp. 12-31-09, CIVIL — REGISTERED PROFESSIONAL ENGINEER — STATE OF CALIFORNIA

THE STATE OF CALIFORNIA OR ITS OFFICERS OR AGENTS SHALL NOT BE RESPONSIBLE FOR THE ACCURACY OR COMPLETENESS OF SCANNED COPIES OF THIS PLAN SHEET.

NOTES:

1. DIMENSIONS OF THE STRUCTURAL SECTIONS ARE SUBJECT TO TOLERANCES SPECIFIED IN THE STANDARD SPECIFICATIONS.
2. SUPERELEVATION AS SHOWN OR AS DIRECTED BY THE ENGINEER.
3. FOR Calif ST-10 BRIDGE RAIL (Mod), SEE CONSTRUCTION DETAILS SHEET C-1.
4. FOR Calif ST-10 BRIDGE RAIL (Mod) (TYPE B) DETAILS AND LIMITS, SEE STRUCTURE PLAN.
5. FOR WALL MOUNTED Calif ST-10 BRIDGE RAIL (Mod) DETAILS AND LIMITS, SEE STRUCTURAL PLAN.
6. FOR EPS BLOCKS DETAIL AND STRUCTURAL SECTION [7] DETAIL, SEE SHEET C-6.
7. IF Conc BARRIER (TYPE K) IS BEING PLACED IN A CROSS SLOPE GREATER THAN 2%, THEN USE #8 x 10'' DOWELS TO ATTACH Conc BARRIER (TYPE K) TO PAVEMENT PER STANDARD PLAN T3.
8. FOR IMPORTED TOPSOIL EMBANKMENT SLOPE REQUIREMENTS SEE CONSTRUCTION DETAILS SHEET C-9.

STRUCTURAL SECTION

1	0.80′ CRCP 0.40′ HMA 0.60′ AS (CLASS 4)
2	0.50′ HMA 1.35′ AB (CLASS 3)
3	0.20′ COLD PLANE ASPHALT CONCRETE AND 0.20′ HMA
4	0.60′ HMA 0.35′ LCB 0.95′ AS (CLASS 4)
5	0.60′ HMA 0-1.5′ LCB
6	0.33′ HMA 0.33′ CLASS 3 AB
7	0.70′ HMA 0.33′ ATPB 0.50′ PCC
A	0.33′ AC & Var 0.67′ PCC
B	0.33′ AC & Var

LEGEND:

- [No.] STRUCTURAL SECTION NUMBER
- EXISTING STRUCTURAL SECTION LETTER
- QUICKCHANGE MOVABLE BARRIER
- Conc BARRIER (TYPE K)

ABBREVIATION:

EPS - EXPANDED POLYSTYRENE

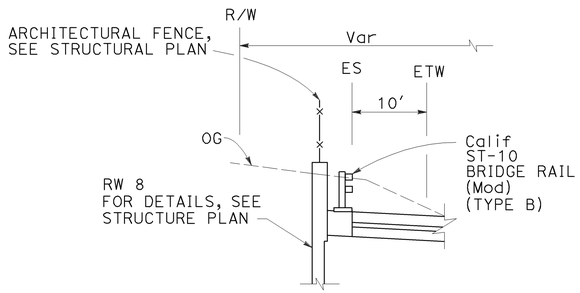

SB 68+83.99 TO 71+25.53

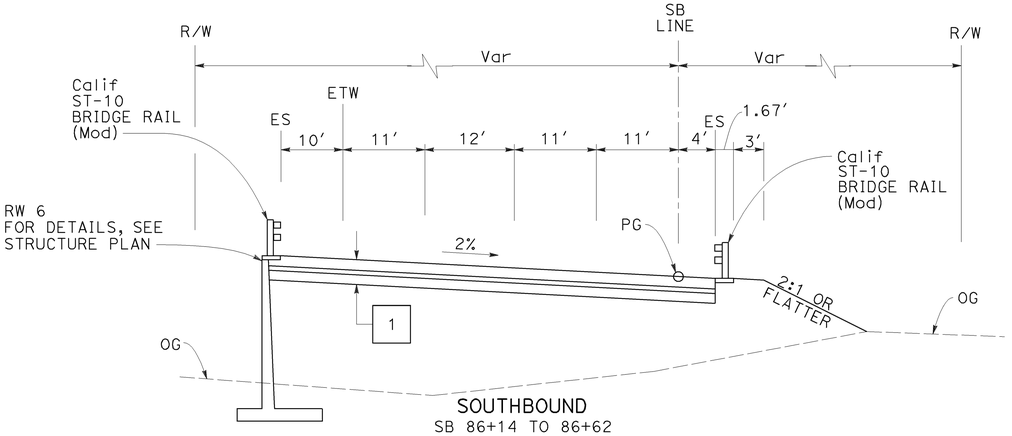

SOUTHBOUND
SB 86+14 TO 86+62

ROUTE 101 - DOYLE DRIVE

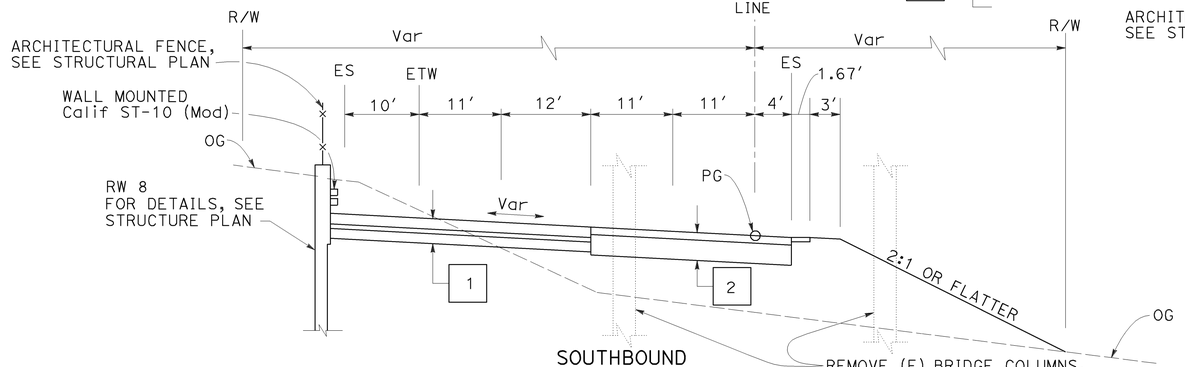

SOUTHBOUND
SB 66+80 TO 71+58.23

REMOVE (E) BRIDGE COLUMNS, SEE BRIDGE REMOVAL PLANS

ROUTE 101 - DOYLE DRIVE

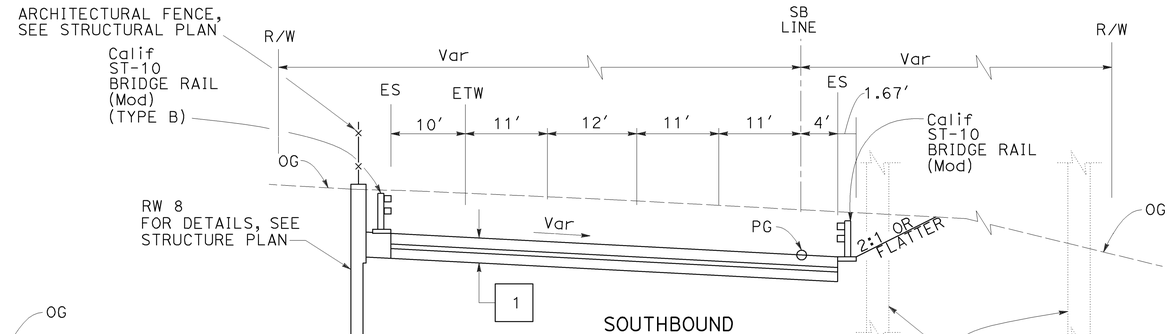

SOUTHBOUND
SB 74+55.42 TO 75+77.70

REMOVE (E) BRIDGE COLUMNS, SEE BRIDGE REMOVAL PLANS

ROUTE 101 - DOYLE DRIVE

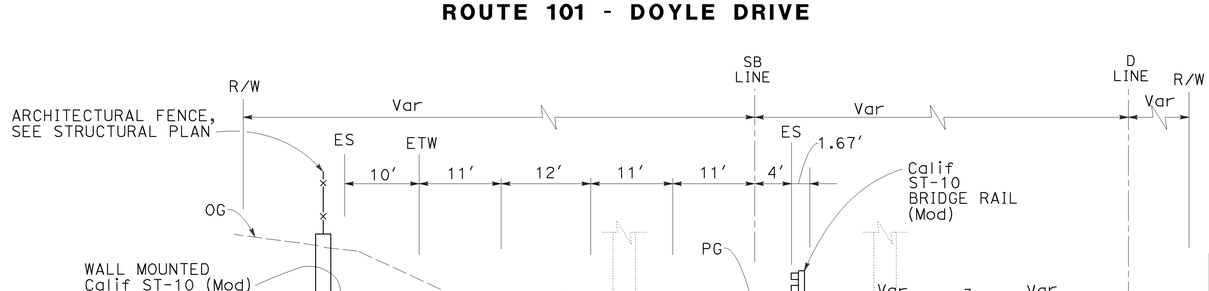

SOUTHBOUND
SB 64+82 TO 66+80

REMOVE (E) BRIDGE COLUMNS, SEE BRIDGE REMOVAL PLANS

ROUTE 101 - DOYLE DRIVE

CALIFORNIA STATE FIRE MARSHAL APPROVED

Approval of this plan does not authorize or approve any omission or deviation from applicable regulations. Final approval is subject to field inspection. One set of approved plans shall be available on the project site at all times.

Reviewed by: STEPHEN GUARINO

Approval date: 12-14-09

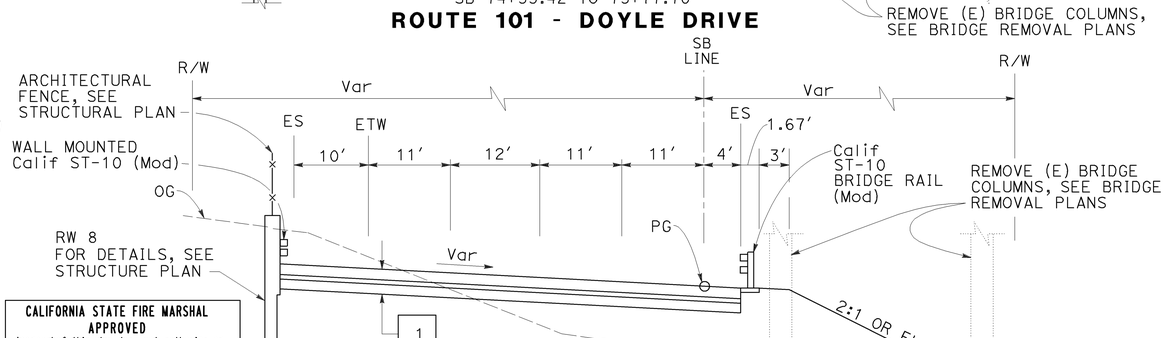

SOUTHBOUND
SB 71+58.23 TO 74+55.42

ROUTE 101 - DOYLE DRIVE

TYPICAL CROSS SECTIONS

NO SCALE

X-1

STATE OF CALIFORNIA - DEPARTMENT OF TRANSPORTATION — DESIGN

FUNCTIONAL SUPERVISOR: ABOLFAZL EMADZADEH

CALCULATED-DESIGNED BY: DOMINIC CHIN

CHECKED BY: ROMY ACOB

REVISED BY	DATE REVISED
DC	8/01/09

LAST REVISION DATE PLOTTED => 14-DEC-2009
TIME PLOTTED => 13:56

BORDER LAST REVISED 4/11/2008

RELATIVE BORDER SCALE IS IN INCHES 0 1 2 3

USERNAME => trienard
DGN FILE => 416374ca001.dgn

CU 04242

EA 163741

Dist	COUNTY	ROUTE	POST MILES TOTAL PROJECT	SHEET No.	TOTAL SHEETS
04	SF	101	8.2/9.2	3	654

CALIFORNIA STATE FIRE MARSHAL APPROVED
Approval of this plan does not authorize or approve any omission or deviation from applicable regulations. Final approval is subject to field inspection. One set of approved plans shall be available on the project site at all times.
Reviewed by: STEPHEN GUARINO
Approval date: 12-14-09

8-10-09
REGISTERED CIVIL ENGINEER DATE

Hossein Khodabakhsh No. 71650 Exp. 12-31-09 CIVIL — REGISTERED PROFESSIONAL ENGINEER — STATE OF CALIFORNIA

12-14-09
PLANS APPROVAL DATE

THE STATE OF CALIFORNIA OR ITS OFFICERS OR AGENTS SHALL NOT BE RESPONSIBLE FOR THE ACCURACY OR COMPLETENESS OF SCANNED COPIES OF THIS PLAN SHEET.

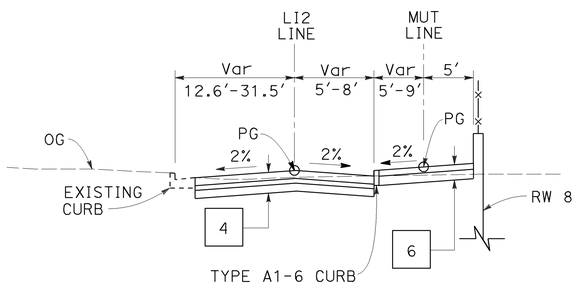

LI2 12+02 TO 12+64.15
MUT 11+95 TO 12+57.45

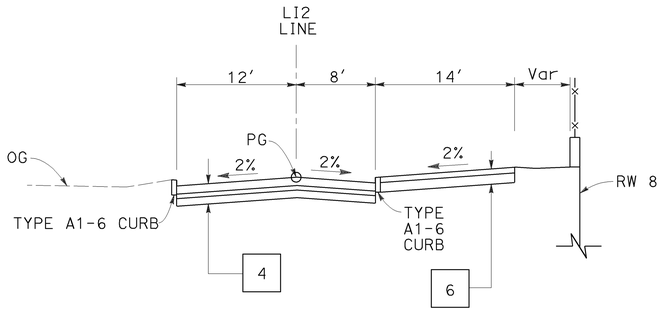

LI2 12+64.15 TO 21+36.17

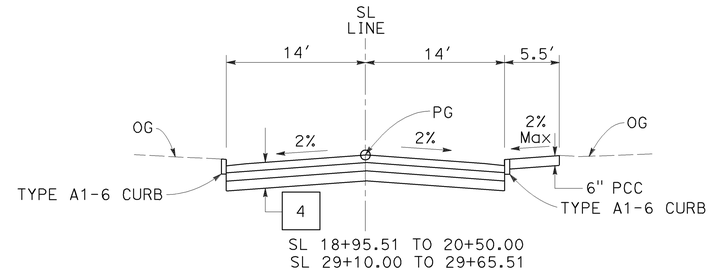

SL 18+95.51 TO 20+50.00
SL 29+10.00 TO 29+65.51

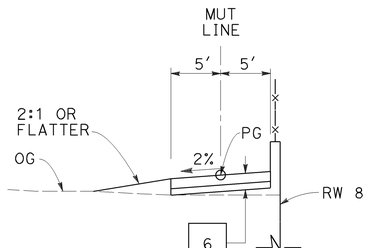

MUT 10+57.59 TO 11+95

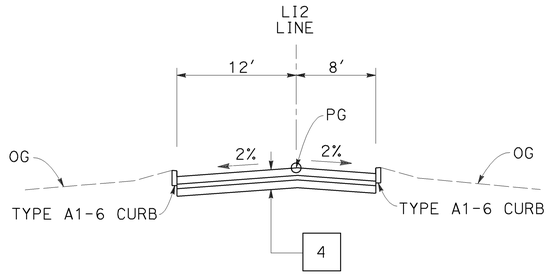

LI2 10+00 TO 12+02

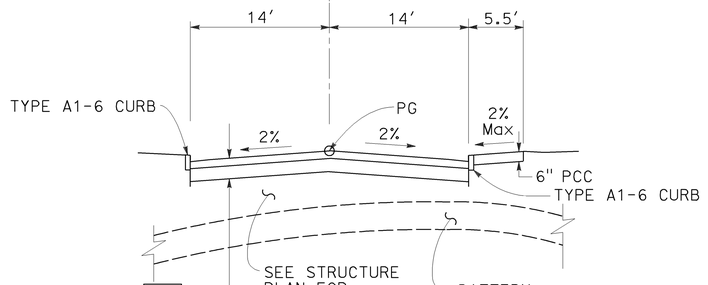

SL 20+50.00 TO 29+10.00

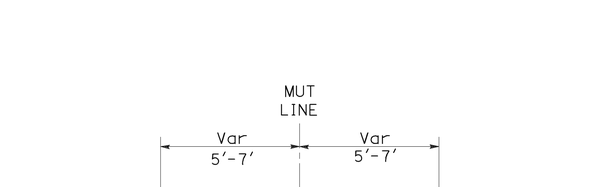

MUT 10+00 TO 10+57.59

LINCOLN Blvd

FOR NOTES, ABBREVIATIONS AND LEGEND, SEE SHEET X-1

TYPICAL CROSS SECTIONS

NO SCALE

X-2

STATE OF CALIFORNIA - DEPARTMENT OF TRANSPORTATION
Caltrans®
DESIGN
FUNCTIONAL SUPERVISOR: ABOLFAZL EMADZADEH
CALCULATED-DESIGNED BY: DOMINIC CHIN
CHECKED BY: ROMY ACOB
REVISED BY
DATE REVISED: 8/01/09

LAST REVISION
DATE PLOTTED => 14-DEC-2009
TIME PLOTTED => 13:56
09-14-09

BORDER LAST REVISED 4/11/2008
RELATIVE BORDER SCALE IS IN INCHES 0 1 2 3
USERNAME => trlenard
DGN FILE => 416374ca002.dgn
CU 04242
EA 163741

Dist	COUNTY	ROUTE	POST MILES TOTAL PROJECT	SHEET No.	TOTAL SHEETS
04	SF	101	8.2/9.2	4	654

REGISTERED CIVIL ENGINEER 8-10-09 DATE

12-14-09
PLANS APPROVAL DATE

REGISTERED PROFESSIONAL ENGINEER Hossein Khodabakhsh No. 71650 Exp. 12-31-09 CIVIL STATE OF CALIFORNIA

THE STATE OF CALIFORNIA OR ITS OFFICERS OR AGENTS SHALL NOT BE RESPONSIBLE FOR THE ACCURACY OR COMPLETENESS OF SCANNED COPIES OF THIS PLAN SHEET.

CALIFORNIA STATE FIRE MARSHAL APPROVED
Approval of this plan does not authorize or approve any omission or deviation from applicable regulations. Final approval is subject to field inspection. One set of approved plans shall be available on the project site at all times.
Reviewed by: STEPHEN GUARINO
Approval date: 12-14-09

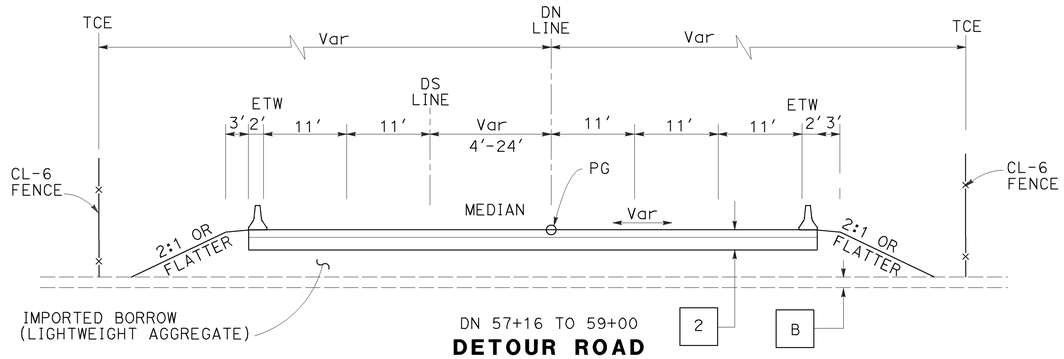

DN 57+16 TO 59+00
DETOUR ROAD

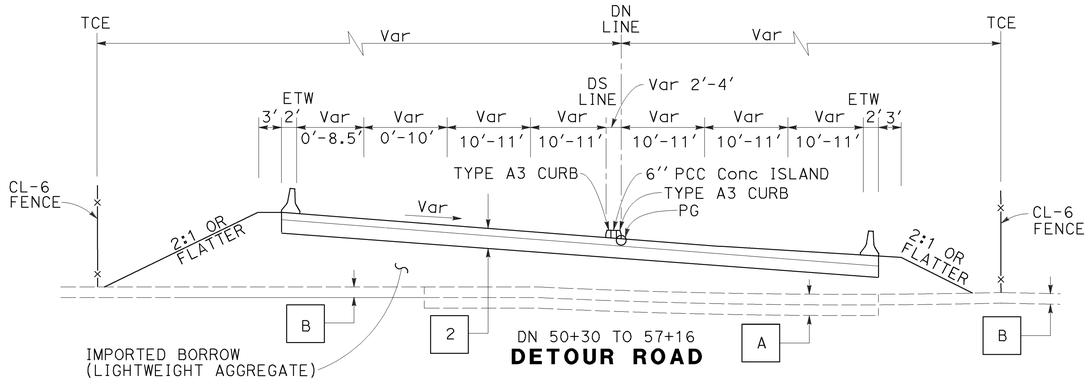

DN 50+30 TO 57+16
DETOUR ROAD

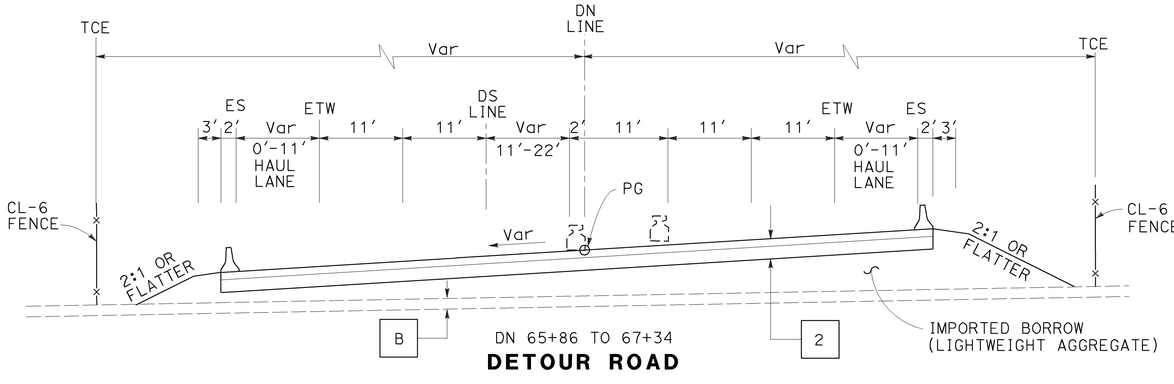

DN 65+86 TO 67+34
DETOUR ROAD

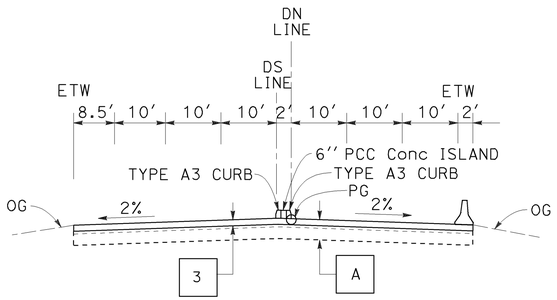

DN 49+51 TO 50+30
DETOUR ROAD

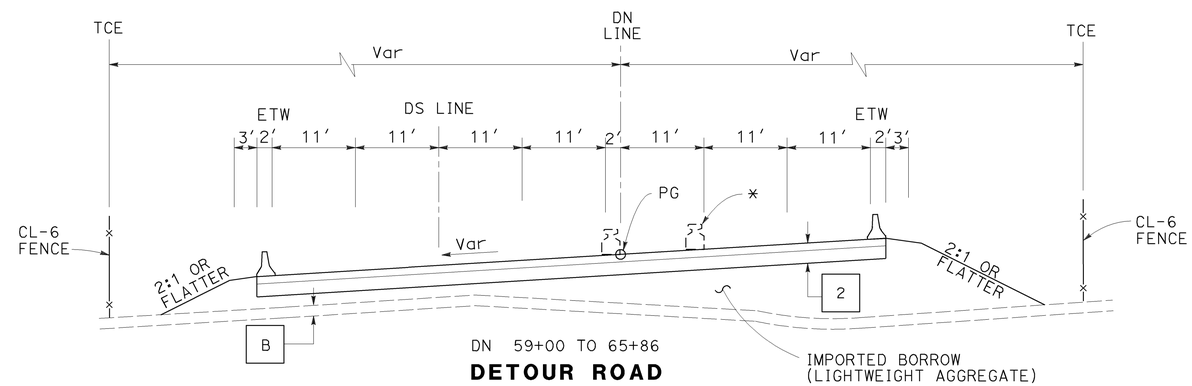

DN 59+00 TO 65+86
DETOUR ROAD

* BEGIN AT STATION 59+80

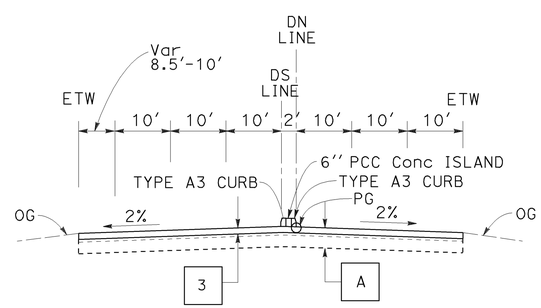

DN 48+00 TO 49+51
DETOUR ROAD

TYPICAL CROSS SECTIONS
(DETOUR)
NO SCALE

FOR NOTES, ABBREVIATIONS AND LEGEND, SEE SHEET X-1

X-3

STATE OF CALIFORNIA - DEPARTMENT OF TRANSPORTATION
Caltrans
DESIGN
FUNCTIONAL SUPERVISOR: ABOLFAZL EMADZADEH
CALCULATED-DESIGNED BY: DOMINIC CHIN
CHECKED BY: ROMY ACOB
REVISED BY: DC
DATE REVISED: 8/01/09

LAST REVISION 09-18-09
DATE PLOTTED => 14-DEC-2009
TIME PLOTTED => 13:56

Dist	COUNTY	ROUTE	POST MILES TOTAL PROJECT	SHEET No.	TOTAL SHEETS
04	SF	101	8.2/9.2	5	654

REGISTERED CIVIL ENGINEER 8-10-09 DATE

12-14-09
PLANS APPROVAL DATE

REGISTERED PROFESSIONAL ENGINEER Hossein Khodabakhsh No. 71650 Exp. 12-31-09 CIVIL STATE OF CALIFORNIA

THE STATE OF CALIFORNIA OR ITS OFFICERS OR AGENTS SHALL NOT BE RESPONSIBLE FOR THE ACCURACY OR COMPLETENESS OF SCANNED COPIES OF THIS PLAN SHEET.

CALIFORNIA STATE FIRE MARSHAL APPROVED
Approval of this plan does not authorize or approve any omission or deviation from applicable regulations. Final approval is subject to field inspection. One set of approved plans shall be available on the project site at all times.
Reviewed by: STEPHEN GUARINO
Approval date: 12-14-09

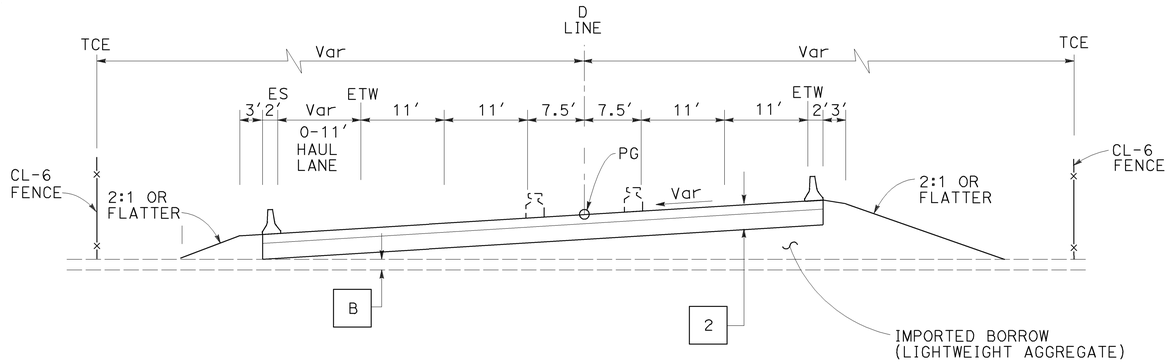

D 75+72 TO 79+46.475
DETOUR ROAD

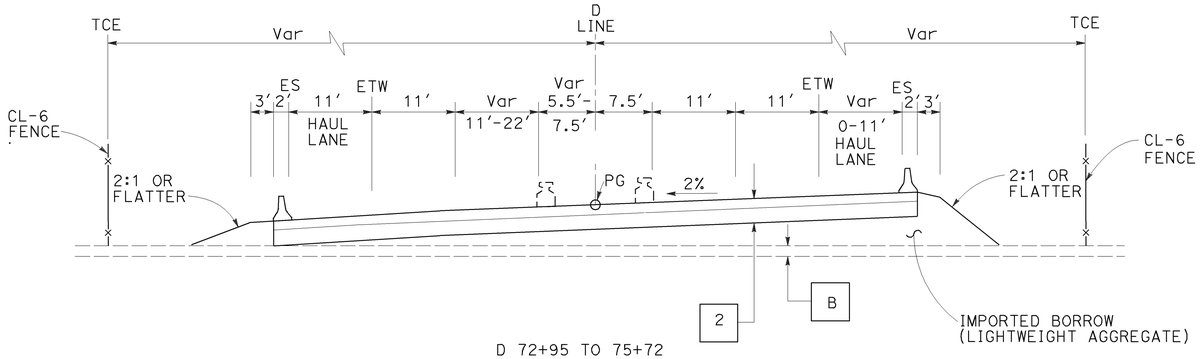

D 72+95 TO 75+72
DETOUR ROAD

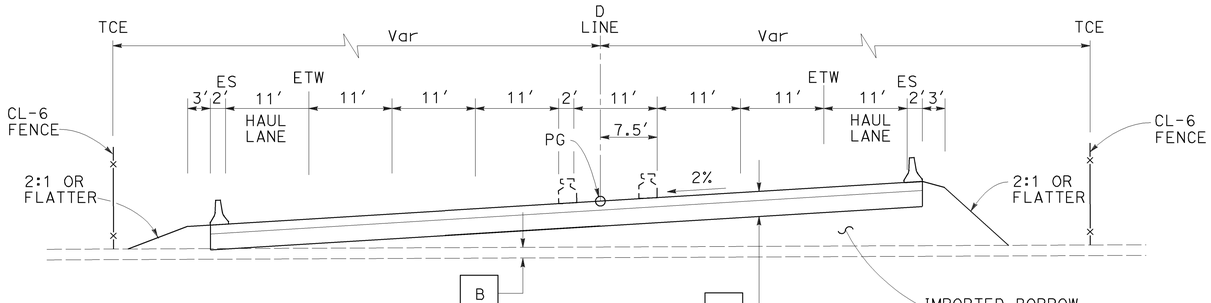

D 67+34 TO 72+95
DETOUR ROAD

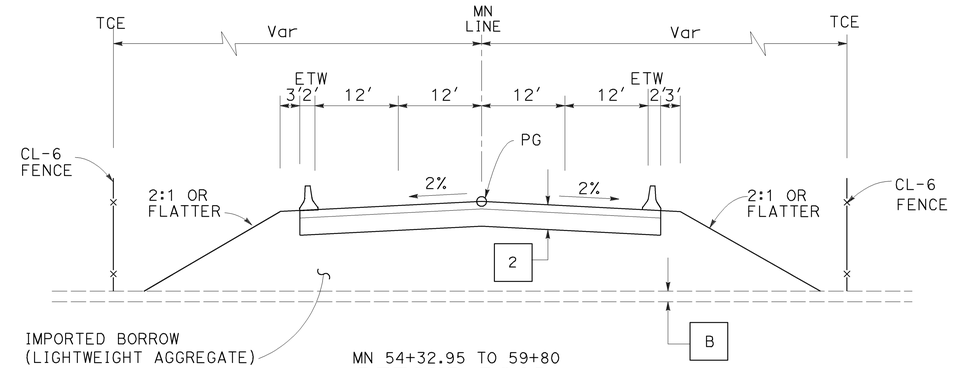

MN 54+32.95 TO 59+80
DETOUR ROAD

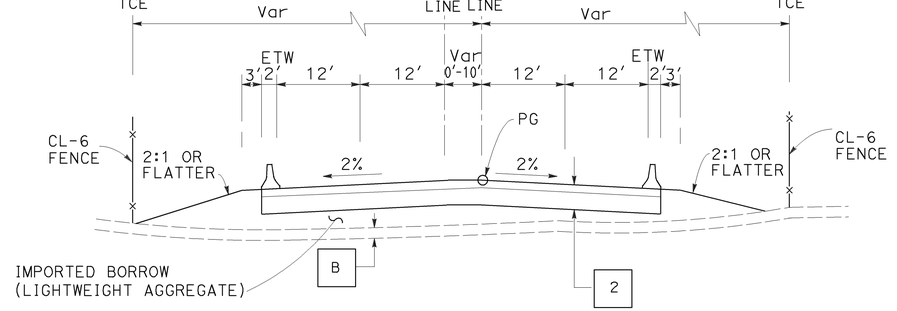

MN 52+50 TO 54+32.95
DETOUR ROAD

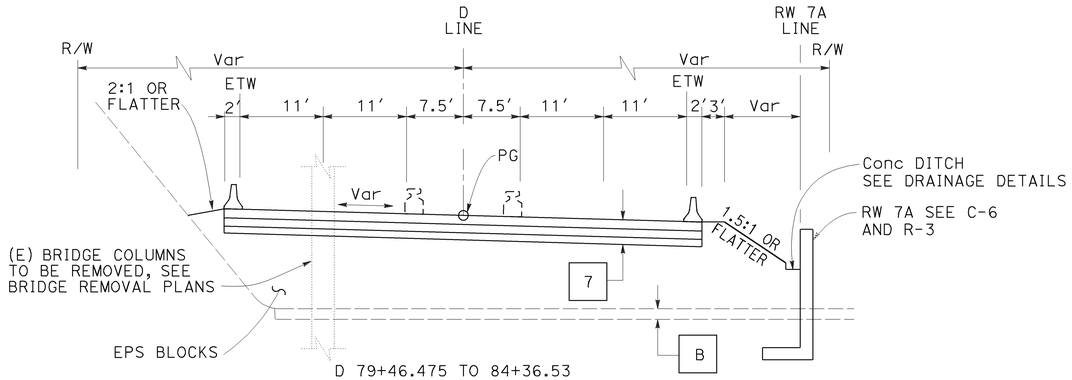

D 79+46.475 TO 84+36.53
DETOUR ROAD

TYPICAL CROSS SECTIONS (DETOUR)
NO SCALE

FOR NOTES, ABBREVIATIONS AND LEGEND, SEE SHEET X-1

X-4

STATE OF CALIFORNIA - DEPARTMENT OF TRANSPORTATION
Caltrans
DESIGN

FUNCTIONAL SUPERVISOR: ABOLFAZL EMADZADEH
CALCULATED-DESIGNED BY: DOMINIC CHIN
CHECKED BY: ROMY ACOB
REVISED BY: DC
DATE REVISED: 8/01/09

LAST REVISION 09-17-09
DATE PLOTTED => 14-DEC-2009
TIME PLOTTED => 13:56

FOR ACCURATE RIGHT OF WAY AND ACCESS DATA, CONTACT RIGHT OF WAY ENGINEERING AT THE DISTRICT OFFICE.

COORDINATE VALUES SHOWN ARE CCS NAD-83, ZONE 29R. ELEVATIONS ARE BASED ON NAD-88.

CURVE DATA

No.	R	Δ	T	L	N-COORDINATE	E-COORDINATE
1	2884′	20° 51′ 30″	530.83′	1049.91′	2117905.81	5997081.75
2	1380′	36° 24′ 25″	453.81′	876.88′	2121646.10	5994945.58

Dist	COUNTY	ROUTE	POST MILES TOTAL PROJECT	SHEET No.	TOTAL SHEETS
04	SF	101	8.2/9.2	6	654

REGISTERED CIVIL ENGINEER — DATE: 8-10-09

Hossein Khodabakhsh, No. 71650, Exp. 12-31-09, CIVIL — REGISTERED PROFESSIONAL ENGINEER — STATE OF CALIFORNIA

PLANS APPROVAL DATE: 12-14-09

THE STATE OF CALIFORNIA OR ITS OFFICERS OR AGENTS SHALL NOT BE RESPONSIBLE FOR THE ACCURACY OR COMPLETENESS OF SCANNED COPIES OF THIS PLAN SHEET.

CALIFORNIA STATE FIRE MARSHAL APPROVED

Approval of this plan does not authorize or approve any omission or deviation from applicable regulations. Final approval is subject to field inspection. One set of approved plans shall be available on the project site at all times.

Reviewed by: STEPHEN GUARINO

Approval date: 12-14-09

SAN FRANCISCO

MONTGOMERY St
TAYLOR Rd
ORD St
MILES St
RILEY Ave
LINCOLN Blvd
DOYLE Dr
ROUTE 101
MASON St

64.25′ Lt SB 65+00
BEGIN Ret WALL 8 & ARCHITECTURAL FENCE

SB 64+82
BEGIN CRCP

SB 65+48.81 EC

WALL MOUNTED Calif ST-10 (Mod)

Calif ST-10 BRIDGE RAIL (Mod) (TYPE B)

Ret WALL 8 & ARCHITECTURAL FENCE (SEE STRUCTURE PLAN)

SB 71+58.23 BC

CROSSOVER

2" WATER METER

ELECTRICAL POC

SB LINE S 68° 24′ 07.3″ W 609.423′

PAVEMENT EXPANSION JOINT (CRCP)

SB 64+82
BEGIN Calif ST-10 BRIDGE RAIL (Mod)

TERMINAL JOINT TYPE C

SB 66+80
END Calif ST-10 BRIDGE RAIL (Mod)

SB 71+58.23
BEGIN Calif ST-10 BRIDGE RAIL (Mod)

SEE SHEET L-2

LEGEND:

No.	STRUCTURAL SECTION NUMBER
	TREE TO REMAIN
— ESA —	ENVIROMENTALLY SENSITIVE AREA
— TCE —	Temp CONSTRUCTION EASEMENT Temp FENCE (TYPE CL-6, SLATTED)
— TFESA —x—	TEMPORARY FENCE (ESA)
— TPB —xx—	TEMPORARY PERIMETER BARRIER (Exist)
— TRSF —xx—	TEMPORARY REINFORCED SILT FENCE (Exist)
— VESA —x—	VERTICAL ESA

NOTES:

1. FOR RETAINING WALL DETAILS, SEE STRUCTURE PLANS.

ABBREVIATION:

CCS CALIFORNIA COORDINATE SYSTEM

LAYOUT AND CONTOUR GRADING PLAN

SCALE: 1"=50′

L-1

STATE OF CALIFORNIA - DEPARTMENT OF TRANSPORTATION
DESIGN
Caltrans

FUNCTIONAL SUPERVISOR: ABOLFAZL EMADZADEH
CALCULATED-DESIGNED BY:
CHECKED BY: ROGER DAYOAN
REVISED BY: CARLOS SANDOVAL
DATE REVISED: CS 8/01/09

LAST REVISION DATE PLOTTED => 14-DEC-2009
09-20-09 TIME PLOTTED => 13:56

BORDER LAST REVISED 4/11/2008

RELATIVE BORDER SCALE IS IN INCHES 0 1 2 3

USERNAME => trienard
DGN FILE => 416374ea001.dgn

CU 04242

EA 163741

Dist	COUNTY	ROUTE	POST MILES TOTAL PROJECT	SHEET No.	TOTAL SHEETS
04	SF	101	8.2/9.2	7	654

8-10-09
REGISTERED CIVIL ENGINEER DATE

Hossein Khodabakhsh
No. 71650
Exp. 12-31-09
CIVIL
REGISTERED PROFESSIONAL ENGINEER
STATE OF CALIFORNIA

12-14-09
PLANS APPROVAL DATE

THE STATE OF CALIFORNIA OR ITS OFFICERS OR AGENTS SHALL NOT BE RESPONSIBLE FOR THE ACCURACY OR COMPLETENESS OF SCANNED COPIES OF THIS PLAN SHEET.

CALIFORNIA STATE FIRE MARSHAL APPROVED

Approval of this plan does not authorize or approve any omission or deviation from applicable regulations. Final approval is subject to field inspection. One set of approved plans shall be available on the project site at all times.

Reviewed by: STEPHEN GUARINO
Approval date: 12-14-09

CURVE DATA

No.	R	Δ	T	L	N-COORDINATE	E-COORDINATE
(2)	1380′	36° 24′ 25″	453.81′	876.88′	2121646.10	5994945.58

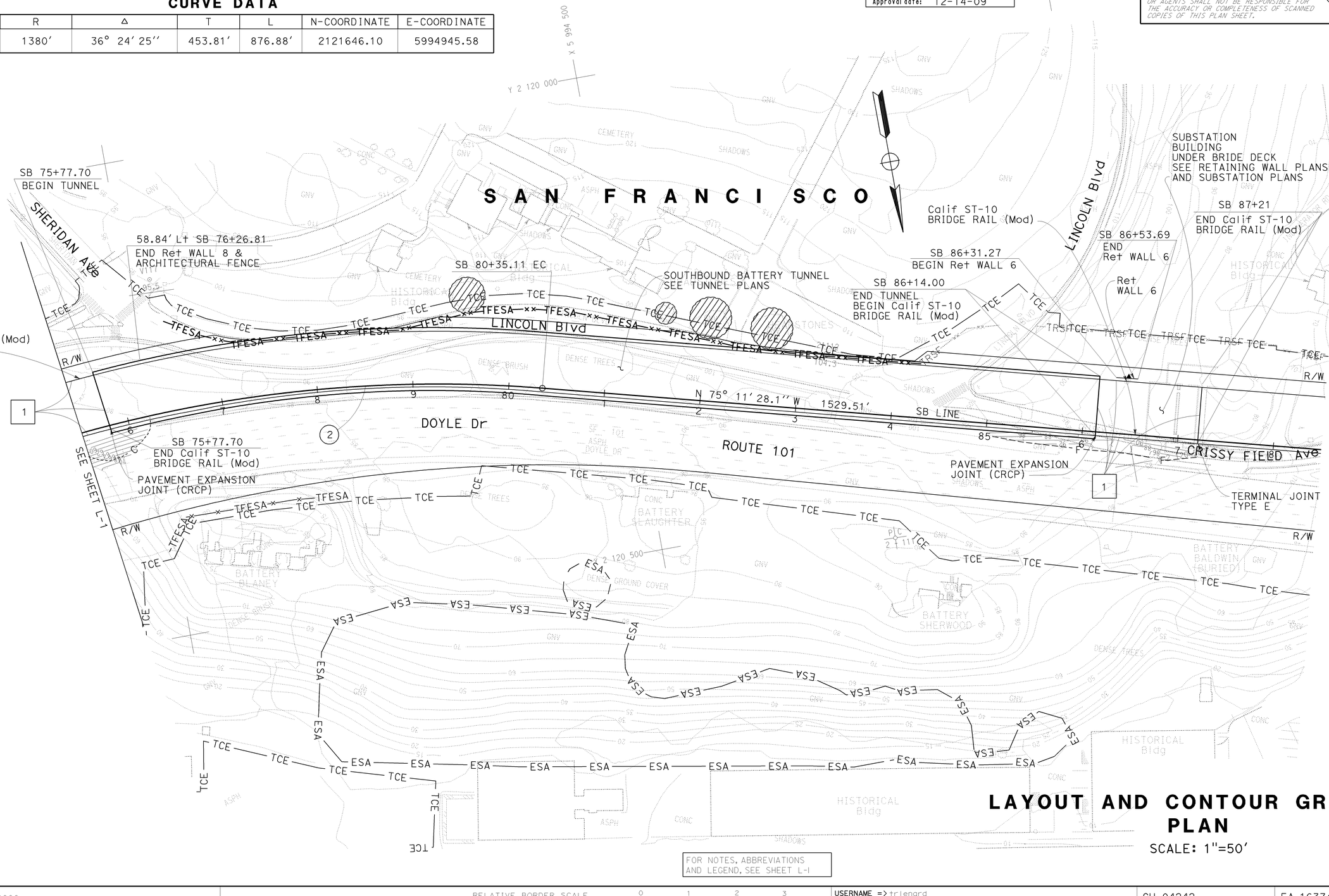

LAYOUT AND CONTOUR GRADING PLAN

SCALE: 1"=50′

FOR NOTES, ABBREVIATIONS AND LEGEND, SEE SHEET L-1

L-2

CS | 8/01/09
REVISED BY | DATE REVISED
CARLOS SANDOVAL | ROGER DAYOAN
CALCULATED-DESIGNED BY | CHECKED BY
FUNCTIONAL SUPERVISOR
ABOLFAZL EMADZADEH

STATE OF CALIFORNIA - DEPARTMENT OF TRANSPORTATION
DESIGN

LAST REVISION | DATE PLOTTED => 14-DEC-2009
11-17-09 | TIME PLOTTED => 13:56

FOR ACCURATE RIGHT OF WAY AND ACCESS DATA, CONTACT RIGHT OF WAY ENGINEERING AT THE DISTRICT OFFICE.

CURVE DATA

No.	R	Δ	T	L	N-COORDINATE	E-COORDINATE
3	25.00′	51° 40′ 32″	12.11′	22.55′	2120494.94	5996023.19
4	508.00′	04° 54′ 40″	21.78′	43.54′	2120900.59	5996084.04
5	50.00′	62° 32′ 06″	30.36′	54.57′	2120410.36	5995904.79
6	1288.00′	12° 12′ 54″	137.82′	274.59′	2121526.14	5995157.52
12	40.00′	131° 51′ 05″	89.53′	92.05′	2120282.62	5995623.62
13	300.00′	10° 20′ 0″	27.13′	54.12′	2120001.12	5995641.58
14	30.00′	119° 2′ 04″	50.96′	62.33′	2120268.95	5995607.40

Dist	COUNTY	ROUTE	POST MILES TOTAL PROJECT	SHEET No.	TOTAL SHEETS
04	SF	101	8.2/9.2	8	654

8-10-09
REGISTERED CIVIL ENGINEER DATE

Hossein Khodabakhsh No. 71650 Exp. 12-31-09 CIVIL — REGISTERED PROFESSIONAL ENGINEER — STATE OF CALIFORNIA

12-14-09
PLANS APPROVAL DATE

THE STATE OF CALIFORNIA OR ITS OFFICERS OR AGENTS SHALL NOT BE RESPONSIBLE FOR THE ACCURACY OR COMPLETENESS OF SCANNED COPIES OF THIS PLAN SHEET.

CALIFORNIA STATE FIRE MARSHAL APPROVED
Approval of this plan does not authorize or approve any omission or deviation from applicable regulations. Final approval is subject to field inspection. One set of approved plans shall be available on the project site at all times.
Reviewed by: STEPHEN GUARINO
Approval date: 12-14-09

LI2 10+00.00 PI
LI2 10+00.07 BC
MONTGOMERY St
LI2 10+43.62 EC
LI2 10+72.39 EC
SAN FRANCISCO
LI2 11+56.91 BC
LI2 12+11.48 EC
TAYLOR Rd
LI2 13+26.05 BC
LC1 10+18.72 BC
LC2 20+00.00 BC
LC2 20+62.33 EC
LC2 20+62.33 BC
ORD St
MILES St
LC2 21+16.44 EC
LI2 16+00.64 EC
RILEY Ave
MUT 10+00.00 PI
MUT 10+35.04 BC
MUT 10+57.59 EC
MUT 12+57.45 PI
LINCOLN Blvd
DOYLE Dr
ROUTE 101
LI2 15+13.89 =
LC1 11+10.77 EC
SEE SHEET L-4
CONFORM
R=20′
R=35′
R=300′
R=25′
R/W
TCE
TFESA
TRSF
TPB

LC2 LINE — LC1 LINE
20′ & Var
Var
TYPE A1-6 CURB
TYPE A1-6 CURB
0.60′ HMA
0.35′ LCB
0.95′ AS (CLASS 4)

SECTION A-A

FOR NOTES, ABBREVIATIONS AND LEGEND, SEE SHEET L-1

LAYOUT AND CONTOUR GRADING PLAN

SCALE: 1"=50′

L-3

REVISED BY	DATE REVISED
CS	8/01/09

CALCULATED-DESIGNED BY: CARLOS SANDOVAL
CHECKED BY: ROGER DAYOAN
FUNCTIONAL SUPERVISOR: ABOLFAZL EMADZADEH

STATE OF CALIFORNIA - DEPARTMENT OF TRANSPORTATION
Caltrans® DESIGN

LAST REVISION DATE PLOTTED => 14-DEC-2009
TIME PLOTTED => 13:57
09-17-09

BORDER LAST REVISED 4/11/2008
RELATIVE BORDER SCALE IS IN INCHES 0 1 2 3
USERNAME => trlenard
DGN FILE => 416374ea003.dgn
CU 04242
EA 163741

Dist	COUNTY	ROUTE	POST MILES TOTAL PROJECT	SHEET No.	TOTAL SHEETS
04	SF	101	8.2/9.2	9	654

REGISTERED CIVIL ENGINEER 8-10-09 DATE

12-14-09
PLANS APPROVAL DATE

REGISTERED PROFESSIONAL ENGINEER Hossein Khodabakhsh No. 71650 Exp. 12-31-09 CIVIL STATE OF CALIFORNIA

THE STATE OF CALIFORNIA OR ITS OFFICERS OR AGENTS SHALL NOT BE RESPONSIBLE FOR THE ACCURACY OR COMPLETENESS OF SCANNED COPIES OF THIS PLAN SHEET.

CALIFORNIA STATE FIRE MARSHAL APPROVED

Approval of this plan does not authorize or approve any omission or deviation from applicable regulations. Final approval is subject to field inspection. One set of approved plans shall be available on the project site at all times.

Reviewed by: STEPHEN GUARINO

Approval date: 12-14-09

CURVE DATA

No.	R	Δ	T	L	N-COORDINATE	E-COORDINATE
7	240.00′	40° 56′ 57″	89.61′	171.53′	2119987.92	5994828.37
8	324.00′	14° 25′ 27″	41.00′	81.57′	2119913.37	5994778.76
9	349.00′	25° 58′ 27″	80.49′	158.21′	2120580.02	5994660.54
10	150.00′	38° 20′ 00″	52.14′	100.36′	2120222.85	5994214.97
11	325.00′	19° 08′ 16″	54.79′	108.56′	2120054.75	5994263.63

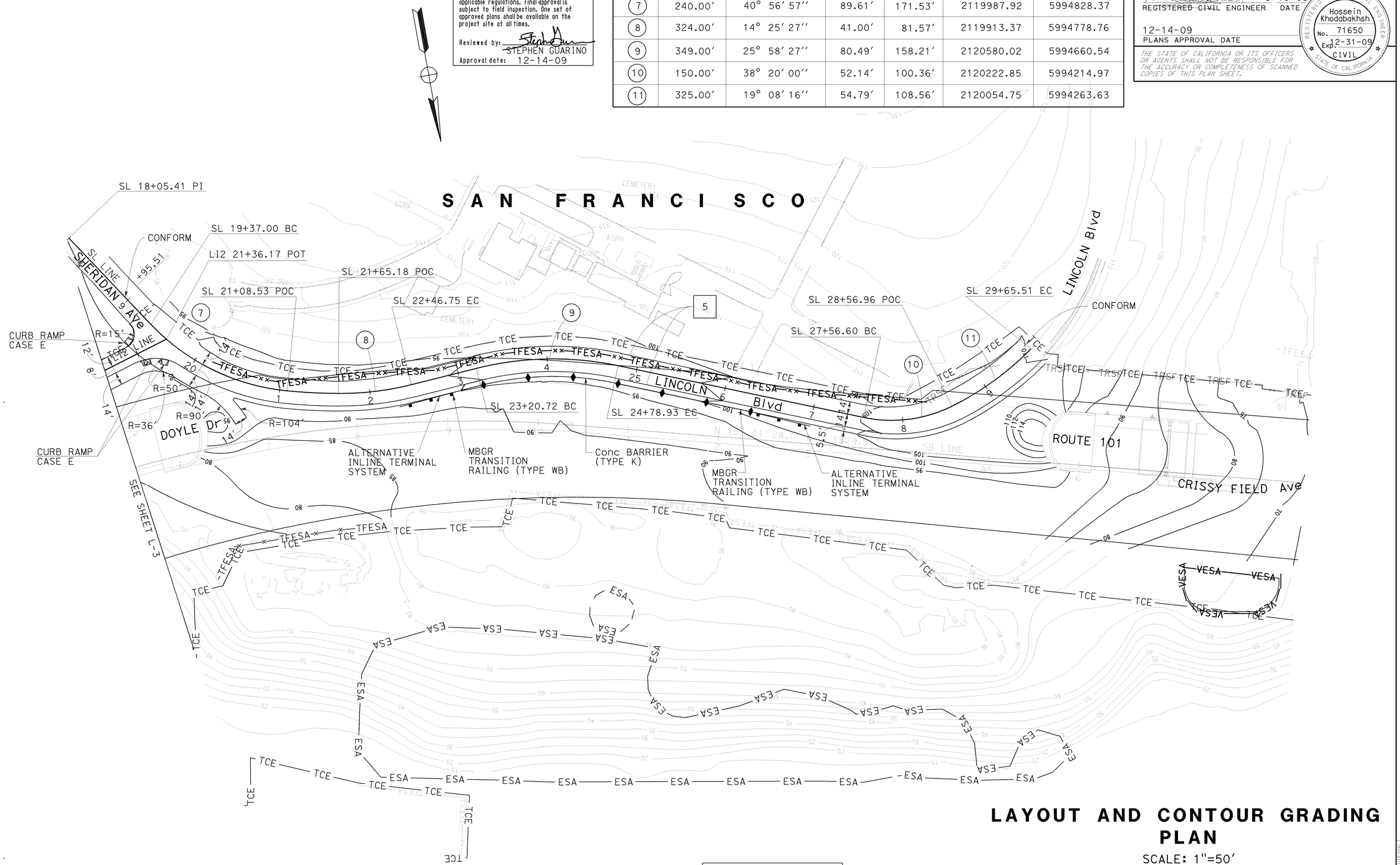

LAYOUT AND CONTOUR GRADING PLAN

SCALE: 1"=50′

FOR NOTES, ABBREVIATIONS AND LEGEND, SEE SHEET L-1

L-4

STATE OF CALIFORNIA - DEPARTMENT OF TRANSPORTATION

Caltrans

DESIGN

FUNCTIONAL SUPERVISOR: ABOLFAZL EMADZADEH

CALCULATED-DESIGNED BY: CARLOS SANDOVAL

CHECKED BY: ROGER DAYOAN

REVISED BY: CS

DATE REVISED: 8/01/09

LAST REVISION 11-17-09

DATE PLOTTED => 14-DEC-2009

TIME PLOTTED => 13:57

BORDER LAST REVISED 4/11/2008

RELATIVE BORDER SCALE IS IN INCHES 0 1 2 3

USERNAME => trlenard

DGN FILE => 416374ea004.dgn

CU 04242

EA 163741

Dist	COUNTY	ROUTE	POST MILES TOTAL PROJECT	SHEET No.	TOTAL SHEETS
04	SF	101	8.2/9.2	10	654

CALIFORNIA STATE FIRE MARSHAL APPROVED

Approval of this plan does not authorize or approve any omission or deviation from applicable regulations. Final approvals subject to field inspection. One set of approved plans shall be available on the project site at all times.

Reviewed by: STEPHEN GUARINO

Approval date: 12-14-09

8-10-09
REGISTERED CIVIL ENGINEER DATE

Hossein Khodabakhsh
No. 71650
Exp. 12-31-09
CIVIL
REGISTERED PROFESSIONAL ENGINEER
STATE OF CALIFORNIA

12-14-09
PLANS APPROVAL DATE

THE STATE OF CALIFORNIA OR ITS OFFICERS OR AGENTS SHALL NOT BE RESPONSIBLE FOR THE ACCURACY OR COMPLETENESS OF SCANNED COPIES OF THIS PLAN SHEET.

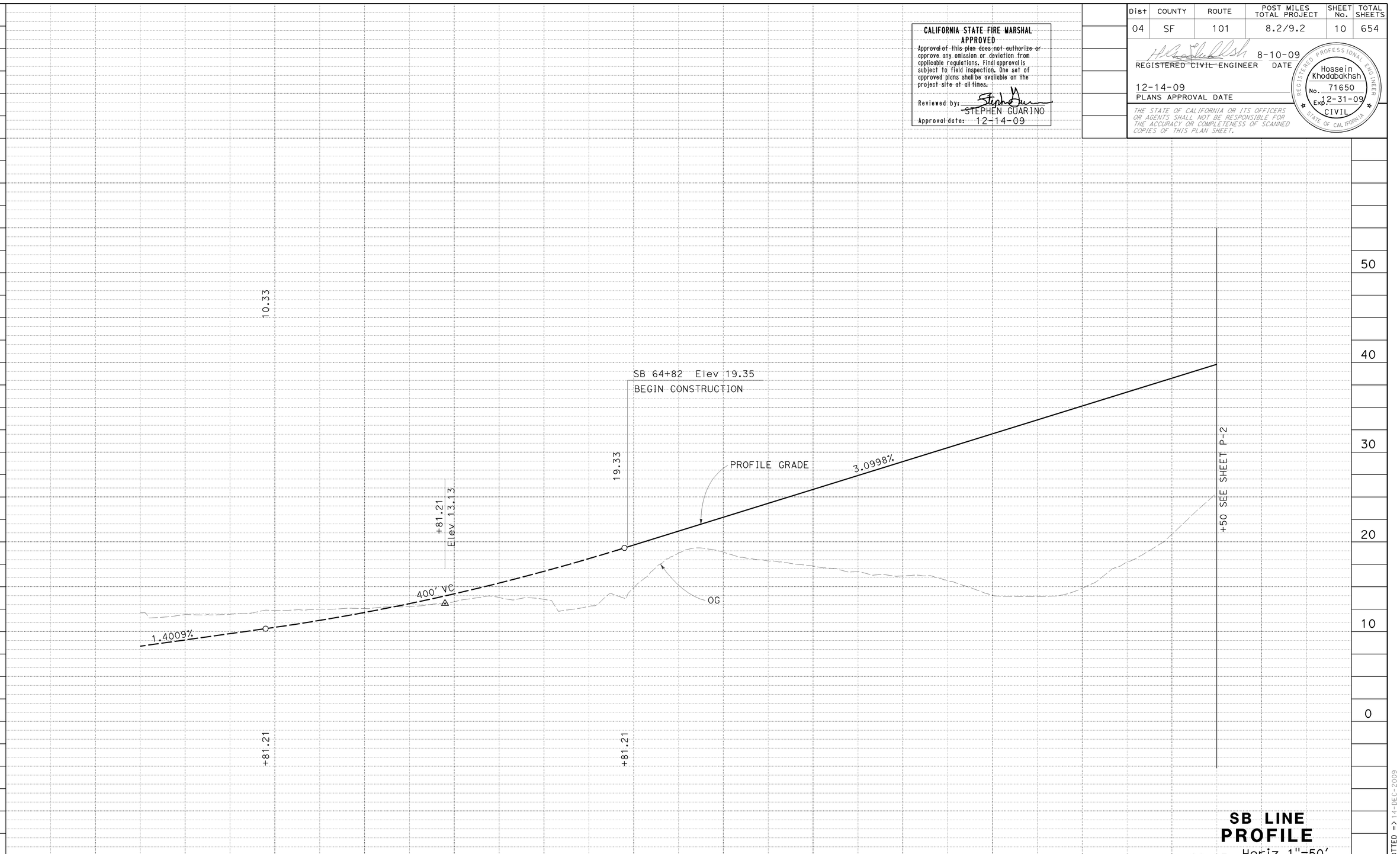

SB LINE
PROFILE
SCALE: Horiz 1"=50'
Vert 1"=5'

P-1

STATION	60	1	2	3	4	65	6	7	8	9	70	1	TOTAL
CY Exc						25500							
CY Emb						23540							

CALCULATED-DESIGNED BY
CHECKED BY
FUNCTIONAL SUPERVISOR: ABOLFAZL EMADZADEH
REVISED BY: CS
DATE REVISED: 8/01/09
STATE OF CALIFORNIA - DEPARTMENT OF TRANSPORTATION
DESIGN
CARLOS SANDOVAL
ROGER DAYOAN
Gates

LAST REVISION
DATE PLOTTED => 14-DEC-2009
TIME PLOTTED => 13:57
08-20-09

BORDER LAST REVISED 4/11/2008

RELATIVE BORDER SCALE IS IN INCHES 0 1 2 3

USERNAME => trlenard
DGN FILE => 416374fa001.dgn

CU 04242

EA 163741

Dist	COUNTY	ROUTE	POST MILES TOTAL PROJECT	SHEET No.	TOTAL SHEETS
04	SF	101	8.2/9.2	11	654

CALIFORNIA STATE FIRE MARSHAL APPROVED
Approval of this plan does not authorize or approve any omission or deviation from applicable regulations. Final approval is subject to field inspection. One set of approved plans shall be available on the project site at all times.
Reviewed by: STEPHEN GUARINO
Approval date: 12-14-09

8-10-09
REGISTERED CIVIL ENGINEER DATE

Hossein Khodabakhsh No. 71650 Exp. 12-31-09 CIVIL — REGISTERED PROFESSIONAL ENGINEER — STATE OF CALIFORNIA

12-14-09
PLANS APPROVAL DATE

THE STATE OF CALIFORNIA OR ITS OFFICERS OR AGENTS SHALL NOT BE RESPONSIBLE FOR THE ACCURACY OR COMPLETENESS OF SCANNED COPIES OF THIS PLAN SHEET.

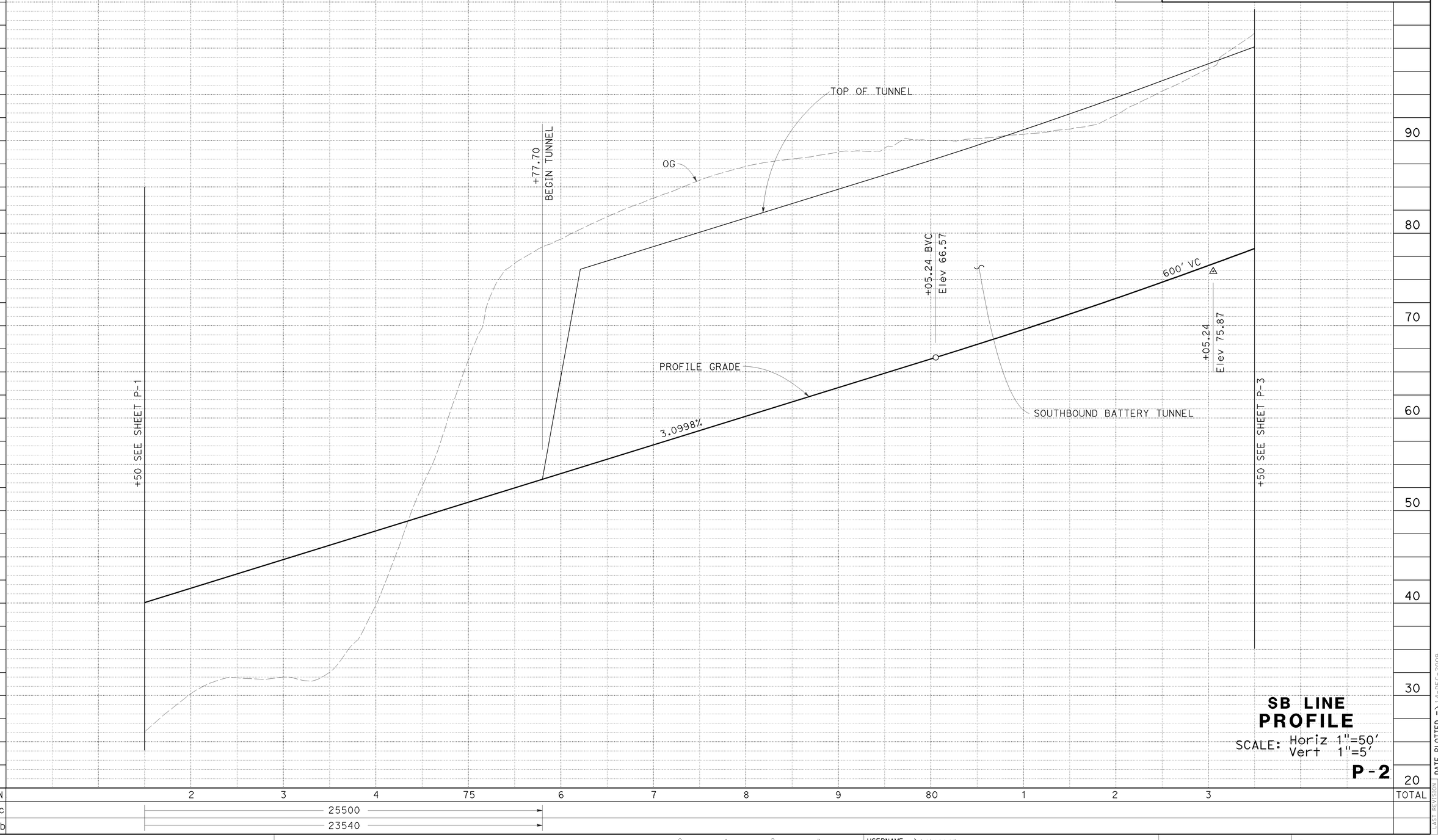

SB LINE PROFILE
SCALE: Horiz 1"=50'
Vert 1"=5'

P-2

LAST REVISION DATE PLOTTED => 14-DEC-2009
TIME PLOTTED => 13:57
08-20-09

CALCULATED-DESIGNED BY
CHECKED BY
REVISED BY CS
DATE REVISED 8/01/09
CARLOS SANDOVAL
ROGER DAYOAN
FUNCTIONAL SUPERVISOR
ABOLFAZL EMADZADEH
STATE OF CALIFORNIA - DEPARTMENT OF TRANSPORTATION
DESIGN
Gutans

BORDER LAST REVISED 4/11/2008
RELATIVE BORDER SCALE IS IN INCHES 0 1 2 3
USERNAME => trienard
DGN FILE => 416374fa002.dgn
CU 04242
EA 163741

Dist	COUNTY	ROUTE	POST MILES TOTAL PROJECT	SHEET No.	TOTAL SHEETS
04	SF	101	8.2/9.2	12	654

CALIFORNIA STATE FIRE MARSHAL APPROVED

Approval of this plan does not authorize or approve any omission or deviation from applicable regulations. Final approval is subject to field inspection. One set of approved plans shall be available on the project site at all times.

Reviewed by: STEPHEN GUARINO

Approval date: 12-14-09

8-10-09
REGISTERED CIVIL ENGINEER DATE

Hossein Khodabakhsh
No. 71650
Exp. 12-31-09
CIVIL
REGISTERED PROFESSIONAL ENGINEER
STATE OF CALIFORNIA

12-14-09
PLANS APPROVAL DATE

THE STATE OF CALIFORNIA OR ITS OFFICERS OR AGENTS SHALL NOT BE RESPONSIBLE FOR THE ACCURACY OR COMPLETENESS OF SCANNED COPIES OF THIS PLAN SHEET.

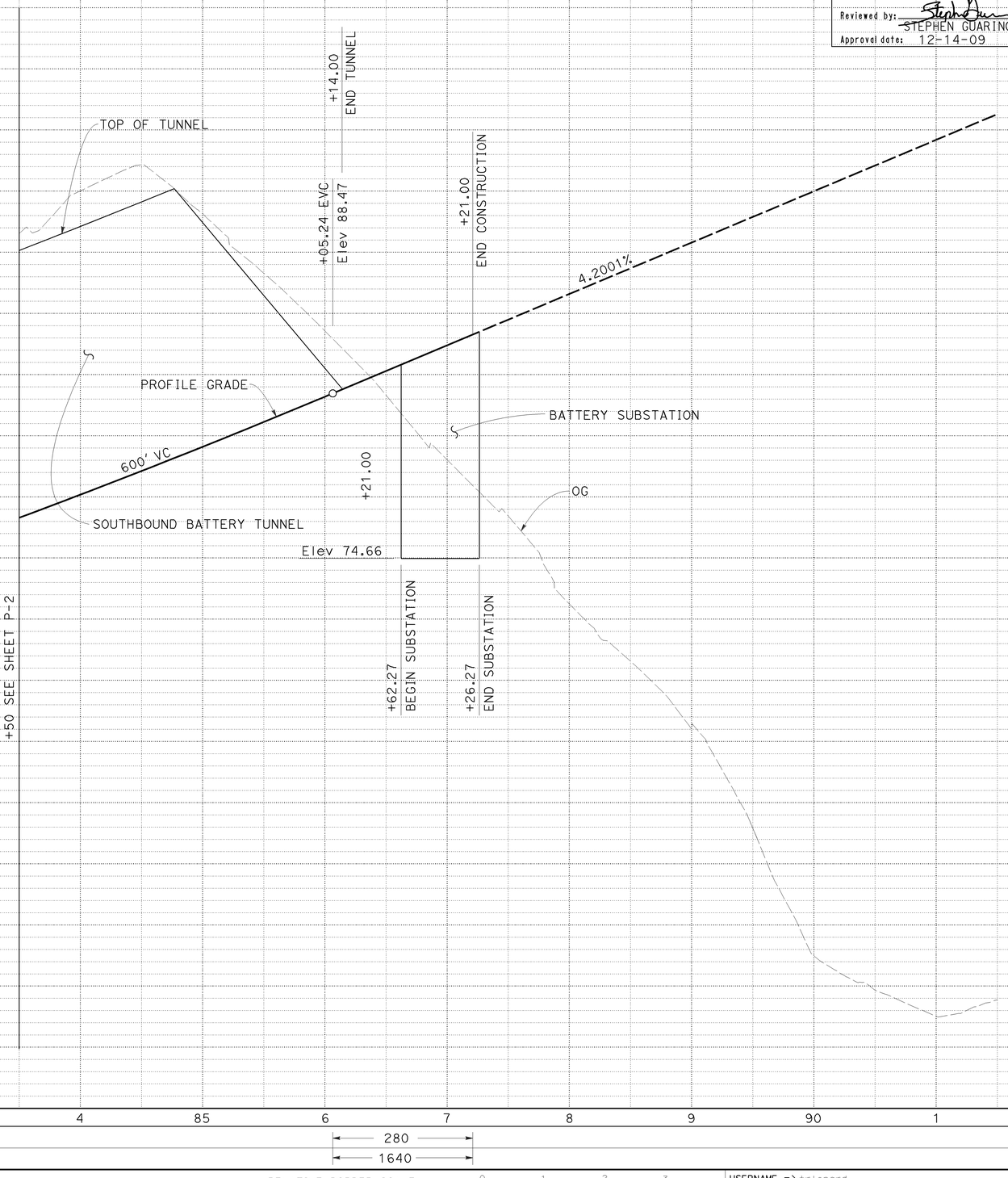

SB LINE PROFILE

SCALE: Horiz 1"=50'
Vert 1"=5'

P-3

STATION	4	85	6	7	8	9	90	1	TOTAL
CY Exc			280						
CY Emb			1640						

CALCULATED-DESIGNED BY: CARLOS SANDOVAL
CHECKED BY: ROGER DAYOAN
REVISED BY: CS
DATE REVISED: 8/01/09
FUNCTIONAL SUPERVISOR: ABOLFAZL EMADZADEH
STATE OF CALIFORNIA - DEPARTMENT OF TRANSPORTATION
DESIGN

LAST REVISION: DATE PLOTTED => 14-DEC-2009, TIME PLOTTED => 13:57
08-19-09

BORDER LAST REVISED 4/11/2008

RELATIVE BORDER SCALE IS IN INCHES 0 1 2 3

USERNAME => trienard
DGN FILE => 416374fa003.dgn

CU 04242

EA 163741

Dist	COUNTY	ROUTE	POST MILES TOTAL PROJECT	SHEET No.	TOTAL SHEETS
04	SF	101	8.2/9.2	13	654

CALIFORNIA STATE FIRE MARSHAL APPROVED

Approval of this plan does not authorize or approve any omission or deviation from applicable regulations. Final approval is subject to field inspection. One set of approved plans shall be available on the project site at all times.

Reviewed by: STEPHEN GUARINO

Approval date: 12-14-09

8-10-09
REGISTERED CIVIL ENGINEER DATE

Hossein Khodabakhsh
No. 71650
Exp. 12-31-09
CIVIL
REGISTERED PROFESSIONAL ENGINEER
STATE OF CALIFORNIA

12-14-09
PLANS APPROVAL DATE

THE STATE OF CALIFORNIA OR ITS OFFICERS OR AGENTS SHALL NOT BE RESPONSIBLE FOR THE ACCURACY OR COMPLETENESS OF SCANNED COPIES OF THIS PLAN SHEET.

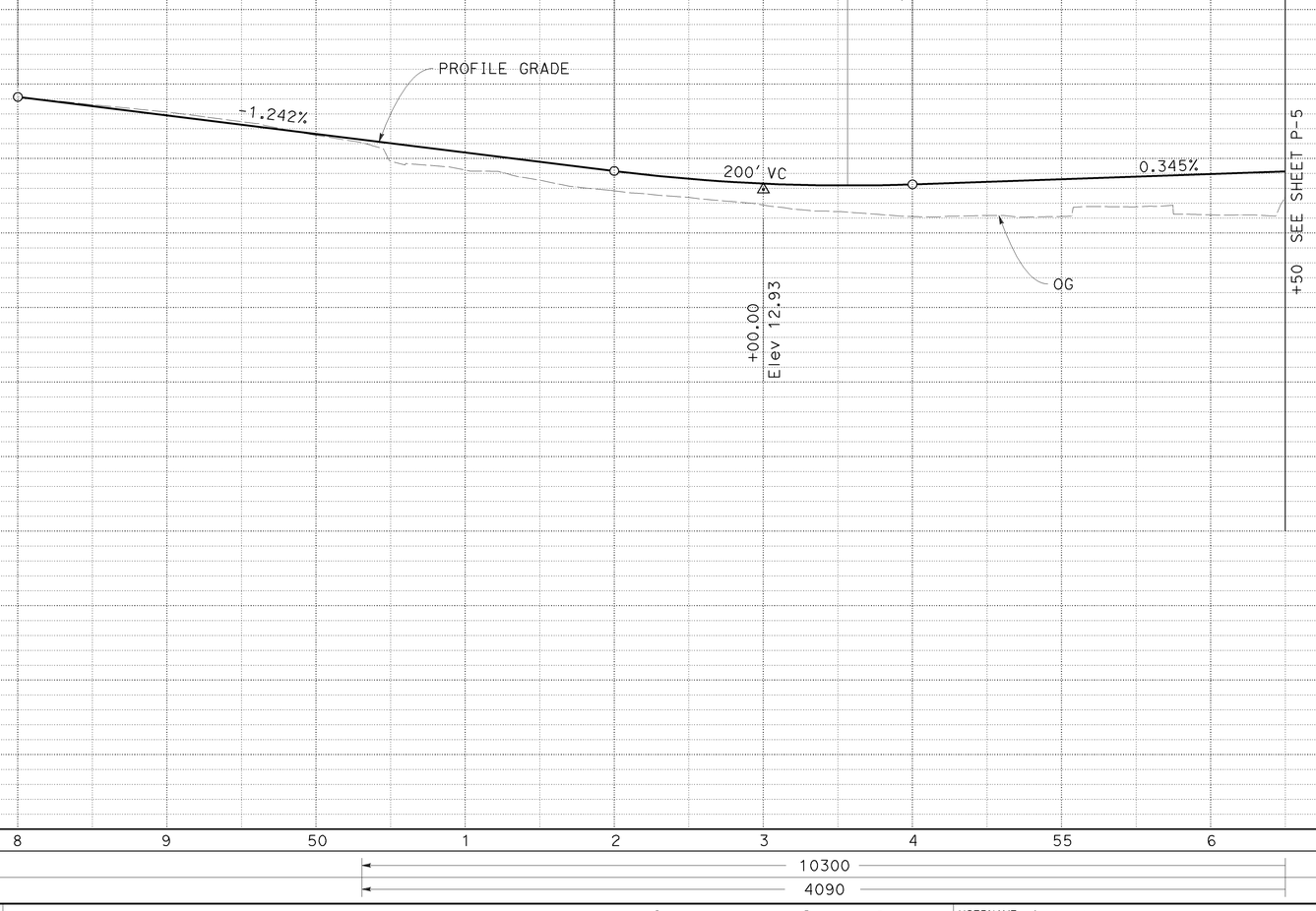

DETOUR DN LINE PROFILE

SCALE: Horiz 1"=50'
Vert 1"=5'

P-4

STATION		8	9	50	1	2	3	4	55	6	TOTAL
CY	Exc				10300						
	Emb				4090						

CALCULATED-DESIGNED BY
CHECKED BY
FUNCTIONAL SUPERVISOR: ABOLFAZL EMADZADEH
REVISED BY: CS
DATE REVISED: 8/01/09

STATE OF CALIFORNIA - DEPARTMENT OF TRANSPORTATION
DESIGN
CARLOS SANDOVAL
ROGER DAYOAN

LAST REVISION
DATE PLOTTED => 14-DEC-2009
TIME PLOTTED => 13:57
08-20-09

BORDER LAST REVISED 4/11/2008

RELATIVE BORDER SCALE IS IN INCHES 0 1 2 3

USERNAME => trlenard
DGN FILE => 416374fa004.dgn

CU 04242

EA 163741

Dist	COUNTY	ROUTE	POST MILES TOTAL PROJECT	SHEET No.	TOTAL SHEETS
04	SF	101	8.2/9.2	14	654

CALIFORNIA STATE FIRE MARSHAL APPROVED
Approval of this plan does not authorize or approve any omission or deviation from applicable regulations. Final approval is subject to field inspection. One set of approved plans shall be available on the project site at all times.
Reviewed by: STEPHEN GUARINO
Approval date: 12-14-09

Hossein Khodabakhsh 8-10-09
REGISTERED CIVIL ENGINEER DATE

12-14-09
PLANS APPROVAL DATE

REGISTERED PROFESSIONAL ENGINEER — Hossein Khodabakhsh — No. 71650 — Exp. 12-31-09 — CIVIL — STATE OF CALIFORNIA

THE STATE OF CALIFORNIA OR ITS OFFICERS OR AGENTS SHALL NOT BE RESPONSIBLE FOR THE ACCURACY OR COMPLETENESS OF SCANNED COPIES OF THIS PLAN SHEET.

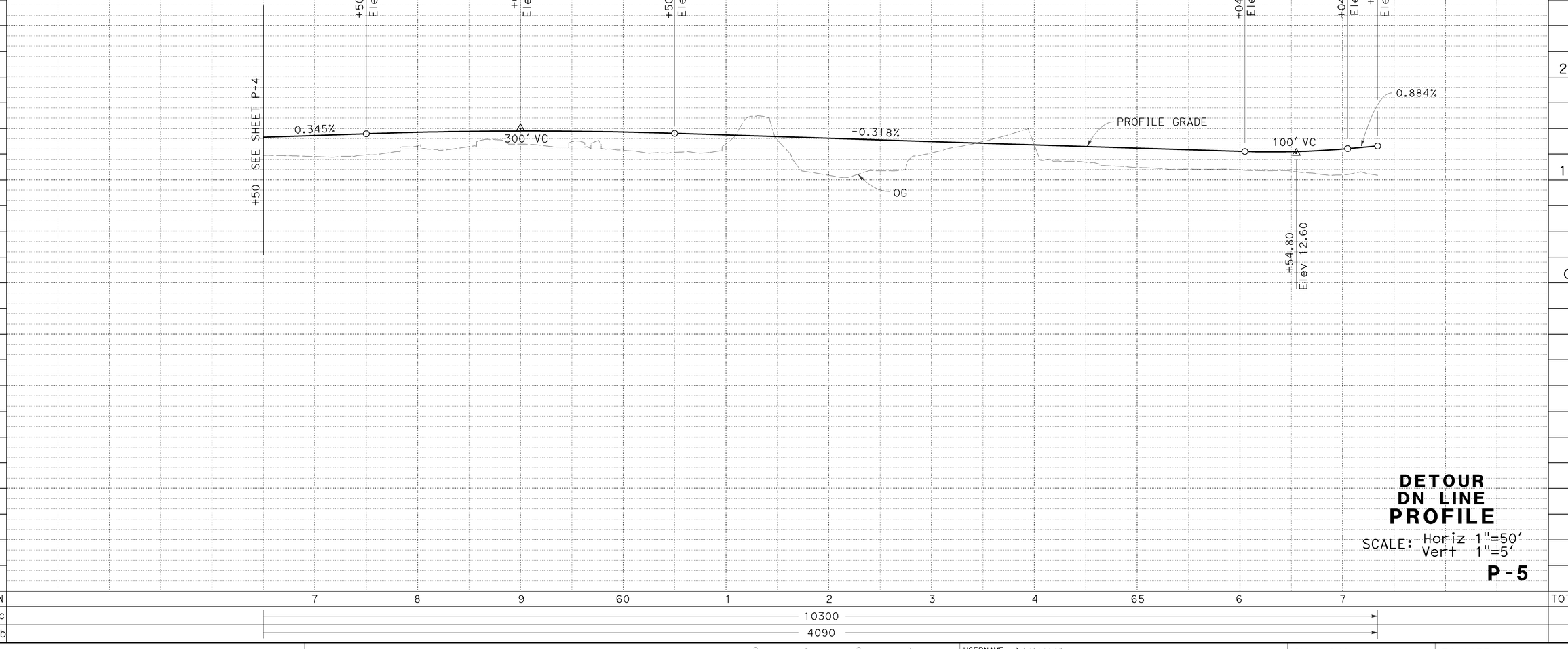

DETOUR DN LINE PROFILE

SCALE: Horiz 1"=50'
Vert 1"=5'

P-5

STATION	7	8	9	60	1	2	3	4	65	6	7	TOTAL
CY Exc					10300							
CY Emb					4090							

CARLOS SANDOVAL — CALCULATED-DESIGNED BY
ROGER DAYOAN — CHECKED BY
CS — REVISED BY
8/01/09 — DATE REVISED
ABOLFAZL EMADZADEH — FUNCTIONAL SUPERVISOR

STATE OF CALIFORNIA - DEPARTMENT OF TRANSPORTATION
DESIGN

LAST REVISION DATE PLOTTED => 14-DEC-2009
TIME PLOTTED => 13:57
08-19-09

BORDER LAST REVISED 4/11/2008
RELATIVE BORDER SCALE IS IN INCHES 0 1 2 3
USERNAME => trlenard
DGN FILE => 416374fa005.dgn
CU 04242
EA 163741

Dist	COUNTY	ROUTE	POST MILES TOTAL PROJECT	SHEET No.	TOTAL SHEETS
04	SF	101	8.2/9.2	15	654

REGISTERED CIVIL ENGINEER 8-10-09 DATE

12-14-09
PLANS APPROVAL DATE

REGISTERED PROFESSIONAL ENGINEER
Hossein Khodabakhsh
No. 71650
Exp. 12-31-09
CIVIL
STATE OF CALIFORNIA

THE STATE OF CALIFORNIA OR ITS OFFICERS OR AGENTS SHALL NOT BE RESPONSIBLE FOR THE ACCURACY OR COMPLETENESS OF SCANNED COPIES OF THIS PLAN SHEET.

CALIFORNIA STATE FIRE MARSHAL APPROVED
Approval of this plan does not authorize or approve any omission or deviation from applicable regulations. Final approval is subject to field inspection. One set of approved plans shall be available on the project site at all times.
Reviewed by: STEPHEN GUARINO
Approval date: 12-14-09

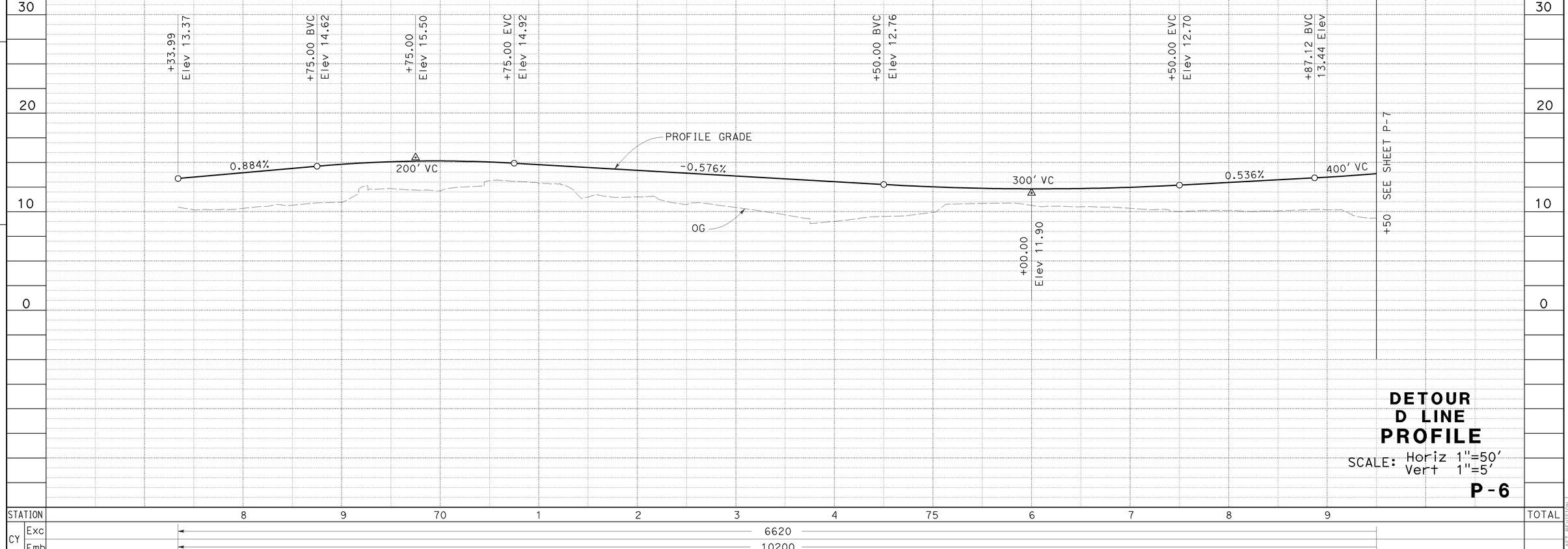

DETOUR D LINE PROFILE

SCALE: Horiz 1"=50'
Vert 1"=5'

P-6

STATE OF CALIFORNIA - DEPARTMENT OF TRANSPORTATION
Caltrans
DESIGN

FUNCTIONAL SUPERVISOR: ABOLFAZL EMADZADEH
CALCULATED-DESIGNED BY: CARLOS SANDOVAL
CHECKED BY: ROGER DAYOAN
REVISED BY: CS
DATE REVISED: 8/01/09

DATE PLOTTED => 14-DEC-2009
TIME PLOTTED => 13:57
LAST REVISION 08-19-09

Dist	COUNTY	ROUTE	POST MILES TOTAL PROJECT	SHEET No.	TOTAL SHEETS
04	SF	101	8.2/9.2	16	654

CALIFORNIA STATE FIRE MARSHAL APPROVED

Approval of this plan does not authorize or approve any omission or deviation from applicable regulations. Final approval is subject to field inspection. One set of approved plans shall be available on the project site at all times.

Reviewed by: STEPHEN GUARINO

Approval date: 12-14-09

8-10-09
REGISTERED CIVIL ENGINEER DATE

Hossein Khodabakhsh
No. 71650
Exp. 12-31-09
CIVIL
REGISTERED PROFESSIONAL ENGINEER
STATE OF CALIFORNIA

12-14-09
PLANS APPROVAL DATE

THE STATE OF CALIFORNIA OR ITS OFFICERS OR AGENTS SHALL NOT BE RESPONSIBLE FOR THE ACCURACY OR COMPLETENESS OF SCANNED COPIES OF THIS PLAN SHEET.

SEE PAVEMENT ELEVATION PLAN C-8

+40

+87.12 EVC
Elev 19.32

+36.53
Elev 22.91

D STA 84+36.53
SB STA 66+70.10

2.404%

PROFILE GRADE

400' VC

SEE SHEET P-6

+50

+87.12
Elev 14.51

OG

STATION 80 1 2 3 4 85 6 7 8 9 90 1 2 TOTAL

CY Exc 6620

CY Emb 10200

DETOUR
D LINE
PROFILE

SCALE: Horiz 1"=50'
Vert 1"=5'

P-7

STATE OF CALIFORNIA - DEPARTMENT OF TRANSPORTATION
Caltrans
DESIGN

FUNCTIONAL SUPERVISOR: ABOLFAZL EMADZADEH

CALCULATED-DESIGNED BY: CARLOS SANDOVAL
CHECKED BY: ROGER DAYOAN

REVISED BY: CS
DATE REVISED: 8/01/09

LAST REVISION DATE PLOTTED => 14-DEC-2009
TIME PLOTTED => 13:57
08-19-09

BORDER LAST REVISED 4/11/2008

RELATIVE BORDER SCALE IS IN INCHES 0 1 2 3

USERNAME => trlenard
DGN FILE => 416374fa007.dgn

CU 04242

EA 163741

Dist	COUNTY	ROUTE	POST MILES TOTAL PROJECT	SHEET No.	TOTAL SHEETS
04	SF	101	8.2/9.2	17	654

CALIFORNIA STATE FIRE MARSHAL APPROVED
Approval of this plan does not authorize or approve any omission or deviation from applicable regulations. Final approval is subject to field inspection. One set of approved plans shall be available on the project site at all times.
Reviewed by: STEPHEN GUARINO
Approval date: 12-14-09

REGISTERED CIVIL ENGINEER — 8-10-09 DATE

12-14-09
PLANS APPROVAL DATE

Hossein Khodabakhsh, No. 71650, Exp. 12-31-09, CIVIL, REGISTERED PROFESSIONAL ENGINEER, STATE OF CALIFORNIA

THE STATE OF CALIFORNIA OR ITS OFFICERS OR AGENTS SHALL NOT BE RESPONSIBLE FOR THE ACCURACY OR COMPLETENESS OF SCANNED COPIES OF THIS PLAN SHEET.

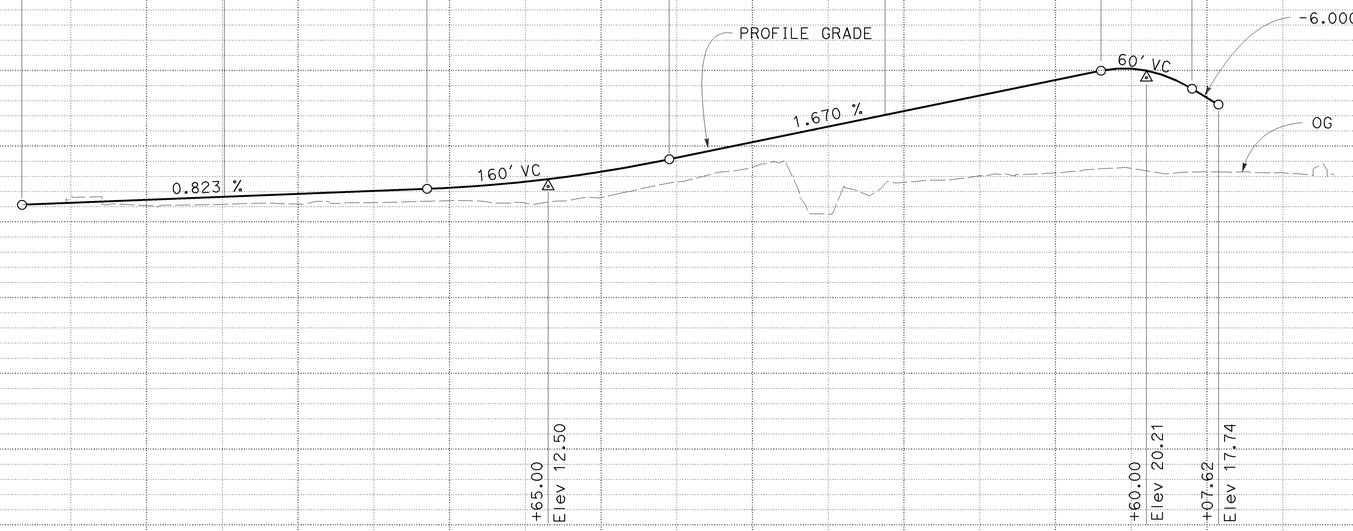

DETOUR
MN LINE
PROFILE
SCALE: Horiz 1"=50'
Vert 1"=5'

P-8

STATION	1	2	3	4	55	6	7	8	9	TOTAL
CY Exc	2550									
CY Emb	3710									

STATE OF CALIFORNIA - DEPARTMENT OF TRANSPORTATION
DESIGN
FUNCTIONAL SUPERVISOR: ABOLFAZL EMADZADEH
CALCULATED-DESIGNED BY: CS
CHECKED BY: ROGER DAYOAN
CARLOS SANDOVAL
REVISED BY
DATE REVISED: 8/01/09

LAST REVISION
DATE PLOTTED => 14-DEC-2009
09-03-09 TIME PLOTTED => 13:57

BORDER LAST REVISED 4/11/2008
RELATIVE BORDER SCALE IS IN INCHES 0 1 2 3
USERNAME => trienard
DGN FILE => 416374fa008.dgn
CU 04242
EA 163741

Dist	COUNTY	ROUTE	POST MILES TOTAL PROJECT	SHEET No.	TOTAL SHEETS
04	SF	101	8.2/9.2	18	654

CALIFORNIA STATE FIRE MARSHAL
APPROVED
Approval of this plan does not authorize or approve any omission or deviation from applicable regulations. Final approval is subject to field inspection. One set of approved plans shall be available on the project site at all times.
Reviewed by: STEPHEN GUARINO
Approval date: 12-14-09

8-10-09
REGISTERED CIVIL ENGINEER DATE

Hossein Khodabakhsh, No. 71650, Exp. 12-31-09, CIVIL, REGISTERED PROFESSIONAL ENGINEER, STATE OF CALIFORNIA

12-14-09
PLANS APPROVAL DATE

THE STATE OF CALIFORNIA OR ITS OFFICERS OR AGENTS SHALL NOT BE RESPONSIBLE FOR THE ACCURACY OR COMPLETENESS OF SCANNED COPIES OF THIS PLAN SHEET.

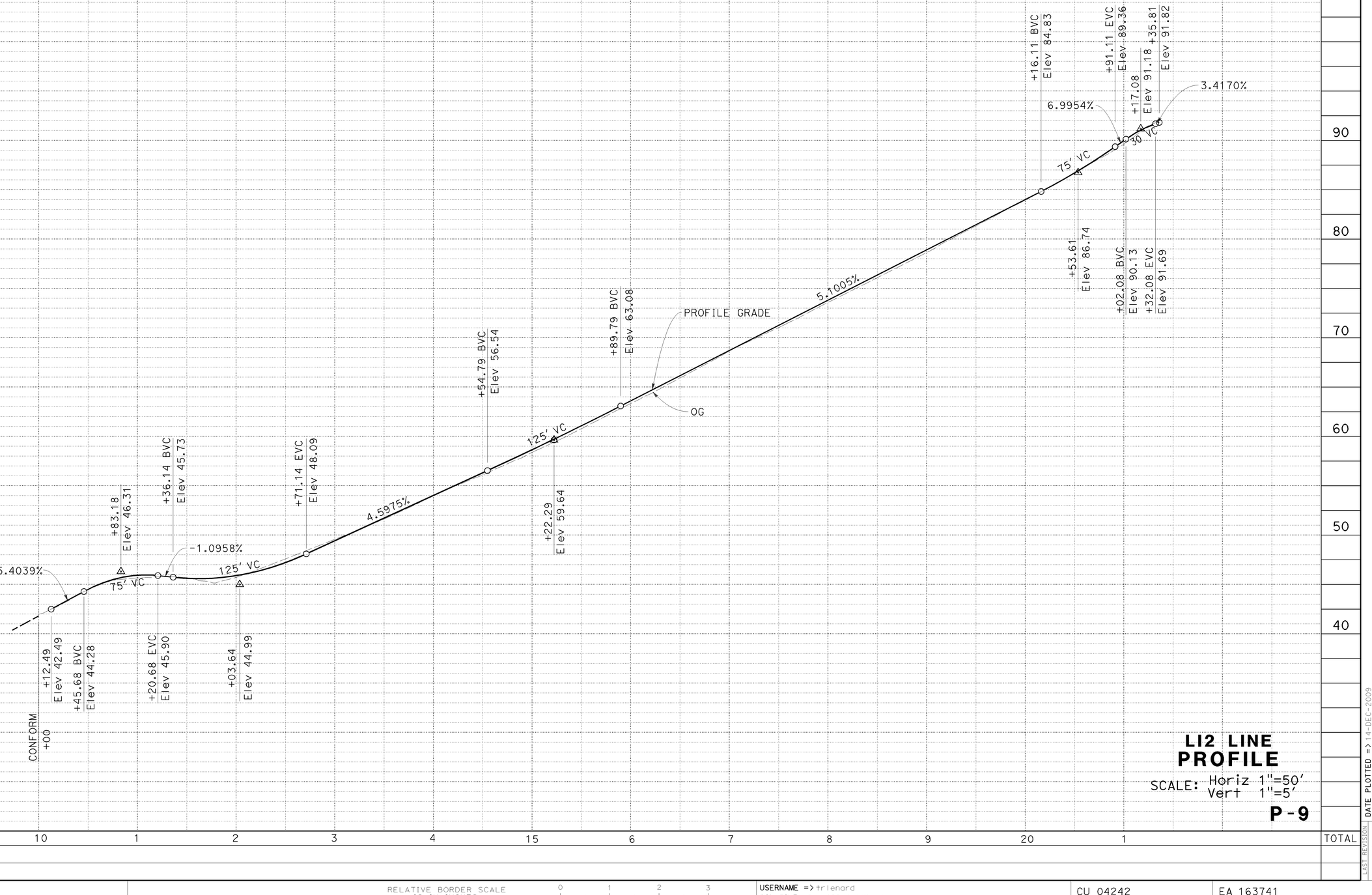

LI2 LINE PROFILE

SCALE: Horiz 1"=50'
Vert 1"=5'

P-9

STATION: 10 1 2 3 4 15 6 7 8 9 20 1 TOTAL

CY Exc
CY Emb

STATE OF CALIFORNIA - DEPARTMENT OF TRANSPORTATION
DESIGN
Caltrans

FUNCTIONAL SUPERVISOR: ABOLFAZL EMADZADEH
CALCULATED-DESIGNED BY:
CHECKED BY:
REVISED BY: CS
DATE REVISED: 8/01/09

LAST REVISION DATE PLOTTED => 14-DEC-2009
TIME PLOTTED => 13:57
09-14-09

BORDER LAST REVISED 4/11/2008
RELATIVE BORDER SCALE IS IN INCHES 0 1 2 3
USERNAME => trlenard
DGN FILE => 416374fa009.dgn
CU 04242
EA 163741

CALIFORNIA STATE FIRE MARSHAL
APPROVED
Approval of this plan does not authorize or approve any omission or deviation from applicable regulations. Final approval is subject to field inspection. One set of approved plans shall be available on the project site at all times.
Reviewed by: STEPHEN GUARINO
Approval date: 12-14-09

Dist	COUNTY	ROUTE	POST MILES TOTAL PROJECT	SHEET No.	TOTAL SHEETS
04	SF	101	8.2/9.2	19	654

REGISTERED CIVIL ENGINEER 8-10-09 DATE
12-14-09 PLANS APPROVAL DATE

Hossein Khodabakhsh No. 71650 Exp. 12-31-09 CIVIL
REGISTERED PROFESSIONAL ENGINEER STATE OF CALIFORNIA

THE STATE OF CALIFORNIA OR ITS OFFICERS OR AGENTS SHALL NOT BE RESPONSIBLE FOR THE ACCURACY OR COMPLETENESS OF SCANNED COPIES OF THIS PLAN SHEET.

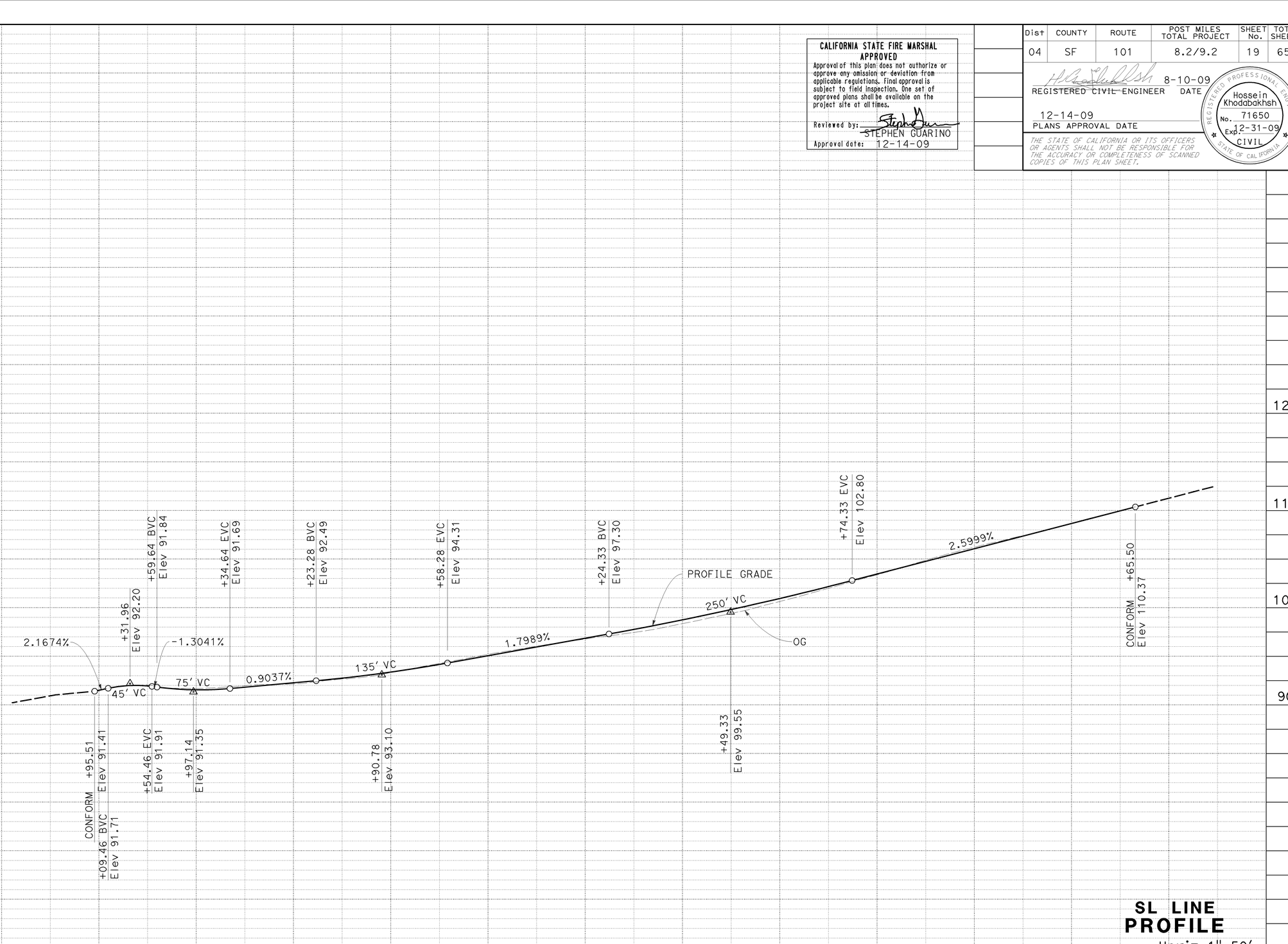

STATION 8 9 20 1 2 3 4 25 6 7 8 9 30 TOTAL

CY Exc
Emb

SL LINE PROFILE

SCALE: Horiz 1"=50'
Vert 1"=5'

P-10

STATE OF CALIFORNIA - DEPARTMENT OF TRANSPORTATION
DESIGN
Caltrans

FUNCTIONAL SUPERVISOR: ABOLFAZL EMADZADEH
CALCULATED-DESIGNED BY: ROGER DAYOAN
CHECKED BY: CARLOS SANDOVAL

REVISED BY: CS
DATE REVISED: 8/01/09

LAST REVISION
DATE PLOTTED => 14-DEC-2009
TIME PLOTTED => 13:57
09-14-09

BORDER LAST REVISED 4/11/2008

RELATIVE BORDER SCALE IS IN INCHES 0 1 2 3

USERNAME => trienard
DGN FILE => 416374fa010.dgn

CU 04242

EA 163741

Dist	COUNTY	ROUTE	POST MILES TOTAL PROJECT	SHEET No.	TOTAL SHEETS
04	SF	101	8.2/9.2	20	654

CALIFORNIA STATE FIRE MARSHAL APPROVED

Approval of this plan does not authorize or approve any omission or deviation from applicable regulations. Final approval is subject to field inspection. One set of approved plans shall be available on the project site at all times.

Reviewed by: STEPHEN GUARINO

Approval date: 12-14-09

8-10-09
REGISTERED CIVIL ENGINEER — DATE

Hossein Khodabakhsh, No. 71650, Exp. 12-31-09, CIVIL, REGISTERED PROFESSIONAL ENGINEER, STATE OF CALIFORNIA

12-14-09
PLANS APPROVAL DATE

THE STATE OF CALIFORNIA OR ITS OFFICERS OR AGENTS SHALL NOT BE RESPONSIBLE FOR THE ACCURACY OR COMPLETENESS OF SCANNED COPIES OF THIS PLAN SHEET.

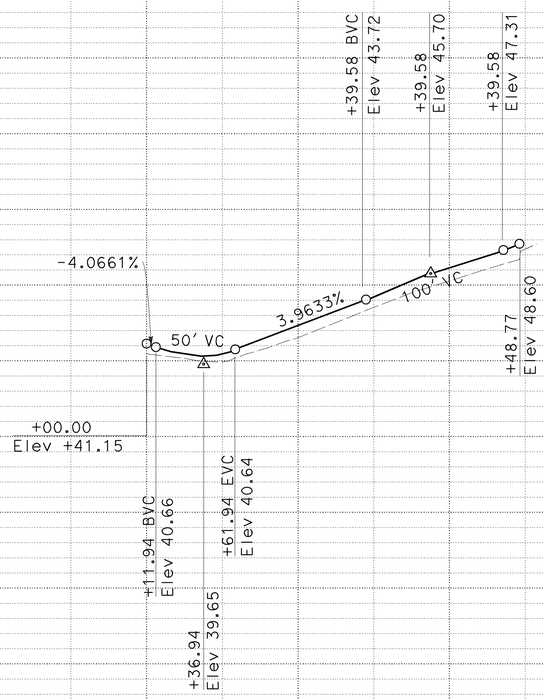

MUT LINE PROFILE

SCALE: Horiz 1"=50'
Vert 1"=5'

P-11

STATION	10	1	2	3	20	1	TOTAL
CY Exc							
CY Emb							

CALCULATED-DESIGNED BY: CARLOS SANDOVAL
CHECKED BY: ROGER DAYOAN
REVISED BY: CS
DATE REVISED: 8/01/09
FUNCTIONAL SUPERVISOR: ABOLFAZL EMADZADEH

STATE OF CALIFORNIA - DEPARTMENT OF TRANSPORTATION
DESIGN

LAST REVISION DATE PLOTTED => 14-DEC-2009
08-15-09 TIME PLOTTED => 13:57

BORDER LAST REVISED 4/11/2008

RELATIVE BORDER SCALE IS IN INCHES 0 1 2 3

USERNAME => trlenard
DGN FILE => 416374fa011.dgn

CU 04242

EA 163741

Dist	COUNTY	ROUTE	POST MILES TOTAL PROJECT	SHEET No.	TOTAL SHEETS
04	SF	101	8.2/9.2	21	654

CALIFORNIA STATE FIRE MARSHAL APPROVED

Approval of this plan does not authorize or approve any omission or deviation from applicable regulations. Final approval is subject to field inspection. One set of approved plans shall be available on the project site at all times.

Reviewed by: STEPHEN GUARINO

Approval date: 12-14-09

8-10-09
REGISTERED CIVIL ENGINEER DATE

Hossein Khodabakhsh No. 71650 Exp. 12-31-09 CIVIL — REGISTERED PROFESSIONAL ENGINEER — STATE OF CALIFORNIA

12-14-09
PLANS APPROVAL DATE

THE STATE OF CALIFORNIA OR ITS OFFICERS OR AGENTS SHALL NOT BE RESPONSIBLE FOR THE ACCURACY OR COMPLETENESS OF SCANNED COPIES OF THIS PLAN SHEET.

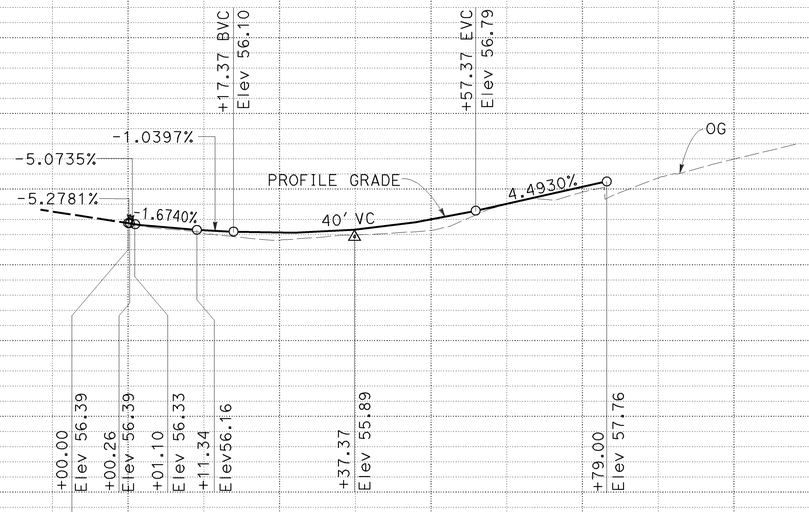

LC1 LINE PROFILE

SCALE: Horiz 1"=12.5'
Vert 1"=2.5'

P-12

STATION	10	1	TOTAL
CY Exc			
CY Emb			

CALCULATED-DESIGNED BY: CARLOS SANDOVAL
CHECKED BY: ROGER DAYOAN
REVISED BY: CS
DATE REVISED: 8/01/09
FUNCTIONAL SUPERVISOR: ABOLFAZL EMADZADEH

STATE OF CALIFORNIA - DEPARTMENT OF TRANSPORTATION
DESIGN

LAST REVISION: DATE PLOTTED => 14-DEC-2009
09-14-09 TIME PLOTTED => 13:57

BORDER LAST REVISED 4/11/2008

RELATIVE BORDER SCALE IS IN INCHES 0 1 2 3

USERNAME => trlenard
DGN FILE => 416374fa012.dgn

CU 04242

EA 163741

Dist	COUNTY	ROUTE	POST MILES TOTAL PROJECT	SHEET No.	TOTAL SHEETS
04	SF	101	8.2/9.2	22	654

CALIFORNIA STATE FIRE MARSHAL APPROVED

Approval of this plan does not authorize or approve any omission or deviation from applicable regulations. Final approval is subject to field inspection. One set of approved plans shall be available on the project site at all times.

Reviewed by: STEPHEN GUARINO

Approval date: 12-14-09

8-10-09
REGISTERED CIVIL ENGINEER DATE

Hossein Khodabakhsh No. 71650 Exp. 12-31-09 CIVIL — REGISTERED PROFESSIONAL ENGINEER — STATE OF CALIFORNIA

12-14-09
PLANS APPROVAL DATE

THE STATE OF CALIFORNIA OR ITS OFFICERS OR AGENTS SHALL NOT BE RESPONSIBLE FOR THE ACCURACY OR COMPLETENESS OF SCANNED COPIES OF THIS PLAN SHEET.

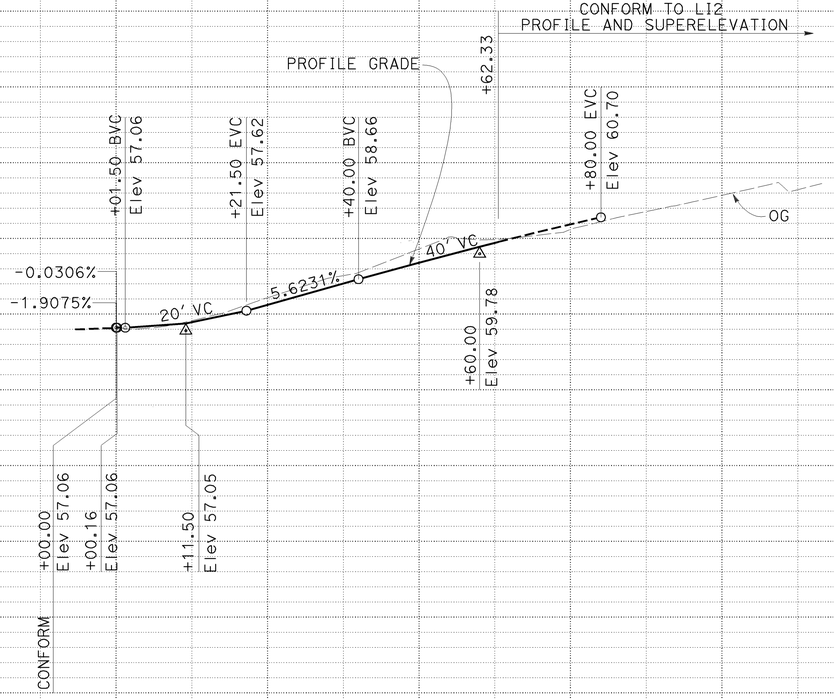

LC2 LINE PROFILE

SCALE: Horiz 1"=12.5'
Vert 1"=2.5'

P-13

STATION	20	1	TOTAL
CY Exc			
CY Emb			

CALCULATED-DESIGNED BY: CARLOS SANDOVAL
CHECKED BY: ROGER DAYOAN
REVISED BY: CS
DATE REVISED: 8/01/09
FUNCTIONAL SUPERVISOR: ABOLFAZL EMADZADEH

STATE OF CALIFORNIA - DEPARTMENT OF TRANSPORTATION
DESIGN
Caltrans

LAST REVISION DATE PLOTTED => 14-DEC-2009
TIME PLOTTED => 13:58
09-17-09

BORDER LAST REVISED 4/11/2008

RELATIVE BORDER SCALE IS IN INCHES 0 1 2 3

USERNAME => trienard
DGN FILE => 416374fa013.dgn

CU 04242

EA 163741

Dist	COUNTY	ROUTE	POST MILES TOTAL PROJECT	SHEET No.	TOTAL SHEETS
04	SF	101	8.2/9.2	23	654

CALIFORNIA STATE FIRE MARSHAL APPROVED
Approval of this plan does not authorize or approve any omission or deviation from applicable regulations. Final approval is subject to field inspection. One set of approved plans shall be available on the project site at all times.
Reviewed by: STEPHEN GUARINO
Approval date: 12-14-09

8-10-09
REGISTERED CIVIL ENGINEER DATE

12-14-09
PLANS APPROVAL DATE

REGISTERED PROFESSIONAL ENGINEER
Hossein Khodabakhsh
No. 71650
Exp. 12-31-09
CIVIL
STATE OF CALIFORNIA

THE STATE OF CALIFORNIA OR ITS OFFICERS OR AGENTS SHALL NOT BE RESPONSIBLE FOR THE ACCURACY OR COMPLETENESS OF SCANNED COPIES OF THIS PLAN SHEET.

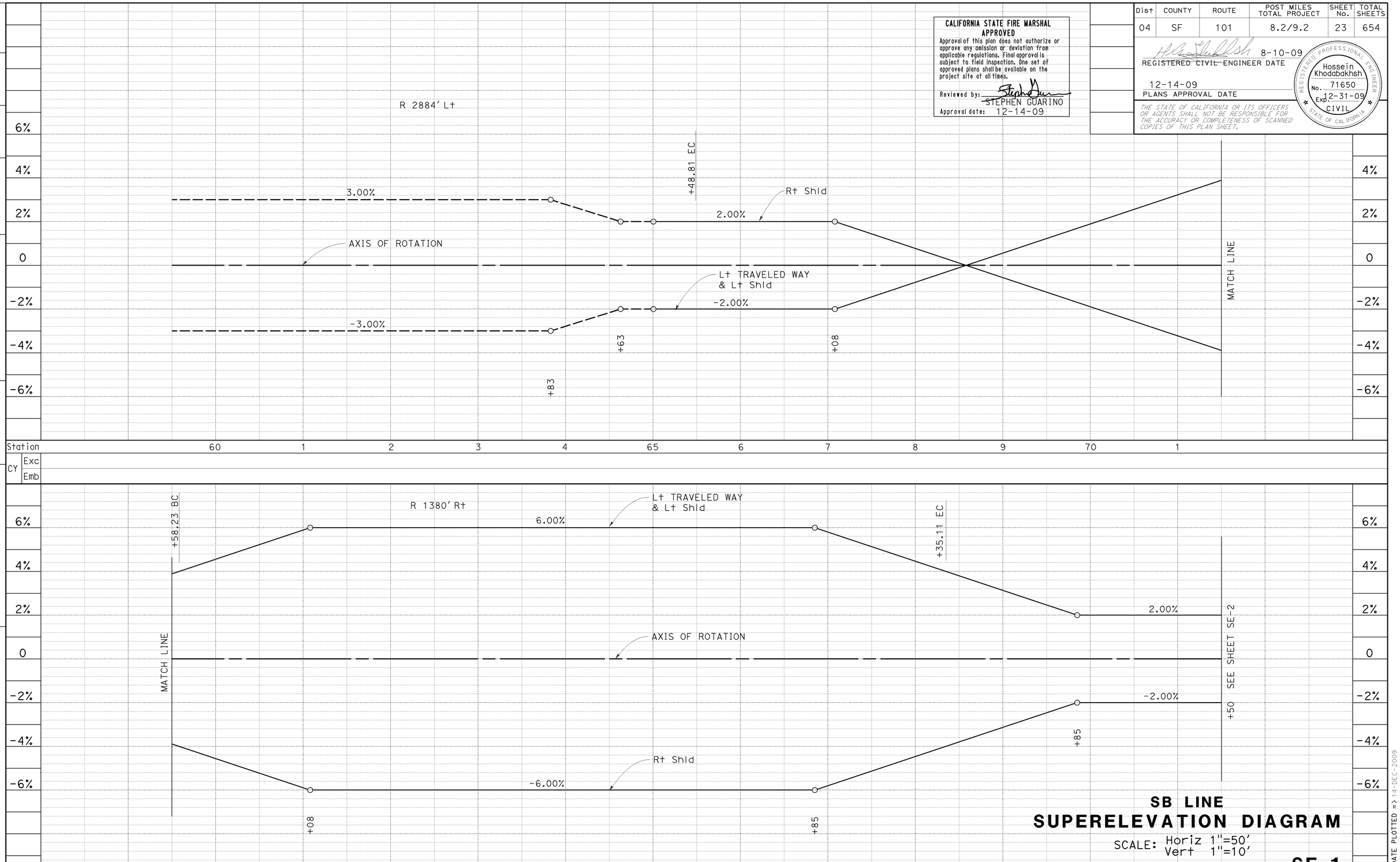

SB LINE
SUPERELEVATION DIAGRAM
SCALE: Horiz 1"=50'
Vert 1"=10'

SE-1

CALCULATED-DESIGNED BY
CHECKED BY
REVISED BY: RD
DATE REVISED: 6/01/08
CARLOS SANDOVAL
ROGER DAYOAN
FUNCTIONAL SUPERVISOR
ABOLFAZL EMADZADEH
STATE OF CALIFORNIA - DEPARTMENT OF TRANSPORTATION
DESIGN
Caltrans

LAST REVISION DATE PLOTTED => 14-DEC-2009
TIME PLOTTED => 13:58
06-10-09

BORDER LAST REVISED 4/11/2008
RELATIVE BORDER SCALE IS IN INCHES 0 1 2 3
USERNAME => trienard
DGN FILE => 416374fc001.dgn
CU 04242
EA 163741

Dist	COUNTY	ROUTE	POST MILES TOTAL PROJECT	SHEET No.	TOTAL SHEETS
04	SF	101	8.2/9.2	24	654

CALIFORNIA STATE FIRE MARSHAL APPROVED

Approval of this plan does not authorize or approve any omission or deviation from applicable regulations. Final approval is subject to field inspection. One set of approved plans shall be available on the project site at all times.

Reviewed by: STEPHEN GUARINO

Approval date: 12-14-09

8-10-09
REGISTERED CIVIL ENGINEER DATE

Hossein Khodabakhsh No. 71650 Exp. 12-31-09 CIVIL — REGISTERED PROFESSIONAL ENGINEER — STATE OF CALIFORNIA

12-14-09
PLANS APPROVAL DATE

THE STATE OF CALIFORNIA OR ITS OFFICERS OR AGENTS SHALL NOT BE RESPONSIBLE FOR THE ACCURACY OR COMPLETENESS OF SCANNED COPIES OF THIS PLAN SHEET.

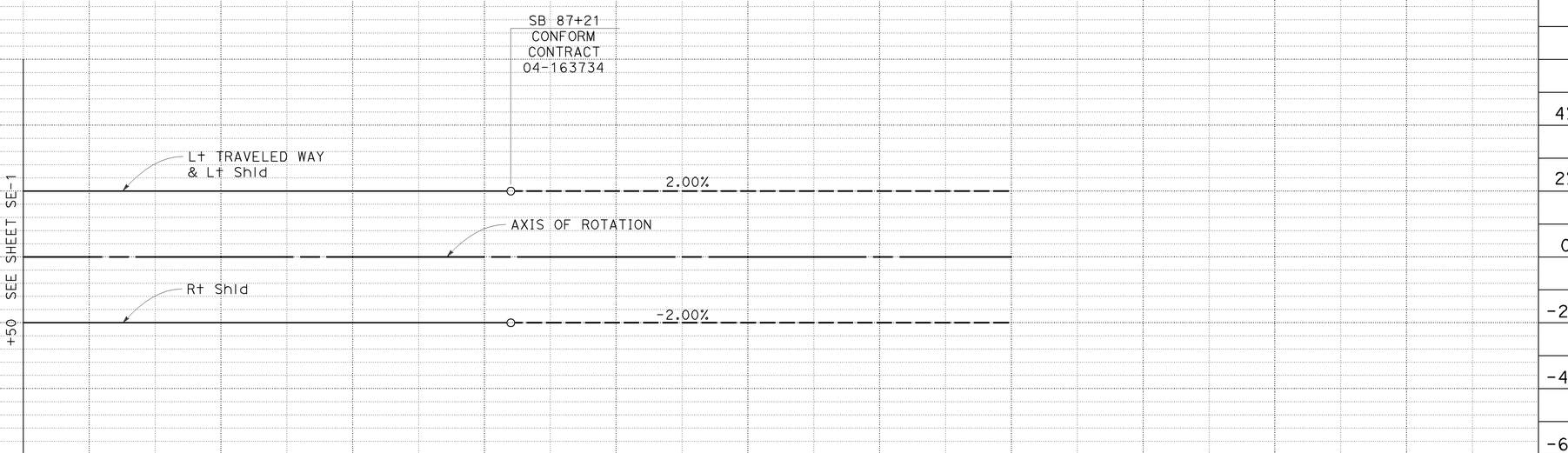

SB LINE

SUPERELEVATION DIAGRAM

SCALE: Horiz 1"=100'
Vert 1"=10'

SE-2

CALCULATED-DESIGNED BY: CARLOS SANDOVAL
CHECKED BY: ROGER DAYOAN
REVISED BY: CS
DATE REVISED: 8/01/09
FUNCTIONAL SUPERVISOR: ABOLFAZL EMADZADEH

STATE OF CALIFORNIA - DEPARTMENT OF TRANSPORTATION
DESIGN

LAST REVISION: DATE PLOTTED => 14-DEC-2009
08-15-09 TIME PLOTTED => 13:58

BORDER LAST REVISED 4/11/2008

RELATIVE BORDER SCALE IS IN INCHES 0 1 2 3

USERNAME => trienard
DGN FILE => 416374fc002.dgn

CU 04242

EA 163741

Dist	COUNTY	ROUTE	POST MILES TOTAL PROJECT	SHEET No.	TOTAL SHEETS
04	SF	101	8.2/9.2	25	654

CALIFORNIA STATE FIRE MARSHAL APPROVED
Approval of this plan does not authorize or approve any omission or deviation from applicable regulations. Final approval is subject to field inspection. One set of approved plans shall be available on the project site at all times.
Reviewed by: STEPHEN GUARINO
Approval date: 12-14-09

8-10-09
REGISTERED CIVIL ENGINEER DATE

Hossein Khodabakhsh No. 71650 Exp. 12-31-09 CIVIL — REGISTERED PROFESSIONAL ENGINEER — STATE OF CALIFORNIA

12-14-09
PLANS APPROVAL DATE

THE STATE OF CALIFORNIA OR ITS OFFICERS OR AGENTS SHALL NOT BE RESPONSIBLE FOR THE ACCURACY OR COMPLETENESS OF SCANNED COPIES OF THIS PLAN SHEET.

R 600' R↑

R 400' R↑

51+87.78 BC

53+39.89 EC

54+97.01 BC

Lt TRAVELED WAY & Lt Shld

6.00%

AXIS OF ROTATION

-2.00%

-6.00%

Rt TRAVELED WAY & Rt Shld

+28

+48

+38

+98

+50 SEE SHEET SE-4

12%
10%
8%
6%
4%
2%
0
-2%
-4%
-6%
-8%
-10%
-12%

STATION 8 9 50 1 2 3 4 55 6 TOTAL

CY Exc
Emb

DN LINE
SUPERELEVATION DIAGRAM

SCALE: Horiz 1"=50'
Vert 1"=10'

SE-3

CALCULATED-DESIGNED BY
CHECKED BY

FUNCTIONAL SUPERVISOR: ABOLFAZL EMADZADEH

REVISED BY: CS
DATE REVISED: 8/01/09

CARLOS SANDOVAL
ROGER DAYOAN

STATE OF CALIFORNIA - DEPARTMENT OF TRANSPORTATION
DESIGN

Caltrans

LAST REVISION
DATE PLOTTED => 14-DEC-2009
TIME PLOTTED => 13:58
08-15-09

BORDER LAST REVISED 4/11/2008

RELATIVE BORDER SCALE IS IN INCHES 0 1 2 3

USERNAME => trlenard
DGN FILE => 416374fc003.dgn

CU 04242

EA 163741

Dist	COUNTY	ROUTE	POST MILES TOTAL PROJECT	SHEET No.	TOTAL SHEETS
04	SF	101	8.2/9.2	26	654

REGISTERED CIVIL ENGINEER — 8-10-09 DATE

12-14-09
PLANS APPROVAL DATE

Hossein Khodabakhsh
No. 71650
Exp. 12-31-09
CIVIL
REGISTERED PROFESSIONAL ENGINEER
STATE OF CALIFORNIA

THE STATE OF CALIFORNIA OR ITS OFFICERS OR AGENTS SHALL NOT BE RESPONSIBLE FOR THE ACCURACY OR COMPLETENESS OF SCANNED COPIES OF THIS PLAN SHEET.

CALIFORNIA STATE FIRE MARSHAL
APPROVED
Approval of this plan does not authorize or approve any omission or deviation from applicable regulations. Final approval is subject to field inspection. One set of approved plans shall be available on the project site at all times.
Reviewed by: STEPHEN GUARINO
Approval date: 12-14-09

REVISED BY: CS — DATE REVISED: 8/01/09
CALCULATED-DESIGNED BY: CARLOS SANDOVAL
CHECKED BY: ROGER DAYOAN
FUNCTIONAL SUPERVISOR: ABOLFAZL EMADZADEH

STATE OF CALIFORNIA - DEPARTMENT OF TRANSPORTATION
DESIGN

R 400' Lt | R 800' Lt | R 900' Lt

56+55.73 EC
57+43.44 BC
61+65.92 EC
62+45.78 BC
65+57.85 EC
65+86.01 BC
66+86.05 EC

12% 10% 8% 6% 4% 2% 0 -2% -4% -6% -8% -10% -12%

R↑ TRAVELED WAY & R↑ Shld
6.00%
5.00%
2.00%
AXIS OF ROTATION
-2.00%
-5.00%
-6.00%
L↑ TRAVELED WAY & L↑ Shld

+50 SEE SHEET SE-3

+01 +16 +96 +36 +26

STATION 7 8 9 60 1 2 3 4 65 6 7 TOTAL
CY Exc
CY Emb

DN LINE
SUPERELEVATION DIAGRAM
SCALE: Horiz 1"=50'
Vert 1"=10'
SE-4

LAST REVISION DATE PLOTTED => 14-DEC-2009
TIME PLOTTED => 13:58
08-15-09

BORDER LAST REVISED 4/11/2008
RELATIVE BORDER SCALE IS IN INCHES 0 1 2 3
USERNAME => trlenard
DGN FILE => 416374fc004.dgn
CU 04242
EA 163741

Dist	COUNTY	ROUTE	POST MILES TOTAL PROJECT	SHEET No.	TOTAL SHEETS
04	SF	101	8.2/9.2	27	654

REGISTERED CIVIL ENGINEER — 8-10-09 DATE

12-14-09
PLANS APPROVAL DATE

Hossein Khodabakhsh
No. 71650
Exp. 12-31-09
CIVIL
REGISTERED PROFESSIONAL ENGINEER
STATE OF CALIFORNIA

THE STATE OF CALIFORNIA OR ITS OFFICERS OR AGENTS SHALL NOT BE RESPONSIBLE FOR THE ACCURACY OR COMPLETENESS OF SCANNED COPIES OF THIS PLAN SHEET.

CALIFORNIA STATE FIRE MARSHAL APPROVED

Approval of this plan does not authorize or approve any omission or deviation from applicable regulations. Final approval is subject to field inspection. One set of approved plans shall be available on the project site at all times.

Reviewed by: STEPHEN GUARINO

Approval date: 12-14-09

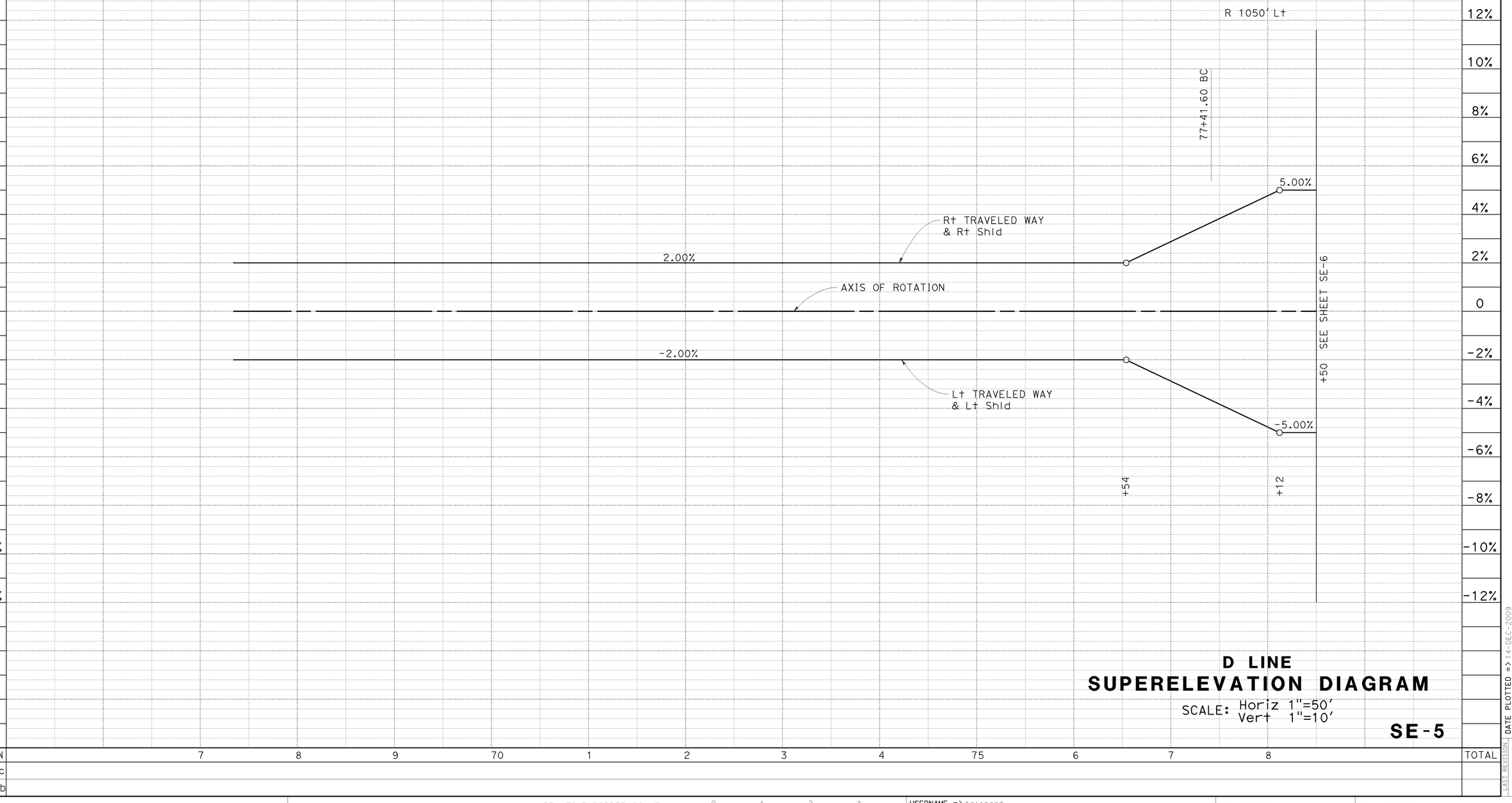

D LINE
SUPERELEVATION DIAGRAM

SCALE: Horiz 1"=50'
Vert 1"=10'

SE-5

CALCULATED-DESIGNED BY: CARLOS SANDOVAL
CHECKED BY: ROGER DAYOAN
REVISED BY: CS
DATE REVISED: 8/01/09
FUNCTIONAL SUPERVISOR: ABOLFAZL EMADZADEH

STATE OF CALIFORNIA - DEPARTMENT OF TRANSPORTATION
DESIGN

LAST REVISION: DATE PLOTTED => 14-DEC-2009
08-15-09 TIME PLOTTED => 13:58

BORDER LAST REVISED 4/11/2008

RELATIVE BORDER SCALE IS IN INCHES 0 1 2 3

USERNAME => trienard
DGN FILE => 416374fc005.dgn

CU 04242

EA 163741

Dist	COUNTY	ROUTE	POST MILES TOTAL PROJECT	SHEET No.	TOTAL SHEETS
04	SF	101	8.2/9.2	28	654

CALIFORNIA STATE FIRE MARSHAL APPROVED
Approval of this plan does not authorize or approve any omission or deviation from applicable regulations. Final approval is subject to field inspection. One set of approved plans shall be available on the project site at all times.
Reviewed by: STEPHEN GUARINO
Approval date: 12-14-09

8-10-09
REGISTERED CIVIL ENGINEER DATE

Hossein Khodabakhsh
No. 71650
Exp. 12-31-09
CIVIL
REGISTERED PROFESSIONAL ENGINEER
STATE OF CALIFORNIA

12-14-09
PLANS APPROVAL DATE

THE STATE OF CALIFORNIA OR ITS OFFICERS OR AGENTS SHALL NOT BE RESPONSIBLE FOR THE ACCURACY OR COMPLETENESS OF SCANNED COPIES OF THIS PLAN SHEET.

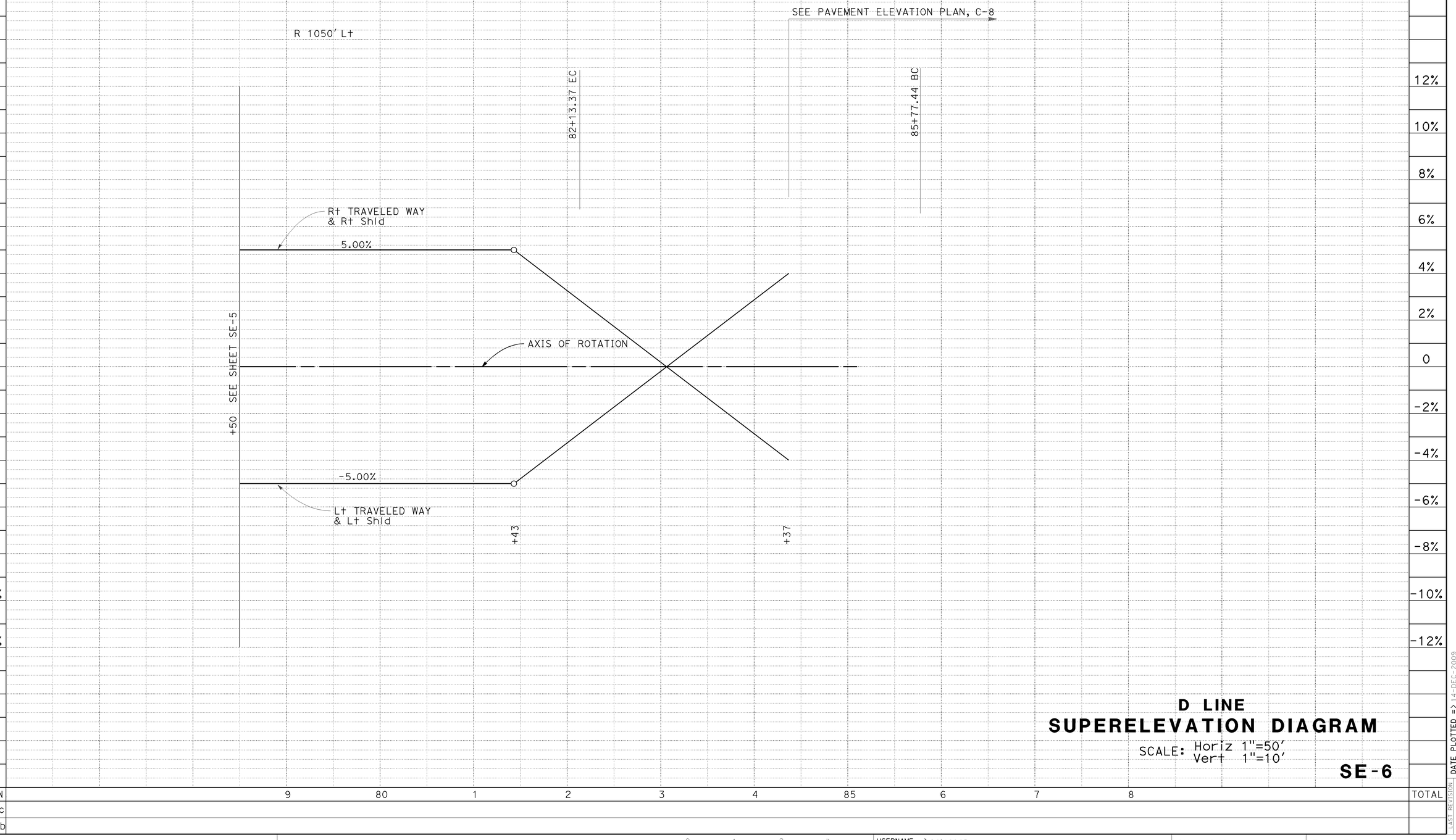

D LINE
SUPERELEVATION DIAGRAM

SCALE: Horiz 1"=50'
Vert 1"=10'

SE-6

STATION	9	80	1	2	3	4	85	6	7	8	TOTAL
CY Exc											
CY Emb											

STATE OF CALIFORNIA - DEPARTMENT OF TRANSPORTATION
DESIGN
Caltrans

FUNCTIONAL SUPERVISOR: ABOLFAZL EMADZADEH
CALCULATED-DESIGNED BY: CS
CHECKED BY: ROGER DAYOAN
REVISED BY:
DATE REVISED: 8/01/09

LAST REVISION
DATE PLOTTED => 14-DEC-2009
TIME PLOTTED => 13:58
08-15-09

BORDER LAST REVISED 4/11/2008
RELATIVE BORDER SCALE IS IN INCHES 0 1 2 3
USERNAME => trienard
DGN FILE => 416374fc006.dgn
CU 04242
EA 163741

Dist	COUNTY	ROUTE	POST MILES TOTAL PROJECT	SHEET No.	TOTAL SHEETS
04	SF	101	8.2/9.2	29	654

REGISTERED CIVIL ENGINEER — 8-10-09 DATE

12-14-09
PLANS APPROVAL DATE

Hossein Khodabakhsh
No. 71650
Exp. 12-31-09
CIVIL
REGISTERED PROFESSIONAL ENGINEER
STATE OF CALIFORNIA

THE STATE OF CALIFORNIA OR ITS OFFICERS OR AGENTS SHALL NOT BE RESPONSIBLE FOR THE ACCURACY OR COMPLETENESS OF SCANNED COPIES OF THIS PLAN SHEET.

CALIFORNIA STATE FIRE MARSHAL APPROVED

Approval of this plan does not authorize or approve any omission or deviation from applicable regulations. Final approval is subject to field inspection. One set of approved plans shall be available on the project site at all times.

Reviewed by: STEPHEN GUARINO

Approval date: 12-14-09

52+72.38 BC

53+66.91 EC

57+11.93 BC

59+07.62 EC

AXIS OF ROTATION

-2.00%

Rt TRAVELED WAY
& Rt Shld

Lt TRAVELED WAY
& Lt Shld

12% 10% 8% 6% 4% 2% 0 -2% -4% -6% -8% -10% -12%

STATION 2 3 4 55 6 7 8 9 TOTAL

CY Exc

Emb

MN LINE
SUPERELEVATION DIAGRAM

SCALE: Horiz 1"=50'
Vert 1"=10'

SE-7

CALCULATED-DESIGNED BY —

CHECKED BY CARLOS SANDOVAL

REVISED BY CS

DATE REVISED 8/01/09

FUNCTIONAL SUPERVISOR ABOLFAZL EMADZADEH

STATE OF CALIFORNIA - DEPARTMENT OF TRANSPORTATION
DESIGN

Caltrans

LAST REVISION DATE PLOTTED => 14-DEC-2009
TIME PLOTTED => 13:58
08-09-09

BORDER LAST REVISED 4/11/2008

RELATIVE BORDER SCALE IS IN INCHES 0 1 2 3

USERNAME => trlenard
DGN FILE => 416374fc007.dgn

CU 04242

EA 163741

Dist	COUNTY	ROUTE	POST MILES TOTAL PROJECT	SHEET No.	TOTAL SHEETS
04	SF	101	8.2/9.2	30	654

REGISTERED CIVIL ENGINEER — 8-12-09 DATE

12-14-09
PLANS APPROVAL DATE

PHILIP E. LUTZ No. C 55839 Exp.12-31-10 CIVIL — REGISTERED PROFESSIONAL ENGINEER — STATE OF CALIFORNIA

THE STATE OF CALIFORNIA OR ITS OFFICERS OR AGENTS SHALL NOT BE RESPONSIBLE FOR THE ACCURACY OR COMPLETENESS OF ELECTRONIC COPIES OF THIS PLAN SHEET.

CALIFORNIA STATE FIRE MARSHAL APPROVED

Approval of this plan does not authorize or approve any omission or deviation from applicable regulations. Final approval is subject to field inspection. One set of approved plans shall be available on the project site at all times.

Reviewed by: STEPHEN GUARINO

Approval date: 12-14-09

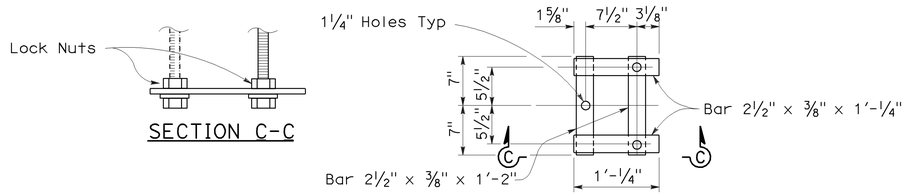

WALL ANCHOR PLATE DETAIL

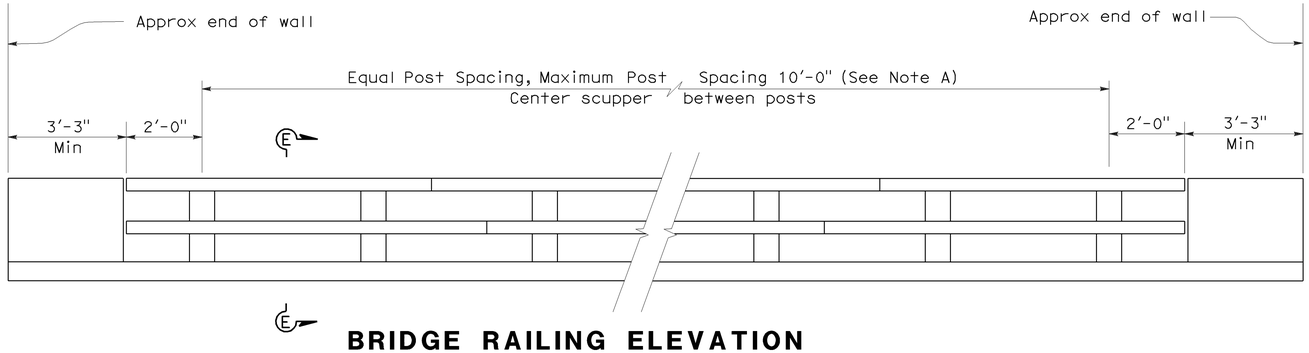

BRIDGE RAILING ELEVATION

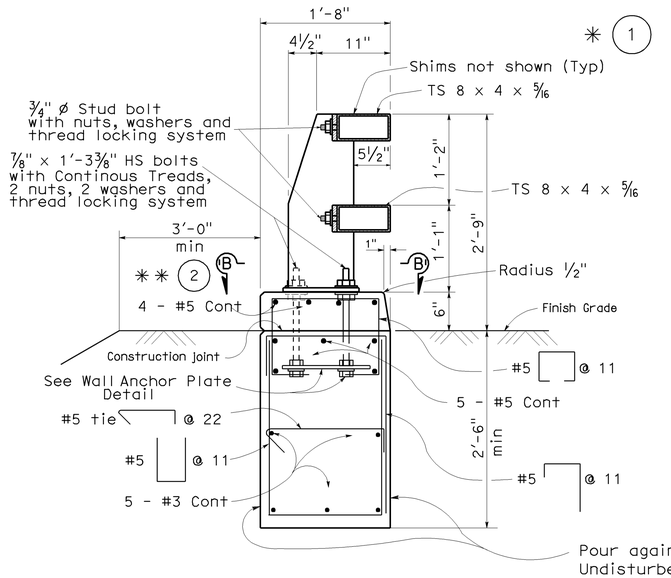

SECTION E-E

NOTE:
THE CONTRACTOR SHALL VERIFY ALL CONTROLLING FIELD DIMENSIONS BEFORE ORDERING OR FABRICATING ANY MATERIAL.

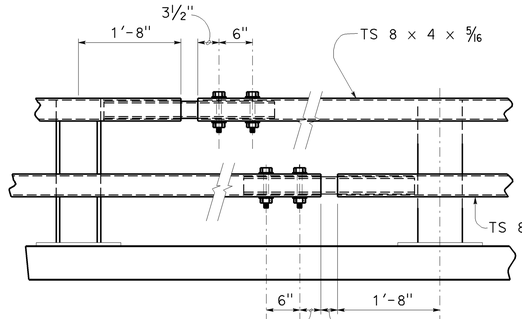

EXPANSION SPLICE

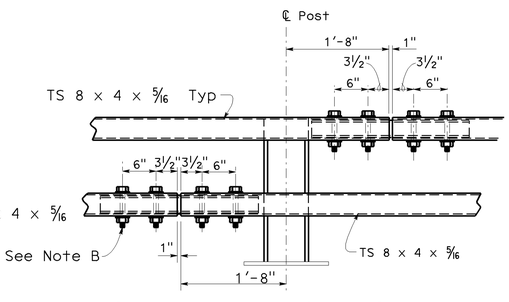

STANDARD SPLICE

NOTE A:
Post spacing and/or block length to be adjusted to fit bridge length or wingwall length.

NOTE B:
Use ¾" ø x 5⅝" HS bolts with washers, fully tensioned.
1" holes in rail Typ

Notes:

* (1) See Std. Plans B11-68 (STUD BOLT DETAIL)

** (2) See Std. Plans B11-68 for SECTION B-B

CALIFORNIA ST-10 BRIDGE RAIL (MOD)

CONSTRUCTION DETAILS

NO SCALE

C-1

STATE OF CALIFORNIA - DEPARTMENT OF TRANSPORTATION
DESIGN
Caltrans

FUNCTIONAL SUPERVISOR: ABOLFAZL EMADZADEH

CALCULATED-DESIGNED BY: PHILIP E. LUTZ
CHECKED BY: MAJID MADANI

REVISED BY	DATE REVISED
A	A

LAST REVISION DATE PLOTTED => 14-DEC-2009
04-07-09 TIME PLOTTED => 13:58

BORDER LAST REVISED 3/1/2007

RELATIVE BORDER SCALE IS IN INCHES 0 1 2 3

USERNAME => trlenard
DGN FILE => 416374ga001.dgn

CU 04242

EA 163741

CALIFORNIA STATE FIRE MARSHAL APPROVED

Approval of this plan does not authorize or approve any omission or deviation from applicable regulations. Final approval is subject to field inspection. One set of approved plans shall be available on the project site at all times.

Reviewed by: STEPHEN GUARINO

Approval date: 12-14-09

Dist	COUNTY	ROUTE	POST MILES TOTAL PROJECT	SHEET No.	TOTAL SHEETS
04	SF	101	8.2/9.2	31	654

Hossein Khodabakhsh 8-10-09
REGISTERED CIVIL ENGINEER DATE

12-14-09
PLANS APPROVAL DATE

REGISTERED PROFESSIONAL ENGINEER — Hossein Khodabakhsh — No. 71650 — Exp. 12-31-09 — CIVIL — STATE OF CALIFORNIA

THE STATE OF CALIFORNIA OR ITS OFFICERS OR AGENTS SHALL NOT BE RESPONSIBLE FOR THE ACCURACY OR COMPLETENESS OF SCANNED COPIES OF THIS PLAN SHEET.

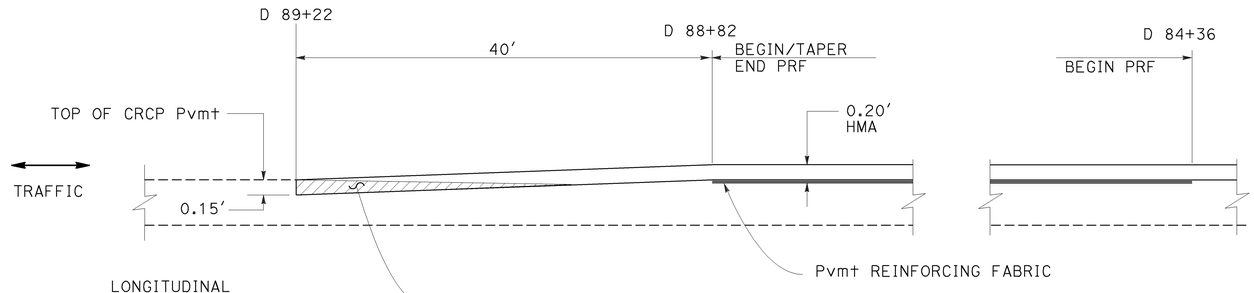

HMA TAPER TO CRCP PAVEMENT LONGITUDINAL SECTION

CONSTRUCTION DETAILS

NO SCALE

C-2

CALCULATED-DESIGNED BY	ROGER DAYOAN	REVISED BY	RD
CHECKED BY	ROMY ACOB	DATE REVISED	8/01/09
FUNCTIONAL SUPERVISOR	ABOLFAZL EMADZADEH		

STATE OF CALIFORNIA - DEPARTMENT OF TRANSPORTATION — DESIGN — Caltrans

LAST REVISION | DATE PLOTTED => 14-DEC-2009 | TIME PLOTTED => 13:58 | 09-17-09

BORDER LAST REVISED 4/11/2008 | RELATIVE BORDER SCALE IS IN INCHES 0 1 2 3 | USERNAME => trlenard | DGN FILE => 416374ga002.dgn | CU 04242 | EA 163741

Dist	COUNTY	ROUTE	POST MILES TOTAL PROJECT	SHEET No.	TOTAL SHEETS
04	SF	101	8.2/9.2	32	654

REGISTERED CIVIL ENGINEER — 8-10-09 DATE

Richard Man Shing Chan, No. 45557, Exp. 12-31-10, CIVIL, REGISTERED PROFESSIONAL ENGINEER, STATE OF CALIFORNIA

12-14-09
PLANS APPROVAL DATE

THE STATE OF CALIFORNIA OR ITS OFFICERS OR AGENTS SHALL NOT BE RESPONSIBLE FOR THE ACCURACY OR COMPLETENESS OF SCANNED COPIES OF THIS PLAN SHEET.

CALIFORNIA STATE FIRE MARSHAL APPROVED

Approval of this plan does not authorize or approve any omission or deviation from applicable regulations. Final approval is subject to field inspection. One set of approved plans shall be available on the project site at all times.

Reviewed by: STEPHEN GUARINO

Approval date: 12-14-09

NOTES:

1. THE LOCATIONS OF THE PAVEMENT EXPANSION JOINT (CRCP) AND PAVEMENT ANCHOR (CRCP) SHALL BE AS SHOWN ON PROJECT PLAN.
2. THE CRCP SHALL CONTINUE ACROSS THE PAVEMENT ANCHOR (CRCP) AS SHOWN.
3. DETAILS OF REINFORCEMENT, TIE BARS, AND LONGITUDINAL JOINTS (AND IF NECESSARY, TRANSVERSE JOINTS) ARE SHOWN ON STANDARD PLANS.
4. TRANSVERSE CONSTRUCTION JOINTS ARE NOT ALLOWED WITHIN 20'-0'' OF THE PAVEMENT ANCHOR (CRCP).

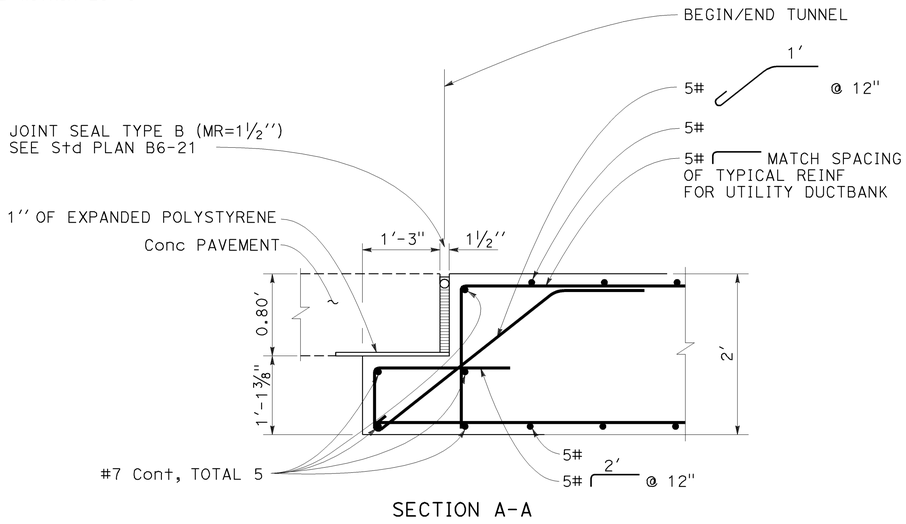

SECTION A-A

PAVEMENT EXPANSION JOINT (CRCP)

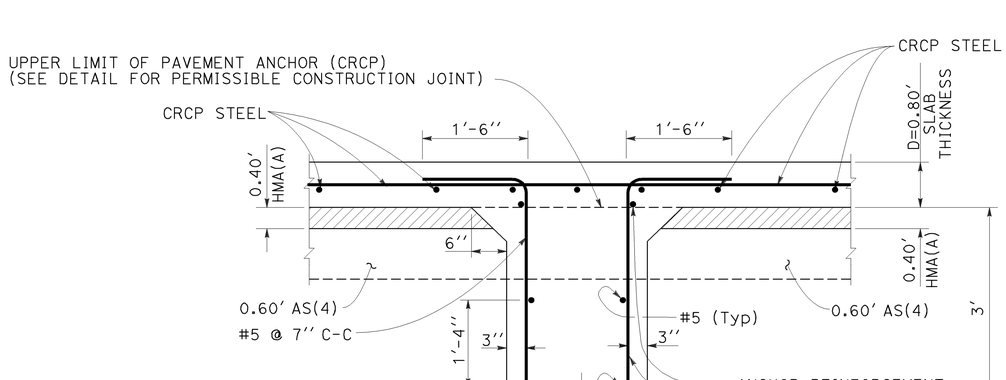

PAVEMENT ANCHOR (CRCP)

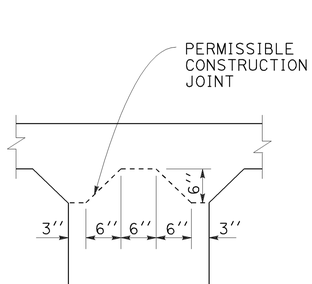

PAVEMENT ANCHOR (CRCP) DETAIL SHOWING PERMISSIBLE CONSTRUCTION JOINT

SECTION B-B

CONSTRUCTION DETAILS

NO SCALE

C-3

CALCULATED-DESIGNED BY	CHECKED BY	REVISED BY	DATE REVISED
SAMIA ARA	RICHARD CHAN	SA	8/01/09

FUNCTIONAL SUPERVISOR: BRIAN KEARNEY

STATE OF CALIFORNIA - DEPARTMENT OF TRANSPORTATION — DESIGN

Caltrans

LAST REVISION | DATE PLOTTED => 14-DEC-2009 | TIME PLOTTED => 13:58 | 08-18-09

BORDER LAST REVISED 4/11/2008 | RELATIVE BORDER SCALE IS IN INCHES 0 1 2 3 | USERNAME => trlenard | DGN FILE => 416374ga003.dgn | CU 04242 | EA 163741

Dist	COUNTY	ROUTE	POST MILES TOTAL PROJECT	SHEET No.	TOTAL SHEETS
04	SF	101	8.2/9.2	33	654

8-10-09
REGISTERED CIVIL ENGINEER DATE

12-14-09
PLANS APPROVAL DATE

Richard Man Shing Chan
No. 45557
Exp. 12-31-10
CIVIL
REGISTERED PROFESSIONAL ENGINEER
STATE OF CALIFORNIA

THE STATE OF CALIFORNIA OR ITS OFFICERS OR AGENTS SHALL NOT BE RESPONSIBLE FOR THE ACCURACY OR COMPLETENESS OF SCANNED COPIES OF THIS PLAN SHEET.

CALIFORNIA STATE FIRE MARSHAL APPROVED

Approval of this plan does not authorize or approve any omission or deviation from applicable regulations. Final approval is subject to field inspection. One set of approved plans shall be available on the project site at all times.

Reviewed by: STEPHEN GUARINO

Approval date: 12-14-09

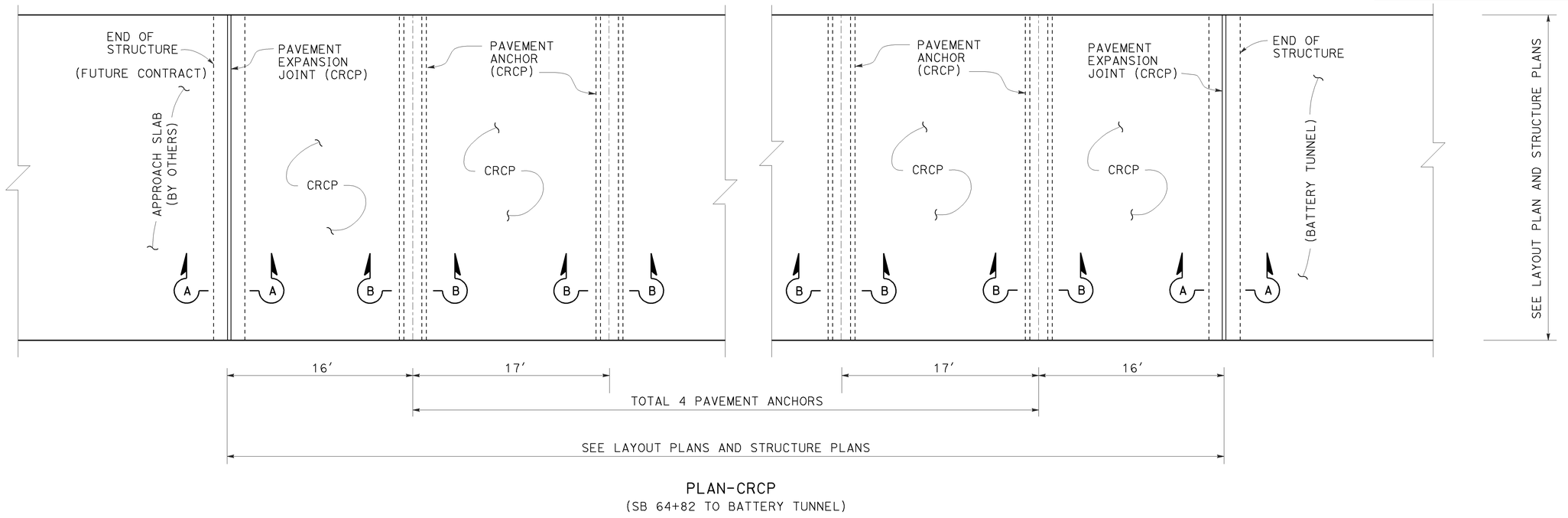

PLAN-CRCP
(SB 64+82 TO BATTERY TUNNEL)

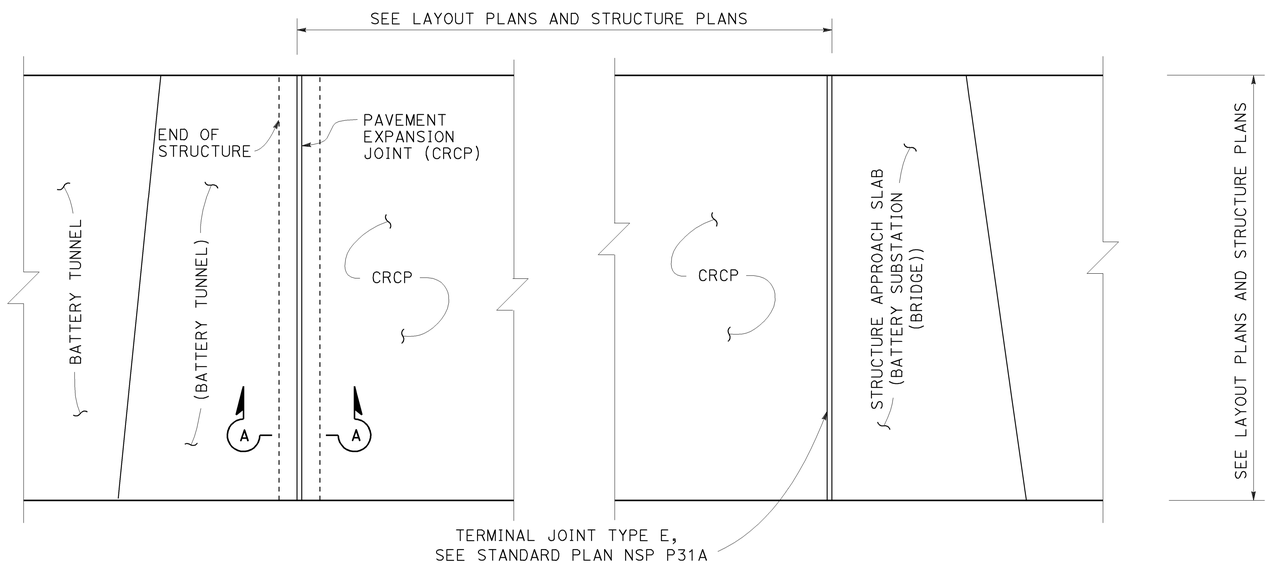

PLAN-CRCP
BETWEEN BATTERY TUNNEL AND (BATTERY SUBSTATION (BRIDGE))

CONSTRUCTION DETAILS

NO SCALE

C-4

REVISED BY	DATE REVISED
SA	8/01/09

CALCULATED-DESIGNED BY: SAMIA ARA
CHECKED BY: RICHARD CHAN
FUNCTIONAL SUPERVISOR: BRIAN KEARNEY

STATE OF CALIFORNIA - DEPARTMENT OF TRANSPORTATION
DESIGN

LAST REVISION | DATE PLOTTED => 14-DEC-2009
08-17-09 | TIME PLOTTED => 13:58

BORDER LAST REVISED 4/11/2008

RELATIVE BORDER SCALE IS IN INCHES 0 1 2 3

USERNAME => trlenard
DGN FILE => 416374ga004.dgn

CU 04242

EA 163741

Dist	COUNTY	ROUTE	POST MILES TOTAL PROJECT	SHEET No.	TOTAL SHEETS
04	SF	101	8.2/9.2	34	654

REGISTERED CIVIL ENGINEER 8-10-09 DATE

12-14-09
PLANS APPROVAL DATE

REGISTERED PROFESSIONAL ENGINEER Hossein Khodabakhsh No. 71650 Exp. 12-31-09 CIVIL STATE OF CALIFORNIA

THE STATE OF CALIFORNIA OR ITS OFFICERS OR AGENTS SHALL NOT BE RESPONSIBLE FOR THE ACCURACY OR COMPLETENESS OF SCANNED COPIES OF THIS PLAN SHEET.

CALIFORNIA STATE FIRE MARSHAL APPROVED

Approval of this plan does not authorize or approve any omission or deviation from applicable regulations. Final approval is subject to field inspection. One set of approved plans shall be available on the project site at all times.

Reviewed by: STEPHEN GUARINO

Approval date: 12-14-09

TEMPORARY FENCE (TYPE CL-6)

AREA	LF
C	2079
D	1110
H	2047
I	2603
J	3704
A	1755
F, G, L	1497
N	600
O	522
B	1170
K	501
M	660
P	1769
E	298
TOTAL	20315

LEGEND:

AREA FOR CONTRACTOR'S USE

APPROXIMATE LOCATION FOR CHAIN LINK GATE

NOTE:

1. FOR AVAILABILITY AND RESTRICTIONS, SEE "AREA FOR CONTRACTOR'S USE" IN THE CONTRACT SPECIAL PROVISIONS.

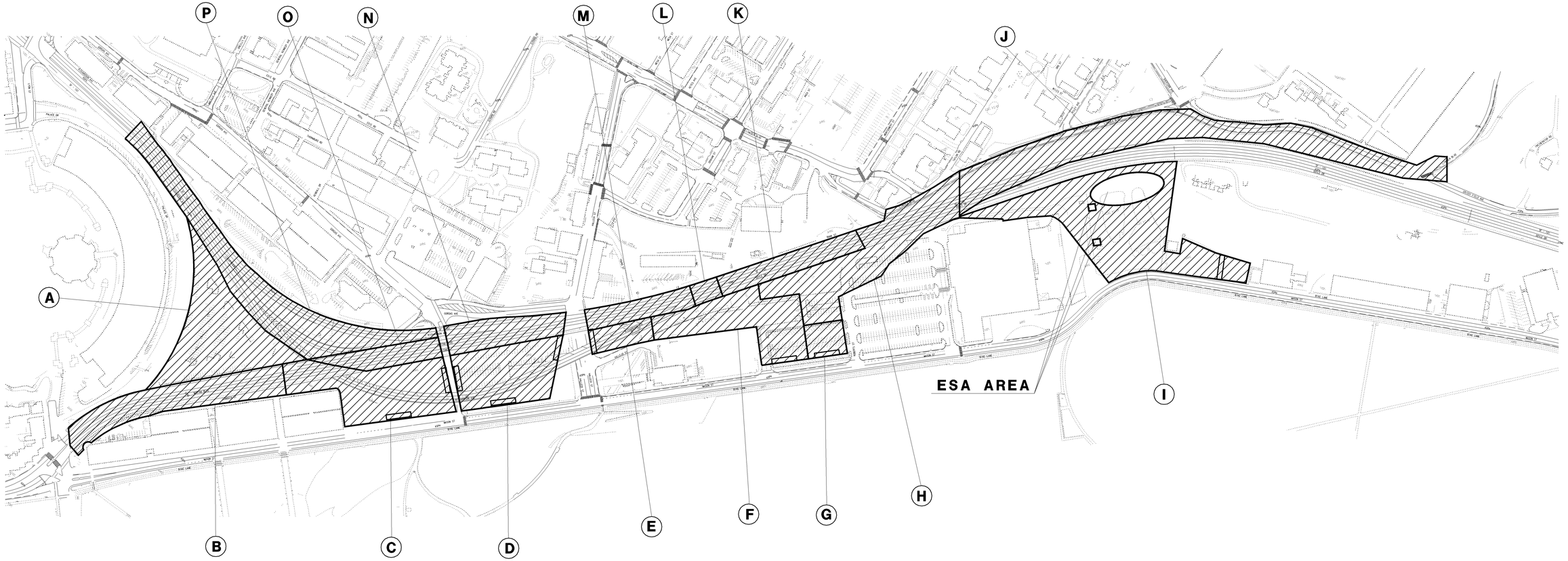

CONSTRUCTION DETAILS
AREA FOR CONTRACTOR'S USE
NO SCALE

C-5

STATE OF CALIFORNIA - DEPARTMENT OF TRANSPORTATION
Caltrans DESIGN

FUNCTIONAL SUPERVISOR: ABOLFAZL EMADZADEH
CALCULATED-DESIGNED BY: GINA CHOI
CHECKED BY: ROGER DAYOAN
REVISED BY: GC
DATE REVISED: 8/01/09

LAST REVISION 11-16-09
DATE PLOTTED => 14-DEC-2009
TIME PLOTTED => 13:58

BORDER LAST REVISED 4/11/2008
RELATIVE BORDER SCALE IS IN INCHES 0 1 2 3
USERNAME => trlenard
DGN FILE => 416374ga005.dgn
CU 04242
EA 163741

Dist	COUNTY	ROUTE	POST MILES TOTAL PROJECT	SHEET No.	TOTAL SHEETS
04	SF	101	8.2/9.2	35	654

CALIFORNIA STATE FIRE MARSHAL APPROVED
Approval of this plan does not authorize or approve any omission or deviation from applicable regulations. Final approval is subject to field inspection. One set of approved plans shall be available on the project site at all times.
Reviewed by: STEPHEN GUARINO
Approval date: 12-14-09

8-10-09
REGISTERED CIVIL ENGINEER DATE

12-14-09
PLANS APPROVAL DATE

Tung Nguyen No. 72143 Exp 6-30-10 CIVIL — REGISTERED PROFESSIONAL ENGINEER — STATE OF CALIFORNIA

THE STATE OF CALIFORNIA OR ITS OFFICERS OR AGENTS SHALL NOT BE RESPONSIBLE FOR THE ACCURACY OR COMPLETENESS OF SCANNED COPIES OF THIS PLAN SHEET.

NOTES:

1. FOR EPS BLOCKS PLACED IN CONFINED AREAS. A MINIMUM WIDTH OF 2' IS REQUIRED. TO ACHIEVE THIS WIDTH, THE ADJACENT BLOCK WILL HAVE TO BE A CUSTOM MANUFACTURED BLOCK. CUT TO FIT WIDTHS MORE THAN STANDARD EPS BLOCK.
2. PRE-GLUING CUSTOM MANUFACTURED EPS BLOCKS TO ACHIEVE DESIRED DIMENSIONS IS ACCEPTABLE.
3. PLACEMENT AND COMPACTION OF THE EMBANKMENT FILL FOR THE EPS BLOCK SHALL BE PLACED IN ACCORDANCE WITH THE STANDARD SPECIFICATIONS.
4. 2''Ø WEEPHOLE, AT 24' OC @ 6'' ABOVE O.G.

ABBREVIATION:

EPS EXPANDED POLYSTYRENE

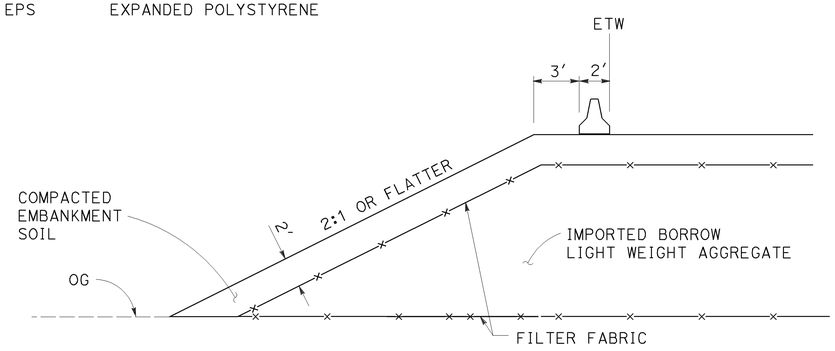

IMPORT BORROW LIGHT WEIGHT AGGREGATE (TYPICAL SECTION)

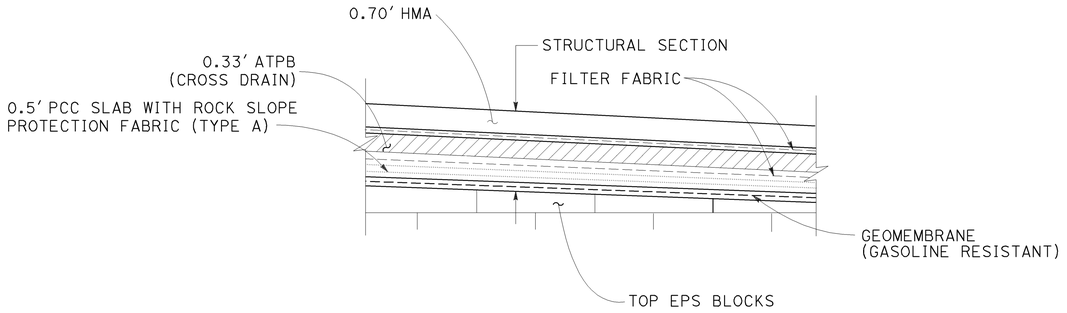

DETAIL A

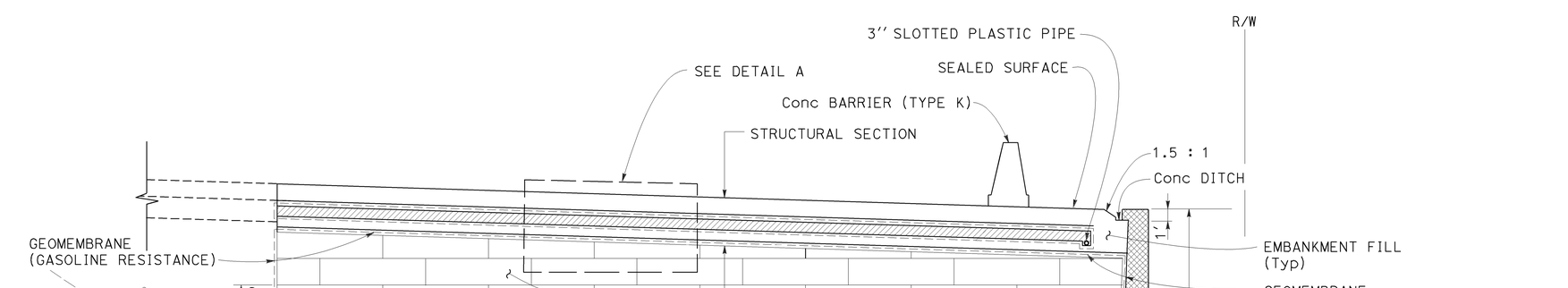

Typ. SECTION RW-7A WALL TYPE 5SW (WITHOUT SOUNDWALL)

(DETOUR ROAD AT RETAINING WALL)

Sta D79+46 TO D85+87

CONSTRUCTION DETAILS

NO SCALE

C-6

STATE OF CALIFORNIA - DEPARTMENT OF TRANSPORTATION
DESIGN
FUNCTIONAL SUPERVISOR: MAHMOOD MOMENZADEH
CALCULATED-DESIGNED BY: TUNG NGUYEN
CHECKED BY: MAHMOOD MOMENZADEH
REVISED BY: TN
DATE REVISED: 8/01/09

LAST REVISION DATE PLOTTED => 14-DEC-2009
TIME PLOTTED => 13:59
09-17-09

BORDER LAST REVISED 4/11/2008
RELATIVE BORDER SCALE IS IN INCHES 0 1 2 3
USERNAME => trienard
DGN FILE => 416374ga006.dgn
CU 04242
EA 163741

Dist	COUNTY	ROUTE	POST MILES TOTAL PROJECT	SHEET No.	TOTAL SHEETS
04	SF	101	8.2/9.2	36	654

REGISTERED CIVIL ENGINEER — 8-10-09 DATE

12-14-09
PLANS APPROVAL DATE

Hossein Khodabakhsh
No. 71650
Exp. 12-31-09
CIVIL
REGISTERED PROFESSIONAL ENGINEER
STATE OF CALIFORNIA

THE STATE OF CALIFORNIA OR ITS OFFICERS OR AGENTS SHALL NOT BE RESPONSIBLE FOR THE ACCURACY OR COMPLETENESS OF SCANNED COPIES OF THIS PLAN SHEET.

CALIFORNIA STATE FIRE MARSHAL APPROVED

Approval of this plan does not authorize or approve any omission or deviation from applicable regulations. Final approval is subject to field inspection. One set of approved plans shall be available on the project site at all times.

Reviewed by: STEPHEN GUARINO

Approval date: 12-14-09

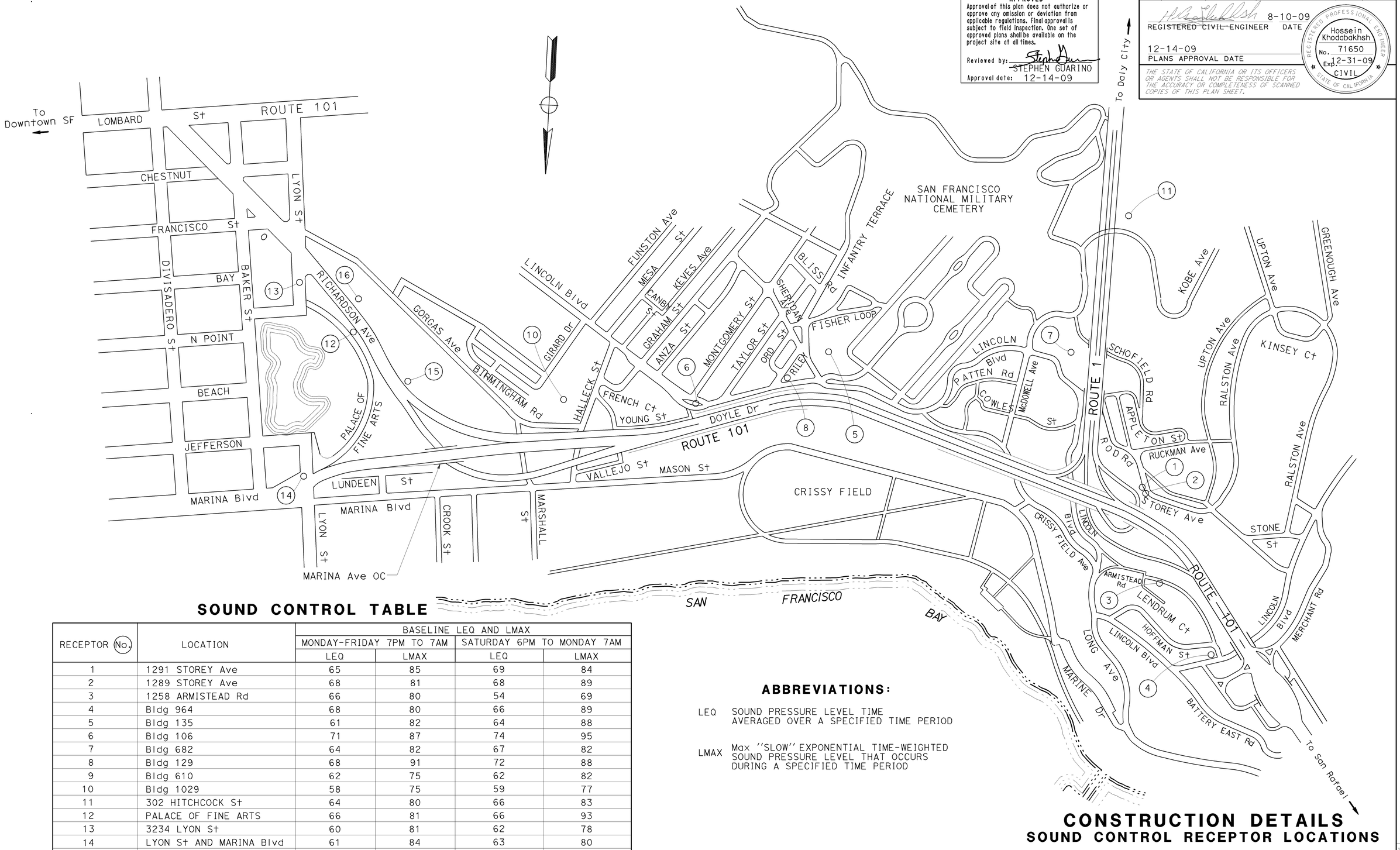

SOUND CONTROL TABLE

RECEPTOR (No.)	LOCATION	BASELINE LEQ AND LMAX			
		MONDAY-FRIDAY 7PM TO 7AM		SATURDAY 6PM TO MONDAY 7AM	
		LEQ	LMAX	LEQ	LMAX
1	1291 STOREY Ave	65	85	69	84
2	1289 STOREY Ave	68	81	68	89
3	1258 ARMISTEAD Rd	66	80	54	69
4	Bldg 964	68	80	66	89
5	Bldg 135	61	82	64	88
6	Bldg 106	71	87	74	95
7	Bldg 682	64	82	67	82
8	Bldg 129	68	91	72	88
9	Bldg 610	62	75	62	82
10	Bldg 1029	58	75	59	77
11	302 HITCHCOCK St	64	80	66	83
12	PALACE OF FINE ARTS	66	81	66	93
13	3234 LYON St	60	81	62	78
14	LYON St AND MARINA Blvd	61	84	63	80
15	Bldg 68	64	72	67	82
16	PRESIDIO YMCA	72	89	70	90

ABBREVIATIONS:

LEQ — SOUND PRESSURE LEVEL TIME AVERAGED OVER A SPECIFIED TIME PERIOD

LMAX — Max ''SLOW'' EXPONENTIAL TIME-WEIGHTED SOUND PRESSURE LEVEL THAT OCCURS DURING A SPECIFIED TIME PERIOD

CONSTRUCTION DETAILS
SOUND CONTROL RECEPTOR LOCATIONS

NO SCALE

THIS PLAN ACCURATE FOR SOUND CONTROL RECEPTOR LOCATIONS ONLY

C-7

CALCULATED-DESIGNED BY	GINA CHOI	REVISED BY	GC
CHECKED BY	ROGER DAYOAN	DATE REVISED	8/01/09
FUNCTIONAL SUPERVISOR	ABOLFAZL EMADZADEH		

STATE OF CALIFORNIA - DEPARTMENT OF TRANSPORTATION
DESIGN

LAST REVISION DATE PLOTTED => 14-DEC-2009
08-15-09 TIME PLOTTED => 13:59

BORDER LAST REVISED 4/11/2008

RELATIVE BORDER SCALE IS IN INCHES 0 1 2 3

USERNAME => trienard
DGN FILE => 416374ga007.dgn

CU 04242

EA 163741

FOR ACCURATE RIGHT OF WAY AND
ACCESS DATA, CONTACT RIGHT OF WAY
ENGINEERING AT THE DISTRICT OFFICE.

CALIFORNIA STATE FIRE MARSHAL APPROVED
Approval of this plan does not authorize or approve any omission or deviation from applicable regulations. Final approval is subject to field inspection. One set of approved plans shall be available on the project site at all times.
Reviewed by: STEPHEN GUARINO
Approval date: 12-14-09

Dist	COUNTY	ROUTE	POST MILES TOTAL PROJECT	SHEET No.	TOTAL SHEETS
04	SF	101	8.2/9.2	37	654

8-10-09
REGISTERED CIVIL ENGINEER DATE

Hossein Khodabakhsh No. 71650 Exp. 12-31-09 CIVIL — REGISTERED PROFESSIONAL ENGINEER — STATE OF CALIFORNIA

12-14-09
PLANS APPROVAL DATE

THE STATE OF CALIFORNIA OR ITS OFFICERS OR AGENTS SHALL NOT BE RESPONSIBLE FOR THE ACCURACY OR COMPLETENESS OF SCANNED COPIES OF THIS PLAN SHEET.

NOTES:

1. ALL ELEVATIONS ARE 20′ APART UNLESS OTHERWISE NOTED.
2. ALL ELEVATIONS ARE TIED TO EDGE OF PAVEMENT, 31.5′ LEFT AND RIGHT OF D LINE UNLESS OTHERWISE NOTED.

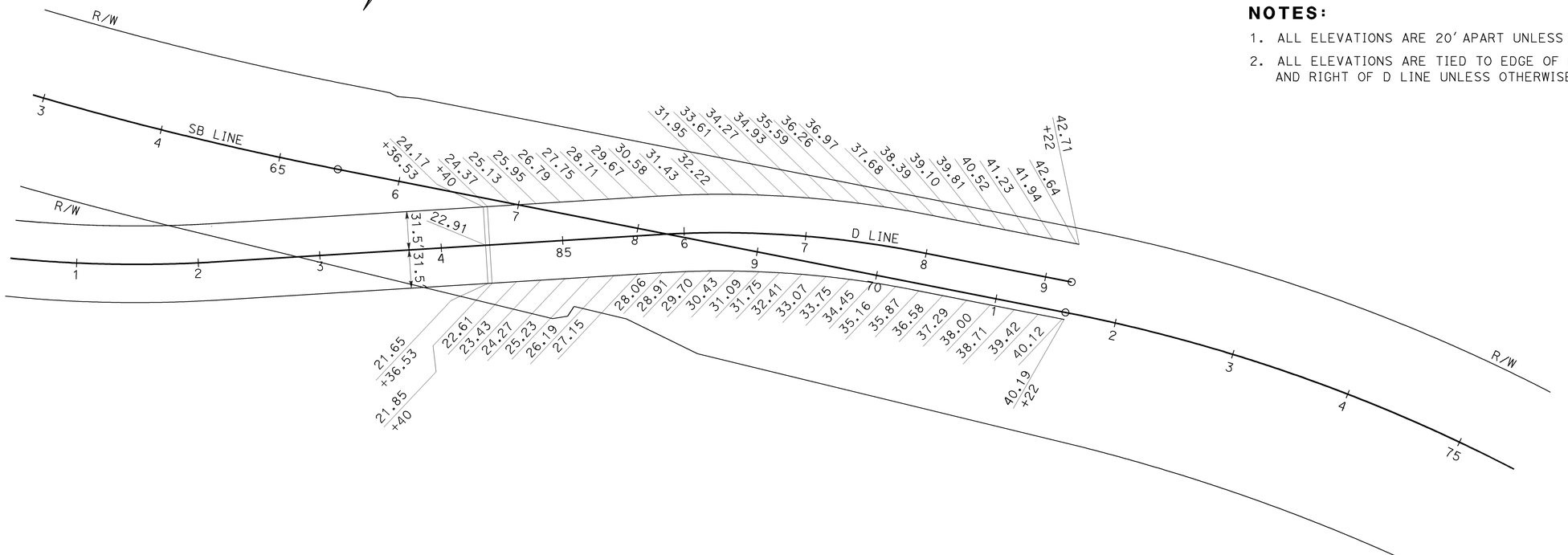

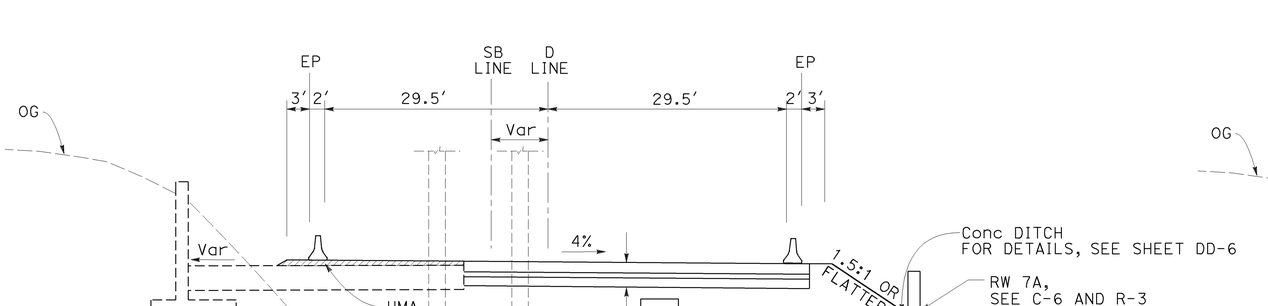

D 84+36.53 TO 85+87.77
TYPICAL SECTION
NO SCALE

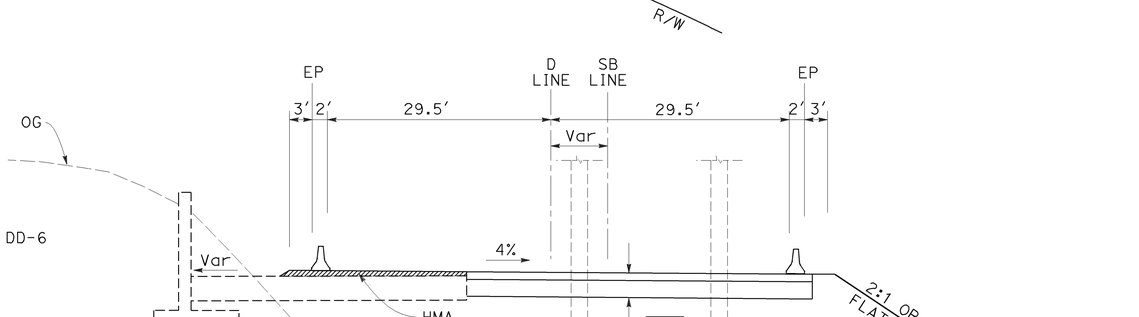

D 85+87.77 TO 89+22
TYPICAL SECTION
NO SCALE

CONSTRUCTION DETAILS
PAVEMENT ELEVATION PLAN
SCALE: 1′′ = 50′

FOR NOTES, ABBREVIATIONS AND LEGEND, SEE SHEET C-1 AND X-1

THIS PLAN ACCURATE FOR PAVEMENT ELEVATION ONLY

C-8

STATE OF CALIFORNIA - DEPARTMENT OF TRANSPORTATION
DESIGN
Caltrans
FUNCTIONAL SUPERVISOR: ABOLFAZL EMADZADEH
CALCULATED-DESIGNED BY: CARLOS SANDOVAL
CHECKED BY: ROGER DAYOAN
REVISED BY: CS
DATE REVISED: 8/01/09

LAST REVISION | DATE PLOTTED => 14-DEC-2009
12-08-09 | TIME PLOTTED => 13:59

BORDER LAST REVISED 4/11/2008
RELATIVE BORDER SCALE IS IN INCHES 0 1 2 3
USERNAME => trlenard
DGN FILE => 416374ga008.dgn
CU 04242
EA 163741

Dist	COUNTY	ROUTE	POST MILES TOTAL PROJECT	SHEET No.	TOTAL SHEETS
04	SF	101	8.2/9.2	38	654

CALIFORNIA STATE FIRE MARSHAL APPROVED
Approval of this plan does not authorize or approve any omission or deviation from applicable regulations. Final approval is subject to field inspection. One set of approved plans shall be available on the project site at all times.
Reviewed by: STEPHEN GUARINO
Approval date: 12-14-09

8-10-09
REGISTERED CIVIL ENGINEER DATE

12-14-09
PLANS APPROVAL DATE

REGISTERED PROFESSIONAL ENGINEER — Hossein Khodabakhsh — No. 71650 — Exp. 12-31-09 — CIVIL — STATE OF CALIFORNIA

THE STATE OF CALIFORNIA OR ITS OFFICERS OR AGENTS SHALL NOT BE RESPONSIBLE FOR THE ACCURACY OR COMPLETENESS OF SCANNED COPIES OF THIS PLAN SHEET.

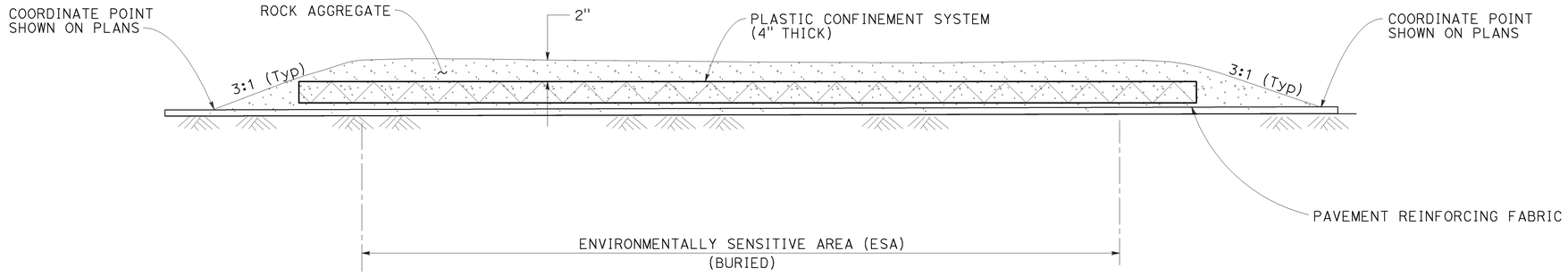

SECTION
CONFINEMENT SYSTEM

NOTES:

1. CONFINEMENT SYSTEM DEPLOYMENT COVERS AN EXISTING BURIED ESA FOLLOWING INSTALLATION OF THE CONFINEMENT. THIS AREA MAY BE USED FOR SITE STORAGE.
2. IMPORTED TOPSOIL REQUIRED ON ALL EMBANKMENT SLOPES 2:1 (H:V) AND FLATTER, EXCEPT WHERE LIGHT WEIGHT AGGREGATE IS USED.

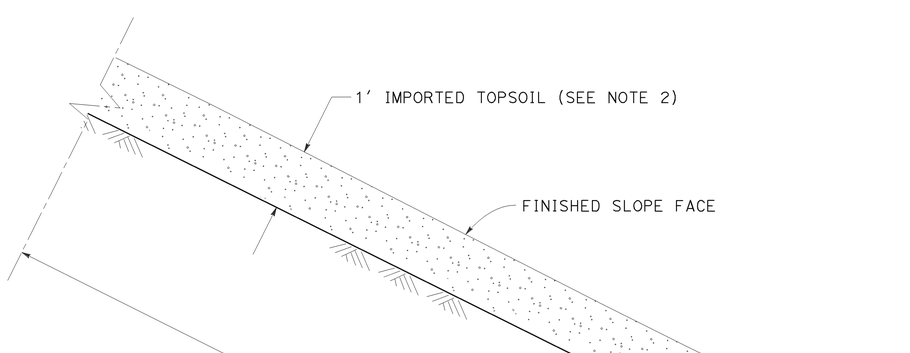

SECTION
IMPORTED TOPSOIL DETAIL

CONSTRUCTION DETAILS
NO SCALE

C-9

REVISED BY	DATE REVISED
GC	8/01/09

CALCULATED-DESIGNED BY: GINA CHOI
CHECKED BY: ROGER DAYOAN
FUNCTIONAL SUPERVISOR: ABOLFAZL EMADZADEH

STATE OF CALIFORNIA - DEPARTMENT OF TRANSPORTATION
Caltrans® DESIGN

LAST REVISION | DATE PLOTTED => 14-DEC-2009 | 09-10-09 | TIME PLOTTED => 13:59

BORDER LAST REVISED 4/11/2008

RELATIVE BORDER SCALE IS IN INCHES 0 1 2 3

USERNAME => trienard
DGN FILE => 416374ga009.dgn

CU 04242

EA 163741

Dist	COUNTY	ROUTE	POST MILES TOTAL PROJECT	SHEET No.	TOTAL SHEETS
04	SF	101	8.2/9.2	39	654

Alex McDonald
LICENSED LANDSCAPE ARCHITECT

12-14-09
PLANS APPROVAL DATE

LICENSED LANDSCAPE ARCHITECT
ALEXANDER K. McDONALD No. 5382
Alex McDonald
Signature
08-31-10
Renewal Date
Date
STATE OF CALIFORNIA

THE STATE OF CALIFORNIA OR ITS OFFICERS OR AGENTS SHALL NOT BE RESPONSIBLE FOR THE ACCURACY OR COMPLETENESS OF SCANNED COPIES OF THIS PLAN SHEET.

FOR ACCURATE RIGHT OF WAY AND ACCESS DATA, CONTACT RIGHT OF WAY ENGINEERING AT THE DISTRICT OFFICE.

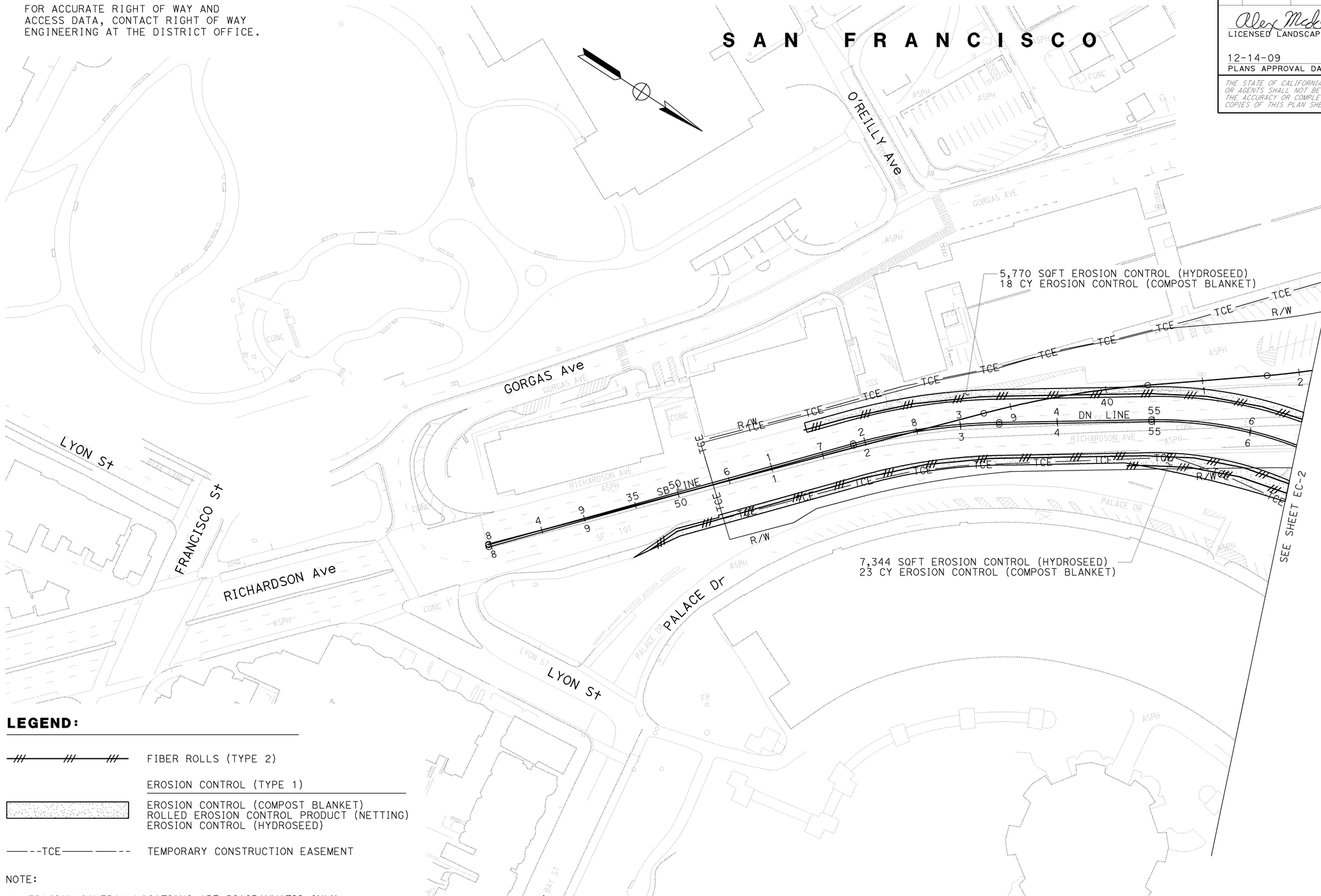

CALIFORNIA STATE FIRE MARSHAL APPROVED

Approval of this plan does not authorize or approve any omission or deviation from applicable regulations. Final approval is subject to field inspection. One set of approved plans shall be available on the project site at all times.

Reviewed by: STEPHEN GUARINO

Approval date: 12-14-09

LEGEND:

FIBER ROLLS (TYPE 2)

EROSION CONTROL (TYPE 1)

EROSION CONTROL (COMPOST BLANKET)
ROLLED EROSION CONTROL PRODUCT (NETTING)
EROSION CONTROL (HYDROSEED)

TCE — TEMPORARY CONSTRUCTION EASEMENT

NOTE:

1. EROSION CONTROL LOCATIONS ARE DIAGRAMMATIC ONLY.

EROSION CONTROL PLAN

SCALE: 1''=50'

EC-1

THIS PLAN ACCURATE FOR EROSION CONTROL WORK ONLY.

STATE OF CALIFORNIA - DEPARTMENT OF TRANSPORTATION
Caltrans LANDSCAPE ARCHITECTURE

SENIOR LANDSCAPE ARCHITECT: DAVID W. YAM
CALCULATED-DESIGNED BY: Alex McDonald
CHECKED BY: Jennifer Egawa
REVISED BY
DATE REVISED

LAST REVISION 08-10-09
DATE PLOTTED => 14-DEC-2009
TIME PLOTTED => 13:59

BORDER LAST REVISED 4/11/2008
RELATIVE BORDER SCALE IS IN INCHES 0 1 2 3
USERNAME => trlenard
DGN FILE => 416374ge001.dgn
CU 04343
EA 163741

Dist	COUNTY	ROUTE	POST MILES TOTAL PROJECT	SHEET No.	TOTAL SHEETS
04	SF	101	8.2/9.2	40	654

Alex McDonald
LICENSED LANDSCAPE ARCHITECT

12-14-09
PLANS APPROVAL DATE

LICENSED LANDSCAPE ARCHITECT
ALEXANDER K. MCDONALD No. 5382
Alex McDonald
Signature
08-31-10
Renewal Date
Date
STATE OF CALIFORNIA

THE STATE OF CALIFORNIA OR ITS OFFICERS OR AGENTS SHALL NOT BE RESPONSIBLE FOR THE ACCURACY OR COMPLETENESS OF SCANNED COPIES OF THIS PLAN SHEET.

FOR ACCURATE RIGHT OF WAY AND ACCESS DATA, CONTACT RIGHT OF WAY ENGINEERING AT THE DISTRICT OFFICE.

CALIFORNIA STATE FIRE MARSHAL APPROVED
Approval of this plan does not authorize or approve any omission or deviation from applicable regulations. Final approval is subject to field inspection. One set of approved plans shall be available on the project site at all times.
Reviewed by: STEPHEN GUARINO
Approval date: 12-14-09

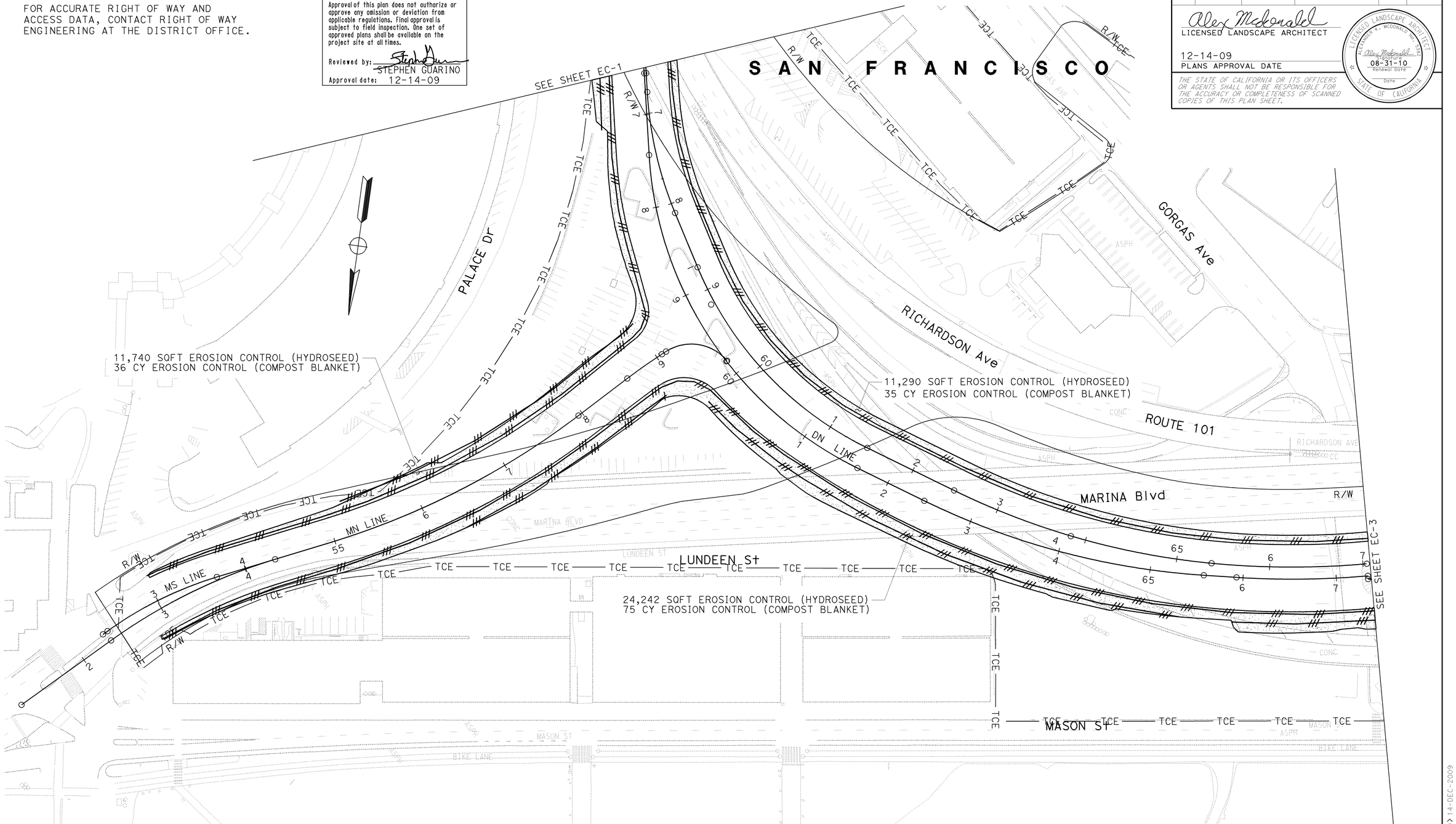

EROSION CONTROL PLAN

SCALE: 1''=50'

EC-2

THIS PLAN ACCURATE FOR EROSION CONTROL WORK ONLY.

STATE OF CALIFORNIA - DEPARTMENT OF TRANSPORTATION
Caltrans LANDSCAPE ARCHITECTURE

SENIOR LANDSCAPE ARCHITECT: DAVID W. YAM
CALCULATED-DESIGNED BY: Alex McDonald
CHECKED BY: Jennifer Egawa
REVISED BY
DATE REVISED

LAST REVISION 08-20-09
DATE PLOTTED => 14-DEC-2009
TIME PLOTTED => 14:00

BORDER LAST REVISED 4/11/2008
RELATIVE BORDER SCALE IS IN INCHES 0 1 2 3
USERNAME => trlenard
DGN FILE => 416374ge002.dgn
CU 04343
EA 163741

Dist	COUNTY	ROUTE	POST MILES TOTAL PROJECT	SHEET No.	TOTAL SHEETS
04	SF	101	8.2/9.2	41	654

Alex McDonald
LICENSED LANDSCAPE ARCHITECT

12-14-09
PLANS APPROVAL DATE

LICENSED LANDSCAPE ARCHITECT
ALEXANDER K. McDONALD No. 5362
Alex McDonald
Signature
08-31-10
Renewal Date
Date
STATE OF CALIFORNIA

THE STATE OF CALIFORNIA OR ITS OFFICERS OR AGENTS SHALL NOT BE RESPONSIBLE FOR THE ACCURACY OR COMPLETENESS OF SCANNED COPIES OF THIS PLAN SHEET.

CALIFORNIA STATE FIRE MARSHAL APPROVED

Approval of this plan does not authorize or approve any omission or deviation from applicable regulations. Final approval is subject to field inspection. One set of approved plans shall be available on the project site at all times.

Reviewed by: Stephen Guarino
STEPHEN GUARINO
Approval date: 12-14-09

FOR ACCURATE RIGHT OF WAY AND ACCESS DATA, CONTACT RIGHT OF WAY ENGINEERING AT THE DISTRICT OFFICE.

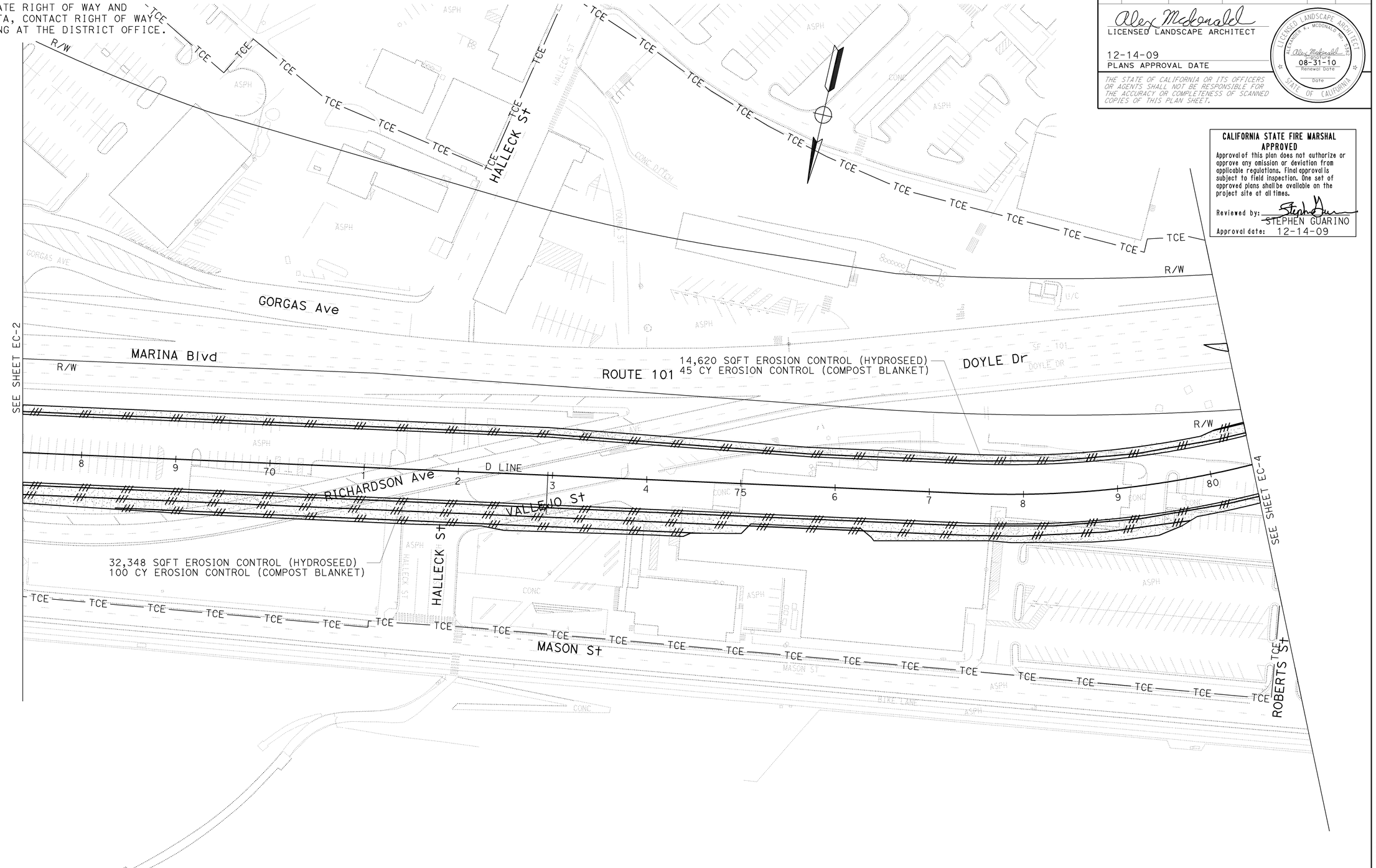

EROSION CONTROL PLAN

SCALE: 1''=50'

EC-3

STATE OF CALIFORNIA - DEPARTMENT OF TRANSPORTATION
Caltrans® LANDSCAPE ARCHITECTURE

SENIOR LANDSCAPE ARCHITECT: DAVID W. YAM
CALCULATED-DESIGNED BY: Alex McDonald
CHECKED BY: Jennifer Egawa
REVISED BY
DATE REVISED

LAST REVISION 11-17-09
DATE PLOTTED => 14-DEC-2009
TIME PLOTTED => 14:00

BORDER LAST REVISED 4/11/2008
RELATIVE BORDER SCALE IS IN INCHES 0 1 2 3
USERNAME => trlenard
DGN FILE => 416374ge003.dgn
CU 04343
EA 163741

Dist	COUNTY	ROUTE	POST MILES TOTAL PROJECT	SHEET No.	TOTAL SHEETS
04	SF	101	8.2/9.2	42	654

Alex McDonald
LICENSED LANDSCAPE ARCHITECT

12-14-09
PLANS APPROVAL DATE

LICENSED LANDSCAPE ARCHITECT
ALEXANDER K. MCDONALD No. 5382
Alex McDonald
Signature
08-31-10
Renewal Date
Date
STATE OF CALIFORNIA

THE STATE OF CALIFORNIA OR ITS OFFICERS OR AGENTS SHALL NOT BE RESPONSIBLE FOR THE ACCURACY OR COMPLETENESS OF SCANNED COPIES OF THIS PLAN SHEET.

CALIFORNIA STATE FIRE MARSHAL APPROVED
Approval of this plan does not authorize or approve any omission or deviation from applicable regulations. Final approval is subject to field inspection. One set of approved plans shall be available on the project site at all times.
Reviewed by: Stephen Guarino
STEPHEN GUARINO
Approval date: 12-14-09

FOR ACCURATE RIGHT OF WAY AND ACCESS DATA, CONTACT RIGHT OF WAY ENGINEERING AT THE DISTRICT OFFICE.

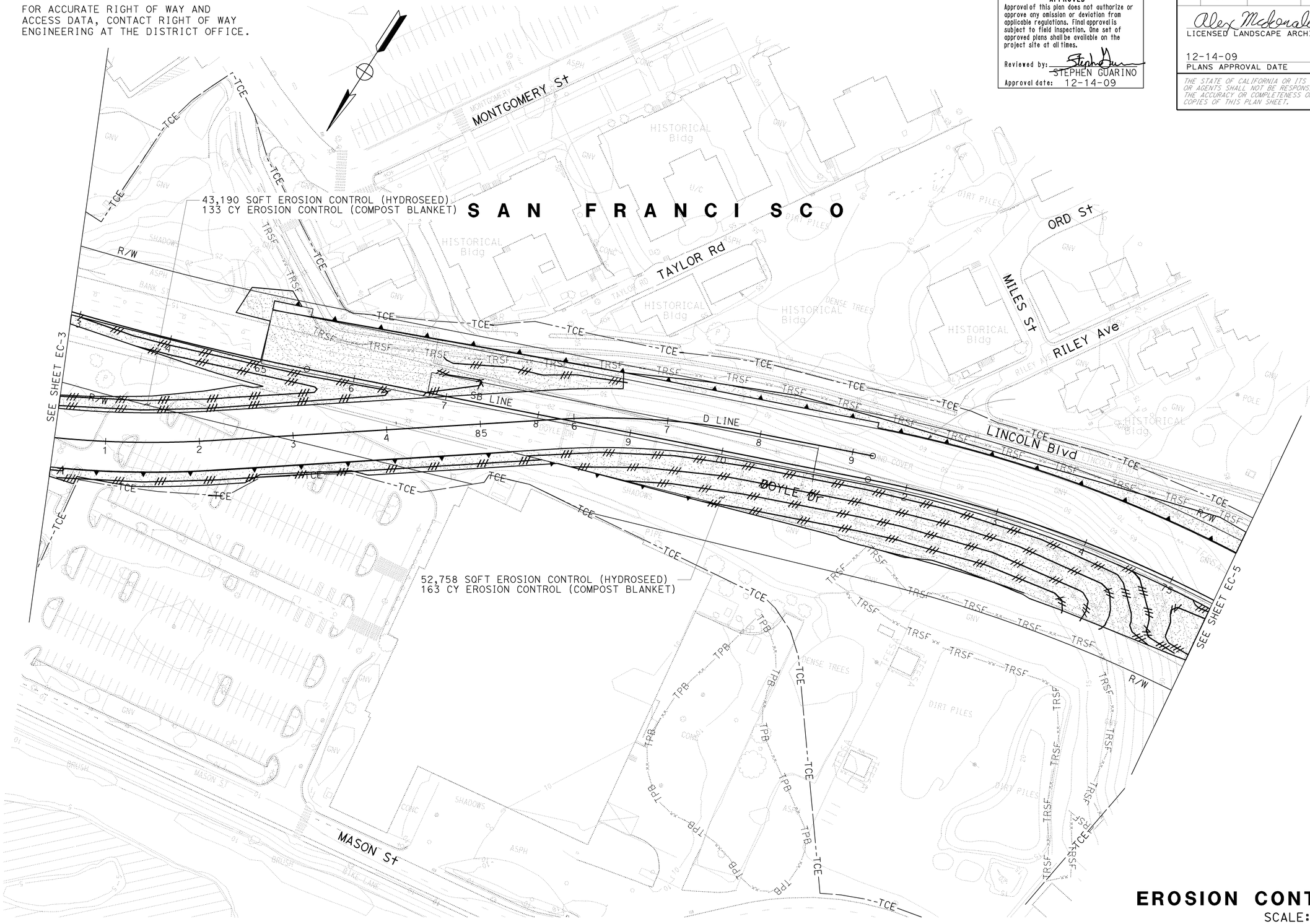

52,758 SQFT EROSION CONTROL (HYDROSEED)
163 CY EROSION CONTROL (COMPOST BLANKET)

EROSION CONTROL PLAN

SCALE: 1''=50'

EC-4

THIS PLAN ACCURATE FOR EROSION CONTROL WORK ONLY.

STATE OF CALIFORNIA - DEPARTMENT OF TRANSPORTATION
Caltrans LANDSCAPE ARCHITECTURE

SENIOR LANDSCAPE ARCHITECT: DAVID W. YAM
CALCULATED-DESIGNED BY: Alex McDonald
CHECKED BY: Jennifer Egawa
REVISED BY
DATE REVISED

LAST REVISION 08-10-09
DATE PLOTTED => 14-DEC-2009
TIME PLOTTED => 14:00

BORDER LAST REVISED 4/11/2008
RELATIVE BORDER SCALE IS IN INCHES 0 1 2 3
USERNAME => trlenard
DGN FILE => 416374ge004.dgn
CU 04343
EA 163741

FOR ACCURATE RIGHT OF WAY AND ACCESS DATA, CONTACT RIGHT OF WAY ENGINEERING AT THE DISTRICT OFFICE.

CALIFORNIA STATE FIRE MARSHAL APPROVED

Approval of this plan does not authorize or approve any omission or deviation from applicable regulations. Final approval is subject to field inspection. One set of approved plans shall be available on the project site at all times.

Reviewed by: STEPHEN GUARINO

Approval date: 12-14-09

Dist	COUNTY	ROUTE	POST MILES TOTAL PROJECT	SHEET No.	TOTAL SHEETS
04	SF	101	8.2/9.2	43	654

Alex McDonald
LICENSED LANDSCAPE ARCHITECT

12-14-09
PLANS APPROVAL DATE

THE STATE OF CALIFORNIA OR ITS OFFICERS OR AGENTS SHALL NOT BE RESPONSIBLE FOR THE ACCURACY OR COMPLETENESS OF SCANNED COPIES OF THIS PLAN SHEET.

LICENSED LANDSCAPE ARCHITECT
ALEXANDER K. MCDONALD No. 5382
Alex McDonald
Signature
08-31-10
Renewal Date
Date
STATE OF CALIFORNIA

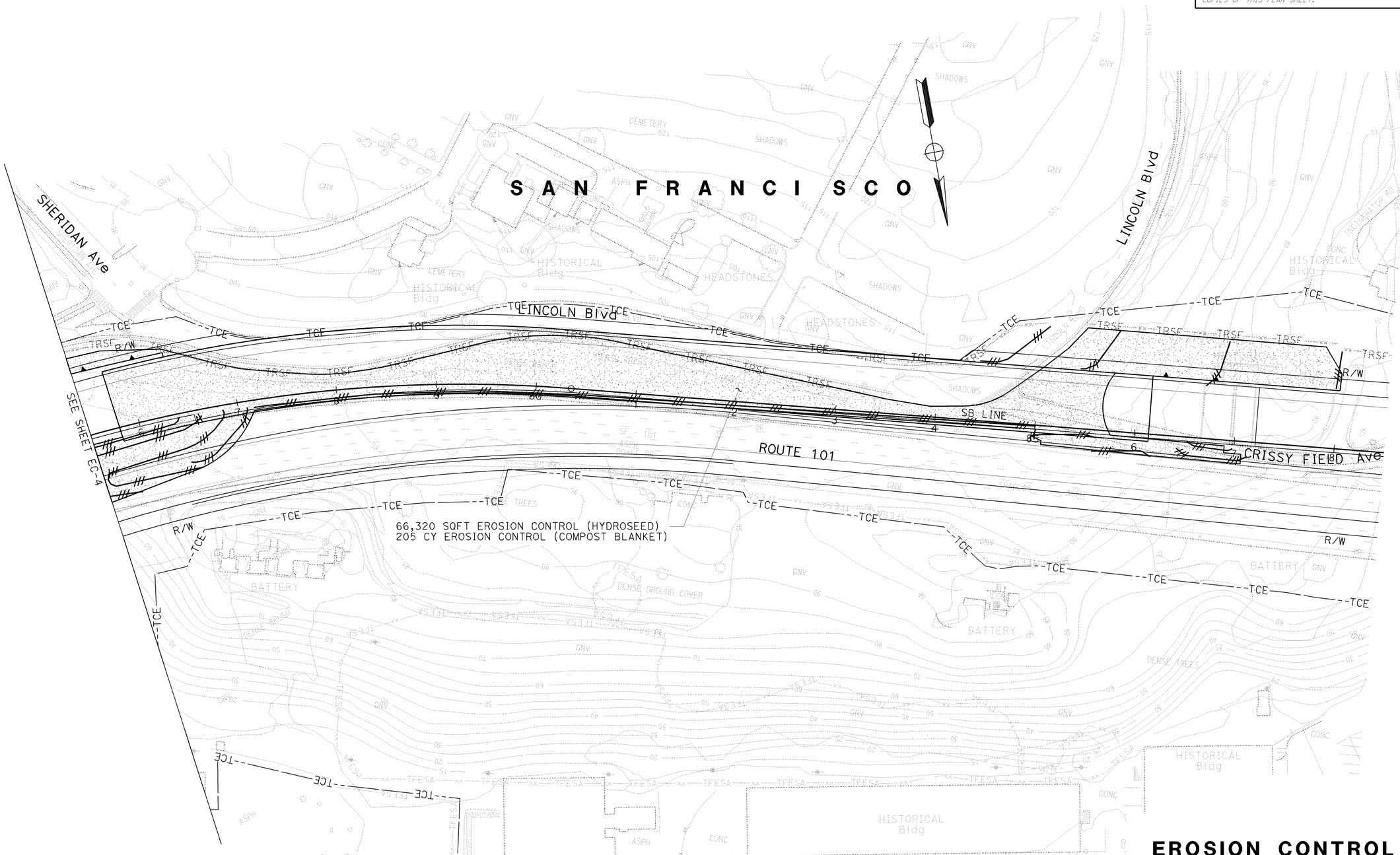

EROSION CONTROL PLAN

SCALE: 1''=50'

THIS PLAN ACCURATE FOR EROSION CONTROL WORK ONLY.

EC-5

STATE OF CALIFORNIA - DEPARTMENT OF TRANSPORTATION
Caltrans LANDSCAPE ARCHITECTURE

SENIOR LANDSCAPE ARCHITECT: DAVID W. YAM

CALCULATED-DESIGNED BY: Alex McDonald
CHECKED BY: Jennifer Egawa

REVISED BY
DATE REVISED

LAST REVISION 08-10-09
DATE PLOTTED => 14-DEC-2009
TIME PLOTTED => 14:00

BORDER LAST REVISED 4/11/2008

RELATIVE BORDER SCALE IS IN INCHES 0 1 2 3

USERNAME => trlenard
DGN FILE => 416374ge005.dgn

CU 04343

EA 163741

Dist	COUNTY	ROUTE	POST MILES TOTAL PROJECT	SHEET No.	TOTAL SHEETS
04	SF	101	8.2/9.2	44	654

CALIFORNIA STATE FIRE MARSHAL APPROVED
Approval of this plan does not authorize or approve any omission or deviation from applicable regulations. Final approval is subject to field inspection. One set of approved plans shall be available on the project site at all times.
Reviewed by: STEPHEN GUARINO
Approval date: 12-14-09

Alex McDonald
LICENSED LANDSCAPE ARCHITECT
12-14-09
PLANS APPROVAL DATE

LICENSED LANDSCAPE ARCHITECT
ALEXANDER K. McDONALD No. 5382
Alex McDonald
Signature
08-31-10
Renewal Date
Date
STATE OF CALIFORNIA

THE STATE OF CALIFORNIA OR ITS OFFICERS OR AGENTS SHALL NOT BE RESPONSIBLE FOR THE ACCURACY OR COMPLETENESS OF SCANNED COPIES OF THIS PLAN SHEET.

EROSION CONTROL QUANTITIES

SHEET No.	EROSION CONTROL (COMPOST BLANKET)	EROSION CONTROL (HYDROSEED)	FIBER ROLLS	ROLLED EROSION CONTROL PRODUCT (NETTING)
	CY	SQFT	LF	SQFT
EC-1	41	13,114	1,200	13,114
EC-2	146	47,272	4,516	47,272
EC-3	145	46,968	4,610	46,968
EC-4	296	95,948	4,902	95,948
EC-5	205	66,320	1,752	66,320
TOTAL	833	269,622	16,980	269,622

EROSION CONTROL QUANTITIES
NO SCALE

ECQ-1

STATE OF CALIFORNIA - DEPARTMENT OF TRANSPORTATION
Caltrans® LANDSCAPE ARCHITECTURE
SENIOR LANDSCAPE ARCHITECT: DAVID W. YAM
CALCULATED-DESIGNED BY: Alex McDonald
CHECKED BY: Jennifer Egawa
REVISED BY
DATE REVISED

LAST REVISION 08-10-09
DATE PLOTTED => 14-DEC-2009
TIME PLOTTED => 14:00

NOTES:

1. FOR ACCURATE RIGHT OF WAY AND ACCESS DATA, CONTACT RIGHT OF WAY ENGINEERING AT THE DISTRICT OFFICE.
2. FOR EDGE DRAIN DETAIL NOT SHOWN, SEE CALTRANS Std PLAN D99A, D99B, D99C AND D99D.

LEGEND:

- Exist ABANDONED STORM DRAIN
- +xx STATION
- O OUTLET/VENT/CLEANOUT
- A TYPE
- xx LENGTH IN FEET

ABBREVIATIONS:

Ang	ANGLE
DDJ	DOWNDRAIN JOINTS
GB	GRADE BREAK
PT	PRESIDIO TRUST
Rem	REMOVE
SDFM	STORM DRAIN FORCE MAIN
SGD	STANDARD GUTTER DEPRESSION
w/	WITH

Dist	COUNTY	ROUTE	POST MILES TOTAL PROJECT	SHEET No.	TOTAL SHEETS
04	SF	101	8.2/9.2	45	654

REGISTERED CIVIL ENGINEER — 7-31-09 DATE

JACK K. MONG No. C66151 Exp. 6-30-10 CIVIL — REGISTERED PROFESSIONAL ENGINEER — STATE OF CALIFORNIA

12-14-09
PLANS APPROVAL DATE

THE STATE OF CALIFORNIA OR ITS OFFICERS OR AGENTS SHALL NOT BE RESPONSIBLE FOR THE ACCURACY OR COMPLETENESS OF SCANNED COPIES OF THIS PLAN SHEET.

Arup PB JV
560 Mission Street, Suite 700
San Francisco, CA 94105

S A N F R A N C I S C O

MONTGOMERY St
TAYLOR Rd
MILES St
RILEY Ave
LINCOLN Blvd
SHERIDAN Ave
MASON St
SB LINE
LI LINE
MUT LINE
Ret WALL No. 8
(E) MH
(E) 18" SD
(E) Abn SD
(E) Conc DITCH
(E) HW
(E) 24" SD
(E) DI
(E) 12" SD
SLOT DRAIN UNION BOX (SEE TUNNEL PLAN)
DENSE TREES
DENSE BRUSH
DIRT PILES
SHADOWS
BIKE LANE
MATCH LINE SEE SHEET D-2

f 8" PPP UD 16
SB BATTERY TUNNEL (SEE TUNNEL PLAN)
53.53 Lt SB 76+30.09
UD Vert RISER
53.53 Lt SB 76+25.64
END 8" CSP DD
Beg 8" PPP UD

CALIFORNIA STATE FIRE MARSHAL APPROVED
Approval of this plan does not authorize or approve any omission or deviation from applicable regulations. Final approval is subject to field inspection. One set of approved plans shall be available on the project site at all times.
Reviewed by: STEPHEN GUARINO
Approval date: 12-14-09

DRAINAGE PLAN
SCALE: 1"=50'

THIS PLAN ACCURATE FOR DRAINAGE WORK ONLY

D-1

REVISED BY	DATE REVISED
ML/KM	7/31/09

CALCULATED-DESIGNED BY: KATIE MING
CHECKED BY: DUANNE GILMORE

CONSULTANT FUNCTIONAL SUPERVISOR: ABOLFAZL EMADZADEH

STATE OF CALIFORNIA - DEPARTMENT OF TRANSPORTATION
Caltrans

LAST REVISION | DATE PLOTTED => 14-DEC-2009
07-31-09 | TIME PLOTTED => 14:00

BORDER LAST REVISED 4/11/2008

RELATIVE BORDER SCALE IS IN INCHES 0 1 2 3

USERNAME => trienard
DGN FILE => 416374ia001.dgn

CU 04242

EA 163741

NOTES:

1. FOR ACCURATE RIGHT OF WAY AND ACCESS DATA, CONTACT RIGHT OF WAY ENGINEERING AT THE DISTRICT OFFICE.
2. FOR NOTES, ABBREVIATIONS AND LEGEND, SEE SHEET D-1.

CALIFORNIA STATE FIRE MARSHAL APPROVED
Approval of this plan does not authorize or approve any omission or deviation from applicable regulations. Final approval is subject to field inspection. One set of approved plans shall be available on the project site at all times.
Reviewed by: STEPHEN GUARINO
Approval date: 12-14-09

Dist	COUNTY	ROUTE	POST MILES TOTAL PROJECT	SHEET No.	TOTAL SHEETS
04	SF	101	8.2/9.2	46	654

REGISTERED CIVIL ENGINEER — 7-31-09 DATE
JACK K. MONG No. C66151 Exp. 6-30-10 CIVIL — REGISTERED PROFESSIONAL ENGINEER — STATE OF CALIFORNIA
12-14-09
PLANS APPROVAL DATE

THE STATE OF CALIFORNIA OR ITS OFFICERS OR AGENTS SHALL NOT BE RESPONSIBLE FOR THE ACCURACY OR COMPLETENESS OF SCANNED COPIES OF THIS PLAN SHEET.

Arup PB JV
560 Mission Street, Suite 700
San Francisco, CA 94105

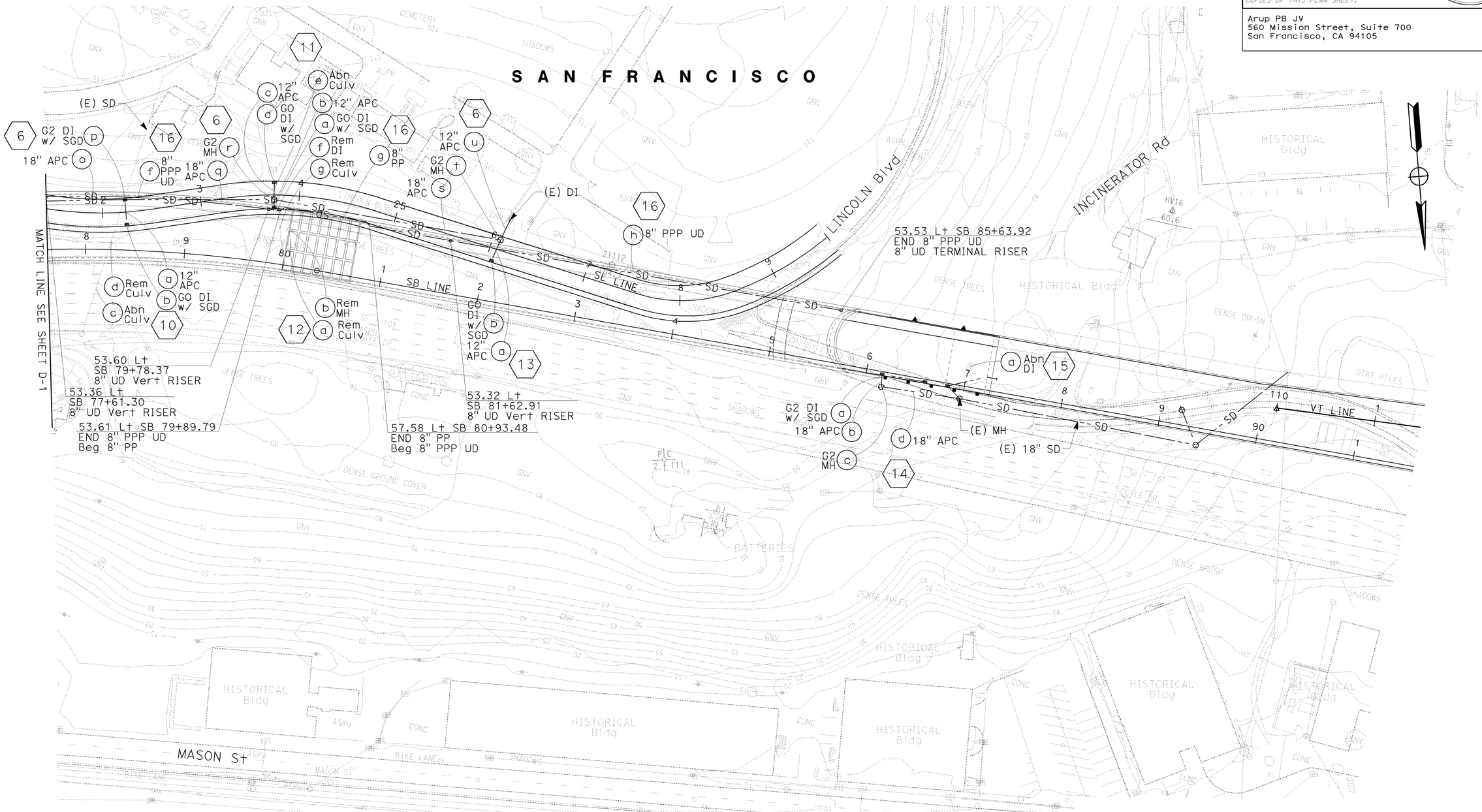

DRAINAGE PLAN
SCALE: 1"=50'

D-2

THIS PLAN ACCURATE FOR DRAINAGE WORK ONLY

CALCULATED-DESIGNED BY: ML/KM
CHECKED BY: DUANNE GILMORE
REVISED BY: KATIE MING
DATE REVISED: 7/31/09
CONSULTANT FUNCTIONAL SUPERVISOR: ABOLFAZL EMADZADEH
STATE OF CALIFORNIA - DEPARTMENT OF TRANSPORTATION
Caltrans

LAST REVISION DATE PLOTTED => 14-DEC-2009
07-31-09 TIME PLOTTED => 14:00

BORDER LAST REVISED 4/11/2008
RELATIVE BORDER SCALE IS IN INCHES 0 1 2 3
USERNAME => trlenard
DGN FILE => 416374ia002.dgn
CU 04242
EA 163741

Dist	COUNTY	ROUTE	POST MILES TOTAL PROJECT	SHEET No.	TOTAL SHEETS
04	SF	101	8.2/9.2	47	654

REGISTERED CIVIL ENGINEER — 7-31-09 DATE

JACK K. MONG No. C66151 Exp. 6-30-10 CIVIL — REGISTERED PROFESSIONAL ENGINEER — STATE OF CALIFORNIA

12-14-09
PLANS APPROVAL DATE

THE STATE OF CALIFORNIA OR ITS OFFICERS OR AGENTS SHALL NOT BE RESPONSIBLE FOR THE ACCURACY OR COMPLETENESS OF SCANNED COPIES OF THIS PLAN SHEET.

Arup PB JV
560 Mission Street, Suite 700
San Francisco, CA 94105

CALIFORNIA STATE FIRE MARSHAL APPROVED
Approval of this plan does not authorize or approve any omission or deviation from applicable regulations. Final approval is subject to field inspection. One set of approved plans shall be available on the project site at all times.
Reviewed by: STEPHEN GUARINO
Approval date: 12-14-09

NOTES:

1. FOR ACCURATE RIGHT OF WAY AND ACCESS DATA, CONTACT RIGHT OF WAY ENGINEERING AT THE DISTRICT OFFICE.
2. FOR NOTES, ABBREVIATIONS AND LEGEND, SEE SHEET D-1.

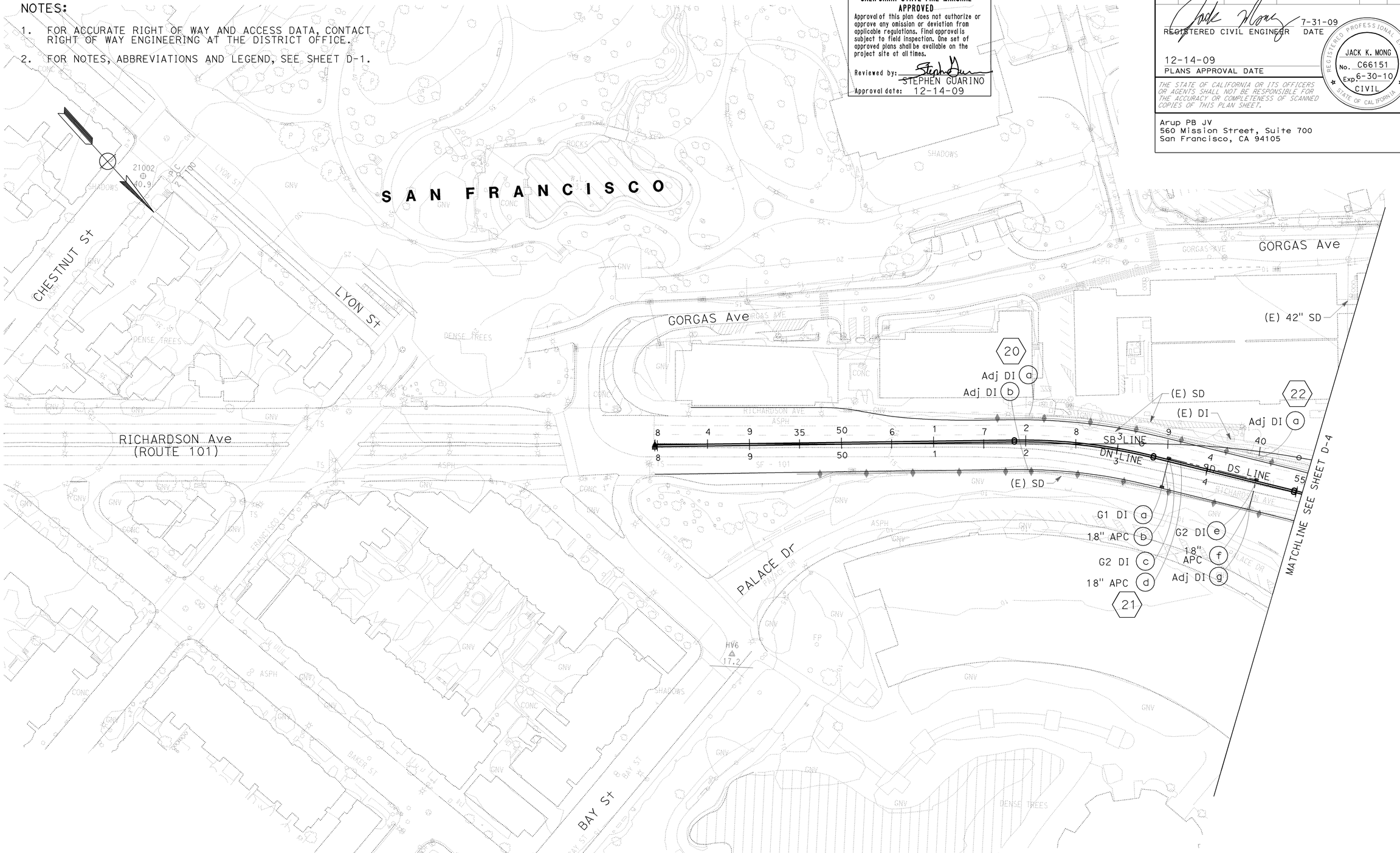

DETOUR DRAINAGE PLAN
SCALE: 1"=50'

D-3

THIS PLAN ACCURATE FOR DRAINAGE WORK ONLY.

CALCULATED-DESIGNED BY: KATIE MING
CHECKED BY: DUANNE GILMORE
REVISED BY: ML/KM
DATE REVISED: 7/31/09
CONSULTANT FUNCTIONAL SUPERVISOR: ABOLFAZL EMADZADEH
STATE OF CALIFORNIA - DEPARTMENT OF TRANSPORTATION
Caltrans

LAST REVISION — DATE PLOTTED => 14-DEC-2009 — TIME PLOTTED => 14:00
07-31-09

BORDER LAST REVISED 4/11/2008
RELATIVE BORDER SCALE IS IN INCHES 0 1 2 3
USERNAME => trlenard
DGN FILE => 416374ia003.dgn
CU 04242
EA 163741

Dist	COUNTY	ROUTE	POST MILES TOTAL PROJECT	SHEET No.	TOTAL SHEETS
04	SF	101	8.2/9.2	48	654

REGISTERED CIVIL ENGINEER — 7-31-09 DATE

12-14-09
PLANS APPROVAL DATE

JACK K. MONG No. C66151 Exp. 6-30-10 CIVIL — REGISTERED PROFESSIONAL ENGINEER — STATE OF CALIFORNIA

THE STATE OF CALIFORNIA OR ITS OFFICERS OR AGENTS SHALL NOT BE RESPONSIBLE FOR THE ACCURACY OR COMPLETENESS OF SCANNED COPIES OF THIS PLAN SHEET.

Arup PB JV
560 Mission Street, Suite 700
San Francisco, CA 94105

CALIFORNIA STATE FIRE MARSHAL APPROVED
Approval of this plan does not authorize or approve any omission or deviation from applicable regulations. Final approval is subject to field inspection. One set of approved plans shall be available on the project site at all times.
Reviewed by: STEPHEN GUARINO
Approval date: 12-14-09

NOTES:

1. FOR ACCURATE RIGHT OF WAY AND ACCESS DATA, CONTACT RIGHT OF WAY ENGINEERING AT THE DISTRICT OFFICE.
2. FOR NOTES, ABBREVIATIONS AND LEGEND, SEE SHEET D-1.

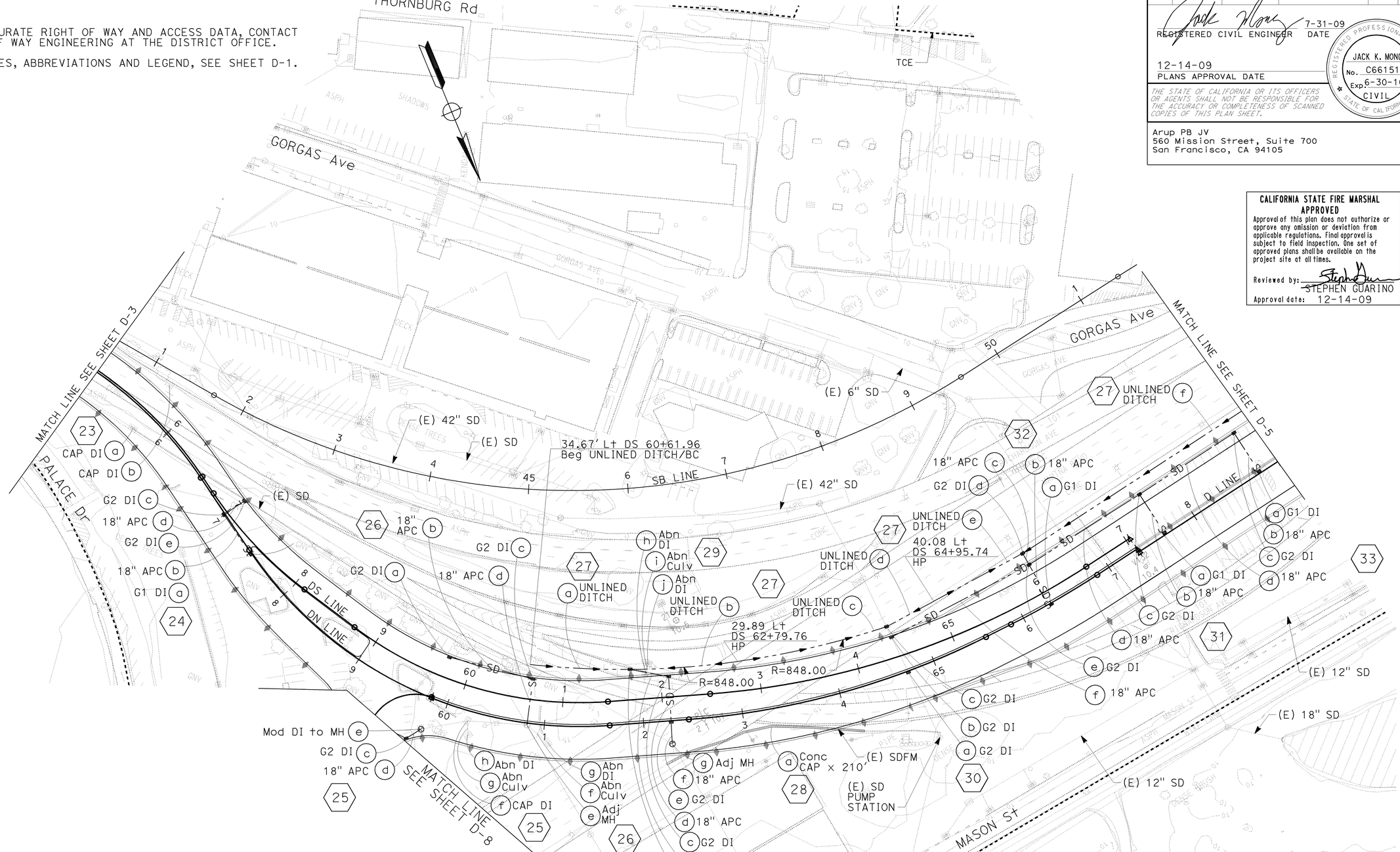

DETOUR DRAINAGE PLAN
SCALE: 1"=50'

THIS PLAN ACCURATE FOR DRAINAGE WORK ONLY

D-4

STATE OF CALIFORNIA - DEPARTMENT OF TRANSPORTATION
Caltrans
CONSULTANT FUNCTIONAL SUPERVISOR: ABOLFAZL EMADZADEH
CALCULATED-DESIGNED BY: KATIE MING
CHECKED BY: DUANNE GILMORE
REVISED BY: ML/KM
DATE REVISED: 7/31/09
LAST REVISION | DATE PLOTTED => 14-DEC-2009 | TIME PLOTTED => 14:00 | 07-31-09

BORDER LAST REVISED 4/11/2008 | RELATIVE BORDER SCALE IS IN INCHES 0 1 2 3 | USERNAME => trienard | DGN FILE => 416374ja004.dgn | CU 04242 | EA 163741

Dist	COUNTY	ROUTE	POST MILES TOTAL PROJECT	SHEET No.	TOTAL SHEETS
04	SF	101	8.2/9.2	49	654

REGISTERED CIVIL ENGINEER 7-31-09 DATE

12-14-09
PLANS APPROVAL DATE

REGISTERED PROFESSIONAL ENGINEER JACK K. MONG No. C66151 Exp. 6-30-10 CIVIL STATE OF CALIFORNIA

THE STATE OF CALIFORNIA OR ITS OFFICERS OR AGENTS SHALL NOT BE RESPONSIBLE FOR THE ACCURACY OR COMPLETENESS OF SCANNED COPIES OF THIS PLAN SHEET.

Arup PB JV
560 Mission Street, Suite 700
San Francisco, CA 94105

CALIFORNIA STATE FIRE MARSHAL APPROVED
Approval of this plan does not authorize or approve any omission or deviation from applicable regulations. Final approval is subject to field inspection. One set of approved plans shall be available on the project site at all times.
Reviewed by: STEPHEN GUARINO
Approval date: 12-14-09

NOTES:

1. FOR ACCURATE RIGHT OF WAY AND ACCESS DATA, CONTACT RIGHT OF WAY ENGINEERING AT THE DISTRICT OFFICE.
2. FOR NOTES, ABBREVIATIONS AND LEGEND, SEE SHEET D-1.

DETOUR DRAINAGE PLAN
SCALE: 1"=50'

THIS PLAN ACCURATE FOR DRAINAGE WORK ONLY

D-5

STATE OF CALIFORNIA - DEPARTMENT OF TRANSPORTATION
Caltrans

CONSULTANT FUNCTIONAL SUPERVISOR: ABOLFAZL EMADZADEH
CALCULATED-DESIGNED BY: KATIE MING
CHECKED BY: DUANNE GILMORE
REVISED BY: ML/KM
DATE REVISED: 7/31/09

LAST REVISION 07-31-09
DATE PLOTTED => 14-DEC-2009
TIME PLOTTED => 14:00

NOTES:

1. FOR ACCURATE RIGHT OF WAY AND ACCESS DATA, CONTACT RIGHT OF WAY ENGINEERING AT THE DISTRICT OFFICE.
2. FOR NOTES, ABBREVIATIONS AND LEGEND, SEE SHEET D-1.

Dist	COUNTY	ROUTE	POST MILES TOTAL PROJECT	SHEET No.	TOTAL SHEETS
04	SF	101	8.2/9.2	50	654

REGISTERED CIVIL ENGINEER — 7-31-09 DATE

12-14-09
PLANS APPROVAL DATE

JACK K. MONG
No. C66151
Exp. 6-30-10
CIVIL
REGISTERED PROFESSIONAL ENGINEER
STATE OF CALIFORNIA

THE STATE OF CALIFORNIA OR ITS OFFICERS OR AGENTS SHALL NOT BE RESPONSIBLE FOR THE ACCURACY OR COMPLETENESS OF SCANNED COPIES OF THIS PLAN SHEET.

Arup PB JV
560 Mission Street, Suite 700
San Francisco, CA 94105

CALIFORNIA STATE FIRE MARSHAL APPROVED
Approval of this plan does not authorize or approve any omission or deviation from applicable regulations. Final approval is subject to field inspection. One set of approved plans shall be available on the project site at all times.
Reviewed by: STEPHEN GUARINO
Approval date: 12-14-09

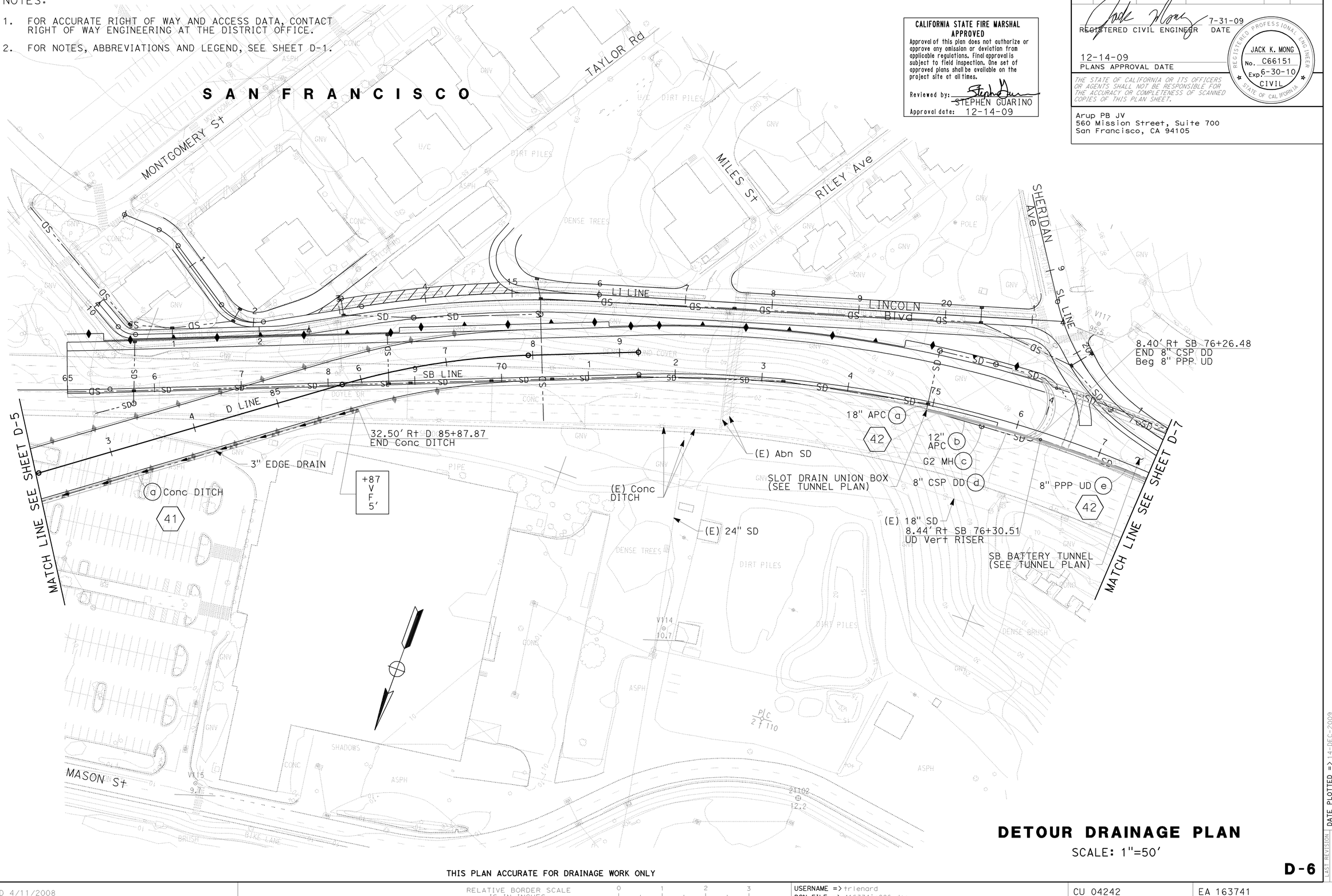

DETOUR DRAINAGE PLAN

SCALE: 1"=50'

THIS PLAN ACCURATE FOR DRAINAGE WORK ONLY

D-6

STATE OF CALIFORNIA - DEPARTMENT OF TRANSPORTATION
Caltrans
CONSULTANT FUNCTIONAL SUPERVISOR: ABOLFAZL EMADZADEH
CALCULATED-DESIGNED BY: KATIE MING
CHECKED BY: DUANNE GILMORE
REVISED BY: ML/KM
DATE REVISED: 7/31/09

LAST REVISION | DATE PLOTTED => 14-DEC-2009
07-31-09 | TIME PLOTTED => 14:01

BORDER LAST REVISED 4/11/2008 | RELATIVE BORDER SCALE IS IN INCHES 0 1 2 3 | USERNAME => trlenard | DGN FILE => 4163741a006.dgn | CU 04242 | EA 163741

NOTES:

1. FOR ACCURATE RIGHT OF WAY AND ACCESS DATA, CONTACT RIGHT OF WAY ENGINEERING AT THE DISTRICT OFFICE.
2. FOR NOTES, ABBREVIATIONS AND LEGEND, SEE SHEET D-1.

CALIFORNIA STATE FIRE MARSHAL APPROVED
Approval of this plan does not authorize or approve any omission or deviation from applicable regulations. Final approval is subject to field inspection. One set of approved plans shall be available on the project site at all times.
Reviewed by: STEPHEN GUARINO
Approval date: 12-14-09

Dist	COUNTY	ROUTE	POST MILES TOTAL PROJECT	SHEET No.	TOTAL SHEETS
04	SF	101	8.2/9.2	51	654

REGISTERED CIVIL ENGINEER — 7-31-09 DATE

JACK K. MONG No. C66151 Exp. 6-30-10 CIVIL — REGISTERED PROFESSIONAL ENGINEER — STATE OF CALIFORNIA

12-14-09
PLANS APPROVAL DATE

THE STATE OF CALIFORNIA OR ITS OFFICERS OR AGENTS SHALL NOT BE RESPONSIBLE FOR THE ACCURACY OR COMPLETENESS OF SCANNED COPIES OF THIS PLAN SHEET.

Arup PB JV
560 Mission Street, Suite 700
San Francisco, CA 94105

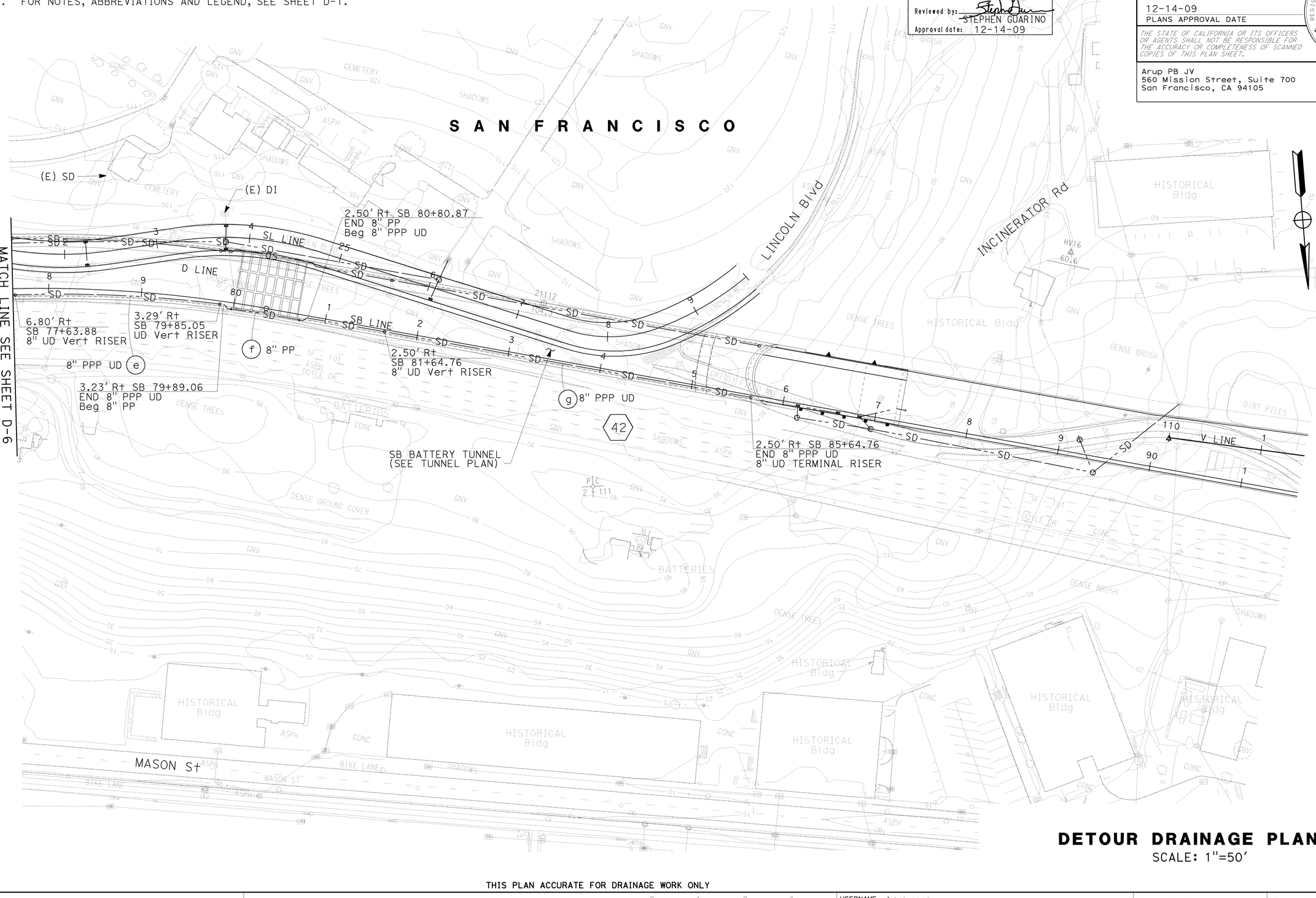

DETOUR DRAINAGE PLAN
SCALE: 1"=50'

D-7

THIS PLAN ACCURATE FOR DRAINAGE WORK ONLY

LAST REVISION | DATE PLOTTED => 14-DEC-2009
07-31-09 | TIME PLOTTED => 14:01

STATE OF CALIFORNIA - DEPARTMENT OF TRANSPORTATION | Caltrans

CONSULTANT FUNCTIONAL SUPERVISOR: ABOLFAZL EMADZADEH

CALCULATED-DESIGNED BY: KATIE MING
CHECKED BY: DUANNE GILMORE

REVISED BY: ML/KM
DATE REVISED: 7/31/09

BORDER LAST REVISED 4/11/2008

RELATIVE BORDER SCALE IS IN INCHES 0 1 2 3

USERNAME => trlenard
DGN FILE => 416374ia007.dgn

CU 04242

EA 163741

Dist	COUNTY	ROUTE	POST MILES TOTAL PROJECT	SHEET No.	TOTAL SHEETS
04	SF	101	8.2/9.2	52	654

REGISTERED CIVIL ENGINEER — 7-31-09 DATE

12-14-09
PLANS APPROVAL DATE

REGISTERED PROFESSIONAL ENGINEER — JACK K. MONG — No. C66151 — Exp. 6-30-10 — CIVIL — STATE OF CALIFORNIA

THE STATE OF CALIFORNIA OR ITS OFFICERS OR AGENTS SHALL NOT BE RESPONSIBLE FOR THE ACCURACY OR COMPLETENESS OF SCANNED COPIES OF THIS PLAN SHEET.

Arup PB JV
560 Mission Street, Suite 700
San Francisco, CA 94105

CALIFORNIA STATE FIRE MARSHAL APPROVED

Approval of this plan does not authorize or approve any omission or deviation from applicable regulations. Final approval is subject to field inspection. One set of approved plans shall be available on the project site at all times.

Reviewed by: STEPHEN GUARINO

Approval date: 12-14-09

NOTES:

1. FOR ACCURATE RIGHT OF WAY AND ACCESS DATA, CONTACT RIGHT OF WAY ENGINEERING AT THE DISTRICT OFFICE.
2. FOR NOTES, ABBREVIATIONS AND LEGEND, SEE SHEET D-1.

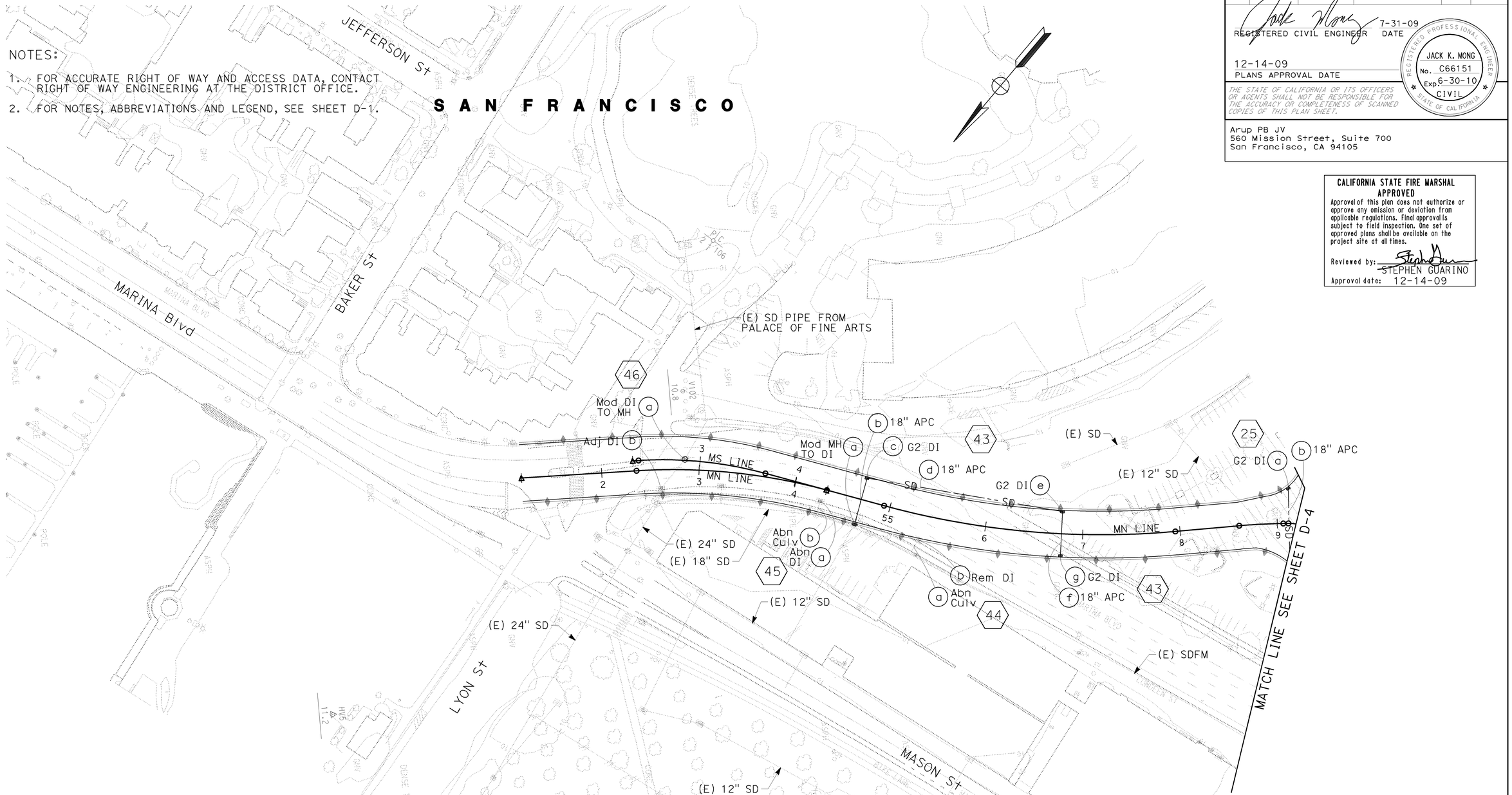

DETOUR DRAINAGE PLAN

SCALE: 1"=50'

THIS PLAN ACCURATE FOR DRAINAGE WORK ONLY.

D-8

CALCULATED-DESIGNED BY	CHECKED BY	REVISED BY	DATE REVISED
KATIE MING	DUANNE GILMORE	ML/KM	7/31/09

CONSULTANT FUNCTIONAL SUPERVISOR: ABOLFAZL EMADZADEH

STATE OF CALIFORNIA - DEPARTMENT OF TRANSPORTATION

Caltrans

LAST REVISION — DATE PLOTTED => 14-DEC-2009 — TIME PLOTTED => 14:01 — 07-31-09

BORDER LAST REVISED 4/11/2008

RELATIVE BORDER SCALE IS IN INCHES 0 1 2 3

USERNAME => trlenard
DGN FILE => 416374ia008.dgn

CU 04242

EA 163741

NOTES:

ELEVATIONS SHOWN ARE BASED ON NORTH AMERICAN VERTICAL DATUM OF 1988 (NAVD 88).

Dist	COUNTY	ROUTE	POST MILES TOTAL PROJECT	SHEET No.	TOTAL SHEETS
04	SF	101	8.2/9.2	53	654

7-31-09
REGISTERED CIVIL ENGINEER DATE

JACK K. MONG
No. C66151
Exp. 6-30-10
CIVIL
REGISTERED PROFESSIONAL ENGINEER
STATE OF CALIFORNIA

12-14-09
PLANS APPROVAL DATE

THE STATE OF CALIFORNIA OR ITS OFFICERS OR AGENTS SHALL NOT BE RESPONSIBLE FOR THE ACCURACY OR COMPLETENESS OF SCANNED COPIES OF THIS PLAN SHEET.

Arup PB JV
560 Mission Street, Suite 700
San Francisco, CA 94105

CALIFORNIA STATE FIRE MARSHAL
APPROVED
Approval of this plan does not authorize or approve any omission or deviation from applicable regulations. Final approval is subject to field inspection. One set of approved plans shall be available on the project site at all times.
Reviewed by: STEPHEN GUARINO
Approval date: 12-14-09

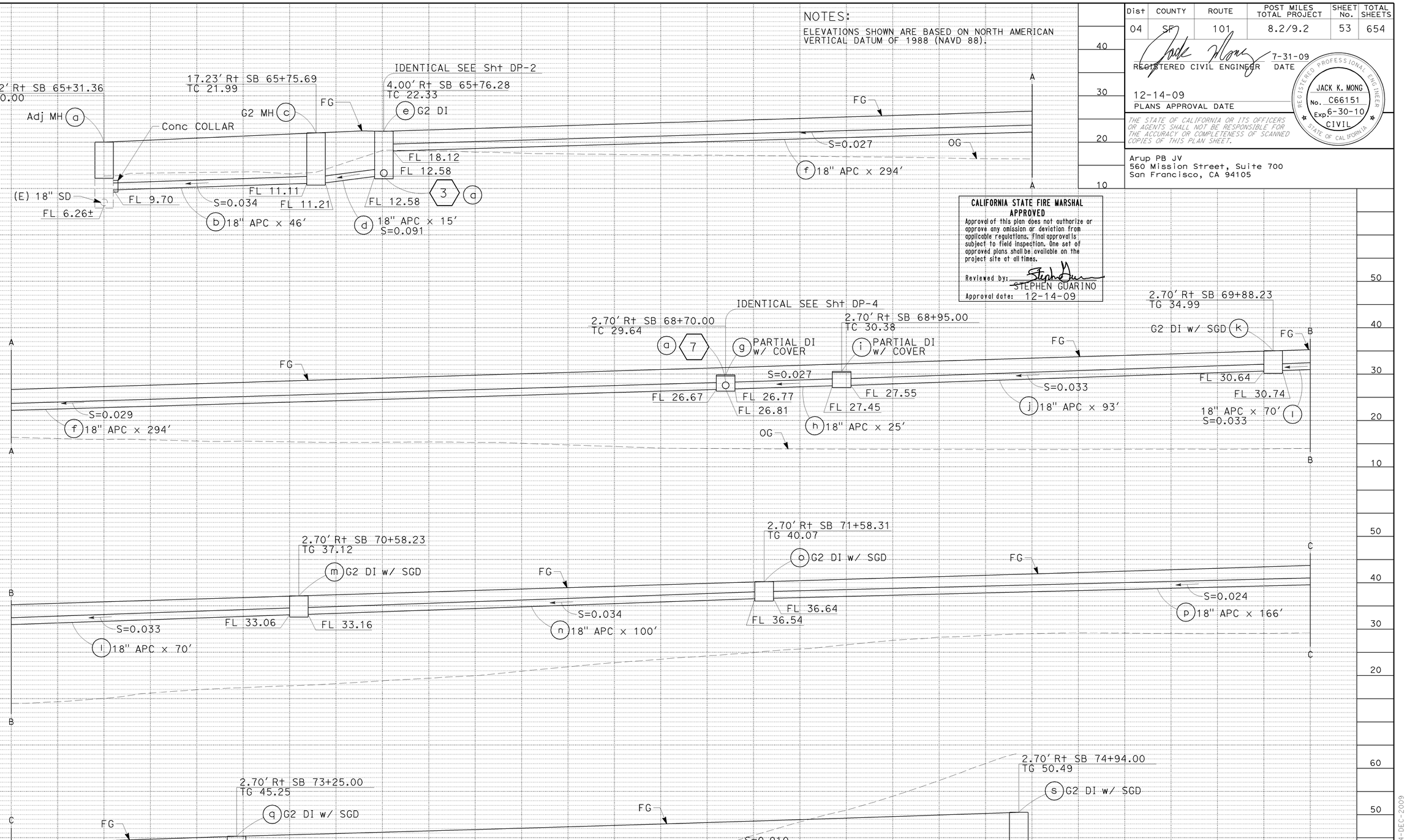

DRAINAGE SYSTEM No. 1

DRAINAGE PROFILE

SCALE: 1"=10'

DP-1

STATE OF CALIFORNIA - DEPARTMENT OF TRANSPORTATION
CONSULTANT FUNCTIONAL SUPERVISOR: ABOLFAZL EMADZADEH
CALCULATED-DESIGNED BY: KATIE MING
CHECKED BY: DUANNE GILMORE
REVISED BY: ML/KM
DATE REVISED: 7/31/09

LAST REVISION DATE PLOTTED => 14-DEC-2009
TIME PLOTTED => 14:01
07-31-09

BORDER LAST REVISED 4/11/2008
RELATIVE BORDER SCALE IS IN INCHES 0 1 2 3
USERNAME => trienard
DGN FILE => 416374ib001.dgn
CU 04242
EA 163741

Dist	COUNTY	ROUTE	POST MILES TOTAL PROJECT	SHEET No.	TOTAL SHEETS
04	SF	101	8.2/9.2	54	654

REGISTERED CIVIL ENGINEER — 7-31-09 DATE

12-14-09
PLANS APPROVAL DATE

JACK K. MONG No. C66151 Exp. 6-30-10 CIVIL — REGISTERED PROFESSIONAL ENGINEER — STATE OF CALIFORNIA

THE STATE OF CALIFORNIA OR ITS OFFICERS OR AGENTS SHALL NOT BE RESPONSIBLE FOR THE ACCURACY OR COMPLETENESS OF SCANNED COPIES OF THIS PLAN SHEET.

Arup PB JV
560 Mission Street, Suite 700
San Francisco, CA 94105

CALIFORNIA STATE FIRE MARSHAL APPROVED
Approval of this plan does not authorize or approve any omission or deviation from applicable regulations. Final approval is subject to field inspection. One set of approved plans shall be available on the project site at all times.
Reviewed by: STEPHEN GUARINO
Approval date: 12-14-09

NOTES:
ELEVATIONS SHOWN ARE BASED ON NORTH AMERICAN VERTICAL DATUM OF 1988 (NAVD 88).

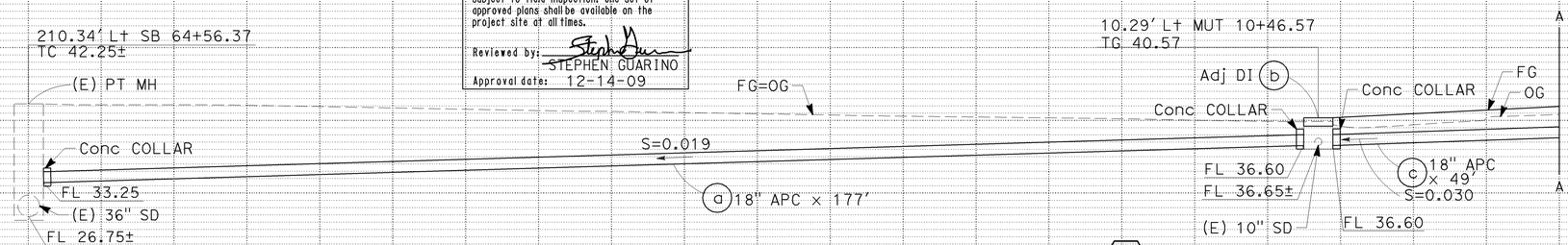

DRAINAGE SYSTEM No. 2

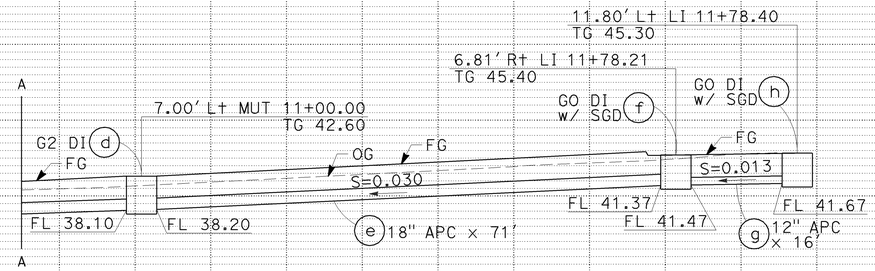

DRAINAGE SYSTEM No. 2

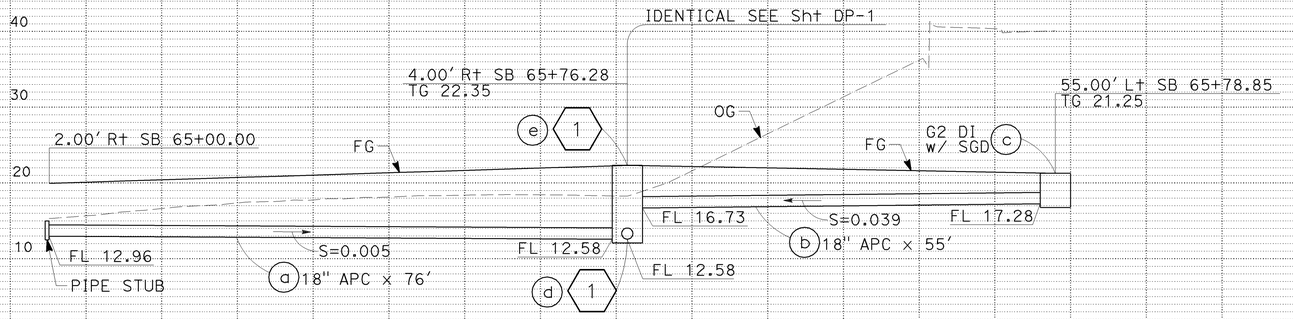

DRAINAGE SYSTEM No. 3

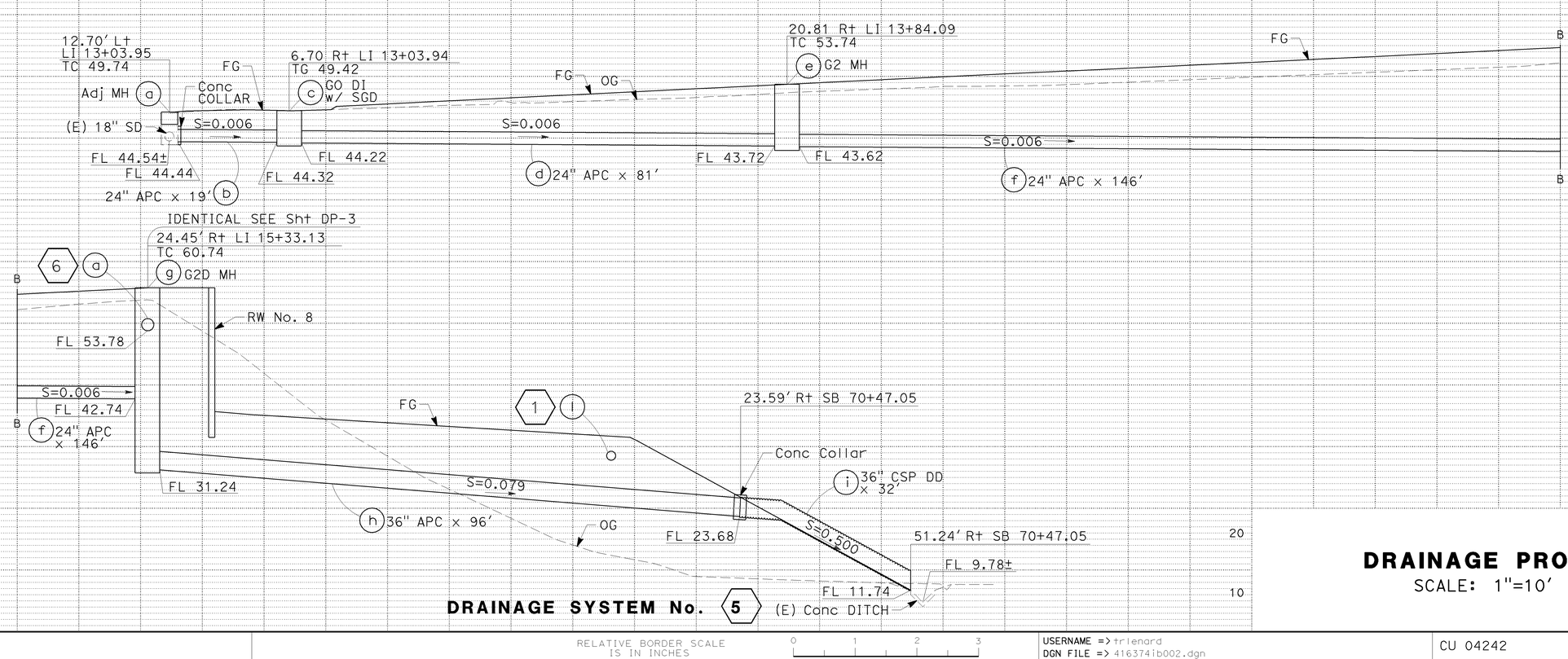

DRAINAGE SYSTEM No. 5

DRAINAGE PROFILE
SCALE: 1"=10'

DP-2

LAST REVISION DATE PLOTTED => 14-DEC-2009
07-31-09 TIME PLOTTED => 14:01

STATE OF CALIFORNIA - DEPARTMENT OF TRANSPORTATION
CONSULTANT FUNCTIONAL SUPERVISOR: ABOLFAZL EMADZADEH
CALCULATED-DESIGNED BY: KATIE MING
CHECKED BY: DUANNE GILMORE
REVISED BY: ML/KM
DATE REVISED: 7/31/09

BORDER LAST REVISED 4/11/2008
RELATIVE BORDER SCALE IS IN INCHES 0 1 2 3
USERNAME => trlenard
DGN FILE => 416374ib002.dgn
CU 04242
EA 163741

Dist	COUNTY	ROUTE	POST MILES TOTAL PROJECT	SHEET No.	TOTAL SHEETS
04	SF	101	8.2/9.2	55	654

REGISTERED CIVIL ENGINEER — DATE 7-31-09

12-14-09
PLANS APPROVAL DATE

REGISTERED PROFESSIONAL ENGINEER — JACK K. MONG — No. C66151 — Exp. 6-30-10 — CIVIL — STATE OF CALIFORNIA

THE STATE OF CALIFORNIA OR ITS OFFICERS OR AGENTS SHALL NOT BE RESPONSIBLE FOR THE ACCURACY OR COMPLETENESS OF SCANNED COPIES OF THIS PLAN SHEET.

Arup PB JV
560 Mission Street, Suite 700
San Francisco, CA 94105

CALIFORNIA STATE FIRE MARSHAL APPROVED

Approval of this plan does not authorize or approve any omission or deviation from applicable regulations. Final approval is subject to field inspection. One set of approved plans shall be available on the project site at all times.

Reviewed by: STEPHEN GUARINO

Approval date: 12-14-09

NOTES:

ELEVATIONS SHOWN ARE BASED ON NORTH AMERICAN VERTICAL DATUM OF 1988 (NAVD 88).

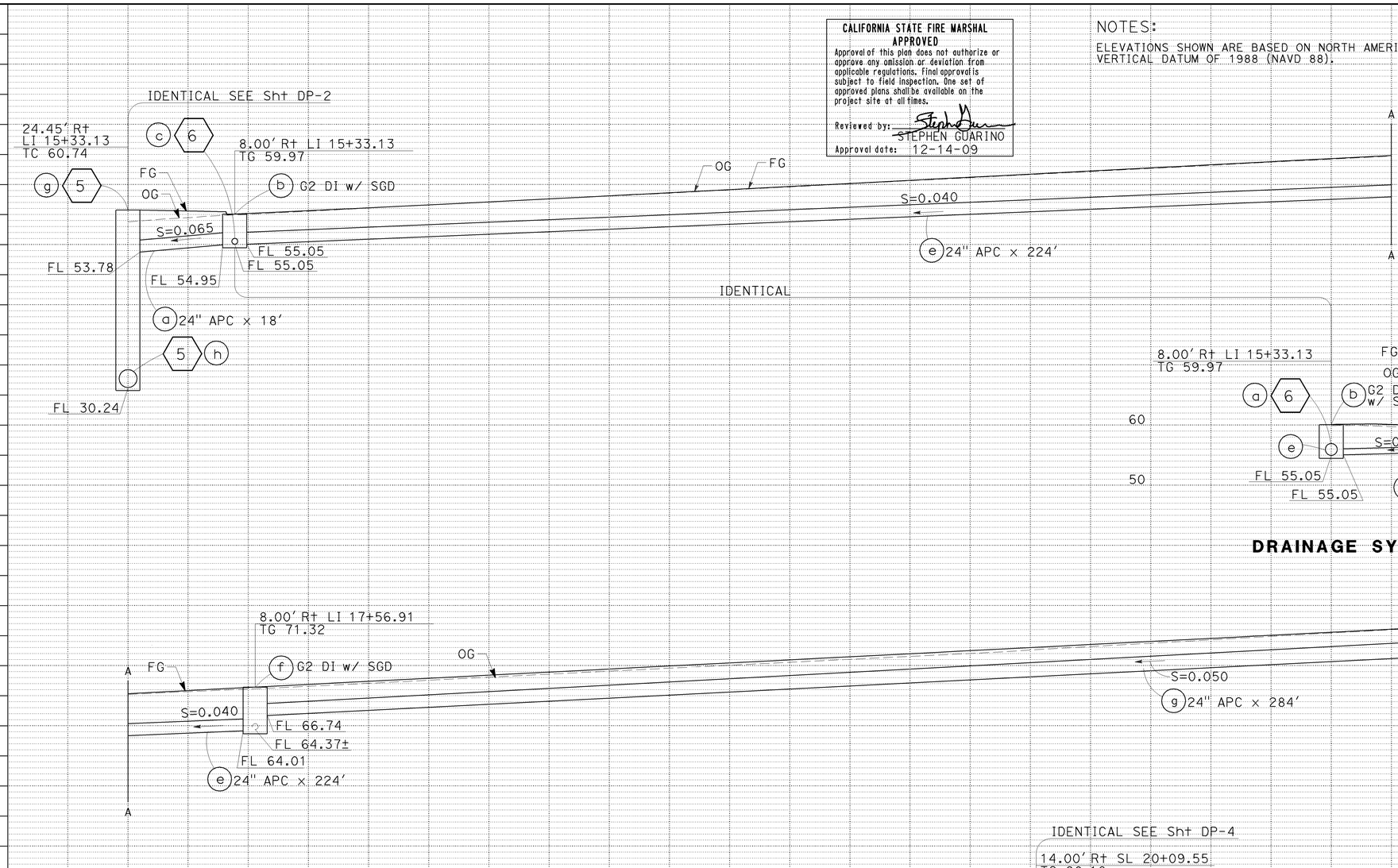

DRAINAGE PROFILE

SCALE: 1"=10'

DP-3

LAST REVISION | DATE PLOTTED => 14-DEC-2009
07-31-09 | TIME PLOTTED => 14:01

STATE OF CALIFORNIA - DEPARTMENT OF TRANSPORTATION
CONSULTANT FUNCTIONAL SUPERVISOR: ABOLFAZL EMADZADEH
CALCULATED-DESIGNED BY: KATIE MING
CHECKED BY: DUANNE GILMORE
REVISED BY | DATE REVISED: ML/KM | 7/31/09

BORDER LAST REVISED 4/11/2008 | RELATIVE BORDER SCALE IS IN INCHES 0 1 2 3 | USERNAME => trienard | DGN FILE => 4163741b003.dgn | CU 04242 | EA 163741

NOTES:
ELEVATIONS SHOWN ARE BASED ON NORTH AMERICAN VERTICAL DATUM OF 1988 (NAVD 88).

Dist	COUNTY	ROUTE	POST MILES TOTAL PROJECT	SHEET No.	TOTAL SHEETS
04	SF	101	8.2/9.2	56	654

7-31-09
REGISTERED CIVIL ENGINEER DATE

JACK K. MONG
No. C66151
Exp. 6-30-10
CIVIL
REGISTERED PROFESSIONAL ENGINEER
STATE OF CALIFORNIA

12-14-09
PLANS APPROVAL DATE

THE STATE OF CALIFORNIA OR ITS OFFICERS OR AGENTS SHALL NOT BE RESPONSIBLE FOR THE ACCURACY OR COMPLETENESS OF SCANNED COPIES OF THIS PLAN SHEET.

Arup PB JV
560 Mission Street, Suite 700
San Francisco, CA 94105

CALIFORNIA STATE FIRE MARSHAL
APPROVED
Approval of this plan does not authorize or approve any omission or deviation from applicable regulations. Final approval is subject to field inspection. One set of approved plans shall be available on the project site at all times.
Reviewed by: STEPHEN GUARINO
Approval date: 12-14-09

MATCH LINE SEE SHEET DP-3

14.00' Lt SL 22+23.44
TG 93.32
(p) G2 DI w/ SGD
OG
FG
S=0.021
(o) 18" APC x 149'
TOP OF TUNNEL
FL 89.07
FL 89.17
FL 89.07±
(E) 15" SD
S=0.014
(q) 18" APC x 151'

IDENTICAL SEE Sht DP-5
4.59' Rt SL 23+74.63
TC 96.31
(c) 11
(r) G2 MH
OG
FG
S=0.021
FL 91.28
FL 91.38
FL 91.38
(q) 18" APC x 151'
S=0.023
(s) 18" APC x 233'

10.00' Lt SL 26+08.05
TC 100.95
FG
OG
(a) 13
Conc COLLAR
FG=OG
(t) G2 MH
32.97' Lt SL 26+11.41
TG 101.50±
(E) DI
S=0.023
FL 96.78
FL 96.88
FL 96.88
FL 98.10±
S=0.053
(s) 18" APC x 233'
(u) 12" APC x 23'
IDENTICAL

DRAINAGE SYSTEM No. 6

IDENTICAL SEE Sht DP-1
2.70' Rt SB 68+70.00
TC 29.64
(1) (g)
(1) (f)
OG
FG
55.00' Lt SB 68+70.00
TG 31.38
(b) G2 DI w/ SGD
S=0.018
FL 26.67
FL 26.81
FL 27.86
(a) 18" APC x 58'

DRAINAGE SYSTEM No. 7

10.00' Lt SL 26+08.05
TC 100.95
(s) 6
6
(t)
FG
OG
14.00' Rt SL 26+05.61
TC 100.68
(b) GO DI w/ SGD
FL 98.79
(a) 12" APC x 23'
S=0.083
TOP OF TUNNEL
FL 96.88

DRAINAGE SYSTEM No. 13

IDENTICAL SEE Sht DP-4
14.00' Rt SL 20+09.55
TG 90.18
(k) 6
6
(l)
FG
OG
16.15' Lt SL 20+09.63
TG 91.11
(b) GO DI w/ SGD
(c) Rem DI
S=0.044
(E) 6" SD
FL 89.16±
FL 84.95
FL 86.05
FL 87.25
(a) 12" APC x 27'

DRAINAGE SYSTEM No. 9

DRAINAGE PROFILE
SCALE: 1"=10'

DP-4

KATIE MING
DUANNE GILMORE
ABOLFAZL EMADZADEH
STATE OF CALIFORNIA - DEPARTMENT OF TRANSPORTATION
Caltrans

REVISED BY | DATE REVISED: ML/KM | 7/31/09
CALCULATED-DESIGNED BY | CHECKED BY

LAST REVISION 07-31-09
DATE PLOTTED => 14-DEC-2009
TIME PLOTTED => 14:01

BORDER LAST REVISED 4/11/2008
RELATIVE BORDER SCALE IS IN INCHES 0 1 2 3
USERNAME => trlenard
DGN FILE => 416374ib004.dgn
CU 04242
EA 163741

Dist	COUNTY	ROUTE	POST MILES TOTAL PROJECT	SHEET No.	TOTAL SHEETS
04	SF	101	8.2/9.2	57	654

REGISTERED CIVIL ENGINEER — 7-31-09 DATE

12-14-09
PLANS APPROVAL DATE

REGISTERED PROFESSIONAL ENGINEER — JACK K. MONG — No. C66151 — Exp. 6-30-10 — CIVIL — STATE OF CALIFORNIA

THE STATE OF CALIFORNIA OR ITS OFFICERS OR AGENTS SHALL NOT BE RESPONSIBLE FOR THE ACCURACY OR COMPLETENESS OF SCANNED COPIES OF THIS PLAN SHEET.

Arup PB JV
560 Mission Street, Suite 700
San Francisco, CA 94105

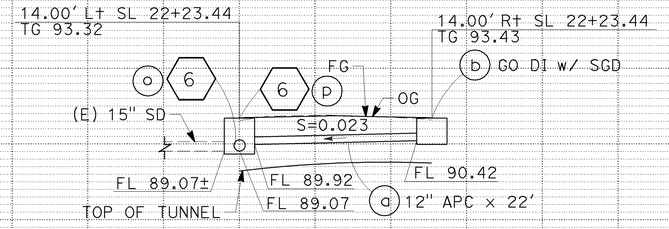

DRAINAGE SYSTEM No. 10

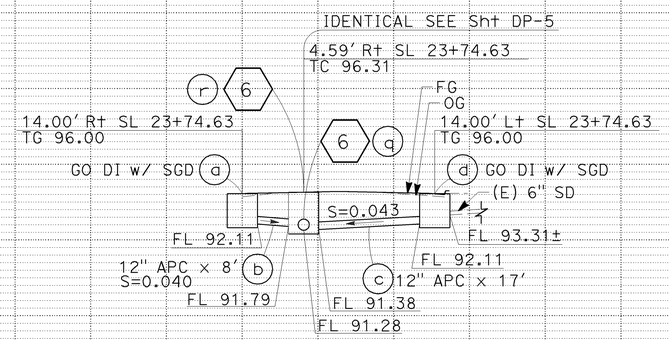

DRAINAGE SYSTEM No. 11

NOTES:

ELEVATIONS SHOWN ARE BASED ON NORTH AMERICAN VERTICAL DATUM OF 1988 (NAVD 88).

CALIFORNIA STATE FIRE MARSHAL APPROVED

Approval of this plan does not authorize or approve any omission or deviation from applicable regulations. Final approval is subject to field inspection. One set of approved plans shall be available on the project site at all times.

Reviewed by: STEPHEN GUARINO

Approval date: 12-14-09

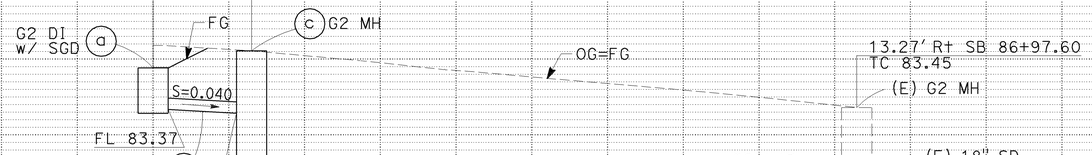

DRAINAGE SYSTEM No. 14

DRAINAGE PROFILE

SCALE: 1"=10'

DP-5

STATE OF CALIFORNIA - DEPARTMENT OF TRANSPORTATION
Caltrans

CONSULTANT FUNCTIONAL SUPERVISOR: ABOLFAZL EMADZADEH

CALCULATED-DESIGNED BY: KATIE MING
CHECKED BY: DUANNE GILMORE

REVISED BY: ML/KM
DATE REVISED: 7/31/09

LAST REVISION DATE PLOTTED => 14-DEC-2009
07-31-09 TIME PLOTTED => 14:01

BORDER LAST REVISED 4/11/2008

RELATIVE BORDER SCALE IS IN INCHES 0 1 2 3

USERNAME => trlenard
DGN FILE => 416374ib005.dgn

CU 04242

EA 163741

NOTES:

ELEVATIONS SHOWN ARE BASED ON NORTH AMERICAN VERTICAL DATUM OF 1988 (NAVD 88).

CALIFORNIA STATE FIRE MARSHAL APPROVED

Approval of this plan does not authorize or approve any omission or deviation from applicable regulations. Final approval is subject to field inspection. One set of approved plans shall be available on the project site at all times.

Reviewed by: STEPHEN GUARINO

Approval date: 12-14-09

Dist	COUNTY	ROUTE	POST MILES TOTAL PROJECT	SHEET No.	TOTAL SHEETS
04	SF	101	8.2/9.2	58	654

Manish Dalia 7-31-09
REGISTERED CIVIL ENGINEER DATE

MANISH M. DALIA No. C74016 Exp. 6-30-11 CIVIL — REGISTERED PROFESSIONAL ENGINEER — STATE OF CALIFORNIA

12-14-09
PLANS APPROVAL DATE

THE STATE OF CALIFORNIA OR ITS OFFICERS OR AGENTS SHALL NOT BE RESPONSIBLE FOR THE ACCURACY OR COMPLETENESS OF SCANNED COPIES OF THIS PLAN SHEET.

Arup PB JV
560 Mission Street, Suite 700
San Francisco, CA 94105

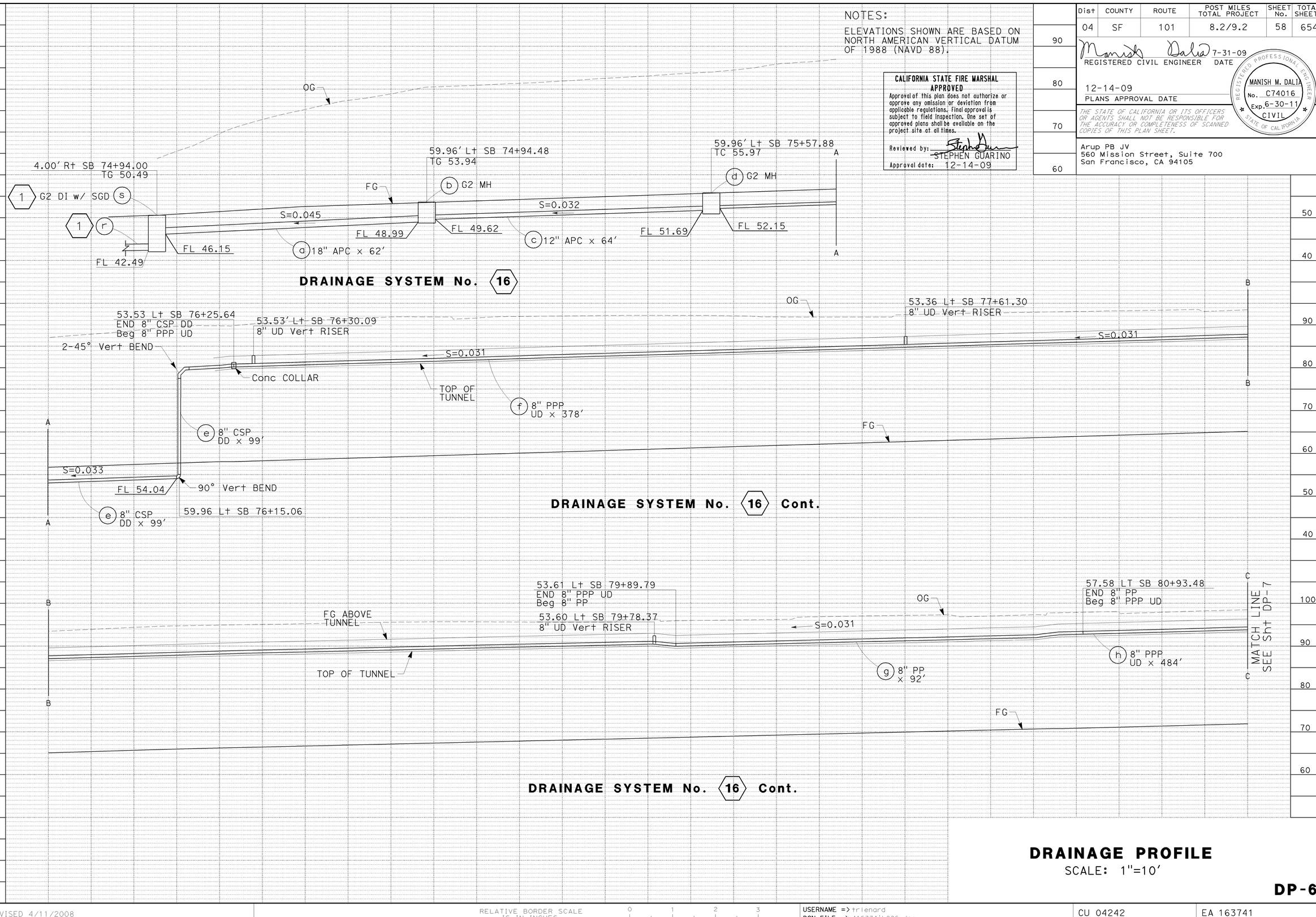

DRAINAGE PROFILE

SCALE: 1"=10'

DP-6

STATE OF CALIFORNIA - DEPARTMENT OF TRANSPORTATION
CONSULTANT FUNCTIONAL SUPERVISOR: ABOLFAZL EMADZADEH
CALCULATED-DESIGNED BY: KATIE MING
CHECKED BY: DUANNE GILMORE
REVISED BY: ML/KM
DATE REVISED: 7/31/09

LAST REVISION DATE PLOTTED => 14-DEC-2009
TIME PLOTTED => 14:01
07-31-09

BORDER LAST REVISED 4/11/2008
RELATIVE BORDER SCALE IS IN INCHES 0 1 2 3
USERNAME => trienard
DGN FILE => 4163741b006.dgn
CU 04242
EA 163741

NOTES:

ELEVATIONS SHOWN ARE BASED ON NORTH AMERICAN VERTICAL DATUM OF 1988 (NAVD 88).

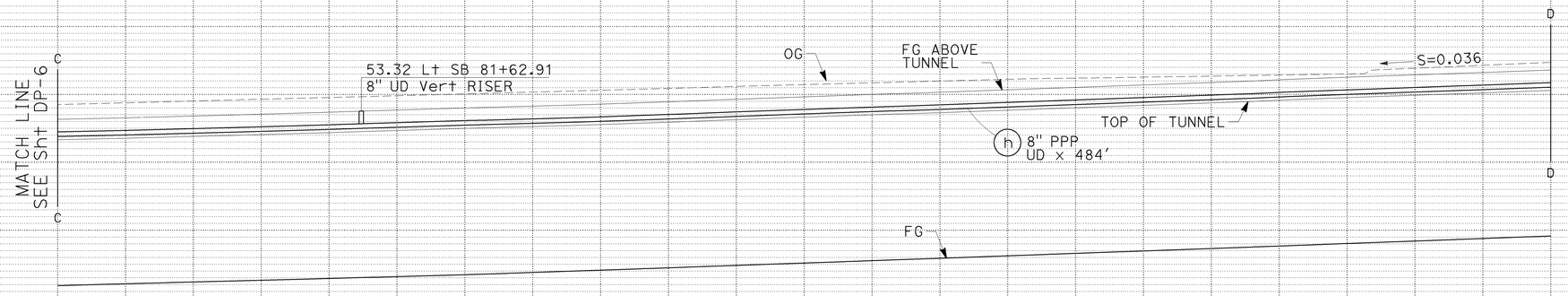

DRAINAGE SYSTEM No. (16) Cont.

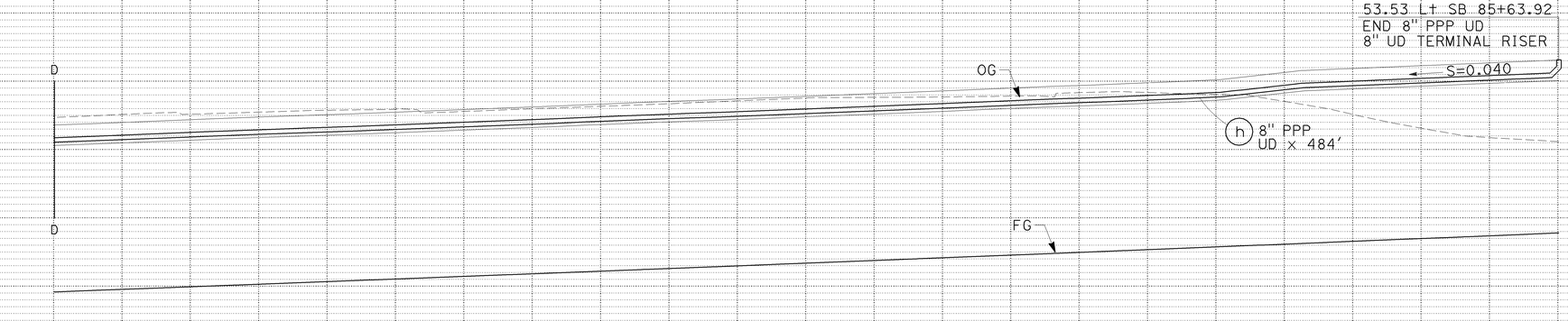

DRAINAGE SYSTEM No. (16) Cont.

Dist	COUNTY	ROUTE	POST MILES TOTAL PROJECT	SHEET No.	TOTAL SHEETS
04	SF	101	8.2/9.2	59	654

Manish Dalia 7-31-09
REGISTERED CIVIL ENGINEER DATE

12-14-09
PLANS APPROVAL DATE

REGISTERED PROFESSIONAL ENGINEER
MANISH M. DALIA
No. C74016
Exp. 6-30-11
CIVIL
STATE OF CALIFORNIA

THE STATE OF CALIFORNIA OR ITS OFFICERS OR AGENTS SHALL NOT BE RESPONSIBLE FOR THE ACCURACY OR COMPLETENESS OF SCANNED COPIES OF THIS PLAN SHEET.

Arup PB JV
560 Mission Street, Suite 700
San Francisco, CA 94105

CALIFORNIA STATE FIRE MARSHAL APPROVED

Approval of this plan does not authorize or approve any omission or deviation from applicable regulations. Final approval is subject to field inspection. One set of approved plans shall be available on the project site at all times.

Reviewed by: STEPHEN GUARINO
Approval date: 12-14-09

DRAINAGE PROFILE

SCALE: 1"=10'

DP-7

CALCULATED-DESIGNED BY: KATIE MING
CHECKED BY: DUANNE GILMORE
REVISED BY: ML/KM
DATE REVISED: 7/31/09
CONSULTANT FUNCTIONAL SUPERVISOR: ABOLFAZL EMADZADEH
STATE OF CALIFORNIA - DEPARTMENT OF TRANSPORTATION
Caltrans

LAST REVISION | DATE PLOTTED => 14-DEC-2009
07-31-09 | TIME PLOTTED => 14:01

BORDER LAST REVISED 4/11/2008
RELATIVE BORDER SCALE IS IN INCHES 0 1 2 3
USERNAME => trienard
DGN FILE => 4163741b007.dgn
CU 04242
EA 163741

Dist	COUNTY	ROUTE	POST MILES TOTAL PROJECT	SHEET No.	TOTAL SHEETS
04	SF	101	8.2/9.2	60	654

REGISTERED CIVIL ENGINEER — 7-31-09 DATE

12-14-09
PLANS APPROVAL DATE

JACK K. MONG
No. C66151
Exp. 6-30-10
CIVIL
REGISTERED PROFESSIONAL ENGINEER
STATE OF CALIFORNIA

THE STATE OF CALIFORNIA OR ITS OFFICERS OR AGENTS SHALL NOT BE RESPONSIBLE FOR THE ACCURACY OR COMPLETENESS OF SCANNED COPIES OF THIS PLAN SHEET.

Arup PB JV
560 Mission Street, Suite 700
San Francisco, CA 94105

CALIFORNIA STATE FIRE MARSHAL APPROVED

Approval of this plan does not authorize or approve any omission or deviation from applicable regulations. Final approval is subject to field inspection. One set of approved plans shall be available on the project site at all times.

Reviewed by: STEPHEN GUARINO

Approval date: 12-14-09

NOTES:

ELEVATIONS SHOWN ARE BASED ON NORTH AMERICAN VERTICAL DATUM OF 1988 (NAVD 88).

DRAINAGE SYSTEM No. 21

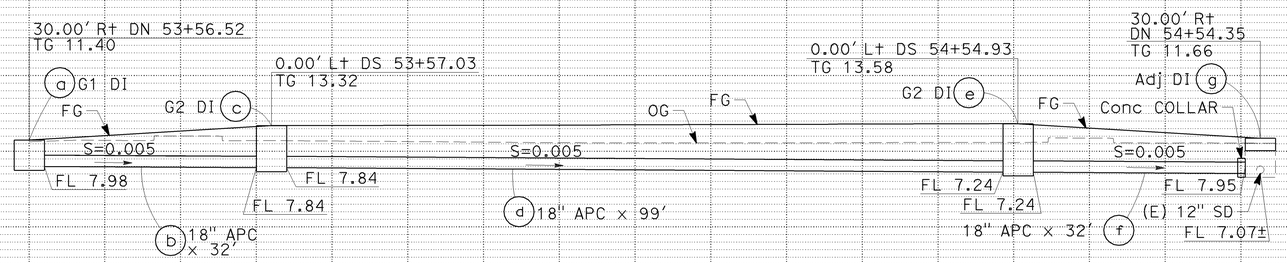

DRAINAGE SYSTEM No. 24

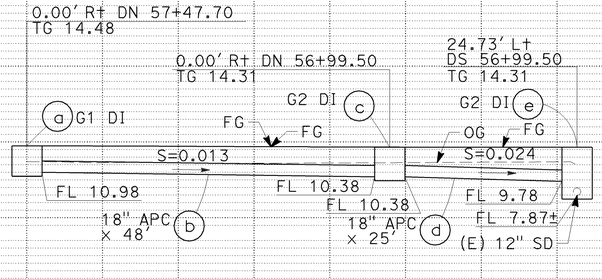

DRAINAGE SYSTEM No. 25

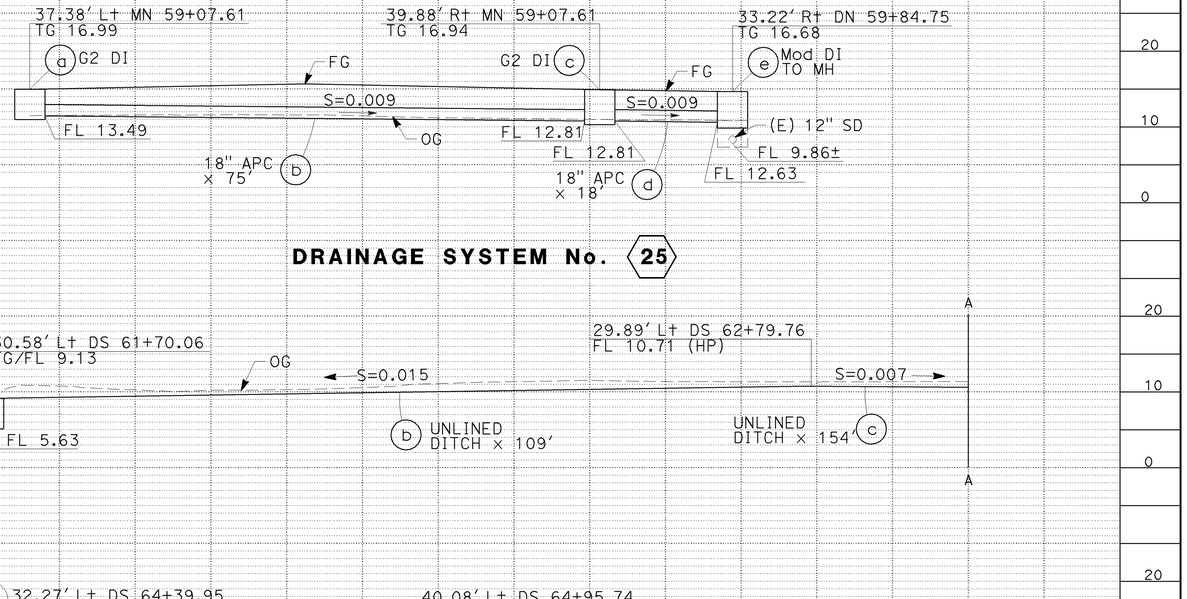

DRAINAGE SYSTEM No. 27 Cont

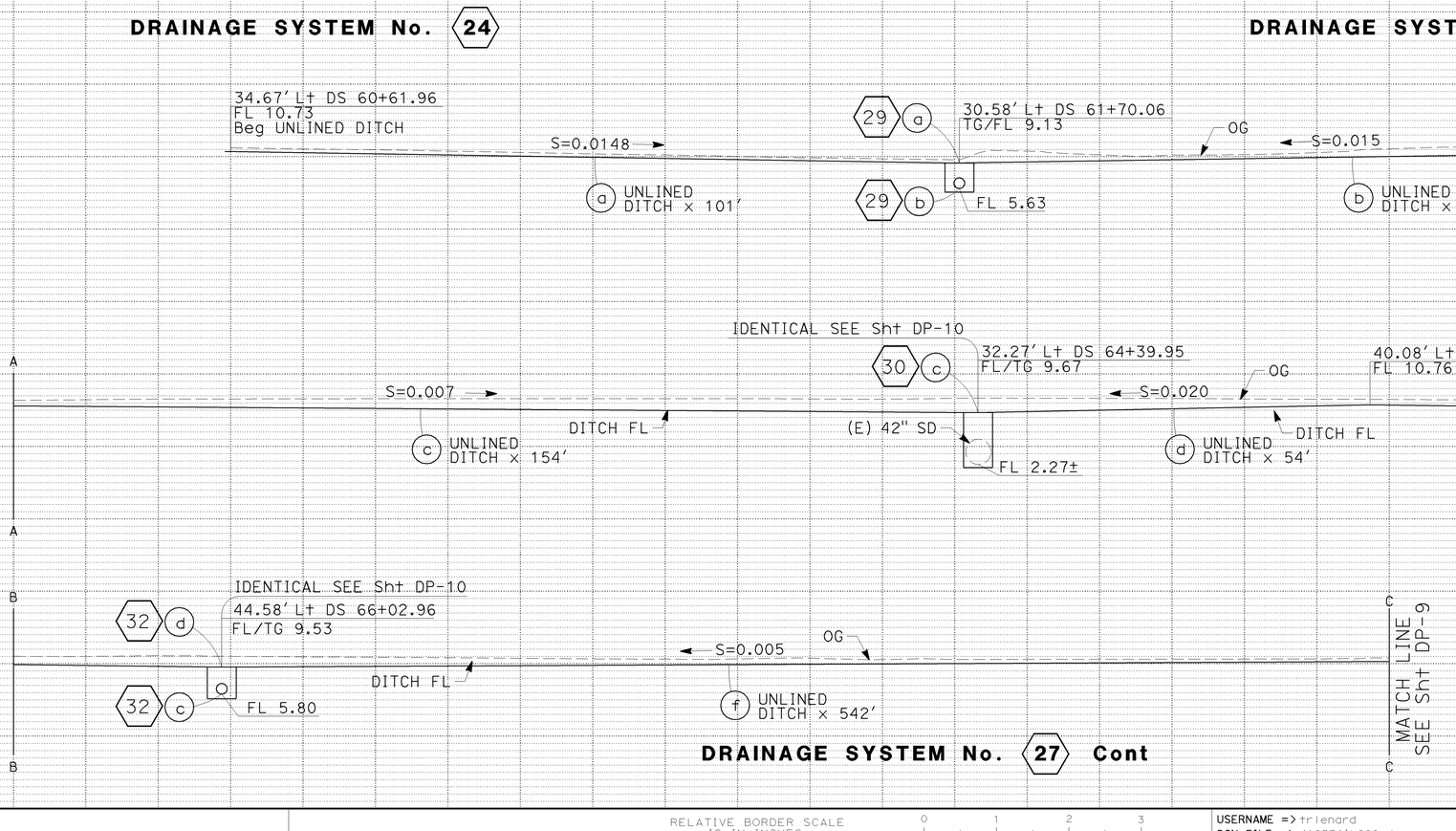

DETOUR DRAINAGE PROFILE

SCALE: 1"=10'

DP-8

STATE OF CALIFORNIA - DEPARTMENT OF TRANSPORTATION
CONSULTANT FUNCTIONAL SUPERVISOR: ABOLFAZL EMADZADEH
CALCULATED-DESIGNED BY: KATIE MING
CHECKED BY: DUANNE GILMORE
REVISED BY: ML/KM
DATE REVISED: 7/31/09

LAST REVISION | DATE PLOTTED => 14-DEC-2009 | TIME PLOTTED => 14:01 | 07-31-09

BORDER LAST REVISED 4/11/2008 | RELATIVE BORDER SCALE IS IN INCHES 0 1 2 3 | USERNAME => trlenard | DGN FILE => 4163741b008.dgn | CU 04242 | EA 163741

NOTES:

ELEVATIONS SHOWN ARE BASED ON NORTH AMERICAN VERTICAL DATUM OF 1988 (NAVD 88).

Dist	COUNTY	ROUTE	POST MILES TOTAL PROJECT	SHEET No.	TOTAL SHEETS
04	SF	101	8.2/9.2	61	654

REGISTERED CIVIL ENGINEER — 7-31-09 DATE

12-14-09
PLANS APPROVAL DATE

JACK K. MONG No. C66151 Exp. 6-30-10 CIVIL — REGISTERED PROFESSIONAL ENGINEER — STATE OF CALIFORNIA

THE STATE OF CALIFORNIA OR ITS OFFICERS OR AGENTS SHALL NOT BE RESPONSIBLE FOR THE ACCURACY OR COMPLETENESS OF SCANNED COPIES OF THIS PLAN SHEET.

Arup PB JV
560 Mission Street, Suite 700
San Francisco, CA 94105

MATCH LINE SEE Sht DP-8

DITCH FL — S=0.005 — OG — (f) UNLINED DITCH x 542′

55.80′ Lt D 69+01.63
FL 10.82 (GB)
S=0.007 — DITCH FL

S=0.007 — OG — (f) UNLINED DITCH x 542′

67.60′ Lt D 71+74.27
FL 12.60 (HP)
S=0.035 — (g) UNLINED DITCH x 196′

70.14′ Lt D 72+32.91
FL 10.71 (GB)
S=0.004

DITCH FL — S=0.004 — (g) UNLINED DITCH x 196′

76.07′ Lt D 73+69.77
FL/TG 10.06
(E) 10" SD — 35 e
FL 7.90±

S=0.004 — OG — DITCH FL — (h) UNLINED DITCH x 272′

IDENTICAL SEE Sht DP-11

78.86′ Lt D 76+42.84
FL/TG 8.92
a 37
(E) 10" SD
FL 6.17±

S=0.004 — DITCH FL — (h) UNLINED DITCH x 272′

DITCH FL — OG — S=0.003 — (i) UNLINED DITCH x 540′

DITCH FL — S=0.003 — OG — (i) UNLINED DITCH x 540′

56.40′ Lt D 82+13.74
FL 10.64
END UNLINED DITCH

OG — DITCH FL — S=0.003 — (i) UNLINED DITCH x 540′

DRAINAGE SYSTEM No. 27

CALIFORNIA STATE FIRE MARSHAL
APPROVED
Approval of this plan does not authorize or approve any omission or deviation from applicable regulations. Final approval is subject to field inspection. One set of approved plans shall be available on the project site at all times.
Reviewed by: STEPHEN GUARINO
Approval date: 12-14-09

DETOUR DRAINAGE PROFILE

SCALE: 1"=10′

DP-9

STATE OF CALIFORNIA - DEPARTMENT OF TRANSPORTATION
Caltrans
CONSULTANT FUNCTIONAL SUPERVISOR: ABOLFAZL EMADZADEH
CALCULATED-DESIGNED BY: KATIE MING
CHECKED BY: DUANNE GILMORE
REVISED BY: ML/KM
DATE REVISED: 7/31/09

LAST REVISION DATE PLOTTED => 14-DEC-2009
TIME PLOTTED => 14:02
07-31-09

BORDER LAST REVISED 4/11/2008
RELATIVE BORDER SCALE IS IN INCHES 0 1 2 3
USERNAME => trlenard
DGN FILE => 416374ib009.dgn
CU 04242
EA 163741

NOTES:

ELEVATIONS SHOWN ARE BASED ON NORTH AMERICAN VERTICAL DATUM OF 1988 (NAVD 88).

CALIFORNIA STATE FIRE MARSHAL APPROVED
Approval of this plan does not authorize or approve any omission or deviation from applicable regulations. Final approval is subject to field inspection. One set of approved plans shall be available on the project site at all times.
Reviewed by: STEPHEN GUARINO
Approval date: 12-14-09

Dist	COUNTY	ROUTE	POST MILES TOTAL PROJECT	SHEET No.	TOTAL SHEETS
04	SF	101	8.2/9.2	62	654

REGISTERED CIVIL ENGINEER — 7-31-09 DATE

JACK K. MONG No. C66151 Exp. 6-30-10 CIVIL — REGISTERED PROFESSIONAL ENGINEER — STATE OF CALIFORNIA

12-14-09
PLANS APPROVAL DATE

THE STATE OF CALIFORNIA OR ITS OFFICERS OR AGENTS SHALL NOT BE RESPONSIBLE FOR THE ACCURACY OR COMPLETENESS OF SCANNED COPIES OF THIS PLAN SHEET.

Arup PB JV
560 Mission Street, Suite 700
San Francisco, CA 94105

DRAINAGE SYSTEM No. 26

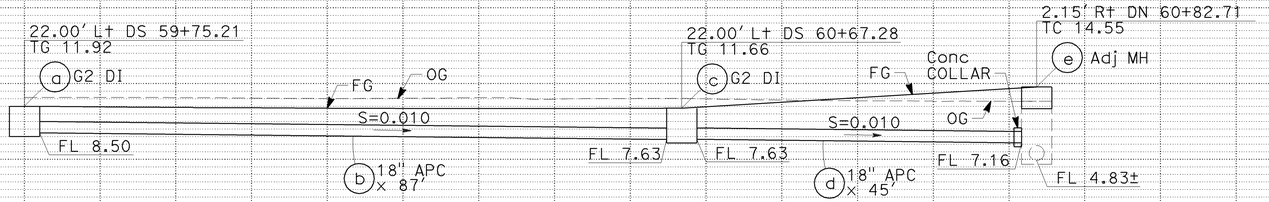

DRAINAGE SYSTEM No. 29

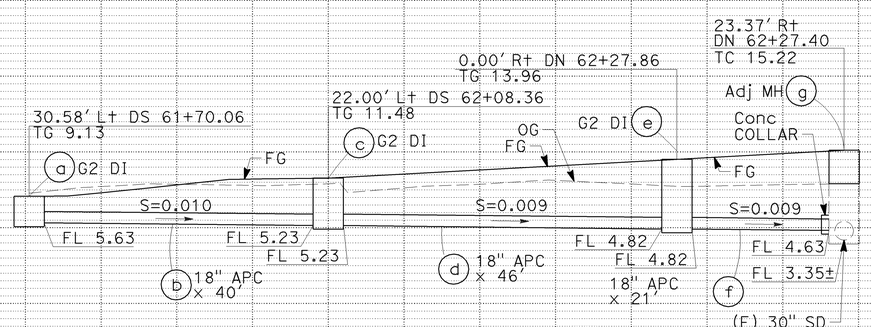

DRAINAGE SYSTEM No. 30

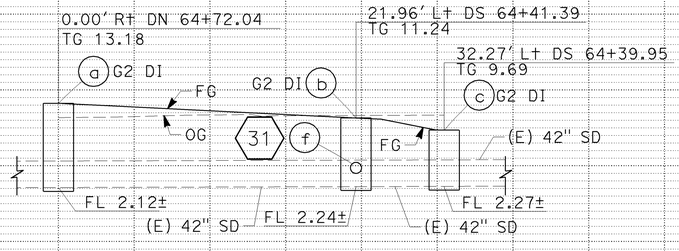

DRAINAGE SYSTEM No. 31

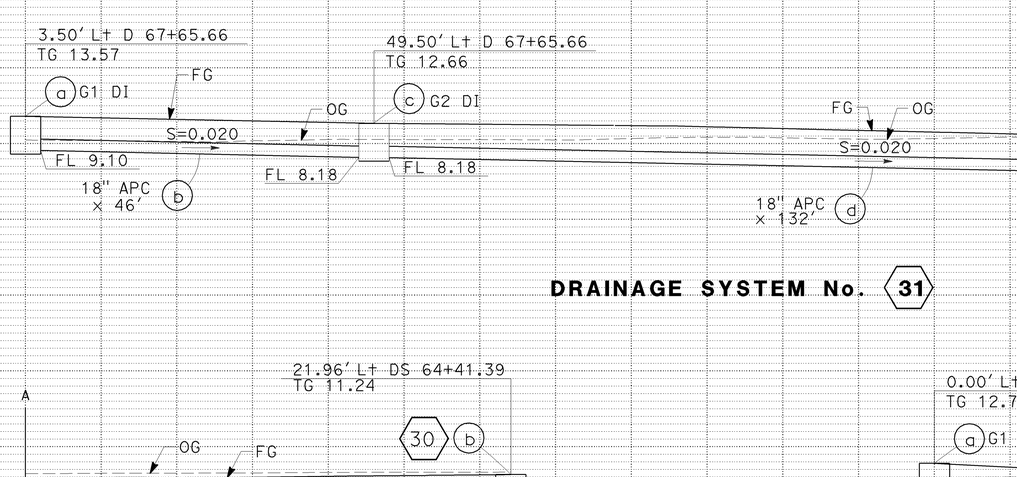

DRAINAGE SYSTEM No. 31

DRAINAGE SYSTEM No. 32

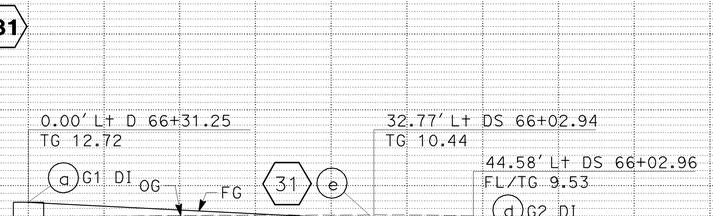

DETOUR DRAINAGE PROFILE

SCALE: 1"=10'

DP-10

REVISED BY: ML/KM — DATE REVISED: 7/31/09
CALCULATED-DESIGNED BY: KATIE MING
CHECKED BY: DUANNE GILMORE
CONSULTANT FUNCTIONAL SUPERVISOR: ABOLFAZL EMADZADEH
STATE OF CALIFORNIA - DEPARTMENT OF TRANSPORTATION

LAST REVISION DATE PLOTTED => 14-DEC-2009
TIME PLOTTED => 14:02
07-31-09

BORDER LAST REVISED 4/11/2008
RELATIVE BORDER SCALE IS IN INCHES 0 1 2 3
USERNAME => trienard
DGN FILE => 416374ib010.dgn
CU 04242
EA 163741

REGISTERED CIVIL ENGINEER — 7-31-09 DATE

12-14-09
PLANS APPROVAL DATE

REGISTERED PROFESSIONAL ENGINEER — JACK K. MONG — No. C66151 — Exp. 6-30-10 — CIVIL — STATE OF CALIFORNIA

THE STATE OF CALIFORNIA OR ITS OFFICERS OR AGENTS SHALL NOT BE RESPONSIBLE FOR THE ACCURACY OR COMPLETENESS OF SCANNED COPIES OF THIS PLAN SHEET.

Arup PB JV
560 Mission Street, Suite 700
San Francisco, CA 94105

CALIFORNIA STATE FIRE MARSHAL APPROVED

Approval of this plan does not authorize or approve any omission or deviation from applicable regulations. Final approval is subject to field inspection. One set of approved plans shall be available on the project site at all times.

Reviewed by: STEPHEN GUARINO

Approval date: 12-14-09

DRAINAGE SYSTEM No. 33

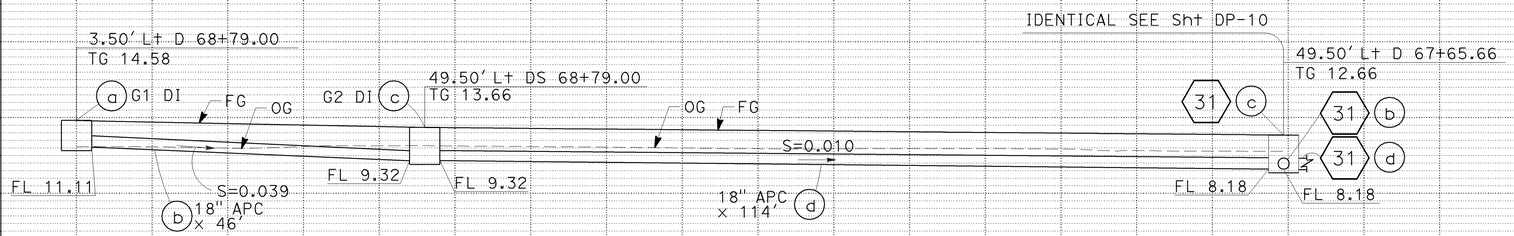

DRAINAGE SYSTEM No. 35

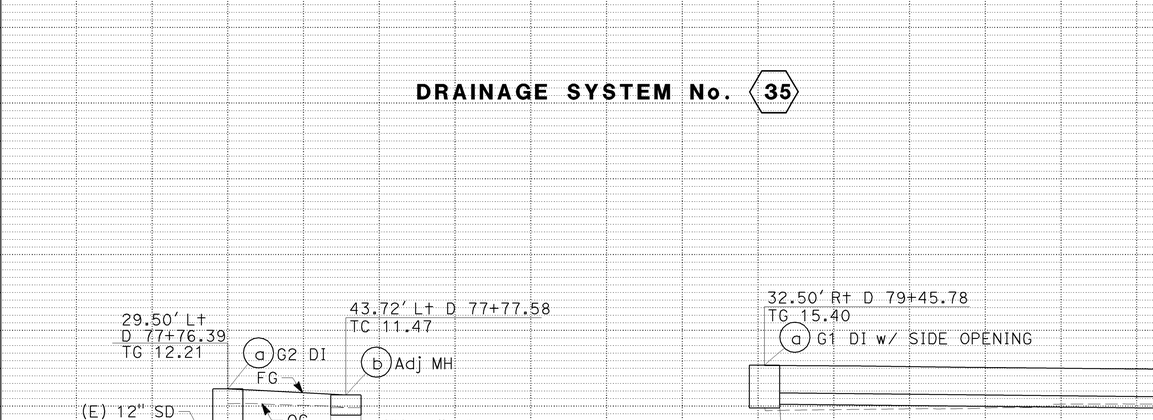

DRAINAGE SYSTEM No. 38

DRAINAGE SYSTEM No. 39

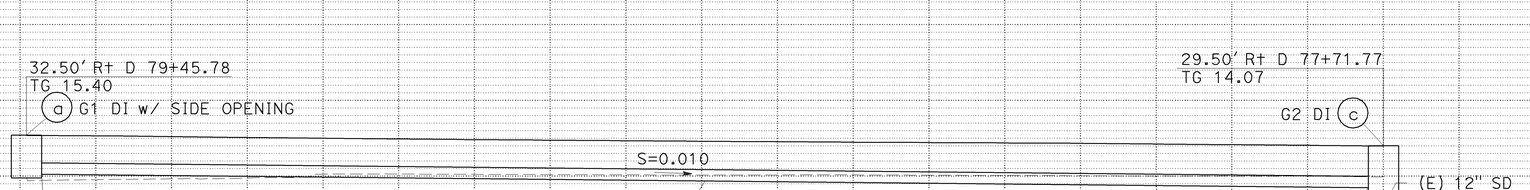

DRAINAGE SYSTEM No. 37

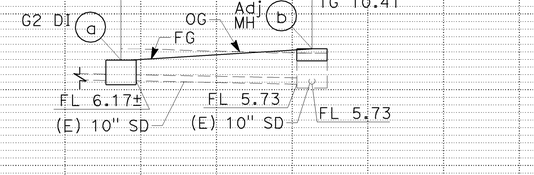

NOTES:

ELEVATIONS SHOWN ARE BASED ON NORTH AMERICAN VERTICAL DATUM OF 1988 (NAVD 88).

DETOUR DRAINAGE PROFILE

SCALE: 1"=10'

DP-11

LAST REVISION | DATE PLOTTED => 14-DEC-2009 | TIME PLOTTED => 14:02 | 07-31-09

STATE OF CALIFORNIA - DEPARTMENT OF TRANSPORTATION | CONSULTANT FUNCTIONAL SUPERVISOR: ABOLFAZL EMADZADEH | CALCULATED-DESIGNED BY: KATIE MING | CHECKED BY: DUANNE GILMORE | REVISED BY: ML/KM | DATE REVISED: 7/31/09

NOTES:

ELEVATIONS SHOWN ARE BASED ON NORTH AMERICAN VERTICAL DATUM OF 1988 (NAVD 88).

Dist	COUNTY	ROUTE	POST MILES TOTAL PROJECT	SHEET No.	TOTAL SHEETS
04	SF	101	8.2/9.2	64	654

7-31-09
REGISTERED CIVIL ENGINEER DATE

JACK K. MONG
No. C66151
Exp. 6-30-10
CIVIL
REGISTERED PROFESSIONAL ENGINEER
STATE OF CALIFORNIA

12-14-09
PLANS APPROVAL DATE

THE STATE OF CALIFORNIA OR ITS OFFICERS OR AGENTS SHALL NOT BE RESPONSIBLE FOR THE ACCURACY OR COMPLETENESS OF SCANNED COPIES OF THIS PLAN SHEET.

Arup PB JV
560 Mission Street, Suite 700
San Francisco, CA 94105

CALIFORNIA STATE FIRE MARSHAL
APPROVED
Approval of this plan does not authorize or approve any omission or deviation from applicable regulations. Final approval is subject to field inspection. One set of approved plans shall be available on the project site at all times.
Reviewed by: STEPHEN GUARINO
Approval date: 12-14-09

32.50' Rt D 79+45.78
TG 15.40
FL 14.40
39 a
DITCH FL
S=0.014
FG AT EP
a Conc DITCH x 650'
OG
FL 10.26
39 b

DRAINAGE SYSTEM No. 41

A
DITCH FL
FG AT EP
S=0.014
a Conc DITCH x 650'
OG
A

DRAINAGE SYSTEM No. 41

B
32.50' Rt D 84+40.00
FL 21.10 (GB)
S=0.014
DITCH FL
FG AT EP
S=0.0435
32.50' Rt D 85+87.87
FL 27.50
a Conc DITCH x 650'
OG
B

DRAINAGE SYSTEM No. 41

8.40' Rt SB 76+26.48
END 8" CSP DD
Beg 8" PPP UD
8.44' Rt SB 76+30.51
8" UD Vert RISER
OG
FG ABOVE TUNNEL
C
OG
2-45° Vert BEND
S=0.031
Conc COLLAR
TOP OF TUNNEL
FL 76.40
e 8" PPP UD x 363'
d 8" CSP DD x 94'
C

IDENTICAL SEE Sht DP-1
4.00' Rt SB 74+94.00
TG 50.49
SLOT DRAIN UNION BOX
4.00' Rt SB 74+92.00
TG 50.13
12.80' Rt SB 75+59.73
TC 52.19
1 G2 DI w/ SGD s
FG
FG
FG
c G2 MH
FG
S=0.006
S=0.019
1 r
FL 46.28
FL 47.69
FL 48.52
FL 50.30
90° Vert BEND
FL 42.49
FL 42.46
b 12" APC x 64'
d 8" CSP DD x 94'
13.78' Rt SB 76+20.20
FL 42.59
S=0.010
a 18" APC x 7'

C
6.80' Rt SB 77+63.88
8" UD Vert RISER
FG ABOVE TUNNEL
OG
S=0.031
TOP OF TUNNEL
e 8" PPP UD x 363'
3.23 RT SB 79+89.06
END 8" PPP UD
Beg 8" PP
3.29' Rt SB 79+85.05
8" UD Vert RISER
D
MATCH LINE SEE Sht DP-13
D
C

DRAINAGE SYSTEM No. 42 Cont

DETOUR DRAINAGE PROFILE

SCALE: 1"=10'

DP-12

LAST REVISION 07-31-09
DATE PLOTTED => 14-DEC-2009
TIME PLOTTED => 14:02

CALCULATED-DESIGNED BY: KATIE MING
CHECKED BY: DUANNE GILMORE
REVISED BY: ML/KM
DATE REVISED: 7/31/09
CONSULTANT FUNCTIONAL SUPERVISOR: ABOLFAZL EMADZADEH
STATE OF CALIFORNIA - DEPARTMENT OF TRANSPORTATION
Caltrans

BORDER LAST REVISED 4/11/2008
RELATIVE BORDER SCALE IS IN INCHES 0 1 2 3
USERNAME => trlenard
DGN FILE => 416374ib012.dgn
CU 04242
EA 163741

Dist	COUNTY	ROUTE	POST MILES TOTAL PROJECT	SHEET No.	TOTAL SHEETS
04	SF	101	8.2/9.2	65	654

REGISTERED CIVIL ENGINEER — 7-31-09 DATE

JACK K. MONG No. C66151 Exp. 6-30-10 CIVIL — REGISTERED PROFESSIONAL ENGINEER — STATE OF CALIFORNIA

12-14-09
PLANS APPROVAL DATE

THE STATE OF CALIFORNIA OR ITS OFFICERS OR AGENTS SHALL NOT BE RESPONSIBLE FOR THE ACCURACY OR COMPLETENESS OF SCANNED COPIES OF THIS PLAN SHEET.

Arup PB JV
560 Mission Street, Suite 700
San Francisco, CA 94105

NOTES:

ELEVATIONS SHOWN ARE BASED ON NORTH AMERICAN VERTICAL DATUM OF 1988 (NAVD 88).

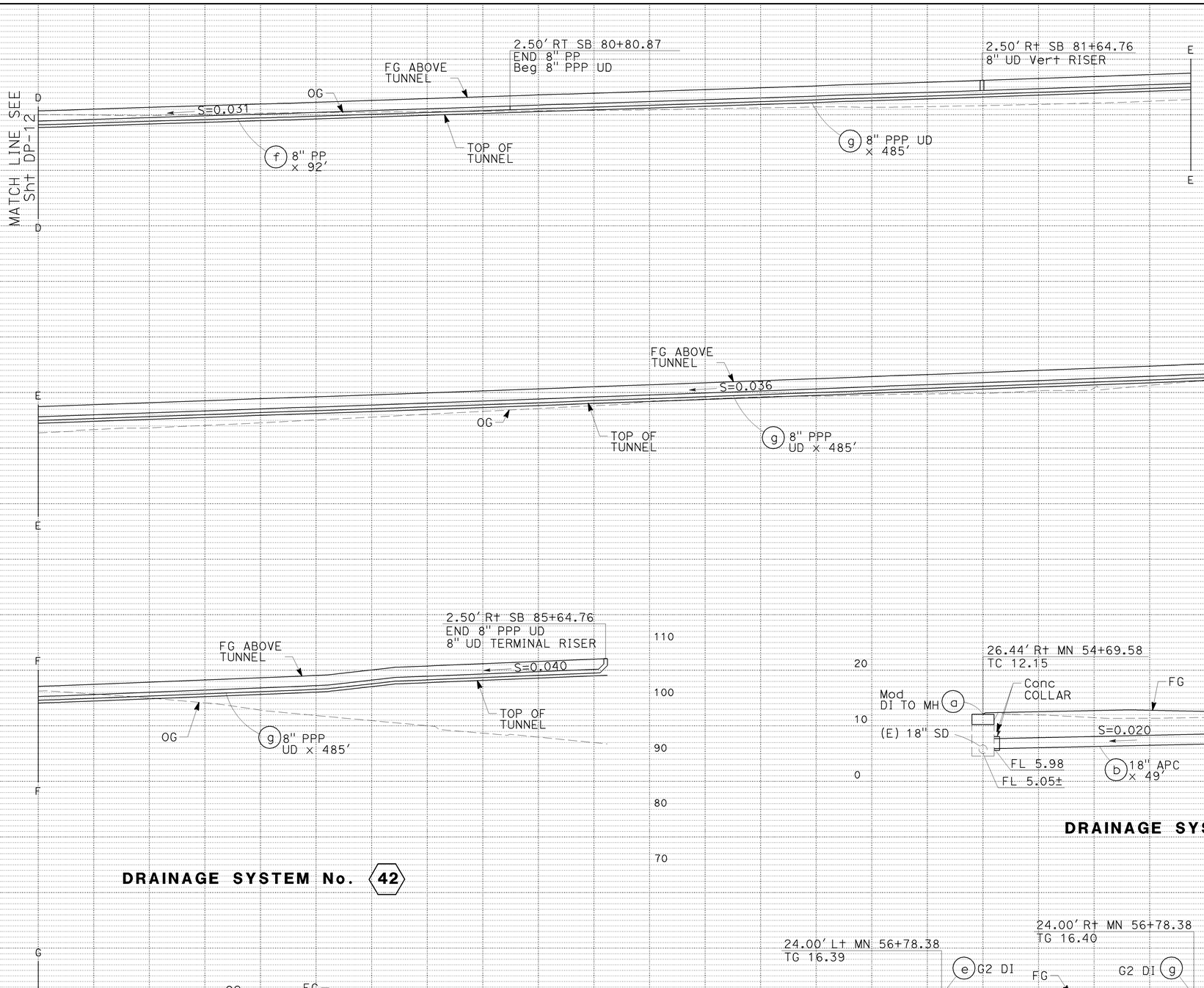

DRAINAGE SYSTEM No. 42

DRAINAGE SYSTEM No. 43

DRAINAGE SYSTEM No. 43

CALIFORNIA STATE FIRE MARSHAL
APPROVED
Approval of this plan does not authorize or approve any omission or deviation from applicable regulations. Final approval is subject to field inspection. One set of approved plans shall be available on the project site at all times.
Reviewed by: STEPHEN GUARINO
Approval date: 12-14-09

DETOUR DRAINAGE PROFILE

SCALE: 1"=10'

DP-13

LAST REVISION DATE PLOTTED => 14-DEC-2009
07-31-09 TIME PLOTTED => 14:02

STATE OF CALIFORNIA - DEPARTMENT OF TRANSPORTATION
CONSULTANT FUNCTIONAL SUPERVISOR: ABOLFAZL EMADZADEH
CALCULATED-DESIGNED BY: KATIE MING
CHECKED BY: DUANNE GILMORE
REVISED BY: ML/KM
DATE REVISED: 7/31/09

BORDER LAST REVISED 4/11/2008
RELATIVE BORDER SCALE IS IN INCHES 0 1 2 3
USERNAME => trlenard
DGN FILE => 416374ib013.dgn
CU 04242
EA 163741

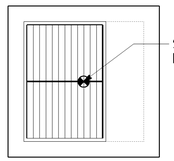

PLAN

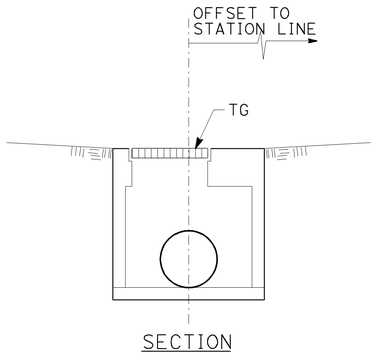

SECTION

FIELD INLET

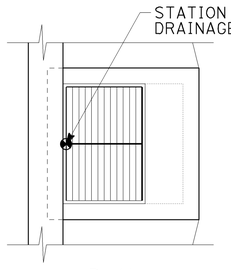

PLAN

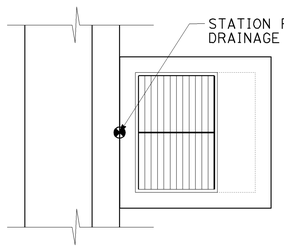

PLAN

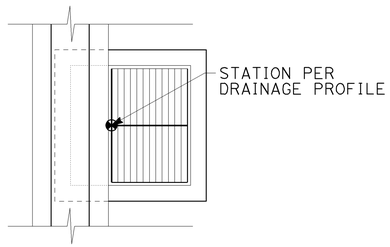

PLAN

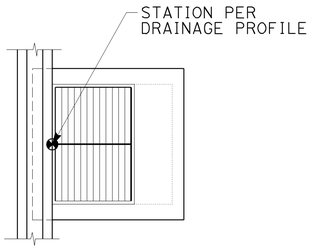

PLAN

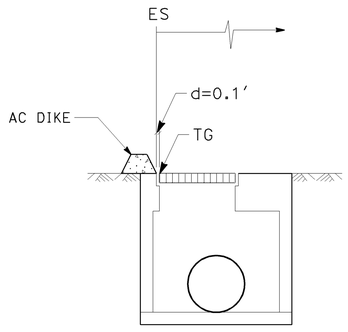

SECTION

INLET ADJACENT TO AC DIKE

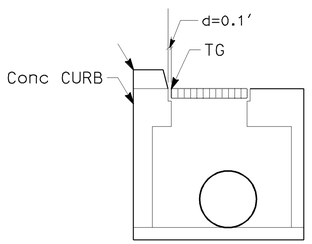

SECTION

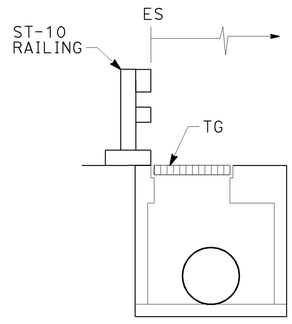

SECTION

INLET ADJACENT TO CONCRETE CURB OR ST-10 RAILING

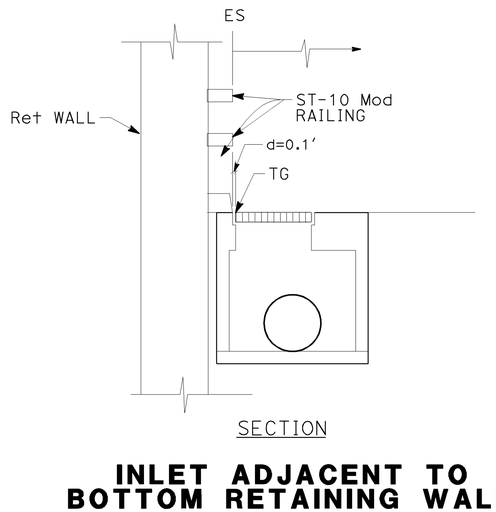

SECTION

INLET ADJACENT TO BOTTOM RETAINING WALL

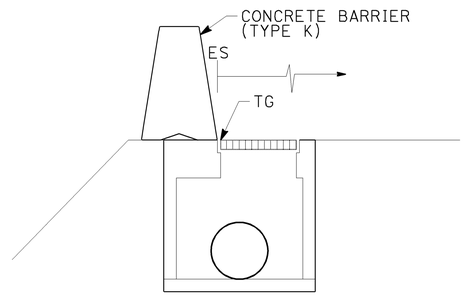

SECTION

INLET ADJACENT TO CONCRETE BARRIER (TYPE K)

DRAINAGE DETAILS

NO SCALE

DD-1

CALIFORNIA STATE FIRE MARSHAL APPROVED

Approval of this plan does not authorize or approve any omission or deviation from applicable regulations. Final approval is subject to field inspection. One set of approved plans shall be available on the project site at all times.

Reviewed by: STEPHEN GUARINO

Approval date: 12-14-09

Dist	COUNTY	ROUTE	POST MILES TOTAL PROJECT	SHEET No.	TOTAL SHEETS
04	SF	101	8.2/9.2	66	654

REGISTERED CIVIL ENGINEER — 7-31-09 DATE

REGISTERED PROFESSIONAL ENGINEER — JACK K. MONG — No. C66151 — Exp. 6-30-10 — CIVIL — STATE OF CALIFORNIA

12-14-09
PLANS APPROVAL DATE

THE STATE OF CALIFORNIA OR ITS OFFICERS OR AGENTS SHALL NOT BE RESPONSIBLE FOR THE ACCURACY OR COMPLETENESS OF SCANNED COPIES OF THIS PLAN SHEET.

Arup PB JV
560 Mission Street, Suite 700
San Francisco, CA 94105

REVISED BY	DATE REVISED
ML/KM	7/31/09

CALCULATED-DESIGNED BY: KATIE MING
CHECKED BY: DUANNE GILMORE

CONSULTANT FUNCTIONAL SUPERVISOR: ABOLFAZL EMADZADEH

STATE OF CALIFORNIA - DEPARTMENT OF TRANSPORTATION
Caltrans

LAST REVISION: DATE PLOTTED => 14-DEC-2009
07-31-09 TIME PLOTTED => 14:02

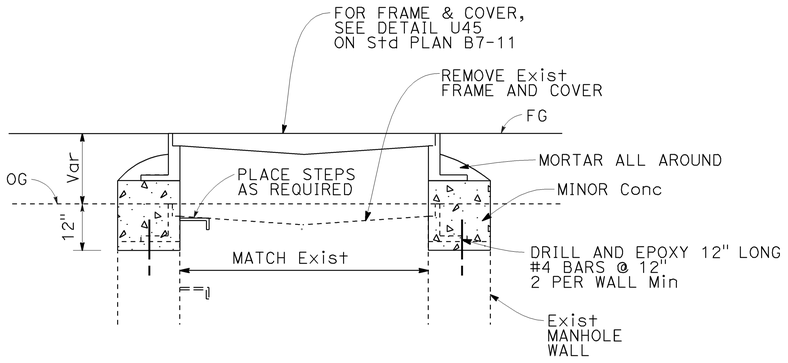

ADJUST MANHOLE TO GRADE

1 a 5 a 26 e 29 g 37 b 38 b

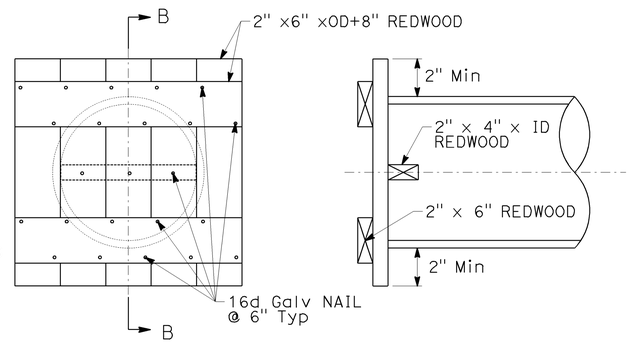

SECTION B-B

PIPE STUB-OUT DETAIL

3 a

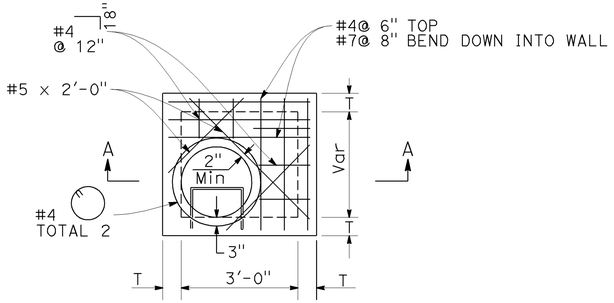

PLAN

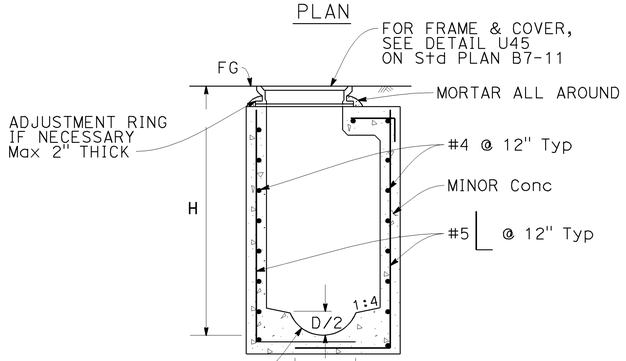

SECTION A-A

NOTE:
FOR DETAILS NOT SHOWN, SEE
Std PLAN D73 - G2 INLET.

G2 MANHOLE

1 c 5 e 6 n r t 14 c 42 c

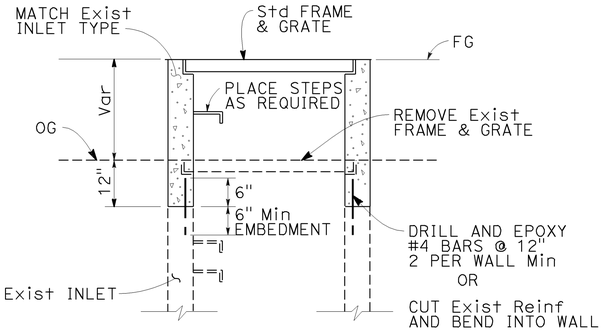

ADJUST INLET

SECTIONAL VIEW

2 b 8 a 20 a b 21 g 22 a 46 b

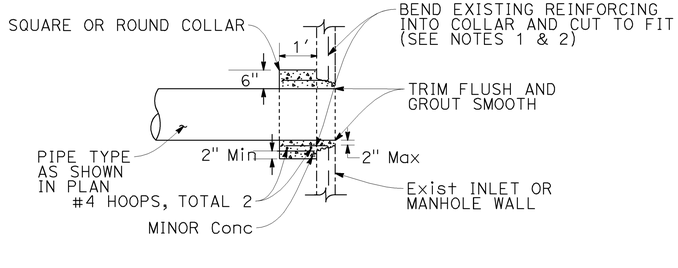

NOTES:

1) CUT REINFORCEMENT ON ALTERNATE SIDES AND BEND INTO COLLAR.

2) IF THERE ARE NO EXISTING REINFORCING BARS, THEN USE 6 #4 DOWELS, SPACED EVENLY AROUND NEW PIPE, AND DRILL AND GROUT INTO EXISTING INLET WALLS 6".

CONCRETE COLLAR PIPE CONNECTION TO EXISTING INLET OR MANHOLE

1 b 2 a 5 b 6 u 14 d 21 f 26 d 29 f 43 b

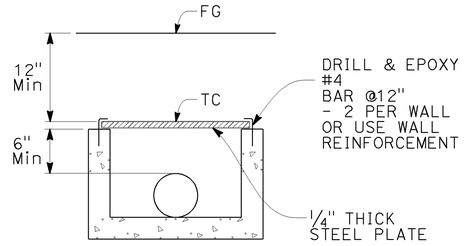

SECTIONAL VIEW

PARTIAL DI WITH COVER

1 g i

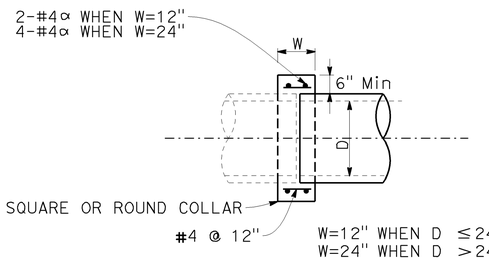

NOTE:

COLLAR CAN BE USED FOR JOINING NEW PIPE TO EXISTING PIPE, PIPES OF DIFFERENT SIZES, AND FLARED END SECTIONS TO PIPE AS DIRECTED BY THE ENGINEER.

CONCRETE COLLAR

5 h 16 e 42 d

DRAINAGE DETAILS

NO SCALE

DD-2

CALIFORNIA STATE FIRE MARSHAL
APPROVED
Approval of this plan does not authorize or approve any omission or deviation from applicable regulations. Final approval is subject to field inspection. One set of approved plans shall be available on the project site at all times.
Reviewed by: STEPHEN GUARINO
Approval date: 12-14-09

Dist	COUNTY	ROUTE	POST MILES TOTAL PROJECT	SHEET No.	TOTAL SHEETS
04	SF	101	8.2/9.2	67	654

REGISTERED CIVIL ENGINEER — 7-31-09 DATE

JACK K. MONG
No. C66151
Exp. 6-30-10
CIVIL
REGISTERED PROFESSIONAL ENGINEER
STATE OF CALIFORNIA

12-14-09
PLANS APPROVAL DATE

THE STATE OF CALIFORNIA OR ITS OFFICERS OR AGENTS SHALL NOT BE RESPONSIBLE FOR THE ACCURACY OR COMPLETENESS OF SCANNED COPIES OF THIS PLAN SHEET.

Arup PB JV
560 Mission Street, Suite 700
San Francisco, CA 94105

REVISED BY	DATE REVISED
ML/KM	7/31/09

CALCULATED-DESIGNED BY: KATIE MING
CHECKED BY: DUANNE GILMORE
CONSULTANT FUNCTIONAL SUPERVISOR: ABOLFAZL EMADZADEH
STATE OF CALIFORNIA - DEPARTMENT OF TRANSPORTATION
Caltrans

LAST REVISION DATE PLOTTED => 14-DEC-2009
07-31-09 TIME PLOTTED => 14:02

Dist	COUNTY	ROUTE	POST MILES TOTAL PROJECT	SHEET No.	TOTAL SHEETS
04	SF	101	8.2/9.2	68	654

REGISTERED CIVIL ENGINEER — 7-31-09 DATE

12-14-09
PLANS APPROVAL DATE

KEVIN BARRY CLINCH No. C48926 Exp. 9-30-10 CIVIL — REGISTERED PROFESSIONAL ENGINEER — STATE OF CALIFORNIA

THE STATE OF CALIFORNIA OR ITS OFFICERS OR AGENTS SHALL NOT BE RESPONSIBLE FOR THE ACCURACY OR COMPLETENESS OF SCANNED COPIES OF THIS PLAN SHEET.

Arup PB JV
560 Mission Street, Suite 700
San Francisco, CA 94105

CALIFORNIA STATE FIRE MARSHAL APPROVED

Approval of this plan does not authorize or approve any omission or deviation from applicable regulations. Final approval is subject to field inspection. One set of approved plans shall be available on the project site at all times.

Reviewed by: STEPHEN GUARINO
Approval date: 12-14-09

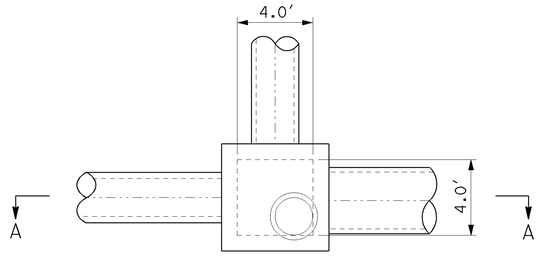

PLAN
SCALE: 1/4" = 1'

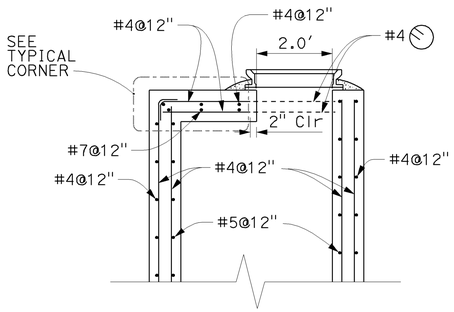

TOP SLAB SECTION
SCALE: 1/2" = 1'

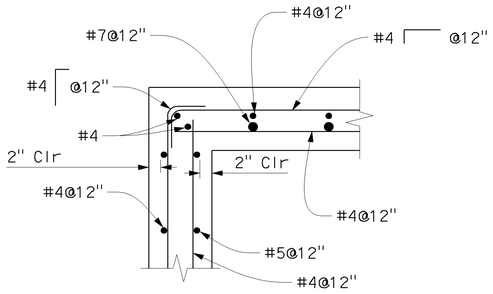

TYPICAL CORNER
SCALE: 1" = 1'

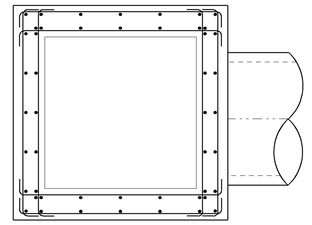

SECTION B-B

BOTTOM LANDING
SCALE: 1/2" = 1'

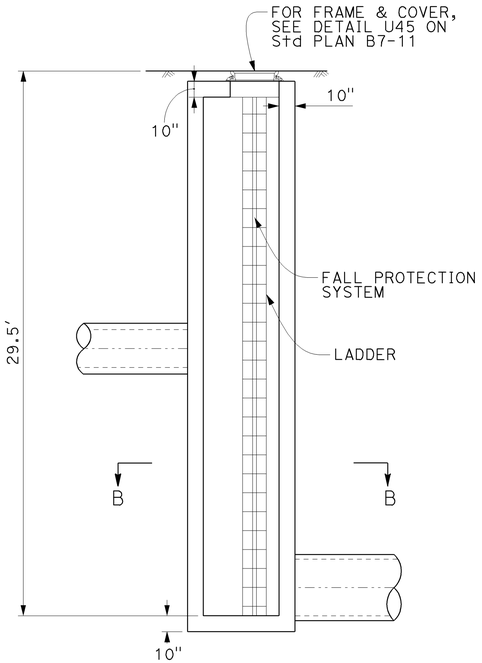

SECTION A-A

ELEVATION
SCALE: 1/4" = 1'

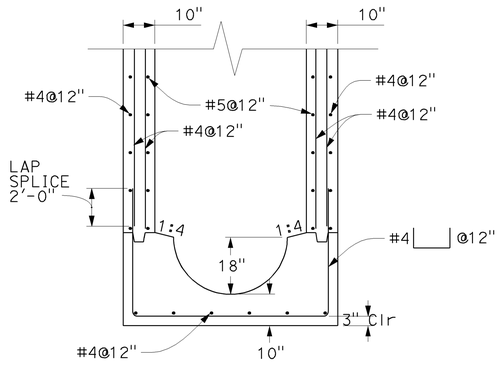

SLAB TO WALL REINFORCEMENT
SCALE: 1/2" = 1'

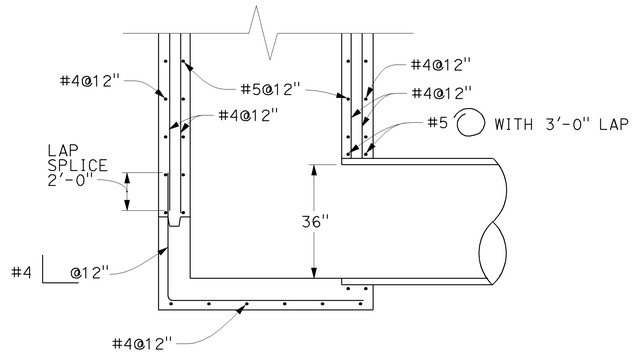

SECTION AT APC
SCALE: 1/2" = 1'

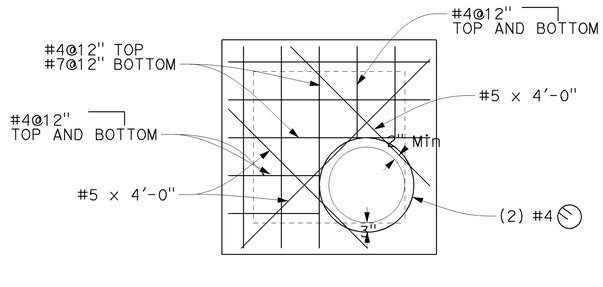

TOP SLAB
SCALE: 1/2" = 1'

STANDARD PLANS DATED MAY 2006

A62C	LIMITS OF PAYMENT FOR EXCAVATION AND BACKFILL BRIDGE
B7-11	UTILITY DETAILS

GENERAL NOTES:

1. DESIGN: LRFD BRIDGE DESIGN SPECIFICATIONS, FOURTH EDITION (2007) PUBLISHED BY THE AMERICAN ASSOCIATION OF STATE HIGHWAY AND TRANSPORTATION OFFICIALS WITH CALIFORNIA AMENDMENT (V3.06.01)

   DOYLE DRIVE STRUCTURAL DESIGN CRITERIA CUT-AND-COVER TUNNELS AND NON-STANDARD RETAINING WALLS

   A. LOADS: SOIL DENSITY = 120pcf
   COEFFICIENT OF EARTH PRESSURE - AT REST CONDITION = 0.45
   LIVE LOAD FOR ROOF = 100psf

   B. REINFORCED CONCRETE (ULTIMATE STRENGTH DESIGN):
   f'c = 4000psi
   fy = 60000psi

   C. MISCELLANEOUS METAL (WORKING STRESS DESIGN):
   fy = 36000psi

2. SOIL REPORT: FOUNDATION REPORT FOR RETAINING WALL 8 (REVISION) OF AUGUST 2009

3. ALLOWABLE SOIL BEARING PRESSURE = 12500psf

DETAIL NOTES

1. METAL WORKS NOTES:
   - A. ALL METAL WORK SHALL BE HOT-DIP GALVANIZED AFTER FABRICATION.
   - B. SECURE METAL TO METAL CONNECTIONS WITH 1/2" Dia x 1 1/2" Dia IN HEX HEAD MACHINE BOLTS, LOCK WASHERS AND HEX NUTS, UNLESS OTHERWISE NOTED.
   - C. MECHANICAL EXPANSION ANCHORS USED FOR SECURING LADDERS INSIDE OF PUMPIMG PLANT SHALL BE OF STAINLESS STEEL.
   - D ALL LOCK WASHERS SHALL BE HELICAL SPRING LOCK WASHERS.
   - E. ALL RAILING AND LADDERS SHALL HAVE SMOOTH EDGES.
2. FOR PIPE LOCATIONS AND ELEVATIONS, SEE MECHANICAL PLANS.

G2D MANHOLE
5 g

DRAINAGE DETAILS
SCALE: AS SHOWN

DD-3

STATE OF CALIFORNIA - DEPARTMENT OF TRANSPORTATION | Caltrans
CONSULTANT FUNCTIONAL SUPERVISOR: ABOLFAZL EMADZADEH
CALCULATED-DESIGNED BY: KATIE MING
CHECKED BY: DUANNE GILMORE
REVISED BY: ML/KM
DATE REVISED: 7/31/09

LAST REVISION | DATE PLOTTED => 14-DEC-2009
11-19-09 | TIME PLOTTED => 14:02

BORDER LAST REVISED 4/11/2008 | RELATIVE BORDER SCALE IS IN INCHES 0 1 2 3 | USERNAME => trienard | DGN FILE => 416374ic003.dgn | CU 04242 | EA 163741

Dist	COUNTY	ROUTE	POST MILES TOTAL PROJECT	SHEET No.	TOTAL SHEETS
04	SF	101	8.2/9.2	69	654

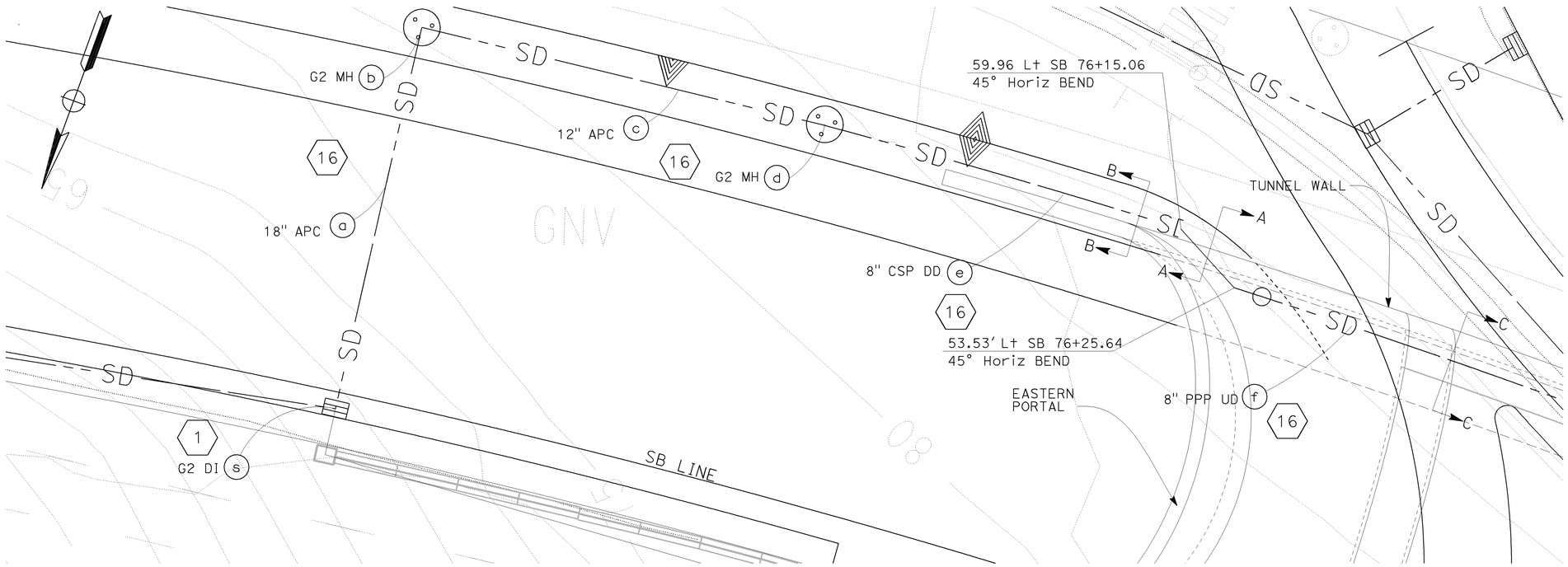

PLAN
SCALE: 1" = 10'

7-31-09
REGISTERED CIVIL ENGINEER DATE

MANISH M. DALIA
No. C74016
Exp. 6-30-11
CIVIL
REGISTERED PROFESSIONAL ENGINEER
STATE OF CALIFORNIA

12-14-09
PLANS APPROVAL DATE

THE STATE OF CALIFORNIA OR ITS OFFICERS OR AGENTS SHALL NOT BE RESPONSIBLE FOR THE ACCURACY OR COMPLETENESS OF SCANNED COPIES OF THIS PLAN SHEET.

Arup PB JV
560 Mission Street, Suite 700
San Francisco, CA 94105

NOTES:

1. FOR UNDERDRAIN DETAILS NOT SHOWN, SEE Std PLAN D102.
2. FOR TUNNEL AND RETAINING WALL DETAILS, SEE TUNNEL AND RETAINING WALL PLANS.

CALIFORNIA STATE FIRE MARSHAL APPROVED
Approval of this plan does not authorize or approve any omission or deviation from applicable regulations. Final approval is subject to field inspection. One set of approved plans shall be available on the project site at all times.
Reviewed by: STEPHEN GUARINO
Approval date: 12-14-09

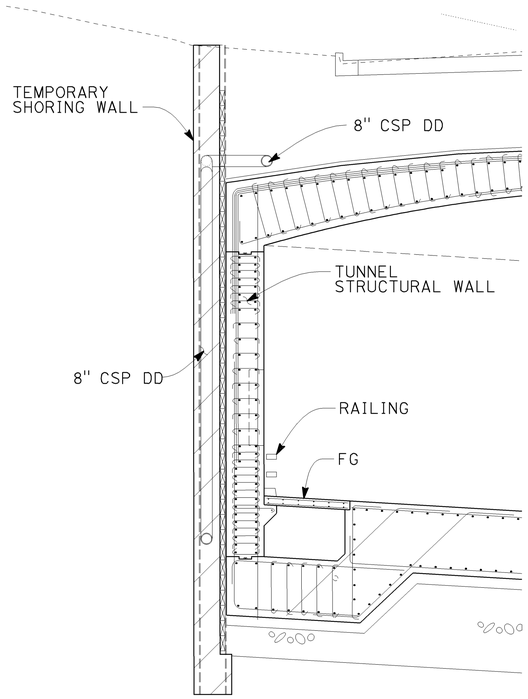

SECTION A-A
NTS

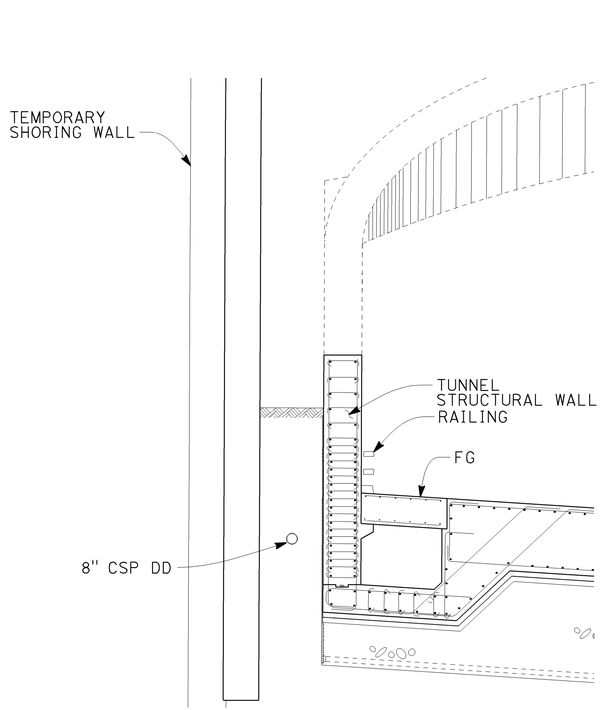

SECTION B-B
NTS

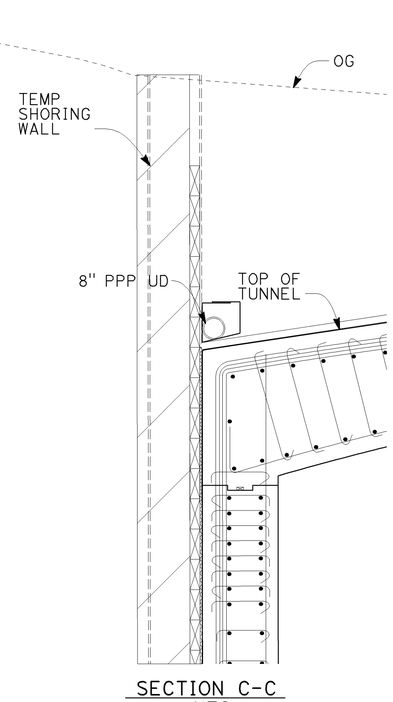

SECTION C-C
NTS

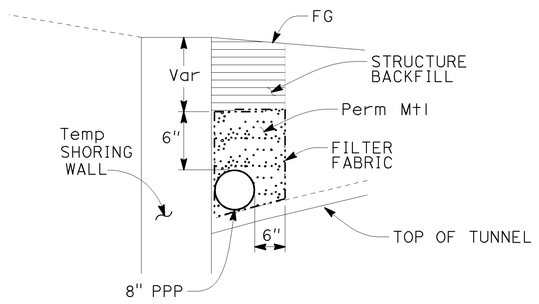

UNDERDRAIN TRENCH DETAIL
NTS

DRAINAGE DETAILS

SCALE: AS SHOWN

DD-4

THIS PLAN ACCURATE FOR DRAINAGE WORK ONLY

STATE OF CALIFORNIA - DEPARTMENT OF TRANSPORTATION
Caltrans
CONSULTANT FUNCTIONAL SUPERVISOR: ABOLFAZL EMADZADEH
CALCULATED-DESIGNED BY: KATIE MING
CHECKED BY: DUANNE GILMORE
REVISED BY: ML/KM
DATE REVISED: 7/31/09
LAST REVISION DATE PLOTTED => 14-DEC-2009
TIME PLOTTED => 14:02
07-31-09

BORDER LAST REVISED 4/11/2008
RELATIVE BORDER SCALE IS IN INCHES 0 1 2 3
USERNAME => trienard
DGN FILE => 416374ic004.dgn
CU 04242
EA 163741

Dist	COUNTY	ROUTE	POST MILES TOTAL PROJECT	SHEET No.	TOTAL SHEETS
04	SF	101	8.2/9.2	70	654

CALIFORNIA STATE FIRE MARSHAL APPROVED
Approval of this plan does not authorize or approve any omission or deviation from applicable regulations. Final approval is subject to field inspection. One set of approved plans shall be available on the project site at all times.
Reviewed by: STEPHEN GUARINO
Approval date: 12-14-09

Manish Dalia 7-31-09
REGISTERED CIVIL ENGINEER DATE

12-14-09
PLANS APPROVAL DATE

REGISTERED PROFESSIONAL ENGINEER — MANISH M. DALIA No. C74016 Exp. 6-30-11 CIVIL — STATE OF CALIFORNIA

THE STATE OF CALIFORNIA OR ITS OFFICERS OR AGENTS SHALL NOT BE RESPONSIBLE FOR THE ACCURACY OR COMPLETENESS OF SCANNED COPIES OF THIS PLAN SHEET.

Arup PB JV
560 Mission Street, Suite 700
San Francisco, CA 94105

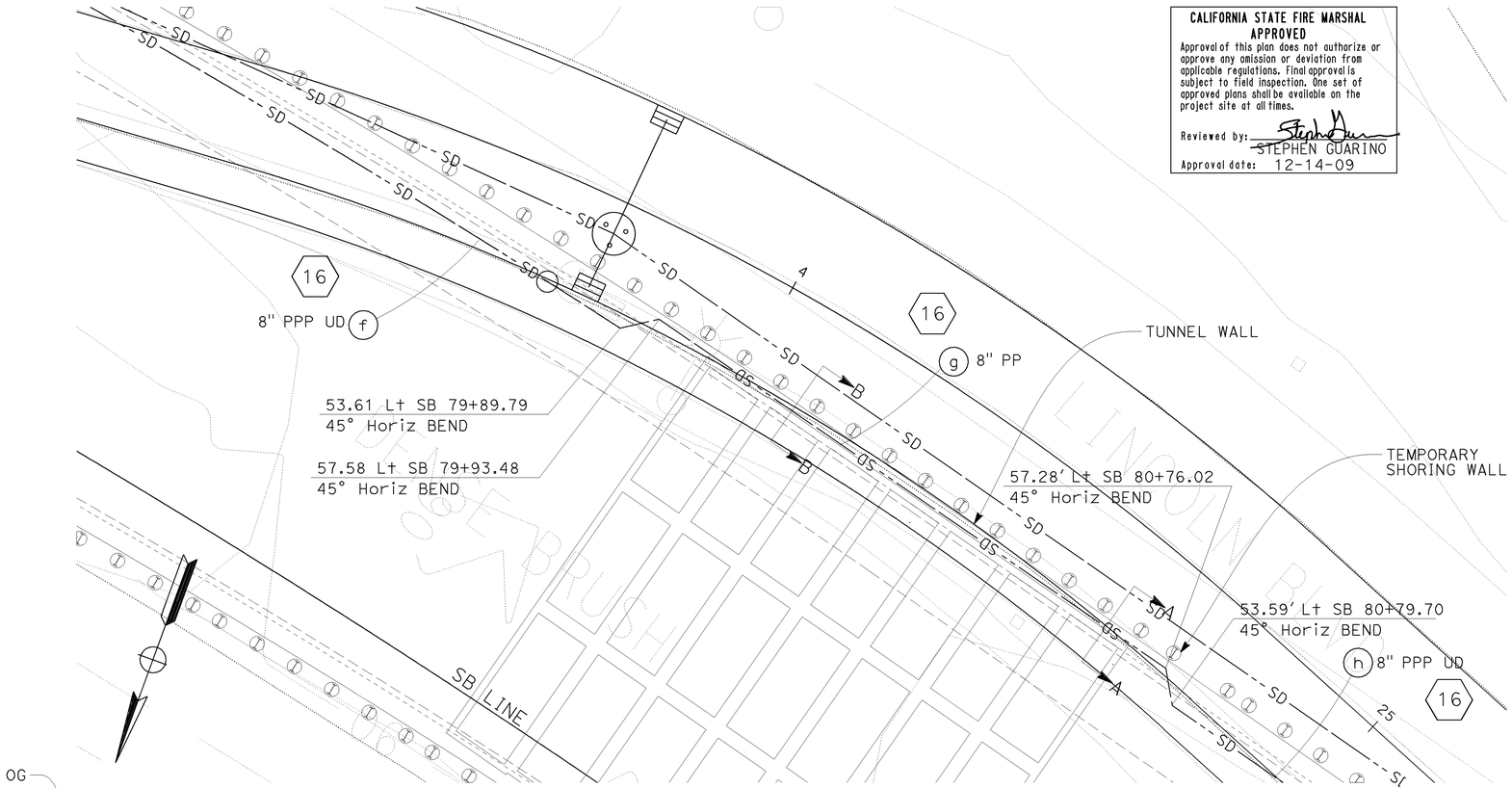

PLAN
SCALE: 1" = 10'

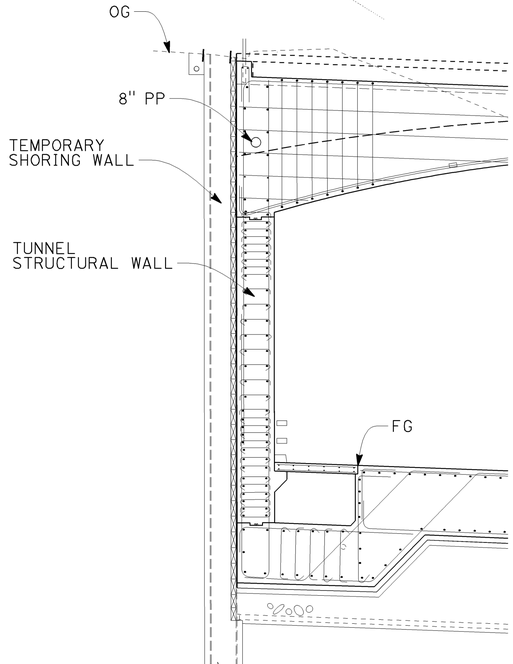

SECTION A-A
NTS

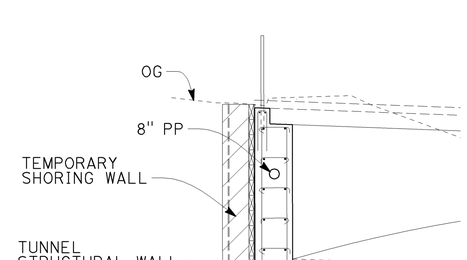

SECTION B-B
NTS

NOTES:
1. FOR UNDERDRAIN DETAILS NOT SHOWN, SEE Std PLAN D102.
2. FOR TUNNEL AND RETAINING WALL DETAILS, SEE TUNNEL AND RETAINING WALL PLANS.

DRAINAGE DETAILS
SCALE: AS SHOWN

DD-5

THIS PLAN ACCURATE FOR DRAINAGE WORK ONLY

	REVISED BY	DATE REVISED
	ML/KM	7/31/09

CALCULATED-DESIGNED BY: KATIE MING
CHECKED BY: DUANNE GILMORE
CONSULTANT FUNCTIONAL SUPERVISOR: ABOLFAZL EMADZADEH
STATE OF CALIFORNIA - DEPARTMENT OF TRANSPORTATION — Caltrans

LAST REVISION | DATE PLOTTED => 14-DEC-2009
07-31-09 | TIME PLOTTED => 14:03

BORDER LAST REVISED 4/11/2008
RELATIVE BORDER SCALE IS IN INCHES 0 1 2 3
USERNAME => trienard
DGN FILE => 416374ic005.dgn
CU 04242
EA 163741

Dist	COUNTY	ROUTE	POST MILES TOTAL PROJECT	SHEET No.	TOTAL SHEETS
04	SF	101	8.2/9.2	71	654

CALIFORNIA STATE FIRE MARSHAL APPROVED

Approval of this plan does not authorize or approve any omission or deviation from applicable regulations. Final approval is subject to field inspection. One set of approved plans shall be available on the project site at all times.

Reviewed by: STEPHEN GUARINO

Approval date: 12-14-09

REGISTERED CIVIL ENGINEER — 7-31-09 DATE

JACK K. MONG No. C66151 Exp. 6-30-10 CIVIL — REGISTERED PROFESSIONAL ENGINEER — STATE OF CALIFORNIA

12-14-09
PLANS APPROVAL DATE

THE STATE OF CALIFORNIA OR ITS OFFICERS OR AGENTS SHALL NOT BE RESPONSIBLE FOR THE ACCURACY OR COMPLETENESS OF SCANNED COPIES OF THIS PLAN SHEET.

Arup PB JV
560 Mission Street, Suite 700
San Francisco, CA 94105

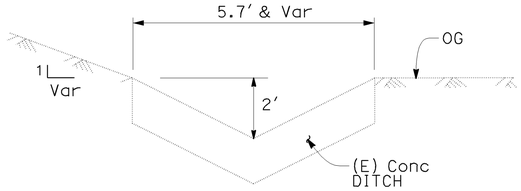

EXISTING CONCRETE DITCH

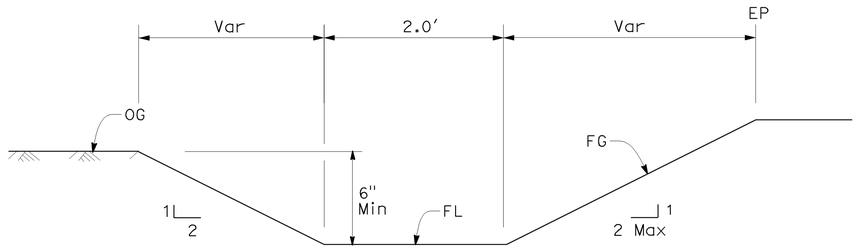

UNLINED DITCH

27 (a) (b) (c) (d) (e) (f) (g) (h) (i)

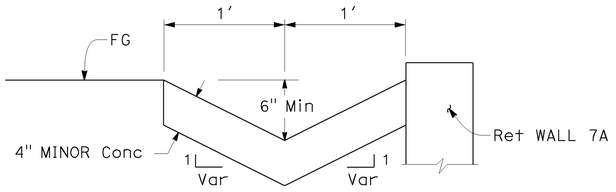

CONCRETE DITCH

41 (a)

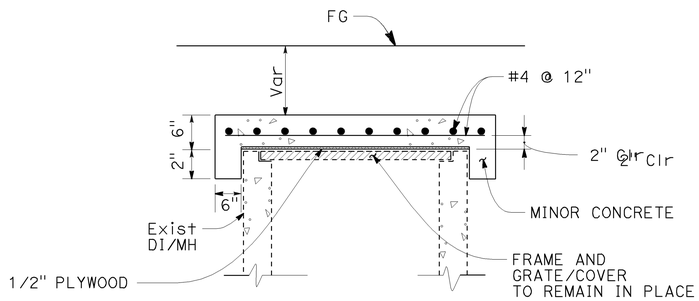

CONCRETE CAP FOR EXISTING DI/MH

23 (a) (b) 25 (f) 34 (a) (b)

36 (a) (b) (c) (d) 37 (c) 40 (a) (b) (c) (d)

DETOUR DRAINAGE DETAILS

NO SCALE

DD-6

CALCULATED-DESIGNED BY: KATIE MING
CHECKED BY: DUANNE GILMORE
REVISED BY: ML/KM
DATE REVISED: 7/31/09
CONSULTANT FUNCTIONAL SUPERVISOR: ABOLFAZL EMADZADEH
STATE OF CALIFORNIA - DEPARTMENT OF TRANSPORTATION
Caltrans

LAST REVISION | DATE PLOTTED => 14-DEC-2009 | TIME PLOTTED => 14:03 | 07-31-09

BORDER LAST REVISED 4/11/2008 | RELATIVE BORDER SCALE IS IN INCHES 0 1 2 3 | USERNAME => trienard | DGN FILE => 416374ic006.dgn | CU 04242 | EA 163741

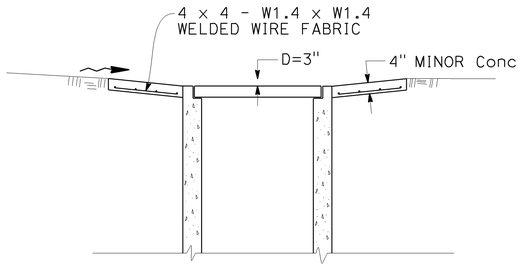

SECTION B-B

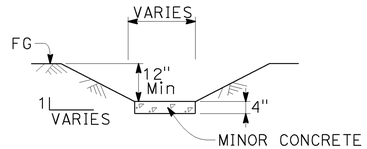

SECTION C-C

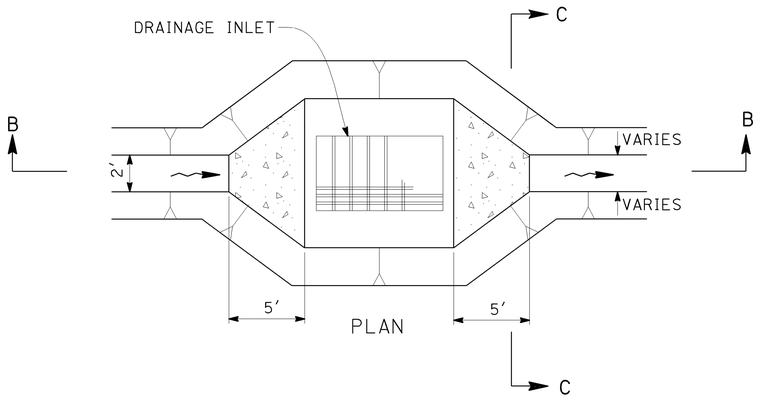

DITCH TRANSITION TO DRAINAGE INLET

29 a 30 c 32 d 35 e 37 a

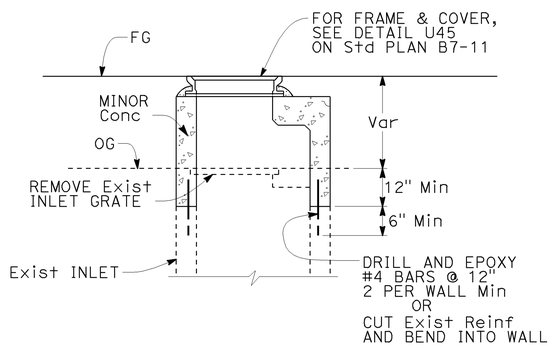

NOTE:
FOR DETAILS NOT SHOWN, SEE
G2 MH DETAIL.

MODIFY DI TO MH

25 e 46 a

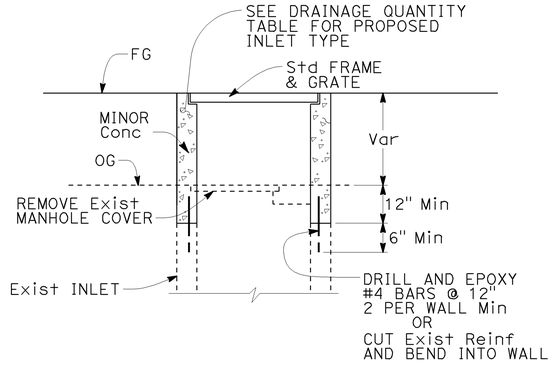

NOTE:
FOR DETAILS NOT SHOWN, SEE
G2 DI STANDARD PLAN.

MODIFY MH TO DI

43 a

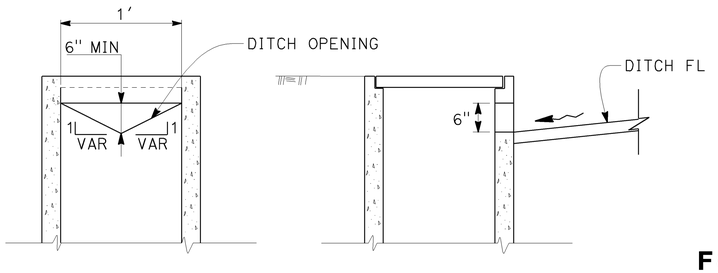

NOTE:
SHAPE OF SIDE OPENING
MATCHING INCOMING DITCH

DRAINAGE INLET SIDE OPENING

39 a

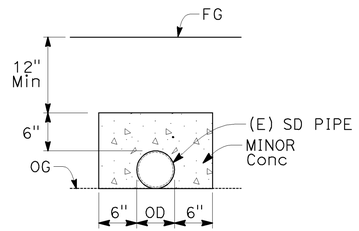

CONCRETE CAP

28 a

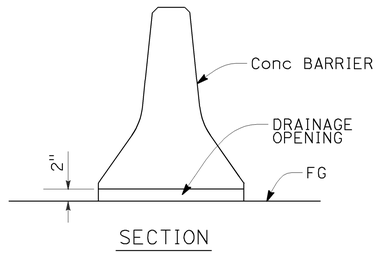

SECTION

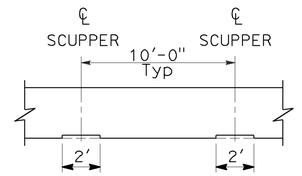

PLAN

SCUPPER DRAIN FOR CONCRETE BARRIER (ALL TYPE) OR MOVABLE CONCRETE BARRIER

DETOUR DRAINAGE PROFILE

NO SCALE

DD-7

CALIFORNIA STATE FIRE MARSHAL APPROVED
Approval of this plan does not authorize or approve any omission or deviation from applicable regulations. Final approval is subject to field inspection. One set of approved plans shall be available on the project site at all times.
Reviewed by: STEPHEN GUARINO
Approval date: 12-14-09

Dist	COUNTY	ROUTE	POST MILES TOTAL PROJECT	SHEET No.	TOTAL SHEETS
04	SF	101	8.2/9.2	72	654

REGISTERED CIVIL ENGINEER — 7-31-09 DATE

JACK K. MONG No. C66151 Exp. 6-30-10 CIVIL — REGISTERED PROFESSIONAL ENGINEER — STATE OF CALIFORNIA

12-14-09
PLANS APPROVAL DATE

THE STATE OF CALIFORNIA OR ITS OFFICERS OR AGENTS SHALL NOT BE RESPONSIBLE FOR THE ACCURACY OR COMPLETENESS OF SCANNED COPIES OF THIS PLAN SHEET.

Arup PB JV
560 Mission Street, Suite 700
San Francisco, CA 94105

CALCULATED-DESIGNED BY: KATIE MING
CHECKED BY: DUANNE GILMORE
REVISED BY: ML/KM
DATE REVISED: 7/31/09
CONSULTANT FUNCTIONAL SUPERVISOR: ABOLFAZL EMADZADEH
STATE OF CALIFORNIA - DEPARTMENT OF TRANSPORTATION
Caltrans

LAST REVISION 07-31-09
DATE PLOTTED => 14-DEC-2009
TIME PLOTTED => 14:03

Dist	COUNTY	ROUTE	POST MILES TOTAL PROJECT	SHEET No.	TOTAL SHEETS
04	SF	101	8.2/9.2	73	654

7-31-09
REGISTERED CIVIL ENGINEER DATE

12-14-09
PLANS APPROVAL DATE

REGISTERED PROFESSIONAL ENGINEER
MANISH M. DALIA
No. C74016
Exp. 6-30-11
CIVIL
STATE OF CALIFORNIA

THE STATE OF CALIFORNIA OR ITS OFFICERS OR AGENTS SHALL NOT BE RESPONSIBLE FOR THE ACCURACY OR COMPLETENESS OF SCANNED COPIES OF THIS PLAN SHEET.

Arup PB JV
560 Mission Street, Suite 700
San Francisco, CA 94105

NOTES:

1. FOR UNDERDRAIN DETAILS NOT SHOWN, SEE Std PLAN D102.
2. FOR TUNNEL AND RETAINING WALL DETAILS, SEE TUNNEL AND RETAINING WALL PLANS.

CALIFORNIA STATE FIRE MARSHAL APPROVED
Approval of this plan does not authorize or approve any omission or deviation from applicable regulations. Final approval is subject to field inspection. One set of approved plans shall be available on the project site at all times.
Reviewed by: STEPHEN GUARINO
Approval date: 12-14-09

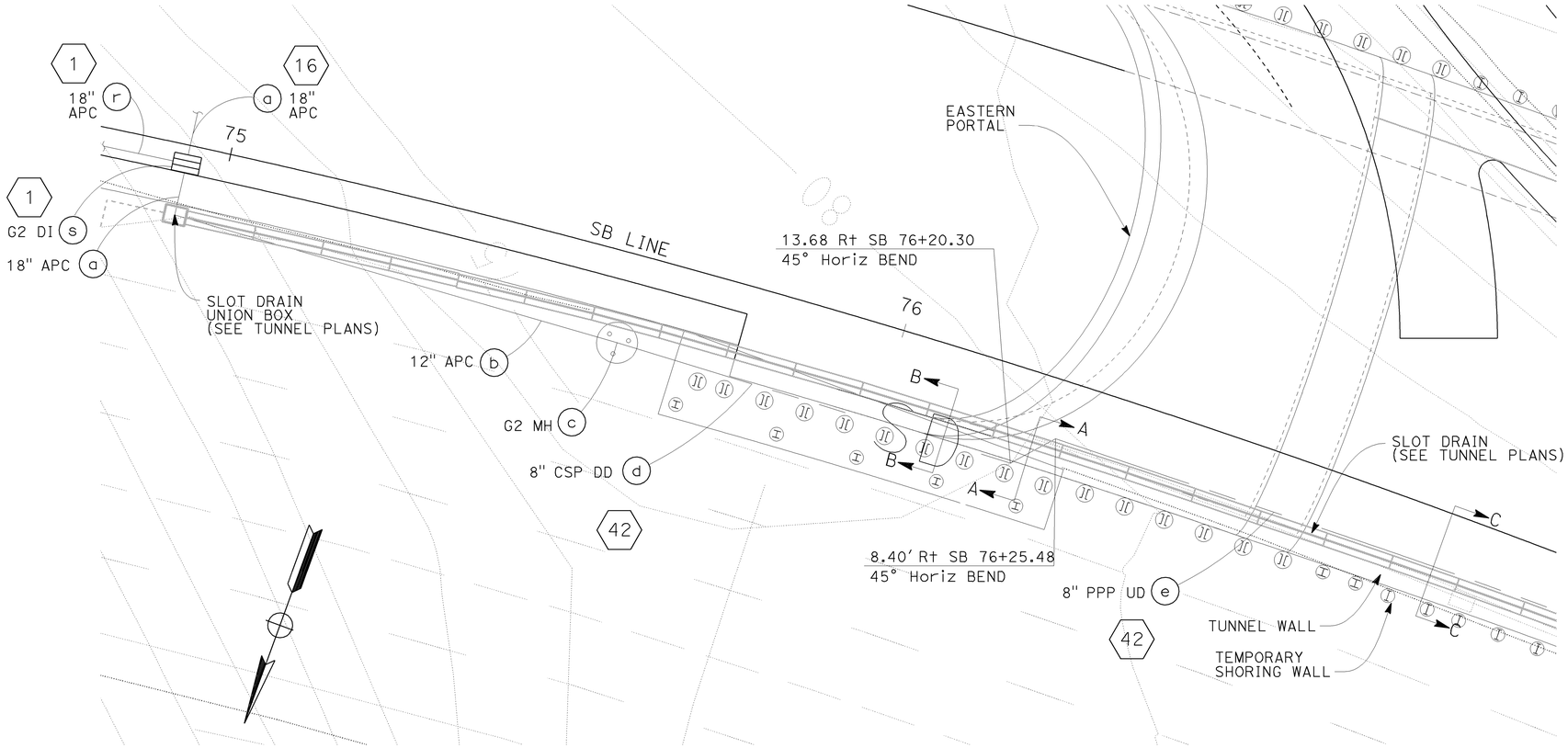

PLAN
SCALE: 1" = 10'

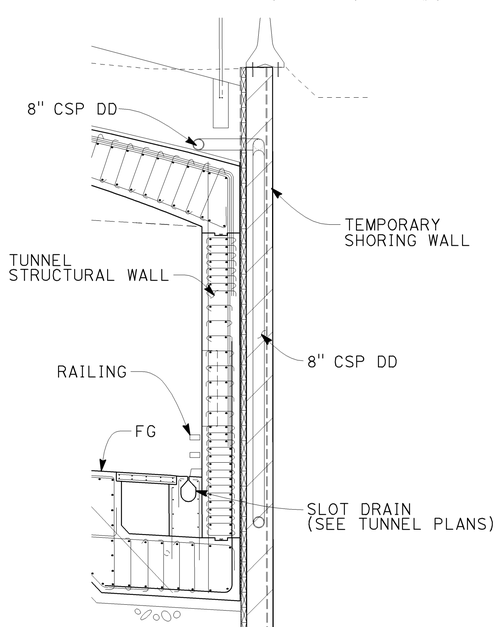

SECTION A-A
NTS

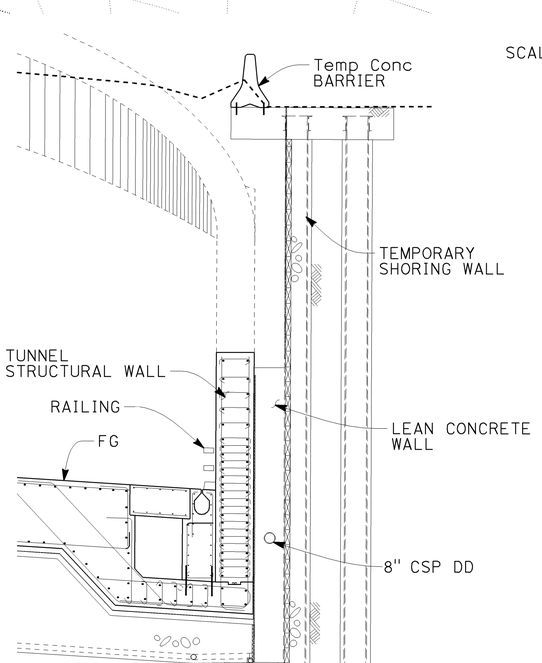

SECTION B-B
NTS

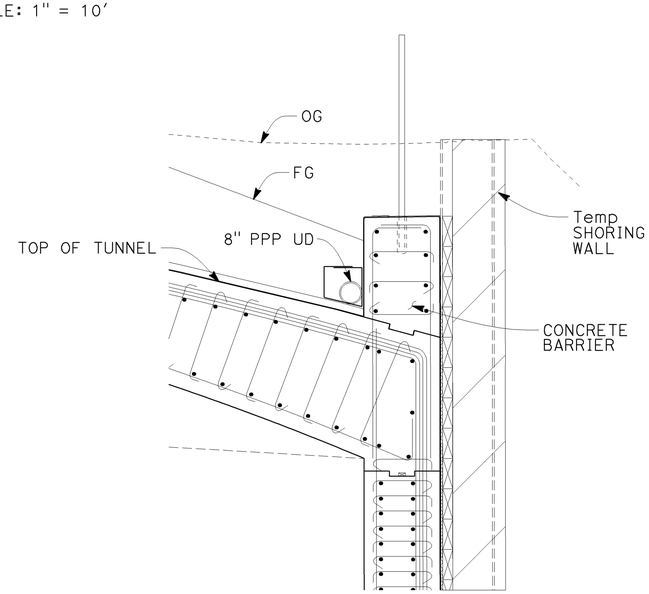

SECTION C-C
NTS

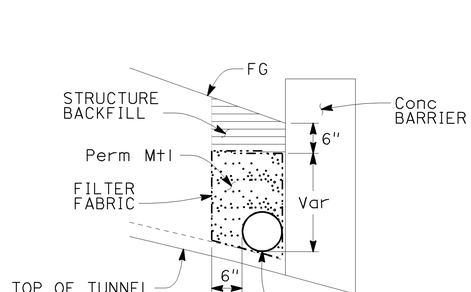

UNDERDRAIN
TRENCH DETAIL
NTS

DETOUR DRAINAGE DETAILS

SCALE: AS SHOWN

THIS PLAN ACCURATE FOR DRAINAGE WORK ONLY

DD-8

STATE OF CALIFORNIA - DEPARTMENT OF TRANSPORTATION
Caltrans
CONSULTANT FUNCTIONAL SUPERVISOR: ABOLFAZL EMADZADEH
CALCULATED-DESIGNED BY: KATIE MING
CHECKED BY: DUANNE GILMORE
REVISED BY: ML/KM
DATE REVISED: 7/31/09

LAST REVISION DATE PLOTTED => 14-DEC-2009
07-31-09 TIME PLOTTED => 14:03

BORDER LAST REVISED 4/11/2008
RELATIVE BORDER SCALE IS IN INCHES 0 1 2 3
USERNAME => trienard
DGN FILE => 416374ic008.dgn
CU 04242
EA 163741

Dist	COUNTY	ROUTE	POST MILES TOTAL PROJECT	SHEET No.	TOTAL SHEETS
04	SF	101	8.2/9.2	74	654

Manish Dalia 7-31-09
REGISTERED CIVIL ENGINEER DATE

12-14-09
PLANS APPROVAL DATE

REGISTERED PROFESSIONAL ENGINEER
MANISH M. DALIA
No. C74016
Exp. 6-30-11
CIVIL
STATE OF CALIFORNIA

THE STATE OF CALIFORNIA OR ITS OFFICERS OR AGENTS SHALL NOT BE RESPONSIBLE FOR THE ACCURACY OR COMPLETENESS OF SCANNED COPIES OF THIS PLAN SHEET.

Arup PB JV
560 Mission Street, Suite 700
San Francisco, CA 94105

NOTES:

1. FOR UNDERDRAIN DETAILS NOT SHOWN, SEE Std PLAN D102.
2. FOR TUNNEL AND RETAINING WALL DETAILS, SEE TUNNEL AND RETAINING WALL PLANS.

CALIFORNIA STATE FIRE MARSHAL APPROVED
Approval of this plan does not authorize or approve any omission or deviation from applicable regulations. Final approval is subject to field inspection. One set of approved plans shall be available on the project site at all times.
Reviewed by: STEPHEN GUARINO
Approval date: 12-14-09

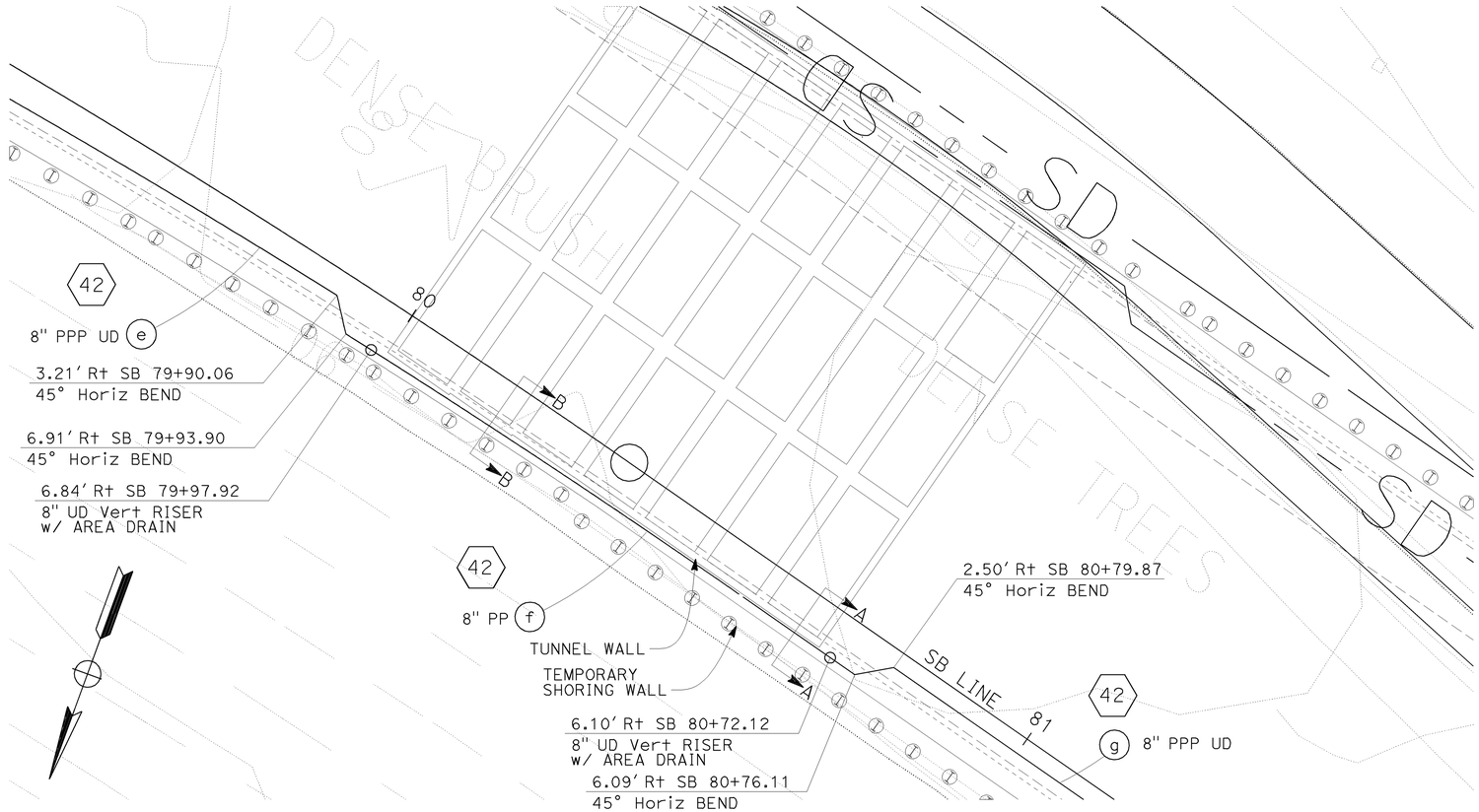

PLAN
SCALE: 1" = 10'

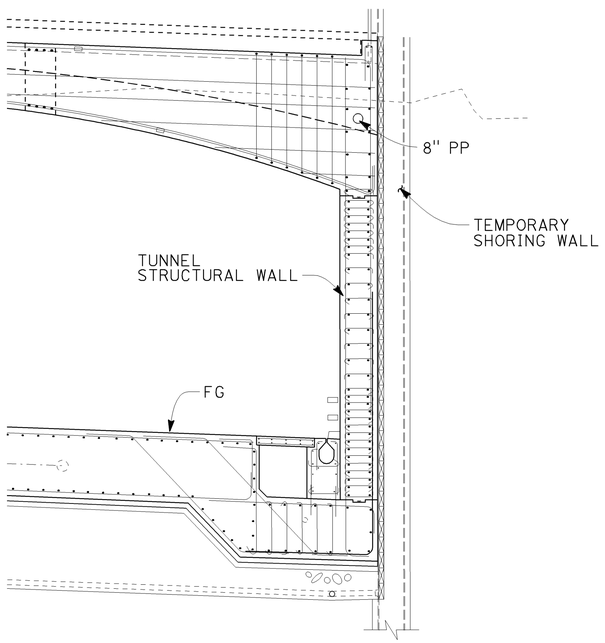

SECTION A-A
NTS

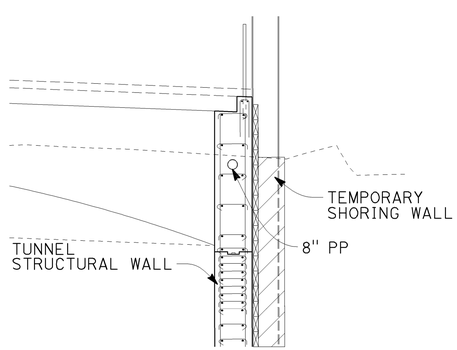

SECTION B-B
NTS

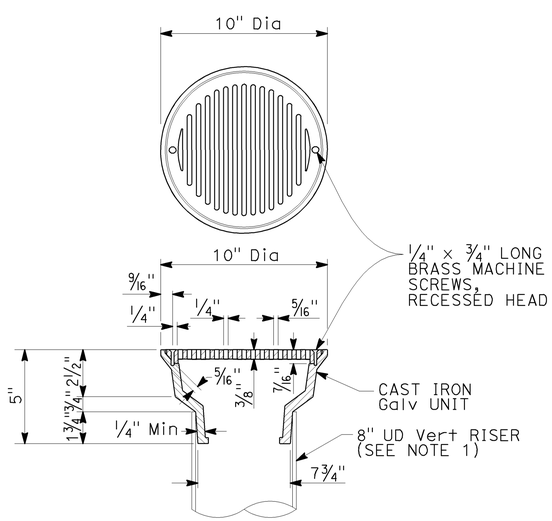

AREA DRAIN DETAIL
NTS

DETOUR DRAINAGE DETAILS

SCALE: AS SHOWN

DD-9

THIS PLAN ACCURATE FOR DRAINAGE WORK ONLY

STATE OF CALIFORNIA - DEPARTMENT OF TRANSPORTATION
Caltrans
CONSULTANT FUNCTIONAL SUPERVISOR: ABOLFAZL EMADZADEH
CALCULATED-DESIGNED BY: KATIE MING
CHECKED BY: DUANNE GILMORE
REVISED BY: ML/KM
DATE REVISED: 7/31/09
LAST REVISION: 07-31-09
DATE PLOTTED => 14-DEC-2009
TIME PLOTTED => 14:03

BORDER LAST REVISED 4/11/2008
RELATIVE BORDER SCALE IS IN INCHES 0 1 2 3
USERNAME => trienard
DGN FILE => 416374ic009.dgn
CU 04242
EA 163741

DESIGNATION	RCP	CSP			SSRP			PLASTIC
	SIZE	SIZE	THICKNESS WITH BC	THICKNESS WITH PSC	SIZE	THICKNESS WITH BC	THICKNESS WITH PSC	SMOOTH INTERIOR SIZE
12" APC	12"	12"	0.064"	0.052"	12"	0.064"	0.052"	12"
15" APC	15"	15"	0.064"	0.052"	15"	0.064"	0.052"	15"
18" APC	18"	18"	0.064"	0.052"	18"	0.064"	0.052"	18"
24" APC	24"	24"	0.064"	0.052"	24"	0.064"	0.052"	24"
36" APC	36"	36"	0.064"	0.052"	36"	0.064"	0.052"	36"

NOTES:

1. FOR MINIMUM ALLOWABLE CLASS OF RCP, SEE STANDARD PLAN D79.
2. BITUMINOUS COATING IS ON THE SOIL SIDE ONLY.
3. ALL G2 INLETS, USE F&G TYPE 24-12.
4. ALL MANHOLES, USE F&C TYPE U45.
5. SURVEY INFORMATION IS INCONCLUSIVE OF SIZES OF SEVERAL EXISTING CULVERTS AND DITCHES. UNLESS OTHERWISE NOTED, CULVERTS HAVE BEEN ASSUMED TO BE 18" Dia AND DITCHES ARE 3' WIDE WITH 6" THICKNESS.

LEGEND

BC - BITUMINOUS COATING
DD - DOWN DRAIN JOINT TYPE
DIM - DRAINAGE INLET MARKER (FOR DETAIL, SEE WPCD SHEETS)
(N) - NOT A SEPARATE PAY ITEM, FOR INFORMATION ONLY
P - POSITIVE JOINT TYPE
PSC - POLYMETRIC SHEET COATING
S - STANDARD JOINT TYPE
SGD - STANDARD GUTTER DEPRESSION

CALIFORNIA STATE FIRE MARSHAL APPROVED
Approval of this plan does not authorize or approve any omission or deviation from applicable regulations. Final approval is subject to field inspection. One set of approved plans shall be available on the project site at all times.
Reviewed by: STEPHEN GUARINO
Approval date: 12-14-09

Dist	COUNTY	ROUTE	POST MILES TOTAL PROJECT	SHEET No.	TOTAL SHEETS
04	SF	101	8.2/9.2	75	654

Manish Dalia 7-31-09
REGISTERED CIVIL ENGINEER DATE

12-14-09
PLANS APPROVAL DATE

REGISTERED PROFESSIONAL ENGINEER — MANISH M. DALIA — No. C74016 — Exp. 6-30-11 — CIVIL — STATE OF CALIFORNIA

THE STATE OF CALIFORNIA OR ITS OFFICERS OR AGENTS SHALL NOT BE RESPONSIBLE FOR THE ACCURACY OR COMPLETENESS OF SCANNED COPIES OF THIS PLAN SHEET.

Arup PB JV
560 Mission Street, Suite 700
San Francisco, CA 94105

DRAINAGE SYSTEM No.	DRAINAGE UNIT	ABANDON CULVERT	ABANDON INLET	ABANDON MANHOLE	REMOVE CULVERT	REMOVE INLET	REMOVE MANHOLE	ADJUST INLET	ADJUST MANHOLE TO GRADE	SAND BACKFILL	DITCH EXCAVATION	MINOR CONCRETE			ALTERNATIVE PIPE CULVERT				36" CSP w/ DD (0.079" THICK)	8" CSP w/ DD	8" PPP UNDERDRAIN	8" PP	MODIFY INLET TO MANHOLE	CAP MANHOLE	CAP INLET	(N) FRAME & GRATE (TYPE 24-12)	(N) FRAME & GRATE (TYPE 24-12X)	(N) FRAME & COVER (TYPE U45)	MISCELLANEOUS IRON AND STEEL	(N) CONCRETE COLLAR	(N) MAXIMUM PIPE COVER	(N) HEIGHT OF DRAINAGE STRUCTURE	PIPE JOINT CLASSIFICATION	DESCRIPTION	STATION	DRAINAGE UNIT	DRAINAGE SYSTEM No.	DRAINAGE PROFILE SHEET No.	DRAINAGE PLAN SHEET No.
		LF	EA		LF	EA		LF	EA	CY				LF					LF				EA			EA			LB	EA	Ft								
1	a								1																						14.0		ADJUST MANHOLE TO GRADE	27.72' Rt SB 65+31.36	a	1	DP-1	D-1
	b														46															1	9.5		S	18" APC w/ COLLAR	27.72' Rt SB 65+31.36 TO 17.23' Rt SB 65+75.69	b			
	c											4.5															1	435			10.9		G2 MANHOLE	17.23' Rt SB 65+75.69	c			
	d														15																10.1		P	18" APC	17.23' Rt SB 65+75.69 TO 4.00' Rt SB 65+76.28	d			
	e											4.1														1		326			9.8		G2 DI	4.00' Rt SB 65+76.28	e			
	f														294															3.0		S	18" APC	4.00' Rt SB 65+76.28 TO 2.70' Rt SB 68+70.00	f			
	g											1.3																326			3.0		PARTIAL DI w/ STEEL COVER	2.70' Rt SB 68+70.00	g			
	h														25																3.0		S	18" APC	2.70' Rt SB 68+70.00 TO 2.70' Rt SB 68+95.00	h			
	i											1.3																326			2.9		PARTIAL DI w/ STEEL COVER	2.70' Rt SB 68+95.00	i			
	j														93																3.0		S	18" APC	2.70' Rt SB 68+95.00 TO 4.00' Rt SB 69+88.23	j			
	k											2.2		1.2													1		326			6.4		G2 DI w/ SGD	2.70' Rt SB 69+88.23	k			
	l														70																3.0		S	18" APC	2.70' Rt SB 69+88.23 TO 2.70' Rt SB 70+58.23	l			
	m											1.6		1.2													1		326			4.1		G2 DI w/ SGD	2.70' Rt SB 70+58.23	m			
	n														100																3.0		S	18" APC	2.70' Rt SB 70+58.23 TO 2.70' Rt SB 71+58.31	n			
	o											1.4		1.2													1		326			3.5		G2 DI w/ SGD	2.70' Rt SB 71+58.31	o			
	p														166																3.0		S	18" APC	2.70' Rt SB 71+58.31 TO 2.70' Rt SB 73+25.00	p			
	q											1.7		1.2													1		326			4.6		G2 DI w/ SGD	2.70' Rt SB 73+25.00	q			
	r														169																3.0		S	18" APC	2.70' Rt SB 73+25.00 TO 2.70' Rt SB 74+94.00	r			
	s											3.5		1.2													1		326			8.0		G2 DI w/ SGD	2.70' Rt SB 74+94.00	s			
2	a														177															1	9.3		S	18' APC w/ COLLAR	210.34' Lt SB 64+56.37 TO 10.29' Lt MUT 10+46.57	a	2	DP-2	D-1
	b							1.6																							4.0			ADJUST DI	10.29' Lt MUT 10+46.57	b			
	c														49																3.0		S	18" APC	10.29' Lt MUT 10+46.57 TO 7.00' Lt MUT 11+00.00	c			
	d											1.7																1	326			4.5		G2 DI	7.00' Lt MUT 11+00.00	d			
	e														71																3.0		S	18" APC	7.00' Lt MUT 11+00.00 TO 6.81' Rt LI2 11+78.21	e			
	f											1.6		1.2													1		239			4.0			GO DI w/ SGD	6.81' Rt LI2 11+78.21	f			
SHEET TOTAL								1.6	1			24.9		7.2	1275								6	2	1	3608	2												

DRAINAGE QUANTITIES

DQ-1

STATE OF CALIFORNIA - DEPARTMENT OF TRANSPORTATION
Caltrans
CONSULTANT FUNCTIONAL SUPERVISOR: ABOLFAZL EMADZADEH
CALCULATED-DESIGNED BY: KATIE MING
CHECKED BY: DUANNE GILMORE
REVISED BY: ML/KM
DATE REVISED: 7/31/09

LAST REVISION | DATE PLOTTED => 14-DEC-2009
11-19-09 | TIME PLOTTED => 14:03

BORDER LAST REVISED 4/11/2008
RELATIVE BORDER SCALE IS IN INCHES 0 1 2 3
USERNAME => trienard
DGN FILE => 416374id001.dgn
CU 04242
EA 163741

NOTE:

1. FOR NOTES AND LEGEND SEE DQ-1.

CALIFORNIA STATE FIRE MARSHAL APPROVED

Approval of this plan does not authorize or approve any omission or deviation from applicable regulations. Final approval is subject to field inspection. One set of approved plans shall be available on the project site at all times.

Reviewed by: STEPHEN GUARINO

Approval date: 12-14-09

Dist	COUNTY	ROUTE	POST MILES TOTAL PROJECT	SHEET No.	TOTAL SHEETS
04	SF	101	8.2/9.2	76	654

Manish Dalia 7-31-09
REGISTERED CIVIL ENGINEER DATE

MANISH M. DALIA No. C74016 Exp. 6-30-11 CIVIL — REGISTERED PROFESSIONAL ENGINEER — STATE OF CALIFORNIA

12-14-09
PLANS APPROVAL DATE

THE STATE OF CALIFORNIA OR ITS OFFICERS OR AGENTS SHALL NOT BE RESPONSIBLE FOR THE ACCURACY OR COMPLETENESS OF SCANNED COPIES OF THIS PLAN SHEET.

Arup PB JV
560 Mission Street, Suite 700
San Francisco, CA 94105

DRAINAGE SYSTEM No. ⬡	DRAINAGE UNIT ◯	ABANDON CULVERT (LF)	ABANDON INLET (EA)	ABANDON MANHOLE (EA)	REMOVE CULVERT (LF)	REMOVE INLET (EA)	REMOVE MANHOLE (EA)	ADJUST INLET (EA)	ADJUST MANHOLE TO GRADE (EA)	SAND BACKFILL (CY)	DITCH EXCAVATION (CY)	MINOR CONCRETE: MINOR STRUCTURE (CY)	MINOR CONCRETE: BACKFILL (CY)	MINOR CONCRETE: MISCELLANEOUS CONSTRUCTION (CY)	ALTERNATIVE PIPE CULVERT: 12" (LF)	18" (LF)	24" (LF)	36" (LF)	36" CSP w/ DD (0.079" THICK) (LF)	8" CSP w/ DD (LF)	8" PPP UNDERDRAIN (LF)	8" PP (LF)	MODIFY INLET TO MANHOLE (EA)	CAP MANHOLE (EA)	CAP INLET (EA)	(N) FRAME & GRATE (TYPE 24-12) (EA)	(N) FRAME & GRATE (TYPE 24-12X) (EA)	(N) FRAME & COVER (TYPE U45) (EA)	(N) MISCELLANEOUS IRON AND STEEL (LB)	(N) CONCRETE COLLAR (EA)	(N) MAXIMUM PIPE COVER (F†)	(N) HEIGHT OF DRAINAGE STRUCTURE (F†)	PIPE JOINT CLASSIFICATION	DESCRIPTION	STATION	DRAINAGE UNIT ◯	DRAINAGE SYSTEM No. ⬡	DRAINAGE PROFILE SHEET No.	DRAINAGE PLAN SHEET No.
2	g														16															3.0		S	12" APC	6.81′ R† LI2 11+78.21 TO 11.80′ L† LI2 11+78.40	g	2	DP-2	D-1
	h											1.5		1.2													1		239			3.6		GO DI w/ SGD	11.80′ L† LI2 11+78.40	h			
	i	14								0.4																								ABANDON CULVERT (12")	39.91′ R† D 83+38.75 TO 40.01′ R† D 83+27.04	i			
	j																																	REMOVE INLET	40.01′ R† D 83+27.04	j			
	k				64																													REMOVE CULVERT	40.01′ R† D 83+27.04 TO 86.17L† D 82+89.91	k			
	l			1																														ABANDON MANHOLE	18.06′ L† SB 65+26.05	l			
	m	46								1.3																								ABANDON CULVERT (12")	18.06′ L† SB 65+26.05 TO 27.72′ R† SB 65+31.36	m			
3	a															76														8.5		S	18" APC w/ PIPE STUB	2.00′ R† SB 65+00.00 TO 4.00′ R† SB 65+76.28	a	3	DP-2	D-1
	b															55														4.2		S	18" APC	4.00′ R† SB 65+76.28 TO 55.00′ L† SB 65+78.85	b			
	c											1.6		1.2												1		326			4.0		G2 DI w/ SGD	55.00′ L† SB 65+78.85	c			
4	a		1																															ABANDON DI	14.05′ R† LI2 12+94.97	a	4		D-1
	b				80																													REMOVE CULVERT	94.09′ L† D 85+89.93 TO 16.48′ L† D 85+71.08	b			
	c			1																														ABANDON MANHOLE	16.48′ L† D 85+71.08	c			
	d	70								4.6																								ABANDON CULVERT	16.48′ L† D 85+71.08 TO 50.54′ R† D 85+91.30	d			
	e										16.7																							REMOVE CONCRETE DITCH	40.46′ L† D 82+83.85 TO 44.89′ R† D 85+69.40	e			
	f				80																													REMOVE CULVERT	96.84′ L† SB 68+17.69 TO 16.72′ L† SB 68+15.99	f			
5	a							1																							5.3		ADJUST MANHOLE TO GRADE	12.70′ L† LI2 13+03.95	a	5	DP-2	D-1
	b																19												1	3.2		S	24" APC w/ COLLAR	12.70′ L† LI2 13+03.95 TO 6.70′ R† LI2 13+03.94	b			
	c											1.9		1.2												1		239			5.2		GO DI w/ SGD	6.70′ R† LI2 13+03.94	c			
	d																81													8.0		S	24" APC	6.70′ R† LI2 13+03.94 TO 20.81′ R† LI2 13+84.09	d			
	e											4.2																1	435		10.1		G2 MANHOLE	20.81′ R† LI2 13+84.09	e			
	f																146													16.0		S	24" APC	20.81′ R† LI2 13+84.09 TO 24.45′ R† LI2 15+33.13	f			
	g											17.0																1	435		29.5		G2 D MH w/ FALL PROTECTION SYSTEM	24.45′ R† LI2 15+33.13	g			
SHEET TOTAL		130	1	2	224			1	6.3	16.7		26.2		3.6	16	131	246							1	2	2	1674	1										

DRAINAGE QUANTITIES

DQ-2

KATIE MING — DUANNE GILMORE — REVISED BY — DATE REVISED — ML/KM — 7/31/09

CALCULATED-DESIGNED BY — CHECKED BY

CONSULTANT FUNCTIONAL SUPERVISOR — ABOLFAZL EMADZADEH

STATE OF CALIFORNIA - DEPARTMENT OF TRANSPORTATION — Gutans

LAST REVISION 11-19-09 — DATE PLOTTED => 14-DEC-2009 — TIME PLOTTED => 14:03

BORDER LAST REVISED 4/11/2008 — RELATIVE BORDER SCALE IS IN INCHES 0 1 2 3 — USERNAME => trienard — DGN FILE => 4163741d002.dgn — CU 04242 — EA 163741

NOTE:

1. FOR NOTES AND LEGEND SEE DQ-1.

CALIFORNIA STATE FIRE MARSHAL APPROVED

Approval of this plan does not authorize or approve any omission or deviation from applicable regulations. Final approval is subject to field inspection. One set of approved plans shall be available on the project site at all times.

Reviewed by: STEPHEN GUARINO

Approval date: 12-14-09

Dist	COUNTY	ROUTE	POST MILES TOTAL PROJECT	SHEET No.	TOTAL SHEETS
04	SF	101	8.2/9.2	77	654

Manish Dalia 7-31-09
REGISTERED CIVIL ENGINEER DATE

MANISH M. DALIA No. C74016 Exp. 6-30-11 CIVIL — REGISTERED PROFESSIONAL ENGINEER — STATE OF CALIFORNIA

12-14-09
PLANS APPROVAL DATE

THE STATE OF CALIFORNIA OR ITS OFFICERS OR AGENTS SHALL NOT BE RESPONSIBLE FOR THE ACCURACY OR COMPLETENESS OF SCANNED COPIES OF THIS PLAN SHEET.

Arup PB JV
560 Mission Street, Suite 700
San Francisco, CA 94105

DRAINAGE SYSTEM No. ⬡	DRAINAGE UNIT ◯	ABANDON CULVERT (LF)	ABANDON INLET (EA)	ABANDON MANHOLE (EA)	REMOVE CULVERT (LF)	REMOVE INLET (EA)	REMOVE MANHOLE (EA)	ADJUST INLET (LF)	ADJUST MANHOLE TO GRADE (EA)	SAND BACKFILL (CY)	DITCH EXCAVATION (CY)	MINOR CONCRETE: MINOR STRUCTURE (CY)	MINOR CONCRETE: BACKFILL (CY)	MINOR CONCRETE: MISCELLANEOUS CONSTRUCTION (CY)	ALTERNATIVE PIPE CULVERT: 12" (LF)	18" (LF)	24" (LF)	36" (LF)	36" CSP w/ DD (0.079" THICK) (LF)	8" CSP w/ DD (LF)	8" PPP UNDERDRAIN (LF)	8" PP (LF)	MODIFY INLET TO MANHOLE (EA)	CAP MANHOLE (EA)	CAP INLET (EA)	(N) FRAME & GRATE (TYPE 24-12) (EA)	(N) FRAME & GRATE (TYPE 24-12X) (EA)	(N) FRAME & COVER (TYPE U45) (EA)	(N) MISCELLANEOUS IRON AND STEEL (LB)	(N) CONCRETE COLLAR (EA)	(N) MAXIMUM PIPE COVER (Ft)	(N) HEIGHT OF DRAINAGE STRUCTURE (Ft)	PIPE JOINT CLASSIFICATION	DESCRIPTION	STATION	DRAINAGE UNIT ◯	DRAINAGE SYSTEM No. ⬡	DRAINAGE PROFILE SHEET No.	DRAINAGE PLAN SHEET No.
5	h																	96												1	24.5		P	36" APC w/ COLLAR	24.45' Rt LI2 15+33.13 TO 23.59' Rt SB 70+47.05	h	5	DP-2	D-1
	i																		32												0.0		DD	36" CSP w/ DD	23.59' Rt SB 70+47.05 TO 51.24' Rt SB 70+47.05	i			
6	a																18														5.0		P	24" APC	24.45' Rt LI2 15+33.13 TO 8.00' Rt LI2 15+33.13	a	6	DP-3	D-1
	b											1.8		1.2													1		326			5.0		G2 DI w/ SGD	8.00' Rt LI2 15+33.13	b			
	c														23																4.0		S	12" APC	17.56' Lt LI2 15+29.03 TO 8.00' Rt LI2 15+33.13	c			
	d											1.6		1.2													1		326			4.2		G2 DI w/ SGD	17.56' Lt LI2 15+29.03	d			
	e																224														5.0		S	24" APC	8.00' Rt LI2 15+33.13 TO 8.00' Rt LI2 17+56.91	e			
	f											2.4		1.2													1		326			7.3		G2 DI w/ SGD	8.00' Rt LI2 17+56.91	f			
	g																284														2.0		P	24" APC	8.00' Rt LI2 17+56.91 TO 8.00' Rt LI2 20+41.25	g			
	h											1.8		1.2													1		326			5.0		G2 DI w/ SGD	8.00' Rt LI2 20+41.25	h			
	i														18																4.0		S	12" APC	12.00' Lt LI2 20+41.25 TO 8.00' Rt LI2 20+41.25	i			
	j											1.7		1.2													1		326			4.4		G2 DI w/ SGD	12.00' Lt LI2 20+41.25	j			
	k																116														5.5		S	24" APC	8.00' Rt LI2 20+41.25 TO 14.00' Rt SL 20+09.55	k			
	l											1.9		1.2													1		326			5.2		G2 DI w/ SGD	14.00' Rt SL 20+09.55	l			
	m															68														4.5		S	18" APC	14.00' Rt SL 20+09.55 TO 8.72' Rt SL 20+74.65	m			
	n											2.1																1	435			6.0		G2 MANHOLE	8.72' Rt SL 20+74.65	n			
	o															149														4.5		S	18" APC	8.72' Rt SL 20+74.65 TO 14.00' Lt SL 22+23.44	o			
	p											1.6		1.2													1		326			4.2		G2 DI w/ SGD	14.00' Lt SL 22+23.44	p		DP-4	D-2
	q															151														3.5		S	18" APC	14.00' Lt SL 22+23.44 TO 4.59' Rt SL 23+74.63	q			
	r											1.8																1	435			5.0		G2 MANHOLE	4.59' Rt SL 23+74.63	r			
	s															233														3.5		S	18" APC	4.59' Rt SL 23+74.63 TO 10.00' Lt SL 26+08.05	s			
	t											1.6																1	435			4.2		G2 MANHOLE	10.00' Lt SL 26+08.05	t			
	u														23															1	3.0		P	12" APC w/ COLLAR	10.00' Lt SL 26+08.05 TO 32.97' Lt SL 26+11.41	u			
7	a															58														5.9		S	18" APC	2.70' Rt SB 68+70.00 TO 55.00' Lt SB 68+70.00	a	7	DP-4	D-1
SHEET TOTAL												18.3		8.4	64	659	642	96	32								7	3	3587	2									

DRAINAGE QUANTITIES

DQ-3

STATE OF CALIFORNIA - DEPARTMENT OF TRANSPORTATION
Caltrans

CONSULTANT FUNCTIONAL SUPERVISOR: ABOLFAZL EMADZADEH

CALCULATED-DESIGNED BY: KATIE MING
CHECKED BY: DUANNE GILMORE

REVISED BY: ML/KM
DATE REVISED: 7/31/09

LAST REVISION — DATE PLOTTED => 14-DEC-2009, TIME PLOTTED => 14:03
11-19-09

BORDER LAST REVISED 4/11/2008

RELATIVE BORDER SCALE IS IN INCHES 0 1 2 3

USERNAME => trlenard
DGN FILE => 416374id003.dgn

CU 04242

EA 163741

NOTE:

1. FOR NOTES AND LEGEND SEE DQ-1.

CALIFORNIA STATE FIRE MARSHAL APPROVED
Approval of this plan does not authorize or approve any omission or deviation from applicable regulations. Final approval is subject to field inspection. One set of approved plans shall be available on the project site at all times.
Reviewed by: STEPHEN GUARINO
Approval date: 12-14-09

Dist	COUNTY	ROUTE	POST MILES TOTAL PROJECT	SHEET No.	TOTAL SHEETS
04	SF	101	8.2/9.2	78	654

Manish Dalia 7-31-09
REGISTERED CIVIL ENGINEER DATE

12-14-09
PLANS APPROVAL DATE

REGISTERED PROFESSIONAL ENGINEER — MANISH M. DALIA — No. C74016 — Exp. 6-30-11 — CIVIL — STATE OF CALIFORNIA

THE STATE OF CALIFORNIA OR ITS OFFICERS OR AGENTS SHALL NOT BE RESPONSIBLE FOR THE ACCURACY OR COMPLETENESS OF SCANNED COPIES OF THIS PLAN SHEET.

Arup PB JV
560 Mission Street, Suite 700
San Francisco, CA 94105

DRAINAGE SYSTEM No.	DRAINAGE UNIT	ABANDON CULVERT	ABANDON INLET	ABANDON MANHOLE	REMOVE CULVERT	REMOVE INLET	REMOVE MANHOLE	ADJUST INLET	ADJUST MANHOLE TO GRADE	SAND BACKFILL	DITCH EXCAVATION	MINOR CONCRETE: MINOR STRUCTURE	MINOR CONCRETE: BACKFILL	MINOR CONCRETE: MISCELLANEOUS CONSTRUCTION	ALTERNATIVE PIPE CULVERT: 12"	18"	24"	36"	36" CSP w/ DD (0.079" THICK)	8" CSP w/ DD	8" PPP UNDERDRAIN	8" PP	MODIFY INLET TO MANHOLE	CAP MANHOLE	CAP INLET	(N) FRAME & GRATE (TYPE 24-12)	(N) FRAME & GRATE (TYPE 24-12X)	(N) FRAME & COVER (TYPE U45)	(N) MISCELLANEOUS IRON AND STEEL	(N) CONCRETE COLLAR	(N) MAXIMUM PIPE COVER	(N) HEIGHT OF DRAINAGE STRUCTURE	PIPE JOINT CLASSIFICATION	DESCRIPTION	STATION	DRAINAGE UNIT	DRAINAGE SYSTEM No.	DRAINAGE PROFILE SHEET No.	DRAINAGE PLAN SHEET No.
		LF	EA		LF	EA		LF	EA			CY			LF								EA				EA			LB	EA	F†							
7	b											1.4		1.2												1			326			3.5		G2 DI w/ SGD	55.00′ L† SB 68+70.00	b	7	DP-4	D-1
8	a							0.4																										ADJUST DI TO GRADE	10.82′ R† LI2 17+70.30	a	8	DP-4	D-1
	b				88																													REMOVE CULVERT	53.58′ L† D 90+19.93 TO 87.33′ R† D 90+08.82	b			
	c				104																													REMOVE CULVERT	68.69′ L† D 90+32.59 TO 34.55′ R† D 90+16.76	c			
	d				103																													REMOVE CULVERT	68.69′ L† D 90+32.59 TO 34.49′ R† D 90+23.55	d			
	e		1																															ABANDON INLET	71.25′ L† SB 72+58.36	e			
9	a														27																4.0		S	12" APC	14.00′ R† SL 20+09.55 TO 16.15′ L† SL 20+09.63	a	9	DP-4	D-1
	b											1.5		1.2												1		239			3.9		GO DI w/ SGD	16.15′ L† SL 20+09.63	b			
	c					1																												REMOVE INLET	16.15′ L† SL 20+09.63	c			
	d	81							5.3																									ABANDON CULVERT	16.15′ L† SL 20+09.63 TO 67.57′ L† SB 75+85.85	d			
	e	62							4.1																									ABANDON CULVERT	93.10′ L† SB 75+32.50 TO 67.57′ L† SB 75+85.85	e			
	f		1																															ABANDON INLET	93.10′ L† SB 75+32.50	f			
	g				178																													REMOVE CULVERT	124.21′ L† SB 76+34.96 TO 2.28′ R† SB 75+15.82	g			
	h			1																														ABANDON MANHOLE	124.21′ L† SB 76+34.96	h			
	i	29							1.9																									ABANDON CULVERT	124.21′ L† SB 76+34.96 TO 16.15′ L† SL 20+09.63	i			
10	a														22																2.5		S	12" APC	14.00′ L† SL 22+23.44 TO 14.00′ R† SL 22+23.44	a	10	DP-5	D-2
	b											1.3		1.2												1		239			3.0		GO DI w/ SGD	14.00′ R† SL 22+23.44	b			
	c				79																													REMOVE CULVERT	58.44′ L† SB 78+39.41 TO 17.73′ R† SB 78+19.11	c			
	d	71							4.6																									ABANDON CULVERT	17.73′ R† SB 78+19.11 TO 85.86′ R† SB 77+97.14	d			
11	a											1.7		1.2												1		239			4.5		GO DI w/ SGD	14.00′ R† SL 23+74.63	a	11	DP-5	D-2
	b														8																3.8		S	12" APC	14.00′ R† SL 23+74.63 TO 4.59′ R† SL 23+74.63	b			
	c														17																3.9		S	12" APC	4.59′ R† SL 23+74.63 TO 14.00′ L† SL 23+74.63	c			
SHEET TOTAL		243	2	1	552	1		0.4	15.9			5.9		4.8	74											1	3		1043										

DRAINAGE QUANTITIES

DQ-4

CALCULATED-DESIGNED BY
CHECKED BY
CONSULTANT FUNCTIONAL SUPERVISOR: ABOLFAZL EMADZADEH
STATE OF CALIFORNIA - DEPARTMENT OF TRANSPORTATION
Caltrans

REVISED BY	DATE REVISED
KATIE MING	7/31/09
DUANNE GILMORE	ML/KM

LAST REVISION 11-19-09
DATE PLOTTED => 14-DEC-2009
TIME PLOTTED => 14:03

BORDER LAST REVISED 4/11/2008
RELATIVE BORDER SCALE IS IN INCHES 0 1 2 3
USERNAME => trienard
DGN FILE => 416374id004.dgn
CU 04242
EA 163741

NOTE:

1. FOR NOTES AND LEGEND SEE DQ-1.

CALIFORNIA STATE FIRE MARSHAL APPROVED

Approval of this plan does not authorize or approve any omission or deviation from applicable regulations. Final approval is subject to field inspection. One set of approved plans shall be available on the project site at all times.

Reviewed by: STEPHEN GUARINO

Approval date: 12-14-09

Dist	COUNTY	ROUTE	POST MILES TOTAL PROJECT	SHEET No.	TOTAL SHEETS
04	SF	101	8.2/9.2	79	654

Manish Dalia 7-31-09
REGISTERED CIVIL ENGINEER DATE

12-14-09
PLANS APPROVAL DATE

REGISTERED PROFESSIONAL ENGINEER — MANISH M. DALIA — No. C74016 — Exp. 6-30-11 — CIVIL — STATE OF CALIFORNIA

THE STATE OF CALIFORNIA OR ITS OFFICERS OR AGENTS SHALL NOT BE RESPONSIBLE FOR THE ACCURACY OR COMPLETENESS OF SCANNED COPIES OF THIS PLAN SHEET.

Arup PB JV
560 Mission Street, Suite 700
San Francisco, CA 94105

DRAINAGE SYSTEM No.	DRAINAGE UNIT	ABANDON CULVERT (LF)	ABANDON INLET (EA)	ABANDON MANHOLE (EA)	REMOVE CULVERT (LF)	REMOVE INLET (EA)	REMOVE MANHOLE (EA)	ADJUST INLET (EA)	ADJUST MANHOLE TO GRADE (EA)	SAND BACKFILL (CY)	DITCH EXCAVATION (CY)	MINOR CONCRETE: MINOR STRUCTURE (CY)	MINOR CONCRETE: BACKFILL (CY)	MINOR CONCRETE: MISCELLANEOUS CONSTRUCTION (CY)	ALTERNATIVE PIPE CULVERT: 12" (LF)	18" (LF)	24" (LF)	36" (LF)	36" CSP (0.079" THICK) (LF)	8" CSP DD (LF)	8" PPP UNDERDRAIN (LF)	8" PP (LF)	MODIFY INLET TO MANHOLE (EA)	CAP MANHOLE (EA)	CAP INLET (EA)	(N) FRAME & GRATE (TYPE 24-12) (EA)	(N) FRAME & GRATE (TYPE 24-12X) (EA)	(N) FRAME & COVER (TYPE U45) (EA)	(N) MISCELLANEOUS IRON AND STEEL (LB)	(N) CONCRETE COLLAR (EA)	(N) MAXIMUM PIPE COVER (Ft)	(N) HEIGHT OF DRAINAGE STRUCTURE (Ft)	PIPE JOINT CLASSIFICATION	DESCRIPTION	STATION	DRAINAGE UNIT	DRAINAGE SYSTEM No.	DRAINAGE PROFILE SHEET No.	DRAINAGE PLAN SHEET No.
11	d											1.7		1.2													1		326			4.5		GO DI w/ SGD	14.00′ Lt SL 23+74.63	d	11	DP-5	D-2
	e	42								2.7																								ABANDON CULVERT	93.74′ Lt SB 79+77.30 TO 54.78′ Lt SB 79+86.97	e			
	f					1																												REMOVE INLET	54.78′ Lt SB 79+86.97	f			
	g				39																													REMOVE CULVERT	54.78′ Lt SB 79+86.97 TO 15.90′ Lt SB 79+97.19	g			
12	a						1																											REMOVE MANHOLE	35.94′′ Lt SB 80+01.25	a	12		D-2
	b				20																													REMOVE CULVERT	35.94′′ Lt SB 80+01.25 TO 17.12′′ Lt SB 80+06.39	b			
13	a														23															3.5		P	12" APC	10.00′ Lt SL 26+08.05 TO 14.00′ Rt SL 26+05.61	a	13	DP-4	D-2
	b											1.0		1.2													1		239			1.9		GO DI w/ SGD	14.00′ Rt SL 26+05.61	b			
14	a											2.4		1.2												1			326			7.1		G2 DI w/ SGD	4.00′ Rt SB 86+15.98	a	14	DP-5	D-2
	b															13														7.0		S	18" APC	4.00′ Rt SB 86+15.98 TO 15.28′ Rt SB 86+17.49	b			
	c											7.1															1	435			18.1		G2 MANHOLE	15.28′ Rt SB 86+17.49	c			
	d															80														1	18.0		S	18" APC w/ COLLAR	15.28′ Rt SB 86+17.49 TO 13.27′ Rt SB 86+97.60	d			
15	a		1																															ABANDON DI	20.22′′ Lt SB 87+62.41	a	15		D-2
16	a															62														3.0		S	18" APC	4.00′ Rt SB 74+92.00 TO 59.96 Lt SB 74+94.48	a	16	DP-6	D-1
	b											1.8															1	435			5.0		G2 MANHOLE	59.96 Lt SB 74+94.48	b			
	c														64															3.0		S	12" APC	59.96 Lt SB 74+94.48 TO 59.96 Lt SB 75+57.88	c			
	d											1.6															1	435			4.3		G2 MANHOLE	59.96 Lt SB 75+57.88	d			
	e																		99										1	3.0		S	8" CSP DD w/ COLLAR	59.96 Lt SB 75+57.88 TO 53.53 Lt SB 76+25.64	e			
	f																			378										2.0		S	8" PPP UD	53.53 Lt SB 76+25.64 TO 53.61 Lt SB 79+89.79	f		DP-7	D-2
	g																				92												8" PP	53.61 Lt SB 79+89.79 TO 57.58 Lt SB 79+93.48	g			
	h																			484													8" PPP UNDERDRAIN	57.58 Lt SB 79+93.48 TO 53.53 Lt SB 85+63.92	h			
SHEET TOTAL		42	1		59	1	1			2.7		15.6		3.6	87	155			99	862	92				1	2	3	2196	2								

DRAINAGE QUANTITIES

DQ-5

STATE OF CALIFORNIA - DEPARTMENT OF TRANSPORTATION
Caltrans

CONSULTANT FUNCTIONAL SUPERVISOR: ABOLFAZL EMADZADEH

CALCULATED-DESIGNED BY: KATIE MING
CHECKED BY: DUANNE GILMORE

REVISED BY: ML/KM
DATE REVISED: 7/31/09

LAST REVISION — DATE PLOTTED => 14-DEC-2009, TIME PLOTTED => 14:03
11-19-09

BORDER LAST REVISED 4/11/2008

RELATIVE BORDER SCALE IS IN INCHES 0 1 2 3

USERNAME => trlenard
DGN FILE => 416374id005.dgn

CU 04242

EA 163741

NOTE:

1. FOR NOTES AND LEGEND SEE DQ-1.

FALL PROTECTION SYSTEM (N)

STATION	DRAINAGE UNIT No.
24.45' Rt LI2 15+33.13	5g

CALIFORNIA STATE FIRE MARSHAL APPROVED

Approval of this plan does not authorize or approve any omission or deviation from applicable regulations. Final approval is subject to field inspection. One set of approved plans shall be available on the project site at all times.

Reviewed by: STEPHEN GUARINO

Approval date: 12-14-09

Dist	COUNTY	ROUTE	POST MILES TOTAL PROJECT	SHEET No.	TOTAL SHEETS
04	SF	101	8.2/9.2	80	654

Manish Dalia 7-31-09
REGISTERED CIVIL ENGINEER DATE

12-14-09
PLANS APPROVAL DATE

REGISTERED PROFESSIONAL ENGINEER — MANISH M. DALIA — No. C74016 — Exp. 6-30-11 — CIVIL — STATE OF CALIFORNIA

THE STATE OF CALIFORNIA OR ITS OFFICERS OR AGENTS SHALL NOT BE RESPONSIBLE FOR THE ACCURACY OR COMPLETENESS OF SCANNED COPIES OF THIS PLAN SHEET.

Arup PB JV
560 Mission Street, Suite 700
San Francisco, CA 94105

DRAINAGE SYSTEM No. ⬡	DRAINAGE UNIT ◯	ABANDON CULVERT	ABANDON INLET	ABANDON MANHOLE	REMOVE CULVERT	REMOVE INLET	REMOVE MANHOLE	ADJUST INLET	ADJUST MANHOLE TO GRADE	SAND BACKFILL	DITCH EXCAVATION	MINOR CONCRETE			ALTERNATIVE PIPE CULVERT				36" CSP (0.079" THICK)	8" CSP DD	8" PPP UNDERDRAIN	8" PP	MODIFY INLET TO MANHOLE	CAP MANHOLE	CAP INLET	(N) FRAME & GRATE (TYPE 24-12)	(N) FRAME & GRATE (TYPE 24-12X)	(N) FRAME & COVER (TYPE U45)	MISCELLANEOUS IRON AND STEEL	(N) CONCRETE COLLAR	(N) MAXIMUM PIPE COVER	(N) HEIGHT OF DRAINAGE STRUCTURE	PIPE JOINT CLASSIFICATION	DESCRIPTION	STATION	DRAINAGE UNIT ◯	DRAINAGE SYSTEM No. ⬡	DRAINAGE PROFILE SHEET No.	DRAINAGE PLAN SHEET No.
		LF	EA		LF	EA		LF	EA	CY					LF								EA			EA			LB	EA	F†								
17	-																																NOT USED		-	17		
18	-																																NOT USED		-	18		
19	-																																NOT USED		-	19		
SHEET TOTAL																																							
GRAND TOTAL		415	4	3	835	2	1	2.0	2	24.9	16.7	90.9		27.6	241	2220	888	96	32	99	862	92				9	16	9	12108	7								

DRAINAGE QUANTITIES

DQ-6

STATE OF CALIFORNIA - DEPARTMENT OF TRANSPORTATION
Caltrans

CONSULTANT FUNCTIONAL SUPERVISOR: ABOLFAZL EMADZADEH

CALCULATED-DESIGNED BY: KATIE MING
CHECKED BY: DUANNE GILMORE

REVISED BY: ML/KM
DATE REVISED: 7/31/09

LAST REVISION: DATE PLOTTED => 14-DEC-2009; TIME PLOTTED => 14:03
11-19-09

BORDER LAST REVISED 4/11/2008

RELATIVE BORDER SCALE IS IN INCHES 0 1 2 3

USERNAME => trienard
DGN FILE => 416374id006.dgn

CU 04242

EA 163741

NOTE:

1. FOR NOTES AND LEGEND SEE DQ-1.

CALIFORNIA STATE FIRE MARSHAL APPROVED

Approval of this plan does not authorize or approve any omission or deviation from applicable regulations. Final approval is subject to field inspection. One set of approved plans shall be available on the project site at all times.

Reviewed by: STEPHEN GUARINO

Approval date: 12-14-09

Dist	COUNTY	ROUTE	POST MILES TOTAL PROJECT	SHEET No.	TOTAL SHEETS
04	SF	101	8.2/9.2	81	654

Manish Dalia 7-31-09
REGISTERED CIVIL ENGINEER DATE

12-14-09
PLANS APPROVAL DATE

REGISTERED PROFESSIONAL ENGINEER — MANISH M. DALIA No. C74016 Exp. 6-30-11 CIVIL — STATE OF CALIFORNIA

THE STATE OF CALIFORNIA OR ITS OFFICERS OR AGENTS SHALL NOT BE RESPONSIBLE FOR THE ACCURACY OR COMPLETENESS OF SCANNED COPIES OF THIS PLAN SHEET.

Arup PB JV
560 Mission Street, Suite 700
San Francisco, CA 94105

DRAINAGE SYSTEM No. ⬡	DRAINAGE UNIT ◯	ABANDON CULVERT (LF)	ABANDON INLET (EA)	ABANDON MANHOLE (EA)	REMOVE CULVERT (LF)	REMOVE INLET (EA)	REMOVE MANHOLE (EA)	ADJUST INLET (LF)	ADJUST MANHOLE TO GRADE (EA)	SAND BACKFILL (CY)	DITCH EXCAVATION (CY)	MINOR CONCRETE: MINOR STRUCTURE (CY)	MINOR CONCRETE: BACKFILL (CY)	MINOR CONCRETE: MISCELLANEOUS CONSTRUCTION (CY)	APC 12" (LF)	APC 18" (LF)	APC 24" (LF)	APC 36" (LF)	36" CSP (0.079" THICK) (LF)	8" CSP DD (LF)	8" PPP UNDERDRAIN (LF)	8" PP (LF)	MODIFY INLET TO MANHOLE (EA)	MODIFY MANHOLE TO INLET (EA)	CAP MANHOLE (EA)	CAP INLET (EA)	(N) FRAME & GRATE (TYPE 24-12) (EA)	(N) FRAME & GRATE (TYPE 24-12X) (EA)	(N) FRAME & COVER (TYPE U45) (EA)	(N) MISCELLANEOUS IRON AND STEEL (LB)	(N) CONCRETE COLLAR (EA)	(N) MAXIMUM PIPE COVER (Ft)	(N) HEIGHT OF DRAINAGE STRUCTURE (Ft)	PIPE JOINT CLASSIFICATION	DESCRIPTION	STATION	DRAINAGE UNIT ◯	DRAINAGE SYSTEM No. ⬡	DRAINAGE PROFILE SHEET No.	DRAINAGE PLAN SHEET No.
20	a							1.9																										ADJUST INLET	35.19′ L† DN 51+99.61	a	20		D-3
	b							0.7																										ADJUST INLET	24.58′ R† DN 51+98.50	b			
21	a											1.0															1			326			3.4		GI DI	30.00′ R† DN 53+56.52	a	21	DP-8	D-3
	b															32																4.5		S	18" APC	30.00′ R† DN 53+56.52 TO 0.00′′ L† DS 53+57.03	b			
	c											1.9															1			326			5.5		G2 DI	0.00′′ L† DS 53+57.03	c			
	d															99																5.0		S	18" APC	0.00′′ L† DS 53+57.03 TO 0.00′ L† DS 54+54.93	d			
	e											2.2															1			326			6.3		G2 DI	0.00′ L† DS 54+54.93	e			
	f															32															1	4.8		S	18" APC w/ COLLAR	0.00′ L† DS 54+54.93 TO 30.00′ R† DN 54+54.35	f			
	g							1.6																								4.6			ADJUST INLET	30.00′ R† DN 54+54.35	g			
22	a							1.4																											ADJUST INLET	47.21′ L† DN 54+11.19	a	22		D-3
23	a																									1									CAP DI	11.13′ R† DN 55+64.23	a	23		D-4
	b																									1									CAP DI	10.96′ R† DN 55+59.84	b			
24	a											1.1															1			326			3.5		G1 DI	0.00′ R† DN 57+47.70	a	24	DP-8	D-4
	b															48																3.1		S	18" APC	0.00′ R† DN 57+47.70 TO 0.00′ R† DN 56+99.50	b			
	c											1.5															1			326			3.9		G2 DI	0.00′ R† DN 56+99.50	c			
	d															25																3.5		S	18" APC	0.00′ R† DN 56+99.50 TO 24.73′ L† DS 56+99.50	d			
	e											2.2															1			326			6.4		G2 DI	24.73′ L† DS 56+99.50	e			
25	a											1.4															1			326			3.5		G2 DI	37.38′ L† MN 59+07.61	a	25	DP-8	D-8
	b															75																3.0		S	18" APC	37.38′ L† MN 59+07.61 TO 39.88′ R† MN 59+07.61	b			
	c											1.6															1			326			4.1		G2 DI	39.88′ R† MN 59+07.61	c			D-4
	d															18																3.0		S	18" APC	39.88′ R† MN 59+07.61 TO 33.22′ R† DN 59+84.75	d			
SHEET TOTAL								5.6				12.9				329										2	8			2608	1									

DETOUR DRAINAGE QUANTITIES

DQ-7

STATE OF CALIFORNIA - DEPARTMENT OF TRANSPORTATION — Caltrans

CONSULTANT FUNCTIONAL SUPERVISOR: ABOLFAZL EMADZADEH

CALCULATED-DESIGNED BY: KATIE MING

CHECKED BY: DUANNE GILMORE

REVISED BY: ML/KM

DATE REVISED: 7/31/09

LAST REVISION: DATE PLOTTED => 14-DEC-2009 — 07-31-09 — TIME PLOTTED => 14:04

BORDER LAST REVISED 4/11/2008

RELATIVE BORDER SCALE IS IN INCHES 0 1 2 3

USERNAME => trlenard
DGN FILE => 416374id007.dgn

CU 04242

EA 163741

NOTE:

1. FOR NOTES AND LEGEND SEE DQ-1.

CALIFORNIA STATE FIRE MARSHAL APPROVED
Approval of this plan does not authorize or approve any omission or deviation from applicable regulations. Final approval is subject to field inspection. One set of approved plans shall be available on the project site at all times.
Reviewed by: STEPHEN GUARINO
Approval date: 12-14-09

Dist	COUNTY	ROUTE	POST MILES TOTAL PROJECT	SHEET No.	TOTAL SHEETS
04	SF	101	8.2/9.2	82	654

Manish Dalia 7-31-09
REGISTERED CIVIL ENGINEER DATE

12-14-09
PLANS APPROVAL DATE

REGISTERED PROFESSIONAL ENGINEER — MANISH M. DALIA — No. C74016 — Exp. 6-30-11 — CIVIL — STATE OF CALIFORNIA

THE STATE OF CALIFORNIA OR ITS OFFICERS OR AGENTS SHALL NOT BE RESPONSIBLE FOR THE ACCURACY OR COMPLETENESS OF SCANNED COPIES OF THIS PLAN SHEET.

Arup PB JV
560 Mission Street, Suite 700
San Francisco, CA 94105

DRAINAGE SYSTEM No. ⬡	DRAINAGE UNIT ◯	ABANDON CULVERT (LF)	ABANDON INLET (EA)	ABANDON MANHOLE (EA)	REMOVE CULVERT (LF)	REMOVE INLET (EA)	REMOVE MANHOLE (EA)	ADJUST INLET (LF)	ADJUST MANHOLE TO GRADE (EA)	SAND BACKFILL (CY)	DITCH EXCAVATION (CY)	MINOR CONCRETE: MINOR STRUCTURE (CY)	MINOR CONCRETE: BACKFILL (CY)	MINOR CONCRETE: MISCELLANEOUS CONSTRUCTION (CY)	APC 12" (LF)	APC 18" (LF)	APC 24" (LF)	APC 36" (LF)	36" CSP (0.079" THICK) (LF)	8" CSP DD (LF)	8" PPP UNDERDRAIN (LF)	8" PP (LF)	MODIFY INLET TO MANHOLE (EA)	MODIFY MANHOLE TO INLET (EA)	CAP MANHOLE (EA)	CAP INLET (EA)	(N) FRAME & GRATE (TYPE 24-12) (EA)	(N) FRAME & GRATE (TYPE 24-12X) (EA)	(N) FRAME & COVER (TYPE U45) (EA)	(N) MISCELLANEOUS IRON AND STEEL (LB)	(N) CONCRETE COLLAR (EA)	(N) MAXIMUM PIPE COVER (F†)	(N) HEIGHT OF DRAINAGE STRUCTURE (F†)	PIPE JOINT CLASSIFICATION	DESCRIPTION	STATION	DRAINAGE UNIT ◯	DRAINAGE SYSTEM No. ⬡	DRAINAGE PROFILE SHEET No.	DRAINAGE PLAN SHEET No.
25	e											2.3											1							435			6.8		MODIFY INLET TO MANHOLE	33.22′ R† DN 59+84.75	e	25	DP-8	D-4
	f																									1									CAP DI	5.89′ R† DN 60+21.24	f			
	g	15								1.0																									ABANDON CULVERT	5.89′ R† DN 60+21.24 TO 20.10′ R† DN 60+25.06	g			
	h		1																																ABANDON INLET	20.10′ R† DN 60+25.06	h			
26	a											1.4															1			326			3.4		G2 DI	22.00′ L† DS 59+75.21	a	26	DP-10	D-4
	b															87																2.6			18" APC	22.00′ L† DS 59+75.21 TO 22.00′ L† DS 60+67.28	b			
	c											1.6															1			326			4.0		G2 DI	22.00′ L† DS 60+67.28	c			
	d															45															1	5.8			18" APC w/ COLLAR	22.00′ L† DS 60+67.28 TO 2.15′ R† DN 60+82.71	d			
	e								1																								9.7		ADJUST MANHOLE TO GRADE	2.15′ R† DN 60+82.71	e			
	f	27								1.8																									ABANDON CULVERT	0.00′ R† DN 60+80.32 TO 15.70′ R† 61+02.23	f			
	g		1																																ABANDON INLET	15.70′ R† 61+02.23	g			
27	a										19																								UNLINED DITCH (101′)	34.67′ L† DS 60+61.96 TO 30.58′ L† DS 61+70.06	a	27	DP-8	D-4
	b										20																								UNLINED DITCH (109′)	29.88′ L† DS 62+79.79 TO 30.58′ L† DS 61+70.06	b			
	c										29																								UNLINED DITCH (154′)	29.88′ L† DS 62+79.79 TO 32.27′ L† DS 64+39.95	c			
	d										10																								UNLINED DITCH (54′)	40.08′ L† DS 64+95.74 TO 32.27′ L† DS 64+39.95	d			
	e										19																								UNLINED DITCH (102′)	40.08′ L† DS 64+95.74 TO 44.58′ L† D 66+02.96	e			
	f										100																								UNLINED DITCH (542′)	67.60′ L† D 71+74.27 TO 44.58′ L† D 66+02.96	f		DP-9	D-5
	g										36																								UNLINED DITCH (196′)	67.60′ L† D 71+74.27 TO 76.07′ L† D 73+69.77	g			
	h										50																								UNLINED DITCH (272′)	78.86′ L† D 76+42.84 TO 76.07′ L† D 73+69.77	h			
	i										100																								UNLINED DITCH (540′)	56.40′ L† D 82+13.74 TO 78.86′ L† D 76+42.84	i			
28	a													14.8																					CONCRETE CAP × 210′	38.61′ R† DN 62+19.33 TO 37.38′ R† DN 64+12.29	a	28		D-4
SHEET TOTAL		42	2						1	2.8	383	5.3		14.8		132							1		1	2		1	1087	1										

DETOUR DRAINAGE QUANTITIES

DQ-8

CALCULATED-DESIGNED BY
CHECKED BY
KATIE MING
DUANNE GILMORE
REVISED BY
DATE REVISED
ML/KM
7/31/09
CONSULTANT FUNCTIONAL SUPERVISOR
ABOLFAZL EMADZADEH
STATE OF CALIFORNIA - DEPARTMENT OF TRANSPORTATION
Caltrans

LAST REVISION 07-31-09
DATE PLOTTED => 14-DEC-2009
TIME PLOTTED => 14:04

BORDER LAST REVISED 4/11/2008
RELATIVE BORDER SCALE IS IN INCHES 0 1 2 3
USERNAME => trlenard
DGN FILE => 416374id008.dgn
CU 04242
EA 163741

NOTE:

1. FOR NOTES AND LEGEND SEE DQ-1.

CALIFORNIA STATE FIRE MARSHAL APPROVED

Approval of this plan does not authorize or approve any omission or deviation from applicable regulations. Final approval is subject to field inspection. One set of approved plans shall be available on the project site at all times.

Reviewed by: STEPHEN GUARINO

Approval date: 12-14-09

Dist	COUNTY	ROUTE	POST MILES TOTAL PROJECT	SHEET No.	TOTAL SHEETS
04	SF	101	8.2/9.2	83	654

Manish Dalia 7-31-09
REGISTERED CIVIL ENGINEER DATE

12-14-09
PLANS APPROVAL DATE

REGISTERED PROFESSIONAL ENGINEER — MANISH M. DALIA — No. C74016 — Exp. 6-30-11 — CIVIL — STATE OF CALIFORNIA

THE STATE OF CALIFORNIA OR ITS OFFICERS OR AGENTS SHALL NOT BE RESPONSIBLE FOR THE ACCURACY OR COMPLETENESS OF SCANNED COPIES OF THIS PLAN SHEET.

Arup PB JV
560 Mission Street, Suite 700
San Francisco, CA 94105

DRAINAGE SYSTEM No.	DRAINAGE UNIT	ABANDON CULVERT	ABANDON INLET	ABANDON MANHOLE	REMOVE CULVERT	REMOVE INLET	REMOVE MANHOLE	ADJUST INLET	ADJUST MANHOLE TO GRADE	SAND BACKFILL	DITCH EXCAVATION	MINOR CONCRETE: MINOR STRUCTURE	MINOR CONCRETE: BACKFILL	MINOR CONCRETE: MISCELLANEOUS CONSTRUCTION	APC: 12"	APC: 18"	APC: 24"	APC: 36"	36" CSP (0.079" THICK)	8" CSP DD	8" PPP UNDERDRAIN	8" PP	MODIFY INLET TO MANHOLE	MODIFY MANHOLE TO INLET	CAP MANHOLE	CAP INLET	(N) FRAME & GRATE (TYPE 24-12)	(N) FRAME & GRATE (TYPE 24-12X)	(N) FRAME & COVER (TYPE U45)	(N) MISCELLANEOUS IRON AND STEEL	(N) CONCRETE COLLAR	(N) MAXIMUM PIPE COVER	(N) HEIGHT OF DRAINAGE STRUCTURE	PIPE JOINT CLASSIFICATION	DESCRIPTION	STATION	DRAINAGE UNIT	DRAINAGE SYSTEM No.	DRAINAGE PROFILE SHEET No.	DRAINAGE PLAN SHEET No.
		LF	EA		LF	EA		LF	EA	CY					LF								EA				EA			LB	EA		Ft						
29	a											1.4															1			326			3.5		G2 DI	30.58' Lt DS 61+70.06	a	29	DP-10	D-4
	b															40																5.5		S	18" APC	30.58' Lt DS 61+70.06 TO 22.00' Lt DS 62+08.36	b			
	c											2.1															1			326			6.3		G2 DI	22.00' Lt DS 62+08.36	c			
	d															46																8.7		S	18" APC	22.00' Lt DS 62+08.36 TO 0.00' Rt DN 62+27.86	d			
	e											3.9															1			326			9.1		G2 DI	0.00' Rt DN 62+27.86	e			
	f															21															1	9.9		S	18" APC w/ COLLAR	0.00' Rt DN 62+27.86 TO 23.37' Rt DN 62+27.40	f			
	g								1																							11.9			ADJUST MANHOLE TO GRADE	23.37' Rt DN 62+27.40	g			
	h		1																																ABANDON INLET	53.34' Lt DN 62+02.76	h			
	i	11								0.7																									ABANDON CULVERT	53.34' Lt DN 62+02.76 TO 64.36' Lt DN 62+05.12	i			
	j		1																																ABANDON INLET	64.36' Lt DN 62+05.12	j			
30	a											4.6															1			326			11.1		G2 DI	0.00' Rt DN 64+72.04	a	30	DP-10	D-4
	b											3.8															1			326			9.0		G2 DI	21.96' Lt DS 64+41.39	b			
	c											2.4															1			326			7.4		G2 DI	32.27' Lt DS 64+39.95	c			
31	a											1.3															1			326			4.5		G1 DI	3.50' Lt D 67+65.66	a	31	DP-10	D-4
	b															46																3.0		S	18" APC	3.50' Lt D 67+65.66 TO 49.50' Lt D 67+65.66	b			
	c											1.7															1			326			4.5		G2 DI	49.50' Lt D 67+65.66	c			
	d															132																3.4		S	18" APC	49.50' Lt D 67+65.66 TO 32.77' Lt DS 66+02.94	d			
	e											1.8															1			326			4.9		G2 DI	32.77' Lt D 66+02.94	e			
	f															157																5.8		S	18" APC	32.77' Lt D 66+02.94 TO 21.96' Lt DS 64+41.39	f			
32	a											1.3															1			326			4.4		G1 DI	0.00' Lt D 66+31.25	a	32	DP-10	D-4
	b															46																3.0		P	18" APC	0.00' Lt D 66+31.25 TO 32.77' Lt DS 66+02.94	b			
	c															13																3.0		S	18" APC	32.77' Lt DS 66+02.94 TO 44.58' Lt DS 66+02.96	c			
	d											1.5															1			326			3.7		G2 DI	38.50' Lt D 67+64.26 TO 22.00' Lt DS 66+02.85	d			
SHEET TOTAL		11	2						1	0.7		25.8				501											11			3586	1									

DETOUR DRAINAGE QUANTITIES

DQ-9

STATE OF CALIFORNIA - DEPARTMENT OF TRANSPORTATION — Caltrans

CONSULTANT FUNCTIONAL SUPERVISOR: ABOLFAZL EMADZADEH

CALCULATED-DESIGNED BY: KATIE MING

CHECKED BY: DUANNE GILMORE

REVISED BY: ML/KM

DATE REVISED: 7/31/09

LAST REVISION — DATE PLOTTED => 14-DEC-2009 — TIME PLOTTED => 14:04 — 07-31-09

BORDER LAST REVISED 4/11/2008

RELATIVE BORDER SCALE IS IN INCHES 0 1 2 3

USERNAME => trlenard
DGN FILE => 416374id009.dgn

CU 04242

EA 163741

NOTE:

1. FOR NOTES AND LEGEND SEE DQ-1.

CALIFORNIA STATE FIRE MARSHAL APPROVED

Approval of this plan does not authorize or approve any omission or deviation from applicable regulations. Final approval is subject to field inspection. One set of approved plans shall be available on the project site at all times.

Reviewed by: STEPHEN GUARINO

Approval date: 12-14-09

Dist	COUNTY	ROUTE	POST MILES TOTAL PROJECT	SHEET No.	TOTAL SHEETS
04	SF	101	8.2/9.2	84	654

Manish Dalia 7-31-09
REGISTERED CIVIL ENGINEER DATE

12-14-09
PLANS APPROVAL DATE

REGISTERED PROFESSIONAL ENGINEER — MANISH M. DALIA — No. C74016 — Exp. 6-30-11 — CIVIL — STATE OF CALIFORNIA

THE STATE OF CALIFORNIA OR ITS OFFICERS OR AGENTS SHALL NOT BE RESPONSIBLE FOR THE ACCURACY OR COMPLETENESS OF SCANNED COPIES OF THIS PLAN SHEET.

Arup PB JV
560 Mission Street, Suite 700
San Francisco, CA 94105

DRAINAGE SYSTEM No.	DRAINAGE UNIT	ABANDON CULVERT (LF)	ABANDON INLET (EA)	ABANDON MANHOLE (EA)	REMOVE CULVERT (LF)	REMOVE INLET (EA)	REMOVE MANHOLE (EA)	ADJUST INLET (LF)	ADJUST MANHOLE TO GRADE (EA)	SAND BACKFILL (CY)	DITCH EXCAVATION (CY)	MINOR CONCRETE: MINOR STRUCTURE (CY)	MINOR CONCRETE: BACKFILL (CY)	MINOR CONCRETE: MISCELLANEOUS CONSTRUCTION (CY)	APC 12" (LF)	APC 18" (LF)	APC 24" (LF)	APC 36" (LF)	36" CSP (0.079" THICK) (LF)	8" CSP DD (LF)	8" PPP UNDERDRAIN (LF)	8" PP (LF)	MODIFY INLET TO MANHOLE (EA)	MODIFY MANHOLE TO INLET (EA)	CAP MANHOLE (EA)	CAP INLET (EA)	(N) FRAME & GRATE (TYPE 24-12) (EA)	(N) FRAME & GRATE (TYPE 24-12X) (EA)	(N) FRAME & COVER (TYPE U45) (EA)	(N) MISCELLANEOUS IRON AND STEEL (LB)	(N) CONCRETE COLLAR (EA)	(N) MAXIMUM PIPE COVER (Ft)	(N) HEIGHT OF DRAINAGE STRUCTURE (Ft)	PIPE JOINT CLASSIFICATION	DESCRIPTION	STATION	DRAINAGE UNIT	DRAINAGE SYSTEM No.	DRAINAGE PROFILE SHEET No.	DRAINAGE PLAN SHEET No.
33	a											1.1															1			326			3.5		G1 DI	3.50′ Lt D 68+79.00	a	33	DP-11	D-4
	b															46																2.8		S	18" APC	3.50′ Lt D 68+79.00 TO 49.50′ Lt D 68+79.00	b			
	c											1.7															1			326			4.3		G2 DI	49.50′ Lt D 68+79.00	c			
	d															114																3.0		S	18" APC	49.50′ Lt D 68+79.00 TO 49.50′ Lt D 67+65.66	d			
34	a																										1								CAP DI	6.51′ Rt D 69+97.30	a	34		D-5
	b																										1								CAP DI	33.87′ Rt D 72+29.35	b			
35	a											1.4																1		326			3.5		G2 DI	3.50′ Lt D 72+93.00	a	35	DP-11	D-5
	b															46																2.0		S	18" APC	3.50′ Lt D 72+93.00 TO 38.50′ Lt D 72+93.00	b			
	c											1.7																1		326			3.45		G2 DI	38.50′ Lt D 72+93.00	c			
	d															82																2.0		S	18" APC	38.50′ Lt D 72+93.00 TO 76.07′ Lt D 73+69.77	d			
	e											1.1																1		326			2.2		G2 DI	76.07′ Lt D 73+69.77	e			
36	a																										1								CAP DI	43.31′ Lt D 73+40.46	a	36		D-5
	b																										1								CAP DI	47.52′ Lt D 73+72.91	b			
	c																										1								CAP DI	12.59′ Rt D 74+24.72	c			
	d																										1								CAP DI	29.28′ Rt D 74+89.26	d			
37	a											1.2																1		326			2.8		G2 DI	78.86′ Lt D 76+42.84	a	37	DP-11	D-5
	b								1																				1	435			4.7		ADJUST MANHOLE TO GRADE	55.93′ Lt D 76+53.33	b			
	c																										1								CAP DI	52.09′ Lt D 76+67.40	c			
SHEET TOTAL									1			8.2				288											7	6		1	2391										

DETOUR DRAINAGE QUANTITIES

DQ-10

LAST REVISION 07-31-09 | DATE PLOTTED => 14-DEC-2009 | TIME PLOTTED => 14:04

STATE OF CALIFORNIA - DEPARTMENT OF TRANSPORTATION | Caltrans

CONSULTANT FUNCTIONAL SUPERVISOR: ABOLFAZL EMADZADEH

CALCULATED-DESIGNED BY: KATIE MING | CHECKED BY: DUANNE GILMORE | REVISED BY: ML/KM | DATE REVISED: 7/31/09

BORDER LAST REVISED 4/11/2008 | RELATIVE BORDER SCALE IS IN INCHES 0 1 2 3 | USERNAME => trlenard | DGN FILE => 416374id010.dgn | CU 04242 | EA 163741

NOTE:

1. FOR NOTES AND LEGEND SEE DQ-1.

CALIFORNIA STATE FIRE MARSHAL APPROVED

Approval of this plan does not authorize or approve any omission or deviation from applicable regulations. Final approval is subject to field inspection. One set of approved plans shall be available on the project site at all times.

Reviewed by: STEPHEN GUARINO

Approval date: 12-14-09

Dist	COUNTY	ROUTE	POST MILES TOTAL PROJECT	SHEET No.	TOTAL SHEETS
04	SF	101	8.2/9.2	85	654

Manish Dalia 7-31-09
REGISTERED CIVIL ENGINEER DATE

12-14-09
PLANS APPROVAL DATE

REGISTERED PROFESSIONAL ENGINEER — MANISH M. DALIA — No. C74016 — Exp. 6-30-11 — CIVIL — STATE OF CALIFORNIA

THE STATE OF CALIFORNIA OR ITS OFFICERS OR AGENTS SHALL NOT BE RESPONSIBLE FOR THE ACCURACY OR COMPLETENESS OF SCANNED COPIES OF THIS PLAN SHEET.

Arup PB JV
560 Mission Street, Suite 700
San Francisco, CA 94105

DRAINAGE SYSTEM No.	DRAINAGE UNIT	ABANDON CULVERT	ABANDON INLET	ABANDON MANHOLE	REMOVE CULVERT	REMOVE INLET	REMOVE MANHOLE	ADJUST INLET	ADJUST MANHOLE TO GRADE	SAND BACKFILL	DITCH EXCAVATION	MINOR CONCRETE: MINOR STRUCTURE	MINOR CONCRETE: BACKFILL	MINOR CONCRETE: MISCELLANEOUS CONSTRUCTION	APC: 12"	APC: 18"	APC: 24"	APC: 36"	36" CSP (0.079" THICK)	8" CSP DD	8" PPP UNDERDRAIN	8" PP	MODIFY INLET TO MANHOLE	MODIFY MANHOLE TO INLET	CAP MANHOLE	CAP INLET	(N) FRAME & GRATE (TYPE 24-12)	(N) FRAME & GRATE (TYPE 24-12X)	(N) FRAME & COVER (TYPE U45)	(N) MISCELLANEOUS IRON AND STEEL	(N) CONCRETE COLLAR	(N) MAXIMUM PIPE COVER	(N) HEIGHT OF DRAINAGE STRUCTURE	PIPE JOINT CLASSIFICATION	DESCRIPTION	STATION	DRAINAGE UNIT	DRAINAGE SYSTEM No.	DRAINAGE PROFILE SHEET No.	DRAINAGE PLAN SHEET No.
		LF	EA	EA	LF	EA	EA	LF	EA	CY					LF									EA				EA			LB	EA	F†							
38	a											2.3															1			326			7.0		G2 DI	29.50′ Lt D 77+76.64	a	38	DP-11	D-5
	b								1																							6.1		ADJUST MANHOLE TO GRADE	43.72′ Lt D 77+77.58	b			
	c	47								3.1																								ABANDON CULVERT	9.82′ Rt D 77+77.00 TO 5.86′ Lt D 78+23.57	c			
	d		1																															ABANDON INLET	5.86′ Lt D 78+23.57	d			
39	a											1.9															1			326			5.1		G1 DI w/ SIDE OPENING	25.50′ Rt D 79+45.78	a	39	DP-11	D-5
	b															179																4.1		S	18" APC	32.50′ Rt D 79+45.78 TO 29.50′ Rt D 77+71.77	b			
	c											3.9															1			326			9.1		G2 DI	29.50′ Rt D 77+71.77	a			
40	a																									1								CAP DI	29.13′ Rt D 79+28.92	a	40		D-5
	b																							1										CAP MH	39.99′ Rt D 80+03.06	b			
	c																									1								CAP DI	17.30′′ Rt D 74+24.61	c			
	d																							1										CAP MH	3.44′′ Rt D 74+89.79	d			
41	a													16.0																				CONCRETE DITCH	32.50′ Rt D 79+46.00 TO 32.50′ Rt D 85+87.87	a	41	DP-12	D-5
SHEET TOTAL		47	1						1	3.1		8.1		16.0		179								2	2	3				978									

DETOUR DRAINAGE QUANTITIES

DQ-11

KATIE MING	REVISED BY	ML/KM	
DUANNE GILMORE	DATE REVISED	7/31/09	
CALCULATED-DESIGNED BY			
CHECKED BY			
CONSULTANT FUNCTIONAL SUPERVISOR	ABOLFAZL EMADZADEH		

STATE OF CALIFORNIA - DEPARTMENT OF TRANSPORTATION

Caltrans

LAST REVISION 07-31-09 | DATE PLOTTED => 14-DEC-2009 | TIME PLOTTED => 14:04

BORDER LAST REVISED 4/11/2008 | RELATIVE BORDER SCALE IS IN INCHES 0 1 2 3 | USERNAME => trlenard | DGN FILE => 416374id011.dgn | CU 04242 | EA 163741

NOTE:

1. FOR NOTES AND LEGEND SEE DQ-1.

CALIFORNIA STATE FIRE MARSHAL APPROVED
Approval of this plan does not authorize or approve any omission or deviation from applicable regulations. Final approval is subject to field inspection. One set of approved plans shall be available on the project site at all times.
Reviewed by: STEPHEN GUARINO
Approval date: 12-14-09

EDGE DRAIN QUANTITY

STATION	3" PPP	3" PP	NOTE
D 79+46 RT		5	TYPE D OUTLET
D 79+46 to D 87+87	645		
D 87+87 RT		5	TYPE F VENT
TOTAL	645	10	

Dist	COUNTY	ROUTE	POST MILES TOTAL PROJECT	SHEET No.	TOTAL SHEETS
04	SF	101	8.2/9.2	86	654

Manish Dalia 7-31-09
REGISTERED CIVIL ENGINEER DATE

12-14-09
PLANS APPROVAL DATE

REGISTERED PROFESSIONAL ENGINEER — MANISH M. DALIA — No. C74016 — Exp. 6-30-11 — CIVIL — STATE OF CALIFORNIA

THE STATE OF CALIFORNIA OR ITS OFFICERS OR AGENTS SHALL NOT BE RESPONSIBLE FOR THE ACCURACY OR COMPLETENESS OF SCANNED COPIES OF THIS PLAN SHEET.

Arup PB JV
560 Mission Street, Suite 700
San Francisco, CA 94105

DRAINAGE SYSTEM No.	DRAINAGE UNIT	ABANDON CULVERT (LF)	ABANDON INLET (EA)	ABANDON MANHOLE (EA)	REMOVE CULVERT (LF)	REMOVE INLET (EA)	REMOVE MANHOLE (EA)	ADJUST INLET (LF)	ADJUST MANHOLE TO GRADE (EA)	SAND BACKFILL (CY)	DITCH EXCAVATION (CY)	MINOR CONCRETE: MINOR STRUCTURE (CY)	MINOR CONCRETE: BACKFILL (CY)	MINOR CONCRETE: MISCELLANEOUS CONSTRUCTION (CY)	APC 12" (LF)	APC 18" (LF)	APC 24" (LF)	APC 36" (LF)	36" CSP (0.079" THICK) (LF)	8" CSP DD (LF)	8" PPP UNDERDRAIN (LF)	8" PP (LF)	MODIFY INLET TO MANHOLE (EA)	MODIFY MANHOLE TO INLET (EA)	CAP MANHOLE (EA)	CAP INLET (EA)	(N) FRAME & GRATE (TYPE 24-12) (EA)	(N) FRAME & GRATE (TYPE 24-12X) (EA)	(N) FRAME & COVER (TYPE U45) (EA)	MISCELLANEOUS IRON AND STEEL (LB)	(N) CONCRETE COLLAR (EA)	(N) MAXIMUM PIPE COVER (Ft)	(N) HEIGHT OF DRAINAGE STRUCTURE (Ft)	PIPE JOINT CLASSIFICATION	DESCRIPTION	STATION	DRAINAGE UNIT	DRAINAGE SYSTEM No.	DRAINAGE PROFILE SHEET No.	DRAINAGE PLAN SHEET No.
42	a															7															6.7		S	18" APC	2.70' Rt SB 74+94.00 TO 4.00' Rt SB 74+92.00	a	42	DP-12	D-6
	b														64																3.0		S	12" APC	4.00' Rt SB 74+92.00 TO 12.80' Rt SB 75+59.73	b			
	c											1.6																1	435			4.3		G2 MANHOLE	12.80' Rt SB 75+59.73	c			
	d																			94										1	3.0		S	8" CSP DD w/ COLLAR	12.80' Rt SB 75+59.73 TO 8.40' Rt SB 76+25.48	d			
	e																				363										1.2		S	8" PPP UD	8.40' Rt SB 76+25.48 TO 2.50' Rt SB 85+64.76	e		DP-13	D-7
	f																					92												8" PP	3.21' Rt SB 79+90.06 TO 2.34' Rt SB 80+79.87	f			
	g																				485													8" PPP UD	2.34' Rt SB 80+79.87 TO 2.50' Rt SB 85+64.76	g			
43	a																							1		1			326					MODIFY MANHOLE TO INLET	26.44' Rt MN 54+69.58	a	43	DP-13	D-8
	b															49														1	6.0		S	18" APC w/ COLLAR	26.44 Rt MN 54+69.58 TO 24.00' Lt MN 54+69.58	b			
	c											1.9														1			326			5.5		G2 DI	24.00' Lt MN 54+69.58	c			
	d															203															5.0		S	18" APC	24.00' Lt MN 54+69.58 TO 24.00' Lt MN 56+78.38	d			
	e											1.9														1			326			5.2		G2 DI	24.00' Lt MN 56+78.38	e			
	f															45															4.1		S	18" APC	24.00' Lt MN 56+78.38 TO 24.00' Rt MN 56+78.38	f			
	g											1.6														1			326			4.3		G2 DI	24.00' Rt MN 56+78.38	g			
44	a	13							1.0																									ABANDON CULVERT	38.58' Rt MN 55+31.54 TO 25.86' Rt MN 55+35.27	a	44		D-8
	b					1																												REMOVE INLET	25.86' Rt MN 55+35.27	b			
45	a		1																															ABANDON INLET	22.88' Rt MN 54+27.75	a	45		D-8
	b	15							1.0																									ABANDON CULVERT	22.88' Rt MN 54+27.75 TO 37.91' Rt MN 54+25.79	b			
46	a																						1					1	435					MODIFY INLET TO MANHOLE	8.66' Lt MN 52+85.91	a	46		D-8
	b						0.5																											ADJUST INLET	21.05' Rt MN 52+59.97	b			
SHEET TOTAL		28	1			1	0.5		2.0			7.0			64	304				94	848	92	1	1			4		2	2174	2										
GRAND TOTAL		128	6			1	6.1	4	8.6	383		67.3	0.0	30.8	64	1733				94	848	92	2	1	2	12	34		4	12824	5										

DETOUR DRAINAGE QUANTITIES
DQ-12

CALCULATED-DESIGNED BY: KATIE MING
CHECKED BY: DUANNE GILMORE
REVISED BY: ML/KM
DATE REVISED: 7/31/09
CONSULTANT FUNCTIONAL SUPERVISOR: ABOLFAZL EMADZADEH
STATE OF CALIFORNIA - DEPARTMENT OF TRANSPORTATION
Caltrans

LAST REVISION | DATE PLOTTED => 14-DEC-2009
07-31-09 | TIME PLOTTED => 14:04

BORDER LAST REVISED 4/11/2008 | RELATIVE BORDER SCALE IS IN INCHES 0 1 2 3 | USERNAME => trlenard | DGN FILE => 416374id012.dgn | CU 04242 | EA 163741

NOTES:

1. EXISTING UTILITIES IN CONFLICT WITH FUTURE ALIGNMENT TO BE RELOCATED BY OTHERS.
2. ALL UTILITIES SHOWN IN THESE PLANS ARE BASED UPON RECORD INFORMATION OBTAINED FROM UTILITY OWNERS, AND/OR FIELD SURVEYS OF EXISTING UTILITY SURFACE FEATURES.
3. LOCATION OF UTILITY FACILITIES SHOWN ON THESE PLANS ARE APPROXIMATE AND SHALL BE VERIFIED BY THE CONTRACTOR PRIOR TO CONSTRUCTION.

CALIFORNIA STATE FIRE MARSHAL APPROVED
Approval of this plan does not authorize or approve any omission or deviation from applicable regulations. Final approval is subject to field inspection. One set of approved plans shall be available on the project site at all times.
Reviewed by: STEPHEN GUARINO
Approval date: 12-14-09

Dist	COUNTY	ROUTE	POST MILES TOTAL PROJECT	SHEET No.	TOTAL SHEETS
04	SF	101	8.2/9.2	87	654

REGISTERED CIVIL ENGINEER — 7-31-09 DATE

12-14-09
PLANS APPROVAL DATE

REGISTERED PROFESSIONAL ENGINEER — JOHN EDWARD KARN JR — No. C66743 — Exp. 9-30-10 — CIVIL — STATE OF CALIFORNIA

THE STATE OF CALIFORNIA OR ITS OFFICERS OR AGENTS SHALL NOT BE RESPONSIBLE FOR THE ACCURACY OR COMPLETENESS OF SCANNED COPIES OF THIS PLAN SHEET.

Arup PB JV
560 Mission Street, Suite 700
San Francisco, CA 94105

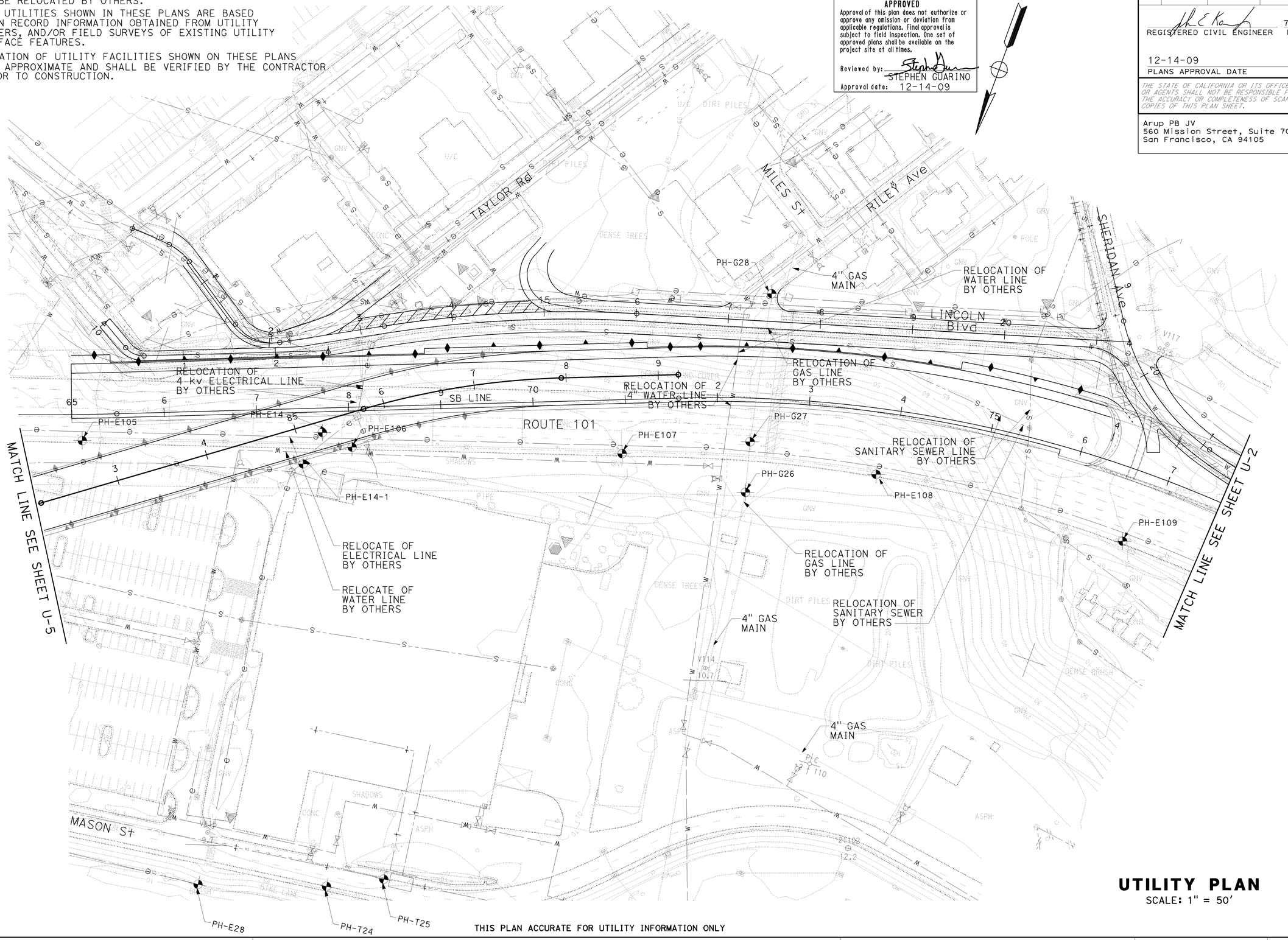

UTILITY PLAN
SCALE: 1" = 50'

THIS PLAN ACCURATE FOR UTILITY INFORMATION ONLY

U-1

STATE OF CALIFORNIA - DEPARTMENT OF TRANSPORTATION
Caltrans

CONSULTANT FUNCTIONAL SUPERVISOR: ABOLFAZL EMADZADEH
CALCULATED-DESIGNED BY
CHECKED BY
DUANNE GILMORE
JOHN E KARN
REVISED BY: DG
DATE REVISED: 7/31/09

LAST REVISION DATE PLOTTED => 14-DEC-2009
07-31-09 TIME PLOTTED => 14:04

BORDER LAST REVISED 4/11/2008
RELATIVE BORDER SCALE IS IN INCHES 0 1 2 3
USERNAME => trienard
DGN FILE => 416374ka001.dgn
CU 04242
EA 163741

NOTE:

1. FOR GENERAL NOTES, LEGENDS, AND ABBREVIATIONS, SEE SHEET U-1.

CALIFORNIA STATE FIRE MARSHAL APPROVED

Approval of this plan does not authorize or approve any omission or deviation from applicable regulations. Final approval is subject to field inspection. One set of approved plans shall be available on the project site at all times.

Reviewed by: STEPHEN GUARINO

Approval date: 12-14-09

Dist	COUNTY	ROUTE	POST MILES TOTAL PROJECT	SHEET No.	TOTAL SHEETS
04	SF	101	8.2/9.2	88	654

REGISTERED CIVIL ENGINEER — 7-31-09 DATE

12-14-09
PLANS APPROVAL DATE

REGISTERED PROFESSIONAL ENGINEER — JOHN EDWARD KARN JR — No. C66743 — Exp. 9-30-10 — CIVIL — STATE OF CALIFORNIA

THE STATE OF CALIFORNIA OR ITS OFFICERS OR AGENTS SHALL NOT BE RESPONSIBLE FOR THE ACCURACY OR COMPLETENESS OF SCANNED COPIES OF THIS PLAN SHEET.

Arup PB JV
560 Mission Street, Suite 700
San Francisco, CA 94105

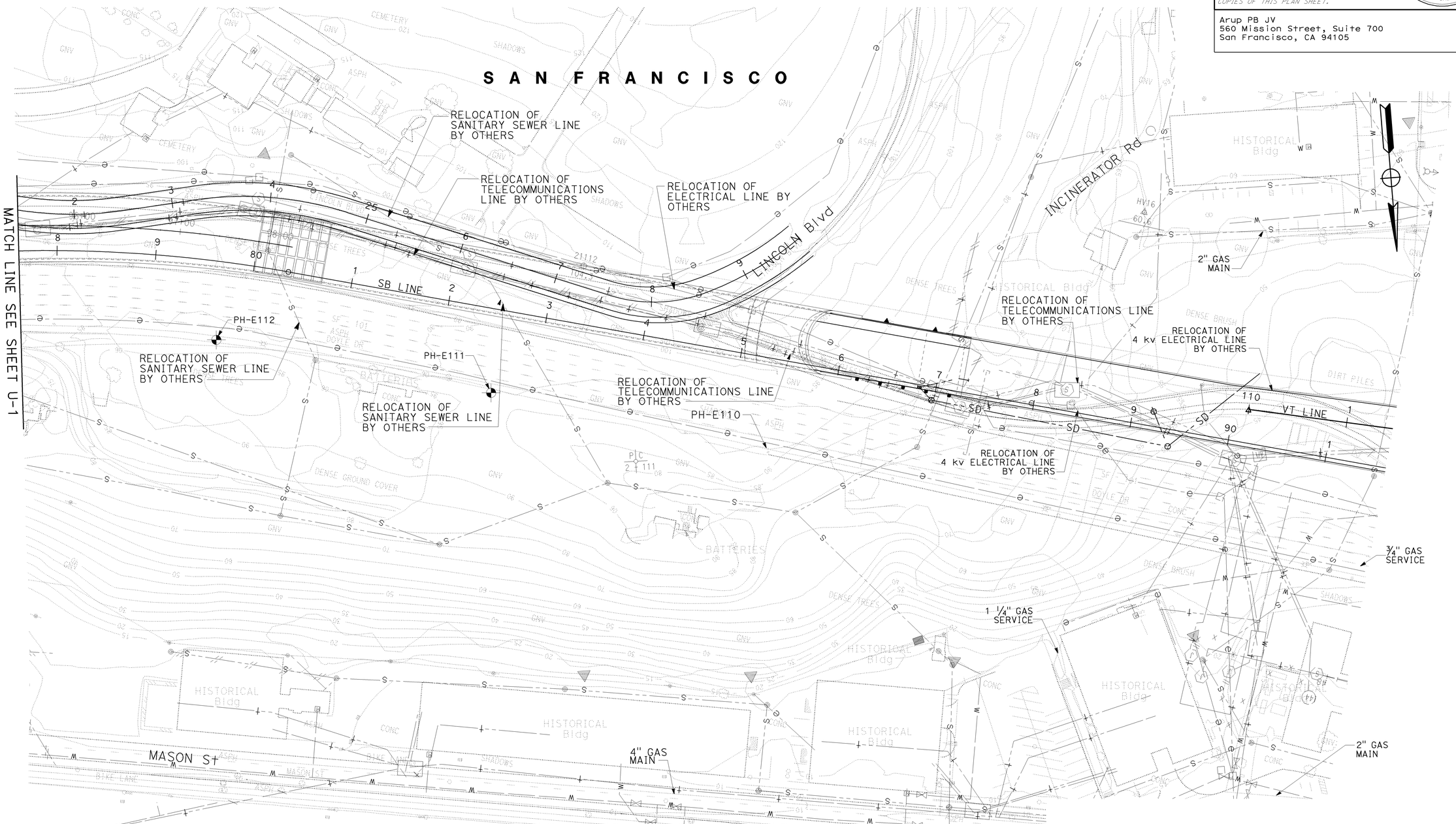

UTILITY PLAN
SCALE: 1" = 50'

THIS PLAN ACCURATE FOR UTILITY INFORMATION ONLY

U-2

STATE OF CALIFORNIA - DEPARTMENT OF TRANSPORTATION | CONSULTANT FUNCTIONAL SUPERVISOR: ABOLFAZL EMADZADEH | CALCULATED-DESIGNED BY | CHECKED BY: JOHN E KARN | DUANE GILMORE | REVISED BY: DG | DATE REVISED: 7/31/09

LAST REVISION | DATE PLOTTED => 14-DEC-2009 | TIME PLOTTED => 14:04 | 07-31-09

BORDER LAST REVISED 4/11/2008 | RELATIVE BORDER SCALE IS IN INCHES 0 1 2 3 | USERNAME => trienard | DGN FILE => 416374ka002.dgn | CU 04242 | EA 163741

NOTE:
1. FOR GENERAL NOTES, LEGENDS, AND ABBREVIATIONS, SEE SHEET U-1.

CALIFORNIA STATE FIRE MARSHAL APPROVED
Approval of this plan does not authorize or approve any omission or deviation from applicable regulations. Final approval is subject to field inspection. One set of approved plans shall be available on the project site at all times.
Reviewed by: STEPHEN GUARINO
Approval date: 12-14-09

Dist	COUNTY	ROUTE	POST MILES TOTAL PROJECT	SHEET No.	TOTAL SHEETS
04	SF	101	8.2/9.2	89	654

REGISTERED CIVIL ENGINEER — DATE: 7-31-09

JOHN EDWARD KARN JR No. C66743 Exp. 9-30-10 CIVIL — REGISTERED PROFESSIONAL ENGINEER — STATE OF CALIFORNIA

12-14-09
PLANS APPROVAL DATE

THE STATE OF CALIFORNIA OR ITS OFFICERS OR AGENTS SHALL NOT BE RESPONSIBLE FOR THE ACCURACY OR COMPLETENESS OF SCANNED COPIES OF THIS PLAN SHEET.

Arup PB JV
560 Mission Street, Suite 700
San Francisco, CA 94105

SAN FRANCISCO

CHESTNUT St
LYON St
RICHARDSON Ave (ROUTE 101)
GORGAS Ave
PALACE Dr
BAY ST
MATCHLINE SEE SHEET U-4

RELOCATION OF SANITARY SEWER LINE BY OTHERS
8" GAS MAIN
PH-G02
PH-E01
PH-E02
PH-G01
RELOCATION OF GAS LINE BY OTHERS
12" CASING
SB LINE 3
DS LINE 4

UTILITY PLAN
SCALE: 1" = 50'

THIS PLAN IS ACCURATE FOR UTILITY INFORMATION ONLY.

U-3

STATE OF CALIFORNIA - DEPARTMENT OF TRANSPORTATION
Caltrans
CONSULTANT FUNCTIONAL SUPERVISOR: ABOLFAZL EMADZADEH
CALCULATED-DESIGNED BY
CHECKED BY
DUANNE GILMORE
JOHN E KARN
REVISED BY: DG
DATE REVISED: 7/31/09

LAST REVISION DATE PLOTTED => 14-DEC-2009
07-31-09 TIME PLOTTED => 14:04

BORDER LAST REVISED 4/11/2008
RELATIVE BORDER SCALE IS IN INCHES 0 1 2 3
USERNAME => trlenard
DGN FILE => 416374ka003.dgn
CU 04242
EA 163741

NOTE:

1. FOR GENERAL NOTES, LEGENDS, AND ABBREVIATIONS, SEE SHEET U-1.

Dist	COUNTY	ROUTE	POST MILES TOTAL PROJECT	SHEET No.	TOTAL SHEETS
04	SF	101	8.2/9.2	90	654

REGISTERED CIVIL ENGINEER — 7-31-09 DATE

JOHN EDWARD KARN JR No. C66743 Exp. 9-30-10 CIVIL — REGISTERED PROFESSIONAL ENGINEER — STATE OF CALIFORNIA

12-14-09
PLANS APPROVAL DATE

THE STATE OF CALIFORNIA OR ITS OFFICERS OR AGENTS SHALL NOT BE RESPONSIBLE FOR THE ACCURACY OR COMPLETENESS OF SCANNED COPIES OF THIS PLAN SHEET.

Arup PB JV
560 Mission Street, Suite 700
San Francisco, CA 94105

CALIFORNIA STATE FIRE MARSHAL APPROVED

Approval of this plan does not authorize or approve any omission or deviation from applicable regulations. Final approval is subject to field inspection. One set of approved plans shall be available on the project site at all times.

Reviewed by: STEPHEN GUARINO

Approval date: 12-14-09

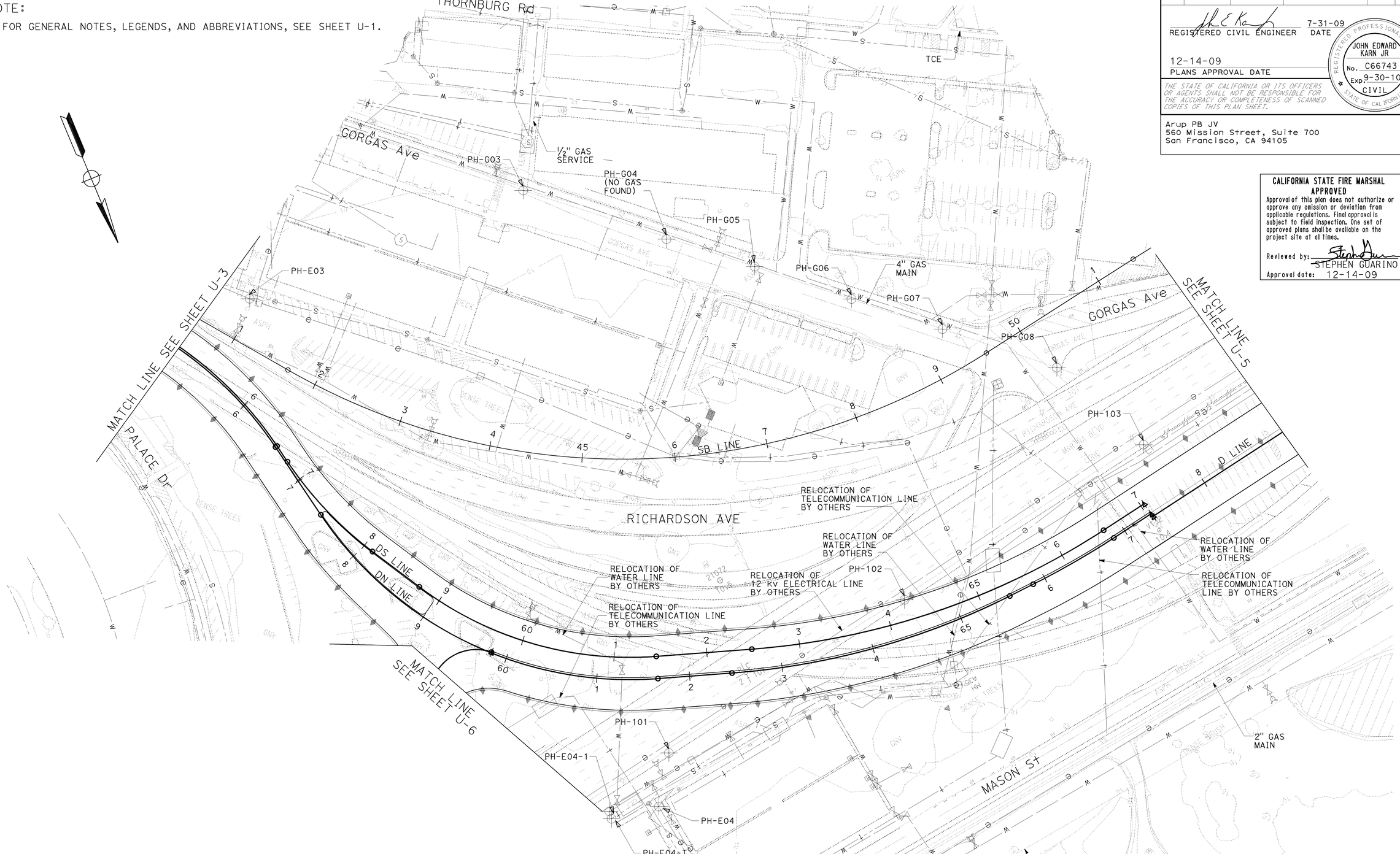

UTILITY PLAN

SCALE: 1" = 50'

THIS PLAN ACCURATE FOR UTILITY INFORMATION ONLY

U-4

STATE OF CALIFORNIA - DEPARTMENT OF TRANSPORTATION — Caltrans

CONSULTANT FUNCTIONAL SUPERVISOR: ABOLFAZL EMADZADEH

CALCULATED-DESIGNED BY: DUANNE GILMORE

CHECKED BY: JOHN E KARN

REVISED BY: DG

DATE REVISED: 7/31/09

LAST REVISION DATE PLOTTED => 14-DEC-2009
TIME PLOTTED => 14:04
07-31-09

BORDER LAST REVISED 4/11/2008

RELATIVE BORDER SCALE IS IN INCHES 0 1 2 3

USERNAME => trlenard
DGN FILE => 416374ka004.dgn

CU 04242

EA 163741

NOTE:
1. FOR GENERAL NOTES, LEGENDS, AND ABBREVIATIONS, SEE SHEET U-1.

Dist	COUNTY	ROUTE	POST MILES TOTAL PROJECT	SHEET No.	TOTAL SHEETS
04	SF	101	8.2/9.2	91	654

REGISTERED CIVIL ENGINEER — 7-31-09 DATE

12-14-09
PLANS APPROVAL DATE

JOHN EDWARD KARN JR
No. C66743
Exp. 9-30-10
CIVIL
REGISTERED PROFESSIONAL ENGINEER
STATE OF CALIFORNIA

THE STATE OF CALIFORNIA OR ITS OFFICERS OR AGENTS SHALL NOT BE RESPONSIBLE FOR THE ACCURACY OR COMPLETENESS OF SCANNED COPIES OF THIS PLAN SHEET.

Arup PB JV
560 Mission Street, Suite 700
San Francisco, CA 94105

CALIFORNIA STATE FIRE MARSHAL APPROVED
Approval of this plan does not authorize or approve any omission or deviation from applicable regulations. Final approval is subject to field inspection. One set of approved plans shall be available on the project site at all times.
Reviewed by: STEPHEN GUARINO
Approval date: 12-14-09

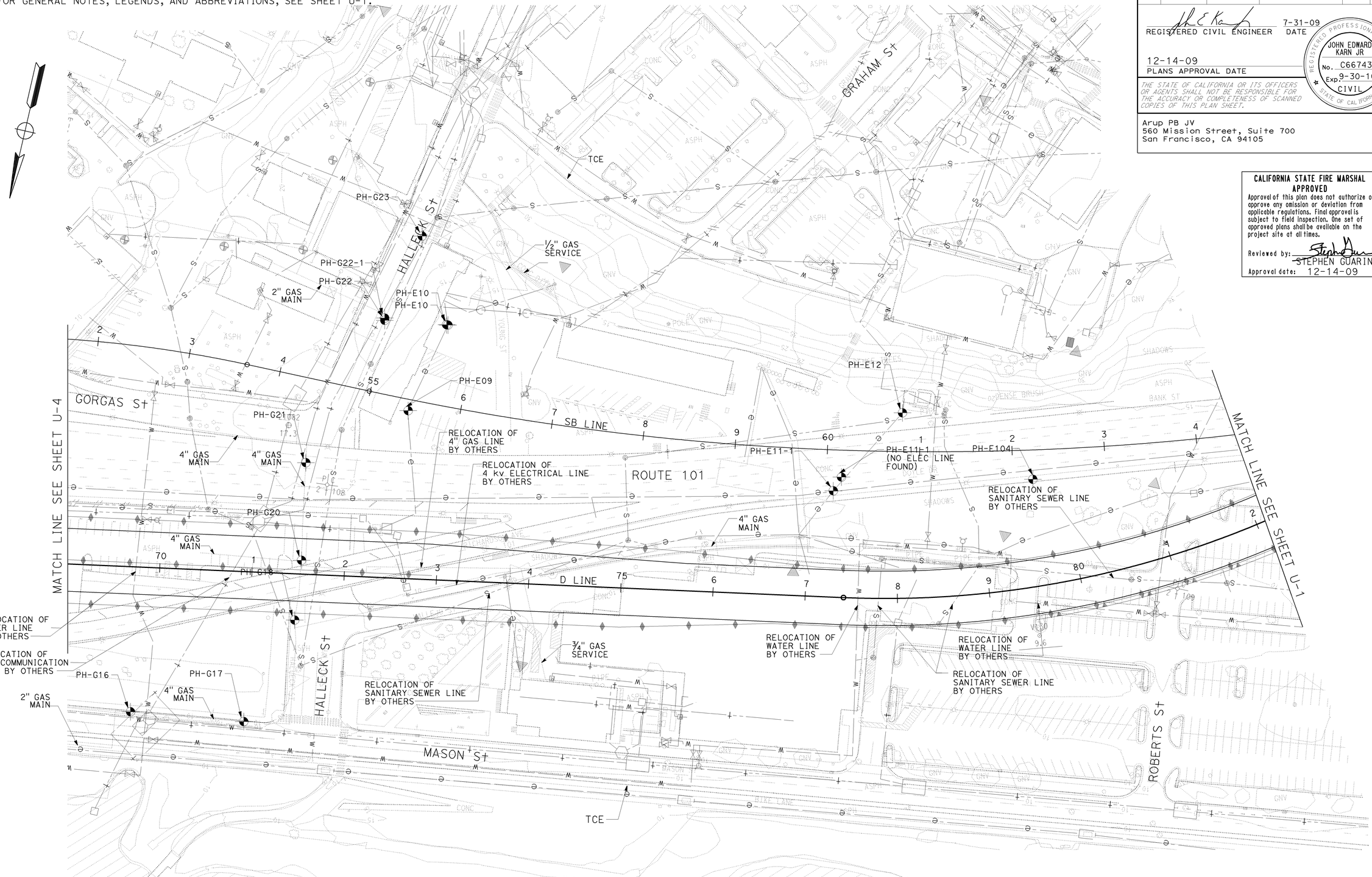

UTILITY PLAN
SCALE: 1" = 50'

THIS PLAN ACCURATE FOR UTILITY INFORMATION ONLY

U-5

STATE OF CALIFORNIA - DEPARTMENT OF TRANSPORTATION
Caltrans
CONSULTANT FUNCTIONAL SUPERVISOR: ABOLFAZL EMADZADEH
CALCULATED-DESIGNED BY: DUANNE GILMORE
CHECKED BY: JOHN E KARN
REVISED BY: DG
DATE REVISED: 7/31/09

LAST REVISION — DATE PLOTTED => 14-DEC-2009 — TIME PLOTTED => 14:04 — 07-31-09

BORDER LAST REVISED 4/11/2008 | RELATIVE BORDER SCALE IS IN INCHES 0 1 2 3 | USERNAME => trienard | DGN FILE => 416374ka005.dgn | CU 04242 | EA 163741

NOTE:

1. FOR GENERAL NOTES, LEGENDS, AND ABBREVIATIONS, SEE SHEET U-1.

Dist	COUNTY	ROUTE	POST MILES TOTAL PROJECT	SHEET No.	TOTAL SHEETS
04	SF	101	8.2/9.2	92	654

REGISTERED CIVIL ENGINEER — 7-31-09 DATE

JOHN EDWARD KARN JR No. C66743 Exp. 9-30-10 CIVIL — REGISTERED PROFESSIONAL ENGINEER — STATE OF CALIFORNIA

12-14-09
PLANS APPROVAL DATE

THE STATE OF CALIFORNIA OR ITS OFFICERS OR AGENTS SHALL NOT BE RESPONSIBLE FOR THE ACCURACY OR COMPLETENESS OF SCANNED COPIES OF THIS PLAN SHEET.

Arup PB JV
560 Mission Street, Suite 700
San Francisco, CA 94105

CALIFORNIA STATE FIRE MARSHAL APPROVED

Approval of this plan does not authorize or approve any omission or deviation from applicable regulations. Final approval is subject to field inspection. One set of approved plans shall be available on the project site at all times.

Reviewed by: STEPHEN GUARINO

Approval date: 12-14-09

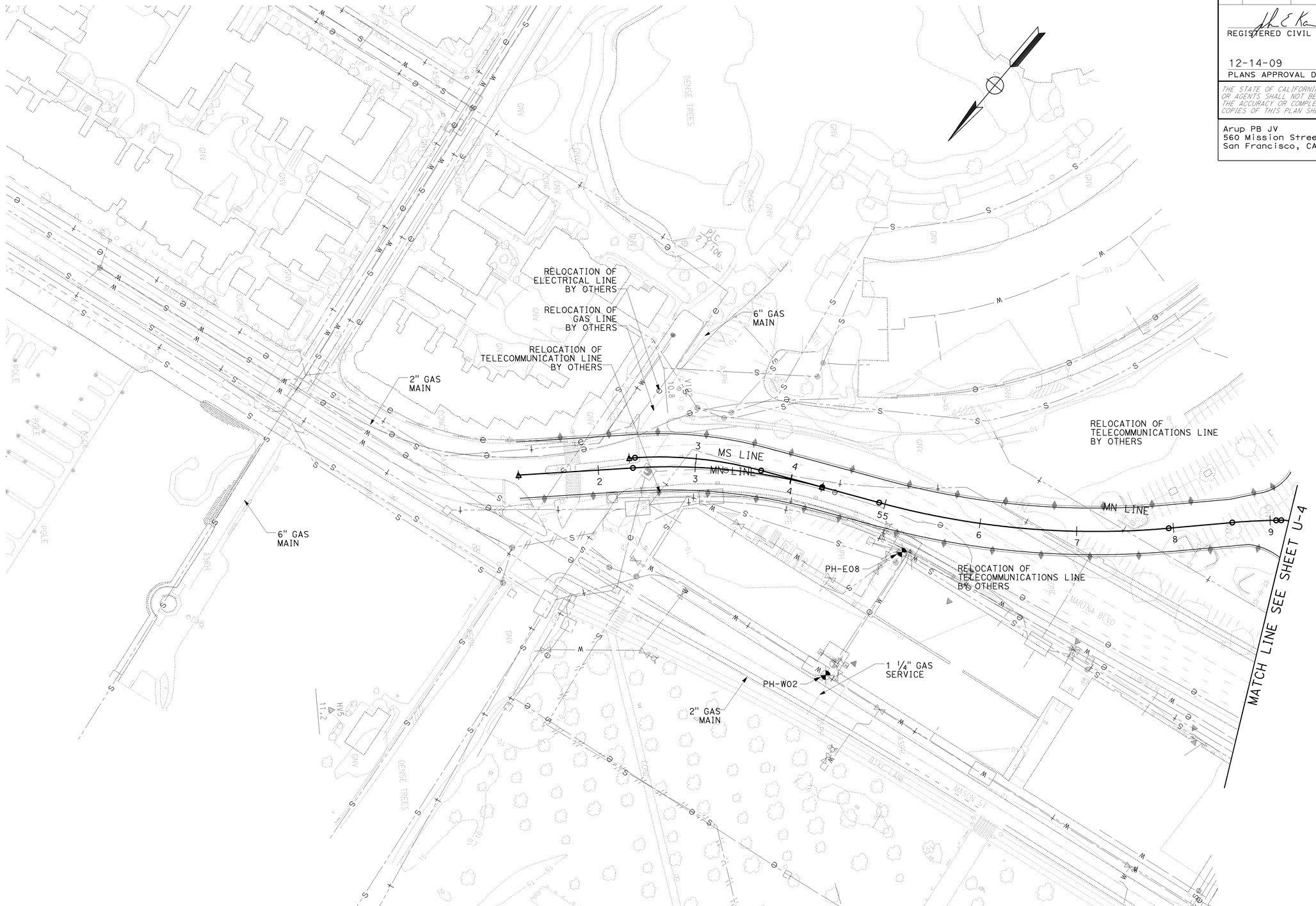

UTILITY PLAN

SCALE: 1' = 50'

THIS PLAN ACCURATE FOR UTILITY INFORMATION ONLY.

U-6

STATE OF CALIFORNIA - DEPARTMENT OF TRANSPORTATION

CONSULTANT FUNCTIONAL SUPERVISOR: ABOLFAZL EMADZADEH

CALCULATED-DESIGNED BY: DUANNE GILMORE

CHECKED BY: JOHN E KARN

REVISED BY: DG

DATE REVISED: 7/31/09

LAST REVISION DATE PLOTTED => 14-DEC-2009
07-31-09 TIME PLOTTED => 14:05

BORDER LAST REVISED 4/11/2008

RELATIVE BORDER SCALE IS IN INCHES 0 1 2 3

USERNAME => trlenard
DGN FILE => 416374ka006.dgn

CU 04242

EA 163741

NOTE:

1. FOR GENERAL NOTES, LEGENDS, AND ABBREVIATIONS, SEE SHEET U-1.

CALIFORNIA STATE FIRE MARSHAL APPROVED
Approval of this plan does not authorize or approve any omission or deviation from applicable regulations. Final approval is subject to field inspection. One set of approved plans shall be available on the project site at all times.
Reviewed by: STEPHEN GUARINO
Approval date: 12-14-09

Dist	COUNTY	ROUTE	POST MILES TOTAL PROJECT	SHEET No.	TOTAL SHEETS
04	SF	101	8.2/9.2	93	654

REGISTERED CIVIL ENGINEER — 7-31-09 DATE

JOHN EDWARD KARN JR No. C66743 Exp. 9-30-10 CIVIL — REGISTERED PROFESSIONAL ENGINEER — STATE OF CALIFORNIA

12-14-09
PLANS APPROVAL DATE

THE STATE OF CALIFORNIA OR ITS OFFICERS OR AGENTS SHALL NOT BE RESPONSIBLE FOR THE ACCURACY OR COMPLETENESS OF SCANNED COPIES OF THIS PLAN SHEET.

Arup PB JV
560 Mission Street, Suite 700
San Francisco, CA 94105

POTHOLE DATA TABLE

SHEET NO.	PH No.	NORTHING	EASTING	GROUND Elev.	DEPTH (in)	TOP OF PIPE Elev.	UTILITY DESCRIPTION	OWNER
U-01	E-104	2120720.98	5996322.47	39.40	50	35.23	12KV Elec	PG&E
U-01	E-105	2120627.72	5996045.42	40.14	25	38.05	12KV Elec	PG&E
U-01	E-106	2120534.42	5995768.21	48.98	20	47.32	12KV Elec	PG&E
U-01	E-107	2120440.90	5995490.75	59.82	50	55.66	12KV Elec	PG&E
U-01	E-108	2120367.86	5995224.33	69.89	50	65.72	12KV Elec	PG&E
U-01	E-109	2120344.63	5994948.39	80.05	30	77.55	12KV Elec	PG&E
U-01	E-14	2120530.24	5995803.88	13.48	Dry hole	NONE	Elec	PG&E
U-01	E-14-1	2120569.08	5995812.12	12.13	9	11.38	Elec	PG&E
U-01	G-26	2120434.33	5995350.74	12.26	33	9.51	4" Gas	PG&E
U-01	G-27	2120381.10	5995364.81	14.82	19	13.23	4" Gas	PG&E
U-01	G-28	2120222.17	5995397.79	70.00	47	66.08	4" Gas	PG&E
U-02	E-110	2120533.17	5994124.39	93.54	20	91.88	12KV Elec	PG&E
U-02	E-111	2120450.78	5994398.62	90.69	5	90.28	12KV Elec	PG&E
U-02	E-112	2120374.79	5994671.03	87.37	45	83.62	12KV Elec	PG&E
U-03	E-01	2120295.74	5998488.51	10.90	28	8.56	6" Elec	PG&E
U-03	E-01-W	2120296.34	5998489.07	10.90	16	9.57	16" Unknown	PG&E
U-03	E-02	2120337.99	5998440.12	10.58	31	7.99	Elec	PG&E
U-03	G-01	2120060.36	5998925.47	17.36	31	14.78	8" Gas	PG&E
U-03	G-02	2120068.53	5998738.83	16.68	78	10.18	8" Gas	PG&E
U-04	E-03	2120487.32	5998292.03	10.49	33	7.74	Elec	PG&E
U-04	E-04	2121160.69	5998094.90	10.28	36	7.28	4" Elec	PG&E
U-04	E-04-1	2121145.63	5998146.18	10.32	34	7.49	1-3" Elec , 1-4" Elec	PG&E
U-04	E-04-T	2121153.21	5998146.92	10.30	18	8.80	Tele	PG&E
U-04	E-101	2121111.74	5998062.84	28.10	43	24.52	12KV Elec	PG&E
U-04	E-102	2121056.65	5997765.61	35.69	40	32.36	12KV Elec	PG&E
U-04	E-103	2121001.00	5997464.18	36.57	40	33.24	12KV Elec	PG&E
U-04	G-03	2120492.40	5997975.63	10.09	27	7.84	4" Gas	PG&E
U-04	G-04	2120599.88	5997853.45	10.23	Dry hole	NONE	4" Gas	PG&E
U-04	G-05	2120663.43	5997777.04	10.24	27	7.99	4" Gas	PG&E
U-04	G-06	2120735.62	5997694.24	10.30	28	7.97	4" Gas	PG&E
U-04	G-07	2120802.99	5997616.28	10.21	26	8.04	4" Gas	PG&E
U-04	G-08	2120888.40	5997518.52	10.72	26	8.55	4" Gas	PG&E
U-05	E-09	2120800.45	5996998.74	11.26	31	8.68	3-6" Elec	PG&E
U-05	E-10	2120700.64	5996977.52	12.34	24	10.34	2-4" Elec	PG&E
U-05	E-10	2120700.57	5996977.80	12.33	31	9.75	1-4" Elec	PG&E
U-05	E-11	2120765.18	5996525.11	11.91	Dry hole	NONE	Elec	PG&E
U-05	E-11-1	2120781.76	5996530.36	11.73	45	7.98	3" Elec	PG&E
U-05	E-12	2120682.39	5996476.20	12.84	36	9.84	3" Elec	PG&E
U-05	G-16	2121186.16	5997218.54	9.71	26	7.54	4" Gas	PG&E
U-05	G-17	2121168.90	5997096.58	9.94	34	7.10	4" Gas	PG&E
U-05	G-18	2121049.21	5997067.55	9.96	33	7.21	4" Gas	PG&E
U-05	G-20	2120984.52	5997074.84	12.04	35	9.12	4" Gas	PG&E
U-05	G-21	2120880.54	5997094.04	16.25	33	13.50	4" Gas	PG&E
U-05	G-22	2120710.99	5997045.97	20.78	29	18.36	1/2" Unknown	PG&E
U-05	G-22-1	2120708.71	5997045.48	20.84	39	17.59	4" Gas	PG&E
U-05	G-23	2120613.14	5997026.52	25.98	37	22.89	2" Gas	PG&E
U-06	E-08	2121214.42	5998541.86	10.47	30	7.97	2-4" Elec	PG&E
U-06	W-02	2121362.17	5998520.63	9.76	46	5.92	8" Water	Presidio Trust

THIS PLAN ACCURATE FOR UTILITY INFORMATION ONLY.

UTILITY POTHOLE DATA

U-7

REVISED BY: DG — DATE REVISED: 7/31/09
CALCULATED-DESIGNED BY: DUANNE GILMORE
CHECKED BY: JOHN E KARN
CONSULTANT FUNCTIONAL SUPERVISOR: ABOLFAZL EMADZADEH
STATE OF CALIFORNIA - DEPARTMENT OF TRANSPORTATION — Caltrans

LAST REVISION DATE PLOTTED => 14-DEC-2009
07-31-09 TIME PLOTTED => 14:05

BORDER LAST REVISED 4/11/2008
RELATIVE BORDER SCALE IS IN INCHES 0 1 2 3
USERNAME => trienard
DGN FILE => 416374ka007.dgn
CU 04242
EA 163741

Dist	COUNTY	ROUTE	POST MILES TOTAL PROJECT	SHEET No.	TOTAL SHEETS
04	SF	101	8.2/9.2	94	654

REGISTERED CIVIL ENGINEER — 8-11-09 DATE

12-14-09
PLANS APPROVAL DATE

Jerilyn L. Struven, No. 49964, Exp. 12-31-10, CIVIL, REGISTERED PROFESSIONAL ENGINEER, STATE OF CALIFORNIA

THE STATE OF CALIFORNIA OR ITS OFFICERS OR AGENTS SHALL NOT BE RESPONSIBLE FOR THE ACCURACY OR COMPLETENESS OF SCANNED COPIES OF THIS PLAN SHEET.

CALIFORNIA STATE FIRE MARSHAL
APPROVED
Approval of this plan does not authorize or approve any omission or deviation from applicable regulations. Final approval is subject to field inspection. One set of approved plans shall be available on the project site at all times.
Reviewed by: STEPHEN GUARINO
Approval date: 12-14-09

LEGEND:

No.	CONSTRUCTION AREA SIGN NUMBER
*	CONSTRUCTION AREA SIGN INSTALLED UNDER PROJECT 3

NOTES:

1. LOCATION OF CONSTRUCTION AREA SIGNS ARE APPROXIMATE. EXACT LOCATION WILL BE DETERMINED BY THE ENGINEER.
2. CONSTRUCTION AREA SIGNS ARE STATIONARY MOUNTED.

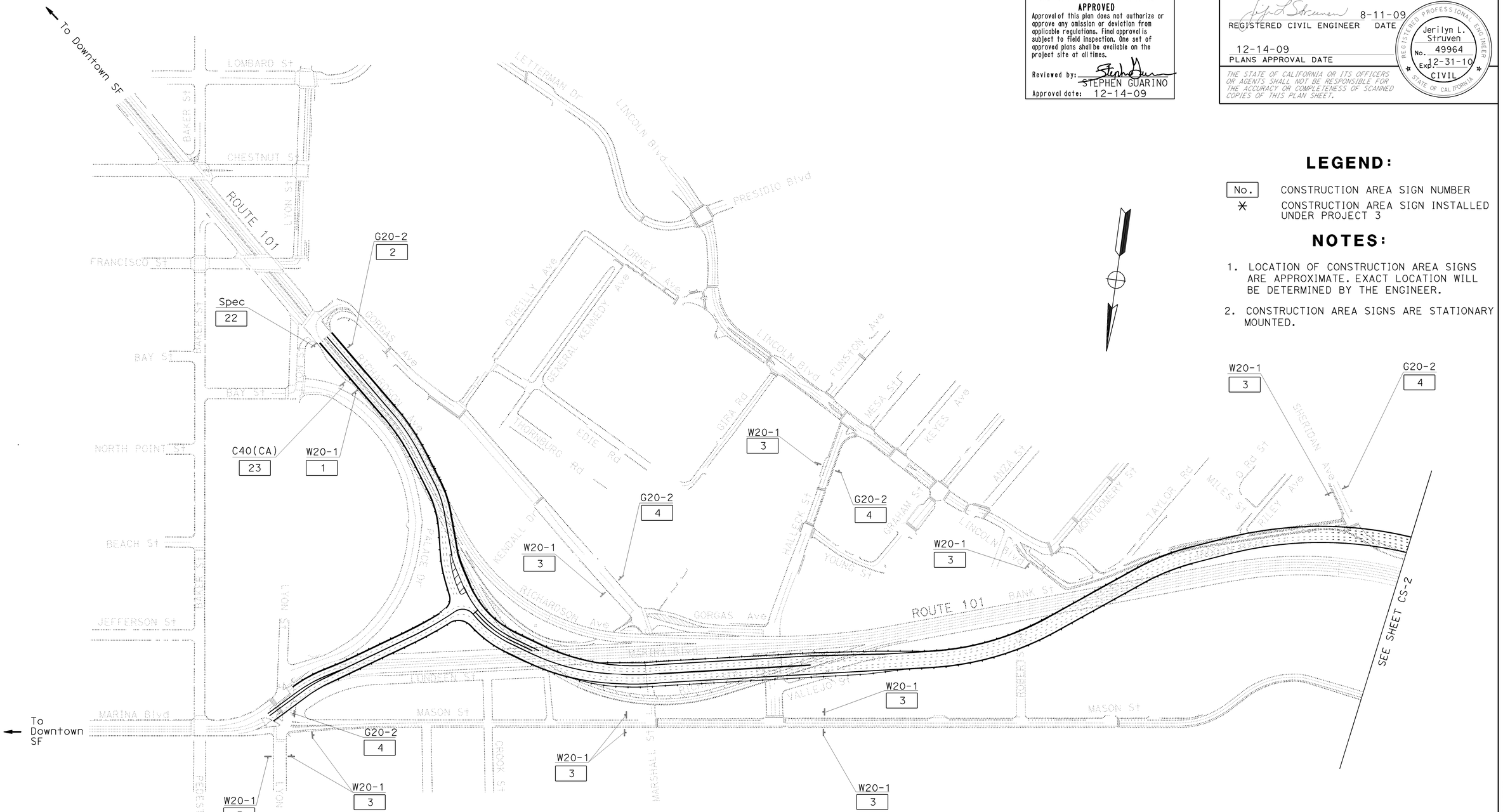

CONSTRUCTION AREA SIGNS

NO SCALE

THIS PLAN ACCURATE FOR CONSTRUCTION AREA SIGN WORK ONLY

CS-1

STATE OF CALIFORNIA - DEPARTMENT OF TRANSPORTATION
Caltrans
TRAFFIC
FUNCTIONAL SUPERVISOR: ROLAND AU-YEUNG
CALCULATED-DESIGNED BY: ULICES VEGA
CHECKED BY: LILY TING
REVISED BY: UV
DATE REVISED: 8/01/09

LAST REVISION | DATE PLOTTED => 14-DEC-2009
08-12-09 | TIME PLOTTED => 14:05

BORDER LAST REVISED 4/11/2008

RELATIVE BORDER SCALE IS IN INCHES 0 1 2 3

USERNAME => trlenard
DGN FILE => 4163741a001.dgn

CU 04242

EA 163741

Dist	COUNTY	ROUTE	POST MILES TOTAL PROJECT	SHEET No.	TOTAL SHEETS
04	SF	101	8.2/9.2	95	654

REGISTERED CIVIL ENGINEER 8-11-09 DATE

12-14-09
PLANS APPROVAL DATE

REGISTERED PROFESSIONAL ENGINEER
Jerilyn L. Struven
No. 49964
Exp. 12-31-10
CIVIL
STATE OF CALIFORNIA

THE STATE OF CALIFORNIA OR ITS OFFICERS OR AGENTS SHALL NOT BE RESPONSIBLE FOR THE ACCURACY OR COMPLETENESS OF SCANNED COPIES OF THIS PLAN SHEET.

CALIFORNIA STATE FIRE MARSHAL APPROVED

Approval of this plan does not authorize or approve any omission or deviation from applicable regulations. Final approval is subject to field inspection. One set of approved plans shall be available on the project site at all times.

Reviewed by: STEPHEN GUARINO

Approval date: 12-14-09

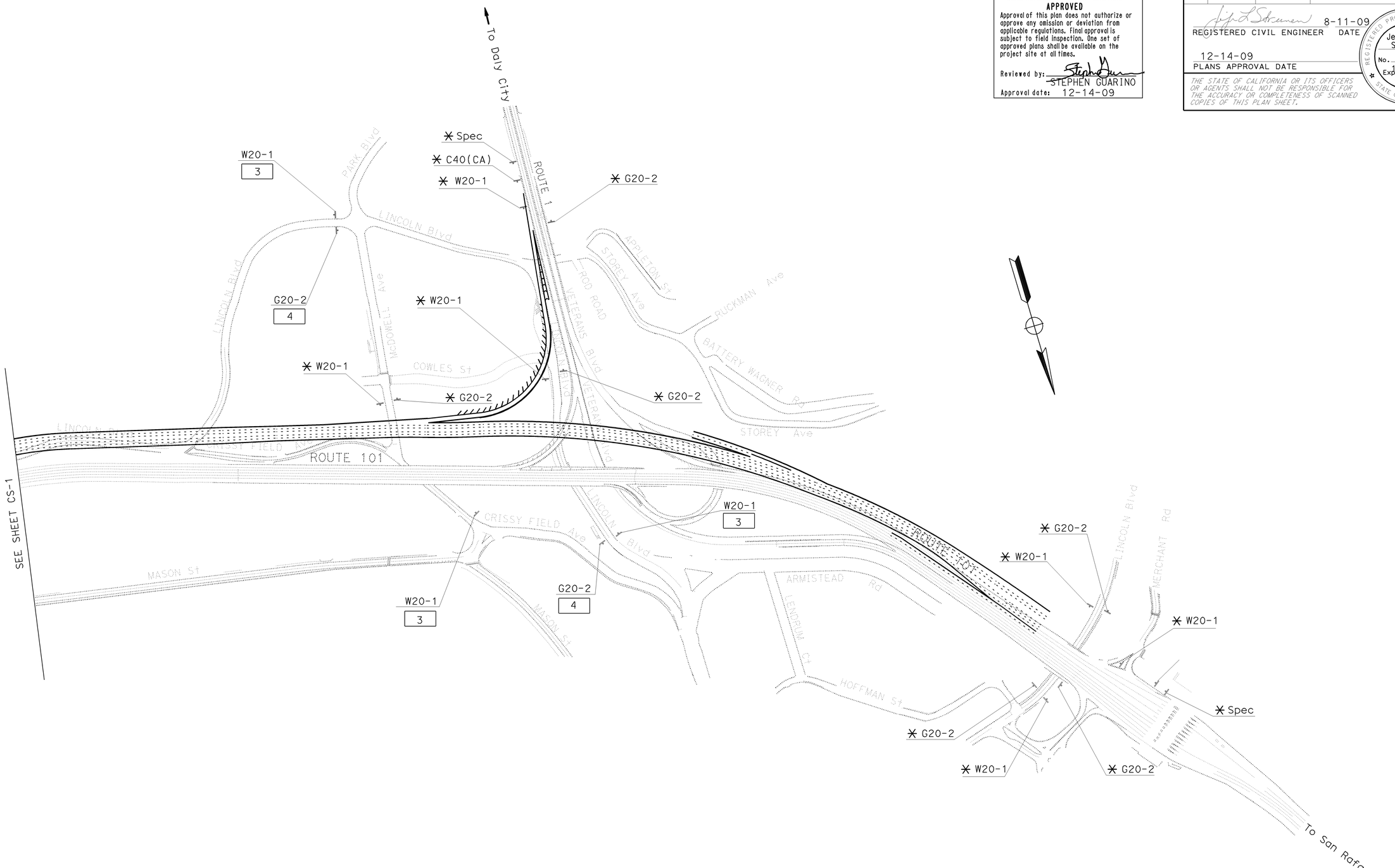

CONSTRUCTION AREA SIGNS

NO SCALE

FOR NOTES, ABBREVIATIONS AND LEGEND, SEE SHEET CS-1

THIS PLAN ACCURATE FOR CONSTRUCTION AREA SIGN WORK ONLY

CS-2

STATE OF CALIFORNIA - DEPARTMENT OF TRANSPORTATION

Caltrans

TRAFFIC

FUNCTIONAL SUPERVISOR: ROLAND AU-YEUNG

CALCULATED-DESIGNED BY: ULICES VEGA

CHECKED BY: LILY TING

REVISED BY: UV

DATE REVISED: 8/01/09

LAST REVISION 08-11-09

DATE PLOTTED => 14-DEC-2009

TIME PLOTTED => 14:05

Dist	COUNTY	ROUTE	POST MILES TOTAL PROJECT	SHEET No.	TOTAL SHEETS
04	SF	101	8.2/9.2	96	654

REGISTERED CIVIL ENGINEER 8-11-09 DATE

12-14-09
PLANS APPROVAL DATE

REGISTERED PROFESSIONAL ENGINEER Jerilyn L. Struven No. 49964 Exp. 12-31-10 CIVIL STATE OF CALIFORNIA

THE STATE OF CALIFORNIA OR ITS OFFICERS OR AGENTS SHALL NOT BE RESPONSIBLE FOR THE ACCURACY OR COMPLETENESS OF SCANNED COPIES OF THIS PLAN SHEET.

CALIFORNIA STATE FIRE MARSHAL APPROVED

Approval of this plan does not authorize or approve any omission or deviation from applicable regulations. Final approval is subject to field inspection. One set of approved plans shall be available on the project site at all times.

Reviewed by: STEPHEN GUARINO

Approval date: 12-14-09

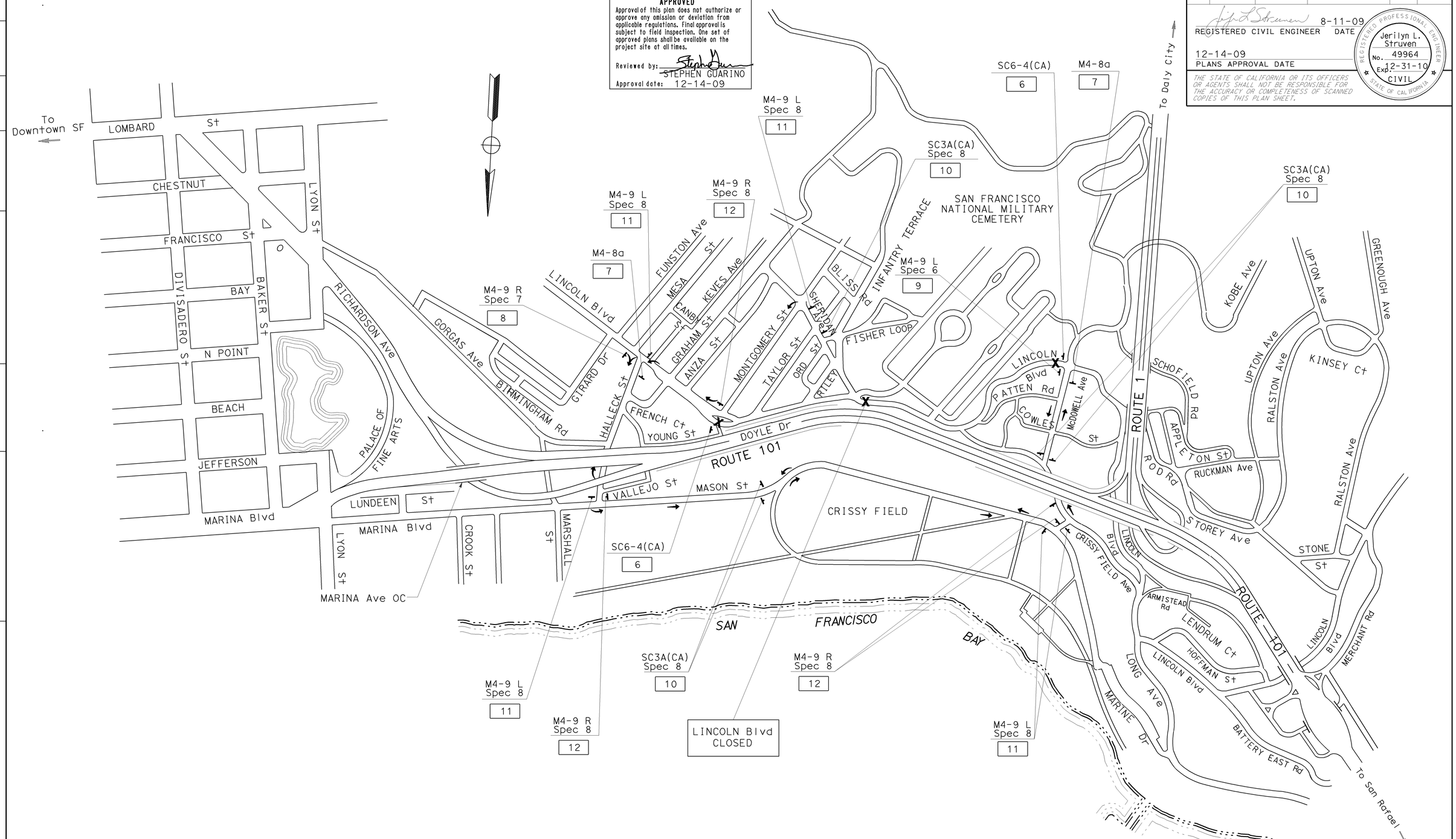

DETOUR
LINCOLN Blvd CLOSURES

CONSTRUCTION AREA SIGNS
NO SCALE

FOR NOTES, ABBREVIATIONS AND LEGEND, SEE SHEET CS-1

THIS PLAN ACCURATE FOR CONSTRUCTION AREA SIGN WORK ONLY

CS-3

STATE OF CALIFORNIA - DEPARTMENT OF TRANSPORTATION
Caltrans
TRAFFIC

FUNCTIONAL SUPERVISOR: ROLAND AU-YEUNG
CALCULATED-DESIGNED BY: ULICES VEGA
CHECKED BY: LILY TING
REVISED BY: UV
DATE REVISED: 8/01/09

LAST REVISION 08-24-09
DATE PLOTTED => 14-DEC-2009
TIME PLOTTED => 14:05

BORDER LAST REVISED 4/11/2008
RELATIVE BORDER SCALE IS IN INCHES 0 1 2 3
USERNAME => trlenard
DGN FILE => 4163741a003.dgn
CU 04242
EA 163741

CALIFORNIA STATE FIRE MARSHAL APPROVED

Approval of this plan does not authorize or approve any omission or deviation from applicable regulations. Final approval is subject to field inspection. One set of approved plans shall be available on the project site at all times.

Reviewed by: STEPHEN GUARINO

Approval date: 12-14-09

Dist	COUNTY	ROUTE	POST MILES TOTAL PROJECT	SHEET No.	TOTAL SHEETS
04	SF	101	8.2/9.2	97	654

Jerilyn L. Struven 8-11-09
REGISTERED CIVIL ENGINEER DATE

12-14-09
PLANS APPROVAL DATE

REGISTERED PROFESSIONAL ENGINEER — Jerilyn L. Struven — No. 49964 — Exp. 12-31-10 — CIVIL — STATE OF CALIFORNIA

THE STATE OF CALIFORNIA OR ITS OFFICERS OR AGENTS SHALL NOT BE RESPONSIBLE FOR THE ACCURACY OR COMPLETENESS OF SCANNED COPIES OF THIS PLAN SHEET.

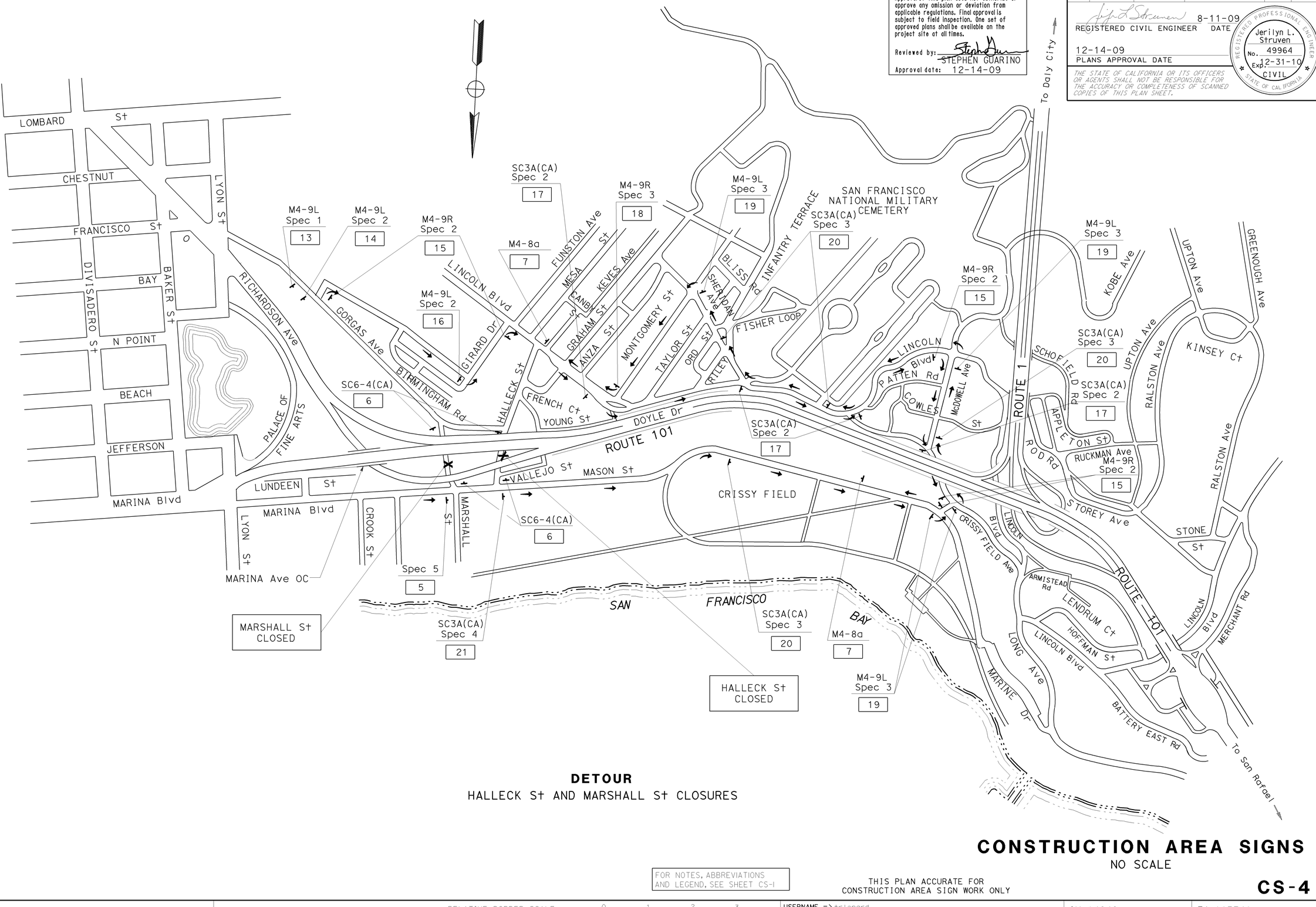

DETOUR

HALLECK St AND MARSHALL St CLOSURES

FOR NOTES, ABBREVIATIONS AND LEGEND, SEE SHEET CS-1

THIS PLAN ACCURATE FOR CONSTRUCTION AREA SIGN WORK ONLY

CONSTRUCTION AREA SIGNS

NO SCALE

CS-4

REVISED BY	DATE REVISED
UV	8/01/09

CALCULATED-DESIGNED BY: ULICES VEGA
CHECKED BY: LILY TING
FUNCTIONAL SUPERVISOR: ROLAND AU-YEUNG

STATE OF CALIFORNIA - DEPARTMENT OF TRANSPORTATION
TRAFFIC

LAST REVISION DATE PLOTTED => 14-DEC-2009
08-15-09 TIME PLOTTED => 14:05

BORDER LAST REVISED 4/11/2008

RELATIVE BORDER SCALE IS IN INCHES 0 1 2 3

USERNAME => trienard
DGN FILE => 4163741a004.dgn

CU 04242

EA 163741

Dist	COUNTY	ROUTE	POST MILES TOTAL PROJECT	SHEET No.	TOTAL SHEETS
04	SF	101	8.2/9.2	98	654

Jerilyn L. Struven 8-11-09
REGISTERED CIVIL ENGINEER DATE

12-14-09
PLANS APPROVAL DATE

REGISTERED PROFESSIONAL ENGINEER — Jerilyn L. Struven — No. 49964 — Exp. 12-31-10 — CIVIL — STATE OF CALIFORNIA

THE STATE OF CALIFORNIA OR ITS OFFICERS OR AGENTS SHALL NOT BE RESPONSIBLE FOR THE ACCURACY OR COMPLETENESS OF SCANNED COPIES OF THIS PLAN SHEET.

CALIFORNIA STATE FIRE MARSHAL APPROVED
Approval of this plan does not authorize or approve any omission or deviation from applicable regulations. Final approval is subject to field inspection. One set of approved plans shall be available on the project site at all times.
Reviewed by: STEPHEN GUARINO
Approval date: 12-14-09

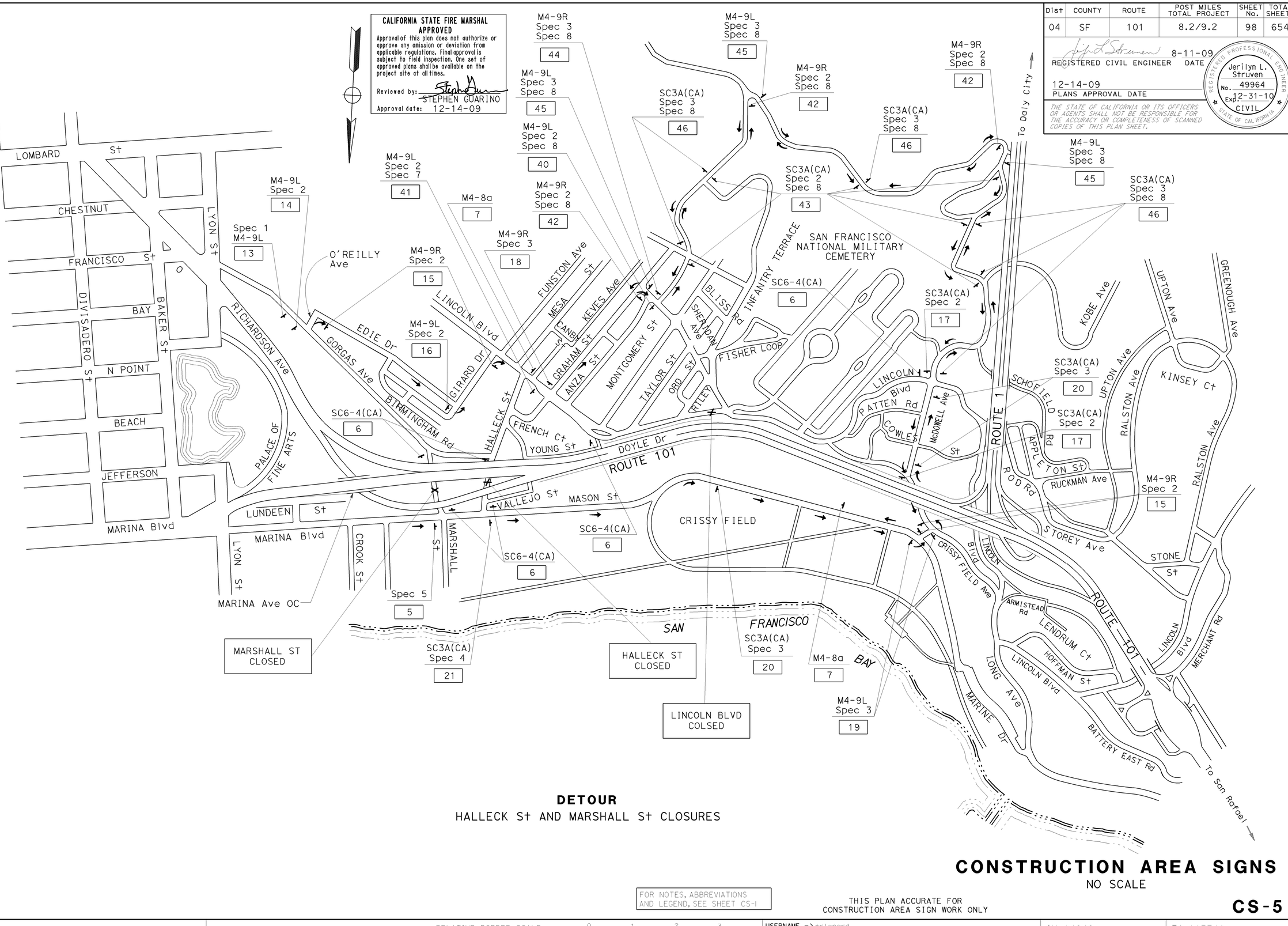

DETOUR
HALLECK St AND MARSHALL St CLOSURES

CONSTRUCTION AREA SIGNS
NO SCALE

FOR NOTES, ABBREVIATIONS AND LEGEND, SEE SHEET CS-1

THIS PLAN ACCURATE FOR CONSTRUCTION AREA SIGN WORK ONLY

CS-5

REVISED BY	DATE REVISED
UV	8/01/09

CALCULATED-DESIGNED BY: ULICES VEGA
CHECKED BY: LILY TING
FUNCTIONAL SUPERVISOR: ROLAND AU-YEUNG

STATE OF CALIFORNIA - DEPARTMENT OF TRANSPORTATION
TRAFFIC

LAST REVISION DATE PLOTTED => 14-DEC-2009
11-24-09 TIME PLOTTED => 14:05

BORDER LAST REVISED 4/11/2008
RELATIVE BORDER SCALE IS IN INCHES 0 1 2 3
USERNAME => trienard
DGN FILE => 4163741a005.dgn
CU 04242
EA 163741

Dist	COUNTY	ROUTE	POST MILES TOTAL PROJECT	SHEET No.	TOTAL SHEETS
04	SF	101	8.2/9.2	99	654

REGISTERED CIVIL ENGINEER — 11-16-09 DATE

Jerilyn L. Struven, No. 49964, Exp. 12-31-10, CIVIL — REGISTERED PROFESSIONAL ENGINEER — STATE OF CALIFORNIA

12-14-09
PLANS APPROVAL DATE

THE STATE OF CALIFORNIA OR ITS OFFICERS OR AGENTS SHALL NOT BE RESPONSIBLE FOR THE ACCURACY OR COMPLETENESS OF SCANNED COPIES OF THIS PLAN SHEET.

CALIFORNIA STATE FIRE MARSHAL APPROVED
Approval of this plan does not authorize or approve any omission or deviation from applicable regulations. Final approval is subject to field inspection. One set of approved plans shall be available on the project site at all times.
Reviewed by: STEPHEN GUARINO
Approval date: 12-14-09

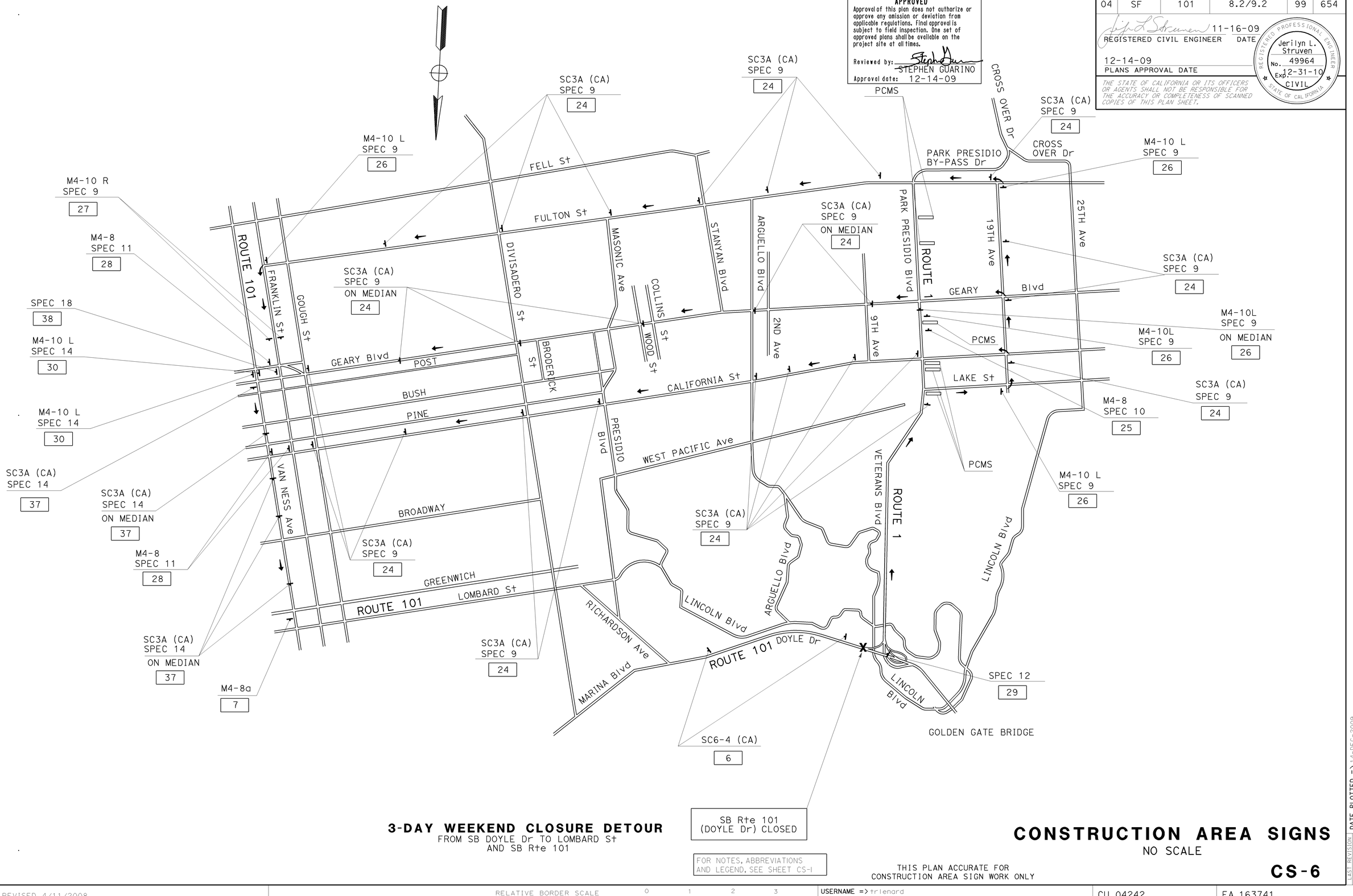

3-DAY WEEKEND CLOSURE DETOUR
FROM SB DOYLE Dr TO LOMBARD St
AND SB Rte 101

SB Rte 101
(DOYLE Dr) CLOSED

FOR NOTES, ABBREVIATIONS AND LEGEND, SEE SHEET CS-1

THIS PLAN ACCURATE FOR CONSTRUCTION AREA SIGN WORK ONLY

CONSTRUCTION AREA SIGNS
NO SCALE

CS-6

STATE OF CALIFORNIA - DEPARTMENT OF TRANSPORTATION
Caltrans
TRAFFIC
FUNCTIONAL SUPERVISOR: ROLAND AU-YEUNG
CALCULATED-DESIGNED BY: ULICES F. VEGA
CHECKED BY: LILY Y. TING
REVISED BY: UV
DATE REVISED: 9/24/09

LAST REVISION DATE PLOTTED => 14-DEC-2009
TIME PLOTTED => 14:05
11-18-09

Dist	COUNTY	ROUTE	POST MILES TOTAL PROJECT	SHEET No.	TOTAL SHEETS
04	SF	101	8.2/9.2	100	654

11-16-09
REGISTERED CIVIL ENGINEER DATE

12-14-09
PLANS APPROVAL DATE

Jerilyn L. Struven
No. 49964
Exp. 12-31-10
CIVIL
REGISTERED PROFESSIONAL ENGINEER
STATE OF CALIFORNIA

THE STATE OF CALIFORNIA OR ITS OFFICERS OR AGENTS SHALL NOT BE RESPONSIBLE FOR THE ACCURACY OR COMPLETENESS OF SCANNED COPIES OF THIS PLAN SHEET.

CALIFORNIA STATE FIRE MARSHAL APPROVED
Approval of this plan does not authorize or approve any omission or deviation from applicable regulations. Final approval is subject to field inspection. One set of approved plans shall be available on the project site at all times.
Reviewed by: STEPHEN GUARINO
Approval date: 12-14-09

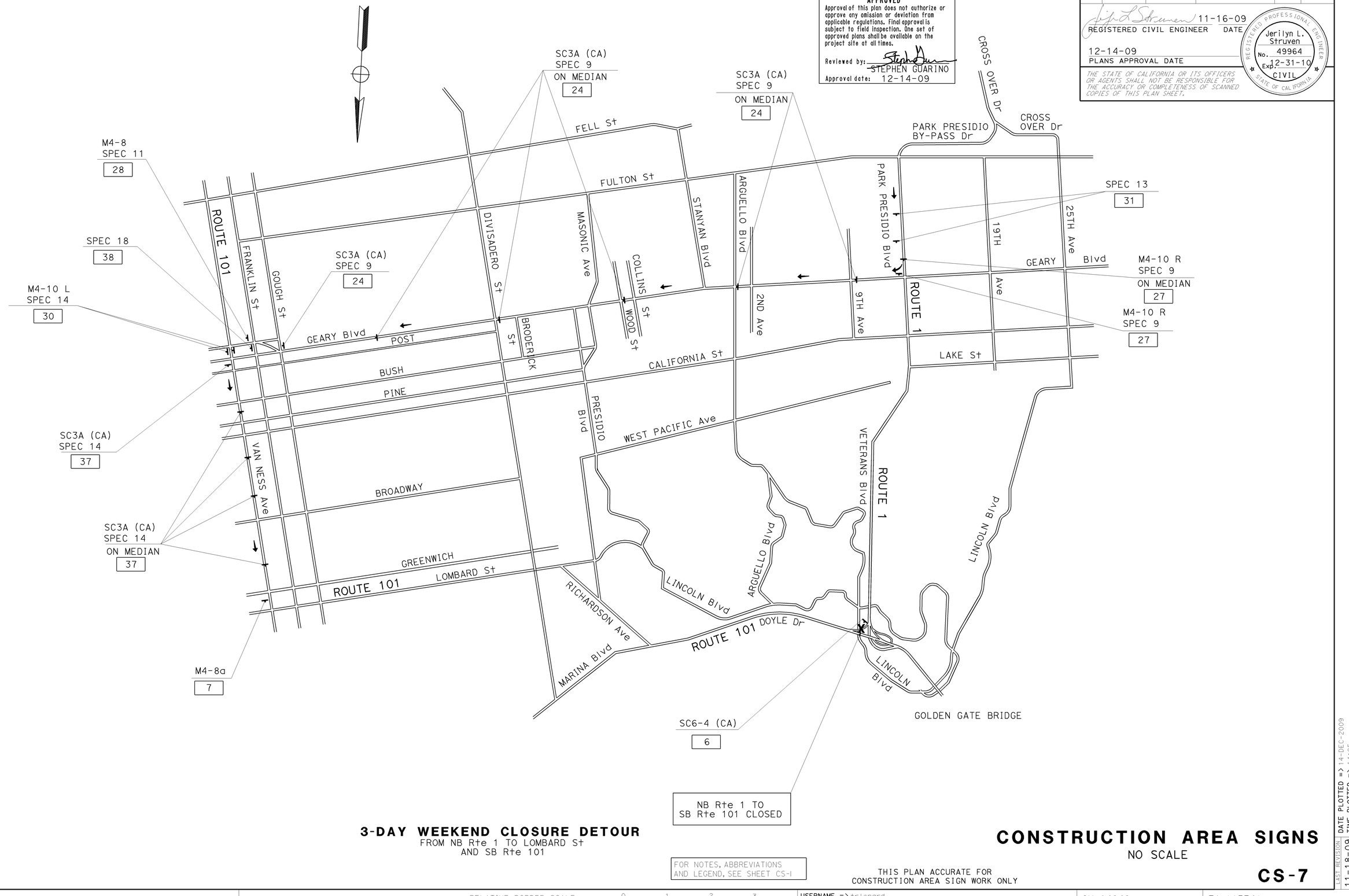

3-DAY WEEKEND CLOSURE DETOUR
FROM NB Rte 1 TO LOMBARD St
AND SB Rte 101

FOR NOTES, ABBREVIATIONS AND LEGEND, SEE SHEET CS-1

THIS PLAN ACCURATE FOR CONSTRUCTION AREA SIGN WORK ONLY

CONSTRUCTION AREA SIGNS
NO SCALE

CS-7

STATE OF CALIFORNIA - DEPARTMENT OF TRANSPORTATION
TRAFFIC
FUNCTIONAL SUPERVISOR: ROLAND AU-YEUNG
CALCULATED-DESIGNED BY: ULICES F. VEGA
CHECKED BY: LILY Y. TING
REVISED BY: UV
DATE REVISED: 9/24/09

LAST REVISION DATE PLOTTED => 14-DEC-2009
TIME PLOTTED => 14:05
11-18-09

BORDER LAST REVISED 4/11/2008
RELATIVE BORDER SCALE IS IN INCHES 0 1 2 3
USERNAME => trlenard
DGN FILE => 4163741a007.dgn
CU 04242
EA 163741

Dist	COUNTY	ROUTE	POST MILES TOTAL PROJECT	SHEET No.	TOTAL SHEETS
04	SF	101	8.2/9.2	101	654

11-16-09
REGISTERED CIVIL ENGINEER DATE

12-14-09
PLANS APPROVAL DATE

REGISTERED PROFESSIONAL ENGINEER
Jerilyn L. Struven
No. 49964
Exp. 12-31-10
CIVIL
STATE OF CALIFORNIA

THE STATE OF CALIFORNIA OR ITS OFFICERS OR AGENTS SHALL NOT BE RESPONSIBLE FOR THE ACCURACY OR COMPLETENESS OF SCANNED COPIES OF THIS PLAN SHEET.

CALIFORNIA STATE FIRE MARSHAL APPROVED
Approval of this plan does not authorize or approve any omission or deviation from applicable regulations. Final approval is subject to field inspection. One set of approved plans shall be available on the project site at all times.
Reviewed by: STEPHEN GUARINO
Approval date: 12-14-09

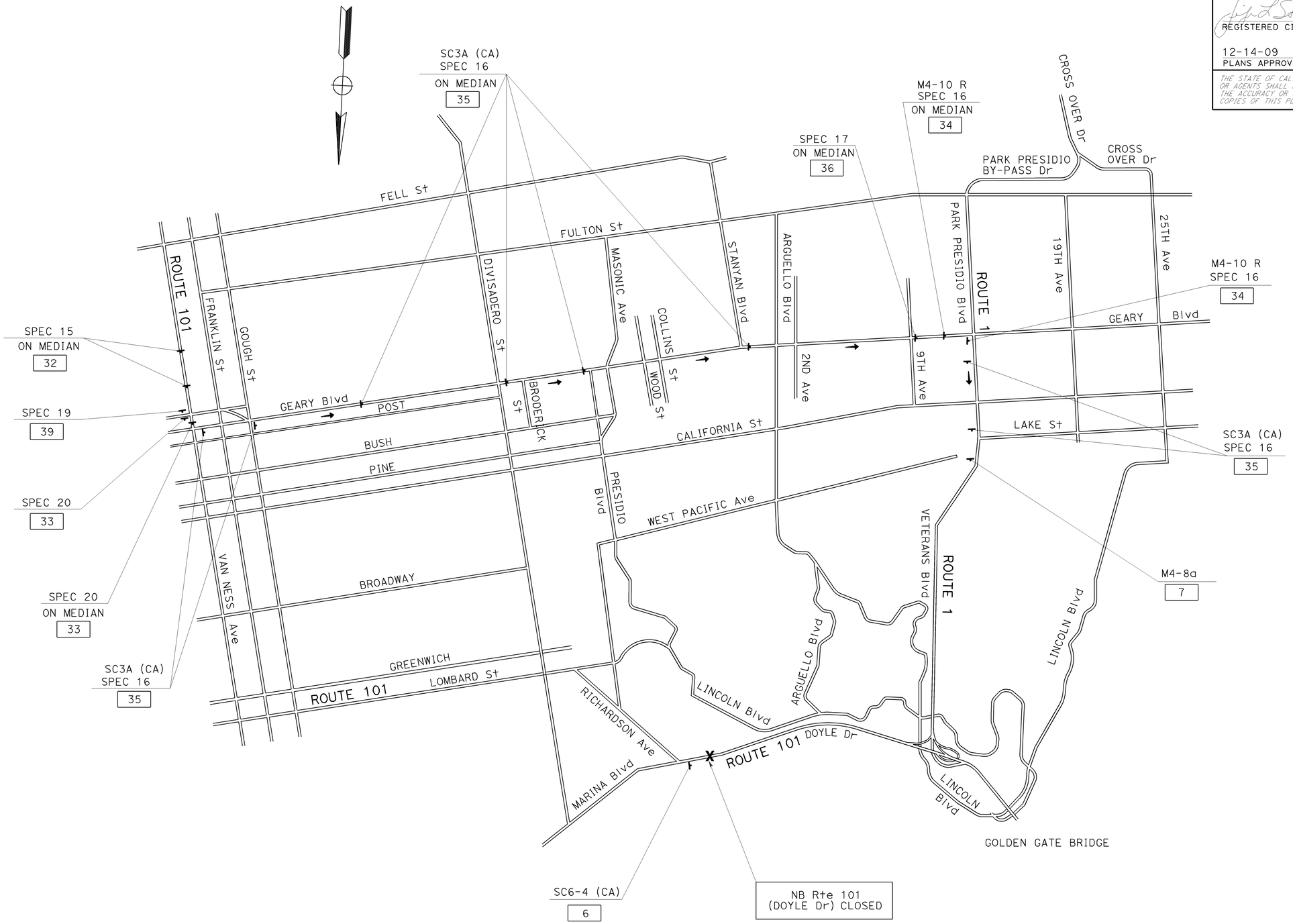

3-DAY WEEKEND CLOSURE DETOUR

FROM VAN NESS Ave TO SB Rte 101/GOLDEN GATE Br

FOR NOTES, ABBREVIATIONS AND LEGEND, SEE SHEET CS-1

THIS PLAN ACCURATE FOR CONSTRUCTION AREA SIGN WORK ONLY

CONSTRUCTION AREA SIGNS

NO SCALE

CS-8

STATE OF CALIFORNIA - DEPARTMENT OF TRANSPORTATION
Caltrans
TRAFFIC

FUNCTIONAL SUPERVISOR: ROLAND AU-YEUNG
CALCULATED-DESIGNED BY: ULICES F. VEGA
CHECKED BY: LILY Y. TING
REVISED BY: UV
DATE REVISED: 9/24/09

LAST REVISION 11-18-09
DATE PLOTTED => 14-DEC-2009
TIME PLOTTED => 14:05

BORDER LAST REVISED 4/11/2008
RELATIVE BORDER SCALE IS IN INCHES 0 1 2 3
USERNAME => trlenard
DGN FILE => 4163741a008.dgn
CU 04242
EA 163741

CONSTRUCTON AREA SIGNS

SIGN	MESSAGE	PANEL SIZE (INCH x INCH)
R11-2	ROAD CLOSED	48 x 30
R11-4	ROAD CLOSED TO THRU TRAFFIC	60 x 30
SC6-4(CA)	(ROAD) CLOSED (DATE)	48 x 60
OM1-3	TYPE N MARKER	18 x 18
R9-3a	NO PEDESTRIAN CROSSING	18 x 18
SPEC 1	SIDEWALK CLOSED AHEAD	36 x 18
SPEC 2	SIDEWALK CLOSED	36 x 18

36"x 18"

3" C CAPS
BLACK ON ORANGE

SIDEWALK CLOSED AHEAD

SPEC 1

36" x 18"

SIDEWALK CLOSED

4" D CAPS
BLACK ON WHITE

SPEC 2

CALIFORNIA STATE FIRE MARSHAL APPROVED

Approval of this plan does not authorize or approve any omission or deviation from applicable regulations. Final approval is subject to field inspection. One set of approved plans shall be available on the project site at all times.

Reviewed by: STEPHEN GUARINO

Approval date: 12-14-09

Dist	COUNTY	ROUTE	POST MILES TOTAL PROJECT	SHEET No.	TOTAL SHEETS
04	SF	101	8.2/9.2	102	654

Jerilyn L. Struven 8-11-09
REGISTERED CIVIL ENGINEER DATE

12-14-09
PLANS APPROVAL DATE

REGISTERED PROFESSIONAL ENGINEER
Jerilyn L. Struven
No. 49964
Exp. 12-31-10
CIVIL
STATE OF CALIFORNIA

THE STATE OF CALIFORNIA OR ITS OFFICERS OR AGENTS SHALL NOT BE RESPONSIBLE FOR THE ACCURACY OR COMPLETENESS OF SCANNED COPIES OF THIS PLAN SHEET.

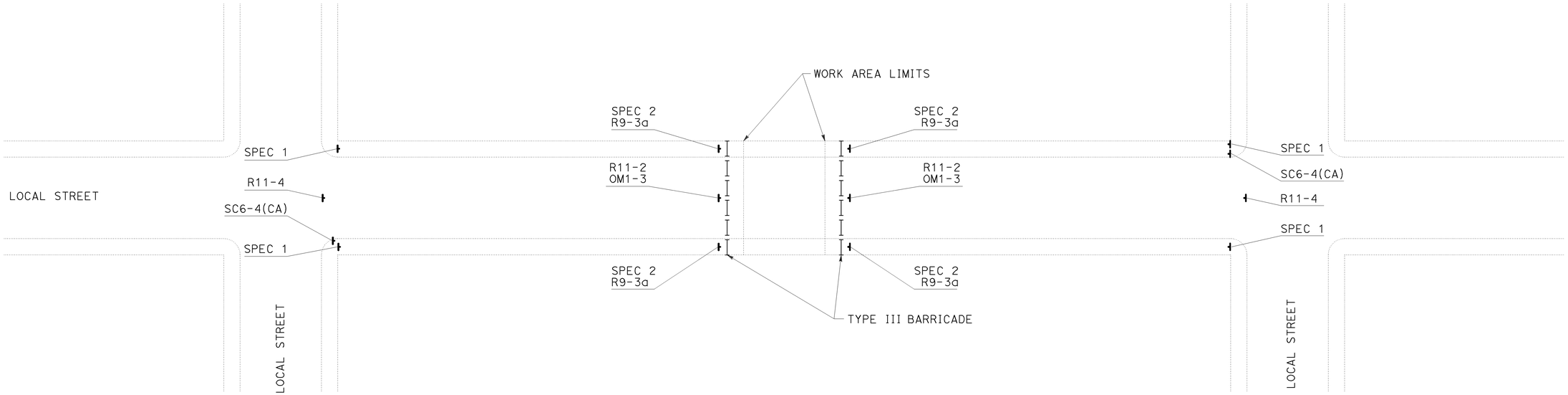

STREET AND SIDEWALK CLOSURES
(TYPICAL)

FOR NOTES, ABBREVIATIONS AND LEGEND, SEE SHEET CS-1

THIS PLAN ACCURATE FOR CONSTRUCTION AREA SIGN WORK ONLY

CONSTRUCTION AREA SIGNS
NO SCALE

CS-9

REVISED BY	DATE REVISED
UV	8/01/09

ULICES VEGA
LILY TING

CALCULATED-DESIGNED BY
CHECKED BY

FUNCTIONAL SUPERVISOR
ROLAND AU-YEUNG

STATE OF CALIFORNIA - DEPARTMENT OF TRANSPORTATION
Caltrans®
TRAFFIC

LAST REVISION 11-17-09
DATE PLOTTED => 14-DEC-2009
TIME PLOTTED => 14:05

Dist	COUNTY	ROUTE	POST MILES TOTAL PROJECT	SHEET No.	TOTAL SHEETS
04	SF	101	8.2/9.2	103	654

REGISTERED CIVIL ENGINEER — 8-11-09 DATE

12-14-09
PLANS APPROVAL DATE

Jerilyn L. Struven, No. 49964, Exp. 12-31-10, CIVIL, REGISTERED PROFESSIONAL ENGINEER, STATE OF CALIFORNIA

THE STATE OF CALIFORNIA OR ITS OFFICERS OR AGENTS SHALL NOT BE RESPONSIBLE FOR THE ACCURACY OR COMPLETENESS OF SCANNED COPIES OF THIS PLAN SHEET.

CALIFORNIA STATE FIRE MARSHAL APPROVED

Approval of this plan does not authorize or approve any omission or deviation from applicable regulations. Final approval is subject to field inspection. One set of approved plans shall be available on the project site at all times.

Reviewed by: STEPHEN GUARINO

Approval date: 12-14-09

48" x 24" — 4"D

MARSHALL ST
HALLECK ST
CLOSED

BLACK ON ORANGE

Spec 1

42" x 18" — 4"D

CRISSY FIELD
MASON ST

BLACK ON ORANGE

Spec 2

42" x 12" — 4"D

HALLECK ST

BLACK ON ORANGE

Spec 3

42" x 18" — 4"D

HALLECK ST
CLOSED

BLACK ON ORANGE

Spec 4

48" x 36" — 4"D

MARSHALL ST
CLOSED USE
HALLECK ST
DETOUR

BLACK ON ORANGE

Spec 5

48" x 18" — 4"D

LINCOLN BLVD
CLOSED

BLACK ON ORANGE

Spec 6

48" x 24" — 4"D

LINCOLN BLVD
CLOSED AT
MONTGOMERY

BLACK ON ORANGE

Spec 7

42" x 12" — 4"D

LINCOLN BLVD

BLACK ON ORANGE

Spec 8

48" x 30" — 5"D

101 SOUTH
LOMBARD ST

BLACK ON ORANGE

Spec 9

48" x 36" — 5"D

101 SOUTH
LOMBARD ST
LEFT LANE

BLACK ON ORANGE

Spec 10

48" x 36" — 4"C

LOMBARD ST
101 SOUTH

BLACK ON ORANGE

Spec 11

72" x 42" — 6"D

DETOUR
101 SOUTH
LOMBARD ST

BLACK ON ORANGE

Spec 12

66" x 36" — 6"D

DOYLE DR TO
LOMBARD ST
CLOSED
USE DETOUR

BLACK ON ORANGE

Spec 13

48" x 12" — 4"D

LOMBARD ST

BLACK ON ORANGE

Spec 14

66" x 42" — 5"D

NB DOYLE DR
TO GOLDEN GATE
BRIDGE CLOSED
USE DETOUR

BLACK ON ORANGE

Spec 15

48" x 30" — 4"D

101 NORTH
GOLDEN GATE BR

BLACK ON ORANGE

Spec 16

48" x 30" — 4"D, 4"C, 4"D

101 NORTH
GOLDEN GATE BR
RIGHT LANE

BLACK ON ORANGE

Spec 17

42" x 36" — 5"D, 4"D, 4"D

DETOUR
101 SOUTH
RIGHT LANE

BLACK ON ORANGE

Spec 18

48" x 42" — 5"D, 4"D, 4"C, 4"D

DETOUR
101 NORTH
GOLDEN GATE BR
LEFT LANE

BLACK ON ORANGE

Spec 19

30" x 54" — 4"D, 4"D, 4"B, 4"B

DETOUR
101
NORTH
GOLDEN GATE
BRIDGE

BLACK ON ORANGE

Spec 20

FOR NOTES, ABBREVIATIONS AND LEGEND, SEE SHEET CS-1

CONSTRUCTION AREA SIGNS

NO SCALE

CS-10

STATE OF CALIFORNIA - DEPARTMENT OF TRANSPORTATION
TRAFFIC
Caltrans

FUNCTIONAL SUPERVISOR: ROLAND AU-YEUNG

CALCULATED-DESIGNED BY: ULICES VEGA
CHECKED BY: LILY TING

REVISED BY: UV — DATE REVISED: 8/01/09

LAST REVISION | DATE PLOTTED => 14-DEC-2009 | TIME PLOTTED => 14:05 | 11-17-09

BORDER LAST REVISED 4/11/2008

RELATIVE BORDER SCALE IS IN INCHES 0 1 2 3

USERNAME => trlenard
DGN FILE => 4163741a010.dgn

CU 04242

EA 163741

CONSTRUCTION AREA SIGNS

SIGN No.	CODE	PANEL SIZE (INCH x INCH)	SIGN MESSAGE	No. OF SIGNS EA	POST SIZE (EA - INCH x INCH)
1	W20-1	48 x 48	ROAD WORK AHEAD	1	1 - 4 x 6
2	G20-2	48 x 24	END ROAD WORK	1	1 - 4 x 6
3	W20-1	36 x 36	ROAD WORK AHEAD	14	1 - 4 x 6
4	G20-2	36 x 18	END ROAD WORK	6	1 - 4 x 6
5	Spec 5	48 x 36	MARSHALL ST CLOSED USE HALL...	2	1 - 4 x 6
6	SC6-4 (CA)	48 x 60	ROAD (RAMP) CLOSED (DATES)...	10	1 - 4 x 6
7	M4-8a	24 x 18	END DETOUR	9	1 - 4 x 6
8	Spec 7	48 x 24	LINCOLN BLVD CLOSED AT MONT...	1	1 - 4 x 6
	M4-9 R	30 x 24	DETOUR		
9	Spec 6	48 x 18	LINCOLN BLVD CLOSED	1	1 - 4 x 6
	M4-9 L	30 x 24	DETOUR		
10	SC3A (CA)	36 x 12	DETOUR	5	1 - 4 x 6
	Spec 8	42 x 12	LINCOLN BLVD		
11	M4-9 L	30 x 24	DETOUR	5	1 - 4 x 6
	Spec 8	42 x 12	LINCOLN BLVD		
12	M4-9 R	30 x 24	DETOUR	4	1 - 4 x 6
	Spec 8	42 x 12	LINCOLN BLVD		
13	Spec 1	48 x 24	MARSHALL ST HALLECK ST CLOSED	2	1 - 4 x 6
	M4-9 L	30 x 24	DETOUR		
14	Spec 2	42 x 18	CRISSY FIELD MASON ST	2	1 - 4 x 6
	M4-9 L	30 x 24	DETOUR		
15	M4-9 R	30 x 24	DETOUR	9	1 - 4 x 6
	Spec 2	42 x 18	CRISSY FIELD MASON ST		
16	M4-9 L	30 x 24	DETOUR	2	1 - 4 x 6
	Spec 2	42 x 18	CRISSY FIELD MASON ST		
17	SC3A (CA)	36 x 12	DETOUR	8	1 - 4 x 6
	Spec 2	42 x 18	CRISSY FIELD MASON ST		
18	M4-9 R	30 x 24	DETOUR	2	1 - 4 x 6
	Spec 3	42 x 12	HALLECK ST		
19	M4-9 L	30 x 24	DETOUR	6	1 - 4 x 6
	Spec 3	42 x 12	HALLECK ST		
20	SC3A (CA)	36 x 12	DETOUR	6	1 - 4 x 6
	Spec 3	42 x 12	HALLECK ST		
21	Spec 4	42 x 18	HALLECK ST CLOSED	2	1 - 4 x 6
	SC3A (CA)	36 x 12	DETOUR		
22	Spec	90 x 60	CONSTRUCTION PROJECT FUNDING ID SIGN	1	2 - 4 x 6
23	C40 (CA)	72 x 36	TRAFFIC FINES DOUBLE IN...	1	2 - 4 x 6
24	SC3A (CA)	36 x 12	DETOUR	31	1 - 4 x 6
	Spec 9	48 x 30	101 SOUTH - LOMBARD ST		
25	M4-8	30 x 15	DETOUR	1	1 - 4 x 6
	Spec 10	48 x 42	101 SOUTH - LOMBARD ST - LEFT LANE		
26	M4-10 L	48 x 18	DETOUR	5	1 - 4 x 6
	Spec 9	48 x 30	101 SOUTH - LOMBARD ST		
27	M4-10 R	48 x 18	DETOUR	4	1 - 4 x 6
	Spec 9	48 x 30	101 SOUTH - LOMBARD ST		
28	M4-8	30 x 15	DETOUR	4	1 - 4 x 6
	Spec 11	48 x 24	LOMBARD ST - 101 SOUTH		
29	Spec 12	72 x 54	DETOUR - 101 SOUTH - LOMBARD ST	1	2 - 4 x 6
30	M4-10 L	48 x 18	DETOUR	4	1 - 4 x 6
	Spec 14	48 x 12	LOMBARD ST		
31	Spec 13	66 x 48	DOYLE DR TO - LOMBARD ST - CLOSED	2	2 - 4 x 6
32	Spec 15	84 x 48	NB DOYLE DR - TO GOLDEN GATE BR	2	2 - 4 x 6
33	Spec 20	30 x 54	DETOUR 101 NORTH - GOLDEN GATE BRIDGE	2	1 - 4 x 6
34	M4-10 R	48 x 18	DETOUR	2	1 - 4 x 6
	Spec 16	48 x 30	101 NORTH - GOLDEN GATE BR		
35	SC3A (CA)	36 x 12	DETOUR	8	1 - 4 x 6
	Spec 16	48 x 30	101 NORTH - GOLDEN GATE BR		
36	Spec 17	48 x 42	101 NORTH - GOLDEN GATE BR - RIGHT LANE	1	1 - 4 x 6
37	SC3A (CA)	36 x 12	DETOUR	10	1 - 4 x 6
	Spec 14	48 x 12	LOMBARD ST		
38	Spec 18	42 x 36	DETOUR - 101 SOUTH - RIGHT LANE	2	1 - 4 x 6
39	Spec 19	48 x 42	DETOUR - 101 NORTH - GOLDEN GATE BR...	1	1 - 4 x 6

CALIFORNIA STATE FIRE MARSHAL APPROVED

Approval of this plan does not authorize or approve any omission or deviation from applicable regulations. Final approval is subject to field inspection. One set of approved plans shall be available on the project site at all times.

Reviewed by: STEPHEN GUARINO

Approval date: 12-14-09

Dist	COUNTY	ROUTE	POST MILES TOTAL PROJECT	SHEET No.	TOTAL SHEETS
04	SF	101	8.2/9.2	104	654

Roland Au-Yeung 11-18-09
REGISTERED CIVIL ENGINEER DATE

12-14-09
PLANS APPROVAL DATE

REGISTERED PROFESSIONAL ENGINEER — Roland Au-Yeung — No. 34304 — Exp 9-30-11 — CIVIL — STATE OF CALIFORNIA

THE STATE OF CALIFORNIA OR ITS OFFICERS OR AGENTS SHALL NOT BE RESPONSIBLE FOR THE ACCURACY OR COMPLETENESS OF SCANNED COPIES OF THIS PLAN SHEET.

SIGN No.	CODE	PANEL SIZE (INCH x INCH)	SIGN MESSAGE	No. OF SIGNS EA	POST SIZE (EA - INCH x INCH)
40	Spec 8	42 x 12	LINCOLN BLVD	1	1 - 4 x 6
	Spec 2	42 x 18	CRISSY FIELD-MASON ST		
	M4-9 L	30 x 24	DETOUR		
41	Spec 7	48 x 30	LINCOLN BLVD-CLOSED AT MONT...	1	1 - 4 x 6
	Spec 2	42 x 18	CRISSY FIELD-MASON ST		
	M4-9 L	30 x 24	DETOUR		
42	M4-9R	30 x 24	DETOUR	3	1 - 4 x 6
	Spec 2	42 x 18	CRISSY FIELD-MASON ST		
	Spec 8	42 x 12	LINCOLN BLVD		
43	SC3A (CA)	36 x 12	DETOUR	5	1 - 4 x 6
	Spec 2	42 x 18	CRISSY FIELD-MASON ST		
	Spec 8	42 x 12	LINCOLN BLVD		
44	M4-9R	30 x 24	DETOUR	1	1 - 4 x 6
	Spec 3	42 x 12	HALLECK ST		
	Spec 8	42 x 12	LINCOLN BLVD		
45	M4-9 L	30 x 24	DETOUR	3	1 - 4 x 6
	Spec 3	42 x 12	HALLECK ST		
	Spec 8	42 x 12	LINCOLN BLVD		
46	SC3A (CA)	36 x 12	DETOUR	6	1 - 4 x 6
	Spec 3	42 x 12	HALLECK ST		
	Spec 8	42 x 12	LINCOLN BLVD		

FOR NOTES, ABBREVIATIONS AND LEGEND, SEE SHEET CS-1

CONSTRUCTION AREA SIGNS

CS-11

CALCULATED-DESIGNED BY	CHECKED BY
ULICES VEGA	LILY TING

REVISED BY	DATE REVISED
UV	8/01/09

FUNCTIONAL SUPERVISOR: SEAN NOZZARI

STATE OF CALIFORNIA - DEPARTMENT OF TRANSPORTATION — TRAFFIC — Caltrans®

LAST REVISION DATE PLOTTED => 14-DEC-2009
TIME PLOTTED => 14:06

BORDER LAST REVISED 4/11/2008

RELATIVE BORDER SCALE IS IN INCHES 0 1 2 3

USERNAME => trlenard
DGN FILE => 4163741a011.dgn

CU 04242

EA 163741

Dist	COUNTY	ROUTE	POST MILES TOTAL PROJECT	SHEET No.	TOTAL SHEETS
04	SF	101	8.2/9.2	105	654

REGISTERED CIVIL ENGINEER — 8-10-09 DATE

12-14-09
PLANS APPROVAL DATE

REGISTERED PROFESSIONAL ENGINEER — Hossein Khodabakhsh — No. 71650 — Exp. 12-31-09 — CIVIL — STATE OF CALIFORNIA

THE STATE OF CALIFORNIA OR ITS OFFICERS OR AGENTS SHALL NOT BE RESPONSIBLE FOR THE ACCURACY OR COMPLETENESS OF SCANNED COPIES OF THIS PLAN SHEET.

FOR ACCURATE RIGHT OF WAY AND ACCESS DATA, CONTACT RIGHT OF WAY ENGINEERING AT THE DISTRICT OFFICE.

TRAFFIC HANDLING - STAGE 1 PER LANE CLOSURE CHART

A — CLOSE LINCOLN Blvd FOR ROADWAY AND RETAINING WALL CONSTRUCTION.

LEGEND:

- PERMANENT CONSTRUCTION
- Temp CONSTRUCTION
- REMOVAL
- Temp RAILING (TYPE K)
- TYPE III BARRICADE

NOTES:

1. CONSTRUCT PERMANENT AND/OR TEMPORARY ROADWAY.
2. CONSTRUCT RETAINING WALL No. 8.
3. CONSTRUCT RETAINING WALL No. 6.
4. CONSTRUCT TUNNEL.
5. CONSTRUCT RETAINING WALL No. 7A

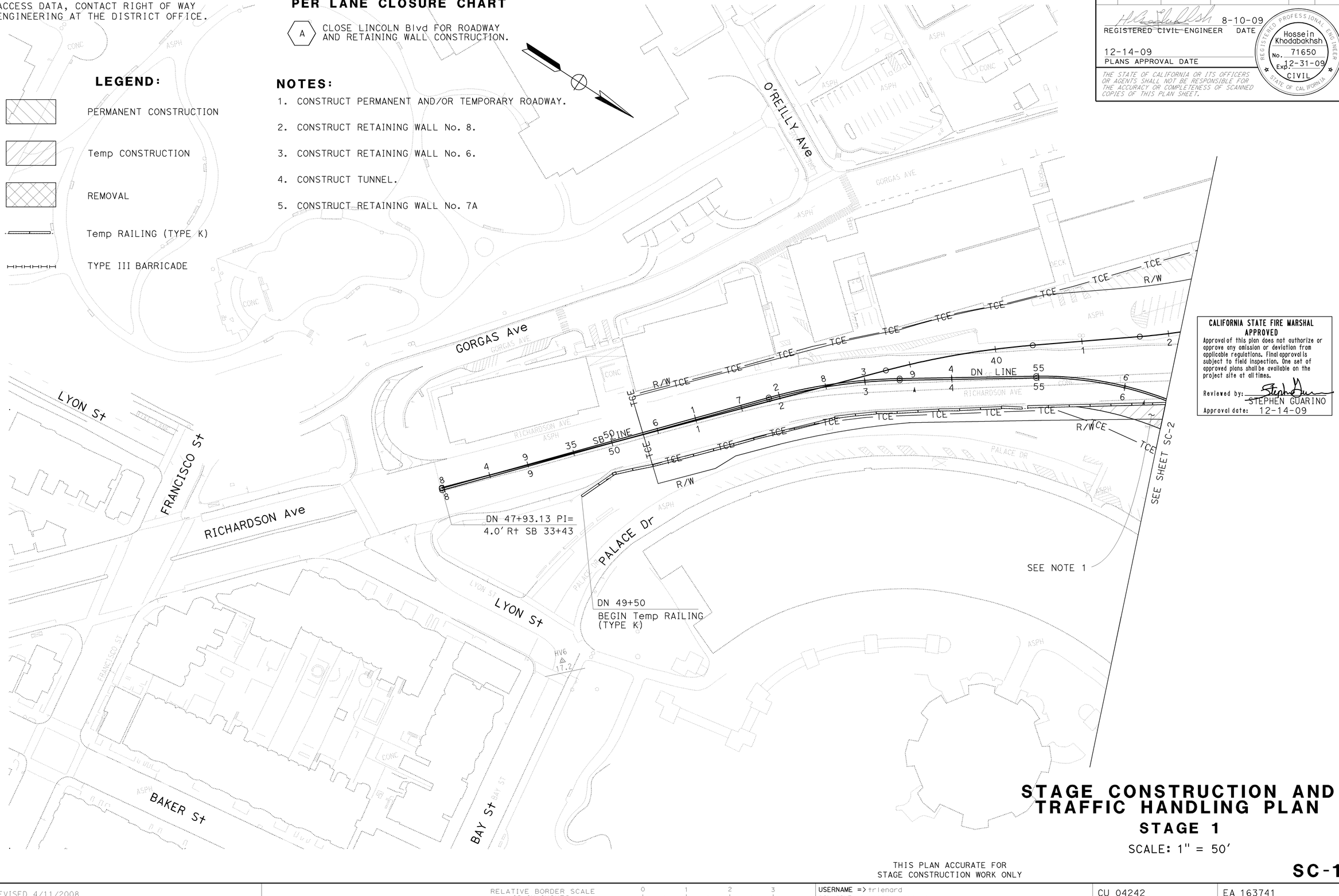

CALIFORNIA STATE FIRE MARSHAL APPROVED

Approval of this plan does not authorize or approve any omission or deviation from applicable regulations. Final approval is subject to field inspection. One set of approved plans shall be available on the project site at all times.

Reviewed by: STEPHEN GUARINO

Approval date: 12-14-09

STAGE CONSTRUCTION AND TRAFFIC HANDLING PLAN

STAGE 1

SCALE: 1" = 50'

THIS PLAN ACCURATE FOR STAGE CONSTRUCTION WORK ONLY

SC-1

REVISED BY	DATE REVISED
RA	8/01/09

CALCULATED-DESIGNED BY: ROMY ACOB
CHECKED BY: GEORGE GIN
FUNCTIONAL SUPERVISOR: ABOLFAZL EMADZADEH

STATE OF CALIFORNIA - DEPARTMENT OF TRANSPORTATION
Caltrans® DESIGN

LAST REVISION: DATE PLOTTED => 14-DEC-2009; 09-15-09 TIME PLOTTED => 14:06

BORDER LAST REVISED 4/11/2008 | RELATIVE BORDER SCALE IS IN INCHES 0 1 2 3 | USERNAME => trienard | DGN FILE => 416374ma001.dgn | CU 04242 | EA 163741

Dist	COUNTY	ROUTE	POST MILES TOTAL PROJECT	SHEET No.	TOTAL SHEETS
04	SF	101	8.2/9.2	106	654

REGISTERED CIVIL ENGINEER 8-10-09 DATE

12-14-09
PLANS APPROVAL DATE

REGISTERED PROFESSIONAL ENGINEER Hossein Khodabakhsh No. 71650 Exp. 12-31-09 CIVIL STATE OF CALIFORNIA

THE STATE OF CALIFORNIA OR ITS OFFICERS OR AGENTS SHALL NOT BE RESPONSIBLE FOR THE ACCURACY OR COMPLETENESS OF SCANNED COPIES OF THIS PLAN SHEET.

FOR ACCURATE RIGHT OF WAY AND ACCESS DATA, CONTACT RIGHT OF WAY ENGINEERING AT THE DISTRICT OFFICE.

CALIFORNIA STATE FIRE MARSHAL APPROVED
Approval of this plan does not authorize or approve any omission or deviation from applicable regulations. Final approval is subject to field inspection. One set of approved plans shall be available on the project site at all times.
Reviewed by: STEPHEN GUARINO
Approval date: 12-14-09

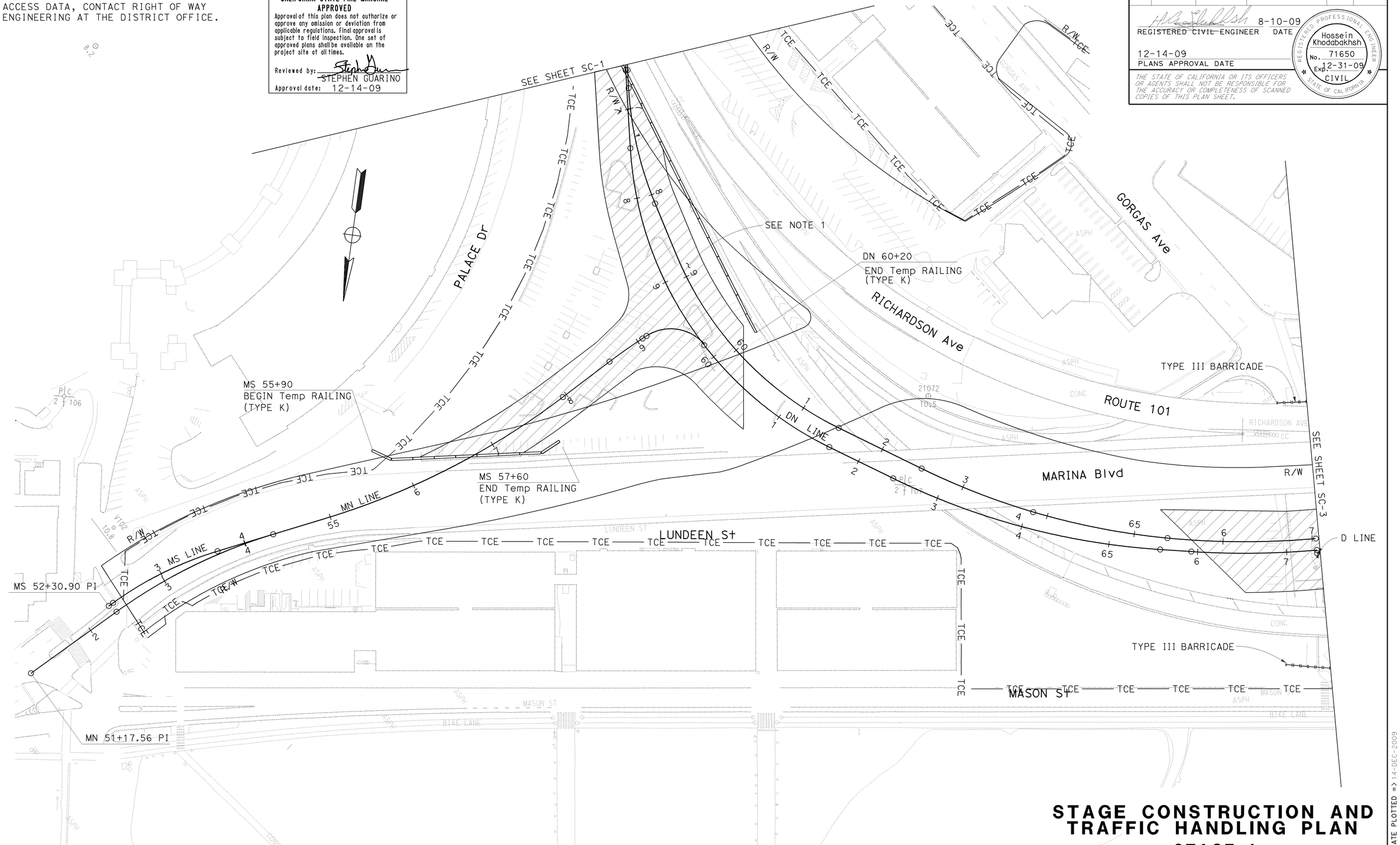

STAGE CONSTRUCTION AND TRAFFIC HANDLING PLAN

STAGE 1

SCALE: 1" = 50'

FOR NOTES, ABBREVIATIONS AND LEGEND, SEE SHEET SC-1

THIS PLAN ACCURATE FOR STAGE CONSTRUCTION WORK ONLY

SC-2

STATE OF CALIFORNIA - DEPARTMENT OF TRANSPORTATION
Caltrans
DESIGN

FUNCTIONAL SUPERVISOR: ABOLFAZL EMADZADEH
CALCULATED-DESIGNED BY: ROMY ACOB
CHECKED BY: GEORGE GIN
REVISED BY: RA
DATE REVISED: 8/01/09

LAST REVISION 09-14-09
DATE PLOTTED => 14-DEC-2009
TIME PLOTTED => 14:06

BORDER LAST REVISED 4/11/2008
RELATIVE BORDER SCALE IS IN INCHES 0 1 2 3
USERNAME => trlenard
DGN FILE => 416374ma002.dgn
CU 04242
EA 163741

FOR ACCURATE RIGHT OF WAY AND
ACCESS DATA, CONTACT RIGHT OF WAY
ENGINEERING AT THE DISTRICT OFFICE.

Dist	COUNTY	ROUTE	POST MILES TOTAL PROJECT	SHEET No.	TOTAL SHEETS
04	SF	101	8.2/9.2	107	654

8-10-09
REGISTERED CIVIL ENGINEER DATE

12-14-09
PLANS APPROVAL DATE

Hossein Khodabakhsh
No. 71650
Exp. 12-31-09
CIVIL
REGISTERED PROFESSIONAL ENGINEER
STATE OF CALIFORNIA

THE STATE OF CALIFORNIA OR ITS OFFICERS OR AGENTS SHALL NOT BE RESPONSIBLE FOR THE ACCURACY OR COMPLETENESS OF SCANNED COPIES OF THIS PLAN SHEET.

CALIFORNIA STATE FIRE MARSHAL APPROVED

Approval of this plan does not authorize or approve any omission or deviation from applicable regulations. Final approval is subject to field inspection. One set of approved plans shall be available on the project site at all times.

Reviewed by: STEPHEN GUARINO
Approval date: 12-14-09

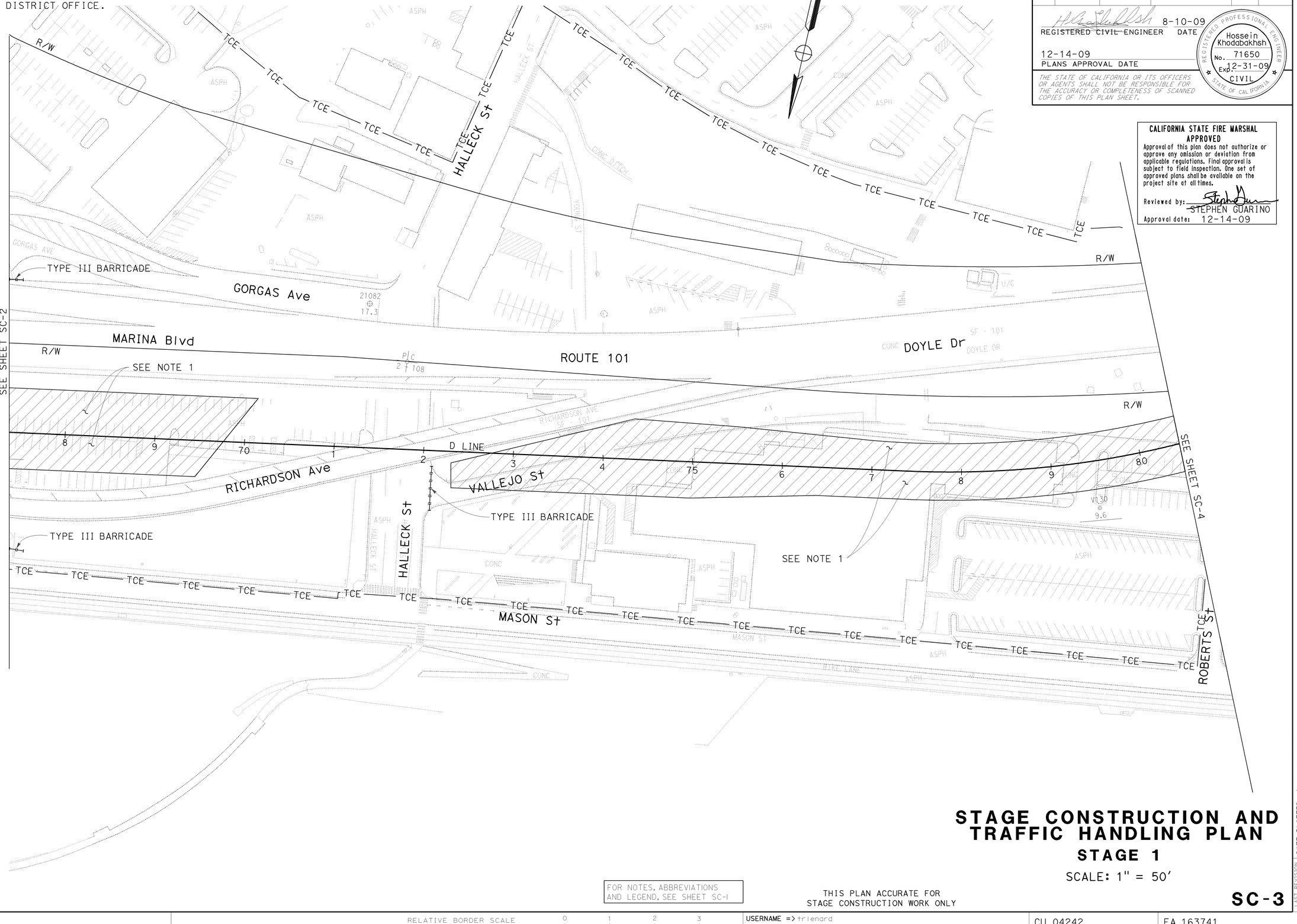

STAGE CONSTRUCTION AND TRAFFIC HANDLING PLAN

STAGE 1

SCALE: 1" = 50'

FOR NOTES, ABBREVIATIONS AND LEGEND, SEE SHEET SC-1

THIS PLAN ACCURATE FOR STAGE CONSTRUCTION WORK ONLY

SC-3

STATE OF CALIFORNIA - DEPARTMENT OF TRANSPORTATION
DESIGN
FUNCTIONAL SUPERVISOR: ABOLFAZL EMADZADEH
CALCULATED-DESIGNED BY: ROMY ACOB
CHECKED BY: GEORGE GIN
REVISED BY: RA
DATE REVISED: 8/01/09

LAST REVISION | DATE PLOTTED => 14-DEC-2009 | TIME PLOTTED => 14:06 | 08-01-09

BORDER LAST REVISED 4/11/2008

RELATIVE BORDER SCALE IS IN INCHES 0 1 2 3

USERNAME => trienard
DGN FILE => 416374ma003.dgn

CU 04242

EA 163741

Dist	COUNTY	ROUTE	POST MILES TOTAL PROJECT	SHEET No.	TOTAL SHEETS
04	SF	101	8.2/9.2	108	654

8-10-09
REGISTERED CIVIL ENGINEER DATE

12-14-09
PLANS APPROVAL DATE

REGISTERED PROFESSIONAL ENGINEER
Hossein Khodabakhsh
No. 71650
Exp. 12-31-09
CIVIL
STATE OF CALIFORNIA

THE STATE OF CALIFORNIA OR ITS OFFICERS OR AGENTS SHALL NOT BE RESPONSIBLE FOR THE ACCURACY OR COMPLETENESS OF SCANNED COPIES OF THIS PLAN SHEET.

CALIFORNIA STATE FIRE MARSHAL APPROVED

Approval of this plan does not authorize or approve any omission or deviation from applicable regulations. Final approval is subject to field inspection. One set of approved plans shall be available on the project site at all times.

Reviewed by: STEPHEN GUARINO
Approval date: 12-14-09

FOR ACCURATE RIGHT OF WAY AND ACCESS DATA, CONTACT RIGHT OF WAY ENGINEERING AT THE DISTRICT OFFICE.

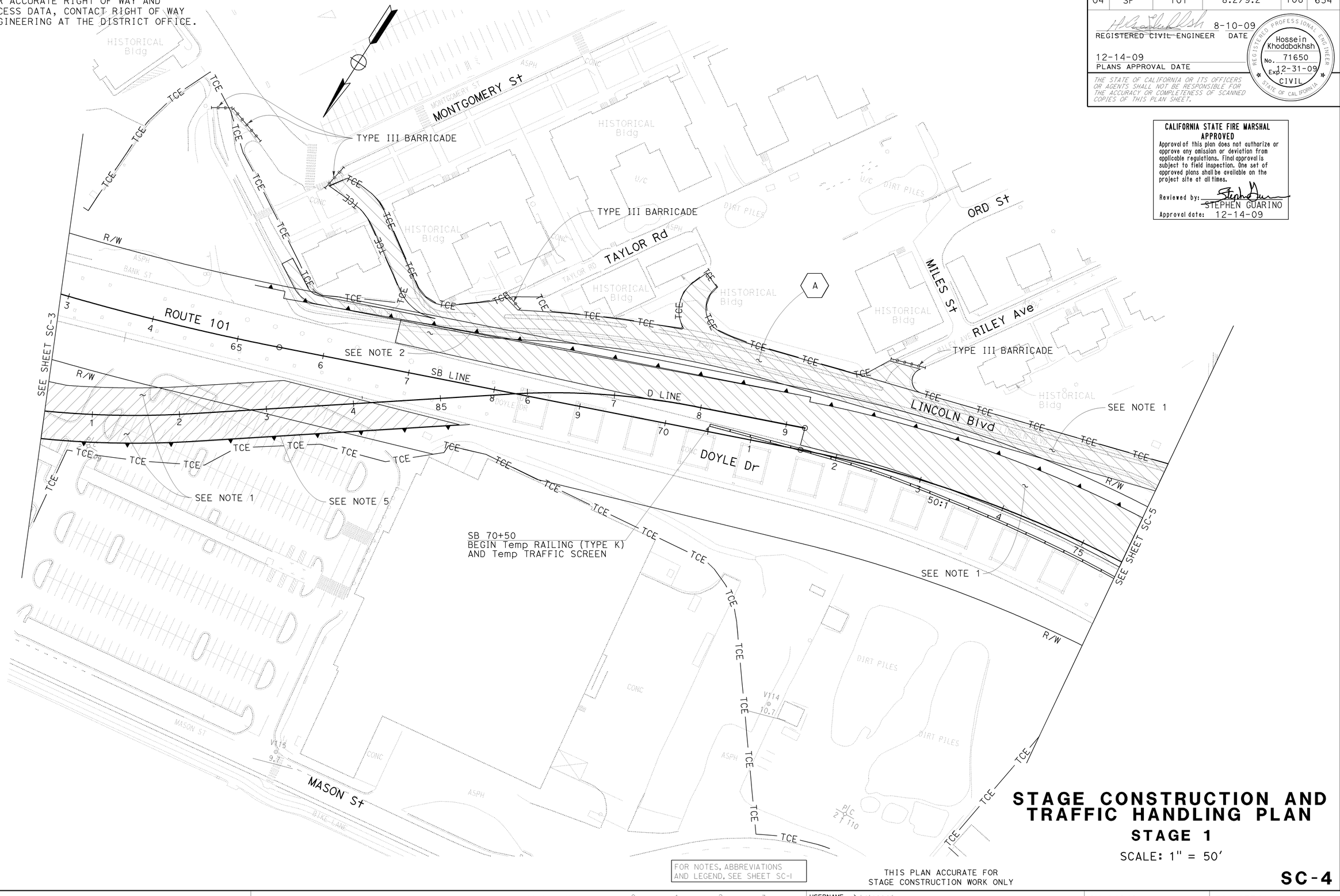

FOR NOTES, ABBREVIATIONS AND LEGEND, SEE SHEET SC-1

THIS PLAN ACCURATE FOR STAGE CONSTRUCTION WORK ONLY

STAGE CONSTRUCTION AND TRAFFIC HANDLING PLAN

STAGE 1

SCALE: 1" = 50'

SC-4

STATE OF CALIFORNIA - DEPARTMENT OF TRANSPORTATION
DESIGN
FUNCTIONAL SUPERVISOR: ABOLFAZL EMADZADEH
CALCULATED-DESIGNED BY: ROMY ACOB
CHECKED BY: GEORGE GIN
REVISED BY: RA
DATE REVISED: 8/01/09

LAST REVISION DATE PLOTTED => 14-DEC-2009
09-14-09 TIME PLOTTED => 14:06

BORDER LAST REVISED 4/11/2008
RELATIVE BORDER SCALE IS IN INCHES 0 1 2 3
USERNAME => trienard
DGN FILE => 416374ma004.dgn
CU 04242
EA 163741

FOR ACCURATE RIGHT OF WAY AND
ACCESS DATA, CONTACT RIGHT OF WAY
ENGINEERING AT THE DISTRICT OFFICE.

Dist	COUNTY	ROUTE	POST MILES TOTAL PROJECT	SHEET No.	TOTAL SHEETS
04	SF	101	8.2/9.2	109	654

Hossein Khodabakhsh — 8-10-09
REGISTERED CIVIL ENGINEER — DATE

12-14-09
PLANS APPROVAL DATE

REGISTERED PROFESSIONAL ENGINEER — Hossein Khodabakhsh — No. 71650 — Exp. 12-31-09 — CIVIL — STATE OF CALIFORNIA

THE STATE OF CALIFORNIA OR ITS OFFICERS OR AGENTS SHALL NOT BE RESPONSIBLE FOR THE ACCURACY OR COMPLETENESS OF SCANNED COPIES OF THIS PLAN SHEET.

CALIFORNIA STATE FIRE MARSHAL APPROVED
Approval of this plan does not authorize or approve any omission or deviation from applicable regulations. Final approval is subject to field inspection. One set of approved plans shall be available on the project site at all times.
Reviewed by: STEPHEN GUARINO
Approval date: 12-14-09

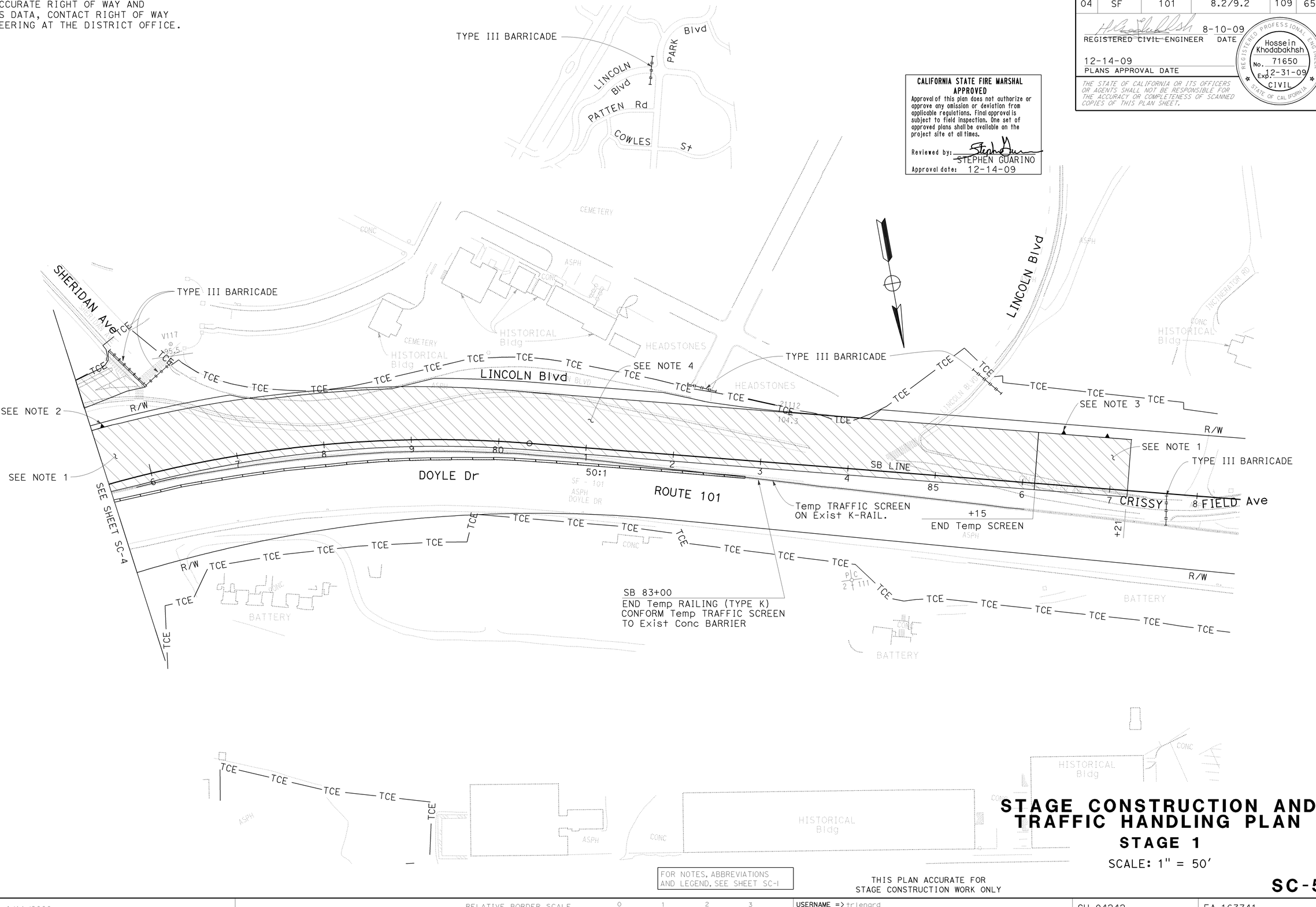

STAGE CONSTRUCTION AND TRAFFIC HANDLING PLAN

STAGE 1

SCALE: 1" = 50'

FOR NOTES, ABBREVIATIONS AND LEGEND, SEE SHEET SC-1

THIS PLAN ACCURATE FOR STAGE CONSTRUCTION WORK ONLY

SC-5

REVISED BY	DATE REVISED
RA	8/01/09

CALCULATED-DESIGNED BY: ROMY ACOB
CHECKED BY: GEORGE GIN
FUNCTIONAL SUPERVISOR: ABOLFAZL EMADZADEH

STATE OF CALIFORNIA - DEPARTMENT OF TRANSPORTATION
DESIGN

LAST REVISION — DATE PLOTTED => 14-DEC-2009
09-14-09 — TIME PLOTTED => 14:06

BORDER LAST REVISED 4/11/2008

RELATIVE BORDER SCALE IS IN INCHES 0 1 2 3

USERNAME => trlenard
DGN FILE => 416374ma005.dgn

CU 04242

EA 163741

Dist	COUNTY	ROUTE	POST MILES TOTAL PROJECT	SHEET No.	TOTAL SHEETS
04	SF	101	8.2/9.2	110	654

REGISTERED CIVIL ENGINEER 8-10-09 DATE

12-14-09
PLANS APPROVAL DATE

Hossein Khodabakhsh No. 71650 Exp. 12-31-09 CIVIL — REGISTERED PROFESSIONAL ENGINEER — STATE OF CALIFORNIA

THE STATE OF CALIFORNIA OR ITS OFFICERS OR AGENTS SHALL NOT BE RESPONSIBLE FOR THE ACCURACY OR COMPLETENESS OF SCANNED COPIES OF THIS PLAN SHEET.

FOR ACCURATE RIGHT OF WAY AND ACCESS DATA, CONTACT RIGHT OF WAY ENGINEERING AT THE DISTRICT OFFICE.

TRAFFIC HANDLING - STAGE 2, PHASE 1 / PHASE 2 PER LANE CLOSURE CHART (3 DAY WEEKEND CLOSURE)

A CLOSE SB DOYLE DRIVE.

B CLOSE NB DOYLE DRIVE.

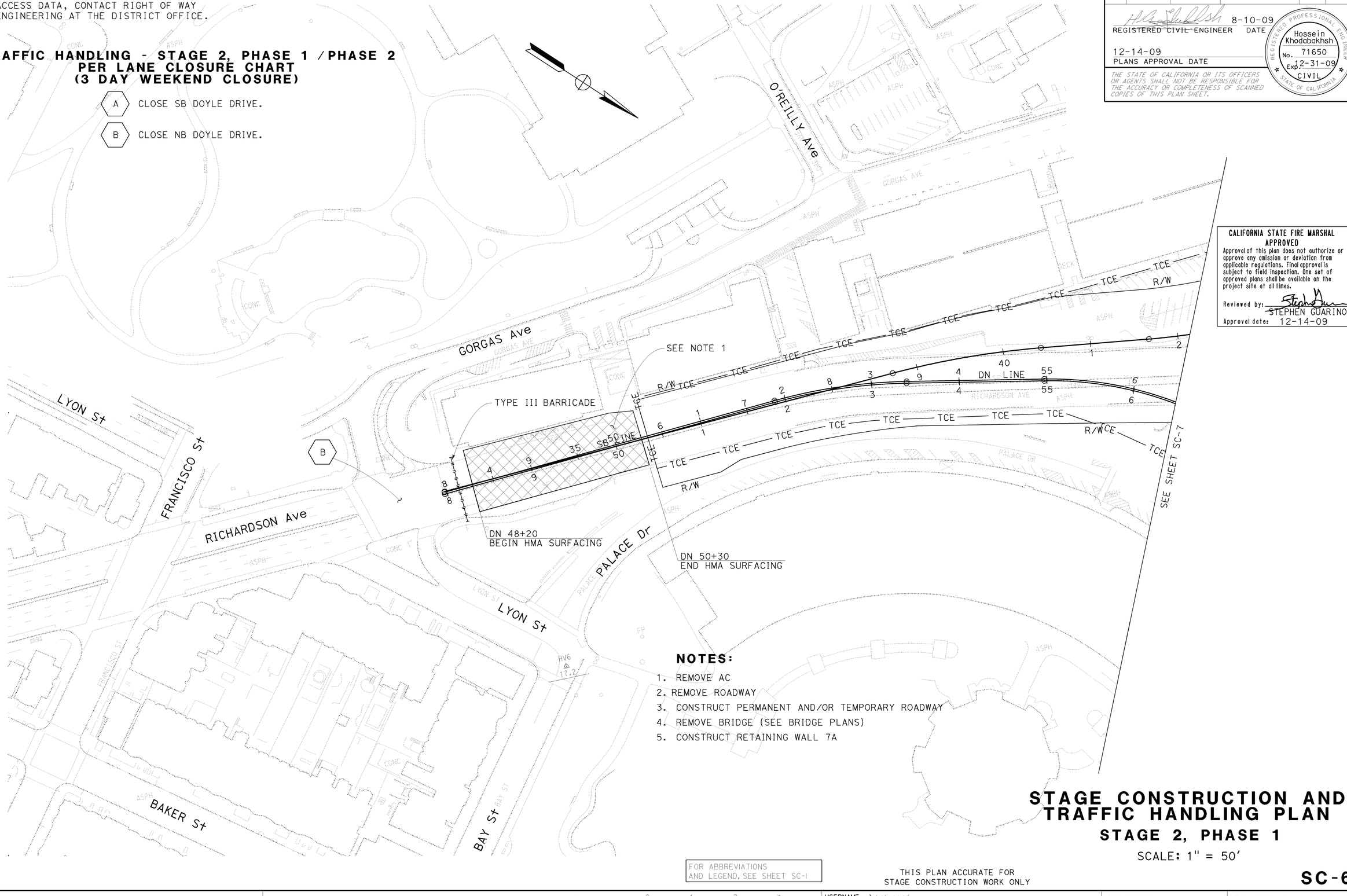

NOTES:

1. REMOVE AC
2. REMOVE ROADWAY
3. CONSTRUCT PERMANENT AND/OR TEMPORARY ROADWAY
4. REMOVE BRIDGE (SEE BRIDGE PLANS)
5. CONSTRUCT RETAINING WALL 7A

CALIFORNIA STATE FIRE MARSHAL APPROVED

Approval of this plan does not authorize or approve any omission or deviation from applicable regulations. Final approval is subject to field inspection. One set of approved plans shall be available on the project site at all times.

Reviewed by: STEPHEN GUARINO

Approval date: 12-14-09

STAGE CONSTRUCTION AND TRAFFIC HANDLING PLAN

STAGE 2, PHASE 1

SCALE: 1" = 50'

FOR ABBREVIATIONS AND LEGEND, SEE SHEET SC-1

THIS PLAN ACCURATE FOR STAGE CONSTRUCTION WORK ONLY

SC-6

REVISED BY	DATE REVISED
RA	8/01/09

CALCULATED-DESIGNED BY: ROMY ACOB
CHECKED BY: GEORGE GIN
FUNCTIONAL SUPERVISOR: ABOLFAZL EMADZADEH

STATE OF CALIFORNIA - DEPARTMENT OF TRANSPORTATION
DESIGN

LAST REVISION: DATE PLOTTED => 14-DEC-2009
09-17-09 TIME PLOTTED => 14:06

FOR ACCURATE RIGHT OF WAY AND ACCESS DATA, CONTACT RIGHT OF WAY ENGINEERING AT THE DISTRICT OFFICE.

CALIFORNIA STATE FIRE MARSHAL APPROVED
Approval of this plan does not authorize or approve any omission or deviation from applicable regulations. Final approval is subject to field inspection. One set of approved plans shall be available on the project site at all times.
Reviewed by: STEPHEN GUARINO
Approval date: 12-14-09

Dist	COUNTY	ROUTE	POST MILES TOTAL PROJECT	SHEET No.	TOTAL SHEETS
04	SF	101	8.2/9.2	111	654

REGISTERED CIVIL ENGINEER — DATE: 8-10-09
PLANS APPROVAL DATE: 12-14-09
Hossein Khodabakhsh, No. 71650, Exp. 12-31-09, CIVIL, REGISTERED PROFESSIONAL ENGINEER, STATE OF CALIFORNIA

THE STATE OF CALIFORNIA OR ITS OFFICERS OR AGENTS SHALL NOT BE RESPONSIBLE FOR THE ACCURACY OR COMPLETENESS OF SCANNED COPIES OF THIS PLAN SHEET.

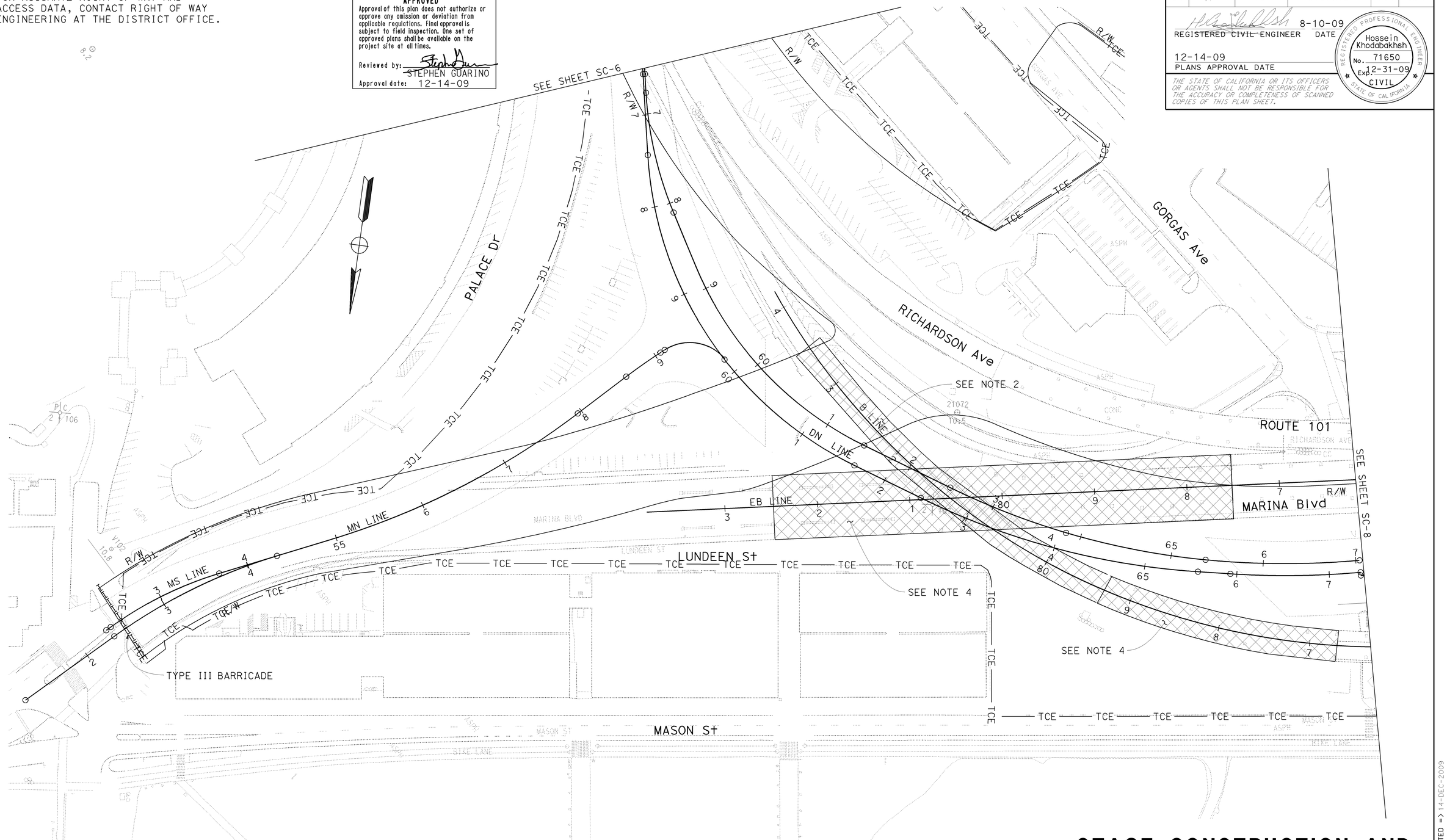

FOR NOTES, SEE SHEET SC-6
FOR ABBREVIATIONS AND LEGEND, SEE SHEET SC-1

THIS PLAN ACCURATE FOR STAGE CONSTRUCTION WORK ONLY

STAGE CONSTRUCTION AND TRAFFIC HANDLING PLAN

STAGE 2, PHASE 1

SCALE: 1" = 50'

SC-7

REVISED BY	DATE REVISED
RA	8/01/09

CALCULATED-DESIGNED BY: ROMY ACOB
CHECKED BY: GEORGE GIN
FUNCTIONAL SUPERVISOR: ABOLFAZL EMADZADEH

STATE OF CALIFORNIA - DEPARTMENT OF TRANSPORTATION
DESIGN

LAST REVISION: DATE PLOTTED => 14-DEC-2009, TIME PLOTTED => 14:06, 09-17-09

BORDER LAST REVISED 4/11/2008
RELATIVE BORDER SCALE IS IN INCHES 0 1 2 3
USERNAME => trienard
DGN FILE => 416374ma007.dgn
CU 04242
EA 163741

Dist	COUNTY	ROUTE	POST MILES TOTAL PROJECT	SHEET No.	TOTAL SHEETS
04	SF	101	8.2/9.2	112	654

REGISTERED CIVIL ENGINEER — 8-10-09 DATE

12-14-09
PLANS APPROVAL DATE

Hossein Khodabakhsh No. 71650 Exp. 12-31-09 CIVIL — REGISTERED PROFESSIONAL ENGINEER — STATE OF CALIFORNIA

THE STATE OF CALIFORNIA OR ITS OFFICERS OR AGENTS SHALL NOT BE RESPONSIBLE FOR THE ACCURACY OR COMPLETENESS OF SCANNED COPIES OF THIS PLAN SHEET.

CALIFORNIA STATE FIRE MARSHAL APPROVED

Approval of this plan does not authorize or approve any omission or deviation from applicable regulations. Final approval is subject to field inspection. One set of approved plans shall be available on the project site at all times.

Reviewed by: STEPHEN GUARINO

Approval date: 12-14-09

FOR ACCURATE RIGHT OF WAY AND ACCESS DATA, CONTACT RIGHT OF WAY ENGINEERING AT THE DISTRICT OFFICE.

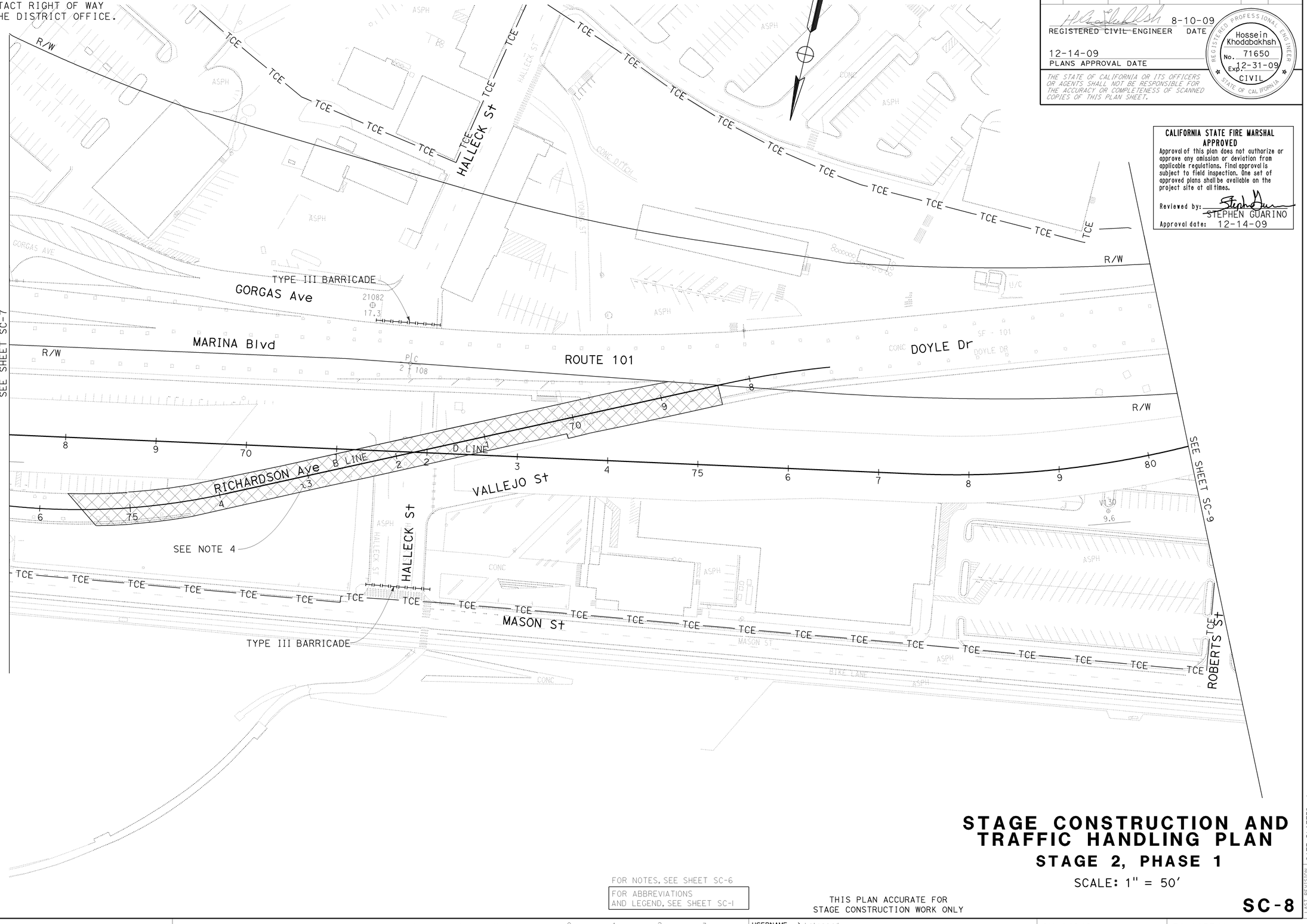

FOR NOTES, SEE SHEET SC-6

FOR ABBREVIATIONS AND LEGEND, SEE SHEET SC-1

THIS PLAN ACCURATE FOR STAGE CONSTRUCTION WORK ONLY

STAGE CONSTRUCTION AND TRAFFIC HANDLING PLAN

STAGE 2, PHASE 1

SCALE: 1" = 50'

SC-8

CALCULATED-DESIGNED BY	REVISED BY	DATE REVISED
CHECKED BY	RA	8/01/09
ROMY ACOB		
GEORGE GIN		

FUNCTIONAL SUPERVISOR: ABOLFAZL EMADZADEH

STATE OF CALIFORNIA - DEPARTMENT OF TRANSPORTATION

Caltrans® DESIGN

LAST REVISION DATE PLOTTED => 14-DEC-2009
09-17-09 TIME PLOTTED => 14:06

BORDER LAST REVISED 4/11/2008

RELATIVE BORDER SCALE IS IN INCHES 0 1 2 3

USERNAME => trlenard
DGN FILE => 416374ma008.dgn

CU 04242

EA 163741

FOR ACCURATE RIGHT OF WAY AND ACCESS DATA, CONTACT RIGHT OF WAY ENGINEERING AT THE DISTRICT OFFICE.

Dist	COUNTY	ROUTE	POST MILES TOTAL PROJECT	SHEET No.	TOTAL SHEETS
04	SF	101	8.2/9.2	113	654

REGISTERED CIVIL ENGINEER — 8-10-09 DATE

Hossein Khodabakhsh No. 71650 Exp. 12-31-09 CIVIL — REGISTERED PROFESSIONAL ENGINEER — STATE OF CALIFORNIA

12-14-09
PLANS APPROVAL DATE

THE STATE OF CALIFORNIA OR ITS OFFICERS OR AGENTS SHALL NOT BE RESPONSIBLE FOR THE ACCURACY OR COMPLETENESS OF SCANNED COPIES OF THIS PLAN SHEET.

CALIFORNIA STATE FIRE MARSHAL APPROVED

Approval of this plan does not authorize or approve any omission or deviation from applicable regulations. Final approval is subject to field inspection. One set of approved plans shall be available on the project site at all times.

Reviewed by: STEPHEN GUARINO

Approval date: 12-14-09

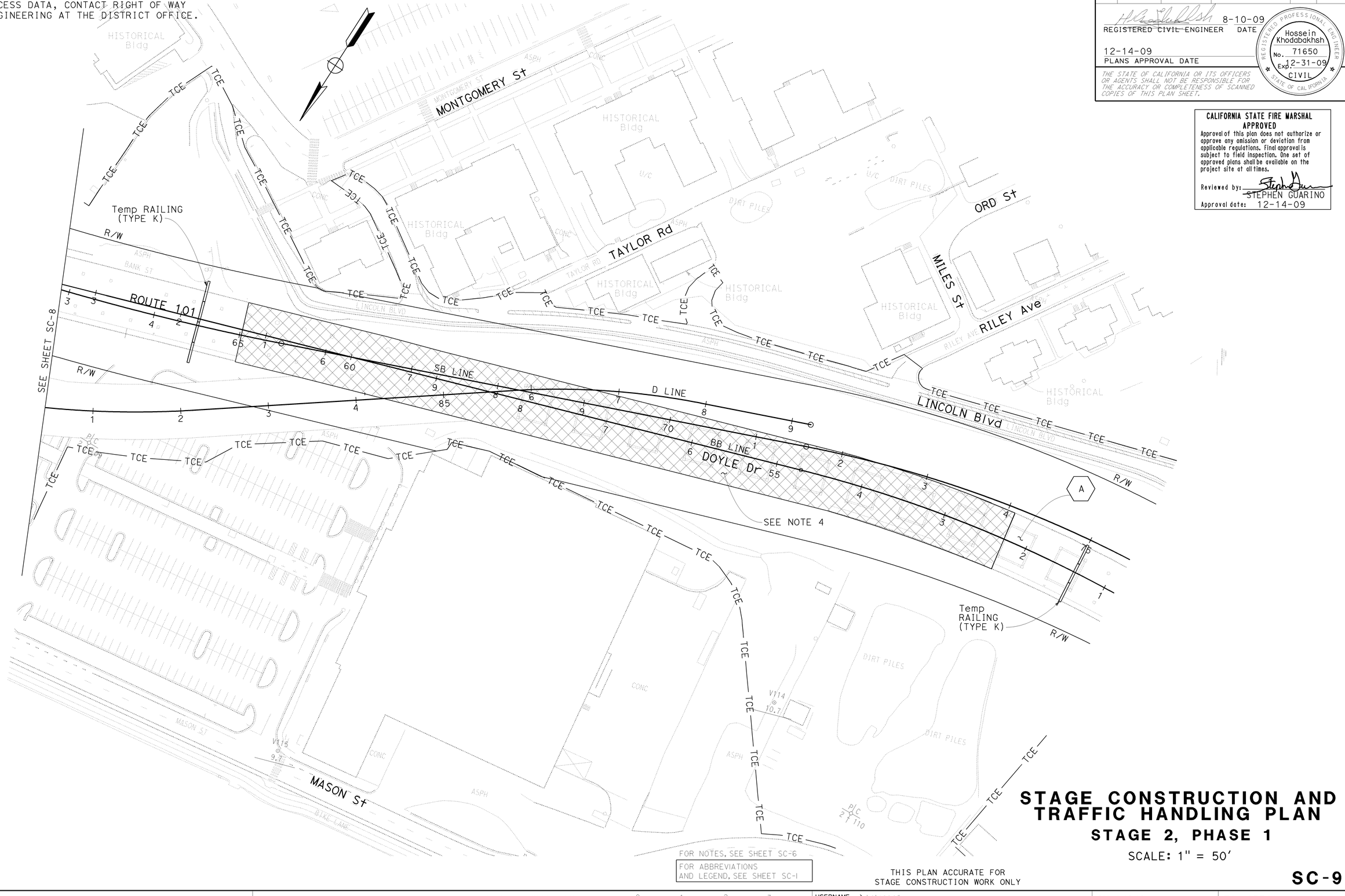

FOR NOTES, SEE SHEET SC-6

FOR ABBREVIATIONS AND LEGEND, SEE SHEET SC-1

THIS PLAN ACCURATE FOR STAGE CONSTRUCTION WORK ONLY

STAGE CONSTRUCTION AND TRAFFIC HANDLING PLAN

STAGE 2, PHASE 1

SCALE: 1" = 50'

SC-9

STATE OF CALIFORNIA - DEPARTMENT OF TRANSPORTATION
DESIGN
FUNCTIONAL SUPERVISOR: ABOLFAZL EMADZADEH
CALCULATED-DESIGNED BY: ROMY ACOB
CHECKED BY: GEORGE GIN
REVISED BY: RA
DATE REVISED: 8/01/09

LAST REVISION DATE PLOTTED => 14-DEC-2009
08-18-09 TIME PLOTTED => 14:06

BORDER LAST REVISED 4/11/2008

RELATIVE BORDER SCALE IS IN INCHES 0 1 2 3

USERNAME => trienard
DGN FILE => 416374ma009.dgn

CU 04242

EA 163741

Dist	COUNTY	ROUTE	POST MILES TOTAL PROJECT	SHEET No.	TOTAL SHEETS
04	SF	101	8.2/9.2	114	654

REGISTERED CIVIL ENGINEER — 8-10-09 DATE

Hossein Khodabakhsh No. 71650 Exp. 12-31-09 CIVIL — REGISTERED PROFESSIONAL ENGINEER — STATE OF CALIFORNIA

12-14-09
PLANS APPROVAL DATE

THE STATE OF CALIFORNIA OR ITS OFFICERS OR AGENTS SHALL NOT BE RESPONSIBLE FOR THE ACCURACY OR COMPLETENESS OF SCANNED COPIES OF THIS PLAN SHEET.

FOR ACCURATE RIGHT OF WAY AND ACCESS DATA, CONTACT RIGHT OF WAY ENGINEERING AT THE DISTRICT OFFICE.

NOTE:

1. ALL STAGE 2, PHASE 2 WORK MUST BE COMPLETED DURING THE 3 DAY WEEKEND CLOSURE.

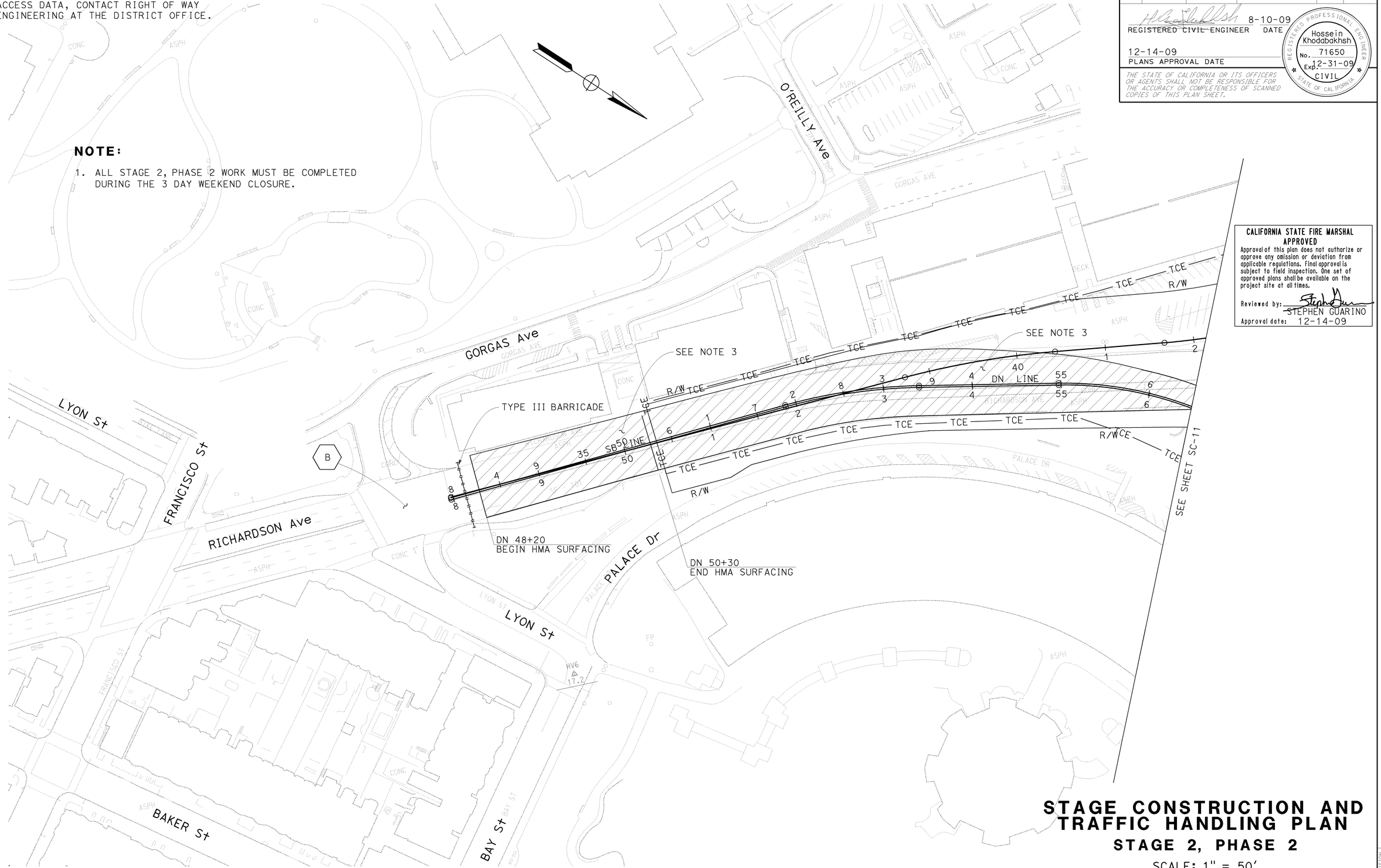

CALIFORNIA STATE FIRE MARSHAL APPROVED

Approval of this plan does not authorize or approve any omission or deviation from applicable regulations. Final approval is subject to field inspection. One set of approved plans shall be available on the project site at all times.

Reviewed by: STEPHEN GUARINO

Approval date: 12-14-09

STAGE CONSTRUCTION AND TRAFFIC HANDLING PLAN

STAGE 2, PHASE 2

SCALE: 1" = 50'

FOR ABBREVIATIONS AND LEGEND, SEE SHEET SC-1

THIS PLAN ACCURATE FOR STAGE CONSTRUCTION WORK ONLY

SC-10

REVISED BY	DATE REVISED
RA	8/01/09

CALCULATED-DESIGNED BY: ROMY ACOB
CHECKED BY: GEORGE GIN

FUNCTIONAL SUPERVISOR: ABOLFAZL EMADZADEH

STATE OF CALIFORNIA - DEPARTMENT OF TRANSPORTATION
DESIGN

LAST REVISION: DATE PLOTTED => 14-DEC-2009
09-08-09 TIME PLOTTED => 14:06

FOR ACCURATE RIGHT OF WAY AND ACCESS DATA, CONTACT RIGHT OF WAY ENGINEERING AT THE DISTRICT OFFICE.

CALIFORNIA STATE FIRE MARSHAL APPROVED
Approval of this plan does not authorize or approve any omission or deviation from applicable regulations. Final approval is subject to field inspection. One set of approved plans shall be available on the project site at all times.
Reviewed by: STEPHEN GUARINO
Approval date: 12-14-09

Dist	COUNTY	ROUTE	POST MILES TOTAL PROJECT	SHEET No.	TOTAL SHEETS
04	SF	101	8.2/9.2	115	654

REGISTERED CIVIL ENGINEER — 8-10-09 DATE
12-14-09 PLANS APPROVAL DATE
Hossein Khodabakhsh, No. 71650, Exp. 12-31-09, CIVIL, REGISTERED PROFESSIONAL ENGINEER, STATE OF CALIFORNIA

THE STATE OF CALIFORNIA OR ITS OFFICERS OR AGENTS SHALL NOT BE RESPONSIBLE FOR THE ACCURACY OR COMPLETENESS OF SCANNED COPIES OF THIS PLAN SHEET.

NOTE:

1. ALL STAGE 2, PHASE 2 WORK MUST BE COMPLETED DURING THE 3 DAY WEEKEND CLOSURE.

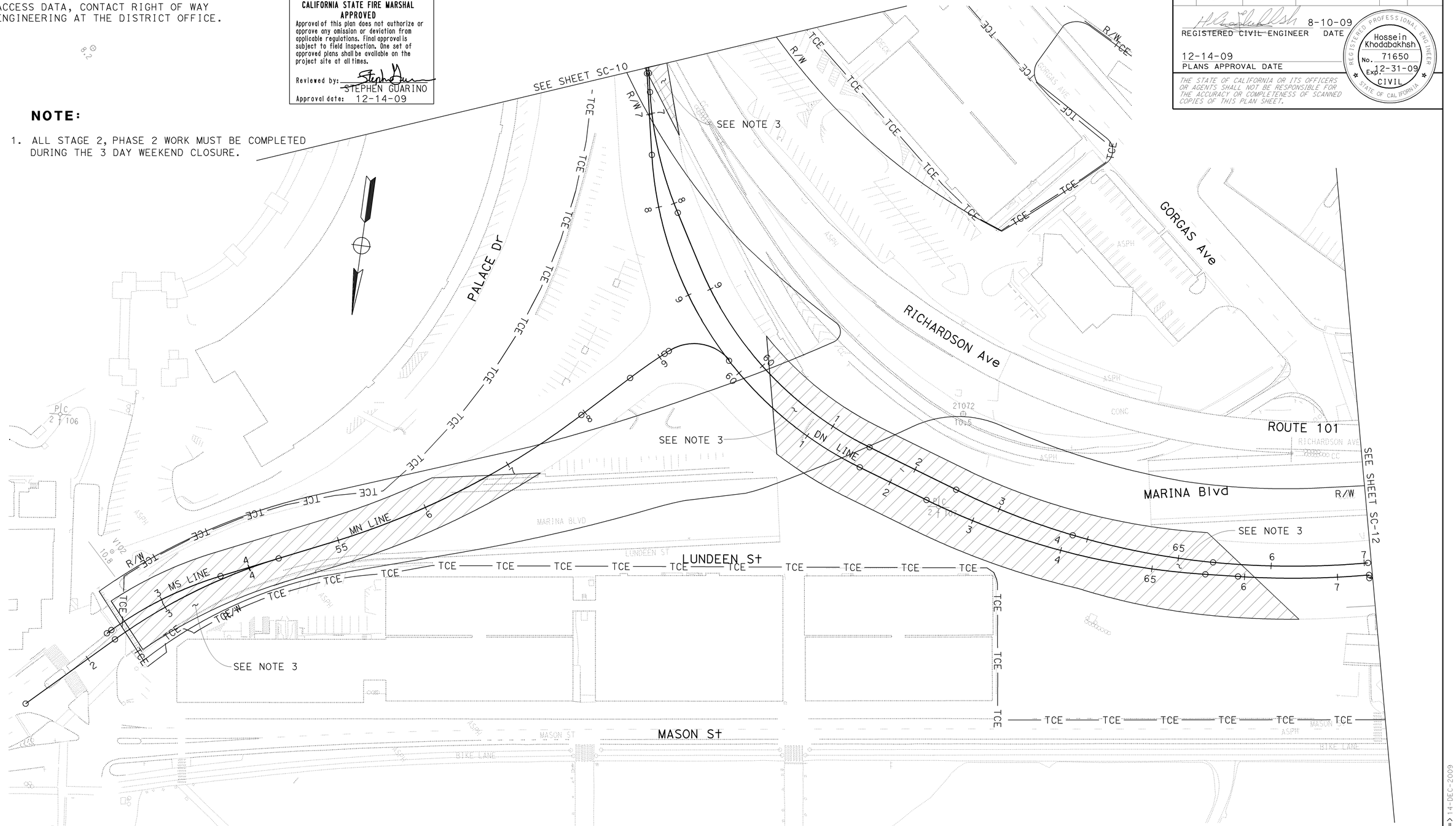

FOR NOTES, SEE SHEET SC-6
FOR ABBREVIATIONS AND LEGEND, SEE SHEET SC-1

THIS PLAN ACCURATE FOR STAGE CONSTRUCTION WORK ONLY

STAGE CONSTRUCTION AND TRAFFIC HANDLING PLAN

STAGE 2, PHASE 2

SCALE: 1" = 50'

SC-11

REVISED BY	DATE REVISED
RA	8/01/09

CALCULATED-DESIGNED BY: ROMY ACOB
CHECKED BY: GEORGE GIN
FUNCTIONAL SUPERVISOR: ABOLFAZL EMADZADEH
STATE OF CALIFORNIA - DEPARTMENT OF TRANSPORTATION
DESIGN

LAST REVISION: DATE PLOTTED => 14-DEC-2009, TIME PLOTTED => 14:06, 09-15-09

BORDER LAST REVISED 4/11/2008 | RELATIVE BORDER SCALE IS IN INCHES 0 1 2 3 | USERNAME => trienard, DGN FILE => 416374ma011.dgn | CU 04242 | EA 163741

FOR ACCURATE RIGHT OF WAY AND
ACCESS DATA, CONTACT RIGHT OF WAY
ENGINEERING AT THE DISTRICT OFFICE.

Dist	COUNTY	ROUTE	POST MILES TOTAL PROJECT	SHEET No.	TOTAL SHEETS
04	SF	101	8.2/9.2	116	654

H Hosseinkhodabakhsh 8-10-09
REGISTERED CIVIL ENGINEER DATE

12-14-09
PLANS APPROVAL DATE

REGISTERED PROFESSIONAL ENGINEER
Hossein Khodabakhsh
No. 71650
Exp. 12-31-09
CIVIL
STATE OF CALIFORNIA

THE STATE OF CALIFORNIA OR ITS OFFICERS OR AGENTS SHALL NOT BE RESPONSIBLE FOR THE ACCURACY OR COMPLETENESS OF SCANNED COPIES OF THIS PLAN SHEET.

CALIFORNIA STATE FIRE MARSHAL APPROVED

Approval of this plan does not authorize or approve any omission or deviation from applicable regulations. Final approval is subject to field inspection. One set of approved plans shall be available on the project site at all times.

Reviewed by: STEPHEN GUARINO
Approval date: 12-14-09

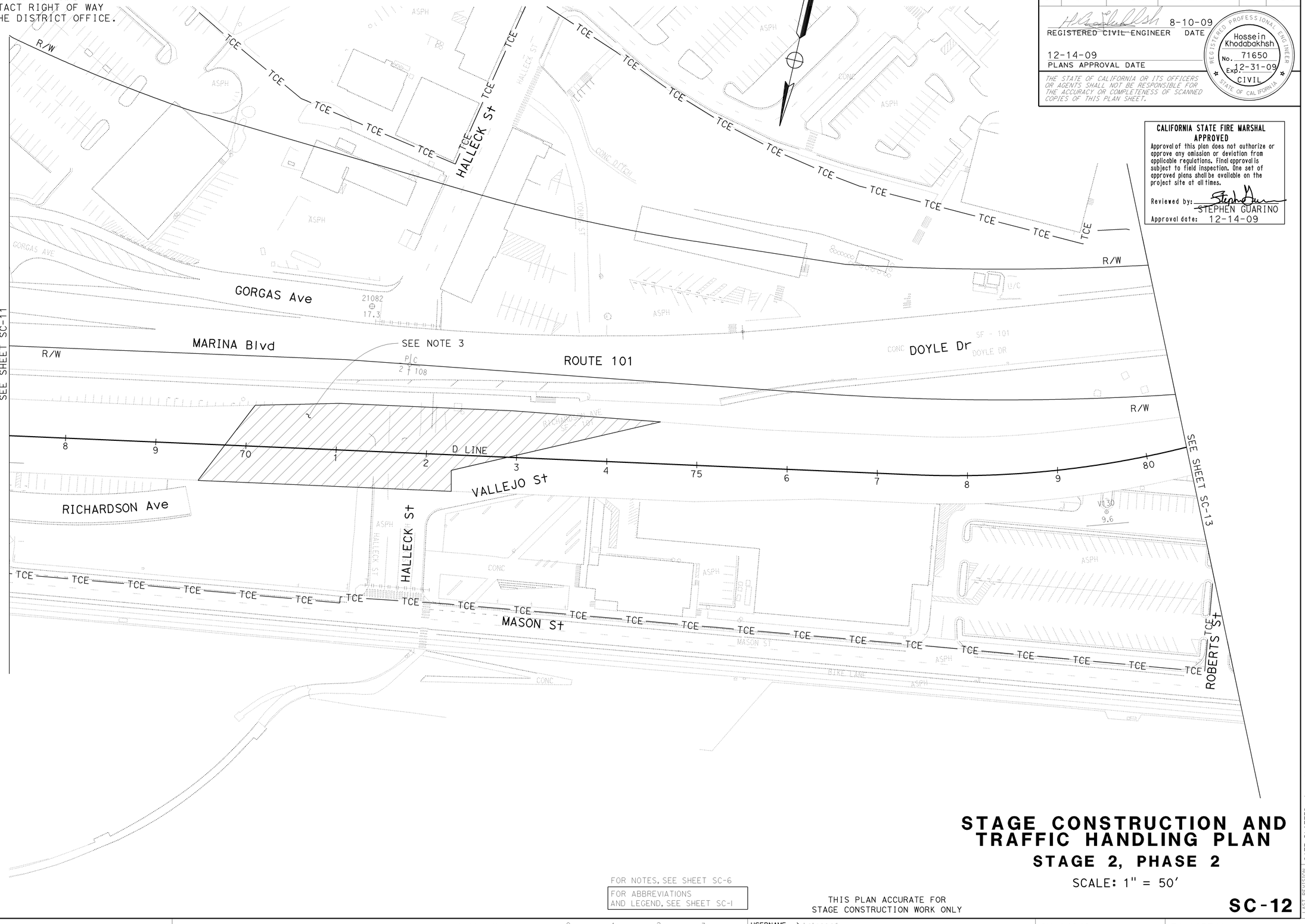

STAGE CONSTRUCTION AND TRAFFIC HANDLING PLAN

STAGE 2, PHASE 2

SCALE: 1" = 50'

FOR NOTES, SEE SHEET SC-6

FOR ABBREVIATIONS AND LEGEND, SEE SHEET SC-1

THIS PLAN ACCURATE FOR STAGE CONSTRUCTION WORK ONLY

SC-12

CALCULATED-DESIGNED BY	REVISED BY	DATE REVISED
CHECKED BY	ROMY ACOB	8/01/09
	GEORGE GIN	

FUNCTIONAL SUPERVISOR: ABOLFAZL EMADZADEH

STATE OF CALIFORNIA - DEPARTMENT OF TRANSPORTATION
Caltrans®
DESIGN

LAST REVISION DATE PLOTTED => 14-DEC-2009
09-04-09 TIME PLOTTED => 14:06

BORDER LAST REVISED 4/11/2008

RELATIVE BORDER SCALE IS IN INCHES 0 1 2 3

USERNAME => trienard
DGN FILE => 416374ma012.dgn

CU 04242

EA 163741

Dist	COUNTY	ROUTE	POST MILES TOTAL PROJECT	SHEET No.	TOTAL SHEETS
04	SF	101	8.2/9.2	117	654

REGISTERED CIVIL ENGINEER — 8-10-09 DATE

12-14-09
PLANS APPROVAL DATE

Hossein Khodabakhsh No. 71650 Exp. 12-31-09 CIVIL — REGISTERED PROFESSIONAL ENGINEER — STATE OF CALIFORNIA

THE STATE OF CALIFORNIA OR ITS OFFICERS OR AGENTS SHALL NOT BE RESPONSIBLE FOR THE ACCURACY OR COMPLETENESS OF SCANNED COPIES OF THIS PLAN SHEET.

CALIFORNIA STATE FIRE MARSHAL APPROVED

Approval of this plan does not authorize or approve any omission or deviation from applicable regulations. Final approval is subject to field inspection. One set of approved plans shall be available on the project site at all times.

Reviewed by: STEPHEN GUARINO

Approval date: 12-14-09

FOR ACCURATE RIGHT OF WAY AND ACCESS DATA, CONTACT RIGHT OF WAY ENGINEERING AT THE DISTRICT OFFICE.

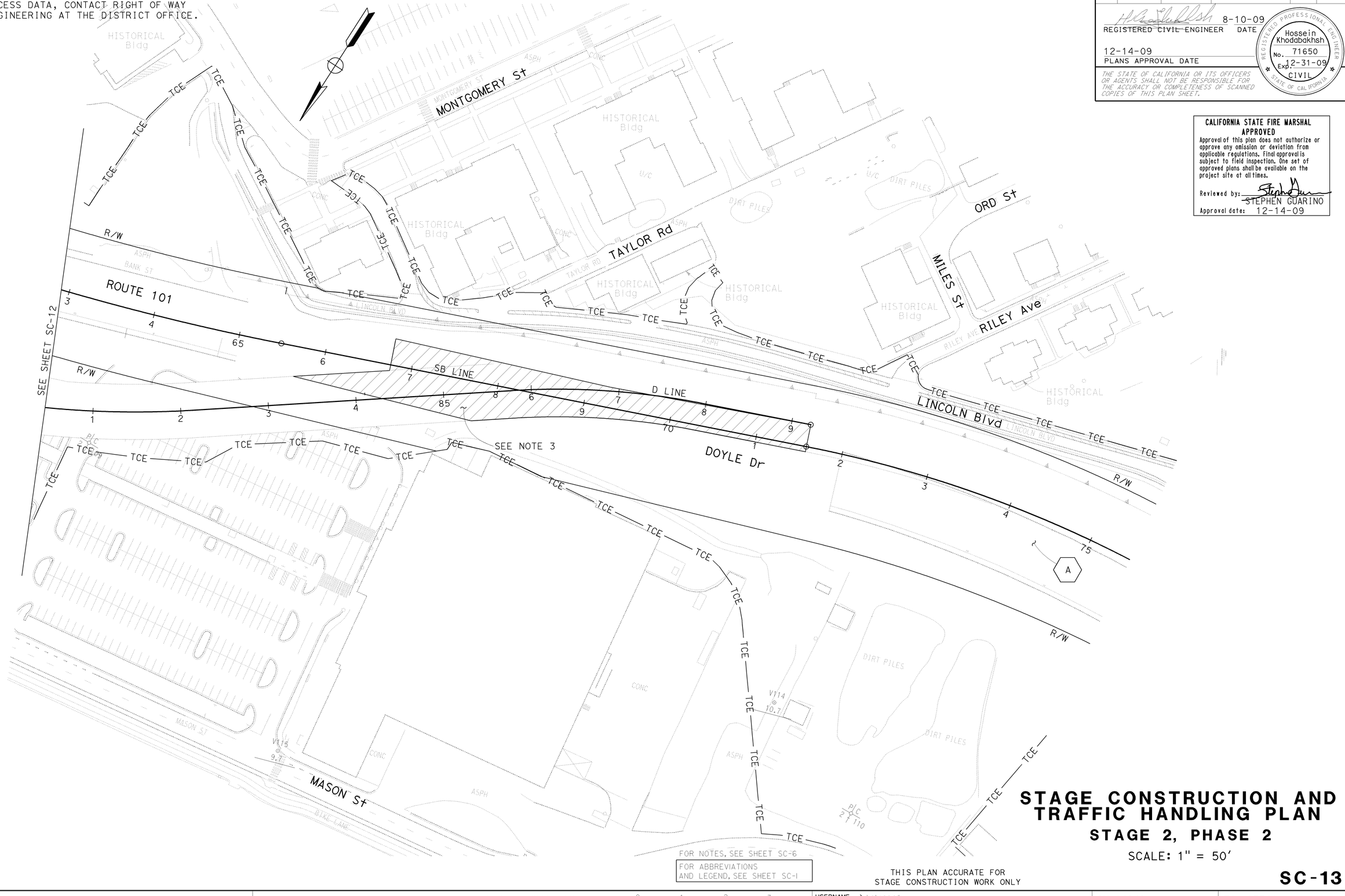

FOR NOTES, SEE SHEET SC-6

FOR ABBREVIATIONS AND LEGEND, SEE SHEET SC-1

THIS PLAN ACCURATE FOR STAGE CONSTRUCTION WORK ONLY

STAGE CONSTRUCTION AND TRAFFIC HANDLING PLAN

STAGE 2, PHASE 2

SCALE: 1" = 50'

SC-13

STATE OF CALIFORNIA - DEPARTMENT OF TRANSPORTATION
DESIGN
FUNCTIONAL SUPERVISOR: ABOLFAZL EMADZADEH
CALCULATED-DESIGNED BY: ROMY ACOB
CHECKED BY: GEORGE GIN
REVISED BY: RA
DATE REVISED: 8/01/09

LAST REVISION DATE PLOTTED => 14-DEC-2009
09-04-09 TIME PLOTTED => 14:07

BORDER LAST REVISED 4/11/2008

RELATIVE BORDER SCALE IS IN INCHES 0 1 2 3

USERNAME => trienard
DGN FILE => 416374ma013.dgn

CU 04242

EA 163741

FOR ACCURATE RIGHT OF WAY AND
ACCESS DATA, CONTACT RIGHT OF WAY
ENGINEERING AT THE DISTRICT OFFICE.

Dist	COUNTY	ROUTE	POST MILES TOTAL PROJECT	SHEET No.	TOTAL SHEETS
04	SF	101	8.2/9.2	118	654

REGISTERED CIVIL ENGINEER — DATE: 8-10-09

Hossein Khodabakhsh No. 71650 Exp. 12-31-09 CIVIL — REGISTERED PROFESSIONAL ENGINEER — STATE OF CALIFORNIA

12-14-09
PLANS APPROVAL DATE

THE STATE OF CALIFORNIA OR ITS OFFICERS OR AGENTS SHALL NOT BE RESPONSIBLE FOR THE ACCURACY OR COMPLETENESS OF SCANNED COPIES OF THIS PLAN SHEET.

CALIFORNIA STATE FIRE MARSHAL APPROVED

Approval of this plan does not authorize or approve any omission or deviation from applicable regulations. Final approval is subject to field inspection. One set of approved plans shall be available on the project site at all times.

Reviewed by: STEPHEN GUARINO

Approval date: 12-14-09

TRAFFIC HANDLING-STAGE 3 PER LANE CLOSURE CHART

C — LINCOLN Blvd WILL BE CLOSED PER LANE CLOSURE CHART

NOTE:

1. REMOVE BRIDGE (SEE STRUCTURE PLANS).
2. REMOVE ROADWAY.
3. CONSTRUCT PERMANENT AND/OR TEMPORARY ROADWAY.

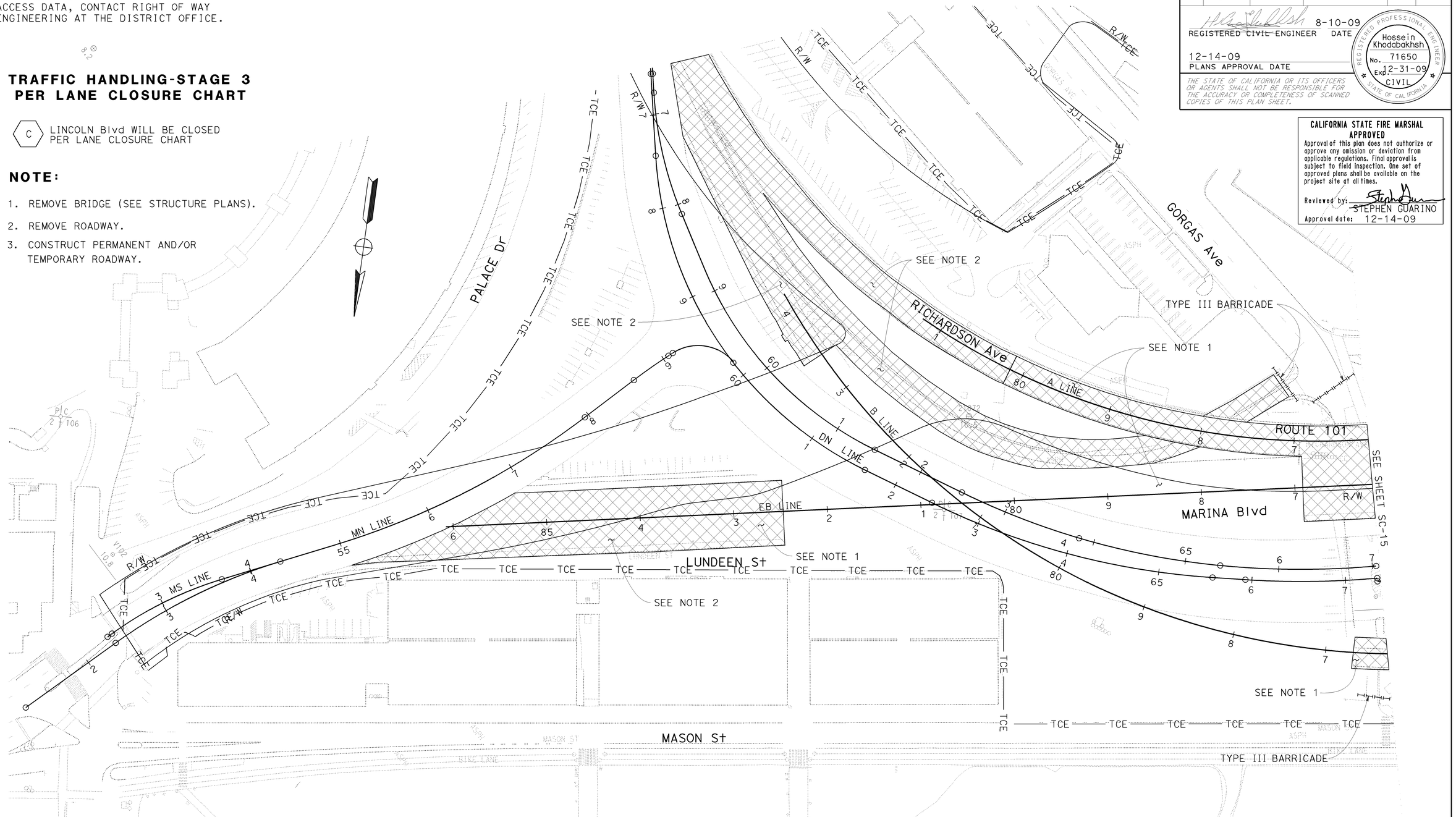

STAGE CONSTRUCTION AND TRAFFIC HANDLING PLAN

STAGE 3

SCALE: 1" = 50'

THIS PLAN ACCURATE FOR STAGE CONSTRUCTION WORK ONLY

SC-14

CALCULATED-DESIGNED BY	ROMY ACOB
CHECKED BY	GEORGE GIN
REVISED BY	RA
DATE REVISED	8/01/09
FUNCTIONAL SUPERVISOR	ABOLFAZL EMADZADEH

STATE OF CALIFORNIA - DEPARTMENT OF TRANSPORTATION — DESIGN

Caltrans

LAST REVISION — DATE PLOTTED => 14-DEC-2009 — TIME PLOTTED => 14:07 — 09-17-09

BORDER LAST REVISED 4/11/2008

RELATIVE BORDER SCALE IS IN INCHES 0 1 2 3

USERNAME => trienard
DGN FILE => 416374ma014.dgn

CU 04242

EA 163741

FOR ACCURATE RIGHT OF WAY AND
ACCESS DATA, CONTACT RIGHT OF WAY
ENGINEERING AT THE DISTRICT OFFICE.

Dist	COUNTY	ROUTE	POST MILES TOTAL PROJECT	SHEET No.	TOTAL SHEETS
04	SF	101	8.2/9.2	119	654

Hossein Khodabakhsh 8-10-09
REGISTERED CIVIL ENGINEER DATE

12-14-09
PLANS APPROVAL DATE

REGISTERED PROFESSIONAL ENGINEER
Hossein Khodabakhsh
No. 71650
Exp. 12-31-09
CIVIL
STATE OF CALIFORNIA

THE STATE OF CALIFORNIA OR ITS OFFICERS OR AGENTS SHALL NOT BE RESPONSIBLE FOR THE ACCURACY OR COMPLETENESS OF SCANNED COPIES OF THIS PLAN SHEET.

CALIFORNIA STATE FIRE MARSHAL APPROVED
Approval of this plan does not authorize or approve any omission or deviation from applicable regulations. Final approval is subject to field inspection. One set of approved plans shall be available on the project site at all times.
Reviewed by: STEPHEN GUARINO
Approval date: 12-14-09

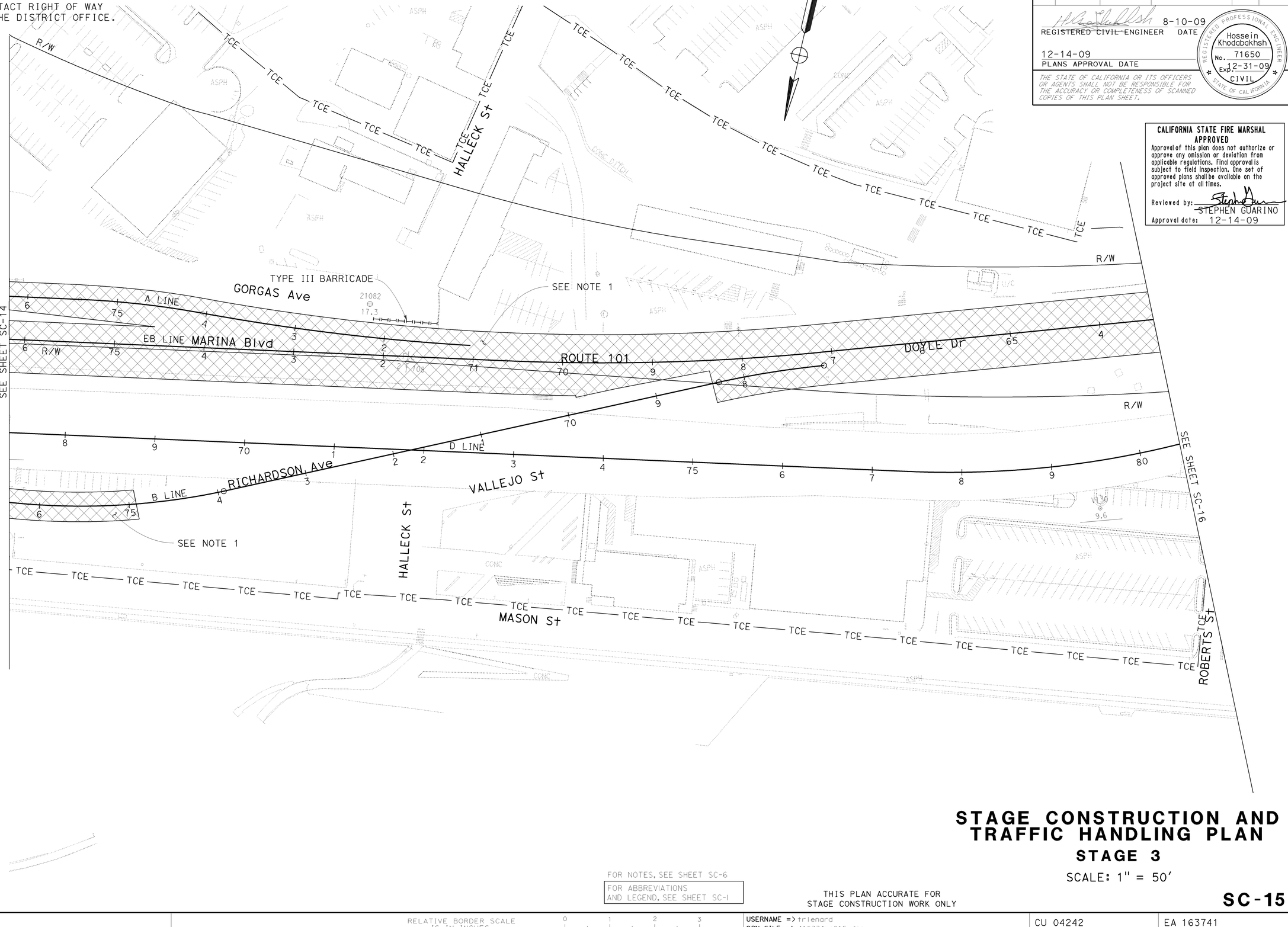

STAGE CONSTRUCTION AND TRAFFIC HANDLING PLAN

STAGE 3

SCALE: 1" = 50'

FOR NOTES, SEE SHEET SC-6
FOR ABBREVIATIONS AND LEGEND, SEE SHEET SC-1

THIS PLAN ACCURATE FOR STAGE CONSTRUCTION WORK ONLY

SC-15

REVISED BY	DATE REVISED
RA	8/01/09

CALCULATED-DESIGNED BY: ROMY ACOB
CHECKED BY: GEORGE GIN
FUNCTIONAL SUPERVISOR: ABOLFAZL EMADZADEH
STATE OF CALIFORNIA - DEPARTMENT OF TRANSPORTATION
DESIGN

LAST REVISION: DATE PLOTTED => 14-DEC-2009 09-14-09 TIME PLOTTED => 14:07

BORDER LAST REVISED 4/11/2008 | RELATIVE BORDER SCALE IS IN INCHES 0 1 2 3 | USERNAME => trienard DGN FILE => 416374ma015.dgn | CU 04242 | EA 163741

FOR ACCURATE RIGHT OF WAY AND ACCESS DATA, CONTACT RIGHT OF WAY ENGINEERING AT THE DISTRICT OFFICE.

Dist	COUNTY	ROUTE	POST MILES TOTAL PROJECT	SHEET No.	TOTAL SHEETS
04	SF	101	8.2/9.2	120	654

REGISTERED CIVIL ENGINEER — 8-10-09 DATE

12-14-09
PLANS APPROVAL DATE

Hossein Khodabakhsh No. 71650 Exp. 12-31-09 CIVIL — REGISTERED PROFESSIONAL ENGINEER — STATE OF CALIFORNIA

THE STATE OF CALIFORNIA OR ITS OFFICERS OR AGENTS SHALL NOT BE RESPONSIBLE FOR THE ACCURACY OR COMPLETENESS OF SCANNED COPIES OF THIS PLAN SHEET.

CALIFORNIA STATE FIRE MARSHAL APPROVED
Approval of this plan does not authorize or approve any omission or deviation from applicable regulations. Final approval is subject to field inspection. One set of approved plans shall be available on the project site at all times.
Reviewed by: STEPHEN GUARINO
Approval date: 12-14-09

MONTGOMERY St
TAYLOR Rd
ORD St
MILES St
RILEY Ave
LINCOLN Blvd
DOYLE Dr
MASON St
ROUTE 101
EB LINE
SB LINE
D LINE
SEE SHEET SC-15
SEE NOTE 1
SEE NOTE 3
R/W
TCE
HISTORICAL Bldg
DIRT PILES
CONC
ASPH
BIKE LANE
V114 @ 10.7
V115 @ 9.7
P/C
ZT110
FOR NOTES, SEE SHEET SC-6
FOR ABBREVIATIONS AND LEGEND, SEE SHEET SC-1

THIS PLAN ACCURATE FOR STAGE CONSTRUCTION WORK ONLY

STAGE CONSTRUCTION AND TRAFFIC HANDLING PLAN

STAGE 3

SCALE: 1" = 50'

SC-16

REVISED BY	DATE REVISED
RA	8/01/09

CALCULATED-DESIGNED BY: ROMY ACOB
CHECKED BY: GEORGE GIN
FUNCTIONAL SUPERVISOR: ABOLFAZL EMADZADEH
STATE OF CALIFORNIA - DEPARTMENT OF TRANSPORTATION
Caltrans DESIGN

LAST REVISION DATE PLOTTED => 14-DEC-2009
09-14-09 TIME PLOTTED => 14:07

BORDER LAST REVISED 4/11/2008
RELATIVE BORDER SCALE IS IN INCHES 0 1 2 3
USERNAME => trienard
DGN FILE => 416374ma016.dgn
CU 04242
EA 163741

FOR ACCURATE RIGHT OF WAY AND ACCESS DATA, CONTACT RIGHT OF WAY ENGINEERING AT THE DISTRICT OFFICE.

Dist	COUNTY	ROUTE	POST MILES TOTAL PROJECT	SHEET No.	TOTAL SHEETS
04	SF	101	8.2/9.2	121	654

REGISTERED CIVIL ENGINEER 8-10-09 DATE

12-14-09
PLANS APPROVAL DATE

REGISTERED PROFESSIONAL ENGINEER Hossein Khodabakhsh No. 71650 Exp. 12-31-09 CIVIL STATE OF CALIFORNIA

THE STATE OF CALIFORNIA OR ITS OFFICERS OR AGENTS SHALL NOT BE RESPONSIBLE FOR THE ACCURACY OR COMPLETENESS OF SCANNED COPIES OF THIS PLAN SHEET.

CALIFORNIA STATE FIRE MARSHAL APPROVED
Approval of this plan does not authorize or approve any omission or deviation from applicable regulations. Final approval is subject to field inspection. One set of approved plans shall be available on the project site at all times.
Reviewed by: STEPHEN GUARINO
Approval date: 12-14-09

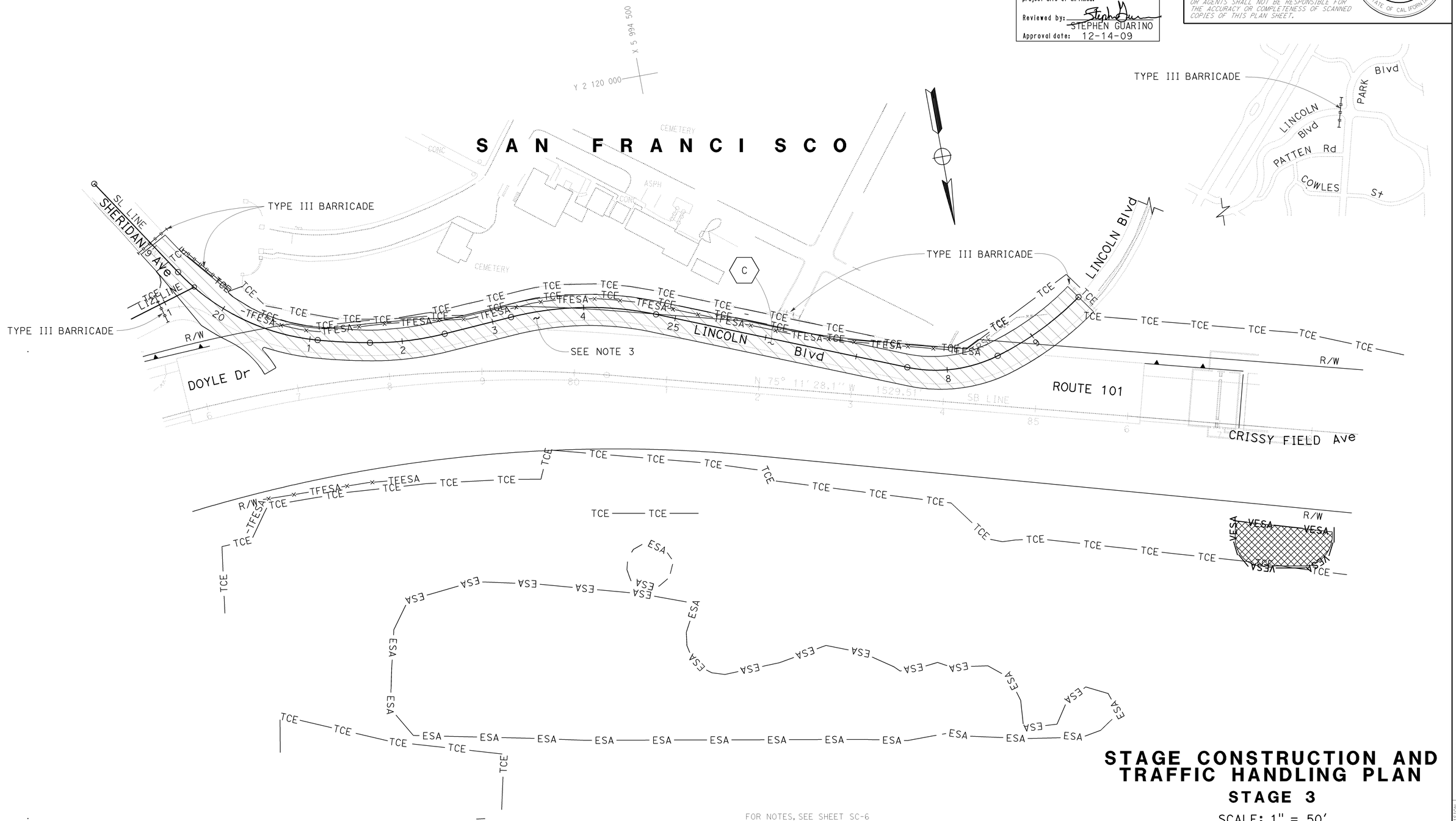

STAGE CONSTRUCTION AND TRAFFIC HANDLING PLAN

STAGE 3

SCALE: 1" = 50'

FOR NOTES, SEE SHEET SC-6

FOR ABBREVIATIONS AND LEGEND, SEE SHEET SC-1

THIS PLAN ACCURATE FOR STAGE CONSTRUCTION WORK ONLY

SC-17

STATE OF CALIFORNIA - DEPARTMENT OF TRANSPORTATION
Caltrans
DESIGN

FUNCTIONAL SUPERVISOR: ABOLFAZL EMADZADEH
CALCULATED-DESIGNED BY: ROMY ACOB
CHECKED BY: GEORGE GIN
REVISED BY: RA
DATE REVISED: 8/01/09

LAST REVISION 09-14-09
DATE PLOTTED => 14-DEC-2009
TIME PLOTTED => 14:07

Dist	COUNTY	ROUTE	POST MILES TOTAL PROJECT	SHEET No.	TOTAL SHEETS
04	SF	101	8.2/9.2	122	654

REGISTERED CIVIL ENGINEER — 11-16-09 DATE

Hossein Khodabakhsh No. 71650 Exp. 12-31-09 CIVIL — REGISTERED PROFESSIONAL ENGINEER — STATE OF CALIFORNIA

12-14-09
PLANS APPROVAL DATE

THE STATE OF CALIFORNIA OR ITS OFFICERS OR AGENTS SHALL NOT BE RESPONSIBLE FOR THE ACCURACY OR COMPLETENESS OF SCANNED COPIES OF THIS PLAN SHEET.

CALIFORNIA STATE FIRE MARSHAL APPROVED

Approval of this plan does not authorize or approve any omission or deviation from applicable regulations. Final approval is subject to field inspection. One set of approved plans shall be available on the project site at all times.

Reviewed by: STEPHEN GUARINO

Approval date: 12-14-09

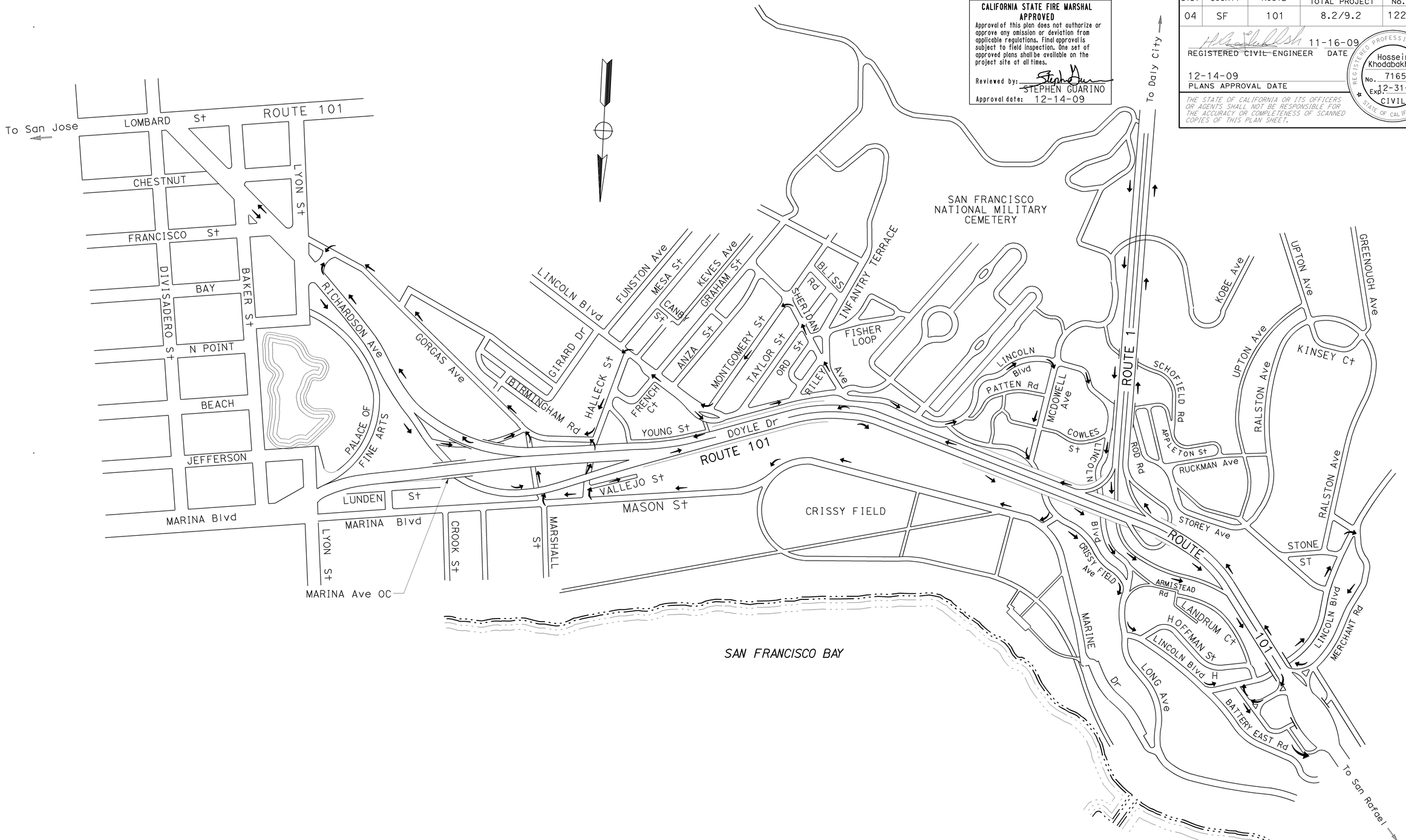

TRAFFIC HANDLING PLAN
CONSTRUCTION TRUCK TRAFFIC

NO SCALE

THIS PLAN ACCURATE FOR TRAFFIC HANDLING ONLY

TH-1

CALCULATED-DESIGNED BY	CLAUDIA FANG	REVISED BY	CF
CHECKED BY	MANSUE MAMOODI	DATE REVISED	11/16/09
FUNCTIONAL SUPERVISOR	ABOLFAZL EMADZADEH		

STATE OF CALIFORNIA - DEPARTMENT OF TRANSPORTATION
DESIGN

LAST REVISION DATE PLOTTED => 14-DEC-2009
11-16-09 TIME PLOTTED => 14:07

BORDER LAST REVISED 4/11/2008

RELATIVE BORDER SCALE IS IN INCHES 0 1 2 3

USERNAME => trlenard
DGN FILE => 416374md001.dgn

CU 04242

EA 163741

Dist	COUNTY	ROUTE	POST MILES TOTAL PROJECT	SHEET No.	TOTAL SHEETS
04	SF	101	8.2/9.2	123	654

REGISTERED CIVIL ENGINEER — 8-10-09 DATE

12-14-09
PLANS APPROVAL DATE

REGISTERED PROFESSIONAL ENGINEER — Hossein Khodabakhsh — No. 71650 — Exp. 12-31-09 — CIVIL — STATE OF CALIFORNIA

THE STATE OF CALIFORNIA OR ITS OFFICERS OR AGENTS SHALL NOT BE RESPONSIBLE FOR THE ACCURACY OR COMPLETENESS OF SCANNED COPIES OF THIS PLAN SHEET.

FOR ACCURATE RIGHT OF WAY AND ACCESS DATA, CONTACT RIGHT OF WAY ENGINEERING AT THE DISTRICT OFFICE.

LEGEND:

- (No.) CURVE DATA
- [No.] STRUCTURAL SECTION NUMBER
- ---TCE--- Temp CONSTRUCTION EASEMENT / Temp FENCE (TYPE CL-6 SLATTED)
- -x-TFESA-x- Temp FENCE ENVIRONMENTALLY SENSITIVE AREA
- CONFINEMENT SYSTEM
- GRIND Exist Conc PAVEMENT AND PAVEMENT REINFORCING FABRIC LIMITS

CALIFORNIA STATE FIRE MARSHAL APPROVED
Approval of this plan does not authorize or approve any omission or deviation from applicable regulations. Final approval is subject to field inspection. One set of approved plans shall be available on the project site at all times.
Reviewed by: STEPHEN GUARINO
Approval date: 12-14-09

DS 52+35 BEGIN Conc BARRIER (TYPE K)
REMOVE Conc BARRIER AND FENCE
DS 53+40.40 EC
DS 54+97.51 BC
Conc BARRIER (TYPE K)
DS 51+87.78 BC
S 41° 27' 19" W 390.6'
37' Lt DN 50+30 BEGIN REMOVE Conc BARRIER & FENCE
GORGAS Ave
DS 47+97.18 PI
DS 49+50 BEGIN Conc BARRIER (TYPE K)
S 55° 58' 52" W 157.11'
DN 54+97.01 BC
Conc BARRIER (TYPE K)
S 66° 49' 33" W 157.11'
DN 53+39.89 EC
DN 51+87.78 BC
28.5' Rt DN 50+30 BEGIN REMOVE Conc BARRIER & FENCE
DN 47+97.18 PI
DN 48+00 BEGIN Conc ISLAND AND TYPE A3 CURB
S 41° 27' 19" W 390.6'
DN 4 LINE
DS LINE
SEE SHEET DE-2
LYON St
FRANCISCO St
RICHARDSON Ave
PALACE Dr
BAKER St
BAY St
O'REILLY Ave

CURVE DATA

No.	R	Δ	T	L	N-COORDINATE	E-COORDINATE
(1)	600′	14° 31′ 33"	76.47′	152.11′	2120705.26	5998973.45
(2)	400′	22° 44′ 11"	80.42′	158.73′	2120723.59	5998719.78
(6)	602′	14° 31′ 33"	76.72′	152.62′	2120705.26	5998973.45
(7)	402′	22° 44′ 10"	80.82′	159.52′	2120723.56	5998719.78

DETOUR LAYOUT AND CONTOUR GRADING PLAN

SCALE: 1" = 50′

THIS PLAN ACCURATE FOR DETOUR AND CONTOUR GRADING WORK ONLY

DE-1

REVISED BY	DATE REVISED
CS	8/01/09

CALCULATED-DESIGNED BY: CARLOS SANDOVAL
CHECKED BY: MOHAMMAD G. SAHIBZADAH
FUNCTIONAL SUPERVISOR: ABOLFAZL EMADZADEH

STATE OF CALIFORNIA - DEPARTMENT OF TRANSPORTATION
DESIGN
Caltrans

LAST REVISION DATE PLOTTED => 14-DEC-2009
TIME PLOTTED => 14:07

BORDER LAST REVISED 4/11/2008
RELATIVE BORDER SCALE IS IN INCHES 0 1 2 3
USERNAME => trlenard
DGN FILE => 416374mg001.dgn
CU 04242
EA 163741

FOR ACCURATE RIGHT OF WAY AND ACCESS DATA, CONTACT RIGHT OF WAY ENGINEERING AT THE DISTRICT OFFICE.

CALIFORNIA STATE FIRE MARSHAL APPROVED
Approval of this plan does not authorize or approve any omission or deviation from applicable regulations. Final approval is subject to field inspection. One set of approved plans shall be available on the project site at all times.
Reviewed by: STEPHEN GUARINO
Approval date: 12-14-09

Dist	COUNTY	ROUTE	POST MILES TOTAL PROJECT	SHEET No.	TOTAL SHEETS
04	SF	101	8.2/9.2	124	654

REGISTERED CIVIL ENGINEER — 8-10-09 DATE
12-14-09 PLANS APPROVAL DATE

Hossein Khodabakhsh No. 71650 Exp. 12-31-09 CIVIL — REGISTERED PROFESSIONAL ENGINEER — STATE OF CALIFORNIA

THE STATE OF CALIFORNIA OR ITS OFFICERS OR AGENTS SHALL NOT BE RESPONSIBLE FOR THE ACCURACY OR COMPLETENESS OF SCANNED COPIES OF THIS PLAN SHEET.

REMOVE CRASH CUSHIONS
SEE SHEET DE-1
DS 56+57.03 EC
S 78° 43' 01" W
20.27'
DS 56+77.30 BC
DS 57+16
END Conc ISLAND AND TYPE A3 CURBS
64.4' Lt DN 57+13
BEGIN REMOVE Conc BARRIER & FENCE
DS 58+10.92 EC
108' Lt DN 58+07
BEGIN REMOVE FENCE
S 79° 42' 51" W
63.05'
DS 58+73.97 BC
93.5' Lt DN 60+60
BEGIN REMOVE Conc BARRIER & FENCE
DN 56+55.73 EC
S 78° 43' 03" W
87.7'
DN 57+43.44 BC
PALACE Dr
MN 59+11.60 BC
MN 59+06.29 EC
R=50'
MN 58+60.96 BC
MN 57+95.21 EC
MN 59+83.56 EC
MN 59+83.89 PI
DN 59+80
BEGIN QUICKCHANGE MOVABLE BARRIER & ABSORB 350
GORGAS Ave
170' Lt DN 61+20
END REMOVE Conc BARRIER
BEGIN REMOVE Ret WALL
195.7' Lt DN 66+34
END REMOVE Conc BARRIER & FENCE
150' Lt DN 61+20
END REMOVE Conc BARRIER
BEGIN REMOVE Ret WALL
228.6' Lt DN 66+34
END REMOVE FENCE
RICHARDSON Ave
182.2' Lt DN 62+55
END REMOVE Ret WALL & FENCE
142.8' Lt DN 62+55
END REMOVE Ret WALL & FENCE
14.4' Lt DN 63+40
END REMOVE Conc BARRIER
BEGIN REMOVE Ret WALL
DS 61+45.50 EC
DS 62+49.15 BC
ROUTE 101
DN 67+00
BEGIN 11' HAUL LANE
DS 66+37.53 EC
SEE SHEET DE-3
MARINA Blvd
Conc BARRIER (TYPE K)
3.5' D LINE
REMOVE Ret WALL
16.8' Lt MN 56+19
BEGIN REMOVE Ret WALL
45.2' Lt MN 52+83
BEGIN REMOVE Conc BARRIER & FENCE
60 Rt MN 56+00
END REMOVE Conc BARRIER
BEGIN REMOVE Ret WALL
MN 54+93.84 BC
MS 54+33.56 PI
MS 53+68.26 EC
MS 52+30.90 PI
MS 52+36.86 BC
MN 54+32.95 EC
MN 52+35.86 BC
28.3' Rt MN 52+35
BEGIN REMOVE Conc BARRIER & FENCE
MN 51+17.56 PI
DN 59+79.96 EC
REMOVE CRASH CUSHIONS
85' Rt MN 57+83
END REMOVE Conc BARRIER & FENCE
50' Lt MN 57+50
END REMOVE Ret WALL
LUNDEEN St
143' Rt MN 57+51
END REMOVE Ret WALL & FENCE
DN 61+65.92 EC
S 18° 12' 06" W
79.86'
DN 62+45.78 BC
20' Rt DN 63+40
END REMOVE Conc BARRIER
BEGIN REMOVE Ret WALL
Conc BARRIER (TYPE K)
45.2' Rt DN 64+57
END REMOVE Ret WALL & FENCE
15.8' Rt DN 64+64
END REMOVE Ret WALL & FENCE
MASON St
DN 65+57.85 EC
DN 65+86.01 BC
DN 66+00
BEGIN 11' HAUL LANE
DN 66+86.05 EC
DN 67+33.93=
3.5 Lt D 67+33.93

CURVE DATA

No.	R	Δ	T	L	N-COORDINATE	E-COORDINATE
2	400′	22° 44′ 11"	80.42′	158.73′	2120723.59	5998719.78
3	400′	60° 30′ 56"	233.35′	422.48′	2120653.08	5997918.08
4	800′	22° 21′ 01"	158.04′	312.07′	2120298.04	5997717.27
5	900′	06° 22′ 06"	50.07′	100.03′	2120196.27	5997696.41
7	402′	22° 44′ 10"	80.82′	159.52′	2120723.56	5998719.78
8	400′	19° 08′ 22"	67.44′	133.62′	2120586.56	5997929.31
9	376′	41° 22′ 34"	141.99′	271.53′	2120653.08	5997918.08
10	805′	28° 43′ 07"	206.08′	403.49′	2120277.76	5997686.12
14	400′	18° 49′ 15"	66.29′	131.39′	2121606.26	5998539.63
15	600′	18° 49′ 14"	99.44′	197.09′	2121760.46	5998396.49
16	850′	20° 18′ 52"	152.28′	301.37′	2120418.53	5998949.16
17	600′	4° 19′ 46"	22.68′	45.33′	2121395.39	5997875.62
18	50′	82° 27′ 38"	43.82′	71.96′	2120975.44	5998230.77

FOR NOTES, ABBREVIATIONS AND LEGEND, SEE SHEET DE-1

DETOUR LAYOUT AND CONTOUR GRADING PLAN

SCALE: 1" = 50′

THIS PLAN ACCURATE FOR DETOUR AND CONTOUR GRADING WORK ONLY

DE-2

CALCULATED-DESIGNED BY	CHECKED BY	REVISED BY	DATE REVISED
CARLOS SANDOVAL	MOHAMMAD G. SAHIBZADAH	CS	8/01/09

FUNCTIONAL SUPERVISOR: ABOLFAZL EMADZADEH

STATE OF CALIFORNIA - DEPARTMENT OF TRANSPORTATION — DESIGN

LAST REVISION | DATE PLOTTED => 14-DEC-2009 | TIME PLOTTED => 14:07 | 12-09-09

Dist	COUNTY	ROUTE	POST MILES TOTAL PROJECT	SHEET No.	TOTAL SHEETS
04	SF	101	8.2/9.2	125	654

REGISTERED CIVIL ENGINEER 8-10-09 DATE

12-14-09
PLANS APPROVAL DATE

REGISTERED PROFESSIONAL ENGINEER Hossein Khodabakhsh No. 71650 Exp. 12-31-09 CIVIL STATE OF CALIFORNIA

THE STATE OF CALIFORNIA OR ITS OFFICERS OR AGENTS SHALL NOT BE RESPONSIBLE FOR THE ACCURACY OR COMPLETENESS OF SCANNED COPIES OF THIS PLAN SHEET.

CALIFORNIA STATE FIRE MARSHAL APPROVED

Approval of this plan does not authorize or approve any omission or deviation from applicable regulations. Final approval is subject to field inspection. One set of approved plans shall be available on the project site at all times.

Reviewed by: STEPHEN GUARINO

Approval date: 12-14-09

FOR ACCURATE RIGHT OF WAY AND ACCESS DATA, CONTACT RIGHT OF WAY ENGINEERING AT THE DISTRICT OFFICE.

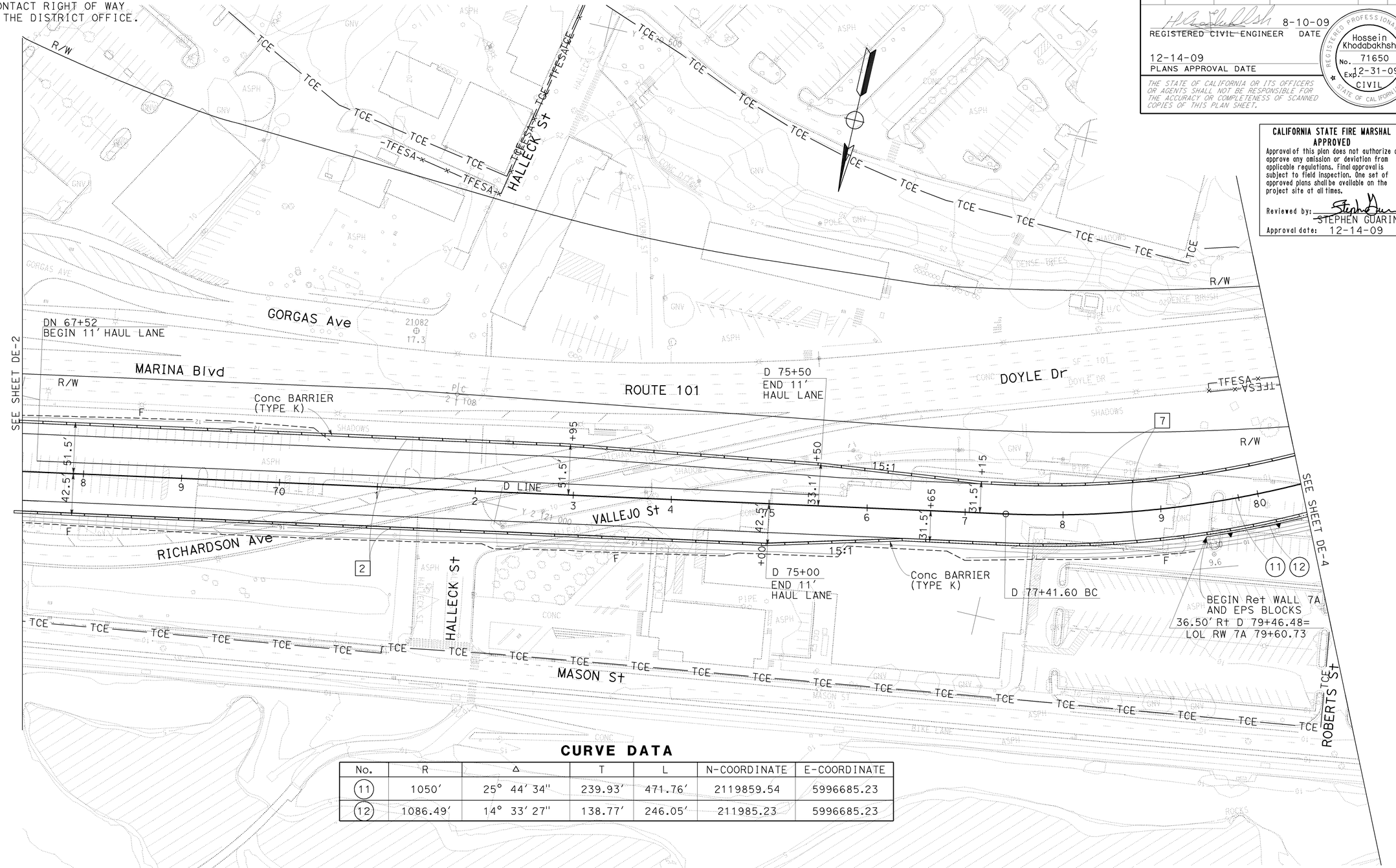

CURVE DATA

No.	R	Δ	T	L	N-COORDINATE	E-COORDINATE
11	1050'	25° 44' 34"	239.93'	471.76'	2119859.54	5996685.23
12	1086.49'	14° 33' 27"	138.77'	246.05'	211985.23	5996685.23

DETOUR LAYOUT AND CONTOUR GRADING PLAN

SCALE: 1" = 50'

FOR NOTES, ABBREVIATIONS AND LEGEND, SEE SHEET DE-1

THIS PLAN ACCURATE FOR DETOUR AND CONTOUR GRADING WORK ONLY

DE-3

STATE OF CALIFORNIA - DEPARTMENT OF TRANSPORTATION
Caltrans
DESIGN

FUNCTIONAL SUPERVISOR: ABOLFAZL EMADZADEH
CALCULATED-DESIGNED BY: MOHAMMAD G. SAHIBZADAH
CHECKED BY: CARLOS SANDOVAL
REVISED BY: CS
DATE REVISED: 8/01/09

LAST REVISION 09-17-09
DATE PLOTTED => 14-DEC-2009
TIME PLOTTED => 14:07

FOR ACCURATE RIGHT OF WAY AND ACCESS DATA, CONTACT RIGHT OF WAY ENGINEERING AT THE DISTRICT OFFICE.

CURVE DATA

No.	R	Δ	T	L	N-COORDINATE	E-COORDINATE
12	850′	14° 39′ 42″	109.35′	217.51′	2121176.26	5995267.91

Dist	COUNTY	ROUTE	POST MILES TOTAL PROJECT	SHEET No.	TOTAL SHEETS
04	SF	101	8.2/9.2	126	654

REGISTERED CIVIL ENGINEER 8-10-09 DATE

12-14-09
PLANS APPROVAL DATE

REGISTERED PROFESSIONAL ENGINEER Hossein Khodabakhsh No. 71650 Exp. 12-31-09 CIVIL STATE OF CALIFORNIA

THE STATE OF CALIFORNIA OR ITS OFFICERS OR AGENTS SHALL NOT BE RESPONSIBLE FOR THE ACCURACY OR COMPLETENESS OF SCANNED COPIES OF THIS PLAN SHEET.

CALIFORNIA STATE FIRE MARSHAL APPROVED
Approval of this plan does not authorize or approve any omission or deviation from applicable regulations. Final approval is subject to field inspection. One set of approved plans shall be available on the project site at all times.
Reviewed by: STEPHEN GUARINO
Approval date: 12-14-09

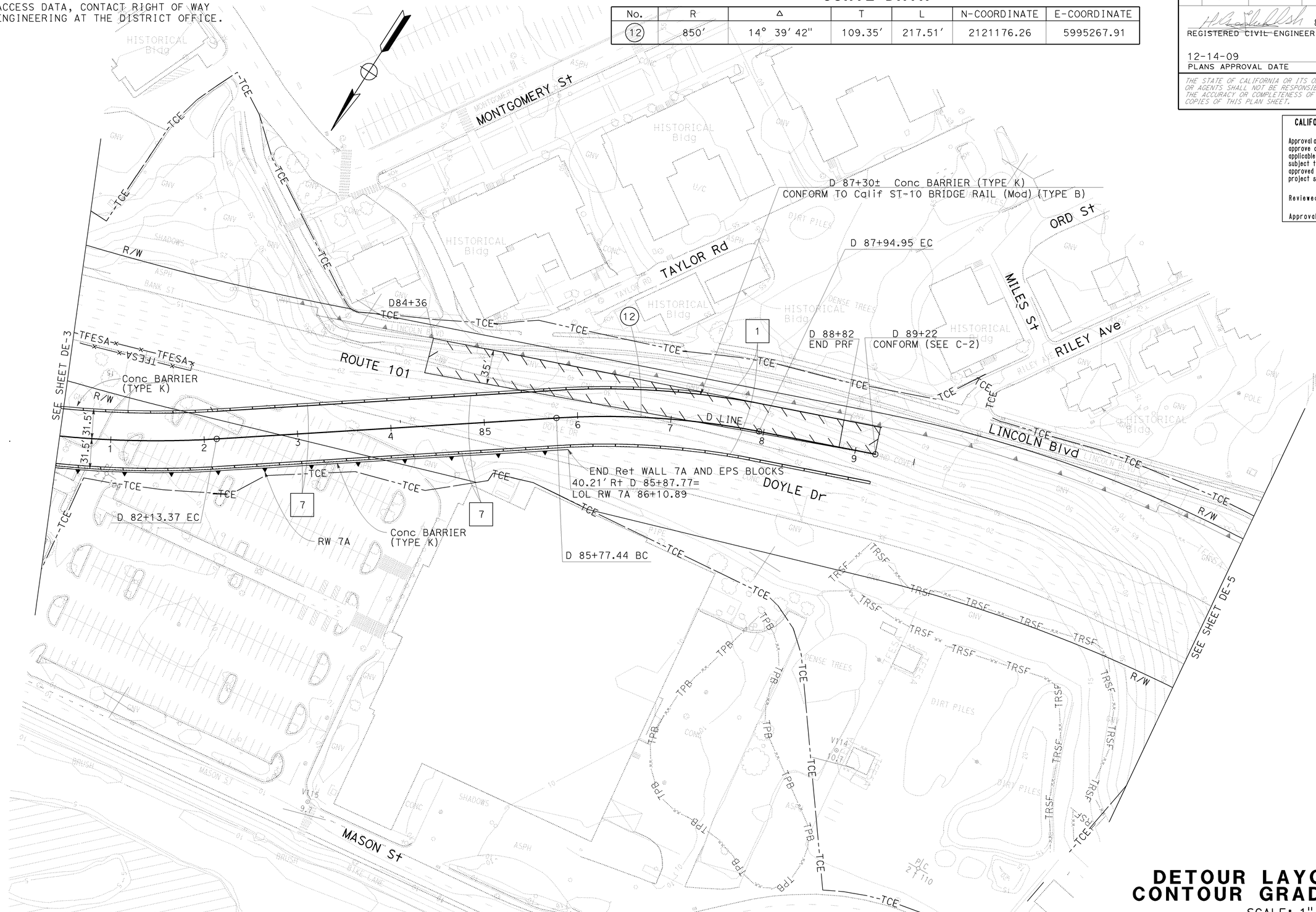

DETOUR LAYOUT AND CONTOUR GRADING PLAN

SCALE: 1" = 50′

FOR NOTES, ABBREVIATIONS AND LEGEND, SEE SHEET DE-1

THIS PLAN ACCURATE FOR DETOUR AND CONTOUR GRADING WORK ONLY

DE-4

STATE OF CALIFORNIA - DEPARTMENT OF TRANSPORTATION
Caltrans
DESIGN

FUNCTIONAL SUPERVISOR: ABOLFAZL EMADZADEH
CALCULATED-DESIGNED BY: CARLOS SANDOVAL
CHECKED BY: MOHAMMAD G. SAHIBZADAH
REVISED BY: CS
DATE REVISED: 8/01/09

LAST REVISION 09-03-09
DATE PLOTTED => 14-DEC-2009
TIME PLOTTED => 14:07

FOR ACCURATE RIGHT OF WAY AND
ACCESS DATA, CONTACT RIGHT OF WAY
ENGINEERING AT THE DISTRICT OFFICE.

CALIFORNIA STATE FIRE MARSHAL APPROVED
Approval of this plan does not authorize or approve any omission or deviation from applicable regulations. Final approval is subject to field inspection. One set of approved plans shall be available on the project site at all times.
Reviewed by: STEPHEN GUARINO
Approval date: 12-14-09

Dist	COUNTY	ROUTE	POST MILES TOTAL PROJECT	SHEET No.	TOTAL SHEETS
04	SF	101	8.2/9.2	127	654

REGISTERED CIVIL ENGINEER — DATE: 8-10-09
Hossein Khodabakhsh, No. 71650, Exp. 12-31-09, CIVIL — REGISTERED PROFESSIONAL ENGINEER — STATE OF CALIFORNIA
12-14-09
PLANS APPROVAL DATE

THE STATE OF CALIFORNIA OR ITS OFFICERS OR AGENTS SHALL NOT BE RESPONSIBLE FOR THE ACCURACY OR COMPLETENESS OF SCANNED COPIES OF THIS PLAN SHEET.

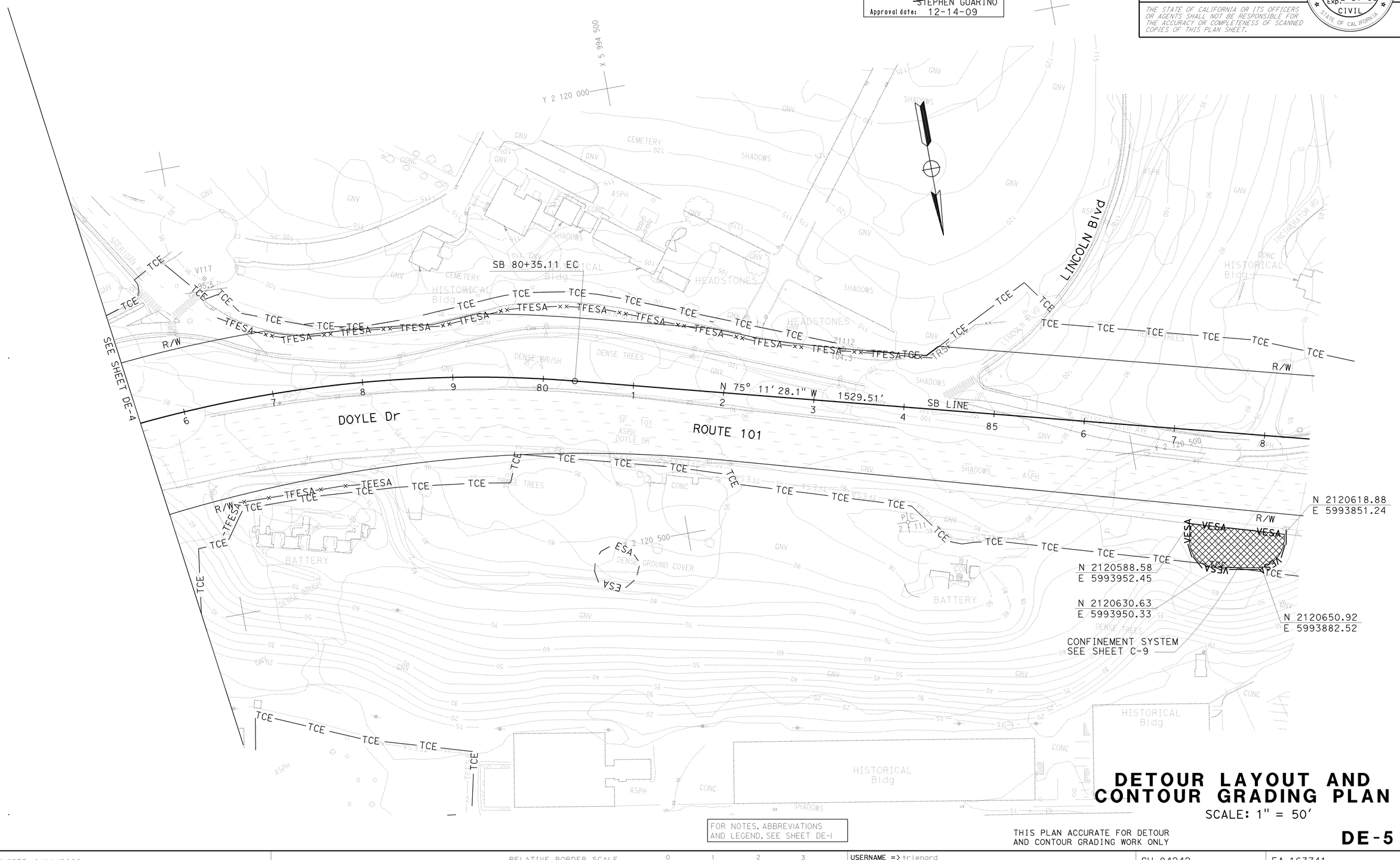

FOR NOTES, ABBREVIATIONS AND LEGEND, SEE SHEET DE-1

DETOUR LAYOUT AND CONTOUR GRADING PLAN

SCALE: 1" = 50'

THIS PLAN ACCURATE FOR DETOUR AND CONTOUR GRADING WORK ONLY

DE-5

STATE OF CALIFORNIA - DEPARTMENT OF TRANSPORTATION
DESIGN
FUNCTIONAL SUPERVISOR: ABOLFAZL EMADZADEH
CALCULATED-DESIGNED BY: CARLOS SANDOVAL
CHECKED BY: MOHAMMAD G. SAHIBZADAH
REVISED BY: CS
DATE REVISED: 8/01/09

LAST REVISION DATE PLOTTED => 14-DEC-2009
TIME PLOTTED => 14:07
09-15-09

BORDER LAST REVISED 4/11/2008
RELATIVE BORDER SCALE IS IN INCHES 0 1 2 3
USERNAME => trlenard
DGN FILE => 416374mg005.dgn
CU 04242
EA 163741

Dist	COUNTY	ROUTE	POST MILES TOTAL PROJECT	SHEET No.	TOTAL SHEETS
04	SF	101	8.2/9.2	128	654

REGISTERED CIVIL ENGINEER 8-11-09 DATE

12-14-09
PLANS APPROVAL DATE

REGISTERED PROFESSIONAL ENGINEER Paul M. Leung No. 40875 Exp. 3-31-11 CIVIL STATE OF CALIFORNIA

THE STATE OF CALIFORNIA OR ITS OFFICERS OR AGENTS SHALL NOT BE RESPONSIBLE FOR THE ACCURACY OR COMPLETENESS OF SCANNED COPIES OF THIS PLAN SHEET.

FOR ACCURATE RIGHT OF WAY AND ACCESS DATA, CONTACT RIGHT OF WAY ENGINEERING AT THE DISTRICT OFFICE.

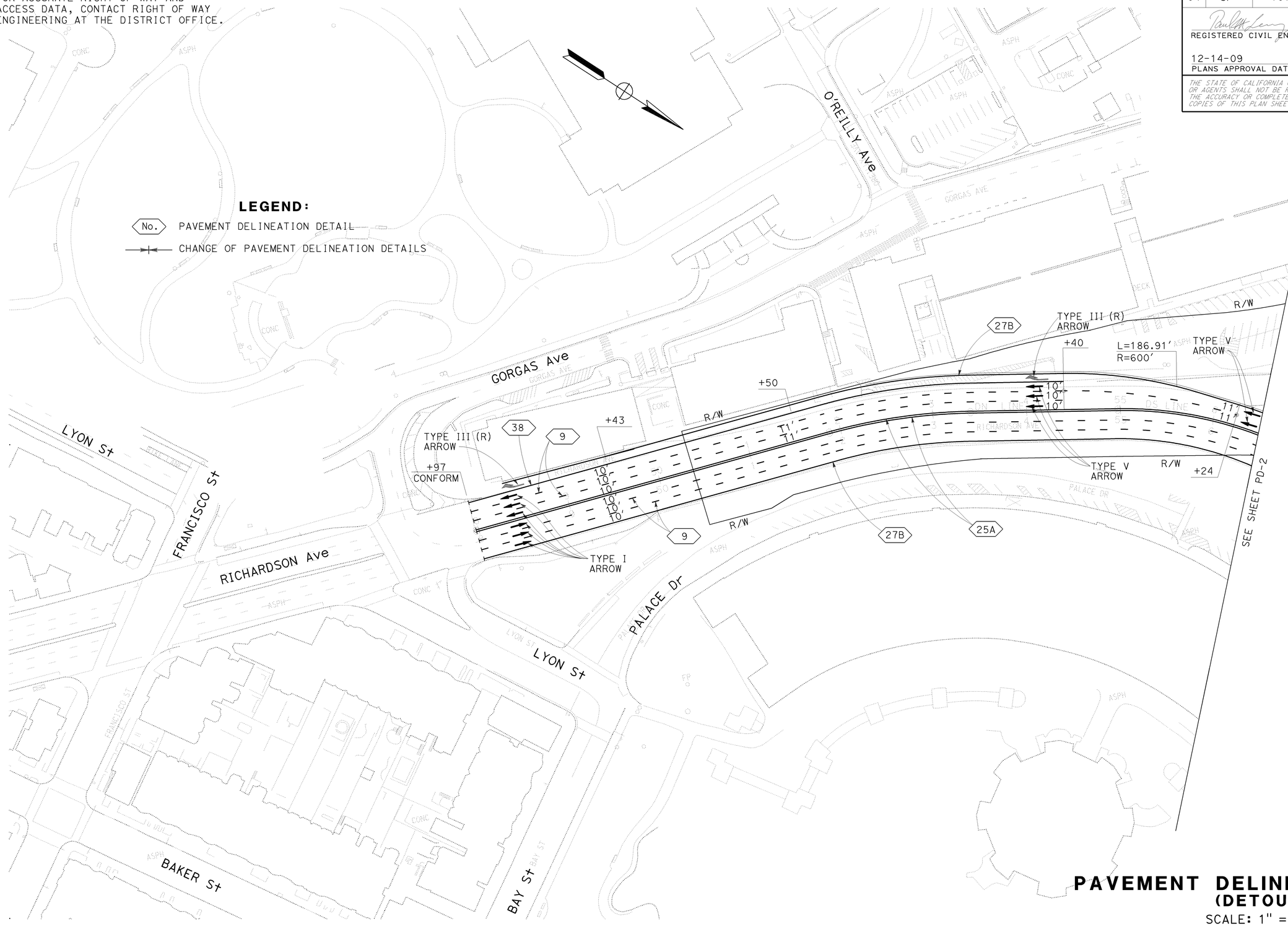

CALIFORNIA STATE FIRE MARSHAL APPROVED

Approval of this plan does not authorize or approve any omission or deviation from applicable regulations. Final approval is subject to field inspection. One set of approved plans shall be available on the project site at all times.

Reviewed by: STEPHEN GUARINO

Approval date: 12-14-09

PAVEMENT DELINEATION PLAN (DETOUR)

SCALE: 1" = 50'

THIS PLAN ACCURATE FOR PAVEMENT DELINEATION WORK ONLY

PD-1

STATE OF CALIFORNIA - DEPARTMENT OF TRANSPORTATION

Caltrans

TRAFFIC

FUNCTIONAL SUPERVISOR: RAMIEL F. GUTIERREZ

CALCULATED-DESIGNED BY: CHRIS TSENG

CHECKED BY: PAUL LEUNG

REVISED BY: CT

DATE REVISED: 8/01/09

LAST REVISION: 12-09-09

DATE PLOTTED => 14-DEC-2009

TIME PLOTTED => 14:08

BORDER LAST REVISED 4/11/2008

RELATIVE BORDER SCALE IS IN INCHES 0 1 2 3

USERNAME => trlenard

DGN FILE => 416374na001.dgn

CU 04242

EA 163741

FOR ACCURATE RIGHT OF WAY AND ACCESS DATA, CONTACT RIGHT OF WAY ENGINEERING AT THE DISTRICT OFFICE.

CALIFORNIA STATE FIRE MARSHAL APPROVED

Approval of this plan does not authorize or approve any omission or deviation from applicable regulations. Final approval is subject to field inspection. One set of approved plans shall be available on the project site at all times.

Reviewed by: STEPHEN GUARINO

Approval date: 12-14-09

Dist	COUNTY	ROUTE	POST MILES TOTAL PROJECT	SHEET No.	TOTAL SHEETS
04	SF	101	8.2/9.2	129	654

REGISTERED CIVIL ENGINEER — DATE: 8-11-09

12-14-09
PLANS APPROVAL DATE

Paul M. Leung No. 40875 Exp. 3-31-11 CIVIL — REGISTERED PROFESSIONAL ENGINEER — STATE OF CALIFORNIA

THE STATE OF CALIFORNIA OR ITS OFFICERS OR AGENTS SHALL NOT BE RESPONSIBLE FOR THE ACCURACY OR COMPLETENESS OF SCANNED COPIES OF THIS PLAN SHEET.

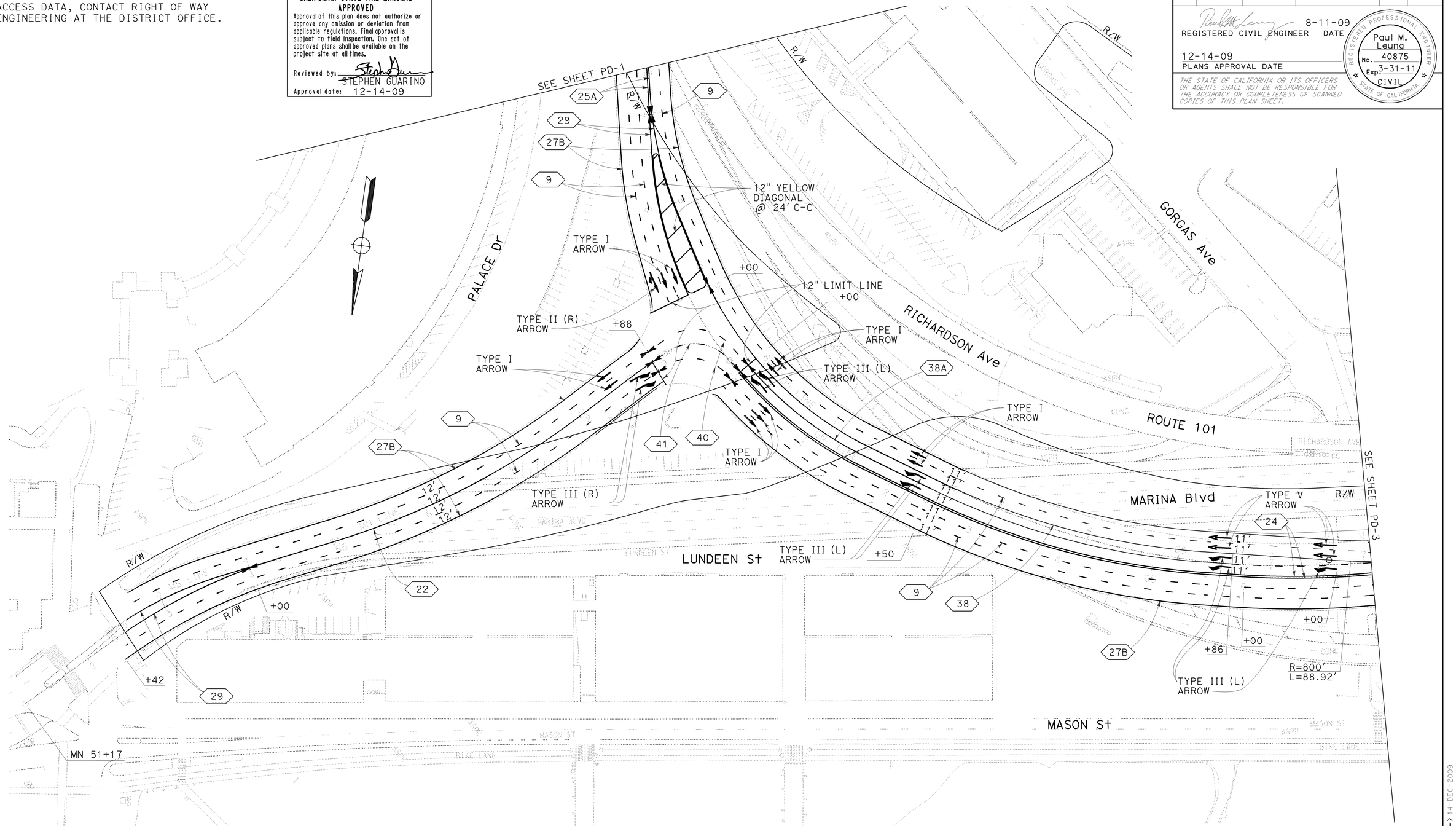

PAVEMENT DELINEATION PLAN (DETOUR)

SCALE: 1" = 50'

PD-2

FOR NOTES, ABBREVIATIONS AND LEGEND, SEE SHEET PD-1

THIS PLAN ACCURATE FOR PAVEMENT DELINEATION WORK ONLY

STATE OF CALIFORNIA - DEPARTMENT OF TRANSPORTATION
TRAFFIC

CALCULATED-DESIGNED BY	CHECKED BY	FUNCTIONAL SUPERVISOR	REVISED BY	DATE REVISED
CHRIS TSENG	PAUL LEUNG	RAMIEL F. GUTIERREZ	CT	8/01/09

LAST REVISION — DATE PLOTTED => 14-DEC-2009 — TIME PLOTTED => 14:08 — 12-09-09

BORDER LAST REVISED 4/11/2008

RELATIVE BORDER SCALE IS IN INCHES 0 1 2 3

USERNAME => trlenard
DGN FILE => 416374na002.dgn

CU 04242

EA 163741

FOR ACCURATE RIGHT OF WAY AND
ACCESS DATA, CONTACT RIGHT OF WAY
ENGINEERING AT THE DISTRICT OFFICE.

Dist	COUNTY	ROUTE	POST MILES TOTAL PROJECT	SHEET No.	TOTAL SHEETS
04	SF	101	8.2/9.2	130	654

REGISTERED CIVIL ENGINEER — 8-11-09 DATE

12-14-09
PLANS APPROVAL DATE

Paul M. Leung No. 40875 Exp 3-31-11 CIVIL — REGISTERED PROFESSIONAL ENGINEER — STATE OF CALIFORNIA

THE STATE OF CALIFORNIA OR ITS OFFICERS OR AGENTS SHALL NOT BE RESPONSIBLE FOR THE ACCURACY OR COMPLETENESS OF SCANNED COPIES OF THIS PLAN SHEET.

CALIFORNIA STATE FIRE MARSHAL APPROVED
Approval of this plan does not authorize or approve any omission or deviation from applicable regulations. Final approval is subject to field inspection. One set of approved plans shall be available on the project site at all times.
Reviewed by: STEPHEN GUARINO
Approval date: 12-14-09

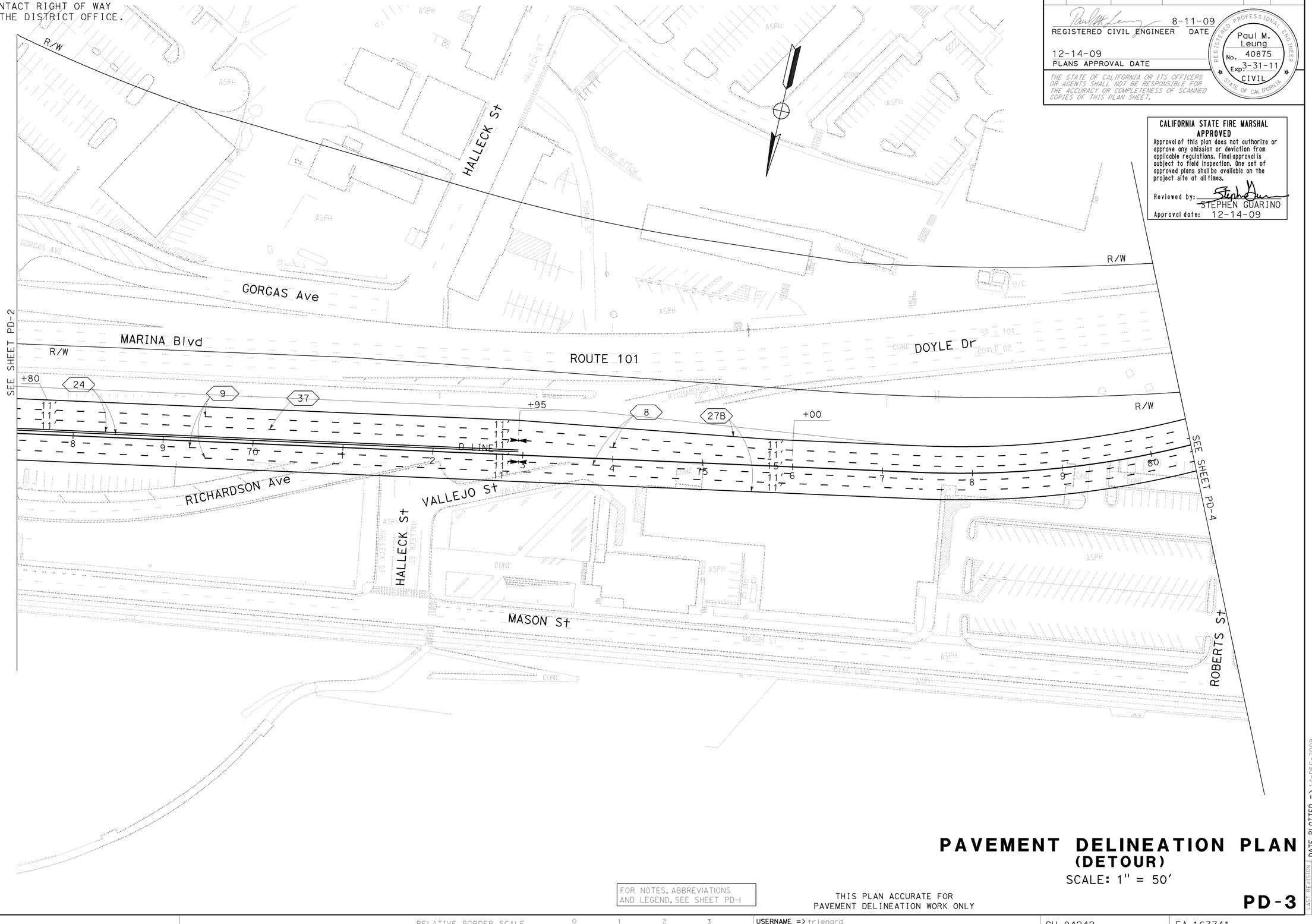

PAVEMENT DELINEATION PLAN
(DETOUR)
SCALE: 1" = 50′

FOR NOTES, ABBREVIATIONS AND LEGEND, SEE SHEET PD-1

THIS PLAN ACCURATE FOR PAVEMENT DELINEATION WORK ONLY

PD-3

STATE OF CALIFORNIA - DEPARTMENT OF TRANSPORTATION
TRAFFIC
FUNCTIONAL SUPERVISOR: RAMIEL F. GUTIERREZ
CALCULATED-DESIGNED BY: CHRIS TSENG
CHECKED BY: PAUL LEUNG
REVISED BY: CT
DATE REVISED: 8/01/09

LAST REVISION DATE PLOTTED => 14-DEC-2009
TIME PLOTTED => 14:08
09-15-09

BORDER LAST REVISED 4/11/2008
RELATIVE BORDER SCALE IS IN INCHES 0 1 2 3
USERNAME => trlenard
DGN FILE => 416374na003.dgn
CU 04242
EA 163741

Dist	COUNTY	ROUTE	POST MILES TOTAL PROJECT	SHEET No.	TOTAL SHEETS
04	SF	101	8.2/9.2	131	654

REGISTERED CIVIL ENGINEER 8-11-09 DATE

12-14-09
PLANS APPROVAL DATE

REGISTERED PROFESSIONAL ENGINEER Paul M. Leung No. 40875 Exp. 3-31-11 CIVIL STATE OF CALIFORNIA

THE STATE OF CALIFORNIA OR ITS OFFICERS OR AGENTS SHALL NOT BE RESPONSIBLE FOR THE ACCURACY OR COMPLETENESS OF SCANNED COPIES OF THIS PLAN SHEET.

CALIFORNIA STATE FIRE MARSHAL APPROVED
Approval of this plan does not authorize or approve any omission or deviation from applicable regulations. Final approval is subject to field inspection. One set of approved plans shall be available on the project site at all times.
Reviewed by: STEPHEN GUARINO
Approval date: 12-14-09

FOR ACCURATE RIGHT OF WAY AND ACCESS DATA, CONTACT RIGHT OF WAY ENGINEERING AT THE DISTRICT OFFICE.

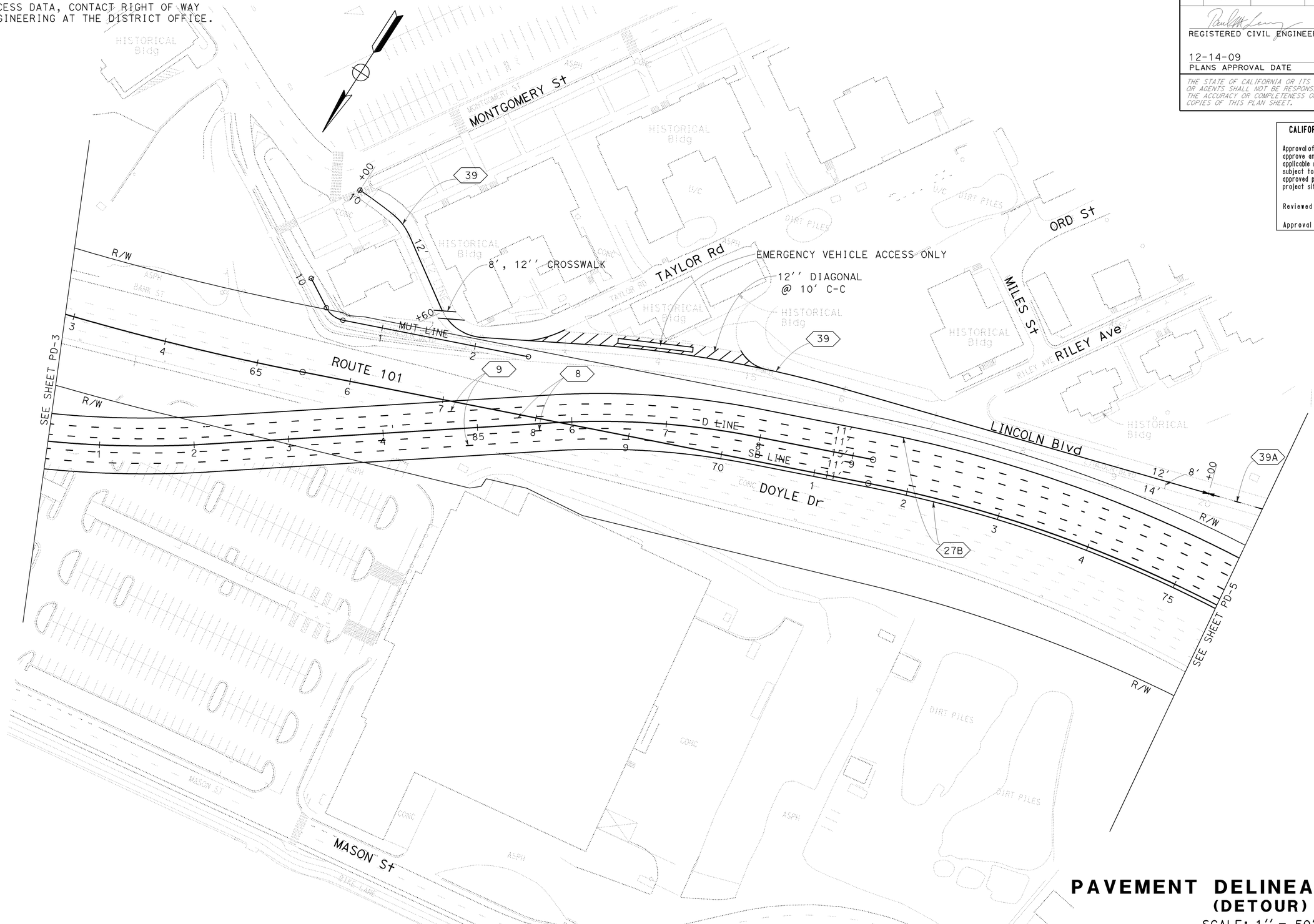

PAVEMENT DELINEATION PLAN
(DETOUR)
SCALE: 1'' = 50'

FOR NOTES, ABBREVIATIONS AND LEGEND, SEE SHEET PD-1

THIS PLAN ACCURATE FOR PAVEMENT DELINEATION WORK ONLY

PD-4

STATE OF CALIFORNIA - DEPARTMENT OF TRANSPORTATION
Caltrans
TRAFFIC

FUNCTIONAL SUPERVISOR: RAMIEL F. GUTIERREZ
CALCULATED-DESIGNED BY: CHRIS TSENG
CHECKED BY: PAUL LEUNG
REVISED BY: CT
DATE REVISED: 8/01/09

LAST REVISION: 08-27-09
DATE PLOTTED => 14-DEC-2009
TIME PLOTTED => 14:08

BORDER LAST REVISED 4/11/2008
RELATIVE BORDER SCALE IS IN INCHES 0 1 2 3
USERNAME => trlenard
DGN FILE => 416374na004.dgn
CU 04242
EA 163741

FOR ACCURATE RIGHT OF WAY AND
ACCESS DATA, CONTACT RIGHT OF WAY
ENGINEERING AT THE DISTRICT OFFICE.

Dist	COUNTY	ROUTE	POST MILES TOTAL PROJECT	SHEET No.	TOTAL SHEETS
04	SF	101	8.2/9.2	132	654

REGISTERED CIVIL ENGINEER — 8-11-09 DATE

Paul M. Leung
No. 40875
Exp 3-31-11
CIVIL
REGISTERED PROFESSIONAL ENGINEER
STATE OF CALIFORNIA

12-14-09
PLANS APPROVAL DATE

THE STATE OF CALIFORNIA OR ITS OFFICERS OR AGENTS SHALL NOT BE RESPONSIBLE FOR THE ACCURACY OR COMPLETENESS OF SCANNED COPIES OF THIS PLAN SHEET.

CALIFORNIA STATE FIRE MARSHAL
APPROVED
Approval of this plan does not authorize or approve any omission or deviation from applicable regulations. Final approval is subject to field inspection. One set of approved plans shall be available on the project site at all times.
Reviewed by: STEPHEN GUARINO
Approval date: 12-14-09

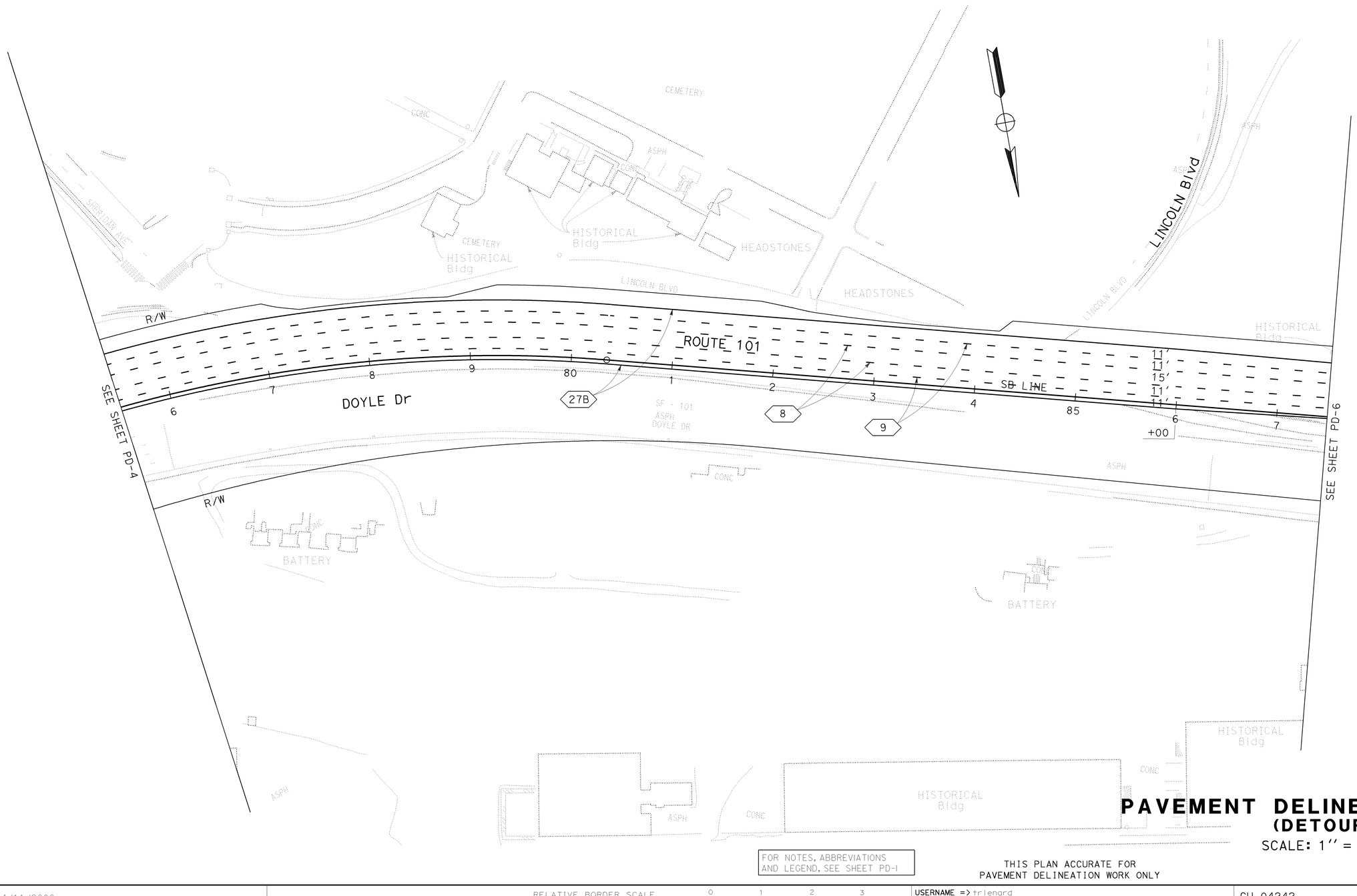

FOR NOTES, ABBREVIATIONS AND LEGEND, SEE SHEET PD-1

THIS PLAN ACCURATE FOR PAVEMENT DELINEATION WORK ONLY

PAVEMENT DELINEATION PLAN (DETOUR)

SCALE: 1'' = 50'

PD-5

STATE OF CALIFORNIA - DEPARTMENT OF TRANSPORTATION
Caltrans
TRAFFIC
FUNCTIONAL SUPERVISOR: RAMIEL F. GUTIERREZ
CALCULATED-DESIGNED BY: PAUL LEUNG
CHECKED BY: CHRIS TSENG
REVISED BY: CT
DATE REVISED: 8/01/09

LAST REVISION | DATE PLOTTED => 14-DEC-2009
08-04-09 | TIME PLOTTED => 14:08

BORDER LAST REVISED 4/11/2008 | RELATIVE BORDER SCALE IS IN INCHES 0 1 2 3 | USERNAME => trlenard | DGN FILE => 416374pd005.dgn | CU 04242 | EA 163741

FOR ACCURATE RIGHT OF WAY AND
ACCESS DATA, CONTACT RIGHT OF WAY
ENGINEERING AT THE DISTRICT OFFICE.

Dist	COUNTY	ROUTE	POST MILES TOTAL PROJECT	SHEET No.	TOTAL SHEETS
04	SF	101	8.2/9.2	133	654

REGISTERED CIVIL ENGINEER — 8-11-09 DATE

Paul M. Leung No. 40875 Exp 3-31-11 CIVIL — REGISTERED PROFESSIONAL ENGINEER — STATE OF CALIFORNIA

12-14-09
PLANS APPROVAL DATE

THE STATE OF CALIFORNIA OR ITS OFFICERS OR AGENTS SHALL NOT BE RESPONSIBLE FOR THE ACCURACY OR COMPLETENESS OF SCANNED COPIES OF THIS PLAN SHEET.

CALIFORNIA STATE FIRE MARSHAL APPROVED

Approval of this plan does not authorize or approve any omission or deviation from applicable regulations. Final approval is subject to field inspection. One set of approved plans shall be available on the project site at all times.

Reviewed by: STEPHEN GUARINO

Approval date: 12-14-09

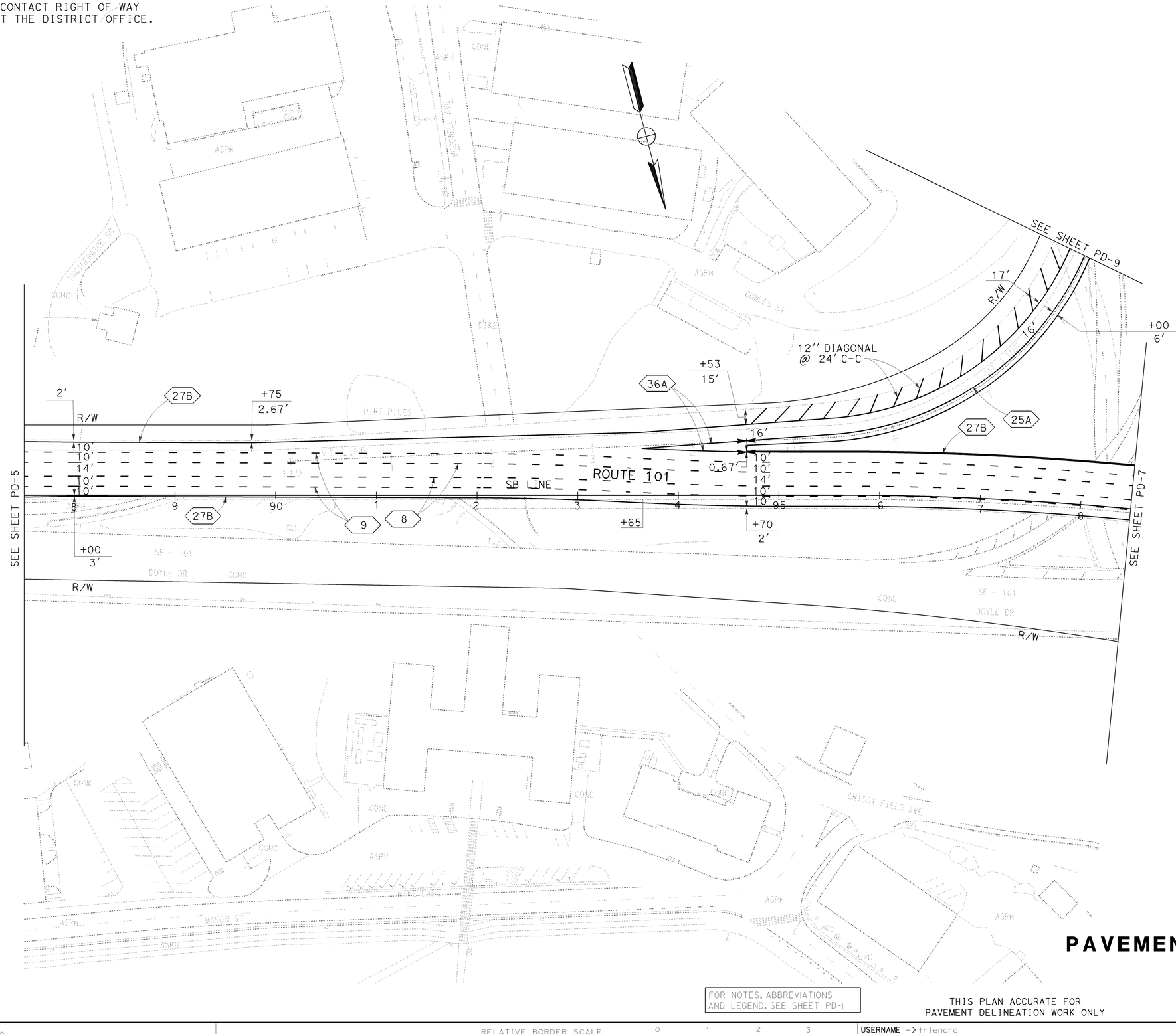

FOR NOTES, ABBREVIATIONS AND LEGEND, SEE SHEET PD-1

THIS PLAN ACCURATE FOR PAVEMENT DELINEATION WORK ONLY

PAVEMENT DELINEATION PLAN (DETOUR)

SCALE: 1″ = 50′

PD-6

LAST REVISION DATE PLOTTED => 14-DEC-2009
08-10-09 TIME PLOTTED => 14:08

STATE OF CALIFORNIA - DEPARTMENT OF TRANSPORTATION
TRAFFIC
Caltrans®

FUNCTIONAL SUPERVISOR: RAMIEL F. GUTIERREZ
CALCULATED-DESIGNED BY:
CHECKED BY:
REVISED BY: CT — DATE REVISED: 8/01/09
CHRIS TSENG
PAUL LEUNG

BORDER LAST REVISED 4/11/2008

RELATIVE BORDER SCALE IS IN INCHES 0 1 2 3

USERNAME => trlenard
DGN FILE => 416374na006.dgn

CU 04242

EA 163741

FOR ACCURATE RIGHT OF WAY AND ACCESS DATA, CONTACT RIGHT OF WAY ENGINEERING AT THE DISTRICT OFFICE.

Dist	COUNTY	ROUTE	POST MILES TOTAL PROJECT	SHEET No.	TOTAL SHEETS
04	SF	101	8.2/9.2	134	654

REGISTERED CIVIL ENGINEER 8-11-09 DATE

12-14-09
PLANS APPROVAL DATE

REGISTERED PROFESSIONAL ENGINEER Paul M. Leung No. 40875 Exp. 3-31-11 CIVIL STATE OF CALIFORNIA

THE STATE OF CALIFORNIA OR ITS OFFICERS OR AGENTS SHALL NOT BE RESPONSIBLE FOR THE ACCURACY OR COMPLETENESS OF SCANNED COPIES OF THIS PLAN SHEET.

CALIFORNIA STATE FIRE MARSHAL APPROVED

Approval of this plan does not authorize or approve any omission or deviation from applicable regulations. Final approval is subject to field inspection. One set of approved plans shall be available on the project site at all times.

Reviewed by: STEPHEN GUARINO

Approval date: 12-14-09

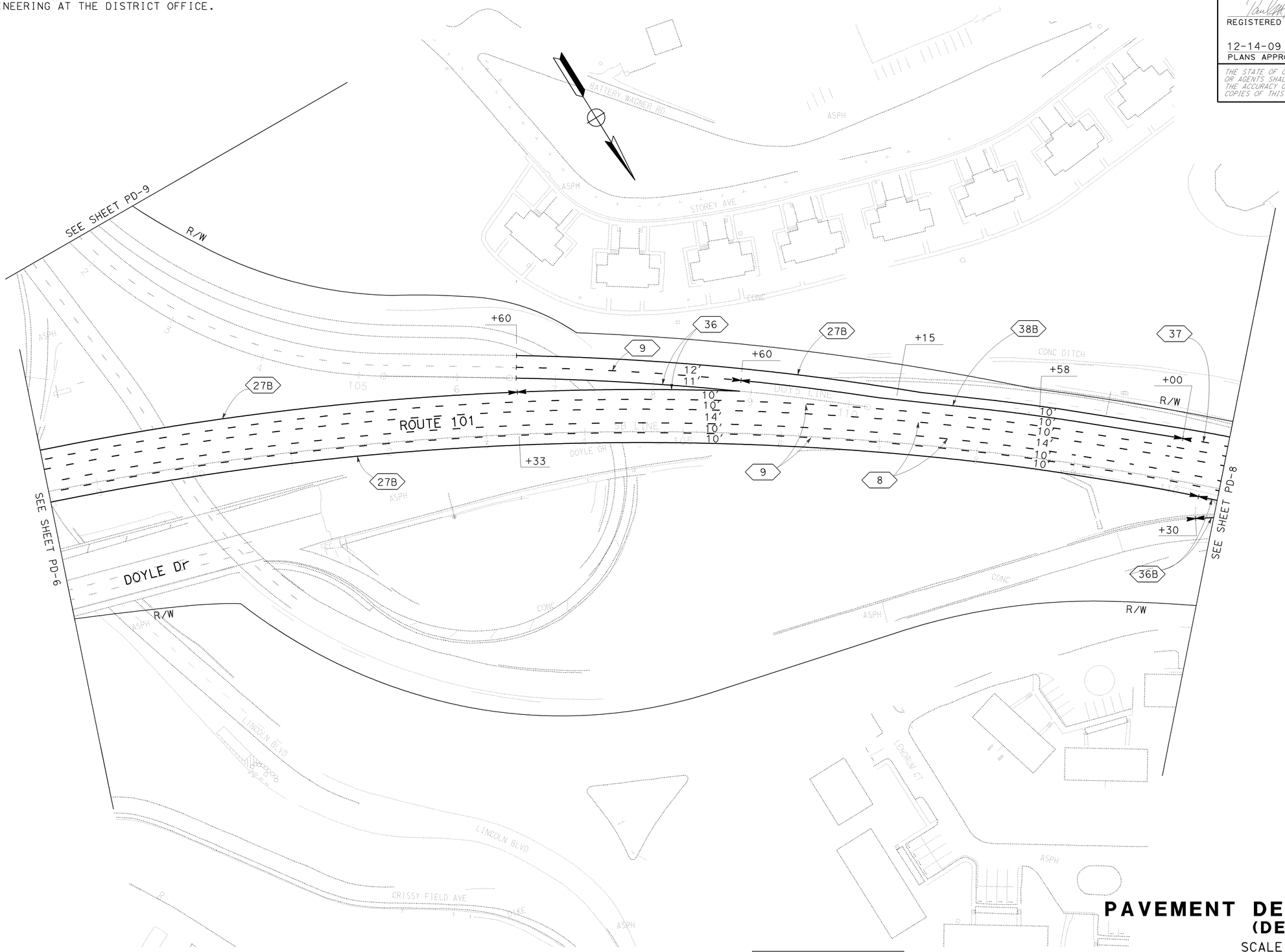

PAVEMENT DELINEATION PLAN
(DETOUR)

SCALE: 1'' = 50'

FOR NOTES, ABBREVIATIONS AND LEGEND, SEE SHEET PD-1

THIS PLAN ACCURATE FOR PAVEMENT DELINEATION WORK ONLY

PD-7

STATE OF CALIFORNIA - DEPARTMENT OF TRANSPORTATION
Caltrans
TRAFFIC

FUNCTIONAL SUPERVISOR: RAMIEL F. GUTIERREZ
CALCULATED-DESIGNED BY: CHRIS TSENG
CHECKED BY: PAUL LEUNG
REVISED BY: CT
DATE REVISED: 8/01/09

LAST REVISION 08-10-09
DATE PLOTTED => 14-DEC-2009
TIME PLOTTED => 14:08

BORDER LAST REVISED 4/11/2008

RELATIVE BORDER SCALE IS IN INCHES 0 1 2 3

USERNAME => trlenard
DGN FILE => 416374na007.dgn

CU 04242

EA 163741

FOR ACCURATE RIGHT OF WAY AND ACCESS DATA, CONTACT RIGHT OF WAY ENGINEERING AT THE DISTRICT OFFICE.

CALIFORNIA STATE FIRE MARSHAL APPROVED

Approval of this plan does not authorize or approve any omission or deviation from applicable regulations. Final approval is subject to field inspection. One set of approved plans shall be available on the project site at all times.

Reviewed by: STEPHEN GUARINO

Approval date: 12-14-09

Dist	COUNTY	ROUTE	POST MILES TOTAL PROJECT	SHEET No.	TOTAL SHEETS
04	SF	101	8.2/9.2	135	654

8-11-09
REGISTERED CIVIL ENGINEER DATE

12-14-09
PLANS APPROVAL DATE

REGISTERED PROFESSIONAL ENGINEER
Paul M. Leung
No. 40875
Exp. 3-31-11
CIVIL
STATE OF CALIFORNIA

THE STATE OF CALIFORNIA OR ITS OFFICERS OR AGENTS SHALL NOT BE RESPONSIBLE FOR THE ACCURACY OR COMPLETENESS OF SCANNED COPIES OF THIS PLAN SHEET.

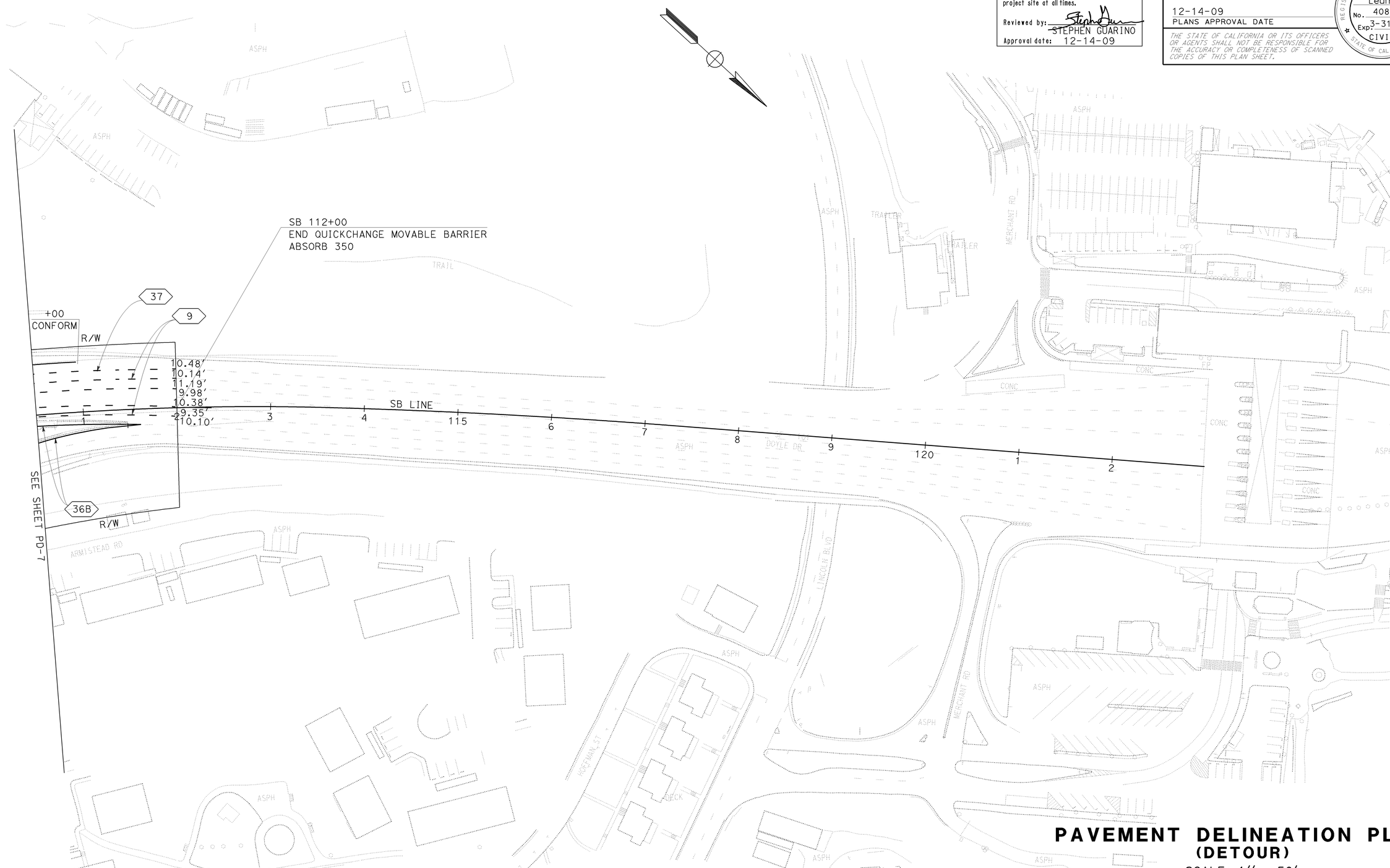

PAVEMENT DELINEATION PLAN
(DETOUR)

SCALE: 1'' = 50'

FOR NOTES, ABBREVIATIONS AND LEGEND, SEE SHEET PD-1

THIS PLAN ACCURATE FOR PAVEMENT DELINEATION WORK ONLY

PD-8

STATE OF CALIFORNIA - DEPARTMENT OF TRANSPORTATION
Caltrans
TRAFFIC

FUNCTIONAL SUPERVISOR: RAMIEL F. GUTIERREZ
CALCULATED-DESIGNED BY: CHRIS TSENG
CHECKED BY: PAUL LEUNG
REVISED BY: CT
DATE REVISED: 8/01/09

LAST REVISION 08-19-09
DATE PLOTTED => 14-DEC-2009
TIME PLOTTED => 14:08

BORDER LAST REVISED 4/11/2008
RELATIVE BORDER SCALE IS IN INCHES 0 1 2 3
USERNAME => trlenard
DGN FILE => 416374na008.dgn
CU 04242
EA 163741

FOR ACCURATE RIGHT OF WAY AND
ACCESS DATA, CONTACT RIGHT OF WAY
ENGINEERING AT THE DISTRICT OFFICE.

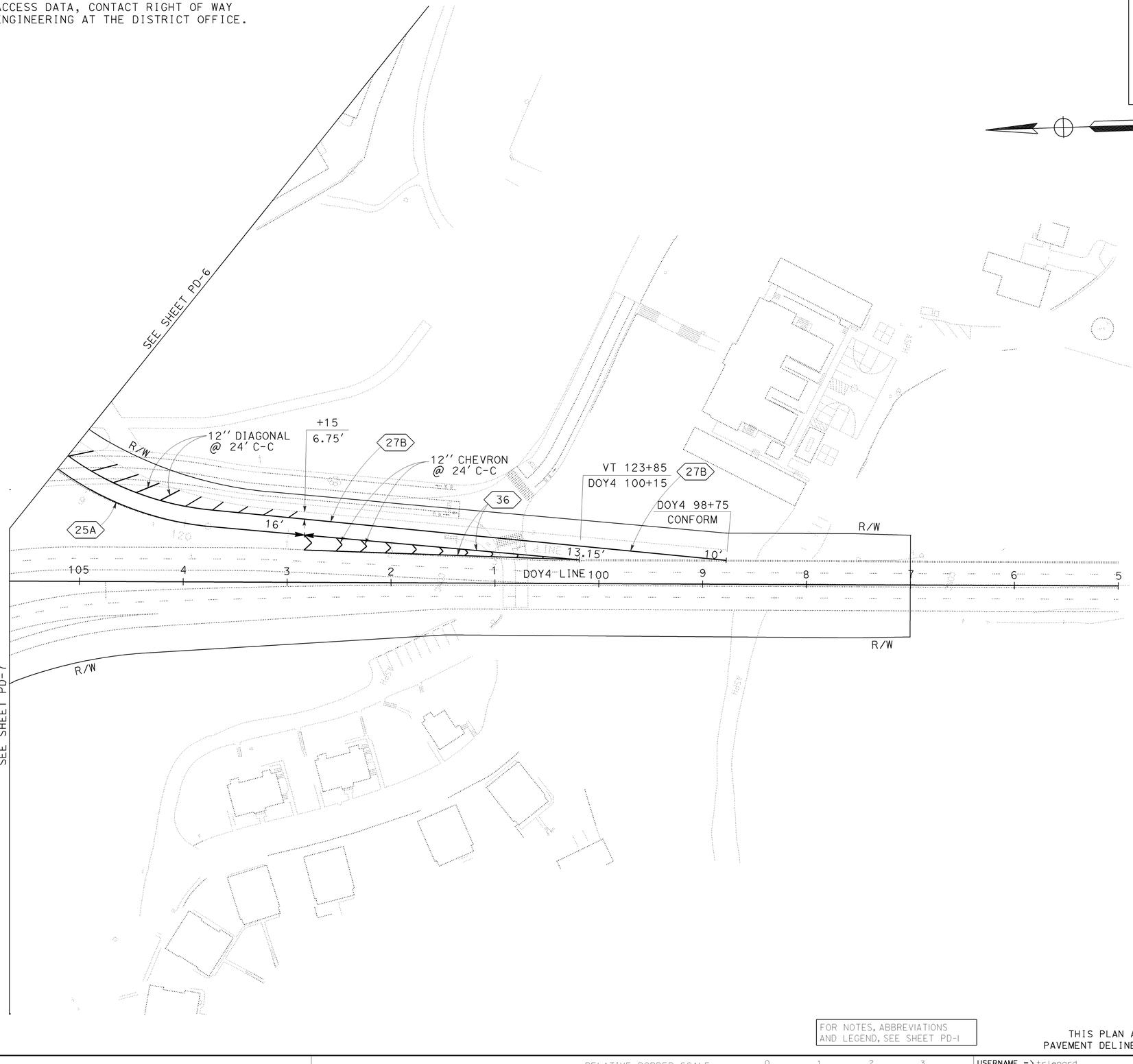

CALIFORNIA STATE FIRE MARSHAL APPROVED

Approval of this plan does not authorize or approve any omission or deviation from applicable regulations. Final approval is subject to field inspection. One set of approved plans shall be available on the project site at all times.

Reviewed by: STEPHEN GUARINO

Approval date: 12-14-09

Dist	COUNTY	ROUTE	POST MILES TOTAL PROJECT	SHEET No.	TOTAL SHEETS
04	SF	101	8.2/9.2	136	654

8-11-09
REGISTERED CIVIL ENGINEER DATE

Paul M. Leung
No. 40875
Exp. 3-31-11
CIVIL
REGISTERED PROFESSIONAL ENGINEER
STATE OF CALIFORNIA

12-14-09
PLANS APPROVAL DATE

THE STATE OF CALIFORNIA OR ITS OFFICERS OR AGENTS SHALL NOT BE RESPONSIBLE FOR THE ACCURACY OR COMPLETENESS OF SCANNED COPIES OF THIS PLAN SHEET.

PAVEMENT DELINEATION PLAN
(DETOUR)

SCALE: 1'' = 50'

PD-9

FOR NOTES, ABBREVIATIONS AND LEGEND, SEE SHEET PD-1

THIS PLAN ACCURATE FOR PAVEMENT DELINEATION WORK ONLY

REVISED BY	DATE REVISED
CT	8/01/09

CALCULATED-DESIGNED BY: CHRIS TSENG
CHECKED BY: PAUL LEUNG
FUNCTIONAL SUPERVISOR: RAMIEL F. GUTIERREZ

STATE OF CALIFORNIA - DEPARTMENT OF TRANSPORTATION
Caltrans
TRAFFIC

LAST REVISION | DATE PLOTTED => 14-DEC-2009
08-09-09 | TIME PLOTTED => 14:08

BORDER LAST REVISED 4/11/2008

RELATIVE BORDER SCALE IS IN INCHES 0 1 2 3

USERNAME => trlenard
DGN FILE => 416374na009.dgn

CU 04242

EA 163741

FOR ACCURATE RIGHT OF WAY AND
ACCESS DATA, CONTACT RIGHT OF WAY
ENGINEERING AT THE DISTRICT OFFICE.

CALIFORNIA STATE FIRE MARSHAL APPROVED

Approval of this plan does not authorize or approve any omission or deviation from applicable regulations. Final approval is subject to field inspection. One set of approved plans shall be available on the project site at all times.

Reviewed by: STEPHEN GUARINO

Approval date: 12-14-09

Dist	COUNTY	ROUTE	POST MILES TOTAL PROJECT	SHEET No.	TOTAL SHEETS
04	SF	101	8.2/9.2	137	654

8-11-09
REGISTERED CIVIL ENGINEER DATE

12-14-09
PLANS APPROVAL DATE

REGISTERED PROFESSIONAL ENGINEER
Paul M. Leung
No. 40875
Exp 3-31-11
CIVIL
STATE OF CALIFORNIA

THE STATE OF CALIFORNIA OR ITS OFFICERS OR AGENTS SHALL NOT BE RESPONSIBLE FOR THE ACCURACY OR COMPLETENESS OF SCANNED COPIES OF THIS PLAN SHEET.

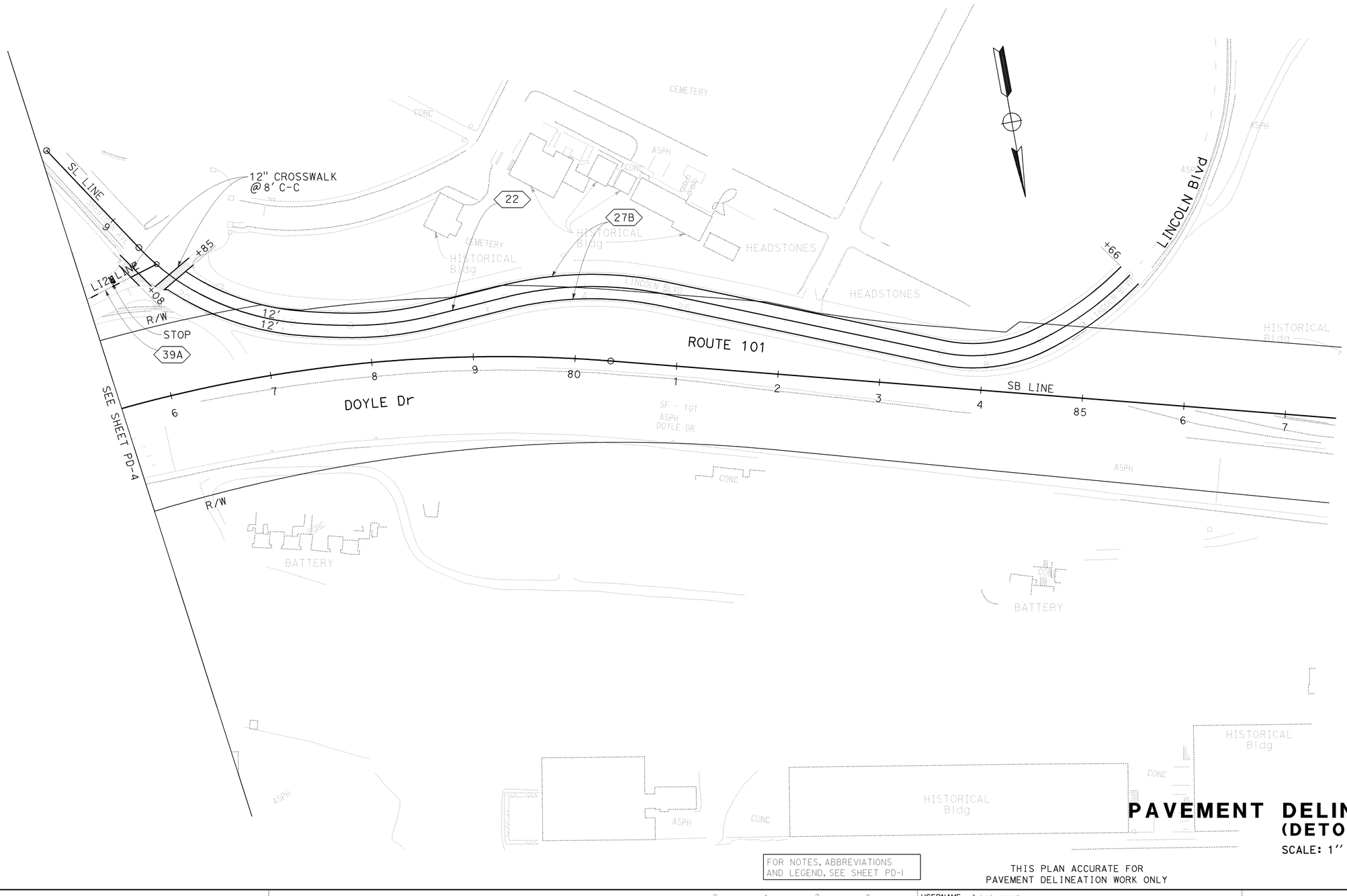

FOR NOTES, ABBREVIATIONS AND LEGEND, SEE SHEET PD-1

THIS PLAN ACCURATE FOR PAVEMENT DELINEATION WORK ONLY

PAVEMENT DELINEATION PLAN (DETOUR)

SCALE: 1'' = 50'

PD-10

LAST REVISION | DATE PLOTTED => 14-DEC-2009
08-26-09 | TIME PLOTTED => 14:08

CALCULATED-DESIGNED BY: CHRIS TSENG
CHECKED BY: PAUL LEUNG
REVISED BY | DATE REVISED: CT | 8/01/09
FUNCTIONAL SUPERVISOR: RAMIEL F. GUTIERREZ

STATE OF CALIFORNIA - DEPARTMENT OF TRANSPORTATION
Caltrans
TRAFFIC

BORDER LAST REVISED 4/11/2008

RELATIVE BORDER SCALE IS IN INCHES 0 1 2 3

USERNAME => trlenard
DGN FILE => 416374na010.dgn

CU 04242

EA 163741

CALIFORNIA STATE FIRE MARSHAL
APPROVED
Approval of this plan does not authorize or approve any omission or deviation from applicable regulations. Final approval is subject to field inspection. One set of approved plans shall be available on the project site at all times.
Reviewed by: STEPHEN GUARINO
Approval date: 12-14-09

Dist	COUNTY	ROUTE	POST MILES TOTAL PROJECT	SHEET No.	TOTAL SHEETS
04	SF	101	8.2/9.2	138	654

8-10-09
REGISTERED CIVIL ENGINEER DATE
12-14-09
PLANS APPROVAL DATE
REGISTERED PROFESSIONAL ENGINEER — Hossein Khodabakhsh — No. 71650 — Exp. 12-31-09 — CIVIL — STATE OF CALIFORNIA

THE STATE OF CALIFORNIA OR ITS OFFICERS OR AGENTS SHALL NOT BE RESPONSIBLE FOR THE ACCURACY OR COMPLETENESS OF SCANNED COPIES OF THIS PLAN SHEET.

TRAFFIC STRIPES, PAVEMENT MARKING AND PAVEMENT MARKERS

SHEET No.	STATION LIMITS	LOCATION	DETAIL No. OR PAVEMENT MARKING	REMOVE PAVEMENT MARKER	REMOVE PAINTED TRAFFIC STRIPE		REMOVE THERMOPLASTIC TRAFFIC STRIPE		REMOVE THERMO-PLASTIC PAVEMENT MARKING	PAVEMENT MARKER RETROREFLECTIVE TYPE				PAINT TRAFFIC STRIPE (2-COAT)			PAINT PAVEMENT MARKING	THERMOPLASTIC TRAFFIC STRIPE			THERMO-PLASTIC PAVEMENT MARKING
					4"	4"	4"	4"						4"	4"	8"		4"	4"	6"	
					WHITE	YELLOW	WHITE	YELLOW		C	D	G	H	WHITE	YELLOW	WHITE		WHITE	YELLOW	WHITE	WHITE
				EA	LF				SQFT	EA				LF			SQFT	LF			SQFT
PD-1	DN 47+97 TO 56+50	Rt, Lt		134			3025		506												
PD-1	DN 47+97 TO 56+50	Rt	9									38		1706							
PD-1	DN 47+97 TO 56+50	Rt, Lt	25A										74		1706						
PD-1	DN 47+97 TO 56+50	Rt	27B											853							
PD-1	DN 48+20	Rt	TYPE I 24' ARROW														93				
PD-1	DN 47+97 TO 56+50	Lt	9									29		1116							
PD-1	DN 47+97 TO 56+50	Lt	27B											813							
PD-1	DN 47+97 TO 54+40	Lt	38									30				650					
PD-1	DN 54+20 TO 56+30	Lt	TYPE V ARROW														165				
PD-1	DS 48+20	Lt	TYPE I 24' ARROW														93				
PD-1	DS 48+20 TO DS 54+20	Lt	TYPE III ARROW														84				
PD-2	MN 52+42 TO 58+88	Rt, Lt		273			1051		273												
PD-2	MN 52+42 TO 58+88	Rt, Lt	9									30		1292							
PD-2	MN 54+00 TO 58+88	Lt	22								44				976						
PD-2	MN 52+42 TO 54+88	Rt, Lt	27B											1292							
PD-2	MN 52+42 TO 54+00	Lt	29								16				632						
PD-2	MN 58+88 TO 60+00	Rt, Lt	40											224							
PD-2	MN 58+88 TO 60+00	Rt	41												112						
PD-2	MN 58+88	Rt	12'' LIMIT LINE														26				
PD-2	MN 58+00 TO 59+00	Lt	TYPE I 24' ARROW														62				
PD-2	MN 58+00 TO 59+00	Rt	TYPE III ARROW														84				
PD-2	DN 56+50 TO 59+00	Rt	9									14		500							
PD-2	DN 56+50 TO 57+00	Lt	25A										8		100						
PD-2	DN 56+50 TO 59+00	Rt	27B											250							
PD-2	DN 57+00 TO 59+00	Lt	29								22				820						
PD-2	DN 59+00	Rt	12'' LIMIT LINE														46				
PD-2	D 57+40 TO 59+00	Lt	12'' DIAGONAL														110				
PD-2	DN 58+60	Rt	TYPE I 24' ARROW														62				
PD-2	DN 58+60	Rt	TYPE II ARROW														45				
PD-2	D 60+00 TO 67+40	Rt	9									34		1480							
PD-2	D 60+00 TO 67+40	Rt, Lt	24												1480						
PD-2	D 60+00 TO 67+40	Rt	27B											740							
PD-2	D 60+40	Rt	TYPE I ARROW														93				
PD-2	DS 56+50 TO 67+08	Lt	9									24		1058							
PD-2	DS 56+50 TO 67+08	Lt	27B											1058							
PD-2	DS 64+73 TO 67+08	Lt	37							16		2				235					
PD-2	DS 60+00 TO 62+50	Rt	38A													250					
PD-2	DS 59+00 TO 65+00	Lt	38									26				600					
PD-2	DS 60+20	Lt	TYPE I ARROW														124				
PD-2	DS 60+20 TO 67+00	Lt	TYPE III ARROW														210				
PD-2	DS 64+00 TO 67+00	Lt	TYPE V ARROW														132				
SUBTOTAL				407			4076	0	779	16	82	244	82	12382	5826	2325	1429	0	0	0	0
TOTAL				407			4076	0	779	424				20533			1429	0	0	0	0

PAVEMENT DELINEATION QUANTITIES

PDQ-1

CHRIS TSENG — CALCULATED-DESIGNED BY
BAHMAN MAHDARIAN — CHECKED BY
CT — REVISED BY
8/01/09 — DATE REVISED
RAMIEL F. GUTIERREZ — FUNCTIONAL SUPERVISOR
STATE OF CALIFORNIA - DEPARTMENT OF TRANSPORTATION
TRAFFIC
Caltrans

LAST REVISION DATE PLOTTED => 14-DEC-2009
09-15-09 TIME PLOTTED => 14:08

BORDER LAST REVISED 4/11/2008
RELATIVE BORDER SCALE IS IN INCHES 0 1 2 3
USERNAME => trlenard
DGN FILE => 416374nc001.dgn
CU 04242
EA 163741

CALIFORNIA STATE FIRE MARSHAL
APPROVED
Approval of this plan does not authorize or approve any omission or deviation from applicable regulations. Final approval is subject to field inspection. One set of approved plans shall be available on the project site at all times.
Reviewed by: STEPHEN GUARINO
Approval date: 12-14-09

Dist	COUNTY	ROUTE	POST MILES TOTAL PROJECT	SHEET No.	TOTAL SHEETS
04	SF	101	8.2/9.2	139	654

8-10-09
REGISTERED CIVIL ENGINEER DATE
Hossein Khodabakhsh No. 71650 Exp. 12-31-09 CIVIL
REGISTERED PROFESSIONAL ENGINEER STATE OF CALIFORNIA
12-14-09
PLANS APPROVAL DATE
THE STATE OF CALIFORNIA OR ITS OFFICERS OR AGENTS SHALL NOT BE RESPONSIBLE FOR THE ACCURACY OR COMPLETENESS OF SCANNED COPIES OF THIS PLAN SHEET.

TRAFFIC STRIPES, PAVEMENT MARKING AND PAVEMENT MARKERS

SHEET No.	STATION LIMITS	LOCATION	DETAIL No. OR PAVEMENT MARKING	REMOVE PAVEMENT MARKER	REMOVE PAINTED TRAFFIC STRIPE		REMOVE THERMOPLASTIC TRAFFIC STRIPE		REMOVE THERMO-PLASTIC PAVEMENT MARKING	PAVEMENT MARKER RETROREFLECTIVE TYPE				PAINT TRAFFIC STRIPE (2-COAT)			PAINT PAVEMENT MARKING	THERMOPLASTIC TRAFFIC STRIPE			THERMO-PLASTIC PAVEMENT MARKING
					4"	4"	4"	4"						4"	4"	8"		4"	4"	6"	
					WHITE	YELLOW	WHITE	YELLOW		C	D	G	H	WHITE	YELLOW	WHITE		WHITE	YELLOW	WHITE	WHITE
				EA	LF				SQFT	EA				LF			SQFT	LF			SQFT
PD-3	D 72+95 TO 80+45	Rt, Lt	8											1500							
PD-3	D 67+40 TO 80+45	Rt, Lt	9									71		3165							
PD-3	D 67+40 TO 72+95	Rt, Lt	24												1110						
PD-3	D 67+40 TO 72+95	Lt	37							36		2				555					
PD-3	D 67+40 TO 80+45	Rt, Lt	27B											2610							
PD-4	D 80+45 TO 93+20	Rt, Lt	8											2550							
PD-4	D 80+45 TO 93+20	Rt, Lt	9									56		2550							
PD-4	D 80+45 TO 93+20	Rt, Lt	27B											2550							
PD-4	MUT 10+00 TO 12+00	Rt, Lt					200	240													
PD-4	LI2 10+00 TO 20+60	Rt, Lt					980	2186	242												
PD-4	LI2 10+00 TO 20+00	Rt	39																	1000	
PD-4	LI2 20+00 TO 20+60	Rt	39A																	60	
PD-4	LI2 11+60 TO 11+80	Rt, Lt	12" CROSSWALK																		52
PD-4	LI2 12+60 TO 15+20	Lt	12" DIAGONAL																		324
PD-4	LI2 12+60 TO 15+20	Lt	EMERGENCY VEHICLE ACCESS ONLY																		5 4 3 2
PD-5	SB 75+50 TO 87+50	Lt	8											2400							
PD-5	SB 75+50 TO 87+50	Rt, Lt	9									52		2400							
PD-5	SB 75+50 TO 87+50	Rt, Lt	27B											2400							
PD-6	SB 87+50 TO 98+50	Lt	8											2200							
PD-6	SB 87+50 TO 98+50	Rt, Lt	9									48		2200							
PD-6	SB 87+50 TO 98+50	Rt, Lt	27B											2200							
PD-6	SB 93+67 TO 94+70	Lt	36A									3		103		40					
PD-6	VT 114+53 TO 118+65	Rt	25A										19		412						
PD-6	VT 114+53 TO 118+65	Lt	27B											412							
PD-6	VT 114+53 TO 118+65	Lt	12" DIAGONAL														360				
PD-7	SB 105+50 TO 110+50	Rt, Lt		86	2244	1100			139												
PD-7	SB 98+50 TO 110+50	Lt	8											2400							
PD-7	SB 98+50 TO 110+50	Rt, Lt	9									52		2400							
PD-7	SB 98+50 TO 110+50	Rt, Lt	27B											2170							
PD-7	DOY5 106+60 TO 108+90	Lt	9									6		230							
PD-7	DOY5 106+60 TO 108+90	Rt	36									22				460					
PD-7	DOY5 106+60 TO 108+90	Lt	27B											230							
PD-7	SB 105+60 TO 110+00	Lt	38B									40				440					
PD-7	SB 110+30 TO 110+50	Rt	36B									4				40					
PD-8	SB 110+50 TO 112+00	Rt, Lt		923	1753																
PD-8	SB 110+50 TO 112+00	Rt, Lt	8											500							
PD-8	SB 110+50 TO 112+00	Rt, Lt	9									10		500							
PD-8	SB 110+50 TO 112+00	Rt, Lt	27B											250							
PD-8	SB 110+50 TO 111+60	Rt	36B									6		110		110					
PD-8	SB 110+50 TO 112+60	Lt	37									18				250					
SUBTOTAL				1009	3997	1100	1180	2426	381	36	0	390	19	38030	1522	1895	360	0	0	1060	390
TOTAL				1009	3997	1100	1180	2426	381	445				41447			360	0	0	1060	390

PAVEMENT DELINEATION QUANTITIES

PDQ-2

REVISED BY CT | DATE REVISED 8/01/09
CALCULATED-DESIGNED BY CHRIS TSENG | CHECKED BY BAHMAN MAHDARIAN
FUNCTIONAL SUPERVISOR RAMIEL F. GUTIERREZ
STATE OF CALIFORNIA - DEPARTMENT OF TRANSPORTATION TRAFFIC

LAST REVISION DATE PLOTTED => 14-DEC-2009
09-15-09 TIME PLOTTED => 14:08

BORDER LAST REVISED 4/11/2008
RELATIVE BORDER SCALE IS IN INCHES 0 1 2 3
USERNAME => trlenard
DGN FILE => 416374nc002.dgn
CU 04242
EA 163741

CALIFORNIA STATE FIRE MARSHAL
APPROVED
Approval of this plan does not authorize or approve any omission or deviation from applicable regulations. Final approval is subject to field inspection. One set of approved plans shall be available on the project site at all times.
Reviewed by: STEPHEN GUARINO
Approval date: 12-14-09

Dist	COUNTY	ROUTE	POST MILES TOTAL PROJECT	SHEET No.	TOTAL SHEETS
04	SF	101	8.2/9.2	140	654

8-11-09
REGISTERED CIVIL ENGINEER DATE

12-14-09
PLANS APPROVAL DATE

REGISTERED PROFESSIONAL ENGINEER
Paul M. Leung
No. 40875
Exp 3-31-11
CIVIL
STATE OF CALIFORNIA

THE STATE OF CALIFORNIA OR ITS OFFICERS OR AGENTS SHALL NOT BE RESPONSIBLE FOR THE ACCURACY OR COMPLETENESS OF SCANNED COPIES OF THIS PLAN SHEET.

TRAFFIC STRIPES, PAVEMENT MARKING AND PAVEMENT MARKERS

SHEET No.	STATION LIMITS	LOCATION	DETAIL No. OR PAVEMENT MARKING	REMOVE PAVEMENT MARKER	REMOVE PAINTED TRAFFIC STRIPE		REMOVE THERMOPLASTIC TRAFFIC STRIPE		REMOVE THERMO-PLASTIC PAVEMENT MARKING	PAVEMENT MARKER RETROREFLECTIVE TYPE				PAINT TRAFFIC STRIPE (2-COAT)			PAINT PAVEMENT MARKING	THERMOPLASTIC TRAFFIC STRIPE			THERMO-PLASTIC PAVEMENT MARKING
					4"	4"	4"	4"						4"	4"	8"		4"	4"	6"	
					WHITE	YELLOW	WHITE	YELLOW		C	D	G	H	WHITE	YELLOW	WHITE		WHITE	YELLOW	WHITE	WHITE
				EA	LF				SQFT	EA				LF			SQFT	LF			SQFT
PD-9	DOY4 98+75 TO 102+85	Rt, Lt			451																
PD-9	DOY4 98+75 TO 100+15	Rt	27B											140							
PD-9	VT 118+65 TO 121+15	Rt	25A										12		250						
PD-9	VT 118+65 TO 121+15	Lt	12" DIAGONAL														186				
PD-9	VT 118+65 TO 123+85	Lt	27B											520							
PD-9	DOY4 100+15 TO 102+85	Rt, Lt	36									26				541					
PD-9	DOY4 100+15 TO 102+85	Rt	12" CHEVRON														122				
PD-10	LI2 20+60 TO 21+13	Rt, Lt					117	115	178												
PD-10	LI2 20+60 TO 21+00	Lt	27B															40			
PD-10	LI2 20+60 TO 21+00	Rt	39A																	40	
PD-10	LI2 21+00 TO 21+20	Rt, Lt	12" CROSSWALK																		66
PD-10	LI2 20+92	Lt	STOP																		22
PD-10	SL 19+86 TO 29+66	Rt, Lt		84			113	1960	114												
PD-10	SL 19+96 TO 29+66	Rt, Lt	22								84								1940		
PD-10	SL 19+96 TO 29+66	Rt, Lt	27B															1940			
PD-10	SL 19+70 TO 19+90	Lt	12" CROSSWALK																		84
	SUBTOTAL			84	451	0	230	2075	292	0	84	26	12	660	250	541	308	1980	1940	40	172
	TOTAL THIS SHEET			84	0	0	230	2075	292	122				1451			308	1980	1940	40	172
	TOTAL FROM SHEET PDQ-1			407	0	0	4076	0	779	424				20533			1429	0	0	0	0
	TOTAL FROM SHEET PDQ-2			1009	3997	1100	1180	2426	381	445				41447			360	1060	0	1060	390
	GRAND TOTAL			1500	4448	1100	5486	4501	1452	991				63431			2097	3040	1940	1100	562

CT 8/01/09
REVISED BY DATE REVISED
CHRIS TSENG
BAHMAN MAHDARIAN
CALCULATED-DESIGNED BY
CHECKED BY
FUNCTIONAL SUPERVISOR
RAMIEL F. GUTIERREZ
STATE OF CALIFORNIA - DEPARTMENT OF TRANSPORTATION
TRAFFIC

PAVEMENT DELINEATION QUANTITIES

PDQ-3

LAST REVISION 09-17-09
DATE PLOTTED => 14-DEC-2009
TIME PLOTTED => 14:09

BORDER LAST REVISED 4/11/2008
RELATIVE BORDER SCALE IS IN INCHES 0 1 2 3
USERNAME => trlenard
DGN FILE => 416374nc003.dgn
CU 04242
EA 163741

Dist	COUNTY	ROUTE	POST MILES TOTAL PROJECT	SHEET No.	TOTAL SHEETS
04	SF	101	8.2/9.2	141	654

Jerilyn L. Struven 8-11-09
REGISTERED CIVIL ENGINEER DATE

12-14-09
PLANS APPROVAL DATE

REGISTERED PROFESSIONAL ENGINEER — Jerilyn L. Struven No. 49964 Exp. 12-31-10 CIVIL — STATE OF CALIFORNIA

THE STATE OF CALIFORNIA OR ITS OFFICERS OR AGENTS SHALL NOT BE RESPONSIBLE FOR THE ACCURACY OR COMPLETENESS OF SCANNED COPIES OF THIS PLAN SHEET.

CALIFORNIA STATE FIRE MARSHAL APPROVED
Approval of this plan does not authorize or approve any omission or deviation from applicable regulations. Final approval is subject to field inspection. One set of approved plans shall be available on the project site at all times.
Reviewed by: STEPHEN GUARINO
Approval date: 12-14-09

LEGEND:

- (No.) ROADSIDE SIGN NUMBER
- ■ REMOVE ROADSIDE SIGN
- ◇ OVERHEAD SIGN
- ◆ REMOVE OVERHEAD SIGN
- ✳ INSTALLED UNDER PROJECT 3
- ● EXISTING SIGN TO REMAIN

NOTES:

1. LOCATION OF ROADSIDE SIGNS ARE APPROXIMATE. EXACT LOCATION WILL BE DETERMINED BY THE ENGINEER.
2. POST LENGTH GIVEN IS APPROXIMATE. EXACT SIZE AND LENGTH OF WOOD POST TO BE DETERMINED BY THE ENGINEER.
3. OVERHEAD SIGN STRUCTURE FOUNDATION ON S-3 SHOWN IS FOR LOCATION REFERENCE PURPOSE ONLY. SEE RW8-21, SEGMENT C-STRUCTURE PLAN, FOR INFORMATION.

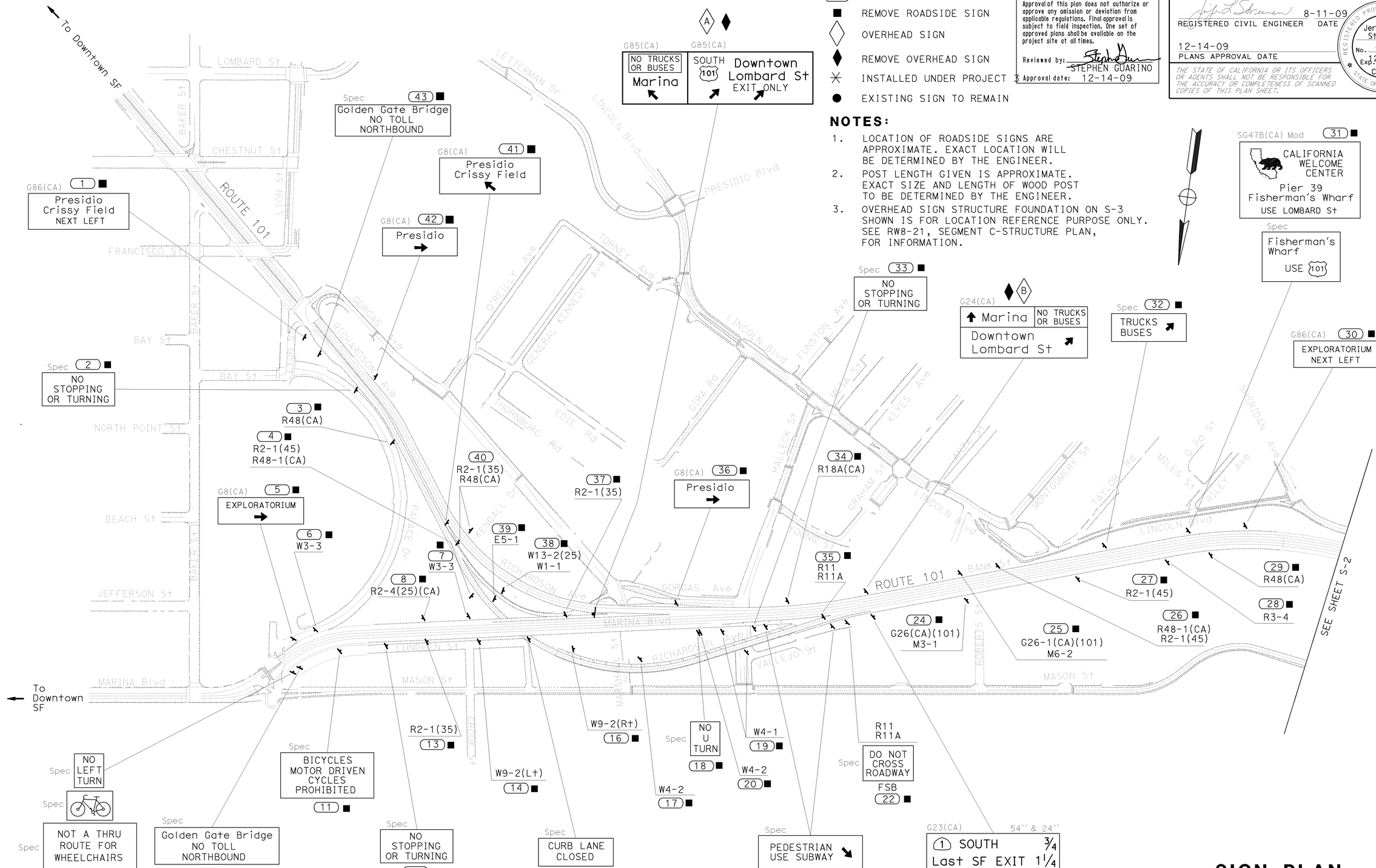

SIGN PLAN (EXISTING)
NO SCALE

THIS PLAN ACCURATE FOR SIGN WORK ONLY

S-1

REVISED BY	DATE REVISED
UV	8/01/09

CALCULATED-DESIGNED BY	CHECKED BY
ULICES VEGA	LILY TING

FUNCTIONAL SUPERVISOR: ROLAND AU-YEUNG

STATE OF CALIFORNIA - DEPARTMENT OF TRANSPORTATION
TRAFFIC

LAST REVISION 08-26-09 DATE PLOTTED => 14-DEC-2009 TIME PLOTTED => 14:09

BORDER LAST REVISED 4/11/2008 | RELATIVE BORDER SCALE IS IN INCHES 0 1 2 3 | USERNAME => trlenard DGN FILE => 416374og001.dgn | CU 04242 | EA 163741

Dist	COUNTY	ROUTE	POST MILES TOTAL PROJECT	SHEET No.	TOTAL SHEETS
04	SF	101	8.2/9.2	142	654

REGISTERED CIVIL ENGINEER — 8-11-09 DATE

12-14-09
PLANS APPROVAL DATE

Jerilyn L. Struven
No. 49964
Exp. 12-31-10
CIVIL
REGISTERED PROFESSIONAL ENGINEER
STATE OF CALIFORNIA

THE STATE OF CALIFORNIA OR ITS OFFICERS OR AGENTS SHALL NOT BE RESPONSIBLE FOR THE ACCURACY OR COMPLETENESS OF SCANNED COPIES OF THIS PLAN SHEET.

CALIFORNIA STATE FIRE MARSHAL APPROVED

Approval of this plan does not authorize or approve any omission or deviation from applicable regulations. Final approval is subject to field inspection. One set of approved plans shall be available on the project site at all times.

Reviewed by: STEPHEN GUARINO

Approval date: 12-14-09

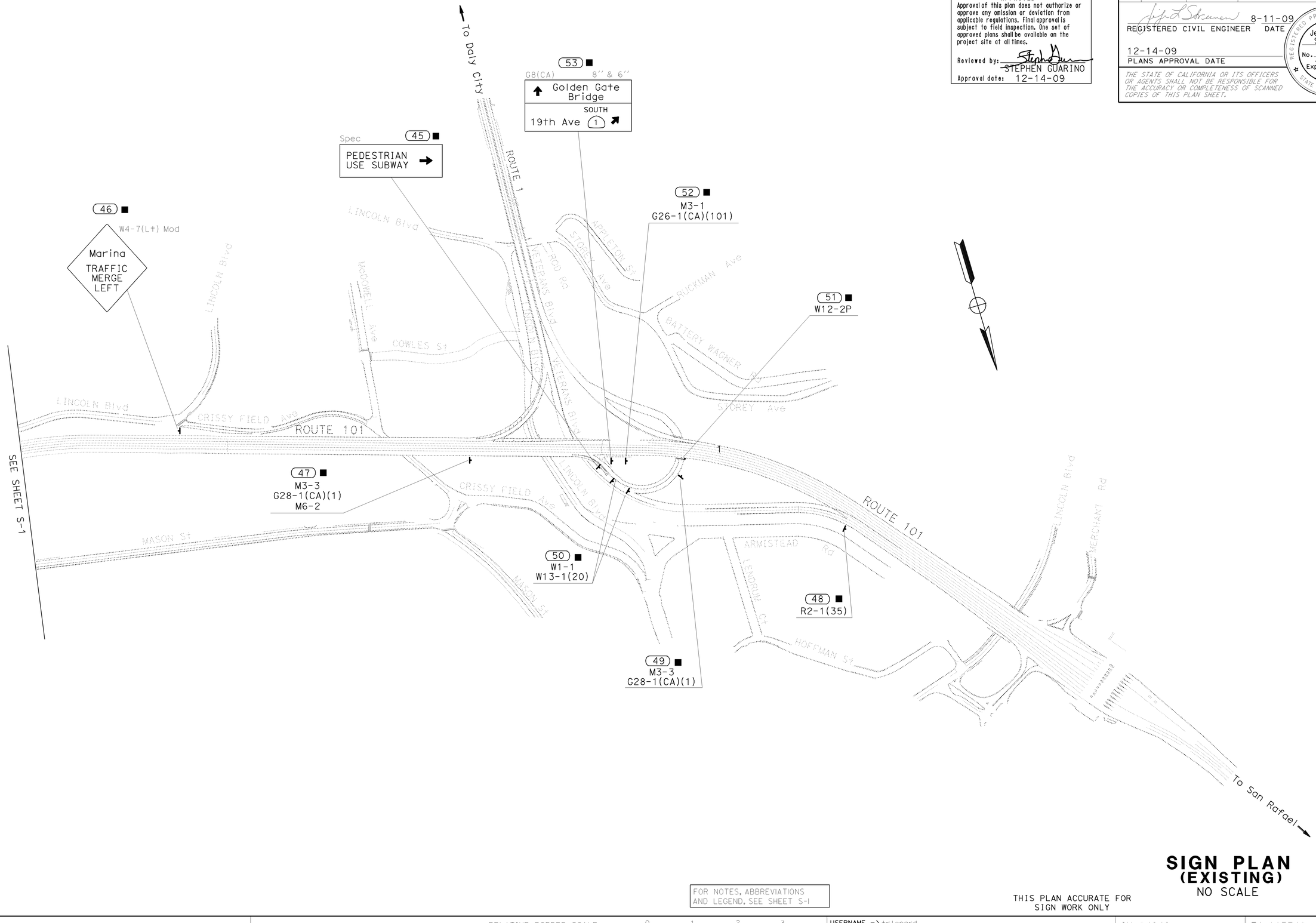

FOR NOTES, ABBREVIATIONS AND LEGEND, SEE SHEET S-1

THIS PLAN ACCURATE FOR SIGN WORK ONLY

SIGN PLAN (EXISTING)

NO SCALE

S-2

REVISED BY	DATE REVISED
UV	8/01/09

ULICES VEGA — CALCULATED-DESIGNED BY
LILY TING — CHECKED BY

FUNCTIONAL SUPERVISOR: ROLAND AU-YEUNG

STATE OF CALIFORNIA - DEPARTMENT OF TRANSPORTATION
TRAFFIC

LAST REVISION 08-06-09
DATE PLOTTED => 14-DEC-2009
TIME PLOTTED => 14:09

BORDER LAST REVISED 4/11/2008

RELATIVE BORDER SCALE IS IN INCHES 0 1 2 3

USERNAME => trlenard
DGN FILE => 416374oa002.dgn

CU 04242

EA 163741

Dist	COUNTY	ROUTE	POST MILES TOTAL PROJECT	SHEET No.	TOTAL SHEETS
04	SF	101	8.2/9.2	143	654

REGISTERED CIVIL ENGINEER — 8-11-09 DATE

Jerilyn L. Struven, No. 49964, Exp. 12-31-10, CIVIL, REGISTERED PROFESSIONAL ENGINEER, STATE OF CALIFORNIA

12-14-09
PLANS APPROVAL DATE

THE STATE OF CALIFORNIA OR ITS OFFICERS OR AGENTS SHALL NOT BE RESPONSIBLE FOR THE ACCURACY OR COMPLETENESS OF SCANNED COPIES OF THIS PLAN SHEET.

CALIFORNIA STATE FIRE MARSHAL APPROVED
Approval of this plan does not authorize or approve any omission or deviation from applicable regulations. Final approval is subject to field inspection. One set of approved plans shall be available on the project site at all times.
Reviewed by: STEPHEN GUARINO
Approval date: 12-14-09

To Downtown SF

19th Ave
Golden Gate Br
Palace of Fine Arts
Exploratorium →
Exist

LOMBARD St
CHESTNUT St
FRANCISCO St
BAY St
NORTH POINT St
BEACH St
JEFFERSON St
MARINA Blvd
MASON St
BANK St
ROUTE 101
BAKER St
LYON St
LETTERMAN Dr
LINCOLN Blvd
PRESIDIO Blvd
O'REILLY Ave
TORNEY Ave
GENERAL KENNEDY AVE
GORGAS Ave
RICHARDSON Ave
THORNBURG Rd
EDIE Rd
KENDALL DR
GIFFORD ST
GIRA Rd
HALLECK ST
GRAHAM ST
YOUNG ST
LINCOLN Blvd
FUNSTON Ave
MESA ST
KEYES Ave
ANZA ST
MONTGOMERY ST
TAYLOR Rd
SHERIDAN AVE
MILES RD
CRISSY FIELD
VALLEJO ST
PIERCE ST
SCOTT ST
PRESIDIO AVE
LYON ST

101 G8(CA) Presidio →

R26A(S)(CA)

102 R3-4 D3 Marina Blvd MAST ARM

103 R3-18 MAST ARM

104 R61(CA) ONLY | ONLY | ONLY | ONLY

105 G86(CA) Marina Blvd NO TRUCKS OR BUSES NEXT LEFT

106 W3-3 SSBM

107 W1-4-L W13-1(25)

OH SIGN STRUCTURE FOUNDATION SEE NOTE 3

108 W1-4-L W13-1(25)

109 R2-1(35)

110 M3-1 G26-2(CA)(101)

111 R3-4 D3 Marina Blvd MAST ARM

112 R61(CA) ONLY | ONLY

113 W3-3

114 R5-10a

115 G78 (CA) NORTH ↑ 101 Golden Gate Br

116 R5-10c

117 G8(CA) Exploratorium →

118 R3-7R

119 R61(CA) ONLY | ONLY

120 G8(CA) Marina Blvd →

121 W3-3

122 R5-10a

123 R61(CA) ONLY | ONLY | ONLY

R9-3a
R5-6
R9-9

SEE SHEET S-4

FOR NOTES, ABBREVIATIONS AND LEGEND, SEE SHEET S-1

THIS PLAN ACCURATE FOR SIGN WORK ONLY

SIGN PLAN (DETOUR)
NO SCALE

S-3

STATE OF CALIFORNIA - DEPARTMENT OF TRANSPORTATION
TRAFFIC
Caltrans

FUNCTIONAL SUPERVISOR: ROLAND AU-YEUNG
CALCULATED-DESIGNED BY: ULICES VEGA
CHECKED BY: LILY TING
REVISED BY: UV
DATE REVISED: 8/01/09

LAST REVISION DATE PLOTTED => 14-DEC-2009
TIME PLOTTED => 14:09
08-25-09

BORDER LAST REVISED 4/11/2008

RELATIVE BORDER SCALE IS IN INCHES 0 1 2 3

USERNAME => trlenard
DGN FILE => 416374oa003.dgn

CU 04242

EA 163741

Dist	COUNTY	ROUTE	POST MILES TOTAL PROJECT	SHEET No.	TOTAL SHEETS
04	SF	101	8.2/9.2	144	654

CALIFORNIA STATE FIRE MARSHAL APPROVED

Approval of this plan does not authorize or approve any omission or deviation from applicable regulations. Final approval is subject to field inspection. One set of approved plans shall be available on the project site at all times.

Reviewed by: STEPHEN GUARINO

Approval date: 12-14-09

Jerilyn L. Struven — 8-11-09
REGISTERED CIVIL ENGINEER — DATE

12-14-09
PLANS APPROVAL DATE

REGISTERED PROFESSIONAL ENGINEER — Jerilyn L. Struven — No. 49964 — Exp. 12-31-10 — CIVIL — STATE OF CALIFORNIA

THE STATE OF CALIFORNIA OR ITS OFFICERS OR AGENTS SHALL NOT BE RESPONSIBLE FOR THE ACCURACY OR COMPLETENESS OF SCANNED COPIES OF THIS PLAN SHEET.

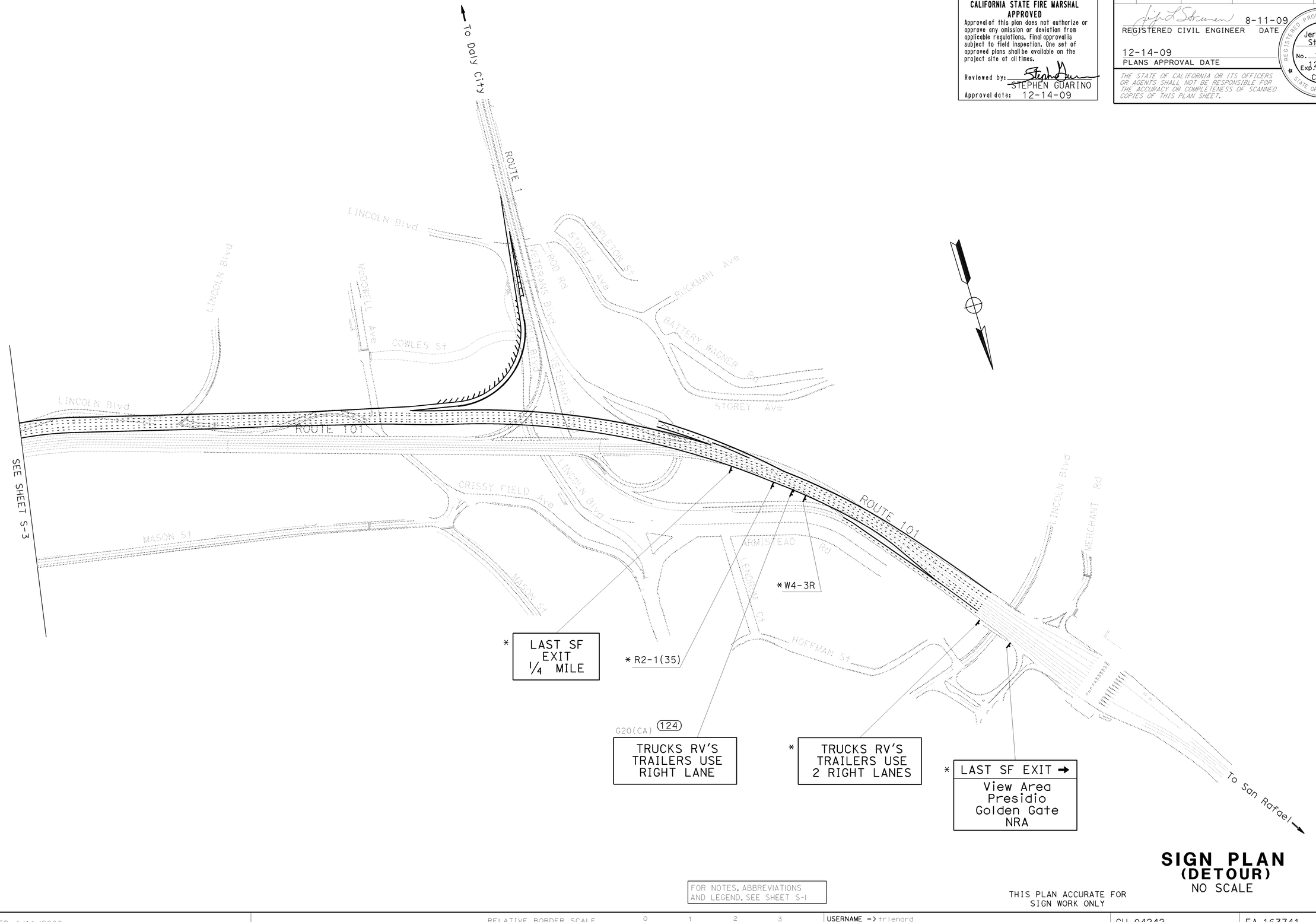

FOR NOTES, ABBREVIATIONS AND LEGEND, SEE SHEET S-1

THIS PLAN ACCURATE FOR SIGN WORK ONLY

SIGN PLAN (DETOUR)

NO SCALE

S-4

STATE OF CALIFORNIA - DEPARTMENT OF TRANSPORTATION
TRAFFIC
FUNCTIONAL SUPERVISOR: ROLAND AU-YEUNG
CALCULATED-DESIGNED BY: ULICES VEGA
CHECKED BY: LILY TING
REVISED BY: UV
DATE REVISED: 8/01/09

LAST REVISION DATE PLOTTED => 14-DEC-2009
08-15-09 TIME PLOTTED => 14:09

BORDER LAST REVISED 4/11/2008

RELATIVE BORDER SCALE IS IN INCHES 0 1 2 3

USERNAME => trienard
DGN FILE => 416374oa004.dgn

CU 04242

EA 163741

Dist	COUNTY	ROUTE	POST MILES TOTAL PROJECT	SHEET No.	TOTAL SHEETS
04	SF	101	8.2/9.2	145	654

8-11-09
REGISTERED CIVIL ENGINEER DATE

12-14-09
PLANS APPROVAL DATE

REGISTERED PROFESSIONAL ENGINEER
Jerilyn L. Struven
No. 49964
Exp. 12-31-10
CIVIL
STATE OF CALIFORNIA

THE STATE OF CALIFORNIA OR ITS OFFICERS OR AGENTS SHALL NOT BE RESPONSIBLE FOR THE ACCURACY OR COMPLETENESS OF SCANNED COPIES OF THIS PLAN SHEET.

CALIFORNIA STATE FIRE MARSHAL APPROVED
Approval of this plan does not authorize or approve any omission or deviation from applicable regulations. Final approval is subject to field inspection. One set of approved plans shall be available on the project site at all times.
Reviewed by: STEPHEN GUARINO
Approval date: 12-14-09

(101)
G8 (CA) 48" × 30"
Presidio →
6" UC, 4½" LC E Mod

(102)
(111)
D3 66" × 18"
Marina Blvd
6" UC, 4½" LC E Mod

(105)
G86 (CA) 84" × 36"
Marina Blvd
NO TRUCKS OR BUSES
NEXT LEFT
72" × 6" Black/White 4" E CAPS
6" UC, 4½" LC E Mod

(115)
G78 (CA) 114" × 60"
NORTH
↑ 101
Golden Gate Br
8" UC, 6" LC E Mod
6" E Mod CAPS

(117)
G8 (CA) 60" × 30"
Exploratorium →
6" UC, 4½" LC C

(120)
G8 (CA) 54" × 30"
Marina Blvd →
6" UC, 4½" LC C

(124)
G20 (CA) 78" × 36"
TRUCKS RV'S TRAILER USE RIGHT LANE
6" E Mod CAPS

SIGN DETAILS
NO SCALE

SD-1

CALCULATED-DESIGNED BY	CHECKED BY	REVISED BY	DATE REVISED
ULICES F. VEGA	LILY TING	UV	7/14/09

STATE OF CALIFORNIA - DEPARTMENT OF TRANSPORTATION
Caltrans
TRAFFIC
FUNCTIONAL SUPERVISOR: ROLAND AU-YEUNG

LAST REVISION 08-24-09
DATE PLOTTED => 14-DEC-2009
TIME PLOTTED => 14:09

BORDER LAST REVISED 4/11/2008
RELATIVE BORDER SCALE IS IN INCHES 0 1 2 3
USERNAME => trlenard
DGN FILE => 416374ob001.dgn
CU 04242
EA 163741

ROADSIDE SIGN QUANTITIES

SHEET No.	SIGN No.	CODE	PANEL SIZE	POST SIZE & LENGTH				ROADSIDE SIGN		REMOVE ROADSIDE SIGN	REMARKS
								ONE POST	TWO POST		
			INCH × INCH	4'' × 4''	4'' × 6''	6'' × 6''	6'' × 8''	EA			
S-1	1	G86 (CA)								1	PRESIDIO,CRISSY FIELD,NEXT LEFT
	2	Spec								1	NO STOPPING OR TURNING
	3	R48 (CA)								1	
	4	R2-1								1	
		R48-1 (CA)									
	5	G8 (CA)								1	EXPLORATORIUM →
	6	W3-3								1	
	7	W3-3								1	
	8	R2-4 (25)(CA)								1	
	9	Spec								1	NO LEFT TURN
		Spec									BIKE SYMBOL
		Spec									NOT A THRU ROUTE FOR WHEELCHAIRS
	10	Spec								1	GOLDEN GATE BRIDGE NO TOLL
	11	Spec								1	BICYCLES,MOTOR DRIVEN CYCLES
	12	Spec								1	NO STOPPING OR TURNING
	13	R2-1 (35)								1	
	14	W9-2 (L↑)								1	
	15	Spec								1	CURVE LANE CLOSED
	16	W9-2 (R↑)								1	
	17	W4-2								1	
	18	Spec								1	NO U TURN
	19	W4-1								2	
	20	W4-2								1	
	21	Spec								1	PEDESTRIAN USE SUBWAY
	22	R-11								1	
		R-11A									
		Spec									DO NOT CROSS ROADWAY
	23	G23 (CA)								1	
	24	M3-1								1	
		G26 (CA)(101)									
	25	G26-1(CA)(101)								1	
		M6-2									
	26	R48-1 (CA)								1	
		R2-1 (45)									
	27	R2-1 (45)								1	
	28	R3-4								1	
	29	R48 (CA)								1	
	30	G86 (CA)								1	EXPLORATORIUM, NEXT LEFT
	31	SG47B(CA) Mod								1	
		Spec									FISHERMAN'S WHARF, USE
	32	Spec								1	TRUCK, BUSES, ↗
	33	Spec								1	NO STOPPING OR TURNING
	34	R18A (CA)								1	
	35	R11								1	
		R11A									
	36	G8 (CA)								1	
	37	R2-1 (35)								1	
	38	W13-2 (25)								1	
		W1-1									
	39	E5-1								1	
	40	R2-1 (35)								1	
		R48-1 (CA)									
	41	G8 (CA)								1	PRESIDIO, CRISSY FIELD ↖
	42	G8 (CA)								1	PRESIDIO →
	43	Spec								1	GOLDEN GATE BRIDGE,NO TOLL
TOTAL										44	

Dist	COUNTY	ROUTE	POST MILES TOTAL PROJECT	SHEET No.	TOTAL SHEETS
04	SF	101	8.2/9.2	146	654

8-11-09
REGISTERED CIVIL ENGINEER DATE

12-14-09
PLANS APPROVAL DATE

REGISTERED PROFESSIONAL ENGINEER
Jerilyn L. Struven
No. 49964
Exp. 12-31-10
CIVIL
STATE OF CALIFORNIA

THE STATE OF CALIFORNIA OR ITS OFFICERS OR AGENTS SHALL NOT BE RESPONSIBLE FOR THE ACCURACY OR COMPLETENESS OF SCANNED COPIES OF THIS PLAN SHEET.

CALIFORNIA STATE FIRE MARSHAL APPROVED

Approval of this plan does not authorize or approve any omission or deviation from applicable regulations. Final approval is subject to field inspection. One set of approved plans shall be available on the project site at all times.

Reviewed by: STEPHEN GUARINO

Approval date: 12-14-09

CALCULATED-DESIGNED BY: UV
CHECKED BY: ULICES VEGA
REVISED BY: LILY TING
DATE REVISED: 8/01/09
FUNCTIONAL SUPERVISOR: ROLAND AU-YEUNG

STATE OF CALIFORNIA - DEPARTMENT OF TRANSPORTATION
TRAFFIC
Caltrans

LAST REVISION DATE PLOTTED => 14-DEC-2009
08-10-09 TIME PLOTTED => 14:09

SIGN QUANTITIES

SQ-1

BORDER LAST REVISED 4/11/2008

RELATIVE BORDER SCALE IS IN INCHES 0 1 2 3

USERNAME => trlenard
DGN FILE => 416374oc001.dgn

CU 04242

EA 163741

Dist	COUNTY	ROUTE	POST MILES TOTAL PROJECT	SHEET No.	TOTAL SHEETS
04	SF	101	8.2/9.2	147	654

8-11-09
REGISTERED CIVIL ENGINEER DATE

Jerilyn L. Struven
No. 49964
Exp. 12-31-10
CIVIL
REGISTERED PROFESSIONAL ENGINEER
STATE OF CALIFORNIA

12-14-09
PLANS APPROVAL DATE

THE STATE OF CALIFORNIA OR ITS OFFICERS OR AGENTS SHALL NOT BE RESPONSIBLE FOR THE ACCURACY OR COMPLETENESS OF SCANNED COPIES OF THIS PLAN SHEET.

CALIFORNIA STATE FIRE MARSHAL APPROVED

Approval of this plan does not authorize or approve any omission or deviation from applicable regulations. Final approval is subject to field inspection. One set of approved plans shall be available on the project site at all times.

Reviewed by: STEPHEN GUARINO

Approval date: 12-14-09

ROADSIDE SIGN QUANTITIES

SHEET No.	SIGN No.	CODE	PANEL SIZE	POST SIZE & LENGTH				ROADSIDE SIGN		REMOVE ROADSIDE SIGN	REMARKS
								ONE POST	TWO POST		
			INCH x INCH	4'' x 4''	4'' x 6''	6'' x 6''	6'' x 8''	EA			
S-2	45	Spec	108 x 108	15'-6''						1	PEDESTRIAN USE SUBWAY →
	46	W4-7 (Lt) Mod								1	
	47	M3-3								1	
		G28-1 (CA)(1)									
		M6-2									
	48	R2-1 (35)								1	
	49	M3-3								1	
		G28-1 (CA)(1)									
	50	W1-1								1	
		W13-1 (20)									
	51	W12-2P								1	
	52	M3-1								1	
		G26-1 (CA)(101)									
	53	G8 (CA)								1	
	54-100	DELETED									
	101	G8 (CA)	48 x 30		14'-0''			1			
	102	R3-4	30 x 30								PAID UNDER ELECTRICAL ITEM
		D3	66 x 18								PAID UNDER ELECTRICAL ITEM
	103	R3-18	30 x 30								PAID UNDER ELECTRICAL ITEM
	104	R61 (CA)	66 x 48		15'-6''				1		
	105	G86 (CA)	84 x 36		15'-6''				1		
	106	W3-3	48 x 48								PAID UNDER ELECTRICAL ITEM
	107	W1-4 L	48 x 48		18'-0''			1			
		W13-1 (25)	30 x 30								
	108	W1-4 L	48 x 48		18'-0''			1			
		W13-1 (25)	30 x 30								
	109	R2-1 (35)	36 x 48		15'-6''			1			
S-3	110	M3-1	24 x 12		13'-6''			1			
		G26-2 (CA)(101)	28 x 24								
	111	R3-4	30 x 30								PAID UNDER ELECTRICAL ITEM
		D3	66 x 18								PAID UNDER ELECTRICAL ITEM
	112	R61 (CA)	30 x 30	13'-0''				1			
	113	W3-3	48 x 48		17'-6''			1			
	114	R5-10a	30 x 36		13'-6''			1			
	115	G78 (CA)	114 x 60			17'-0''			1		
	116	R5-10c	24 x 12	11'-6''				1			
	117	G8 (CA)	60 x 30	13'-0''					1		
	118	R3-7 R	30 x 30	13'-0''				1			
	119	R61 (CA)	48 x 30		14'-0''			1			
	120	G8 (CA)	54 x 30		14'-0''			1			
	121	W3-3	48 x 48		17'-6''			1			
	122	R5-10a	30 x 36	13'-6''				1			
	123	R61 (CA)	48 x 30		14'-0''			1			
S-4	124	G20 (CA)	78 x 36		14'-6''				1		
TOTAL								15	5	9	
TOTAL FROM SHEET SQ-1										44	
GRAND TOTAL								15	5	53	

OVERHEAD SIGN QUANTITIES

SHEET No.	SIGN LETTER ◇	REMOVE SIGN STRUCTURE	REMARKS
		EA	
S-1	A	1	
	B	1	
TOTAL		2	

SIGN QUANTITIES

SQ-2

CALCULATED-DESIGNED BY	ULICES VEGA	UV	8/01/09	LAST REVISION	08-24-09
CHECKED	LILY TING	REVISED BY	DATE REVISED	DATE PLOTTED =>	14-DEC-2009
FUNCTIONAL SUPERVISOR	ROLAND AU-YEUNG			TIME PLOTTED =>	14:09

STATE OF CALIFORNIA - DEPARTMENT OF TRANSPORTATION
TRAFFIC

BORDER LAST REVISED 4/11/2008

RELATIVE BORDER SCALE IS IN INCHES 0 1 2 3

USERNAME => trlenard
DGN FILE => 416374oc002.dgn

CU 04242

EA 163741

Dist	COUNTY	ROUTE	POST MILES TOTAL PROJECT	SHEET No.	TOTAL SHEETS
04	SF	101	8.2/9.2	148	654

REGISTERED CIVIL ENGINEER — 8-11-09 DATE

12-14-09
PLANS APPROVAL DATE

REGISTERED PROFESSIONAL ENGINEER — Jerilyn L. Struven — No. 49964 — Exp. 12-31-10 — CIVIL — STATE OF CALIFORNIA

THE STATE OF CALIFORNIA OR ITS OFFICERS OR AGENTS SHALL NOT BE RESPONSIBLE FOR THE ACCURACY OR COMPLETENESS OF SCANNED COPIES OF THIS PLAN SHEET.

CALIFORNIA STATE FIRE MARSHAL APPROVED

Approval of this plan does not authorize or approve any omission or deviation from applicable regulations. Final approval is subject to field inspection. One set of approved plans shall be available on the project site at all times.

Reviewed by: STEPHEN GUARINO

Approval date: 12-14-09

MATERIAL SUMMARY

SIGN No.	SIGN CODE	SIGN SIZE	No. OF SIGNS	SIGN AREA	SINGLE FACED	DOUBLE FACED	BACKGROUND		LEGEND		PROTECTIVE OVERLAY		ROADSIDE SIGNS								OVERHEAD			DESCRIPTION
													SINGLE SHEET						LAMINATED						
													FRP	FRAMED ALUMINUM		UNFRAMED ALUMINUM									
							SHEETING COLOR	RETROREFLECTIVE ASTM TYPE	SHEETING COLOR	RETROREFLECTIVE ASTM TYPE	STANDARD	PREMIUM	0.134''	0.063''	0.080''	0.063''	0.080''	0.134''	1'' TYPE B	2.6'' TYPE B	2.6'' TYPE H	FORMED	LAMINATED TYPE A	FORMED w/o RSPF	FORMED WITH RSPF	
		INCH x INCH	EA	SQFT									SQFT												
101	G8(CA)	48 x 30	1	10	X		GREEN	III	WHITE	IX		X				10									PRESIDIO →
102,111	R3-4	30 x 30	2	6.25	X		WHITE	III	BLACK/RED	PLAIN/III		X				12.5									
	D3	66 x 18		8.25		X	GREEN	III	WHITE	IX		X					16.5								MARINA Blvd
103	R3-18	30 x 30	1	6.25	X		WHITE	III	BLACK/RED	PLAIN/III		X				6.25									
104	R61(CA)	66 x 48	1	22	X		WHITE	III	BLACK	PLAIN		X		22											
105	G86(CA)	84 x 36	1	21	X		GREEN/WHITE	III/III	WHITE/BLACK	IX/PLAIN		X		21											MARINA Blvd .....NEXT LEFT
106,113,121	W3-3	48 x 48	3	16	X		YELLOW	III	BLACK/RED/GREEN	PLAIN/III/III		X					48								
107,108	W1-4 L	48 x 48	2	16	X		YELLOW	III	BLACK	PLAIN		X					32								
	W13-1(25)	30 x 30		6.25	X		YELLOW	III	BLACK	PLAIN		X				12.5									
109	R2-1(35)	36 x 48	1	12	X		WHITE	III	BLACK	PLAIN		X				12									
110	M3-3	24 x 12	1	2	X		GREEN	III	WHITE	IX		X				2									SOUTH
	G26-2(CA)	28 x 24		4.7	X		WHITE	III	BLACK	PLAIN		X				4.7									101
112	R61(CA)	30 x 30	1	6.25	X		WHITE	III	BLACK	PLAIN		X				6.25									
114,122	R5-10a	30 x 36	2	7.5	X		WHITE	III	BLACK	PLAIN		X				15									
115	G78 (CA)	114 x 60	1	47.5	X		GREEN	III	WHITE	IX		X			47.5										NORTH-101-GOLDEN GATE Br
116	R5-10c	24 x 12	1	2	X		WHITE	III	BLACK	PLAIN		X				2									
117	G8(CA)	60 x 30	1	12.5	X		GREEN	III	WHITE	IX		X		12.5											EXPLORATORIUM →
118	R3-7 R	30 x 30	1	6.25	X		WHITE	III	BLACK	PLAIN		X				6.25									
119	R61(CA)	48 x 30	1	10	X		WHITE	III	BLACK	PLAIN		X				10									
120	G8(CA)	54 x 30	1	11.25	X		GREEN	III	WHITE	IX		X					11.25								MARINA Blvd →
123	R61(CA)	48 x 30	1	10	X		WHITE	III	BLACK	PLAIN		X				10									
124	G20(CA)	78 x 36	1	19.5	X		GREEN	III	WHITE	IX		X		19.5											TRUCKS RV'S-TRAILERS USE
TOTAL														75	47.5	109.5	107.8								

SIGN QUANTITIES
CONTRACTOR FURNISHED SIGNS
SQ-3

CALCULATED-DESIGNED BY: ULICES VEGA
CHECKED BY: LILY TING
REVISED BY: UV — DATE REVISED: 8/01/09
FUNCTIONAL SUPERVISOR: ROLAND AU-YEUNG

STATE OF CALIFORNIA - DEPARTMENT OF TRANSPORTATION
Caltrans®
TRAFFIC

LAST REVISION — DATE PLOTTED => 14-DEC-2009 — TIME PLOTTED => 14:09
08-24-09

BORDER LAST REVISED 4/11/2008

RELATIVE BORDER SCALE IS IN INCHES 0 1 2 3

USERNAME => trienard
DGN FILE => 416374oc003.dgn

CU 04242

EA 163741

RETAINING WALL

STATION	CHAIN LINK FENCE (TYPE CL-6)	3'' SLOTTED PLASTIC PIPE	BAR REINFORCING STEEL (RETAINING WALL)	STRUCTURE EXCAVATION (RETAINING WALL)	STRUCTURE BACKFILL (RETAINING WALL)	CONCRETE PAVEMENT	STRUCTURAL CONCRETE RETAINING WALL	GEOMEMBRANE (GASOLINE RESISTANT)	ROCK SLOPE PROTECTION FABRIC (TYPE A)	CHAIN LINK GATE
	LF		LB	CY				SQYD		EA
D 79+46 TO 85+87		700	115000	1400	420	930	980	11000	5630	
FROM RETAINING WALL AND SIDEWALK PLAN, R-2	70		8300	218	174		100			2
TOTAL	70	700	123300	1618	594	930	1080	11000	5630	2

CALIFORNIA STATE FIRE MARSHAL APPROVED
Approval of this plan does not authorize or approve any omission or deviation from applicable regulations. Final approval is subject to field inspection. One set of approved plans shall be available on the project site at all times.
Reviewed by: STEPHEN GUARINO
Approval date: 12-14-09

Dist	COUNTY	ROUTE	POST MILES TOTAL PROJECT	SHEET No.	TOTAL SHEETS
04	SF	101	8.2/9.2	149	654

REGISTERED CIVIL ENGINEER — 8-10-09 DATE
12-14-09 PLANS APPROVAL DATE
Hossein Khodabakhsh, No. 71650, Exp. 12-31-09, CIVIL, REGISTERED PROFESSIONAL ENGINEER, STATE OF CALIFORNIA
THE STATE OF CALIFORNIA OR ITS OFFICERS OR AGENTS SHALL NOT BE RESPONSIBLE FOR THE ACCURACY OR COMPLETENESS OF SCANNED COPIES OF THIS PLAN SHEET.

BRIDGE RAILING

STATION	LOCATION	CALIFORNIA ST-10 BRIDGE RAIL (Mod)	CALIFORNIA ST-10 BRIDGE RAIL (COLOR) (N)
		LF	
SB 64+82 TO 66+80	Rt	198	INTERNATIONAL ORANGE
SB 71+58 TO 75+78	Rt	420	INTERNATIONAL ORANGE
SB 86+14 TO 87+21	Lt	107	INTERNATIONAL ORANGE
SB 86+14 TO 87+21	Rt	107	INTERNATIONAL ORANGE
TOTAL		832	

(N) NOT A SEPARATE PAY ITEM. FOR INFORMATION ONLY.

STATION	FILTER FABRIC
	SQYD
MN 52+50 TO 59+80	10580
DN 50+30 TO 67+34	35240
D 67+34 TO 79+46	26670
D 79+46 TO 85+87	11200
TOTAL	83690

MINOR CONCRETE

STATION	LOCATION	CURB	SIDE WALK	CURB SIDEWALK AND CURB RAMP	MISCELLANEOUS	CURB RAMP CASE E (N)
		CY				EA
DN 48+00 TO 57+16	Med	52			19	
LI2 10+00 TO 12+19	Lt			14		
LI2 10+00 TO 21+36	Rt			63		
LI2 12+65 TO 21+36	Lt			77		
SL 18+05 TO 29+65	Lt			33		
SL 18+05 TO 29+65	Rt			166		
LI2 12+00	Rt					1
LI2 21+08	Lt					1
LI2 21+08	Rt					1
SL 19+85	Rt					1
FROM RETAINING WALL AND SIDEWALK PLAN, R-2			17			
TOTAL		52	17	353	19	4

(N) NOT A SEPARATE PAY ITEM. FOR INFORMATION ONLY.

ROADWAY QUANTITIES

STATION	ROADWAY EXCAVATION	EMBANKMENT (N)	IMPORTED BORROW	IMPORTED BORROW (LIGHTWEIGHT AGGREGATE)	LIGHT WEIGHT FILL (EPS BLOCKS)	IMPORTED TOPSOIL	CONTINUOUSLY REINFORCED CONCRETE PAVEMENT	CLASS 3 AGGREGATE BASE	CLASS 3 AGGREGATE SUBBASE	CLASS 4 AGGREGATE SUBBASE	LEAN CONCRETE BASE	ASPHALT TREATED PERMEABLE BASE	CRCP (TERMINAL JOINT, TYPE E)	CRCP (EXPANSION JOINT)	CRCP (PAVEMENT ANCHOR)	CRCP (TERMINAL JOINT, TYPE C)	PAVEMENT REINFORCING FABRIC	GRIND EXISTING CONCRETE PAVEMENT (PAVEMENT CONFORM)	COLD PLANE ASPHALT CONCRETE PAVEMENT (0.20' Max)	PAVING ASPHALT (BINDER-PAVEMENT REINFORCING FABRIC)	TACK COAT	HMA
	CY												LF				SQYD				TON	
SB 64+82 TO 66+80	4340	950	950			51	360			270											1.1	390
SB 66+80 TO 71+58	4960	14000	14000			329	490	730		370							2200	235		3	2.3	1030
SB 71+58 TO 75+78	16200	8590	8590			200	870			650											2.1	840
SB 75+78 TO 86+14		7600	7600																			
SB 86+14 TO 86+62	280	180	180			47	100			75											0.3	100
SB 66+80 TO 71+58																522						
SB 64+82														60								
SB 75+78														60								
SB 86+14														60								
SB 87+21													60									
SB 64+98															60							
SB 65+15															60							
SB 75+45															60							
SB 75+62															60							
DN 48+00 TO 50+30																			2130		1.1	300
DN 50+30 TO 67+34	3980	1530		1530				6580													10.8	5300
D 67+34 TO 79+46	330	5800		5800				4550													8.9	4320
D 79+46 TO 85+87	25	13180			13180							550									4.4	2340
MN 52+50 TO 59+80	280	3480		3480				2110													3.2	1610
LI2 10+00 TO 21+36	980							170		890	330										3.6	1460
SL 18+05 TO 29+66	1330									370	1180										3.5	1610
MUT 10+00 TO 12+57	130							40													0.5	80
Exist SF 101 ON-RAMP, DN 56+00 TO 64+80	4080																					
Exist SF 101 OFF-RAMP, 30'Lt DN 55+50 TO 150'Lt DN 62+80	3830																					
Exist RICHARSON Ave TO GORGAS Ave RAMP, 90'Lt DN 59+00 TO 200'Lt DN 33+30	1030																					
Exist MARINA Blvd, 26'Lt MN 55+20 TO 85'Rt 57+90	2160																					
SUB TOTAL	43935	55310	31320	10810	13180	627	1820	14180		2625	1510	550	60	180	240	522	2200	235	2130	3	41.8	19380
FROM RETAINING WALL AND SIDEWALK PLAN R-2	528								20													
TOTAL	44463	55310	31320	10810	13180	627	1820	14180	20	2625	1510	550	60	180	240	522	2200	235	2130	3	41.8	19380

(N) NOT A SEPARATE PAY ITEM. FOR INFORMATION ONLY.

SUMMARY OF QUANTITIES
Q-1

REVISED BY	RD		
DATE REVISED	8/01/09		
CALCULATED-DESIGNED BY	ROGER DUAN BAHMAN MAHDARIAN		
CHECKED BY	MOHAMMAD G. SAHIBZADAH		
FUNCTIONAL SUPERVISOR	ABOLFAZL EMADZADEH		

STATE OF CALIFORNIA - DEPARTMENT OF TRANSPORTATION
DESIGN
Gutans®

LAST REVISION: DATE PLOTTED => 14-DEC-2009, TIME PLOTTED => 14:09, 11-16-09

BORDER LAST REVISED 4/11/2008 | RELATIVE BORDER SCALE IS IN INCHES 0 1 2 3 | USERNAME => trienard, DGN FILE => 416374pa001.dgn | CU 04242 | EA 163741

Dist	COUNTY	ROUTE	POST MILES TOTAL PROJECT	SHEET No.	TOTAL SHEETS
04	SF	101	8.2/9.2	150	654

8-10-09
REGISTERED CIVIL ENGINEER DATE

12-14-09
PLANS APPROVAL DATE

Hossein Khodabakhsh No. 71650 Exp. 12-31-09 CIVIL — REGISTERED PROFESSIONAL ENGINEER — STATE OF CALIFORNIA

THE STATE OF CALIFORNIA OR ITS OFFICERS OR AGENTS SHALL NOT BE RESPONSIBLE FOR THE ACCURACY OR COMPLETENESS OF SCANNED COPIES OF THIS PLAN SHEET.

CALIFORNIA STATE FIRE MARSHAL APPROVED
Approval of this plan does not authorize or approve any omission or deviation from applicable regulations. Final approval is subject to field inspection. One set of approved plans shall be available on the project site at all times.
Reviewed by: STEPHEN GUARINO
Approval date: 12-14-09

CONFINEMENT SYSTEM

SHEET No.	STATION	LOCATION	ROCK AGGREGATE (N)	PLASTIC CONFINEMENT SYSTEM (N)	PAVEMENT REINFORCING FABRIC (N)	CONFINEMENT SYSTEM
			CY	SQFT		SQYD
L-2	SB 87+22 TO 88+28	Rt	26	4105	4105	457
TOTAL			26	4105	4105	457

(N) = NOT A SEPARATE PAY ITEM. FOR INFORMATION ONLY.

TEMPORARY FENCE (ESA)

SHEET No.	STATION	LOCATION	LF
L-1	SB 62+95 TO 64+24	Rt	278
L-2	SB 76+56 TO 78+05	Rt	194
L-2	SB 76+11 TO 79+00	Lt	797
DE-1	DS 50+38 TO 56+31	Lt	672
DE-2	DS 56+51 TO 61+00	Lt	643
DE-2	MN 52+47 TO 54+13	Rt	159
DE-2	DS 61+12 TO 63+68	Rt	407
DE-3	D 70+88 TO 72+95	Lt	357
DE-3	D 79+69 TO 80+46	Lt	153
TOTAL			3660

VERTICAL ESA (N)

SHEET No.	STATION	LOCATION	LF
L-2	SB 87+22 TO 88+28	Rt	343
TOTAL			343

(N) NOT A SEPARATE PAY ITEM. FOR INFORMATION ONLY.

TEMPORARY CHAIN LINK FENCE (TYPE CL-6, SLATTED)

SHEET No.	STATION	LF
DE-1	DN 51+37 TO 56+50	1792
DE-2	DN 56+50 TO 67+38	3526
DE-3	D 67+38 TO 80+45	4500
L-1	SB 71+58 TO 75+50	3485
L-2	SB 75+50 TO 88+72	3428
TOTAL		16731

IRRIGATION CROSSOVERS

LOCATION		SIDE		CONDUIT TYPE ③		(N) WATER LINE CROSSOVER	(N) SPRINKLER CONTROL CROSSOVER
LINE	STATION	Rt	Lt	SIZE (INCH) 8 LENGTH (LF)		SIZE (INCH)	SIZE (INCH)
SB	65+10	X	X	67	——	3	2
SB	70+00	X	X	72	——	3	2
SB	75+00	X	X	63	——	3	2
LI2	16+50	X	X	16	——	3	2
LI2	18+00	X	X	16	——	3	2
TOTAL				234			

(N) - NOT A SEPARATE PAY ITEM. FOR INFORMATION ONLY.
X - DENOTES REQUIREMENT

CONDUIT TYPE
(APPLICABLE WHEN CIRCLED BELOW AND SHOWN UNDER THE 'CONDUIT TYPE' COLUMN HEADING)

① BITUMINOUS COATED CORRUGATED STEEL PIPE (0.064 INCH THICK)
② CORRUGATED STEEL PIPE (0.064 INCH THICK)
③ CORRUGATED HIGH DENSITY POLYETHYLENE PIPE
④ WELDED STEEL PIPE

TEMPORARY FENCE (TYPE CL-6)

SHEET No.	AREA	LF
C-5	C	2079
	D	1110
	H	2047
	I	2603
	J	3704
	AREA	1755
	F, G, L	1497
	N	600
	O	522
	B	1170
	K	501
	M	660
	P	1769
	E	298
TOTAL		20315

SUMMARY OF QUANTITIES

Q-2

REVISED BY	DATE REVISED
RD	8/01/09

CALCULATED-DESIGNED BY: GINA CHOI
CHECKED BY: MOHAMMAD G. SAHIBZADAH
FUNCTIONAL SUPERVISOR: ABOLFAZL EMADZADEH

STATE OF CALIFORNIA - DEPARTMENT OF TRANSPORTATION
DESIGN

LAST REVISION | DATE PLOTTED => 14-DEC-2009
11-16-09 | TIME PLOTTED => 14:09

BORDER LAST REVISED 4/11/2008

RELATIVE BORDER SCALE IS IN INCHES 0 1 2 3

USERNAME => trienard
DGN FILE => 416374pa002.dgn

CU 04242

EA 163741

Dist	COUNTY	ROUTE	POST MILES TOTAL PROJECT	SHEET No.	TOTAL SHEETS
04	SF	101	8.2/9.2	151	654

8-10-09
REGISTERED CIVIL ENGINEER DATE

Hossein Khodabakhsh No. 71650 Exp. 12-31-09 CIVIL — REGISTERED PROFESSIONAL ENGINEER — STATE OF CALIFORNIA

12-14-09
PLANS APPROVAL DATE

THE STATE OF CALIFORNIA OR ITS OFFICERS OR AGENTS SHALL NOT BE RESPONSIBLE FOR THE ACCURACY OR COMPLETENESS OF SCANNED COPIES OF THIS PLAN SHEET.

CALIFORNIA STATE FIRE MARSHAL APPROVED
Approval of this plan does not authorize or approve any omission or deviation from applicable regulations. Final approval is subject to field inspection. One set of approved plans shall be available on the project site at all times.
Reviewed by: STEPHEN GUARINO
Approval date: 12-14-09

TEMPORARY RAILING AND TRAFFIC SCREEN

SHEET No.	LOCATION	TEMPORARY RAILING (TYPE K)	TEMPORARY TRAFFIC SCREEN
		LF	
SC-1, SC-2	50′ Rt DN 49+50 TO 25′ Lt DN 60+20	1070	1070
SC-4, SC-5	Lt Exist SF 101, SB 70+50 TO 83+00	1250	1250
SC-2	40′ Lt MS 55+90 TO 30′ Rt MS 57+60	170	
SC-9	SB 64+50	80	
SC-9	SB 75+00	80	
TOTAL		2650	2320

CONCRETE BARRIER

SHEET No.	STATION	LOCATION	CONCRETE BARRIER (TYPE K)
			LF
DE-1, DE-2	DN 52+35 TO 67+34	Lt	1499
DE-1, DE-2	DN 49+50 TO 67+34	Rt	1784
DE-3, DE-4	D 67+34 TO 87+30	Lt	1996
DE-3, DE-4	D 67+34 TO 89+22	Rt	2188
DE-2	MN 52+50 TO 59+00	Lt	650
DE-2	MN 52+50 TO 59+00	Rt	650
L-4	SL 23+00 TO 26+30	Rt	330
TOTAL			9097

BARRICADES

SHEET No.	LOCATION	TYPE III BARRICADE
		EA
SC-2, SC-3	MARSHALL St 130′ Rt DN 67+30	8
SC-2, SC-3	GORGAS Ave 160′ Lt DN 67+30	8
SC-3	VALLEJO St 50′ Rt D 72+10	8
SC-4	LINCOLN Blvd 90′ Lt SB 65+20	18
SC-4	MONTGOMERY St 100′ Lt SB 65+80	6
SC-4	TAYLOR Rd 110′ Lt SB 68+20	8
SC-4	RILEY Ave 85′ Lt SB 72+40	8
SC-5	LINCOLN Blvd 85′ Lt SB 82+20	6
SC-5	LINCOLN Blvd 125′ Lt SB 85+50	8
SC-5	LINCOLN Blvd 110′ Lt SB 76+00	12
SC-5	LINCOLN Blvd 110′ Lt SB 76+50	8
SC-5	CRISSY FIELD Ave SB 87+60	8
SC-5	LINCOLN Blvd/PARK Blvd	8
SC-6	SB 33+50	12
SC-7	MN 52+50	12
SC-8	HALLECK St 140′ Lt D 71+80	12
SC-8	HALLECK St 150′ Rt D 71+80	12
SC-14	60′ Rt A 76+50	8
SC-14	60′ Rt A 77+00	8
SC-14	120′ Rt DN 67+20	8
SC-15	HALLECK St 140′ Lt D 71+80	12
SC-17	SL 19+00	8
SC-17	20′ Lt SL 19+50	12
TOTAL		218

QUICKCHANGE MOVEABLE BARRIER SYSTEM

LOCATION	QUICKCHANGE MOVABLE BARRIER (N)	ABSORB 350 CRASH CUSHION (N)	QMB MACHINE (N)
	LF	EA	
DN 59+80 TO D 89+22	2942		1
SB 71+58 TO 112+00	4042		1
DN 59+80		1	
SB 112+00		1	
TOTAL	6984	2	2

(N) NOT A SEPARATE PAY ITEM, FOR INFORMATION ONLY.

EXISTING MAN-MADE REMOVAL

SHEET No.	LOCATION	REMOVE FENCE	REMOVE RETAINING WALL (PORTION)	REMOVE BARRIER	REMOVE CRASH CUSHION
		LF			EA
DE-1, DE-2	30′ Rt DN 50+30 TO 20′ Rt DN 63+40	1270		1270	
DE-2	20′ Rt DN 63+40 TO 45′ Rt DN 64+57	130	130		
DE-1, DE-2	37′ Lt DN 50+30 TO 170′ Lt DN 61+20	1000		1000	
DE-2	170′ Lt DN 61+20 TO 180′ Lt 62+55	100	100		
DE-2	65′ Lt DN 57+13 TO 150′ Lt DN 61+20	310		310	
DE-2	150′ Lt DN 61+20 TO 140′ Lt DN 62+55	120	120		
DE-2	100′ Lt DN 58+10 TO 230′ Lt DN 66+34	720			
DE-2	90′ Lt DN 60+60 TO 200′ Lt DN 66+34	570			
DE-2	90′ Lt DN 60+60 TO 15′ Lt DN 63+40	280		280	
DE-2	15′ Lt DN 63+40 TO 15′ Rt DN 64+64	130	130		
DE-2	30′ Rt MN 52+35 TO 60′ Rt MN 56+00	350		350	
DE-2	60′ Rt MN 56+00 TO 143′ Rt MN 57+51	200	200		
DE-2	45′ Lt MN 52+83 TO 85′ Rt MN 57+83	590		590	
DE-2	16′ Lt MN 56+16 TO 50′ Rt MN 57+50		140		
DE-2	50′ Lt DN 57+10				1
DE-2	90′ Lt DN 60+50				1
TOTAL		5770	820	3800	2

RAILING AND TERMINAL SYSTEM

SHEET No.	LOCATION	TRANSITION RAILING (TYPE WB)	ALTERNATIVE IN LINE TERMINAL SYSTEM
		EA	
L-4	Rt SL 22+75	1	
L-4	Rt SL 22+50		1
L-4	Rt SL 26+30	1	
L-4	Rt SL 26+55		1
TOTAL		2	2

SUMMARY OF QUANTITIES

Q-3

REVISED BY	DATE REVISED
RD	8/01/09

CALCULATED-DESIGNED BY	CHECKED BY
ROGER DUAN	ROGER DAYOAN

FUNCTIONAL SUPERVISOR: ABOLFAZL EMADZADEH

STATE OF CALIFORNIA - DEPARTMENT OF TRANSPORTATION — DESIGN — Caltrans

LAST REVISION 11-17-09 | DATE PLOTTED => 14-DEC-2009 | TIME PLOTTED => 14:09

BORDER LAST REVISED 4/11/2008 | RELATIVE BORDER SCALE IS IN INCHES 0 1 2 3 | USERNAME => trlenard | DGN FILE => 416374pa003.dgn | CU 04242 | EA 163741

Dist	COUNTY	ROUTE	POST MILES TOTAL PROJECT	SHEET No.	TOTAL SHEETS
04	SF	101	8.2/9.2	152	654

REGISTERED CIVIL ENGINEER — 8-10-09 DATE

12-14-09
PLANS APPROVAL DATE

Hossein Khodabakhsh No. 71650 Exp. 12-31-09 CIVIL — REGISTERED PROFESSIONAL ENGINEER — STATE OF CALIFORNIA

THE STATE OF CALIFORNIA OR ITS OFFICERS OR AGENTS SHALL NOT BE RESPONSIBLE FOR THE ACCURACY OR COMPLETENESS OF SCANNED COPIES OF THIS PLAN SHEET.

CALIFORNIA STATE FIRE MARSHAL APPROVED
Approval of this plan does not authorize or approve any omission or deviation from applicable regulations. Final approval is subject to field inspection. One set of approved plans shall be available on the project site at all times.
Reviewed by: STEPHEN GUARINO
Approval date: 12-14-09

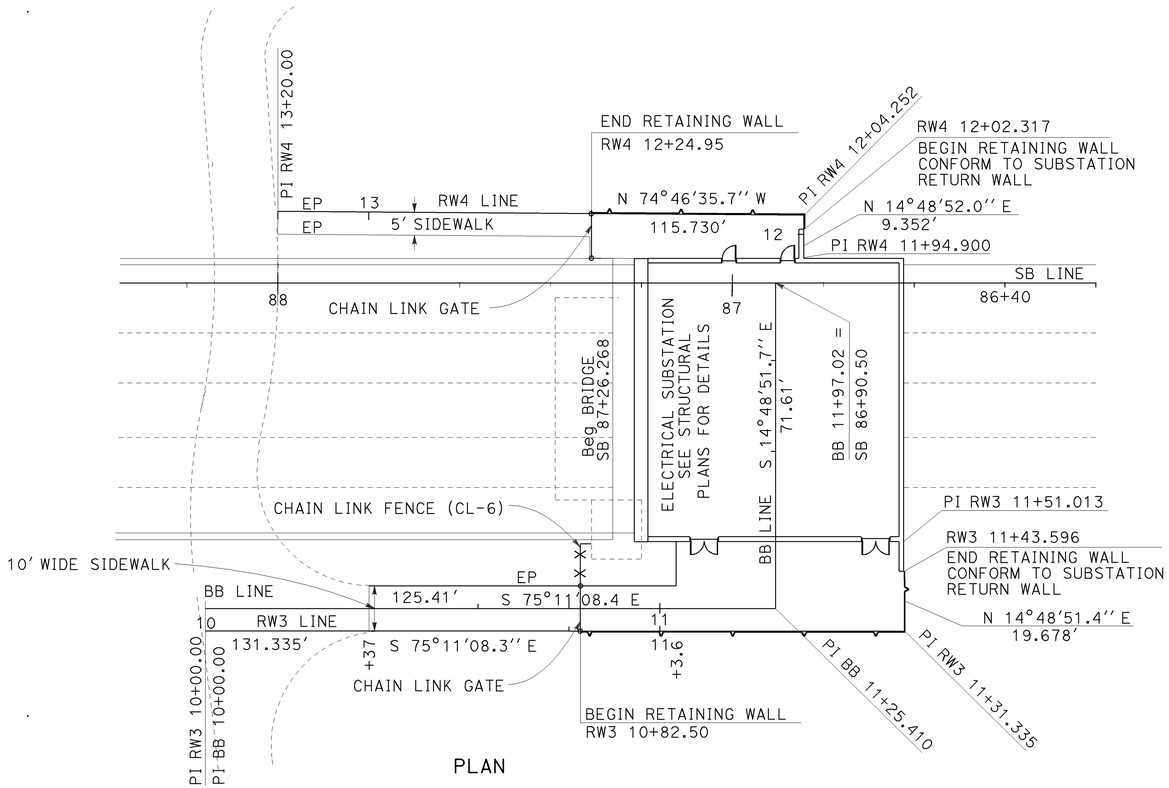

PLAN

LEGEND:

XX-X / X-X — Std PLAN SHEET / DETAIL No.

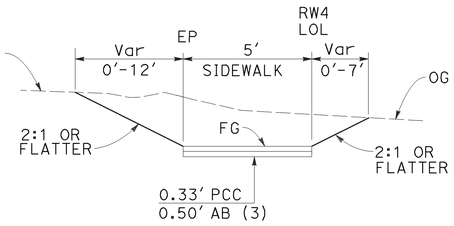

TYPICAL SECTION
SIDEWALK
RW4 12+51.00 TO 13+20.00

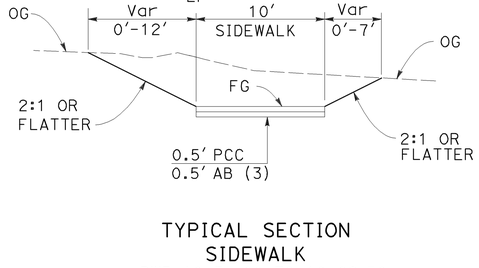

TYPICAL SECTION
SIDEWALK
RW3 10+35.00 TO 10+82.50

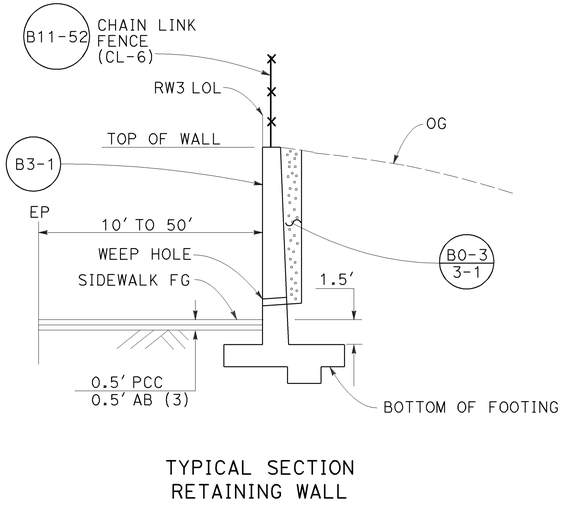

TYPICAL SECTION
RETAINING WALL
RW3 10+82.50 TO 11+43.596

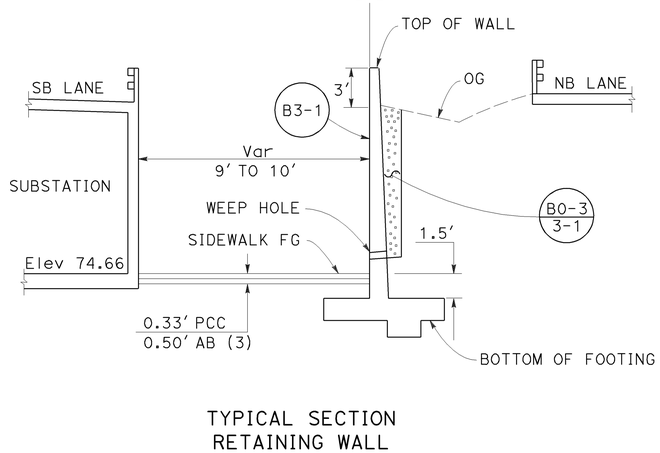

TYPICAL SECTION
RETAINING WALL
RW4 12+02.317 TO 12+51.00

RETAINING WALL AND SIDEWALK PLAN

NO SCALE

R-1

STATE OF CALIFORNIA - DEPARTMENT OF TRANSPORTATION — DESIGN

CALCULATED-DESIGNED BY	CHECKED BY	FUNCTIONAL SUPERVISOR	REVISED BY	DATE REVISED
MOHAMMAD G. SAHIBZADAH	HOSSEIN KHODABAKHSH	ABOLFAZL EMADZADEH	MS	8/01/09

LAST REVISION — DATE PLOTTED => 14-DEC-2009 — TIME PLOTTED => 14:10
09-14-09

BORDER LAST REVISED 4/11/2008 — RELATIVE BORDER SCALE IS IN INCHES (0 1 2 3) — USERNAME => trlenard — DGN FILE => 416374qa001.dgn — CU 04242 — EA 163741

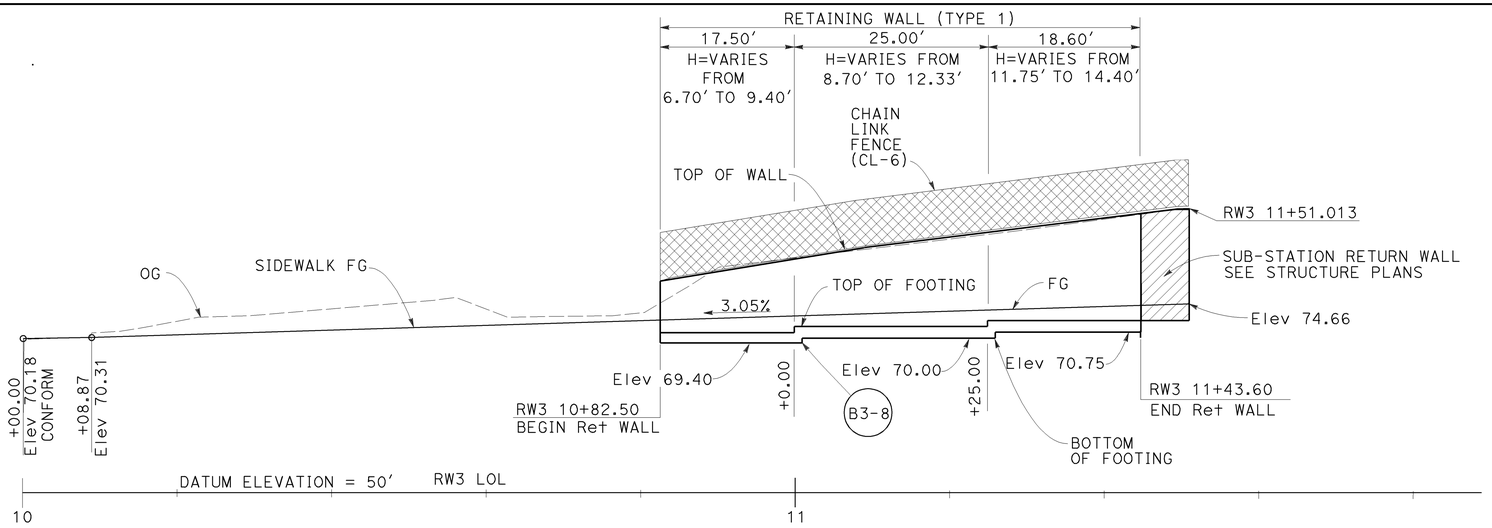

ELEVATION

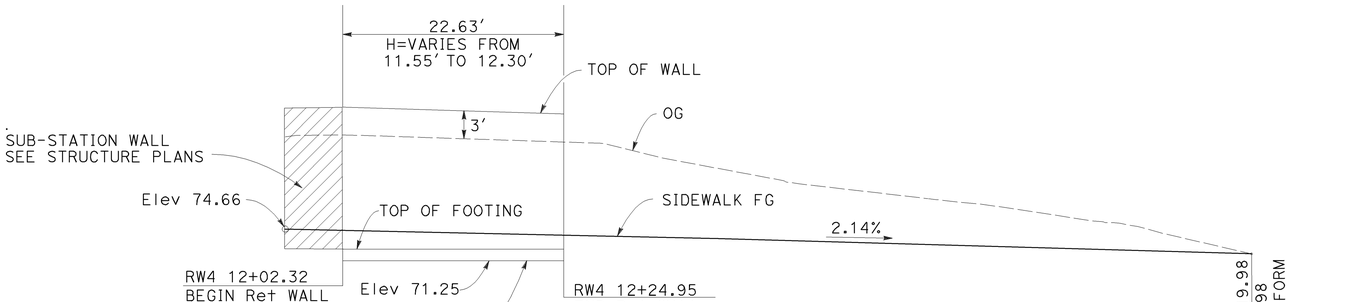

RETAINING WALL QUANTITIES

LOCATION AT SUBSTATION	ROADWAY EXCAVATION	STRUCTURE EXCAVATION (RETAINING WALL)	STRUCTURE BACKFILL (RETAINING WALL)	CLASS 3 AGGREGATE SUBBASE	STRUCTURE CONCRETE (RETAINING WALL)	BAR REINFORCING STEEL (RETAINING WALL)	MINOR CONCRETE (SIDEWALK)	CHAIN LINK FENCE (TYPE CL-6)	CHAIN LINK GATE
	CY					LB	CY	LF	EACH
SOUTH SIDE-(RW3)	300	140	112	13	70	6000	13	70	1
NORTH SIDE-(RW4)	228	78	62	6.4	30	2300	4		1
TOTAL	528	218	174	19.4	100	8300	17	70	2

Dist	COUNTY	ROUTE	POST MILES TOTAL PROJECT	SHEET No.	TOTAL SHEETS
04	SF	101	8.2/9.2	153	654

8-10-09
REGISTERED CIVIL ENGINEER DATE

Hossein Khodabakhsh No. 71650 Exp. 12-31-09 CIVIL
REGISTERED PROFESSIONAL ENGINEER STATE OF CALIFORNIA

12-14-09
PLANS APPROVAL DATE

THE STATE OF CALIFORNIA OR ITS OFFICERS OR AGENTS SHALL NOT BE RESPONSIBLE FOR THE ACCURACY OR COMPLETENESS OF SCANNED COPIES OF THIS PLAN SHEET.

CALIFORNIA STATE FIRE MARSHAL APPROVED
Approval of this plan does not authorize or approve any omission or deviation from applicable regulations. Final approval is subject to field inspection. One set of approved plans shall be available on the project site at all times.
Reviewed by: STEPHEN GUARINO
Approval date: 12-14-09

RETAINING WALL AND SIDEWALK PLAN

NO SCALE

THIS PLAN ACCURATE FOR RETAINING WALL WORK ONLY

R-2

STATE OF CALIFORNIA - DEPARTMENT OF TRANSPORTATION
DESIGN
FUNCTIONAL SUPERVISOR: ABOLFAZL EMADZADEH
CALCULATED-DESIGNED BY: BAHMAN MAHDARIAN
CHECKED BY: MOHAMMAD G. SAHIBZADAH
REVISED BY: BM
DATE REVISED: 8/01/09

LAST REVISION | DATE PLOTTED => 14-DEC-2009
09-18-09 | TIME PLOTTED => 14:10

BORDER LAST REVISED 4/11/2008
RELATIVE BORDER SCALE IS IN INCHES 0 1 2 3
USERNAME => trienard
DGN FILE => 416374qa002.dgn
CU 04242
EA 163741

Dist	COUNTY	ROUTE	POST MILES TOTAL PROJECT	SHEET No.	TOTAL SHEETS
04	SF	101	8.2/9.2	154	654

CALIFORNIA STATE FIRE MARSHAL APPROVED
Approval of this plan does not authorize or approve any omission or deviation from applicable regulations. Final approval is subject to field inspection. One set of approved plans shall be available on the project site at all times.
Reviewed by: STEPHEN GUARINO
Approval date: 12-14-09

REGISTERED CIVIL ENGINEER — 8-10-09 DATE
Hossein Khodabakhsh, No. 71650, Exp. 12-31-09, CIVIL — REGISTERED PROFESSIONAL ENGINEER — STATE OF CALIFORNIA
12-14-09
PLANS APPROVAL DATE

THE STATE OF CALIFORNIA OR ITS OFFICERS OR AGENTS SHALL NOT BE RESPONSIBLE FOR THE ACCURACY OR COMPLETENESS OF SCANNED COPIES OF THIS PLAN SHEET.

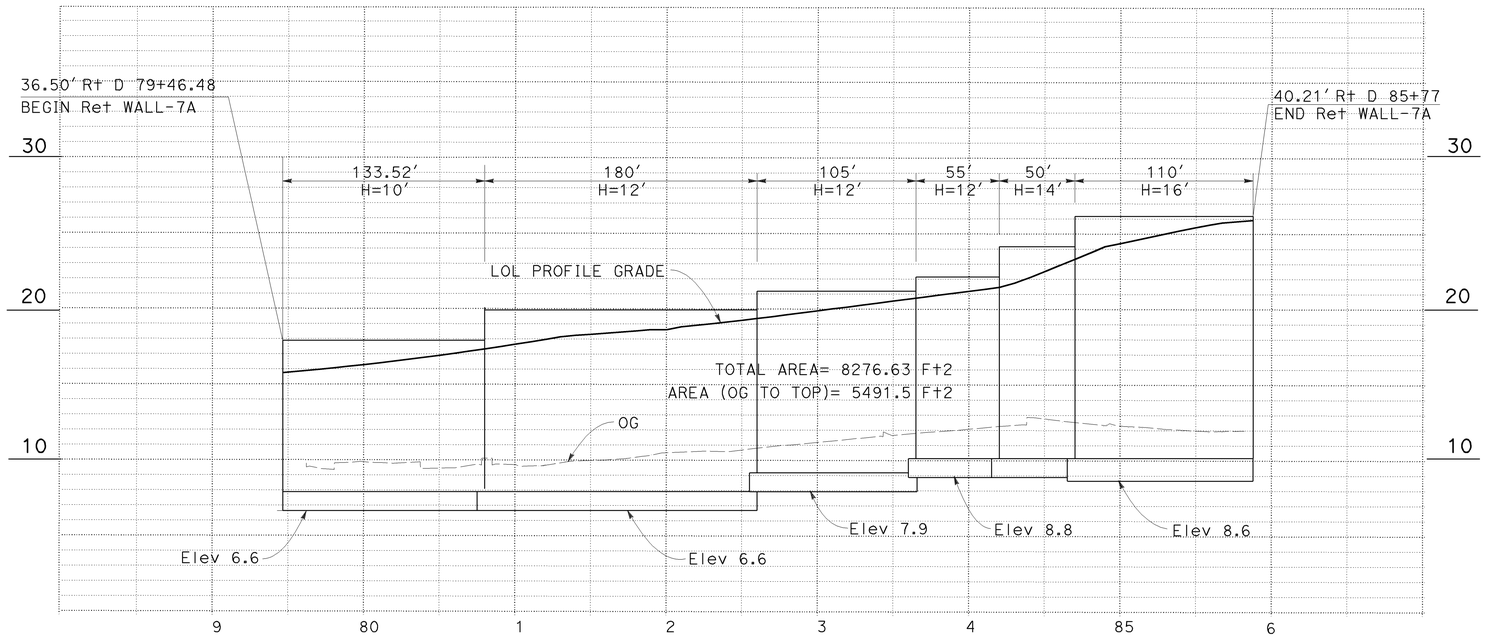

PART DEVELOPED ELEVATION
RETAINING WALL TYPE 5SW
SCALE: 1'' = 100' HORIZONTAL
1'' = 5' VERTICAL

CURVE DATA "RW 7A"

R	Δ	T	L
1086.49'	14° 33' 27''	138.77'	276.05'

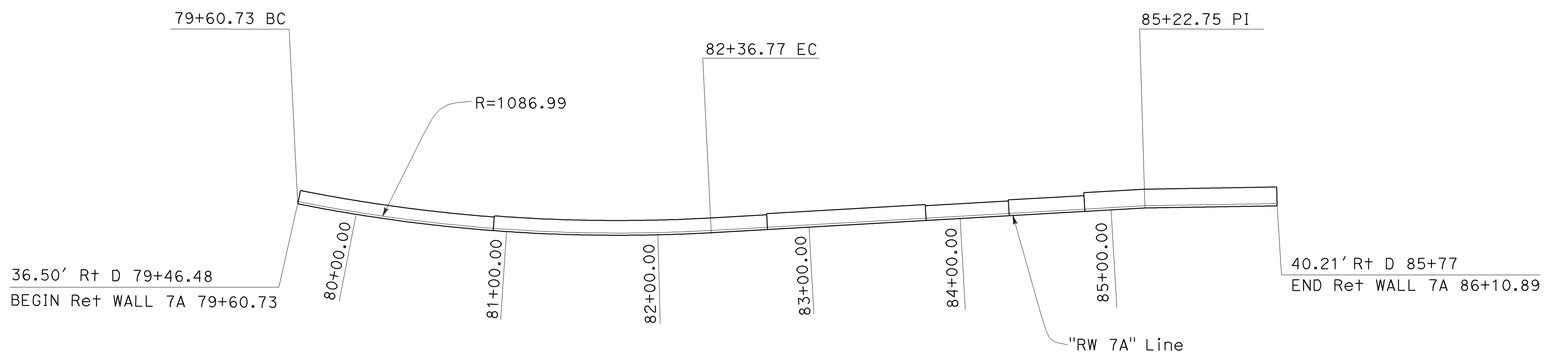

PLAN
RETAINING WALL TYPE 5SW

NOTES:

1. STANDARD RETAINING WALL TYPE 5SW WITHOUT BARRIER AND SOUNDWALL
2. 2''Ø WEEPHOLE AT 24' OC @ 6'' ABOVE O.G.

RETAINING WALL RW-7A

SCALE AS SHOWN

THIS PLAN ACCURATE FOR RETAINING WALL WORK ONLY

R-3

REVISED BY	DATE REVISED
CS	8/01/09

CALCULATED-DESIGNED BY: CARLOS SANDOVAL
CHECKED BY: ROGER DAYOAN
FUNCTIONAL SUPERVISOR: ABOLFAZL EMADZADEH

STATE OF CALIFORNIA - DEPARTMENT OF TRANSPORTATION
DESIGN

LAST REVISION: DATE PLOTTED => 14-DEC-2009 08-29-09 TIME PLOTTED => 14:10

BORDER LAST REVISED 4/11/2008
RELATIVE BORDER SCALE IS IN INCHES 0 1 2 3
USERNAME => trlenard
DGN FILE => 416374qa003.dgn
CU 04242
EA 163741

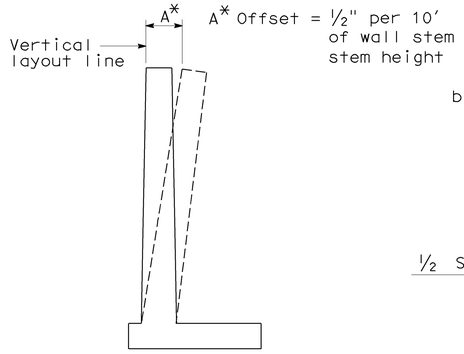

WALL OFFSET

NO SCALE

Values for offsetting forms to be determined by the engineer

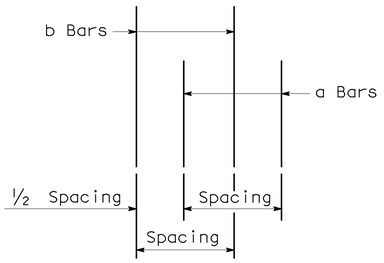

DETAIL A

NO SCALE

CALIFORNIA STATE FIRE MARSHAL APPROVED

Approval of this plan does not authorize or approve any omission or deviation from applicable regulations. Final approval is subject to field inspection. One set of approved plans shall be available on the project site at all times.

Reviewed by: STEPHEN GUARINO

Approval date: 12-14-09

DIST.	COUNTY	ROUTE	POST MILES TOTAL PROJECT	SHEET NO.	TOTAL SHEETS
04	SF	101	8.2/9.2	155	654

Philip E Lutz 8-12-09
REGISTERED ENGINEER - CIVIL

12-14-09
PLANS APPROVAL DATE

REGISTERED PROFESSIONAL ENGINEER — PHILIP E. LUTZ — No. C55839 — Exp. 12-31-10 — CIVIL — STATE OF CALIFORNIA

The State of California or its officers or agents shall not be responsible for the accuracy or completeness of electronic copies of this plan sheet.

ALTERNATIVE A : (CONSTANT TOP OF WALL THICKNESS) TABLE OF REINFORCING STEEL DIMENSIONS AND DATA

DESIGN H	6′	8′	10′	12′	14′	16′	18′	20′	22′	24′	26′	28′	30′	32′
W	8′-6"	8′-6"	9′-3"	10′-0"	11′-3"	12′-3"	13′-3"	14′-6"	15′-9"	17′-0"	18′-6"	20′-0"	21′-3"	22′-9"
F SPREAD FTG.	1′-3"	1′-3"	1′-3"	1′-6"	1′-6"	1′-9"	2′-0"	2′-0"	2′-3"	2′-6"	3′-0"	3′-3"	3′-9"	4′-0"
BATTER	0	½:12	½:12	½:12	½:12	½:12	½:12	½:12	½:12	⅝:12	¾:12	⅞:12	1:12	1:12
STEM THICKNESS @ TOP	1′-0"	1′-0"	1′-0"	1′-0"	1′-0"	1′-0"	1′-0"	1′-0"	1′-0"	1′-0"	1′-0"	1′-0"	1′-0"	1′-0"
a BARS				#6@18 XX	#7@18 XX	#8@18 XX	#9@18 XX	#10@18 XX	#8 @ 9 X	#8 @ 9 X	#7 @ 6 X	#10@12 XX	#9 @ 9 X	#11@12 XX
Y				8′-0"	6′-6"	7′-6"	8′-0"	9′-0"	9′-6"	11′-0"	11′-6"	13′-0"	14′-0"	15′-6"
b BARS	#5 @ 12	#5 @ 12	#5 @ 9	#6@18 XX	#7@18 XX	#8@18 XX	#9@18 XX	#10@18 XX	#8 @ 9 X	#8 @ 9 X	#7 @ 6 X	#10@12 XX	#9 @ 9 X	#11@12 XX
Y	CONT	CONT	CONT	CONT	10′-6"	13′-0"	15′-0"	17′-6"	19′-6"	21′-0"	18′-6"	19′-0"	25′-6"	23′-6"
c BARS					#6 @ 18	#6 @ 18	#6 @ 18	#6 @ 18	#6 @ 18	#6 @ 18	#6 @ 12	#7 @ 12	#7 @ 18	#7 @ 12
SHORT d BARS	#5 @ 12	#5 @ 9	#6 @ 9	#7@18 XX	#8@18 XX	#8@18 XX	#9@18 XX	#10@18 XX	#8 @ 9 X	#8 @ 9 X	#7 @ 6 X	#10@12 X	#9 @ 9 X	#11@12 XX
X	CONT	CONT	CONT	5′-6"	6′-6"	7′-6"	8′-0"	8′-6"	9′-6"	10′-6"	11′-6"	12′-6"	13′-6"	15′-0"
d BARS				#7@18 XX	#8@18 XX	#8@18 XX	#9@18 XX	#10@18 XX	#8 @ 9 X	#8 @ 9 X	#7 @ 6 X	#10@12 X	#9 @ 9 X	#11@12 XX
X				CONT	CONT	CONT	CONT	CONT	CONT	CONT	CONT	CONT	CONT	CONT
ULTIMATE BEARING CAPACITY REQUIRED k/sf	6.3	7.8	8.8	10.3	11.4	13.2	15	16.2	17.8	19.4	21.1	22.4	24.4	25.8

ALTERNATIVE B : (VARIABLE TOP OF WALL THICKNESS) TABLE OF REINFORCING STEEL DIMENSIONS AND DATA

DESIGN H	8′	10′	12′	14′	16′	18′	20′	22′	24′	26′	28′	30′	32′
W	8′-6"	9′-0"	9′-9"	10′-6"	12′-6"	13′-3"	14′-3"	16′-3"	17′-0"	18′-9"	20′-3"	21′-3"	22′-6"
F SPREAD FTG.	1′-3"	1′-3"	1′-3"	1′-3′"	1′-6′"	1′-6"	1′-9"	2′-3"	2′-3"	2′-9"	3′-3"	3′-9"	3′-9"
BATTER	0	0	0	0	0	0	0	0	0	¼:12	½:12	½:12	½:12
STEM THICKNESS @ TOP	1′-0"	1′-0"	1′-0"	1′-0"	1′-3"	1′-3"	1′-6"	2′-0"	2′-0"	2′-0"	2′-0"	2′-0"	2′-0"
a BARS			#6@12 XX	#5 @ 6 X	#8@12 XX	#8 @ 9 X	#9@12 XX	#9@12 XX	#7 @ 6 X	#7 @ 6 X	#7 @ 6 X	#9 @ 9 X	#11@12 XX
Y			5′-6"	5′-6"	6′-0"	6′-6"	8′-0"	8′-6"	9′-6"	11′-0"	12′-6"	13′-6"	14′-6"
b BARS	#5 @ 9	#6 @ 9	#6@12 XX	#5 @ 6 X	#8@12 XX	#8 @ 9 X	#9@12 XX	#9@12 XX	#7 @ 6 X	#7 @ 6 X	#7 @ 6 X	#9 @ 9 X	#11@12 XX
Y	CONT	CONT	CONT	CONT	8′-6"	11′-0"	11′-0"	11′-6"	17′-0"	19′-6"	21′-6"	24′-0"	24′-0"
c BARS					#6 @ 12	#7 @ 18	#7 @ 12	#7 @ 12	#6 @ 12	#6 @ 12	#6 @ 12	#7 @ 18	#7 @ 12
SHORT d BARS	#5 @ 9	#6 @ 9	#7@18 XX	#5 @ 6 X	#8@12 XX	#8 @ 9 X	#9@12 XX	#9@12 XX	#7 @ 6 X	#9 @ 6 X	#9 @ 6 X	#9 @ 9 X	#8 @ 6 X
X	CONT	CONT	6′-0"	5′-6"	7′-0"	8′-6"	9′-0"	10′-0"	11′-0"	12′-0"	13′-0"	14′-0"	15′-0"
d BARS			#7@18 XX	#5 @ 6 X	#9@18 XX	#8 @ 9 X	#9@12 XX	#9@12 XX	#7 @ 6 X	#9 @ 6 X	#9 @ 6 X	#9 @ 9 X	#8 @ 6 X
X			CONT	CONT	CONT	CONT	CONT	CONT	CONT	CONT	CONT	CONT	CONT
ULTIMATE BEARING CAPACITY REQUIRED k/sf	7.8	9	10.3	11.8	12.6	14.3	16.2	17.3	19.1	20.6	22.3	24.5	25.8

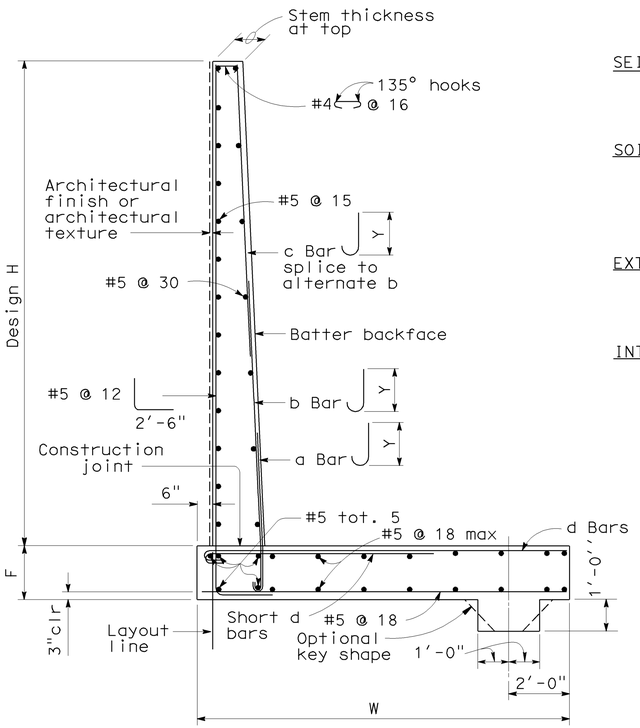

SPREAD FOOTING SECTION

NO SCALE

DESIGN DATA

DESIGN: LOAD FACTOR DESIGN (LFD)

CONCRETE: REINFORCED CONCRETE, fc = 3600 psi
fy = 6000 psi

LOADING CASE:

LEVEL GROUND WITH 240 psf SURCHARGE AND 16′ SOUNDWALL.

SEISMIC LOAD	= 0.3 DEAD LOAD
WIND LOAD	= 30 psf
DEAD LOAD OF SOUNDWALL	= 1414 lb/lf
DEAD LOAD OF BARRIER	= 372 lb/lf

SEISMIC LOAD: SOIL

Kh = 0.3g
Kv = 0.0
Kae : MONOBE-OKABE METHOD

SOIL: Ø = 34°γ = 120 pcf

EQUIVALENT FLUID PRESSURE:
= 36 pcf MAX. FOR DETERMINATION OF TOE PRESSURE
= 27 pcf MAX. FOR DETERMINATION OF HEEL PRESSURE

EXTERNAL STABILITY:

GROUP 1 :D+E+SC
GROUP 2 :D+E+SC+W
GROUP 3 :D+PYM

INTERNAL STABILITY (LFD):

GROUP A :βD+1.7 E+1.7 SC
GROUP B :βD+1.7 E+1.3 W
GROUP C :
STEM : 1.0 D+1.0E+1.0 EQD+1.0 EQE
FOOTING : D+PYM

WHERE: β = 1.0 OR 1.3 WHICHEVER CONTROLS DESIGN
D = DEAD LOAD
E = LATERAL EARTH PRESSURE
SC = SURCHARGE
W = WIND LOAD
EQD = SEISMIC DEAD LOAD
EQE = SEISMIC LATERAL EARTH PRESSURE
PYM = PROBABLE YIELD MOMENT (1.3* NOMINAL YIELD MOMENT OF STEM)

CONT = CONTINUOUS
* = a AND b [SHORT d & d] BARS ARE BUNDLED TOGETHER.
** = ALTERNATE a AND b BARS AS SHOWN IN DETAIL A.
ALTERNATE d AND d BARS.

GENERAL NOTES

1. FOR SOUNDWALL AND RETAINING WALL ARCHITECTURAL FINISH OR TEXTURE SEE DETAILS ELSEWHERE IN PROJECT PLANS
2. FOR DETAILS NOT SHOWN AND DRAINAGE NOTES, SEE B3-8
3. FOOTING COVER, 1′-6" MINIMUM.
<2> 4. MAXIMUM RETAINING WALL HEIGHT SHALL NOT EXCEED 16′-0" FROM TOP OF FOOTING

R-4

STANDARD DRAWING

FILE NO. xs14-340e

APPROVED BY G. WANG — RESPONSIBLE TECHNICAL SPECIALIST
APPROVAL DATE 5-13-08

RELEASED BY ROBERTO LACALLE — RESPONSIBLE OFFICE CHIEF
RELEASE DATE 5-13-08

<1> Modified Detail
<2> Modified Note
<3> Deleted Detail

STATE OF CALIFORNIA
DEPARTMENT OF TRANSPORTATION

DIVISION OF ENGINEERING SERVICES

CU 04242
EA 163741

BRIDGE NO. -----
POST MILE

RETAINING WALL 7A

RETAINING WALL TYPE 5SW

DISREGARD PRINTS BEARING EARLIER REVISION DATES →

REVISION DATES (PRELIMINARY STAGE ONLY)

SHEET 2 OF 2

DS OSD 2147A (ENGLISH STANDARD DRAWING "XS" BORDER REV. 01/11/08)

ORIGINAL SCALE IN INCHES FOR REDUCED PLANS 0 1 2 3

USERNAME => trlenard

DATE PLOTTED => 14-DEC-2009 TIME PLOTTED => 14:10

416374qa004.dgn

DIST	COUNTY	ROUTE	POST MILES TOTAL PROJECT	SHEET No	TOTAL SHEETS
04	SF	101	8.2/9.2	156	654

Terrence M Carroll 8-20-09
REGISTERED CIVIL ENGINEER

12-14-09
PLANS APPROVAL DATE

The State of California or its officers or agents shall not be responsible for the accuracy or completeness of electronic copies of this plan sheet.

REGISTERED PROFESSIONAL ENGINEER — Terrence Carroll — No. C68869 — Exp. 9-30-11 — CIVIL — STATE OF CALIFORNIA

NOTE:
The information presented on this drawing was developed and performed by Arup PB JV for the California Department of Transportation (CALTRANS).

This LOTB sheet was prepared in accordance with the Caltrans Soil & Rock Logging, Classification, & Presentation Manual (June 2007), with the exception of section 2.3.

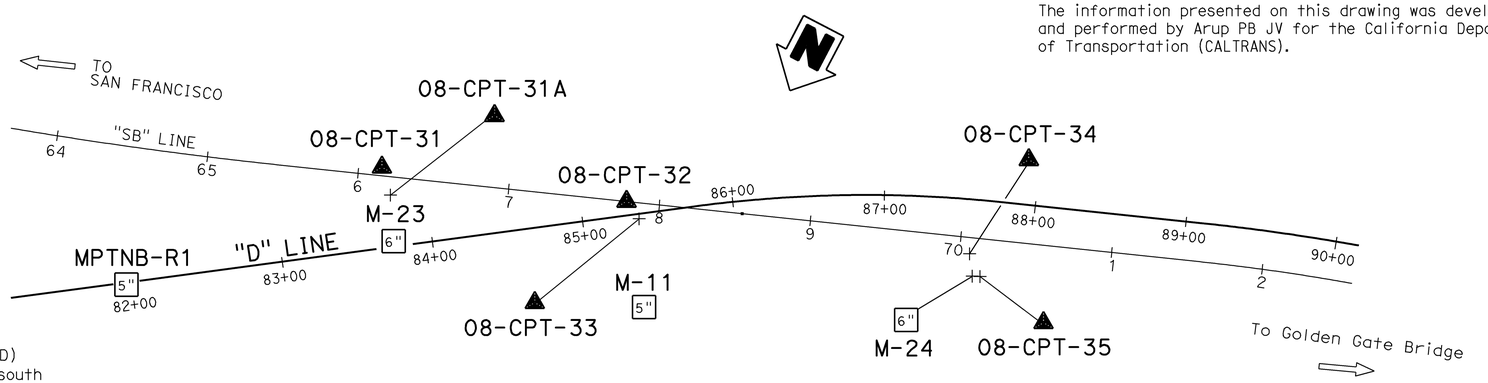

PLAN
1" = 50'

BENCH MARK

BM No. SF15 Elev 10.090′ (1988 NAVD)
Set 1" Caltrans brass plug in concrete, south of Mason St., Approx 1900′ west of Halleck St. on the southwest side of concrete drainage structure, 9.8′ east of a curb island nose at entrance of the west end of a Sports Basement building, and 5.8′ south of curb angle point inlet at south edge of Mason St.
N 2120923.973
E 5995469.423

CALIFORNIA STATE FIRE MARSHAL APPROVED
Approval of this plan does not authorize or approve any omission or deviation from applicable regulations. Final approval is subject to field inspection. One set of approved plans shall be available on the project site at all times.
Reviewed by: STEPHEN GUARINO
Approval date: 12-14-09

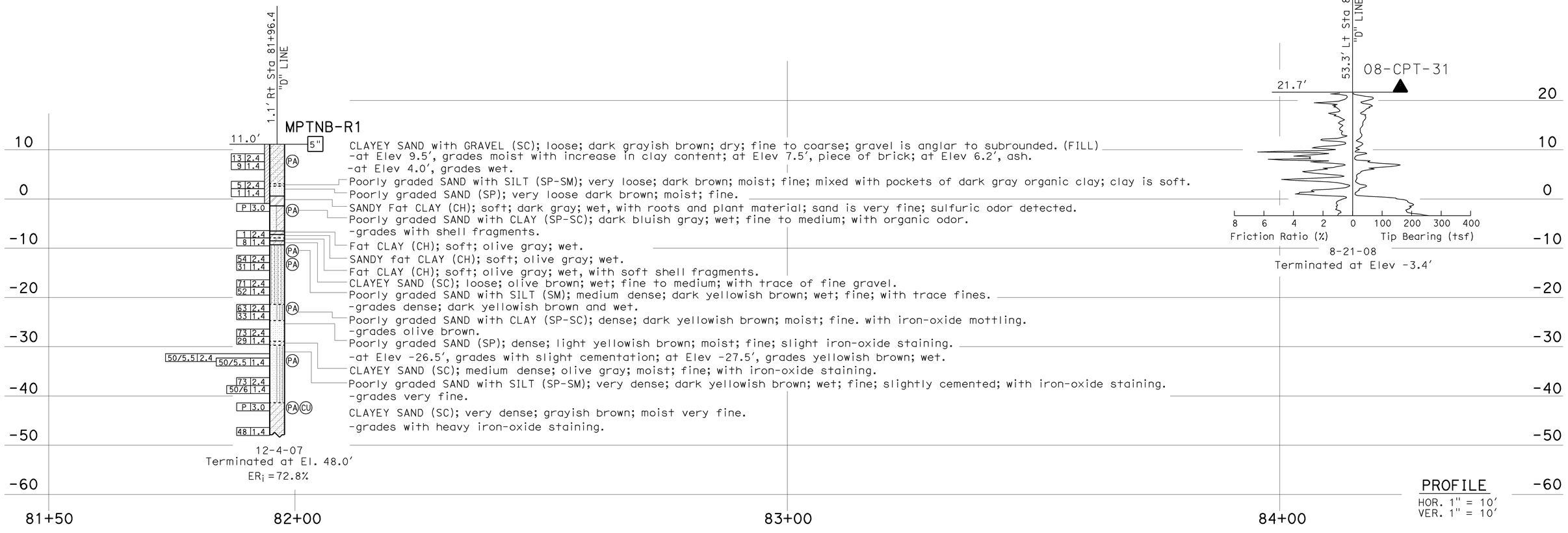

PROFILE
HOR. 1" = 10′
VER. 1" = 10′

ENGINEERING SERVICES		GEOTECHNICAL SERVICES		STATE OF CALIFORNIA DEPARTMENT OF TRANSPORTATION	DIVISION OF ENGINEERING SERVICES STRUCTURE DESIGN	BRIDGE NO.	DETOUR ROAD
FUNCTIONAL SUPERVISOR	DRAWN BY: C. Christian, I.G-Remmen, 7/09	FIELD INVESTIGATION BY:			DESIGN BRANCH	POST MILES 8.8/9.2	LOG OF TEST BORINGS 1 OF 7
NAME: F. Greguras (Arup PB JV)	CHECKED BY: R. Price	T. Carroll (Arup PB JV)			CU 04242 EA 163741	DISREGARD PRINTS BEARING EARLIER REVISION DATES →	REVISION DATES: 07-27-09, 08-05-09, 08-10-09 — SHEET — OF

OGS CIVIL LOG OF TEST BORINGS SHEET

ORIGINAL SCALE IN INCHES FOR REDUCED PLANS 0 1 2 3

FILE => 416374qa005.dgn

USERNAME => trlenard DATE PLOTTED => 14-DEC-2009 TIME PLOTTED => 14:10

NOTE:
The information presented on this drawing was developed and performed by Arup PB JV for the California Department of Transportation (CALTRANS).

DIST	COUNTY	ROUTE	POST MILES TOTAL PROJECT	SHEET No	TOTAL SHEETS
04	SF	101	8.2/9.2	157	654

Terrence M Carroll 8-20-09
REGISTERED CIVIL ENGINEER

12-14-09
PLANS APPROVAL DATE

The State of California or its officers or agents shall not be responsible for the accuracy or completeness of electronic copies of this plan sheet.

REGISTERED PROFESSIONAL ENGINEER — Terrence Carroll — No. C68869 — Exp. 9-30-11 — CIVIL — STATE OF CALIFORNIA

CALIFORNIA STATE FIRE MARSHAL APPROVED
Approval of this plan does not authorize or approve any omission or deviation from applicable regulations. Final approval is subject to field inspection. One set of approved plans shall be available on the project site at all times.
Reviewed by: STEPHEN GUARINO
Approval date: 12-14-09

This LOTB sheet was prepared in accordance with the Caltrans Soil & Rock Logging, Classification, & Presentation Manual (June 2007), with the exception of section 2.3.

FOR PLAN VIEW, SEE
"LOG OF TEST BORINGS 1 OF7"

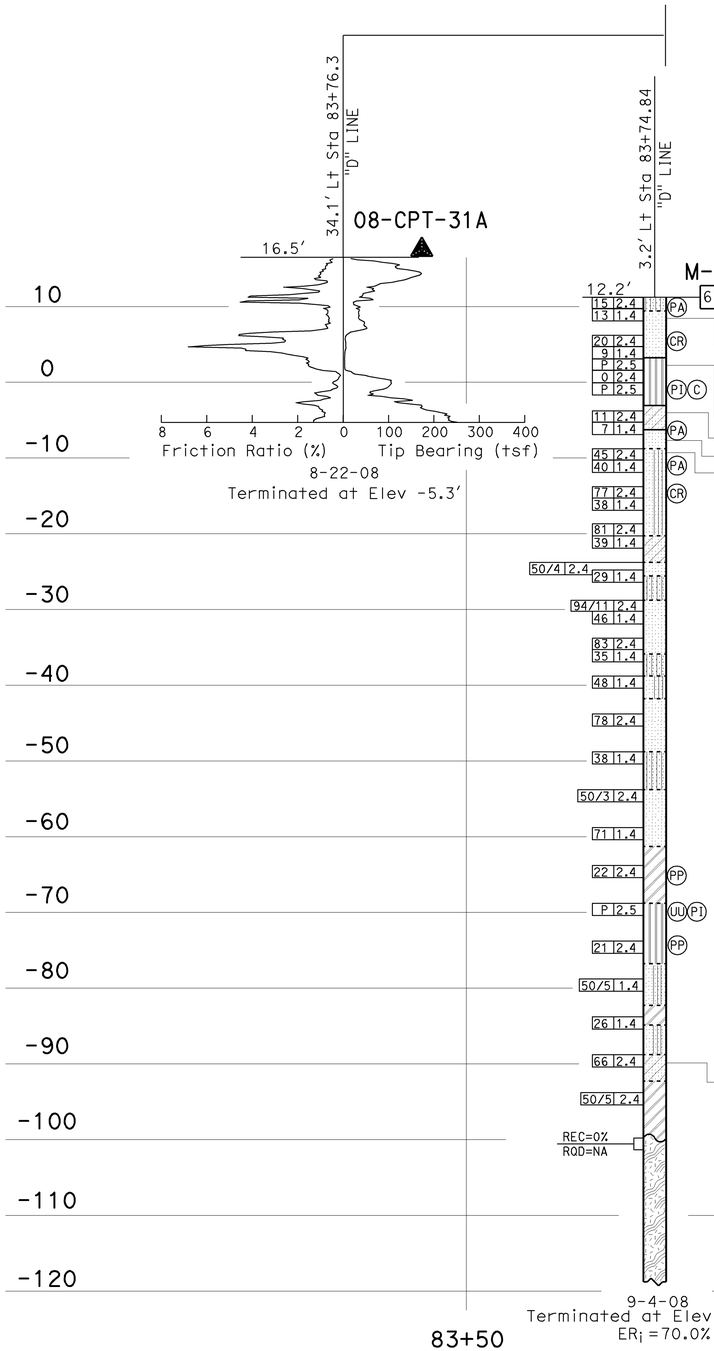

SILTY SAND (SM); loose; dark brown; dry; frequent rootlets; strong, earthy odor; trace fine gravel; occasional piece of plastic. (FILL)
-at Elev 11.4′, frequent rootlets; fine to medium sand; dark brown; earthy odor.
-grades loose, dark brown, dry, fine to coarse.
Poorly graded SAND (SP); loose; black; moist; layer of ash, with fine gravel.
-grades loose; medium dense; reddish brown; wet; fine to medium; trace fine gravel.
-at Elev 5.5′, large glass fragment.
-grades loose; dark gray; wet; line to medium; trace fines.
Elastic SILT (MH); soft; light gray; wet; frequent decayed vegetation; trace fine sand; strong sulfur smell.
CLAYEY SAND (SC); loose; gray; wet; fine to medium with occasional lenses of fat clay.
Poorly graded SAND (SP); medium dense; yellowish brown; wet; fine to medium; trace fines.
Poorly graded SAND with SILT (SP-SM); dense; yellowish brown; wet; fine to medium; with horizontal iron-oxide seams.
-grades dark yellowish brown.
-grades fine.
-grades yellowish brown.
CLAYEY SAND (SC); dense; yellowish brown; moist; fine to medium; weakly cemented.
Poorly graded SAND (SP); dense to very dense; reddish brown; moist; fine; iron-oxide seams.
SILTY SAND (SM); medium dense to dense; light yellowish brown; moist; fine; iron-oxide mottling.
Poorly graded SAND (SP); very dense; dark yellowish brown; wet; fine.
-at Elev -29.8′, grades with increased fines content; light yellowish brown.
SILTY SAND (SM); dense; yellowish brown; moist; with iron-oxide stratification's; slightly cemented.
Poorly graded SAND with SILT (SP-SM); very dense; yellowish brown; moist; with iron-oxide mottling.
Poorly graded SAND (SP); dense; dark yellowish brown; moist; trace fines.
-grades light yellowish brown with increase in fines content.
SILTY SAND (SM); dense; yellowish brown; moist; fine to medium; light iron-oxide mottling.
Poorly graded SAND (SP); very dense; dark yellowish brown; moist; fine; with black laminations.
-grades very dense; with dark brown and reddish brown mottling.
Fat CLAY (CH); stiff dark greenish gray; moist; with dark brown decayed vegetation seams (up to 1/8" thick).
Elastic SILT (MH); greenish gray; dry to moist; crumbles under moderate hand pressure.
-grades very stiff.
-at Elev -73.8′, grades with dark brown carbon nodules (up to 1/8" thick).
-at Elev -74.3′, grades with dark gray mottling.
Poorly graded SAND with SILT (SP-SM); very dense; greenish gray; moist; with fine to coarse gravel. Gravel is black subangular gravel fragments.
SANDY fat CLAY (CH); stiff dark brown and dark grayish brown; moist; sand is fine; with seams of decayed vegetation.
-at Elev -83.6′, grades medium stiff.
Poorly graded SAND with SILT (SP-SM); dense; dark greenish gray; moist; with subangular fine gravel fragments; fine to medium.
CLAYEY SAND with GRAVEL (SC); very dense; dark greenish gray; moist; gravel is fine to coarse and subangular.
Fat CLAY with SAND (CH); stiff; dark greenish gray; dry to moist; sand is fine, with fine, subrounded gravel.
METAMORPHIC ROCK (SERPENTINITE).

PROFILE
HOR. 1" = 10′
VER. 1" = 10′

ENGINEERING SERVICES	GEOTECHNICAL SERVICES		STATE OF CALIFORNIA DEPARTMENT OF TRANSPORTATION	DIVISION OF ENGINEERING SERVICES STRUCTURE DESIGN	BRIDGE NO.	DETOUR ROAD
FUNCTIONAL SUPERVISOR	DRAWN BY: C. Christian, I.G-Remmen, 7/09	FIELD INVESTIGATION BY:		DESIGN BRANCH	POST MILES 8.8/9.2	LOG OF TEST BORINGS 2 OF 7
NAME: F. Greguras (Arup PB JV)	CHECKED BY: R. Price	T. Carroll (Arup PB JV)				

OGS CIVIL LOG OF TEST BORINGS SHEET

ORIGINAL SCALE IN INCHES FOR REDUCED PLANS 0 1 2 3

CU 04242
EA 163741

DISREGARD PRINTS BEARING EARLIER REVISION DATES →

REVISION DATES: 07-27-09 | 08-05-09 | 08-10-09

SHEET OF

FILE => 416374qa006.dgn

USERNAME => ttrenard DATE PLOTTED => 14-DEC-2009 TIME PLOTTED => 14:10

NOTE:
The information presented on this drawing was developed and performed by Arup PB JV for the California Department of Transportation (CALTRANS).

CALIFORNIA STATE FIRE MARSHAL APPROVED
Approval of this plan does not authorize or approve any omission or deviation from applicable regulations. Final approval is subject to field inspection. One set of approved plans shall be available on the project site at all times.
Reviewed by: STEPHEN GUARINO
Approval date: 12-14-09

DIST	COUNTY	ROUTE	POST MILES TOTAL PROJECT	SHEET No	TOTAL SHEETS
04	SF	101	8.2/9.2	158	654

Terrence M Carroll 8-20-09
REGISTERED CIVIL ENGINEER

12-14-09
PLANS APPROVAL DATE

REGISTERED PROFESSIONAL ENGINEER — Terrence Carroll — No. C68869 — Exp. 9-30-11 — CIVIL — STATE OF CALIFORNIA

The State of California or its officers or agents shall not be responsible for the accuracy or completeness of electronic copies of this plan sheet.

This LOTB sheet was prepared in accordance with the Caltrans Soil & Rock Logging, Classification, & Presentation Manual (June 2007), with the exception of section 2.3.

FOR PLAN VIEW, SEE
"LOG OF TEST BORINGS 1 OF7"

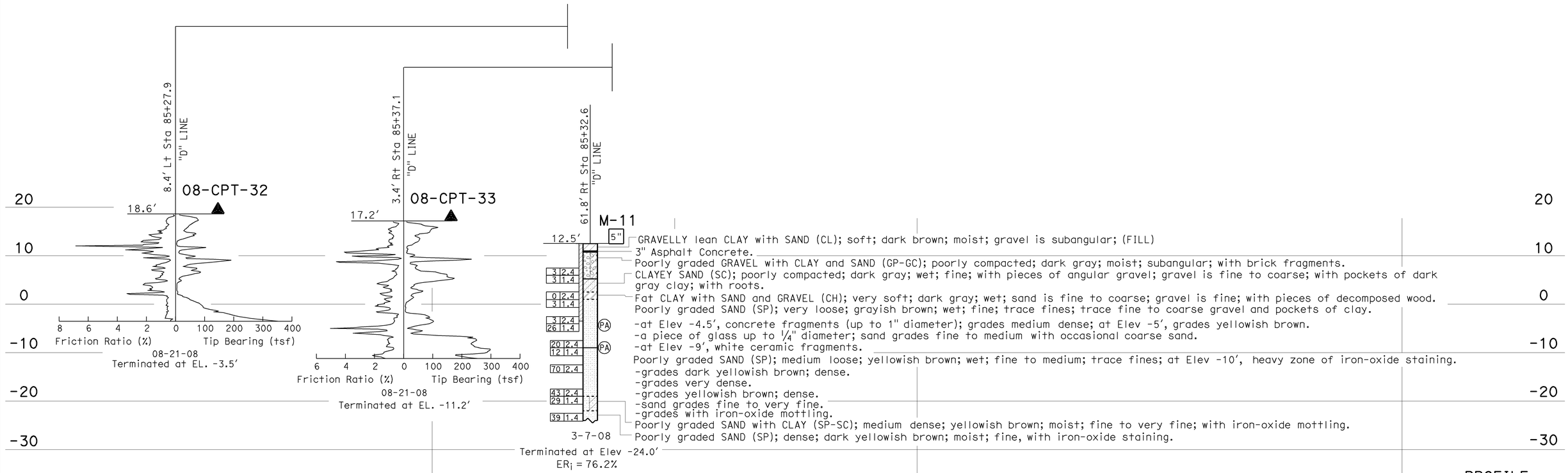

PROFILE
HOR. 1" = 10'
VER. 1" = 10'

ENGINEERING SERVICES	GEOTECHNICAL SERVICES		STATE OF CALIFORNIA DEPARTMENT OF TRANSPORTATION	DIVISION OF ENGINEERING SERVICES STRUCTURE DESIGN	BRIDGE NO.	DETOUR ROAD
FUNCTIONAL SUPERVISOR	DRAWN BY: I.G-Remmen, 7/09	FIELD INVESTIGATION BY:		DESIGN BRANCH	POST MILES 8.8/9.2	LOG OF TEST BORINGS 3 OF 7
NAME: F. Greguras (Arup PB JV)	CHECKED BY: R. Price	T. Carroll (Arup PB JV)				

OGS CIVIL LOG OF TEST BORINGS SHEET

ORIGINAL SCALE IN INCHES FOR REDUCED PLANS 0 1 2 3

CU 04242
EA 163741

DISREGARD PRINTS BEARING EARLIER REVISION DATES →

REVISION DATES: 07-27-09 | 08-05-09 | 08-10-09 | 08-18-09

SHEET OF

FILE => 416374qa007.dgn

USERNAME => ATrienard DATE PLOTTED => 14-DEC-2009 TIME PLOTTED => 14:10

NOTE:
The information presented on this drawing was developed and performed by Arup PB JV for the California Department of Transportation (CALTRANS).

DIST	COUNTY	ROUTE	POST MILES TOTAL PROJECT	SHEET No	TOTAL SHEETS
04	SF	101	8.2/9.2	159	654

Terrence M Carroll 8-20-09
REGISTERED CIVIL ENGINEER

12-14-09
PLANS APPROVAL DATE

REGISTERED PROFESSIONAL ENGINEER — Terrence Carroll — No. C68869 — Exp. 9-30-11 — CIVIL — STATE OF CALIFORNIA

The State of California or its officers or agents shall not be responsible for the accuracy or completeness of electronic copies of this plan sheet.

CALIFORNIA STATE FIRE MARSHAL APPROVED
Approval of this plan does not authorize or approve any omission or deviation from applicable regulations. Final approval is subject to field inspection. One set of approved plans shall be available on the project site at all times.
Reviewed by: STEPHEN GUARINO
Approval date: 12-14-09

This LOTB sheet was prepared in accordance with the Caltrans Soil & Rock Logging, Classification, & Presentation Manual (June 2007), with the exception of section 2.3.

FOR PLAN VIEW, SEE
"LOG OF TEST BORINGS 1 OF 7"

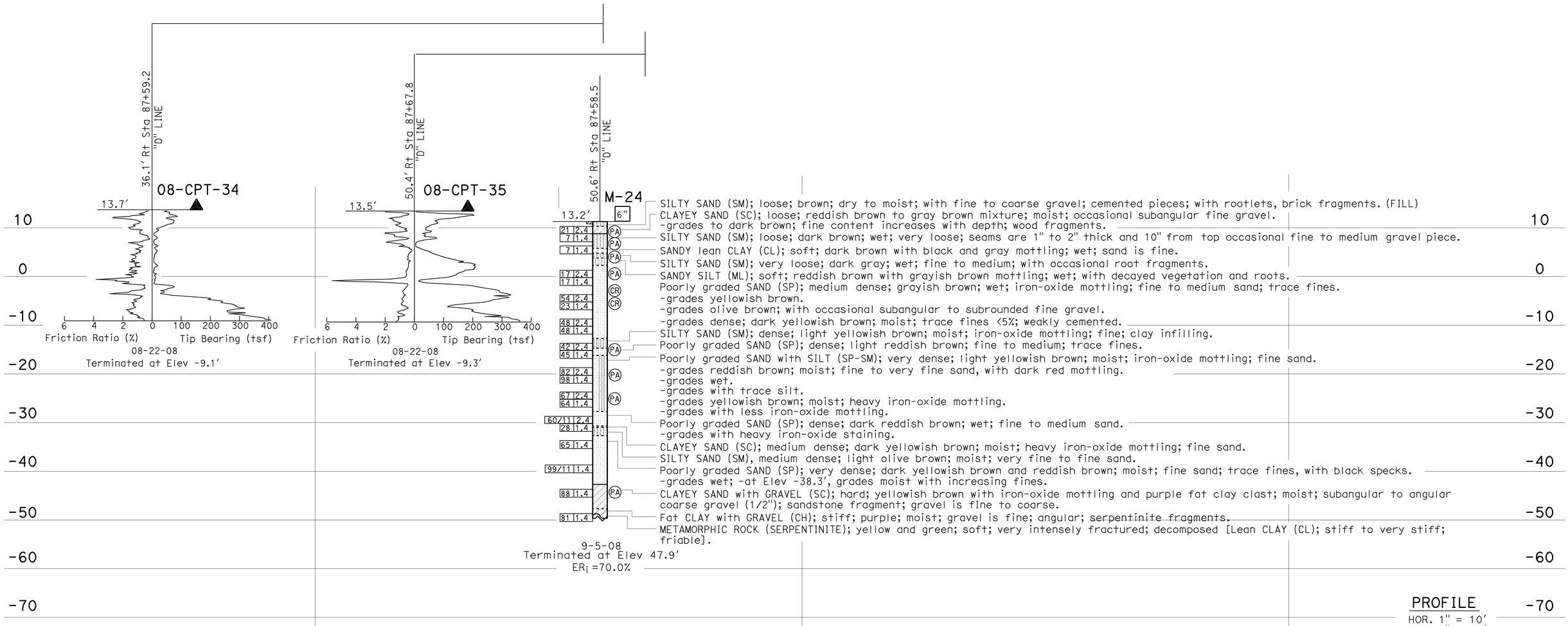

SILTY SAND (SM); loose; brown; dry to moist; with fine to coarse gravel; cemented pieces; with rootlets, brick fragments. (FILL)
CLAYEY SAND (SC); loose; reddish brown to gray brown mixture; moist; occasional subangular fine gravel.
-grades to dark brown; fine content increases with depth; wood fragments.
SILTY SAND (SM); loose; dark brown; wet; very loose; seams are 1" to 2" thick and 10" from top occasional fine to medium gravel piece.
SANDY lean CLAY (CL); soft; dark brown with black and gray mottling; wet; sand is fine.
SILTY SAND (SM); very loose; dark gray; wet; fine to medium; with occasional root fragments.
SANDY SILT (ML); soft; reddish brown with grayish brown mottling; wet; with decayed vegetation and roots.
Poorly graded SAND (SP); medium dense; grayish brown; wet; iron-oxide mottling; fine to medium sand; trace fines.
-grades yellowish brown.
-grades olive brown; with occasional subangular to subrounded fine gravel.
-grades dense; dark yellowish brown; moist; trace fines <5%; weakly cemented.
SILTY SAND (SM); dense; light yellowish brown; moist; iron-oxide mottling; fine; clay infilling.
Poorly graded SAND (SP); dense; light reddish brown; fine to medium; trace fines.
Poorly graded SAND with SILT (SP-SM); very dense; light yellowish brown; moist; iron-oxide mottling; fine sand.
-grades reddish brown; moist; fine to very fine sand, with dark red mottling.
-grades wet.
-grades with trace silt.
-grades yellowish brown; moist; heavy iron-oxide mottling.
-grades with less iron-oxide mottling.
Poorly graded SAND (SP); dense; dark reddish brown; wet; fine to medium sand.
-grades with heavy iron-oxide staining.
CLAYEY SAND (SC); medium dense; dark yellowish brown; moist; heavy iron-oxide mottling; fine sand.
SILTY SAND (SM), medium dense; light olive brown; moist; very fine to fine sand.
Poorly graded SAND (SP); very dense; dark yellowish brown and reddish brown; moist; fine sand; trace fines, with black specks.
-grades wet; -at Elev -38.3', grades moist with increasing fines.
CLAYEY SAND with GRAVEL (SC); hard; yellowish brown with iron-oxide mottling and purple fat clay clast; moist; subangular to angular coarse gravel (1/2"); sandstone fragment; gravel is fine to coarse.
Fat CLAY with GRAVEL (CH); stiff; purple; moist; gravel is fine; angular; serpentinite fragments.
METAMORPHIC ROCK (SERPENTINITE); yellow and green; soft; very intensely fractured; decomposed [Lean CLAY (CL); stiff to very stiff; friable].

PROFILE
HOR. 1" = 10'
VER. 1" = 10'

ENGINEERING SERVICES	GEOTECHNICAL SERVICES		STATE OF CALIFORNIA DEPARTMENT OF TRANSPORTATION	DIVISION OF ENGINEERING SERVICES STRUCTURE DESIGN	BRIDGE NO.	DETOUR ROAD
FUNCTIONAL SUPERVISOR	DRAWN BY: C. Christian, I.G-Remmen, 7/09	FIELD INVESTIGATION BY:		DESIGN BRANCH	POST MILES 8.8/9.2	LOG OF TEST BORINGS 4 OF 7
NAME: F. Greguras (Arup PB JV)	CHECKED BY: R. Price	T. Carroll (Arup PB JV)				

OGS CIVIL LOG OF TEST BORINGS SHEET

ORIGINAL SCALE IN INCHES FOR REDUCED PLANS 0 1 2 3

CU 04242
EA 163741

DISREGARD PRINTS BEARING EARLIER REVISION DATES →

REVISION DATES							SHEET	OF
07-27-09	08-05-09	08-05-09	08-18-09					

FILE => 416374qa008.dgn

USERNAME => trlenard DATE PLOTTED => 14-DEC-2009 TIME PLOTTED => 14:10

REFERENCE: CALTRANS SOIL & ROCK LOGGING, CLASSIFICATION, AND PRESENTATION MANUAL (JUNE 2007)

DIST	COUNTY	ROUTE	POST MILES TOTAL PROJECT	SHEET No	TOTAL SHEETS
04	SF	101	8.2/9.2	160	654

Terrence M Carroll 8-20-09
REGISTERED CIVIL ENGINEER

12-14-09
PLANS APPROVAL DATE

REGISTERED PROFESSIONAL ENGINEER — Terrence Carroll — No. C68869 — Exp. 9-30-11 — CIVIL — STATE OF CALIFORNIA

The State of California or its officers or agents shall not be responsible for the accuracy or completeness of electronic copies of this plan sheet.

CALIFORNIA STATE FIRE MARSHAL APPROVED

Approval of this plan does not authorize or approve any omission or deviation from applicable regulations. Final approval is subject to field inspection. One set of approved plans shall be available on the project site at all times.

Reviewed by: Stephen Guarino
STEPHEN GUARINO
Approval date: 12-14-09

CEMENTATION

Description	Criteria
Weak	Crumbles or breaks with handling or little finger pressure.
Moderate	Crumbles or breaks with considerable finger pressure.
Strong	Will not crumble or break with finger pressure.

BOREHOLE IDENTIFICATION

Symbol	Hole Type	Description
Size	A	Auger Boring
Size	R P	Rotary drilled boring Rotary percussion boring (air)
Size	R	Rotary drilled diamond core
Size	HD HA	Hand driven (1-inch soil tube) Hand Auger
●	D	Dynamic Cone Penetration Boring
▲	CPT	Cone Penetration Test (ASTM D 5778-95)
⬚	O	Other

Note: Size in inches.

CONSISTENCY OF COHESIVE SOILS

Description	Unconfined Compressive Strength (tsf)	Pocket Penetrometer Measurement (tsf)	Torvane Measurement (tsf)	Field Approximation
Very Soft	< 0.25	< 0.25	< 0.12	Easily penetrated several inches by fist
Soft	0.25 to 0.50	0.25 to 0.50	0.12 to 0.25	Easily penetrated several inches by thumb
Medium Stiff	0.50 to 1.0	0.50 to 1.0	0.25 to 0.50	Penetrated several inches by thumb with moderate effort
Stiff	1 to 2	1 to 2	0.50 to 1.0	Readily indented by thumb but penetrated only with great effort
Very Stiff	2 to 4	2 to 4	1.0 to 2.0	Readily indented by thumbnail
Hard	> 4.0	> 4.0	> 2.0	Indented by thumbnail with difficulty

PLASTICITY OF FINE-GRAINED SOILS

Description	Criteria
Nonplastic	A 1/8-inch thread cannot be rolled at any water content.
Low	The thread can barely be rolled and the lump cannot be formed when drier than the plastic limit.
Medium	The thread is easy to roll and not much time is required to reach the plastic limit. The thread cannot be rerolled after reaching the plastic limit. The lump crumbles when drier than the plastic limit.
High	It takes considerable time rolling and kneading to reach the plastic limit. The thread can be rerolled several times after reaching the plastic limit. The lump can be formed without crumbling when drier than the plastic limit.

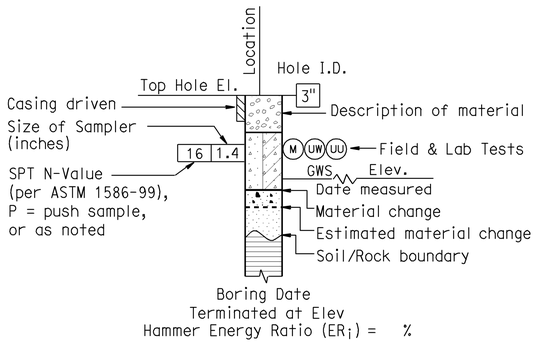

ROTARY BORING

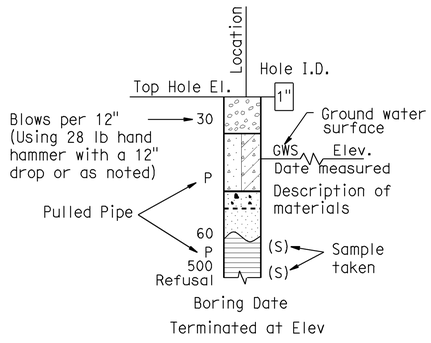

HAND BORING

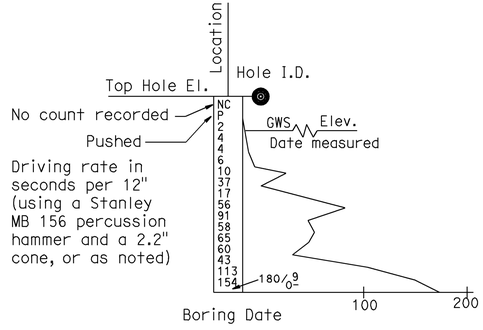

DYNAMIC CONE PENETRATION BORING

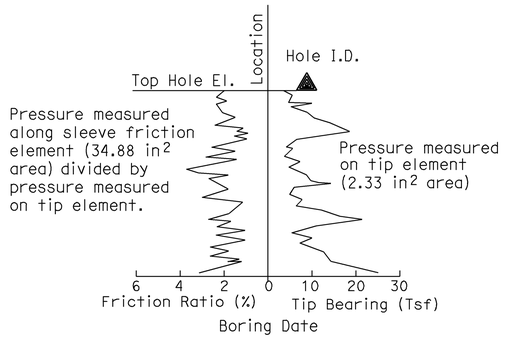

CONE PENETRATION TEST (CPT) SOUNDING

ENGINEERING SERVICES	GEOTECHNICAL SERVICES	STATE OF CALIFORNIA DEPARTMENT OF TRANSPORTATION	DIVISION OF ENGINEERING SERVICES STRUCTURE DESIGN	BRIDGE NO.	DETOUR ROAD
	PREPARED BY: I.G-Remmen, 7/09		DESIGN BRANCH	POST MILE 8.8/9.2	LOG OF TEST BORINGS 5 OF 7

GS LOTB SOIL LEGEND

ORIGINAL SCALE IN INCHES FOR REDUCED PLANS 0 1 2 3

CU 04242
EA 163741

DISREGARD PRINTS BEARING EARLIER REVISION DATES →

REVISION DATES | SHEET | OF

FILE => 416374qa009.dgn

USERNAME => rfriehard DATE PLOTTED => 14-DEC-2009 TIME PLOTTED => 14:10

REFERENCE: CALTRANS SOIL & ROCK LOGGING, CLASSIFICATION, AND PRESENTATION MANUAL (JUNE 2007)

GROUP SYMBOLS AND NAMES

Graphic/Symbol	Group Names	Graphic/Symbol	Group Names
GW	Well-graded GRAVEL Well-graded GRAVEL with SAND	CL	Lean CLAY Lean CLAY with SAND Lean CLAY with GRAVEL SANDY lean CLAY SANDY lean CLAY with GRAVEL GRAVELLY lean CLAY GRAVELLY lean CLAY with SAND
GP	Poorly graded GRAVEL Poorly graded GRAVEL with SAND		
GW-GM	Well-graded GRAVEL with SILT Well-graded GRAVEL with SILT and SAND	CL-ML	SILTY CLAY SILTY CLAY with SAND SILTY CLAY with GRAVEL SANDY SILTY CLAY SANDY SILTY CLAY with GRAVEL GRAVELLY SILTY CLAY GRAVELLY SILTY CLAY with SAND
GW-GC	Well-graded GRAVEL with CLAY (or SILTY CLAY) Well-graded GRAVEL with CLAY and SAND (or SILTY CLAY and SAND)		
GP-GM	Poorly graded GRAVEL with SILT Poorly graded GRAVEL with SILT and SAND	ML	SILT SILT with SAND SILT with GRAVEL SANDY SILT SANDY SILT with GRAVEL GRAVELLY SILT GRAVELLY SILT with SAND
GP-GC	Poorly graded GRAVEL with CLAY (or SILTY CLAY) Poorly graded GRAVEL with CLAY and SAND (or SILTY CLAY and SAND)		
GM	SILTY GRAVEL SILTY GRAVEL with SAND	OL	ORGANIC lean CLAY ORGANIC lean CLAY with SAND ORGANIC lean CLAY with GRAVEL SANDY ORGANIC lean CLAY SANDY ORGANIC lean CLAY with GRAVEL GRAVELLY ORGANIC lean CLAY GRAVELLY ORGANIC lean CLAY with SAND
GC	CLAYEY GRAVEL CLAYEY GRAVEL with SAND		
GC-GM	SILTY, CLAYEY GRAVEL SILTY, CLAYEY GRAVEL with SAND	OL	ORGANIC SILT ORGANIC SILT with SAND ORGANIC SILT with GRAVEL SANDY ORGANIC SILT SANDY ORGANIC SILT with GRAVEL GRAVELLY ORGANIC SILT GRAVELLY ORGANIC SILT with SAND
SW	Well-graded SAND Well-graded SAND with GRAVEL		
SP	Poorly graded SAND Poorly graded SAND with GRAVEL	CH	Fat CLAY Fat CLAY with SAND Fat CLAY with GRAVEL SANDY fat CLAY SANDY fat CLAY with GRAVEL GRAVELLY fat CLAY GRAVELLY fat CLAY with SAND
SW-SM	Well-graded SAND with SILT Well-graded SAND with SILT and GRAVEL		
SW-SC	Well-graded SAND with CLAY (or SILTY CLAY) Well-graded SAND with CLAY and GRAVEL (or SILTY CLAY and GRAVEL)	MH	Elastic SILT Elastic SILT with SAND Elastic SILT with GRAVEL SANDY elastic SILT SANDY elastic SILT with GRAVEL GRAVELLY elastic SILT GRAVELLY elastic SILT with SAND
SP-SM	Poorly graded SAND with SILT Poorly graded SAND with SILT and GRAVEL		
SP-SC	Poorly graded SAND with CLAY (or SILTY CLAY) Poorly graded SAND with CLAY and GRAVEL (or SILTY CLAY and GRAVEL)	OH	ORGANIC fat CLAY ORGANIC fat CLAY with SAND ORGANIC fat CLAY with GRAVEL SANDY ORGANIC fat CLAY SANDY ORGANIC fat CLAY with GRAVEL GRAVELLY ORGANIC fat CLAY GRAVELLY ORGANIC fat CLAY with SAND
SM	SILTY SAND SILTY SAND with GRAVEL		
SC	CLAYEY SAND CLAYEY SAND with GRAVEL	OH	ORGANIC elastic SILT ORGANIC elastic SILT with SAND ORGANIC elastic SILT with GRAVEL SANDY ORGANIC elastic SILT SANDY ORGANIC elastic SILT with GRAVEL GRAVELLY ORGANIC elastic SILT GRAVELLY ORGANIC elastic SILT with SAND
SC-SM	SILTY, CLAYEY SAND SILTY, CLAYEY SAND with GRAVEL		
PT	PEAT	OL/OH	ORGANIC SOIL ORGANIC SOIL with SAND ORGANIC SOIL with GRAVEL SANDY ORGANIC SOIL SANDY ORGANIC SOIL with GRAVEL GRAVELLY ORGANIC SOIL GRAVELLY ORGANIC SOIL with SAND
	COBBLES COBBLES and BOULDERS BOULDERS		

FIELD AND LABORATORY TESTING

- (C) Consolidation (ASTM D 2435)
- (CL) Collapse Potential (ASTM D 5333)
- (CP) Compaction Curve (CTM 216)
- (CR) Corrosivity Testing (CTM 643, CTM 422, CTM 417)
- (CU) Consolidated Undrained Triaxial (ASTM D 4767)
- (DS) Direct Shear (ASTM D 3080)
- (EI) Expansion Index (ASTM D 4829)
- (M) Moisture Content (ASTM D 2216)
- (OC) Organic Content-% (ASTM D 2974)
- (P) Permeability (CTM 220)
- (PA) Particle Size Analysis (ASTM D 422)
- (PI) Plasticity Index (AASHTO T 90) Liquid Limit (AASHTO T 89)
- (PL) Point Load Index (ASTM D 5731)
- (PM) Pressure Meter
- (PP) Pocket Penetrometer
- (R) R-Value (CTM 301)
- (SE) Sand Equivalent (CTM 217)
- (SG) Specific Gravity (AASHTO T 100)
- (SL) Shrinkage Limit (ASTM D 427)
- (SW) Swell Potential (ASTM D 4546)
- (TV) Pocket Torvane
- (UC) Unconfined Compression-Soil (ASTM D 2166) Unconfined Compression-Rock (ASTM D 2938)
- (UU) Unconsolidated Undrained Triaxial (ASTM D 2850)
- (UW) Unit Weight (ASTM D 4767)
- (VS) Vane Shear (AASHTO T 223)

CALIFORNIA STATE FIRE MARSHAL APPROVED

Approval of this plan does not authorize or approve any omission or deviation from applicable regulations. Final approval is subject to field inspection. One set of approved plans shall be available on the project site at all times.

Reviewed by: STEPHEN GUARINO

Approval date: 12-14-09

DIST	COUNTY	ROUTE	POST MILES TOTAL PROJECT	SHEET No	TOTAL SHEETS
04	SF	101	8.2/9.2	161	654

Terrence M Carroll 8-20-09
REGISTERED CIVIL ENGINEER

12-14-09
PLANS APPROVAL DATE

REGISTERED PROFESSIONAL ENGINEER — Terrence Carroll — No. C68869 — Exp. 9-30-11 — CIVIL — STATE OF CALIFORNIA

The State of California or its officers or agents shall not be responsible for the accuracy or completeness of electronic copies of this plan sheet.

APPARENT DENSITY OF COHESIONLESS SOILS

Description	SPT N_{60} (Blows / 12 inches)
Very loose	0 - 4
Loose	5 - 10
Medium Dense	11 - 30
Dense	31 - 50
Very Dense	> 50

MOISTURE

Description	Criteria
Dry	Absence of moisture, dusty, dry to the touch
Moist	Damp but no visible water
Wet	Visible free water, usually soil is below water table

PERCENT OR PROPORTION OF SOILS

Description	Criteria
Trace	Particles are present but estimated to be less than 5%
Few	5 to 10%
Little	15 to 25%
Some	30 to 45%
Mostly	50 to 100%

PARTICLE SIZE

Description		Size
Boulder		> 12"
Cobble		3" to 12"
Gravel	Coarse	3/4" to 3"
	Fine	No. 4 to 3/4"
Sand	Coarse	No. 10 to No. 4
	Medium	No. 40 to No. 10
	Fine	No. 200 to No. 40

ENGINEERING SERVICES	GEOTECHNICAL SERVICES	STATE OF CALIFORNIA DEPARTMENT OF TRANSPORTATION	DIVISION OF ENGINEERING SERVICES STRUCTURE DESIGN	BRIDGE NO.	DETOUR ROAD
	PREPARED BY: I.G-Remmen, 7/09		DESIGN BRANCH	POST MILE 8.8/9.2	LOG OF TEST BORINGS 6 OF 7

GS LOTB SOIL LEGEND

ORIGINAL SCALE IN INCHES FOR REDUCED PLANS 0 1 2 3

CU 04242
EA 163741

DISREGARD PRINTS BEARING EARLIER REVISION DATES →

REVISION DATES | SHEET | OF

FILE => 416374qa010.dgn

USERNAME => trrichard DATE PLOTTED => 14-DEC-2009 TIME PLOTTED => 14:10

REFERENCE: CALTRANS SOIL & ROCK LOGGING, CLASSIFICATION, AND PRESENTATION MANUAL (JUNE 2007)

DIST	COUNTY	ROUTE	POST MILES TOTAL PROJECT	SHEET No	TOTAL SHEETS
04	SF	101	8.2/9.2	162	654

Terrence M Carroll 8-20-09
REGISTERED CIVIL ENGINEER

12-14-09
PLANS APPROVAL DATE

REGISTERED PROFESSIONAL ENGINEER — Terrence Carroll — No. C68869 — Exp. 9-30-11 — CIVIL — STATE OF CALIFORNIA

The State of California or its officers or agents shall not be responsible for the accuracy or completeness of electronic copies of this plan sheet.

CALIFORNIA STATE FIRE MARSHAL APPROVED
Approval of this plan does not authorize or approve any omission or deviation from applicable regulations. Final approval is subject to field inspection. One set of approved plans shall be available on the project site at all times.
Reviewed by: STEPHEN GUARINO
Approval date: 12-14-09

PERCENT CORE RECOVERY (REC) & ROCK QUALITY DESIGNATION (RQD)

$$REC = \frac{\sum \text{Length of the recovered core pieces (inches)}}{\text{Total length of core run (inches)}} \times 100\%$$

$$RQD = \frac{\sum \text{Length of intact core pieces} \geq 4\text{"}}{\text{Total length of core run (inches)}} \times 100\%$$

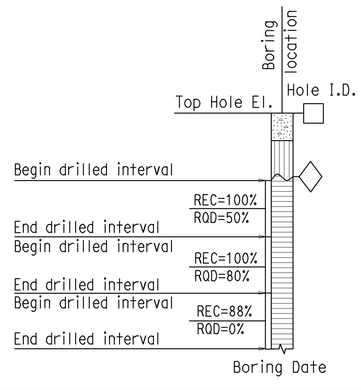

RELATIVE STRENGTH OF INTACT ROCK

Term	Uniaxial Compressive Strength (PSI)
Extremely Strong	> 30,000
Very Strong	14,500 - 30,000
Strong	7,000 - 14,500
Medium Strong	3,500 - 7,000
Weak	700 - 3,500
Very Weak	150 - 700
Extremely Weak	< 150

BEDDING SPACING

Description	Thickness / Spacing
Massive	Greater than 10 ft
Very thickly bedded	3 to 10 ft
Thickly bedded	1 to 3 ft
Moderately bedded	3-5/8" to 1 ft
Thinly bedded	1-1/4" to 3-5/8"
Very thinly bedded	3/8" to 1-1/4"
Laminated	Less than 3/8"

LEGEND OF ROCK MATERIALS

- IGNEOUS ROCK
- SEDIMENTARY ROCK
- METAMORPHIC ROCK

ROCK HARDNESS

Description	Criteria
Extremely Hard	Specimen cannot be scratched with a pocket knife or sharp pick; can only be chipped with repeated heavy hammer blows.
Very Hard	Specimen cannot be scratched with a pocket knife or sharp pick. Breaks with repeated heavy hammer blows.
Hard	Specimen can be scratched with a pocket knife or sharp pick with difficulty (heavy pressure). Heavy hammer blows required to break specimen.
Moderately Hard	Specimen can be scratched with pocket knife or sharp pick with light or moderate pressure. Core breaks with moderate hammer blows.
Moderately Soft	Specimen can be grooved 1/6" deep with a pocket knife or sharp pick with moderate or heavy pressure. Breaks with light hammer blow or heavy manual pressure.
Soft	Specimen can be grooved or gouged easily by a pocket knife or sharp pick with light pressure, can be scratched with fingernail. Breaks with light to moderate manual pressure.
Very Soft	Specimen can be readily indented, grooved or gouged with fingernail, or carved with a pocket knife. Breaks with light manual pressure.

FRACTURE DENSITY

Description	Observed Fracture Density
Unfractured	No fractures.
Very slightly fractured	Lengths greater than 3 feet.
Slightly fractured	Lengths from 1 to 3 feet with few lengths less than 1 foot or greater than 3 feet.
Moderately fractured	Lengths mostly in 4" to 1 foot range with most lengths about 8"
Intensely fractured	Lengths average from 1 to 4" with scattered fragmented intervals with lengths less than 4"
Very intensely fractured	Mostly chips and fragments with a few scattered short core lengths.

Combination descriptors (such as "Very intensely to intensely fractured") are used where equal distribution of both fracture density characteristics is present over a significant interval or exposure, or where characteristics are "in between" the descriptor definitions. Only two adjacent descriptors may be combined.

WEATHERING DESCRIPTORS FOR INTACT ROCK

Description	Diagnostic features: Chemical Weathering-Discoloration and/or oxidation — Body of Rock	Diagnostic features: Chemical Weathering-Discoloration and/or oxidation — Fracture Surfaces	Diagnostic features: Mechanical Weathering-Grain boundary conditions (disaggregation) primarily for granitics and some coarse-grained sediments	Diagnostic features: Texture and Solutioning — Texture	Diagnostic features: Texture and Solutioning — Solutioning	General Characteristics
Fresh	No discoloration, not oxidized.	No discoloration or oxidation.	No separation, intact (tight).	No change.	No solutioning.	Hammer rings when crystalline rocks are struck.
Slightly Weathered	Discoloration or oxidation is limited to surface of, or short distance from, fractures; some feldspar crystals are dull.	Minor to complete discoloration or oxidation of most surfaces.	No visible separation, intact (tight).	Preserved.	Minor leaching of some soluble minerals may be noted.	Hammer rings when crystalline rocks are struck. Body of rock not weakened.
Moderately Weathered	Discoloration or oxidation extends from fractures usually throughout; Fe-Mg minerals are "rusty," feldspar crystals are "cloudy."	All fracture surfaces are discolored or oxidized.	Partial separation of boundaries visible.	Generally preserved.	Soluble minerals may be mostly leached.	Hammer does not ring when rock is struck. Body of rock is slightly weakened.
Intensely Weathered	Discoloration or oxidation throughout; all feldspars and Fe-Mg minerals are altered to clay to some extent; or chemical alteration produces in-situ disaggregation, see grain boundary conditions.	All fracture surfaces are discolored or oxidized, surfaces friable.	Partial separation, rock is friable; in semiarid conditions granitics are disaggregated.	Texture altered by chemical disintegration (hydration, argillation).	Leaching of soluble minerals may be complete.	Dull sound when struck with hammer, usually can be broken with moderate to heavy manual pressure or by light hammer blow without reference to planes of weakness such as incipient or hairline fractures, or veinlets. Rock is significantly weakened.
Decomposed	Discolored or oxidized throughout, but resistant minerals such as quartz may be unaltered; all feldspars and Fe-Mg minerals are completely altered to clay.		Complete separation of grain boundaries (disaggregated).	Resembles a soil, partial or complete remnant rock structure may be preserved; leaching of soluble minerals usually complete.		Can be granulated by hand. Resistant minerals such as quartz may be present as "stringers" or "dikes."

Combination descriptors (such as "slightly weathered to fresh") are permissible where equal distribution of both weathering characteristics is present over significant intervals or where characteristics present are "in between" the diagnostic feature. However, combination descriptors should not be used where significant, identifiable zones can be delineated. Only two adjacent descriptors may be combined. "Very intensely weathered" is the combination descriptor for "intensely weathered to decomposed."

ENGINEERING SERVICES	GEOTECHNICAL SERVICES	STATE OF CALIFORNIA DEPARTMENT OF TRANSPORTATION	DIVISION OF ENGINEERING SERVICES STRUCTURE DESIGN	BRIDGE NO.	DETOUR ROAD
	PREPARED BY: I.G-Remmen, 7/09		DESIGN BRANCH	POST MILE 8.8/9.2	LOG OF TEST BORINGS 7 OF 7

GS LOTB ROCK LEGEND

ORIGINAL SCALE IN INCHES FOR REDUCED PLANS 0 1 2 3

CU 04242
EA 163741

DISREGARD PRINTS BEARING EARLIER REVISION DATES →

REVISION DATES | SHEET | OF

FILE => 416374qa011.dgn

USERNAME => trlenard DATE PLOTTED => 14-DEC-2009 TIME PLOTTED => 14:10

Dist	COUNTY	ROUTE	POST MILES TOTAL PROJECT	SHEET No.	TOTAL SHEETS
04	SF	101	8.2/9.2	163	654

REGISTERED ELECTRICAL ENGINEER — DATE 8-20-09

12-14-09
PLANS APPROVAL DATE

REGISTERED PROFESSIONAL ENGINEER — Mahmood Noii — No. 13717 — Exp 6-30-11 — ELECT — STATE OF CALIFORNIA

THE STATE OF CALIFORNIA OR ITS OFFICERS OR AGENTS SHALL NOT BE RESPONSIBLE FOR THE ACCURACY OR COMPLETENESS OF SCANNED COPIES OF THIS PLAN SHEET.

CALIFORNIA STATE FIRE MARSHAL APPROVED
Approval of this plan does not authorize or approve any omission or deviation from applicable regulations. Final approval is subject to field inspection. One set of approved plans shall be available on the project site at all times.
Reviewed by: STEPHEN GUARINO
Approval date: 12-14-09

GENERAL NOTES: (SHEETS E-2 THROUGH E-27 ONLY)

1. NO ABOVE GROUND ELECTRICAL WORK SHALL BE PERFORMED ON ANY SYSTEM WITHIN THE PROJECT SITE UNTIL ALL CONTRACTOR-FURNISHED ELECTRICAL MATERIALS FOR THAT INDIVIDUAL SYSTEM HAVE BEEN TESTED AND DELIVERED TO CONTRACTOR.
2. THE NEUTRAL CONDUCTOR SHALL RUN FROM THE SERVICE EQUIPMENT ENCLOSURE TO THE CONTROLLER CABINET WITHOUT SPLICING TO ANY OTHER NEUTRAL CONDUCTOR.
3. THE CLEARANCE BETWEEN THE BOTTOM OF THE LOWEST CIRCUIT BREAKER AND THE BOTTOM OF THE SERVICE EQUIPMENT ENCLOSURE FOR A TYPE III-A SERIES SHALL BE 24 INCHES MINIMUM.
4. WHERE ONE OR MORE TRAFFIC SIGNAL DETECTOR(S) CONSIST OF A SEQUENCE OF 4 LOOPS IN A SINGLE LANE, THE FRONT LOOP CLOSEST TO THE LIMIT LINE OR CROSSWALK SHALL BE LOCATED 1 FOOT FROM THE LINE. THE SET OF 4 LOOPS ASSIGNED TO THE SAME LOOP DETECTOR LEAD -IN CABLE (DLC) SHALL BE CONNECTED IN SERIES FOR TRAFFIC SIGNAL SYSTEM ONLY AND NOT FOR RAMP METERING SYSTEM.
5. KNOCKOUTS FOR THE No. 9 OR 9A PULL BOX SHALL MATCH THE SIZE OF THE CONDUIT TO BE INSTALLED AS SHOWN ON THE PLAN.
6. COLOR CODING OF TRAFFIC SIGNAL CONDUCTOR FOR OVERLAP PHASES, SEE DETAIL A ON SHEET E-9, "CONDUCTOR, POLE AND EQUIPMENT SCHEDULES".
7. WHERE 6 OR MORE 3-INCH CONDUITS ENTER A NO. 6 PULL BOX, EACH CONDUIT SHALL ENTER AT AN ANGLE NOT GREATER THAN 45-DEGREES FROM THE HORIZONTAL.
8. AT LEAST THREE WORKING DAYS PRIOR TO PERFORMING ANY WORK ON EACH EXISTING SYSTEM, THE CONTRACTOR SHALL NOTIFY THE DEPARTMENT OF TRANSPORTATION, ELECTRICAL AND SIGNAL MAINTENANCE SUPERINTENDENT, PHONE (415) 330-6500.
9. PRIOR TO ANY WORK ON PG&E SERVICE POINT, THE CONTRACTOR SHALL NOTIFY THE PG&E INSPECTOR.
10. PRIOR TO ANY WORK ON ANY AT&T SERVICE POINT, THE CONTRACTOR SHALL NOTIFY THE AT&T INSPECTOR.

PROJECT NOTES: (SHEETS E-2 THROUGH E-27 ONLY)

1 RS LIGHTING STANDARD MOUNTED ON STRUCTURE WITH 200 W hps LUMINAIRE.

2 RS LIGHTING STANDARD INSTALLED ABOVE GRADE WITH 200 W hps LUMINAIRE.

3 RC EXISTING CONDUIT WITH CONDUCTORS ATTACHED TO THE EXISTING CONCRETE RAILING.

4 RC EXISTING CONDUIT WITH CONDUCTORS MOUNTED ON TOP OF THE EXISTING CONCRETE RAILING.

5 INSTALL MODIFIED TYPE 21 STANDARD WITH 200 W HPS LUMINAIRE ON THE RETAINING WALL, SEE RETAINING WALL PLAN No. 8 FOR FOUNDATION DETAILS. POLE HEIGHT SHALL BE 25'.

6 RS TYPE 10 STANDARD (SIMILAR TO TYPE 15 STANDARD) MOUNTED ON STRUCTURE WITH 200 W hps LUMINAIRE.

7 INSTALL STATE-FURNISHED MODEL 170 CONTROLLER ASSEMBLY WITH MODEL 332 CABINET. SEE ES-3C FOR FOUNDATION DETAILS. FRONT DOOR SHALL FACE WEST.

8 CAMERA STATION: INSTALL POLE TYPE CCTV 45 AND ICU. SEE RSP ES-16A FOR POLE DETAILS.

9 CAMERA STATION: INSTALL CONTRACTOR-FURNISHED MODEL 334 CABINET. INSTALL 1 CAMERA INTERFACE PANEL AND 1 CCU.

10 RC EXISTING CITY ELECTROLIER (SIMILAR TO TYPE 15 STANDARD) WITH 200 W hps LUMINAIRE.

11 INSTALL TYPE 15 STANDARD WITH 200 W HPS LUMINAIRE ON THE ROOF OF THE TUNNEL, SEE E-27 FOR INSTALLATION DETAILS.

12 DETECTORS SHALL BE CENTERED IN EACH LANE SEE E-23 FOR DETAILS.

13 EXISTING ELECTROLIER TO REMAIN IN PLACE EXCEPT LUMINAIRE SHALL NOT BE OPERABLE.

14 PERMANENT EQUIPMENT INSTALLATION SHOWN ON E-2 TO BE USED DURING DETOUR OPERATIONS.

15 INSTALL 2'' C, 3#4 (480 V LIGHTING, CIRCUIT 1),
3#4 (480 V LIGHTING, CIRCUIT 2),
2#4 (480 V SERVICE TO TRANSFORMER ROOM).

16 INSTALL 2'' C, 3#4 (480 V LIGHTING, CIRCUIT 1),
2#4 (480 V SERVICE TO TRANSFORMER ROOM).

17 INSTALL 1½'' C, 3#4 (480 V LIGHTING, CIRCUIT 1).

18 INSTALL 1½'' C, 3#4 (480 V LIGHTING, CIRCUIT 2).

19 2'' C, 2#4 (480 V SERVICE TO TRANSFORMER ROOM),
3#4 (480 V LIGHTING, CIRCUIT 1).
RC 3#4.

20 INSTALL 2'' C, 2#6 (480 V LIGHTING).

21 INSTALL 41'' C, 2#6 (SERVICE TO CONTROLLER),
2#8 (LIGHTING).

22 INSTALL 2'' C, MT.

23 INSTALL 2½'' C, 3#4 (480 V HIGHWAY LIGHTING, CIRCUIT 1),
3#4 (480 V HIGHWAY LIGHTING, CIRCUIT 2),
2#4 (480 V SERVICE TO TRANSFORMER ROOM),
2#2 (480 V SERVICE TO SIGNAL AND LIGHTING).

24 MAINTENANCE CAMERA SYSTEM: INSTALL CONTRACTOR FURNISHED MODEL 334 CABINET.

25 INSTALL GPRS WIRELESS MODEM ASSEMBLY IN THE CABINET, SEE E-24 FOR DETAILS.

26 INSTALL CONTRACTOR-FURNISHED MODEL 334 CABINET WITH STATE-FURNISHED MODEL 170 CONTROLLER UNIT.

27 MAINTENANCE CAMERA SYSTEM: INSTALL TYPE 18-1-100 POLE WITHOUT SIGNAL ARM AND GUSSET. SEE ES-7C FOR POLE DETAILS. INSTALL 2-2''C, MT BETWEEN THE FOUNDATION AND THE ADJACENT PULL BOX. THIS IS PART OF BID ITEM "MAINTENANCE CAMERA SYSTEM".

28 VMS SYSTEM: INSTALL STATE-FURNISHED VMS PANEL AND CONTROLLER ASSEMBLY ON WOOD POST. SEE E-20 AND E-28 FOR DETAILS.

29 INSTALL TYPE 27-4-100 SIGNAL STANDARD WITH 35' SIGNAL ARM. SEE E-23 FOR SIGNAL INSTALLATION DETAILS.

30 INSTALL 3.0 KVA (480 V/120 V) STEPDOWN SUBMERSIBLE TYPE TRANSFORMER IN PULL BOX. INSTALL TWO 15A, 480V IN-LINE FUSES ON THE PRIMARY SIDE OF THE TRANSFORMER.

31 TERMINATE LOOP CONDUCTORS IN PULL BOX AND TAPE ENDS. PROVIDE 10' SLACK FOR EACH LOOP CONDUCTOR.

32 SAME AS NOTE 30 EXCEPT INSTALL 480 V/120-240 V STEPDOWN TRANSFORMER.

33 INSTALL 1½''C, 2#6 (120 V LIGHTING).

34 INSTALL MODIFIED TYPE 21 STANDARD WITH 12' LUMINAIRE ARM AND 200 WATT HPS LUMINAIRE. POLE HEIGHT SHALL BE 30' AND SHALL BE INSTALLED 2.5' BEHIND THE RAILING.

35 INSTALL 2-2''C, MT

ELECTRICAL INDEX: (SHEETS E-2 THROUGH E-29 ONLY)

DRAWING No.	TITLE
E-1	LIGHTING AND SIGN ILLUMINATION TRAFFIC OPERATIONS SYSTEM (NOTES, SYMBOLS AND ABBREVIATIONS)
E-2 AND E-3	LIGHTING AND SIGN ILLUMINATION
E-4 TO E-7	LIGHTING (DETOUR)
E-8 AND E-9	SIGNAL AND LIGHTING (TEMPORARY)
E-10 TO E-14	TRAFFIC OPERATIONS SYSTEM
E-15 AND E-16	LIGHTING (CITY STREET)
E-17	LIGHTING (PARKING LOT)
E-18 TO E-29	ELECTRICAL DETAILS

SYMBOLS: (SHEETS E-2 THROUGH E-29 ONLY)

PROPOSED	EXISTING	
HV	hv	HIGH VOLTAGE CONDUIT (SUBSTATION)
		GOLDEN GATE BRIDGE TYPE LIGHTING STANDARD
FO		FIBER OPTIC PULL BOX (SEE E-25 FOR DETAILS)
F		MAINTENANCE CAMERA - FUTURE
VMS	vms	VARIABLE MESSAGE SIGN

ABBREVIATIONS: (SHEETS E-2 THROUGH E-29 ONLY)

PROPOSED	EXISTING	
CCU	ccu	CAMERA CONTROL UNIT
CT ID		CALTRANS IDENTIFICATION
GPRS		GENERAL PACKET RADIO SERVICE
HCC		HYBRID CAMERA CABLE
ICU		INTEGRATED CAMERA UNIT
VCC		VMS CONTROL CABLE
VEU	veu	VIDEO ENCODER UNIT
VMS	vms	VARIABLE MESSAGE SIGN
WAN		WIDE AREA NETWORK

THIS PLAN IS ACCURATE FOR ELECTRICAL WORK ONLY

ELECTRICAL INDEX, NOTES, ABBREVIATIONS AND SYMBOLS
E-1

REVISED BY	DATE REVISED
PB	8/01/09

PAUL BAUTISTA — DESIGNED BY
MAHMOOD NOII — CALCULATED-DESIGNED BY
CHECKED BY
FUNCTIONAL SUPERVISOR: LAI HONG CHIU

STATE OF CALIFORNIA - DEPARTMENT OF TRANSPORTATION
Caltrans®
ELECTRICAL

LAST REVISION | DATE PLOTTED => 14-DEC-2009
10-30-09 | TIME PLOTTED => 15:53

BORDER LAST REVISED 4/11/2008 — RELATIVE BORDER SCALE IS IN INCHES 0 1 2 3 — USERNAME => trienard — DGN FILE => 416374ea001.dgn — CU 04242 — EA 163741

Dist	COUNTY	ROUTE	POST MILES TOTAL PROJECT	SHEET No.	TOTAL SHEETS
04	SF	101	8.2/9.2	164	654

8-20-09
REGISTERED ELECTRICAL ENGINEER DATE

Mahmood Noii
No. 13717
Exp 6-30-11
ELECT
REGISTERED PROFESSIONAL ENGINEER
STATE OF CALIFORNIA

12-14-09
PLANS APPROVAL DATE

THE STATE OF CALIFORNIA OR ITS OFFICERS OR AGENTS SHALL NOT BE RESPONSIBLE FOR THE ACCURACY OR COMPLETENESS OF SCANNED COPIES OF THIS PLAN SHEET.

CALIFORNIA STATE FIRE MARSHAL APPROVED
Approval of this plan does not authorize or approve any omission or deviation from applicable regulations. Final approval is subject to field inspection. One set of approved plans shall be available on the project site at all times.
Reviewed by: STEPHEN GUARINO
Approval date: 12-14-09

FOR ACCURATE RIGHT OF WAY AND ACCESS DATA, CONTACT RIGHT OF WAY ENGINEERING AT THE DISTRICT OFFICE.

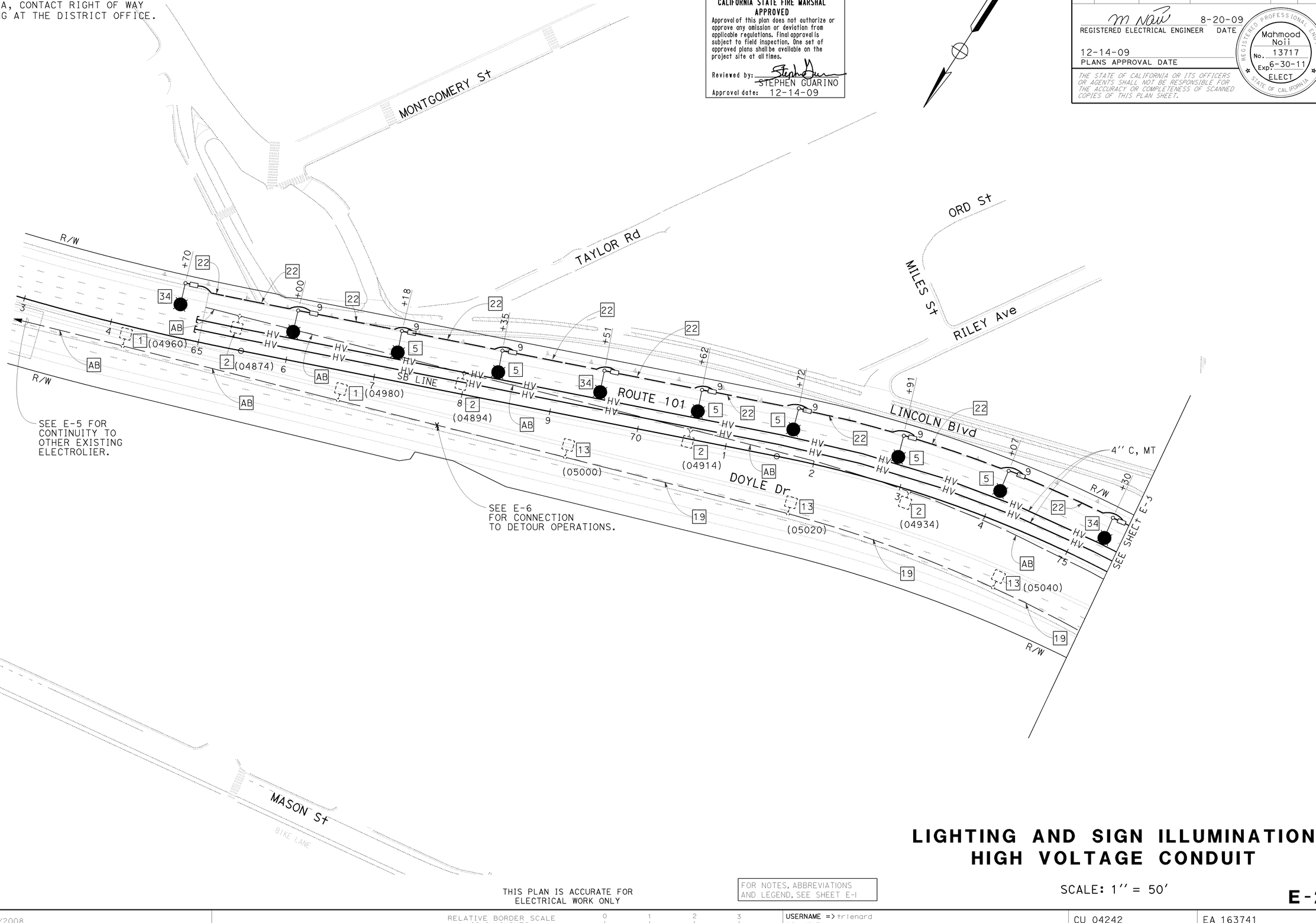

THIS PLAN IS ACCURATE FOR ELECTRICAL WORK ONLY

FOR NOTES, ABBREVIATIONS AND LEGEND, SEE SHEET E-1

LIGHTING AND SIGN ILLUMINATION
HIGH VOLTAGE CONDUIT

SCALE: 1'' = 50'

E-2

STATE OF CALIFORNIA - DEPARTMENT OF TRANSPORTATION
ELECTRICAL
Caltrans

FUNCTIONAL SUPERVISOR: LAI HONG CHIU
CALCULATED-DESIGNED BY: PAUL BAUTISTA
CHECKED BY: MAHMOOD NOII
REVISED BY: PB
DATE REVISED: 8/01/09

LAST REVISION
DATE PLOTTED => 14-DEC-2009
TIME PLOTTED => 15:53
10-30-09

BORDER LAST REVISED 4/11/2008
RELATIVE BORDER SCALE IS IN INCHES 0 1 2 3
USERNAME => trienard
DGN FILE => 416374ua002.dgn
CU 04242
EA 163741

FOR ACCURATE RIGHT OF WAY AND
ACCESS DATA, CONTACT RIGHT OF WAY
ENGINEERING AT THE DISTRICT OFFICE.

CALIFORNIA STATE FIRE MARSHAL APPROVED
Approval of this plan does not authorize or approve any omission or deviation from applicable regulations. Final approval is subject to field inspection. One set of approved plans shall be available on the project site at all times.
Reviewed by: STEPHEN GUARINO
Approval date: 12-14-09

Dist	COUNTY	ROUTE	POST MILES TOTAL PROJECT	SHEET No.	TOTAL SHEETS
04	SF	101	8.2/9.2	165	654

REGISTERED ELECTRICAL ENGINEER — 8-20-09 DATE
12-14-09 PLANS APPROVAL DATE

REGISTERED PROFESSIONAL ENGINEER — Mahmood Noii — No. 13717 — Exp 6-30-11 — ELECT — STATE OF CALIFORNIA

THE STATE OF CALIFORNIA OR ITS OFFICERS OR AGENTS SHALL NOT BE RESPONSIBLE FOR THE ACCURACY OR COMPLETENESS OF SCANNED COPIES OF THIS PLAN SHEET.

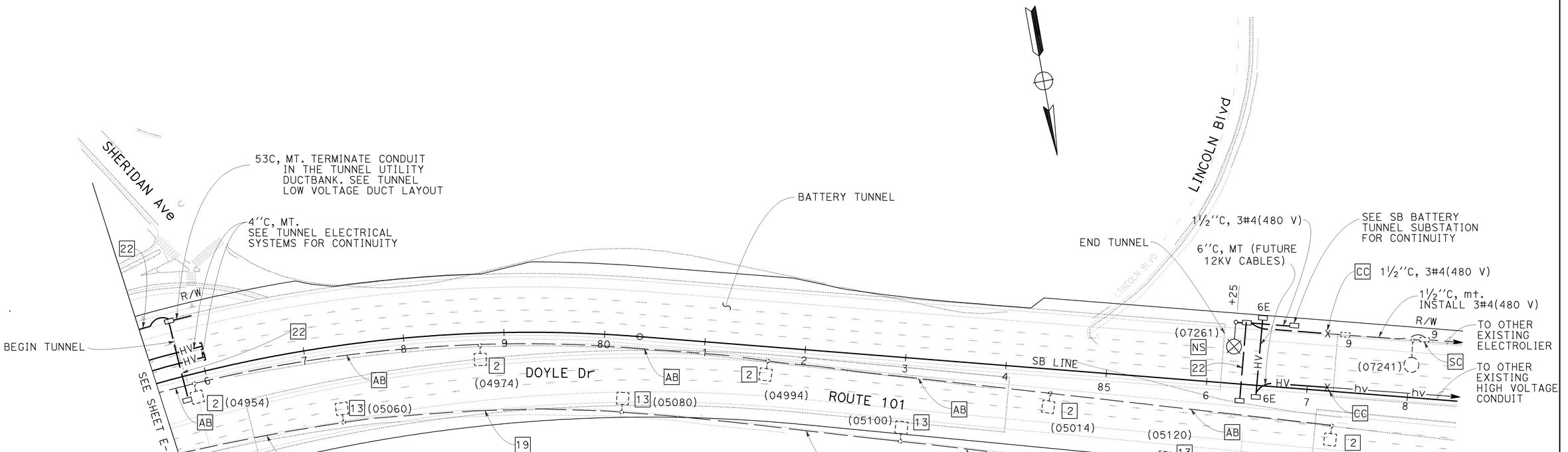

LIGHTING AND SIGN ILLUMINATION
HIGH VOLTAGE CONDUIT

SCALE: 1" = 50'

THIS PLAN IS ACCURATE FOR ELECTRICAL WORK ONLY

FOR NOTES, ABBREVIATIONS AND LEGEND, SEE SHEET E-1

E-3

CALCULATED-DESIGNED BY: PAUL BAUTISTA
CHECKED BY: MAHMOOD NOII
REVISED BY: PB
DATE REVISED: 8/01/09
FUNCTIONAL SUPERVISOR: LAI HONG CHIU

STATE OF CALIFORNIA - DEPARTMENT OF TRANSPORTATION
ELECTRICAL

LAST REVISION: DATE PLOTTED => 14-DEC-2009
TIME PLOTTED => 15:53
10-29-09

BORDER LAST REVISED 4/11/2008
RELATIVE BORDER SCALE IS IN INCHES 0 1 2 3
USERNAME => trlenard
DGN FILE => 416374ua003.dgn
CU 04242
EA 163741

FOR ACCURATE RIGHT OF WAY AND ACCESS DATA, CONTACT RIGHT OF WAY ENGINEERING AT THE DISTRICT OFFICE.

Dist	COUNTY	ROUTE	POST MILES TOTAL PROJECT	SHEET No.	TOTAL SHEETS
04	SF	101	8.2/9.2	166	654

REGISTERED ELECTRICAL ENGINEER — 8-20-09 DATE

12-14-09
PLANS APPROVAL DATE

REGISTERED PROFESSIONAL ENGINEER — Mahmood Noii — No. 13717 — Exp 6-30-11 — ELECT — STATE OF CALIFORNIA

THE STATE OF CALIFORNIA OR ITS OFFICERS OR AGENTS SHALL NOT BE RESPONSIBLE FOR THE ACCURACY OR COMPLETENESS OF SCANNED COPIES OF THIS PLAN SHEET.

CALIFORNIA STATE FIRE MARSHAL APPROVED
Approval of this plan does not authorize or approve any omission or deviation from applicable regulations. Final approval is subject to field inspection. One set of approved plans shall be available on the project site at all times.
Reviewed by: STEPHEN GUARINO
Approval date: 12-14-09

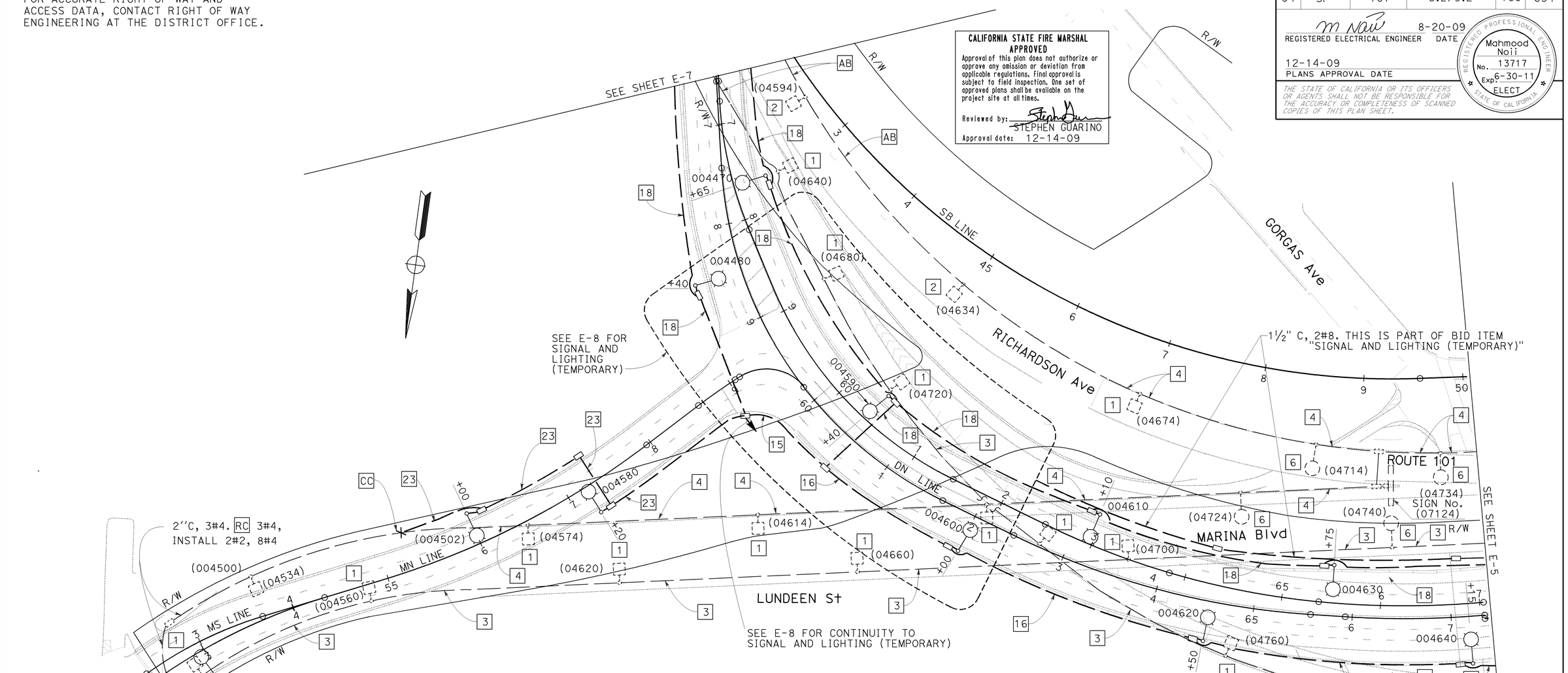

EXISTING SYSTEM No. 34-480-04500

480 V, 3Ø - PG&E TRANSFORMER PAD

EXISTING LOAD:
- 80-200 W hps LUMINAIRES
- 3-70 W hps LUMINAIRES
- 10-75 W INCANDESCENT SIGN LIGHTING
- 8-175 W MERCURY LUMINARIES
- 5-150 W INCANDESCENT FLASHING BEACON
- 2-1000 W CCTV
- 5-100 W TRAFFIC MONITORING STATION
- 100 W tdc

LOAD AFTER MODIFICATION:
- 38-200 W HPS LUMINAIRES
- 5-310 W HPS LUMINAIRES
- 1500 W TRAFFIC SIGNAL

THIS PLAN IS ACCURATE FOR ELECTRICAL WORK ONLY

FOR NOTES, ABBREVIATIONS AND LEGEND, SEE SHEET E-1

LIGHTING (DETOUR)

SCALE: 1'' = 50'

E-4

CALCULATED-DESIGNED BY	CHECKED BY	REVISED BY	DATE REVISED
PAUL BAUTISTA	MAHMOOD NOII	PB	8/01/09

STATE OF CALIFORNIA - DEPARTMENT OF TRANSPORTATION — ELECTRICAL
FUNCTIONAL SUPERVISOR: LAI HONG CHIU

LAST REVISION — DATE PLOTTED => 14-DEC-2009, TIME PLOTTED => 15:53
09-15-09

BORDER LAST REVISED 4/11/2008 — RELATIVE BORDER SCALE IS IN INCHES (0 1 2 3) — USERNAME => trienard — DGN FILE => 416374ua004.dgn — CU 04242 — EA 163741

Dist	COUNTY	ROUTE	POST MILES TOTAL PROJECT	SHEET No.	TOTAL SHEETS
04	SF	101	8.2/9.2	167	654

REGISTERED ELECTRICAL ENGINEER — 8-20-09 DATE

12-14-09
PLANS APPROVAL DATE

REGISTERED PROFESSIONAL ENGINEER — Mahmood Noii — No. 13717 — Exp 6-30-11 — ELECT — STATE OF CALIFORNIA

THE STATE OF CALIFORNIA OR ITS OFFICERS OR AGENTS SHALL NOT BE RESPONSIBLE FOR THE ACCURACY OR COMPLETENESS OF SCANNED COPIES OF THIS PLAN SHEET.

CALIFORNIA STATE FIRE MARSHAL APPROVED

Approval of this plan does not authorize or approve any omission or deviation from applicable regulations. Final approval is subject to field inspection. One set of approved plans shall be available on the project site at all times.

Reviewed by: STEPHEN GUARINO

Approval date: 12-14-09

FOR ACCURATE RIGHT OF WAY AND ACCESS DATA, CONTACT RIGHT OF WAY ENGINEERING AT THE DISTRICT OFFICE.

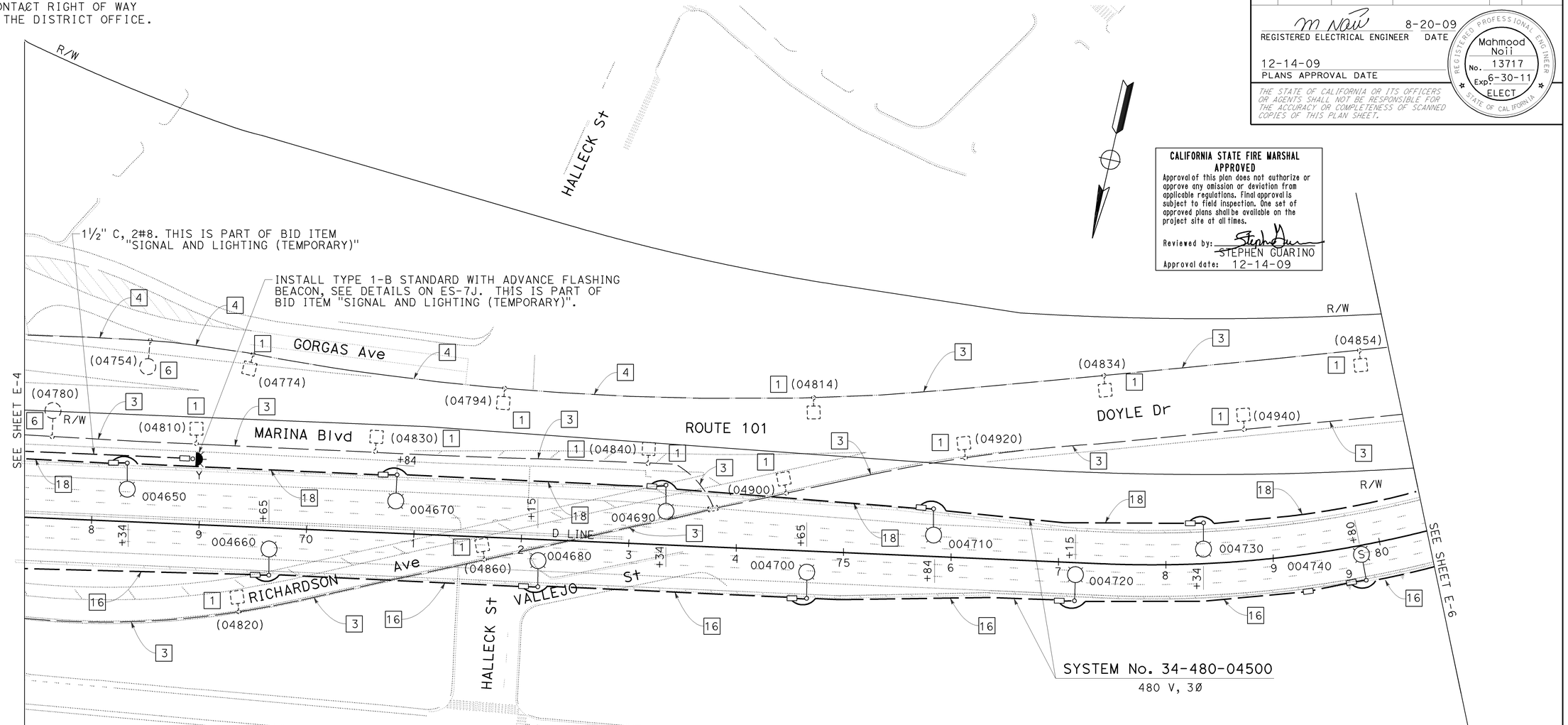

LIGHTING (DETOUR)

SCALE: 1'' = 50'

THIS PLAN IS ACCURATE FOR ELECTRICAL WORK ONLY

FOR NOTES, ABBREVIATIONS AND LEGEND, SEE SHEET E-1

E-5

STATE OF CALIFORNIA - DEPARTMENT OF TRANSPORTATION
ELECTRICAL

FUNCTIONAL SUPERVISOR: LAI HONG CHIU

CALCULATED-DESIGNED BY: PB
CHECKED BY: MAHMOOD NOII

REVISED BY: PB
DATE REVISED: 8/01/09

LAST REVISION — DATE PLOTTED => 14-DEC-2009 — TIME PLOTTED => 15:53
10-27-09

BORDER LAST REVISED 4/11/2008

RELATIVE BORDER SCALE IS IN INCHES 0 1 2 3

USERNAME => trlenard
DGN FILE => 416374ua005.dgn

CU 04242

EA 163741

FOR ACCURATE RIGHT OF WAY AND ACCESS DATA, CONTACT RIGHT OF WAY ENGINEERING AT THE DISTRICT OFFICE.

CALIFORNIA STATE FIRE MARSHAL APPROVED
Approval of this plan does not authorize or approve any omission or deviation from applicable regulations. Final approval is subject to field inspection. One set of approved plans shall be available on the project site at all times.
Reviewed by: STEPHEN GUARINO
Approval date: 12-14-09

Dist	COUNTY	ROUTE	POST MILES TOTAL PROJECT	SHEET No.	TOTAL SHEETS
04	SF	101	8.2/9.2	168	654

REGISTERED ELECTRICAL ENGINEER — DATE 8-20-09
Mahmood Noii No. 13717 Exp 6-30-11 ELECT — REGISTERED PROFESSIONAL ENGINEER — STATE OF CALIFORNIA
12-14-09
PLANS APPROVAL DATE

THE STATE OF CALIFORNIA OR ITS OFFICERS OR AGENTS SHALL NOT BE RESPONSIBLE FOR THE ACCURACY OR COMPLETENESS OF SCANNED COPIES OF THIS PLAN SHEET.

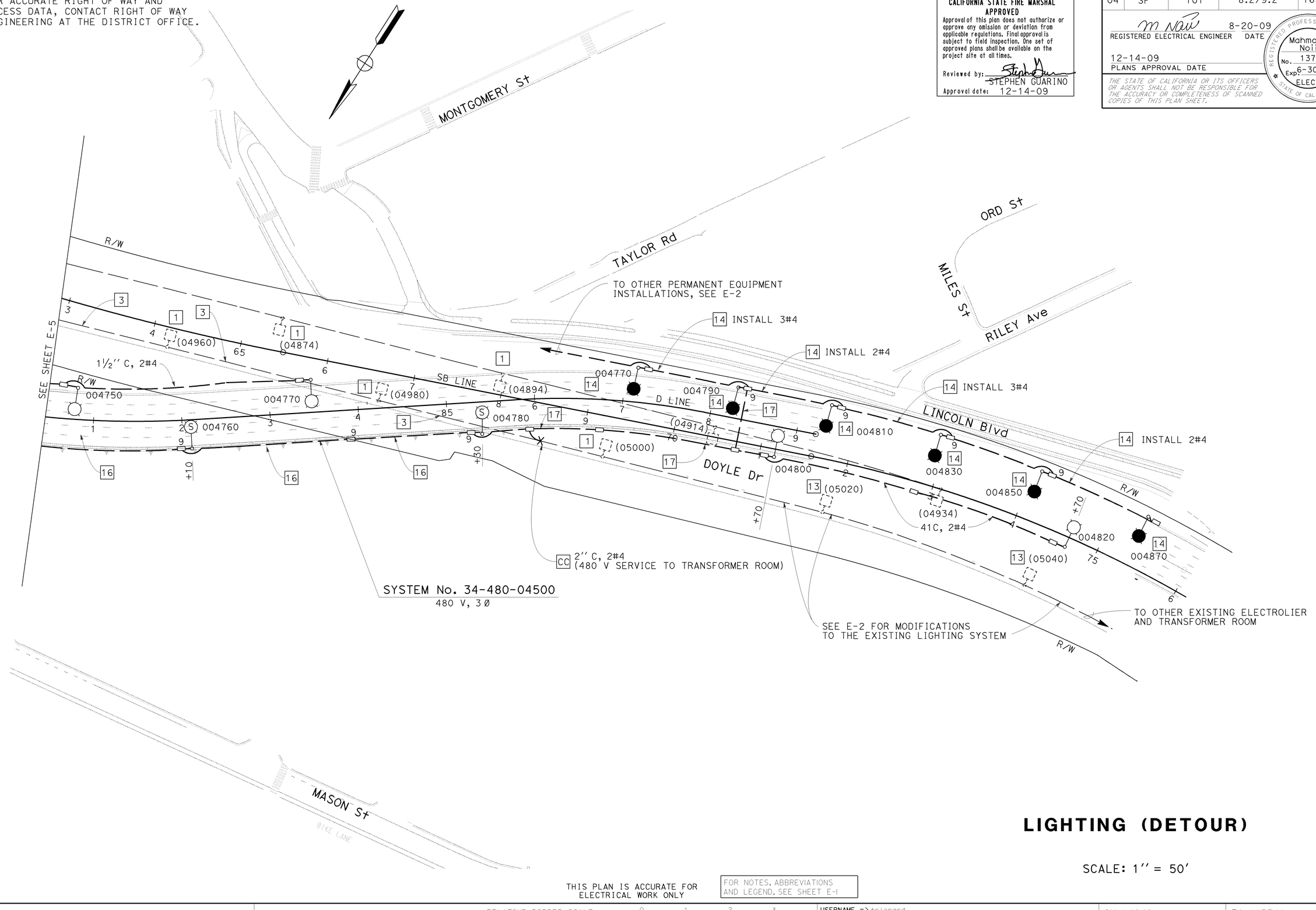

LIGHTING (DETOUR)

SCALE: 1'' = 50'

THIS PLAN IS ACCURATE FOR ELECTRICAL WORK ONLY

FOR NOTES, ABBREVIATIONS AND LEGEND, SEE SHEET E-1

E-6

STATE OF CALIFORNIA - DEPARTMENT OF TRANSPORTATION
ELECTRICAL
FUNCTIONAL SUPERVISOR: LAI HONG CHIU
CALCULATED-DESIGNED BY: PAUL BAUTISTA
CHECKED BY: MAHMOOD NOII
REVISED BY: PB
DATE REVISED: 8/01/09
LAST REVISION DATE PLOTTED => 14-DEC-2009
TIME PLOTTED => 15:53
10-30-09

Dist	COUNTY	ROUTE	POST MILES TOTAL PROJECT	SHEET No.	TOTAL SHEETS
04	SF	101	8.2/9.2	169	654

REGISTERED ELECTRICAL ENGINEER — DATE: 8-20-09

Mahmood Noii — No. 13717 — Exp 6-30-11 — ELECT — REGISTERED PROFESSIONAL ENGINEER — STATE OF CALIFORNIA

12-14-09
PLANS APPROVAL DATE

THE STATE OF CALIFORNIA OR ITS OFFICERS OR AGENTS SHALL NOT BE RESPONSIBLE FOR THE ACCURACY OR COMPLETENESS OF SCANNED COPIES OF THIS PLAN SHEET.

FOR ACCURATE RIGHT OF WAY AND ACCESS DATA, CONTACT RIGHT OF WAY ENGINEERING AT THE DISTRICT OFFICE.

CALIFORNIA STATE FIRE MARSHAL APPROVED

Approval of this plan does not authorize or approve any omission or deviation from applicable regulations. Final approval is subject to field inspection. One set of approved plans shall be available on the project site at all times.

Reviewed by: STEPHEN GUARINO

Approval date: 12-14-09

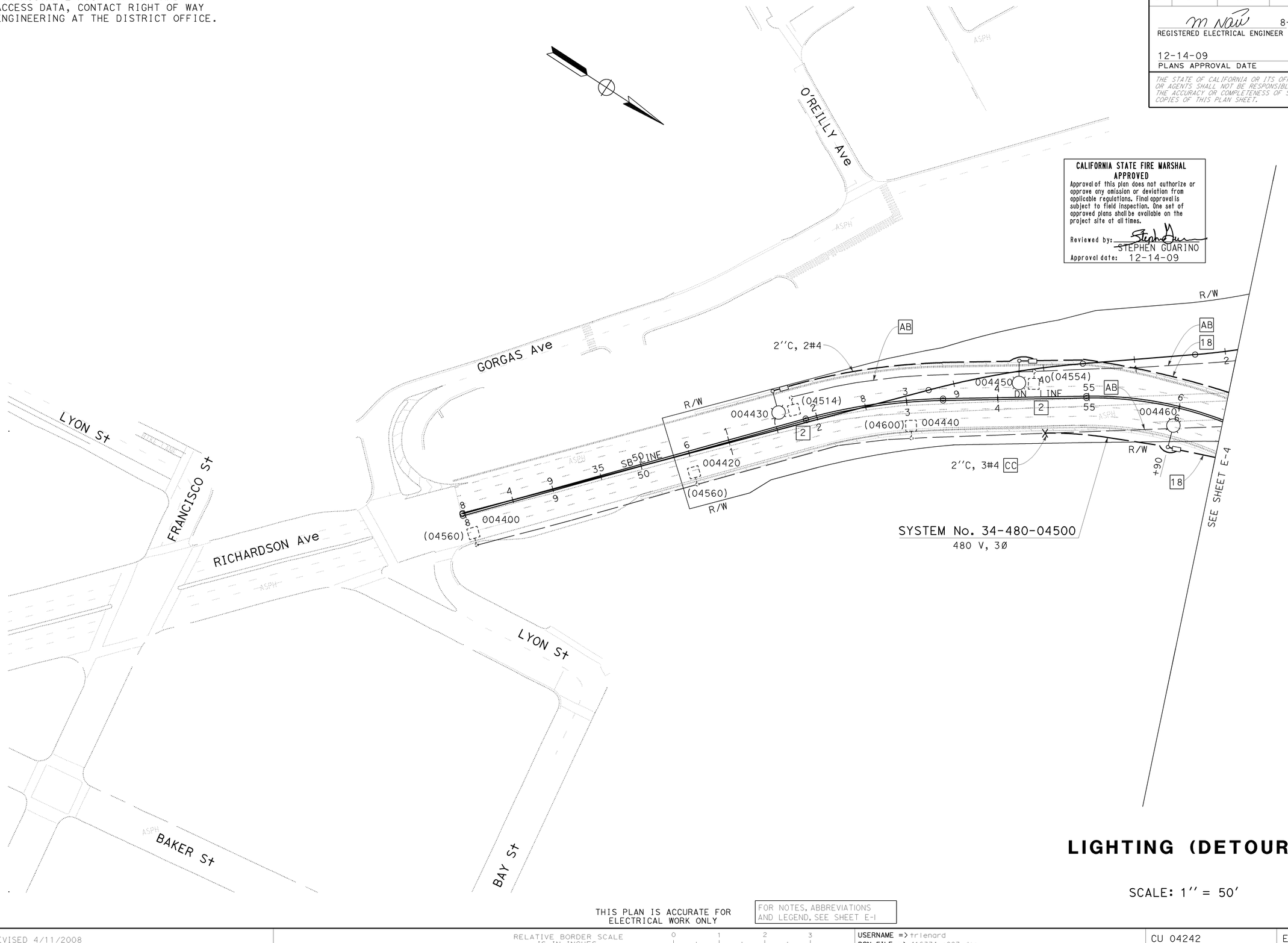

LIGHTING (DETOUR)

SCALE: 1'' = 50'

THIS PLAN IS ACCURATE FOR ELECTRICAL WORK ONLY

FOR NOTES, ABBREVIATIONS AND LEGEND, SEE SHEET E-1

E-7

STATE OF CALIFORNIA - DEPARTMENT OF TRANSPORTATION
ELECTRICAL

FUNCTIONAL SUPERVISOR: LAI HONG CHIU

CALCULATED-DESIGNED BY: PAUL BAUTISTA
CHECKED BY: MAHMOOD NOII

REVISED BY: PB
DATE REVISED: 8/01/09

LAST REVISION — DATE PLOTTED => 14-DEC-2009
TIME PLOTTED => 15:53
11-18-09

Dist	COUNTY	ROUTE	POST MILES TOTAL PROJECT	SHEET No.	TOTAL SHEETS
04	SF	101	8.2/9.2	170	654

REGISTERED ELECTRICAL ENGINEER 8-20-09 DATE

12-14-09
PLANS APPROVAL DATE

REGISTERED PROFESSIONAL ENGINEER Mahmood Noii No. 13717 Exp. 6-30-11 ELECT STATE OF CALIFORNIA

THE STATE OF CALIFORNIA OR ITS OFFICERS OR AGENTS SHALL NOT BE RESPONSIBLE FOR THE ACCURACY OR COMPLETENESS OF SCANNED COPIES OF THIS PLAN SHEET.

CALIFORNIA STATE FIRE MARSHAL APPROVED
Approval of this plan does not authorize or approve any omission or deviation from applicable regulations. Final approval is subject to field inspection. One set of approved plans shall be available on the project site at all times.
Reviewed by: STEPHEN GUARINO
Approval date: 12-14-09

FOR ACCURATE RIGHT OF WAY AND ACCESS DATA, CONTACT RIGHT OF WAY ENGINEERING AT THE DISTRICT OFFICE.

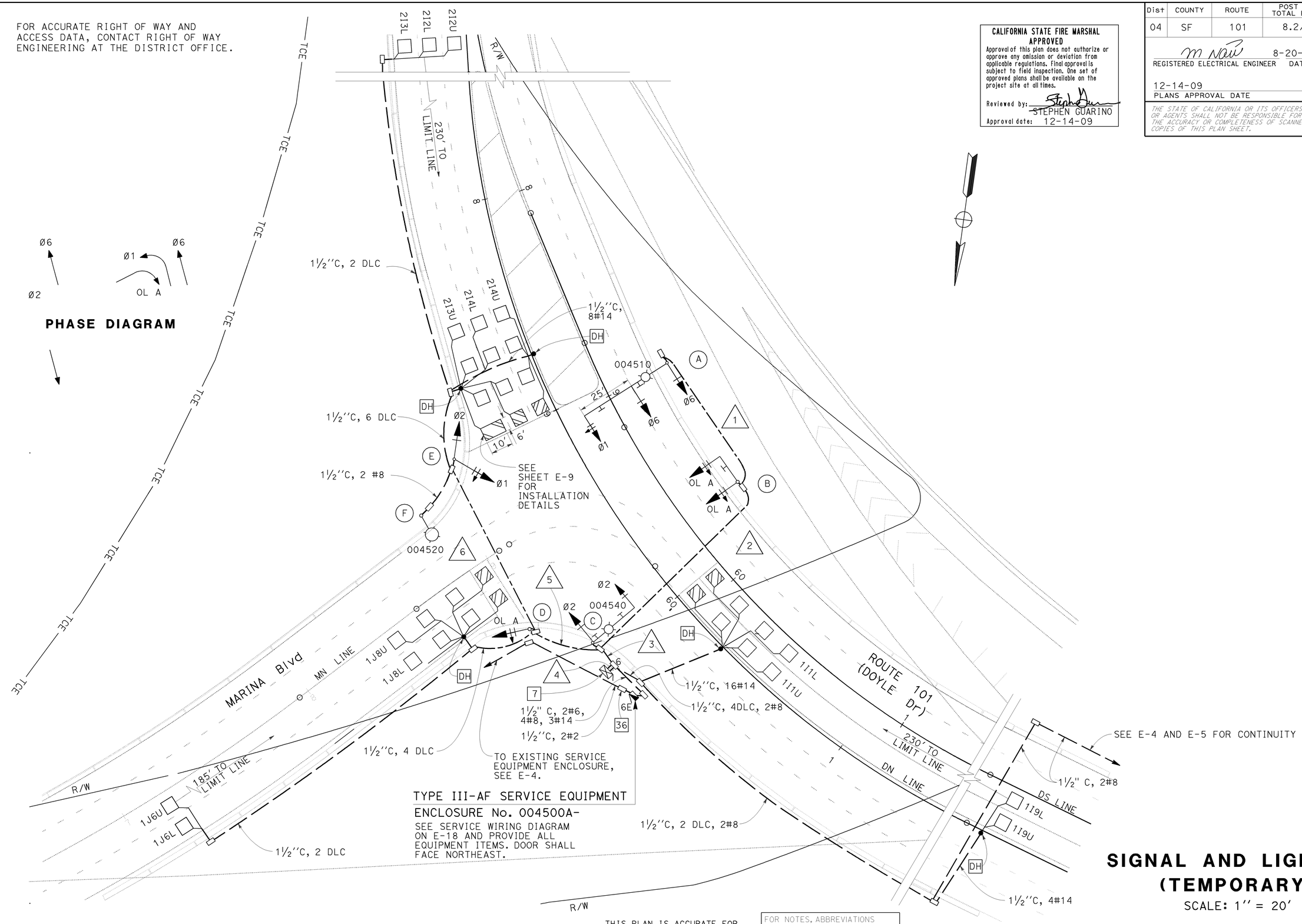

SIGNAL AND LIGHTING (TEMPORARY)

SCALE: 1'' = 20'

THIS PLAN IS ACCURATE FOR ELECTRICAL WORK ONLY

FOR NOTES, ABBREVIATIONS AND LEGEND, SEE SHEET E-1

E-8

STATE OF CALIFORNIA - DEPARTMENT OF TRANSPORTATION
Caltrans
ELECTRICAL

FUNCTIONAL SUPERVISOR: LAI HONG CHIU
CALCULATED-DESIGNED BY: PAUL BAUTISTA
CHECKED BY: MAHMOOD NOII
REVISED BY: PB
DATE REVISED: 8/01/09

LAST REVISION 11-18-09
DATE PLOTTED => 14-DEC-2009
TIME PLOTTED => 15:53

CONDUCTOR SCHEDULE

CONDUCTOR DESIGNATION	NUMBER OF CONDUCTORS RUN NUMBER 1	2	3	4	5	6
No. 14 CONDUCTORS						
Ø1	3	3	6	6	3	3
Ø2			3	3	3	3
Ø6	3	3	3	3	3	
OLA		3	6	6	3	3
PEU			3			
SPARES	3	3	3	3	3	3
TOTAL No. 14 CONDUCTORS	9	12	24	21	15	12
DETECTOR CABLES						
1I1U				1		
1I1L				1		
1IAU				1		
1I9L				1		
1J6U			1	1	1	
1J6L			1	1	1	
1J8U			1	1	1	
1J8L			1	1	1	
2I2U			1	1	1	1
2I2L			1	1	1	1
2I3L			1	1	1	1
2I3U			1	1	1	1
2I4U			1	1	1	1
2I4L			1	1	1	1
TOTAL DETECTOR CABLES			10	14	10	6
No. 8 CONDUCTORS						
LIGHTING	2	2	2		2	2
SIGNAL NEUTRAL	1	1	2	2	1	1
TOTAL No. 8 CONDUCTORS	3	3	4	2	3	3
No. 6 CONDUCTORS						
120 V SERVICE TO CONTROLLER				2		
CONDUIT SIZE (INCHES)	2	3	3	2-3	3	3

TRAFFIC SIGNAL CONDUCTORS FOR PHASE OVERLAPS SHALL BE DOUBLE STRIPED AS FOLLOWS:

SIGNAL PHASE	BASE COLR	DOUBLE STRIPE COLOR
OLA	RE,YE,BRN	BLACK/BLUE
OLB	RE,YE,BRN	BLACK/ORANGE
OLC	RE,YE,BRN	BLACK/PURPLE
OLD	RE,YE,BRN	BLACK/GRAY

CALIFORNIA STATE FIRE MARSHAL APPROVED
Approval of this plan does not authorize or approve any omission or deviation from applicable regulations. Final approval is subject to field inspection. One set of approved plans shall be available on the project site at all times.
Reviewed by: STEPHEN GUARINO
Approval date: 12-14-09

DETAIL A

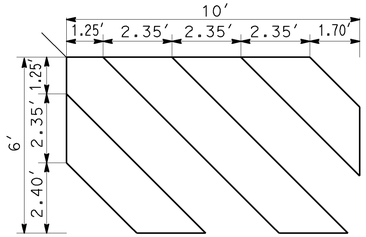

SAW CUT DETAIL

DETAIL B

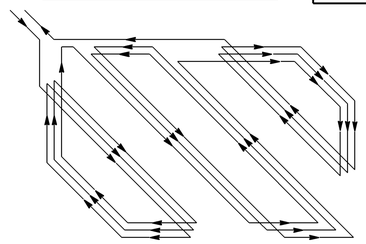

WINDING DETAIL

LOOP DETECTOR DETAIL
NOT TO SCALE
SEE STANDARD PLANS ES-5B FOR OTHER DETAILS

POLE AND EQUIPMENT SCHEDULE

LOCATION	STANDARD TYPE	SIG. MA (FEET)	LUM. MA (FEET)	VEH. SIGNAL MOUNTING MAST ARM	VEH. SIGNAL MOUNTING POLE	PED SIGNAL MOUNTING	PPB Ø	HPS LUMINAIRE (WATTS)	SPECIAL REQUIREMENT *
Ⓐ	26-4-100	45	12	MAS MAS	SV-1-T			200	IS , Tot 2
Ⓑ	16-2-100	15		MAS	SV-1-T				IS
Ⓒ	19-4-100	25	12	MAS	SV-1-T			200	IS , Tot 2. INSTALL 1 PEU.
Ⓓ	1-B				TV-1-T				
Ⓔ	1-B				TV-2-T				
Ⓕ	15		12					200	

* *OTHER REQUIREMENTS ARE COVERED BY NOTES, LEGEND, SPECIAL PROVISIONS, AND STANDARD SPECIFICATIONS. FOR TYPE OF STANDARD, VEHICLE AND PEDESTRIAN SIGNAL MOUNTING, SEE STANDARD PLANS.*

Dist	COUNTY	ROUTE	POST MILES TOTAL PROJECT	SHEET No.	TOTAL SHEETS
04	SF	101	8.2/9.2	171	654

REGISTERED ELECTRICAL ENGINEER — 8-20-09 DATE
12-14-09 PLANS APPROVAL DATE

REGISTERED PROFESSIONAL ENGINEER — Mahmood Noii — No. 13717 — Exp 6-30-11 — ELECT — STATE OF CALIFORNIA

THE STATE OF CALIFORNIA OR ITS OFFICERS OR AGENTS SHALL NOT BE RESPONSIBLE FOR THE ACCURACY OR COMPLETENESS OF SCANNED COPIES OF THIS PLAN SHEET.

PB 8/01/09 — REVISED BY / DATE REVISED
PAUL BAUTISTA / MAHMOOD NOII — CALCULATED-DESIGNED BY / CHECKED BY
LAI HONG CHIU — FUNCTIONAL SUPERVISOR
STATE OF CALIFORNIA - DEPARTMENT OF TRANSPORTATION — ELECTRICAL

SIGNAL AND LIGHTING (TEMPORARY)
(CONDUCTOR, POLE AND EQUIPMENT SCHEDULES)
E-9

LAST REVISION DATE PLOTTED => 14-DEC-2009
TIME PLOTTED => 15:53

FOR ACCURATE RIGHT OF WAY AND
ACCESS DATA, CONTACT RIGHT OF WAY
ENGINEERING AT THE DISTRICT OFFICE.

CALIFORNIA STATE FIRE MARSHAL
APPROVED
Approval of this plan does not authorize or approve any omission or deviation from applicable regulations. Final approval is subject to field inspection. One set of approved plans shall be available on the project site at all times.
Reviewed by: STEPHEN GUARINO
Approval date: 12-14-09

Dist	COUNTY	ROUTE	POST MILES TOTAL PROJECT	SHEET No.	TOTAL SHEETS
04	SF	101	8.2/9.2	172	654

REGISTERED ELECTRICAL ENGINEER — 8-20-09 DATE
Mahmood Noii No. 13717 Exp 6-30-11 ELECT — REGISTERED PROFESSIONAL ENGINEER — STATE OF CALIFORNIA
12-14-09
PLANS APPROVAL DATE

THE STATE OF CALIFORNIA OR ITS OFFICERS OR AGENTS SHALL NOT BE RESPONSIBLE FOR THE ACCURACY OR COMPLETENESS OF SCANNED COPIES OF THIS PLAN SHEET.

RS POLE EXTENSION TYPE CCTV 10 MOUNTED ON TOP OF THE EXISTING SIGN STRUCTURE AND CCTV CAMERA WITH PAN AND TILT UNIT.

TYPE III-AF SERVICE EQUIPMENT
ENCLOSURE No. 004500- SEE E-2

RS TYPE III-AF SERVICE EQUIPMENT
ENCLOSURE No. 004500A

EXISTING SYSTEM No. 34-480-04500

GORGAS Ave
RICHARDSON Ave
ROUTE 101
MARINA Blvd
LUNDEEN St
MASON St
SB LINE
DN LINE
MN LINE
MS LINE
R/W
TCE
BIKE LANE
SEE SHEET E-11

TRAFFIC OPERATIONS SYSTEM
SCALE: 1'' = 50'

THIS PLAN IS ACCURATE FOR ELECTRICAL WORK ONLY

FOR NOTES, ABBREVIATIONS AND LEGEND, SEE SHEET E-1

E-10

STATE OF CALIFORNIA - DEPARTMENT OF TRANSPORTATION
ELECTRICAL
FUNCTIONAL SUPERVISOR: LAI HONG CHIU
CALCULATED-DESIGNED BY: PAUL BAUTISTA
CHECKED BY: MAHMOOD NOII
REVISED BY: PB
DATE REVISED: 8/01/09

LAST REVISION | DATE PLOTTED => 14-DEC-2009 | TIME PLOTTED => 15:54
09-04-09

BORDER LAST REVISED 4/11/2008
RELATIVE BORDER SCALE IS IN INCHES 0 1 2 3
USERNAME => trlenard
DGN FILE => 416374ua010.dgn
CU 04242
EA 163741

Dist	COUNTY	ROUTE	POST MILES TOTAL PROJECT	SHEET No.	TOTAL SHEETS
04	SF	101	8.2/9.2	173	654

REGISTERED ELECTRICAL ENGINEER — DATE: 8-20-09

Mahmood Noii
No. 13717
Exp 6-30-11
ELECT
REGISTERED PROFESSIONAL ENGINEER
STATE OF CALIFORNIA

12-14-09
PLANS APPROVAL DATE

THE STATE OF CALIFORNIA OR ITS OFFICERS OR AGENTS SHALL NOT BE RESPONSIBLE FOR THE ACCURACY OR COMPLETENESS OF SCANNED COPIES OF THIS PLAN SHEET.

CALIFORNIA STATE FIRE MARSHAL APPROVED

Approval of this plan does not authorize or approve any omission or deviation from applicable regulations. Final approval is subject to field inspection. One set of approved plans shall be available on the project site at all times.

Reviewed by: STEPHEN GUARINO

Approval date: 12-14-09

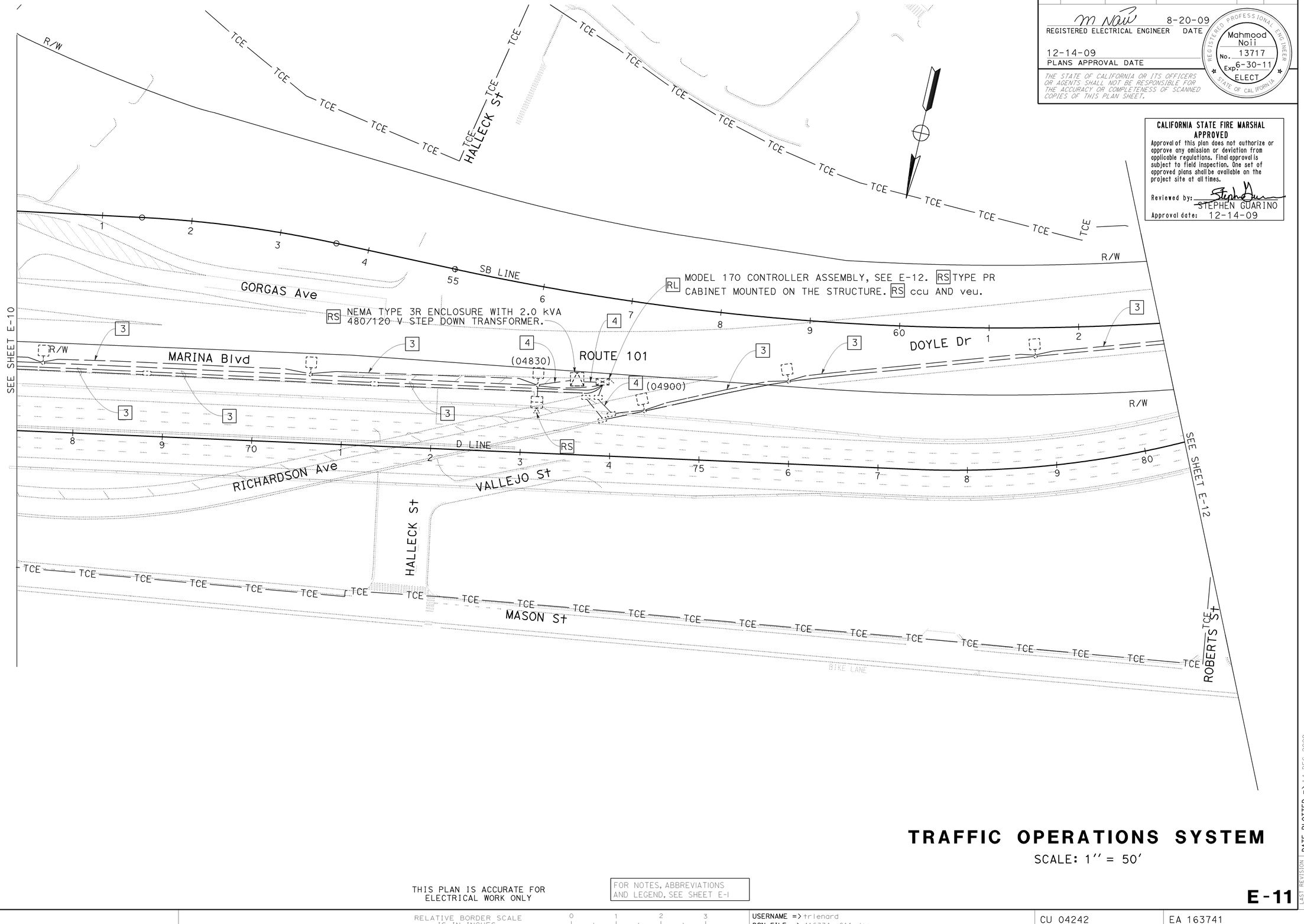

TRAFFIC OPERATIONS SYSTEM

SCALE: 1'' = 50'

THIS PLAN IS ACCURATE FOR ELECTRICAL WORK ONLY

FOR NOTES, ABBREVIATIONS AND LEGEND, SEE SHEET E-1

E-11

STATE OF CALIFORNIA - DEPARTMENT OF TRANSPORTATION
ELECTRICAL
FUNCTIONAL SUPERVISOR: LAI HONG CHIU
CALCULATED-DESIGNED BY: PAUL BAUTISTA
CHECKED BY: MAHMOOD NOII
REVISED BY: PB
DATE REVISED: 8/01/09

LAST REVISION — DATE PLOTTED => 14-DEC-2009, TIME PLOTTED => 15:54
08-24-09

BORDER LAST REVISED 4/11/2008

RELATIVE BORDER SCALE IS IN INCHES 0 1 2 3

USERNAME => trlenard
DGN FILE => 416374ua011.dgn

CU 04242

EA 163741

Dist	COUNTY	ROUTE	POST MILES TOTAL PROJECT	SHEET No.	TOTAL SHEETS
04	SF	101	8.2/9.2	174	654

M Noii 8-20-09
REGISTERED ELECTRICAL ENGINEER DATE

12-14-09
PLANS APPROVAL DATE

REGISTERED PROFESSIONAL ENGINEER Mahmood Noii No. 13717 Exp. 6-30-11 ELECT STATE OF CALIFORNIA

THE STATE OF CALIFORNIA OR ITS OFFICERS OR AGENTS SHALL NOT BE RESPONSIBLE FOR THE ACCURACY OR COMPLETENESS OF SCANNED COPIES OF THIS PLAN SHEET.

CALIFORNIA STATE FIRE MARSHAL APPROVED
Approval of this plan does not authorize or approve any omission or deviation from applicable regulations. Final approval is subject to field inspection. One set of approved plans shall be available on the project site at all times.
Reviewed by: STEPHEN GUARINO
Approval date: 12-14-09

FOR ACCURATE RIGHT OF WAY AND ACCESS DATA, CONTACT RIGHT OF WAY ENGINEERING AT THE DISTRICT OFFICE.

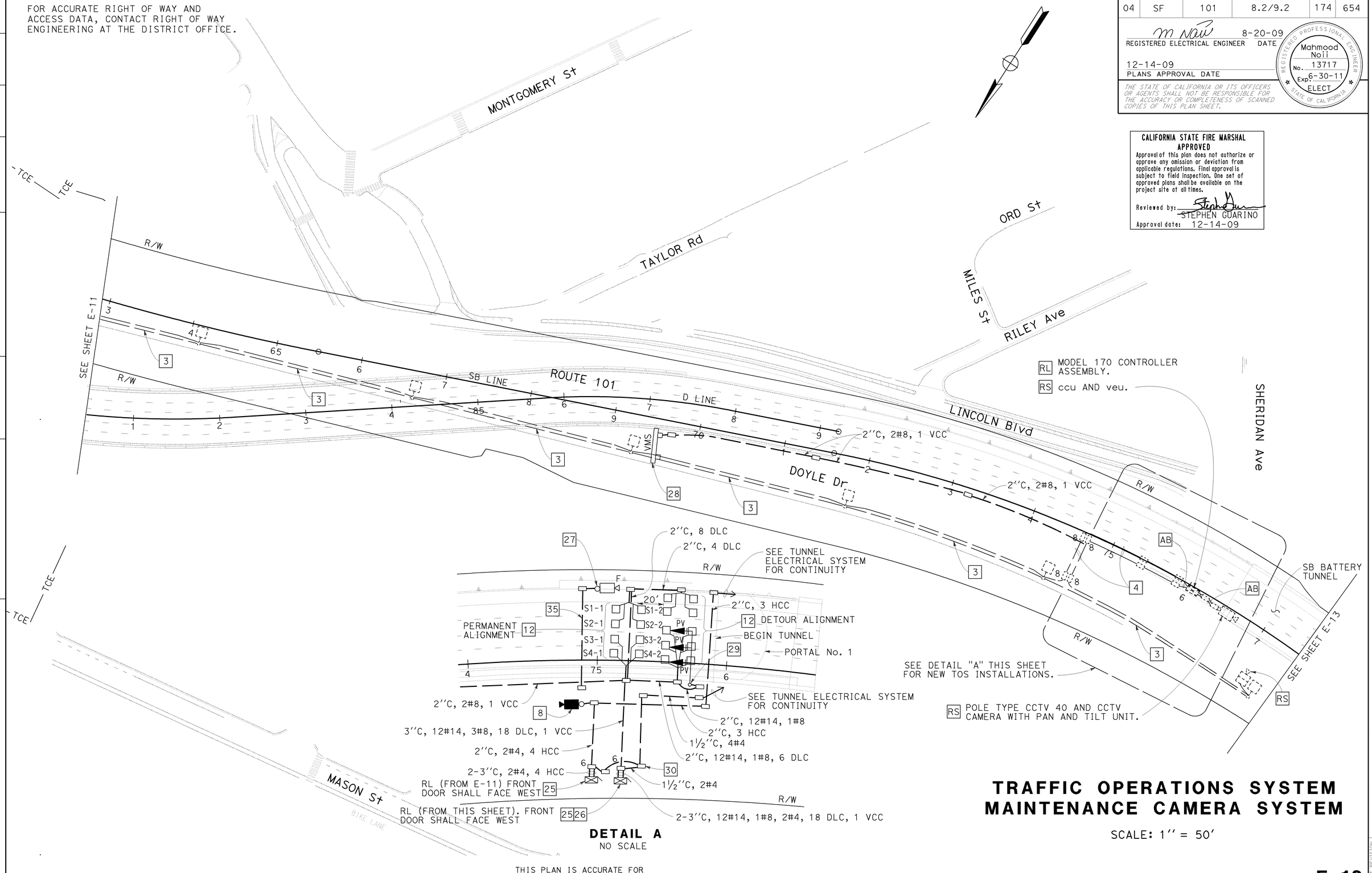

DETAIL A
NO SCALE

THIS PLAN IS ACCURATE FOR ELECTRICAL WORK ONLY

TRAFFIC OPERATIONS SYSTEM MAINTENANCE CAMERA SYSTEM

SCALE: 1'' = 50'

E-12

STATE OF CALIFORNIA - DEPARTMENT OF TRANSPORTATION
Caltrans
ELECTRICAL

FUNCTIONAL SUPERVISOR: LAI HONG CHIU
CALCULATED-DESIGNED BY: PAUL BAUTISTA
CHECKED BY: MAHMOOD NOII
REVISED BY: PB
DATE REVISED: 8/01/09

LAST REVISION 10-30-09
DATE PLOTTED => 14-DEC-2009
TIME PLOTTED => 15:54

Dist	COUNTY	ROUTE	POST MILES TOTAL PROJECT	SHEET No.	TOTAL SHEETS
04	SF	101	8.2/9.2	175	654

M Noii 8-20-09
REGISTERED ELECTRICAL ENGINEER DATE

12-14-09
PLANS APPROVAL DATE

REGISTERED PROFESSIONAL ENGINEER Mahmood Noii No. 13717 Exp. 6-30-11 ELECT STATE OF CALIFORNIA

THE STATE OF CALIFORNIA OR ITS OFFICERS OR AGENTS SHALL NOT BE RESPONSIBLE FOR THE ACCURACY OR COMPLETENESS OF SCANNED COPIES OF THIS PLAN SHEET.

CALIFORNIA STATE FIRE MARSHAL APPROVED
Approval of this plan does not authorize or approve any omission or deviation from applicable regulations. Final approval is subject to field inspection. One set of approved plans shall be available on the project site at all times.
Reviewed by: STEPHEN GUARINO
Approval date: 12-14-09

FOR ACCURATE RIGHT OF WAY AND ACCESS DATA, CONTACT RIGHT OF WAY ENGINEERING AT THE DISTRICT OFFICE.

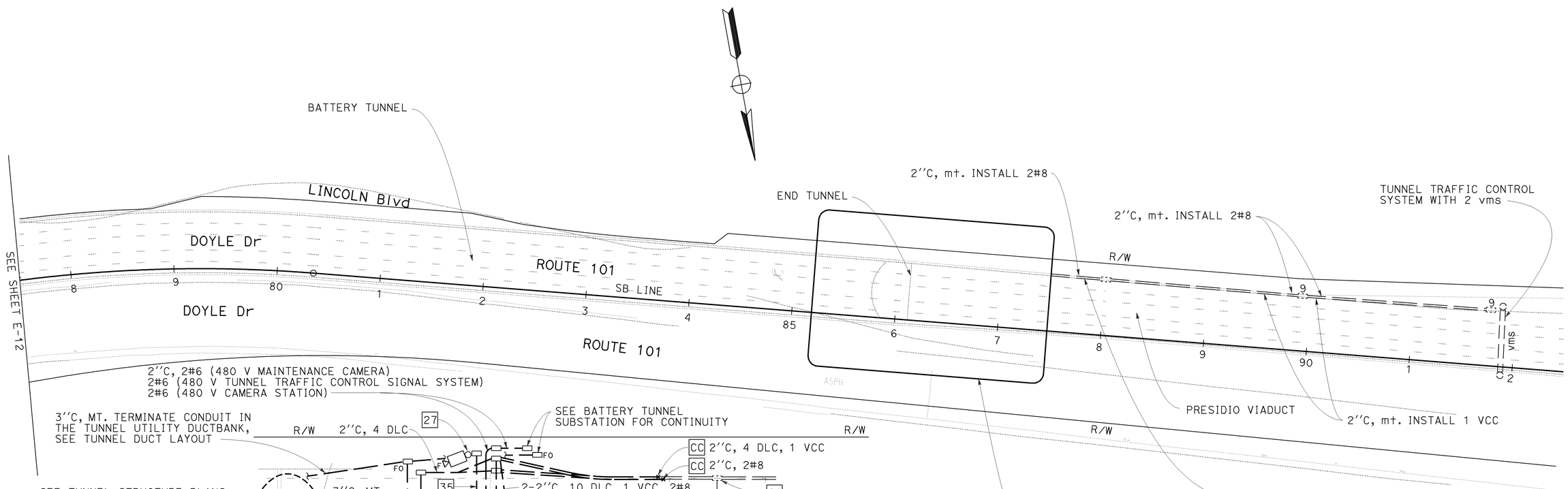

DETAIL A
NO SCALE

TRAFFIC OPERATIONS SYSTEM MAINTENANCE CAMERA SYSTEM

SCALE: 1'' = 50'

THIS PLAN IS ACCURATE FOR ELECTRICAL WORK ONLY

FOR NOTES, ABBREVIATIONS AND LEGEND, SEE SHEET E-1

E-13

STATE OF CALIFORNIA - DEPARTMENT OF TRANSPORTATION
Caltrans
ELECTRICAL

FUNCTIONAL SUPERVISOR: LAI HONG CHIU
CALCULATED-DESIGNED BY: PAUL BAUTISTA
CHECKED BY: MAHMOOD NOII
REVISED BY: PB
DATE REVISED: 8/01/09

LAST REVISION 10-30-09
DATE PLOTTED => 14-DEC-2009
TIME PLOTTED => 15:54

FOR ACCURATE RIGHT OF WAY AND ACCESS DATA, CONTACT RIGHT OF WAY ENGINEERING AT THE DISTRICT OFFICE.

Dist	COUNTY	ROUTE	POST MILES TOTAL PROJECT	SHEET No.	TOTAL SHEETS
04	SF	101	8.2/9.2	176	654

m Noii 8-20-09
REGISTERED ELECTRICAL ENGINEER DATE

12-14-09
PLANS APPROVAL DATE

Mahmood Noii No. 13717 Exp 6-30-11 ELECT — REGISTERED PROFESSIONAL ENGINEER — STATE OF CALIFORNIA

THE STATE OF CALIFORNIA OR ITS OFFICERS OR AGENTS SHALL NOT BE RESPONSIBLE FOR THE ACCURACY OR COMPLETENESS OF SCANNED COPIES OF THIS PLAN SHEET.

CALIFORNIA STATE FIRE MARSHAL APPROVED
Approval of this plan does not authorize or approve any omission or deviation from applicable regulations. Final approval is subject to field inspection. One set of approved plans shall be available on the project site at all times.
Reviewed by: STEPHEN GUARINO
Approval date: 12-14-09

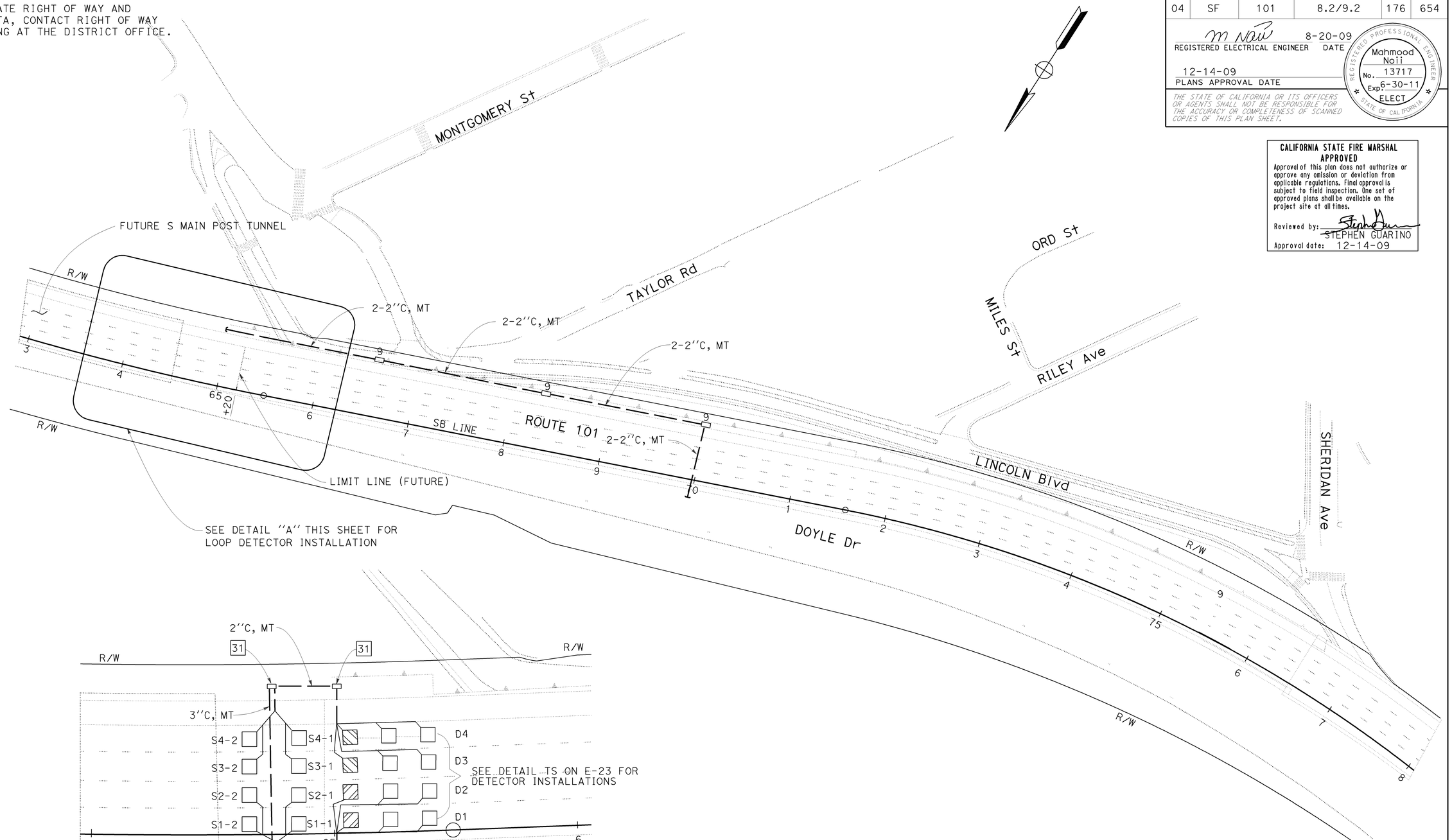

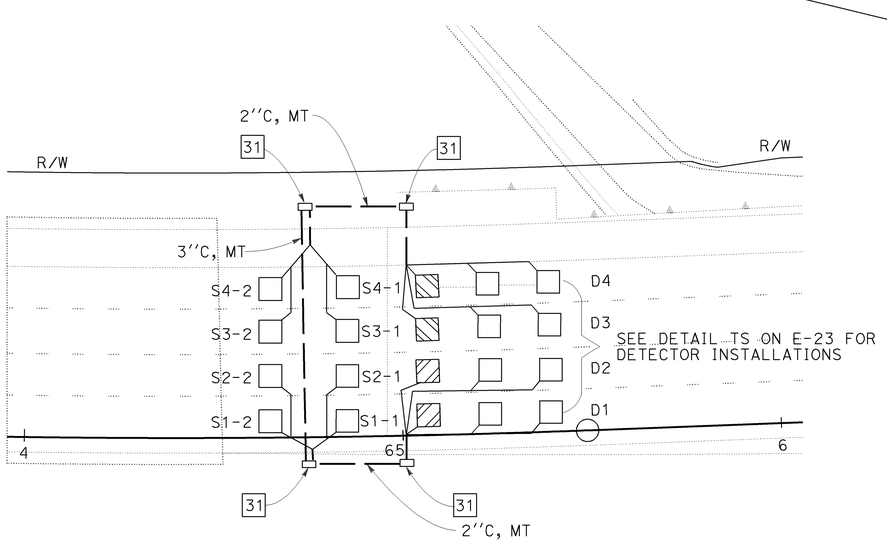

DETAIL A
NO SCALE

THIS PLAN IS ACCURATE FOR ELECTRICAL WORK ONLY

FOR NOTES, ABBREVIATIONS AND LEGEND, SEE SHEET E-1

TRAFFIC OPERATIONS SYSTEM

SCALE: 1'' = 50'

E-14

STATE OF CALIFORNIA - DEPARTMENT OF TRANSPORTATION
Caltrans®
ELECTRICAL

FUNCTIONAL SUPERVISOR: LAI HONG CHIU
CALCULATED-DESIGNED BY:
CHECKED BY:
REVISED BY: PB
DATE REVISED: 8/01/09
PAUL BAUTISTA
MAHMOOD NOII

LAST REVISION DATE PLOTTED => 14-DEC-2009
08-20-09 TIME PLOTTED => 15:54

BORDER LAST REVISED 4/11/2008
RELATIVE BORDER SCALE IS IN INCHES 0 1 2 3
USERNAME => trlenard
DGN FILE => 416374ua014.dgn
CU 04242
EA 163741

Dist	COUNTY	ROUTE	POST MILES TOTAL PROJECT	SHEET No.	TOTAL SHEETS
04	SF	101	8.2/9.2	177	654

m Noii 8-20-09
REGISTERED ELECTRICAL ENGINEER DATE

12-14-09
PLANS APPROVAL DATE

REGISTERED PROFESSIONAL ENGINEER
Mahmood Noii
No. 13717
Exp 6-30-11
ELECT
STATE OF CALIFORNIA

THE STATE OF CALIFORNIA OR ITS OFFICERS OR AGENTS SHALL NOT BE RESPONSIBLE FOR THE ACCURACY OR COMPLETENESS OF SCANNED COPIES OF THIS PLAN SHEET.

CALIFORNIA STATE FIRE MARSHAL APPROVED

Approval of this plan does not authorize or approve any omission or deviation from applicable regulations. Final approval is subject to field inspection. One set of approved plans shall be available on the project site at all times.

Reviewed by: STEPHEN GUARINO
Approval date: 12-14-09

FOR ACCURATE RIGHT OF WAY AND ACCESS DATA, CONTACT RIGHT OF WAY ENGINEERING AT THE DISTRICT OFFICE.

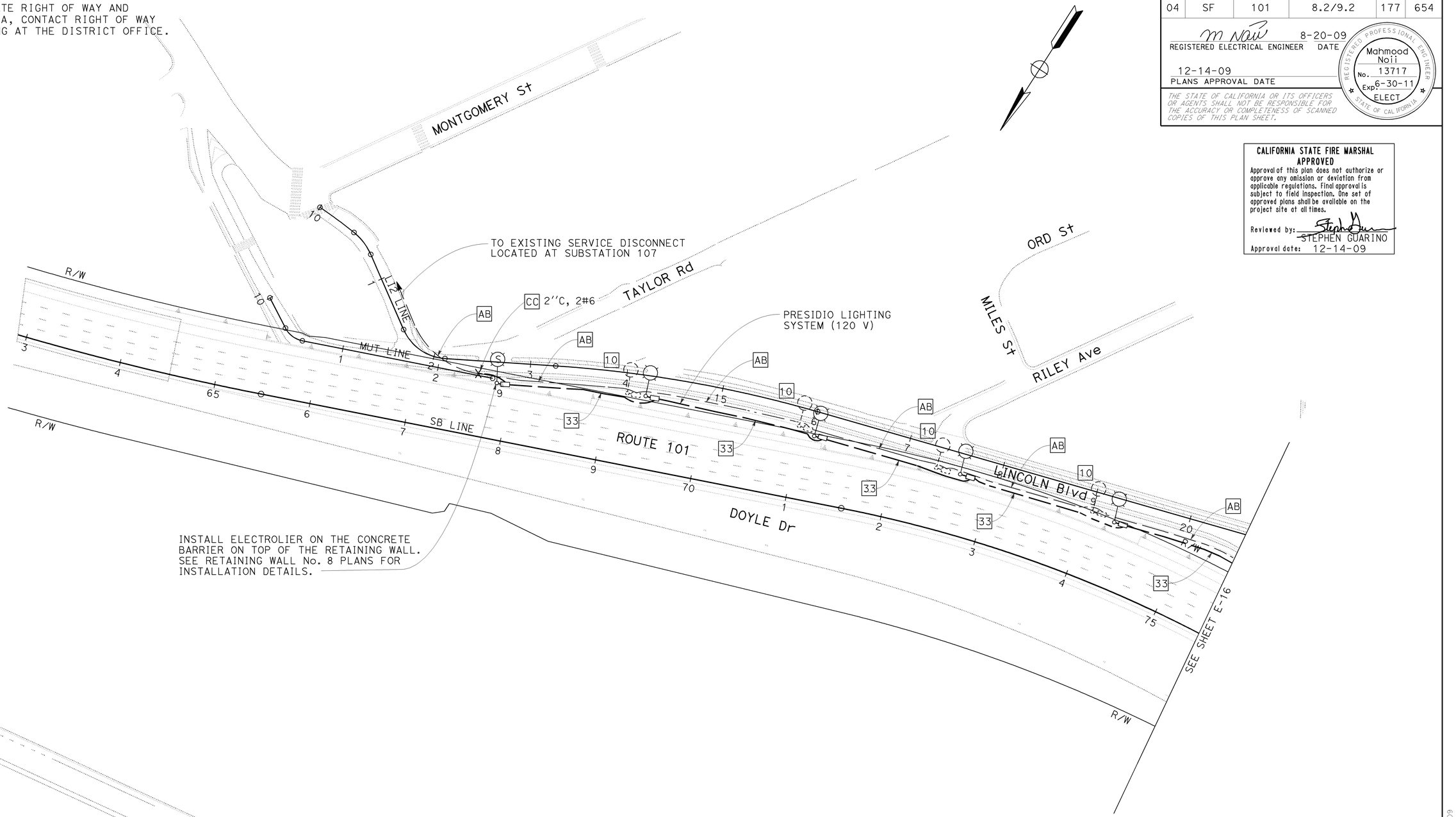

THIS PLAN IS ACCURATE FOR ELECTRICAL WORK ONLY

FOR NOTES, ABBREVIATIONS AND LEGEND, SEE SHEET E-1

LIGHTING (CITY STREET)

SCALE: 1" = 50'

E-15

STATE OF CALIFORNIA - DEPARTMENT OF TRANSPORTATION
ELECTRICAL
Caltrans

FUNCTIONAL SUPERVISOR: LAI HONG CHIU
CALCULATED-DESIGNED BY: PAUL BAUTISTA
CHECKED BY: MAHMOOD NOII
REVISED BY: PB
DATE REVISED: 8/01/09

LAST REVISION DATE PLOTTED => 14-DEC-2009
TIME PLOTTED => 15:54
08-24-09

BORDER LAST REVISED 4/11/2008
RELATIVE BORDER SCALE IS IN INCHES 0 1 2 3
USERNAME => trienard
DGN FILE => 416374ua015.dgn
CU 04242
EA 163741

FOR ACCURATE RIGHT OF WAY AND
ACCESS DATA, CONTACT RIGHT OF WAY
ENGINEERING AT THE DISTRICT OFFICE.

Dist	COUNTY	ROUTE	POST MILES TOTAL PROJECT	SHEET No.	TOTAL SHEETS
04	SF	101	8.2/9.2	178	654

m Noii 8-20-09
REGISTERED ELECTRICAL ENGINEER DATE

12-14-09
PLANS APPROVAL DATE

REGISTERED PROFESSIONAL ENGINEER
Mahmood Noii
No. 13717
Exp 6-30-11
ELECT
STATE OF CALIFORNIA

THE STATE OF CALIFORNIA OR ITS OFFICERS OR AGENTS SHALL NOT BE RESPONSIBLE FOR THE ACCURACY OR COMPLETENESS OF SCANNED COPIES OF THIS PLAN SHEET.

CALIFORNIA STATE FIRE MARSHAL APPROVED
Approval of this plan does not authorize or approve any omission or deviation from applicable regulations. Final approval is subject to field inspection. One set of approved plans shall be available on the project site at all times.
Reviewed by: STEPHEN GUARINO
Approval date: 12-14-09

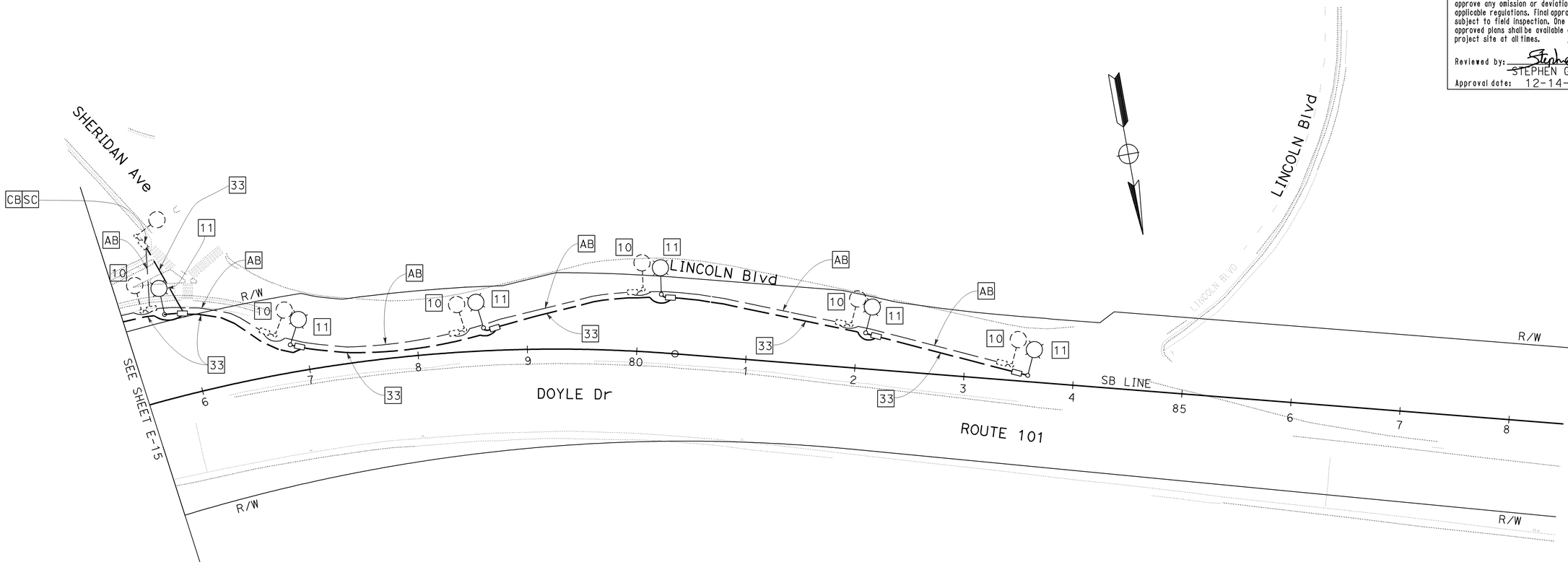

THIS PLAN IS ACCURATE FOR ELECTRICAL WORK ONLY

FOR NOTES, ABBREVIATIONS AND LEGEND, SEE SHEET E-1

LIGHTING (CITY STREET)

SCALE: 1''=50'

E-16

PAUL BAUTISTA
MAHMOOD NOII
8/01/09
PB
REVISED BY
DATE REVISED
CALCULATED-DESIGNED BY
CHECKED BY
FUNCTIONAL SUPERVISOR
STATE OF CALIFORNIA - DEPARTMENT OF TRANSPORTATION
ELECTRICAL

LAST REVISION DATE PLOTTED => 14-DEC-2009
08-24-09 TIME PLOTTED => 15:54

BORDER LAST REVISED 4/11/2008
RELATIVE BORDER SCALE IS IN INCHES 0 1 2 3
USERNAME => trlenard
DGN FILE => 416374ua016.dgn
CU 04242
EA 163741

FOR ACCURATE RIGHT OF WAY AND
ACCESS DATA, CONTACT RIGHT OF WAY
ENGINEERING AT THE DISTRICT OFFICE.

CALIFORNIA STATE FIRE MARSHAL APPROVED
Approval of this plan does not authorize or approve any omission or deviation from applicable regulations. Final approval is subject to field inspection. One set of approved plans shall be available on the project site at all times.
Reviewed by: STEPHEN GUARINO
Approval date: 12-14-09

Dist	COUNTY	ROUTE	POST MILES TOTAL PROJECT	SHEET No.	TOTAL SHEETS
04	SF	101	8.2/9.2	179	654

REGISTERED ELECTRICAL ENGINEER — 8-20-09 DATE
Mahmood Noii No. 13717 Exp 6-30-11 ELECT — REGISTERED PROFESSIONAL ENGINEER — STATE OF CALIFORNIA
12-14-09
PLANS APPROVAL DATE

THE STATE OF CALIFORNIA OR ITS OFFICERS OR AGENTS SHALL NOT BE RESPONSIBLE FOR THE ACCURACY OR COMPLETENESS OF SCANNED COPIES OF THIS PLAN SHEET.

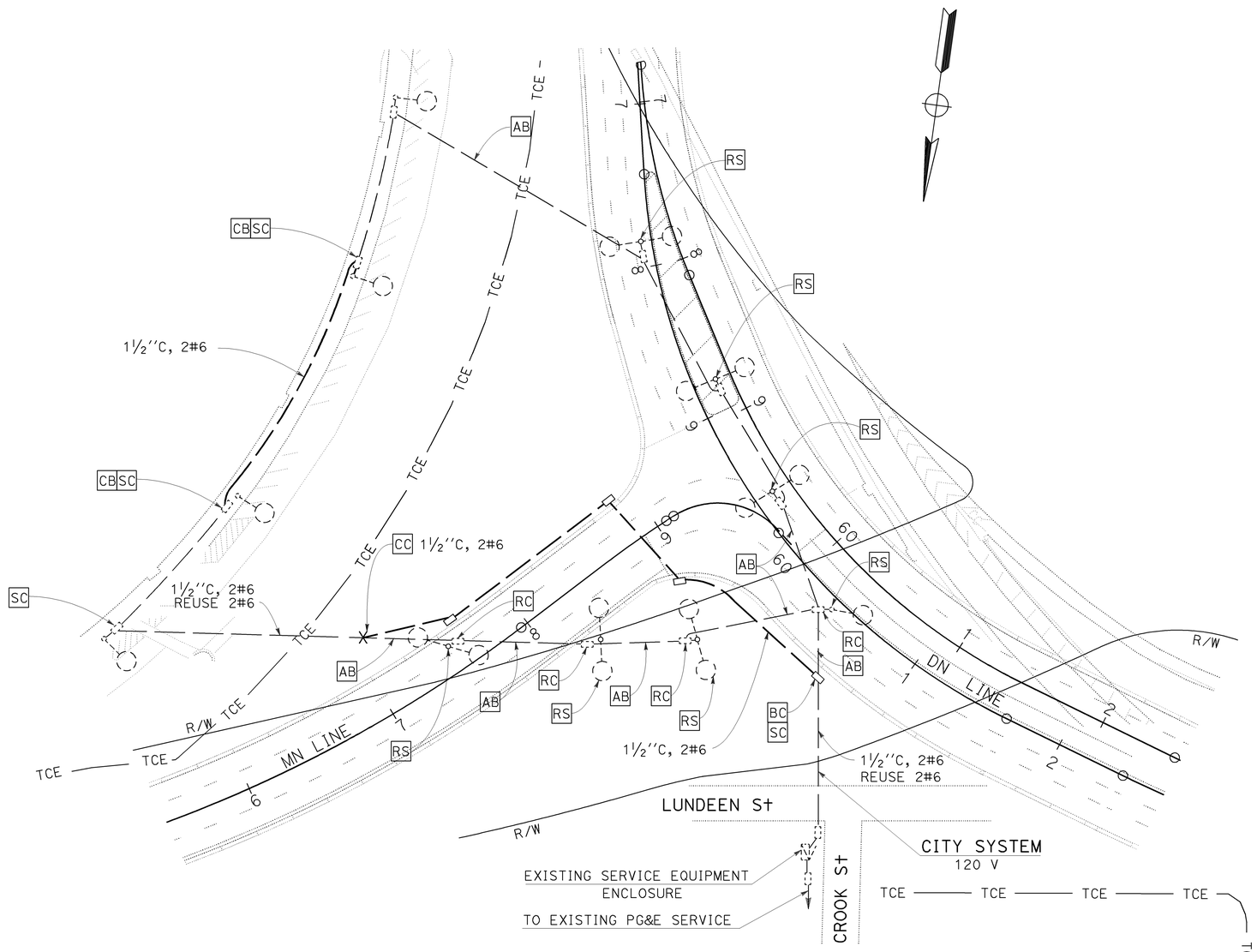

LIGHTING (PARKING LOT)

SCALE: 1"=40'

E-17

THIS PLAN IS ACCURATE FOR ELECTRICAL WORK ONLY

FOR NOTES, ABBREVIATIONS AND LEGEND, SEE SHEET E-1

STATE OF CALIFORNIA - DEPARTMENT OF TRANSPORTATION
ELECTRICAL
Caltrans

FUNCTIONAL SUPERVISOR: LAI HONG CHIU
CALCULATED-DESIGNED BY: PAUL BAUTISTA
CHECKED BY: MAHMOOD NOII
REVISED BY: PB
DATE REVISED: 8/01/09

LAST REVISION: DATE PLOTTED => 14-DEC-2009
09-04-09 TIME PLOTTED => 15:54

BORDER LAST REVISED 4/11/2008
RELATIVE BORDER SCALE IS IN INCHES 0 1 2 3
USERNAME => trlenard
DGN FILE => 416374ua017.dgn
CU 04242
EA 163741

Dist	COUNTY	ROUTE	POST MILES TOTAL PROJECT	SHEET No.	TOTAL SHEETS
04	SF	101	8.2/9.2	180	654

REGISTERED ELECTRICAL ENGINEER — 8-20-09 DATE

12-14-09
PLANS APPROVAL DATE

Mahmood Noii No. 13717 Exp 6-30-11 ELECT — REGISTERED PROFESSIONAL ENGINEER — STATE OF CALIFORNIA

THE STATE OF CALIFORNIA OR ITS OFFICERS OR AGENTS SHALL NOT BE RESPONSIBLE FOR THE ACCURACY OR COMPLETENESS OF SCANNED COPIES OF THIS PLAN SHEET.

CALIFORNIA STATE FIRE MARSHAL APPROVED

Approval of this plan does not authorize or approve any omission or deviation from applicable regulations. Final approval is subject to field inspection. One set of approved plans shall be available on the project site at all times.

Reviewed by: STEPHEN GUARINO

Approval date: 12-14-09

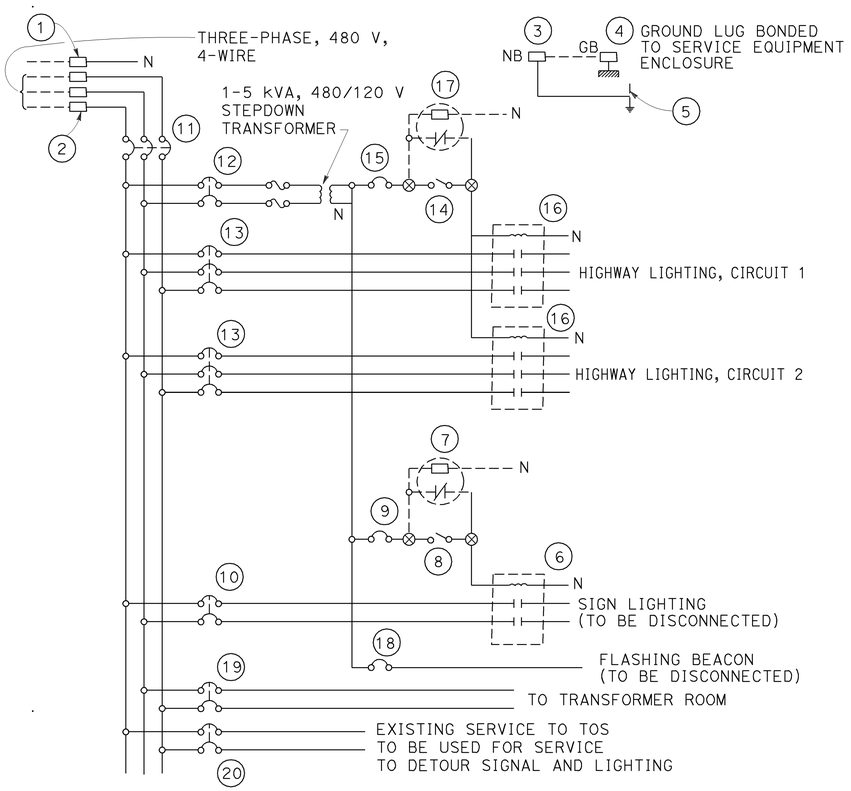

EXISTING SERVICE WIRING DIAGRAM

SYSTEM No. 34-480-04500 (480 V, 3Ø)

TYPE III-AF SERVICE EQUIPMENT LEGEND (480 V, 3Ø) (EXISTING)

ITEM No.	COMPONENT	NAME PLATE DESCRIPTION
(1)	NEUTRAL LUG	
(2)	LANDING LUG	
(3)	SOLID NEUTRAL TERMINAL STRIP	
(4)	GROUND BUS	
(5)	GROUND ELECTRODE	
(6)	30 A, 2PNO MERCURY CONTACTOR	
(7)	PHOTO ELECTRIC UNIT	
(8)	15 A, 1P, TEST SWITCH	SIGN ILLUMINATION TEST SWITCH
(9)	15 A, 120 V, 1P, CB	SIGN ILLUMINATION CONTROL
(10)	30 A, 480 V, 2P, CB	SIGN ILLUMINATION
(11)	100 A, 480 V, 3P, CB	MAIN BREAKER
(12)	15 A, 480 V, 2P, CB	TRANSFORMER
(13)	40 A, 480 V, 3P, CB	HIGHWAY LIGHTING
(14)	15 A, 1P, TEST SWITCH	HIGHWAY LIGHTING TEST SWITCH
(15)	15 A, 120 V, 1P, CB	HIGHWAY LIGHTING CONTROL
(16)	60 A, 3PNO MERCURY CONTACTOR	
(17)	PHOTO ELECTRIC UNIT	
(18)	15 A, 120 V, 1P, CB	FLASHING BEACON
(19)	30 A, 480 V, 2P, CB	TRANSFORMER ROOM
(20)	50 A, 480 V, 2P, CB	SIGNAL AND LIGHTING

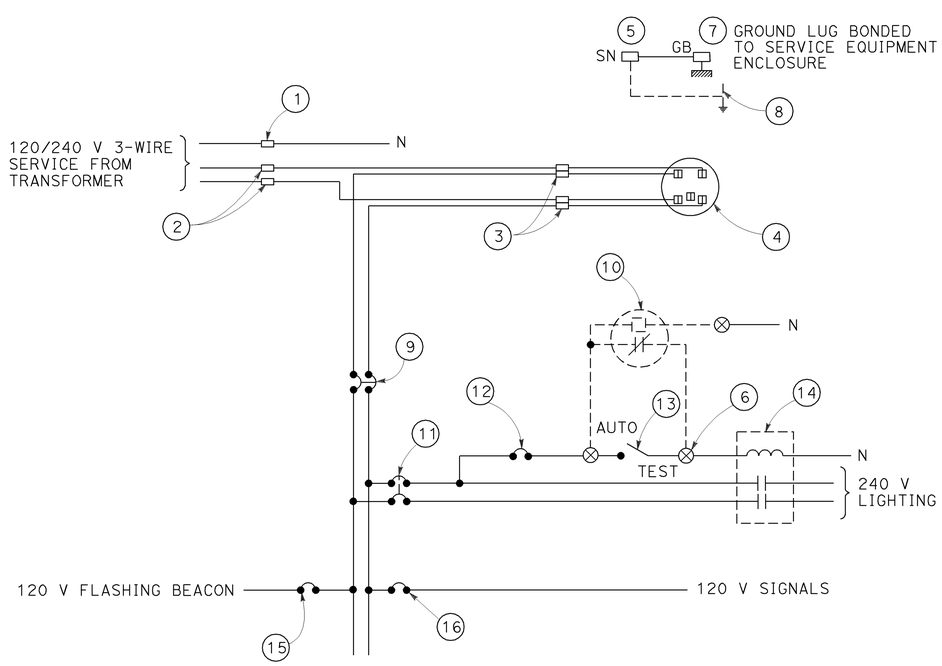

SERVICE WIRING DIAGRAM

TYPE III AF SERVICE EQUIPMENT ENCLOSURE No. 004500A

SERVICE EQUIPMENT ENCLOSURE No. 004500A LEGEND

ITEM No.	COMPONENT	NAME PLATE DESCRIPTION
(1)	NEUTRAL LUG	
(2)	LANDING LUG	
(3)	TEST BYPASS FACILITY	
(4)	METER SOCKET AND SUPPORT	
(5)	NEUTRAL BUS	
(6)	TERMINAL BLOCK	
(7)	GROUNDING BUS	
(8)	GROUNDING ELECTRODE	
(9)	100 A, 240 V, 2P, CB	MAIN BREAKER
(10)	PHOTOELECTRIC UNIT	
(11)	30 A, 240 V, 2P, CB	LIGHTING
(12)	15 A, 120 V, 1P, CB	LIGHTING
(13)	15 A, 1P, TEST SWITCH	LIGHTING TEST SWITCH
(14)	30 A, 2PNO, CONTACTOR	LIGHTING
(15)	15 A, 120 V, 1P, CB	FLASHING BEACON
(16)	50 A, 120 V, 1P, CB	SIGNALS

THIS PLAN IS ACCURATE FOR ELECTRICAL WORK ONLY

FOR NOTES, ABBREVIATIONS AND LEGEND, SEE SHEET E-1

ELECTRICAL DETAILS
(SERVICE EQUIPMENT WIRING AND LIGHTING CONNECTION DIAGRAM)

NO SCALE

E-18

CALCULATED-DESIGNED BY	CHECKED BY	REVISED BY	DATE REVISED
PAUL BAUTISTA	MAHMOOD NOII	PB	8/01/09

FUNCTIONAL SUPERVISOR: LAI HONG CHIU

STATE OF CALIFORNIA - DEPARTMENT OF TRANSPORTATION — ELECTRICAL

Caltrans

LAST REVISION | DATE PLOTTED => 14-DEC-2009 | 08-09-09 | TIME PLOTTED => 15:54

BORDER LAST REVISED 4/11/2008

RELATIVE BORDER SCALE IS IN INCHES 0 1 2 3

USERNAME => trlenard
DGN FILE => 416374ua018.dgn

CU 04242

EA 163741

Dist	COUNTY	ROUTE	POST MILES TOTAL PROJECT	SHEET No.	TOTAL SHEETS
04	SF	101	8.2/9.2	181	654

CALIFORNIA STATE FIRE MARSHAL APPROVED

Approval of this plan does not authorize or approve any omission or deviation from applicable regulations. Final approval is subject to field inspection. One set of approved plans shall be available on the project site at all times.

Reviewed by: STEPHEN GUARINO

Approval date: 12-14-09

8-20-09
REGISTERED ELECTRICAL ENGINEER DATE

12-14-09
PLANS APPROVAL DATE

REGISTERED PROFESSIONAL ENGINEER — Mahmood Noii — No. 13717 — Exp 6-30-11 — ELECT — STATE OF CALIFORNIA

THE STATE OF CALIFORNIA OR ITS OFFICERS OR AGENTS SHALL NOT BE RESPONSIBLE FOR THE ACCURACY OR COMPLETENESS OF SCANNED COPIES OF THIS PLAN SHEET.

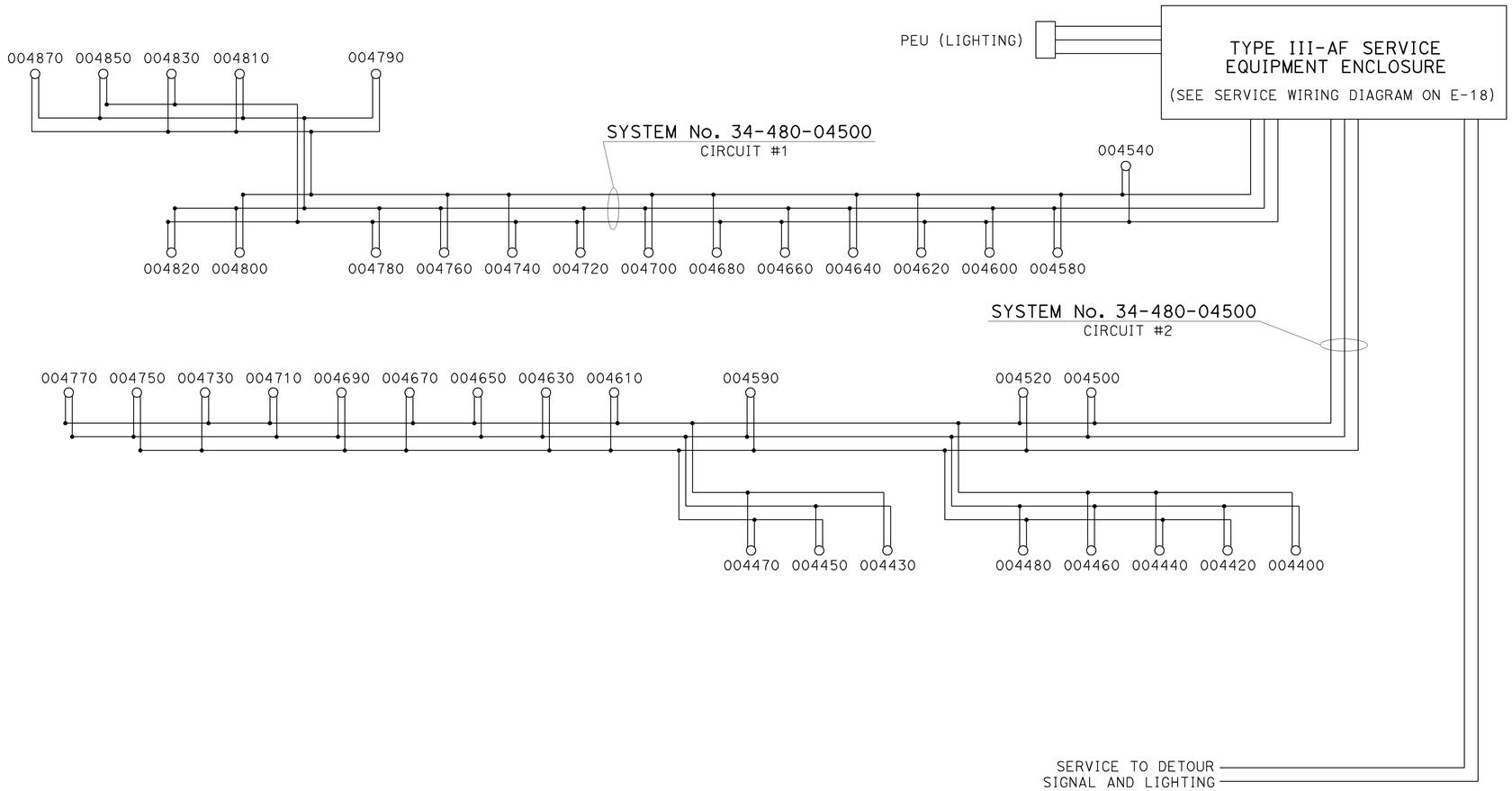

LIGHTING CONNECTION DIAGRAM

SYSTEM No. 33-480-04500

THIS PLAN IS ACCURATE FOR ELECTRICAL WORK ONLY

FOR NOTES, ABBREVIATIONS AND LEGEND, SEE SHEET E-1

ELECTRICAL DETAILS
(SERVICE EQUIPMENT WIRING AND LIGHTING CONNECTION DIAGRAM)

NO SCALE

E-19

CALCULATED-DESIGNED BY: PB
CHECKED BY: 8/01/09
REVISED BY: PAUL BAUTISTA
DATE REVISED: MAHMOOD NOII
FUNCTIONAL SUPERVISOR: LAI HONG CHIU

STATE OF CALIFORNIA - DEPARTMENT OF TRANSPORTATION
Caltrans®
ELECTRICAL

LAST REVISION: 09-03-09
DATE PLOTTED => 14-DEC-2009
TIME PLOTTED => 15:54

BORDER LAST REVISED 4/11/2008

RELATIVE BORDER SCALE IS IN INCHES 0 1 2 3

USERNAME => trienard
DGN FILE => 416374ua019.dgn

CU 04242

EA 163741

Dist	COUNTY	ROUTE	POST MILES TOTAL PROJECT	SHEET No.	TOTAL SHEETS
04	SF	101	8.2/9.2	182	654

CALIFORNIA STATE FIRE MARSHAL APPROVED

Approval of this plan does not authorize or approve any omission or deviation from applicable regulations. Final approval is subject to field inspection. One set of approved plans shall be available on the project site at all times.

Reviewed by: STEPHEN GUARINO

Approval date: 12-14-09

8-25-09
REGISTERED ELECTRICAL ENGINEER DATE

12-14-09
PLANS APPROVAL DATE

REGISTERED PROFESSIONAL ENGINEER
Michael P. Lee
No. 13435
Exp 9-30-10
ELECT
STATE OF CALIFORNIA

THE STATE OF CALIFORNIA OR ITS OFFICERS OR AGENTS SHALL NOT BE RESPONSIBLE FOR THE ACCURACY OR COMPLETENESS OF SCANNED COPIES OF THIS PLAN SHEET.

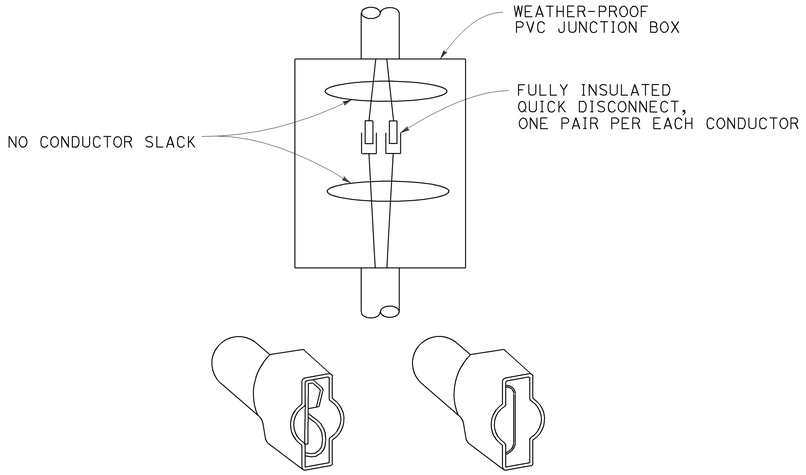

FULLY INSULATED QUICK DISCONNECTS

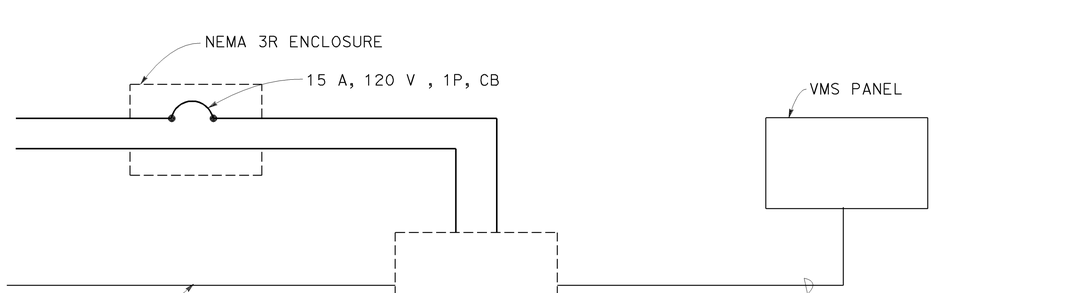

VMS WIRING DIAGRAM

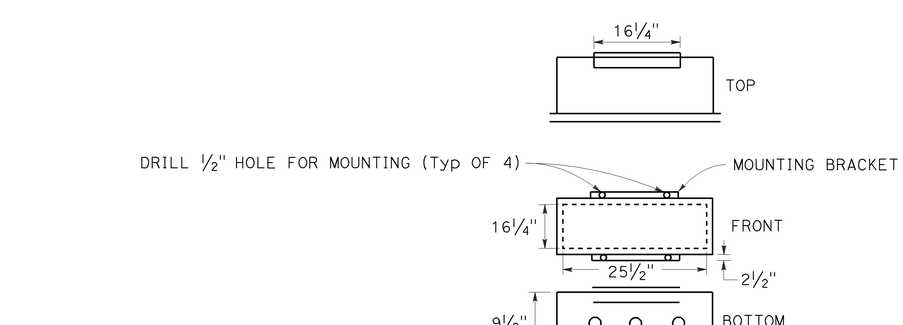

VMS CONTROLLER ASSEMBLY

ELECTRICAL DETAILS
(VMS INSTALLATION)
NO SCALE

THIS PLAN IS ACCURATE FOR ELECTRICAL WORK ONLY

FOR NOTES, ABBREVIATIONS AND LEGEND, SEE SHEET E-1

E-20

CALCULATED-DESIGNED BY	MP	REVISED BY	MICHAEL P. LEE
CHECKED BY	08/1/09	DATE REVISED	MICHAEL P. LEE

STATE OF CALIFORNIA - DEPARTMENT OF TRANSPORTATION
ELECTRICAL
Caltrans
FUNCTIONAL SUPERVISOR: CHARLES PRICE

LAST REVISION DATE PLOTTED => 14-DEC-2009
TIME PLOTTED => 15:54
08-26-09

BORDER LAST REVISED 4/11/2008

RELATIVE BORDER SCALE IS IN INCHES 0 1 2 3

USERNAME => trlenard
DGN FILE => 416374ua020.dgn

CU 04242

EA 163741

Dist	COUNTY	ROUTE	POST MILES TOTAL PROJECT	SHEET No.	TOTAL SHEETS
04	SF	101	8.2/9.2	183	654

REGISTERED ELECTRICAL ENGINEER 8-25-09 DATE

12-14-09
PLANS APPROVAL DATE

REGISTERED PROFESSIONAL ENGINEER Michael P. Lee No. 13435 Exp. 9-30-10 ELECT STATE OF CALIFORNIA

THE STATE OF CALIFORNIA OR ITS OFFICERS OR AGENTS SHALL NOT BE RESPONSIBLE FOR THE ACCURACY OR COMPLETENESS OF SCANNED COPIES OF THIS PLAN SHEET.

CALIFORNIA STATE FIRE MARSHAL APPROVED

Approval of this plan does not authorize or approve any omission or deviation from applicable regulations. Final approval is subject to field inspection. One set of approved plans shall be available on the project site at all times.

Reviewed by: STEPHEN GUARINO

Approval date: 12-14-09

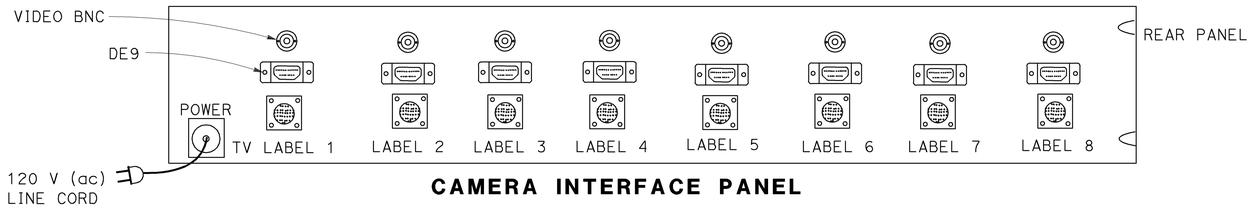

CAMERA INTERFACE PANEL

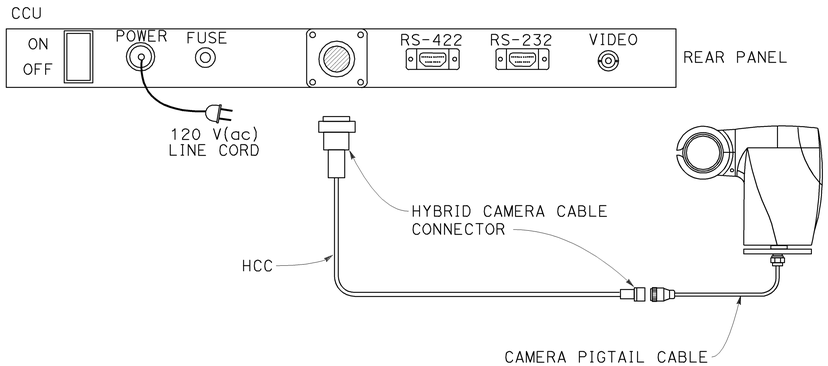

CCTV SYSTEM LAYOUT

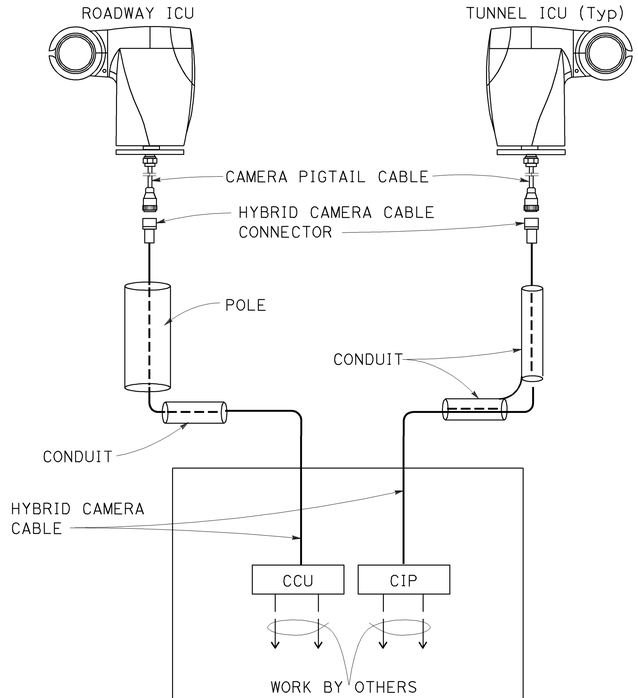

CCTV SYSTEM BLOCK DIAGRAM

HCC - HYBRID CAMERA CABLE
CCU - CAMERA CONTROL UNIT
CIP - CAMERA INTERFACE PANEL

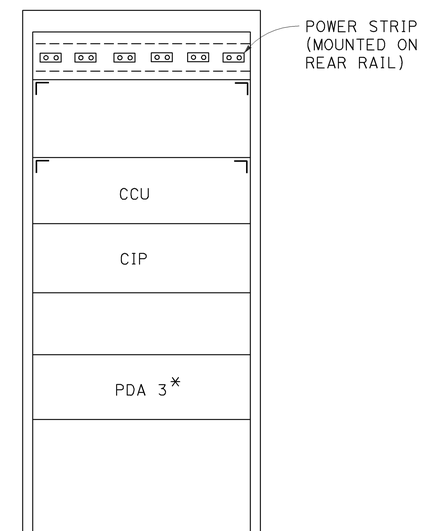

MODEL 334 CONTROLLER CABINET LAYOUT (FRONT VIEW)

* STATE-FURNISHED

ELECTRICAL DETAILS
(CCTV DETAIL)

NO SCALE

THIS PLAN ACCURATE FOR ELECTRICAL WORK ONLY

FOR NOTES, ABBREVIATIONS AND LEGEND, SEE SHEET E-1

E-21

STATE OF CALIFORNIA - DEPARTMENT OF TRANSPORTATION
Caltrans
ELECTRICAL

FUNCTIONAL SUPERVISOR: CHARLES PRICE
CALCULATED-DESIGNED BY: MICHAEL P. LEE
CHECKED BY: MICHAEL P. LEE
REVISED BY: MP
DATE REVISED: 8/01/09

LAST REVISION 08-26-09
DATE PLOTTED => 14-DEC-2009
TIME PLOTTED => 15:54

Dist	COUNTY	ROUTE	POST MILES TOTAL PROJECT	SHEET No.	TOTAL SHEETS
04	SF	101	8.2/9.2	184	654

REGISTERED ELECTRICAL ENGINEER — DATE 8-25-09

Michael P. Lee — No. 13435 — Exp 9-30-10 — ELECT — REGISTERED PROFESSIONAL ENGINEER — STATE OF CALIFORNIA

12-14-09
PLANS APPROVAL DATE

THE STATE OF CALIFORNIA OR ITS OFFICERS OR AGENTS SHALL NOT BE RESPONSIBLE FOR THE ACCURACY OR COMPLETENESS OF SCANNED COPIES OF THIS PLAN SHEET.

CALIFORNIA STATE FIRE MARSHAL APPROVED
Approval of this plan does not authorize or approve any omission or deviation from applicable regulations. Final approval is subject to field inspection. One set of approved plans shall be available on the project site at all times.
Reviewed by: STEPHEN GUARINO
Approval date: 12-14-09

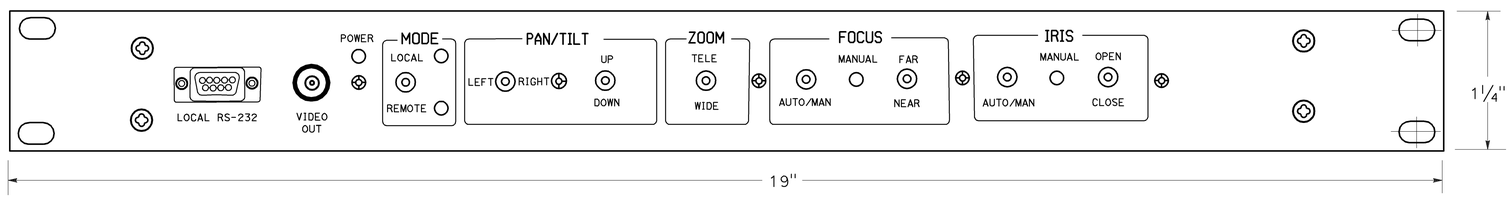

CCU FRONT PANEL LAYOUT

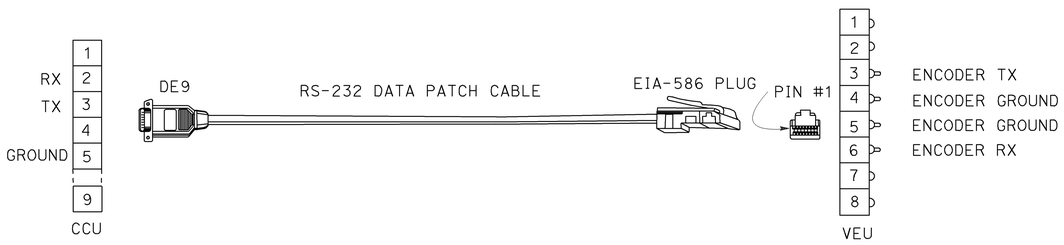

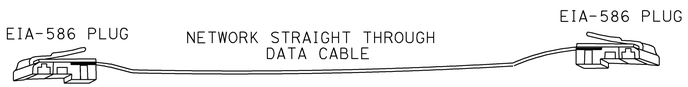

INTERFACE CABLE DETAILS

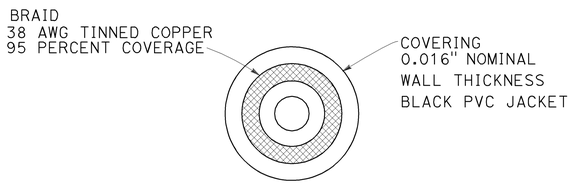

COMPONENT A

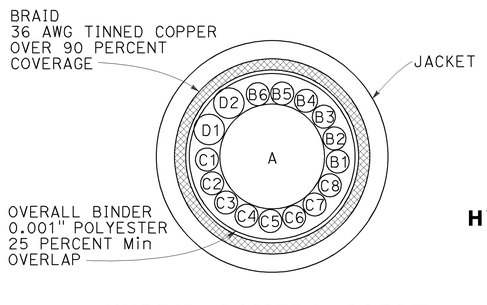

HYBRID CAMERA CABLE CROSS SECTION

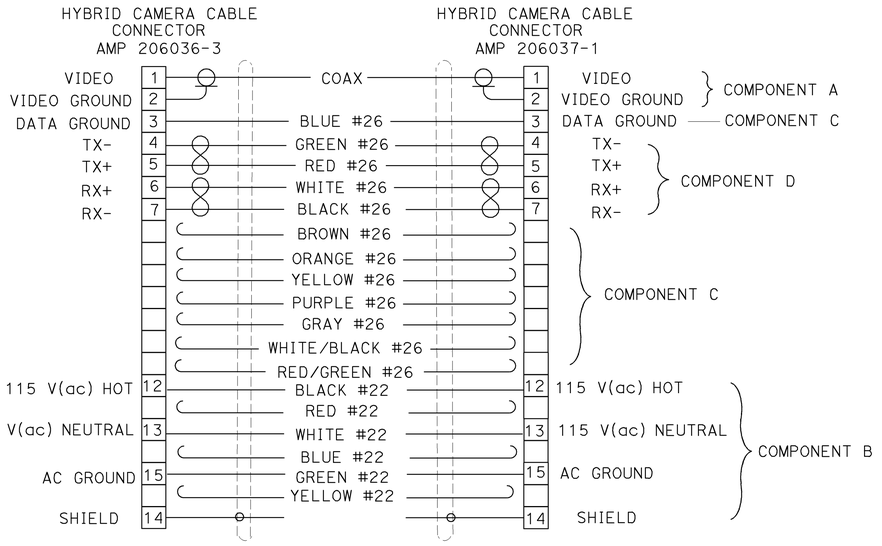

COMPONENT	CONDUCTOR	DESCRIPTION
A	COAX	75 OHM, RG-59/U TYPE, STANDARD ANALOG VIDEO CABLE, 0.242" NOMINAL DIAMETER
B	6 CONDUCTOR	22 AWG, COPPER INSULATED CONDUCTOR, 0.048" NOMINAL DIAMETER, COLOR CODED: B1-BLACK, B2-RED, B3-GREEN, B4-WHITE, B5-BLUE, B6-YELLOW
C	8 CONDUCTOR	26 AWG, COPPER INSULATED CONDUCTOR, 0.037" NOMINAL DIAMETER, COLOR CODED: C1-BROWN, C2-BLUE, C3-ORANGE, C4-YELLOW, C5-PURPLE, C6-GRAY, C7-WHITE/BLACK, C8-RED/GREEN
D	4 CONDUCTOR	26 AWG, COPPER INSULATED CONDUCTOR, 0.037" NOMINAL DIAMETER, COLOR CODED: D1-BLACK & WHITE, D2-RED & GREEN

HYBRID CAMERA CABLE AND CONNECTORS DETAIL

ELECTRICAL DETAILS (CCTV MOUNTING DETAILS)

NO SCALE

THIS PLAN IS ACCURATE FOR ELECTRICAL WORK ONLY

FOR NOTES, ABBREVIATIONS AND LEGEND, SEE SHEET E-1

E-22

REVISED BY	DATE REVISED
MP	8/01/09

CALCULATED-DESIGNED BY: MICHAEL P. LEE
CHECKED BY: MICHAEL P. LEE
FUNCTIONAL SUPERVISOR: CHARLES PRICE

STATE OF CALIFORNIA - DEPARTMENT OF TRANSPORTATION
ELECTRICAL

LAST REVISION DATE PLOTTED => 14-DEC-2009
08-26-09 TIME PLOTTED => 15:54

Dist	COUNTY	ROUTE	POST MILES TOTAL PROJECT	SHEET No.	TOTAL SHEETS
04	SF	101	8.2/9.2	185	654

M Noii 8-20-09
REGISTERED ELECTRICAL ENGINEER DATE

12-14-09
PLANS APPROVAL DATE

REGISTERED PROFESSIONAL ENGINEER Mahmood Noii No. 13717 Exp. 6-30-11 ELECT STATE OF CALIFORNIA

THE STATE OF CALIFORNIA OR ITS OFFICERS OR AGENTS SHALL NOT BE RESPONSIBLE FOR THE ACCURACY OR COMPLETENESS OF SCANNED COPIES OF THIS PLAN SHEET.

CALIFORNIA STATE FIRE MARSHAL APPROVED
Approval of this plan does not authorize or approve any omission or deviation from applicable regulations. Final approval is subject to field inspection. One set of approved plans shall be available on the project site at all times.
Reviewed by: STEPHEN GUARINO
Approval date: 12-14-09

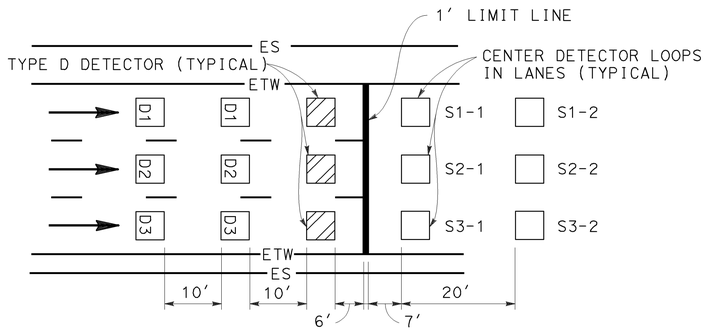

THREE LANES

DETAIL "TS"
TUNNEL TRAFFIC SIGNAL CONTROL
DETECTOR LAYOUT

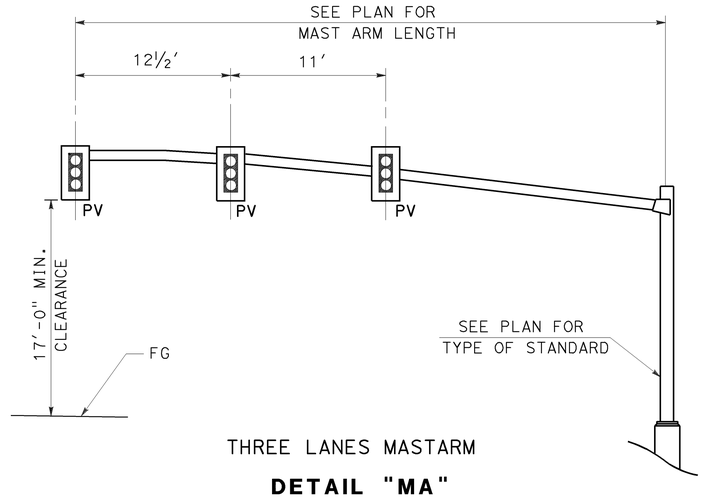

THREE LANES MASTARM

DETAIL "MA"
TUNNEL TRAFFIC SIGNAL CONTROL

TUNNEL TRAFFIC SIGNAL CONTROL NOTES

1. SEE ES-5A, ES-5B, AND ES-13A FOR ADDITIONAL DETAILS.
2. DLC CONDUCTORS SHALL BE SPLICED TO THE LOOP CONDUCTORS IN THE NEAREST PULL BOX.
3. ALL SPLICES SHALL BE TYPE "S" OR TYPE "ST" AS REQUIRED.

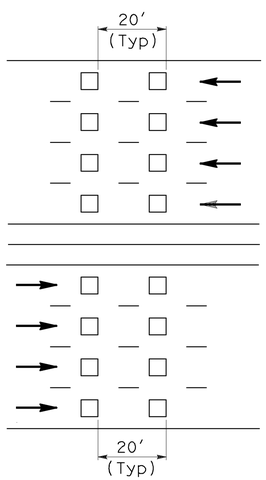

FREEWAY MAINLINE DETECTOR DESIGNATION:

N 3-2

N=NORTHBOUND LANES (NB)
S=SOUTHBOUND LANES (SB)
E=EASTBOUND LANES (EB)
W=WESTBOUND LANES (WB)
DET=DETOUR

NUMBER OF LANES FROM LEFT WITH RESPECT TO DIRECTION OF TRAFFIC:

1=FIRST LANE FROM LEFT
2=SECOND LANE FROM LEFT
3=THIRD LANE FROM LEFT
4=FOURTH LANE FROM LEFT

NUMBER OF DETECTOR IN THE SAME LANE:

1=ENTERING DETECTOR
2=LEAVING DETECTOR

DETAIL "TM"
TRAFFIC MONITORING STATION

TUNNEL TRAFFIC SIGNAL CONTROL DETECTOR DESIGNATION

P 1-2

D=DEMAND DETECTOR
P=PASSAGE DETECTOR
Q=QUEUE DETECTOR

1=FIRST LANE FROM LEFT
2=SECOND LANE FROM LEFT
3=THIRD LANE FROM LEFT

NUMBER OF DETECTOR IN THE SAME LANE:

1=ENTERING DETECTOR
2=LEAVING DETECTOR

ELECTRICAL DETAILS
(TUNNEL TRAFFIC SIGNAL CONTROL AND DETECTOR SPACING AND DESIGNATION)

NO SCALE

THIS PLAN ACCURATE FOR ELECTRICAL WORK ONLY

FOR NOTES, ABBREVIATIONS AND LEGEND, SEE SHEET E-1

E-23

STATE OF CALIFORNIA - DEPARTMENT OF TRANSPORTATION
Caltrans
ELECTRICAL

FUNCTIONAL SUPERVISOR: LAI HONG CHIU
CALCULATED-DESIGNED BY: PAUL BAUTISTA
CHECKED BY: MAHMOOD NOII
REVISED BY: PB
DATE REVISED: 8/01/09

LAST REVISION 08-24-09
DATE PLOTTED => 14-DEC-2009
TIME PLOTTED => 15:55

Dist	COUNTY	ROUTE	POST MILES TOTAL PROJECT	SHEET No.	TOTAL SHEETS
04	SF	101	8.2/9.2	186	654

CALIFORNIA STATE FIRE MARSHAL APPROVED
Approval of this plan does not authorize or approve any omission or deviation from applicable regulations. Final approval is subject to field inspection. One set of approved plans shall be available on the project site at all times.
Reviewed by: STEPHEN GUARINO
Approval date: 12-14-09

m Noii 8-20-09
REGISTERED ELECTRICAL ENGINEER DATE

12-14-09
PLANS APPROVAL DATE

REGISTERED PROFESSIONAL ENGINEER
Mahmood Noii
No. 13717
Exp 6-30-11
ELECT
STATE OF CALIFORNIA

THE STATE OF CALIFORNIA OR ITS OFFICERS OR AGENTS SHALL NOT BE RESPONSIBLE FOR THE ACCURACY OR COMPLETENESS OF SCANNED COPIES OF THIS PLAN SHEET.

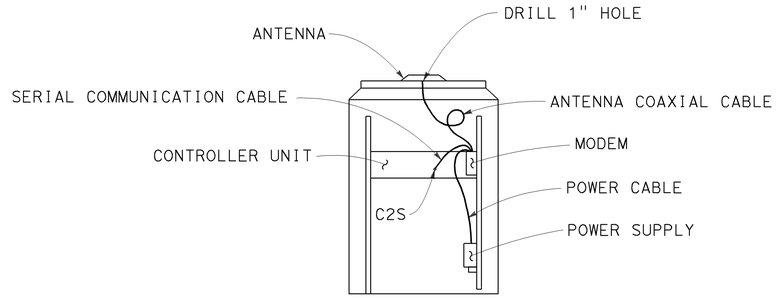

REAR VIEW OF THE CONTROLLER CABINET

CONTRACTOR'S WORK IN THE CONTROLLER CABINET

1. DRILL 1" HOLE THROUGH THE TOP OF THE CABINET. ATTACH THE ANTENNA ON THE CABINET AS DIRECTED BY THE MANUFACTURER.
2. MOUNT THE MODEM ON THE REAR RAIL OF CABINET WITH MOUNTING BRACKET PROVIDED BY THE MANUFACTURER.
3. MOUNT THE POWER SUPPLY ON THE REAR RAIL OF CABINET.
4. CONNECT POWER CABLE TO POWER SUPPLY.
5. CONNECT THE ANTENNA COAXIAL CABLE TO THE MODEM.
6. CONNECT SERIAL COMMUNICATION CABLE BETWEEN THE MODEM AND THE CONTROLLER UNIT AS SHOWN.
7. RECORD THE SERIAL NUMBER AND IMEI NUMBER OF THE MODEM ON THE CHECKLIST SHEET.

TYPE D SERIAL COMMUNICATION CABLE

1. PIN OUT DIAGRAM
   AMP 201360-2-ND DE9-P

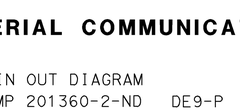

2. SEE SPECIAL PROVISIONS FOR CABLE TYPE AND OTHER INFORMATION.

THIS PLAN ACCURATE FOR ELECTRICAL WORK ONLY

FOR NOTES, ABBREVIATIONS AND LEGEND, SEE SHEET E-1

ELECTRICAL DETAILS
(GENERAL PACKET RADIO SYSTEM WIRELESS MODEM INSTALLATION DETAILS)

NO SCALE

E-24

CALCULATED-DESIGNED BY	REVISED BY	DATE PLOTTED => 14-DEC-2009
CHECKED BY	DATE REVISED	TIME PLOTTED => 15:55
PAUL BAUTISTA	PB	LAST REVISION 08-24-09
MAHMOOD NOII	8/01/09	

FUNCTIONAL SUPERVISOR: LAI HONG CHIU

STATE OF CALIFORNIA - DEPARTMENT OF TRANSPORTATION
Caltrans®
ELECTRICAL

Dist	COUNTY	ROUTE	POST MILES TOTAL PROJECT	SHEET No.	TOTAL SHEETS
04	SF	101	8.2/9.2	187	654

REGISTERED ELECTRICAL ENGINEER — DATE 8-25-09

12-14-09
PLANS APPROVAL DATE

REGISTERED PROFESSIONAL ENGINEER — Michael P. Lee — No. 13435 — Exp 9-30-10 — ELECT — STATE OF CALIFORNIA

THE STATE OF CALIFORNIA OR ITS OFFICERS OR AGENTS SHALL NOT BE RESPONSIBLE FOR THE ACCURACY OR COMPLETENESS OF SCANNED COPIES OF THIS PLAN SHEET.

CALIFORNIA STATE FIRE MARSHAL APPROVED
Approval of this plan does not authorize or approve any omission or deviation from applicable regulations. Final approval is subject to field inspection. One set of approved plans shall be available on the project site at all times.
Reviewed by: STEPHEN GUARINO
Approval date: 12-14-09

NOTES: (THIS SHEET ONLY)

1. CONCRETE SHOULD BE PLACED AROUND AND UNDER PULL BOXES (6" MINIMUM) AND SHOULD CONTAIN A MINIMUM OF 550 lbs OF PORTLAND CEMENT PER CUBIC YARD.
2. PORTLAND CEMENT CONCRETE FLOOR OVER CLEAN CRUSHED ROCK SUMP. BOTTOM OF PULL BOX SHALL BE SLOPED TOWARD DRAIN PIPE FOR DRAINAGE AND SHALL HAVE SMOOTH FINISH.
3. PULL BOX SHALL BE PRECAST OF STEEL REINFORCED PORTLAND CEMENT CONCRETE. PULL BOX COVER SHALL BE POLYMER CONCRETE. PULL BOX AND COVER SHALL SUPPORT MINIMUM TEST LOAD OF 25,000 lbs IF BOX IS LOCATED IN TRAVEL WAY, PULL BOX AND COVER SHALL CONFORM VERTICAL PROOF-LOAD STRENGTH REQUIREMENT AS PER CALTRANS STANDARD SPECIFICATIONS, SECTION 86-2.07.
4. IF APPLICABLE, PULL BOX HEIGHT ABOVE EXISTING DIRT GRADE SHALL PERMIT 1" OF FUTURE SURFACE LANDSCAPING. WHEN PULL BOX IS INSTALLED IN EXISTING SIDEWALK, PULL BOX COVER SHALL SIT FLUSH WITH THE PAVEMENT.
5. LOCKING MECHANISM SHALL BE PROVIDED FOR COVER. TWO 3/8" Ø BRASS OR STAINLESS STEEL STUB BOLTS NUTS, AND WASHERS. 2 PER BOX, RECESS IN COVER FOR NUT.
6. "CALTRANS TOS COMMUNICATIONS" SHALL BE CASTED ON THE TOP FACE OF ALL COVERS.
7. MINIMUM PULL BOX DEPTH WITH EXTENSION SHALL BE 20".
8. SEE PLAN SHEETS FOR NUMBER AND SIZE OF CONDUIT.
9. ALL CONDUITS SHALL ENTER THROUGH KNOCKOUTS. IF MORE THAN 3 CONDUITS ARE REQUIRED IN SAME KNOCKOUT, KNOCKOUT SHALL BE WIDENED TO 3/8" MORE THAN THE COMBINED CONDUIT WIDTH.
10. CONDUIT FROM THE TYPICAL BORE OR TRENCH SECTION SHOULD NOT DEFLECT BY MORE THAN 1' PER 10' FROM THE ALIGNMENT PRECEDING OR THE FOLLOWING THE PULL BOX.
11. BOTTOM OF CONDUIT CENTERLINE SHALL BE ALIGNED TO EXIT TOP OF PULL BOX TO FACILITATE CABLE PULLING. IF EXISTING CONDUIT USED, CONTRACTOR SHALL MODIFY CONDUIT SWEEP (IF NEEDED) AS SHOWN. IF NEW CONDUIT USED, CONTRACTOR SHALL INSTALL CONDUIT ELBOW AS SHOWN.
12. EXCESS CONDUIT FOR ALL CONDUIT ENDS SHALL BE CUT BACK TO PROVIDE STUB ENDS OF 1" MINIMUM TO 2" MAXIMUM.
13. ALL METALLIC CONDUIT SHALL HAVE THREADED METALLIC BUSHINGS. ALL PVC AND HDPE CONDUITS SHALL HAVE BELL ENDS.
14. INSTALL CAPS OR DUCT PLUGS FOR ALL CONDUITS.
15. ALL CONDUITS AND PULL BOXES CONTAINING FIBER OPTIC CABLE SHALL HAVE PERMANENT MARKERS AS SHOWN ON DRAWING SHEET E-27.

LEGEND: (THIS SHEET ONLY)

(1) 45 DEGREE ELBOW, 3' RADIUS Min. ELBOW AND COUPLING MAY NOT BE NECESSARY FOR NEW CONDUIT INSTALLED BY DIRECTIONAL BORING. NEW CONDUIT INSTALLED BY DIRECTIONAL BORING SHALL ENTER THE PULL BOX WITH BENDING RADIUS OF 3' Min.

(2) WARNING TAPE (FOR NEW CONDUIT IF INSTALLED BY TRENCHING).

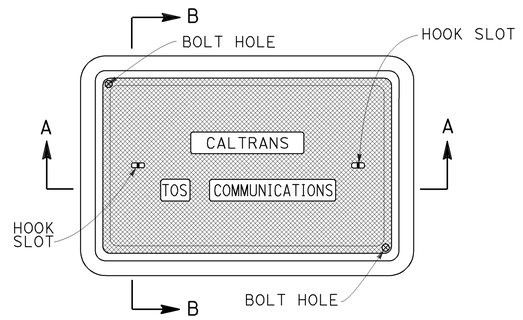

PLAN VIEW

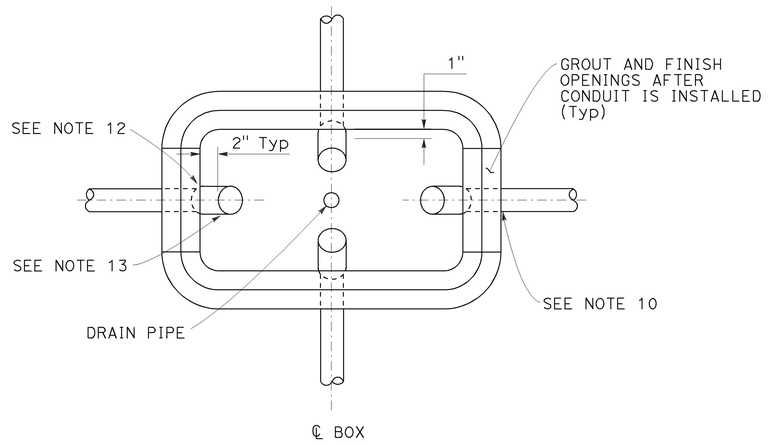

PLAN VIEW
WITHOUT COVER

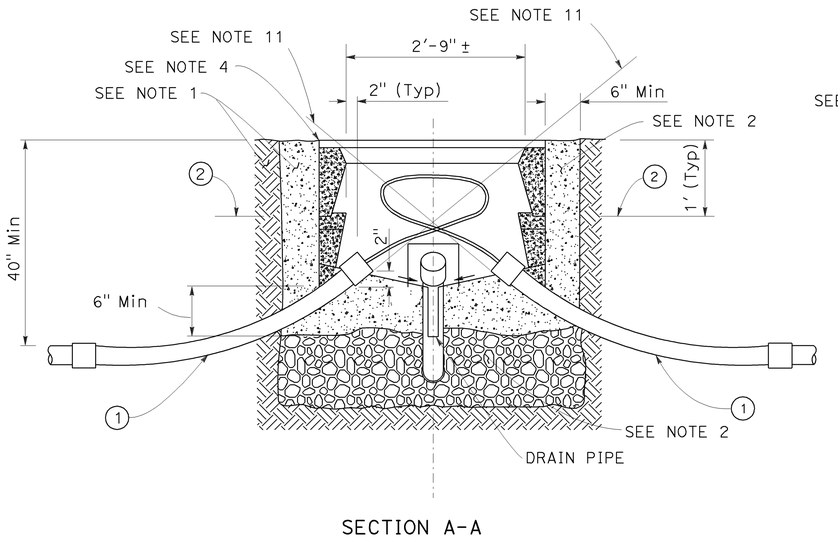

SECTION A-A

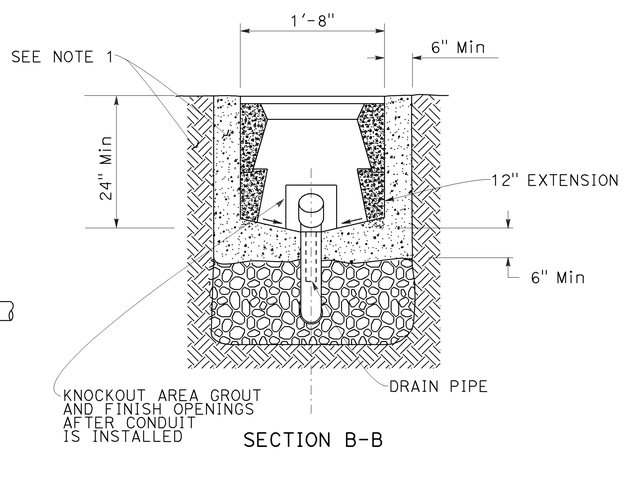

SECTION B-B

ELECTRICAL DETAILS (FIBER OPTIC PULL BOX)

NO SCALE

THIS PLAN ACCURATE FOR ELECTRICAL WORK ONLY

FOR NOTES, ABBREVIATIONS AND LEGEND, SEE SHEET E-1

E-25

REVISED BY	MP
DATE REVISED	8/01/09
CALCULATED-DESIGNED BY	MICHAEL P. LEE
CHECKED BY	MICHAEL P. LEE
FUNCTIONAL SUPERVISOR	CHARLES PRICE

STATE OF CALIFORNIA - DEPARTMENT OF TRANSPORTATION
ELECTRICAL
Caltrans

LAST REVISION — DATE PLOTTED => 14-DEC-2009 — TIME PLOTTED => 15:55 — 08-20-09

BORDER LAST REVISED 4/11/2008

RELATIVE BORDER SCALE IS IN INCHES 0 1 2 3

USERNAME => trlenard
DGN FILE => 416374ua025.dgn

CU 04242

EA 163741

DIST	COUNTY	ROUTE	POST MILE TOTAL PROJECT	SHEET No	TOTAL SHEETS
04	SF	101	8.2/9.2	188	654

CALIFORNIA STATE FIRE MARSHAL APPROVED

Approval of this plan does not authorize or approve any omission or deviation from applicable regulations. Final approval is subject to field inspection. One set of approved plans shall be available on the project site at all times.

Reviewed by: STEPHEN GUARINO

Approval date: 12-14-09

Jeffrey B Woody 6-8-09
REGISTERED CIVIL ENGINEER DATE

12-14-09
PLANS APPROVAL DATE

REGISTERED PROFESSIONAL ENGINEER — JEFFREY B. WOODY — No. C41260 — Exp. 3/31/11 — CIVIL — STATE OF CALIFORNIA

The State of California or its officers or agents shall not be responsible for the accuracy or completeness of electronic copies of this plan sheet.

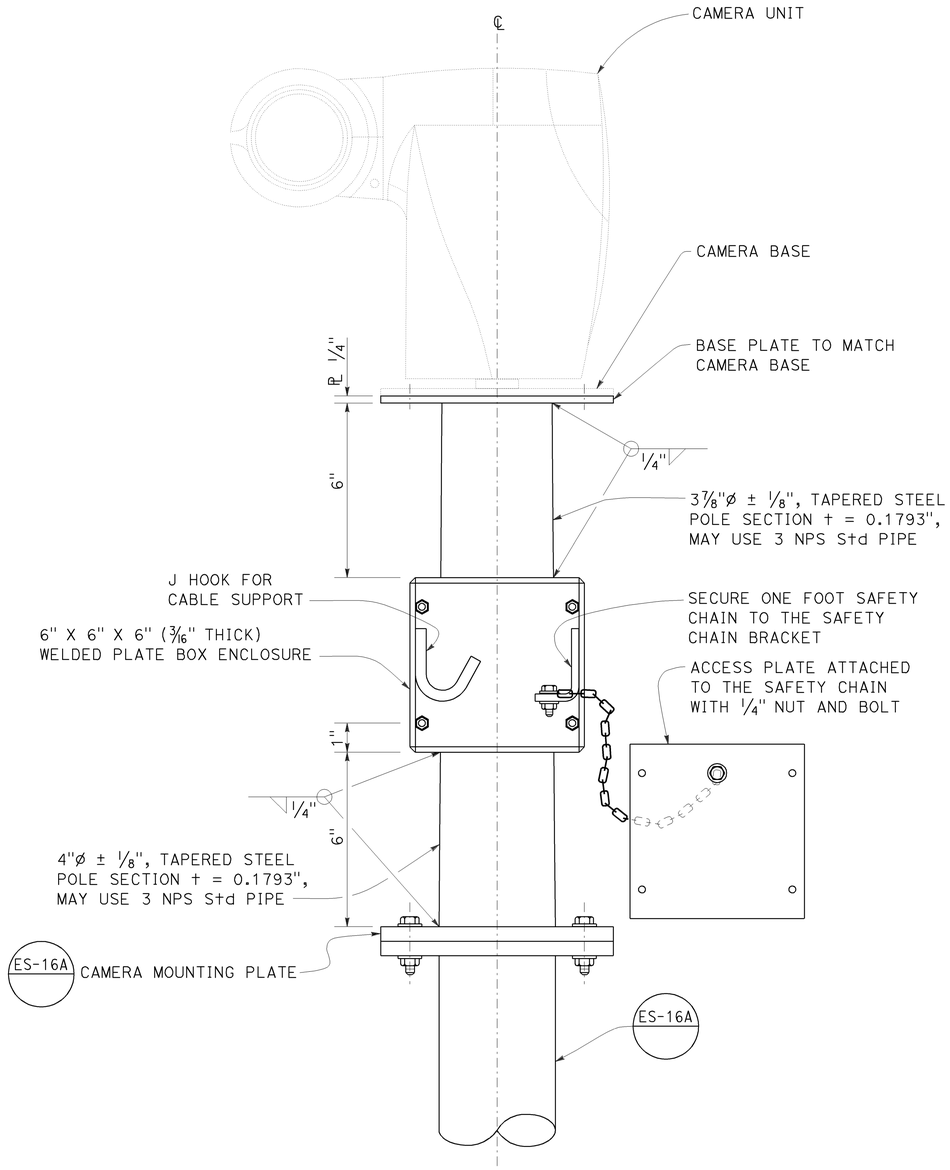

DETAIL A
CCTV POLE MOUNTING WITH ADAPTER

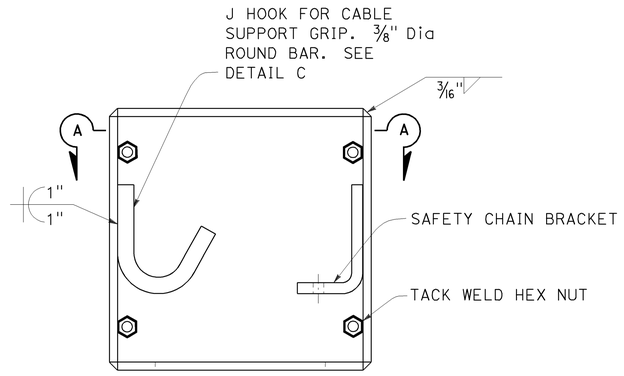

DETAIL B
BOX ENCLOSURE

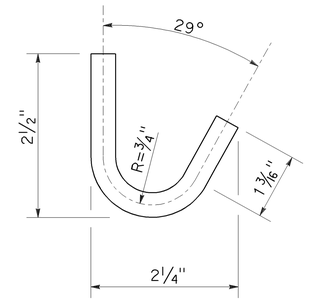

DETAIL C
J HOOK

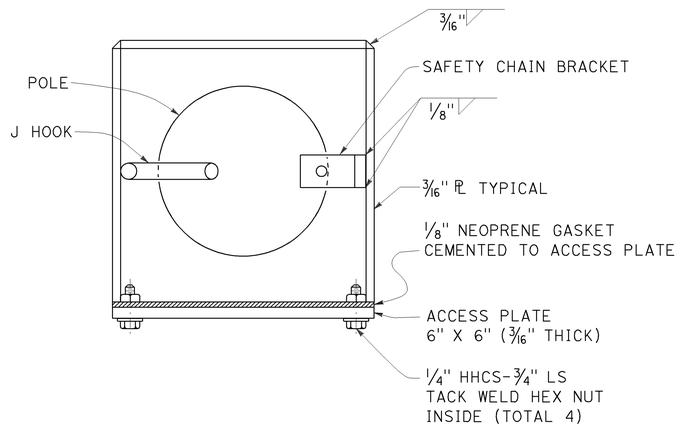

SECTION A-A

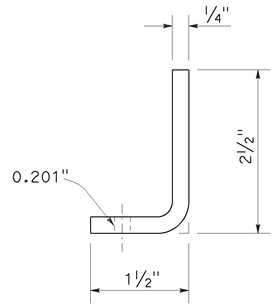

DETAIL D
SAFETY CHAIN BRACKET

NOTE:
THE CONTRACTOR SHALL VERIFY ALL CONTROLLING FIELD DIMENSIONS BEFORE ORDERING OR FABRICATING ANY MATERIAL.

REVISED STANDARD PLAN SHEET NO.
DETAIL NO.

THIS PLAN IS ACCURATE FOR ELECTRICAL WORK ONLY.

FOR NOTES, ABBREVIATIONS AND LEGEND, SEE SHEET E-1

ELECTRICAL DETAILS
CAMERA MOUNTING DETAILS

NO SCALE

E-26

LAST REVISION 8-31-09
DATE PLOTTED => 14-DEC-2009
TIME PLOTTED => 15:58

STATE OF CALIFORNIA - DEPARTMENT OF TRANSPORTATION
Caltrans
SPECIAL DESIGNS BRANCH
PROJECT ENGINEER: JEFF WOODY
CALCULATED/DESIGNED BY: J WOODY
CHECKED BY
DATE: 6-8-09
DETAILS: D W JUSTICE Jr
QUANTITIES:

ORIGINAL SCALE IN INCHES FOR REDUCED PLANS 0 1 2 3

USERNAME => trmikesl
DGN FILE => 04-163741_e26.dgn

CU 04242 | EA 163741

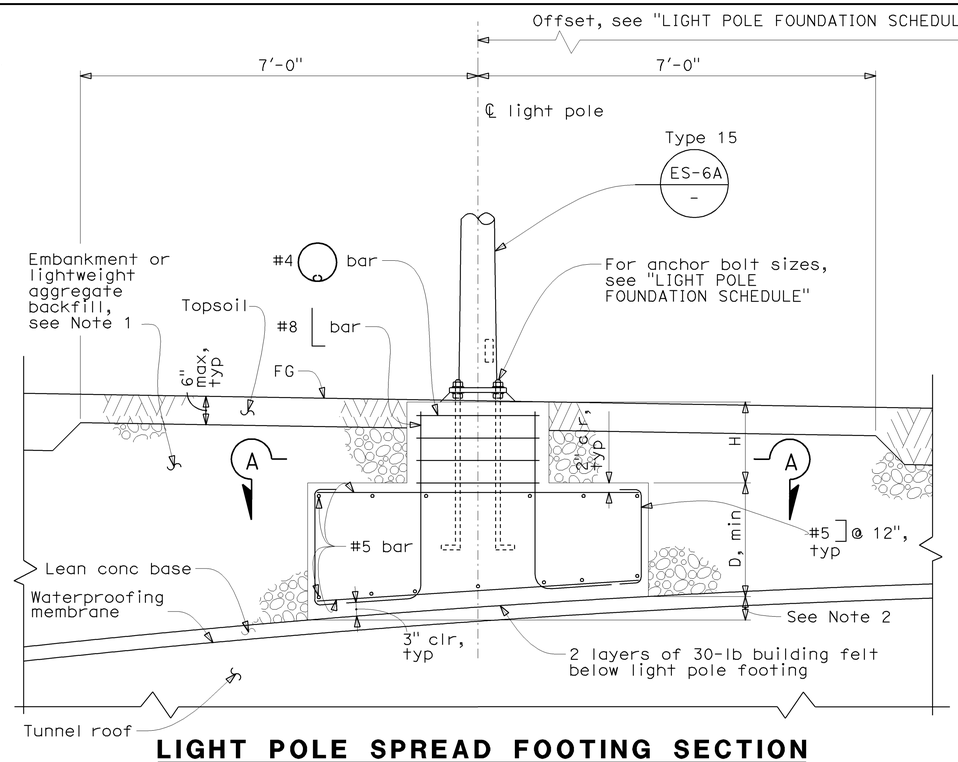

LIGHT POLE SPREAD FOOTING SECTION

Scale ¾" = 1'0"

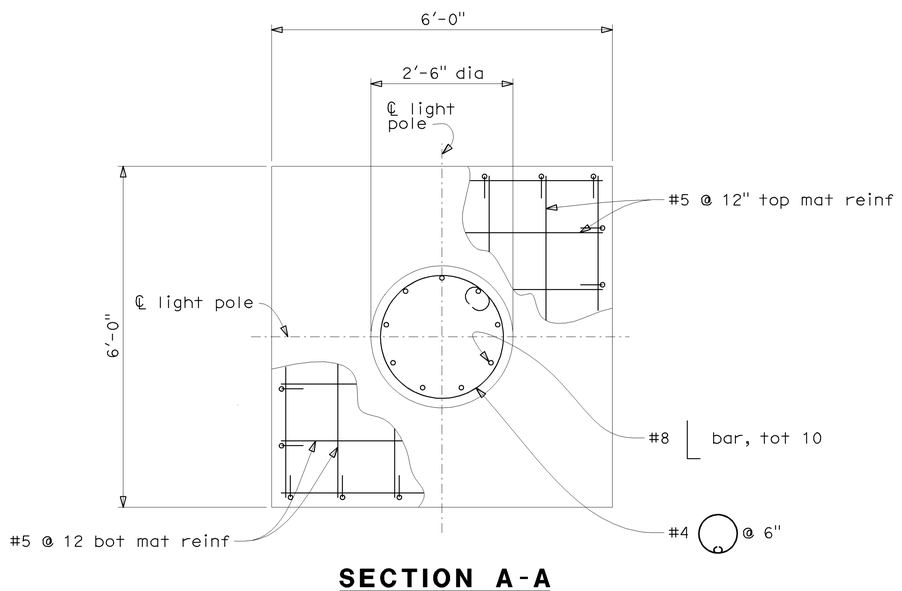

SECTION A-A

Scale ¾" = 1'0"

Note:

1. For limits of embankment and lightweight aggregate backfill and profile of tunnel roof, see "SOUTHBOUND BATTERY TUNNEL STRUCTURAL" plans.

CALIFORNIA STATE FIRE MARSHAL APPROVED

Approval of this plan does not authorize or approve any omission or deviation from applicable regulations. Final approval is subject to field inspection. One set of approved plans shall be available on the project site at all times.

Reviewed by: STEPHEN GUARINO

Approval date: 12-14-09

Dist	COUNTY	ROUTE	POST MILES TOTAL PROJECT	SHEET No.	TOTAL SHEETS
04	SF	101	8.2/9.2	189	654

Ying Ren 8/20/09
LICENSED CIVIL ENGINEER

12-14-09
PLANS APPROVAL DATE

REGISTERED PROFESSIONAL ENGINEER — Ying Ren — No. C-71638 — Exp. 12/31/09 — CIVIL — STATE OF CALIFORNIA

THE STATE OF CALIFORNIA OR ITS OFFICERS OR AGENTS SHALL NOT BE RESPONSIBLE FOR THE ACCURACY OR COMPLETENESS OF ELECTRONIC COPIES OF THIS PLAN SHEET.

Arup PB JV
560 Mission Street, Suite 700
San Francisco, CA 94105

LIGHT POLE FOUNDATION SCHEDULE

"SB" Station	Offset	D, min	H	Anchor Bolt Size	Detail
76+80.00	43' Lt	NA	NA	See "ES-7M".	See "LIGHT POLE CIDH FOUNDATION SECTION".
78+40.00	18' Lt	NA	NA	See "ES-7M".	See "LIGHT POLE CIDH FOUNDATION SECTION".
80+00.00	50' Lt	1'-9"	1'-11¼"	See "ES-7M".	See "LIGHT POLE SPREAD FOOTING SECTION".
81+60.00	40' Lt	1'-9"	1'-3¼"	See "ES-7M".	See "LIGHT POLE SPREAD FOOTING SECTION".
82.20.00	18' Lt	1'-9"	1'-0"	See "ES-7M".	See "LIGHT POLE SPREAD FOOTING SECTION".
83+20.00	18' Lt	1'-9"	2½"	1"ø x 2'-2" x 4"	See "LIGHT POLE SPREAD FOOTING SECTION".

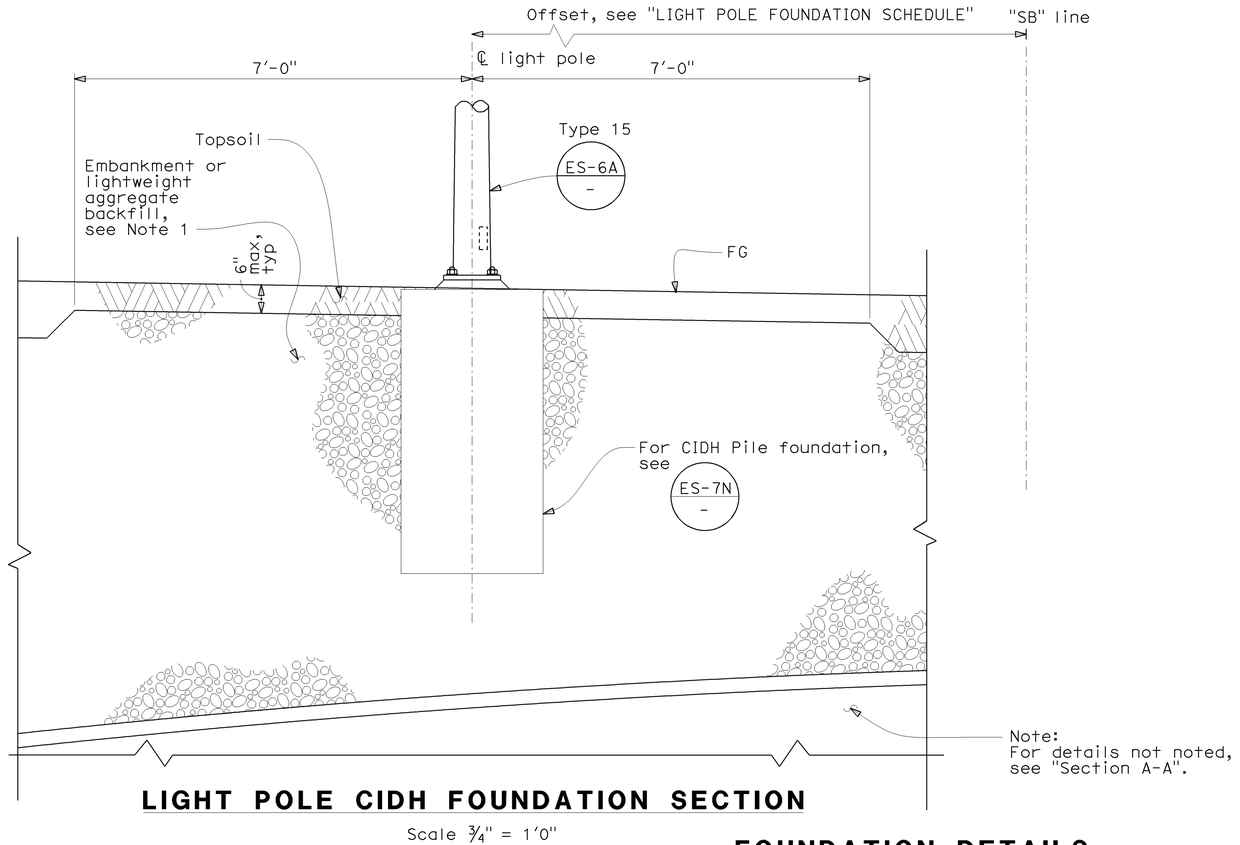

LIGHT POLE CIDH FOUNDATION SECTION

Scale ¾" = 1'0"

FOUNDATION DETAILS TYPE 15 LIGHT POLE STANDARD INSTALLATION ON TUNNEL ROOF

E-27

REVISED BY | DATE REVISED
NOEL L. VIVAR | YING REN
CALCULATED-DESIGNED BY | CHECKED BY
CONSULTANT FUNCTIONAL SUPERVISOR: ABOLFAZL EMADZADEH
STATE OF CALIFORNIA - DEPARTMENT OF TRANSPORTATION
Caltrans

LAST REVISION | DATE PLOTTED => 14-DEC-2009
08-19-09 | TIME PLOTTED => 15:55

VMS Sign D Line STA 87+00	POST DATA, See Note 5								
	Laminated Wood Box Post Type	Section Dimensions	Length, Ft		Weight, Lb		Breakaway System	Panel Manufacturer	Mounting Bolt Size
			Left	Right	Left	Right			
Roadside	"L"	14⅞" x 7⅞"	18.25	20.0	310	340	No	VMS Ver-Mac	½" ø
					Total Wgt = 650 lbs				

DIST	COUNTY	ROUTE	POST MILE TOTAL PROJECT	SHEET No	TOTAL SHEETS
04	SF	101	8.2/9.2	190	654

REGISTERED CIVIL ENGINEER — 9/15/09 DATE

12-14-09
PLANS APPROVAL DATE

REGISTERED PROFESSIONAL ENGINEER — ANDREW BUI No. C63560 Exp. 9/30/10 CIVIL — STATE OF CALIFORNIA

The State of California or its officers or agents shall not be responsible for the accuracy or completeness of electronic copies of this plan sheet.

CALIFORNIA STATE FIRE MARSHAL APPROVED
Approval of this plan does not authorize or approve any omission or deviation from applicable regulations. Final approval is subject to field inspection. One set of approved plans shall be available on the project site at all times.
Reviewed by: STEPHEN GUARINO
Approval date: 12-14-09

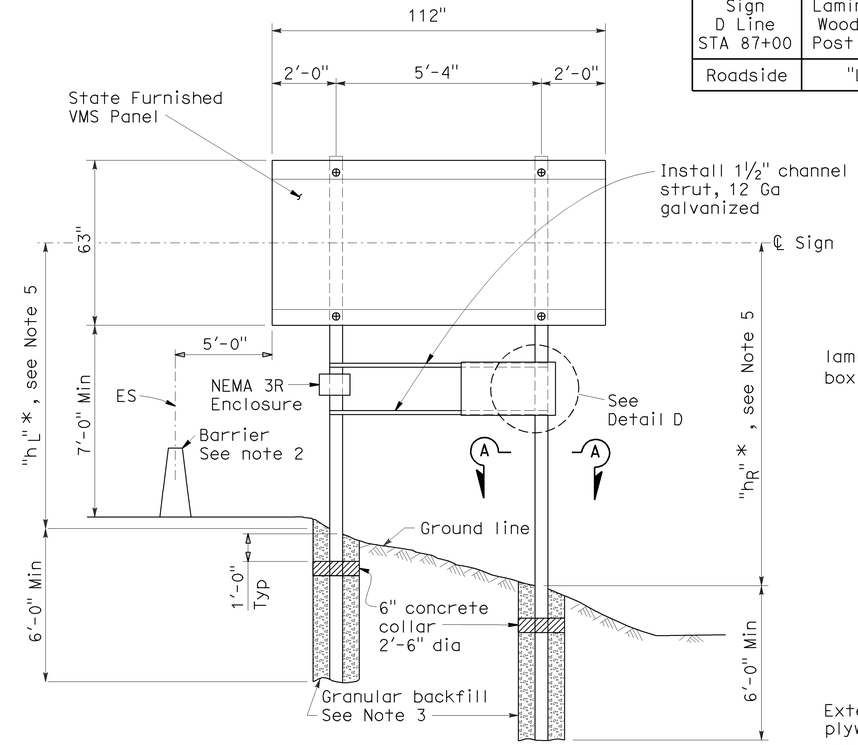

ELEVATION

* Dimensions shown on project plans are for fabrication. At time of installation adjust these dimensions to verify in field.

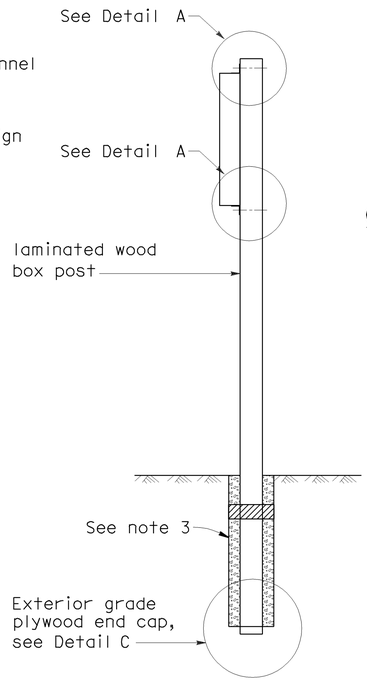

SIDE VIEW

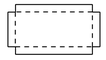

GALV METAL CAP

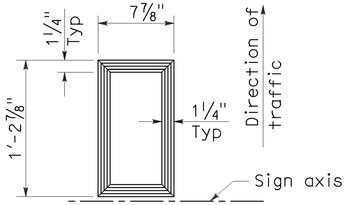

SECTION A-A
TYPE "L"

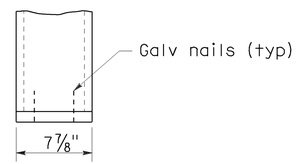

SECTION B-B

GENERAL NOTES

DESIGN:
AASHTO Specifications for Structural Supports for Highway Signs, Luminaries and Traffic Signals, dated 2001

CONSTRUCTION:
Standard Specifications and the Special Provisions State of California Department of Transportation Dated July 1999 and May 2006
Standard Plans State of California Department of Transportation Dated May 2006 and current Revised Plans

LOADING:
WIND LOADING:
40 psf applied load combinations per 3.9 AASHTO Specifications for Structural Supports for Hightway Signs, Luminaries and Traffic Signals, dated 2001

STANDARD PLANS DATED MAY 2006

A10A	ACRONYMS AND ABBREVIATIONS (A-L)
A10B	ACRONYMS AND ABBREVIATIONS (M-Z)
RS1	ROADSIDE SIGNS TYPICAL INSTALLATION DETAIL NO.1
RS2	ROADSIDE SIGNS TYPICAL INSTALLATION DETAIL NO.2

NOTES:

1. For details not shown, see "2006 STANDARD PLANS" and "2006 REVISED STANDARD PLANS".
2. For sign location and barrier type see "PROJECT PLANS".
3. Diameter of post holes shall be at least 2'-6"
4. Refer to VMS Manufacturer to verify bolt hole layout and length.
5. Design based on 1:2 slope. Contractor to verify before post fabrication.

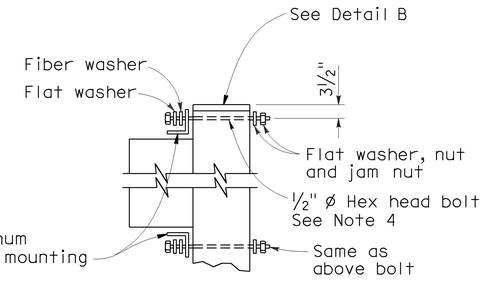

DETAIL A

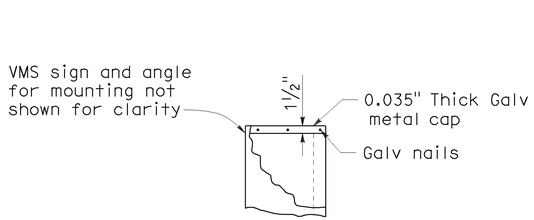

DETAIL B

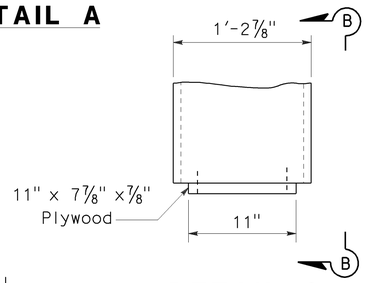

DETAIL C

NOTE:
THE CONTRACTOR SHALL VERIFY ALL CONTROLLING FIELD DIMENSIONS BEFORE ORDERING OR FABRICATING ANY MATERIAL.

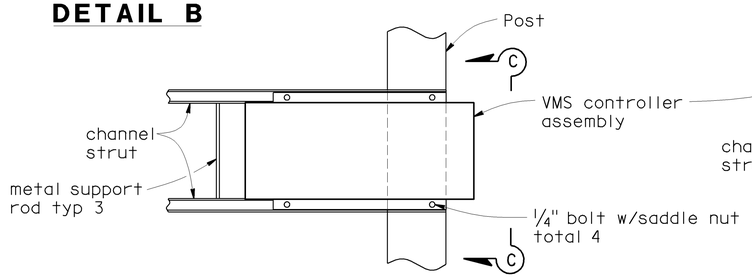

DETAIL D

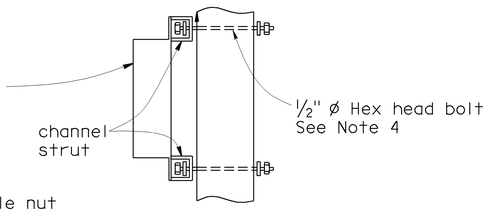

SECTION C-C
Both Posts

VMS ROADSIDE SIGN AT D LINE STA 87+00 INSTALLATION & DETAILS

E-28

STATE OF CALIFORNIA - DEPARTMENT OF TRANSPORTATION
Caltrans
SPECIAL DESIGNS BRANCH
PROJECT ENGINEER: ANDREW BUI
CALCULATED/DESIGNED BY: T MARCHENKO
CHECKED BY: A BUI
DETAILS: DATE 5-13-09
QUANTITIES: 5-13-09
D W JUSTICE Jr

LAST REVISION 9-15-09
DATE PLOTTED => 14-DEC-2009
TIME PLOTTED => 15:58

ORIGINAL SCALE IN INCHES FOR REDUCED PLANS 0 1 2 3
USERNAME => trmikesl
DGN FILE => 04-163741_e28.dgn
CU 04242
EA 163741

DIST	COUNTY	ROUTE	POST MILE TOTAL PROJECT	SHEET No	TOTAL SHEETS
04	SF	101	8.2/9.2	191	654

REGISTERED CIVIL ENGINEER 6-8-09 DATE

12-14-09
PLANS APPROVAL DATE

The State of California or its officers or agents shall not be responsible for the accuracy or completeness of electronic copies of this plan sheet.

REGISTERED PROFESSIONAL ENGINEER JEFFREY B. WOODY No. C41260 Exp. 3/31/11 CIVIL STATE OF CALIFORNIA

CALIFORNIA STATE FIRE MARSHAL APPROVED
Approval of this plan does not authorize or approve any omission or deviation from applicable regulations. Final approval is subject to field inspection. One set of approved plans shall be available on the project site at all times.
Reviewed by: STEPHEN GUARINO
Approval date: 12-14-09

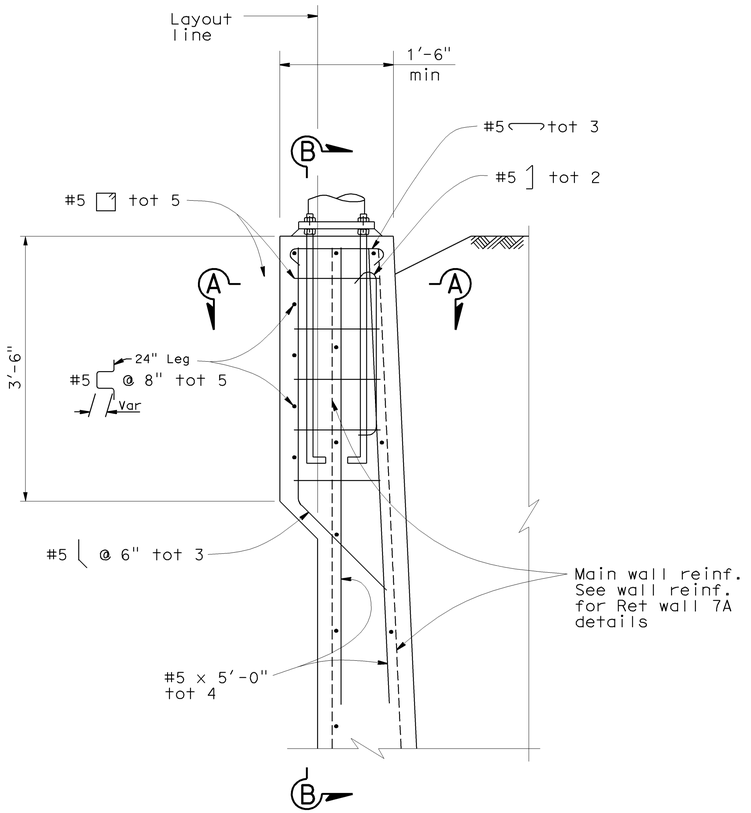

LUMINAIRE PEDESTAL ELEVATION

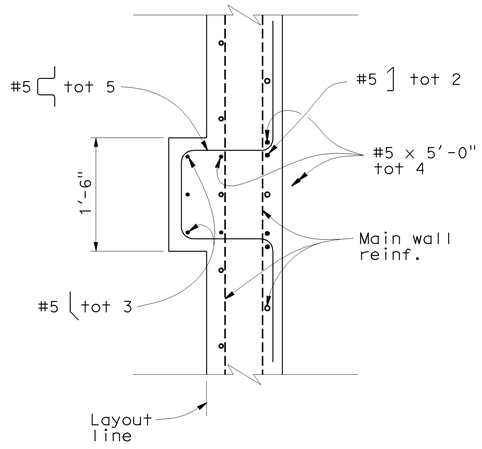

SECTION A-A

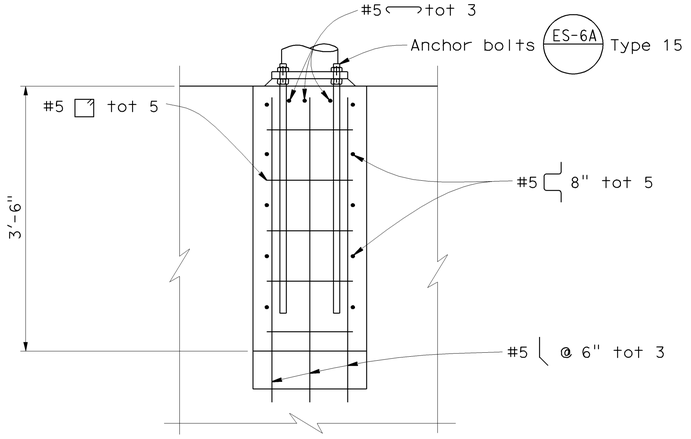

SECTION B-B

Notes:

1. Minimum concrete cover shall be 2"
2. Grout pad shall habve 45° sides. See Standard Plans ES-7M, handhole and anchorage details.
3. Refer to Standard plans ES-6A for Type 15 Lighting standard details.
4. Top 8" of anchor bolts shall be galvanized.
5. Reinforcement shown is in addition to Ret Wall7A reinforcing.

NOTE:
THE CONTRACTOR SHALL VERIFY ALL CONTROLLING FIELD DIMENSIONS BEFORE ORDERING OR FABRICATING ANY MATERIAL.

REVISED STANDARD PLAN SHEET NO.
DETAIL NO.

LIGHTING PEDESTAL ON RETAINING WALL 7A

NO SCALE

E-29

STATE OF CALIFORNIA - DEPARTMENT OF TRANSPORTATION
Caltrans SPECIAL DESIGNS BRANCH

PROJECT ENGINEER JEFF WOODY
CALCULATED/DESIGNED BY J DATILES
CHECKED BY M LICHA
DATE 10-19-09 DETAILS D W JUSTICE Jr
10-19-09 QUANTITIES J DATILES

LAST REVISION 10-30-09
DATE PLOTTED => 14-DEC-2009
TIME PLOTTED => 15:58

ORIGINAL SCALE IN INCHES FOR REDUCED PLANS 0 1 2 3
USERNAME => trmikesl
DGN FILE =>spec_des_br_prj/2009sd/04-163731/ 04-163741_e29.dgn
CU 04242
EA 163741

Dist	COUNTY	ROUTE	POST MILES TOTAL PROJECT	SHEET No.	TOTAL SHEETS
04	SF	101	8.2/9.2	192	654

Lionel J. Sudds 10-8-09
REGISTERED ELECTRICAL ENGINEER DATE

12-14-09
PLANS APPROVAL DATE

REGISTERED PROFESSIONAL ENGINEER — Lionel J. Sudds No. 15201 Exp 6-30-10 ELECT — STATE OF CALIFORNIA

THE STATE OF CALIFORNIA OR ITS OFFICERS OR AGENTS SHALL NOT BE RESPONSIBLE FOR THE ACCURACY OR COMPLETENESS OF SCANNED COPIES OF THIS PLAN SHEET.

CALIFORNIA STATE FIRE MARSHAL APPROVED
Approval of this plan does not authorize or approve any omission or deviation from applicable regulations. Final approval is subject to field inspection. One set of approved plans shall be available on the project site at all times.
Reviewed by: STEPHEN GUARINO
Approval date: 12-14-09

SHEET INDEX

DRAWING No.	GENERAL TITLE/(SUB TITLE)
E-30 TO E-33	GENERAL NOTES, PROJECT NOTES SYMBOLS AND ABBREVIATIONS
E-34	SUBSTATION AT BATTERY TUNNEL
E-35	PRESIDIO VIADUCT SUBSTATION GENERAL PLAN
E-36	PANELBOARDS
E-37	BLANK
E-38	BATTERY SUBSTATION EQUIPMENT AND UNDERGROUND CONDUIT LAYOUT OF BATTERY SUBSTATION
E-39 TO E-42	BATTERY SUBSTATION EQUIPMENT & UNDERGROUND CONDUIT
E-43	SUBSTATION BUILDING LIGHTING CONDUIT
E-44	FIRE ALARM AND SECURITY SYSTEM LAYOUT
E-45	EQUIPMENT & UNDERGROUND CONDUIT LAYOUT OF THE T.O.S. ROOM IN BATTERY SUBSTATION
E-46	EQUIPMENT & UNDERGROUND CONDUIT LAYOUT OF CONTROL SECTION
E-47	SECONDARY UNIT SUBSTATION
E-48 TO E-50	ELEVATION
E-51	LEFT INTENTIONALLY BLANK
E-52	ELEVATION
E-53	WIRING AND CONNECTION OF SUBSTATION FIRE ALARM AND LIGHTING SYSTEM
E-54 TO E-55	DOYLE DRIVE NETWORK COMMUNICATION SYSTEM AND CONNECTION DIAGRAM
E-56 TO E-58	COMMUNICATION CONNECTION DIAGRAM FOR SUBSTATION SCADA SYSTEM JB
E-59	FCS #1 LAYOUT AND CONNECTION DIAGRAM
E-60 TO E-61	PAC No.3 LAYOUT AND WIRING DIAGRAM
E-62 TO E-63	EQUIPMENT LAYOUT OF BATTERY TC AND T.O.S. ROOM
E-64	EQUIPMENT LAYOUT OF BATTERY SUBSTATION ROOM
E-65 TO E-66	DC POWER SYSTEM, FOR SWITCHGEAR/INVERTER
E-67 TO E-68	MCC CONTROL WIRING DIAGRAM
E-69	SUBSTATION FO CONNECTION DIAGRAM
E-70	POWER DISTRIBUTION SYSTEM
E-71	SWITCHBOARD, MCC #1 AND MCC #2 POWER DISTRIBUTION SYSTEM
E-72	LEFT INTENTIONALLY BLANK
E-73	CONTROL POWER WIRING FOR TUNNEL
E-74	CIRCUIT BREAKER INTERFACE CONTROL WIRING
E-75	INCOMING MV CIRCUIT BREAKER WIRING DIAGRAM
E-76	TIE MV CIRCUIT BREAKER WIRING DIAGRAM
E-77	FEEDER MV CIRCUIT BREAKER WIRING DIAGRAM
E-78 AND E-79	SECONDARY UNIT SUBSTATION TB & WIRING DIAGRAM
E-80	GROUNDING ELECTRODE SYSTEM
E-81	SECTION VIEW OF SUBSTATION
E-82	EQUIPMENT & UNDERGROUND CONDUIT LAYOUT OF BATTERY SUBSTATION
E-83	EQUIPMENT & UNDERGROUND CONDUIT LAYOUT OF BATTERY SUBSTATION
E-84	DUCTBANK LAYOUT
E-85 AND E-86	PULLBOX & DUCTBANK LAYOUT SUBSTATION
E-87 AND E-88	BATTERY SUBSTATION, TUNNEL SECTION/ UTILITY DUCTBANK LAYOUT
E-89	ELECTRICAL CONDUIT NICHE LAYOUT
E-90	TUNNEL CROSSOVER CONDUITS
E-91 AND E-92	TUNNEL LOW VOLTAGE DUCT LAYOUT
E-93 AND E-94	TUNNEL POWER DISTRIBUTION SYSTEM WIRING CONNECTION DIAGRAM
E-95	SB TUNNEL CONTROL WIRING FOR JET FANS (MCC #1)
E-96 AND E-97	BATTERY TUNNEL COMMUNICATION DUCT LAYOUT SUBSTATION
E-98	TUNNEL FO CONNECTION DIAGRAM
E-99	CONNECTION DIAGRAM FOR SB TUNNEL SCADA SYSTEM
E-100 TO E-102	TUNNEL FCS #3 JB AT EN16 NORTHSIDE LAYOUT AND WIRING CONNECTION DIAGRAM
E-103 TO E-105	TUNNEL FCS #4 JB AT EN16 SOUTHSIDE LAYOUT AND WIRING CONNECTION DIAGRAM
E-106 AND E-107	TUNNEL FCS #5 JB AT EN16 NORTHSIDE LAYOUT AND WIRING CONNECTION DIAGRAM
E-108 AND E-109	TUNNEL FCS #6 JB AT EN16 SOUTHSIDE LAYOUT AND WIRING CONNECTION DIAGRAM
E-110 AND E-111	TUNNEL FCS #7 JB AT EN3 NORTHSIDE LAYOUT AND WIRING CONNECTION DIAGRAM
E-112 AND E-113	TUNNEL FCS #8 JB AT EN3 SOUTHSIDE LAYOUT AND WIRING CONNECTION DIAGRAM
E-114 AND E-115	TUNNEL CALLBOX DUCT LAYOUT
E-116 TO E-127	TUNNEL LAYOUT AND WIRING CONNECTION OF CO MONITORING SYSTEM
E-128 TO E-141	TUNNEL FIRE CONTROL SYSTEM LAYOUT
E-142 AND E-143	TUNNEL GROUNDING ELECTRODE SYSTEM
E-144 TO E-148	ELECTRICAL NICHE LAYOUT
E-149	BATTERY SUBSTATION FO CONNECTION TABLE
E-150 TO E-160	BATTERY SUBSTATION SCADA I/O POINT TABLE
E-161 TO E-166	SB BATTERY TUNNEL LUMINAIRE LAYOUT
E-167	SB BATTERY TUNNEL INSTALLATION DETAIL
E-168	BATTERY SUBSTATION EQUIPMENT LAYOUT
E-169	LEFT INTENTIONALLY BLANK
E-170 TO E-176	ELECTRICAL DETAILS SB BATTERY TUNNEL WIRING LAYOUT
E-177 TO E-182	CALL BOX SYSTEM LAYOUT
E-183 TO E-185	MAINTENANCE CAMERA LAYOUT AND DETAIL
E-186 TO E-191	TOS CAMERA LAYOUT
E-192 TO E-195	RADIO BROADCAST SYSTEM

GENERAL NOTES:

1. THE CONTRACTOR SHALL VERIFY ALL CONTROLLING FIELD DIMENSIONS AND PARAMETERS BEFORE ORDERING OF FABRICATING ANY MATERIAL.
2. ALL CONNECTIONS OF ARMORED CABLE (AC) TO JUNCTION BOXES OR ANY METALLIC ITEMS SHALL BE DONE USING CAST OR COPPER-FREE ALUMINUM JACKETED INTERLOCKED WATERTIGHT (FOR WET LOCATIONS) COMPOUNDED TYPE ARMORED CABLE CONNECTOR WITH STAINLESS STEEL SCREWS AND LOCKNUTS.
3. ALL ELECTRICAL ITEMS THAT USE ANCHORS TO ATTACH TO THE CONCRETE STRUCTURES SHALL USE STAINLESS STEEL POWER STUD ANCHORS-THREADED VERSION SIZED PER MANUFACTURER RECOMMENDATION AND EPOXY ANCHOR WITH A RATED LIFE OF 25 YEARS OR GREATER.
4. DIMENSIONS SHOWN FOR EXISTING STRUCTURES ARE TAKEN FROM CONSTRUCTION DRAWINGS AND MINOR VARIATIONS ARE TO BE ANTICIPATED. THE CONTRACTOR SHALL FIELD VERIFY AND ADJUST ALL DIMENSIONS TO FIT EXISTING CONDITIONS.
5. FOR CLARITY, TWO OR MORE CONDUITS OR CABLES MAY BE SHOWN BY ONE LINE OR RUN. ALSO CERTAIN EXISTING CONDUITS, EQUIPMENT, AND CABLE DETAILS ARE OMITTED FROM THIS PLAN FOR CLARITY.
6. PADLOCKS SHALL BE INSTALLED ON ALL JUNCTION BOXES, CABINETS, AND WIRE TROUGHS THAT ARE ACCESSIBLE FROM THE GROUND.
7. BEFORE COMPLETION OF ALL ELECTRICAL WORK, THE CONTRACTOR SHALL LABEL ALL CONDUCTORS AND CABLES BY TYPE, CIRCUIT NUMBER, AND CALLBOX NUMBER IN EACH PULL BOX, JUNCTION BOX, CABINET, AND WIRE TROUGH.
8. EACH TERMINAL BLOCK, IN A MEDIUM VOLTAGE BREAKER COMPARTMENTS CABINET, OR JUNCTION BOX, IN WHICH WORK SHALL BE PERFORMED ON, THE CONTRACTOR SHALL INSTALL FOR EACH TERMINAL BLOCK A PERMANENT LABEL FOR IDENTIFICATIONS.
9. ALL HOLES IN CABINETS, CONDUIT BODIES OR JUNCTION BOXES SHALL BE COVERED WITH THE APPROPRIATE TYPE PLUG FOR THE APPLICATION AFTER ANY CONDUIT, CABLE OR DEVICE IS REMOVED.
10. EXACT LOCATIONS OF THE EQUIPMENT OR ITEM MAY BE ADJUSTED TO FIELD CONDITIONS BY THE ENGINEER WITHOUT ADDITIONAL COST TO THE STATE.
11. THE CONDUITS THAT CONTAIN COMMUNICATION, OR TELEPHONE CABLES OR CONDUCTORS SHALL BE TYPE 1 OR TYPE 2 UNLESS OTHERWISE SPECIFIED.
12. IN ADDITION TO THE LATEST EDITION OF NATIONAL ELECTRICAL CODE (NEC), THE CONTRACTOR SHALL ADHERE TO THE LATEST EDITION OF NATIONAL ELECTRICAL SAFETY CODE (NESC) AND THE UTILITY COMPANIES REQUIREMENTS, AND IF THE CODES AND REQUIREMENTS ARE IN CONFLICT, THEN THE ENGINEER SHALL DETERMINE WHICH CODE AND REQUIREMENTS APPLIES AT NO ADDITIONAL COST TO THE STATE.
13. ALL CONNECTIONS OF TYPE 1 OR TYPE 2 CONDUITS TO JUNCTION OR PULL BOXES AND ANY METALLIC ITEM (EXCEPT FOR OUTLET BOXES) AND OPEN ENDED TYPE 1 OR TYPE 2 CONDUIT SHALL BE DONE OR TERMINATED USING TREADED INSULATED BONDING BUSHING (PRESSURE TYPE LUG) WITH GASKETED SEALING LOCKNUT AND MOISTURE PROOF HUB WITH "O" RING.
14. THE MV CONTROL SWITCH CONTACTS (EXCEPT FOR 52a AND 52b CONTACTS) ARE SHOWN NORMALLY OPEN, BUT SHALL BE CLOSE WHEN IN ITS DESIGNATED FUNCTION AS SHOWN ON THE PLANS.
15. THE SWITCHGEAR AS SHOWN ON THE PLANS SHALL BE THE SAME AS THE MEDIUM VOLTAGE CIRCUIT BREAKER COMPARTMENT AS SPECIFIED IN THE SPECIAL PROVISIONS.
16. (H / 85) INSTALL CONDUIT WITH CONDUCTORS AND CABLES SPECIFIED TO PULLBOX LETTER SHOWN ON DETAIL A ON SHEET E-84 FROM THE SUBSTATION.

    INSTALL CONDUCTORS AND CABLES THROUGH THE CONDUIT # OF THE DUCTBANKS ON SHEET E-84 AND THROUGH THE CONDUIT # OF THE UTILITY DUCTBANKS SHOWN ON SHEET E-88 AFTER ENTERING THE PULLBOX WITH THE LETTER SPECIFIED ABOVE.

DRAWING No.	BID ITEM DESCRIPTION
E-34 TO E-86, E-88 TO E-141, E-144 TO E-160	BATTERY SUBSTATION AND TUNNEL WORK
E-87, E-142, E-143	GROUNDING, CONDUITS EMBEDDED IN STRUCTURES
E-161 TO E-176	TUNNEL LIGHTING
E-177 TO E-193	TUNNEL TRAFFIC OPERATION SYSTEM
E-194 TO E-197	RADIO REBROADCAST

GENERAL NOTES, PROJECT NOTES, INDEX, SYMBOLS AND ABBREVIATIONS

E-30

LAST REVISION DATE PLOTTED => 14-DEC-2009
TIME PLOTTED => 15:55

STATE OF CALIFORNIA - DEPARTMENT OF TRANSPORTATION
ELECTRICAL
FUNCTIONAL SUPERVISOR: BEHZAD GOLEMOHAMMADI
CALCULATED-DESIGNED BY: LS
CHECKED BY: LIONEL J. SUDDS
REVISED BY: LIONEL J. SUDDS
DATE REVISED: 8/01/09

BORDER LAST REVISED 4/11/2008
RELATIVE BORDER SCALE IS IN INCHES 0 1 2 3
USERNAME => trlenard
DGN FILE => 416374ua030.dgn
CU 04242
EA 163741

SYMBOLS:

- L — LIGHTING CONDUIT
- G — GROUNDING ELECTRODE CONDUCTOR CONDUIT
- F — FIRE ALARM CONDUIT
- DC — DC POWER CONDUIT
- HV — HIGH VOLTAGE CONDUIT (NEW)
- PB — TEMPERATURE PROBE OR VOLTAGE REMOTE SENSOR CONDUCTOR CABLE CONDUIT
- D — DUCTBANK OR MULTIPLE CONDUITS
- CP — CONTROL POWER CONDUIT
- (Y) — ANTI PUMP RELAY COIL
- (SR) — SPRING RELEASE COIL OF THE MEDIUM VOLTAGE CIRCUIT BREAKER
- (M) — SPRING RELEASE MOTOR OF THE MEDIUM VOLTAGE CIRCUIT BREAKER
- (ST) — SHUNT TRIP COIL
- (ST 1) — SHUNT TRIP COIL #1 (240 VAC)
- (ST 2) — SHUNT TRIP COIL #2 (125 VDC)
- (FAN M) — JUNCTION BOX COOLING FAN MOTOR
- FEEDER OR CONTROL POWER CIRCUIT BREAKER PER NEC UNLESS OTHERWISE SPECIFIED
- COIL OF RELAY
- (#) — CONTROL AND INDICATION NUMBER FOR I/O TABLE OR No. OF CONDUCTORS PER PHASE FOR CONDUCTORS OR CABLES OR No. OF CONDUITS WITH CONDUCTORS OR CABLES
- FUSE PER NEC UNLESS OR OTHERWISE SPECIFIED
- MEDIUM VOLTAGE CIRCUIT BREAKER
- NORMALLY OPEN RELAY CONTACT
- NORMALLY CLOSED RELAY CONTACT
- N.O. SWITCH SINGLE POLE SINGLE THROW
- SECONDARY DISCONNECT
- (R) — INDICATION LIGHT (RED)
- SECONDARY DISCONNECTS (NOTE: ITEM SHOWN BETWEEN THE DISCONNECTS ARE ITEMS WITHIN THE MEDIUM VOLTAGE CIRCUIT BREAKER)
- DIODE
- PROPOSED 400W DIRECTIONAL LUMINAIRE
- PROPOSED 150W DIRECTIONAL LUMINAIRE
- 3 POSITION SELECTOR SWITCH WITH AUXILLARY CONTACT
- I A S — 3 POLE CONTACTOR LABEL IAS
- CALL BOX

- Y ≠ Y — ANTI PUMP RELAY CONTACTS
- ≠ LC — RELAY CONTACT (NOTE: OPEN UNTIL MECHANISM IS RESET)
- LS1/aa OR LS2/aa — RELAY CONTACT (NOTE: OPEN UNTIL SPRINGS ARE FULLY CHARGED)
- ≠ LS1/bb OR LS2/bb — RELAY CONTACT (NOTE: CLOSED UNTIL SPRINGS ARE FULLY CHARGED)
- PS1/aa — RELAY CONTACT (NOTE: OPEN IN ALL EXCEPT BETWEEN "TEST" AND "CORRECTED" POSITIONS)
- ≠ PS2/bb — RELAY CONTACT (NOTE: CLOSED IN ALL EXCEPT BETWEEN "TEST" AND "CORRECTED" POSITIONS)
- NEW GROUNDING ELECTRODE WITH CONDUCTIVE CEMENT
- 4 — No. OF WIRES (INCLUDED BUT NOT SHOWN IS RETURN WIRE FOR CT WIRES WITH THE No. AS SPECIFIED ABOVE
- X OR Y — ARROWS FOR CURRENT FLOW OF CT WHEN SHOWN TO OR FROM X OR Y RELAY COMPONENT RESPECTFULLY OF THE BACKUP PROTECTIVE RELAY
- 2(A&B) — No. OF WIRE WITH PHASES INDICATED WIRES WITH THE No. AS SPECIFIED ABOVE
- CTS — CURRENT TRANSFORMERS
- VTS — VOLTAGE TRANSFORMERS (FOR MEDIUM VOLTAGE)
- CPT — CONTROL POWER TRANSFORMER (FOR MEDIUM VOLTAGE)
- DELTA CONNECTION
- WYE-GROUNDED CONNECTION
- CONNECTION POINT
- POWER TRANSFORMER
- (G) — INDICATION LIGHT (GREEN)
- (Y) — INDICATION LIGHT (AMBER OR YELLOW)
- (W) — INDICATION LIGHT (WHITE)
- TRANSIENT VOLTAGE SURGE SUPRESSION OR 18 KV DISTRIBUTION CLASS SURGE ARRESTER
- PUSH BUTTON NORMALLY OPEN
- PUSH BUTTON NORMALLY CLOSED
- b — RELAY CONTACT (NOTE: CLOSED WHEN MEDIUM VOLTAGE CIRCUIT BREAKER IS OPEN)
- (DC) — OUTPUT SPECIFIED ON THE PROTECTIVE RELAY OR BACKUP PROTECTIVE RELAY OPERATING THE MV CIRCUIT BREAKER ON 125 VDC.

- TERMINAL RESISTOR
- LHD — LINEAR HEAT DETECTOR CABLE
- SLC — SIGNAL LINE CIRCUIT CABLE OR CONDUIT
- 485 — RS-485 CABLE OR CONDUIT
- CO — CO MONITORING CABLE OR CONDUIT
- E — ETHERNET CABLE OR CONDUIT
- 232 — RS-232 CABLE OR CONDUIT
- # — BUFFER TUBE FIBER #
- P# — BUFFER TUBE FIBER # PANEL
- ANT — ANTENNA CABLE OR CONDUIT
- SC — SCADA OR CALLBOX CONDUIT OR CABLE

ABBREVIATIONS:

AC	ARMORED CABLE
ACI	ADDRESSABLE CONTACT INPUT
# ACI	NUMBER OF ADDRESSABLE CONTACT INPUT (NO NUMBER IS ONE ADDRESSABLE CONTACT INPUT)
AH	AMPERE HOUR
# AI	NUMBER OR ANALOG INPUTS
ARO	ADDRESSABLE RELAY OUTPUT
# ARO	NUMBER OF ADDRESSABLE RELAY OUTPUT (NO NUMBER IS ONE ADDRESSABLE RELAY OUTPUT
AUX	AUXILLIARY
BC	BATTERY CHARGER
BEN	BATTERY EAST NORTH
BES	BATTERY EAST SOUTH
BEU	BATTERY EAST UPS
BP	BY-PASS
CB	CALL BOX OR CIRCIUT BREAKER
CB#	CALL BOX # OR CIRCUIT BREAKER #
CBI	CALL BOX INDICATION
CO	CARBON MONOXIDE
CONV	CONVERTER
CP#	CONTROL POWER NUMBER 1
CT	CURRENT TRANSFORMER
CPT	CONTROL POWER TRANSFORMER
DS	DISPLAY STATION
#DI	NUMBER OR DIGITAL INPUTS
#DO	NUMBER OF DETAIL OUTPUTS
EGC	EQUIPMENT GROUNDING CONDUCTOR
EN	ELECTRICAL NICHE
EN#	ELECTRICAL NICHE #
EOL	END OF LINE
EQ	EQUIPMENT
FCS#	FIELD CONTROL STATION #
FR	FAULT RELAY
FRE	FIBERGLASS REINFORCED EPOXY
GEC	GROUNDING ELECTRODE CONDUCTOR
HP	HORSEPOWER
HWRC	THE # JET FOR HARD WIRE RUN CONTROL RELAY
IC	ISOLATION CONTACTOR
INV	INVERTER
I/O	INPUT/OUTPUT
IR	INDUSTRIAL ROUTER
JB	JUNCTION BOX
LHD	LINEAR HEAT DETECTOR
LI	LOOP ISOLATOR
MCC #	MOTOR CONTROL CENTER #
MN	MECHANICAL NICHE
MT	EMPTY NEW OR EXISTING CONDUIT
MV	MEDIUM VOLTAGE
NC	NO CONNECTION
N.C.	NORMALLY CLOSED
N.O.	NORMALLY OPEN
NESC	NATIONAL ELECTRICAL SAFETY CODE
P	PAIR
PAC #	PROGRAMMABLE AUTOMATION CONTROLLER #
PLC	PROGRAMMABLE LOGIC CONTROLLER
PPM	PARTS PER MILLION
PS	POWER SUPPLY
R	RESISTOR
RDEM	REMOTE DISPLAY AND CONTROL MODULE
SCADA	SUPERVISORY CONTROL AND DATA ACQUISITION
SFP	SMALL FORM FACTOR PLUG
SLC	SIGNAL LINE CIRCUIT CABLE
STP	BOOK-UP MOTOR CONTROL INDICATION RELAY
TB	TERMINAL BLOCK
TC	TELEPHONE CABLE
TP	TWISTED PAIR
UPS	UNINTERRUPTIBLE POWER SUPPLY
VT OR PT	VOLTAGE TRANSFORMER
WH	WATT HOUR
Y COMP	Y RELAY COMPONENT OF THE BACKUP PROTECTIVE RELAY

Dist	COUNTY	ROUTE	POST MILES TOTAL PROJECT	SHEET No.	TOTAL SHEETS
04	SF	101	8.2/9.2	193	654

Lionel J. Sudds 10-8-09
REGISTERED ELECTRICAL ENGINEER DATE

12-14-09
PLANS APPROVAL DATE

REGISTERED PROFESSIONAL ENGINEER — Lionel J. Sudds No. 15201 Exp 6-30-10 ELECT — STATE OF CALIFORNIA

THE STATE OF CALIFORNIA OR ITS OFFICERS OR AGENTS SHALL NOT BE RESPONSIBLE FOR THE ACCURACY OR COMPLETENESS OF SCANNED COPIES OF THIS PLAN SHEET.

CALIFORNIA STATE FIRE MARSHAL APPROVED
Approval of this plan does not authorize or approve any omission or deviation from applicable regulations. Final approval is subject to field inspection. One set of approved plans shall be available on the project site at all times.
Reviewed by: STEPHEN GUARINO
Approval date: 12-14-09

GENERAL NOTES, PROJECT NOTES, SYMBOLS AND ABBREVIATIONS

E-31

REVISED BY	DATE REVISED
LS	8/01/09

CALCULATED-DESIGNED BY: LIONEL J. SUDDS
CHECKED BY: LIONEL J. SUDDS
FUNCTIONAL SUPERVISOR: BEHZAD GOLEMOHAMMADI

STATE OF CALIFORNIA - DEPARTMENT OF TRANSPORTATION
Caltrans®
ELECTRICAL

LAST REVISION | DATE PLOTTED => 14-DEC-2009 | TIME PLOTTED => 15:55 | 10-22-09

ABBREVIATIONS:

LINE CURRENT DIFFERENTIAL PROTECTIVE RELAY INPUT FUNCTION:

52a -CONTROL INPUT
TRF1 -TRANSFER TRIP CONTROL INPUT #1
TRF2 -TRANSFER TRIP CONTROL INPUT #2

OR

POWER CONTROL RELAY FUNCTION:

27X - AUXILLIARY UNDERVOLTAGE POWER CONTROL RELAY
127X - SECOND AUXILLIARY UNDERVOLTAGE POWER CONTROL RELAY
95 - RESET POWER CONTROL RELAY
96 - INCOMING MV CIRCUIT BREAKER CLOSE STOPPING POWER CONTROL RELAY
97 - SOURCE RESTORE POWER CONTROL RELAY
98 - CB INTERFACE POWER CONTROL RELAY
2R - TIME DELAY CLOSING POWER CONTROL RELAY
86 - LOCKOUT POWER CONTROL RELAY (THE 86 COIL SHOWN ON THE PLANS SHALL BE FOR THE SET (OR LATCHING) COIL AND THE 86R COIL SHOWN ON THE PLANS SHALL BE FOR THE RESET (OR UNLATCHING COIL)

OR

TRANSFER RELAY FUNCTION:

83P - PRIMARY CONTROL POWER SOURCE TRANSFER RELAY
83S - SECONDARY CONTROL POWER SOURCE TRANSFER RELAY

OR

SCADA CONTROL & INDICATION RELAY FUNCTION:

SCT - TRIP CONTROL SCADA CONTROL AND INDICATION RELAY
SCC - CLOSE CONTROL SCADA CONTROL AND INDICATION RELAY
SCR - RESET CONTROL SCADA CONTROL AND INDICATION RELAY
SCRS - SYSTEM RESET CONTROL SCADA CONTROL AND INDICATION RELAY
R1 - MV CIRCUIT BREAKER CHARGING INDICATION SCADA CONTROL & INDICATION RELAY
SCCPT - CONTROL POWER TEST CONTROL SCADA CONTROL AND INDICATION RELAY

OR

PROTECTIVE RELAY INPUT FUNCTION:

IN# - CONTROL INPUTS FOR THE PROTECTIVE RELAY (NOTE: No. IS FROM 1 TO 4)

OR

BACKUP PROTECTIVE RELAY INPUT FUNCTION:

XIN1 - CONTROL INPUT FOR THE RELAY X COMPONENT OF THE BACKUP PROTECTIVE RELAY
YIN1 - CONTROL INPUT FOR THE RELAY Y COMPONENT OF THE BACKUP PROTECTIVE RELAY

FOR RELAY COILS & PROTECTIVE RELAY INPUTS: 2R / 0

LOCATION OF THE POWER CONTROL RELAY, TRANSFER RELAY SCADA CONTROL AND INDICATION RELAY, PROTECTIVE RELAY OR BACKUP PROTECTIVE RELAY. NOTE: 1 TO 6 IS FOR MEDIUM VOLTAGE CIRCUIT BREAKER COMPARTMENT; No.B IS FOR THE CONTROL VERTICAL COMPARTMENT IN THE BATTERY SUBSTATION AND M IS FOR THE CONTROL VERTICAL COMPARTMENT IN THE MAIN POST SUBSTATION.

SCADA CONTROL & INDICATION RELAY FUNCTION:

SCT - TRIP CONTROL SCADA CONTROL AND INDICATION RELAY
SCC - CLOSE CONTROL SCADA CONTROL AND INDICATION RELAY
SCR - RESET CONTROL SCADA CONTROL AND INDICATION RELAY
SCRS - SYSTEM RESET CONTROL SCADA CONTROL AND INDICATION RELAY
R1 - MV CIRCUIT BREAKER CHARGING INDICATION SCADA CONTROL & INDICATION RELAY
SCCPT - CONTROL POWER TEST CONTROL SCADA CONTROL AND INDICATION RELAY

OR

MV CONTROL SWITCH FUNCTION:

01T - ANSI STANDARD DEVICE DESIGNATION No. 01(MASTER ELEMENT) FOR TRIP CONTROL
01C - ANSI STANDARD DEVICE DESIGNATION No. 01(MASTER ELEMENT) FOR CLOSE CONTROL
43L - ANSI STANDARD DEVICE DESIGNATION No. 43 (MANUAL TRANSFER/ SELECTOR DEVICE) FOR LOCAL CONTROL
43R - ANSI STANDARD DEVICE DESIGNATION No. 43 (MANUAL TRANSFER/ SELECTOR DEVICE) FOR REMOTE CONTROL
52a - ANSI STANDARD DEVICE DESIGNATION No. 52a (AC CIRCUIT BREAKER AUX CONTACT) NOTE: CONTACT IS OPEN WHEN CIRCUIT BREAKER IS OPEN)
52b - ANSI STANDARD DEVICE DESIGNATION No. 52b (AC CIRCUIT BREAKER AUX CONTACT) NOTE: CONTACT IS CLOSE WHEN CIRCUIT BREAKER IS OPEN)

OR

PROTECTIVE RELAY OUTPUT FUNCTION:

TR - TRIP CONTROL OUTPUT FOR THE PROTECTIVE RELAY
CL - CLOSE CONTROL OUTPUT FOR THE PROTECTIVE RELAY
OUT# - CONTROL OUTPUT FOR THE PROTECTIVE RELAY (NOTE: No. IS FROM 1 TO 5)

OR

BACKUP PROTECTIVE RELAY OUTPUT FUNCTION:

XTR - TRIP CONTROL OUTPUT FOR THE RELAY X COMPONENT OF THE BACKUP PROTECTIVE RELAY
XOUT# - CONTROL OUTPUT FOR THE RELAY X COMPONENT OF THE BACKUP PROTECTIVE RELAY (NOTE: No. IS FROM 1 TO 2)
YTR - TRIP CONTROL OUTPUT FOR THE RELAY Y COMPONENT OF THE BACKUP PROTECTIVE RELAY
YOUT# - CONTROL OUTPUT FOR THE RELAY Y COMPONENT OF THE BACKUP PROTECTIVE RELAY (NOTE: No. IS FROM 1 TO 2)

LINE CURRENT DIFFERENTIAL PROTECTIVE RELAY OUTPUT FUNCTION:

TRP1 - HIGH-SPEED TRIP CONTROL OUTPUT #1
TRP2 - HIGH-SPEED TRIP CONTROL OUTPUT #2
TRP3 - TRIP CONTROL OUTPUT #1
TRP4 - TRIP CONTROL OUTPUT #2
RM1 - REMOTE HIGH-SPEED TRIP CONTROL OUTPUT #1 FROM THE TRANSFER TRIP INPUT #1 (TRF1) OF THE OTHER LINE CURRENT DIFFERENTIAL PROTECTIVE RELAY
RM2 - REMOTE HIGH-SPEED TRIP CONTROL OUTPUT #2 FROM THE TRANSFER TRIP INPUT #2 (TRF2) OF THE OTHER LINE CURRENT DIFFERENTIAL PROTECTIVE RELAY

OR

MV CIRCUIT BREAKER

52 - ANSI STANDARD DEVICE DESIGNATION #52 (AC CIRCUIT BREAKER)

FOR RELAY, MV CIRCUIT BREAKER, MV CONTROL SWITCH CONTACTS, AND PROTECTIVE RELAY OUTPUT: SCT / 3

LOCATION OF THE SCADA CONTROL AND INDICATION RELAY, MV CONTROL SWITCH, PROTECTIVE RELAY OR BACKUP PROTECTIVE RELAY. NOTE: 1 TO 6 IS FOR MEDIUM VOLTAGE CIRCUIT BREAKER VERTICAL COMPARTMENT; No. B IS FOR THE CONTROL VERTICAL COMPARTMENT IN THE BATTERY SUBSTATION; AND M IS FOR THE CONTROL VERTICAL COMPARTMENT IN THE MAIN POST SUBSTATION.

CALIFORNIA STATE FIRE MARSHAL APPROVED
Approval of this plan does not authorize or approve any omission or deviation from applicable regulations. Final approval is subject to field inspection. One set of approved plans shall be available on the project site at all times.
Reviewed by: STEPHEN GUARINO
Approval date: 12-14-09

Dist	COUNTY	ROUTE	POST MILES TOTAL PROJECT	SHEET No.	TOTAL SHEETS
04	SF	101	8.2/9.2	194	654

Lionel J. Sudds 10-8-09
REGISTERED ELECTRICAL ENGINEER DATE
12-14-09
PLANS APPROVAL DATE
REGISTERED PROFESSIONAL ENGINEER Lionel J. Sudds No. 15201 Exp 6-30-10 ELECT STATE OF CALIFORNIA
THE STATE OF CALIFORNIA OR ITS OFFICERS OR AGENTS SHALL NOT BE RESPONSIBLE FOR THE ACCURACY OR COMPLETENESS OF SCANNED COPIES OF THIS PLAN SHEET.

POWER CONTROL RELAY FUNCTION:

27X - AUXILLIARY UNDERVOLTAGE POWER CONTROL RELAY
127X - SECOND AUXILLIARY UNDERVOLTAGE POWER CONTROL RELAY
95 - RESET POWER CONTROL RELAY
96 - INCOMING MV CIRCUIT BREAKER CLOSE STOPPING POWER CONTROL RELAY
97 - SOURCE RESTORE POWER CONTROL RELAY
98 - CB INTERFACE POWER CONTROL RELAY
2R - TIME DELAY CLOSING POWER CONTROL RELAY
86 - LOCKOUT POWER CONTROL RELAY

OR

TRANSFER RELAY FUNCTION:

83P - PRIMARY CONTROL POWER SOURCE TRANSFER RELAY
83S - SECONDARY CONTROL POWER SOURCE TRANSFER RELAY

FOR RELAY CONTACTS: 27X / 1 - FOR POWER CONTROL RELAY CONTACT NUMBER OR TRANSFER RELAY AUX CONTACT NUMBER

LOCATION OF POWER CONTROL RELAY OR TRANSFER RELAY. NOTE: 1 TO 6 IS FOR MEDIUM VOLTAGE CIRCUIT BREAKER COMPARTMENT; No. B IS FOR THE CONTROL VERTICAL COMPARTMENT IN THE BATTERY SUBSTATION; AND M IS FOR THE CONTROL VERTICAL COMPARTMENT IN THE MAIN POST SUBSTATION.

BOOLEAN LOGIC EQUATION FOR PROTECTIVE RELAY

"+" IS FOR AN "OR" CONDITION AND "*" IS FOR AN "AND" CONDITION

OUT#=32+27

ANSI STANDARD DEVICE DESIGNATION No. FUNCTION FOR THE PROTECTIVE RELAY (AN "ON" OR "OFF" CONDITION REPRESENTING WHETHER OR NOT THAT RELAY ELEMENT FUNCTION AS SPECIFIED IN THE ANSI STANDARD DEVICE DESIGNATION No. HAS BEEN PICKUP)

27 - UNDERVOLTAGE ELEMENT
27X - AUX UNDERVOLTAGE ELEMENT (FROM THE AUX VT)
127 - SECOND UNDERVOLTAGE ELEMENT
32 - REVERSE POWER ELEMENT
50 - INSTANTANEOUS OVERCURRENT ELEMENT
50BF - BREAKER FAILURE ELEMENT
50N - INSTANTANEOUS GROUND OVERCURRENT ELEMENT
51 - TIME OVERCURRENT ELEMENT
51N - TIME GROUND OVERCURRENT ELEMENT
62 - TIME DELAY ELEMENT
67 - DIRECTIONAL OVERCURRENT ELEMENT
67N - DIRECTIONAL GROUND OVERCURRENT ELEMENT
OR
IN# - CONTROL INPUT VALUES (AN "ON" OR "OFF" CONDITION REPRESENTING WHETHER OR NOT THAT CONTROL INPUT HAS BEEN ENERGIZED) FROM THE PROTECTIVE RELAY (NOTE: NUMBER IS FROM 1 TO 4)

EQUAL

TR - TRIP CONTROL OUTPUT FOR THE PROTECTIVE RELAY
CL - CLOSE CONTROL OUTPUT FOR THE PROTECTIVE RELAY
OUT# - CONTROL OUTPUT FOR THE PROTECTIVE RELAY (NOTE: NUMBER IS FROM 1 TO 5)

FOR Cont SEE ABOVE

GENERAL NOTES, PROJECT NOTES, INDEX, SYMBOLS AND ABBREVIATIONS
E-32

LAST REVISION DATE PLOTTED => 14-DEC-2009
TIME PLOTTED => 15:55
10-09-09

STATE OF CALIFORNIA - DEPARTMENT OF TRANSPORTATION
ELECTRICAL
FUNCTIONAL SUPERVISOR: BEHZAD GOLEMOHAMMADI
CALCULATED-DESIGNED BY: LIONEL J. SUDDS
CHECKED BY: LS
REVISED BY
DATE REVISED: 8/01/09

BORDER LAST REVISED 4/11/2008
RELATIVE BORDER SCALE IS IN INCHES 0 1 2 3
USERNAME => trlenard
DGN FILE => 416374ua032.dgn
CU 04242
EA 163741

NOTES: SHEETS E-30 THROUGH E-195 ONLY.

1. INSTALL SECONDARY UNIT SUBSTATION.
2. INSTALL MOTOR CONTROL CENTER (MCC).
3. INSTALL SWITCHBOARD.
4. INSTALL DC SWITCH.
5. INSTALL INVERTER.
6. INSTALL POWER SUPPLY AND BATTERY CHARGER.
7. INSTALL 3 PHASE POWER SUPPLY AND BATTERY CHARGER.
8. INSTALL SUBSTATION BUILDING TRANSFORMER.
9. INSTALL 19" COMPUTER CABINET.
10. INSTALL 3 PHASE 480/277 V PANEL.
11. INSTALL 3 PHASE 208/120 V PANEL
12. INSTALL SINGLE-PHASE 120 V PANEL.
13. INSTALL 4′ L x 4′ W x 1′ D STAINLESS STEEL NEMA TYPE 4X JUNCTION BOX.
14. INSTALL 3′ L x 3′ W x 1′ D STAINLESS STEEL NEMA TYPE 4X JUNCTION BOX.
15. INSTALL 2′ L x 2′ W x 8"D STAINLESS STEEL NEMA TYPE 4X JUNCTION BOX.
16. INSTALL TUNNEL FIRE ALARM CONTROL PANEL
17. INSTALL SUBSTATION FIRE ALARM PANEL.
18. INSTALL 12-20 KVA MODULAR UPS SYSTEM.
19. INSTALL CONSOLE.
20. INSTALL COMMUNICATION BOARD.
21. INSTALL SINGLE-PHASE 208/120 V PANEL.
22. INSTALL SUBSTATION SMOKE DETECTOR.
23. INSTALL FIRE PULL STATION.
24. INSTALL DOOR ALARM.
25. INSTALL OUTLET BOX.
26. INSTALL FIRE ALARM SIREN.
27. INSTALL FLUORESCENT LIGHT FIXTURE.
28. INSTALL 1′L x 1′ W x 4" D STAINLESS STEEL NEMA TYPE 4X JUNCTION BOX.
29. INSTALL EXIT LIGHT.
30. INSTALL LIGHT SWITCH.
31. INSTALL EMERGENCY LIGHT SWITCH.
32. INSTALL 12′′ x 12′′ WIREWAY.
33. INSTALL GROUNDING BAR.
34. INSTALL POWER SUPPLY.
35. INSTALL REDUNDANT POWER SUPPLY CONTROLLER.
36. INSTALL FIELD CONTROL STATION.
37. INSTALL PROGRAMMABLE AUTOMATION CONTROLLER.
38. INSTALL FIBER OPTIC MODEM.
39. INSTALL INDUSTRIAL DC TO DC CONVERTER.
40. INSTALL LIGHTING CONTROLLER.
41. INSTALL ETHERNET SWITCH.
42. INSTALL CO MONITOR CALIBRATOR.
43. INSTALL RS - 485 ISOLATOR.
44. INSTALL SELF-HEALING MULTI-DROP FIBER OPTIC MODEM.
45. INSTALL RACK-MOUNTED INVERTER.
46. INSTALL RACK-MOUNTED DC TO DC CONVERTER.
47. INSTALL RACK TRAY.
48. INSTALL TELEPHONE EXTENDER.
49. INSTALL RACK-MOUNTED ETHERNET SWITCH.
50. INSTALL SCADA SUBMASTER SERVER.
51. INSTALL RACK-MOUNTED FIBER OPTIC PATCH PANEL.
52. INSTALL RACK-MOUNTED FIBER OPTIC SPLICE ENCLOSURE.
53. INSTALL WALL-MOUNTED 72-CONNECTOR FIBER OPTIC PATCH BOX.
54. INSTALL CO CALIBRATION SERVER.
55. INSTALL WALL-MOUNTED 24-CONNECTOR FIBER OPTIC PATCH PANEL.
56. INSTALL TI TO FO MUX.
57. INSTALL ETHERNET ROUTER.
58. INSTALL FIXED WIRELESS TERMINAL (FWT).
59. INSTALL INDUSTRIAL ROUTER.
60. INSTALL 36′ L x 36′′ W x 10′′ D STAINLESS NEMA TYPE 4X JUNCTION BOX.
61. INSTALL TYPE 15 PULLBOX.
62. INSTALL GROUND WELL.
63. INSTALL WIRE TROUGH.
64. INSTALL LOAD CENTER.
65. INSTALL ADDRESSABLE PULL STATION.
66. INSTALL LINEAR HEAT DETECTOR.
67. INSTALL ELECTRIC DUCTBANK AS SHOWN ON THE PLANS.
68. INSTALL 6′′ C, MT.
69. INSTALL CO MONITOR.
70. LUMINAIRES SPACING ±14 FEET TYPICAL.
71. LUMINAIRES SPACING ±6 FEET TYPICAL.
72. LUMINAIRES SPACING ±4 FEET TYPICAL.
73. LUMINAIRES SPACING ±2 FEET TYPICAL.
74. LUMINAIRES SPACING ±1.3 FEET TYPICAL.
75. LUMINAIRES SPACING ±3 FEET TYPICAL.
76. INSTALL SIGNAL CONVERTER.
77. INSTALL REMOTE DISPLAY AND CONTROL MODULE.
78. INSTALL FIRE CONTROL DISPLAY STATION.
79. INSTALL GROUNDING ELECTRODE WITH CONDUCTIVE CEMENT.
80. EXOTHERMICALLY WELD CONDUCTOR.
81. INSTALL CONDUCTIVE CEMENT WITH 1#500 Kcmil STANDARD ANNEALED SOFT-DRAWN BARE COPPER CONDUCTOR.
82. INSTALL 150 HP FUSE DISCONNECT SWITCH
83. INSTALL 4.0′′ x 4.0′′ CUT-OFF FITTING INSIDE WIRE TROUGH (HEIGHT OF THE FITTING SHALL BE 6.0′′).
84. INSTALL WALL MOUNTED 72-CONNECTOR NEMA 4X FO PATCH BOX.
85. INSTALL WALL MOUNTED 24-CONNECTOR NEMA 4X FO PATCH BOX.
86. INSTALL 250 VA 600/240/120 V TRANSFORMER.
87. INSTALL DC UPS.
88. INSTALL CO MONITOR CONTROLLER.
89. INSTALL REMOTE RELEASE MODULE.
90. INSTALL ADDRESSABLE RELAY OUTPUT.
91. INSTALL ADDRESSABLE CONTACT INPUT.
92. INSTALL FIRE ALARM POWER SUPPLY.
93. INSTALL LOOP ISOLATOR.
94. INSTALL 3′′ C, FOR COMMUNICATION BETWEEN THE NICHE AND COMMUNICATION SECTION OF THE TUNNEL PULLBOX (EMBEDDED).
95. INSTALL 3′′ C, FOR POWER BETWEEN THE NICHE AND THE POWER SECTION OF THE TUNNEL PULLBOX (EMBEDDED).
96. INSTALL UTILITY PULLBOX.
97. INSTALL RADIO ANTENNA POLE.
98. INSTALL WALL LIGHT FIXTURE.
99. INSTALL DUPLEX RECEPTABLE
100. INSTALL 10 KVA 600/240/120 V TRANSFORMER

Dist	COUNTY	ROUTE	POST MILES TOTAL PROJECT	SHEET No.	TOTAL SHEETS
04	SF	101	8.2/9.2	195	654

Lionel J. Sudds 10-8-09
REGISTERED ELECTRICAL ENGINEER DATE

12-14-09
PLANS APPROVAL DATE

REGISTERED PROFESSIONAL ENGINEER — Lionel J. Sudds — No. 15201 — Exp 6-30-10 — ELECT — STATE OF CALIFORNIA

THE STATE OF CALIFORNIA OR ITS OFFICERS OR AGENTS SHALL NOT BE RESPONSIBLE FOR THE ACCURACY OR COMPLETENESS OF SCANNED COPIES OF THIS PLAN SHEET.

CALIFORNIA STATE FIRE MARSHAL APPROVED

Approval of this plan does not authorize or approve any omission or deviation from applicable regulations. Final approval is subject to field inspection. One set of approved plans shall be available on the project site at all times.

Reviewed by: STEPHEN GUARINO
Approval date: 12-14-09

REVISED BY	DATE REVISED
LS	8/01/09

CALCULATED-DESIGNED BY: LIONEL J. SUDDS
CHECKED BY: LIONEL J. SUDDS

FUNCTIONAL SUPERVISOR: BEHZAD GOLEMOHAMMADI

STATE OF CALIFORNIA - DEPARTMENT OF TRANSPORTATION
Caltrans®
ELECTRICAL

GENERAL NOTES, PROJECT NOTES, SYMBOLS AND ABBREVIATIONS

E-33

LAST REVISION | DATE PLOTTED => 14-DEC-2009
10-28-09 | TIME PLOTTED => 15:55

BORDER LAST REVISED 4/11/2008

RELATIVE BORDER SCALE IS IN INCHES 0 1 2 3

USERNAME => trlenard
DGN FILE => 416374ua033.dgn

CU 04242

EA 163741

Dist	COUNTY	ROUTE	POST MILES TOTAL PROJECT	SHEET No.	TOTAL SHEETS
04	SF	101	8.2/9.2	196	654

Lionel J. Sudds 10-8-09
REGISTERED ELECTRICAL ENGINEER DATE

Lionel J. Sudds No. 15201 Exp 6-30-10 ELECT
REGISTERED PROFESSIONAL ENGINEER — STATE OF CALIFORNIA

12-14-09
PLANS APPROVAL DATE

THE STATE OF CALIFORNIA OR ITS OFFICERS OR AGENTS SHALL NOT BE RESPONSIBLE FOR THE ACCURACY OR COMPLETENESS OF SCANNED COPIES OF THIS PLAN SHEET.

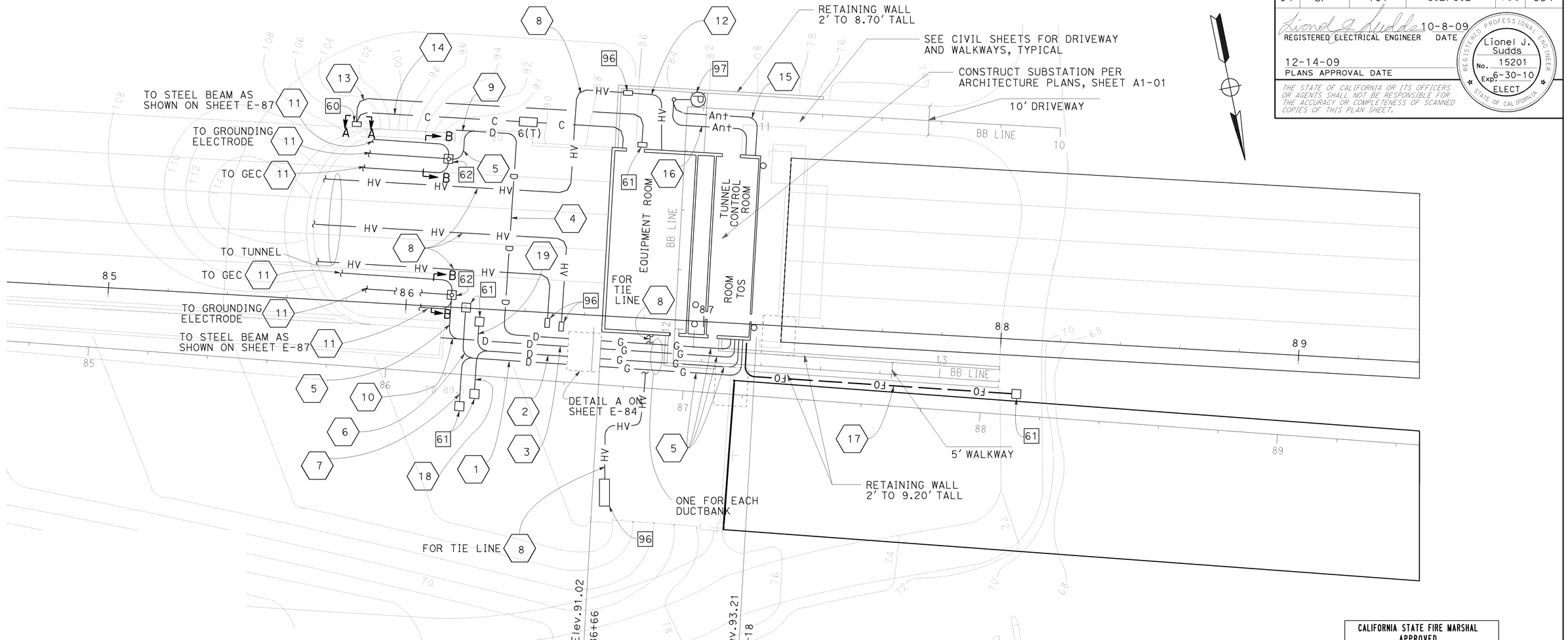

GENERAL NOTES: (THIS SHEET ONLY)

1. SEE SHEET E-81 FOR SECTION B-B.
2. SEE SHEET E-35 FOR SECTION A-A.
3. INSTALL TWO (2) GROUND WELLS ON OTHER END OF THE TUNNEL AND CONNECT THE 1#500 Kcmil STANDARD ANNEALED SOFT-DRAWN BARE COPPER CONDUCTOR FROM THE GEC AND THE STEEL BEAM OF THE OTHER END OF TUNNEL TO THE GROUND WELLS (SIMILARLY SHOWN ON THIS SHEET).

   ALSO, (5) BETWEEN THE TWO GROUND WELLS AND [81] CONDUCTOR AT THE GROUND WELLS.

NOTES: (THIS SHEET ONLY)

(1) INSTALL NORTHBOUND NORTHSIDE DUCTBANK AS SHOWN ON SHEET E-84 WITH CONDUCTORS AND CABLES SHOWN ON THE PLANS.

(2) INSTALL NORTHBOUND SOUTHSIDE DUCTBANK AS SHOWN ON SHEET E-84 WITH CONDUCTORS AND CABLES SHOWN ON THE PLANS.

(3) INSTALL SOUTHBOUND NORTHSIDE DUCTBANK AS SHOWN ON SHEET E-84 WITH CONDUCTORS AND CABLES SHOWN ON THE PLANS.

(4) INSTALL SOUTHBOUND SOUTHSIDE DUCTBANK AS SHOWN ON SHEET E-84 WITH CONDUCTORS AND CABLES SHOWN ON THE PLANS.

(5) INSTALL 2½'' C, 1#500 Kcmil CONDUCTOR FOR GEC.

(6) INSTALL THE NORTHSIDE COMMUNICATION DUCTBANK AS SHOWN ON SHEET E-84 WITH CONDUCTORS AND CABLES AS SHOWN ON THE PLANS.

(7) INSTALL THE NORTHSIDE POWER DUCTBANK, THE SUBSTATION SOUTHSIDE AS SHOWN ON SHEET E-84 WITH CONDUCTORS AND CABLES AS SHOWN ON THE PLANS.

(8) INSTALL 6''C, MT FOR MEDIUM VOLTAGE CABLES.

(9) INSTALL SOUTHBOUND NORTHSIDE DUCTBANK AS SHOWN ON SHEET E-84 WITHOUT GEC CONDUIT ANDWITH THE CONDUCTORS AND CABLES AS SHOWN ON THE PLANS.

(10) INSTALL SOUTHBOUND SOUTHSIDE DUCTBANK AS SHOWN ON SHEET E-84 WITHOUT GEC CONDUIT ANDWITH THE CONDUCTORS AND CABLES AS SHOWN ON THE PLANS.

(11) INSTALL 1#500 Kcmil STANDARD ANNEALED SOFT-DRAWN BARE COPPER CONDUCTOR.

(12) INSTALL 6''C, 3#2/0 MEDIUM VOLTAGE CABLES.

(13) INSTALL 4''C, 3#12 CONDUCTORS.

(14) INSTALL 4''C, 1-ETHERNET CABLE, AND 4-RS-485 CABLES.

(15) INSTALL 1½'' C, 1-ANTENNA CABLE FOR FIXED WIRELESS TERMINAL.

(16) INSTALL 1½'' C, 1-ANTENNA CABLE FOR REBROADCASTING SYSTEM.

(17) INSTALL 4'' C, 1-72 FIBER SMFO CABLE.

(18) INSTALL THE SOUTHSIDE POWER DUCTBANK AS SHOWN ON SHEET E-84 WITH CONDUCTORS AND CABLES AS SHOWN ON THE PLANS.

(19) INSTALL THE SOUTHSIDE COMMUNICATION DUCTBANK AS SHOWN ON SHEET E-84 WITH CONDUCTORS AND CABLES AS SHOWN ON THE PLANS.

CALIFORNIA STATE FIRE MARSHAL APPROVED
Approval of this plan does not authorize or approve any omission or deviation from applicable regulations. Final approval is subject to field inspection. One set of approved plans shall be available on the project site at all times.
Reviewed by: STEPHEN GUARINO
Approval date: 12-14-09

BATTERY SUBSTATION AND TUNNEL WORK
(LAYOUT OF SUBSTATION AT BATTERY TUNNEL)

NO SCALE

THIS PLAN IS ACCURATE FOR ELECTRICAL WORK ONLY

E-34

STATE OF CALIFORNIA - DEPARTMENT OF TRANSPORTATION
ELECTRICAL
FUNCTIONAL SUPERVISOR: BEHZAD GOLEMOHAMMADI
CALCULATED-DESIGNED BY: LIONEL J. SUDDS
CHECKED BY: LIONEL J. SUDDS
REVISED BY: LS
DATE REVISED: 8/01/09
LAST REVISION DATE PLOTTED => 14-DEC-2009
TIME PLOTTED => 15:55
12-8-09

BORDER LAST REVISED 4/11/2008
RELATIVE BORDER SCALE IS IN INCHES 0 1 2 3
USERNAME => trlenard
DGN FILE => 416374ua034.dgn
CU 04242
EA 163741

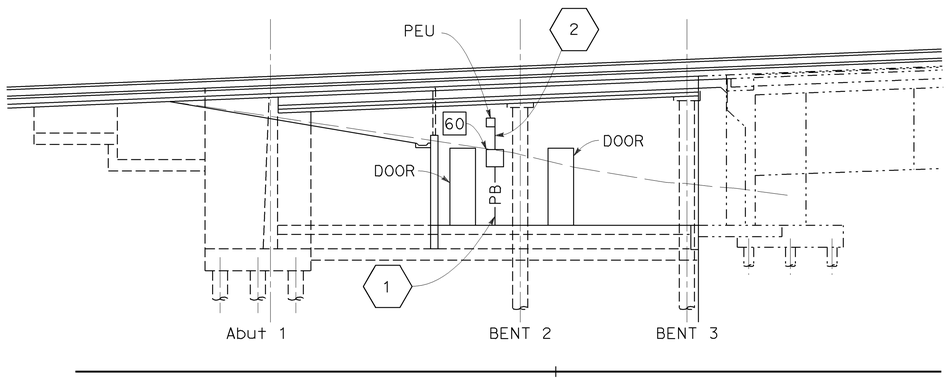

ELEVATION

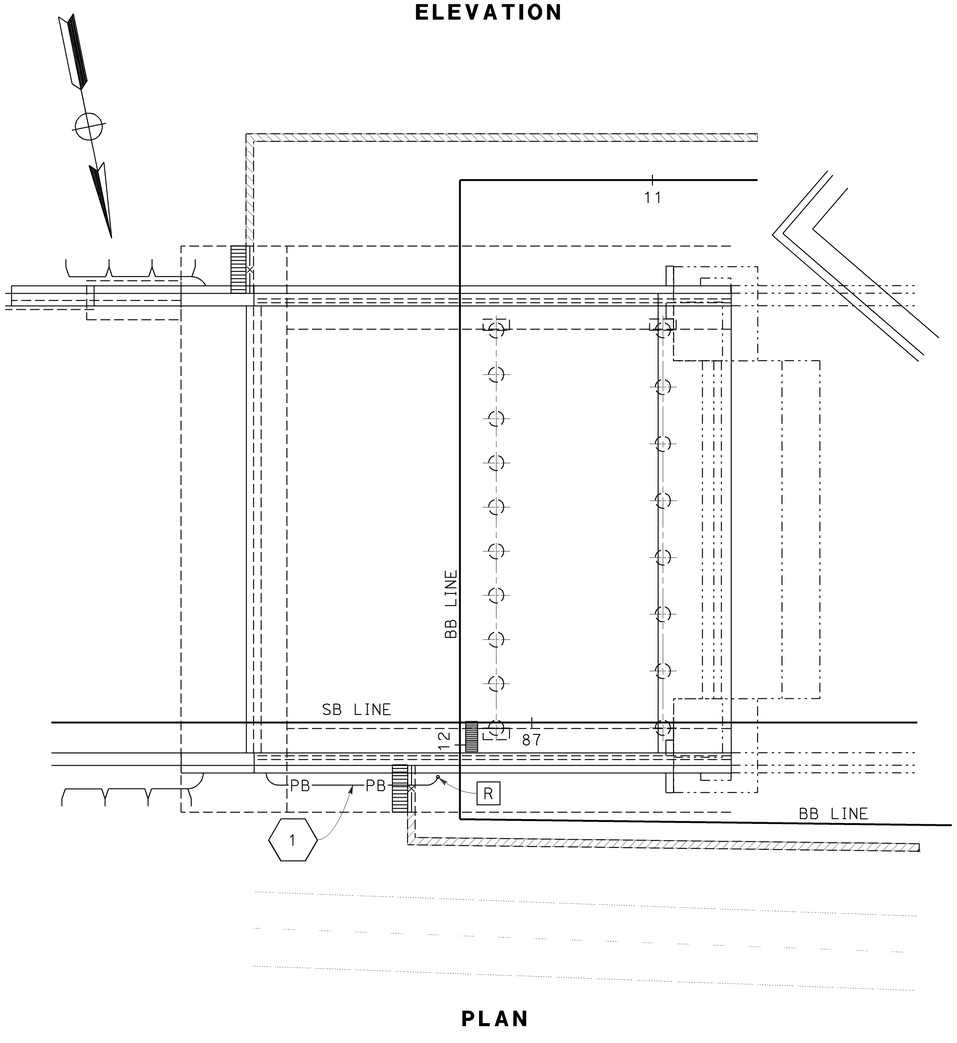

PLAN

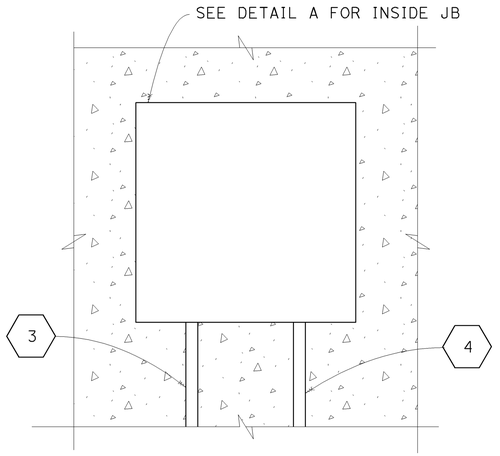

SECTION A-A

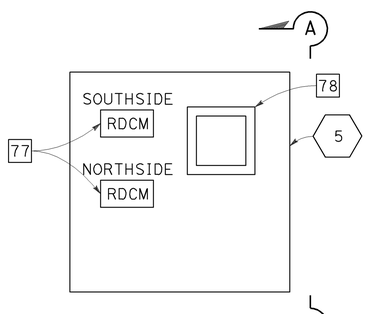

DETAIL A

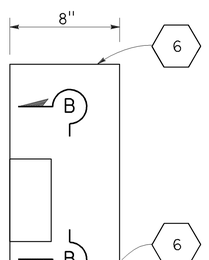

SECTION A-A

SECTION B-B

CALIFORNIA STATE FIRE MARSHAL APPROVED

Approval of this plan does not authorize or approve any omission or deviation from applicable regulations. Final approval is subject to field inspection. One set of approved plans shall be available on the project site at all times.

Reviewed by: STEPHEN GUARINO

Approval date: 12-14-09

Dist	COUNTY	ROUTE	POST MILES TOTAL PROJECT	SHEET No.	TOTAL SHEETS
04	SF	101	8.2/9.2	197	654

Lionel J. Sudds 10-8-09
REGISTERED ELECTRICAL ENGINEER DATE

12-14-09
PLANS APPROVAL DATE

REGISTERED PROFESSIONAL ENGINEER — Lionel J. Sudds No. 15201 Exp 6-30-10 ELECT — STATE OF CALIFORNIA

THE STATE OF CALIFORNIA OR ITS OFFICERS OR AGENTS SHALL NOT BE RESPONSIBLE FOR THE ACCURACY OR COMPLETENESS OF SCANNED COPIES OF THIS PLAN SHEET.

NOTES: (THIS SHEET ONLY)

1. INSTALL 4'' C, 1-4#14 CONDUCTOR CABLE.
2. INSTALL ¾'' C, 1-4#14 CONDUCTOR CABLE.
3. INSTALL 4'' C, 1-ETHERNET CABLE AND 2-RS-485 CABLES.
4. INSTALL 4'' C, 3#12 CONDUCTORS.
5. INSTALL BACK PANEL.
6. INSTALL 8'' HANGER BETWEEN BACK PANELS.

BATTERY SUBSTATION AND TUNNEL WORK
(GENERAL PLAN)

NO SCALE

THIS PLAN IS ACCURATE FOR ELECTRICAL WORK ONLY

E-35

LAST REVISION DATE PLOTTED => 14-DEC-2009
TIME PLOTTED => 15:55
10-28-09

STATE OF CALIFORNIA - DEPARTMENT OF TRANSPORTATION
ELECTRICAL
FUNCTIONAL SUPERVISOR: BEHZAD GOLEMOHAMMADI
REVISED BY: LS — DATE REVISED: 8/01/09
LIONEL J. SUDDS
CALCULATED-DESIGNED BY: LIONEL J. SUDDS
CHECKED BY:

BORDER LAST REVISED 4/11/2008

RELATIVE BORDER SCALE IS IN INCHES 0 1 2 3

USERNAME => trlenard
DGN FILE => 416374ua035.dgn

CU 04242

EA 163741

Dist	COUNTY	ROUTE	POST MILES TOTAL PROJECT	SHEET No.	TOTAL SHEETS
04	SF	101	8.2/9.2	198	654

Lionel J. Sudds
REGISTERED ELECTRICAL ENGINEER DATE

12-14-09
PLANS APPROVAL DATE

REGISTERED PROFESSIONAL ENGINEER — Lionel J. Sudds No. 15201 Exp 6-30-10 ELECT — STATE OF CALIFORNIA

THE STATE OF CALIFORNIA OR ITS OFFICERS OR AGENTS SHALL NOT BE RESPONSIBLE FOR THE ACCURACY OR COMPLETENESS OF SCANNED COPIES OF THIS PLAN SHEET.

CALIFORNIA STATE FIRE MARSHAL APPROVED

Approval of this plan does not authorize or approve any omission or deviation from applicable regulations. Final approval is subject to field inspection. One set of approved plans shall be available on the project site at all times.

Reviewed by: STEPHEN GUARINO

Approval date: 12-14-09

208/120 V PANEL

POWER CKT No.	POLE No.	WIRE No.	TRIP RATING	LOAD	Max LOAD	CONDUCTORS
1	3	4	300 A	MAIN CIRCUIT BREAKER	100 kVA	5#350 KCMIL
2	1	2	15 A	SUBSTATION FIRE ALARM PANEL	0.10 kVA	3#12
3	3	4	75 A	TUNNEL CONTROL & T0.5 ROOM PANEL	50 kVA	5#3/0
4	1	2	60 A	INVERTER	5.70 kVA	3#6
5	1	2	15 A	RECEPTACLE	1.44 kVA	3#12
6	1	2	20 A	SUBSTATION ROOM LIGHTING	1.944 kVA	3#12
7	1	2	15 A	TUNNEL FIRE ALARM CONTROL PANEL FOR SOUTHBOUND TUNNEL	0.384 kVA	3#12
8	1	2	15 A	TUNNEL FIRE ALARM CONTROL PANEL FOR NORTHBOUND TUNNEL	0.384 kVA	3#12
9	1	2	20 A	RACK-MOUNTED INVERTER	2.00 kVA	3#12
10	3	3	25 A	SUBSTATION ROOM FAN #1	3.00 HP	4#10
11	3	3	25 A	SUBSTATION ROOM FAN #2	3.00 HP	4#10
12	1	2	15 A	EXIT LIGHTS	0.10 kVA	3#12

T.O.S. UPS PANEL

POWER CKT No.	POLE No.	WIRE No.	TRIP RATING	LOAD	Max LOAD	CONDUCTORS
1	2	3	70 A	MAIN CIRCUIT BREAKER	12.00 kVA	4#2
2	1	2	15 A	BASE CABINET #1	1.67 kVA	3#12
3	1	2	15 A	BASE CABINET #2	1.67 kVA	3#12
4	1	2	15 A	T.O.S CABINET #1	1.67 kVA	3#12
5	1	2	15 A	T.O.S CABINET #2	1.67 kVA	3#12
6	1	2	15 A	T.O.S CABINET #3	1.67 kVA	3#12
7	1	2	15 A	TRAFFIC CONTROL CABINET #1	1.67 kVA	3#12
8	1	2	15 A	TRAFFIC CONTROL CABINET #2	1,67 kVA	3#12

TUNNEL CONTROL AND T.O.S. ROOM PANEL

POWER CKT No.	POLE No.	WIRE No.	TRIP RATING	LOAD	Max LOAD	CONDUCTORS
1	3	4	75 A	MAIN CIRCUIT BREAKER	50 kVA	5#3/0
2	2	3	70 A	TUNNEL CONTROL UPS	13.4 kVA	4#2
3	2	3	70 A	T.O.S UPS	13.4 kVA	4#2
4	1	2	15 A	EXIT LIGHTS	0.10 kVA	3#12
5	1	2	15 A	RECEPTACLES	1.44 kVA	3#12
6	1	2	15 A	TUNNEL CONTROL & T.O.S ROOM	1.296 kVA	3#12
7	3	3	15 A	TUNNEL CONTROL & T.O.S ROOM	1-1/4 HP	4#10

TUNNEL CONTROL UPS PANEL

POWER CKT No.	POLE No.	WIRE No.	TRIP RATING	LOAD	Max LOAD	CONDUCTORS
1	2	3	70 A	MAIN CIRCUIT BREAKER	12.00 kVA	4#2
2	1	2	15 A	19'' COMPUTER CABIINET FOR	1.67 kVA	3#12
3	1	2	15 A	19'' COMPUTER CABINET FOR TC ROOM CABINET #2	1.67 kVA	3#12
4	1	2	15 A	19'' COMPUTER CABINET FOR TC ROOM CABINET #3	1.67 kVA	3#12
5	1	2	15 A	19'' COMPUTER CABINET FOR TC ROOM CABINET #4	1.67 kVA	3#12
6	1	2	15 A	19'' COMPUTER CABINET FOR FO CABINET FOR T.O.S	1.67 kVA	3#12

480 V PANEL

POWER CKT No.	POLE No.	WIRE No.	TRIP RATING	LOAD	Max LOAD	CONDUCTORS
1	3	4	200 A	MAIN CIRCUIT BREAKER	133 kVA	5#300 KCMIL
2	2	2	50 A	TRAILER	20 kVA	3#1

SL PANEL

POWER CKT No.	POLE No.	WIRE No.	TRIP RATING	LOAD	Max LOAD	CONDUCTORS
1	3	4	100 A	MAIN CIRCUIT BREAKER	66.5 kVA	5#300 KCMIL
2	3	3	20 A	T.O.S POWER	13.3 kVA	4#4 in CONDUIT #84

THIS PLAN IS ACCURATE FOR ELECTRICAL WORK ONLY

BATTERY SUBSTATION AND TUNNEL WORK (PANELBOARDS)

E-36

CALCULATED-DESIGNED BY	CHECKED BY	REVISED BY	DATE REVISED
LIONEL J. SUDDS	LIONEL J. SUDDS	LS	8/01/09

FUNCTIONAL SUPERVISOR: BEHZAD GOLEMOHAMMADI

STATE OF CALIFORNIA - DEPARTMENT OF TRANSPORTATION — ELECTRICAL

Caltrans

LAST REVISION | DATE PLOTTED => 14-DEC-2009 | TIME PLOTTED => 15:55 | 12-07-09

BORDER LAST REVISED 4/11/2008

RELATIVE BORDER SCALE IS IN INCHES 0 1 2 3

USERNAME => trlenard
DGN FILE => 416374ua036.dgn

CU 04242

EA 163741

Dist	COUNTY	ROUTE	POST MILES TOTAL PROJECT	SHEET No.	TOTAL SHEETS
04	SF	101	8.2/9.2	199	654

REGISTERED ELECTRICAL ENGINEER DATE

12-14-09
PLANS APPROVAL DATE

REGISTERED PROFESSIONAL ENGINEER
No.
Exp.
ELECT
STATE OF CALIFORNIA

THE STATE OF CALIFORNIA OR ITS OFFICERS OR AGENTS SHALL NOT BE RESPONSIBLE FOR THE ACCURACY OR COMPLETENESS OF SCANNED COPIES OF THIS PLAN SHEET.

LEFT INTENTIONALLY BLANK

REVISED BY
DATE REVISED
CALCULATED-DESIGNED BY
CHECKED BY
FUNCTIONAL SUPERVISOR

STATE OF CALIFORNIA - DEPARTMENT OF TRANSPORTATION
Caltrans
ELECTRICAL

BATTERY SUBSTATION AND TUNNEL WORK

NO SCALE

E-37

LAST REVISION 11-10-09
DATE PLOTTED => 14-DEC-2009
TIME PLOTTED => 15:55

Dist	COUNTY	ROUTE	POST MILES TOTAL PROJECT	SHEET No.	TOTAL SHEETS
04	SF	101	8.2/9.2	200	654

Lionel J. Sudds 10-8-09
REGISTERED ELECTRICAL ENGINEER DATE

12-14-09
PLANS APPROVAL DATE

REGISTERED PROFESSIONAL ENGINEER — Lionel J. Sudds — No. 15201 — Exp 6-30-10 — ELECT — STATE OF CALIFORNIA

THE STATE OF CALIFORNIA OR ITS OFFICERS OR AGENTS SHALL NOT BE RESPONSIBLE FOR THE ACCURACY OR COMPLETENESS OF SCANNED COPIES OF THIS PLAN SHEET.

CALIFORNIA STATE FIRE MARSHAL APPROVED
Approval of this plan does not authorize or approve any omission or deviation from applicable regulations. Final approval is subject to field inspection. One set of approved plans shall be available on the project site at all times.
Reviewed by: STEPHEN GUARINO
Approval date: 12-14-09

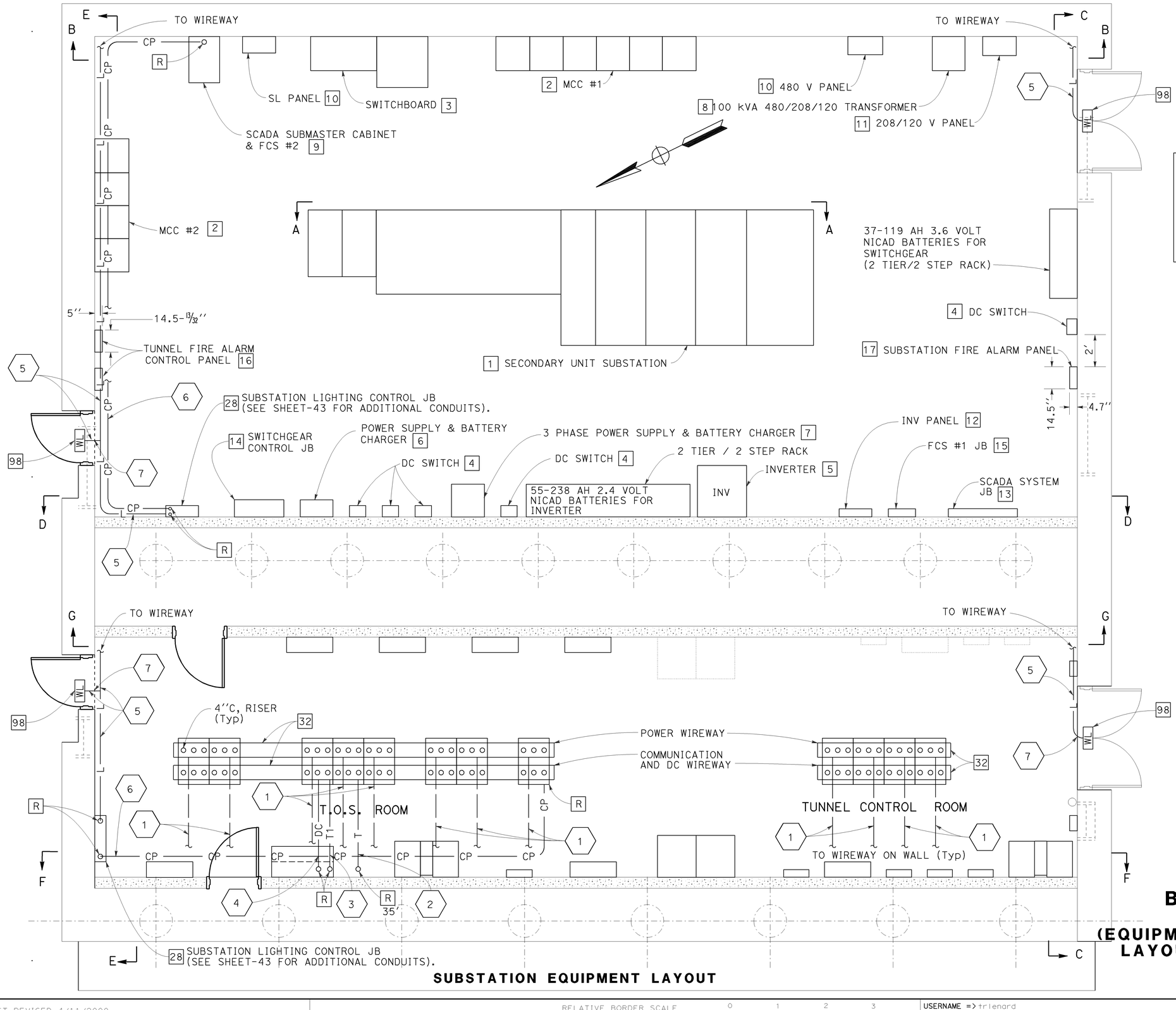

SUBSTATION EQUIPMENT LAYOUT

GENERAL NOTES:

(THIS SHEET ONLY)

1. THE POWER WIREWAY SHALL BE AT THE SAME LEVEL AS THE WIREWAY ON THE WALL ABOVE THE COMMUNICATION WIREWAY.
2. CONDUITS SHOWN ON THIS SHEET ARE OVERHEAD CONDUITS.
3. SECTION E-E VIEW. SECTION C-C VIEW, SEE E-49
   SECTION D-D VIEW. SECTION F-F VIEW, SEE E-50
4. SECTION B-B VIEW. SEE E-48
5. SECTION G-G VIEW. SEE E-52
6. SEE SHEET E-53 FOR WIRING CONNECTION OF THE WALL LIGHT FIXTURES. (EXTERIOR LIGHTS).

NOTES: (THIS SHEET ONLY)

1. INSTALL ¾''C, 3#10 CONDUCTORS.
2. INSTALL ¾''C, 1-TELEPHONE CABLE.
3. INSTALL 1-½''C, 2-T1 CABLES.
4. INSTALL 1-½''C, 3#6 CONDUCTORS.
5. INSTALL ¾''C, 3#12 CONDUCTORS.
6. INSTALL 1''C, 2-4#16 CONDUCTOR CABLE.
7. CORE DRILL HOLE AND INSTALL CONDUIT WITH CONDUCTORS AND CABLES THROUGH HOLE AS SHOWN ON THE PLANS.

THIS PLAN IS ACCURATE FOR ELECTRICAL WORK ONLY

BATTERY SUBSTATION AND TUNNEL WORK
(EQUIPMENT & UNDERGROUND CONDUIT LAYOUT OF BATTERY SUBSTATION)

SCALE: 1''=3'

E-38

REVISED BY	DATE REVISED
LS	8/01/09

CALCULATED-DESIGNED BY: LIONEL J. SUDDS
CHECKED BY: LIONEL J. SUDDS

FUNCTIONAL SUPERVISOR: BEHZAD GOLEMOHAMMADI

STATE OF CALIFORNIA - DEPARTMENT OF TRANSPORTATION
ELECTRICAL

Caltrans

LAST REVISION DATE PLOTTED => 14-DEC-2009
TIME PLOTTED => 15:55
11-02-09

BORDER LAST REVISED 4/11/2008

RELATIVE BORDER SCALE IS IN INCHES 0 1 2 3

USERNAME => trlenard
DGN FILE => 416374ua038.dgn

CU 04242

EA 163741

Dist	COUNTY	ROUTE	POST MILES TOTAL PROJECT	SHEET No.	TOTAL SHEETS
04	SF	101	8.2/9.2	201	654

Lionel J. Sudds 10-8-09
REGISTERED ELECTRICAL ENGINEER DATE

12-14-09
PLANS APPROVAL DATE

REGISTERED PROFESSIONAL ENGINEER — Lionel J. Sudds No. 15201 Exp 6-30-10 ELECT — STATE OF CALIFORNIA

THE STATE OF CALIFORNIA OR ITS OFFICERS OR AGENTS SHALL NOT BE RESPONSIBLE FOR THE ACCURACY OR COMPLETENESS OF SCANNED COPIES OF THIS PLAN SHEET.

CALIFORNIA STATE FIRE MARSHAL APPROVED
Approval of this plan does not authorize or approve any omission or deviation from applicable regulations. Final approval is subject to field inspection. One set of approved plans shall be available on the project site at all times.
Reviewed by: STEPHEN GUARINO
Approval date: 12-14-09

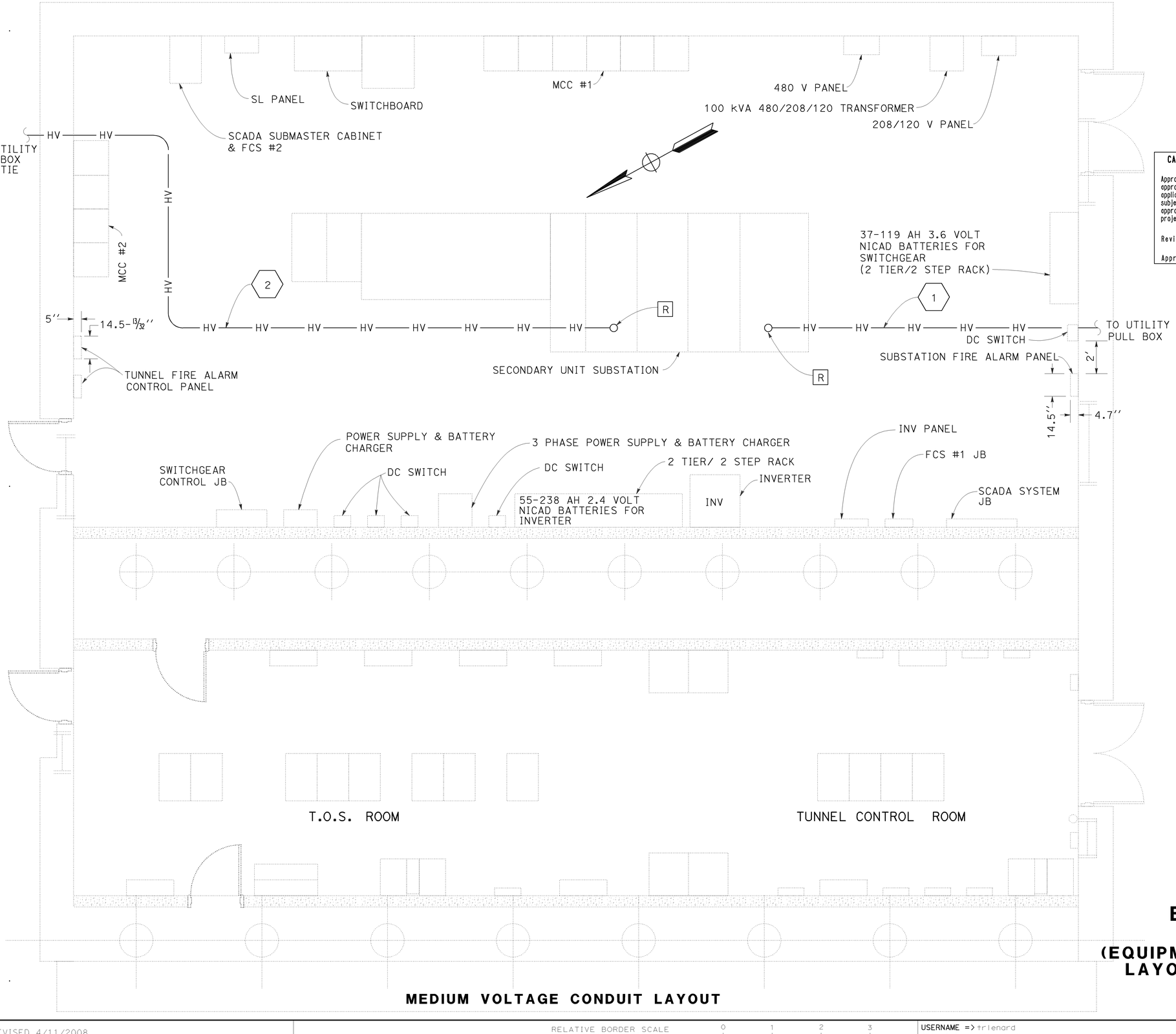

MEDIUM VOLTAGE CONDUIT LAYOUT

GENERAL NOTE:
(THIS SHEET ONLY)

1. THE MEDIUM VOLTAGE CONDUIT SHALL BE 72'' OR BELOW FINISHED GRADE, UNLESS OTHERWISE SHOWN ON THE PLANS, AND AS DIRECTED BY THE ENGINEER.

NOTE: (THIS SHEET ONLY)

1. INSTALL 6'' C, 3#2/0 MEDIUM VOLTAGE POWER CABLE.
2. INSTALL 6'' C, MT FOR MEDIUM VOLTAGE TIE LINE.

THIS PLAN IS ACCURATE FOR ELECTRICAL WORK ONLY

BATTERY SUBSTATION AND TUNNEL WORK
(EQUIPMENT & UNDERGROUND CONDUIT LAYOUT OF BATTERY SUBSTATION)

SCALE: 1''=3'

E-39

LAST REVISION 10-28-09
DATE PLOTTED => 14-DEC-2009
TIME PLOTTED => 15:56

REVISED BY	DATE REVISED
LS	8/01/09

CALCULATED-DESIGNED BY: LIONEL J. SUDDS
CHECKED BY: LIONEL J. SUDDS

FUNCTIONAL SUPERVISOR: BEHZAD GOLEMOHAMMADI

STATE OF CALIFORNIA - DEPARTMENT OF TRANSPORTATION
Caltrans
ELECTRICAL

BORDER LAST REVISED 4/11/2008
RELATIVE BORDER SCALE IS IN INCHES 0 1 2 3
USERNAME => trlenard
DGN FILE => 416374ua039.dgn
CU 04242
EA 163741

Dist	COUNTY	ROUTE	POST MILES TOTAL PROJECT	SHEET No.	TOTAL SHEETS
04	SF	101	8.2/9.2	202	654

Lionel J. Sudds 10-8-09
REGISTERED ELECTRICAL ENGINEER DATE

12-14-09
PLANS APPROVAL DATE

REGISTERED PROFESSIONAL ENGINEER — Lionel J. Sudds No. 15201 Exp 6-30-10 ELECT — STATE OF CALIFORNIA

THE STATE OF CALIFORNIA OR ITS OFFICERS OR AGENTS SHALL NOT BE RESPONSIBLE FOR THE ACCURACY OR COMPLETENESS OF SCANNED COPIES OF THIS PLAN SHEET.

GENERAL NOTES: (THIS SHEET ONLY)

1. THE LOW VOLTAGE CONDUIT SHALL 60'' OR BELOW FINISHED GRADE, AND ABOVE THE MEDIUM VOLTAGE CONDUIT UNLESS OTHERWISE SHOWN ON THE PLANS, AND DIRECTED BY THE ENGINEER.
2. SECTION A-A TO I-I, SEE E-82.
3. SECTION J-J TO M-M, SEE E-83.

NOTES: (THIS SHEET ONLY)

1. INSTALL 5''C 3#750 Kcmil AND #750 Kcmil FOR EGC.
2. INSTALL 4''C, 3#500 Kcmil AND 1#500 Kcmil FOR EGC.
3. INSTALL 4''C, 1-2#4 CONDUCTOR CABLE.
4. INSTALL 4''C, 2-2#4 CONDUCTOR CABLES
5. INSTALL 4''C, MT.
6. INSTALL 4''C, 3#4/0 CONDUCTORS, & 1#4/0 CONDUCTOR FOR EGC (TO TUNNEL PANELS).
7. INSTALL 4''C, 2#4/0 CONDUCTORS, AND 1 4/0 CONDUCTOR FOR EGC.
8. INSTALL 1-1/2''C, 2#2 CONDUCTORS AND #2 CONDUCTOR FOR EGC.
9. INSTALL 2''C, 3#1 CONDUCTORS AND #1 CONDUCTOR FOR EGC.
10. INSTALL 3''C, 1-25#14 CONDUCTOR CABLE, AND 1-4#6 CONDUCTOR.
11. INSTALL 3'' C, 3-4#6 CONDUCTOR CABLES.
12. INSTALL 3''C, 1#3/0 CONDUCTOR AND 1#3/0 CONDUCTOR FOR EGC.
13. INSTALL 2''C, 3#2 CONDUCTORS AND 1#2 CONDUCTOR FOR EGC.
14. INSTALL 4''C, 3#250 Kcmil THWN-2 CONDUCTORS, 1#6 CONDUCTOR FOR NEUTRAL AND 1#6 CONDUCTOR FOR EGC.
15. INSTALL 4''C, MT FOR TUNNEL LIGHTING CONDUCTORS.
16. INSTALL 4''C, 3#12 CONDUCTORS.
17. INSTALL 4''C, 4#4 CONDUCTORS.

THIS PLAN IS ACCURATE FOR ELECTRICAL WORK ONLY

SCADA SUBMASTER CABINET & PAC #3 · SL PANEL · SWITCHBOARD · MCC #1 · 480 V PANEL · 100 kVA 480/208/120 TRANSFORMER · 208/120 V PANEL · MCC #2 · SECONDARY UNIT SUBSTATION · TO TYPE 15 PULL BOX AS SHOWN ON Sht E-34 · 37-119 AH 3.6 VOLT NICAD BATTERIES FOR SWITCHGEAR (2 TIER/2 STEP RACK) · DC SWITCH · SUBSTATION FIRE ALARM PANEL · TUNNEL FIRE ALARM CONTROL PANEL WIREWAY UNDER EQUIPMENT · SWITCHGEAR CONTROL JB · POWER SUPPLY & BATTERY CHARGER · 3 PHASE POWER SUPPLY & BATTERY CHARGER · DC SWITCH · INVERTER · INVERTER PANEL · SCADA SYSTEM JB · 55-238 AH 2.4 VOLT NICAD BATTERIES FOR INVERTER · DC SWITCH · 2 TIER / 2 STEP RACK · T.O.S. ROOM · TUNNEL CONTROL ROOM

CALIFORNIA STATE FIRE MARSHAL APPROVED
Approval of this plan does not authorize or approve any omission or deviation from applicable regulations. Final approval is subject to field inspection. One set of approved plans shall be available on the project site at all times.
Reviewed by: STEPHEN GUARINO
Approval date: 12-14-09

BATTERY SUBSTATION AND TUNNEL WORK
(EQUIPMENT & UNDERGROUND CONDUIT LAYOUT OF BATTERY SUBSTATION)

SCALE: 1''=3'

LOW VOLTAGE CONDUIT LAYOUT

E-40

STATE OF CALIFORNIA - DEPARTMENT OF TRANSPORTATION
ELECTRICAL
FUNCTIONAL SUPERVISOR: BEHZAD GOLEMOHAMMADI
CALCULATED-DESIGNED BY: LS
CHECKED BY: LIONEL J. SUDDS
REVISED BY: LIONEL J. SUDDS
DATE REVISED: 8/01/09

LAST REVISION DATE PLOTTED => 14-DEC-2009
TIME PLOTTED => 15:56

BORDER LAST REVISED 4/11/2008 · RELATIVE BORDER SCALE IS IN INCHES (0 1 2 3) · USERNAME => trlenard · DGN FILE => 416374ua040.dgn · CU 04242 · EA 163741

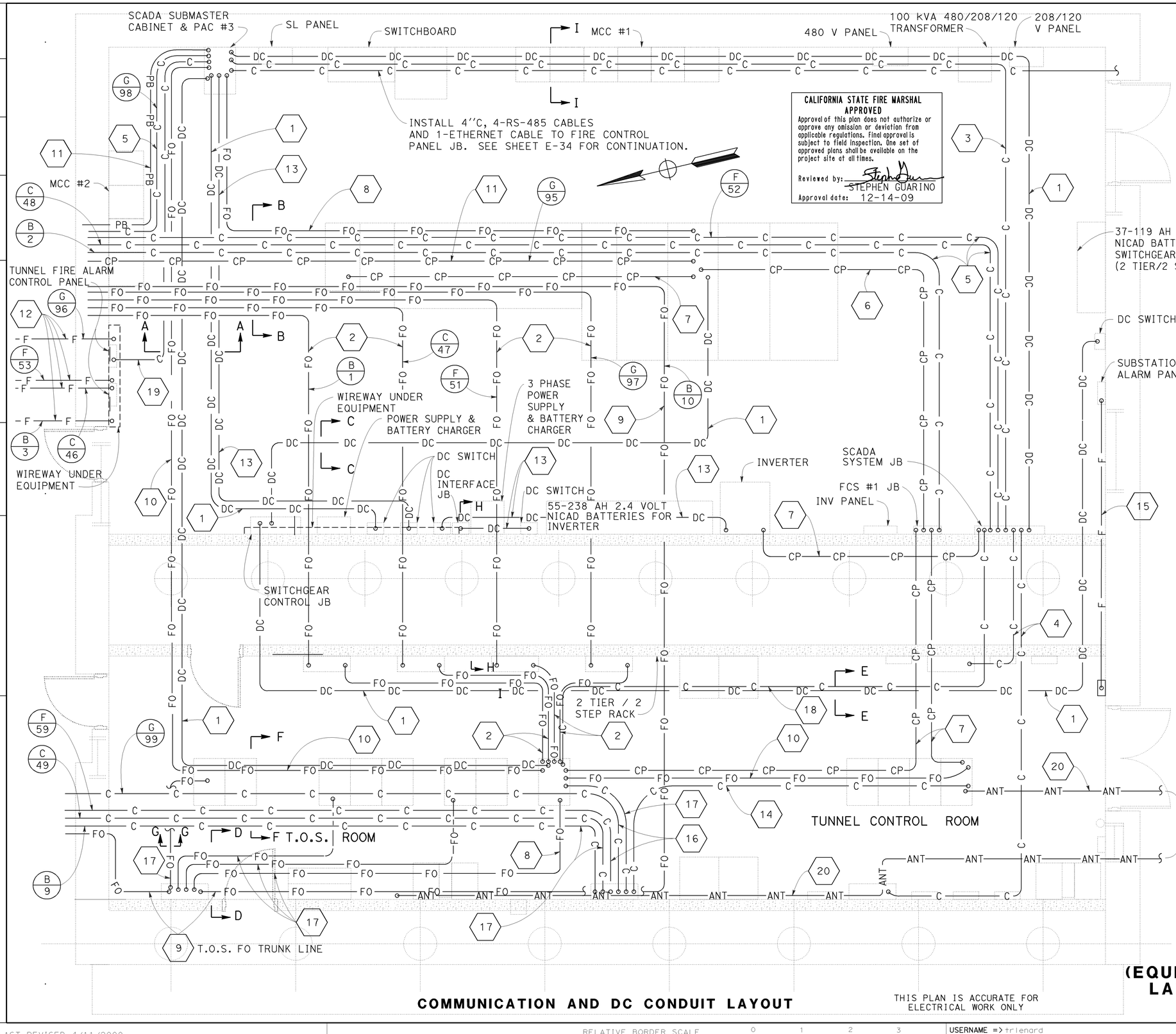

Dist	COUNTY	ROUTE	POST MILES TOTAL PROJECT	SHEET No.	TOTAL SHEETS
04	SF	101	8.2/9.2	203	654

Lionel J. Sudds 10-8-09
REGISTERED ELECTRICAL ENGINEER DATE

Lionel J. Sudds No. 15201 Exp 6-30-10 ELECT
REGISTERED PROFESSIONAL ENGINEER — STATE OF CALIFORNIA

12-14-09
PLANS APPROVAL DATE

THE STATE OF CALIFORNIA OR ITS OFFICERS OR AGENTS SHALL NOT BE RESPONSIBLE FOR THE ACCURACY OR COMPLETENESS OF SCANNED COPIES OF THIS PLAN SHEET.

GENERAL NOTES: (THIS SHEET ONLY)

1. THE COMMUNICATION AND DC CONDUIT SHALL BE 36'' OR BELOW FINISHED GRADE AND ABOVE THE LOW VOLTAGE CONDUIT, UNLESS OTHERWISE SHOWN ON THE PLANS AND AS DIRECTED BY THE ENGINEER.
2. SECTION A-A TO I-I ARE ON SHEET E-83.

NOTES: (THIS SHEET ONLY)

1. INSTALL 1-½'' C, 2#6 CONDUCTORS AND #6 CONDUCTORS FOR EGC.
2. INSTALL 4''C, 1-36 FIBER SINGLE-MODE FIBER OPTIC CABLE AND 1-24 FIBER SINGLE-MODE FIBER OPTIC CABLE.
3. INSTALL 4''C, 1-48 FIBER SINGLE-MODE FIBER OPTIC CABLE, 4-ETHERNET CABLE, 1-REMOTE I/O CABLE, 1-24 FIBER SINGLE-MODE FIBER OPTIC CABLE AND 1-RS-485 CABLE.
4. INSTALL 1-½''C, 1-ETHERNET CABLE.
5. INSTALL 4''C, 1-RS-485 CABLE.
6. INSTALL 3''C, 1-100#18 CONDUCTOR CABLE.
7. INSTALL 2''C, 1-30#18 CONDUCTOR CABLE.
8. INSTALL 1-½''C, 2-12 FIBER SINGLE-MODE FIBER OPTIC CABLE.
9. INSTALL 4''C, 1-72 FIBER SINGLE-MODE FIBER OPTIC CABLE.
10. INSTALL 4''C, 3-48 FIBER SINGLE-MODE FIBER OPTIC CABLE, AND 1-ETHERNET CABLE.
11. INSTALL 4'C, 1-4#14 CONDUCTOR CABLE.
12. INSTALL 4''C, 1-SLC.
13. INSTALL 2''C, 2#1 CONDUCTORS AND #1 CONDUCTOR FOR EGC.
14. INSTALL 4''C, 4#8 CONDUCTORS
15. INSTALL 2''C, 6-FIRE ALARM CABLES, AND #12 CONDUCTORS FOR EGC.
16. INSTALL 4''C, 2#8 CONDUCTORS.
17. INSTALL 4''C, MT.
18. INSTALL 1-½''C, 2-ETHERNET CABLE.
19. INSTALL 3''C, 3-ETHERNET CABLE, 2-RS-485 CABLES AND 2-RS-232 CABLES
20. 1-½''C, 1-ANTENNA CABLE.

BATTERY SUBSTATION AND TUNNEL WORK
(EQUIPMENT & UNDERGROUND CONDUIT LAYOUT OF BATTERY SUBSTATION)

SCALE: 1''=3'

E-41

COMMUNICATION AND DC CONDUIT LAYOUT

THIS PLAN IS ACCURATE FOR ELECTRICAL WORK ONLY

LAST REVISION DATE PLOTTED => 14-DEC-2009
11-02-09 TIME PLOTTED => 15:56

STATE OF CALIFORNIA - DEPARTMENT OF TRANSPORTATION
ELECTRICAL
Caltrans
FUNCTIONAL SUPERVISOR: BEHZAD GOLEMOHAMMADI
CALCULATED-DESIGNED BY: LS 8/01/09
CHECKED BY: LIONEL J. SUDDS
REVISED BY / DATE REVISED:

BORDER LAST REVISED 4/11/2008
RELATIVE BORDER SCALE IS IN INCHES 0 1 2 3
USERNAME => trlenard
DGN FILE => 416374ua041.dgn
CU 04242
EA 163741

Dist	COUNTY	ROUTE	POST MILES TOTAL PROJECT	SHEET No.	TOTAL SHEETS
04	SF	101	8.2/9.2	204	654

Lionel J. Sudds 10-8-09
REGISTERED ELECTRICAL ENGINEER DATE

12-14-09
PLANS APPROVAL DATE

REGISTERED PROFESSIONAL ENGINEER — Lionel J. Sudds No. 15201 Exp 6-30-10 ELECT — STATE OF CALIFORNIA

THE STATE OF CALIFORNIA OR ITS OFFICERS OR AGENTS SHALL NOT BE RESPONSIBLE FOR THE ACCURACY OR COMPLETENESS OF SCANNED COPIES OF THIS PLAN SHEET.

CALIFORNIA STATE FIRE MARSHAL APPROVED

Approval of this plan does not authorize or approve any omission or deviation from applicable regulations. Final approval is subject to field inspection. One set of approved plans shall be available on the project site at all times.

Reviewed by: STEPHEN GUARINO
Approval date: 12-14-09

GENERAL NOTES: (THIS SHEET ONLY)

1. THE GROUNDING ELECTRODE CONDUCTOR (GEC) CONDUIT SHALL BE 18'' OR BELOW FINISHED GRADE AND ABOVE THE COMMUNICATION & DC CONDUIT, UNLESS OTHERWISE SHOWN ON THE PLANS AND AS DIRECTED BY THE ENGINEER.
2. SECTION C-C AND D-D ON SHEET E-81.

NOTES: (THIS SHEET ONLY)

(1) INSTALL 2½'' C, 1#500 Kcmil CONDUCTOR.

(2) INSTALL 500 Kcmil STANDARD ANNEALED SOFT-DRAWN BARE COPPER CONDUCTOR.

THIS PLAN IS ACCURATE FOR ELECTRICAL WORK ONLY

BATTERY SUBSTATION AND TUNNEL WORK (EQUIPMENT & UNDERGROUND CONDUIT LAYOUT OF BATTERY SUBSTATION)

SCALE: 1''=3'

GROUNDING ELECTRODE CONDUCTOR CONDUIT LAYOUT

E-42

LAST REVISION DATE PLOTTED => 14-DEC-2009
10-30-09 TIME PLOTTED => 15:56

STATE OF CALIFORNIA - DEPARTMENT OF TRANSPORTATION
ELECTRICAL
Caltrans

FUNCTIONAL SUPERVISOR: BEHZAD GOLEMOHAMMADI

REVISED BY	DATE REVISED
LS	8/01/09

LIONEL J. SUDDS — CALCULATED-DESIGNED BY
LIONEL J. SUDDS — CHECKED BY

BORDER LAST REVISED 4/11/2008

RELATIVE BORDER SCALE IS IN INCHES 0 1 2 3

USERNAME => trlenard
DGN FILE => 416374ua042.dgn

CU 04242

EA 163741

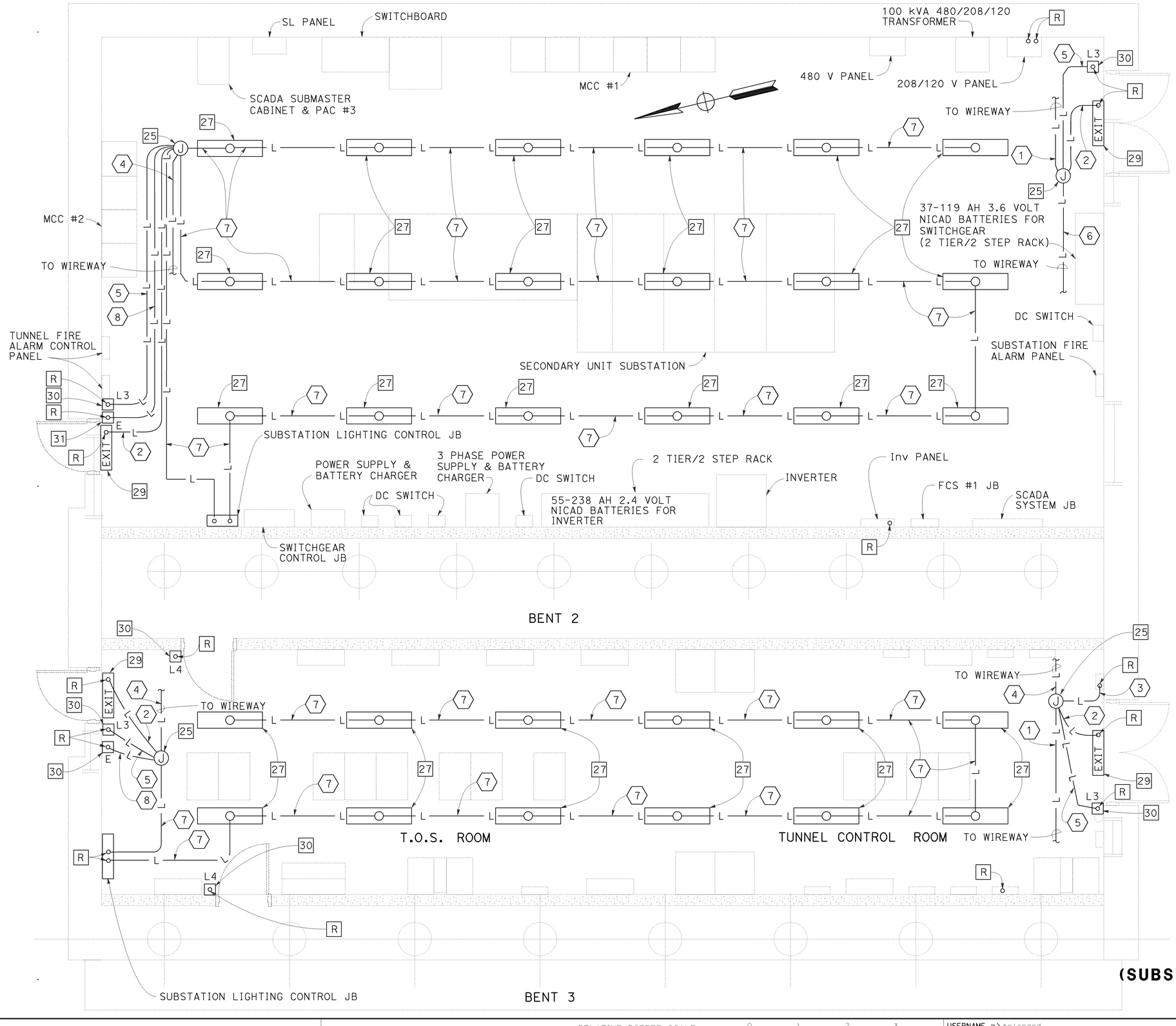

Dist	COUNTY	ROUTE	POST MILES TOTAL PROJECT	SHEET No.	TOTAL SHEETS
04	SF	101	8.2/9.2	205	654

Lionel J. Sudds 10-8-09
REGISTERED ELECTRICAL ENGINEER DATE

12-14-09
PLANS APPROVAL DATE

Lionel J. Sudds No. 15201 Exp 6-30-10 ELECT — REGISTERED PROFESSIONAL ENGINEER — STATE OF CALIFORNIA

THE STATE OF CALIFORNIA OR ITS OFFICERS OR AGENTS SHALL NOT BE RESPONSIBLE FOR THE ACCURACY OR COMPLETENESS OF SCANNED COPIES OF THIS PLAN SHEET.

CALIFORNIA STATE FIRE MARSHAL APPROVED
Approval of this plan does not authorize or approve any omission or deviation from applicable regulations. Final approval is subject to field inspection. One set of approved plans shall be available on the project site at all times.
Reviewed by: STEPHEN GUARINO
Approval date: 12-14-09

GENERAL NOTES: (THIS SHEET ONLY)

1. THE FLUORESCENT LIGHT FIXTURES SHALL BE MOUNTED 12′ ABOVE THE FINISHED FLOOR OF THE SUBSTATION.
2. SEE SHEET E-53 FOR WIRING CONNECTION OF THE LIGHTS.
3. THE CONDUCTORS SHALL THW TYPE CONDUCTORS.

NOTES: (THIS SHEET ONLY)

(1) INSTALL ¾″C, 6#12 CONDUCTORS (3 FOR MAIN LIGHTS WITH 1 FOR EGC; AND 3 FOR EXIT LIGHTS WITH 1 FOR EGC).

(2) INSTALL ¾″C, 3#12 CONDUCTORS (2 FOR EXIT LIGHTS WITH 1 FOR EGC).

(3) INSTALL ¾″C, 3#12 CONDUCTORS (3 FOR EMERGENCY LIGHTS WITH 1 FOR EGC).

(4) INSTALL ¾″C, 10#12 CONDUCTORS (4 FOR MAIN LIGHTS WITH 1 FOR EGC; 3 FOR EMERGENCY LIGHTS WITH 1 FOR EGC; AND 3 FOR EXIT LIGHTS WITH 1 FOR EGC).

(5) INSTALL ¾″C, 7#12 CONDUCTORS (3 FOR MAIN LIGHTS WITH 1 FOR EGC; AND 4 FOR THE MAIN LIGHT SWITCH WITH 1 FOR EGC).

(6) INSTALL ¾″C, 7#12 CONDUCTORS (4 FOR MAIN LIGHTS WITH 1 FOR EGC; AND 3 FOR EXIT LIGHTS WITH 1 FOR EGC).

(7) INSTALL ¾″C, 6#12 CONDUCTORS (3 FOR MAIN LIGHTS WITH 1 FOR EGC; AND 3 FOR EMERGENCY LIGHTS WITH 1 FOR EGC).

(8) INSTALL ¾″C, 6#12 CONDUCTORS (6 FOR THE EMERGENCY LIGHT SWITCH WITH 2 FOR EGC).

THIS PLAN IS ACCURATE FOR ELECTRICAL WORK ONLY

BATTERY SUBSTATION AND TUNNEL WORK (SUBSTATION BUILDING LIGHTING CONDUIT)

SCALE: 1″=3′

E-43

LAST REVISION DATE PLOTTED => 14-DEC-2009
TIME PLOTTED => 15:56

STATE OF CALIFORNIA - DEPARTMENT OF TRANSPORTATION
ELECTRICAL
FUNCTIONAL SUPERVISOR: BEHZAD GOLEMOHAMMADI
CALCULATED-DESIGNED BY: LIONEL J. SUDDS
CHECKED BY: LS
REVISED BY
DATE REVISED: 8/01/09

BORDER LAST REVISED 4/11/2008
RELATIVE BORDER SCALE IS IN INCHES 0 1 2 3
USERNAME => trlenard
DGN FILE => 416374ua043.dgn
CU 04242
EA 163741

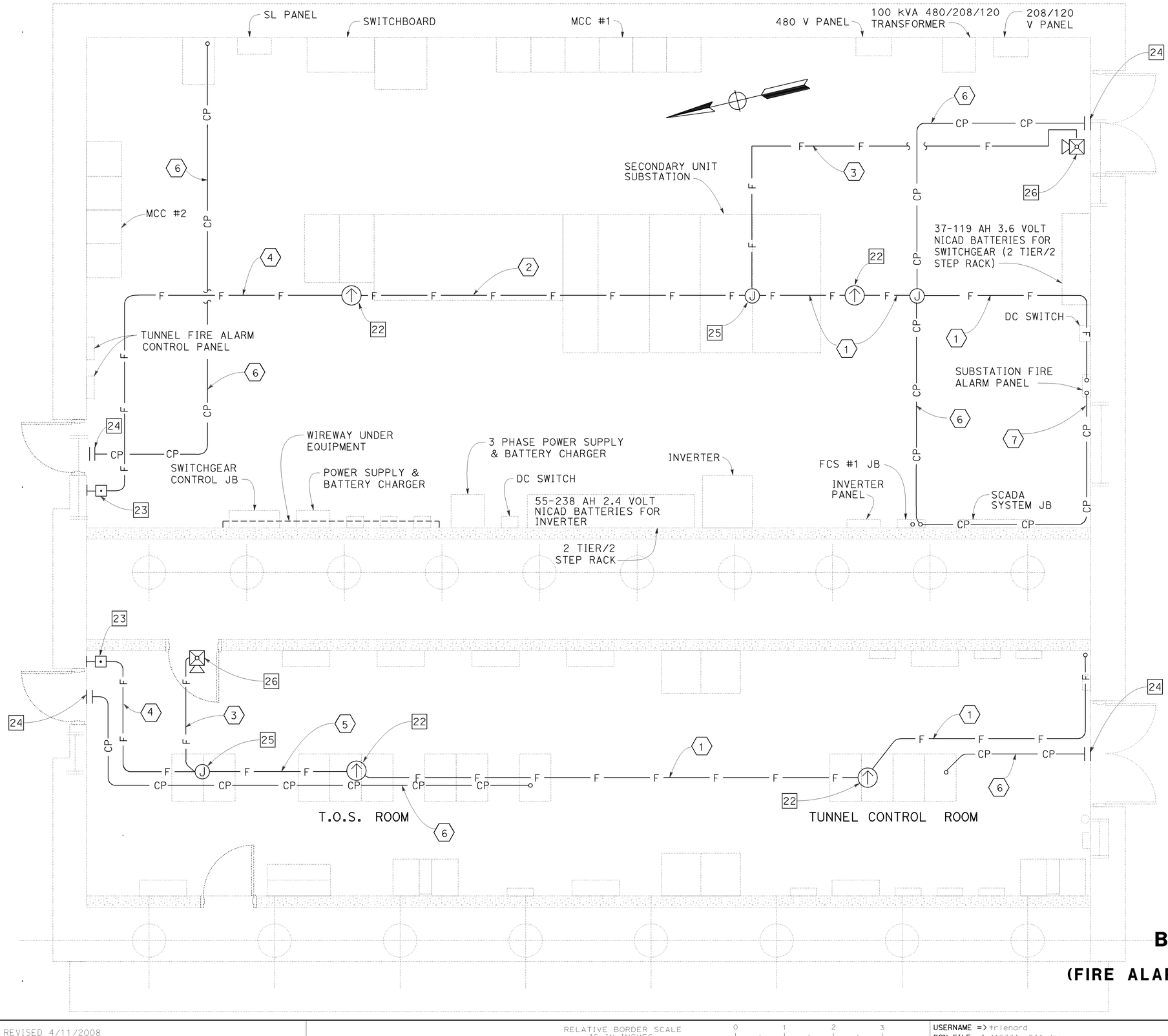

Dist	COUNTY	ROUTE	POST MILES TOTAL PROJECT	SHEET No.	TOTAL SHEETS
04	SF	101	8.2/9.2	206	654

Lionel J. Sudds 10-8-09
REGISTERED ELECTRICAL ENGINEER DATE

12-14-09
PLANS APPROVAL DATE

REGISTERED PROFESSIONAL ENGINEER — Lionel J. Sudds — No. 15201 — Exp 6-30-10 — ELECT — STATE OF CALIFORNIA

THE STATE OF CALIFORNIA OR ITS OFFICERS OR AGENTS SHALL NOT BE RESPONSIBLE FOR THE ACCURACY OR COMPLETENESS OF SCANNED COPIES OF THIS PLAN SHEET.

CALIFORNIA STATE FIRE MARSHAL APPROVED
Approval of this plan does not authorize or approve any omission or deviation from applicable regulations. Final approval is subject to field inspection. One set of approved plans shall be available on the project site at all times.
Reviewed by: STEPHEN GUARINO
Approval date: 12-14-09

GENERAL NOTES: (THIS SHEET ONLY)

1. SEE SHEET E-53 FOR WIRING CONNECTION TO SUBSTATION FIRE ALARM SYSTEM.
2. ALL CONDUITS, OUTLET BOXES, AND SUBSTATION SMOKE DETECTORS ARE OVERHEAD.

NOTES: (THIS SHEET ONLY)

(1) INSTALL ¾''C, 6-FIRE ALARM CABLES (2 FOR SUBSTATION SMOKE DETECTORS, 2 FOR PULL STATION, AND 2 FOR FIRE ALARM SIREN).

(2) INSTALL ¾''C, 4-FIRE ALARM CABLES (2 FOR SUBSTATION SMOKE DETECTORS, AND 2 FOR FIRE STATION).

(3) INSTALL ¾''C, 2-FIRE ALARM CABLES (2 FOR FIRE ALARM SIREN).

(4) INSTALL ¾''C, 2-FIRE ALARM CABLES (2 FOR PULL STATION).

(5) INSTALL ¾''C, 4-FIRE ALARM CABLES (2 FOR PULL STATION AND 2 FOR FIRE, ALARM SIREN).

(6) INSTALL 1''C, 1-2#18 CONDUCTOR CABLE.

(7) INSTALL 1-½''C, 1-4#18 CONDUCTOR CABLE.

THIS PLAN IS ACCURATE FOR ELECTRICAL WORK ONLY

BATTERY SUBSTATION AND TUNNEL WORK
(FIRE ALARM AND SECURITY SYSTEM LAYOUT)

SCALE: 1'' = 3'

E-44

STATE OF CALIFORNIA - DEPARTMENT OF TRANSPORTATION
ELECTRICAL
Caltrans
FUNCTIONAL SUPERVISOR: BEHZAD GOLEMOHAMMADI
CALCULATED-DESIGNED BY: LIONEL J. SUDDS
CHECKED BY: LIONEL J. SUDDS
REVISED BY: LS
DATE REVISED: 8/01/09

LAST REVISION DATE PLOTTED => 14-DEC-2009
TIME PLOTTED => 15:56

BORDER LAST REVISED 4/11/2008
RELATIVE BORDER SCALE IS IN INCHES 0 1 2 3
USERNAME => trlenard
DGN FILE => 416374ya044.dgn
CU 04242
EA 163741

Dist	COUNTY	ROUTE	POST MILES TOTAL PROJECT	SHEET No.	TOTAL SHEETS
04	SF	101	8.2/9.2	207	654

Lionel J. Sudds 10-8-09
REGISTERED ELECTRICAL ENGINEER DATE

12-14-09
PLANS APPROVAL DATE

REGISTERED PROFESSIONAL ENGINEER — Lionel J. Sudds — No. 15201 — Exp 6-30-10 — ELECT — STATE OF CALIFORNIA

THE STATE OF CALIFORNIA OR ITS OFFICERS OR AGENTS SHALL NOT BE RESPONSIBLE FOR THE ACCURACY OR COMPLETENESS OF SCANNED COPIES OF THIS PLAN SHEET.

CALIFORNIA STATE FIRE MARSHAL APPROVED
Approval of this plan does not authorize or approve any omission or deviation from applicable regulations. Final approval is subject to field inspection. One set of approved plans shall be available on the project site at all times.
Reviewed by: STEPHEN GUARINO
Approval date: 12-14-09

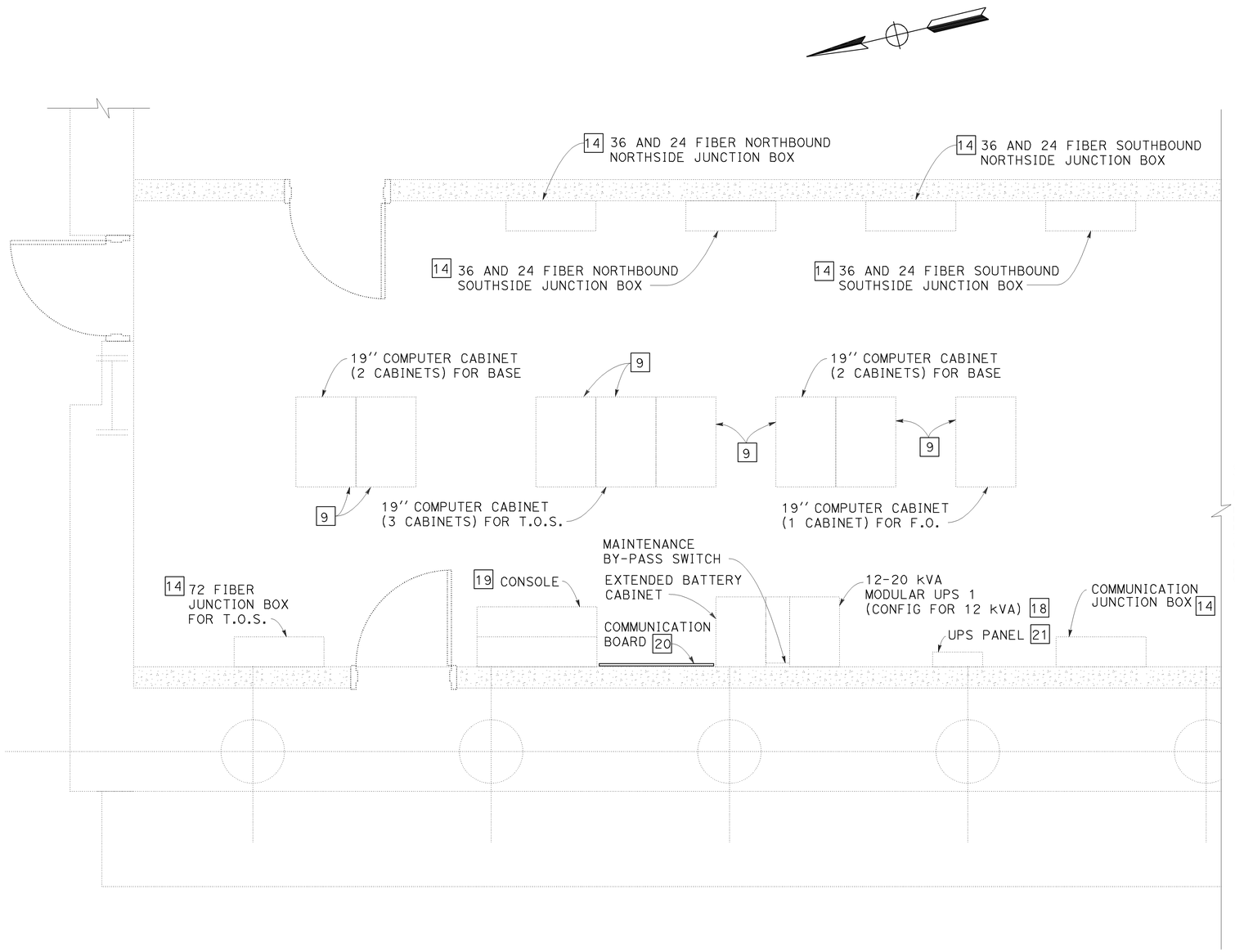

BATTERY SUBSTATION AND TUNNEL WORK
(EQUIPMENT & UNDERGROUND CONDUIT LAYOUT OF THE T.O.S. ROOM IN BATTERY SUBSTATION)

SCALE: 1" = 2'

THIS PLAN IS ACCURATE FOR ELECTRICAL WORK ONLY

E-45

CALCULATED-DESIGNED BY	REVISED BY	LS
CHECKED BY	DATE REVISED	8/01/09
LIONEL J. SUDDS		
LIONEL J. SUDDS		

FUNCTIONAL SUPERVISOR: BEHZAD GOLEMOHAMMADI

STATE OF CALIFORNIA - DEPARTMENT OF TRANSPORTATION
ELECTRICAL

LAST REVISION | DATE PLOTTED => 14-DEC-2009
10-28-09 | TIME PLOTTED => 15:57

BORDER LAST REVISED 4/11/2008 | RELATIVE BORDER SCALE IS IN INCHES 0 1 2 3 | USERNAME => trlenard | DGN FILE => 416374ua045.dgn | CU 04242 | EA 163741

Dist	COUNTY	ROUTE	POST MILES TOTAL PROJECT	SHEET No.	TOTAL SHEETS
04	SF	101	8.2/9.2	208	654

Lionel J. Sudds 10-8-09
REGISTERED ELECTRICAL ENGINEER DATE

12-14-09
PLANS APPROVAL DATE

REGISTERED PROFESSIONAL ENGINEER
Lionel J. Sudds
No. 15201
Exp 6-30-10
ELECT
STATE OF CALIFORNIA

THE STATE OF CALIFORNIA OR ITS OFFICERS OR AGENTS SHALL NOT BE RESPONSIBLE FOR THE ACCURACY OR COMPLETENESS OF SCANNED COPIES OF THIS PLAN SHEET.

CALIFORNIA STATE FIRE MARSHAL APPROVED
Approval of this plan does not authorize or approve any omission or deviation from applicable regulations. Final approval is subject to field inspection. One set of approved plans shall be available on the project site at all times.
Reviewed by: STEPHEN GUARINO
Approval date: 12-14-09

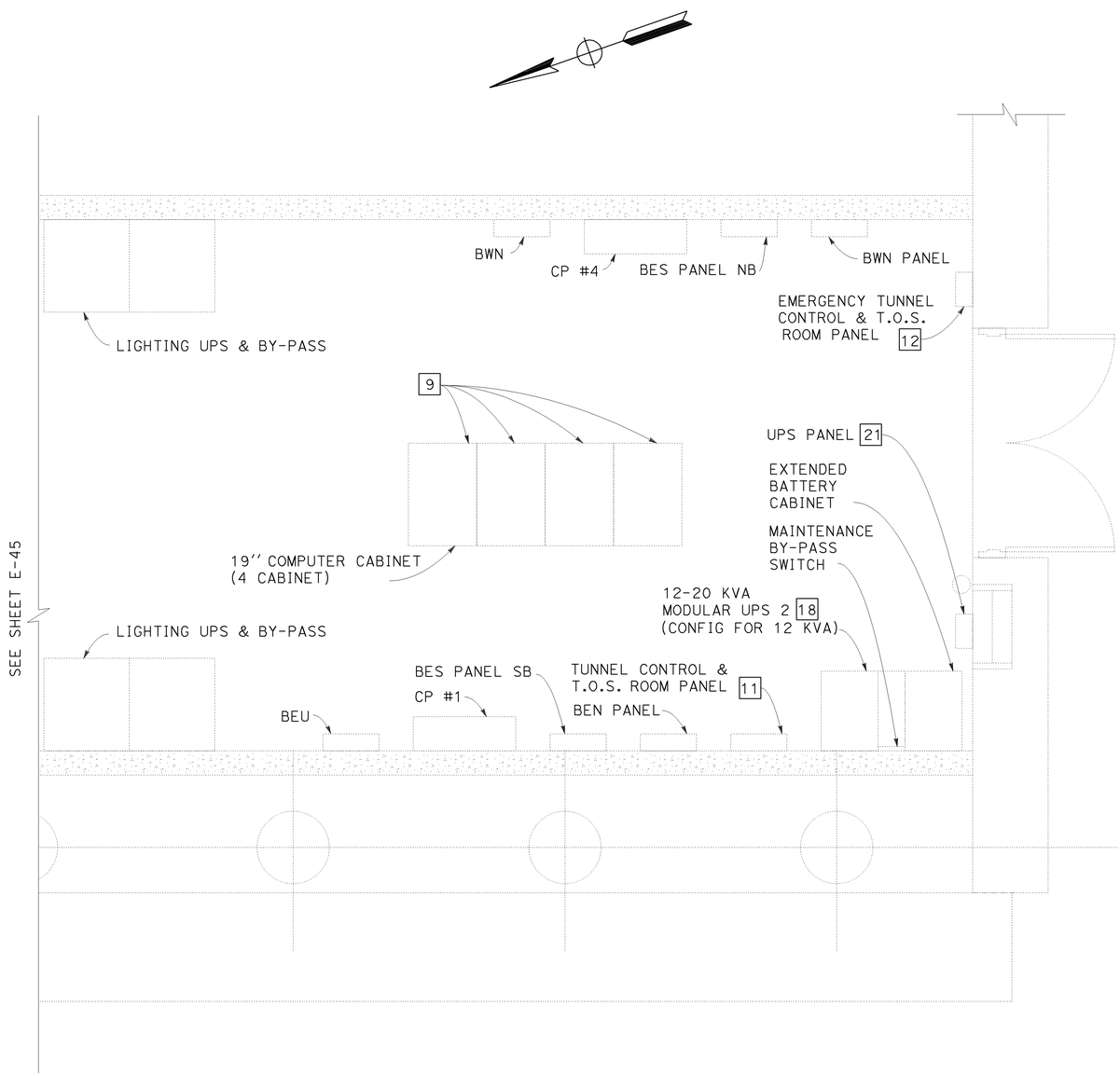

BATTERY SUBSTATION AND TUNNEL WORK

(EQUIPMENT & UNDERGROUND CONDUIT LAYOUT OF TUNNEL CONTROL SECTION IN BATTERY SUBSTATION)

SCALE: 1" = 2'

THIS PLAN IS ACCURATE FOR ELECTRICAL WORK ONLY

E-46

STATE OF CALIFORNIA - DEPARTMENT OF TRANSPORTATION
ELECTRICAL
FUNCTIONAL SUPERVISOR: BEHZAD GOLEMOHAMMADI
CALCULATED-DESIGNED BY: LIONEL J. SUDDS
CHECKED BY: LIONEL J. SUDDS
REVISED BY: LS
DATE REVISED: 8/01/09

LAST REVISION DATE PLOTTED => 14-DEC-2009
TIME PLOTTED => 15:57

BORDER LAST REVISED 4/11/2008
RELATIVE BORDER SCALE IS IN INCHES 0 1 2 3
USERNAME => trlenard
DGN FILE => 416374ua046.dgn
CU 04242
EA 163741

Dist	COUNTY	ROUTE	POST MILES TOTAL PROJECT	SHEET No.	TOTAL SHEETS
04	SF	101	8.2/9.2	209	654

REGISTERED ELECTRICAL ENGINEER 10-8-09 DATE

12-14-09
PLANS APPROVAL DATE

REGISTERED PROFESSIONAL ENGINEER Lionel J. Sudds No. 15201 Exp. 6-30-10 ELECT STATE OF CALIFORNIA

THE STATE OF CALIFORNIA OR ITS OFFICERS OR AGENTS SHALL NOT BE RESPONSIBLE FOR THE ACCURACY OR COMPLETENESS OF SCANNED COPIES OF THIS PLAN SHEET.

CALIFORNIA STATE FIRE MARSHAL APPROVED
Approval of this plan does not authorize or approve any omission or deviation from applicable regulations. Final approval is subject to field inspection. One set of approved plans shall be available on the project site at all times.
Reviewed by: STEPHEN GUARINO
Approval date: 12-14-09

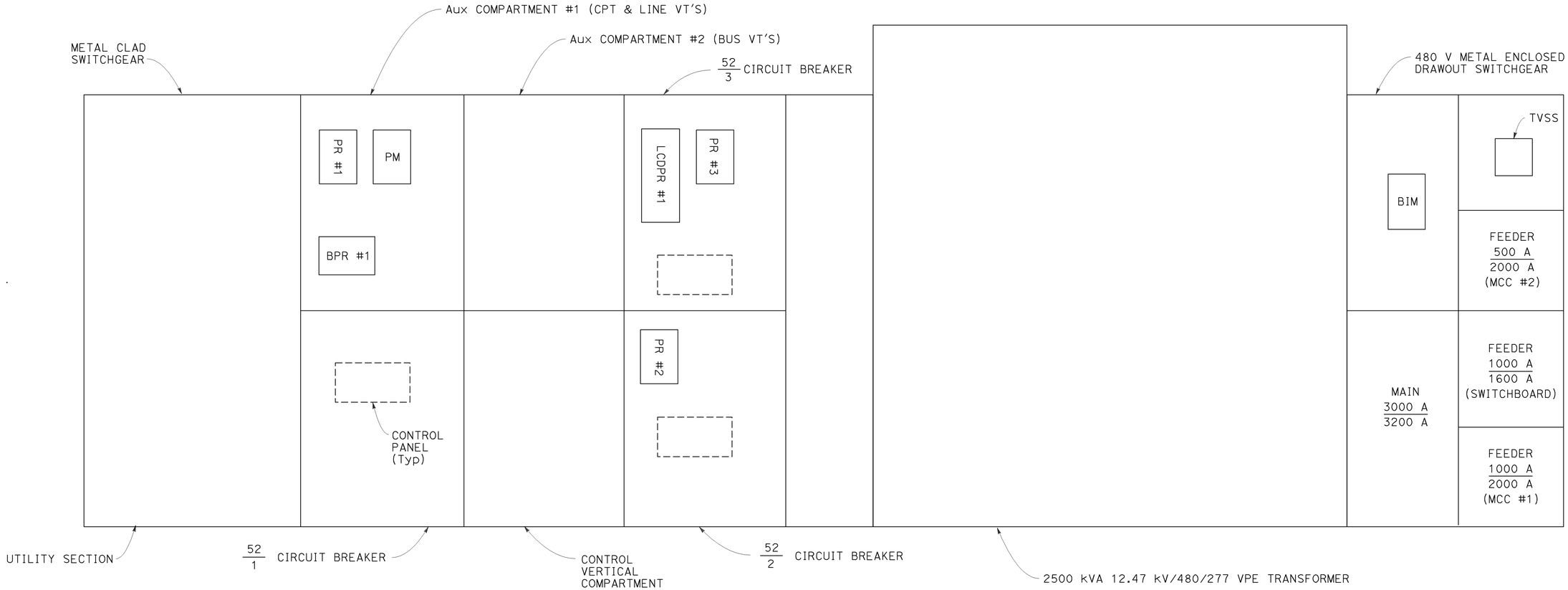

BATTERY SUBSTATION AND TUNNEL WORK
(SECONDARY UNIT SUBSTATION)

NO SCALE

E-47

STATE OF CALIFORNIA - DEPARTMENT OF TRANSPORTATION
Caltrans
ELECTRICAL

FUNCTIONAL SUPERVISOR: BEHZAD GOLEMOHAMMADI
CALCULATED-DESIGNED BY: LIONEL J. SUDDS
CHECKED BY: LIONEL J. SUDDS
REVISED BY: LS
DATE REVISED: 8/01/09

LAST REVISION 10-09-09
DATE PLOTTED => 14-DEC-2009
TIME PLOTTED => 15:57

Dist	COUNTY	ROUTE	POST MILES TOTAL PROJECT	SHEET No.	TOTAL SHEETS
04	SF	101	8.2/9.2	210	654

REGISTERED ELECTRICAL ENGINEER 10-8-09 DATE

12-14-09
PLANS APPROVAL DATE

REGISTERED PROFESSIONAL ENGINEER Lionel J. Sudds No. 15201 Exp. 6-30-10 ELECT STATE OF CALIFORNIA

THE STATE OF CALIFORNIA OR ITS OFFICERS OR AGENTS SHALL NOT BE RESPONSIBLE FOR THE ACCURACY OR COMPLETENESS OF SCANNED COPIES OF THIS PLAN SHEET.

CALIFORNIA STATE FIRE MARSHAL APPROVED

Approval of this plan does not authorize or approve any omission or deviation from applicable regulations. Final approval is subject to field inspection. One set of approved plans shall be available on the project site at all times.

Reviewed by: STEPHEN GUARINO

Approval date: 12-14-09

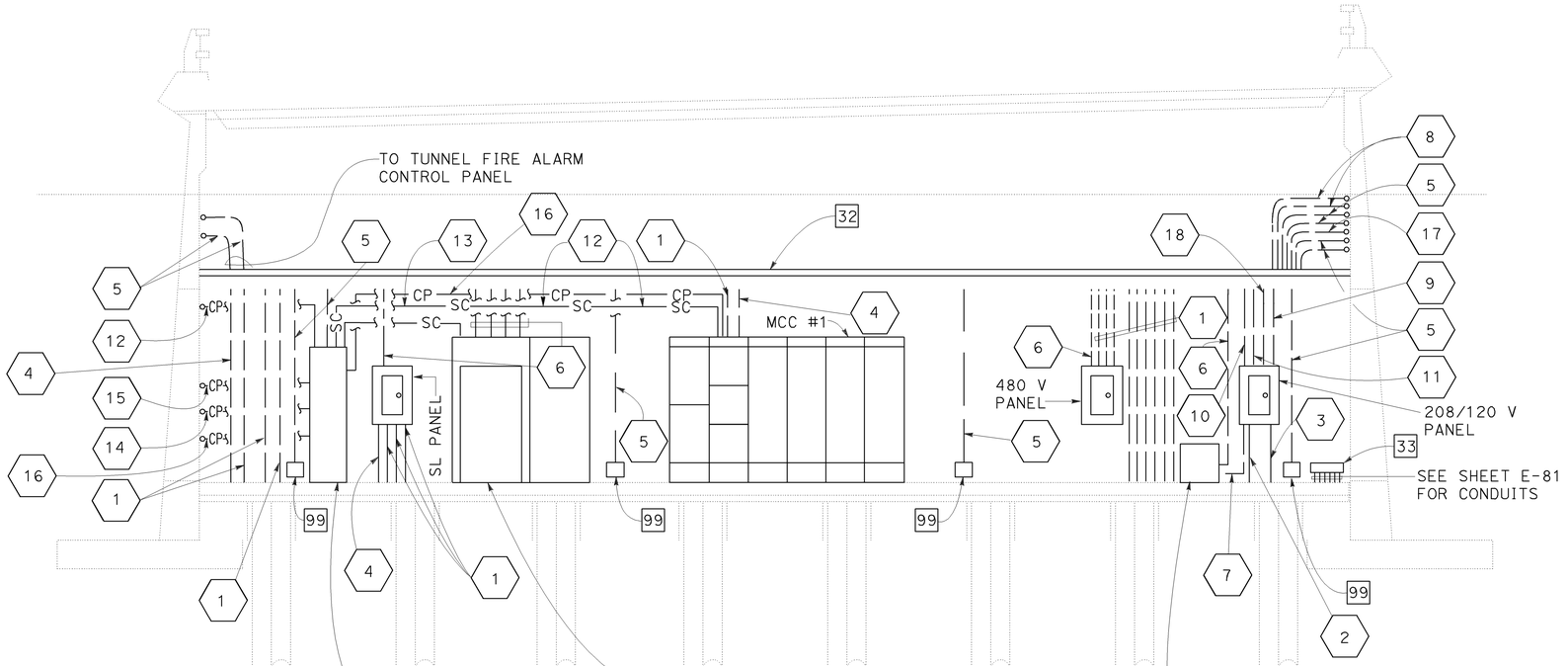

SECTION B-B

NOTES: (THIS SHEET ONLY)

1. INSTALL 4'' C, MT
2. INSTALL 4''C, 3#12 CONDUCTORS.
3. INSTALL 3''C, 4#3/0 CONDUCTORS.
4. INSTALL 4''C, 4#4 CONDUCTORS.
5. INSTALL ¾''C, 3#12 CONDUCTORS.
6. INSTALL 4''C, 5#300 Kcmil CONDUCTORS.
7. INSTALL 4''C, 5#350 Kcmil CONDUCTORS.
8. INSTALL ¾''C, 4#10 CONDUCTORS.
9. INSTALL 3''C, 8#10 CONDUCTORS FOR SUBSTATION FANS.
10. INSTALL 2''C, 15#12 CONDUCTORS FOR LIGHTING AND OPPOSITE SIDE WALL RECEPTACLES.
11. INSTALL 1½''C, 3#12 CONDUCTORS FOR THE SUBSTATION FIRE ALARM PANEL AND 3#6 FOR INVERTER.
12. INSTALL 2''C, 1-100#19 CONDUCTOR CABLE.
13. INSTALL 1½''C, 1-30#19 CONDUCTOR CABLE.
14. INSTALL ¾''C, 1-2#16 CONDUCTOR CABLE.
15. INSTALL 1½''C, 1-50#19 CONDUCTOR CABLE.
16. INSTALL ¾''C, 1-2#14 CONDUCTOR CABLE (FOR PEU CONTROL).
17. INSTALL 1½''C, 3#6.
18. INSTALL 1½''C, 9#12.

BATTERY SUBSTATION AND TUNNEL WORK
(ELEVATION)

SCALE: ¼'' = 1'

E-48

STATE OF CALIFORNIA - DEPARTMENT OF TRANSPORTATION
Caltrans
ELECTRICAL

FUNCTIONAL SUPERVISOR: BEHZAD GOLEMOHAMMADI
CALCULATED-DESIGNED BY: LIONEL J. SUDDS
CHECKED BY: LIONEL J. SUDDS
REVISED BY: LS
DATE REVISED: 8/01/09

LAST REVISION 11-02-09
DATE PLOTTED => 14-DEC-2009
TIME PLOTTED => 15:57

BORDER LAST REVISED 4/11/2008
RELATIVE BORDER SCALE IS IN INCHES 0 1 2 3
USERNAME => trlenard
DGN FILE => 416374ua048.dgn
CU 04242
EA 163741

Dist	COUNTY	ROUTE	POST MILES TOTAL PROJECT	SHEET No.	TOTAL SHEETS
04	SF	101	8.2/9.2	211	654

Lionel J. Sudds 10-8-09
REGISTERED ELECTRICAL ENGINEER DATE

12-14-09
PLANS APPROVAL DATE

REGISTERED PROFESSIONAL ENGINEER — Lionel J. Sudds No. 15201 Exp 6-30-10 ELECT — STATE OF CALIFORNIA

THE STATE OF CALIFORNIA OR ITS OFFICERS OR AGENTS SHALL NOT BE RESPONSIBLE FOR THE ACCURACY OR COMPLETENESS OF SCANNED COPIES OF THIS PLAN SHEET.

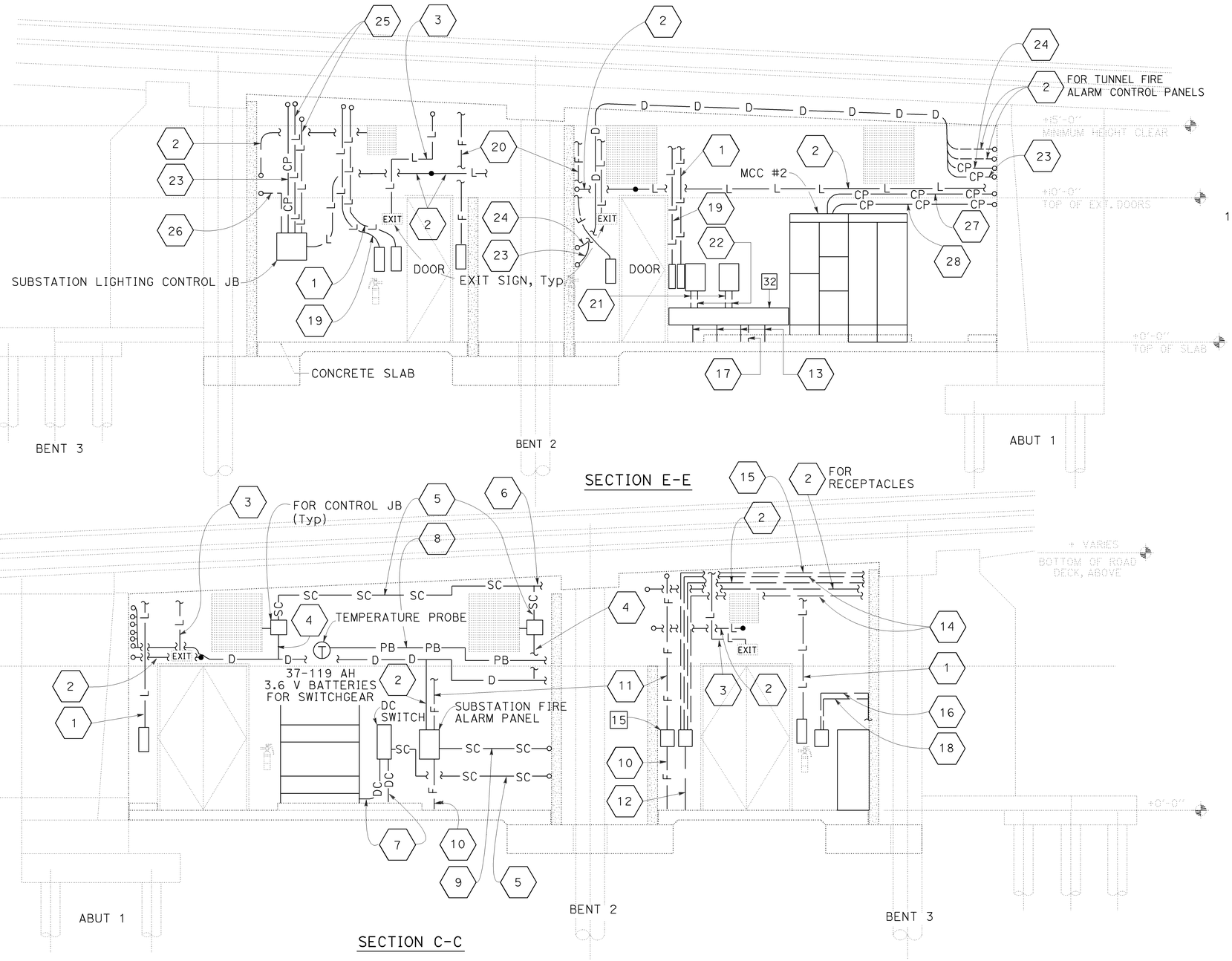

GENERAL NOTE: (THIS SHEET ONLY)

1. INSTALL CONDUITS WITH CONDUCTORS AND CABLES AS SHOWN ON THE PLAN VIEWS TO THE EQUIPMENT SHOWN ON THIS SHEET.

NOTES: (THIS SHEET ONLY)

1. INSTALL ¾''C, 7#12 CONDUCTORS (3 FOR MAIN LIGHTS WITH 1 FOR EGC; AND 4 FOR THE MAIN LIGHT SWITCH WITH 1 FOR EGC).
2. INSTALL ¾''C, 3#12 CONDUCTORS.
3. INSTALL ¾''C, 3#12 CONDUCTORS (2 FOR EXIT LIGHTS WITH 1 FOR EGC).
4. INSTALL ¾''C, 4#10 CONDUCTORS.
5. INSTALL ¾''C, 1-2#18 CONDUCTOR CABLE FOR FAN CONTROL.
6. INSTALL ¾''C, 2-2#18 CONDUCTOR CABLES.
7. INSTALL 1½''C, 3#6 CONDUCTORS.
8. INSTALL ¾''C, 1-TEMPERATURE PROBE CONDUCTOR CABLE.
9. INSTALL ¾''C, 1-4#18 CONDUCTOR CABLE.
10. INSTALL 2''C, 3-FIRE ALARM CABLES, AND 1#12 CONDUCTORS FOR EGC.
11. INSTALL ¾''C, 3-FIRE ALARM CABLES.
12. INSTALL 1½''C, 3#8 CONDUCTORS.
13. INSTALL 4''C, 1-SLC.
14. ¾''C, MT
15. INSTALL ¾''C, 3#12 CONDUCTORS (3 FOR EMERGENCY LIGHTS WITH 1 FOR EGC).
16. INSTALL 1½''C, 4#2 CONDUCTORS.
17. INSTALL 3''C, 3-ETHERNET CABLES, 2-RS-485 CABLES AND 2-RS-232 CABLES.
18. INSTALL 2''C, 12#2 CONDUCTORS.
19. INSTALL ¾''C, 6#12 CONDUCTORS (6 FOR EMERGENCY LIGHTS WITH 2 FOR EGC).
20. INSTALL ¾''C, 1-FIRE ALARM CABLES.
21. INSTALL 2''C, 2-SLC.
22. INSTALL 2''C, 1-ETHERNET CABLES, 1-RS-485 CABLE AND 1-RS-232 CABLE.
23. INSTALL 1''C, 2-4#16 CONDUCTOR CABLE.
24. INSTALL 2''C, 1-100#19 CONDUCTOR CABLE.
25. INSTALL ¾''C, 6#12 CONDUCTORS (3 FOR MAIN LIGHTS WITH 1 FOR EGC; AND 3 FOR EMERGENCY LIGHTS WITH 1 FOR EGC).
26. INSTALL ¾''C, 9#12 CONDUCTOR.
27. INSTALL 1½''C, 1-50#19 CONDUCTOR CABLE.
28. INSTALL ¾''C, 1-2#14 CONDUCTOR CABLE (FOR PEU CONTROL).

CALIFORNIA STATE FIRE MARSHAL APPROVED
Approval of this plan does not authorize or approve any omission or deviation from applicable regulations. Final approval is subject to field inspection. One set of approved plans shall be available on the project site at all times.
Reviewed by: STEPHEN GUARINO
Approval date: 12-14-09

BATTERY SUBSTATION AND TUNNEL WORK (ELEVATION)

SCALE: ¼'' = 1'

E-49

REVISED BY	DATE REVISED
LS	8/01/09

CALCULATED- LIONEL J. SUDDS
DESIGNED BY LIONEL J. SUDDS
CHECKED BY

FUNCTIONAL SUPERVISOR: BEHZAD GOLEMOHAMMADI

STATE OF CALIFORNIA - DEPARTMENT OF TRANSPORTATION
Caltrans®
ELECTRICAL

LAST REVISION DATE PLOTTED => 14-DEC-2009
TIME PLOTTED => 15:57

BORDER LAST REVISED 4/11/2008
RELATIVE BORDER SCALE IS IN INCHES 0 1 2 3
USERNAME => trienard
DGN FILE => 416374ua049.dgn
CU 04242
EA 163741

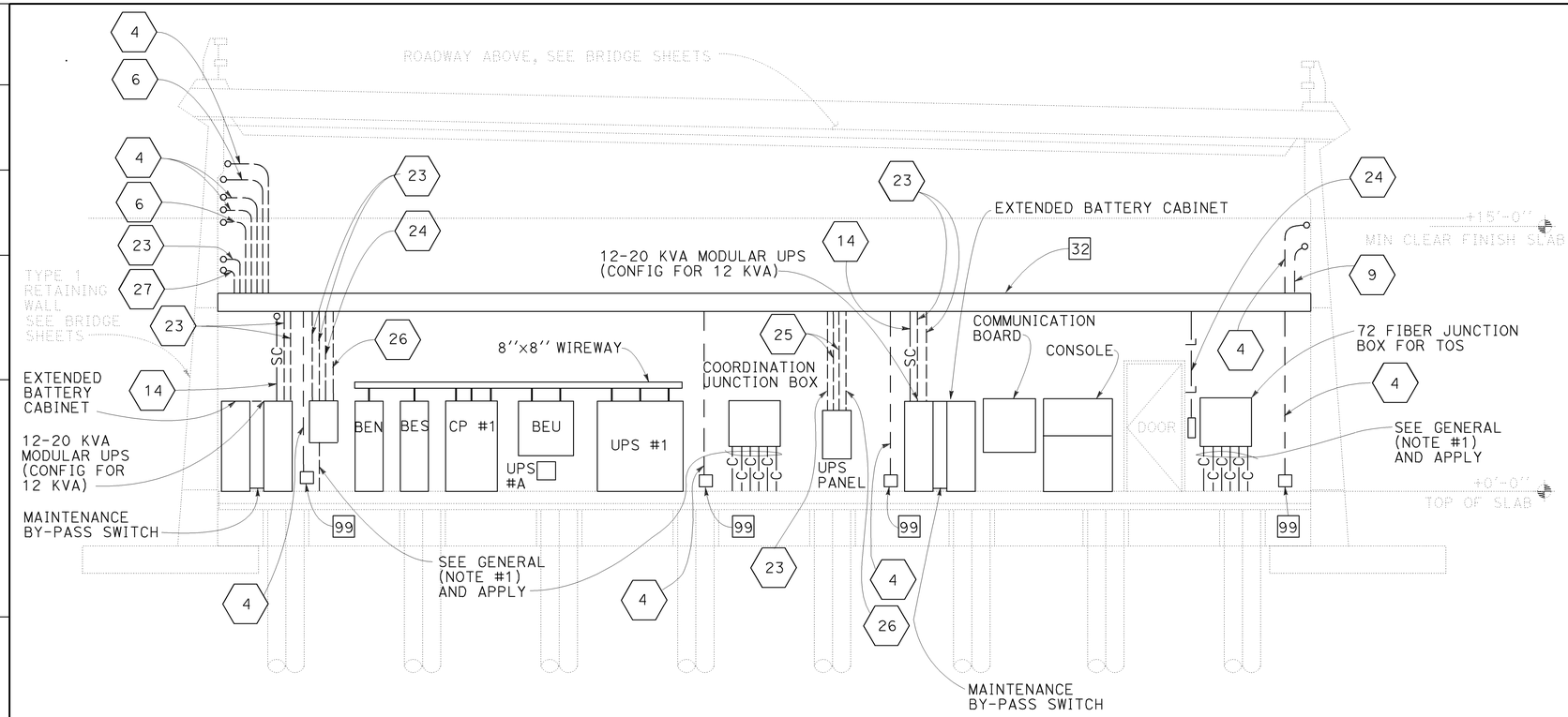

SECTION F-F

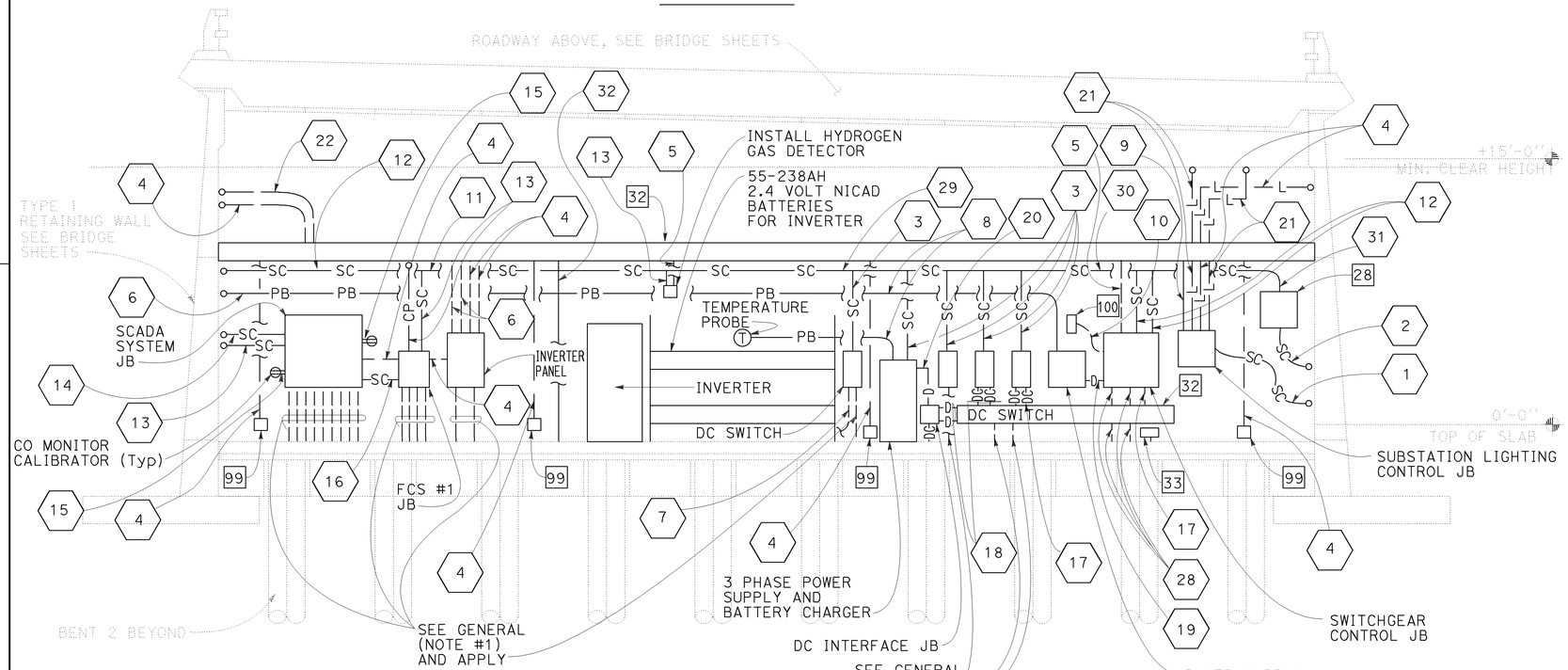

SECTION D-D

CALIFORNIA STATE FIRE MARSHAL APPROVED

Approval of this plan does not authorize or approve any omission or deviation from applicable regulations. Final approval is subject to field inspection. One set of approved plans shall be available on the project site at all times.

Reviewed by: STEPHEN GUARINO

Approval date: 12-14-09

Dist	COUNTY	ROUTE	POST MILES TOTAL PROJECT	SHEET No.	TOTAL SHEETS
04	SF	101	8.2/9.2	212	654

Lionel J. Sudds 10-8-09
REGISTERED ELECTRICAL ENGINEER DATE

12-14-09
PLANS APPROVAL DATE

REGISTERED PROFESSIONAL ENGINEER — Lionel J. Sudds No. 15201 Exp 6-30-10 ELECT — STATE OF CALIFORNIA

THE STATE OF CALIFORNIA OR ITS OFFICERS OR AGENTS SHALL NOT BE RESPONSIBLE FOR THE ACCURACY OR COMPLETENESS OF SCANNED COPIES OF THIS PLAN SHEET.

GENERAL NOTE: (THIS SHEET ONLY)

1. INSTALL CONDUITS WITH CONDUCTORS AND CABLES AS SHOWN ON THE PLAN VIEWS TO THE EQUIPMENT SHOWN ON THIS SHEET.

NOTES: (THIS SHEET ONLY)

1. INSTALL 1'' C, 2-4#16 CONDUCTOR CABLE.
2. INSTALL 2''C, 1-100#19 CONDUCTOR CABLE.
3. INSTALL ¾''C, 1-2#19 CONDUCTOR CABLE.
4. INSTALL ¾''C, 3#12 CONDUCTORS.
5. INSTALL ¾''C, 3#12 CONDUCTORS AND 1-2#16 CONDUCTOR CABLE.
6. INSTALL¾''C, MT.
7. INSTALL 1½''C, 3#1 CONDUCTORS.
8. INSTALL ¾''C, 1-TEMPERATURE PROBE CABLE.
9. INSTALL¾''C, 9#12 CONDUCTORS FOR LIGHTING SYSTEMS.
10. INSTALL 2½''C, 7#1 CONDUCTORS.
11. INSTALL 1½''C, 3-2#18 CONDUCTORS CABLES.
12. INSTALL¾''C, 2-2#18 CONDUCTOR CABLES.
13. INSTALL¾''C, 1-2#18 CONDUCTOR CABLE.
14. INSTALL ¾''C, 1-4#18 CONDUCTOR CABLE.
15. INSTALL¾''C, 2#12 CONDUCTORS, 1- ETHERNET CABLE, AND 1-RS-485 CABLE.
16. INSTALL 1½''C, 1-30#18 CONDUCTOR CABLES
17. INSTALL 1½''C, 3#6 CONDUCTORS.
18. INSTALL 2''C, 3#1 CONDUCTORS.
19. INSTALL 1''C, 3#12 CONDUCTORS; 1''C, 1-1P#16 CONDUCTOR CABLE (STP) (FOR REMOTE VOLTAGE SENSOR); 1''C, 1-2#18 CONDUCTOR CABLE AND 1''C, 1-2#18
20. INSTALL 1''C, 1-1P#16 CONDUCTOR CABLE (STP) (FOR REMOTE VOLTAGE SENSOR); 1½''C, 2#1 CONDUCTORS.
21. INSTALL ¾''C, 6#12 CONDUCTORS (3 FOR MAIN LIGHTS WITH 1 FOR EGC AND 3 FOR EMERGENCY LIGHTS WITH 1 FOR EGC)
22. INSTALL ¾''C, 9#12 CONDUCTORS.
23. INSTALL 1½''C, 4#2 CONDUCTORS.
24. INSTALL ¾''C, 6#12 CONDUCTORS FOR LIGHTING SYSTEM.
25. INSTALL 1½''C, 9#12 CONDUCTORS.
26. INSTALL 1½''C, 6#12 CONDUCTORS.
27. INSTALL 2''C, 12#12 CONDUCTORS.
28. INSTALL 4''C, 3#4/0 CONDUCTORS.
29. INSTALL 1½''C, 4-2#18 CONDUCTORS CABLES.
30. INSTALL 1½''C, 4-2#18 CONDUCTORS CABLES AND 5-2#19 CONDUCTOR CABLES.
31. INSTALL 1½''C, 6-2#18 CONDUCTORS CABLES AND 5-2#19 CONDUCTOR CABLES.
32. INSTALL 1½''C, 3#6.

BATTERY SUBSTATION AND TUNNEL WORK
(ELEVATION)

SCALE: ¼'' = 1'

E-50

LAST REVISION DATE PLOTTED => 14-DEC-2009
11-02-09 TIME PLOTTED => 5:57

STATE OF CALIFORNIA - DEPARTMENT OF TRANSPORTATION
ELECTRICAL
FUNCTIONAL SUPERVISOR: BEHZAD GOLEMOHAMMADI
CALCULATED-DESIGNED BY: LS 8/01/09
CHECKED BY: LIONEL J. SUDDS
REVISED BY / DATE REVISED: LIONEL J. SUDDS

BORDER LAST REVISED 4/11/2008

RELATIVE BORDER SCALE IS IN INCHES 0 1 2 3

USERNAME => trlenard
DGN FILE => 416374ua050.dgn

CU 04242

EA 163741

Dist	COUNTY	ROUTE	POST MILES TOTAL PROJECT	SHEET No.	TOTAL SHEETS
04	SF	101	8.2/9.2	213	654

REGISTERED ELECTRICAL ENGINEER DATE

12-14-09
PLANS APPROVAL DATE

REGISTERED PROFESSIONAL ENGINEER
No.
Exp.
ELECT
STATE OF CALIFORNIA

THE STATE OF CALIFORNIA OR ITS OFFICERS OR AGENTS SHALL NOT BE RESPONSIBLE FOR THE ACCURACY OR COMPLETENESS OF SCANNED COPIES OF THIS PLAN SHEET.

LEFT INTENTIONALLY BLANK

REVISED BY
DATE REVISED
CALCULATED-DESIGNED BY
CHECKED BY
FUNCTIONAL SUPERVISOR

STATE OF CALIFORNIA - DEPARTMENT OF TRANSPORTATION
Caltrans
ELECTRICAL

BATTERY SUBSTATION AND TUNNEL WORK

NO SCALE

E-51

LAST REVISION 11-10-09
DATE PLOTTED => 14-DEC-2009
TIME PLOTTED => 15:57

Dist	COUNTY	ROUTE	POST MILES TOTAL PROJECT	SHEET No.	TOTAL SHEETS
04	SF	101	8.2/9.2	214	654

Lionel J. Sudds 10-8-09
REGISTERED ELECTRICAL ENGINEER DATE

12-14-09
PLANS APPROVAL DATE

REGISTERED PROFESSIONAL ENGINEER
Lionel J. Sudds
No. 15201
Exp 6-30-10
ELECT
STATE OF CALIFORNIA

THE STATE OF CALIFORNIA OR ITS OFFICERS OR AGENTS SHALL NOT BE RESPONSIBLE FOR THE ACCURACY OR COMPLETENESS OF SCANNED COPIES OF THIS PLAN SHEET.

CALIFORNIA STATE FIRE MARSHAL APPROVED

Approval of this plan does not authorize or approve any omission or deviation from applicable regulations. Final approval is subject to field inspection. One set of approved plans shall be available on the project site at all times.

Reviewed by: STEPHEN GUARINO

Approval date: 12-14-09

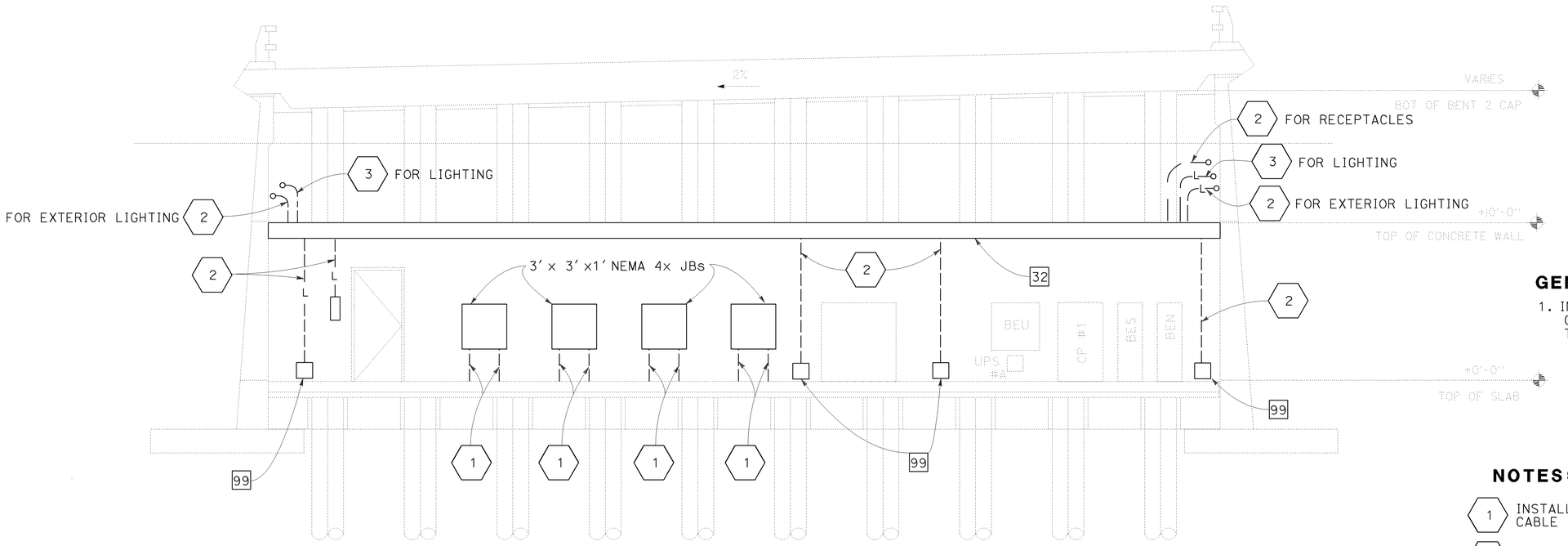

SECTION G-G

GENERAL NOTE: (THIS SHEET ONLY)

1. INSTALL CONDUITS WITH CONDUCTORS AND CABLES AS SHOWN ON THE PLAN VIEWS TO THE EQUIPMENT SHOWN ON THIS SHEET.

NOTES: (THIS SHEET ONLY)

1. INSTALL 4"C, 1-36 FIBER SM FO CABLE AND 1-24 FIBER SM FO CABLE.
2. INSTALL ¾"C, 3#12 CONDUCTORS.
3. INSTALL ¾"C; 10#12 CONDUCTORS (4 FOR MAIN LIGHTS WITH 1 FOR EGC; 3 FOR EMERGENCY LIGHTS WITH 1 FOR EGC; AND 3 FOR EXIT LIGHTS WITH 1 FOR EGC).

BATTERY SUBSTATION AND TUNNEL WORK
(ELEVATION)

SCALE: ¼" = 1'

E-52

CALCULATED-DESIGNED BY	REVISED BY	LS
CHECKED BY	DATE REVISED	8/01/09
LIONEL J. SUDDS		
LIONEL J. SUDDS		

FUNCTIONAL SUPERVISOR: BEHZAD GOLEMOHAMMADI

STATE OF CALIFORNIA - DEPARTMENT OF TRANSPORTATION
ELECTRICAL

LAST REVISION DATE PLOTTED => 14-DEC-2009
TIME PLOTTED => 15:57
10-30-09

BORDER LAST REVISED 4/11/2008

RELATIVE BORDER SCALE IS IN INCHES 0 1 2 3

USERNAME => trlenard
DGN FILE => 416374ua052.dgn

CU 04242

EA 163741

Dist	COUNTY	ROUTE	POST MILES TOTAL PROJECT	SHEET No.	TOTAL SHEETS
04	SF	101	8.2/9.2	215	654

Lionel J Sudds 10-8-09
REGISTERED ELECTRICAL ENGINEER DATE

12-14-09
PLANS APPROVAL DATE

REGISTERED PROFESSIONAL ENGINEER — Lionel J. Sudds No. 15201 Exp 6-30-10 ELECT — STATE OF CALIFORNIA

THE STATE OF CALIFORNIA OR ITS OFFICERS OR AGENTS SHALL NOT BE RESPONSIBLE FOR THE ACCURACY OR COMPLETENESS OF SCANNED COPIES OF THIS PLAN SHEET.

CALIFORNIA STATE FIRE MARSHAL APPROVED
Approval of this plan does not authorize or approve any omission or deviation from applicable regulations. Final approval is subject to field inspection. One set of approved plans shall be available on the project site at all times.
Reviewed by: STEPHEN GUARINO
Approval date: 12-14-09

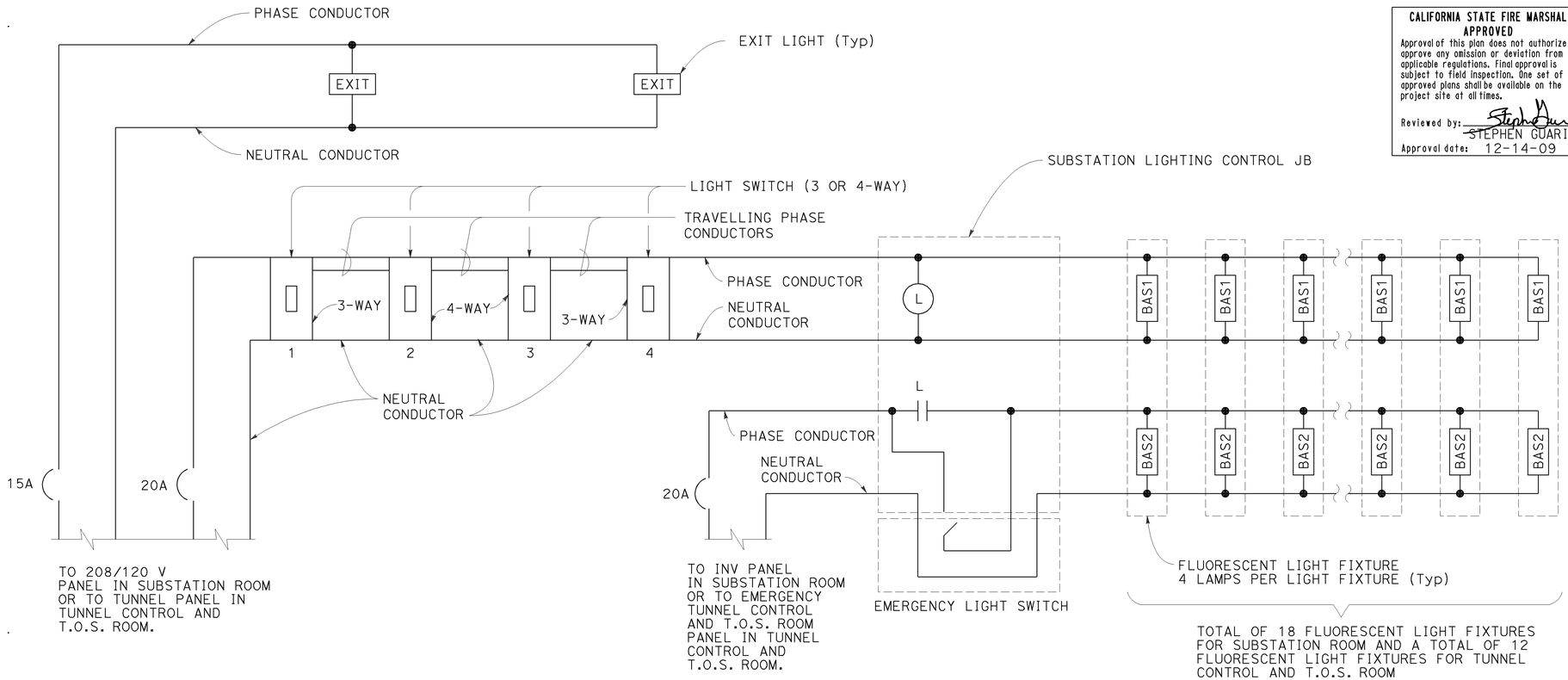

SUBSTATION LIGHTING SYSTEM

GENERAL NOTES: (THIS SHEET ONLY)

1. SUBSTATION LIGHTING SYSTEM CONDUCTOR SHALL BE #12 THW CONDUCTORS.
2. THE SUBSTATION SMOKE DETECTORS, FIRE PULLSTATION, AND THE FIRE ALARM SIREN SHALL BE CLASS B WIRING TO THE SUBSTATION FIRE ALARM PANEL
3. THE FOLLOWING ARE FOR THE LIGHT SWITCH LOCATION:.
   - 1- FOR SUBSTATION, OR TUNNEL CONTROL AND T.O.S. ROOM EQUIPMENT DOOR.
   - 2- FOR THE DOOR BETWEEN THE BENT 2 AND THE T.O.S. SECTION.
   - 3- FOR THE DOOR BETWEEN THE BENT 3 AND THE T.O.S. SECTION.
   - 4- FOR SUBSTATION, OR TUNNEL CONTROL AND THE T.O.S. ROOM PERSONNEL DOOR.
   - 5- INSTALL LIGHTING CONTACTORS L AND WL IN SUBSTATION LIGHTING CONTROL JB.

SYMBOLS: THIS SHEET ONLY.

BAS1	BALLAST FOR LAMPS 1 AND 2 OF THE FLUORESCENT LIGHT FIXTURE ON MAIN SUBSTATION BUILDING POWER.
BAS2	BALLAST FOR LAMPS 3 AND 4 OF THE FLUORESCENT LIGHT FIXTURE ON INVERTER POWER.

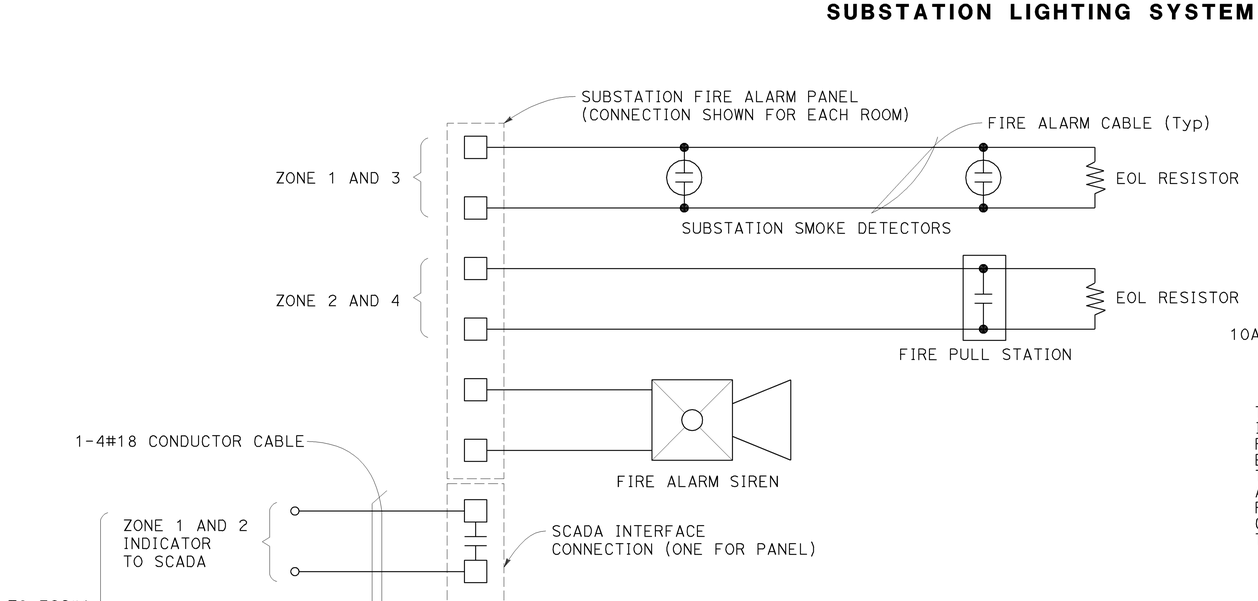

SUBSTATION FIRE ALARM SYSTEM

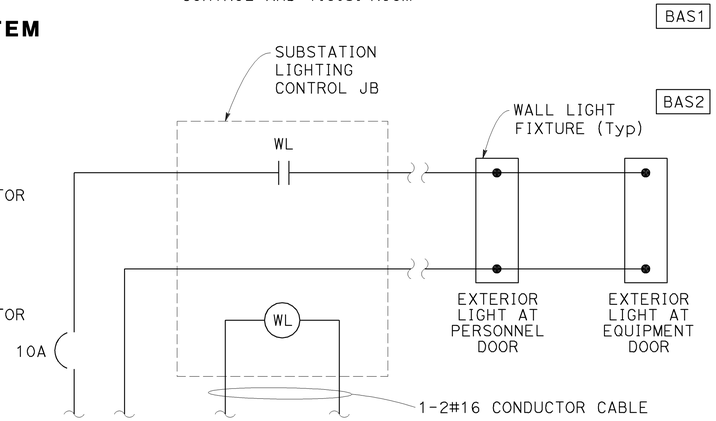

EXTERIOR LIGHTING SYSTEM
(TYPICAL FOR BOTH ROOM)

BATTERY SUBSTATION AND TUNNEL WORK
(WIRING AND CONNECTION OF SUBSTATION FIRE ALARM AND LIGHTING SYSTEM)

NO SCALE

E-53

STATE OF CALIFORNIA - DEPARTMENT OF TRANSPORTATION
ELECTRICAL
FUNCTIONAL SUPERVISOR: BEHZAD GOLEMOHAMMADI
CALCULATED-DESIGNED BY: LIONEL J. SUDDS
CHECKED BY: LIONEL J. SUDDS
REVISED BY: LS
DATE REVISED: 8/01/09
DATE PLOTTED => 14-DEC-2009
TIME PLOTTED => 15:57
LAST REVISION: 10-28-09

BORDER LAST REVISED 4/11/2008
RELATIVE BORDER SCALE IS IN INCHES 0 1 2 3
USERNAME => trlenard
DGN FILE => 416374ua053.dgn
CU 04242
EA 163741

Dist	COUNTY	ROUTE	POST MILES TOTAL PROJECT	SHEET No.	TOTAL SHEETS
04	SF	101	8.2/9.2	216	654

Lionel J. Sudds 10-8-09
REGISTERED ELECTRICAL ENGINEER DATE

12-14-09
PLANS APPROVAL DATE

REGISTERED PROFESSIONAL ENGINEER — Lionel J. Sudds — No. 15201 — Exp 6-30-10 — ELECT — STATE OF CALIFORNIA

THE STATE OF CALIFORNIA OR ITS OFFICERS OR AGENTS SHALL NOT BE RESPONSIBLE FOR THE ACCURACY OR COMPLETENESS OF SCANNED COPIES OF THIS PLAN SHEET.

CALIFORNIA STATE FIRE MARSHAL APPROVED
Approval of this plan does not authorize or approve any omission or deviation from applicable regulations. Final approval is subject to field inspection. One set of approved plans shall be available on the project site at all times.
Reviewed by: STEPHEN GUARINO
Approval date: 12-14-09

WAN (FRAME RELAY)

T1 TO FO mux AT T.O.S. HUB

T.O.S. FO TRUNK LINE (12 FIBER PIGTAIL)

SUBMASTER SERVER

RACK-MOUNTED ETHERNET SWITCH (ES)

PAC #3

Exp I/O

PAC #1

REMOTE I/O

SCADA SUBMASTER & PAC #3 CABINET

TO LIGHTING SYSTEM (NORTHBOUND)

TO LIGHTING SYSTEM (SOUTHBOUND)

ES #1

ES #2

PAC #2

SCADA SYSTEM JB

TO NORTHBOUND TUNNEL

T.O.S. FO TRUNK LINE (12 FIBER PIGTAIL)

TO SOUTHBOUND TUNNEL

ANT

FWT (HSDPA)

IR

TO TELEPHONE (TOS)

TO TELEPHONE EXTENDER

COMMUNICATION BOARD (EQUIPMENT ON BOARD)

RACK-MOUNTED ES

T1 TO FO mux

ETHERNET ROUTER #1

ETHERNET ROUTER #2

F.O. CABINET FOR T.O.S.

RACK-MOUNTED ETHERNET SWITCH

CO CALIBRATION SERVER

F.O. CABINET FOR TUNNEL CONTROL

T.O.S. FO TRUNK LINE (12 FIBER PIGTAIL)

GENERAL NOTES: (THIS SHEET ONLY)

1. THE FOLLOWING ARE ADDITIONAL EQUIPMENT CONNECTED TO THE RACK-MOUNTED ES, ES #1 AND ES #2:
   - (A) -TELEPHONE EXTENDER
   - (B) -TUNNEL FIRE ALARM CONTROL PANEL #1
   - (C) -TUNNEL FIRE ALARM CONTROL PANEL #2
   - (D) -FIRE CONTROL DISPLAY STATION
   - (E) -SOUTHBOUND TUNNEL CO MONITOR CALIBRATOR
   - (S) -NORTHBOUND TUNNEL CO MONITOR CALIBRATOR
2. THE EQUIPMENT SHOWN ON THIS SHEET SHALL BE CONFIGURED IN ACCORDANCE TO THE NETWORK COMMUNICATION SYSTEM IN THE SPECIAL PROVISIONS.

NOTES: (THIS SHEET ONLY)

(1) 1000 BASE F CONNECTION USING SFP

(2) 1000 BASE TX CONNECTION

BATTERY SUBSTATION AND TUNNEL WORK
(DOYLE DRIVE NETWORK COMMUNICATION SYSTEM AND CONNECTION DIAGRAM)
IN BATTERY SUBSTATION

NO SCALE

E-54

CALCULATED-DESIGNED BY	CHECKED BY	REVISED BY	DATE REVISED
LIONEL J. SUDDS	LIONEL J. SUDDS	LS	8/01/09

FUNCTIONAL SUPERVISOR: BEHZAD GOLEMOHAMMADI

STATE OF CALIFORNIA - DEPARTMENT OF TRANSPORTATION
ELECTRICAL

LAST REVISION DATE PLOTTED => 14-DEC-2009
TIME PLOTTED => 15:57

BORDER LAST REVISED 4/11/2008

RELATIVE BORDER SCALE IS IN INCHES 0 1 2 3

USERNAME => trlenard
DGN FILE => 416374ua054.dgn

CU 04242

EA 163741

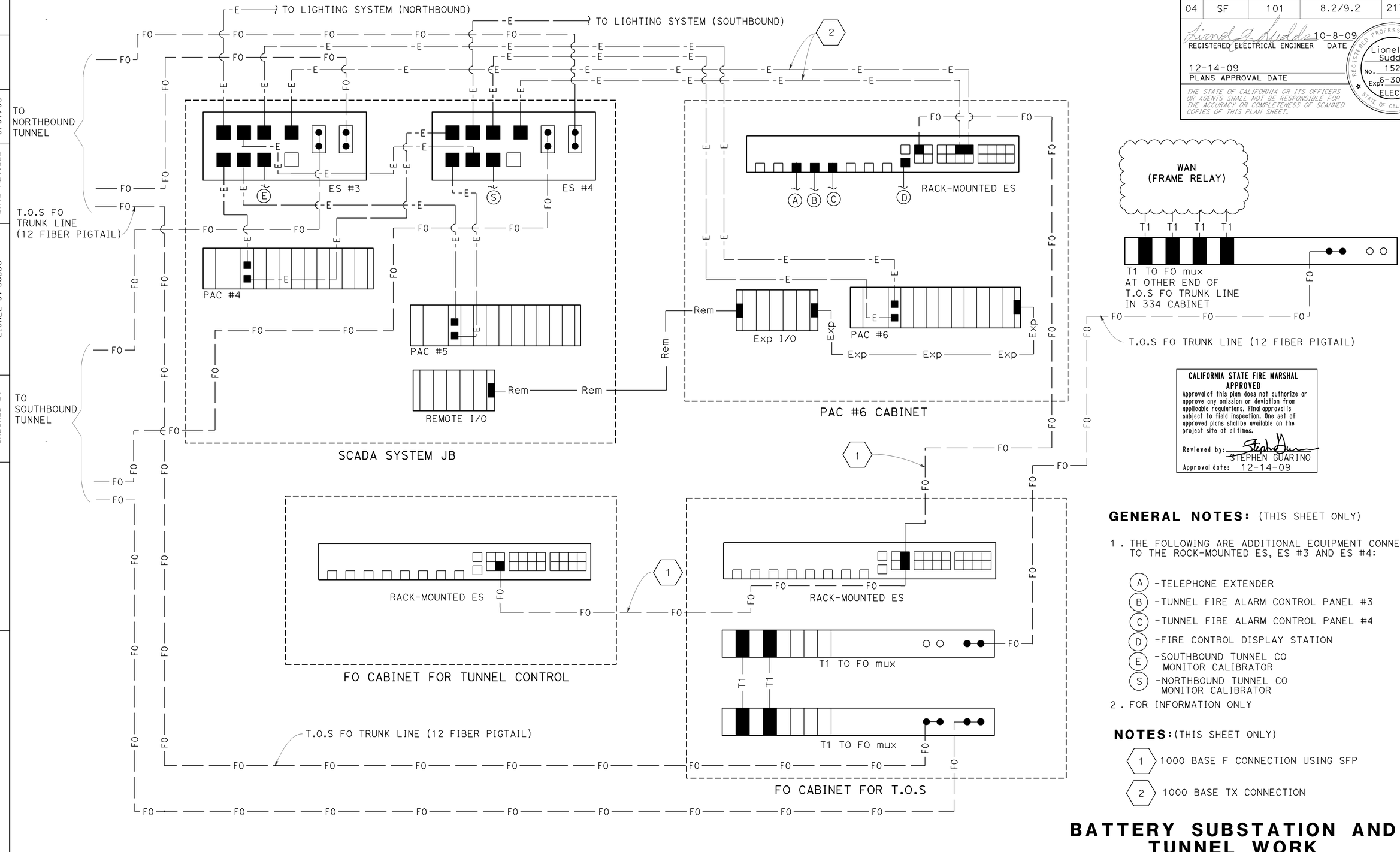

Dist	COUNTY	ROUTE	POST MILES TOTAL PROJECT	SHEET No.	TOTAL SHEETS
04	SF	101	8.2/9.2	217	654

Lionel J. Sudds 10-8-09
REGISTERED ELECTRICAL ENGINEER DATE

12-14-09
PLANS APPROVAL DATE

REGISTERED PROFESSIONAL ENGINEER — Lionel J. Sudds — No. 15201 — Exp 6-30-10 — ELECT — STATE OF CALIFORNIA

THE STATE OF CALIFORNIA OR ITS OFFICERS OR AGENTS SHALL NOT BE RESPONSIBLE FOR THE ACCURACY OR COMPLETENESS OF SCANNED COPIES OF THIS PLAN SHEET.

CALIFORNIA STATE FIRE MARSHAL APPROVED

Approval of this plan does not authorize or approve any omission or deviation from applicable regulations. Final approval is subject to field inspection. One set of approved plans shall be available on the project site at all times.

Reviewed by: STEPHEN GUARINO
Approval date: 12-14-09

GENERAL NOTES: (THIS SHEET ONLY)

1. THE FOLLOWING ARE ADDITIONAL EQUIPMENT CONNECTED TO THE ROCK-MOUNTED ES, ES #3 AND ES #4:
   - (A) -TELEPHONE EXTENDER
   - (B) -TUNNEL FIRE ALARM CONTROL PANEL #3
   - (C) -TUNNEL FIRE ALARM CONTROL PANEL #4
   - (D) -FIRE CONTROL DISPLAY STATION
   - (E) -SOUTHBOUND TUNNEL CO MONITOR CALIBRATOR
   - (S) -NORTHBOUND TUNNEL CO MONITOR CALIBRATOR
2. FOR INFORMATION ONLY

NOTES: (THIS SHEET ONLY)

(1) 1000 BASE F CONNECTION USING SFP

(2) 1000 BASE TX CONNECTION

BATTERY SUBSTATION AND TUNNEL WORK
(MAIN POST SUBSTATION DOYLE DRIVE NETWORK COMMUNICATION SYSTEM AND CONNECTION DIAGRAM)

NO SCALE

IN MAIN POST SUBSTATION

E-55

LAST REVISION DATE PLOTTED => 14-DEC-2009
TIME PLOTTED => 15:57
10-23-09

STATE OF CALIFORNIA - DEPARTMENT OF TRANSPORTATION
ELECTRICAL
FUNCTIONAL SUPERVISOR: BEHZAD GOLEMOHAMMADI
CALCULATED-DESIGNED BY: LIONEL J. SUDDS
CHECKED BY: LIONEL J. SUDDS
REVISED BY: LS
DATE REVISED: 8/01/09

BORDER LAST REVISED 4/11/2008
RELATIVE BORDER SCALE IS IN INCHES 0 1 2 3
USERNAME => trlenard
DGN FILE => 416374ua055.dgn
CU 04242
EA 163741

Dist	COUNTY	ROUTE	POST MILES TOTAL PROJECT	SHEET No.	TOTAL SHEETS
04	SF	101	8.2/9.2	218	654

Lionel J. Sudds 10-8-09
REGISTERED ELECTRICAL ENGINEER DATE

12-14-09
PLANS APPROVAL DATE

Lionel J. Sudds No. 15201 Exp 6-30-10 ELECT — REGISTERED PROFESSIONAL ENGINEER — STATE OF CALIFORNIA

THE STATE OF CALIFORNIA OR ITS OFFICERS OR AGENTS SHALL NOT BE RESPONSIBLE FOR THE ACCURACY OR COMPLETENESS OF SCANNED COPIES OF THIS PLAN SHEET.

CALIFORNIA STATE FIRE MARSHAL APPROVED
Approval of this plan does not authorize or approve any omission or deviation from applicable regulations. Final approval is subject to field inspection. One set of approved plans shall be available on the project site at all times.
Reviewed by: STEPHEN GUARINO
Approval date: 12-14-09

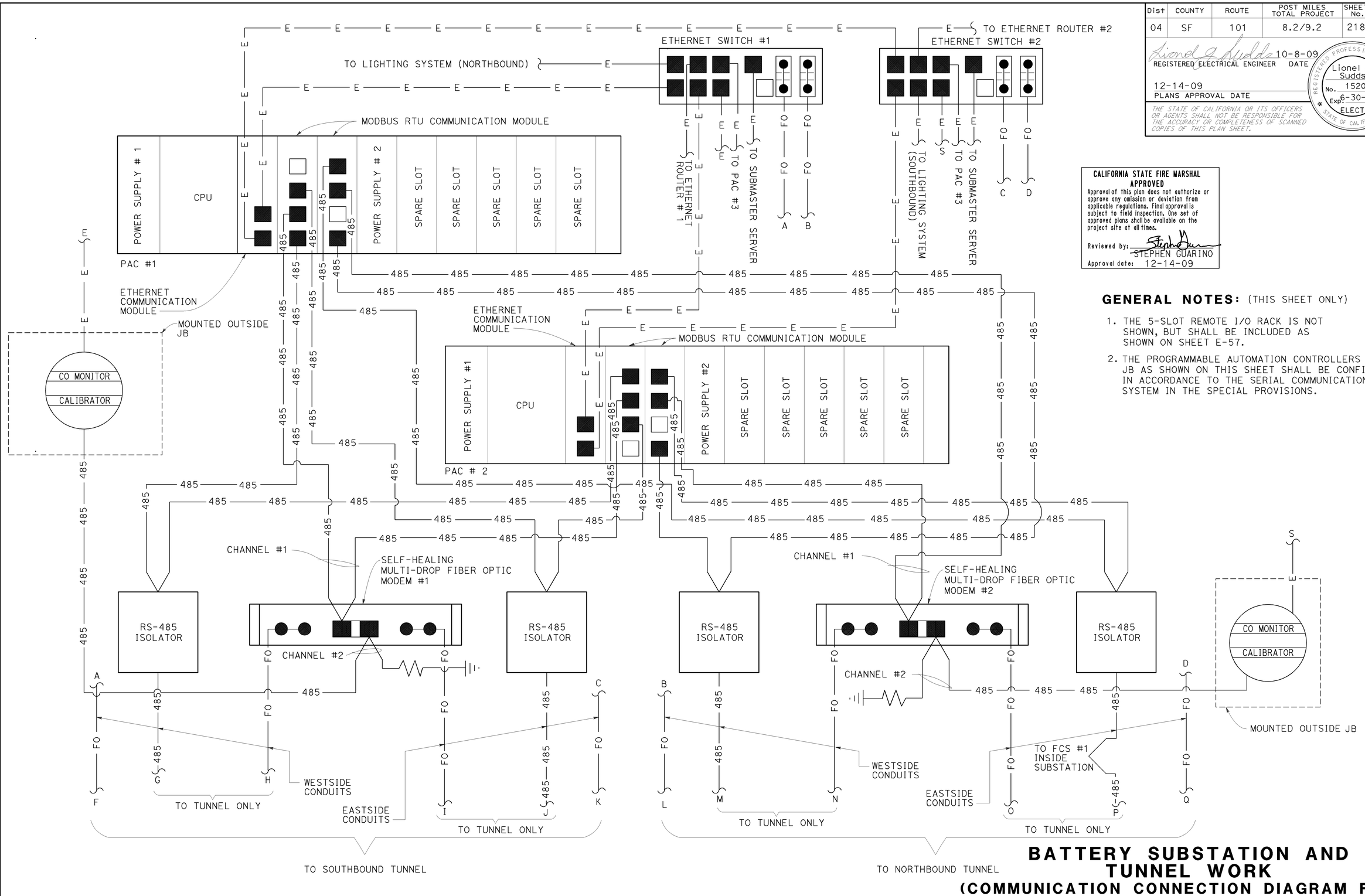

GENERAL NOTES: (THIS SHEET ONLY)

1. THE 5-SLOT REMOTE I/O RACK IS NOT SHOWN, BUT SHALL BE INCLUDED AS SHOWN ON SHEET E-57.
2. THE PROGRAMMABLE AUTOMATION CONTROLLERS JB AS SHOWN ON THIS SHEET SHALL BE CONFIGURED IN ACCORDANCE TO THE SERIAL COMMUNICATION SYSTEM IN THE SPECIAL PROVISIONS.

BATTERY SUBSTATION AND TUNNEL WORK
(COMMUNICATION CONNECTION DIAGRAM FOR SUBSTATION SCADA SYSTEM JB)

NO SCALE

E-56

REVISED BY	DATE REVISED
LS	8/01/09

CALCULATED-DESIGNED BY: LIONEL J. SUDDS
CHECKED BY: LIONEL J. SUDDS

FUNCTIONAL SUPERVISOR: BEHZAD GOLEMOHAMMADI

STATE OF CALIFORNIA - DEPARTMENT OF TRANSPORTATION
ELECTRICAL

LAST REVISION DATE PLOTTED => 14-DEC-2009
TIME PLOTTED => 15:57

BORDER LAST REVISED 4/11/2008

RELATIVE BORDER SCALE IS IN INCHES 0 1 2 3

USERNAME => trlenard
DGN FILE => 416374ua056.dgn

CU 04242

EA 163741

Dist	COUNTY	ROUTE	POST MILES TOTAL PROJECT	SHEET No.	TOTAL SHEETS
04	SF	101	8.2/9.2	219	654

REGISTERED ELECTRICAL ENGINEER 10-8-09 DATE

12-14-09
PLANS APPROVAL DATE

REGISTERED PROFESSIONAL ENGINEER Lionel J. Sudds No. 15201 Exp. 6-30-10 ELECT STATE OF CALIFORNIA

THE STATE OF CALIFORNIA OR ITS OFFICERS OR AGENTS SHALL NOT BE RESPONSIBLE FOR THE ACCURACY OR COMPLETENESS OF SCANNED COPIES OF THIS PLAN SHEET.

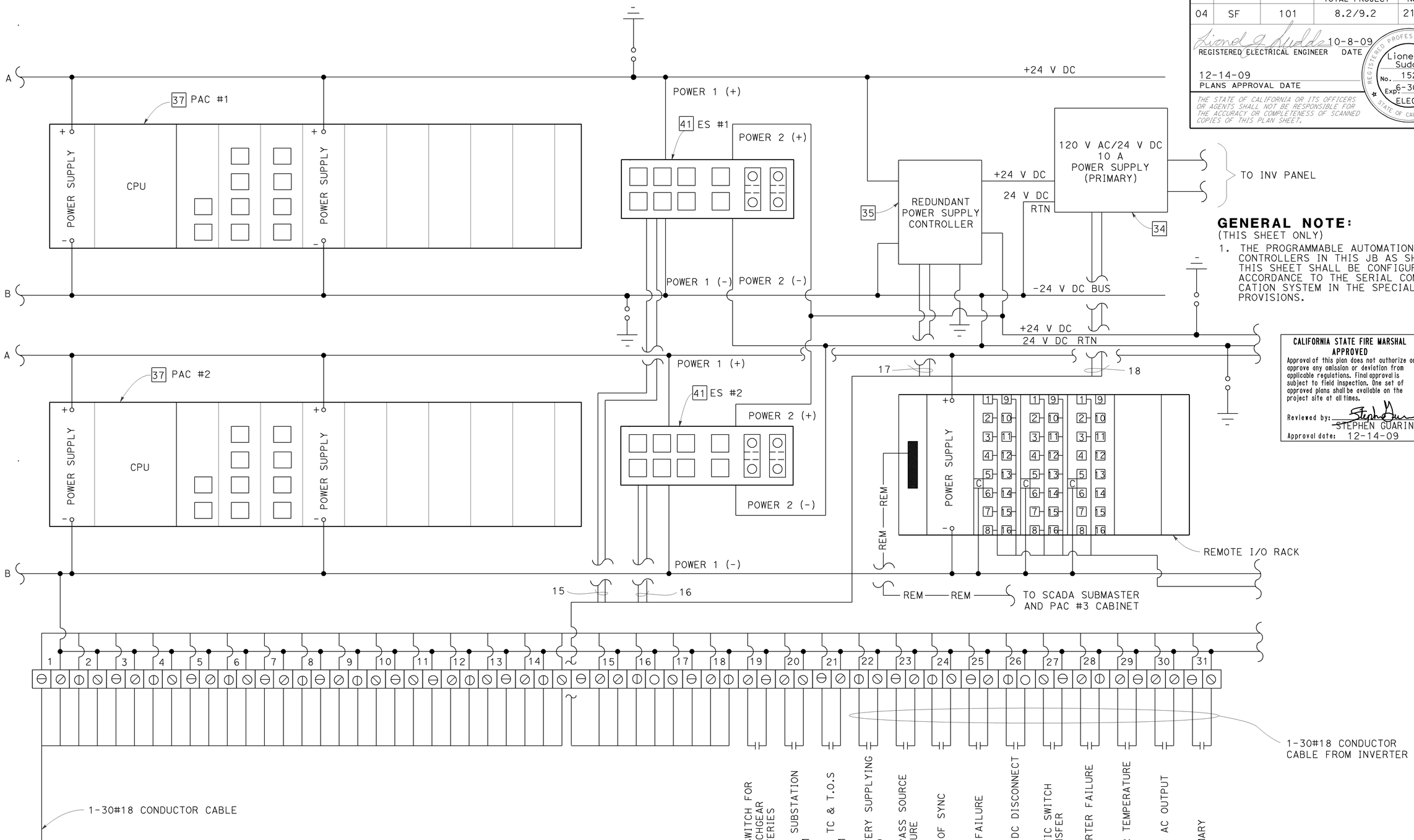

GENERAL NOTE:
(THIS SHEET ONLY)

1. THE PROGRAMMABLE AUTOMATION CONTROLLERS IN THIS JB AS SHOWN ON THIS SHEET SHALL BE CONFIGURED IN ACCORDANCE TO THE SERIAL COMMUNICATION SYSTEM IN THE SPECIAL PROVISIONS.

CALIFORNIA STATE FIRE MARSHAL APPROVED
Approval of this plan does not authorize or approve any omission or deviation from applicable regulations. Final approval is subject to field inspection. One set of approved plans shall be available on the project site at all times.
Reviewed by: STEPHEN GUARINO
Approval date: 12-14-09

BATTERY SUBSTATION AND TUNNEL WORK
(EQUIPMENT LAYOUT AND POWER CONNECTION DIAGRAM FOR SUBSTATION SCADA SYSTEM JB)
NO SCALE

E-57

STATE OF CALIFORNIA - DEPARTMENT OF TRANSPORTATION
Caltrans
ELECTRICAL

FUNCTIONAL SUPERVISOR: BEHZAD GOLEMOHAMMADI
CALCULATED-DESIGNED BY: LIONEL J. SUDDS
CHECKED BY: LIONEL J. SUDDS
REVISED BY: LS
DATE REVISED: 8/01/09

LAST REVISION 10-23-09
DATE PLOTTED => 14-DEC-2009
TIME PLOTTED => 15:58

Dist	COUNTY	ROUTE	POST MILES TOTAL PROJECT	SHEET No.	TOTAL SHEETS
04	SF	101	8.2/9.2	220	654

Lionel J. Sudds 10-8-09
REGISTERED ELECTRICAL ENGINEER DATE

12-14-09
PLANS APPROVAL DATE

REGISTERED PROFESSIONAL ENGINEER — Lionel J. Sudds — No. 15201 — Exp 6-30-10 — ELECT — STATE OF CALIFORNIA

THE STATE OF CALIFORNIA OR ITS OFFICERS OR AGENTS SHALL NOT BE RESPONSIBLE FOR THE ACCURACY OR COMPLETENESS OF SCANNED COPIES OF THIS PLAN SHEET.

CALIFORNIA STATE FIRE MARSHAL APPROVED
Approval of this plan does not authorize or approve any omission or deviation from applicable regulations. Final approval is subject to field inspection. One set of approved plans shall be available on the project site at all times.
Reviewed by: STEPHEN GUARINO
Approval date: 12-14-09

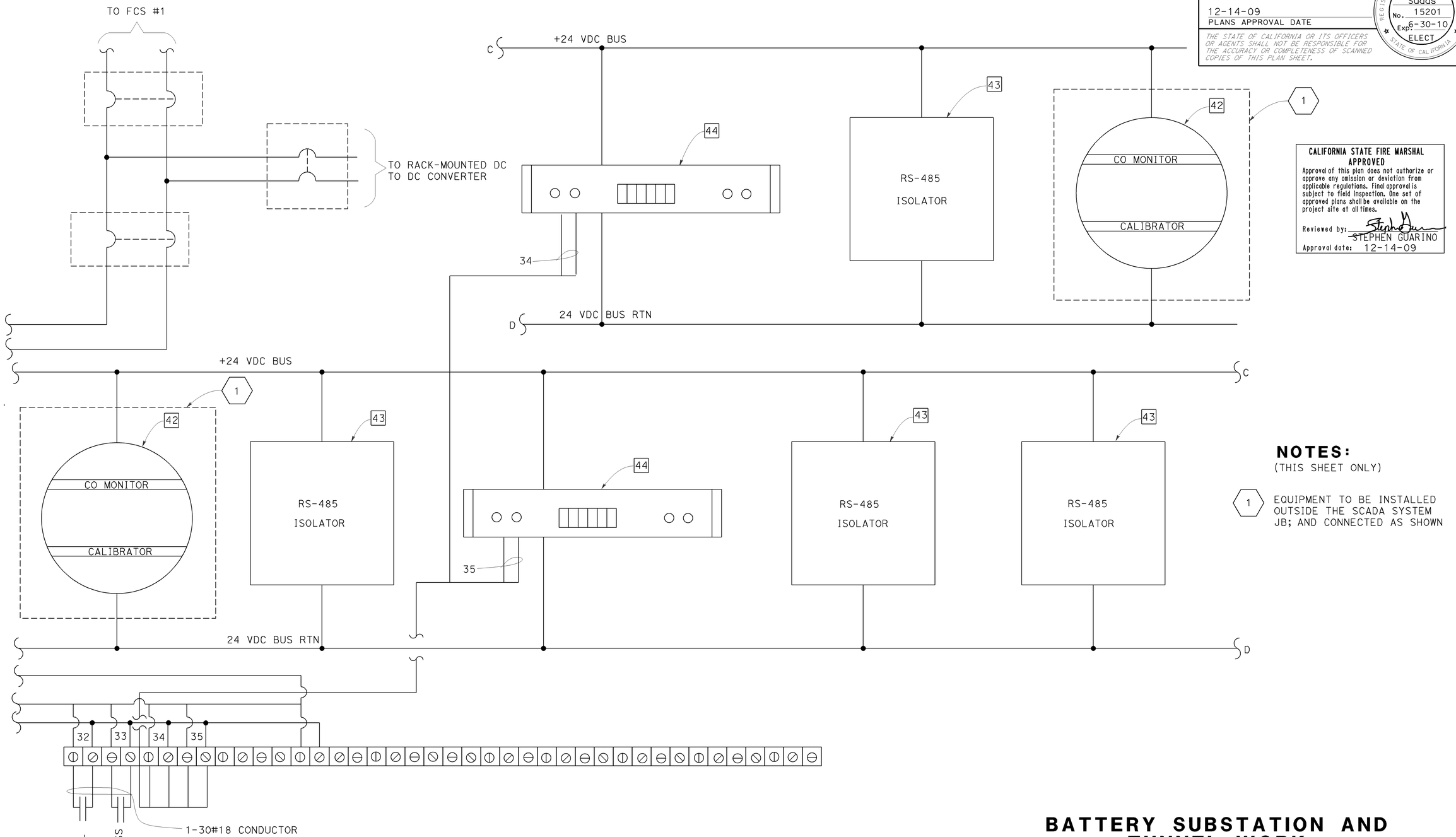

NOTES:
(THIS SHEET ONLY)

1 EQUIPMENT TO BE INSTALLED OUTSIDE THE SCADA SYSTEM JB; AND CONNECTED AS SHOWN

BATTERY SUBSTATION AND TUNNEL WORK
(EQUIPMENT LAYOUT AND POWER CONNECTION DIAGRAM FOR SUBSTATION SCADA SYSTEM JB)

NO SCALE

E-58

CALCULATED-DESIGNED BY	CHECKED BY	REVISED BY	DATE REVISED
LIONEL J. SUDDS	LIONEL J. SUDDS	LS	8/01/09

FUNCTIONAL SUPERVISOR: BEHZAD GOLEMOHAMMADI

STATE OF CALIFORNIA - DEPARTMENT OF TRANSPORTATION
ELECTRICAL

LAST REVISION DATE PLOTTED => 14-DEC-2009
TIME PLOTTED => 15:58

BORDER LAST REVISED 4/11/2008 | RELATIVE BORDER SCALE IS IN INCHES 0 1 2 3 | USERNAME => trlenard | DGN FILE => 416374ua058.dgn | CU 04242 | EA 163741

Dist	COUNTY	ROUTE	POST MILES TOTAL PROJECT	SHEET No.	TOTAL SHEETS
04	SF	101	8.2/9.2	221	654

Lionel J. Sudds 10-8-09
REGISTERED ELECTRICAL ENGINEER DATE

12-14-09
PLANS APPROVAL DATE

REGISTERED PROFESSIONAL ENGINEER — Lionel J. Sudds — No. 15201 — Exp 6-30-10 — ELECT — STATE OF CALIFORNIA

THE STATE OF CALIFORNIA OR ITS OFFICERS OR AGENTS SHALL NOT BE RESPONSIBLE FOR THE ACCURACY OR COMPLETENESS OF SCANNED COPIES OF THIS PLAN SHEET.

CALIFORNIA STATE FIRE MARSHAL APPROVED

Approval of this plan does not authorize or approve any omission or deviation from applicable regulations. Final approval is subject to field inspection. One set of approved plans shall be available on the project site at all times.

Reviewed by: STEPHEN GUARINO

Approval date: 12-14-09

1-100#18 CONDUCTOR CABLE FROM SECONDARY UNIT SUBSTATION

83P-2 B — 480 MAIN CB — 127x-2 1 — 86-5 1 — 86-4 2 — 86-4 3

TC UPS — T.O.S UPS — LCDPR#1

TC AND T.O.S. EQ DOOR — SUB EQ DOOR — ON BATTERY — LOW BATTERY — ON BATTERY — LOW BATTERY

PR#1 — BPR#1 — PR#2 — PR#3

52a 1 — R1 — 43L 1 — 52a 2 — R1 — 43L 2 — 52a 3 — R1 — 43L 3

87 FAIL — RELAY FAIL — MCC#1 CB — MCC#2 CB — SWITCHBOARD CB

INPUT POINTS 8 7 6 5 4 3 2 1

INPUT POINTS 1 2 3 4 5 6 7 8 9 10 11 12 13 14 15 16 17 18 19 20 21 22 23 24

1-25#18 CONDUCTOR CABLE

TO PAC (SCADA JB)

TO CO MONITORS IN TUNNEL

1 -4#18 CONDUCTOR CABLE

2A — 1A — 1A — 1A — 5A

INPUT POINT DATA + − 1 2 3 4 5 6 7 8 9 10 11 12 | 1 2 3 4 | 1 2 3 4 | 1 2 3 4

+24 VDC — 23 — 24

120 VAC/24 VDC 10 A POWER SUPPLY (PRIMARY) — AC POWER FROM INV PANEL

REDUNDANT POWER SUPPLY CONTROLLER — +24 VDC

34 — 35 — 36

OUTPUT POINT DATA 1 2 3 4 5 6 7 8 | 1 2 3 4 | 1 2 3 4 | 1 2 3 4 | 1 2 3 4

24 VDC RTN

+24 VDC — FROM RACK-MOUNTED DC TO DC CONVERTER (SECONDARY)

24 VDC RTN

OUTPUT POINTS 1 2 3 4 5 6 7 8 9 10 11 12 13 14 15 16

INPUT POINTS 9 10 11 12 13 14

1-30#18 CONDUCTOR CABLE TO PAC (SCADA JB)

TC & T.O.S. PP DOOR — TC & T.O.S. FAN ON ROOM — WL IN TC & T.O.S. ROOM

SCC 1 — SCT 1 — SCRS 1 — SCR 1 — SCCPT 1 — SCC 2 — SCT 2 — SCR 2 — SCC 3 — SCT 3 — SCR 3

ST MAIN 480 V CB — ST MCC #1 CB — ST MCC #2 CB — ST SWITCHBOARD CB — WL — FC

1-100#18 CONDUCTOR CABLE FROM SECONDARY UNIT SUBSTATION

EXTERIOR LIGHTING CONTROL IN JB IN T.O.S. AND TC ROOM

SUBSTATION ROOM FAN CONTROL

GENERAL NOTE: (THIS SHEET ONLY)

1. THE FIELD CONTROL STATION IN THIS JB AS SHOWN ON THIS SHEET SHALL BE CONFIGURED IN ACCORDANCE TO THE SERIAL COMMUNICATION SYSTEM IN THE SPECIAL PROVISIONS.

BATTERY SUBSTATION AND TUNNEL WORK (FCS #1 JB LAYOUT, AND CONNECTION DIAGRAM)

NO SCALE

E-59

REVISED BY	DATE REVISED
LS	8/01/09

CALCULATED-DESIGNED BY: LIONEL J. SUDDS
CHECKED BY: LIONEL J. SUDDS
FUNCTIONAL SUPERVISOR: BEHZAD GOLEMOHAMMADI

STATE OF CALIFORNIA - DEPARTMENT OF TRANSPORTATION
ELECTRICAL

LAST REVISION DATE PLOTTED => 14-DEC-2009
TIME PLOTTED => 15:58
10-30-09

BORDER LAST REVISED 4/11/2008 | RELATIVE BORDER SCALE IS IN INCHES 0 1 2 3 | USERNAME => trlenard | DGN FILE => 416374ua059.dgn | CU 04242 | EA 163741

Dist	COUNTY	ROUTE	POST MILES TOTAL PROJECT	SHEET No.	TOTAL SHEETS
04	SF	101	8.2/9.2	222	654

Lionel J. Sudds 10-8-09
REGISTERED ELECTRICAL ENGINEER DATE

12-14-09
PLANS APPROVAL DATE

Lionel J. Sudds No. 15201 Exp 6-30-10 ELECT
REGISTERED PROFESSIONAL ENGINEER — STATE OF CALIFORNIA

THE STATE OF CALIFORNIA OR ITS OFFICERS OR AGENTS SHALL NOT BE RESPONSIBLE FOR THE ACCURACY OR COMPLETENESS OF SCANNED COPIES OF THIS PLAN SHEET.

MCC #1 JET 1 STP
MCC #1 JET 1 CB
MCC #1 JET 1 BP
MCC #1 JET 1 ON
MCC #1 JET 1 43L
MCC #1 JET 1 IC
MCC #1 JET 1 FR
MCC #1 JET 2 STP
MCC #1 JET 2 CB
MCC #1 JET 2 BP
MCC #1 JET 2 ON
MCC #1 JET 2 43L
MCC #1 JET 2 IC
MCC #1 JET 2 FR
MCC #1 JET 3 STP
MCC #1 JET 3 CB
MCC #1 JET 3 BP
MCC #1 JET 3 ON
MCC #1 JET 3 43L
MCC #1 JET 3 IC
MCC #1 JET 3 FR
MCC #1 JET 4 STP
MCC #1 JET 4 CB
MCC #1 JET 4 BP
MCC #1 JET 4 ON
MCC #1 JET 4 43L
MCC #1 JET 4 IC
MCC #1 JET 4 FR
MCC #1 LOW
MCC #1 HIGH
MCC #1 HWRC1

1 2 3 4 5 6 7 8 9 10 11 12 13 14 15 16 17 18 19 20 21 22 23 24 25 26 27 28 29 30 31 32 33

INPUT POINTS

+24 VDC BUS

37 PAC #3

POWER SUPPLY
CPU
TO SCADA SYSTEM JB
E
E
POWER SUPPLY
SPARE

ETHERNET MODULE

35 REDUNDANT POWER SUPPLY CONTROLLER

+24 VDC
24 VDC RTN

120 VAC/24 VDC 10A POWER SUPPLY (PRIMARY)

34 FROM RACK-MOUNTED INVERTER

POWER SUPPLY
SPARE
SPARE

TO 5-SLOT REMOTE I/O RACK IN SCADA SYSTEM JB
Rem

5-SLOT EXPANSION I/O RACK

24 VDC BUS RTN

Exp Exp Exp

+24 VDC
24 VDC RTN
FROM RACK-MOUNTED DC TO DC CONVERTER (SECONDARY)

OUTPUT POINTS

1 2 3 4 5 6 7 8 9 10 11 12 13 14 15

JET 1 SCRC
JET 2 SCRC
JET 3 SCRC
JET 4 SCRC
LIGHT Ckt #1 SC
LIGHT Ckt #1 ST
LIGHT Ckt #2 SC
LIGHT Ckt #2 ST
JET 1 SCRC
JET 2 SCRC
LIGHT Ckt #1 SC
LIGHT Ckt #1 ST
LIGHT Ckt #2 SC
LIGHT Ckt #2 ST
WL

MCC #1 SCADA CONTROLS
MCC #2 SCADA CONTROLS

INPUT POINTS

64 65 66 67 68 69 70 71 72 73 74 75 76 77 78

EXTERIOR LIGHTING CONTROLS IN LIGHTING JB IN SUBSTATION ROOM
MCC #2 LIGHT Ckt #2 C
MCC #2 LIGHT Ckt #2 CB
MCC #2 LIGHT Ckt #2 43L
SUBSTATION PERSONNEL DOOR ALARM
TELEPHONE EXTENDER ALARM
RACK-MOUNTED DC TO DC CONVERTER INPUT FAIL
RACK-MOUNTED DC TO DC CONVERTER OUTPUT FAIL
RACK-MOUNTED DC TO DC CONVERTER OVERLOAD
RACK-MOUNTED INVERTER FAULT
RACK-MOUNTED INVERTER DC ABNORMAL
POWER SUPPLY & BATTERY CHARGER ALARM
3-PHASE POWER SUPPLY & BATTERY CHARGER ALARM
SUBSTATION ROOM LIGHTS L
HYDROGEN GAS DET HIGH HYDROGEN
FAN #1 ON

CALIFORNIA STATE FIRE MARSHAL APPROVED
Approval of this plan does not authorize or approve any omission or deviation from applicable regulations. Final approval is subject to field inspection. One set of approved plans shall be available on the project site at all times.
Reviewed by: STEPHEN GUARINO
Approval date: 12-14-09

GENERAL NOTE: (THIS SHEET ONLY)

1. THE PROGRAMMABLE AUTOMATION CONTROLLERS IN THIS JB AS SHOWN ON THIS SHEET SHALL BE CONFIGURED IN ACCORDANCE TO THE SERIAL COMMUNICATION SYSTEM IN THE SPECIAL PROVISIONS.

BATTERY SUBSTATION AND TUNNEL WORK
(PLC No. 3 LAYOUT AND WIRING DIAGRAM)

NO SCALE

E-60

REVISED BY	DATE REVISED
LS	8/01/09

CALCULATED-DESIGNED BY: LIONEL J. SUDDS
CHECKED BY: LIONEL J. SUDDS

FUNCTIONAL SUPERVISOR: BEHZAD GOLEMOHAMMADI

STATE OF CALIFORNIA - DEPARTMENT OF TRANSPORTATION
Caltrans
ELECTRICAL

LAST REVISION | DATE PLOTTED => 14-DEC-2009
10-23-09 | TIME PLOTTED => 15:58

BORDER LAST REVISED 4/11/2008
RELATIVE BORDER SCALE IS IN INCHES 0 1 2 3
USERNAME => trlenard
DGN FILE => 416374ua060.dgn
CU 04242
EA 163741

Dist	COUNTY	ROUTE	POST MILES TOTAL PROJECT	SHEET No.	TOTAL SHEETS
04	SF	101	8.2/9.2	223	654

REGISTERED ELECTRICAL ENGINEER 10-8-09 DATE

12-14-09
PLANS APPROVAL DATE

REGISTERED PROFESSIONAL ENGINEER Lionel J. Sudds No. 15201 Exp. 6-30-10 ELECT STATE OF CALIFORNIA

THE STATE OF CALIFORNIA OR ITS OFFICERS OR AGENTS SHALL NOT BE RESPONSIBLE FOR THE ACCURACY OR COMPLETENESS OF SCANNED COPIES OF THIS PLAN SHEET.

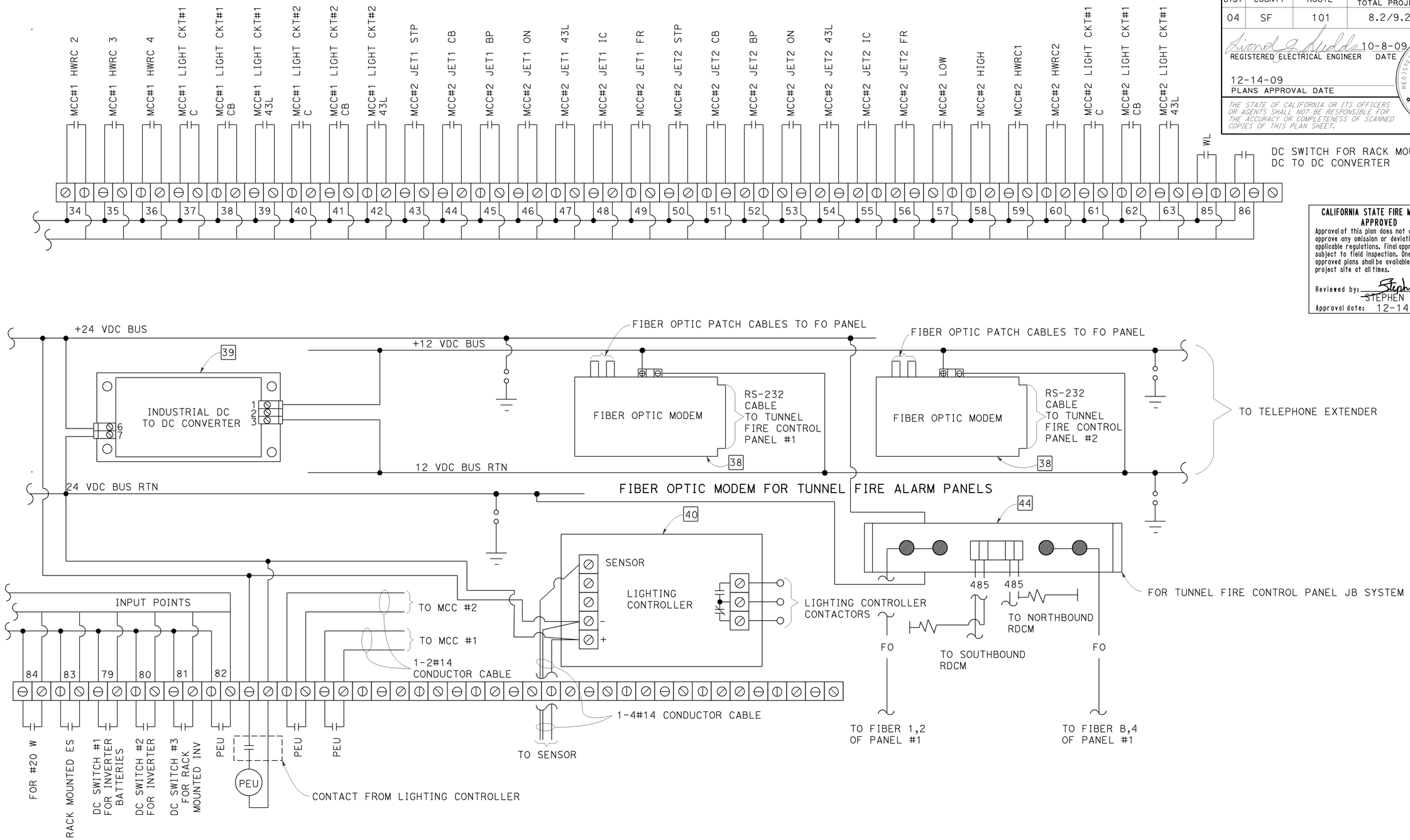

CALIFORNIA STATE FIRE MARSHAL APPROVED

Approval of this plan does not authorize or approve any omission or deviation from applicable regulations. Final approval is subject to field inspection. One set of approved plans shall be available on the project site at all times.

Reviewed by: STEPHEN GUARINO

Approval date: 12-14-09

BATTERY SUBSTATION AND TUNNEL WORK
(PLC #3 LAYOUT, AND WIRING DIAGRAM)

NO SCALE

E-61

STATE OF CALIFORNIA - DEPARTMENT OF TRANSPORTATION
Caltrans
ELECTRICAL

FUNCTIONAL SUPERVISOR: BEHZAD GOLEMOHAMMADI
CALCULATED-DESIGNED BY: LIONEL J. SUDDS
CHECKED BY: LIONEL J. SUDDS
REVISED BY: LS
DATE REVISED: 8/01/09

LAST REVISION 10-28-09
DATE PLOTTED => 14-DEC-2009
TIME PLOTTED => 15:58

BORDER LAST REVISED 4/11/2008
RELATIVE BORDER SCALE IS IN INCHES 0 1 2 3
USERNAME => trlenard
DGN FILE => 416374ua061.dgn
CU 04242
EA 163741

Dist	COUNTY	ROUTE	POST MILES TOTAL PROJECT	SHEET No.	TOTAL SHEETS
04	SF	101	8.2/9.2	224	654

Lionel J. Sudds 10-8-09
REGISTERED ELECTRICAL ENGINEER DATE

12-14-09
PLANS APPROVAL DATE

REGISTERED PROFESSIONAL ENGINEER — Lionel J. Sudds — No. 15201 — Exp 6-30-10 — ELECT — STATE OF CALIFORNIA

THE STATE OF CALIFORNIA OR ITS OFFICERS OR AGENTS SHALL NOT BE RESPONSIBLE FOR THE ACCURACY OR COMPLETENESS OF SCANNED COPIES OF THIS PLAN SHEET.

CALIFORNIA STATE FIRE MARSHAL APPROVED

Approval of this plan does not authorize or approve any omission or deviation from applicable regulations. Final approval is subject to field inspection. One set of approved plans shall be available on the project site at all times.

Reviewed by: STEPHEN GUARINO
Approval date: 12-14-09

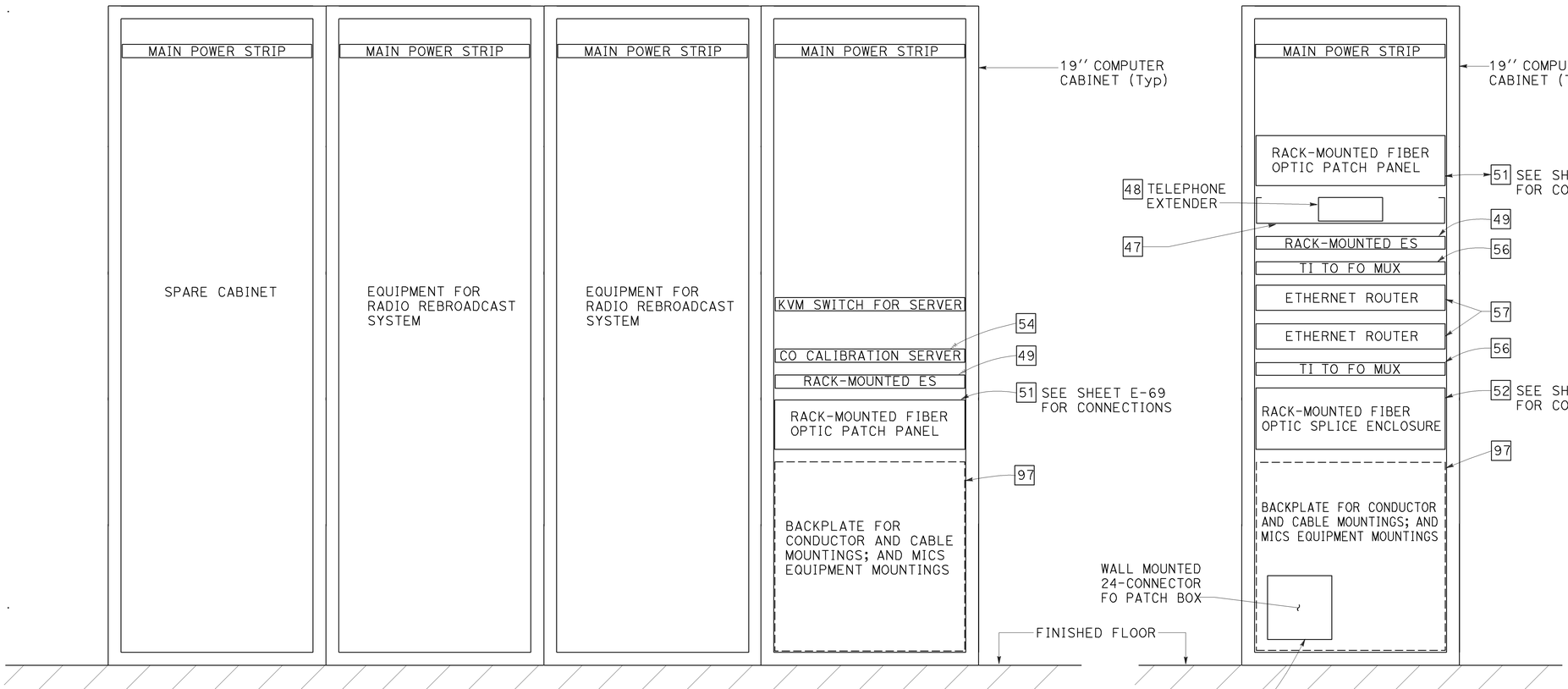

LAYOUT OF TUNNEL CONTROL CABINETS (4 TOTAL)

LAYOUT OF F.O. CABINET FOR T.O.S.

GENERAL NOTE:
(THIS SHEET ONLY)

1. SEE SHEET E-54 FOR CONNECTION OF COMMUNICATION EQUIPMENT SHOWN ON THE PLAN.

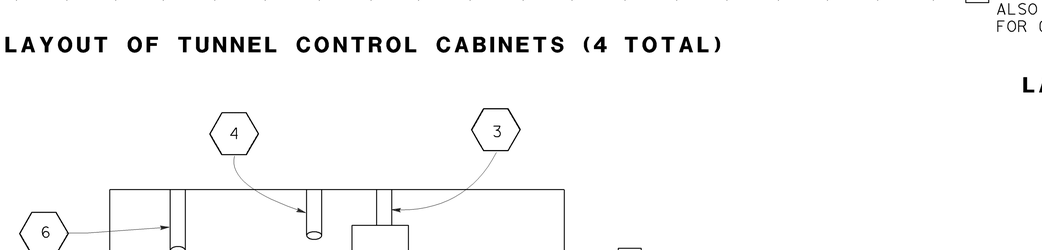

LAYOUT OF COMMUNICATION BOARD

NOTES: (THIS SHEET ONLY)

97 INSTALL BACKPLATE IN THE 19'' COMPUTER CABINET.

2 INSTALL 1½'' C, 1-ANTENNA CABLE.

3 INSTALL 1½'' C, 3#6 CONDUCTORS.

4 INSTALL 1½'' C, 2-T1 CABLES, AND CONNECT CABLE TO THE INDUSTRIAL ROUTER (IR) (ONE CABLE PER ROUTER).

5 INSTALL 1½'' C, 3#12 CONDUCTORS FOR DC POWER TO THE INDUSTRIAL ROUTERS, AND THE FIXED WIRELESS TERMINAL (FWT); ONE CONDUIT WITH CONDUCTORS PER DEVICE.

6 INSTALL ¾'' C, 1-TELEPHONE CABLE AND CONNECT CABLE TO TELEPHONE EXTENDER IN THE F.O. CABINET FOR T.O.S.

BATTERY SUBSTATION AND TUNNEL WORK
(EQUIPMENT LAYOUT OF BATTERY TC AND T.O.S. ROOM)

NO SCALE

E-62

REVISED BY	DATE REVISED
LS	8/01/09

LIONEL J. SUDDS — CALCULATED-DESIGNED BY
LIONEL J. SUDDS — CHECKED BY

FUNCTIONAL SUPERVISOR: BEHZAD GOLEMOHAMMADI

STATE OF CALIFORNIA - DEPARTMENT OF TRANSPORTATION
ELECTRICAL

LAST REVISION DATE PLOTTED => 14-DEC-2009
TIME PLOTTED => 15:58

BORDER LAST REVISED 4/11/2008 | RELATIVE BORDER SCALE IS IN INCHES 0 1 2 3 | USERNAME => trienard | DGN FILE => 416374ua062.dgn | CU 04242 | EA 163741

Dist	COUNTY	ROUTE	POST MILES TOTAL PROJECT	SHEET No.	TOTAL SHEETS
04	SF	101	8.2/9.2	225	654

CALIFORNIA STATE FIRE MARSHAL APPROVED

Approval of this plan does not authorize or approve any omission or deviation from applicable regulations. Final approval is subject to field inspection. One set of approved plans shall be available on the project site at all times.

Reviewed by: STEPHEN GUARINO

Approval date: 12-14-09

Lionel J. Sudds 10-8-09
REGISTERED ELECTRICAL ENGINEER DATE

12-14-09
PLANS APPROVAL DATE

REGISTERED PROFESSIONAL ENGINEER — Lionel J. Sudds — No. 15201 — Exp 6-30-10 — ELECT — STATE OF CALIFORNIA

THE STATE OF CALIFORNIA OR ITS OFFICERS OR AGENTS SHALL NOT BE RESPONSIBLE FOR THE ACCURACY OR COMPLETENESS OF SCANNED COPIES OF THIS PLAN SHEET.

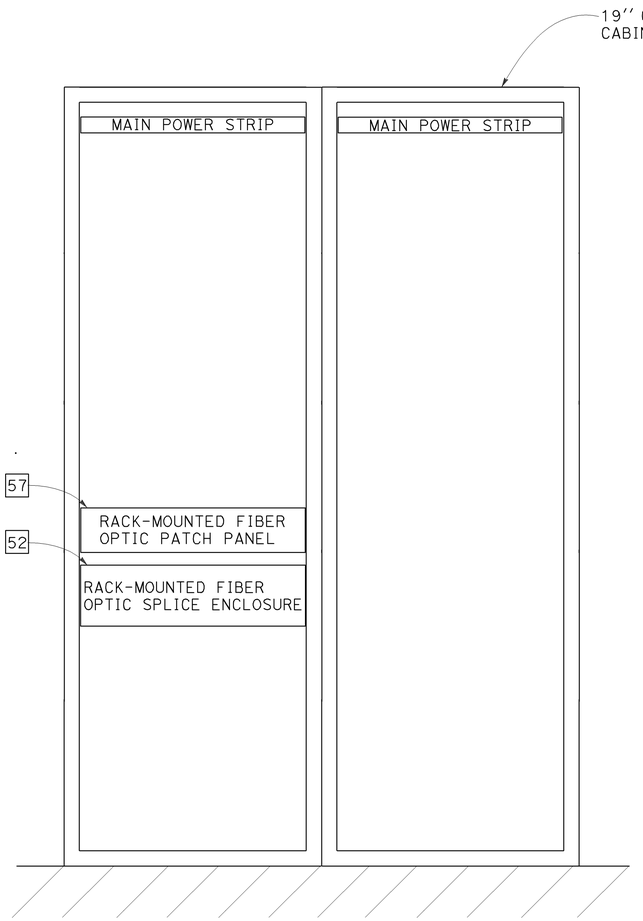

LAYOUT OF BASE CABINETS (2 TOTAL)

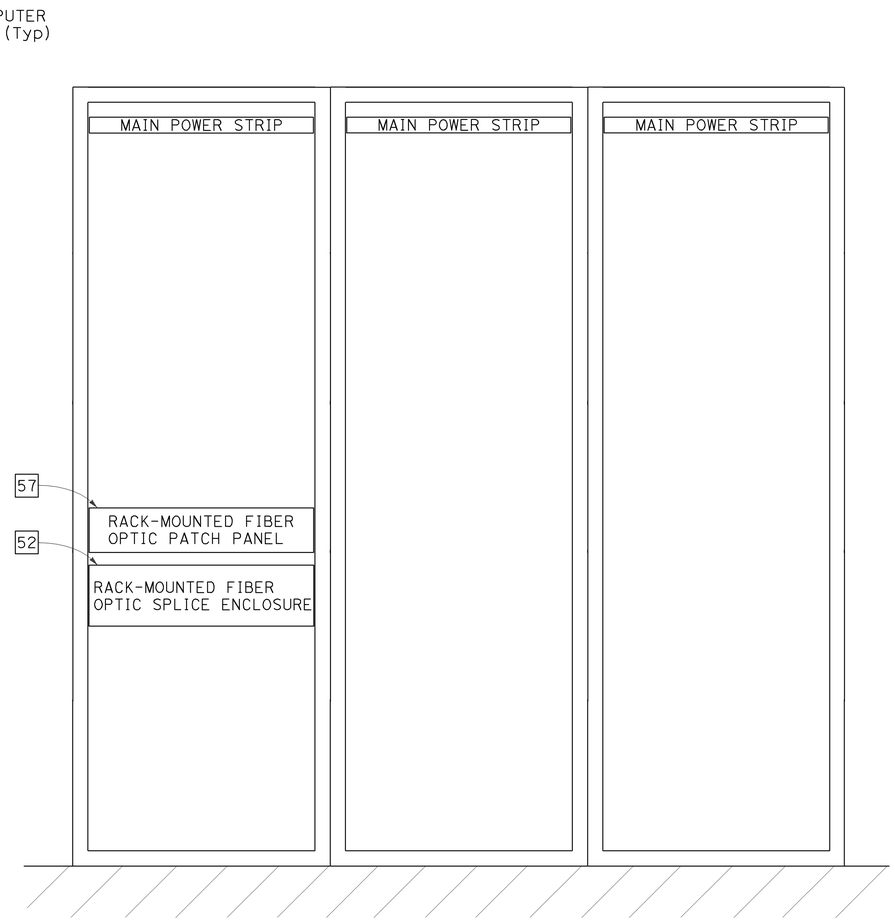

LAYOUT OF T.O.S. CABINETS (3 TOTAL)

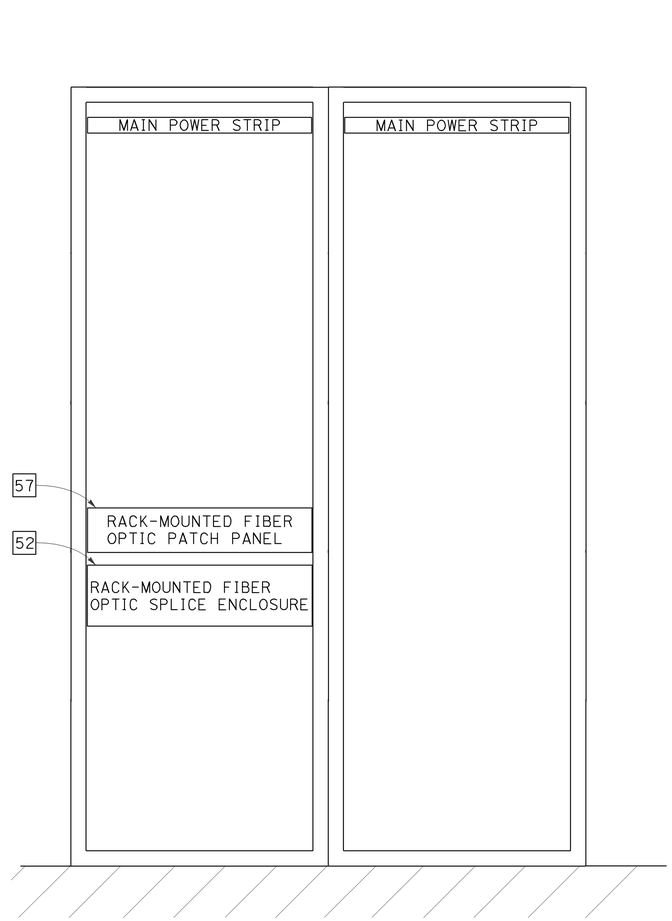

LAYOUT OF TRAFFIC CONTROL CABINETS (2 TOTAL)

BATTERY SUBSTATION AND TUNNEL WORK
(EQUIPMENT LAYOUT OF BATTERY TC AND T.O.S. ROOM)

NO SCALE

E-63

STATE OF CALIFORNIA - DEPARTMENT OF TRANSPORTATION
Caltrans®
ELECTRICAL

FUNCTIONAL SUPERVISOR: BEHZAD GOLEMOHAMMADI

CALCULATED-DESIGNED BY: LIONEL J. SUDDS

CHECKED BY: LIONEL J. SUDDS

REVISED BY: LS — DATE REVISED: 8/01/09

LAST REVISION: DATE PLOTTED => 14-DEC-2009 — TIME PLOTTED => 15:58 — 07-12-09

BORDER LAST REVISED 4/11/2008

RELATIVE BORDER SCALE IS IN INCHES 0 1 2 3

USERNAME => trlenard
DGN FILE => 416374ua063.dgn

CU 04242

EA 163741

Dist	COUNTY	ROUTE	POST MILES TOTAL PROJECT	SHEET No.	TOTAL SHEETS
04	SF	101	8.2/9.2	226	654

Lionel J. Sudds 10-8-09
REGISTERED ELECTRICAL ENGINEER DATE

12-14-09
PLANS APPROVAL DATE

REGISTERED PROFESSIONAL ENGINEER — Lionel J. Sudds No. 15201 Exp 6-30-10 ELECT — STATE OF CALIFORNIA

THE STATE OF CALIFORNIA OR ITS OFFICERS OR AGENTS SHALL NOT BE RESPONSIBLE FOR THE ACCURACY OR COMPLETENESS OF SCANNED COPIES OF THIS PLAN SHEET.

CALIFORNIA STATE FIRE MARSHAL APPROVED
Approval of this plan does not authorize or approve any omission or deviation from applicable regulations. Final approval is subject to field inspection. One set of approved plans shall be available on the project site at all times.
Reviewed by: STEPHEN GUARINO
Approval date: 12-14-09

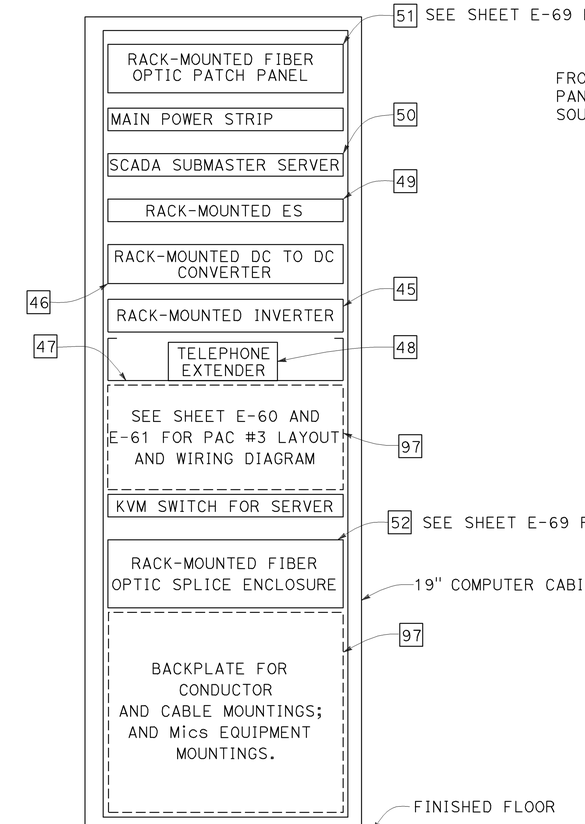

LAYOUT OF SCADA SUBMASTER AND PAC #3 CABINET

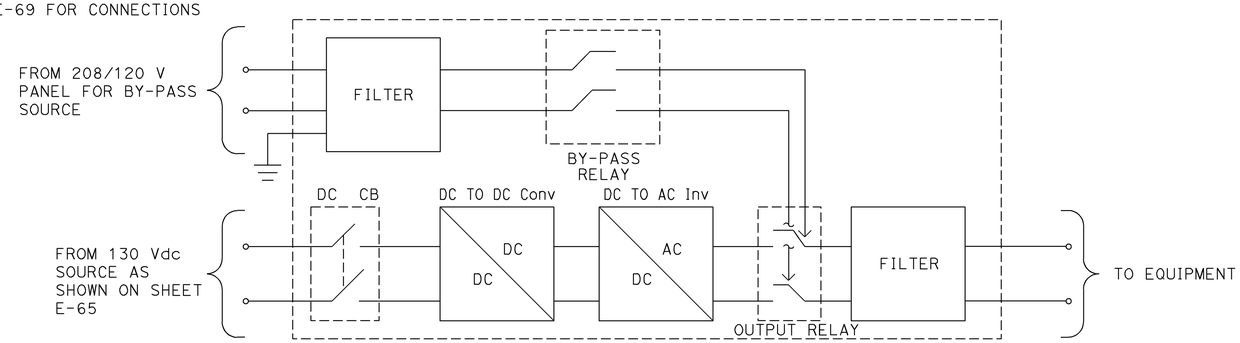

RACK-MOUNTED INVERTER CONNECTION DIAGRAM (SEE SPECIAL PROVISION FOR DETAILS)

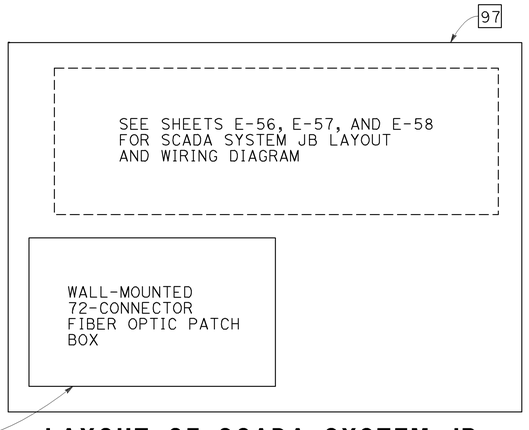

LAYOUT OF SCADA SYSTEM JB (INSIDE LAYOUT)

GENERAL NOTES: (THIS SHEET ONLY)

1. THE CONTRACTOR SHALL LAYOUT THE MCC'S AS SHOWN ON THIS SHEET.
2. SEE SHEET E-67 FOR MCC #1 CONTROLS AND INSTALL CONTROLS AS SHOWN AND IN ACCORDANCE WITH THE SPECIAL PROVISIONS.
3. SEE SHEET E-68 FOR MCC#2 CONTROLS AND INSTALL CONTROLS AS SHOWN AND IN ACCORDANCE WITH THE SPECIAL PROVISIONS.
4. THE RACK-MOUNTED INVERTER SHALL BE SET FOR ONLINE OPERATION.
5. SEE SHEET E-54 FOR CONNECTION OF COMMUNICATION EQUIPMENT SHOWN ON THE PLAN.

NOTES: (THIS SHEET ONLY)

97 INSTALL BACKPLATE AND EQUIPMENT INDICATED IN THE 19'' COMPUTER CABINET; CONNECT EQUIPMENT AS SHOWN ON THE PLANS.

INSTALL BACKPLATE IN THE 19'' COMPUTER CABINET; AS SHOWN ON THE PLANS.

INSTALL BACKPANEL FROM THE JB AND EQUIPMENT INDICATED INSIDE THE SCADA SYSTEM JB; CONNECT EQUIPMENT AS SHOWN ON THE PLANS.

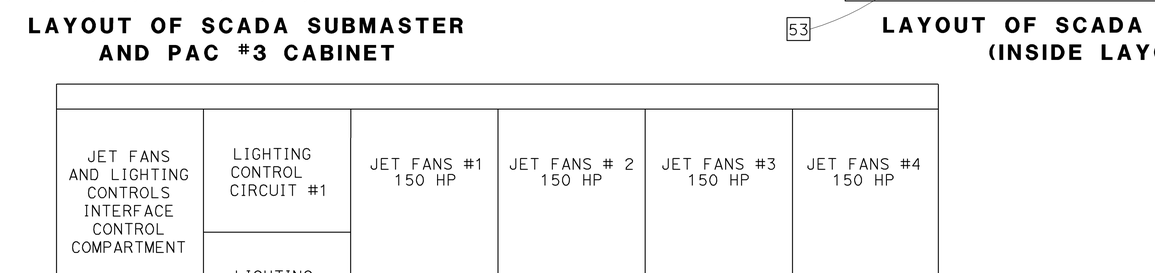

LAYOUT OF MCC#1

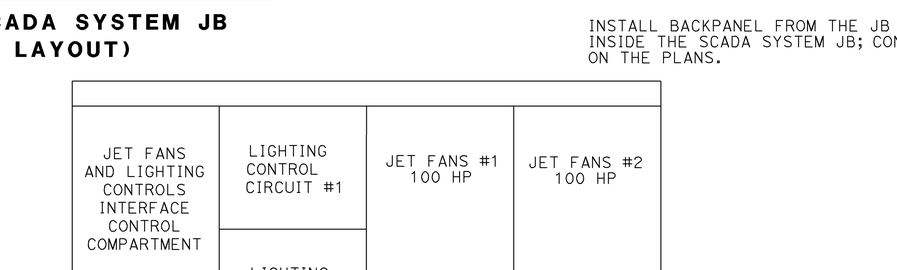

LAYOUT OF MCC#2

BATTERY SUBSTATION AND TUNNEL WORK
(EQUIPMENT LAYOUT OF BATTERY SUBSTATION ROOM)

NO SCALE

E-64

STATE OF CALIFORNIA - DEPARTMENT OF TRANSPORTATION
ELECTRICAL
FUNCTIONAL SUPERVISOR: BEHZAD GOLEMOHAMMADI
CALCULATED-DESIGNED BY: LIONEL J. SUDDS
CHECKED BY: LIONEL J. SUDDS
REVISED BY: LS
DATE REVISED: 8/01/09

LAST REVISION DATE PLOTTED => 14-DEC-2009
TIME PLOTTED => 15:58

BORDER LAST REVISED 4/11/2008
RELATIVE BORDER SCALE IS IN INCHES 0 1 2 3
USERNAME => trlenard
DGN FILE => 416374ua064.dgn
CU 04242
EA 163741

Dist	COUNTY	ROUTE	POST MILES TOTAL PROJECT	SHEET No.	TOTAL SHEETS
04	SF	101	8.2/9.2	227	654

Lionel J. Sudds 10-8-09
REGISTERED ELECTRICAL ENGINEER DATE

12-14-09
PLANS APPROVAL DATE

REGISTERED PROFESSIONAL ENGINEER — Lionel J. Sudds — No. 15201 — Exp 6-30-10 — ELECT — STATE OF CALIFORNIA

THE STATE OF CALIFORNIA OR ITS OFFICERS OR AGENTS SHALL NOT BE RESPONSIBLE FOR THE ACCURACY OR COMPLETENESS OF SCANNED COPIES OF THIS PLAN SHEET.

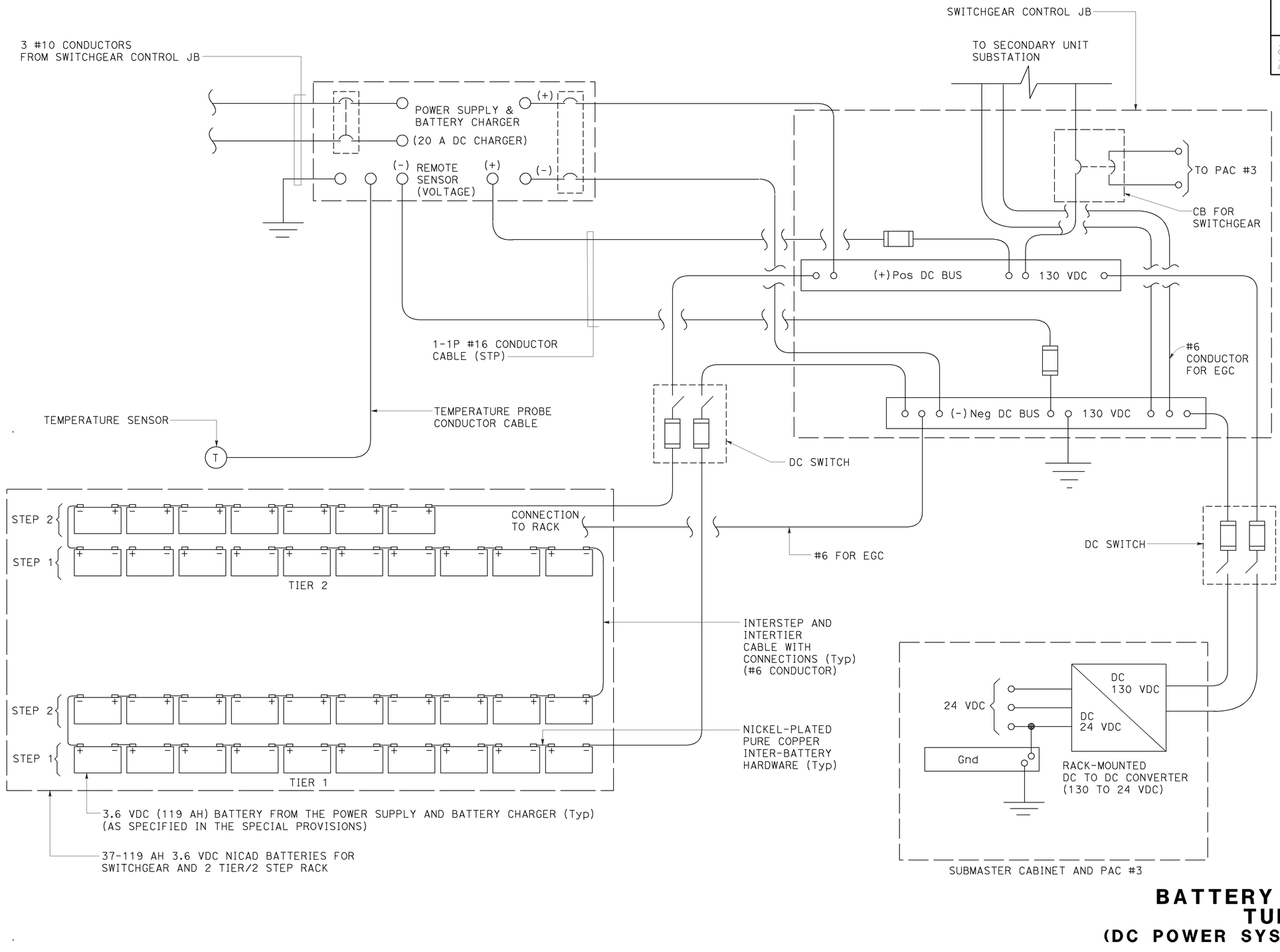

GENERAL NOTE: (THIS SHEET ONLY)

1. UNLESS OTHERWISE SHOWN ON THIS SHEET THE CONDUCTORS SHALL BE #6 CONDUCTORS.

CALIFORNIA STATE FIRE MARSHAL APPROVED
Approval of this plan does not authorize or approve any omission or deviation from applicable regulations. Final approval is subject to field inspection. One set of approved plans shall be available on the project site at all times.
Reviewed by: STEPHEN GUARINO
Approval date: 12-14-09

BATTERY SUBSTATION AND TUNNEL WORK
(DC POWER SYSTEM FOR SWITCHGEAR)

NO SCALE

E-65

CALCULATED-DESIGNED BY	CHECKED BY	REVISED BY	DATE REVISED
LIONEL J. SUDDS	LIONEL J. SUDDS	LS	8/01/09

FUNCTIONAL SUPERVISOR: BEHZAD GOLEMOHAMMADI

STATE OF CALIFORNIA - DEPARTMENT OF TRANSPORTATION
ELECTRICAL

LAST REVISION | DATE PLOTTED => 14-DEC-2009
10-09-09 | TIME PLOTTED => 15:58

GENERAL NOTE: (THIS SHEET ONLY)

1. UNLESS OTHERWISE SHOWN ON THIS SHEET THE CONDUCTORS SHALL BE #1 CONDUCTORS

CALIFORNIA STATE FIRE MARSHAL APPROVED

Approval of this plan does not authorize or approve any omission or deviation from applicable regulations. Final approval is subject to field inspection. One set of approved plans shall be available on the project site at all times.

Reviewed by: STEPHEN GUARINO

Approval date: 12-14-09

Dist	COUNTY	ROUTE	POST MILES TOTAL PROJECT	SHEET No.	TOTAL SHEETS
04	SF	101	8.2/9.2	228	654

Lionel J. Sudds 10-8-09
REGISTERED ELECTRICAL ENGINEER DATE

12-14-09
PLANS APPROVAL DATE

REGISTERED PROFESSIONAL ENGINEER — Lionel J. Sudds — No. 15201 — Exp 6-30-10 — ELECT — STATE OF CALIFORNIA

THE STATE OF CALIFORNIA OR ITS OFFICERS OR AGENTS SHALL NOT BE RESPONSIBLE FOR THE ACCURACY OR COMPLETENESS OF SCANNED COPIES OF THIS PLAN SHEET.

4 #1 CONDUCTORS FROM SWITCHBOARD

3-PHASE POWER POWER SUPPLY & BATTERY CHARGER (125 ADC CHARGER)

(+) (-) REMOTE SENSOR (VOLTAGE) (+) (-)

1-1P #16 CONDUCTOR CABLE (STP)

TEMPERATURE PROBE CONDUCTOR CABLE

TEMPERATURE SENSOR

T

TO RACK-MOUNTED INVERTER IN SCADA SUBMASTER & PAC #3 CABINET

DC INTERFACE JB

DC SWITCH

(+) Pos DC BUS 130 VDC

(-) Neg DC BUS 130 VDC

#1 FOR EGC

DC SWITCH

STATIC SWITCH

MANUAL SWITCH

P

SYNC

120 VAC

130 VDC

INVERTER

TO INV PANEL

N

INVERTER (5 kVA)

TO 208/120 V PANEL FOR BY-PASS SOURCE

DC SWITCH

CONNECT TO RACK

INTERSTEP AND INTERTIER CABLE WITH CONNECTIONS (Typ) (#1 CONDUCTOR)

STEP 2

STEP 1

TIER 2

STEP 2

STEP 1

TIER 1

2.4 VDC (238 AH) BATTERY FROM THE 3 PHASE POWER SUPPLY AND BATTERY CHARGER (Typ)

55-238 AH 2.4 VDC NICAD BATTERIES FOR INVERTER AND 2 TIER/2 STEP RACK

BATTERY SUBSTATION AND TUNNEL WORK
(DC POWER SYSTEM FOR INVERTER)

NO SCALE

E-66

LAST REVISION DATE PLOTTED => 14-DEC-2009
TIME PLOTTED => 15:58 10-09-09

STATE OF CALIFORNIA - DEPARTMENT OF TRANSPORTATION
ELECTRICAL

FUNCTIONAL SUPERVISOR: BEHZAD GOLEMOHAMMADI

CALCULATED-DESIGNED BY: LS 8/01/09
CHECKED BY: LIONEL J. SUDDS

REVISED BY / DATE REVISED

BORDER LAST REVISED 4/11/2008

RELATIVE BORDER SCALE IS IN INCHES 0 1 2 3

USERNAME => trlenard
DGN FILE => 416374ua066.dgn

CU 04242

EA 163741

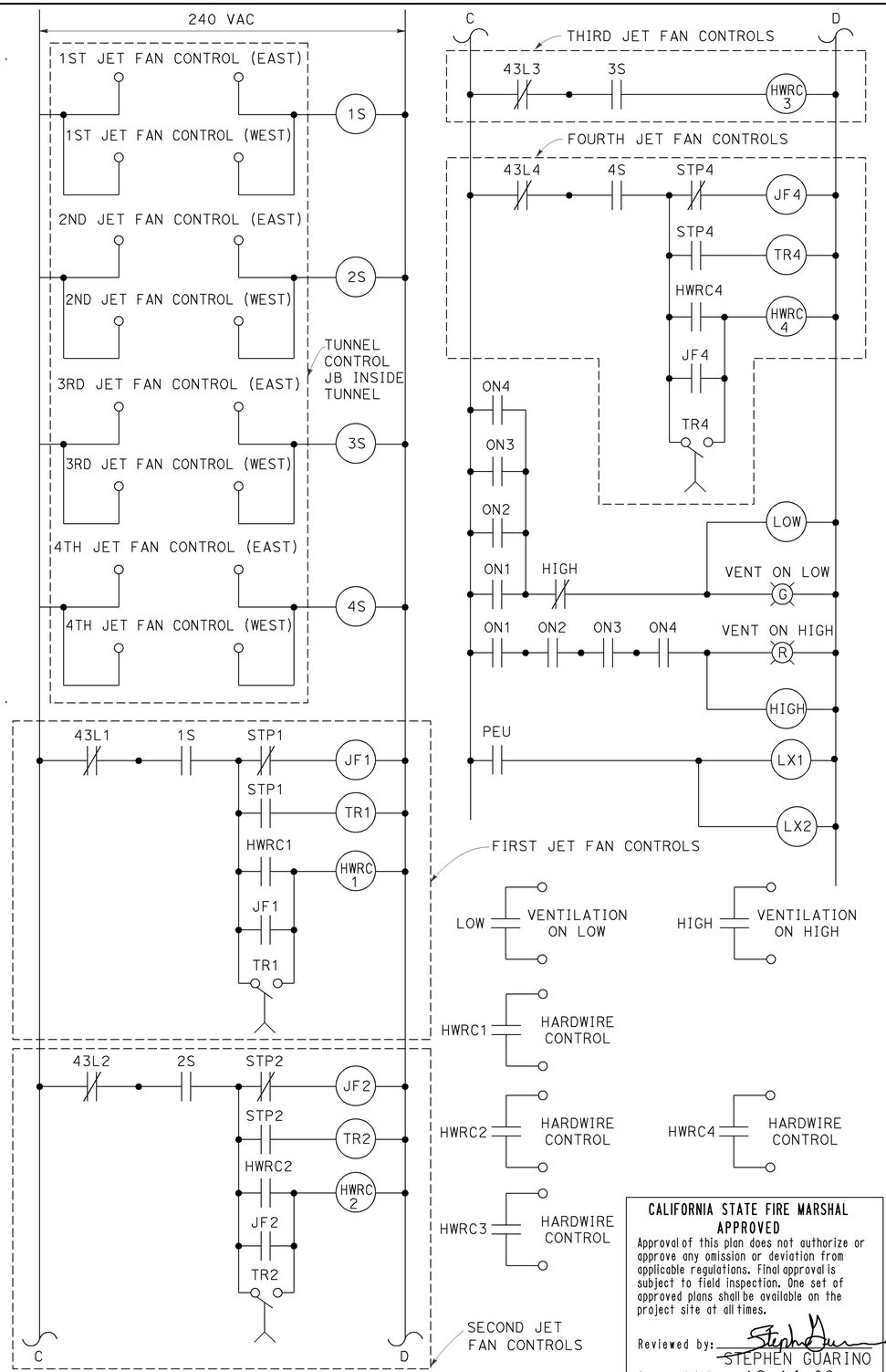

CALIFORNIA STATE FIRE MARSHAL APPROVED

Approval of this plan does not authorize or approve any omission or deviation from applicable regulations. Final approval is subject to field inspection. One set of approved plans shall be available on the project site at all times.

Reviewed by: STEPHEN GUARINO

Approval date: 12-14-09

JET FANS AND LIGHTING CONTROLS INTERFACE CONTROL WIRING DIAGRAM FOR MCC #1 (ONE CONTROL PER MCC)

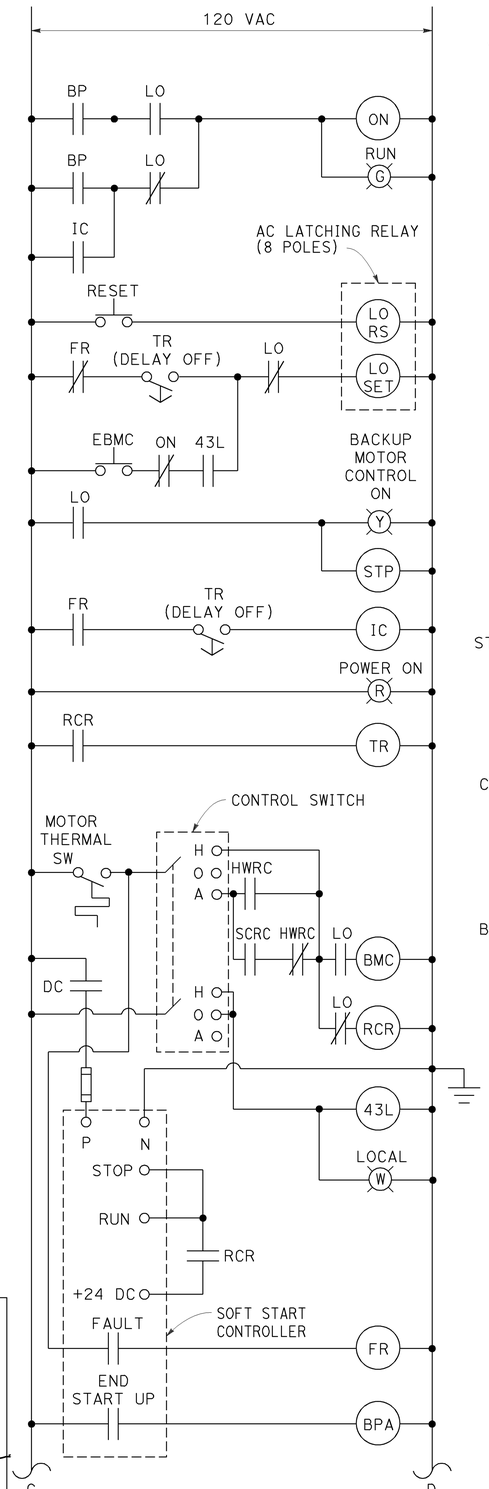

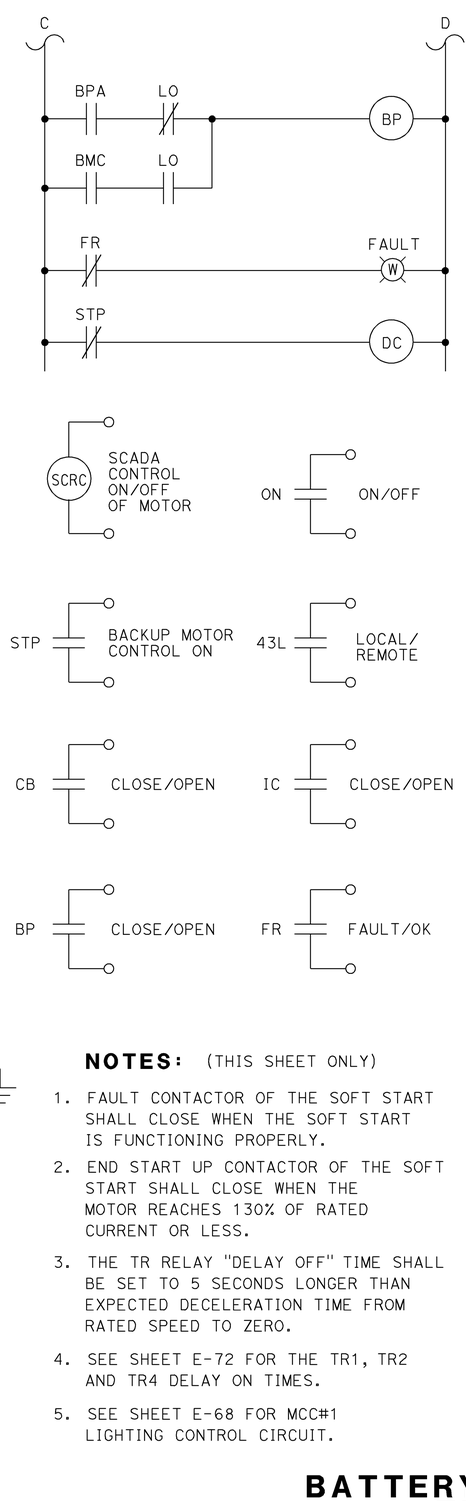

NOTES: (THIS SHEET ONLY)

1. FAULT CONTACTOR OF THE SOFT START SHALL CLOSE WHEN THE SOFT START IS FUNCTIONING PROPERLY.
2. END START UP CONTACTOR OF THE SOFT START SHALL CLOSE WHEN THE MOTOR REACHES 130% OF RATED CURRENT OR LESS.
3. THE TR RELAY "DELAY OFF" TIME SHALL BE SET TO 5 SECONDS LONGER THAN EXPECTED DECELERATION TIME FROM RATED SPEED TO ZERO.
4. SEE SHEET E-72 FOR THE TR1, TR2 AND TR4 DELAY ON TIMES.
5. SEE SHEET E-68 FOR MCC#1 LIGHTING CONTROL CIRCUIT.

JET FAN CONTROL WIRING DIAGRAM (ONE CONTROL PER FAN)

Dist	COUNTY	ROUTE	POST MILES TOTAL PROJECT	SHEET No.	TOTAL SHEETS
04	SF	101	8.2/9.2	229	654

Lionel J. Sudds 10-8-09
REGISTERED ELECTRICAL ENGINEER DATE

12-14-09
PLANS APPROVAL DATE

REGISTERED PROFESSIONAL ENGINEER — Lionel J. Sudds No. 15201 Exp 6-30-10 ELECT — STATE OF CALIFORNIA

THE STATE OF CALIFORNIA OR ITS OFFICERS OR AGENTS SHALL NOT BE RESPONSIBLE FOR THE ACCURACY OR COMPLETENESS OF SCANNED COPIES OF THIS PLAN SHEET.

ABBREVIATIONS: (THIS SHEET ONLY)

- A - AUTO
- 1S - FIRST SB TUNNEL JET FAN CONTROL RELAY
- 2S - SECOND SB TUNNEL JET FAN CONTROL RELAY
- 3S - THIRD SB TUNNEL JET FAN CONTROL RELAY
- 4S - FOURTH SB TUNNEL JET FAN CONTROL RELAY
- BMC - BACKUP MOTOR CONTROL RELAY
- 43L - LOCAL CONTROL INDICATOR RELAY
- 43L# - THE # JET FAN LOCAL CONTROL INDICATION RELAY (FIRST TO FOURTH).
- BP - BY-PASS CONTACTOR
- BPA - AUX BY-PASS CONTACTOR
- CB - AUX CONTACT OF CIRCUIT BREAKER
- DC - DISCONNECT RELAY OR DIRECT CURRENT
- EBMC - EMERGENCY BACKUP MOTOR CONTROL
- FR - FAULT RELAY
- H - HAND
- HWRC - HARDWIRE RUN CONTROL RELAY
- HWRC# - THE # JET FAN HARDWIRE RUN CONTROL RELAY (FIRST TO FOURTH)
- IC - ISOLATION CONTACTOR
- JF1 - FIRST JET FAN SOFT START CONTROL RELAY
- JF2 - SECOND JET FAN SOFT START CONTROL RELAY
- JF4 - FOURTH JET FAN SOFT START CONTROL RELAY
- LO - LOCK OUT RELAY
- LX# - LIGHTING CONTROL CIRCUIT# (FIRST TO SECOND)
- O - OFF
- ON - ON INDICATOR RELAY
- ON# - # JET FAN ON INDICATION RELAY (FIRST TO FOURTH)
- PEU - PHOTOELECTRIC UNIT CONTRACTOR
- RCR - RUN CONTROL RELAY
- RS - RESET
- STP - BACK-UP MOTOR CONTROL INDICATION RELAY
- STP1 - FIRST JET FAN BACK-UP MOTOR CONTROL INDICATION RELAY
- STP2 - SECOND JET FAN BACK-UP MOTOR CONTROL INDICATION RELAY
- STP4 - FOURTH JET FAN BACK-UP MOTOR CONTROL INDICATION RELAY
- TR - TIME RELAY (DELAY OFF)
- TR1 - FIRST JET FAN TIME RELAY (DELAY ON)
- TR2 - SECOND JET FAN TIME RELAY (DELAY ON)
- TR4 - FOURTH JET FAN TIME RELAY (DELAY ON)

BATTERY SUBSTATION AND TUNNEL WORK
(MCC#1 CONTROL WIRING DIAGRAM)

NO SCALE

E-67

LAST REVISION | DATE PLOTTED => 14-DEC-2009
10-09-09 | TIME PLOTTED => 15:59

CALCULATED-DESIGNED BY			
CHECKED BY	LS	LIONEL J. SUDDS	8/01/09
FUNCTIONAL SUPERVISOR	REVISED BY	DATE REVISED	
BEHZAD GOLEMOHAMMADI			

STATE OF CALIFORNIA - DEPARTMENT OF TRANSPORTATION
ELECTRICAL

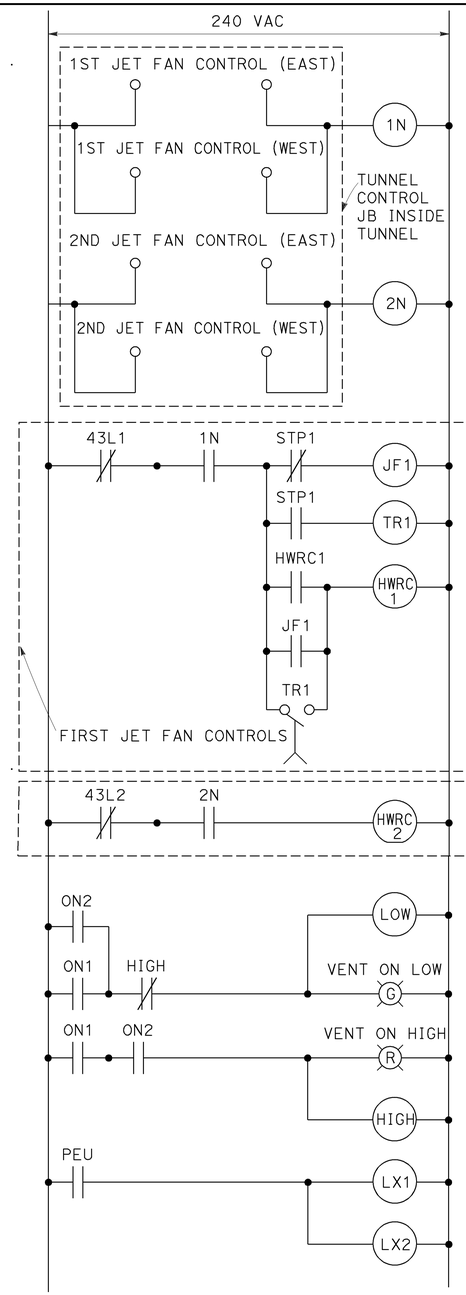

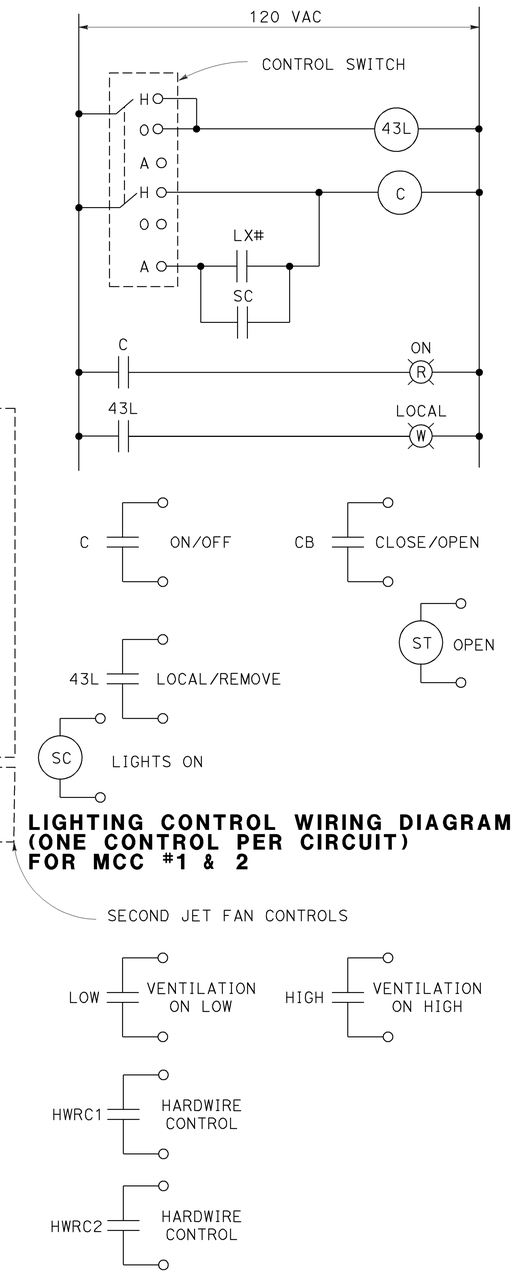

LIGHTING CONTROL WIRING DIAGRAM (ONE CONTROL PER CIRCUIT) FOR MCC #1 & 2

JET FANS AND LIGHTING CONTROLS INTERFACE CONTROL WIRING DIAGRAM FOR MCC #2 (ONE CONTROL PER MCC)

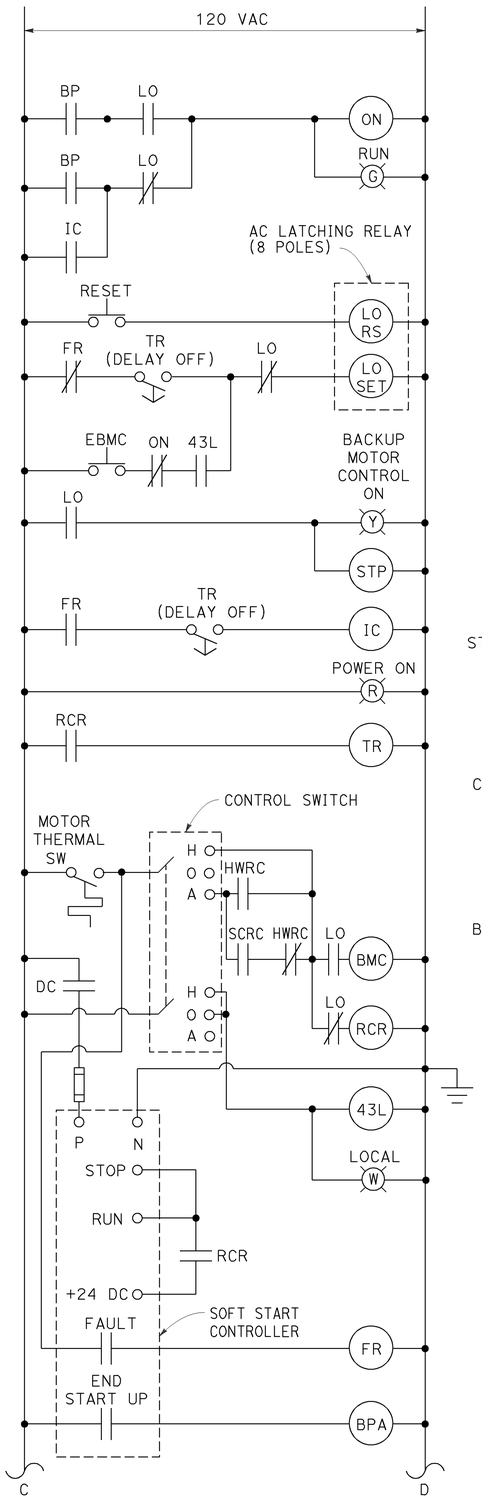

JET FAN CONTROL WIRING DIAGRAM (ONE CONTROL PER FAN)

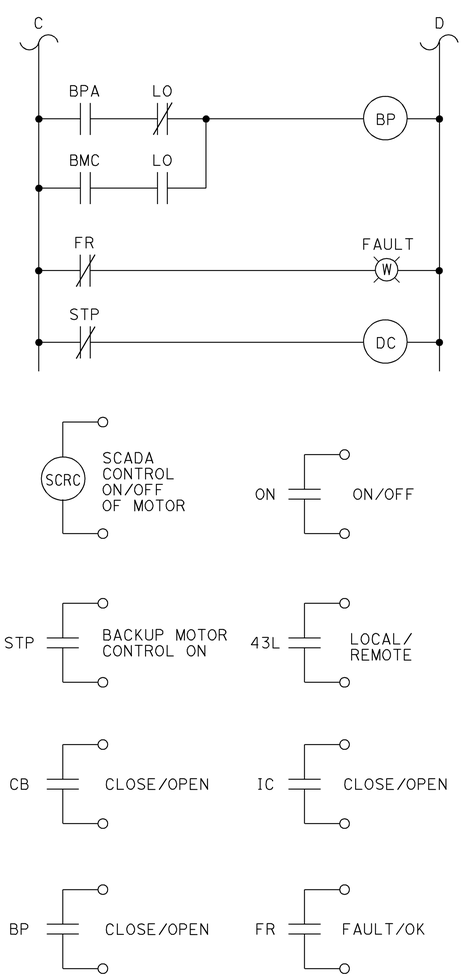

NOTES: (THIS SHEET ONLY)

1. FAULT CONTACTOR OF THE SOFT START SHALL CLOSE WHEN THE SOFT START IS FUNCTIONING PROPERLY.
2. END START UP CONTACTOR OF THE SOFT START SHALL CLOSE WHEN THE MOTOR REACHES 130% OF RATED CURRENT OR LESS.
3. THE TR RELAY "DELAY OFF" TIME SHALL BE SET TO 5 SECONDS LONGER THAN EXPECTED DECELERATION TIME FROM RATED SPEED TO ZERO.
4. SEE SHEET E-72 FOR THE TR1 DELAY ON TIME.

Dist	COUNTY	ROUTE	POST MILES TOTAL PROJECT	SHEET No.	TOTAL SHEETS
04	SF	101	8.2/9.2	230	654

Lionel J. Sudds 10-8-09
REGISTERED ELECTRICAL ENGINEER DATE

12-14-09
PLANS APPROVAL DATE

Lionel J. Sudds No. 15201 Exp 6-30-10 ELECT — REGISTERED PROFESSIONAL ENGINEER — STATE OF CALIFORNIA

THE STATE OF CALIFORNIA OR ITS OFFICERS OR AGENTS SHALL NOT BE RESPONSIBLE FOR THE ACCURACY OR COMPLETENESS OF SCANNED COPIES OF THIS PLAN SHEET.

ABBREVIATIONS: (THIS SHEET ONLY)

- A - AUTO
- 1N - FIRST NB TUNNEL JET FAN CONTROL RELAY
- 2N - SECOND NB TUNNEL JET FAN CONTROL RELAY
- BMC - BACKUP MOTOR CONTROL RELAY
- 43L - LOCAL CONTROL INDICATOR RELAY
- 43L# - THE # JET FAN LOCAL CONTROL INDICATION RELAY (FIRST TO SECOND).
- BP - BY-PASS CONTACTOR
- BPA - AUX BY-PASS CONTACTOR
- C - LIGHTING CONTACTOR
- CB - AUX CONTACT OF CIRCUIT BREAKER
- DC - DISCONNECT RELAY OR DIRECT CURRENT
- EBMC - EMERGENCY BACKUP MOTOR CONTROL
- FR - FAULT RELAY
- H - HAND
- HWRC - HARDWIRE RUN CONTROL RELAY
- HWRC# - THE # JET FAN HARDWIRE RUN CONTROL RELAY (FIRST TO SECOND)
- IC - ISOLATION CONTACTOR
- JF1 - FIRST JET FAN SOFT START CONTROL RELAY
- LO - LOCK OUT RELAY
- LX# - LIGHTING CONTROL CIRCUIT# (FIRST TO SECOND)
- O - OFF
- ON - ON INDICATOR RELAY
- ON# - # JET FAN ON INDICATION RELAY (FIRST TO SECOND)
- PEU - PHOTOELECTRIC UNIT CONTRACTOR
- RCR - RUN CONTROL RELAY
- RS - RESET
- SC - SCADA LIGHTING CONTROL
- ST - SHUT TRIP
- STP - BACK-UP MOTOR CONTROL INDICATION RELAY
- STP1 - FIRST JET FAN BACK-UP MOTOR CONTROL INDICATION RELAY
- TR - TIME RELAY (DELAY OFF)
- TR1 - FIRST JET FAN TIME RELAY (DELAY ON)

CALIFORNIA STATE FIRE MARSHAL APPROVED
Approval of this plan does not authorize or approve any omission or deviation from applicable regulations. Final approval is subject to field inspection. One set of approved plans shall be available on the project site at all times.
Reviewed by: STEPHEN GUARINO
Approval date: 12-14-09

BATTERY SUBSTATION AND TUNNEL WORK
(MCC#2 CONTROL WIRING DIAGRAM)

NO SCALE

E-68

CALCULATED-DESIGNED BY	REVISED BY	DATE REVISED
LIONEL J. SUDDS	LS	8/01/09
CHECKED BY		
LIONEL J. SUDDS		

FUNCTIONAL SUPERVISOR: BEHZAD GOLEMOHAMMADI

STATE OF CALIFORNIA - DEPARTMENT OF TRANSPORTATION
ELECTRICAL

LAST REVISION DATE PLOTTED => 14-DEC-2009
TIME PLOTTED => 15:59
10-09-09

BORDER LAST REVISED 4/11/2008

RELATIVE BORDER SCALE IS IN INCHES 0 1 2 3

USERNAME => trlenard
DGN FILE => 416374ua068.dgn

CU 04242

EA 163741

Dist	COUNTY	ROUTE	POST MILES TOTAL PROJECT	SHEET No.	TOTAL SHEETS
04	SF	101	8.2/9.2	231	654

Lionel J. Sudds 10-8-09
REGISTERED ELECTRICAL ENGINEER DATE

Lionel J. Sudds No. 15201 Exp 6-30-10 ELECT
REGISTERED PROFESSIONAL ENGINEER — STATE OF CALIFORNIA

12-14-09
PLANS APPROVAL DATE

THE STATE OF CALIFORNIA OR ITS OFFICERS OR AGENTS SHALL NOT BE RESPONSIBLE FOR THE ACCURACY OR COMPLETENESS OF SCANNED COPIES OF THIS PLAN SHEET.

GENERAL NOTE:
(THIS SHEET ONLY)

1. SEE SHEET E-149 FOR CONNECTION TO EQUIPMENT.

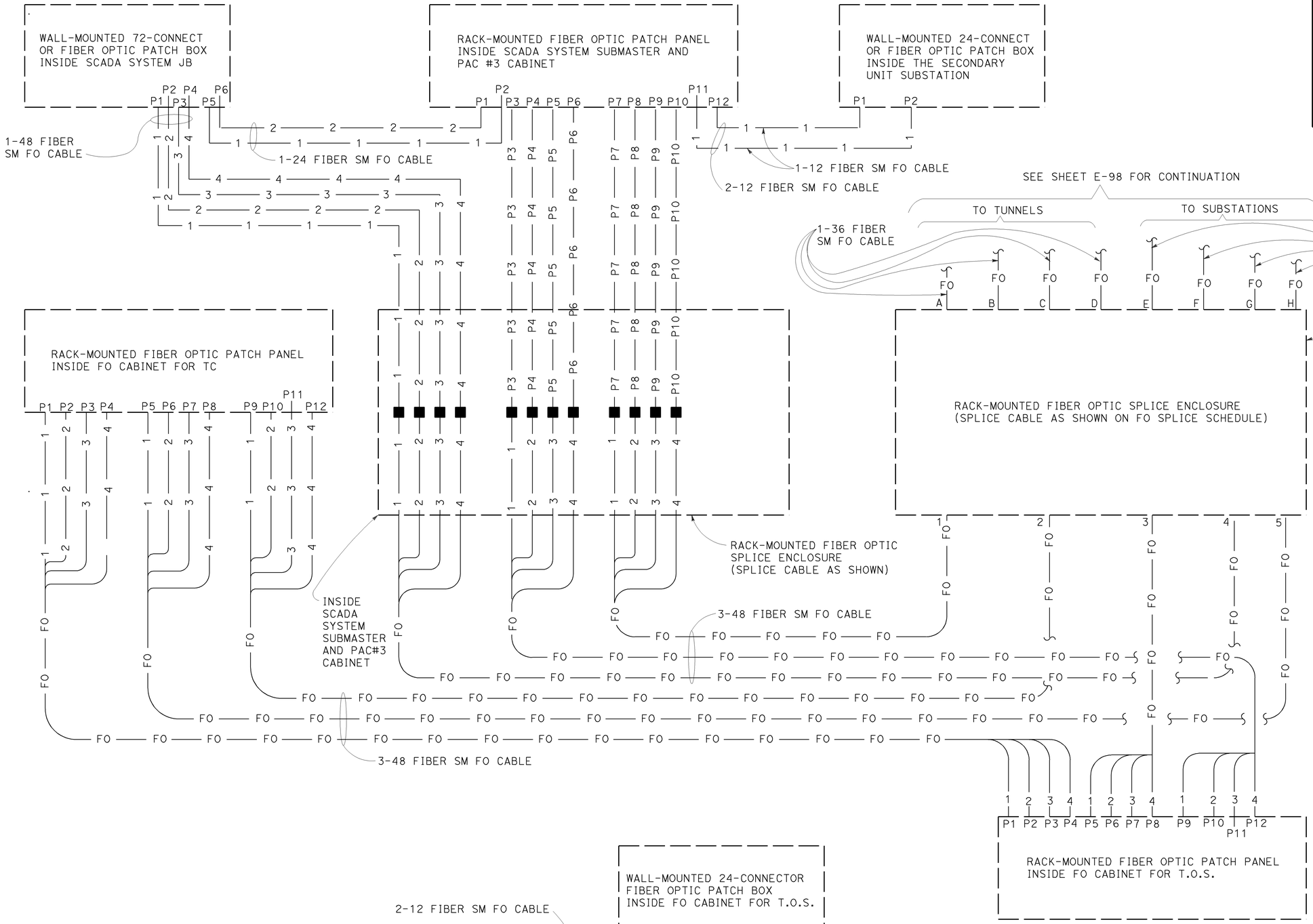

FROM		TO	
CABLE#	BT#	CABLE	BT#
1	1	A	1
1	2	B	1
1	3	C	1
1	4	D	1
2	1	A	2
2	2	B	2
2	3	C	2
2	4	D	2
3	1	A	3
3	2	B	3
3	3	C	3
3	4	D	3
3	3	A	1
3	4	B	1
4	1	E	1
4	2	F	1
4	3	G	1
4	4	H	1
5	1	E	2
5	2	F	2
5	3	G	2
5	4	H	2

FO SPLICE SCHEDULE FOR TOS RACK-MOUNTED FIBER OPTIC SPLICE ENCLOSURE

CALIFORNIA STATE FIRE MARSHAL APPROVED
Approval of this plan does not authorize or approve any omission or deviation from applicable regulations. Final approval is subject to field inspection. One set of approved plans shall be available on the project site at all times.
Reviewed by: STEPHEN GUARINO
Approval date: 12-14-09

BATTERY SUBSTATION AND TUNNEL WORK
(SUBSTATION FO CONNECTION DIAGRAM)
NO SCALE

E-69

STATE OF CALIFORNIA - DEPARTMENT OF TRANSPORTATION
ELECTRICAL
FUNCTIONAL SUPERVISOR: BEHZAD GOLEMOHAMMADI
CALCULATED-DESIGNED BY: LS
CHECKED BY: LIONEL J. SUDDS
REVISED BY: LIONEL J. SUDDS
DATE REVISED: 8/01/09
LAST REVISION DATE PLOTTED => 14-DEC-2009
TIME PLOTTED => 15:59
10-23-09

BORDER LAST REVISED 4/11/2008
RELATIVE BORDER SCALE IS IN INCHES 0 1 2 3
USERNAME => trlenard
DGN FILE => 416374ua069.dgn
CU 04242
EA 163741

Dist	COUNTY	ROUTE	POST MILES TOTAL PROJECT	SHEET No.	TOTAL SHEETS
04	SF	101	8.2/9.2	232	654

Lionel J. Sudds 10-8-09
REGISTERED ELECTRICAL ENGINEER DATE

12-14-09
PLANS APPROVAL DATE

REGISTERED PROFESSIONAL ENGINEER — Lionel J. Sudds No. 15201 Exp 6-30-10 ELECT — STATE OF CALIFORNIA

THE STATE OF CALIFORNIA OR ITS OFFICERS OR AGENTS SHALL NOT BE RESPONSIBLE FOR THE ACCURACY OR COMPLETENESS OF SCANNED COPIES OF THIS PLAN SHEET.

PROTECTIVE RELAY SETTINGS

BATTERY SUBSTATION		MAIN POST SUBSTATION	
PROTECTIVE RELAY #	PROTECTIVE RELAY FUNCTIONS CONTACTOR SETTINGS	PROTECTIVE RELAY #	PROTECTIVE RELAY FUNCTIONS CONTACTOR SETTINGS
1 (INCOMING)	TR=32+27+51+50+51N+50N+IN3	4 (TIE)	TR=67+67N+IN3
	OUT2=51+50+51N+50N+IN3		OUT2=67+67N+IN3
	OUT3=51+50+51N+50N+27+32+IN3		OUT3=27X
	OUT4=27		OUT4=67+67N+IN3
	OUT5=62(SEE SHEET E-73)		OUT5=67*IN2+67N*IN2
2 (FEEDER)	TR=51+50+51N+50N	5 (FEEDER)	TR=51+50+51N+50N
	OUT2=50BF		OUT2=50BF
	OUT3=51+50+51N+50N		OUT3=27+27X
	OUT4=27x		OUT4=51+50+51N+50N
	OUT5=51+50+51N+50N		OUT5=51+50+51N+50N
3 (TIE)	TR=67+67N+IN3	6 (INCOMING)	TR=32+27+51+50+51N+50N+IN3
	OUT2=67+67N+IN3		OUT2=51+50+51N+50N+IN3
	OUT3=67+67N+IN3		OUT3=51+50+51N+50N+27+32+IN3
	OUT4=67*IN2+67N*IN2		OUT4=27x
	OUT5=27x		OUT5=62

GENERAL NOTES: (THIS SHEET ONLY)

1. TR IS OUT1 OF THE PROTECTIVE RELAY CONTACTOR (CONTROL OUTPUT) WITH CIRCUIT MONITOR.
2. INCLUDED BUT NOT SHOWN ARE THE LOCAL AND SCADA CONTROLS OF THE MV CIRCUIT BREAKERS.
3. THE PROTECTIVE RELAYS, BACKUP PROTECTIVE RELAYS, LINE CURRENT SHALL BE SET AS SHOWN ON THIS SHEET AND IN ACCORDANCE WITH THE "SHORT CIRCUIT, PROTECTION, AND COORDINATION STUDY" SPECIFICATIONS AS SPECIFIED IN THE SPECIAL PROVISIONS.
4. ALL VOLTAGE TRANSFORMERS (VTS) ARE 12.47 kV/120 V RATIO; 3 VTS PER LOCATION.
5. ALL CURRENT TRANSFORMERS (CTS) ARE MULTIRATIO CURRENT TRANSFORMERS THAT ARE ADJUSTABLE FROM 1200/5 TO 50/5 RATIOS, AND THE CT RATIO SHALL BE SET IN ACCORDANCE WITH THE "SHORT CIRCUIT, PROTECTION, AND COORDINATION STUDY" SPECIFICATIONS AS SPECIFIED IN THE SPECIAL PROVISIONS FOR EACH CT.
6. OUT # IS THE CONTROL OUTPUT # OF THE PROTECTIVE RELAY.
7. IN # IS THE CONTROL INPUT # OF THE PROTECTIVE RELAY.
8. THERE 3 CURRENT TRANSFORMERS FOR EACH MEDIUM VOLTAGE CIRCUIT BREAKER.
9. THERE ARE 4 WIRES FROM THE VOLTAGE TRANSFORMER TO THE CABLE OR BUS (MEDIUM VOLTAGE).
10. THE POWER DISTRIBUTION SYSTEM SHOWN ON THIS SHEET AND EQUIPMENT SHALL BE TESTED AND STUDY PERFORMED AS SPECIFIED IN THE "POWER SYSTEM TESTING" SPECIFICATIONS AS SPECIFIED IN THE SPECIAL PROVISIONS.

SYMBOLS: (THIS SHEET ONLY)

(BPR#)	BACKUP PROTECTIVE RELAY #
(PM)	POWER METER
(PROT RELAY#)	PROTECTIVE RELAY #
(LCDPR #)	LINE CURRENT DIFFERENTIAL PROTECTIVE RELAY #
(#)	POWER CIRCUIT BREAKER # OR # OF CONDUCTOR PER PHASE OR # OF CONDUIT WITH CONDUCTORS OR CABLES
200 A / 600 A	POWER CIRCUIT BREAKER AMPERE RATING / POWER CIRCUIT BREAKER FRAME SIZE

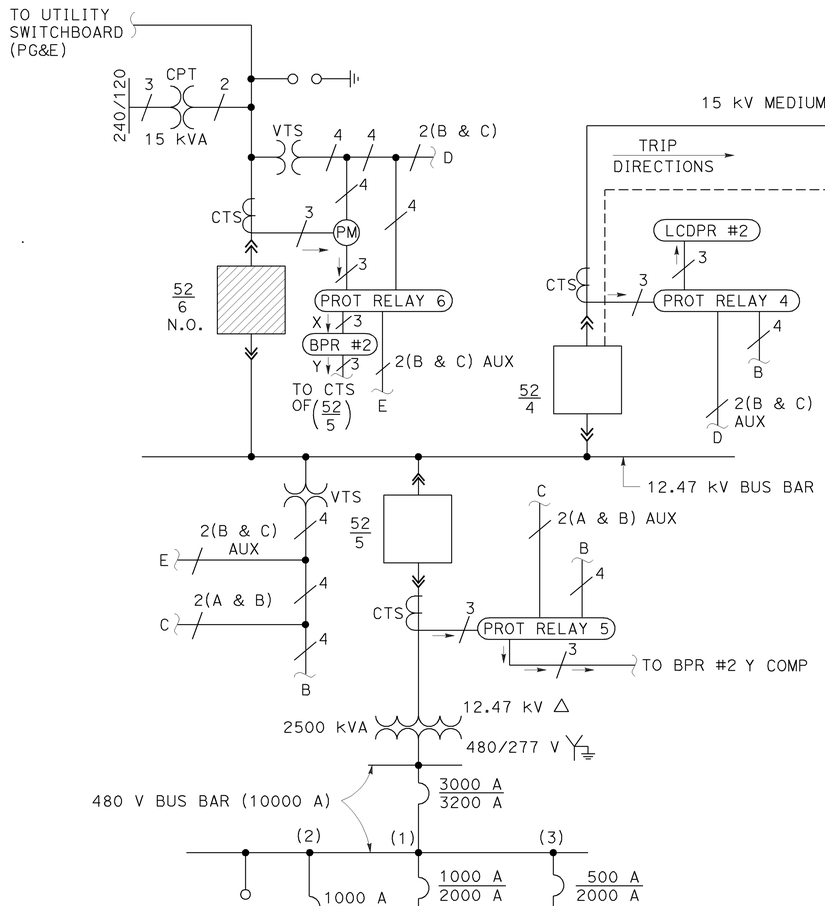

MAIN POST SUBSTATION

BATTERY SUBSTATION

MEDIUM VOLTAGE CIRCUIT BREAKER CONTROL

52/1	TRIP	TR(DC) + XTR(DC) + OUT4/2 + 86-4/1 + OUT3 + OUT5/3 (DC)
	CLOSE	97-1/B
52/2	TRIP	TR (DC) + 86-4/2 + OUT5 + YTR/1 (DC)
	CLOSE	N/A
52/3	TRIP	TR (DC) + OUT5/4 + OUT5 + RM1/3 (DC) + TPR1/3 (DC) + TPR3/3
	CLOSE	N/A
52/4	TRIP	TR (DC) + OUT4/3 + OUT2 + RM1/4 (DC) + TPR1/4 (DC) + TPR3/4
	CLOSE	N/A
52/5	TRIP	TR (DC) + 86-4/5 + OUT5 + YTR/6 (DC)
	CLOSE	N/A
52/6	TRIP	TR (DC) + 86-5/6 + 97-1/M + XTR (DC) + OUT3
	CLOSE	OUT3/5 + OUT4/6

DOYLE DRIVE ONE-LINE DIAGRAM

CALIFORNIA STATE FIRE MARSHAL APPROVED
Approval of this plan does not authorize or approve any omission or deviation from applicable regulations. Final approval is subject to field inspection. One set of approved plans shall be available on the project site at all times.
Reviewed by: STEPHEN GUARINO
Approval date: 12-14-09

BATTERY SUBSTATION AND TUNNEL WORK
(POWER DISTRIBUTION SYSTEM)

NO SCALE

E-70

STATE OF CALIFORNIA - DEPARTMENT OF TRANSPORTATION
ELECTRICAL
FUNCTIONAL SUPERVISOR: BEHZAD GOLEMOHAMMADI
CALCULATED-DESIGNED BY: LIONEL J. SUDDS
CHECKED BY: LIONEL J. SUDDS
REVISED BY: LS
DATE REVISED: 8/01/09

LAST REVISION DATE PLOTTED => 14-DEC-2009
TIME PLOTTED => 15:59

BORDER LAST REVISED 4/11/2008
RELATIVE BORDER SCALE IS IN INCHES 0 1 2 3
USERNAME => trlenard
DGN FILE => 416374ua070.dgn
CU 04242
EA 163741

Dist	COUNTY	ROUTE	POST MILES TOTAL PROJECT	SHEET No.	TOTAL SHEETS
04	SF	101	8.2/9.2	233	654

Lionel J. Sudds 10-8-09
REGISTERED ELECTRICAL ENGINEER DATE

12-14-09
PLANS APPROVAL DATE

Lionel J. Sudds No. 15201 Exp 6-30-10 ELECT
REGISTERED PROFESSIONAL ENGINEER — STATE OF CALIFORNIA

THE STATE OF CALIFORNIA OR ITS OFFICERS OR AGENTS SHALL NOT BE RESPONSIBLE FOR THE ACCURACY OR COMPLETENESS OF SCANNED COPIES OF THIS PLAN SHEET.

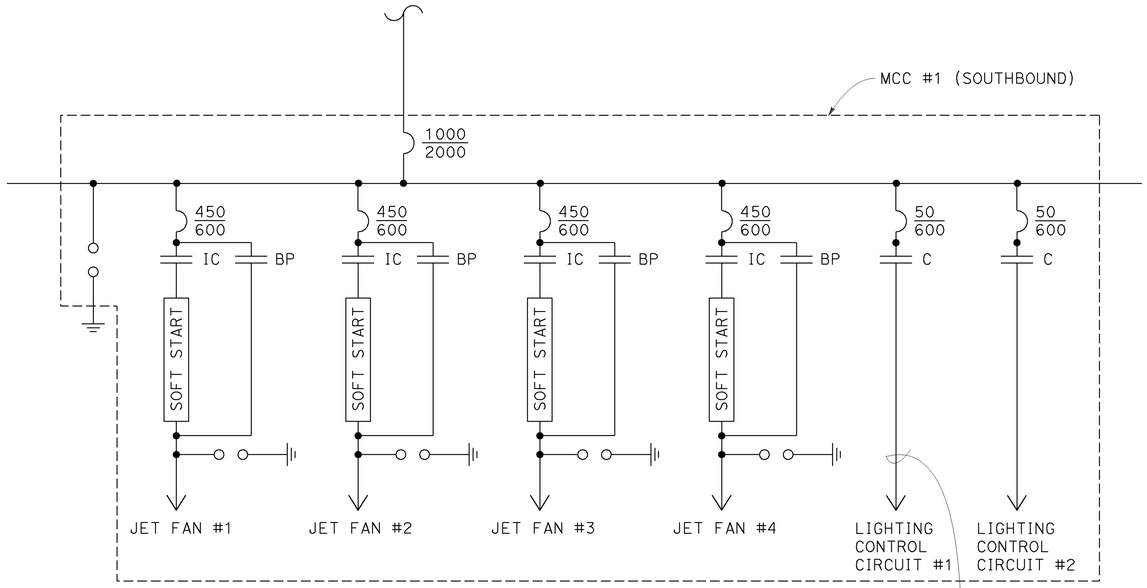

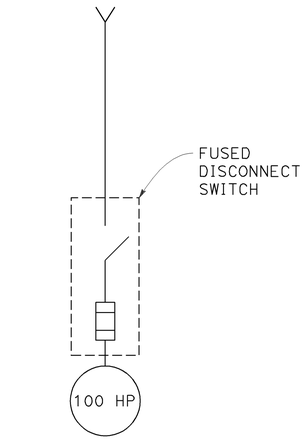

JET FAN (NORTHBOUND)
ONE-LINE DIAGRAM (Typ)

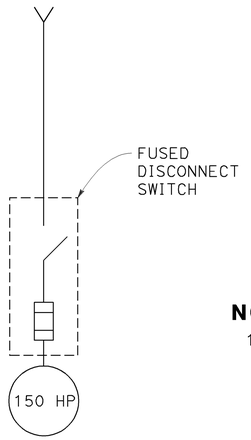

JET FAN (SOUTHBOUND)
ONE-LINE DIAGRAM (Typ)

TUNNEL MOTORS ONE-LINE DIAGRAM

NOTE: (THIS SHEET ONLY)

1. THE MCC'S SHALL INCLUDE A SINGLE-PHASE 5 KVA 480/240/120 V TRANSFORMER FOR THE JET FANS AND LIGHTING CONTROLS INTERFACE CONTROL. (SEE SHEET E-67 AND E-68 FOR WIRING DIAGRAM)

ABBREVIATIONS: (THIS SHEET ONLY)

IC - ISOLATION CONTACTOR

BP - BY-PASS CONTACTOR (FULL VOLTAGE BY-PASS)

C - LIGHTING CONTROL CIRCUIT CONTACTOR

4#4 CONDUCTORS TO CONDUIT #90 OF THE UTILITY DUCTBANK

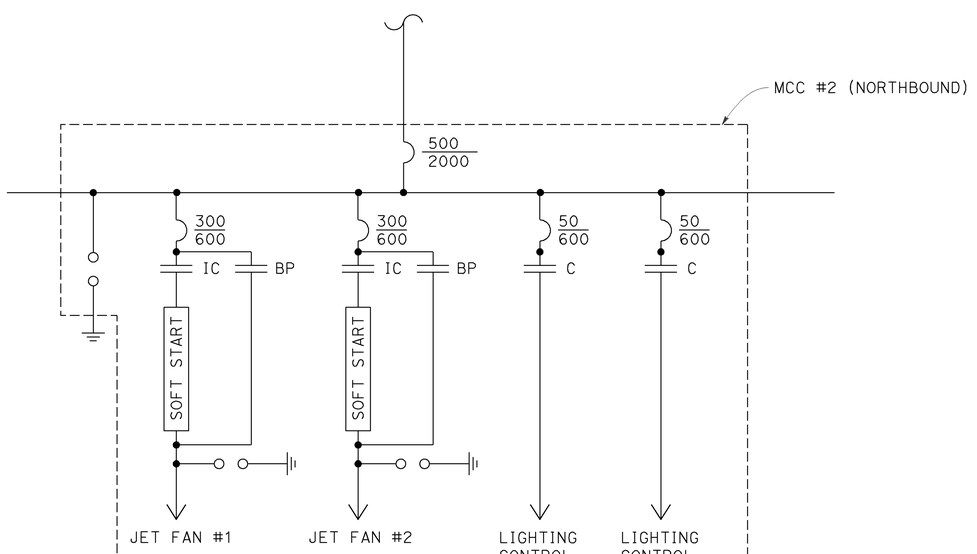

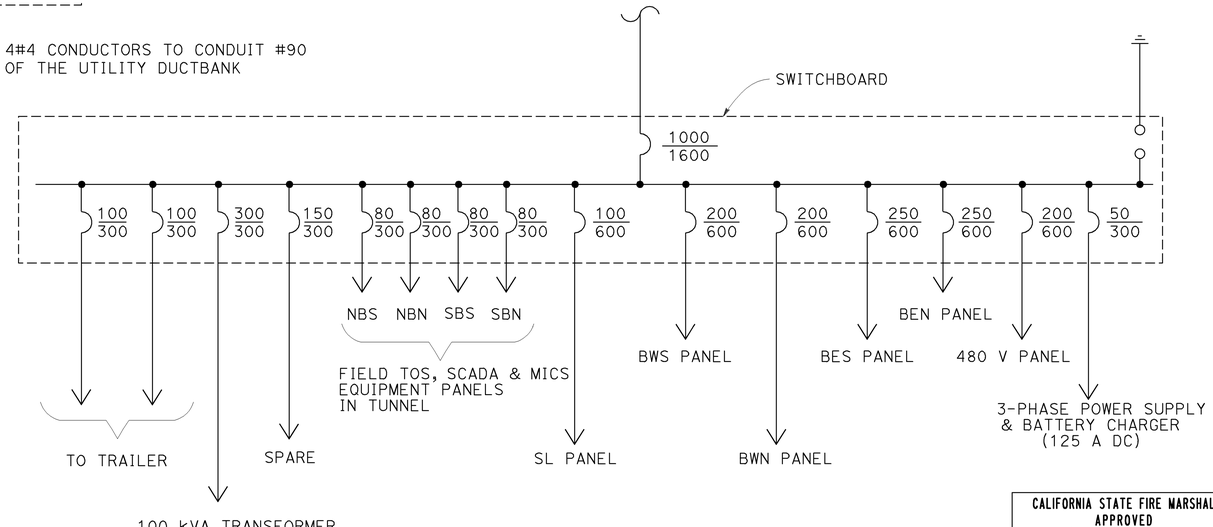

CALIFORNIA STATE FIRE MARSHAL APPROVED
Approval of this plan does not authorize or approve any omission or deviation from applicable regulations. Final approval is subject to field inspection. One set of approved plans shall be available on the project site at all times.
Reviewed by: STEPHEN GUARINO
Approval date: 12-14-09

BATTERY SUBSTATION AND TUNNEL WORK
(SWITCHBOARD, MCC #1, AND MCC #2 POWER DISTRIBUTION SYSTEM)

NO SCALE

E-71

STATE OF CALIFORNIA - DEPARTMENT OF TRANSPORTATION
ELECTRICAL
FUNCTIONAL SUPERVISOR: BEHZAD GOLEMOHAMMADI
CALCULATED-DESIGNED BY: LIONEL J. SUDDS
CHECKED BY: LIONEL J. SUDDS
REVISED BY: LS
DATE REVISED: 8/01/09

LAST REVISION DATE PLOTTED => 14-DEC-2009
10-30-09 TIME PLOTTED => 15:59

BORDER LAST REVISED 4/11/2008
RELATIVE BORDER SCALE IS IN INCHES 0 1 2 3
USERNAME => trienard
DGN FILE => 416374ua071.dgn
CU 04242
EA 163741

Dist	COUNTY	ROUTE	POST MILES TOTAL PROJECT	SHEET No.	TOTAL SHEETS
04	SF	101	8.2/9.2	234	654

REGISTERED ELECTRICAL ENGINEER DATE

12-14-09
PLANS APPROVAL DATE

REGISTERED PROFESSIONAL ENGINEER
No.
Exp.
ELECT
STATE OF CALIFORNIA

THE STATE OF CALIFORNIA OR ITS OFFICERS OR AGENTS SHALL NOT BE RESPONSIBLE FOR THE ACCURACY OR COMPLETENESS OF SCANNED COPIES OF THIS PLAN SHEET.

LEFT INTENTIONALLY BLANK

REVISED BY | DATE REVISED

CALCULATED-DESIGNED BY | CHECKED BY

FUNCTIONAL SUPERVISOR

STATE OF CALIFORNIA - DEPARTMENT OF TRANSPORTATION

Caltrans

ELECTRICAL

BATTERY SUBSTATION AND TUNNEL WORK
(SUBSTATION MAIN SWITCHBOARDS & MCC's SCHEDULE)

E-72

LAST REVISION DATE PLOTTED => 14-DEC-2009
10-09-09 TIME PLOTTED => 15:59

Dist	COUNTY	ROUTE	POST MILES TOTAL PROJECT	SHEET No.	TOTAL SHEETS
04	SF	101	8.2/9.2	235	654

CALIFORNIA STATE FIRE MARSHAL APPROVED

Approval of this plan does not authorize or approve any omission or deviation from applicable regulations. Final approval is subject to field inspection. One set of approved plans shall be available on the project site at all times.

Reviewed by: STEPHEN GUARINO

Approval date: 12-14-09

Lionel J. Sudds 10-8-09
REGISTERED ELECTRICAL ENGINEER DATE

12-14-09
PLANS APPROVAL DATE

REGISTERED PROFESSIONAL ENGINEER — Lionel J. Sudds No. 15201 Exp 6-30-10 ELECT — STATE OF CALIFORNIA

THE STATE OF CALIFORNIA OR ITS OFFICERS OR AGENTS SHALL NOT BE RESPONSIBLE FOR THE ACCURACY OR COMPLETENESS OF SCANNED COPIES OF THIS PLAN SHEET.

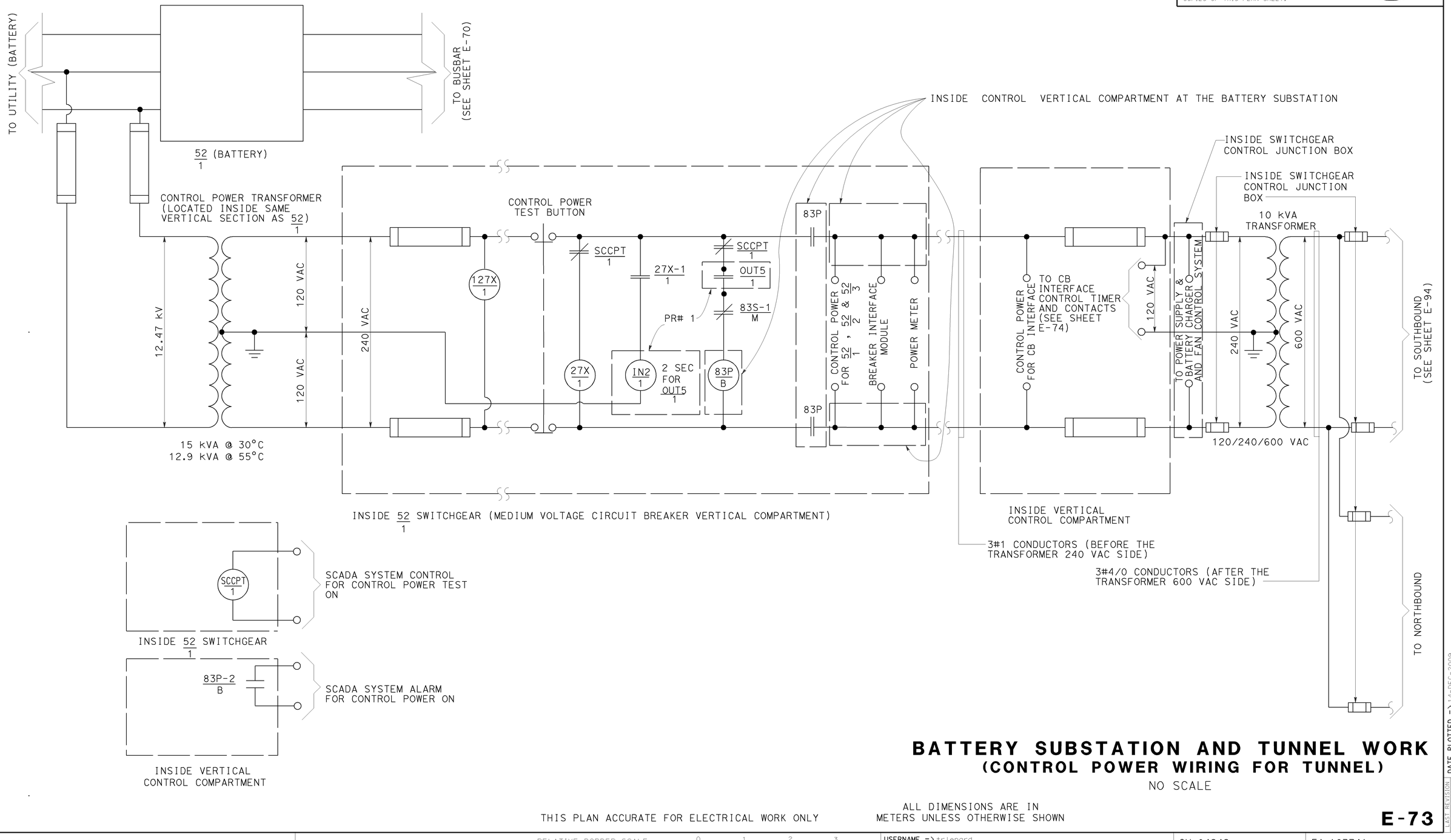

BATTERY SUBSTATION AND TUNNEL WORK
(CONTROL POWER WIRING FOR TUNNEL)

NO SCALE

THIS PLAN ACCURATE FOR ELECTRICAL WORK ONLY

ALL DIMENSIONS ARE IN METERS UNLESS OTHERWISE SHOWN

E-73

REVISED BY	LS
DATE REVISED	8/01/09
CALCULATED-DESIGNED BY	LIONEL J. SUDDS
CHECKED BY	LIONEL J. SUDDS
FUNCTIONAL SUPERVISOR	BEHZAD GOLEMOHAMMADI

STATE OF CALIFORNIA - DEPARTMENT OF TRANSPORTATION
ELECTRICAL

LAST REVISION | DATE PLOTTED => 14-DEC-2009
10-09-09 | TIME PLOTTED => 15:59

Dist	COUNTY	ROUTE	POST MILES TOTAL PROJECT	SHEET No.	TOTAL SHEETS
04	SF	101	8.2/9.2	236	654

Lionel J. Sudds 10-8-09
REGISTERED ELECTRICAL ENGINEER DATE

12-14-09
PLANS APPROVAL DATE

REGISTERED PROFESSIONAL ENGINEER — Lionel J. Sudds No. 15201 Exp 6-30-10 ELECT — STATE OF CALIFORNIA

THE STATE OF CALIFORNIA OR ITS OFFICERS OR AGENTS SHALL NOT BE RESPONSIBLE FOR THE ACCURACY OR COMPLETENESS OF SCANNED COPIES OF THIS PLAN SHEET.

CALIFORNIA STATE FIRE MARSHAL APPROVED
Approval of this plan does not authorize or approve any omission or deviation from applicable regulations. Final approval is subject to field inspection. One set of approved plans shall be available on the project site at all times.
Reviewed by: STEPHEN GUARINO
Approval date: 12-14-09

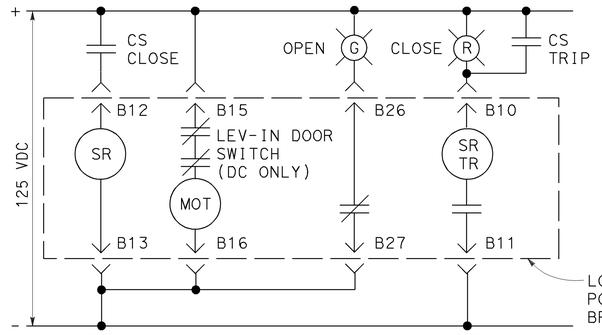

LOW VOLTAGE (480 V) POWER CIRCUIT BREAKER WIRING DIAGRAM

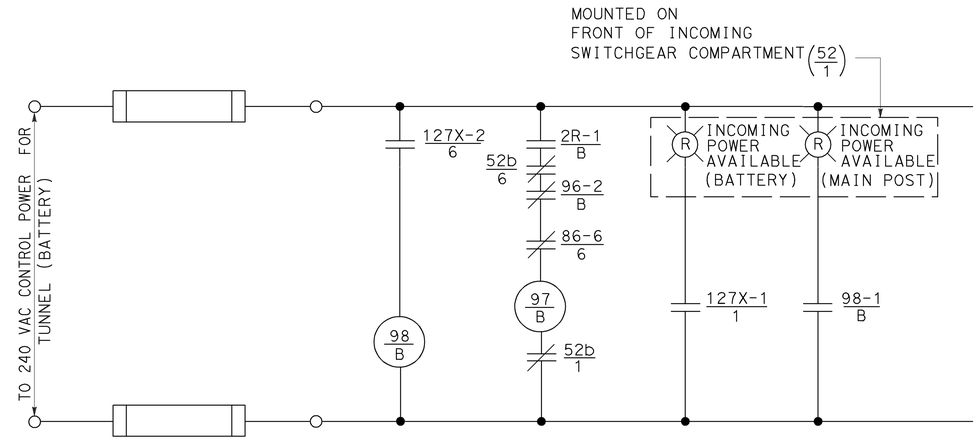

CONTROL VERTICAL COMPARTMENT (CB INTERFACE CONTROLS)

SYMBOL (THIS SHEET ONLY)

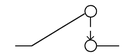

N.O. SWITCH SINGLE POLE SINGLE THROW FOR BY-PASS SWITCH FROM HYDROGEN GAS DETECTOR & TEMPERATURE CONTROL SYSTEM; OR FOR ON/OFF SWITCH FROM SWITCHGEAR CONTROL JUNCTION BOX FAN SYSTEM.

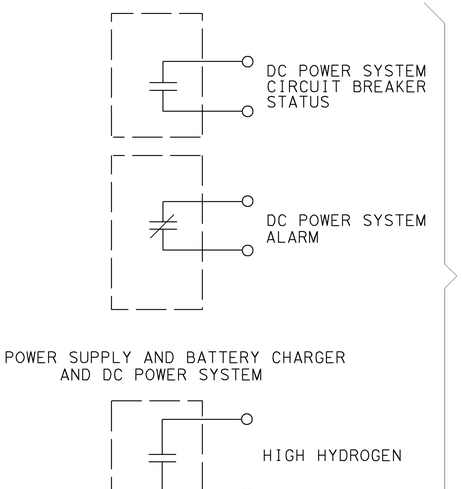

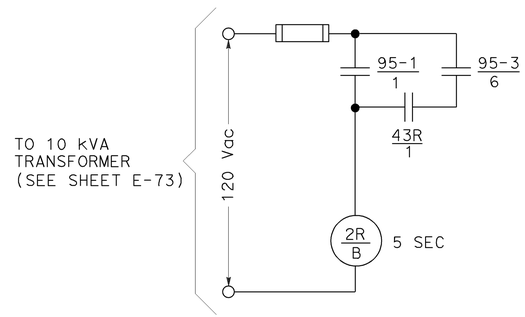

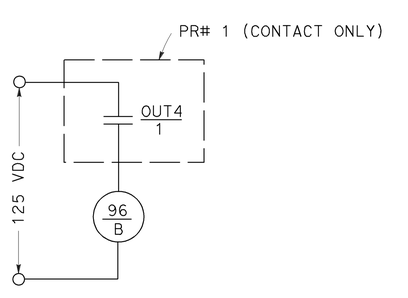

125 VDC POWER FROM POWER SUPPLY AND BATTERY CHARGER FOR PROTECTIVE RELAYS

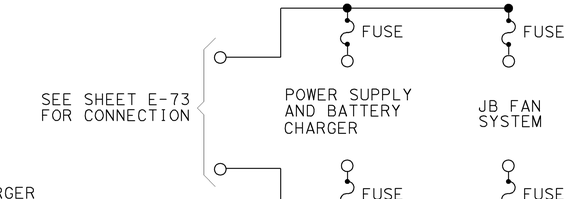

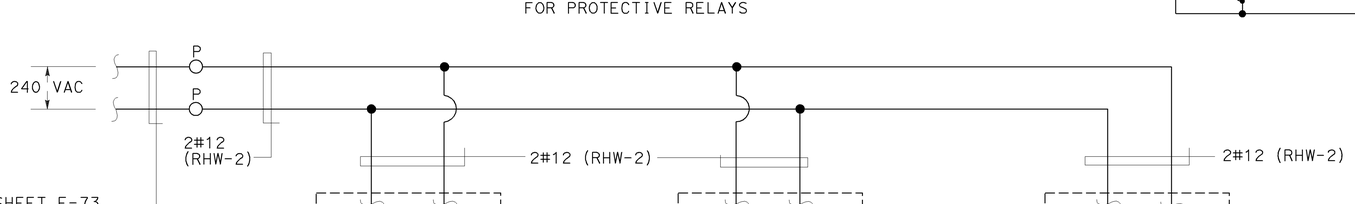

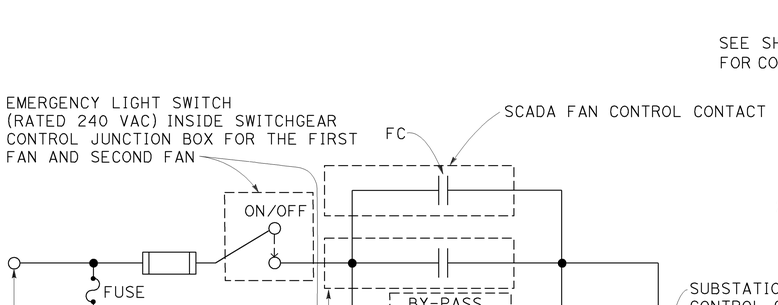

FAN SYSTEM (CONTROLS)

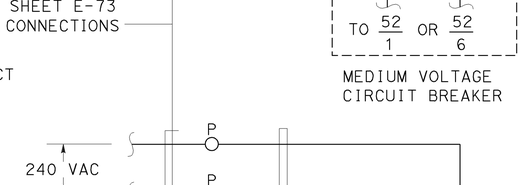

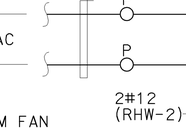

FOR SUBSTATION ROOM FAN 1 & 2

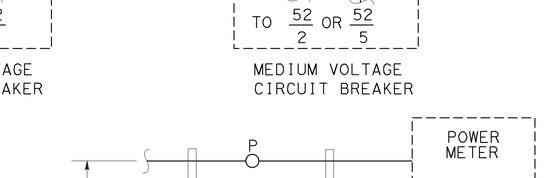

AC SWITCHGEAR POWER SYSTEM

BATTERY SUBSTATION AND TUNNEL WORK (CIRCUIT BREAKER (CB) INTERFACE CONTROL WIRING)

NO SCALE

E-74

STATE OF CALIFORNIA - DEPARTMENT OF TRANSPORTATION
ELECTRICAL
Caltrans
FUNCTIONAL SUPERVISOR: BEHZAD GOLEMOHAMMADI
CALCULATED-DESIGNED BY: LIONEL J. SUDDS
CHECKED BY: LIONEL J. SUDDS
REVISED BY: LS
DATE REVISED: 8/01/09
DATE PLOTTED => 14-DEC-2009
TIME PLOTTED => 15:59
LAST REVISION 10-30-09

BORDER LAST REVISED 4/11/2008
RELATIVE BORDER SCALE IS IN INCHES 0 1 2 3
USERNAME => trlenard
DGN FILE => 416374ua074.dgn
CU 04242
EA 163741

Dist	COUNTY	ROUTE	POST MILES TOTAL PROJECT	SHEET No.	TOTAL SHEETS
04	SF	101	8.2/9.2	237	654

CALIFORNIA STATE FIRE MARSHAL APPROVED

Approval of this plan does not authorize or approve any omission or deviation from applicable regulations. Final approval is subject to field inspection. One set of approved plans shall be available on the project site at all times.

Reviewed by: STEPHEN GUARINO

Approval date: 12-14-09

Lionel J. Sudds 10-8-09
REGISTERED ELECTRICAL ENGINEER DATE

12-14-09
PLANS APPROVAL DATE

REGISTERED PROFESSIONAL ENGINEER — Lionel J. Sudds No. 15201 Exp 6-30-10 ELECT — STATE OF CALIFORNIA

THE STATE OF CALIFORNIA OR ITS OFFICERS OR AGENTS SHALL NOT BE RESPONSIBLE FOR THE ACCURACY OR COMPLETENESS OF SCANNED COPIES OF THIS PLAN SHEET.

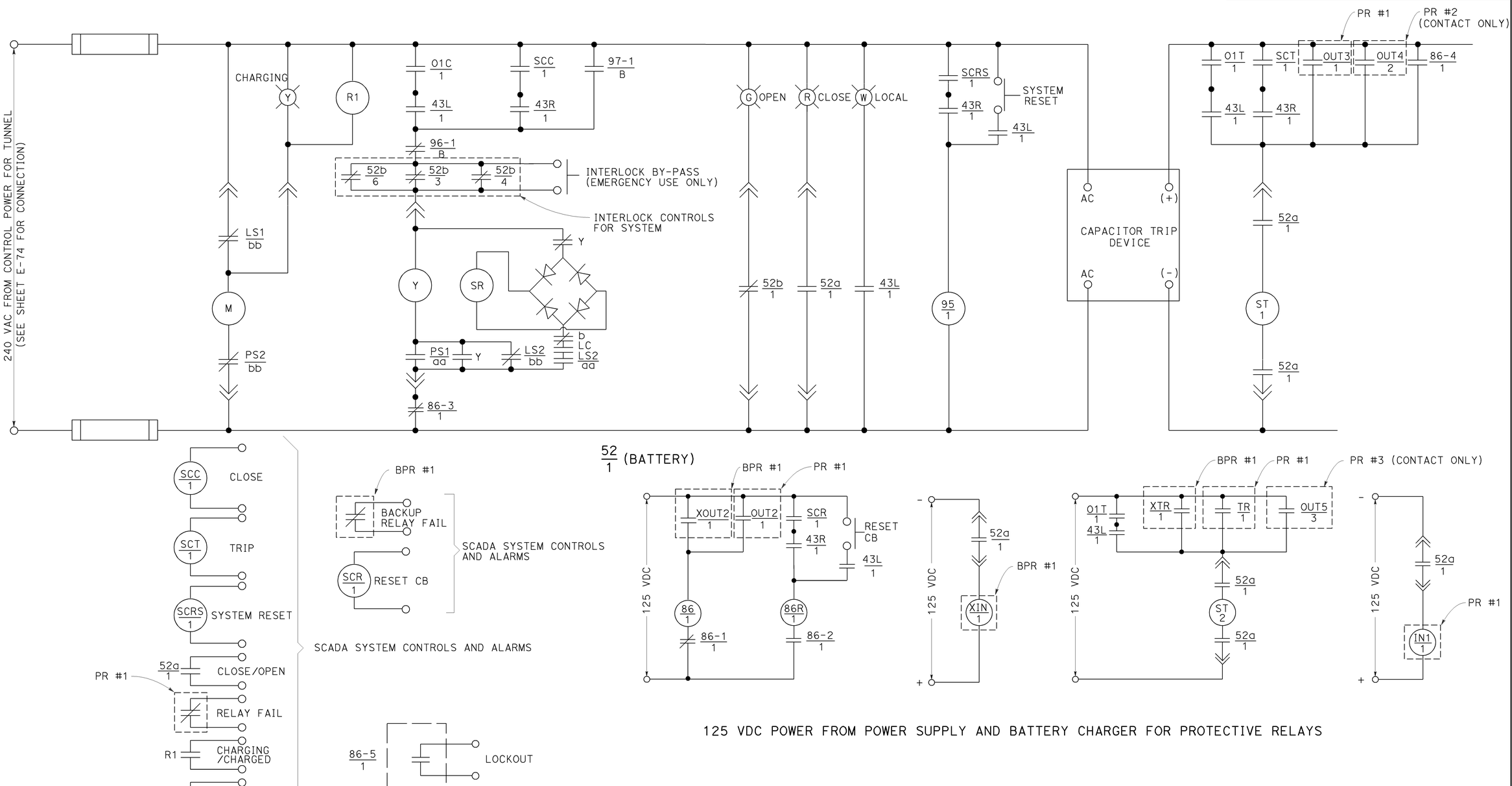

125 VDC POWER FROM POWER SUPPLY AND BATTERY CHARGER FOR PROTECTIVE RELAYS

BATTERY SUBSTATION AND TUNNEL WORK
(INCOMING MV CIRCUIT BREAKER WIRING DIAGRAM)

NO SCALE

E-75

REVISED BY	DATE REVISED
LS	8/01/09

CALCULATED-DESIGNED BY: LIONEL J. SUDDS
CHECKED BY: LIONEL J. SUDDS

FUNCTIONAL SUPERVISOR: BEHZAD GOLEMOHAMMADI

STATE OF CALIFORNIA - DEPARTMENT OF TRANSPORTATION
ELECTRICAL

LAST REVISION | DATE PLOTTED => 14-DEC-2009
10-09-09 | TIME PLOTTED => 15:59

BORDER LAST REVISED 4/11/2008

RELATIVE BORDER SCALE IS IN INCHES 0 1 2 3

USERNAME => trienard
DGN FILE => 416374ua075.dgn

CU 04242

EA 163741

Dist	COUNTY	ROUTE	POST MILES TOTAL PROJECT	SHEET No.	TOTAL SHEETS
04	SF	101	8.2/9.2	238	654

CALIFORNIA STATE FIRE MARSHAL APPROVED
Approval of this plan does not authorize or approve any omission or deviation from applicable regulations. Final approval is subject to field inspection. One set of approved plans shall be available on the project site at all times.
Reviewed by: STEPHEN GUARINO
Approval date: 12-14-09

Lionel J. Sudds 10-8-09
REGISTERED ELECTRICAL ENGINEER DATE

Lionel J. Sudds No. 15201 Exp 6-30-10 ELECT — REGISTERED PROFESSIONAL ENGINEER — STATE OF CALIFORNIA

12-14-09
PLANS APPROVAL DATE

THE STATE OF CALIFORNIA OR ITS OFFICERS OR AGENTS SHALL NOT BE RESPONSIBLE FOR THE ACCURACY OR COMPLETENESS OF SCANNED COPIES OF THIS PLAN SHEET.

240 VAC FROM CONTROL POWER FOR TUBE
(SEE SHEET E-74 FOR CONNECTION)

CHARGING, Y, R1, LS1 bb, M, PS2 bb

01C 3, 43L 3, 86-3 3, 52b 1, 52b 4, INTERLOCK CONTROLS FOR SYSTEM, INTERLOCK BY-PASS (EMERGENCY USE ONLY)

SCC 3, 43R 3

Y, SR, PS1 aa, Y, LS2 bb, b LC, LS2 aa

G OPEN, R CLOSE, W LOCAL

52b 3, 52a 3, 43L 3

AC, (+), CAPACITOR TRIP DEVICE, AC, (-)

PR #4 (CONTACT ONLY), PR #3, LCDPR# 1

01T 3, SCT 3, OUT5 4, OUT2 3, TRP3 3

43L 3, 43R 3

TRANSFER TRIP CONTROL CONTACTOR

52a 3, ST 1, 52a 3

SCC 3 CLOSE
SCT 3 TRIP
SCR 3 RESET
52a 3 CLOSE/OPEN
R1 CHARGING /CHARGED
PR #3 RELAY FAIL
43L 3 LOCAL/ REMOTE
SCADA SYSTEM CONTROLS AND ALARMS

86-4 3 LOCKOUT
SCADA SYSTEM CONTROLS AND ALARMS
LOCKOUT RELAY

LCDPR #1 87 FAIL
LCDPR #1 ALARM RELAY FAIL
SCADA SYSTEM CONTROLS AND ALARMS

52 3 (BATTERY)

LCDPR #1, TRP4 3, TRP2 3, OUT3 3, SCR 3, RESET CB, 43R 3, 43L 3, 125 VDC, TRF1 3, 86 3, 86-1 3, 86R 3, 86-2 3

52a 3, 52a 3, 52b 3, PR #3, IN1 3, IN2 3, LCDPR #1

PR #3, LCDPR #1, 01T 3, 43L 3, TR 3, TRP1 3, RM1 3, 52a 3, ST 2, 52a 3

125 VDC POWER FROM POWER SUPPLY AND BATTERY CHARGER FOR PROTECTIVE RELAYS

BATTERY SUBSTATION AND TUNNEL WORK
(TIE MV CIRCUIT BREAKER WIRING DIAGRAM)

NO SCALE

E-76

CALCULATED-DESIGNED BY	CHECKED BY	REVISED BY	DATE REVISED
LIONEL J. SUDDS	LIONEL J. SUDDS	LS	8/01/09

STATE OF CALIFORNIA - DEPARTMENT OF TRANSPORTATION
ELECTRICAL
FUNCTIONAL SUPERVISOR: BEHZAD GOLEMOHAMMADI

LAST REVISION: DATE PLOTTED => 14-DEC-2009, TIME PLOTTED => 15:59
10-09-09

BORDER LAST REVISED 4/11/2008
RELATIVE BORDER SCALE IS IN INCHES 0 1 2 3
USERNAME => trlenard
DGN FILE => 416374ua076.dgn
CU 04242
EA 163741

Dist	COUNTY	ROUTE	POST MILES TOTAL PROJECT	SHEET No.	TOTAL SHEETS
04	SF	101	8.2/9.2	239	654

REGISTERED ELECTRICAL ENGINEER 10-8-09 DATE

12-14-09
PLANS APPROVAL DATE

REGISTERED PROFESSIONAL ENGINEER Lionel J. Sudds No. 15201 Exp. 6-30-10 ELECT STATE OF CALIFORNIA

THE STATE OF CALIFORNIA OR ITS OFFICERS OR AGENTS SHALL NOT BE RESPONSIBLE FOR THE ACCURACY OR COMPLETENESS OF SCANNED COPIES OF THIS PLAN SHEET.

CALIFORNIA STATE FIRE MARSHAL APPROVED
Approval of this plan does not authorize or approve any omission or deviation from applicable regulations. Final approval is subject to field inspection. One set of approved plans shall be available on the project site at all times.
Reviewed by: STEPHEN GUARINO
Approval date: 12-14-09

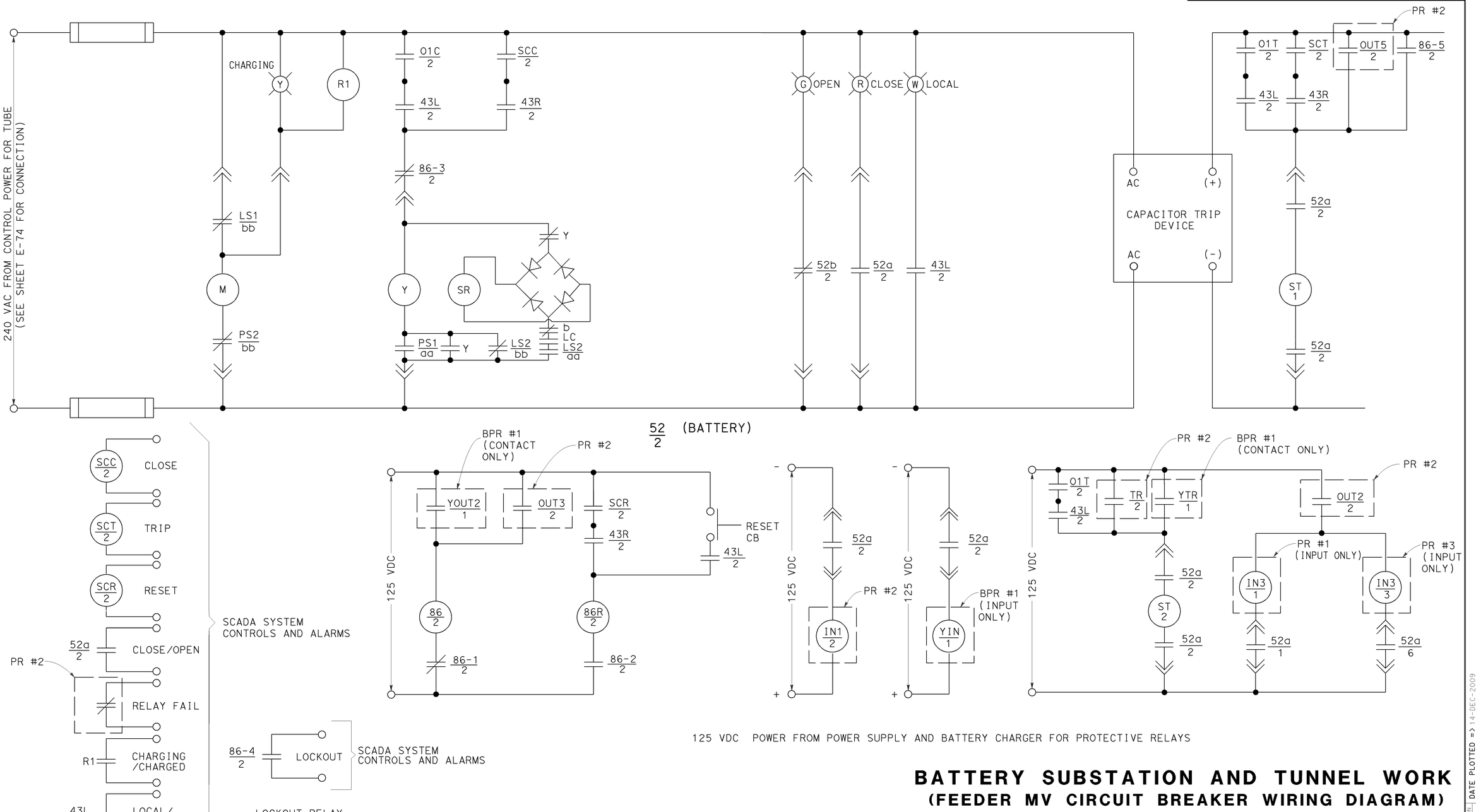

BATTERY SUBSTATION AND TUNNEL WORK
(FEEDER MV CIRCUIT BREAKER WIRING DIAGRAM)

NO SCALE

E-77

STATE OF CALIFORNIA - DEPARTMENT OF TRANSPORTATION
Caltrans
ELECTRICAL

FUNCTIONAL SUPERVISOR: BEHZAD GOLEMOHAMMADI
CALCULATED-DESIGNED BY: LIONEL J. SUDDS
CHECKED BY: LIONEL J. SUDDS
REVISED BY: LS
DATE REVISED: 8/01/09

LAST REVISION 10-09-09
DATE PLOTTED => 14-DEC-2009
TIME PLOTTED => 15:59

Dist	COUNTY	ROUTE	POST MILES TOTAL PROJECT	SHEET No.	TOTAL SHEETS
04	SF	101	8.2/9.2	240	654

REGISTERED ELECTRICAL ENGINEER 10-8-09 DATE

12-14-09
PLANS APPROVAL DATE

THE STATE OF CALIFORNIA OR ITS OFFICERS OR AGENTS SHALL NOT BE RESPONSIBLE FOR THE ACCURACY OR COMPLETENESS OF SCANNED COPIES OF THIS PLAN SHEET.

REGISTERED PROFESSIONAL ENGINEER Lionel J. Sudds No. 15201 Exp. 6-30-10 ELECT STATE OF CALIFORNIA

CALIFORNIA STATE FIRE MARSHAL APPROVED
Approval of this plan does not authorize or approve any omission or deviation from applicable regulations. Final approval is subject to field inspection. One set of approved plans shall be available on the project site at all times.
Reviewed by: STEPHEN GUARINO
Approval date: 12-14-09

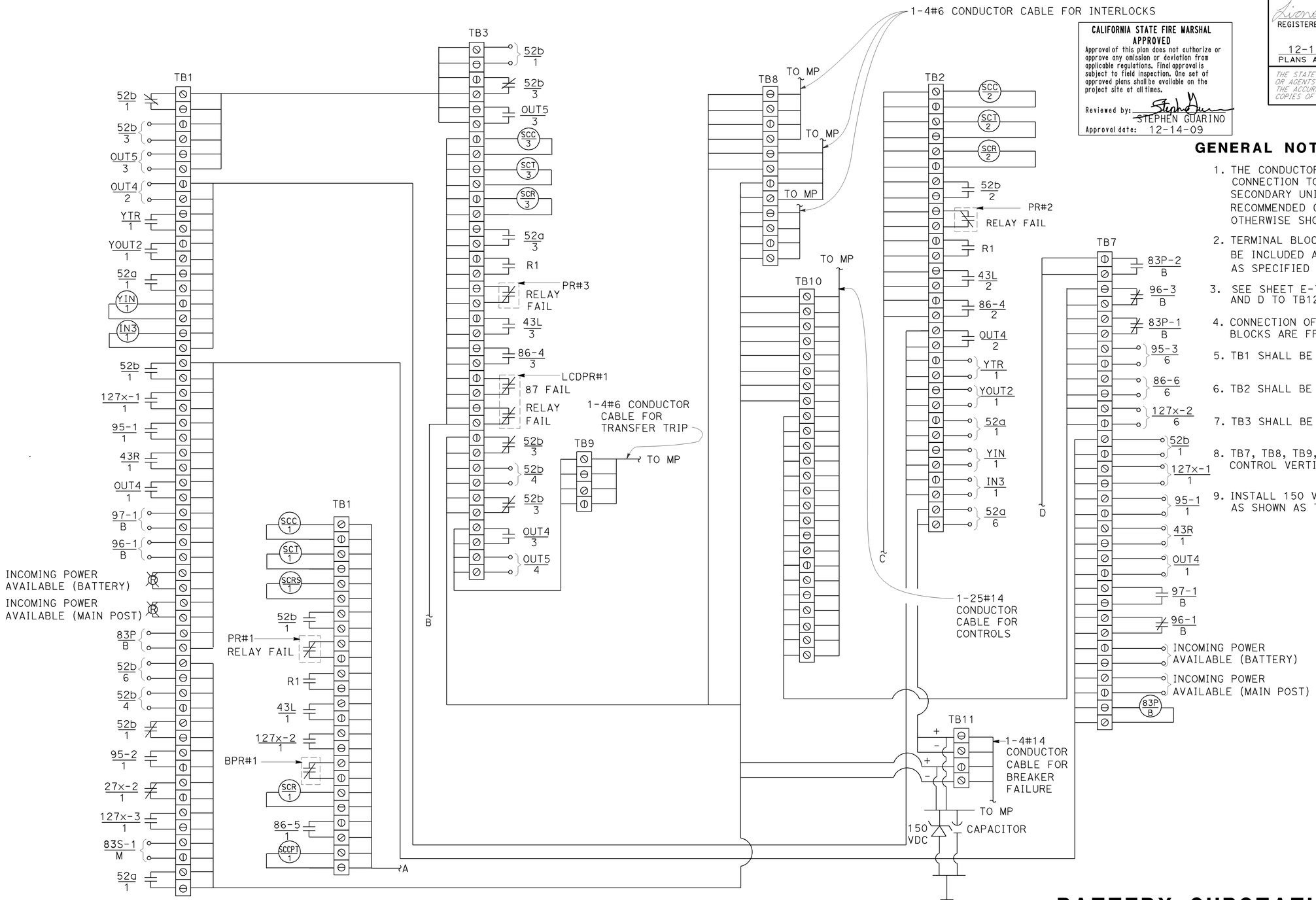

GENERAL NOTES: (THIS SHEET ONLY)

1. THE CONDUCTORS AND CABLES USE FOR THE CONNECTION TO THE TERMINAL BLOCKS SHALL BE THE SECONDARY UNIT SUBSTATION MANUFACTURERS RECOMMENDED CONDUCTORS AND CABLES UNLESS OTHERWISE SHOWN ON THE PLANS.
2. TERMINAL BLOCKS NOT SHOWN ON THIS SHEET SHALL BE INCLUDED AS SHOWN ON THE PLANS AND AS SPECIFIED IN THE SPECIAL PROVISIONS.
3. SEE SHEET E-79 FOR CONNECTION OF A, B, C, AND D TO TB12.
4. CONNECTION OF CONDUCTORS OR CABLES TO TERMINAL BLOCKS ARE FROM TOP TO BOTTOM.
5. TB1 SHALL BE IN THE INCOMING ($\frac{52}{1}$) COMPARTMENT.
6. TB2 SHALL BE IN THE FEEDER ($\frac{52}{2}$) COMPARTMENT.
7. TB3 SHALL BE IN THE TIE ($\frac{52}{3}$) COMPARTMENT.
8. TB7, TB8, TB9, TB10 AND TB11 SHALL BE IN THE CONTROL VERTICAL COMPARTMENT.
9. INSTALL 150 VDC SURGE SUPPRESSON AND CAPACITOR AS SHOWN AS THIS SHEET.

BATTERY SUBSTATION AND TUNNEL WORK
(SECONDARY UNIT SUBSTATION TB & WIRING DIAGRAM)

NO SCALE

E-78

STATE OF CALIFORNIA - DEPARTMENT OF TRANSPORTATION
Caltrans ELECTRICAL

FUNCTIONAL SUPERVISOR: BEHZAD GOLEMOHAMMADI
CALCULATED-DESIGNED BY: LIONEL J. SUDDS
CHECKED BY: LIONEL J. SUDDS
REVISED BY: LS
DATE REVISED: 8/01/09

LAST REVISION 10-23-09
DATE PLOTTED => 14-DEC-2009
TIME PLOTTED => 15:59

Dist	COUNTY	ROUTE	POST MILES TOTAL PROJECT	SHEET No.	TOTAL SHEETS
04	SF	101	8.2/9.2	241	654

Lionel J. Sudds 10-8-09
REGISTERED ELECTRICAL ENGINEER DATE

12-14-09
PLANS APPROVAL DATE

REGISTERED PROFESSIONAL ENGINEER
Lionel J. Sudds
No. 15201
Exp 6-30-10
ELECT
STATE OF CALIFORNIA

THE STATE OF CALIFORNIA OR ITS OFFICERS OR AGENTS SHALL NOT BE RESPONSIBLE FOR THE ACCURACY OR COMPLETENESS OF SCANNED COPIES OF THIS PLAN SHEET.

CALIFORNIA STATE FIRE MARSHAL APPROVED
Approval of this plan does not authorize or approve any omission or deviation from applicable regulations. Final approval is subject to field inspection. One set of approved plans shall be available on the project site at all times.
Reviewed by: STEPHEN GUARINO
Approval date: 12-14-09

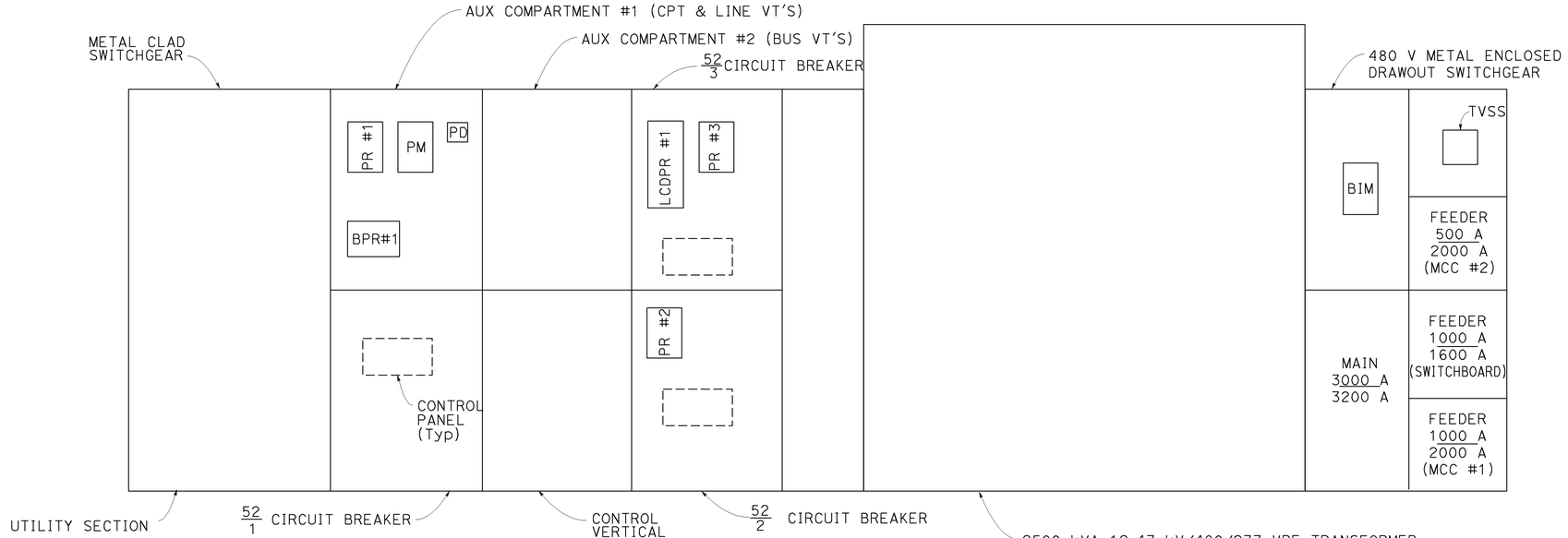

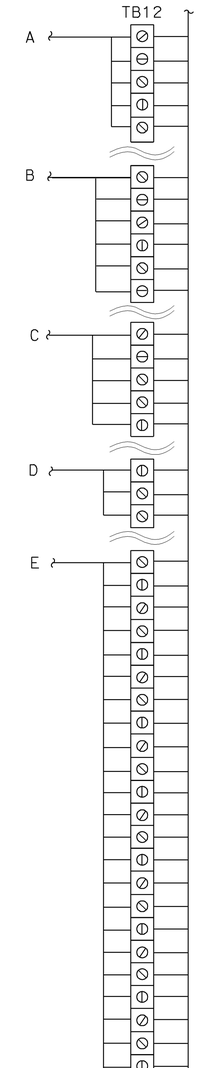

BATTERY SUBSTATION AND TUNNEL WORK
(SECONDARY UNIT SUBSTATION TB & WIRING DIAGRAM)

NO SCALE

E-79

LAST REVISION 10-23-09
DATE PLOTTED => 14-DEC-2009
TIME PLOTTED => 16:00

STATE OF CALIFORNIA - DEPARTMENT OF TRANSPORTATION
ELECTRICAL
FUNCTIONAL SUPERVISOR: BEHZAD GOLEMOHAMMADI
CALCULATED-DESIGNED BY: LS
CHECKED BY: LIONEL J. SUDDS
REVISED BY: LIONEL J. SUDDS
DATE REVISED: 8/01/09

BORDER LAST REVISED 4/11/2008
RELATIVE BORDER SCALE IS IN INCHES 0 1 2 3
USERNAME => trienard
DGN FILE => 416374ua079.dgn
CU 04242
EA 163741

Dist	COUNTY	ROUTE	POST MILES TOTAL PROJECT	SHEET No.	TOTAL SHEETS
04	SF	101	8.2/9.2	242	654

Lionel J. Sudds 10-8-09
REGISTERED ELECTRICAL ENGINEER DATE

12-14-09
PLANS APPROVAL DATE

REGISTERED PROFESSIONAL ENGINEER — Lionel J. Sudds — No. 15201 — Exp 6-30-10 — ELECT — STATE OF CALIFORNIA

THE STATE OF CALIFORNIA OR ITS OFFICERS OR AGENTS SHALL NOT BE RESPONSIBLE FOR THE ACCURACY OR COMPLETENESS OF SCANNED COPIES OF THIS PLAN SHEET.

CALIFORNIA STATE FIRE MARSHAL APPROVED

Approval of this plan does not authorize or approve any omission or deviation from applicable regulations. Final approval is subject to field inspection. One set of approved plans shall be available on the project site at all times.

Reviewed by: STEPHEN GUARINO

Approval date: 12-14-09

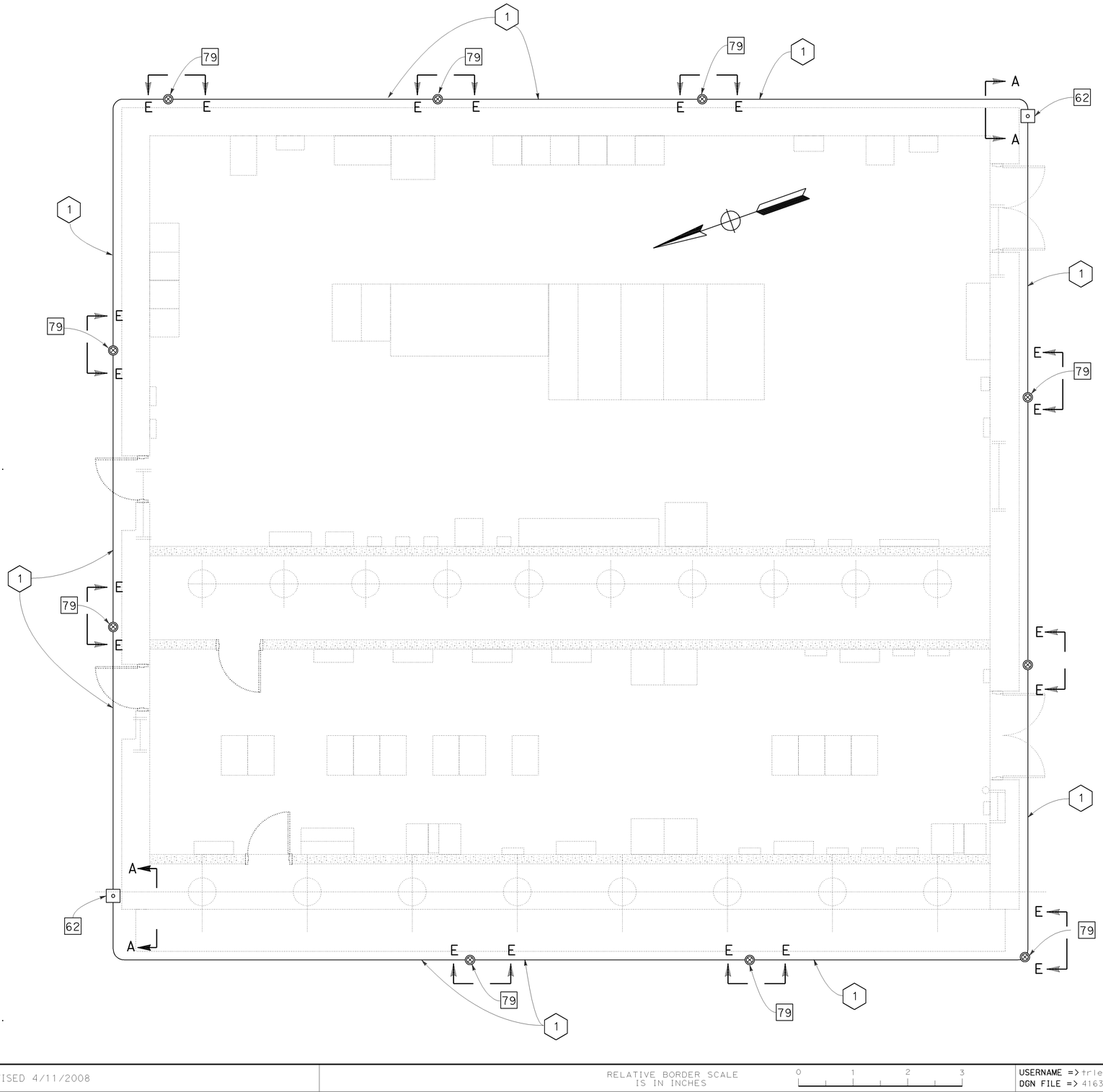

GENERAL NOTES:

(THIS SHEET ONLY)

1. THE GROUNDING ELECTRODE WITH CONDUCTIVE CEMENT 500 kcmil STANDARD ANNEALED SOFT-DRAWN BARE COPPER CONDUCTOR SHALL BE INSTALLED 18" BELOW FINISHED GRADE.
2. THE DISTANCE BETWEEN THE GROUND WELLS, AND GROUNDING ELECTRODES WITH CONDUCTIVE CEMENT SHALL BE BETWEEN 20' AND 30' AROUND THE BUILDING AS SHOWN ON THE PLANS.
3. PERFORM THE "GROUNDING ELECTRODE SYSTEM TESTING" AS SPEFCIFIED IN THE SPECIAL PROVISIONS ON THE SUBSTATION SHOWN ON THIS SHEET.
4. SEE SHEET E-81 FOR ALL SECTION VIEWS.

NOTE:

(THIS SHEET ONLY)

(1) INSTALL 500 kcmil STANDARD ANNEALED SOFT-DRAWN BARE COPPER CONDUCTOR.

THIS PLAN IS ACCURATE FOR ELECTRICAL WORK ONLY

BATTERY SUBSTATION AND TUNNEL WORK
(GROUNDING ELECTRODE SYSTEM)

SCALE: 1''= 4'

E-80

CALCULATED-DESIGNED BY	REVISED BY	DATE REVISED
CHECKED BY	LS	8/01/09
LIONEL J. SUDDS	LIONEL J. SUDDS	

STATE OF CALIFORNIA - DEPARTMENT OF TRANSPORTATION
ELECTRICAL
FUNCTIONAL SUPERVISOR: BEHZAD GOLEMOHAMMADI

LAST REVISION DATE PLOTTED => 14-DEC-2009
TIME PLOTTED => 16:00
10-30-09

BORDER LAST REVISED 4/11/2008

RELATIVE BORDER SCALE IS IN INCHES 0 1 2 3

USERNAME => trlenard
DGN FILE => 416374ua080.dgn

CU 04242

EA 163741

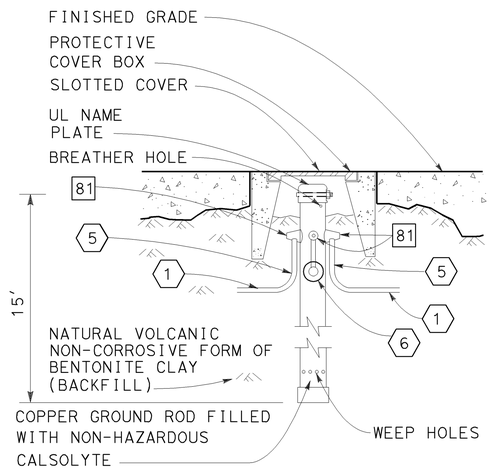

SECTION A-A
(GROUND WELL)

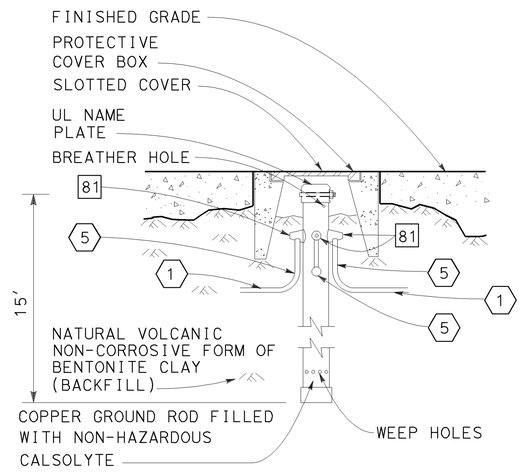

SECTION B-B
(GROUND WELL AT TUNNEL; THE CONNECTION TO THE GROUND WELL FROM EGC CONDUIT IS AS SHOWN ON SECTION A-A.)

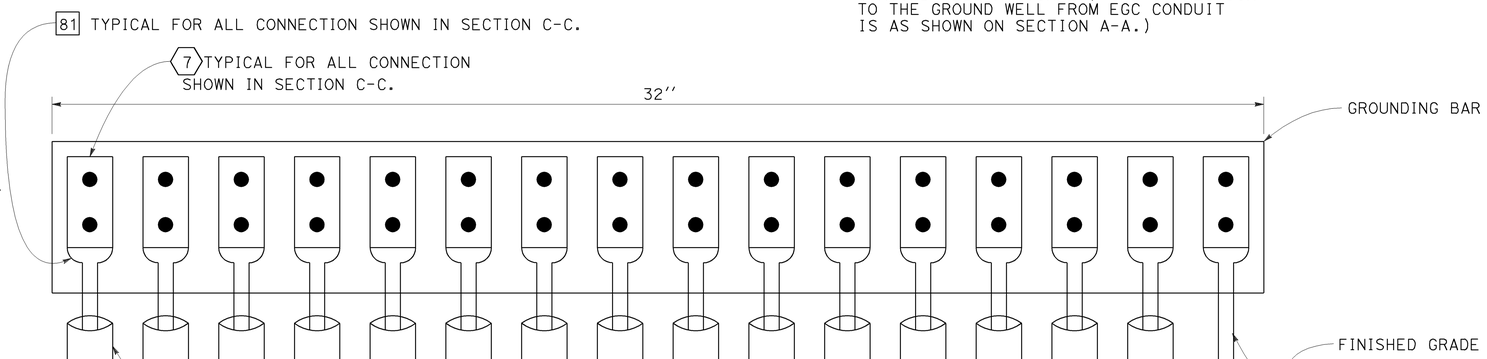

SECTION C-C

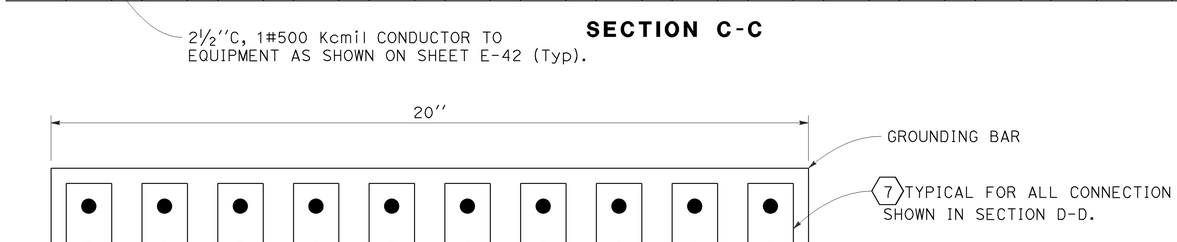

SECTION D-D

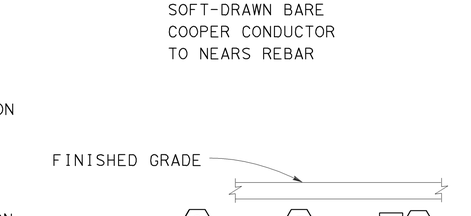

SECTION E-E
(TYPICAL)

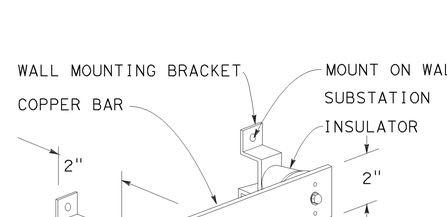

DETAIL-A
(GROUNDING BAR)

CALIFORNIA STATE FIRE MARSHAL APPROVED
Approval of this plan does not authorize or approve any omission or deviation from applicable regulations. Final approval is subject to field inspection. One set of approved plans shall be available on the project site at all times.
Reviewed by: STEPHEN GUARINO
Approval date: 12-14-09

Dist	COUNTY	ROUTE	POST MILES TOTAL PROJECT	SHEET No.	TOTAL SHEETS
04	SF	101	8.2/9.2	243	654

Lionel J. Sudds 10-8-09
REGISTERED ELECTRICAL ENGINEER DATE
12-14-09
PLANS APPROVAL DATE
REGISTERED PROFESSIONAL ENGINEER Lionel J. Sudds No. 15201 Exp 6-30-10 ELECT STATE OF CALIFORNIA
THE STATE OF CALIFORNIA OR ITS OFFICERS OR AGENTS SHALL NOT BE RESPONSIBLE FOR THE ACCURACY OR COMPLETENESS OF SCANNED COPIES OF THIS PLAN SHEET.

NOTES: (THIS SHEET ONLY)

1. INSTALL CONDUCTOR A MINIMUN DEPTH OF BELOW FINISHED GRADE AS SHOWN ON GENERAL NOTE #1 ON SHEET E-80.
2. INSTALL CONDUCTOR A MINIMUN DEPTH OF BELOW FINISHED GRADE FOR THE GROUNDING ELECTRODE SYSTEM AND CONNECTION TO SYSTEM. AS SHOWN ON GENERAL NOTE #1 ON SHEET E-80.
3. THE WELDED CONNECTION FOR THE GROUNDING ELECTRODE TO THE CONDUCTOR OF THE GROUNDING ELECTRODE SYSTEM THROUGH CONDUCTOR TO THE TOP OF GROUNDING ELECTRODE CONNECTIONS TYPE.
4. THE HOLE IN THE GROUNDING BAR SHALL BE DETERMINED BY HOLE SHOWN IN SECTIONS C-C AND D-D, AND ALSO UNDER THE DIRECTION OF THE ENGINEER.
5. 1#500 kcmil STANDARD ANNEALED SOFT-DRAWN BARE COOPER CONDUCTOR.
6. 2½''C, 1#500 kcmil CONDUCTOR.
7. INSTALL LUG AND BOLT LUG TO GROUNDING BAR AS SHOWN.
8. ENCASE GROUND ELECTRODE, GROUNDING CONDUCTOR AND CONNECTING WELD IN CONDUCTIVE CONCRETE WHEN COMPLETE.

BATTERY SUBSTATION AND TUNNEL WORK
(SECTION VIEW OF SUBSTATION)

NO SCALE

E-81

REVISED BY	DATE REVISED
LS	8/01/09

LIONEL J. SUDDS — LIONEL J. SUDDS
CALCULATED-DESIGNED BY — CHECKED BY
FUNCTIONAL SUPERVISOR: BEHZAD GOLEMOHAMMADI
STATE OF CALIFORNIA - DEPARTMENT OF TRANSPORTATION
ELECTRICAL
Caltrans

LAST REVISION 11-02-09
DATE PLOTTED => 14-DEC-2009
TIME PLOTTED => 16:00

BORDER LAST REVISED 4/11/2008
RELATIVE BORDER SCALE IS IN INCHES 0 1 2 3
USERNAME => trienard
DGN FILE => 416374ua081.dgn
CU 04242
EA 163741

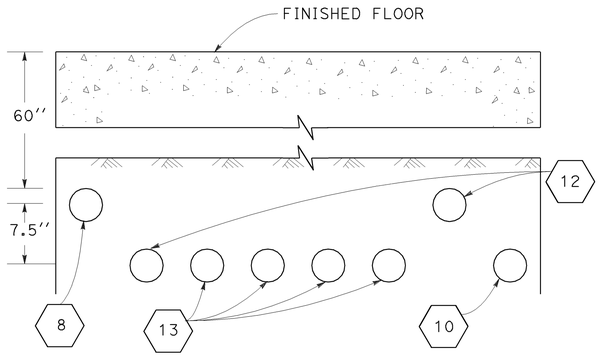

SECTION A-A

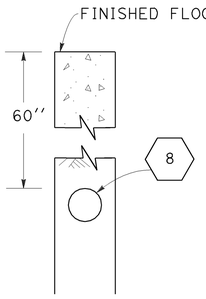

SECTION B-B

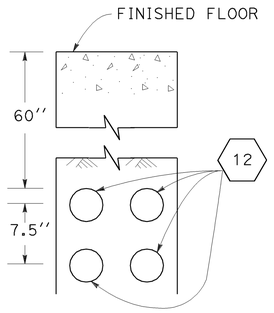

SECTION F-F

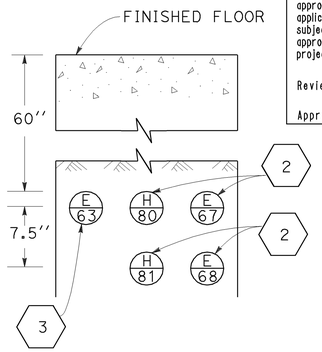

SECTION I-I

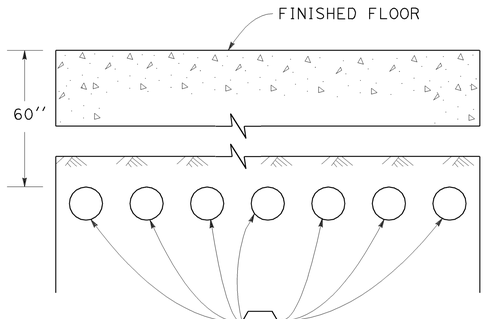

SECTION C-C

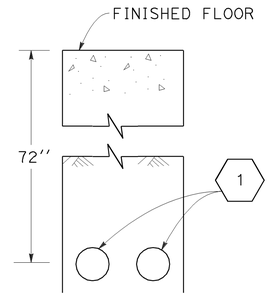

SECTION D-D

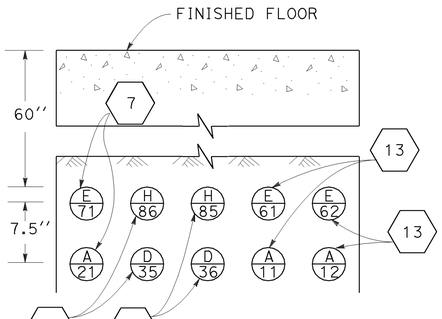

SECTION G-G

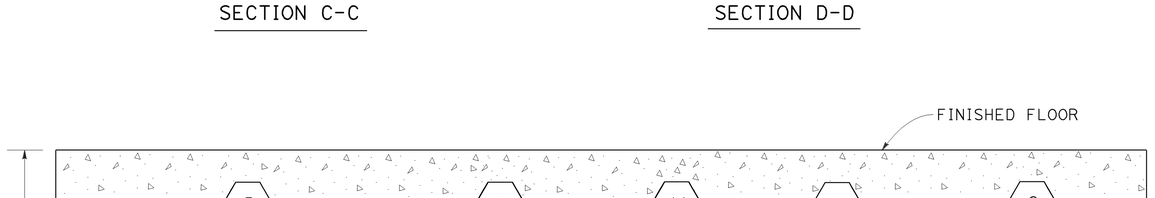

SECTION E-E

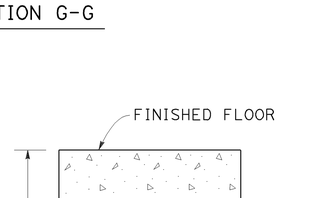

SECTION H-H

Dist	COUNTY	ROUTE	POST MILES TOTAL PROJECT	SHEET No.	TOTAL SHEETS
04	SF	101	8.2/9.2	244	654

Lionel J. Sudds 10-8-09
REGISTERED ELECTRICAL ENGINEER DATE

12-14-09
PLANS APPROVAL DATE

REGISTERED PROFESSIONAL ENGINEER — Lionel J. Sudds — No. 15201 — Exp 6-30-10 — ELECT — STATE OF CALIFORNIA

THE STATE OF CALIFORNIA OR ITS OFFICERS OR AGENTS SHALL NOT BE RESPONSIBLE FOR THE ACCURACY OR COMPLETENESS OF SCANNED COPIES OF THIS PLAN SHEET.

CALIFORNIA STATE FIRE MARSHAL APPROVED

Approval of this plan does not authorize or approve any omission or deviation from applicable regulations. Final approval is subject to field inspection. One set of approved plans shall be available on the project site at all times.

Reviewed by: STEPHEN GUARINO
Approval date: 12-14-09

GENERAL NOTE: (THIS SHEET ONLY)

1. CONDUITS SHOW ONLY DEPTH; NOT SIZE AND POSITION. SIZE ARE INDICATED IN NOTES; AND POSITION ARE SHOWN ELSEWHERE ON THE PLANS.

NOTES: (THIS SHEET ONLY)

1. INSTALL 5''C, 3#750 kcmil AND 1#750 kcmil FOR EGC.
2. INSTALL 4''C, 3#500 kcmil and 1#500 kcmil FOR EGC.
3. INSTALL 4''C, 1-2#4 CONDUCTOR CABLE.
4. INSTALL 4''C, 2-2#4 CONDUCTOR CABLES.
5. INSTALL 4''C, MT.
6. INSTALL 4''C, 3#1 CONDUCTOR AND 1# CONDUCTOR FOR EGC (TO TUNNEL PANELS).
7. INSTALL 4''C, 2#4/0 CONDUCTORS AND 1-4/0 CONDUCTOR FOR EGC.
8. INSTALL 1-½''C, 2#2 CONDUCTORS AND #2 CONDUCTOR FOR EGC.
9. INSTALL 2''C, 3#1 CONDUCTORS AND #1 CONDUCTOR FOR EGC.
10. INSTALL 3''C, 1#3/0 CONDUCTORS AND 1-3/0 CONDUCTOR FOR EGC.
11. INSTALL 2''C, 3#2 CONDUCTORS AND #2 CONDUCTOR FOR EGC.
12. INSTALL 4''C, 3#500 Kcmil CONDUCTORS, 1#6 CONDUCTOR FOR NEUTRAL AND 1#6 CONDUCTOR FOR EGC.
13. INSTALL 4''C, MT FOR TUNNEL LIGHTING CONDUCTORS.
14. INSTALL 4#4 CONDUCTORS.

BATTERY SUBSTATION AND TUNNEL WORK
(EQUIPMENT & UNDERGROUND CONDUIT LAYOUT OF BATTERY SUBSTATION)

NO SCALE

E-82

REVISED BY	LS
DATE REVISED	8/01/09
CALCULATED-DESIGNED BY	LIONEL J. SUDDS
CHECKED BY	LIONEL J. SUDDS
FUNCTIONAL SUPERVISOR	BEHZAD GOLEMOHAMMADI

STATE OF CALIFORNIA - DEPARTMENT OF TRANSPORTATION
Caltrans®
ELECTRICAL

LAST REVISION DATE PLOTTED => 14-DEC-2009
TIME PLOTTED => 16:00
10-27-09

BORDER LAST REVISED 4/11/2008
RELATIVE BORDER SCALE IS IN INCHES 0 1 2 3
USERNAME => trlenard
DGN FILE => 416374ua082.dgn
CU 04242
EA 163741

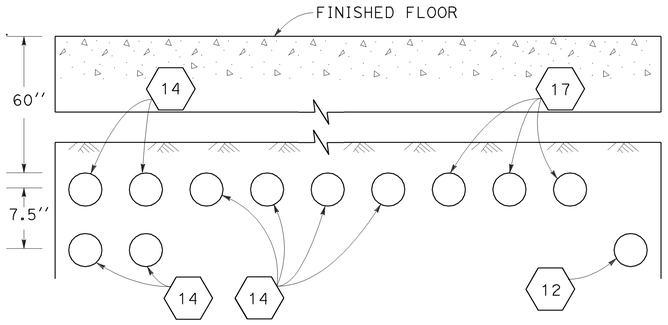

SECTION J-J

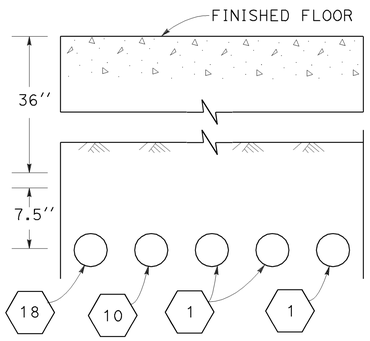

SECTION A-A

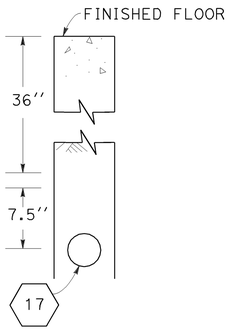

SECTION G-G

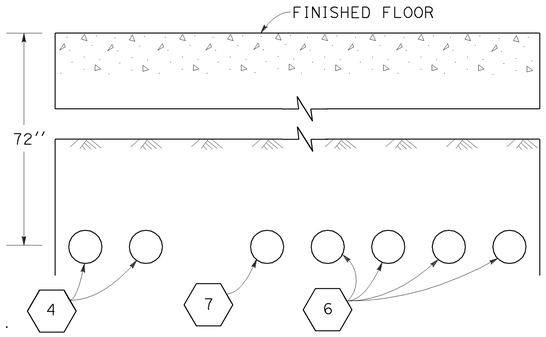

SECTION K-K

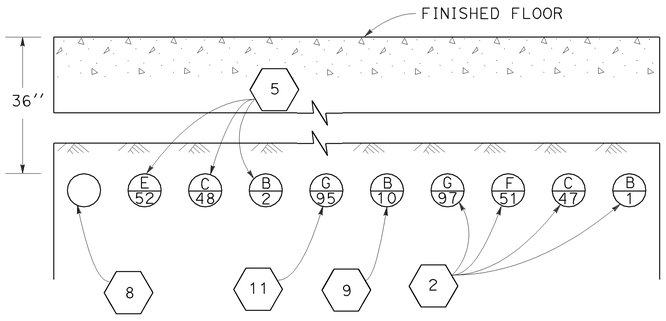

SECTION B-B

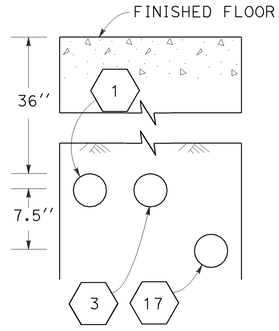

SECTION I-I

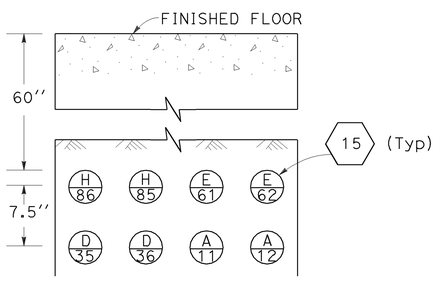

SECTION L-L

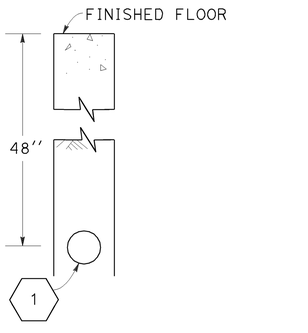

SECTION C-C

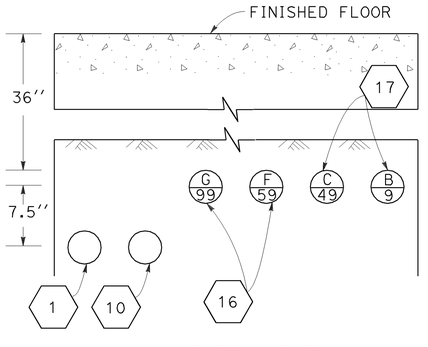

SECTION F-F

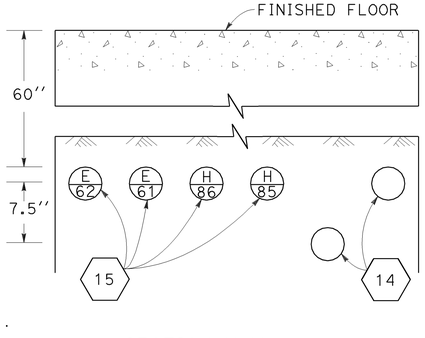

SECTION M-M

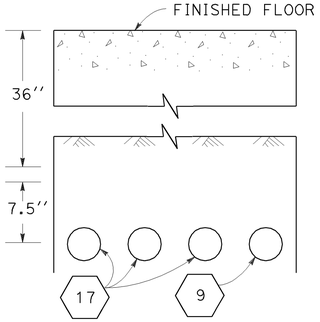

SECTION D-D

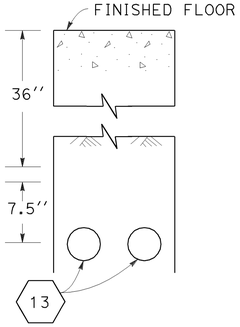

SECTION H-H

CALIFORNIA STATE FIRE MARSHAL APPROVED

Approval of this plan does not authorize or approve any omission or deviation from applicable regulations. Final approval is subject to field inspection. One set of approved plans shall be available on the project site at all times.

Reviewed by: STEPHEN GUARINO

Approval date: 12-14-09

Dist	COUNTY	ROUTE	POST MILES TOTAL PROJECT	SHEET No.	TOTAL SHEETS
04	SF	101	8.2/9.2	245	654

Lionel J. Sudds 10-8-09
REGISTERED ELECTRICAL ENGINEER DATE

12-14-09
PLANS APPROVAL DATE

REGISTERED PROFESSIONAL ENGINEER — Lionel J. Sudds — No. 15201 — Exp 6-30-10 — ELECT — STATE OF CALIFORNIA

THE STATE OF CALIFORNIA OR ITS OFFICERS OR AGENTS SHALL NOT BE RESPONSIBLE FOR THE ACCURACY OR COMPLETENESS OF SCANNED COPIES OF THIS PLAN SHEET.

GENERAL NOTE: (THIS SHEET ONLY)

1. CONDUITS SHOW ONLY DEPTH; NOT SIZE AND POSITION. SIZE ARE INDICATED IN NOTES; AND POSITION ARE SHOWN ELSEWHERE ON THE PLANS.

NOTES: (THIS SHEET ONLY)

1. INSTALL 1-½''C, 2#6 CONDUCTORS AND #6 CONDUCTOR FOR EGC.
2. INSTALL 4''C, 1-36 FIBER SINGLE-MODE FIBER OPTIC CABLE AND 1-24 FIBER SINGLE-MODE FIBER OPTIC CABLE.
3. INSTALL 4''C, 1-48 FIBER SINGLE-MODE FIBER OPTIC CABLE, 4-ETHERNET CABLE, 1-REMOTE I/O CABLE, 1-24 FIBER SINGLE-MODE FIBER OPTIC CABLE AND 1-RS-485 CABLE.
4. INSTALL 5''C, 3#750 Kcmil AND 1#750 Kcmil FOR EGC.
5. INSTALL E 52 4''C, 1-RS-485 CABLES.
6. INSTALL 4''C, 3#500 Kcmil AND 1#500 Kcmil FOR EGC.
7. INSTALL 4''C, 1-2#4 CONDUCTOR CABLE.
8. INSTALL 1-½''C, 2-12 FIBER SINGLE-MODE FIBER OPTIC CABLE.
9. INSTALL 4''C, 1-72 FIBER SINGLE-MODE FIBER OPTIC CABLE.
10. INSTALL 4''C, 3-48 FIBER SINGLE-MODE FIBER OPTIC CABLE AND 1-ETHERNET CABLE.
11. INSTALL 4''C, 1-4#14 CONDUCTOR CABLE.
12. INSTALL 3''C, 3#3/0 CONDUCTORS AND 1-3/0 CONDUCTOR FOR EGC.
13. INSTALL 2''C, 2#1 CONDUCTORS AND #1 CONDUCTOR FOR EGC.
14. INSTALL 4''C, 3#500 Kcmil CONDUCTORS, 1#6 CONDUCTOR FOR NEUTRAL AND 1#6 CONDUCTOR FOR EGC.
15. INSTALL 4''C, MT FOR TUNNEL LIGHTING CONDUCTORS.
16. INSTALL 4''C, 2#8 CONDUCTORS.
17. INSTALL 4''C, MT.
18. INSTALL 3''C, 3-ETHERNET CABLE AND 2-RS-232 CABLES.

BATTERY SUBSTATION AND TUNNEL WORK
(EQUIPMENT & UNDERGROUND CONDUIT LAYOUT OF BATTERY SUBSTATION)

NO SCALE

E-83

LAST REVISION DATE PLOTTED => 14-DEC-2009
TIME PLOTTED => 16:00

CALCULATED-DESIGNED BY: LS — 8/01/09
CHECKED BY: LIONEL J. SUDDS — LIONEL J. SUDDS
REVISED BY — DATE REVISED

FUNCTIONAL SUPERVISOR: BEHZAD GOLEMOHAMMADI

STATE OF CALIFORNIA - DEPARTMENT OF TRANSPORTATION
ELECTRICAL

BORDER LAST REVISED 4/11/2008

RELATIVE BORDER SCALE IS IN INCHES 0 1 2 3

USERNAME => trienard
DGN FILE => 416374ua083.dgn

CU 04242

EA 163741

Dist	COUNTY	ROUTE	POST MILES TOTAL PROJECT	SHEET No.	TOTAL SHEETS
04	SF	101	8.2/9.2	246	654

Lionel J. Sudds 10-8-09
REGISTERED ELECTRICAL ENGINEER DATE

12-14-09
PLANS APPROVAL DATE

REGISTERED PROFESSIONAL ENGINEER — Lionel J. Sudds No. 15201 Exp 6-30-10 ELECT — STATE OF CALIFORNIA

THE STATE OF CALIFORNIA OR ITS OFFICERS OR AGENTS SHALL NOT BE RESPONSIBLE FOR THE ACCURACY OR COMPLETENESS OF SCANNED COPIES OF THIS PLAN SHEET.

CALIFORNIA STATE FIRE MARSHAL APPROVED

Approval of this plan does not authorize or approve any omission or deviation from applicable regulations. Final approval is subject to field inspection. One set of approved plans shall be available on the project site at all times.

Reviewed by: STEPHEN GUARINO
Approval date: 12-14-09

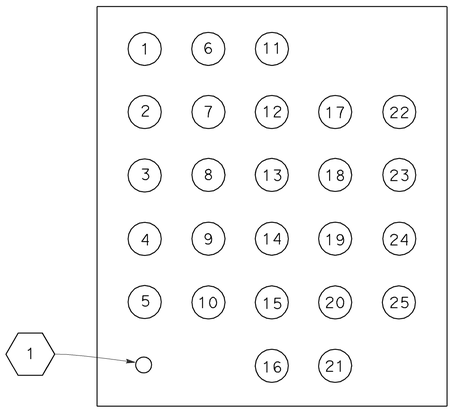

NORTHBOUND NORTHSIDE DUCTBANK LAYOUT FOR DUCTBANK CONDUITS (1) TO (25)

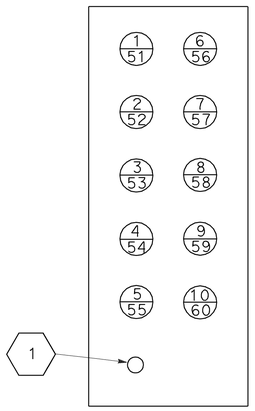

NORTHSIDE COMMUNICATION DUCTBANK LAYOUT

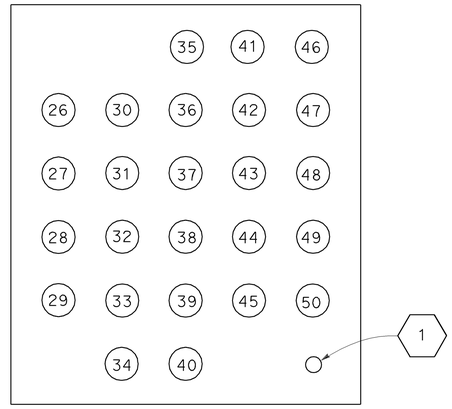

NORTHBOUND SOUTHSIDE DUCTBANK LAYOUT FOR DUCTBANK CONDUITS (26) TO (50)

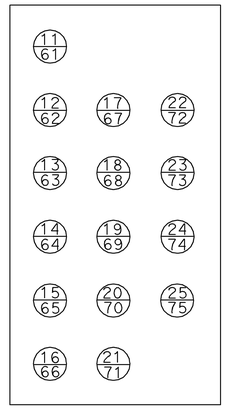

NORTHSIDE POWER DUCTBANK LAYOUT

GENERAL NOTES: (THIS SHEET ONLY)

1. ALL CONDUITS SHOWN IN THE DUCTBANK ARE 4'' CONDUITS UNLESS OTHERWISE SPECIFIED.
2. (#) OR (#/#) SHALL BE THE CONDUIT # OF THE DUCTBANKS. THE TOP # IS TO AND FROM THE NORTHBOUND TUNNEL AND THE BOTTOM # IS TO AND FROM THE SOUTHBOUND TUNNEL.
3. THE CONDUIT # OF THE DUCTBANKS ARE THE SAME NUMBER AS UTILITY DUCTBANKS AS SHOWN ON SHEET E-88.

NOTES: (THIS SHEET ONLY)

1. INSTALL 1½'' C, 1#500 Kcmil CONDUCTOR FOR THE GROUNDING ELECTRODE CONDUCTOR.
2. INSTALL NORTHBOUND NORTHSIDE DUCTBANK WITH CONDUCTORS AND CABLES SHOWN ON THE PLANS.
3. INSTALL NORTHBOUND SOUTHSIDE DUCTBANK WITH CONDUCTORS AND CABLES SHOWN ON THE PLANS.
4. INSTALL SOUTHBOUND NORTHSIDE DUCTBANK WITH CONDUCTORS AND CABLES SHOWN ON THE PLANS.
5. INSTALL SOUTHBOUND SOUTHSIDE DUCTBANK WITH CONDUCTORS AND CABLES SHOWN ON THE PLANS.
6. INSTALL NORTHSIDE COMMUNICATION DUCTBANK WITH CONDUCTORS AND CABLES SHOWN ON THE PLANS.
7. INSTALL NORTHSIDE POWER DUCTBANK WITH CONDUCTORS AND CABLES SHOWN ON THE PLANS.
8. INSTALL SOUTHSIDE COMMUNICATION DUCTBANK WITH CONDUCTORS AND CABLES SHOWN ON THE PLANS.
9. INSTALL SOUTHSIDE POWER DUCTBANK WITH CONDUCTORS AND CABLES SHOWN ON THE PLANS.

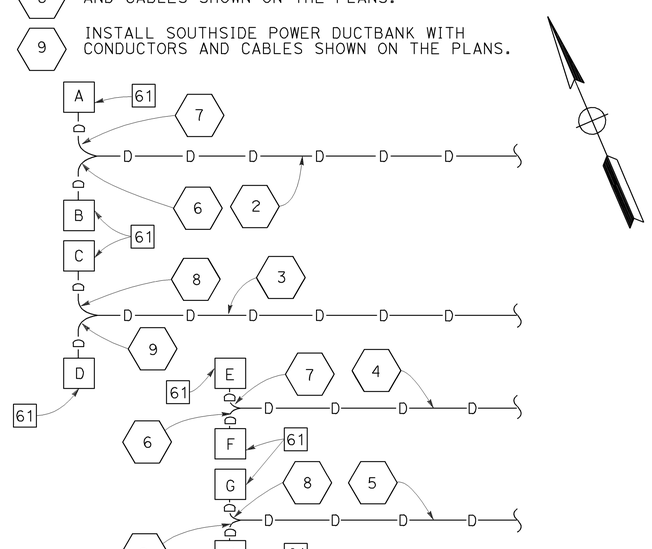

DETAIL A (DETAIL FROM SHEET E-34)

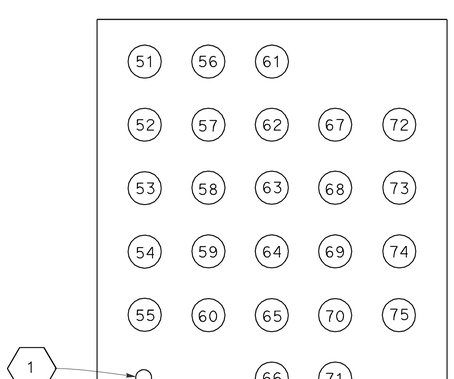

SOUTHBOUND NORTHSIDE DUCTBANK LAYOUT FOR DUCTBANK CONDUITS (57) TO (75)

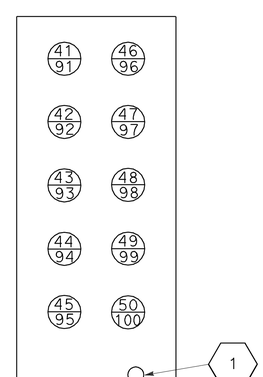

SOUTHSIDE COMMUNICATION DUCTBANK LAYOUT

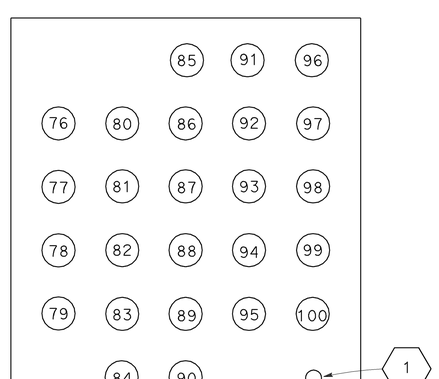

SOUTHBOUND SOUTHSIDE DUCTBANK LAYOUT FOR DUCTBANK CONDUITS (78) TO (100)

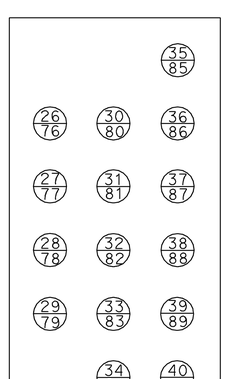

SOUTHSIDE POWER DUCTBANK LAYOUT

BATTERY SUBSTATION AND TUNNEL WORK
(DUCTBANK LAYOUT)

NO SCALE

E-84

STATE OF CALIFORNIA - DEPARTMENT OF TRANSPORTATION
ELECTRICAL
FUNCTIONAL SUPERVISOR: BEHZAD GOLEMOHAMMADI
CALCULATED-DESIGNED BY: LIONEL J. SUDDS
CHECKED BY: LS
REVISED BY
DATE REVISED: 8/01/09

LAST REVISION DATE PLOTTED => 14-DEC-2009
10-28-09 TIME PLOTTED => 16:00

BORDER LAST REVISED 4/11/2008
RELATIVE BORDER SCALE IS IN INCHES 0 1 2 3
USERNAME => trlenard
DGN FILE => 416374ua084.dgn
CU 04242
EA 163741

Dist	COUNTY	ROUTE	POST MILES TOTAL PROJECT	SHEET No.	TOTAL SHEETS
04	SF	101	8.2/9.2	247	654

REGISTERED ELECTRICAL ENGINEER 10-8-09 DATE

12-14-09
PLANS APPROVAL DATE

REGISTERED PROFESSIONAL ENGINEER Lionel J. Sudds No. 15201 Exp. 6-30-10 ELECT STATE OF CALIFORNIA

THE STATE OF CALIFORNIA OR ITS OFFICERS OR AGENTS SHALL NOT BE RESPONSIBLE FOR THE ACCURACY OR COMPLETENESS OF SCANNED COPIES OF THIS PLAN SHEET.

CALIFORNIA STATE FIRE MARSHAL APPROVED
Approval of this plan does not authorize or approve any omission or deviation from applicable regulations. Final approval is subject to field inspection. One set of approved plans shall be available on the project site at all times.
Reviewed by: STEPHEN GUARINO
Approval date: 12-14-09

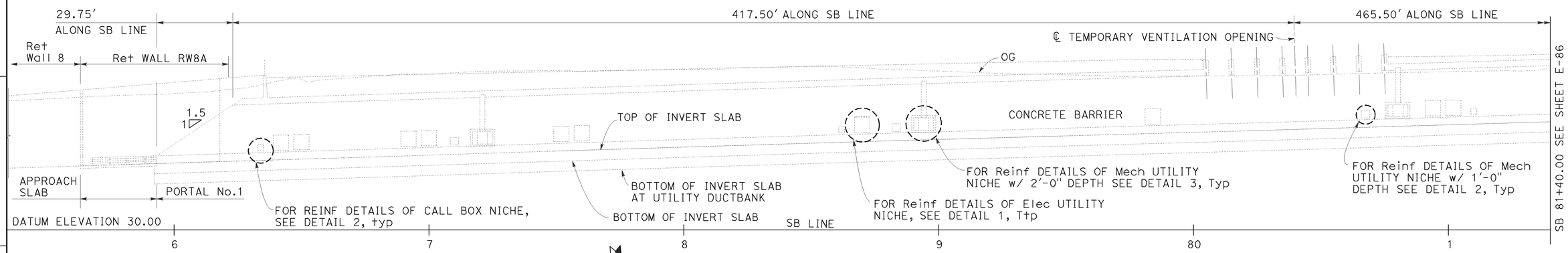

LONGITUDINAL SECTION

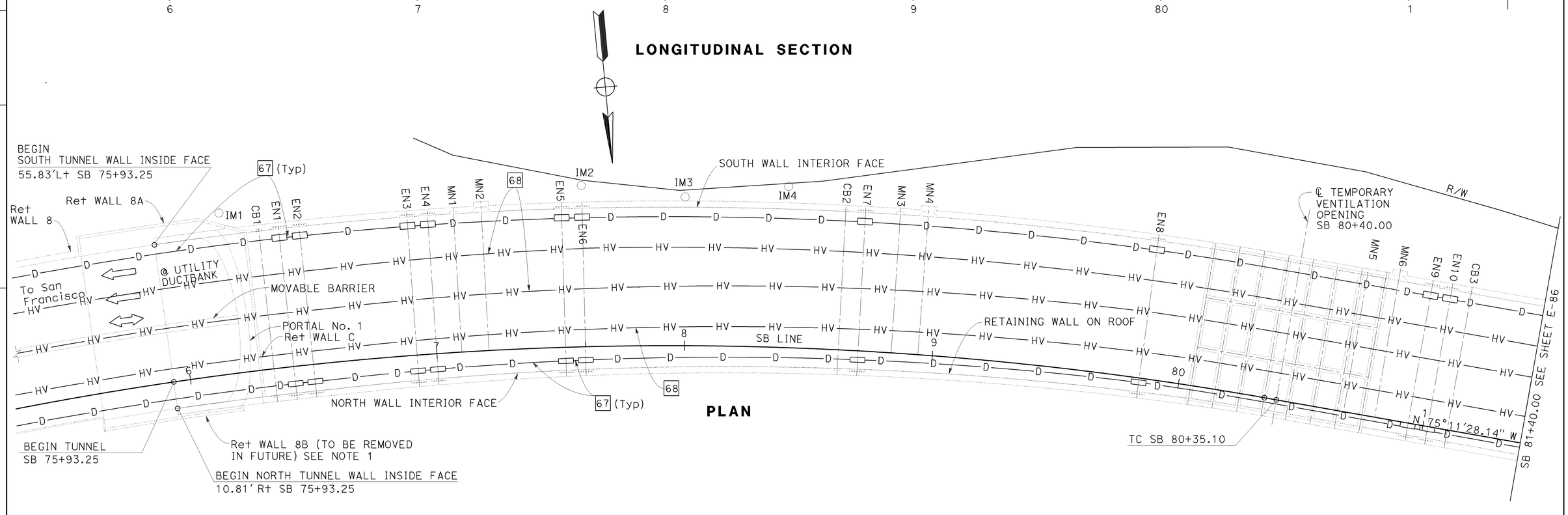

PLAN

BATTERY SUBSTATION AND TUNNEL WORK
(BATTERY TUNNEL UNDERGROUND CONDUIT, PULL BOX AND DUCTBANK LAYOUT SUBSTATION)

SCALE: 1″= 20′

THIS PLAN IS ACCURATE FOR ELECTRICAL WORK ONLY

E-85

STATE OF CALIFORNIA - DEPARTMENT OF TRANSPORTATION
Caltrans
ELECTRICAL

FUNCTIONAL SUPERVISOR: BEHZAD GOLEMOHAMMADI
CALCULATED-DESIGNED BY: LIONEL J. SUDDS
CHECKED BY: LIONEL J. SUDDS
REVISED BY: LS
DATE REVISED: 8/01/09

LAST REVISION 10-29-09
DATE PLOTTED => 14-DEC-2009
TIME PLOTTED => 16:00

Dist	COUNTY	ROUTE	POST MILES TOTAL PROJECT	SHEET No.	TOTAL SHEETS
04	SF	101	8.2/9.2	248	654

CALIFORNIA STATE FIRE MARSHAL APPROVED
Approval of this plan does not authorize or approve any omission or deviation from applicable regulations. Final approval is subject to field inspection. One set of approved plans shall be available on the project site at all times.
Reviewed by: STEPHEN GUARINO
Approval date: 12-14-09

Lionel J. Sudds 10-8-09
REGISTERED ELECTRICAL ENGINEER DATE

12-14-09
PLANS APPROVAL DATE

REGISTERED PROFESSIONAL ENGINEER — Lionel J. Sudds — No. 15201 — Exp 6-30-10 — ELECT — STATE OF CALIFORNIA

THE STATE OF CALIFORNIA OR ITS OFFICERS OR AGENTS SHALL NOT BE RESPONSIBLE FOR THE ACCURACY OR COMPLETENESS OF SCANNED COPIES OF THIS PLAN SHEET.

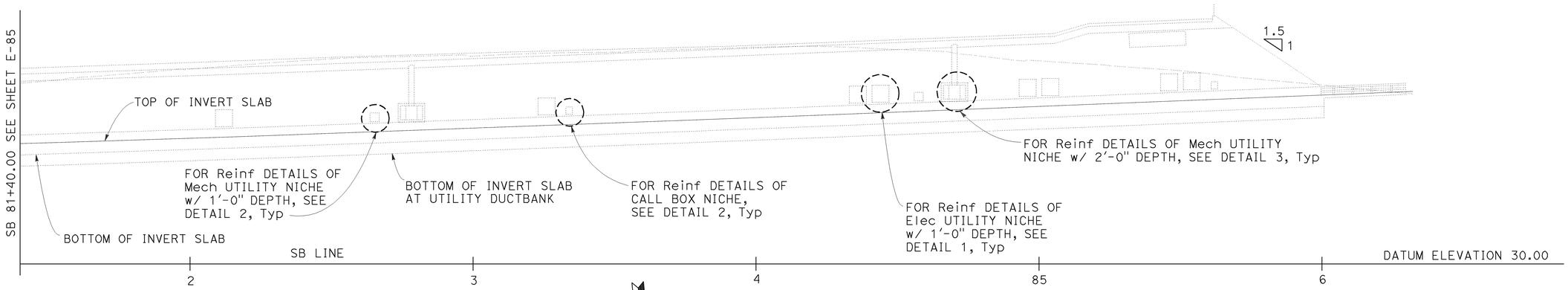

LONGITUDINAL SECTION

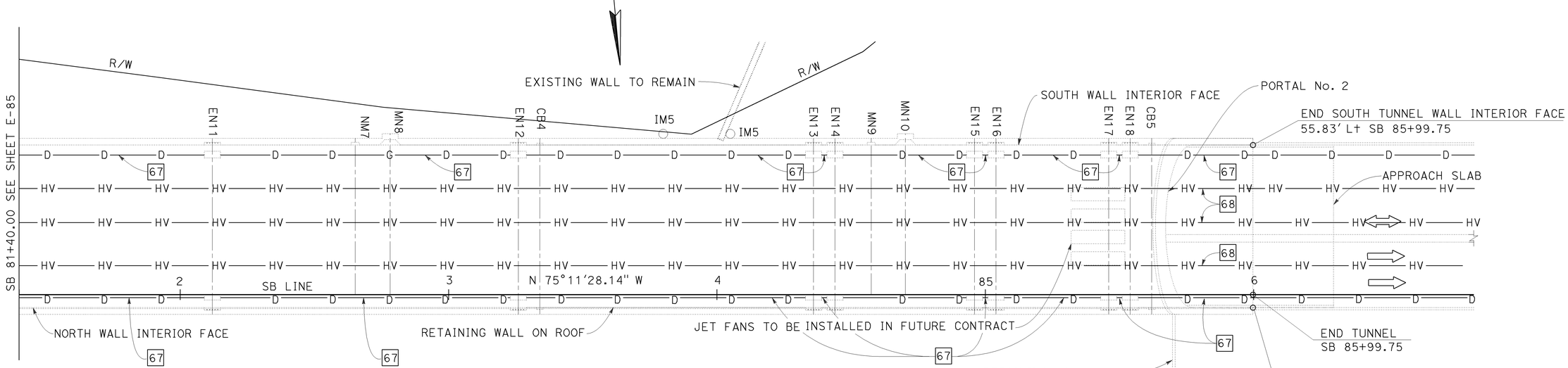

PLAN

BATTERY SUBSTATION AND TUNNEL WORK

(BATTERY TUNNEL UNDERGROUND CONDUIT, PULL BOX AND DUCTBANK LAYOUT SUBSTATION)

SCALE: 1''= 20'

THIS PLAN IS ACCURATE FOR ELECTRICAL WORK ONLY

E-86

REVISED BY	DATE REVISED
LS	8/01/09

CALCULATED-DESIGNED BY: LIONEL J. SUDDS
CHECKED BY: LIONEL J. SUDDS
FUNCTIONAL SUPERVISOR: BEHZAD GOLEMOHAMMADI

STATE OF CALIFORNIA - DEPARTMENT OF TRANSPORTATION
ELECTRICAL

LAST REVISION | DATE PLOTTED => 14-DEC-2009
10-29-09 | TIME PLOTTED => 16:00

BORDER LAST REVISED 4/11/2008 | RELATIVE BORDER SCALE IS IN INCHES 0 1 2 3 | USERNAME => trlenard | DGN FILE => 416374ua086.dgn | CU 04242 | EA 163741

Dist	COUNTY	ROUTE	POST MILES TOTAL PROJECT	SHEET No.	TOTAL SHEETS
04	SF	101	8.2/9.2	249	654

Lionel J. Sudds 10-8-09
REGISTERED ELECTRICAL ENGINEER DATE

12-14-09
PLANS APPROVAL DATE

REGISTERED PROFESSIONAL ENGINEER
Lionel J. Sudds
No. 15201
Exp 6-30-10
ELECT
STATE OF CALIFORNIA

THE STATE OF CALIFORNIA OR ITS OFFICERS OR AGENTS SHALL NOT BE RESPONSIBLE FOR THE ACCURACY OR COMPLETENESS OF SCANNED COPIES OF THIS PLAN SHEET.

CALIFORNIA STATE FIRE MARSHAL APPROVED
Approval of this plan does not authorize or approve any omission or deviation from applicable regulations. Final approval is subject to field inspection. One set of approved plans shall be available on the project site at all times.
Reviewed by: STEPHEN GUARINO
Approval date: 12-14-09

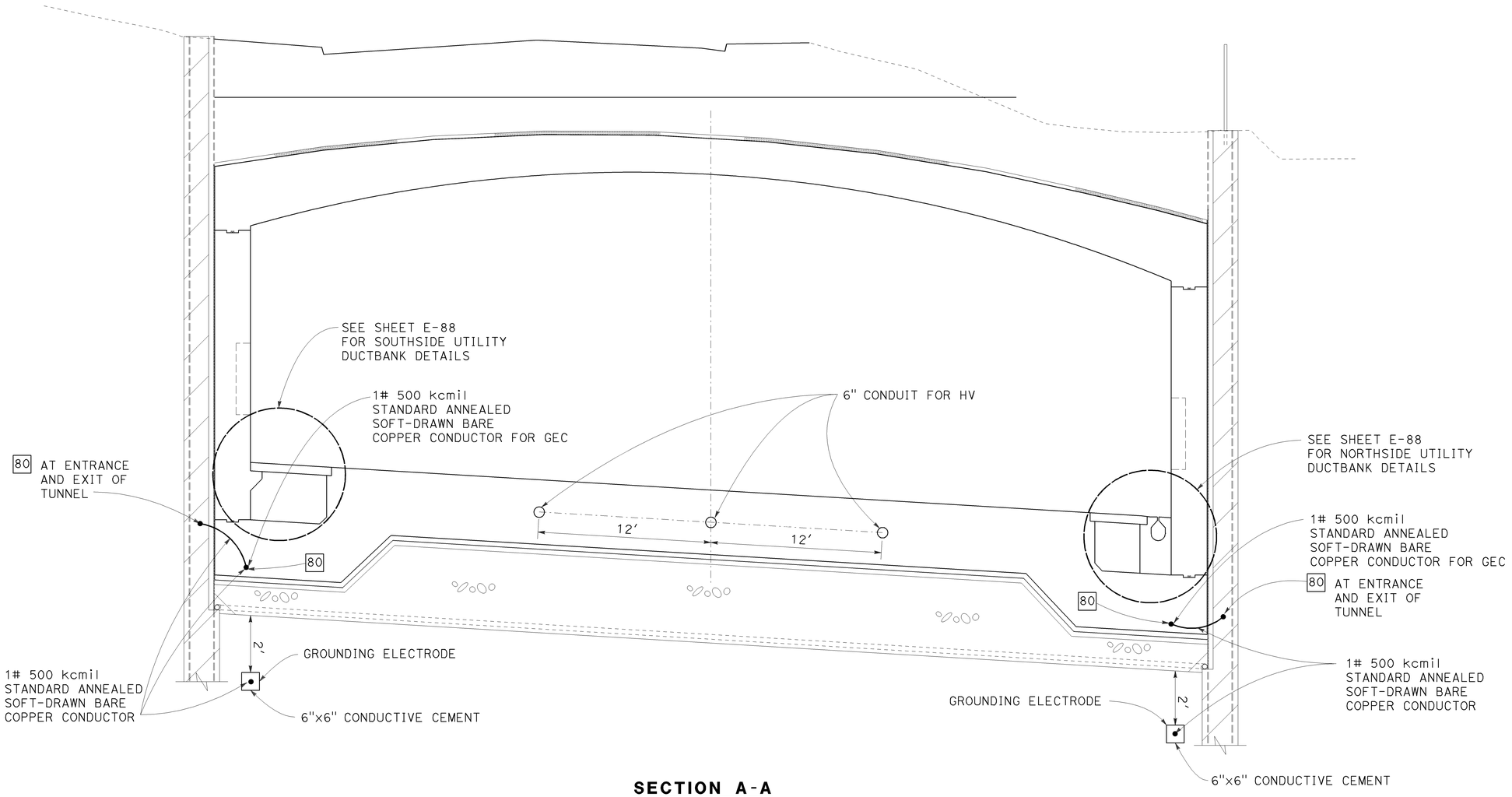

SECTION A-A

GROUNDING, CONDUITS EMBEDDED IN STRUCTURES
(TUNNEL SECTION)

NO SCALE

THIS PLAN IS ACCURATE FOR ELECTRICAL WORK ONLY

E-87

CALCULATED-DESIGNED BY		
CHECKED BY	LIONEL J. SUDDS	LS
	LIONEL J. SUDDS	8/01/09
	REVISED BY	DATE REVISED

STATE OF CALIFORNIA - DEPARTMENT OF TRANSPORTATION
ELECTRICAL
FUNCTIONAL SUPERVISOR
BEHZAD GOLEMOHAMMADI
Caltrans

LAST REVISION 10-29-09
DATE PLOTTED => 14-DEC-2009
TIME PLOTTED => 16:00

BORDER LAST REVISED 4/11/2008
RELATIVE BORDER SCALE IS IN INCHES 0 1 2 3
USERNAME => trlenard
DGN FILE => 416374ua087.dgn
CU 04242
EA 163741

Dist	COUNTY	ROUTE	POST MILES TOTAL PROJECT	SHEET No.	TOTAL SHEETS
04	SF	101	8.2/9.2	250	654

Lionel J. Sudds 10-8-09
REGISTERED ELECTRICAL ENGINEER DATE

12-14-09
PLANS APPROVAL DATE

REGISTERED PROFESSIONAL ENGINEER — Lionel J. Sudds — No. 15201 — Exp 6-30-10 — ELECT — STATE OF CALIFORNIA

THE STATE OF CALIFORNIA OR ITS OFFICERS OR AGENTS SHALL NOT BE RESPONSIBLE FOR THE ACCURACY OR COMPLETENESS OF SCANNED COPIES OF THIS PLAN SHEET.

CALIFORNIA STATE FIRE MARSHAL
APPROVED
Approval of this plan does not authorize or approve any omission or deviation from applicable regulations. Final approval is subject to field inspection. One set of approved plans shall be available on the project site at all times.
Reviewed by: STEPHEN GUARINO
Approval date: 12-14-09

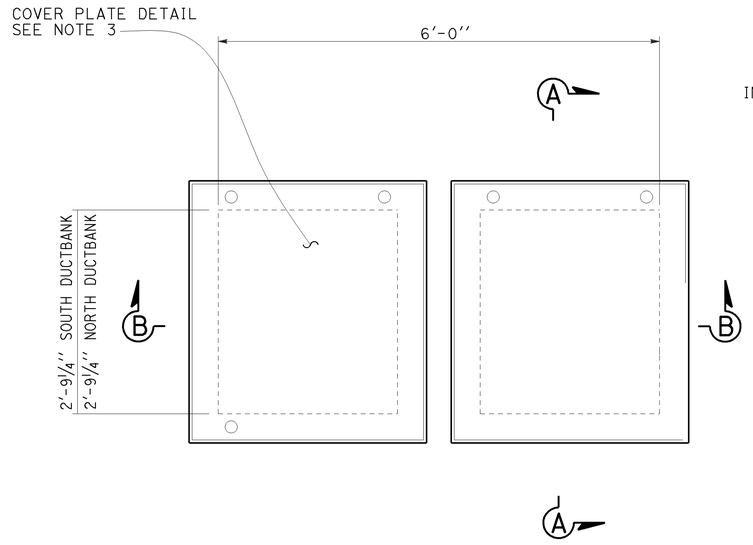

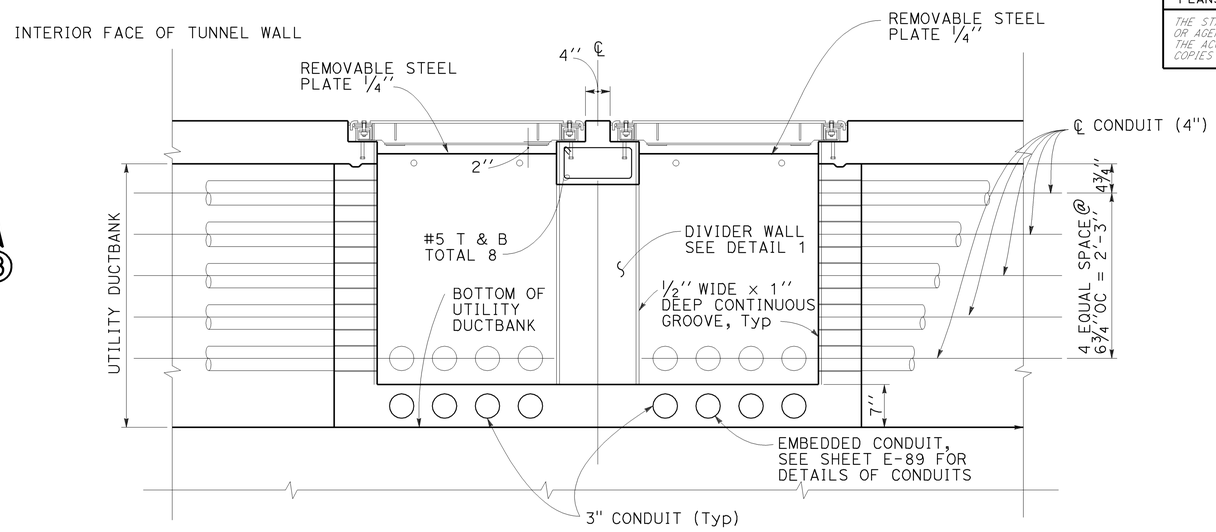

SECTION B-B

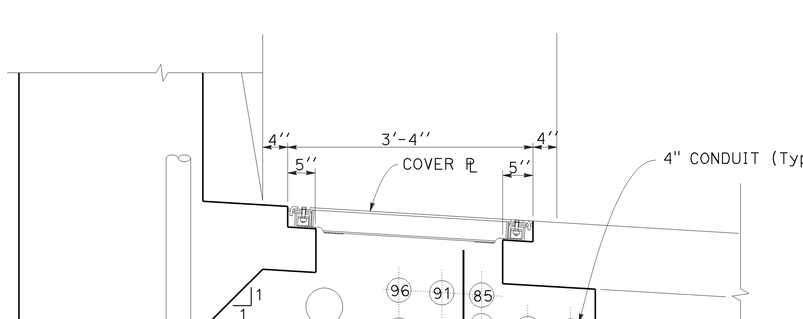

SOUTHSIDE UTILITY DUCTBANK

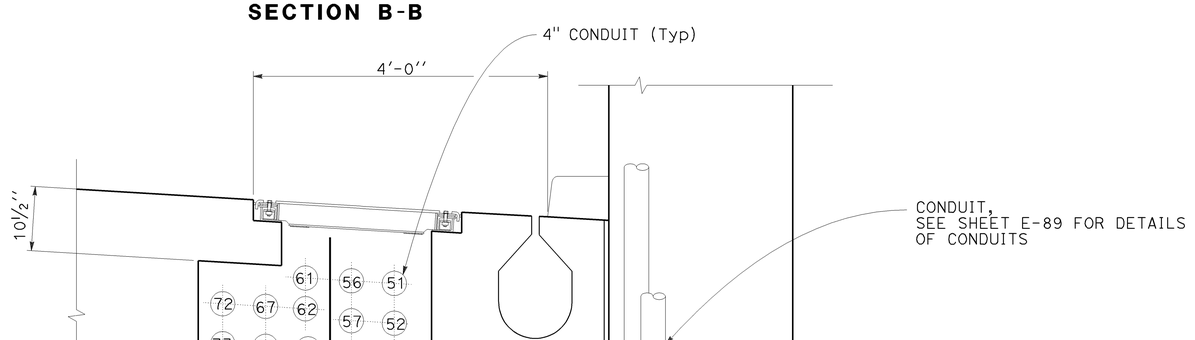

NORTHSIDE UTILITY DUCTBANK

SECTION A-A

BATTERY SUBSTATION AND TUNNEL WORK
(UTILITY DUCTBANK LAYOUT)

NO SCALE

E-88

STATE OF CALIFORNIA - DEPARTMENT OF TRANSPORTATION
Caltrans®
ELECTRICAL
FUNCTIONAL SUPERVISOR: BEHZAD GOLEMOHAMMADI
CALCULATED-DESIGNED BY: LIONEL J. SUDDS
CHECKED BY: LIONEL J. SUDDS
REVISED BY: LS
DATE REVISED: 8/01/09

LAST REVISION | DATE PLOTTED => 14-DEC-2009
10-29-09 | TIME PLOTTED => 16:00

BORDER LAST REVISED 4/11/2008
RELATIVE BORDER SCALE IS IN INCHES 0 1 2 3
USERNAME => trlenard
DGN FILE => 416374ua088.dgn
CU 04242
EA 163741

Dist	COUNTY	ROUTE	POST MILES TOTAL PROJECT	SHEET No.	TOTAL SHEETS
04	SF	101	8.2/9.2	251	654

Lionel J. Sudds 10-8-09
REGISTERED ELECTRICAL ENGINEER DATE

12-14-09
PLANS APPROVAL DATE

REGISTERED PROFESSIONAL ENGINEER — Lionel J. Sudds — No. 15201 — Exp 6-30-10 — ELECT — STATE OF CALIFORNIA

THE STATE OF CALIFORNIA OR ITS OFFICERS OR AGENTS SHALL NOT BE RESPONSIBLE FOR THE ACCURACY OR COMPLETENESS OF SCANNED COPIES OF THIS PLAN SHEET.

CALIFORNIA STATE FIRE MARSHAL APPROVED
Approval of this plan does not authorize or approve any omission or deviation from applicable regulations. Final approval is subject to field inspection. One set of approved plans shall be available on the project site at all times.
Reviewed by: STEPHEN GUARINO
Approval date: 12-14-09

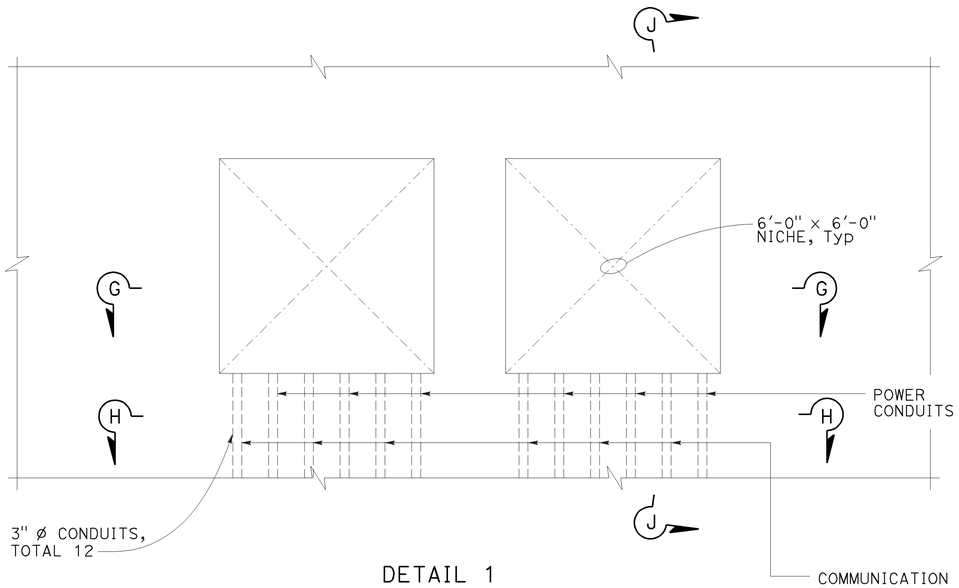

DETAIL 1
(FOR SOUTHSIDE)

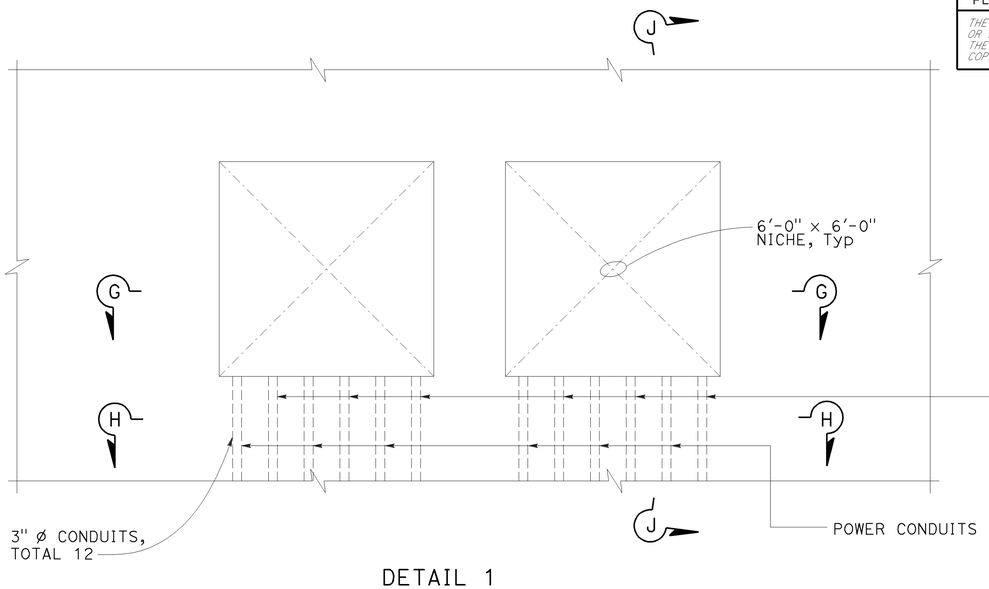

DETAIL 1
(FOR NORTHSIDE)

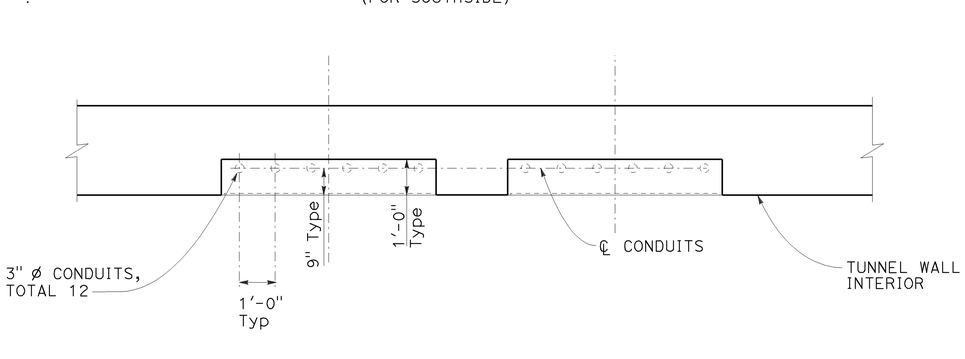

SECTION G-G

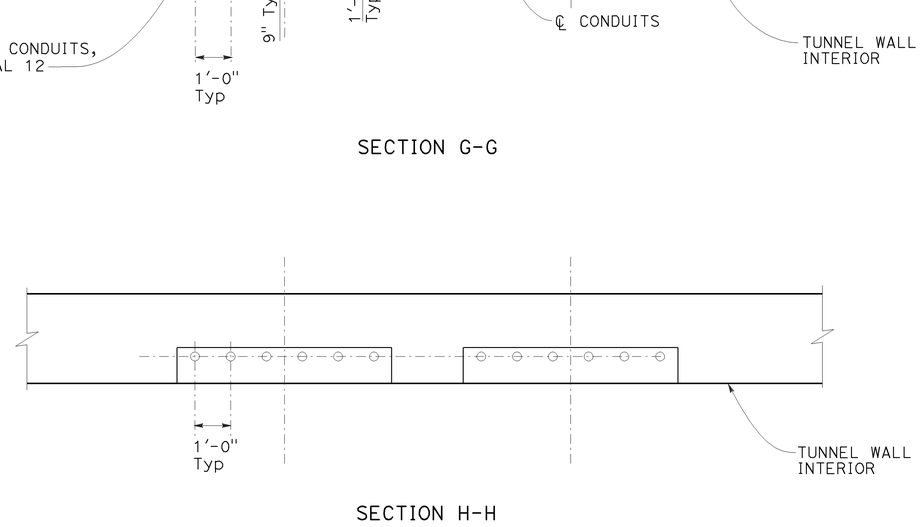

SECTION H-H

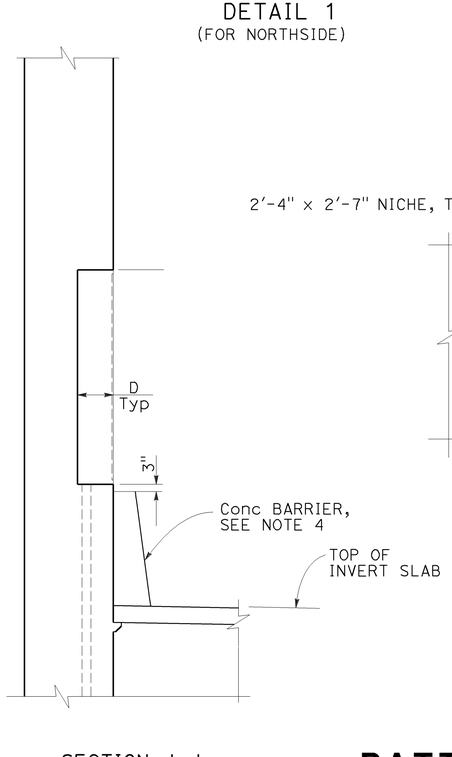

SECTION J-J

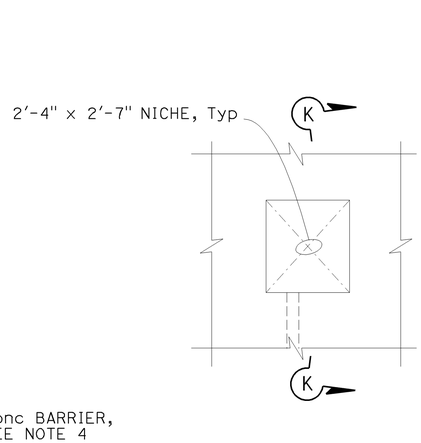

DETAIL 2

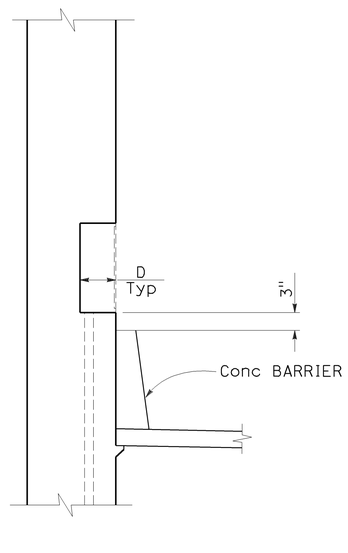

SECTION K-K

BATTERY SUBSTATION AND TUNNEL WORK
(ELECTRICAL CONDUIT NICHE LAYOUT)

NO SCALE

E-89

STATE OF CALIFORNIA - DEPARTMENT OF TRANSPORTATION
Caltrans
ELECTRICAL
FUNCTIONAL SUPERVISOR: BEHZAD GOLEMOHAMMADI
CALCULATED-DESIGNED BY: LIONEL J. SUDDS
CHECKED BY: LIONEL J. SUDDS
REVISED BY: LS
DATE REVISED: 8/01/09

LAST REVISION DATE PLOTTED => 14-DEC-2009
TIME PLOTTED => 16:00

BORDER LAST REVISED 4/11/2008
RELATIVE BORDER SCALE IS IN INCHES 0 1 2 3
USERNAME => trienard
DGN FILE => 416374ua089.dgn
CU 04242
EA 163741

Dist	COUNTY	ROUTE	POST MILES TOTAL PROJECT	SHEET No.	TOTAL SHEETS
04	SF	101	8.2/9.2	252	654

Lionel J. Sudds 10-8-09
REGISTERED ELECTRICAL ENGINEER DATE

12-14-09
PLANS APPROVAL DATE

REGISTERED PROFESSIONAL ENGINEER
Lionel J. Sudds
No. 15201
Exp 6-30-10
ELECT
STATE OF CALIFORNIA

THE STATE OF CALIFORNIA OR ITS OFFICERS OR AGENTS SHALL NOT BE RESPONSIBLE FOR THE ACCURACY OR COMPLETENESS OF SCANNED COPIES OF THIS PLAN SHEET.

CALIFORNIA STATE FIRE MARSHAL APPROVED

Approval of this plan does not authorize or approve any omission or deviation from applicable regulations. Final approval is subject to field inspection. One set of approved plans shall be available on the project site at all times.

Reviewed by: STEPHEN GUARINO
Approval date: 12-14-09

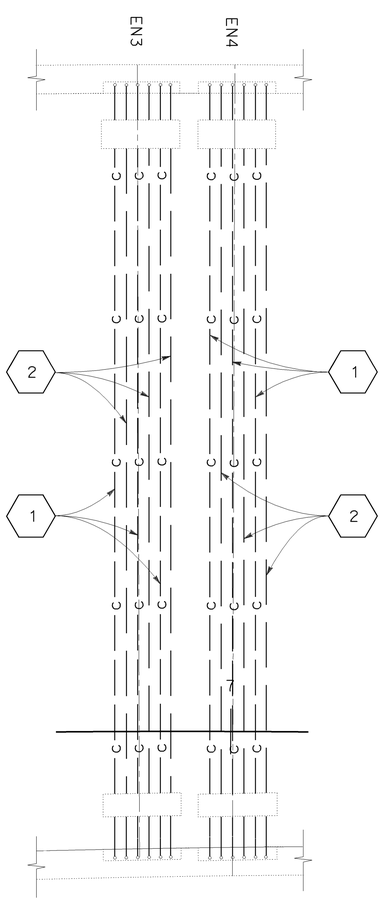

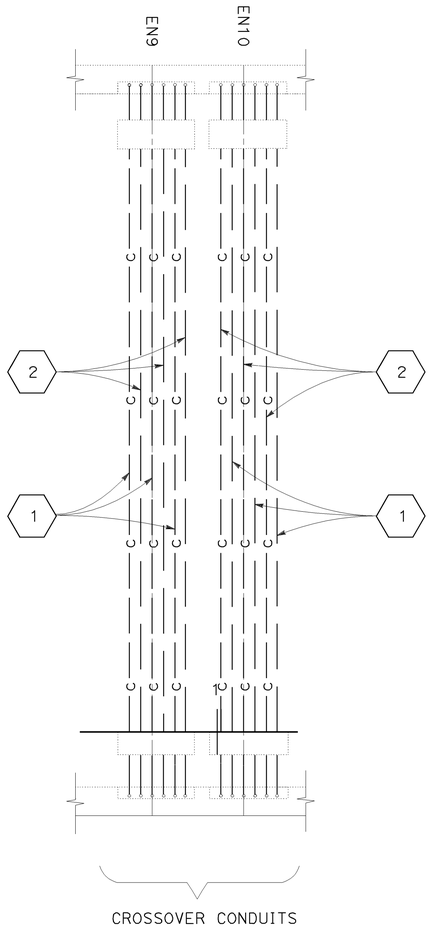

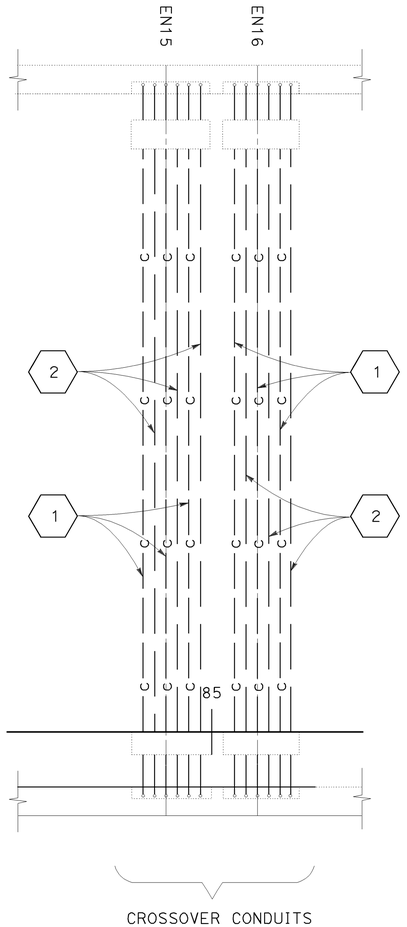

GENERAL NOTE: (THIS SHEET ONLY)

1. THE CROSSOVER CONDUIT NUMBERS ARE FROM LEFT TO RIGHT.

NOTES: (THIS SHEET ONLY)

1. INSTALL 3" C, MT FOR COMMUNICATIONS EMBEDDED TO AND FROM THE COMMUNICATON SECTION OF THE PULLBOX OF BOTH THE NORTH AND SOUTH SIDES OF THE TUNNEL.

2. INSTALL 3" C, MT FOR POWER EMBEDDED TO AND FROM THE POWER SECTION OF THE PULLBOX OF BOTH THE NORTH AND SOUTH SIDES OF THE TUNNEL.

BATTERY SUBSTATION AND TUNNEL WORK
(TUNNEL CROSSOVER CONDUITS)

NO SCALE

E-90

CALCULATED-DESIGNED BY	REVISED BY	FUNCTIONAL SUPERVISOR
LIONEL J. SUDDS	LS	BEHZAD GOLEMOHAMMADI
CHECKED BY	DATE REVISED	
LIONEL J. SUDDS	8/01/09	

STATE OF CALIFORNIA - DEPARTMENT OF TRANSPORTATION
ELECTRICAL

LAST REVISION DATE PLOTTED => 14-DEC-2009
10-09-09 TIME PLOTTED => 16:00

BORDER LAST REVISED 4/11/2008

RELATIVE BORDER SCALE IS IN INCHES 0 1 2 3

USERNAME => trlenard
DGN FILE => 416374ua090.dgn

CU 04242

EA 163741

Dist	COUNTY	ROUTE	POST MILES TOTAL PROJECT	SHEET No.	TOTAL SHEETS
04	SF	101	8.2/9.2	253	654

Lionel J. Sudds 10-8-09
REGISTERED ELECTRICAL ENGINEER DATE

12-14-09
PLANS APPROVAL DATE

REGISTERED PROFESSIONAL ENGINEER — Lionel J. Sudds No. 15201 Exp 6-30-10 ELECT — STATE OF CALIFORNIA

THE STATE OF CALIFORNIA OR ITS OFFICERS OR AGENTS SHALL NOT BE RESPONSIBLE FOR THE ACCURACY OR COMPLETENESS OF SCANNED COPIES OF THIS PLAN SHEET.

NOTES: (THIS SHEET ONLY)

1. INSTALL 4#4/0 CONDUCTORS IN CONDUIT #76 OF THE UTILITY DUCTBANK; 4-2#4 CONDUCTOR CABLES IN CONDUIT #85 OF THE UTILITY DUCTBANK; 4#4 CONDUCTORS IN CONDUIT #84 OF THE UTILITY DUCTBANK; AND 4#4 CONDUCTORS IN CONDUIT #90 OF THE UTILITY DUCTBANK (SEE SHEET E-88 FOR LOCATION).
2. INSTALL 3#4/0 CONDUCTORS IN CONDUIT #71 OF THE UTILITY DUCTBANK; 4#4/0 CONDUCTORS IN CONDUIT #72 OF THE UTILITY DUCTBANK; AND 4-2#4 CONDUCTOR CABLES IN CONDUIT #63 OF THE UTILITY DUCTBANK (SEE SHEET E-88 FOR LOCATION).
3. INSTALL 3#12 CONDUCTORS IN CROSSOVER CONDUIT #2 (SEE SHEET E-90 FOR LOCATION).
4. INSTALL 4#4/0 CONDUCTORS IN CONDUIT #76 OF THE UTILITY DUCTBANK; 4#4 CONDUCTORS IN CONDUIT #84 OF THE UTILITY DUCTBANK; AND 4#4 CONDUCTORS IN CONDUIT #90 OF THE UTILITY DUCTBANK (SEE SHEET E-88 FOR LOCATION).
5. INSTALL 3#4/0 CONDUCTORS IN CONDUIT #71 OF THE UTILITY DUCTBANK; AND 4#4/0 CONDUCTORS IN CONDUIT #72 OF THE UTILITY DUCTBANK (SEE SHEET E-88 FOR LOCATION).
6. INSTALL 4#4 CONDUCTORS IN CONDUIT #84 OF THE UTILITY DUCTBANK; AND 4#4 CONDUCTORS IN CONDUIT #90 OF THE UTILITY DUCTBANK (SEE SHEET E-88 FOR LOCATION).
7. INSTALL 3#4/0 CONDUCTORS IN CONDUIT #71 OF THE UTILITY DUCTBANK; (SEE SHEET E-88 FOR LOCATION).
8. INSTALL 3#12 CONDUCTORS IN CROSSOVER CONDUIT #20 (SEE SHEET E-90 FOR LOCATION).

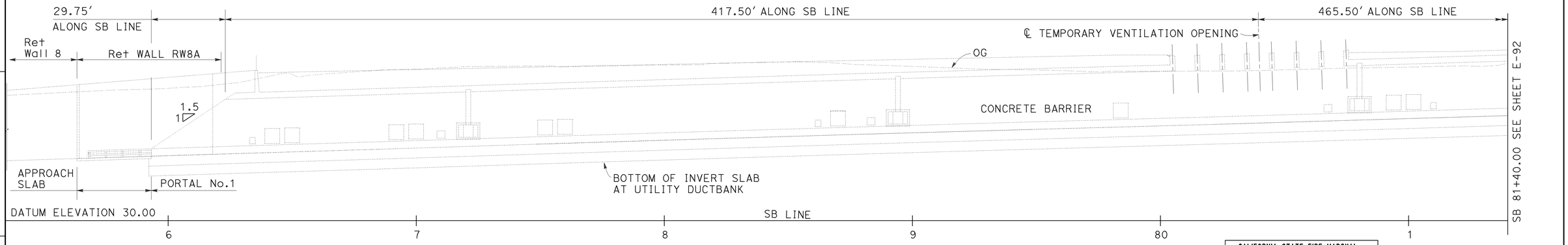

LONGITUDINAL SECTION

CALIFORNIA STATE FIRE MARSHAL APPROVED
Approval of this plan does not authorize or approve any omission or deviation from applicable regulations. Final approval is subject to field inspection. One set of approved plans shall be available on the project site at all times.
Reviewed by: STEPHEN GUARINO
Approval date: 12-14-09

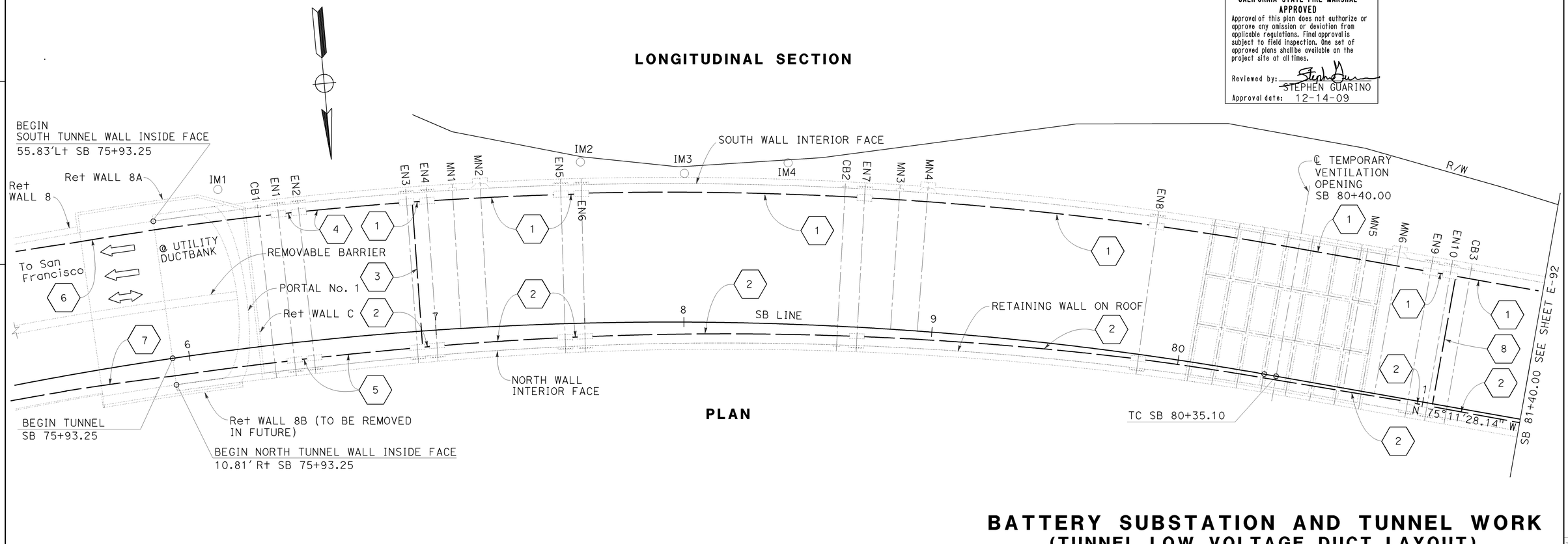

PLAN

BATTERY SUBSTATION AND TUNNEL WORK
(TUNNEL LOW VOLTAGE DUCT LAYOUT)

SCALE: 1"=20'

THIS PLAN IS ACCURATE FOR ELECTRICAL WORK ONLY

E-91

REVISED BY: LS — DATE REVISED: 8/01/09
CALCULATED-DESIGNED BY: LIONEL J. SUDDS
CHECKED BY: LIONEL J. SUDDS
FUNCTIONAL SUPERVISOR: BEHZAD GOLEMOHAMMADI
STATE OF CALIFORNIA - DEPARTMENT OF TRANSPORTATION
ELECTRICAL
Caltrans

LAST REVISION — DATE PLOTTED => 14-DEC-2009 — TIME PLOTTED => 16:00 — 10-29-09

BORDER LAST REVISED 4/11/2008 | RELATIVE BORDER SCALE IS IN INCHES 0 1 2 3 | USERNAME => trlenard | DGN FILE => 416374ua091.dgn | CU 04242 | EA 163741

Dist	COUNTY	ROUTE	POST MILES TOTAL PROJECT	SHEET No.	TOTAL SHEETS
04	SF	101	8.2/9.2	254	654

Lionel J. Sudds 10-8-09
REGISTERED ELECTRICAL ENGINEER DATE

12-14-09
PLANS APPROVAL DATE

REGISTERED PROFESSIONAL ENGINEER — Lionel J. Sudds — No. 15201 — Exp 6-30-10 — ELECT — STATE OF CALIFORNIA

THE STATE OF CALIFORNIA OR ITS OFFICERS OR AGENTS SHALL NOT BE RESPONSIBLE FOR THE ACCURACY OR COMPLETENESS OF SCANNED COPIES OF THIS PLAN SHEET.

NOTES: (THIS SHEET ONLY)

1. INSTALL 4'' C, mt EMBEDDED IN CONCRETE FOR JET FAN.
2. INSTALL TUNNEL LIGHTING CONDUCTORS IN CONDUIT #85 AND CONDUIT #86 OF THE UTILITY DUCTBANK; 4#4/0 CONDUCTORS IN CONDUIT #76 OF THE UTILITY DUCTBANK; 4#500 Kcmil IN CONDUIT #80 AND CONDUIT #81 OF THE UTILITY DUCTBANK; 4#4 CONDUCTORS IN CONDUIT #84 OF THE UTILITY DUCTBANK; AND 4#4 CONDUCTORS IN CONDUIT #90 OF THE UTILITY DUCTBANK (SEE SHEET E-88 FOR LOCATION).
3. INSTALL TUNNEL LIGHTING CONDUCTORS IN CONDUIT #61 AND CONDUIT #62 OF THE UTILITY DUCTBANK; 3#4/0 CONDUCTORS IN CONDUIT #71 OF THE UTILITY DUCTBANK; 4#4/0 CONDUCTORS IN CONDUIT #72 IN THE UTILITY DUCTBANK; 4-2#4 CONDUCTOR CABLES IN CONDUIT #63 OF THE UTILITY DUCTBANK; AND 4#500 Kcmil CONDUCTORS IN CONDUIT #67 AND CONDUIT #68 OF THE UTILITY DUCTBANK (SEE SHEET E-88 FOR LOCATION).
4. INSTALL 4#4/0 CONDUCTORS IN THE CONDUIT #76 OF THE UTILITY DUCTBANK; 4#500 Kcmil CONDUCTORS IN CONDUIT #80 AND CONDUIT #81 OF THE UTILITY DUCTBANK; 4#4 CONDUCTORS IN CONDUIT #84 OF THE UTILITY DUCTBANK; AND 4#4 CONDUCTORS IN CONDUIT #90 OF THE UTILITY DUCTBANK (SEE SHEET E-88 FOR LOCATION).
5. INSTALL 3#4/0 CONDUCTORS IN CONDUIT #71 OF THE UTILITY DUCTBANK; 4#4/0 CONDUCTORS IN CONDUIT #72 OF THE UTILITY DUCTBANK; 4#500 Kcmil CONDUCTORS IN CONDUIT #67 AND CONDUIT #68 OF THE UTILITY DUCTBANK; AND 8-2#4 CONDUCTOR CABLES IN CONDUIT #63 OF THE UTILITY DUCTBANK (SEE SHEET E-88 FOR LOCATION).
6. INSTALL 4#4/0 CONDUCTORS IN CONDUIT #76 OF THE UTILITY DUCTBANK; 4#4 CONDUCTORS IN CONDUIT #84 OF THE UTILITY DUCTBANK; AND 4#4 CONDUCTORS IN CONDUIT #90 OF THE UTILITY DUCTBANK (SEE SHEET E-88 FOR LOCATION).
7. INSTALL 3#12 CONDUCTORS IN CROSSOVER CONDUIT #32.
8. INSTALL 3#4/0 CONDUCTORS IN CONDUIT #71 OF THE UTILITY DUCTBANK; 4#4/0 CONDUCTOR IN CONDUIT #72 OF THE UTILITY DUCTBANK; AND 4-2#4 CONDUCTOR CABLES IN CONDUIT #63 OF THE UTILITY DUCTBANK (SEE SHEET E-88 FOR LOCATION).
9. INSTALL 4-2#4 CONDUCTOR CABLES IN THE CROSSOVER CONDUIT #26. (SEE SHEET E-90 FOR LOCATION).
10. INSTALL 4#4/0 CONDUCTORS IN CONDUIT #76 OF THE UTILITY DUCTBANK; 4-2#4 CONDUCTOR CABLES IN CONDUIT #85 OF THE UTILITY DUCTBANK; 4#4 CONDUCTORS IN CONDUIT #84 OF THE UTILITY DUCTBANK; AND 4#4 CONDUCTORS IN CONDUIT #90 OF THE UTILITY DUCTBANK (SEE SHEET E-88 FOR LOCATION).
11. INSTALL 3#4/0 CONDUCTORS IN CONDUIT #71 OF THE UTILITY DUCTBANK;4#4/0 CONDUCTORS IN CONDUIT #72 OF THE UTILITY DUCTBANK; AND 8-2#4 CONDUCTOR CABLES IN CONDUIT #63 OF THE UTILITY DUCTBANK (SEE SHEET E-88 FOR LOCATION).

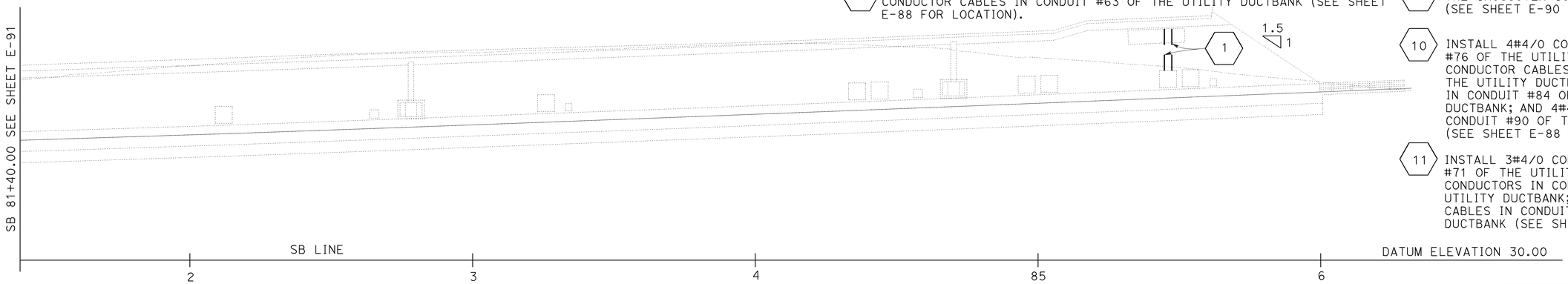

LONGITUDINAL SECTION

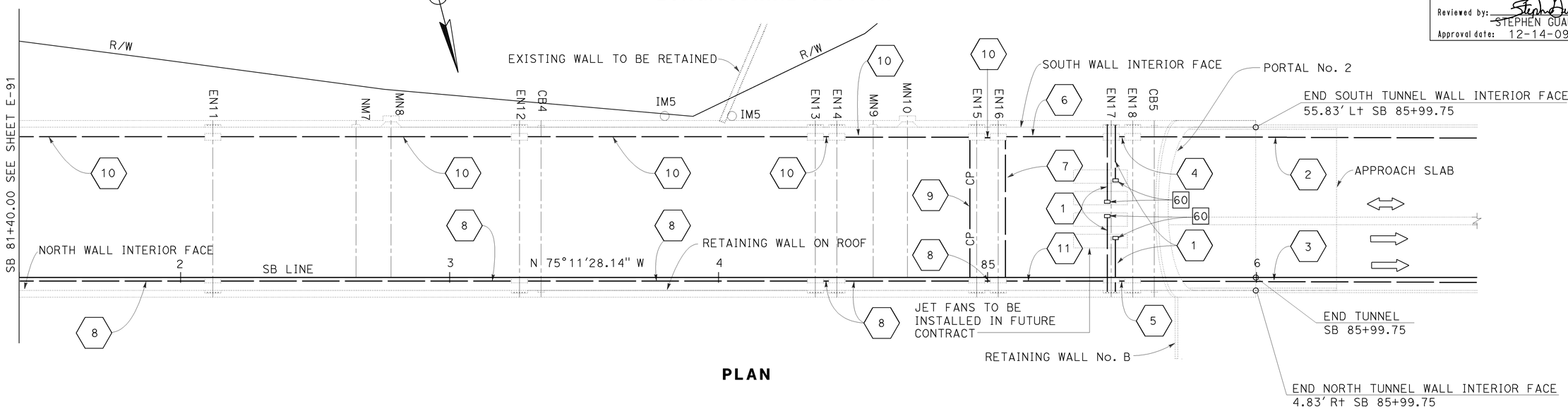

PLAN

CALIFORNIA STATE FIRE MARSHAL APPROVED

Approval of this plan does not authorize or approve any omission or deviation from applicable regulations. Final approval is subject to field inspection. One set of approved plans shall be available on the project site at all times.

Reviewed by: STEPHEN GUARINO
Approval date: 12-14-09

BATTERY SUBSTATION AND TUNNEL WORK
(TUNNEL LOW VOLTAGE DUCT LAYOUT)

SCALE: 1"=20'

E-92

REVISED BY	DATE REVISED
LS	8/01/09

CALCULATED-DESIGNED BY: LIONEL J. SUDDS
CHECKED BY: LIONEL J. SUDDS
FUNCTIONAL SUPERVISOR: BEHZAD GOLEMOHAMMADI

STATE OF CALIFORNIA - DEPARTMENT OF TRANSPORTATION
ELECTRICAL

LAST REVISION DATE PLOTTED => 14-DEC-2009
09-23-09 TIME PLOTTED => 16:01

BORDER LAST REVISED 4/11/2008 | RELATIVE BORDER SCALE IS IN INCHES 0 1 2 3 | USERNAME => trlenard | DGN FILE => 416374ua092.dgn | CU 04242 | EA 163741

Dist	COUNTY	ROUTE	POST MILES TOTAL PROJECT	SHEET No.	TOTAL SHEETS
04	SF	101	8.2/9.2	255	654

REGISTERED ELECTRICAL ENGINEER — DATE 10-8-09

Lionel J. Sudds No. 15201 Exp 6-30-10 ELECT — REGISTERED PROFESSIONAL ENGINEER — STATE OF CALIFORNIA

12-14-09
PLANS APPROVAL DATE

THE STATE OF CALIFORNIA OR ITS OFFICERS OR AGENTS SHALL NOT BE RESPONSIBLE FOR THE ACCURACY OR COMPLETENESS OF SCANNED COPIES OF THIS PLAN SHEET.

CALIFORNIA STATE FIRE MARSHAL APPROVED

Approval of this plan does not authorize or approve any omission or deviation from applicable regulations. Final approval is subject to field inspection. One set of approved plans shall be available on the project site at all times.

Reviewed by: STEPHEN GUARINO

Approval date: 12-14-09

NOTES: (THIS SHEET ONLY)

1. TUNNEL PULL BOX
2. 50/300 A CIRCUIT BREAKER

ABBREVIATION: (THIS SHEET ONLY)

EN # = ELECTRICAL NICHE #

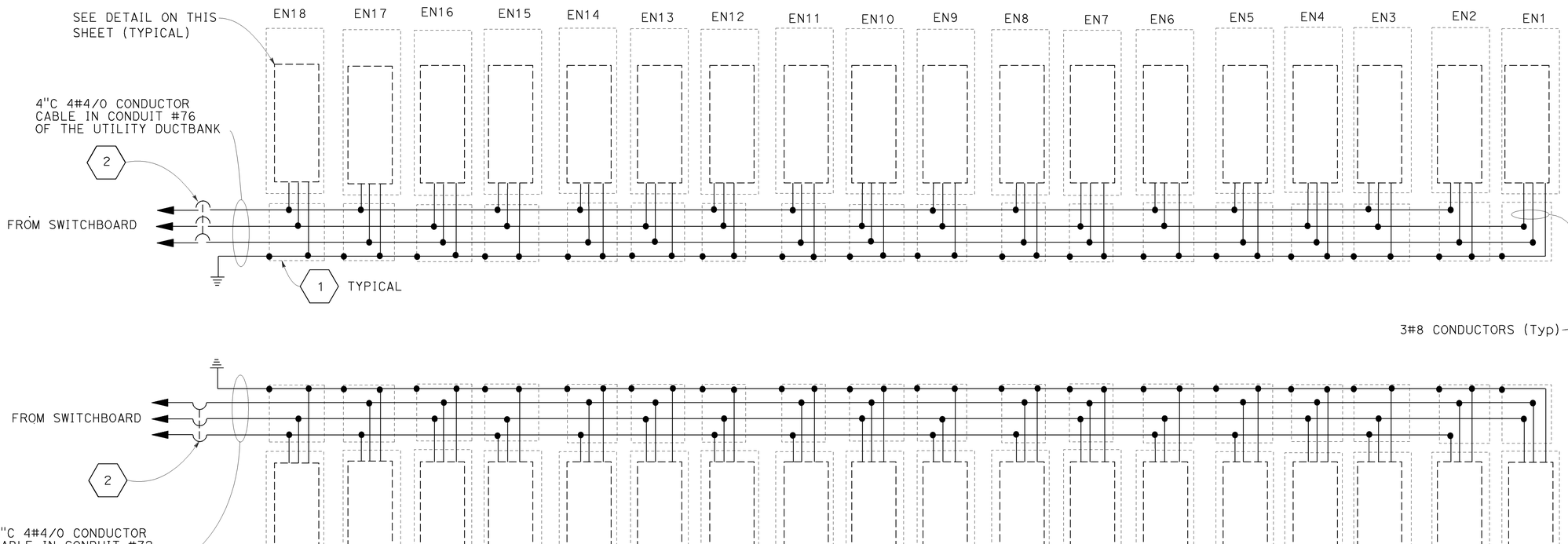

BATTERY SUBSTATION AND TUNNEL WORK
(TUNNEL POWER DISTRIBUTION SYSTEM WIRING CONNECTION DIAGRAM)

NO SCALE

E-93

REVISED BY	DATE REVISED
LS	8/01/09

CALCULATED-DESIGNED BY: LIONEL J. SUDDS
CHECKED BY: LIONEL J. SUDDS
FUNCTIONAL SUPERVISOR: BEHZAD GOLEMOHAMMADI

STATE OF CALIFORNIA - DEPARTMENT OF TRANSPORTATION
ELECTRICAL

LAST REVISION DATE PLOTTED => 15-DEC-2009
TIME PLOTTED => 12:47
10-23-09

BORDER LAST REVISED 4/11/2008

RELATIVE BORDER SCALE IS IN INCHES 0 1 2 3

USERNAME => trmikesl
DGN FILE => 416374ua093.dgn

CU 04242

EA 163741

Dist	COUNTY	ROUTE	POST MILES TOTAL PROJECT	SHEET No.	TOTAL SHEETS
04	SF	101	8.2/9.2	256	654

REGISTERED ELECTRICAL ENGINEER — 10-8-09 DATE

Lionel J. Sudds No. 15201 Exp 6-30-10 ELECT — REGISTERED PROFESSIONAL ENGINEER — STATE OF CALIFORNIA

12-14-09
PLANS APPROVAL DATE

THE STATE OF CALIFORNIA OR ITS OFFICERS OR AGENTS SHALL NOT BE RESPONSIBLE FOR THE ACCURACY OR COMPLETENESS OF SCANNED COPIES OF THIS PLAN SHEET.

CALIFORNIA STATE FIRE MARSHAL APPROVED

Approval of this plan does not authorize or approve any omission or deviation from applicable regulations. Final approval is subject to field inspection. One set of approved plans shall be available on the project site at all times.

Reviewed by: STEPHEN GUARINO

Approval date: 12-14-09

NOTES: (THIS SHEET ONLY)

1. TUNNEL PULL BOX
2. 10 A FUSE
3. 10 KVA 240/600 V TRANSFORMER

ABBREVIATION: (THIS SHEET ONLY)

EN # = ELECTRICAL NICHE #

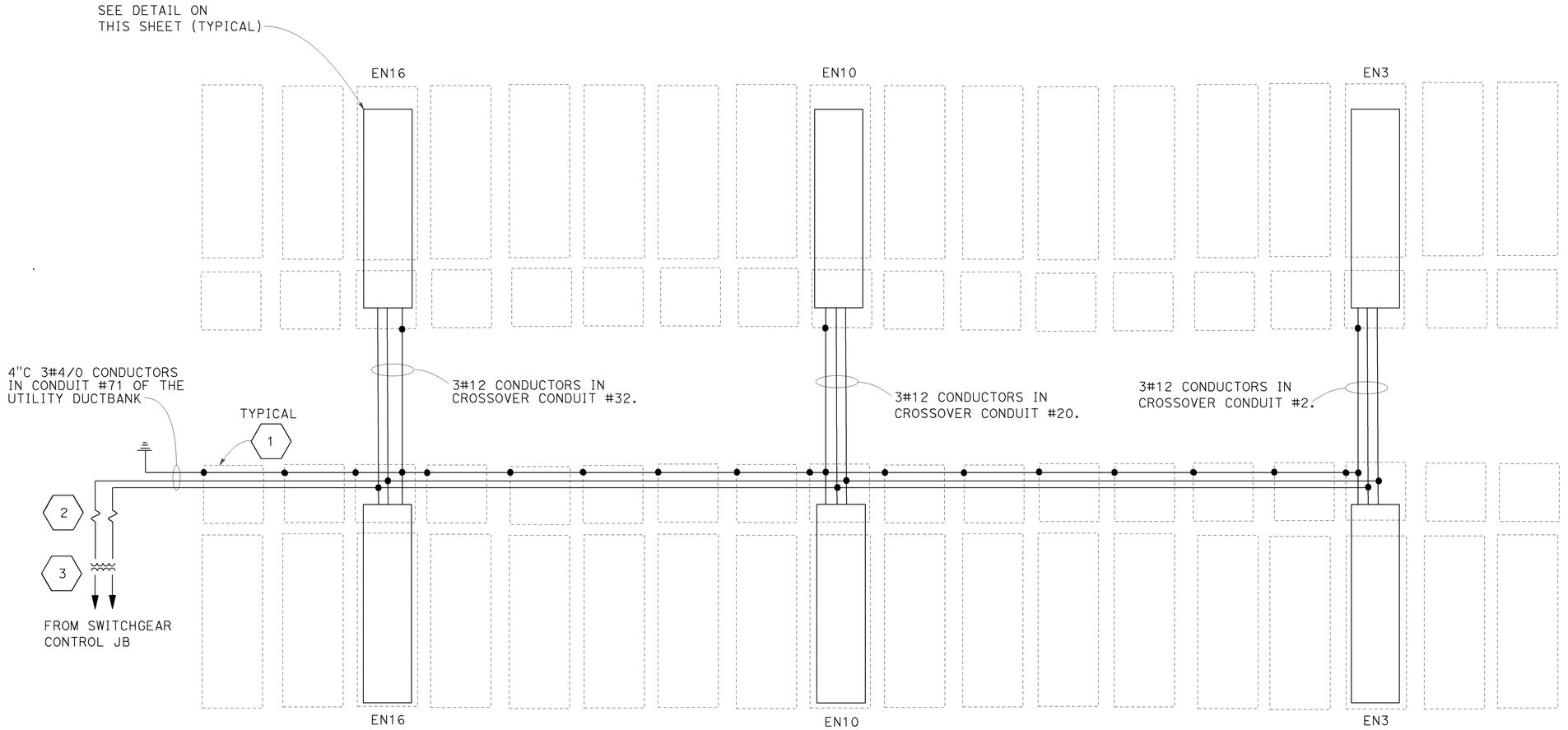

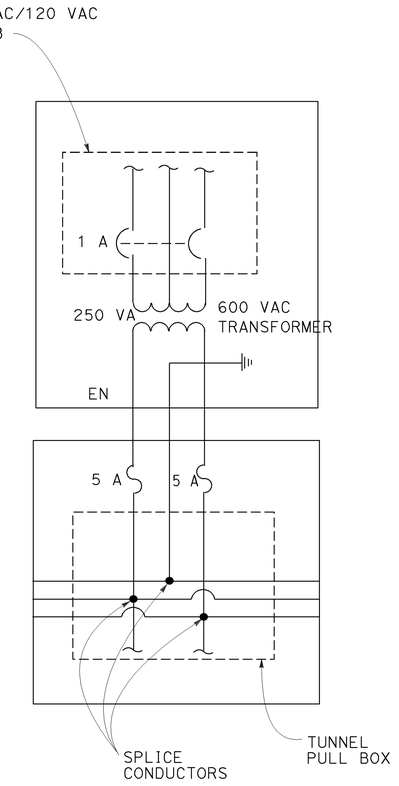

BATTERY SUBSTATION AND TUNNEL WORK
(TUNNEL POWER DISTRIBUTION SYSTEM WIRING CONNECTION DIAGRAM)

NO SCALE

E-94

REVISED BY	DATE REVISED
LS	8/01/09

CALCULATED-DESIGNED BY: LIONEL J. SUDDS
CHECKED BY: LIONEL J. SUDDS
FUNCTIONAL SUPERVISOR: BEHZAD GOLEMOHAMMADI

STATE OF CALIFORNIA - DEPARTMENT OF TRANSPORTATION
Caltrans®
ELECTRICAL

LAST REVISION: DATE PLOTTED => 14-DEC-2009 TIME PLOTTED => 16:10
10-23-09

BORDER LAST REVISED 4/11/2008

RELATIVE BORDER SCALE IS IN INCHES 0 1 2 3

USERNAME => trlenard
DGN FILE => 416374ua094.dgn

CU 04242

EA 163741

Dist	COUNTY	ROUTE	POST MILES TOTAL PROJECT	SHEET No.	TOTAL SHEETS
04	SF	101	8.2/9.2	257	654

Lionel J. Sudds 10-8-09
REGISTERED ELECTRICAL ENGINEER DATE

12-14-09
PLANS APPROVAL DATE

REGISTERED PROFESSIONAL ENGINEER — Lionel J. Sudds — No. 15201 — Exp 6-30-10 — ELECT — STATE OF CALIFORNIA

THE STATE OF CALIFORNIA OR ITS OFFICERS OR AGENTS SHALL NOT BE RESPONSIBLE FOR THE ACCURACY OR COMPLETENESS OF SCANNED COPIES OF THIS PLAN SHEET.

CALIFORNIA STATE FIRE MARSHAL APPROVED

Approval of this plan does not authorize or approve any omission or deviation from applicable regulations. Final approval is subject to field inspection. One set of approved plans shall be available on the project site at all times.

Reviewed by: STEPHEN GUARINO
Approval date: 12-14-09

IN CONDUIT #63 OF THE UTILITY DUCTBANK

IN CROSSOVER CONDUIT #26

4-2#4 CONDUCTOR CABLES

4-2#4 CONDUCTOR CABLES (Typ)

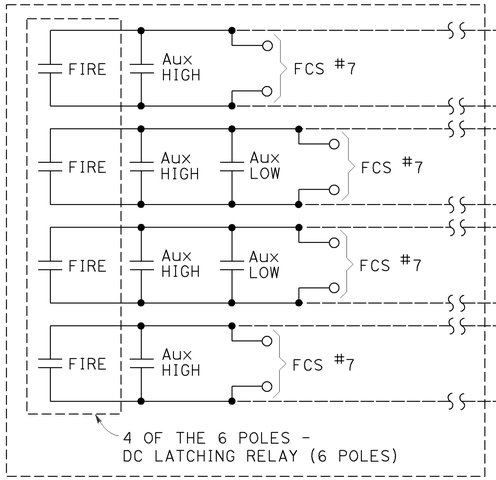

FCS #7 JB JET FAN CONTROL WIRING

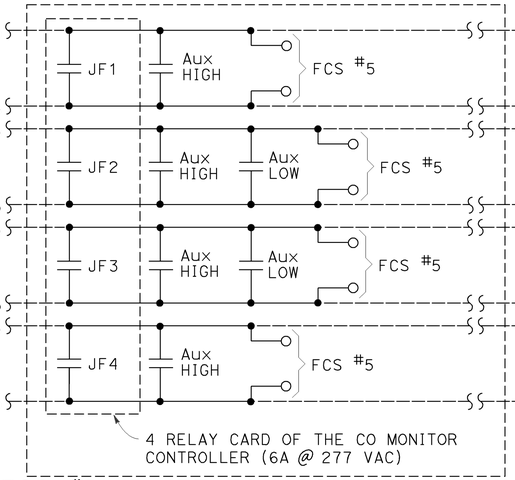

FCS #5 JB JET FAN CONTROL WIRING
NORTHSIDE

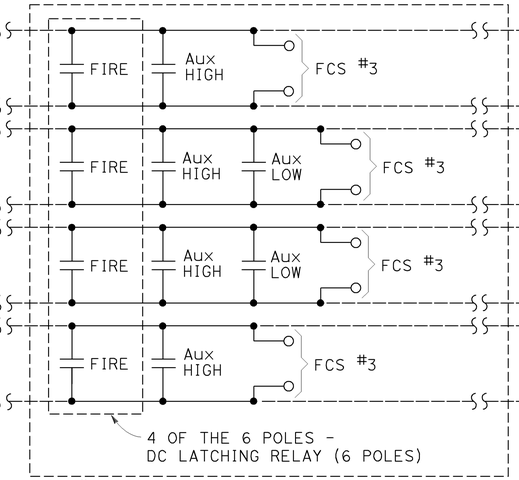

FCS #3 JB JET FAN CONTROL WIRING

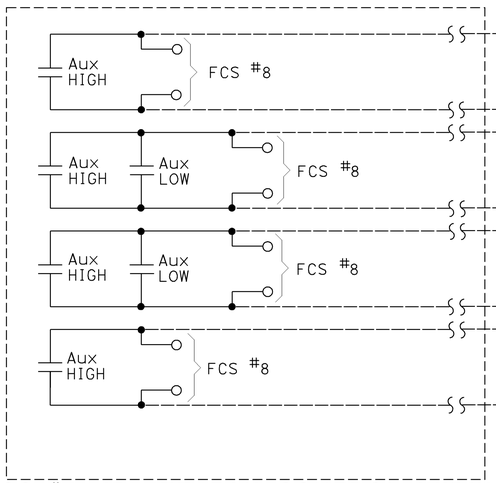

FCS #8 JB JET FAN CONTROL WIRING

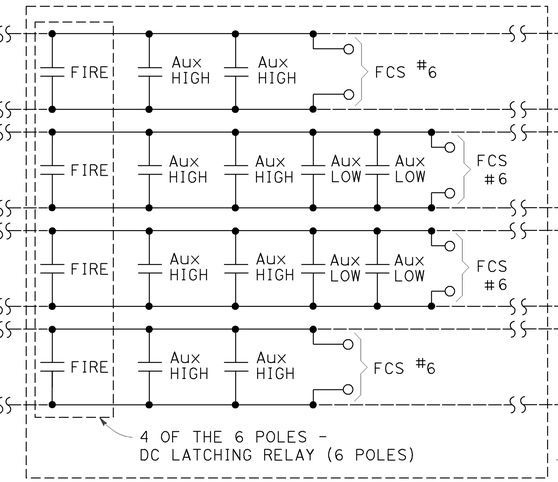

FCS #6 JB JET FAN CONTROL WIRING
SOUTHSIDE

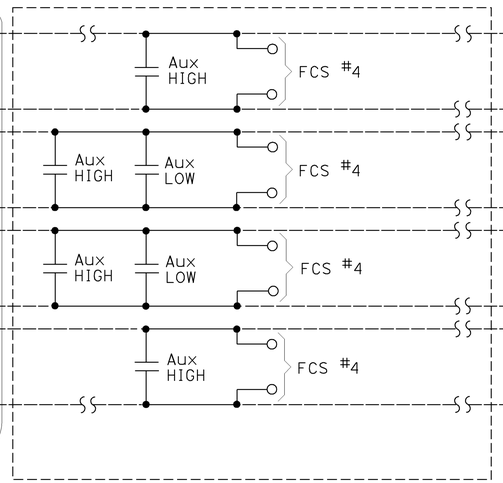

FCS #4 JB JET FAN CONTROL WIRING

IN CONDUIT #85 OF THE UTILITY DUCTBANK

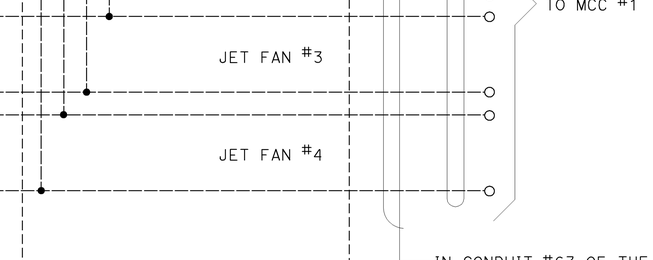

TUNNEL CONTROL JUNCTION BOX (JB) (ON NORTHSIDE)

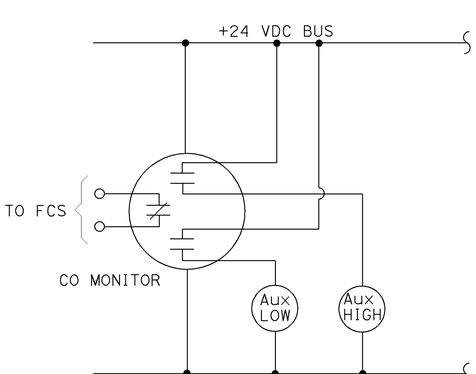

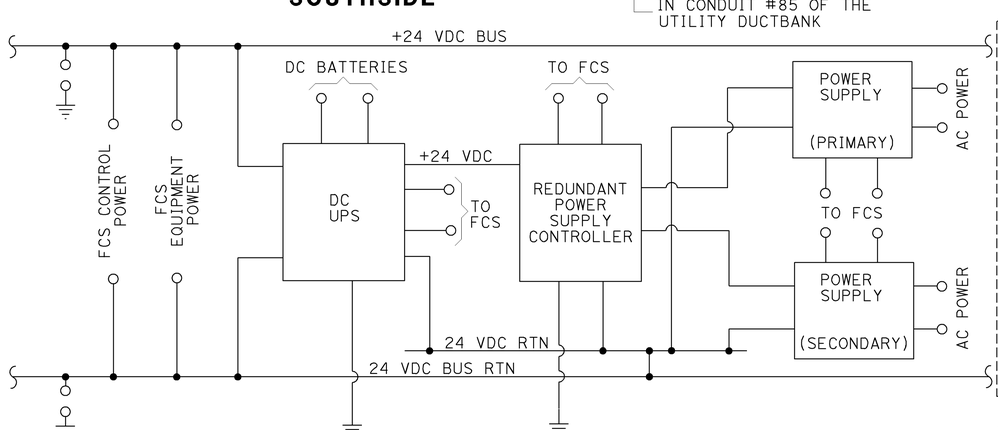

FCS POWER CONNECTION WIRING DIAGRAM

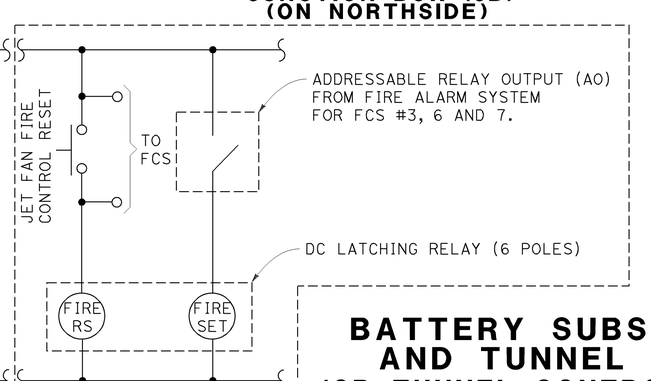

IN FCS #3, #6 AND #7.

BATTERY SUBSTATION AND TUNNEL WORK
(SB TUNNEL CONTROL WIRING FOR JET FANS (MCC #1))

NO SCALE

E-95

LAST REVISION | DATE PLOTTED => 14-DEC-2009 | TIME PLOTTED => 16:01 | 10-23-09

STATE OF CALIFORNIA - DEPARTMENT OF TRANSPORTATION
ELECTRICAL
FUNCTIONAL SUPERVISOR: BEHZAD GOLEMOHAMMADI
CALCULATED-DESIGNED BY: LIONEL J. SUDDS | CHECKED BY: LIONEL J. SUDDS | REVISED BY: LS | DATE REVISED: 8/01/09

BORDER LAST REVISED 4/11/2008 | RELATIVE BORDER SCALE IS IN INCHES 0 1 2 3 | USERNAME => trlenard | DGN FILE => 416374ua095.dgn | CU 04242 | EA 163741

NOTES: (THIS SHEET ONLY)

1. INSTALL 1-24 FIBER SM FO CABLE AND 1-36 FIBER SM FO CABLE IN CONDUIT #97 OF THE UTILITY DUCTBANK; AND 1-4#14 CONDUCTOR CABLE FOR BREAKER FAILURE IN CONDUIT #95 OF THE UTILITY DUCTBANK. (SEE SHEET E-88 FOR LOCATION).
2. INSTALL 1-24 FIBER SM FO CABLE AND 1-36 FIBER SM FO CABLE IN CONDUIT #97 OF THE UTILITY DUCTBANK; 2-RS-485 CABLE IN CONDUIT #93 OF THE UTILITY DUCTBANK; AND 1-4#14 CONDUCTOR CABLE FOR BREAKER FAILURE IN CONDUIT #95 OF THE UTILITY DUCTBANK (SEE SHEET E-88 FOR LOCATION).
3. INSTALL 1-24 FIBER SM FO CABLE AND 1-36 FIBER SM FO CABLE IN CONDUIT #51 OF THE UTILITY DUCTBANK; 1-12 FIBER SM FO CABLE IN CONDUIT #55 OF THE UTILITY DUCTBANK; AND 1-RS-485 CABLE IN CONDUIT #52 OF THE UTILITY DUCTBANK; (SEE SHEET E-88 FOR LOCATION).
4. INSTALL 2-24 FIBER SM FO CABLE AND 1-36 FIBER SM FO CABLE IN CONDUIT #51 OF THE UTILITY DUCTBANK; 1-12 FIBER SM FO CABLE IN CONDUIT #55 OF THE UTILITY DUCTBANK; AND 2-RS-485 CABLE IN CONDUIT #52 OF THE UTILITY DUCTBANK; (SEE SHEET E-88 FOR LOCATION).
5. INSTALL 1-36 FIBER SM FO CABLE IN CROSS OVER CONDUIT # 1
6. INSTALL 1-24 FIBER SM FO CABLE IN CONDUIT #97 OF THE UTILITY DUCTBANK; (SEE SHEET E-88 FOR LOCATION).
7. INSTALL 1-24 FIBER SM FO CABLE IN CONDUIT #51 OF THE UTILITY DUCTBANK; AND 1-12 FIBER SM FO CABLE IN CONDUIT #55 OF THE UTILITY DUCTBANK. (SEE SHEET E-88 FOR LOCATION).
8. INSTALL 2-24 FIBER SM FO CABLE AND 1-36 FIBER SM FO CABLE IN CONDUIT #51 OF THE UTILITY DUCTBANK; 1-12 FIBER SM FO CABLE IN CONDUIT #55 OF THE UTILITY DUCTBANK; AND 1-RS-485 CABLE IN CONDUIT #52 OF THE UTILITY DUCTBANK; (SEE SHEET E-88 FOR LOCATION).
9. INSTALL 2-24 FIBER SM FO CABLE AND 1-36 FIBER SM FO CABLE IN CONDUIT #51 OF THE UTILITY DUCTBANK; AND 1-12 FIBER SM FO CABLE IN CONDUIT #55 OF THE UTILITY DUCTBANK; (SEE SHEET E-88 FOR LOCATION).

CALIFORNIA STATE FIRE MARSHAL APPROVED
Approval of this plan does not authorize or approve any omission or deviation from applicable regulations. Final approval is subject to field inspection. One set of approved plans shall be available on the project site at all times.
Reviewed by: STEPHEN GUARINO
Approval date: 12-14-09

Dist	COUNTY	ROUTE	POST MILES TOTAL PROJECT	SHEET No.	TOTAL SHEETS
04	SF	101	8.2/9.2	258	654

Lionel J. Sudds 10-8-09
REGISTERED ELECTRICAL ENGINEER DATE
12-14-09
PLANS APPROVAL DATE

REGISTERED PROFESSIONAL ENGINEER — Lionel J. Sudds No. 15201 Exp 6-30-10 ELECT — STATE OF CALIFORNIA

THE STATE OF CALIFORNIA OR ITS OFFICERS OR AGENTS SHALL NOT BE RESPONSIBLE FOR THE ACCURACY OR COMPLETENESS OF SCANNED COPIES OF THIS PLAN SHEET.

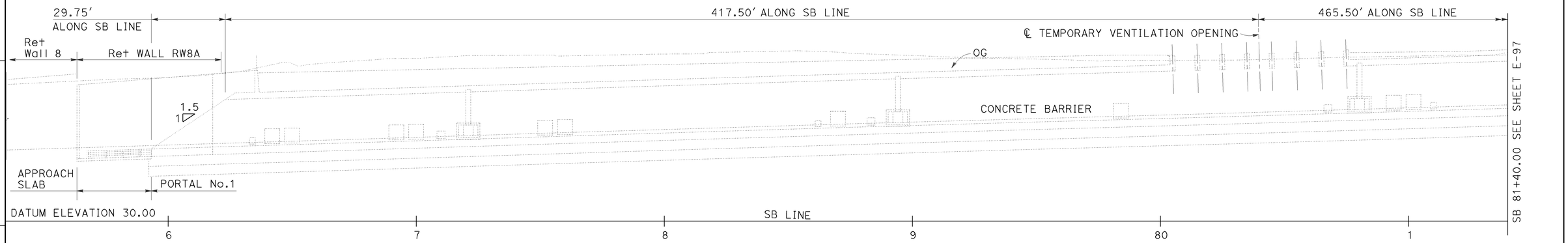

LONGITUDINAL SECTION

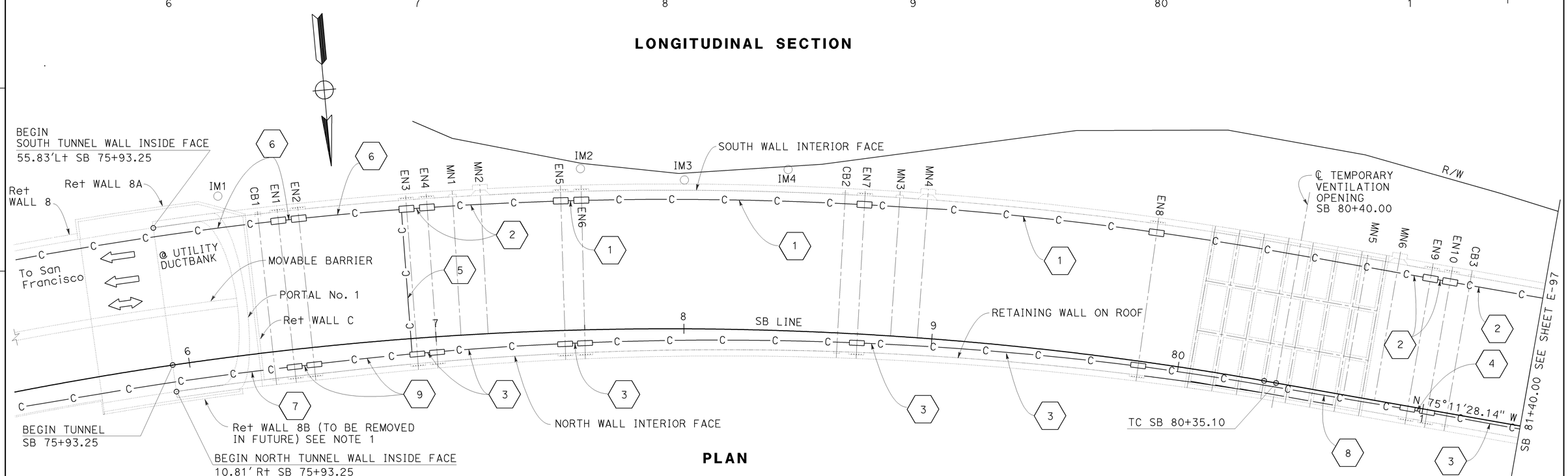

PLAN

BATTERY SUBSTATION AND TUNNEL WORK
(BATTERY TUNNEL COMMUNICATION DUCT LAYOUT SUBSTATION)

SCALE: 1"=20'

THIS PLAN IS ACCURATE FOR ELECTRICAL WORK ONLY

E-96

REVISED BY: LS — DATE REVISED: 8/01/09
CALCULATED-DESIGNED BY: LIONEL J. SUDDS
CHECKED BY: LIONEL J. SUDDS
FUNCTIONAL SUPERVISOR: BEHZAD GOLEMOHAMMADI
STATE OF CALIFORNIA - DEPARTMENT OF TRANSPORTATION
ELECTRICAL
Caltrans®

LAST REVISION: DATE PLOTTED => 14-DEC-2009 TIME PLOTTED => 16:01
10-29-09

BORDER LAST REVISED 4/11/2008
RELATIVE BORDER SCALE IS IN INCHES 0 1 2 3
USERNAME => trlenard
DGN FILE => 416374ua096.dgn
CU 04242
EA 163741

Dist	COUNTY	ROUTE	POST MILES TOTAL PROJECT	SHEET No.	TOTAL SHEETS
04	SF	101	8.2/9.2	259	654

Lionel J. Sudds 10-8-09
REGISTERED ELECTRICAL ENGINEER DATE

12-14-09
PLANS APPROVAL DATE

REGISTERED PROFESSIONAL ENGINEER — Lionel J. Sudds — No. 15201 — Exp 6-30-10 — ELECT — STATE OF CALIFORNIA

THE STATE OF CALIFORNIA OR ITS OFFICERS OR AGENTS SHALL NOT BE RESPONSIBLE FOR THE ACCURACY OR COMPLETENESS OF SCANNED COPIES OF THIS PLAN SHEET.

NOTES: (THIS SHEET ONLY)

1. INSTALL 1-24 FIBER SM FO CABLE AND 1-36 FIBER SM FO CABLE IN CONDUIT #97 OF THE UTILITY DUCTBANK; 1-RS-485 CABLE IN CONDUIT #98 OF THE UTILITY DUCTBANK; AND 1-4#14 CONDUCTOR CABLE FOR BREAKER FAILURE IN CONDUIT #95 OF THE UTILITY DUCTBANK. (SEE SHEET E-88 FOR LOCATION).
2. INSTALL 1-24 FIBER SM FO CABLE AND 1-36 FIBER SM FO CABLE IN CONDUIT #97 OF THE UTILITY DUCTBANK; 2-RS-485 CABLE IN CONDUIT #98 OF THE UTILITY DUCTBANK; AND 1-4#14 CONDUCTOR CABLE FOR BREAKER FAILURE IN CONDUIT #95 OF THE UTILITY DUCTBANK (SEE SHEET E-88 FOR LOCATION).
3. INSTALL 1-24 FIBER SM FO CABLE AND 1-36 FIBER SM FO CABLE IN CONDUIT #51 OF THE UTILITY DUCTBANK; 1-12 FIBER SM FO CABLE IN CONDUIT #55 OF THE UTILITY DUCTBANK; AND 1-RS-485 CABLE IN CONDUIT #52 OF THE UTILITY DUCTBANK; (SEE SHEET E-88 FOR LOCATION).
4. INSTALL 1-24 FIBER SM FO CABLE AND 1-36 FIBER SM FO CABLE IN CONDUIT #51 OF THE UTILITY DUCTBANK; 1-12 FIBER SM FO CABLE IN CONDUIT #55 OF THE UTILITY DUCTBANK; AND 2-RS-485 CABLE IN CONDUIT #52 OF THE UTILITY DUCTBANK; (SEE SHEET E-88 FOR LOCATION).
5. INSTALL 1½"C, MT EMBEDDED IN CONCRETE FOR JET FAN SENSOR, 28 FOR EACH CONDUIT WITH JB EXPOSED, AND CONNECT CONDUIT TO JB FOR EACH CONDUIT.
6. INSTALL 2-24 FIBER SM FO CABLE AND 1-36 FIBER SM FO CABLE IN CONDUIT #51 OF THE UTILITY DUCTBANK; 1-12 FIBER SM FO CABLE IN CONDUIT #55 OF THE UTILITY DUCTBANK; AND 2-RS-485 CABLE IN CONDUIT #52 OF THE UTILITY DUCTBANK; (SEE SHEET E-88 FOR LOCATION).
7. INSTALL 1-24 FIBER SM FO CABLE AND 1-36 FIBER SM FO CABLE IN CONDUIT #97 OF THE UTILITY DUCTBANK; 2-RS-485 CABLE IN CONDUIT #98 OF THE UTILITY DUCTBANK; 16-2P#18 CONDUCTOR CABLE IN CONDUIT #94 OF THE UTILITY DUCTBANK; AND 1-4#14 CONDUCTOR CABLE FOR BREAKER FAILURE IN CONDUIT #95 OF THE UTILITY DUCTBANK (SEE SHEET E-88 FOR LOCATION).
8. INSTALL 1-24 FIBER SM FO CABLE AND 1-36 FIBER SM FO CABLE IN CONDUIT #51 OF THE UTILITY DUCTBANK; 1-12 FIBER SM FO CABLE IN CONDUIT #55 OF THE UTILITY DUCTBANK; 16-2P#18 CONDUCTOR CABLE IN CONDUIT #53 OF THE UTILITY DUCTBANK; AND 1-RS-485 CABLE IN CONDUIT #52 OF THE UTILITY DUCTBANK (SEE SHEET E-88 FOR LOCATION).

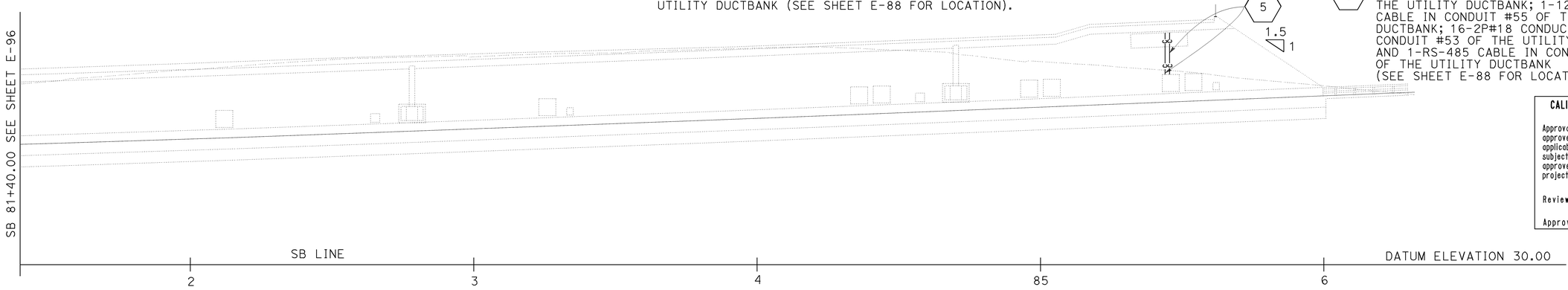

LONGITUDINAL SECTION

CALIFORNIA STATE FIRE MARSHAL APPROVED
Approval of this plan does not authorize or approve any omission or deviation from applicable regulations. Final approval is subject to field inspection. One set of approved plans shall be available on the project site at all times.
Reviewed by: Stephen Guarino
STEPHEN GUARINO
Approval date: 12-14-09

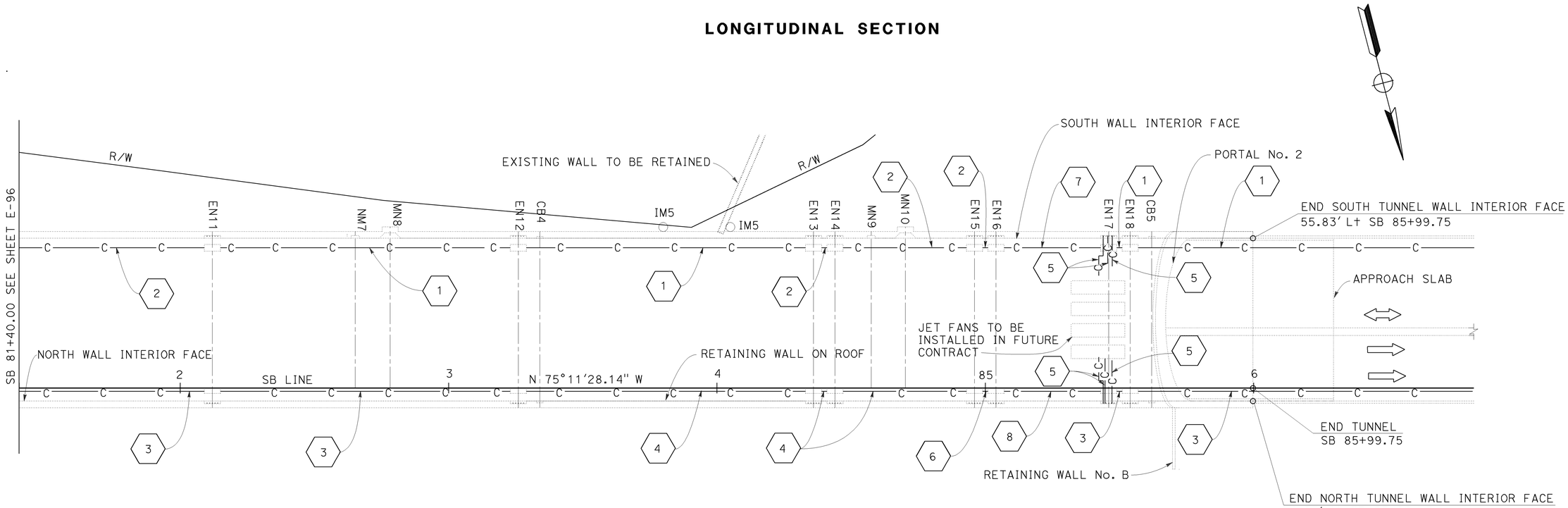

PLAN

BATTERY SUBSTATION AND TUNNEL WORK
(BATTERY TUNNEL COMMUNICATION DUCT LAYOUT SUBSTATION)

SCALE: 1"=20'

THIS PLAN IS ACCURATE FOR ELECTRICAL WORK ONLY

E-97

STATE OF CALIFORNIA - DEPARTMENT OF TRANSPORTATION
ELECTRICAL
FUNCTIONAL SUPERVISOR: BEHZAD GOLEMOHAMMADI
CALCULATED-DESIGNED BY
CHECKED BY
LIONEL J. SUDDS
LIONEL J. SUDDS
REVISED BY: LS
DATE REVISED: 8/01/09

LAST REVISION DATE PLOTTED => 14-DEC-2009
TIME PLOTTED => 16:01
10-29-09

BORDER LAST REVISED 4/11/2008
RELATIVE BORDER SCALE IS IN INCHES 0 1 2 3
USERNAME => trlenard
DGN FILE => 416374ua097.dgn
CU 04242
EA 163741

Dist	COUNTY	ROUTE	POST MILES TOTAL PROJECT	SHEET No.	TOTAL SHEETS
04	SF	101	8.2/9.2	260	654

REGISTERED ELECTRICAL ENGINEER 10-8-09 DATE

12-14-09
PLANS APPROVAL DATE

REGISTERED PROFESSIONAL ENGINEER Lionel J. Sudds No. 15201 Exp. 6-30-10 ELECT STATE OF CALIFORNIA

THE STATE OF CALIFORNIA OR ITS OFFICERS OR AGENTS SHALL NOT BE RESPONSIBLE FOR THE ACCURACY OR COMPLETENESS OF SCANNED COPIES OF THIS PLAN SHEET.

CALIFORNIA STATE FIRE MARSHAL APPROVED
Approval of this plan does not authorize or approve any omission or deviation from applicable regulations. Final approval is subject to field inspection. One set of approved plans shall be available on the project site at all times.
Reviewed by: STEPHEN GUARINO
Approval date: 12-14-09

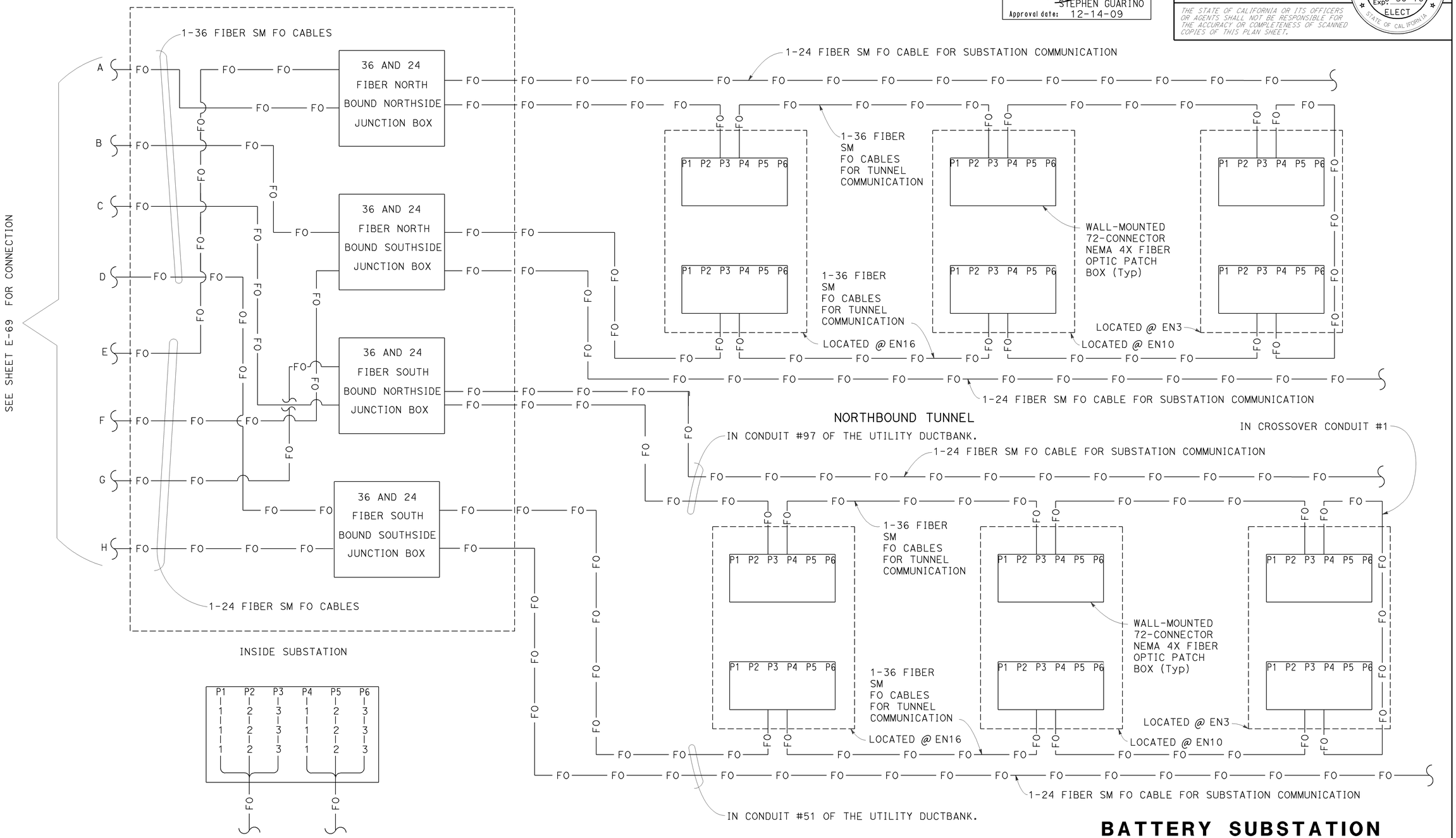

CONNECTION DIAGRAM OF THE WALL-MOUNTED 72-CONNECTOR NEMA 4X FIBER OPTIC PATCH BOX (Typ)

BATTERY SUBSTATION AND TUNNEL WORK
(TUNNEL FO CONNECTION DIAGRAM)

NO SCALE

E-98

STATE OF CALIFORNIA - DEPARTMENT OF TRANSPORTATION
Caltrans
ELECTRICAL

FUNCTIONAL SUPERVISOR: BEHZAD GOLEMOHAMMADI
CALCULATED-DESIGNED BY: LIONEL J. SUDDS
CHECKED BY: LIONEL J. SUDDS
REVISED BY: LS
DATE REVISED: 8/01/09

LAST REVISION 10-23-09
DATE PLOTTED => 14-DEC-2009
TIME PLOTTED => 16:01

BORDER LAST REVISED 4/11/2008
RELATIVE BORDER SCALE IS IN INCHES 0 1 2 3
USERNAME => trlenard
DGN FILE => 416374ua098.dgn
CU 04242
EA 163741

Dist	COUNTY	ROUTE	POST MILES TOTAL PROJECT	SHEET No.	TOTAL SHEETS
04	SF	101	8.2/9.2	261	654

REGISTERED ELECTRICAL ENGINEER 10-8-09 DATE

12-14-09
PLANS APPROVAL DATE

REGISTERED PROFESSIONAL ENGINEER Lionel J. Sudds No. 15201 Exp. 6-30-10 ELECT STATE OF CALIFORNIA

THE STATE OF CALIFORNIA OR ITS OFFICERS OR AGENTS SHALL NOT BE RESPONSIBLE FOR THE ACCURACY OR COMPLETENESS OF SCANNED COPIES OF THIS PLAN SHEET.

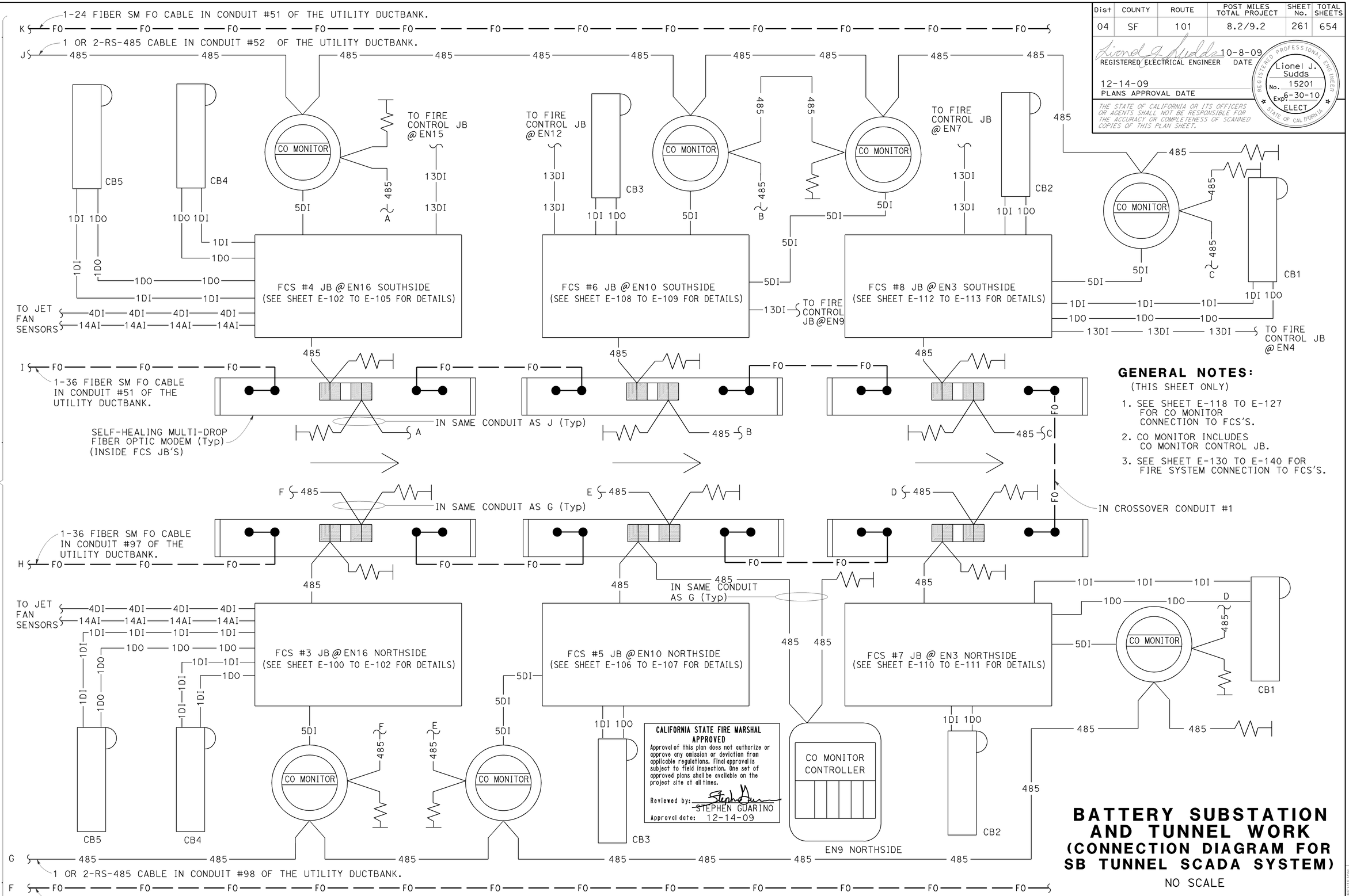

CALIFORNIA STATE FIRE MARSHAL APPROVED

Approval of this plan does not authorize or approve any omission or deviation from applicable regulations. Final approval is subject to field inspection. One set of approved plans shall be available on the project site at all times.

Reviewed by: STEPHEN GUARINO

Approval date: 12-14-09

GENERAL NOTES:

(THIS SHEET ONLY)

1. SEE SHEET E-118 TO E-127 FOR CO MONITOR CONNECTION TO FCS'S.
2. CO MONITOR INCLUDES CO MONITOR CONTROL JB.
3. SEE SHEET E-130 TO E-140 FOR FIRE SYSTEM CONNECTION TO FCS'S.

BATTERY SUBSTATION AND TUNNEL WORK (CONNECTION DIAGRAM FOR SB TUNNEL SCADA SYSTEM)

NO SCALE

E-99

STATE OF CALIFORNIA - DEPARTMENT OF TRANSPORTATION
Caltrans
ELECTRICAL

FUNCTIONAL SUPERVISOR: BEHZAD GOLEMOHAMMADI
CALCULATED-DESIGNED BY: LIONEL J. SUDDS
CHECKED BY: LIONEL J. SUDDS
REVISED BY: LS
DATE REVISED: 8/01/09

LAST REVISION 10-23-09
DATE PLOTTED => 14-DEC-2009
TIME PLOTTED => 16:01

Dist	COUNTY	ROUTE	POST MILES TOTAL PROJECT	SHEET No.	TOTAL SHEETS
04	SF	101	8.2/9.2	262	654

REGISTERED ELECTRICAL ENGINEER 10-8-09 DATE

12-14-09
PLANS APPROVAL DATE

REGISTERED PROFESSIONAL ENGINEER Lionel J. Sudds No. 15201 Exp. 6-30-10 ELECT STATE OF CALIFORNIA

THE STATE OF CALIFORNIA OR ITS OFFICERS OR AGENTS SHALL NOT BE RESPONSIBLE FOR THE ACCURACY OR COMPLETENESS OF SCANNED COPIES OF THIS PLAN SHEET.

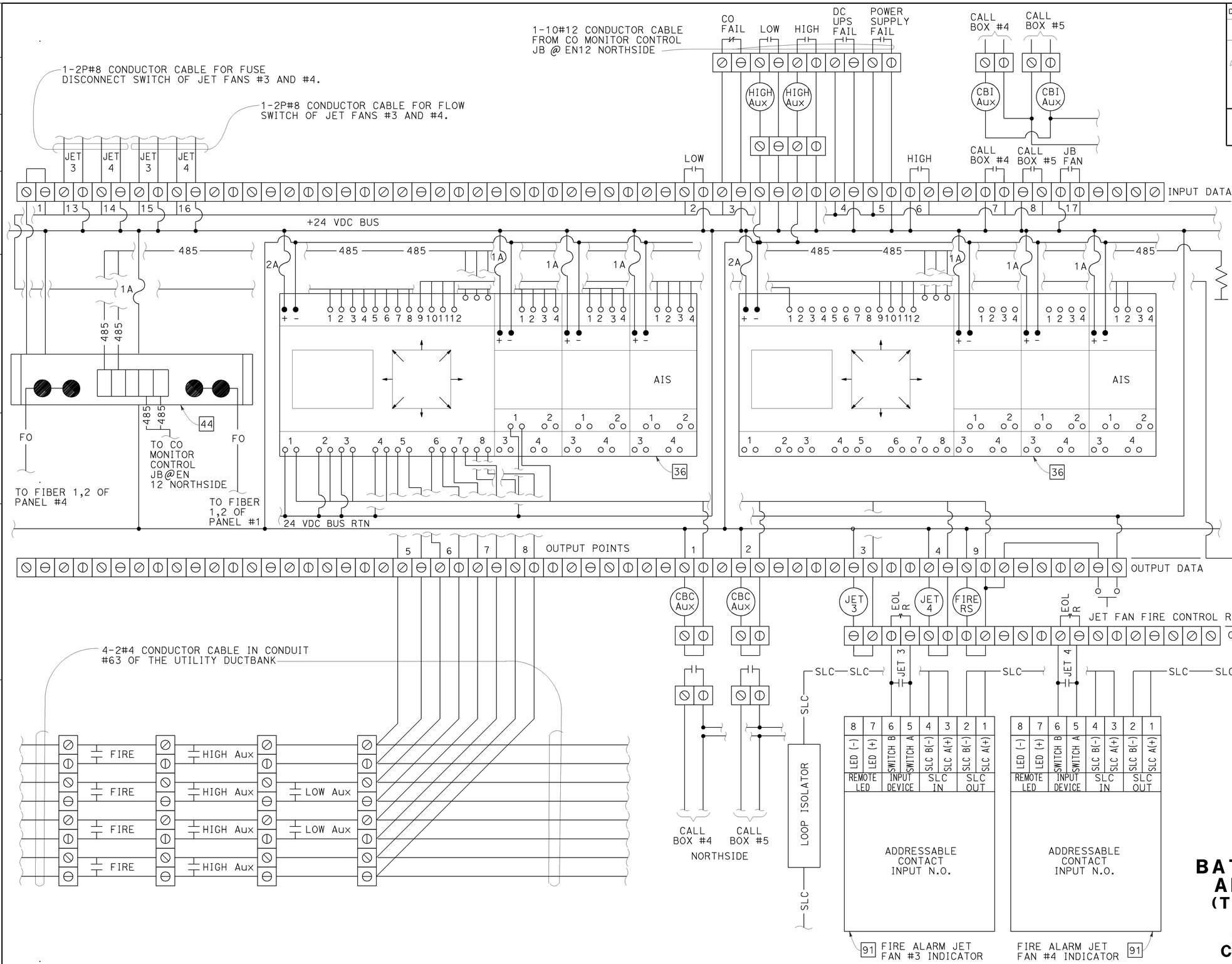

GENERAL NOTES:
(THIS SHEET ONLY)

1. CBI Aux, CBC Aux, HIGH Aux, AND LOW Aux RELAY SHALL BE POWER CONTROL RELAY AS SPECIFIED IN THE SPECIAL PROVISIONS.
2. THE FIELD CONTROL STATIONS IN THIS JB AS SHOWN ON THIS SHEET SHALL BE CONFIGURED IN ACCORDANCE TO THE SERIAL COMMMUNICATION SYSTEM SPECIFICATION IN THE SPECIAL PROVISIONS.
3. AIS ARE ANALOG INPUT MODULES.
4. THE FIRE RELAY SHALL BE A LATCHING POWER CONTROL RELAY AS SPECIFIED IN THE POWER CONTROL RELAY SPECIFICATION IN THE SPECIAL PROVISIONS.

CALIFORNIA STATE FIRE MARSHAL APPROVED
Approval of this plan does not authorize or approve any omission or deviation from applicable regulations. Final approval is subject to field inspection. One set of approved plans shall be available on the project site at all times.
Reviewed by: STEPHEN GUARINO
Approval date: 12-14-09

BATTERY SUBSTATION AND TUNNEL WORK (TUNNEL FCS #3 JB AT EN16 NORTHSIDE LAYOUT AND WIRING CONNECTION DIAGRAM)

NO SCALE

E-100

STATE OF CALIFORNIA - DEPARTMENT OF TRANSPORTATION
Caltrans
ELECTRICAL

FUNCTIONAL SUPERVISOR: BEHZAD GOLEMOHAMMADI
CALCULATED-DESIGNED BY: LIONEL J. SUDDS
CHECKED BY: LIONEL J. SUDDS
REVISED BY: LS
DATE REVISED: 8/01/09

LAST REVISION 10-23-09
DATE PLOTTED => 14-DEC-2009
TIME PLOTTED => 16:01

BORDER LAST REVISED 4/11/2008
RELATIVE BORDER SCALE IS IN INCHES 0 1 2 3
USERNAME => trlenard
DGN FILE => 416374ua100.dgn
CU 04242
EA 163741

Dist	COUNTY	ROUTE	POST MILES TOTAL PROJECT	SHEET No.	TOTAL SHEETS
04	SF	101	8.2/9.2	263	654

Lionel J. Sudds 10-8-09
REGISTERED ELECTRICAL ENGINEER DATE

12-14-09
PLANS APPROVAL DATE

REGISTERED PROFESSIONAL ENGINEER — Lionel J. Sudds — No. 15201 — Exp 6-30-10 — ELECT — STATE OF CALIFORNIA

THE STATE OF CALIFORNIA OR ITS OFFICERS OR AGENTS SHALL NOT BE RESPONSIBLE FOR THE ACCURACY OR COMPLETENESS OF SCANNED COPIES OF THIS PLAN SHEET.

CALIFORNIA STATE FIRE MARSHAL APPROVED

Approval of this plan does not authorize or approve any omission or deviation from applicable regulations. Final approval is subject to field inspection. One set of approved plans shall be available on the project site at all times.

Reviewed by: STEPHEN GUARINO
Approval date: 12-14-09

GENERAL NOTE: (THIS SHEET ONLY)

1. FIRE RELAY SHALL BE A LATCHING POWER CONTROL RELAY AS SPECIFIED IN THE SPECIAL PROVISIONS.

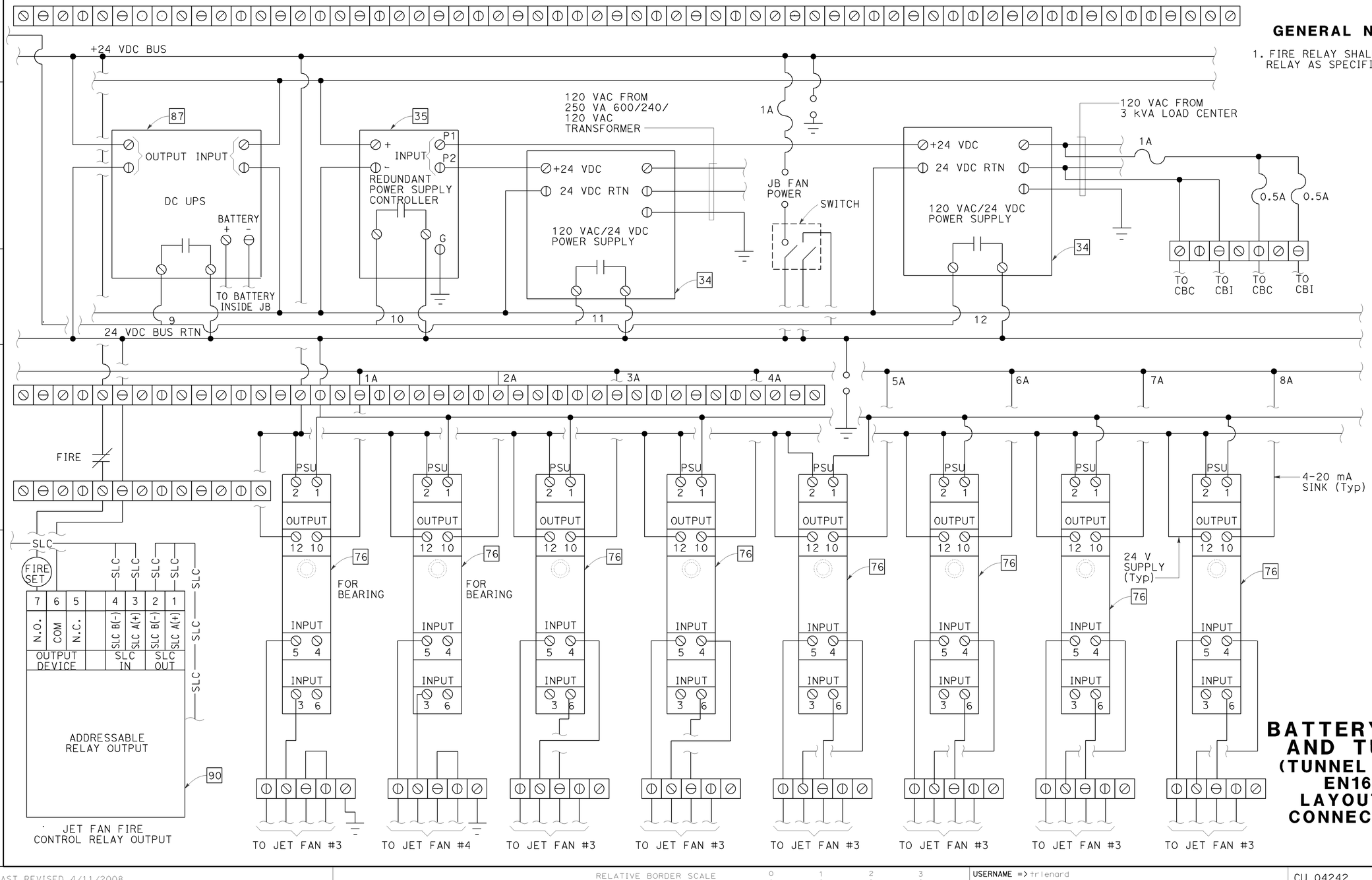

BATTERY SUBSTATION AND TUNNEL WORK (TUNNEL FCS #3 JB AT EN16 NORTHSIDE LAYOUT AND WIRING CONNECTION DIAGRAM)

NO SCALE

E-101

LAST REVISION | DATE PLOTTED => 14-DEC-2009 | TIME PLOTTED => 16:01
10-13-09

STATE OF CALIFORNIA - DEPARTMENT OF TRANSPORTATION
ELECTRICAL
Caltrans
FUNCTIONAL SUPERVISOR: BEHZAD GOLEMOHAMMADI
CALCULATED-DESIGNED BY | CHECKED BY | REVISED BY: LS | DATE REVISED: 8/01/09
LIONEL J. SUDDS | LIONEL J. SUDDS

BORDER LAST REVISED 4/11/2008
RELATIVE BORDER SCALE IS IN INCHES 0 1 2 3
USERNAME => trlenard
DGN FILE => 416374ua101.dgn
CU 04242
EA 163741

Dist	COUNTY	ROUTE	POST MILES TOTAL PROJECT	SHEET No.	TOTAL SHEETS
04	SF	101	8.2/9.2	264	654

REGISTERED ELECTRICAL ENGINEER 10-8-09 DATE

12-14-09
PLANS APPROVAL DATE

REGISTERED PROFESSIONAL ENGINEER Lionel J. Sudds No. 15201 Exp. 6-30-10 ELECT STATE OF CALIFORNIA

THE STATE OF CALIFORNIA OR ITS OFFICERS OR AGENTS SHALL NOT BE RESPONSIBLE FOR THE ACCURACY OR COMPLETENESS OF SCANNED COPIES OF THIS PLAN SHEET.

CALIFORNIA STATE FIRE MARSHAL APPROVED

Approval of this plan does not authorize or approve any omission or deviation from applicable regulations. Final approval is subject to field inspection. One set of approved plans shall be available on the project site at all times.

Reviewed by: STEPHEN GUARINO

Approval date: 12-14-09

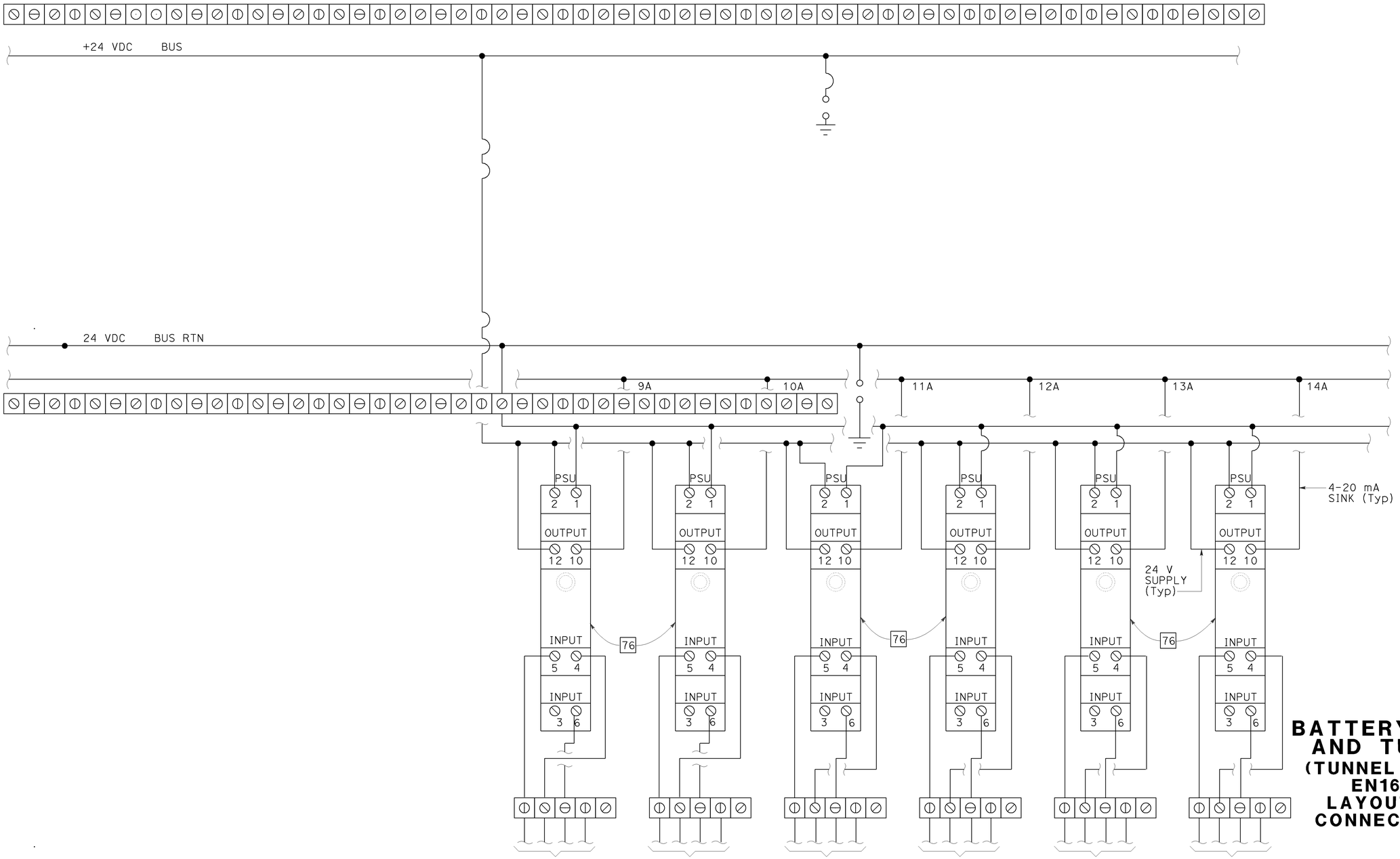

BATTERY SUBSTATION AND TUNNEL WORK
(TUNNEL FCS #3 JB AT EN16 NORTHSIDE LAYOUT AND WIRING CONNECTION DIAGRAM)

NO SCALE

E-102

STATE OF CALIFORNIA - DEPARTMENT OF TRANSPORTATION
Caltrans
ELECTRICAL

FUNCTIONAL SUPERVISOR: BEHZAD GOLEMOHAMMADI

CALCULATED-DESIGNED BY: LIONEL J. SUDDS
CHECKED BY: LIONEL J. SUDDS

REVISED BY: LS
DATE REVISED: 8/01/09

LAST REVISION 10-12-09
DATE PLOTTED => 14-DEC-2009
TIME PLOTTED => 16:02

Dist	COUNTY	ROUTE	POST MILES TOTAL PROJECT	SHEET No.	TOTAL SHEETS
04	SF	101	8.2/9.2	265	654

Lionel J. Sudds 10-8-09
REGISTERED ELECTRICAL ENGINEER DATE

12-14-09
PLANS APPROVAL DATE

Lionel J. Sudds No. 15201 Exp 6-30-10 ELECT — REGISTERED PROFESSIONAL ENGINEER — STATE OF CALIFORNIA

THE STATE OF CALIFORNIA OR ITS OFFICERS OR AGENTS SHALL NOT BE RESPONSIBLE FOR THE ACCURACY OR COMPLETENESS OF SCANNED COPIES OF THIS PLAN SHEET.

ARO#1 ARO#2 ARO#3 ARO#4 ARO#5 ARO#6 ARO#7 ARO#8 RRM#1 PSU RRM#2 PSU AC FAIL Batt LOW Batt JB FAN SPARE

CO FAIL LOW HIGH DC UPS FAIL POWER SUPPLY FAIL CALL BOX #4 CALL BOX #5

1-30#6 CONDUCTOR CABLE FROM FIRE CONTROL JB @ EN15 (ZONE 1&2)

1-10#12 CONDUCTOR CABLE FROM CO MONITOR CONTROL JB @ EN11 SOUTHSIDE

HIGH Aux HIGH Aux CBI Aux CBI Aux

LOW HIGH CALL BOX #4 CALL BOX #5 JB FAN

INPUT DATA

1 2 3 4 5 6 7 8 9 10 11 12 13 14 27 15 16 17 18 19 20 21 26 +24 VDC BUS

485 1A 2A

485 485

44

FO FO

TO FIBER 1, 2 OF PANEL #1

TO FIBER 1, 2 OF PANEL #4

485 TO CO MONITOR CONTROL JB @ EN11 SOUTHSIDE

+ − 1 2 3 4 5 6 7 8 9 10 11 12 AIS

36

24 VDC BUS RTN

7 8 9 10 1 2 3 4 5 6

CBC Aux CBC Aux ZONE 1 EOL R ZONE 2 JET 1 JET 2 EOL R

OUTPUT DATA

4-2#4 CONDUCTOR CABLE IN CONDUIT #85 OF THE UTILITY DUCTBANK

HIGH AUX HIGH AUX LOW AUX LOW AUX HIGH AUX

SLC SLC ZONE 1 SLC SLC ZONE 2 SLC SLC

CALL BOX #4 CALL BOX #5 SOUTHSIDE

LOOP ISOLATOR

8 7 6 5 4 3 2 1
LED (−) LED (+) SWITCH B SWITCH A SLC B(−) SLC A(+) SLC B(−) SLC A(+)
REMOTE LED INPUT DEVICE SLC IN SLC OUT

ADDRESSABLE CONTACT INPUT N.O.

91

ZONE 1 WATER RELEASE CONTROL

ZONE 2 WATER RELEASE CONTROL

GENERAL NOTES:
(THIS SHEET ONLY)

1. CBI Aux, CBC Aux, HIGH Aux, AND LOW Aux RELAYS SHALL BE POWER CONTROL RELAYS AS SPECIFIED IN THE SPECIAL PROVISIONS.
2. THE FIELD CONTROL STATIONS IN THIS JB AS SHOWN ON THIS SHEET SHALL BE CONFIGURED IN ACCORDANCE TO THE SERIAL COMMUNICATION SYSTEM IN THE SPECIAL PROVISIONS.
3. AIS ARE ANALOG INPUT MODULES.

CALIFORNIA STATE FIRE MARSHAL APPROVED

Approval of this plan does not authorize or approve any omission or deviation from applicable regulations. Final approval is subject to field inspection. One set of approved plans shall be available on the project site at all times.

Reviewed by: STEPHEN GUARINO
Approval date: 12-14-09

BATTERY SUBSTATION AND TUNNEL WORK
(TUNNEL FCS #4 JB AT EN16 SOUTHSIDE LAYOUT AND WIRING CONNECTION DIAGRAM)

NO SCALE

E-103

REVISED BY	DATE REVISED
LS	8/01/09

CALCULATED-DESIGNED BY: LIONEL J. SUDDS
CHECKED BY: LIONEL J. SUDDS
FUNCTIONAL SUPERVISOR: BEHZAD GOLEMOHAMMADI

STATE OF CALIFORNIA - DEPARTMENT OF TRANSPORTATION
ELECTRICAL

LAST REVISION DATE PLOTTED => 14-DEC-2009
TIME PLOTTED => 16:02

Dist	COUNTY	ROUTE	POST MILES TOTAL PROJECT	SHEET No.	TOTAL SHEETS
04	SF	101	8.2/9.2	266	654

REGISTERED ELECTRICAL ENGINEER 10-8-09 DATE

12-14-09
PLANS APPROVAL DATE

REGISTERED PROFESSIONAL ENGINEER Lionel J. Sudds No. 15201 Exp. 6-30-10 ELECT STATE OF CALIFORNIA

THE STATE OF CALIFORNIA OR ITS OFFICERS OR AGENTS SHALL NOT BE RESPONSIBLE FOR THE ACCURACY OR COMPLETENESS OF SCANNED COPIES OF THIS PLAN SHEET.

CALIFORNIA STATE FIRE MARSHAL APPROVED

Approval of this plan does not authorize or approve any omission or deviation from applicable regulations. Final approval is subject to field inspection. One set of approved plans shall be available on the project site at all times.

Reviewed by: STEPHEN GUARINO

Approval date: 12-14-09

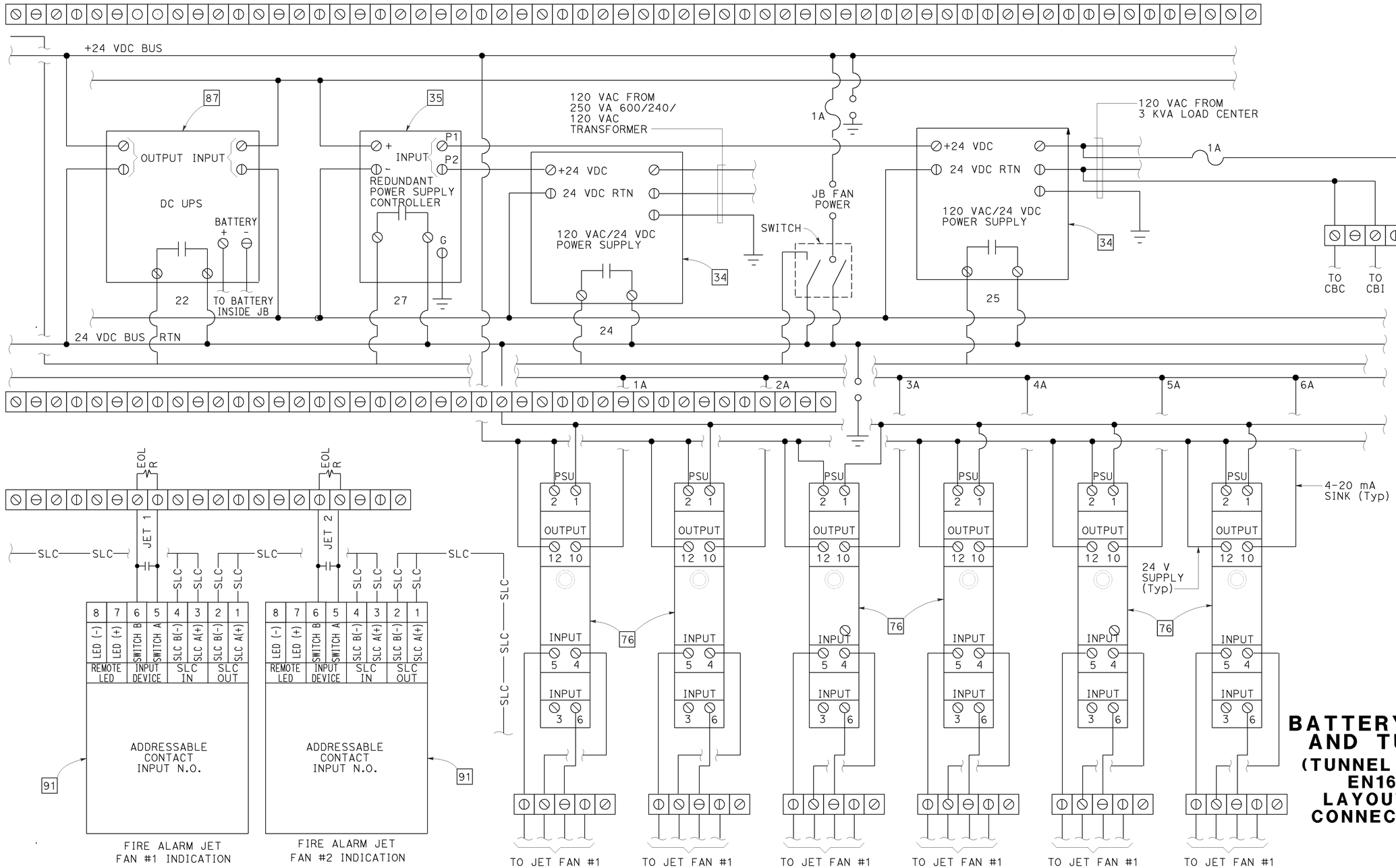

BATTERY SUBSTATION AND TUNNEL WORK
(TUNNEL FCS #4 JB AT EN16 SOUTHSIDE LAYOUT AND WIRING CONNECTION DIAGRAM)

NO SCALE

E-104

STATE OF CALIFORNIA - DEPARTMENT OF TRANSPORTATION
Caltrans
ELECTRICAL

FUNCTIONAL SUPERVISOR: BEHZAD GOLEMOHAMMADI
CALCULATED-DESIGNED BY: LIONEL J. SUDDS
CHECKED BY: LIONEL J. SUDDS
REVISED BY: LS
DATE REVISED: 8/01/09

LAST REVISION 10-13-09
DATE PLOTTED => 14-DEC-2009
TIME PLOTTED => 16:02

Dist	COUNTY	ROUTE	POST MILES TOTAL PROJECT	SHEET No.	TOTAL SHEETS
04	SF	101	8.2/9.2	267	654

CALIFORNIA STATE FIRE MARSHAL APPROVED
Approval of this plan does not authorize or approve any omission or deviation from applicable regulations. Final approval is subject to field inspection. One set of approved plans shall be available on the project site at all times.
Reviewed by: STEPHEN GUARINO
Approval date: 12-14-09

Lionel J. Sudds 10-8-09
REGISTERED ELECTRICAL ENGINEER DATE
12-14-09
PLANS APPROVAL DATE

REGISTERED PROFESSIONAL ENGINEER — Lionel J. Sudds — No. 15201 — Exp 6-30-10 — ELECT — STATE OF CALIFORNIA

THE STATE OF CALIFORNIA OR ITS OFFICERS OR AGENTS SHALL NOT BE RESPONSIBLE FOR THE ACCURACY OR COMPLETENESS OF SCANNED COPIES OF THIS PLAN SHEET.

1-2P#18 CONDUCTOR CABLE FOR FUSE DISCONNECT SWITCH OF JET FAN 1 AND 2.

1-2P#18 CONDUCTOR CABLE FOR FLOW SWITCH OF JET FAN 1 AND 2.

Jet 1 Jet 2 Jet 1 Jet 2

28 29 30 31

24 VDC BUS RTN

24 VDC BUS RTN

7A 8A 9A 10A 11A 12A 13A 14A

PSU 2 1
OUTPUT 12 10
INPUT 5 4
INPUT 3 6

FOR BEARING

76

24 V SUPPLY (Typ)

4-20 mA SINK (Typ)

TO JET FAN #1 TO JET FAN #2 TO JET FAN #2 TO JET FAN #2 TO JET FAN #2 TO JET FAN #2 TO JET FAN #2 TO JET FAN #2

BATTERY SUBSTATION AND TUNNEL WORK (TUNNEL FCS #4 JB AT EN16 SOUTHSIDE LAYOUT AND WIRING CONNECTION DIAGRAM)

NO SCALE

E-105

LAST REVISION DATE PLOTTED => 14-DEC-2009
10-23-09 TIME PLOTTED => 16:02

STATE OF CALIFORNIA - DEPARTMENT OF TRANSPORTATION
ELECTRICAL
Caltrans
FUNCTIONAL SUPERVISOR: BEHZAD GOLEMOHAMMADI
CALCULATED-DESIGNED BY: LS 8/01/09
CHECKED BY: LIONEL J. SUDDS
REVISED BY / DATE REVISED: LIONEL J. SUDDS

BORDER LAST REVISED 4/11/2008
RELATIVE BORDER SCALE IS IN INCHES 0 1 2 3
USERNAME => trlenard
DGN FILE => 416374ua105.dgn
CU 04242
EA 163741

Dist	COUNTY	ROUTE	POST MILES TOTAL PROJECT	SHEET No.	TOTAL SHEETS
04	SF	101	8.2/9.2	268	654

Lionel J. Sudds 10-8-09
REGISTERED ELECTRICAL ENGINEER DATE

12-14-09
PLANS APPROVAL DATE

Lionel J. Sudds No. 15201 Exp 6-30-10 ELECT — REGISTERED PROFESSIONAL ENGINEER — STATE OF CALIFORNIA

THE STATE OF CALIFORNIA OR ITS OFFICERS OR AGENTS SHALL NOT BE RESPONSIBLE FOR THE ACCURACY OR COMPLETENESS OF SCANNED COPIES OF THIS PLAN SHEET.

CALIFORNIA STATE FIRE MARSHAL APPROVED

Approval of this plan does not authorize or approve any omission or deviation from applicable regulations. Final approval is subject to field inspection. One set of approved plans shall be available on the project site at all times.

Reviewed by: STEPHEN GUARINO

Approval date: 12-14-09

1-10#12 CONDUCTOR CABLE FROM CO MONITOR CONTROL JB @ EN9 NORTHSIDE

CO FAIL · LOW · HIGH · DC UPS FAIL · POWER SUPPLY FAIL · CALLBOX #3

HIGH Aux · HIGH Aux · CBI Aux

LOW · HIGH · CALLBOX #3 · JB FAN

INPUT DATA

+24 VDC BUS

-24 VDC BUS

485 · 1A · 2A

AIS

FO

TO FIBER 1,2 OF PANEL #4

TO FIBER 1,2 OF PANEL #1

TO CO MONITOR CONTROL JB @ EN9 NORTHSIDE

TO CO MONITOR CONTROLLER @ EN9 NORTHSIDE

OUTPUT DATA

CBC Aux

CALL BOX #3

NORTHSIDE

4-2#4 CONDUCTOR CABLE IN CONDUIT #63 OF THE UTILITY DUCTBANK

HIGH Aux · HIGH Aux · HIGH Aux · HIGH Aux

LOW Aux · LOW Aux

1-8#12 CONDUCTOR CABLE FROM CO MONITOR CONTROLLER

4-2#4 CONDUCTOR CABLE IN CONDUIT #63 OF THE UTILITY DUCTBANK

GENERAL NOTES:
(THIS SHEET ONLY)

1. CBI Aux, CBC Aux, HIGH Aux AND LOW Aux RELAYS SHALL BE POWER CONTROL RELAYS AS SPECIFIED IN THE SPECIAL PROVISIONS.
2. THE FIELD CONTROL STATION IN THIS JB AS SHOWN ON THIS SHEET SHALL BE CONFIGURED IN ACCORDANCE TO THE SERIAL COMMUNICATION SYSTEM SPECIFICATIONS IN THE THE SPECIAL PROVISIONS.
3. AIS ARE ANALOG INPUT MODULES.

BATTERY SUBSTATION AND TUNNEL WORK
(TUNNEL FCS #5 JB AT EN10 NORTHSIDE LAYOUT AND WIRING CONNECTION DIAGRAM)

NO SCALE

E-106

REVISED BY	DATE REVISED
LS	8/01/09

CALCULATED-DESIGNED BY: LIONEL J. SUDDS
CHECKED BY: LIONEL J. SUDDS
FUNCTIONAL SUPERVISOR: BEHZAD GOLEMOHAMMADI

STATE OF CALIFORNIA - DEPARTMENT OF TRANSPORTATION
ELECTRICAL

LAST REVISION DATE PLOTTED => 14-DEC-2009
TIME PLOTTED => 6:02

BORDER LAST REVISED 4/11/2008

RELATIVE BORDER SCALE IS IN INCHES 0 1 2 3

USERNAME => trlenard
DGN FILE => 416374ua106.dgn

CU 04242

EA 163741

Dist	COUNTY	ROUTE	POST MILES TOTAL PROJECT	SHEET No.	TOTAL SHEETS
04	SF	101	8.2/9.2	269	654

Lionel J. Sudds 10-8-09
REGISTERED ELECTRICAL ENGINEER DATE

12-14-09
PLANS APPROVAL DATE

Lionel J. Sudds No. 15201 Exp 6-30-10 ELECT
REGISTERED PROFESSIONAL ENGINEER — STATE OF CALIFORNIA

THE STATE OF CALIFORNIA OR ITS OFFICERS OR AGENTS SHALL NOT BE RESPONSIBLE FOR THE ACCURACY OR COMPLETENESS OF SCANNED COPIES OF THIS PLAN SHEET.

CALIFORNIA STATE FIRE MARSHAL APPROVED

Approval of this plan does not authorize or approve any omission or deviation from applicable regulations. Final approval is subject to field inspection. One set of approved plans shall be available on the project site at all times.

Reviewed by: STEPHEN GUARINO
Approval date: 12-14-09

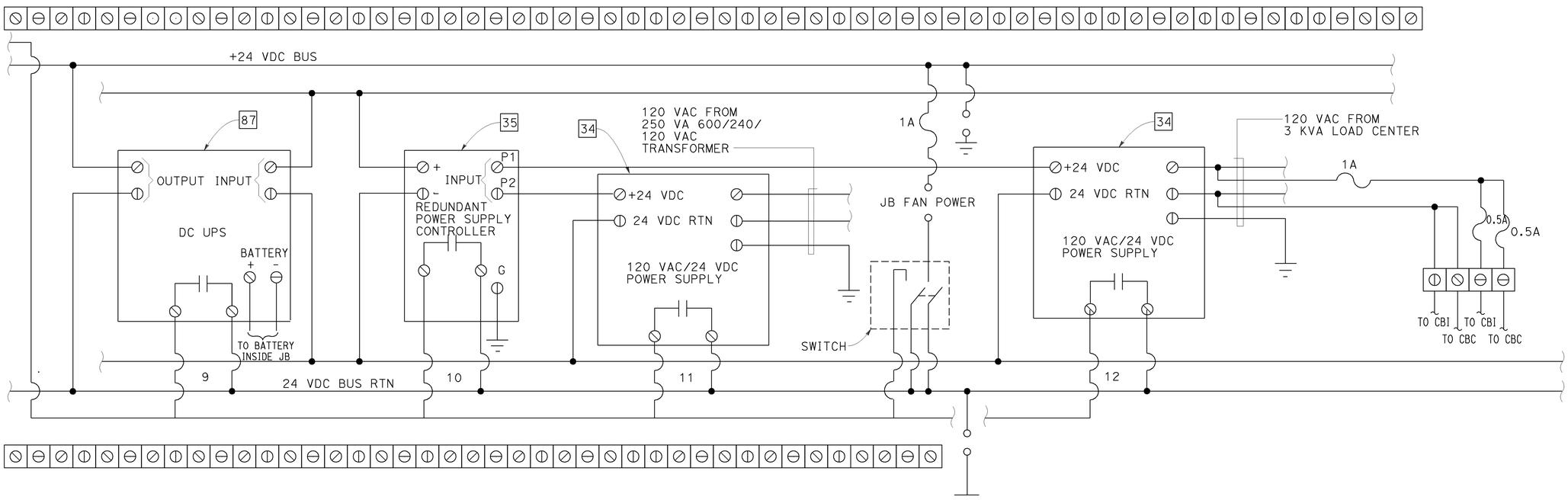

BATTERY SUBSTATION AND TUNNEL WORK
(TUNNEL FCS #5 JB AT EN10 NORTHSIDE LAYOUT AND WIRING CONNECTION DIAGRAM)

NO SCALE

E-107

LAST REVISION 10-13-09
DATE PLOTTED => 14-DEC-2009
TIME PLOTTED => 16:02

STATE OF CALIFORNIA - DEPARTMENT OF TRANSPORTATION
ELECTRICAL

FUNCTIONAL SUPERVISOR: BEHZAD GOLEMOHAMMADI
CALCULATED-DESIGNED BY: LS
CHECKED BY: LIONEL J. SUDDS
REVISED BY: LIONEL J. SUDDS
DATE REVISED: 8/01/09

BORDER LAST REVISED 4/11/2008
RELATIVE BORDER SCALE IS IN INCHES 0 1 2 3
USERNAME => trienard
DGN FILE => 416374ua107.dgn
CU 04242
EA 163741

Dist	COUNTY	ROUTE	POST MILES TOTAL PROJECT	SHEET No.	TOTAL SHEETS
04	SF	101	8.2/9.2	270	654

REGISTERED ELECTRICAL ENGINEER — DATE 10-8-09

12-14-09
PLANS APPROVAL DATE

REGISTERED PROFESSIONAL ENGINEER — Lionel J. Sudds — No. 15201 — Exp 6-30-10 — ELECT — STATE OF CALIFORNIA

THE STATE OF CALIFORNIA OR ITS OFFICERS OR AGENTS SHALL NOT BE RESPONSIBLE FOR THE ACCURACY OR COMPLETENESS OF SCANNED COPIES OF THIS PLAN SHEET.

CALIFORNIA STATE FIRE MARSHAL APPROVED

Approval of this plan does not authorize or approve any omission or deviation from applicable regulations. Final approval is subject to field inspection. One set of approved plans shall be available on the project site at all times.

Reviewed by: STEPHEN GUARINO

Approval date: 12-14-09

ARO#1 ARO#2 ARO#3 ARO#4 ARO#5 ARO#6 ARO#7 ARO#8 RRM#1 PSU RRM#2 PSU AC FAIL Batt LOW Batt JB FAN SPARE

1-30#16 CONDUCTOR CABLE FROM FIRE CONTROL JB @ EN12 (ZONE 3&4)

CO FAIL LOW HIGH DC UPS FAIL POWER SUPPLY FAIL

HIGH Aux HIGH Aux

1-10#12 CONDUCTOR CABLE FROM CO MONITOR CONTROL JB @ EN8 SOUTHSIDE

CBI Aux

CALL BOX #3

LOW HIGH JB FAN CALL BOX #3

INPUT DATA

1 2 3 4 5 6 7 8 9 10 11 12 13 14 15 16 17 18 19 20 21 22 +24 VDC BUS

485 1A 2A

44

FO TO FIBER 1,2 OF PANEL #1

485 485 TO CO MONITOR CONTROL JB @ EN8 SOUTHSIDE

FO TO FIBER 1,2 OF PANEL #4

36

24 VDC BUS RTN

OUTPUT DATA

1 2 3 4 5 6 7 8 9 10

1 FIRE RS

JET FAN FIRE CONTROL RESET PUSHBUTTON (MOUNTED ON JB DOOR)

A B

CBC Aux

ZONE 3 ZONE 4 ZONE 5 ZONE 6 EOL R

SLC SLC SLC SLC SLC SLC SLC SLC SLC SLC SLC SLC SLC SLC SLC SLC SLC SLC SLC SLC

ZONE 3 ZONE 4

8	7	6	5	4	3	2	1
LED (-)	LED (+)	SWITCH B	SWITCH A	SLC B(-)	SLC A(+)	SLC B(-)	SLC A(+)
REMOTE LED		INPUT DEVICE		SLC IN		SLC OUT	

ADDRESSABLE CONTACT INPUT N.O.

91 ZONE 3 WATER RELEASE CONTROL

ZONE 4 WATER RELEASE CONTROL 91

4-2#4 CONDUCTOR CABLE IN CONDUIT #85 OF THE UTILITY DUCTBANK

FIRE HIGH Aux LOW Aux

FROM CO MONITOR CONTROL JB @ EN8 SOUTHSIDE

FROM CO MONITOR CONTROL JB @ EN11 SOUTHSIDE

FROM CO MONITOR CONTROL JB @ EN8 SOUTHSIDE

FROM CO MONITOR CONTROL JB @ EN11 SOUTHSIDE

4-2#4 CONDUCTOR CABLE IN CONDUIT #85 OF THE UTILITY DUCTBANK

CALL BOX #3

SOUTH SIDE

GENERAL NOTES:

(THIS SHEET ONLY)

1. CBI Aux, CBC Aux, HIGH Aux AND LOW Aux RELAYS SHALL BE POWER CONTROL RELAY AS SPECIFIED IN THE SPECIAL PROVISIONS.
2. THE FIELD CONTROL STATIONS IN THIS JB AS SHOWN ON THIS SHEET SHALL BE CONFIGURED IN ACCORDANCE TO THE SERIAL COMMUNICATION SYSTEM IN THE SPECIAL PROVISIONS.
3. THE FIRE RELAY SHALL BE A LATCHING POWER CONTROL RELAY AS SPECIFIED IN THE POWER CONTROL RELAY SPECIFICATION IN THE SPECIAL PROVISIONS.

BATTERY SUBSTATION AND TUNNEL WORK

(TUNNEL FCS #6 JB AT EN10 SOUTHSIDE LAYOUT AND WIRING CONNECTION DIAGRAM)

NO SCALE

E-108

REVISED BY	DATE REVISED
LS	8/01/09

CALCULATED-DESIGNED BY: LIONEL J. SUDDS

CHECKED BY: LIONEL J. SUDDS

FUNCTIONAL SUPERVISOR: BEHZAD GOLEMOHAMMADI

STATE OF CALIFORNIA - DEPARTMENT OF TRANSPORTATION

ELECTRICAL

Caltrans

LAST REVISION DATE PLOTTED => 14-DEC-2009
TIME PLOTTED => 16:02
10-23-09

BORDER LAST REVISED 4/11/2008

RELATIVE BORDER SCALE IS IN INCHES 0 1 2 3

USERNAME => trlenard
DGN FILE => 416374ua108.dgn

CU 04242

EA 163741

Dist	COUNTY	ROUTE	POST MILES TOTAL PROJECT	SHEET No.	TOTAL SHEETS
04	SF	101	8.2/9.2	271	654

REGISTERED ELECTRICAL ENGINEER 10-8-09 DATE

12-14-09
PLANS APPROVAL DATE

REGISTERED PROFESSIONAL ENGINEER Lionel J. Sudds No. 15201 Exp. 6-30-10 ELECT STATE OF CALIFORNIA

THE STATE OF CALIFORNIA OR ITS OFFICERS OR AGENTS SHALL NOT BE RESPONSIBLE FOR THE ACCURACY OR COMPLETENESS OF SCANNED COPIES OF THIS PLAN SHEET.

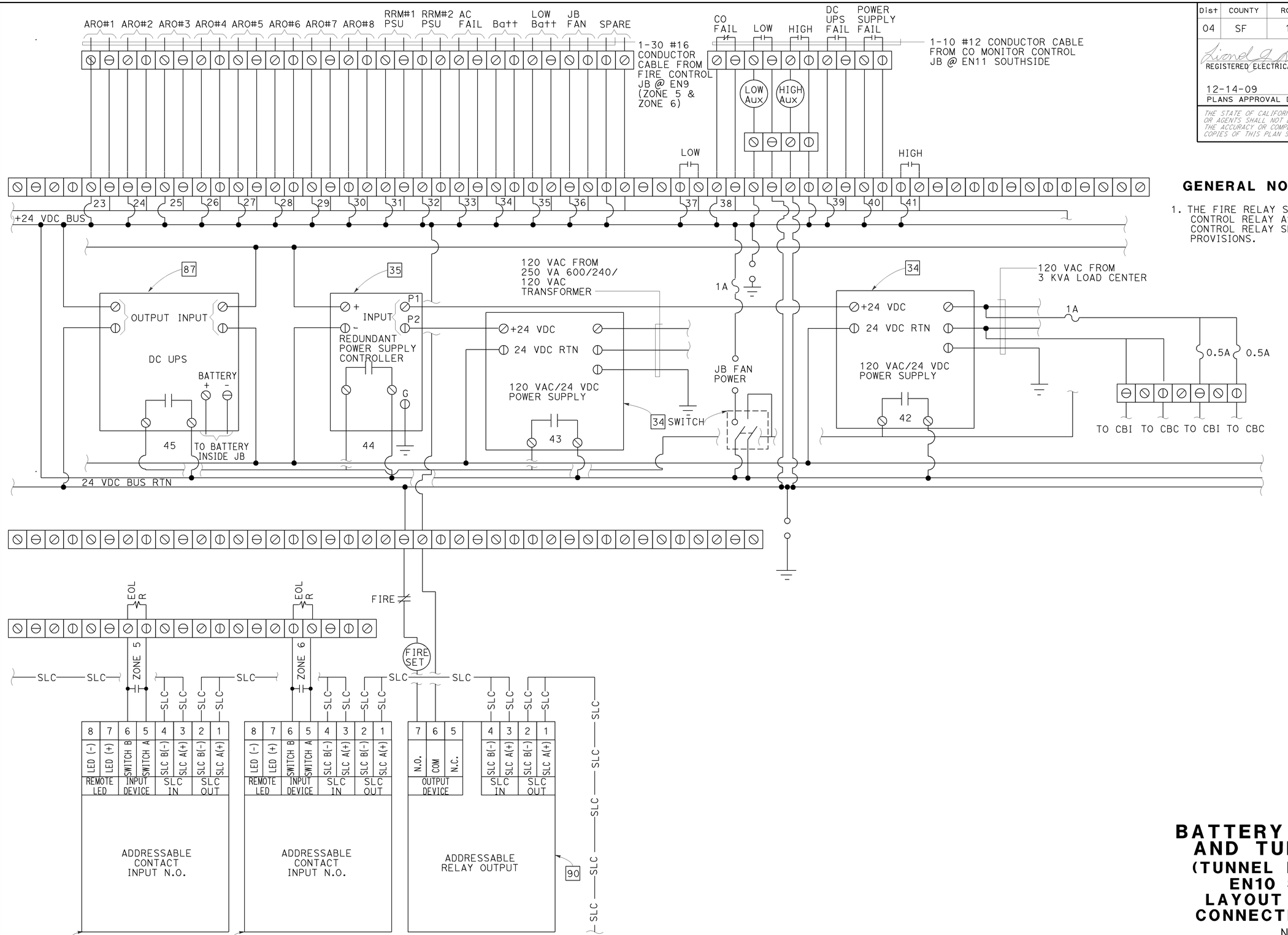

GENERAL NOTES: (THIS SHEET ONLY)

1. THE FIRE RELAY SHALL BE A LATCHING POWER CONTROL RELAY AS SPECIFIED IN THE POWER CONTROL RELAY SPECIFICATION IN THE SPECIAL PROVISIONS.

CALIFORNIA STATE FIRE MARSHAL APPROVED
Approval of this plan does not authorize or approve any omission or deviation from applicable regulations. Final approval is subject to field inspection. One set of approved plans shall be available on the project site at all times.
Reviewed by: STEPHEN GUARINO
Approval date: 12-14-09

BATTERY SUBSTATION AND TUNNEL WORK
(TUNNEL FCS #6 JB AT EN10 SOUTHSIDE LAYOUT AND WIRING CONNECTION DIAGRAM)

NO SCALE

E-109

STATE OF CALIFORNIA - DEPARTMENT OF TRANSPORTATION
Caltrans
ELECTRICAL

FUNCTIONAL SUPERVISOR: BEHZAD GOLEMOHAMMADI
CALCULATED-DESIGNED BY: LIONEL J. SUDDS
CHECKED BY: LIONEL J. SUDDS
REVISED BY: LS
DATE REVISED: 8/01/09

LAST REVISION 10-23-09
DATE PLOTTED => 14-DEC-2009
TIME PLOTTED => 16:02

Dist	COUNTY	ROUTE	POST MILES TOTAL PROJECT	SHEET No.	TOTAL SHEETS
04	SF	101	8.2/9.2	272	654

REGISTERED ELECTRICAL ENGINEER 10-8-09 DATE

12-14-09
PLANS APPROVAL DATE

REGISTERED PROFESSIONAL ENGINEER Lionel J. Sudds No. 15201 Exp. 6-30-10 ELECT STATE OF CALIFORNIA

THE STATE OF CALIFORNIA OR ITS OFFICERS OR AGENTS SHALL NOT BE RESPONSIBLE FOR THE ACCURACY OR COMPLETENESS OF SCANNED COPIES OF THIS PLAN SHEET.

CALIFORNIA STATE FIRE MARSHAL APPROVED

Approval of this plan does not authorize or approve any omission or deviation from applicable regulations. Final approval is subject to field inspection. One set of approved plans shall be available on the project site at all times.

Reviewed by: STEPHEN GUARINO

Approval date: 12-14-09

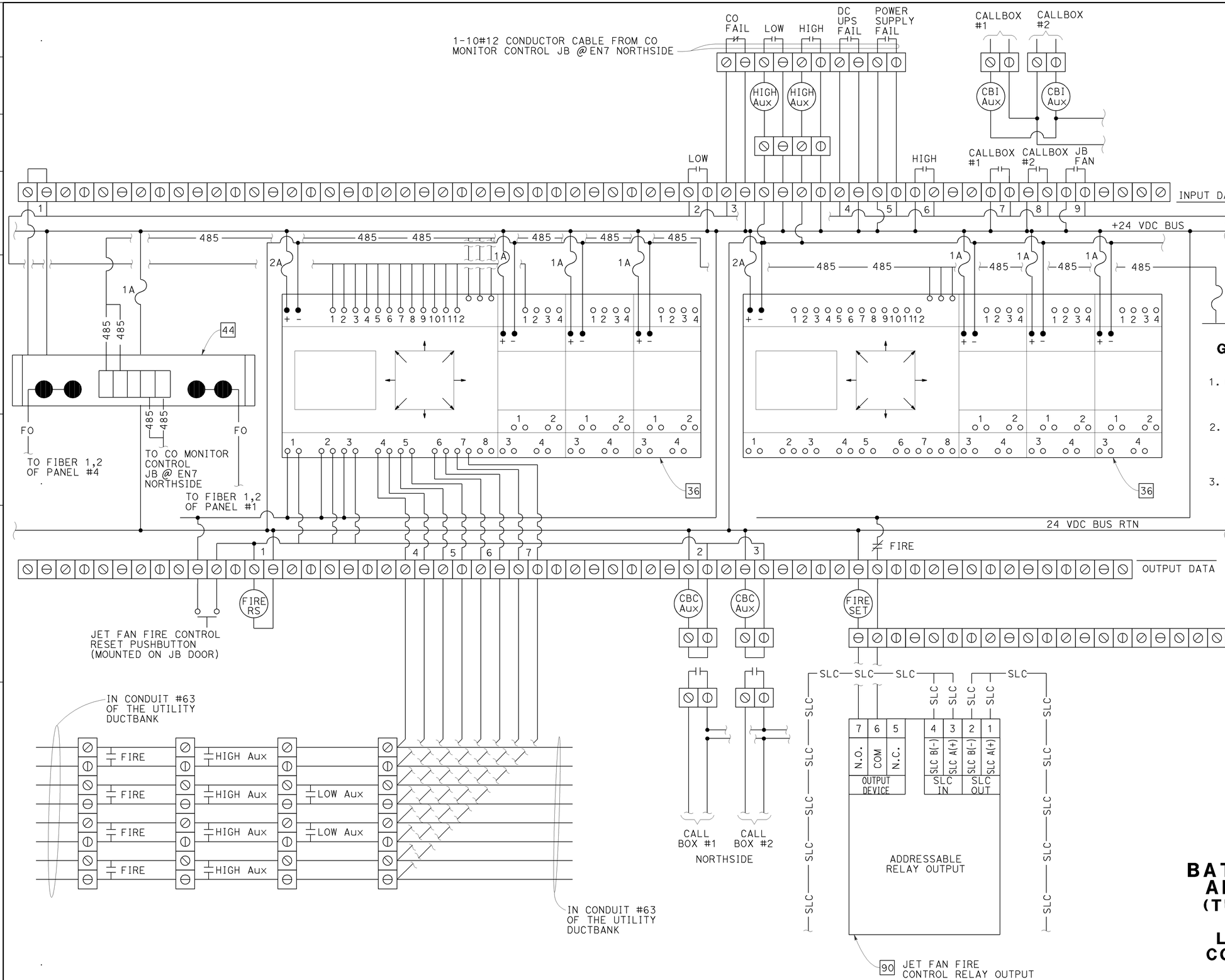

GENERAL NOTES:

(THIS SHEET ONLY)

1. CBI Aux, CBC Aux, HIGH Aux AND LOW Aux RELAYS SHALL BE POWER CONTROL RELAY AS SPECIFIED IN THE SPECIAL PROVISION.
2. THE FIELD CONTROL STATIONS IN THIS JB AS SHOWN ON THIS SHEET SHALL BE CONFIGURED IN ACCORDANCE TO THE SERIAL COMMUNICATION SYSTEM IN THE SPECIAL PROVISION.
3. THE FIRE RELAY SHALL BE A LATCHING POWER CONTROL RELAY AS SPECIFIED IN THE POWER CONTROL RELAY SPECIFICATION IN THE SPECIAL PROVISIONS.

BATTERY SUBSTATION AND TUNNEL WORK (TUNNEL FCS #7 JB AT EN3 NORTHSIDE LAYOUT AND WIRING CONNECTION DIAGRAM)

NO SCALE

E-110

STATE OF CALIFORNIA - DEPARTMENT OF TRANSPORTATION
Caltrans
ELECTRICAL

FUNCTIONAL SUPERVISOR: BEHZAD GOLEMOHAMMADI
CALCULATED-DESIGNED BY: LIONEL J. SUDDS
CHECKED BY: LIONEL J. SUDDS
REVISED BY: LS
DATE REVISED: 8/01/09

LAST REVISION 10-23-09
DATE PLOTTED => 14-DEC-2009
TIME PLOTTED => 16:03

Dist	COUNTY	ROUTE	POST MILES TOTAL PROJECT	SHEET No.	TOTAL SHEETS
04	SF	101	8.2/9.2	273	654

CALIFORNIA STATE FIRE MARSHAL APPROVED

Approval of this plan does not authorize or approve any omission or deviation from applicable regulations. Final approval is subject to field inspection. One set of approved plans shall be available on the project site at all times.

Reviewed by: STEPHEN GUARINO

Approval date: 12-14-09

Lionel J. Sudds 10-8-09
REGISTERED ELECTRICAL ENGINEER DATE

12-14-09
PLANS APPROVAL DATE

REGISTERED PROFESSIONAL ENGINEER — Lionel J. Sudds — No. 15201 — Exp 6-30-10 — ELECT — STATE OF CALIFORNIA

THE STATE OF CALIFORNIA OR ITS OFFICERS OR AGENTS SHALL NOT BE RESPONSIBLE FOR THE ACCURACY OR COMPLETENESS OF SCANNED COPIES OF THIS PLAN SHEET.

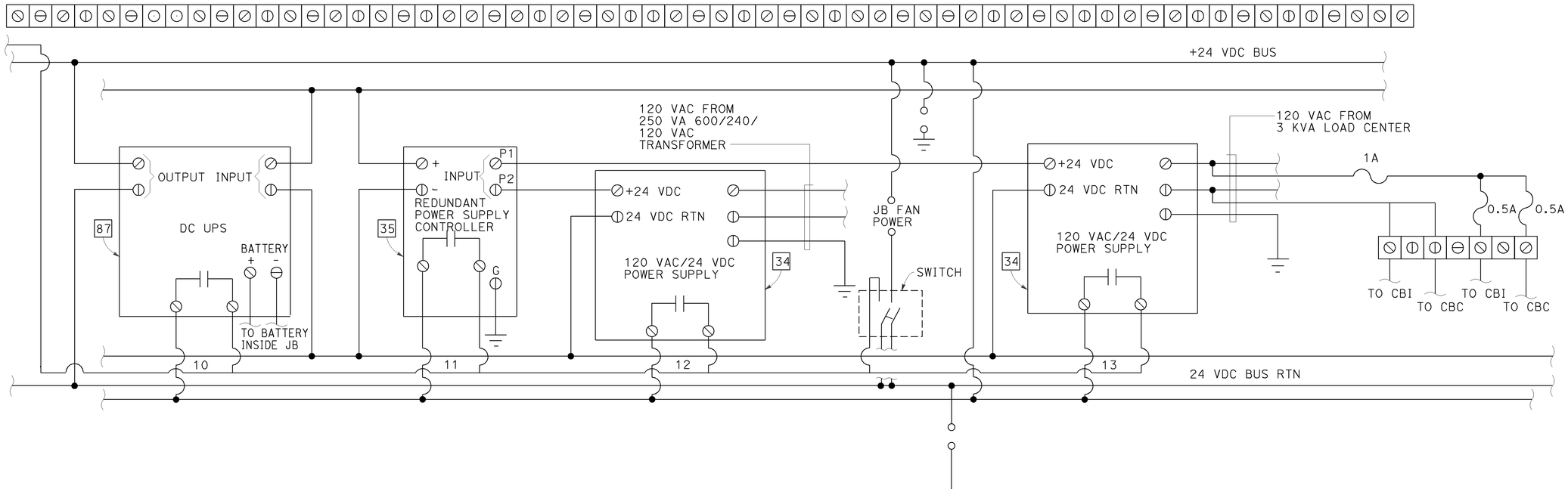

BATTERY SUBSTATION AND TUNNEL WORK

(TUNNEL FCS #7 JB AT EN3 NORTHSIDE LAYOUT AND WIRING CONNECTION DIAGRAM)

NO SCALE

E-111

LAST REVISION DATE PLOTTED => 14-DEC-2009
10-13-09 TIME PLOTTED => 16:03

STATE OF CALIFORNIA - DEPARTMENT OF TRANSPORTATION
Caltrans
ELECTRICAL

FUNCTIONAL SUPERVISOR: BEHZAD GOLEMOHAMMADI

CALCULATED-DESIGNED BY:
CHECKED BY:

REVISED BY: LS — LIONEL J. SUDDS
DATE REVISED: 8/01/09 — LIONEL J. SUDDS

BORDER LAST REVISED 4/11/2008

RELATIVE BORDER SCALE IS IN INCHES 0 1 2 3

USERNAME => trlenard
DGN FILE => 416374ua111.dgn

CU 04242

EA 163741

Dist	COUNTY	ROUTE	POST MILES TOTAL PROJECT	SHEET No.	TOTAL SHEETS
04	SF	101	8.2/9.2	274	654

REGISTERED ELECTRICAL ENGINEER 10-8-09 DATE

12-14-09
PLANS APPROVAL DATE

REGISTERED PROFESSIONAL ENGINEER Lionel J. Sudds No. 15201 Exp. 6-30-10 ELECT STATE OF CALIFORNIA

THE STATE OF CALIFORNIA OR ITS OFFICERS OR AGENTS SHALL NOT BE RESPONSIBLE FOR THE ACCURACY OR COMPLETENESS OF SCANNED COPIES OF THIS PLAN SHEET.

CALIFORNIA STATE FIRE MARSHAL APPROVED

Approval of this plan does not authorize or approve any omission or deviation from applicable regulations. Final approval is subject to field inspection. One set of approved plans shall be available on the project site at all times.

Reviewed by: STEPHEN GUARINO
Approval date: 12-14-09

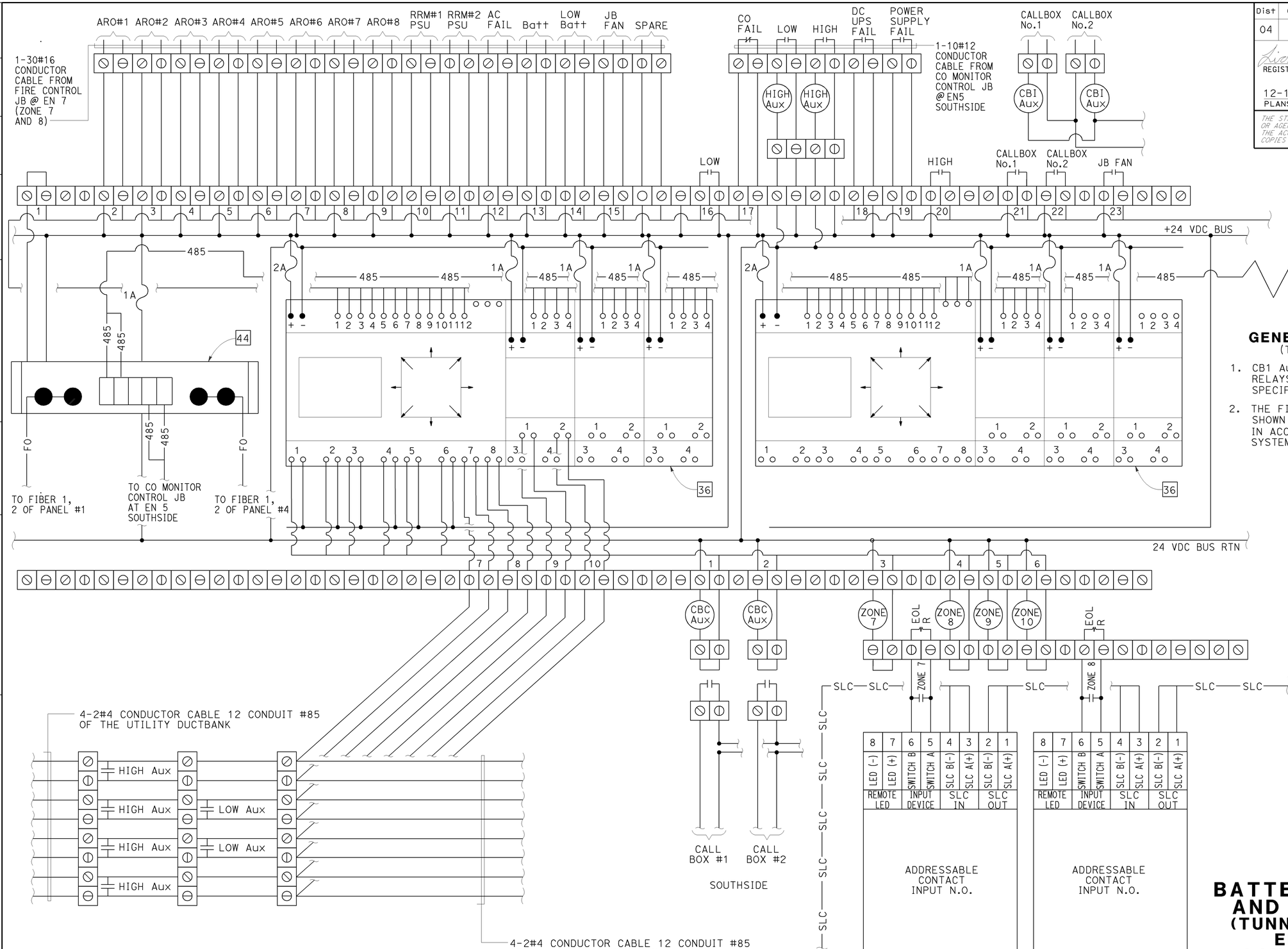

GENERAL NOTES:
(THIS SHEET ONLY)

1. CB1 Aux, CBC Aux, HIGH Aux AND LOW Aux RELAYS SHALL BE POWER CONTROL RELAY AS SPECIFIED IN THE SPECIAL PROVISION.
2. THE FIELD CONTROL STATIONS IN THIS JB AS SHOWN ON THIS SHEET SHALL BE CONFIGURED IN ACCORDANCE TO THE SERIAL COMMUNICATION SYSTEM IN THE SPECIAL PROVISION.

BATTERY SUBSTATION AND TUNNEL WORK (TUNNEL FCS #8 JB AT EN3 SOUTHSIDE LAYOUT AND WIRING CONNECTION DIAGRAM)

NO SCALE

E-112

STATE OF CALIFORNIA - DEPARTMENT OF TRANSPORTATION
Caltrans ELECTRICAL

FUNCTIONAL SUPERVISOR: BEHZAD GOLEMOHAMMADI
CALCULATED-DESIGNED BY: LIONEL J. SUDDS
CHECKED BY: LIONEL J. SUDDS
REVISED BY: LS
DATE REVISED: 8/01/09

LAST REVISION 10-29-09
DATE PLOTTED => 14-DEC-2009
TIME PLOTTED => 16:03

Dist	COUNTY	ROUTE	POST MILES TOTAL PROJECT	SHEET No.	TOTAL SHEETS
04	SF	101	8.2/9.2	275	654

Lionel J. Sudds 10-8-09
REGISTERED ELECTRICAL ENGINEER DATE

12-14-09
PLANS APPROVAL DATE

Lionel J. Sudds No. 15201 Exp 6-30-10 ELECT — REGISTERED PROFESSIONAL ENGINEER — STATE OF CALIFORNIA

THE STATE OF CALIFORNIA OR ITS OFFICERS OR AGENTS SHALL NOT BE RESPONSIBLE FOR THE ACCURACY OR COMPLETENESS OF SCANNED COPIES OF THIS PLAN SHEET.

CALIFORNIA STATE FIRE MARSHAL APPROVED

Approval of this plan does not authorize or approve any omission or deviation from applicable regulations. Final approval is subject to field inspection. One set of approved plans shall be available on the project site at all times.

Reviewed by: STEPHEN GUARINO
Approval date: 12-14-09

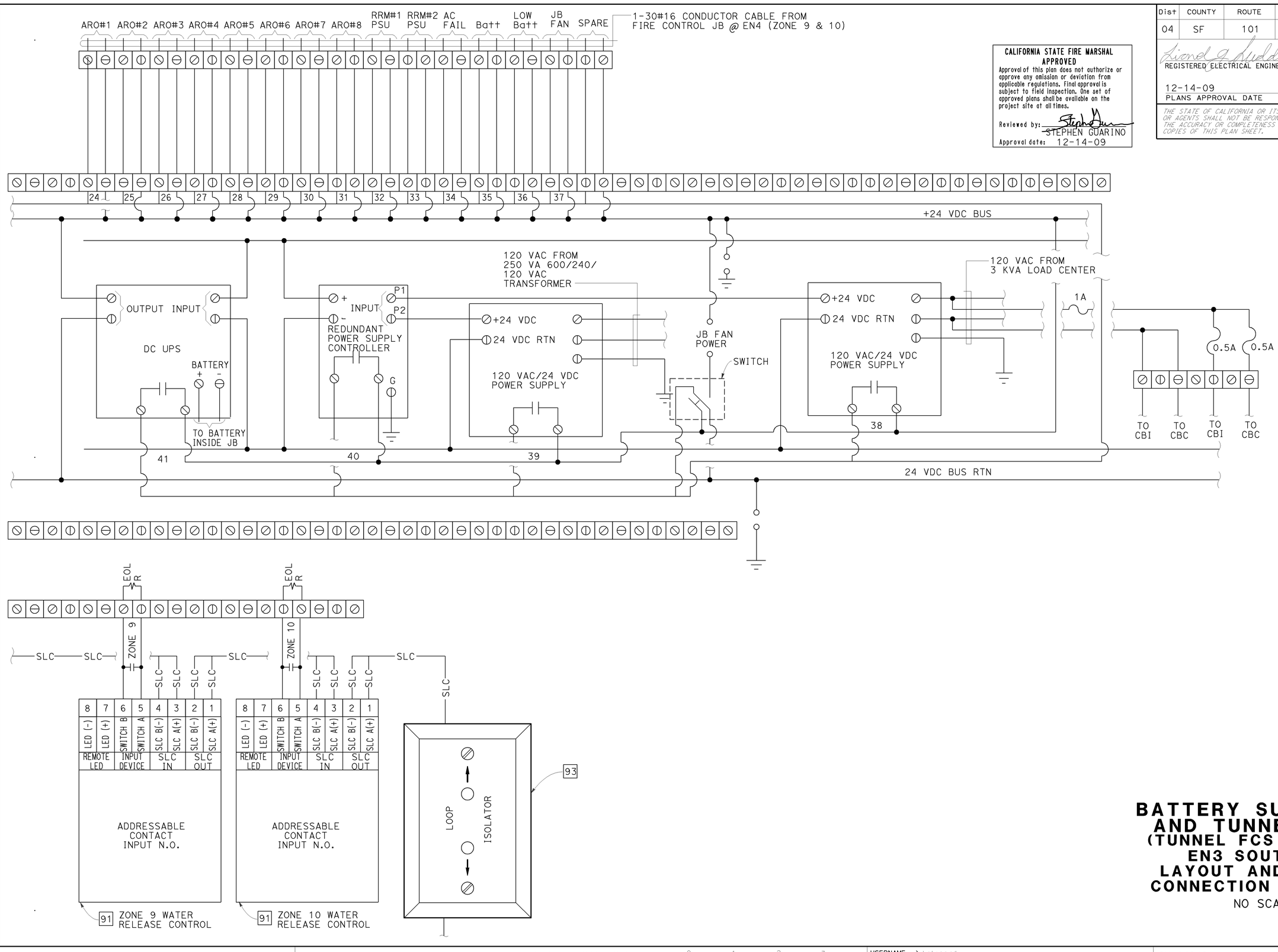

BATTERY SUBSTATION AND TUNNEL WORK (TUNNEL FCS #8 JB AT EN3 SOUTHSIDE LAYOUT AND WIRING CONNECTION DIAGRAM)

NO SCALE

E-113

LAST REVISION | DATE PLOTTED => 14-DEC-2009
10-23-09 | TIME PLOTTED => 16:03

STATE OF CALIFORNIA - DEPARTMENT OF TRANSPORTATION
ELECTRICAL
FUNCTIONAL SUPERVISOR: BEHZAD GOLEMOHAMMADI
CALCULATED-DESIGNED BY | CHECKED BY
REVISED BY: LS | DATE REVISED: 8/01/09
LIONEL J. SUDDS | LIONEL J. SUDDS

BORDER LAST REVISED 4/11/2008
RELATIVE BORDER SCALE IS IN INCHES 0 1 2 3
USERNAME => trlenard
DGN FILE => 416374ua113.dgn
CU 04242
EA 163741

NOTES: (THIS SHEET ONLY)

1. INSTALL 1-½''C, 3#12 CONDUCTORS AND 1-4#14 CONDUCTOR CABLE (FOR CALLBOX) EMBEDDED IN CONCRETE.
2. INSTALL 1-4#14 CONDUIT CABLE (FOR CALLBOX) IN CONDUIT #88 OF THE UTILITY DUCTBANK (SEE SHEET E-88 FOR LOCATION)
3. INSTALL 1-4#14 CONDUCTOR CABLE (FOR CALLBOX) IN CONDUIT #64 OF THE UTILITY DUCTBANK (SEE SHEET E-88 FOR LOCATION)

CALIFORNIA STATE FIRE MARSHAL APPROVED
Approval of this plan does not authorize or approve any omission or deviation from applicable regulations. Final approval is subject to field inspection. One set of approved plans shall be available on the project site at all times.
Reviewed by: STEPHEN GUARINO
Approval date: 12-14-09

Dist	COUNTY	ROUTE	POST MILES TOTAL PROJECT	SHEET No.	TOTAL SHEETS
04	SF	101	8.2/9.2	276	654

Lionel J. Sudds 10-8-09
REGISTERED ELECTRICAL ENGINEER DATE
12-14-09
PLANS APPROVAL DATE
Lionel J. Sudds No. 15201 Exp 6-30-10 ELECT — REGISTERED PROFESSIONAL ENGINEER — STATE OF CALIFORNIA

THE STATE OF CALIFORNIA OR ITS OFFICERS OR AGENTS SHALL NOT BE RESPONSIBLE FOR THE ACCURACY OR COMPLETENESS OF SCANNED COPIES OF THIS PLAN SHEET.

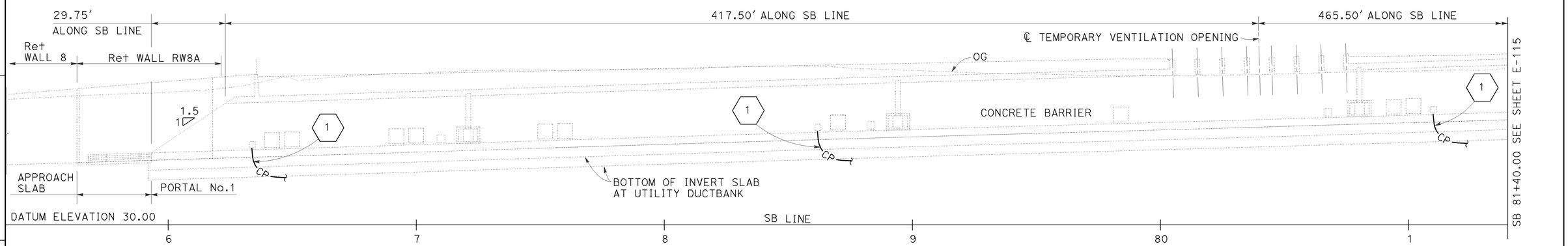

LONGITUDINAL SECTION

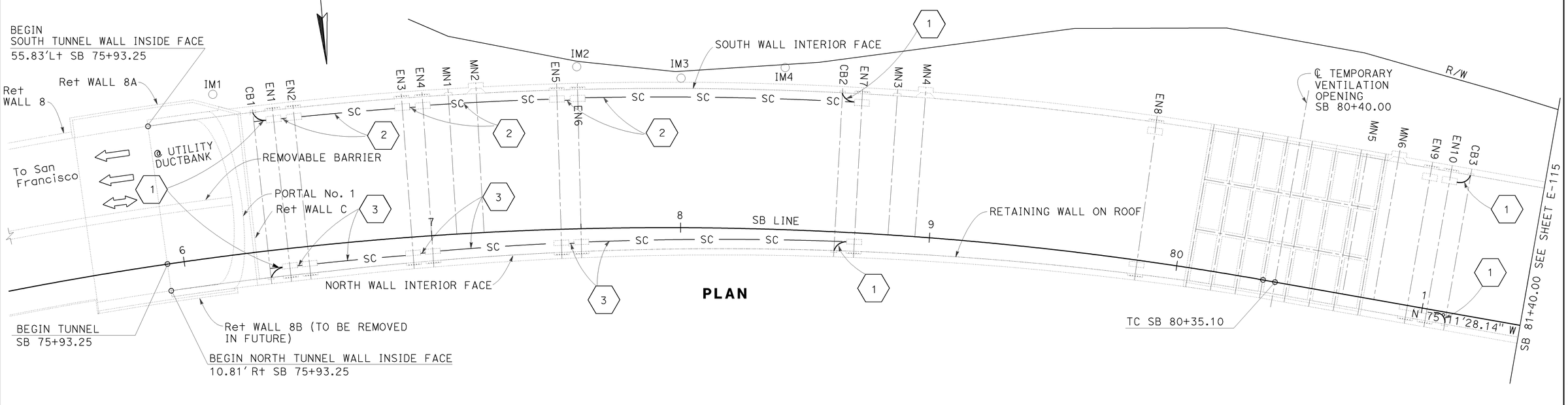

PLAN

BATTERY SUBSTATION AND TUNNEL WORK
(TUNNEL CALLBOX DUCT LAYOUT)

SCALE: 1''= 20'

E-114

LAST REVISION 10-09-09
DATE PLOTTED => 14-DEC-2009
TIME PLOTTED => 16:03

STATE OF CALIFORNIA - DEPARTMENT OF TRANSPORTATION
ELECTRICAL
FUNCTIONAL SUPERVISOR: BEHZAD GOLEMOHAMMADI
CALCULATED-DESIGNED BY
CHECKED BY
REVISED BY: LS — LIONEL J. SUDDS
DATE REVISED: 8/01/09 — LIONEL J. SUDDS

BORDER LAST REVISED 4/11/2008
RELATIVE BORDER SCALE IS IN INCHES 0 1 2 3
USERNAME => trlenard
DGN FILE => 416374ua114.dgn
CU 04242
EA 163741

Dist	COUNTY	ROUTE	POST MILES TOTAL PROJECT	SHEET No.	TOTAL SHEETS
04	SF	101	8.2/9.2	277	654

Lionel J. Sudds 10-8-09
REGISTERED ELECTRICAL ENGINEER DATE

12-14-09
PLANS APPROVAL DATE

THE STATE OF CALIFORNIA OR ITS OFFICERS OR AGENTS SHALL NOT BE RESPONSIBLE FOR THE ACCURACY OR COMPLETENESS OF SCANNED COPIES OF THIS PLAN SHEET.

REGISTERED PROFESSIONAL ENGINEER
Lionel J. Sudds
No. 15201
Exp 6-30-10
ELECT
STATE OF CALIFORNIA

CALIFORNIA STATE FIRE MARSHAL APPROVED
Approval of this plan does not authorize or approve any omission or deviation from applicable regulations. Final approval is subject to field inspection. One set of approved plans shall be available on the project site at all times.
Reviewed by: STEPHEN GUARINO
Approval date: 12-14-09

NOTES: (THIS SHEET ONLY)

1. INSTALL 1-½''C, 3#12 CONDUCTORS AND 1-4#14 CONDUCTOR CABLE (FOR CALLBOX) EMBEDDED IN CONCRETE.
2. INSTALL 1-4#14 CONDUCTOR CABLE (FOR CALLBOX) IN CONDUIT #88 OF THE UTILITY DUCTBANK (SEE SHEET E-88 FOR LOCATION)
3. INSTALL 1-4#14 CONDUCTOR CABLE (FOR CALLBOX) IN CONDUIT #64 OF THE UTILITY DUCTBANK (SEE SHEET E-88 FOR LOCATION)

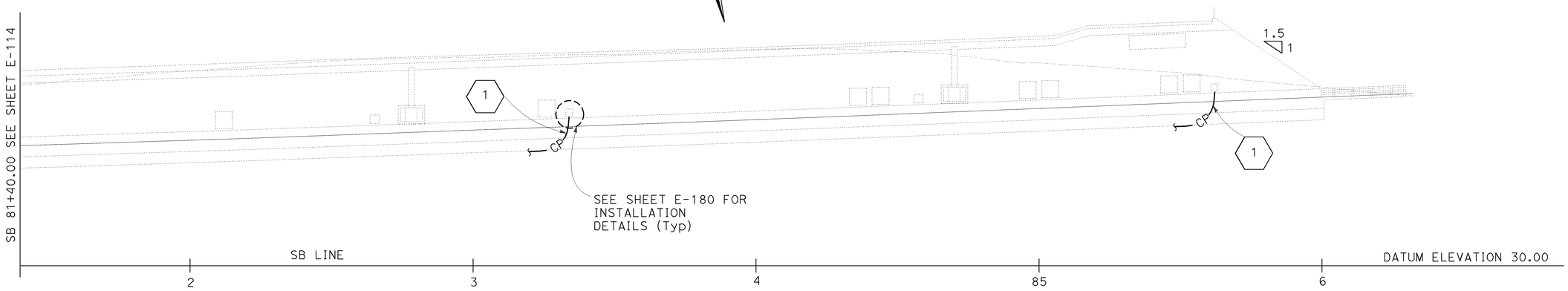

LONGITUDINAL SECTION

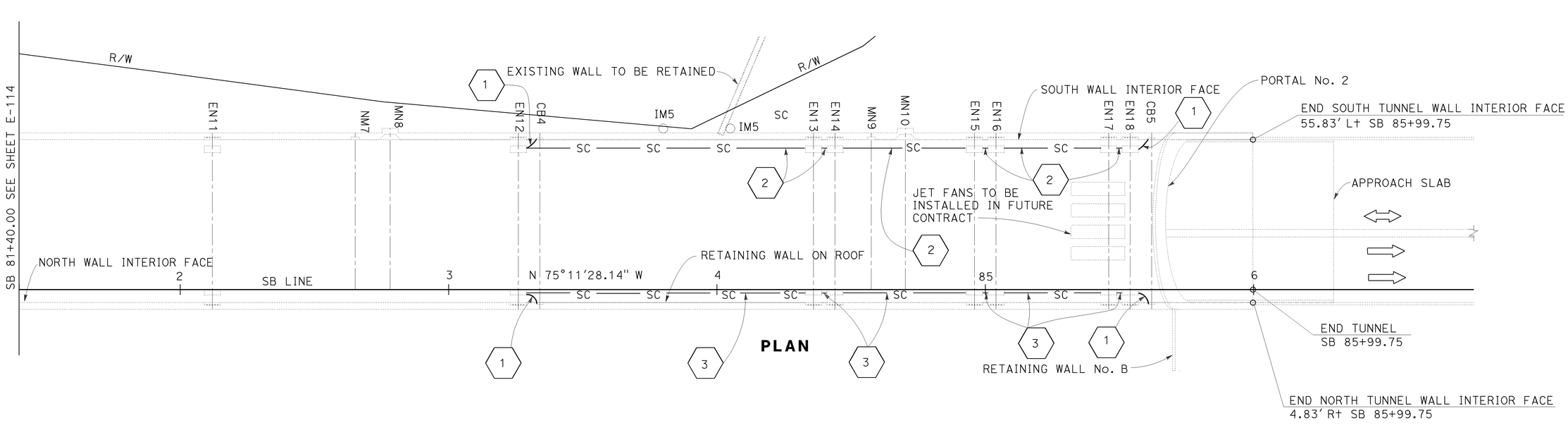

PLAN

BATTERY SUBSTATION AND TUNNEL WORK
(TUNNEL CALLBOX DUCT LAYOUT)

SCALE: 1''= 20'

E-115

REVISED BY	DATE REVISED
LS	8/01/09

CALCULATED-DESIGNED BY: LIONEL J. SUDDS
CHECKED BY: LIONEL J. SUDDS
FUNCTIONAL SUPERVISOR: BEHZAD GOLEMOHAMMADI

STATE OF CALIFORNIA - DEPARTMENT OF TRANSPORTATION
ELECTRICAL
Caltrans

LAST REVISION | DATE PLOTTED => 14-DEC-2009
10-23-09 | TIME PLOTTED => 16:03

BORDER LAST REVISED 4/11/2008
RELATIVE BORDER SCALE IS IN INCHES 0 1 2 3
USERNAME => trlenard
DGN FILE => 416374ua115.dgn
CU 04242
EA 163741

GENERAL NOTE: (THIS SHEET ONLY)

1. SEE SHEET E-118 AND E-127 FOR WIRING DIAGRAM AND CONNECT AS SHOWN ON THE PLANS.

NOTES: (THIS SHEET ONLY)

1. INSTALL 3/4'' C, 1-8#12 CONDUCTOR CABLE, 2-RS-485 CABLES, AND 1-CO MONITORING CABLE; AND METAL TUBE FOR CO MONITOR CALIBRATION.
2. INSTALL 1-10#12 CONDUCTOR CABLE IN CONDUIT #92 OF THE UTILITY DUCTBANK (SEE SHEET E-88 FOR LOCATION).
3. INSTALL 1-CO MONITORING CABLE IN CONDUIT #91 OF THE UTILITY DUCTBANK (SEE SHEET E-88 FOR LOCATION).
4. INSTALL 2-CO MONITORING CABLES IN CONDUIT #91 OF THE UTILITY DUCTBANK, AND 1-10#12 CONDUCTOR CABLE IN CONDUIT #92 OF THE UTILITY DUCTBANK. (SEE SHEET E-88 FOR LOCATION)
5. INSTALL 4-CO MONITORING CABLES IN CONDUIT #13 OF CROSS OVER CONDUITS. (SEE SHEET E-90 FOR LOCATION).
6. INSTALL 1-10#12 CONDUCTION CABLES IN CONDUIT #57 OF THE UTILITY DUCTBANK (SEE SHEET E-88 FOR LOCATION).
7. INSTALL 1-CO MONITORING CABLES IN CONDUIT #56 OF THE UTILITY DUCTBANK (SEE SHEET E-88 FOR LOCATION).

CALIFORNIA STATE FIRE MARSHAL APPROVED

Approval of this plan does not authorize or approve any omission or deviation from applicable regulations. Final approval is subject to field inspection. One set of approved plans shall be available on the project site at all times.

Reviewed by: STEPHEN GUARINO

Approval date: 12-14-09

Dist	COUNTY	ROUTE	POST MILES TOTAL PROJECT	SHEET No.	TOTAL SHEETS
04	SF	101	8.2/9.2	278	654

Lionel J. Sudds 10-8-09
REGISTERED ELECTRICAL ENGINEER DATE

12-14-09
PLANS APPROVAL DATE

REGISTERED PROFESSIONAL ENGINEER — Lionel J. Sudds No. 15201 Exp 6-30-10 ELECT — STATE OF CALIFORNIA

THE STATE OF CALIFORNIA OR ITS OFFICERS OR AGENTS SHALL NOT BE RESPONSIBLE FOR THE ACCURACY OR COMPLETENESS OF SCANNED COPIES OF THIS PLAN SHEET.

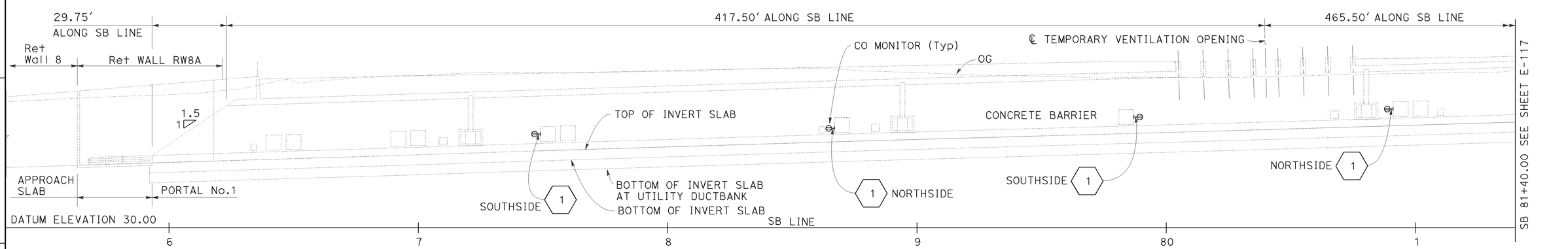

LONGITUDINAL SECTION

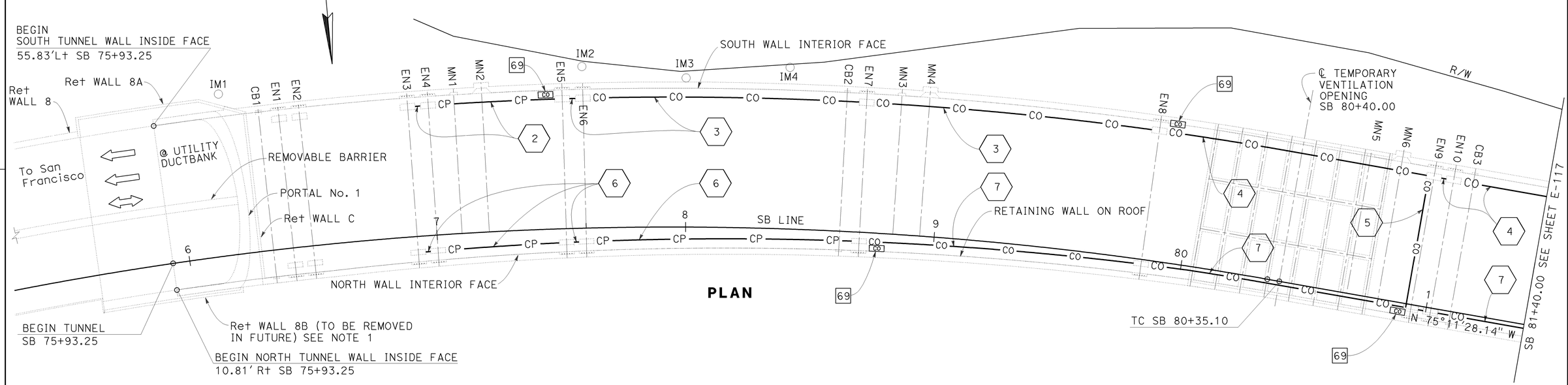

PLAN

BATTERY SUBSTATION AND TUNNEL WORK

(TUNNEL CO MONITORING SYSTEM)

SCALE: 1''= 20'

E-116

REVISED BY	DATE REVISED
LS	8/01/09

LIONEL J. SUDDS — LIONEL J. SUDDS

CALCULATED-DESIGNED BY — CHECKED BY

FUNCTIONAL SUPERVISOR: BEHZAD GOLEMOHAMMADI

STATE OF CALIFORNIA - DEPARTMENT OF TRANSPORTATION

ELECTRICAL

LAST REVISION 10-23-09 — DATE PLOTTED => 14-DEC-2009 — TIME PLOTTED => 16:03

BORDER LAST REVISED 4/11/2008

RELATIVE BORDER SCALE IS IN INCHES 0 1 2 3

USERNAME => trlenard
DGN FILE => 416374ua116.dgn

CU 04242

EA 163741

GENERAL NOTE: (THIS SHEET ONLY)

1. SEE SHEET E-118 AND E-127 FOR WIRING DIAGRAM AND CONNECT AS SHOWN ON THE PLANS.

NOTES: (THIS SHEET ONLY)

1. INSTALL 3/4'' C, 1-8#12 CONDUCTOR CABLE, 2-RS-485 CABLES, AND 1-CO MONITORING CABLE; AND METAL TUBE FOR CO MONITOR CALIBRATION.
2. INSTALL 1-10#12 CONDUCTOR CABLE IN CONDUIT #92 OF THE UTILITY DUCTBANK (SEE SHEET E-88 FOR LOCATION).
3. INSTALL 1-CO MONITORING CABLE IN CONDUIT #91 OF THE UTILITY DUCTBANK (SEE SHEET E-88 FOR LOCATION).
4. INSTALL 2-CO MONITORING CABLES IN CONDUIT #91 OF THE UTILITY DUCTBANK, AND 1-10#12 CONDUCTOR CABLE IN CONDUIT #92 OF THE UTILITY DUCTBANK. (SEE SHEET E-88 FOR LOCATION)
5. INSTALL 1-10#12 CONDUCTOR CABLE IN CONDUIT #57 OF THE UTILITY DUCTBANK (SEE SHEET E-88 FOR LOCATION).
6. INSTALL 1-CO MONITORING CABLE IN CONDUIT #56 OF THE UTILITY DUCTBANK (SEE SHEET E-88 FOR LOCATION).

CALIFORNIA STATE FIRE MARSHAL APPROVED

Approval of this plan does not authorize or approve any omission or deviation from applicable regulations. Final approval is subject to field inspection. One set of approved plans shall be available on the project site at all times.

Reviewed by: STEPHEN GUARINO

Approval date: 12-14-09

Dist	COUNTY	ROUTE	POST MILES TOTAL PROJECT	SHEET No.	TOTAL SHEETS
04	SF	101	8.2/9.2	279	654

Lionel J. Sudds 10-8-09
REGISTERED ELECTRICAL ENGINEER DATE

12-14-09
PLANS APPROVAL DATE

Lionel J. Sudds No. 15201 Exp 6-30-10 ELECT — REGISTERED PROFESSIONAL ENGINEER — STATE OF CALIFORNIA

THE STATE OF CALIFORNIA OR ITS OFFICERS OR AGENTS SHALL NOT BE RESPONSIBLE FOR THE ACCURACY OR COMPLETENESS OF SCANNED COPIES OF THIS PLAN SHEET.

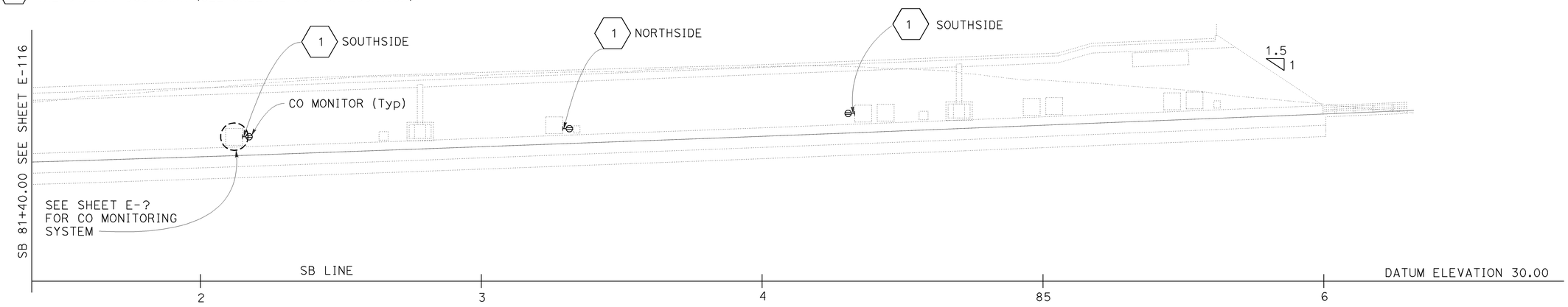

LONGITUDINAL SECTION

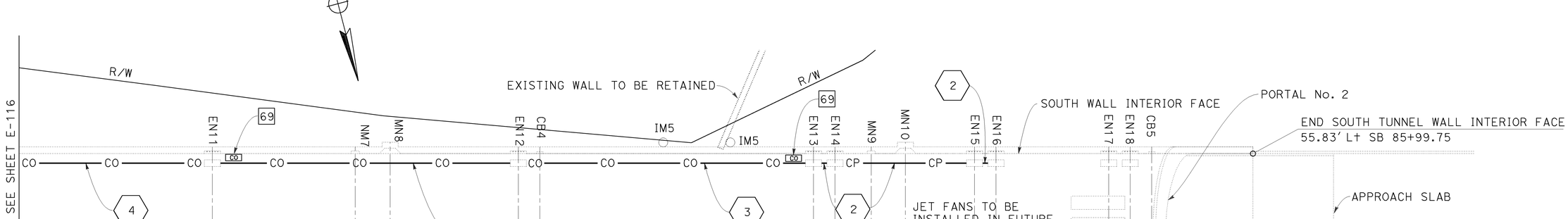

PLAN

BATTERY SUBSTATION AND TUNNEL WORK
(TUNNEL CO MONITORING SYSTEM)

SCALE: 1''= 20'

E-117

STATE OF CALIFORNIA - DEPARTMENT OF TRANSPORTATION
ELECTRICAL
FUNCTIONAL SUPERVISOR: BEHZAD GOLEMOHAMMADI
CALCULATED-DESIGNED BY: LS
CHECKED BY: LIONEL J. SUDDS
REVISED BY: LIONEL J. SUDDS
DATE REVISED: 8/01/09

LAST REVISION DATE PLOTTED => 14-DEC-2009
TIME PLOTTED => 16:03

BORDER LAST REVISED 4/11/2008
RELATIVE BORDER SCALE IS IN INCHES 0 1 2 3
USERNAME => trlenard
DGN FILE => 416374ua117.dgn
CU 04242
EA 163741

Dist	COUNTY	ROUTE	POST MILES TOTAL PROJECT	SHEET No.	TOTAL SHEETS
04	SF	101	8.2/9.2	280	654

REGISTERED ELECTRICAL ENGINEER — 10-8-09 DATE

Lionel J. Sudds No. 15201 Exp 6-30-10 ELECT — REGISTERED PROFESSIONAL ENGINEER — STATE OF CALIFORNIA

12-14-09
PLANS APPROVAL DATE

THE STATE OF CALIFORNIA OR ITS OFFICERS OR AGENTS SHALL NOT BE RESPONSIBLE FOR THE ACCURACY OR COMPLETENESS OF SCANNED COPIES OF THIS PLAN SHEET.

CALIFORNIA STATE FIRE MARSHAL APPROVED

Approval of this plan does not authorize or approve any omission or deviation from applicable regulations. Final approval is subject to field inspection. One set of approved plans shall be available on the project site at all times.

Reviewed by: STEPHEN GUARINO

Approval date: 12-14-09

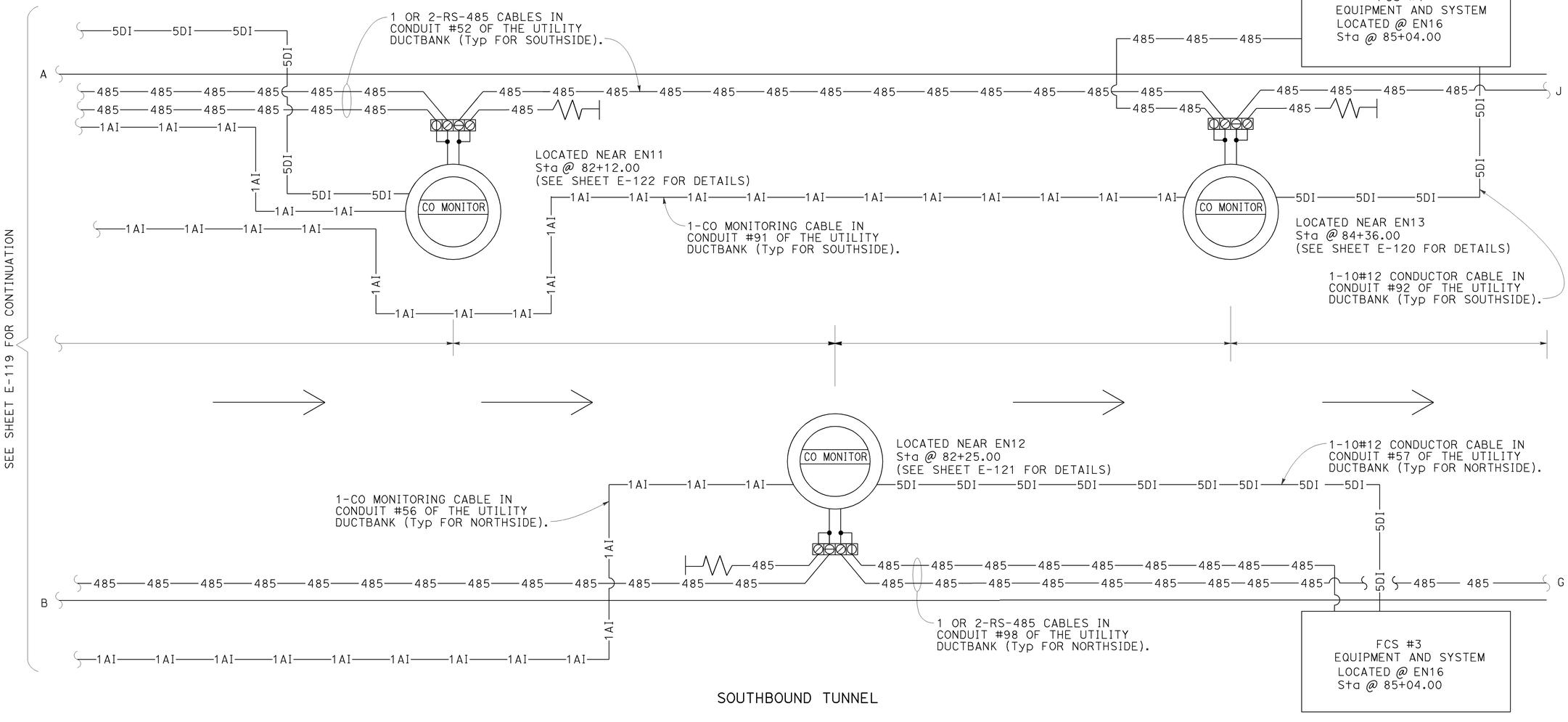

SOUTHBOUND TUNNEL

BATTERY SUBSTATION AND TUNNEL WORK

(TUNNEL LAYOUT AND WIRING CONNECTION OF CO MONITORING SYSTEM)

NO SCALE

E-118

LAST REVISION | DATE PLOTTED => 14-DEC-2009
10-23-09 | TIME PLOTTED => 16:03

STATE OF CALIFORNIA - DEPARTMENT OF TRANSPORTATION
ELECTRICAL
FUNCTIONAL SUPERVISOR: BEHZAD GOLEMOHAMMADI
CALCULATED-DESIGNED BY: LIONEL J. SUDDS
CHECKED BY: LIONEL J. SUDDS
REVISED BY: LS
DATE REVISED: 8/01/09

BORDER LAST REVISED 4/11/2008 | RELATIVE BORDER SCALE IS IN INCHES 0 1 2 3 | USERNAME => trlenard | DGN FILE => 416374ua118.dgn | CU 04242 | EA 163741

Dist	COUNTY	ROUTE	POST MILES TOTAL PROJECT	SHEET No.	TOTAL SHEETS
04	SF	101	8.2/9.2	281	654

CALIFORNIA STATE FIRE MARSHAL APPROVED

Approval of this plan does not authorize or approve any omission or deviation from applicable regulations. Final approval is subject to field inspection. One set of approved plans shall be available on the project site at all times.

Reviewed by: STEPHEN GUARINO

Approval date: 12-14-09

Lionel J. Sudds 10-8-09
REGISTERED ELECTRICAL ENGINEER DATE

Lionel J. Sudds No. 15201 Exp 6-30-10 ELECT
REGISTERED PROFESSIONAL ENGINEER — STATE OF CALIFORNIA

12-14-09
PLANS APPROVAL DATE

THE STATE OF CALIFORNIA OR ITS OFFICERS OR AGENTS SHALL NOT BE RESPONSIBLE FOR THE ACCURACY OR COMPLETENESS OF SCANNED COPIES OF THIS PLAN SHEET.

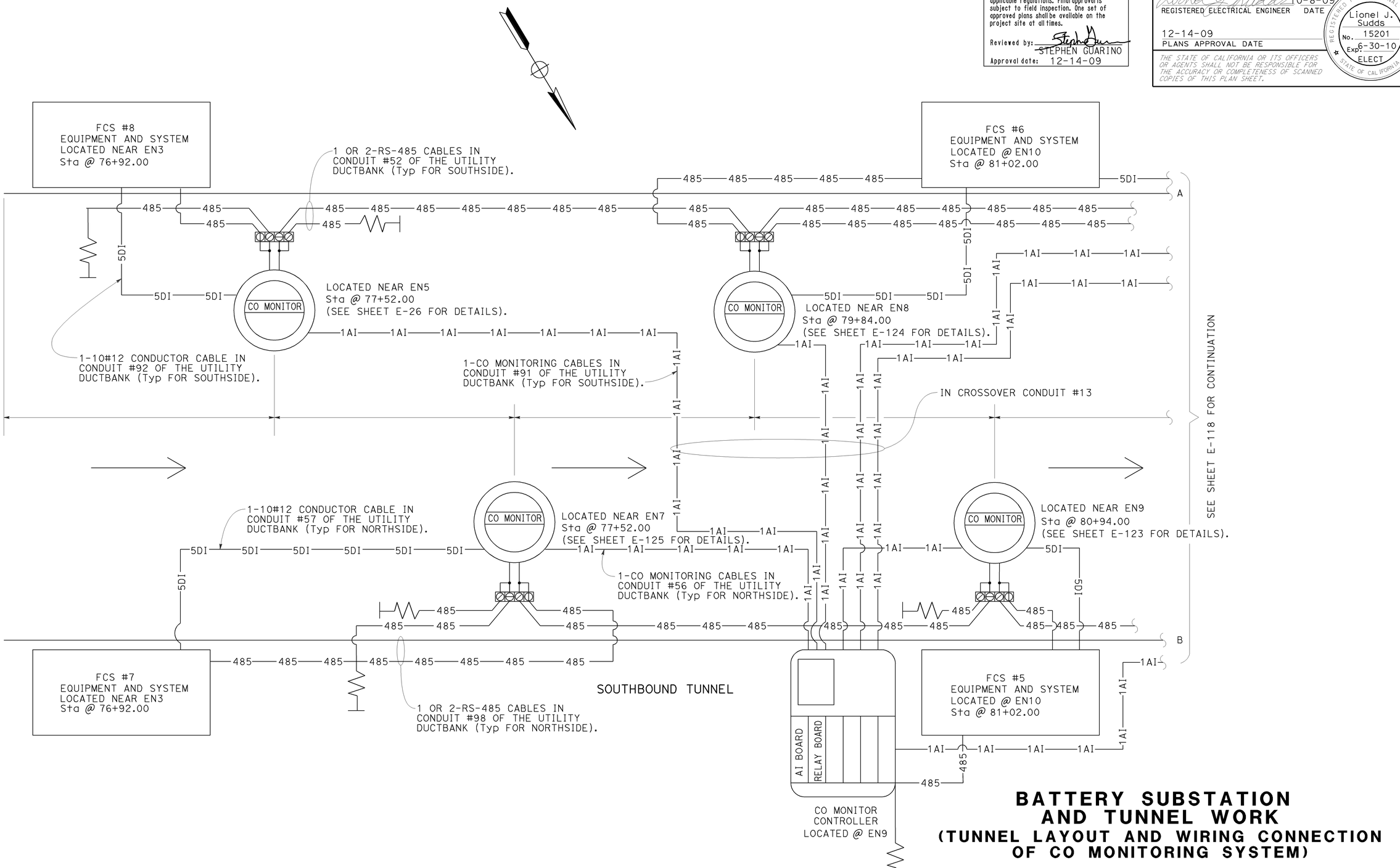

BATTERY SUBSTATION AND TUNNEL WORK
(TUNNEL LAYOUT AND WIRING CONNECTION OF CO MONITORING SYSTEM)

NO SCALE

E-119

REVISED BY	DATE REVISED
LS	8/01/09

LIONEL J. SUDDS — CALCULATED-DESIGNED BY
LIONEL J. SUDDS — CHECKED BY
BEHZAD GOLEMOHAMMADI — FUNCTIONAL SUPERVISOR

STATE OF CALIFORNIA - DEPARTMENT OF TRANSPORTATION
ELECTRICAL
Caltrans

LAST REVISION 10-23-09 | DATE PLOTTED => 14-DEC-2009 | TIME PLOTTED => 16:04

BORDER LAST REVISED 4/11/2008 | RELATIVE BORDER SCALE IS IN INCHES 0 1 2 3 | USERNAME => trlenard | DGN FILE => 416374ua119.dgn | CU 04242 | EA 163741

Dist	COUNTY	ROUTE	POST MILES TOTAL PROJECT	SHEET No.	TOTAL SHEETS
04	SF	101	8.2/9.2	282	654

CALIFORNIA STATE FIRE MARSHAL APPROVED

Approval of this plan does not authorize or approve any omission or deviation from applicable regulations. Final approval is subject to field inspection. One set of approved plans shall be available on the project site at all times.

Reviewed by: STEPHEN GUARINO

Approval date: 12-14-09

Lionel J. Sudds 10-8-09
REGISTERED ELECTRICAL ENGINEER DATE

Lionel J. Sudds No. 15201 Exp 6-30-10 ELECT — REGISTERED PROFESSIONAL ENGINEER — STATE OF CALIFORNIA

12-14-09
PLANS APPROVAL DATE

THE STATE OF CALIFORNIA OR ITS OFFICERS OR AGENTS SHALL NOT BE RESPONSIBLE FOR THE ACCURACY OR COMPLETENESS OF SCANNED COPIES OF THIS PLAN SHEET.

METAL TUBE FOR CO MONITOR CALIBRATION

CALIBRATION GAS CYLINDER 100 ppm CO, 5AL

GAS CYLINDER INSIDE JB

¾''C, 1-8#12 CONDUCTOR CABLE, 2-RS-485 CABLE AND 1-CO MONITORING CABLE

1-8#12 CONDUCTOR CABLE

+24 VDC BUS

JB FAN POWER

SWITCH

87

34

3#12 CONDUCTORS

+24 VDC
HIGH ALARM
LOW ALARM
FAIL ALARM
-24 VDC

+24 VDC
24 VDC RTN
OUT

INPUT

DC UPS

BATTERY

+24 VDC
24 VDC RTN

120 VAC/24 VDC
10 A
POWER SUPPLY

120 VAC

FOR DATA COMMUNICATIONS
485 485 485
485 485 485
2-RS-485 CABLES

TO CO MONITOR

FOR ANALOG INPUT
CO CO

1-CO MONITORING CABLE

CO CO

TO EN9 NORTHSIDE (CO MONITOR CONTROLLER)

METAL TUBE FOR CO MONITOR CALIBRATION

24 VDC BUS RTN

2#12 FOR FAIL ALARM

2#12 FOR FAIL ALARM

1-10#12 CONDUCTOR CABLE TO FCS #4

RS-485 CABLE TO FCS #4
485 485

RS-485 CABLE TO CO MONITOR CONTROL JB @ EN11 SOUTHSIDE
485 485

RS-485 CABLE TO SCADA SYSTEM JB
485 485

TO BATTERIES INSIDE JB

BATTERY SUBSTATION AND TUNNEL WORK
(CO MONITOR CONTROL JB @EN13 SOUTHSIDE WIRING CONNECTION DIAGRAM AND LAYOUT)

NO SCALE

E-120

REVISED BY	DATE REVISED
LS	8/01/09

CALCULATED-DESIGNED BY: LIONEL J. SUDDS
CHECKED BY: LIONEL J. SUDDS
FUNCTIONAL SUPERVISOR: BEHZAD GOLEMOHAMMADI

STATE OF CALIFORNIA - DEPARTMENT OF TRANSPORTATION
ELECTRICAL

LAST REVISION 10-23-09
DATE PLOTTED => 14-DEC-2009
TIME PLOTTED => 16:04

BORDER LAST REVISED 4/11/2008

RELATIVE BORDER SCALE IS IN INCHES 0 1 2 3

USERNAME => trienard
DGN FILE => 416374ua120.dgn

CU 04242

EA 163741

Dist	COUNTY	ROUTE	POST MILES TOTAL PROJECT	SHEET No.	TOTAL SHEETS
04	SF	101	8.2/9.2	283	654

CALIFORNIA STATE FIRE MARSHAL APPROVED

Approval of this plan does not authorize or approve any omission or deviation from applicable regulations. Final approval is subject to field inspection. One set of approved plans shall be available on the project site at all times.

Reviewed by: STEPHEN GUARINO

Approval date: 12-14-09

Lionel J. Sudds 10-8-09
REGISTERED ELECTRICAL ENGINEER DATE

12-14-09
PLANS APPROVAL DATE

REGISTERED PROFESSIONAL ENGINEER — Lionel J. Sudds No. 15201 Exp 6-30-10 ELECT — STATE OF CALIFORNIA

THE STATE OF CALIFORNIA OR ITS OFFICERS OR AGENTS SHALL NOT BE RESPONSIBLE FOR THE ACCURACY OR COMPLETENESS OF SCANNED COPIES OF THIS PLAN SHEET.

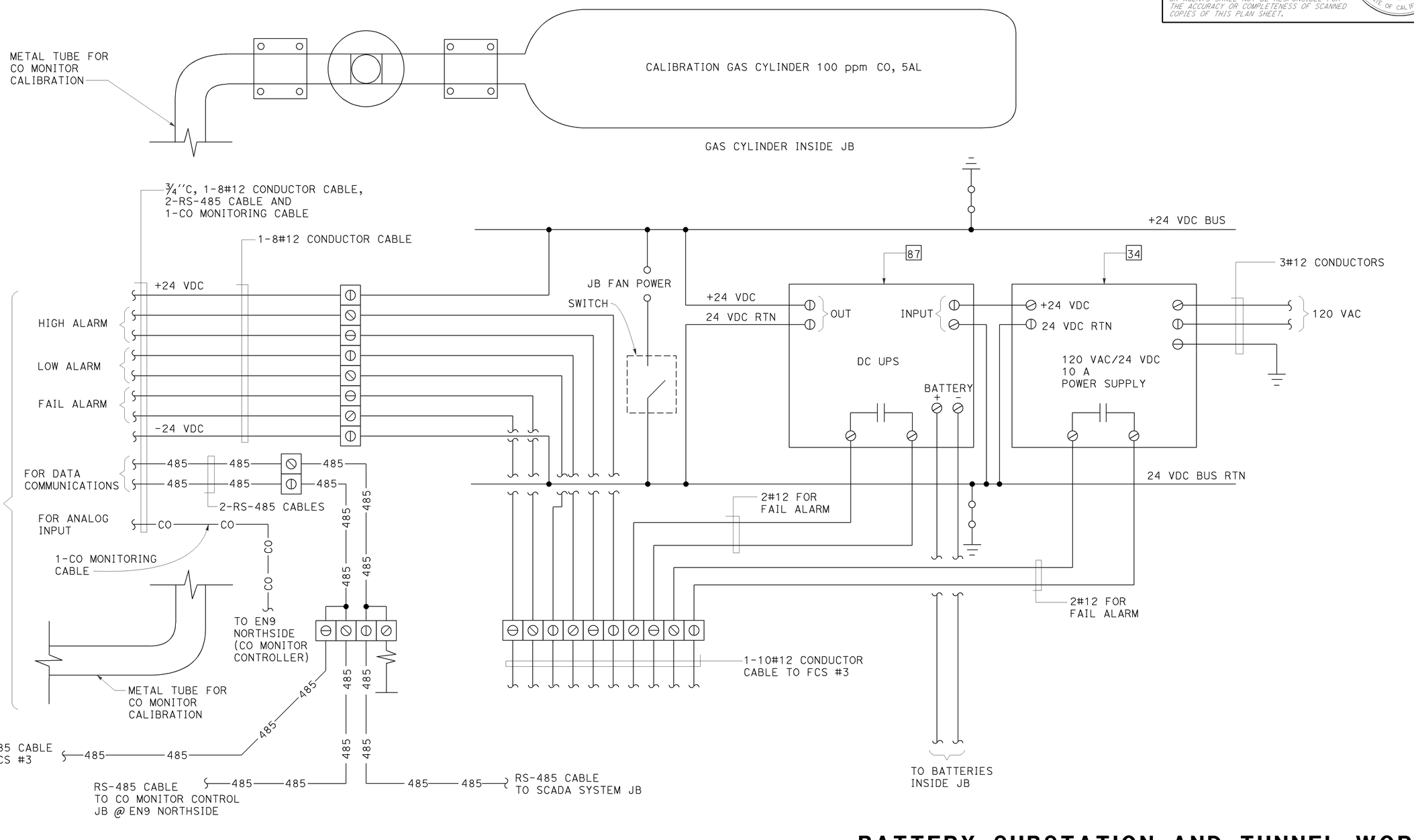

BATTERY SUBSTATION AND TUNNEL WORK

(CO MONITOR CONTROL JB @ EN12 NORTHSIDE WIRING CONNECTION DIAGRAM AND LAYOUT)

NO SCALE

E-121

REVISED BY	DATE REVISED
LS	8/01/09

CALCULATED-DESIGNED BY: LIONEL J. SUDDS
CHECKED BY: LIONEL J. SUDDS
FUNCTIONAL SUPERVISOR: BEHZAD GOLEMOHAMMADI

STATE OF CALIFORNIA - DEPARTMENT OF TRANSPORTATION
ELECTRICAL

LAST REVISION 10-23-09
DATE PLOTTED => 14-DEC-2009
TIME PLOTTED => 16:04

BORDER LAST REVISED 4/11/2008

RELATIVE BORDER SCALE IS IN INCHES 0 1 2 3

USERNAME => trienard
DGN FILE => 416374ua121.dgn

CU 04242

EA 163741

Dist	COUNTY	ROUTE	POST MILES TOTAL PROJECT	SHEET No.	TOTAL SHEETS
04	SF	101	8.2/9.2	284	654

CALIFORNIA STATE FIRE MARSHAL APPROVED

Approval of this plan does not authorize or approve any omission or deviation from applicable regulations. Final approval is subject to field inspection. One set of approved plans shall be available on the project site at all times.

Reviewed by: STEPHEN GUARINO

Approval date: 12-14-09

Lionel J. Sudds 10-8-09
REGISTERED ELECTRICAL ENGINEER DATE

12-14-09
PLANS APPROVAL DATE

REGISTERED PROFESSIONAL ENGINEER — Lionel J. Sudds — No. 15201 — Exp 6-30-10 — ELECT — STATE OF CALIFORNIA

THE STATE OF CALIFORNIA OR ITS OFFICERS OR AGENTS SHALL NOT BE RESPONSIBLE FOR THE ACCURACY OR COMPLETENESS OF SCANNED COPIES OF THIS PLAN SHEET.

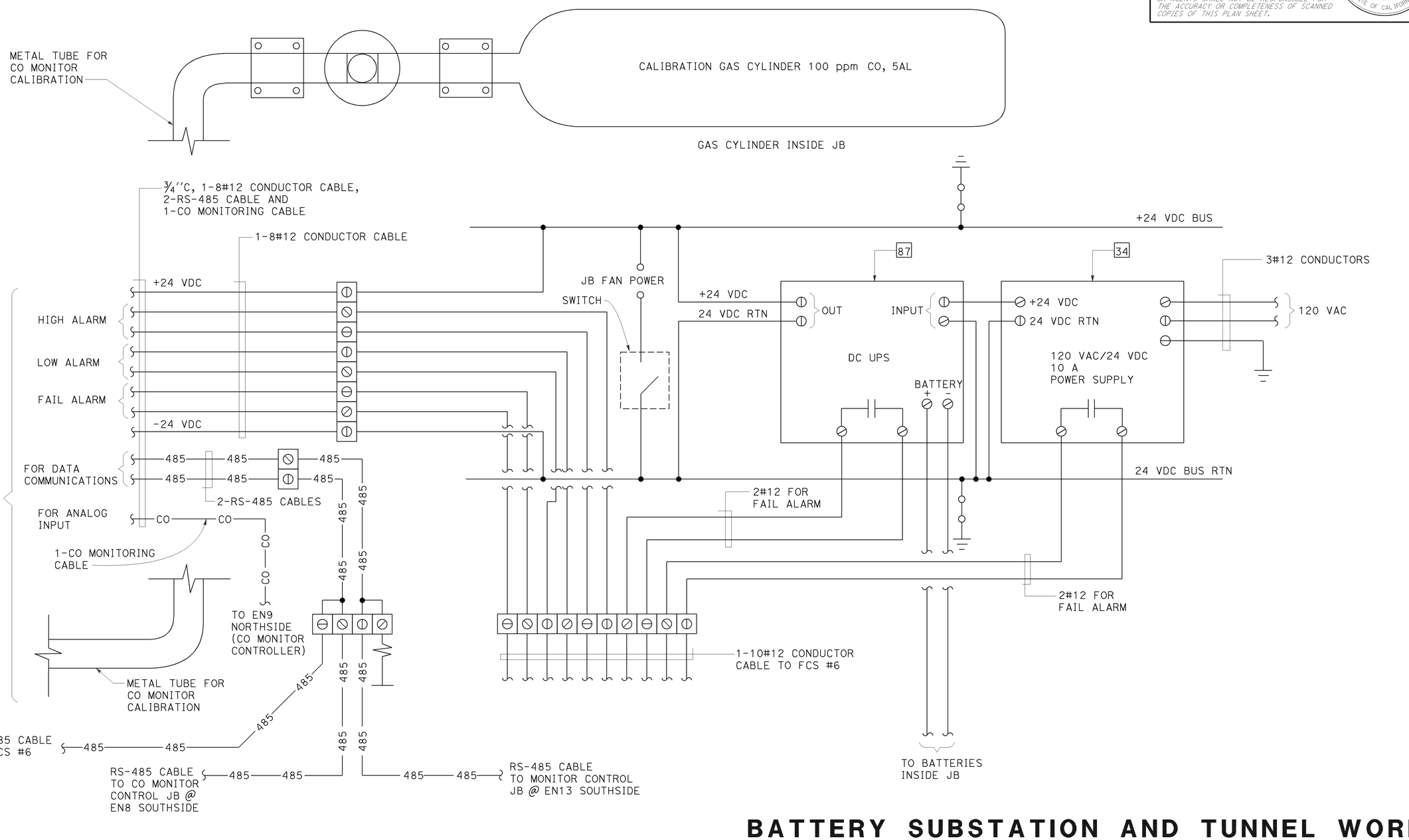

BATTERY SUBSTATION AND TUNNEL WORK

(CO MONITOR CONTROL JB @ EN11 SOUTHSIDE WIRING CONNECTION DIAGRAM AND LAYOUT)

NO SCALE

E-122

CALCULATED-DESIGNED BY	CHECKED BY	FUNCTIONAL SUPERVISOR	REVISED BY	DATE REVISED
LIONEL J. SUDDS	LIONEL J. SUDDS	BEHZAD GOLEMOHAMMADI	LS	8/01/09

STATE OF CALIFORNIA - DEPARTMENT OF TRANSPORTATION
ELECTRICAL
Caltrans

LAST REVISION 10-23-09
DATE PLOTTED => 14-DEC-2009
TIME PLOTTED => 16:04

Dist	COUNTY	ROUTE	POST MILES TOTAL PROJECT	SHEET No.	TOTAL SHEETS
04	SF	101	8.2/9.2	285	654

CALIFORNIA STATE FIRE MARSHAL APPROVED

Approval of this plan does not authorize or approve any omission or deviation from applicable regulations. Final approval is subject to field inspection. One set of approved plans shall be available on the project site at all times.

Reviewed by: STEPHEN GUARINO

Approval date: 12-14-09

Lionel J. Sudds 10-8-09
REGISTERED ELECTRICAL ENGINEER DATE

Lionel J. Sudds No. 15201 Exp 6-30-10 ELECT — REGISTERED PROFESSIONAL ENGINEER — STATE OF CALIFORNIA

12-14-09
PLANS APPROVAL DATE

THE STATE OF CALIFORNIA OR ITS OFFICERS OR AGENTS SHALL NOT BE RESPONSIBLE FOR THE ACCURACY OR COMPLETENESS OF SCANNED COPIES OF THIS PLAN SHEET.

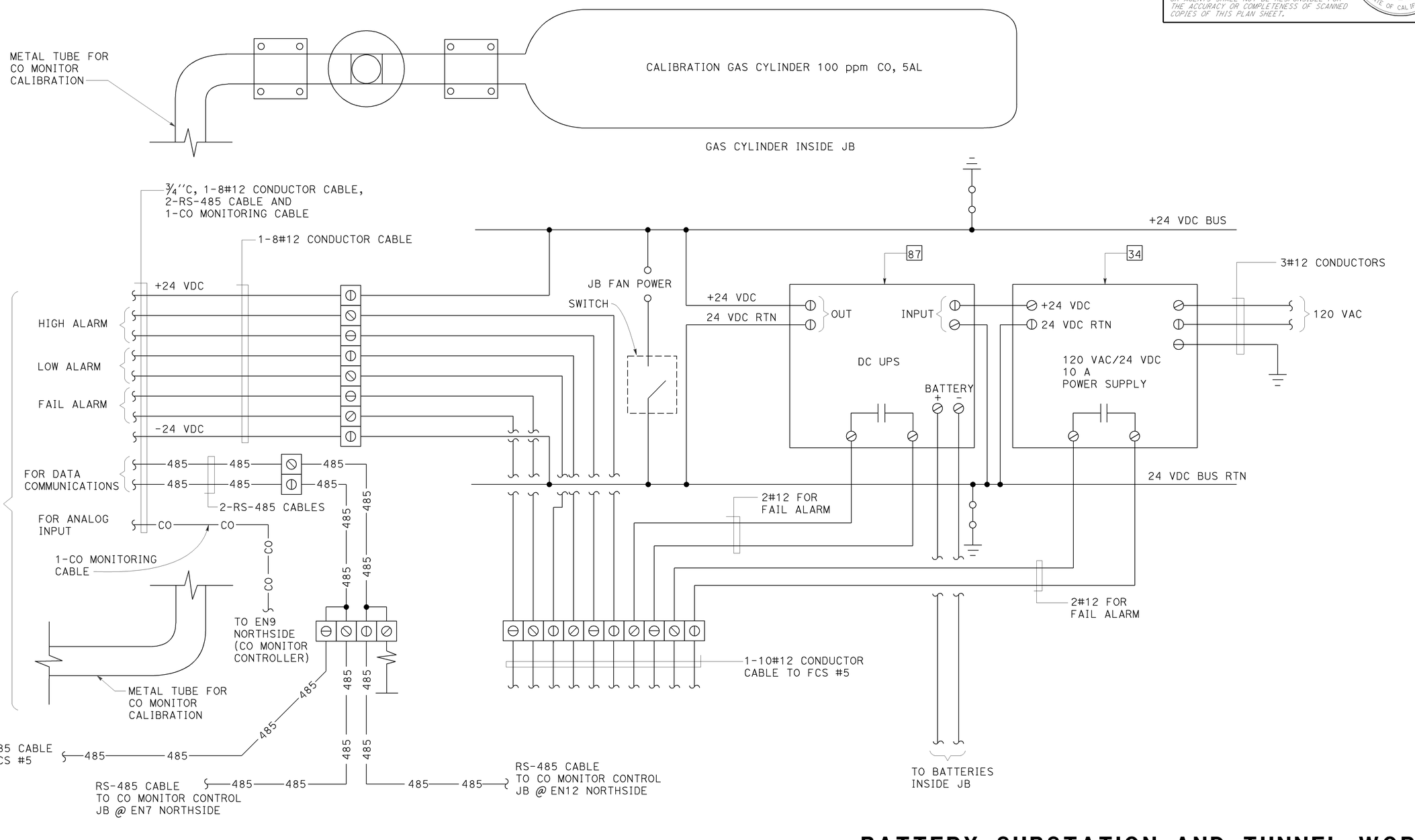

BATTERY SUBSTATION AND TUNNEL WORK

(CO MONITOR CONTROL JB @ EN9 NORTHSIDE WIRING CONNECTION DIAGRAM AND LAYOUT)

NO SCALE

E-123

REVISED BY	DATE REVISED
LS	8/01/09

LIONEL J. SUDDS — CALCULATED-DESIGNED BY
LIONEL J. SUDDS — CHECKED BY
BEHZAD GOLEMOHAMMADI — FUNCTIONAL SUPERVISOR

STATE OF CALIFORNIA - DEPARTMENT OF TRANSPORTATION
ELECTRICAL

LAST REVISION 10-23-09
DATE PLOTTED => 14-DEC-2009
TIME PLOTTED => 16:04

BORDER LAST REVISED 4/11/2008

RELATIVE BORDER SCALE IS IN INCHES 0 1 2 3

USERNAME => trlenard
DGN FILE => 416374ua123.dgn

CU 04242

EA 163741

Dist	COUNTY	ROUTE	POST MILES TOTAL PROJECT	SHEET No.	TOTAL SHEETS
04	SF	101	8.2/9.2	286	654

CALIFORNIA STATE FIRE MARSHAL APPROVED
Approval of this plan does not authorize or approve any omission or deviation from applicable regulations. Final approval is subject to field inspection. One set of approved plans shall be available on the project site at all times.
Reviewed by: STEPHEN GUARINO
Approval date: 12-14-09

Lionel J. Sudds 10-8-09
REGISTERED ELECTRICAL ENGINEER DATE

Lionel J. Sudds No. 15201 Exp 6-30-10 ELECT — REGISTERED PROFESSIONAL ENGINEER — STATE OF CALIFORNIA

12-14-09
PLANS APPROVAL DATE

THE STATE OF CALIFORNIA OR ITS OFFICERS OR AGENTS SHALL NOT BE RESPONSIBLE FOR THE ACCURACY OR COMPLETENESS OF SCANNED COPIES OF THIS PLAN SHEET.

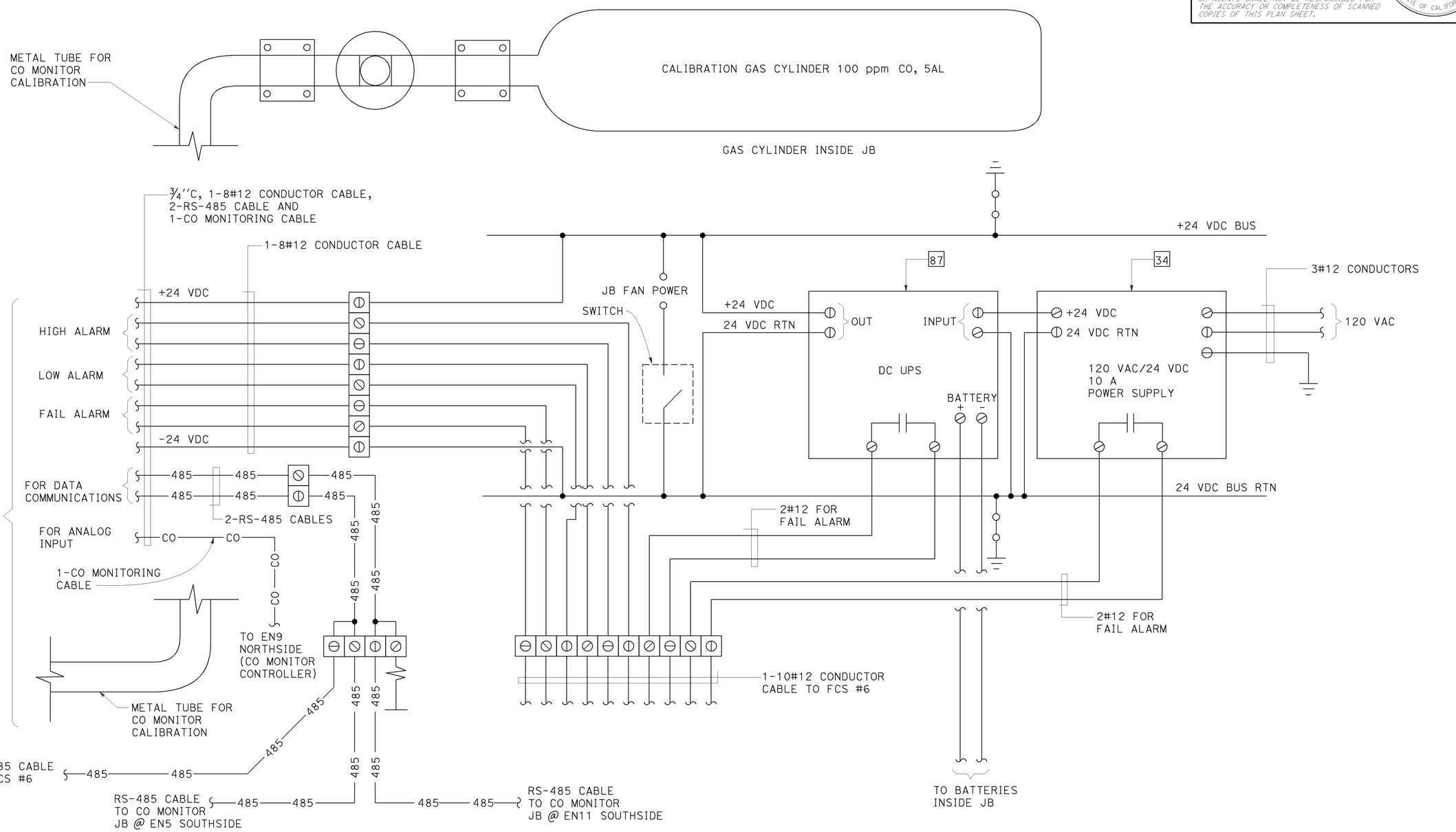

BATTERY SUBSTATION AND TUNNEL WORK

(CO MONITOR CONTROL JB @ EN8 SOUTHSIDE WIRING CONNECTION DIAGRAM AND LAYOUT)

NO SCALE

E-124

CALCULATED-DESIGNED BY	CHECKED BY	REVISED BY	DATE REVISED
LIONEL J. SUDDS	LIONEL J. SUDDS	LS	8/01/09

FUNCTIONAL SUPERVISOR: BEHZAD GOLEMOHAMMADI

STATE OF CALIFORNIA - DEPARTMENT OF TRANSPORTATION
ELECTRICAL

LAST REVISION 10-23-09 | DATE PLOTTED => 14-DEC-2009 | TIME PLOTTED => 16:04

BORDER LAST REVISED 4/11/2008 | RELATIVE BORDER SCALE IS IN INCHES 0 1 2 3 | USERNAME => trlenard | DGN FILE => 416374ua124.dgn | CU 04242 | EA 163741

Dist	COUNTY	ROUTE	POST MILES TOTAL PROJECT	SHEET No.	TOTAL SHEETS
04	SF	101	8.2/9.2	287	654

REGISTERED ELECTRICAL ENGINEER — DATE 10-8-09

Lionel J. Sudds No. 15201 Exp 6-30-10 ELECT — REGISTERED PROFESSIONAL ENGINEER — STATE OF CALIFORNIA

12-14-09
PLANS APPROVAL DATE

THE STATE OF CALIFORNIA OR ITS OFFICERS OR AGENTS SHALL NOT BE RESPONSIBLE FOR THE ACCURACY OR COMPLETENESS OF SCANNED COPIES OF THIS PLAN SHEET.

CALIFORNIA STATE FIRE MARSHAL APPROVED

Approval of this plan does not authorize or approve any omission or deviation from applicable regulations. Final approval is subject to field inspection. One set of approved plans shall be available on the project site at all times.

Reviewed by: STEPHEN GUARINO

Approval date: 12-14-09

METAL TUBE FOR CO MONITOR CALIBRATION

CALIBRATION GAS CYLINDER 100 ppm CO, 5AL

GAS CYLINDER INSIDE JB

¾''C, 1-8#12 CONDUCTOR CABLE, 2-RS-485 CABLE AND 1-CO MONITORING CABLE

1-8#12 CONDUCTOR CABLE

+24 VDC BUS

JB FAN POWER

SWITCH

87

34

3#12 CONDUCTORS

+24 VDC
HIGH ALARM
LOW ALARM
FAIL ALARM
-24 VDC

+24 VDC
24 VDC RTN
OUT
INPUT
DC UPS
BATTERY
+ −

+24 VDC
24 VDC RTN
120 VAC/24 VDC
10 A
POWER SUPPLY

120 VAC

FOR DATA COMMUNICATIONS
485 485 485
485 485 485
2-RS-485 CABLES

TO CO MONITOR

FOR ANALOG INPUT
CO CO
CO CO
1-CO MONITORING CABLE

TO EN9 NORTHSIDE (CO MONITOR CONTROLLER)

METAL TUBE FOR CO MONITOR CALIBRATION

24 VDC BUS RTN

2#12 FOR FAIL ALARM

1-10#12 CONDUCTOR CABLE TO FCS #7

2#12 FOR FAIL ALARM

RS-485 CABLE TO FCS #7
485 485 485 485 485 485

RS-485 CABLE TO CO MONITOR CONTROL JB @ EN9 NORTHSIDE
485 485 485 485 485 485

TO BATTERIES INSIDE JB

BATTERY SUBSTATION AND TUNNEL WORK

(CO MONITOR CONTROL JB @ EN7 NORTHSIDE WIRING CONNECTION DIAGRAM AND LAYOUT)

NO SCALE

E-125

LAST REVISION 10-23-09 | DATE PLOTTED => 14-DEC-2009 | TIME PLOTTED => 16:04

STATE OF CALIFORNIA - DEPARTMENT OF TRANSPORTATION
ELECTRICAL
Caltrans

FUNCTIONAL SUPERVISOR: BEHZAD GOLEMOHAMMADI
CALCULATED-DESIGNED BY:
CHECKED BY:
REVISED BY: LS — LIONEL J. SUDDS
DATE REVISED: 8/01/09 — LIONEL J. SUDDS

BORDER LAST REVISED 4/11/2008

RELATIVE BORDER SCALE IS IN INCHES 0 1 2 3

USERNAME => trlenard
DGN FILE => 416374ua125.dgn

CU 04242

EA 163741

Dist	COUNTY	ROUTE	POST MILES TOTAL PROJECT	SHEET No.	TOTAL SHEETS
04	SF	101	8.2/9.2	288	654

CALIFORNIA STATE FIRE MARSHAL APPROVED
Approval of this plan does not authorize or approve any omission or deviation from applicable regulations. Final approval is subject to field inspection. One set of approved plans shall be available on the project site at all times.
Reviewed by: STEPHEN GUARINO
Approval date: 12-14-09

Lionel J. Sudds 10-8-09
REGISTERED ELECTRICAL ENGINEER DATE

Lionel J. Sudds No. 15201 Exp 6-30-10 ELECT — REGISTERED PROFESSIONAL ENGINEER — STATE OF CALIFORNIA

12-14-09
PLANS APPROVAL DATE

THE STATE OF CALIFORNIA OR ITS OFFICERS OR AGENTS SHALL NOT BE RESPONSIBLE FOR THE ACCURACY OR COMPLETENESS OF SCANNED COPIES OF THIS PLAN SHEET.

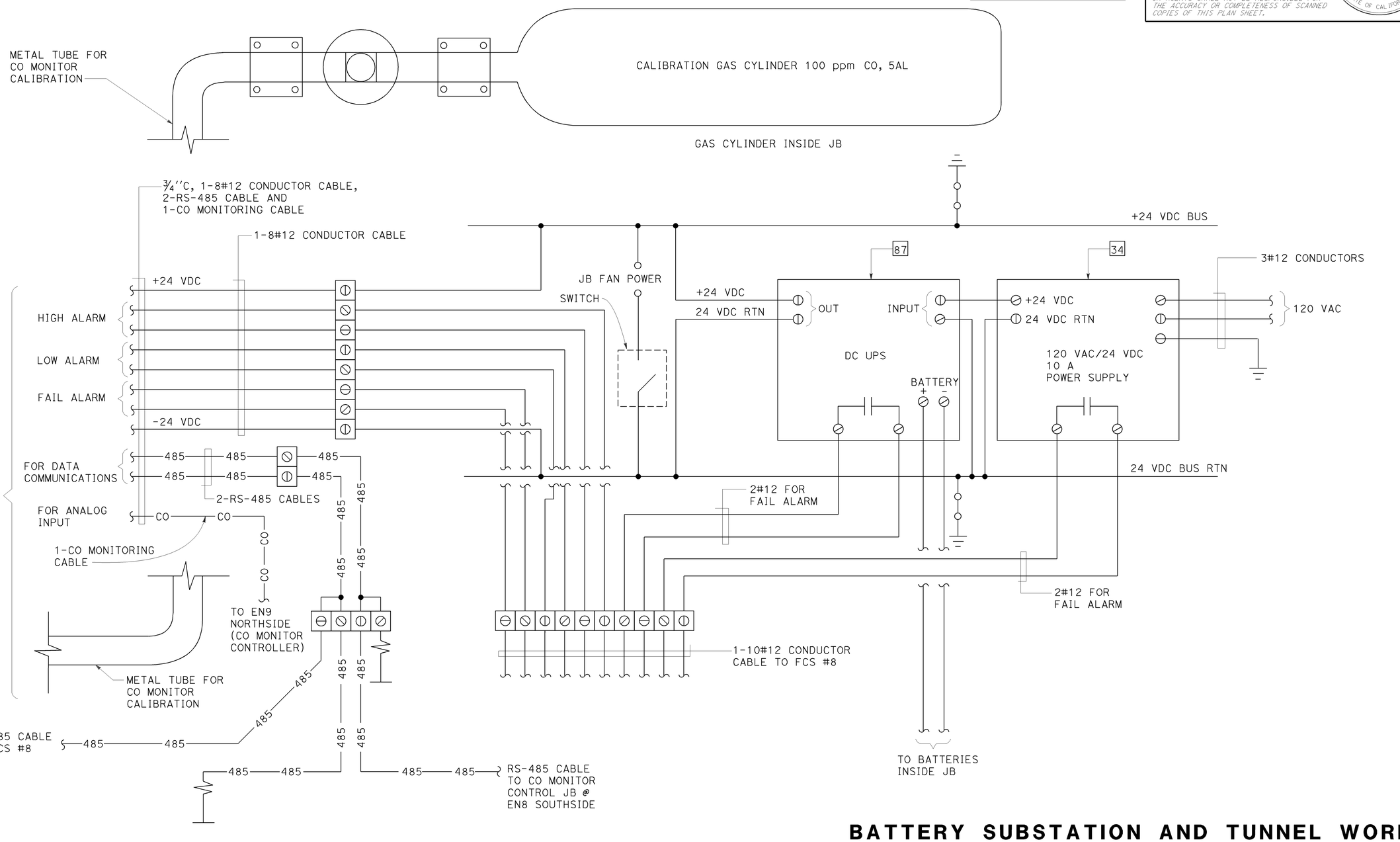

BATTERY SUBSTATION AND TUNNEL WORK

(CO MONITOR CONTROL JB @ EN5 SOUTHSIDE WIRING CONNECTION DIAGRAM AND LAYOUT)

NO SCALE

E-126

CALCULATED-DESIGNED BY	CHECKED BY	REVISED BY	DATE REVISED
LIONEL J. SUDDS	LIONEL J. SUDDS	LS	8/01/09

FUNCTIONAL SUPERVISOR: BEHZAD GOLEMOHAMMADI

STATE OF CALIFORNIA - DEPARTMENT OF TRANSPORTATION
ELECTRICAL

LAST REVISION 10-23-09 | DATE PLOTTED => 14-DEC-2009 | TIME PLOTTED => 16:04

BORDER LAST REVISED 4/11/2008 | RELATIVE BORDER SCALE IS IN INCHES (0 1 2 3) | USERNAME => trlenard | DGN FILE => 416374ua126.dgn | CU 04242 | EA 163741

Dist	COUNTY	ROUTE	POST MILES TOTAL PROJECT	SHEET No.	TOTAL SHEETS
04	SF	101	8.2/9.2	289	654

Lionel J. Sudds 10-8-09
REGISTERED ELECTRICAL ENGINEER DATE

12-14-09
PLANS APPROVAL DATE

REGISTERED PROFESSIONAL ENGINEER — Lionel J. Sudds — No. 15201 — Exp 6-30-10 — ELECT — STATE OF CALIFORNIA

THE STATE OF CALIFORNIA OR ITS OFFICERS OR AGENTS SHALL NOT BE RESPONSIBLE FOR THE ACCURACY OR COMPLETENESS OF SCANNED COPIES OF THIS PLAN SHEET.

CALIFORNIA STATE FIRE MARSHAL APPROVED
Approval of this plan does not authorize or approve any omission or deviation from applicable regulations. Final approval is subject to field inspection. One set of approved plans shall be available on the project site at all times.
Reviewed by: STEPHEN GUARINO
Approval date: 12-14-09

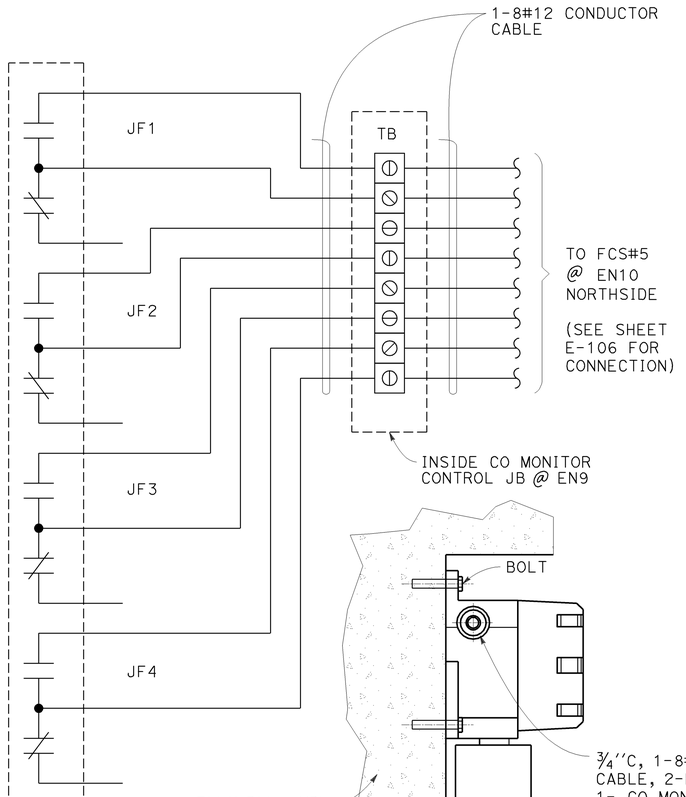

FOUR (4) RELAY CARD

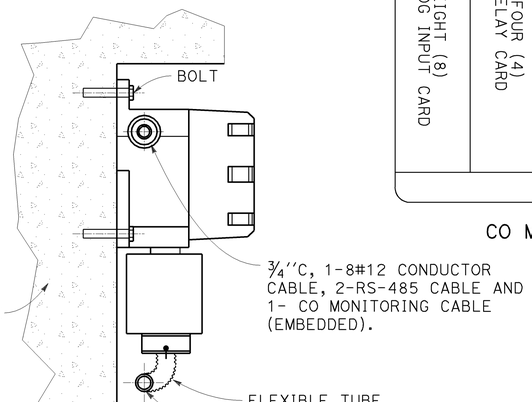

SECTION B-B

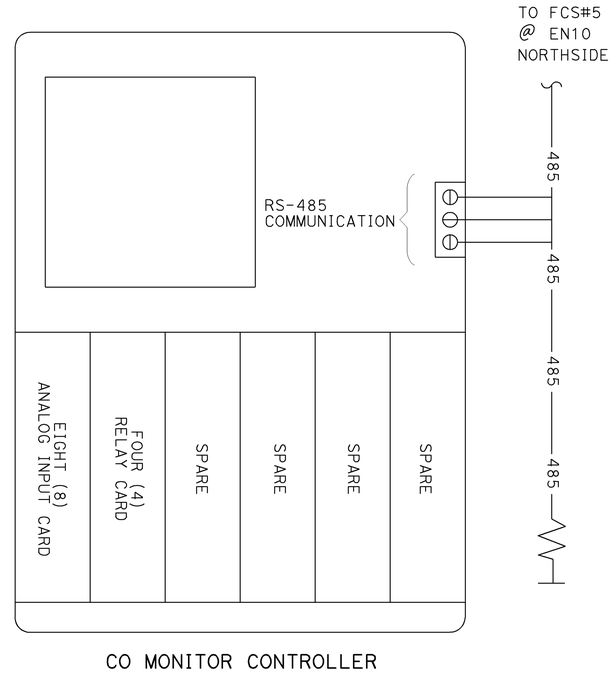

CO MONITOR CONTROLLER

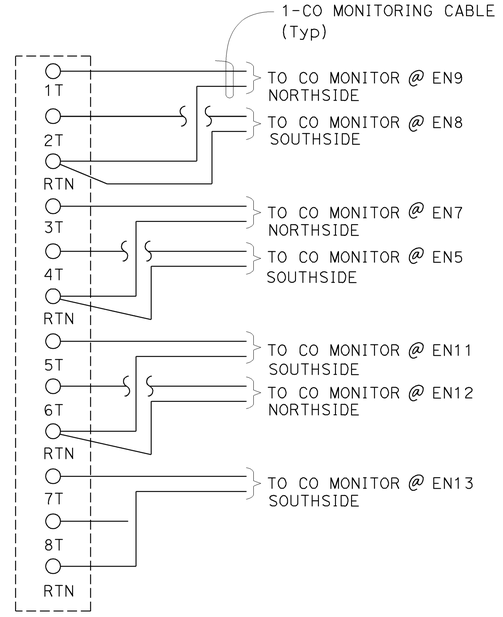

EIGHT (8) ANALOG INPUT CARD
WIRING CONNECTION DIAGRAM

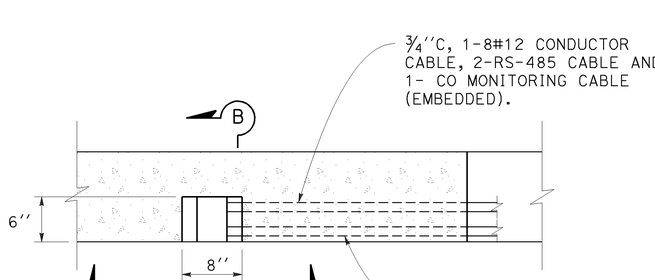

CO MONITOR INSTALLATION LAYOUT

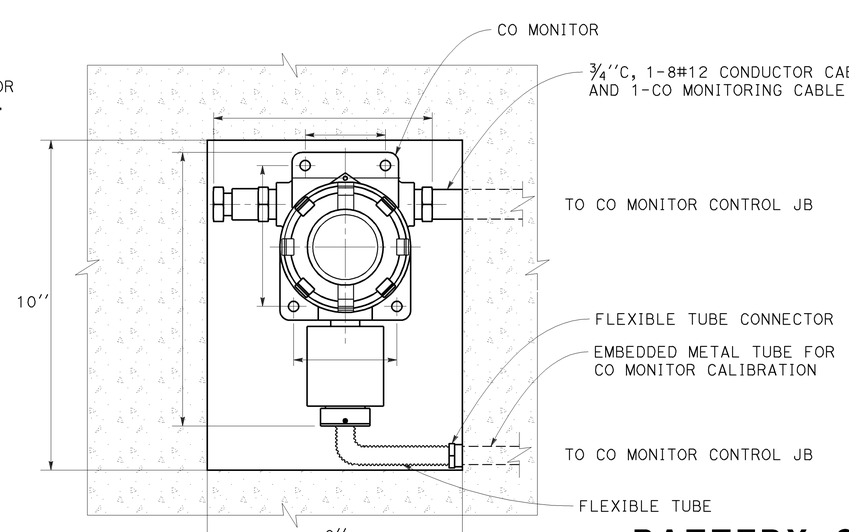

SECTION A-A

CO MONITOR LAYOUT

BATTERY SUBSTATION AND TUNNEL WORK
(TUNNEL CO MONITORING SYSTEM LAYOUT AND WIRING)

NO SCALE

E-127

REVISED BY	DATE REVISED
LS	8/01/09

CALCULATED-DESIGNED BY: LIONEL J. SUDDS
CHECKED BY: LIONEL J. SUDDS

FUNCTIONAL SUPERVISOR: BEHZAD GOLEMOHAMMADI

STATE OF CALIFORNIA - DEPARTMENT OF TRANSPORTATION
ELECTRICAL

LAST REVISION DATE PLOTTED => 14-DEC-2009
TIME PLOTTED => 16:04
10-23-09

BORDER LAST REVISED 4/11/2008
RELATIVE BORDER SCALE IS IN INCHES 0 1 2 3
USERNAME => trlenard
DGN FILE => 416374ua127.dgn
CU 04242
EA 163741

Dist	COUNTY	ROUTE	POST MILES TOTAL PROJECT	SHEET No.	TOTAL SHEETS
04	SF	101	8.2/9.2	290	654

Lionel J Sudds 10-8-09
REGISTERED ELECTRICAL ENGINEER DATE

12-14-09
PLANS APPROVAL DATE

REGISTERED PROFESSIONAL ENGINEER — Lionel J. Sudds No. 15201 Exp 6-30-10 ELECT — STATE OF CALIFORNIA

THE STATE OF CALIFORNIA OR ITS OFFICERS OR AGENTS SHALL NOT BE RESPONSIBLE FOR THE ACCURACY OR COMPLETENESS OF SCANNED COPIES OF THIS PLAN SHEET.

GENERAL NOTES: (THIS SHEET ONLY)

1. THE LINEAR HEAT DETECTOR (LHD) CABLE SHALL BE INSTALL 1' BELOW THE CEILING.
2. SEE SHEET E-130 TO E-135 FOR WIRING CONNECTION OF TUNNEL FIRE CONTROL SYSTEM AND CONNECT AS SHOWN.

NOTES: (THIS SHEET ONLY)

1. INSTALL 1-SLC IN CONDUIT #96 OF THE UTILITY DUCTBANK (SEE SHEET E-88 FOR LOCATION)
2. INSTALL 1½'' C, 12-FIRE ALARM CABLES EMBEDDED IN THE CONCRETE.
3. INSTALL ¾'' C, 1-SLC EMBEDDED IN THE CONCRETE.
4. INSTALL 1-SLC IN CROSS OVER CONDUIT #3 (SEE SHEET E-90 FOR LOCATION)
5. INSTALL ¾'' C, 2-SLC EMBEDDED IN THE CONCRETE.
6. INSTALL 1-SLC IN CONDUIT #53 OF THE UTILITY DUCTBANK (SEE SHEET E-88 FOR LOCATION).
7. INSTALL 1-SLC IN CONDUIT #96 OF THE UTILITY DUCTBANK; AND 1-30#16 CONDUCTOR CABLE IN CONDUIT #94 OF THE UTILITY DUCTBANK (SEE SHEET E-88 FOR LOCATION).
8. INSTALL 1-SLC IN CONDUIT #96 OF THE UTILITY DUCTBANK; AND 2-30#16 CONDUCTOR CABLE IN CONDUIT #94 OF THE UTILITY DUCTBANK (SEE SHEET E-88 FOR LOCATION).

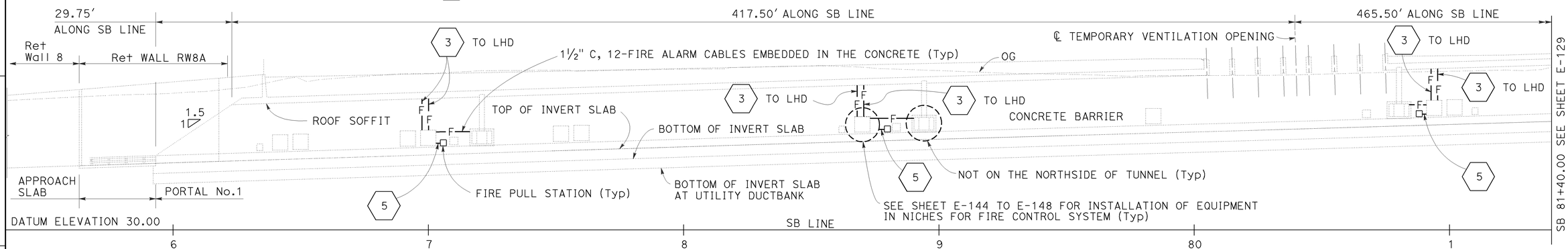

LONGITUDINAL SECTION

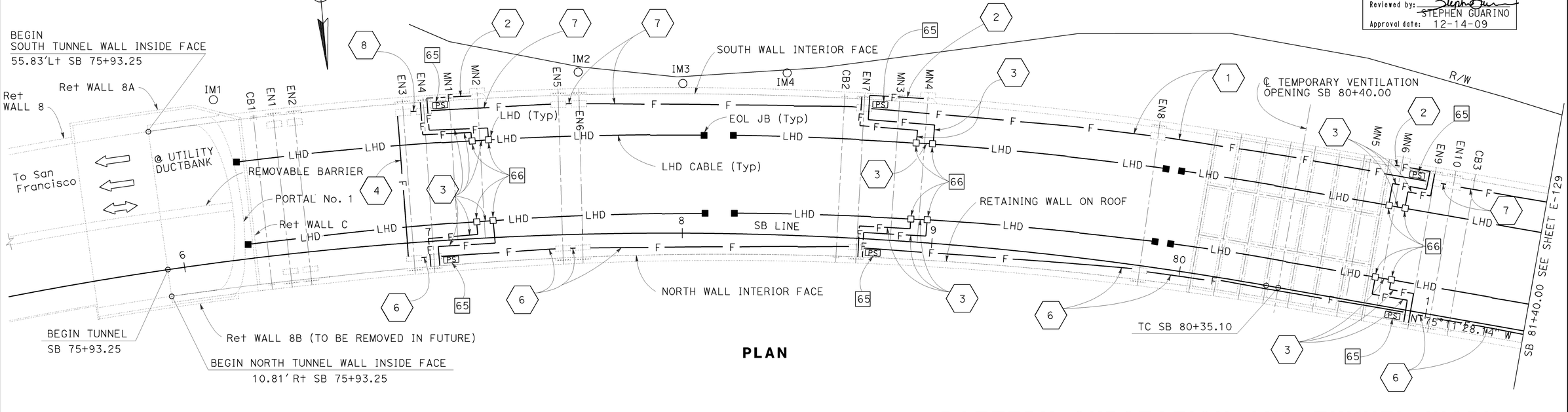

PLAN

CALIFORNIA STATE FIRE MARSHAL APPROVED
Approval of this plan does not authorize or approve any omission or deviation from applicable regulations. Final approval is subject to field inspection. One set of approved plans shall be available on the project site at all times.
Reviewed by: STEPHEN GUARINO
Approval date: 12-14-09

BATTERY SUBSTATION AND TUNNEL WORK

(TUNNEL FIRE CONTROL SYSTEM LAYOUT)

SCALE: 1''=20'

E-128

REVISED BY: LS — DATE REVISED: 8/01/09
CALCULATED-DESIGNED BY: LIONEL J. SUDDS
CHECKED BY: LIONEL J. SUDDS
FUNCTIONAL SUPERVISOR: BEHZAD GOLEMOHAMMADI
STATE OF CALIFORNIA - DEPARTMENT OF TRANSPORTATION
ELECTRICAL

LAST REVISION: DATE PLOTTED => 14-DEC-2009; TIME PLOTTED => 16:56; 10-23-09

BORDER LAST REVISED 4/11/2008 | RELATIVE BORDER SCALE IS IN INCHES 0 1 2 3 | USERNAME => trlenard | DGN FILE => 416374ua128.dgn | CU 04242 | EA 163741

Dist	COUNTY	ROUTE	POST MILES TOTAL PROJECT	SHEET No.	TOTAL SHEETS
04	SF	101	8.2/9.2	291	654

Lionel J. Sudds 10-8-09
REGISTERED ELECTRICAL ENGINEER DATE

12-14-09
PLANS APPROVAL DATE

REGISTERED PROFESSIONAL ENGINEER — Lionel J. Sudds No. 15201 Exp 6-30-10 ELECT — STATE OF CALIFORNIA

THE STATE OF CALIFORNIA OR ITS OFFICERS OR AGENTS SHALL NOT BE RESPONSIBLE FOR THE ACCURACY OR COMPLETENESS OF SCANNED COPIES OF THIS PLAN SHEET.

CALIFORNIA STATE FIRE MARSHAL APPROVED
Approval of this plan does not authorize or approve any omission or deviation from applicable regulations. Final approval is subject to field inspection. One set of approved plans shall be available on the project site at all times.
Reviewed by: STEPHEN GUARINO
Approval date: 12-14-09

GENERAL NOTES: (THIS SHEET ONLY)

1. THE LINEAR HEAT DETECTOR (LHD) CABLE SHALL BE INSTALL 1′ BELOW THE CEILING.
2. SEE SHEET E-130 TO E-135 FOR WIRING CONNECTION OF TUNNEL FIRE CONTROL SYSTEM AND CONNECT AS SHOWN.

NOTES: (THIS SHEET ONLY)

1. INSTALL 1-SLC IN CONDUIT #96 OF THE UTILITY DUCTBANK (SEE SHEET E-88 FOR LOCATION)
2. INSTALL 1½″C, 12-FIRE ALARM CABLES EMBEDDED IN THE CONCRETE.
3. INSTALL ¾″C, 1-SLC EMBEDDED IN THE CONCRETE.
4. INSTALL ¾″C, 2-SLC EMBEDDED IN THE CONCRETE.
5. INSTALL 1-SLC IN CONDUIT #53 OF THE UTILITY DUCTBANK (SEE SHEET E-88 FOR LOCATION).
6. INSTALL 1-SLC IN CONDUIT #96 OF THE UTILITY DUCTBANK; AND 1-30#16 CONDUCTOR CABLE IN CONDUIT #94 OF THE UTILITY DUCTBANK. (SEE SHEET E-88 FOR LOCATION)

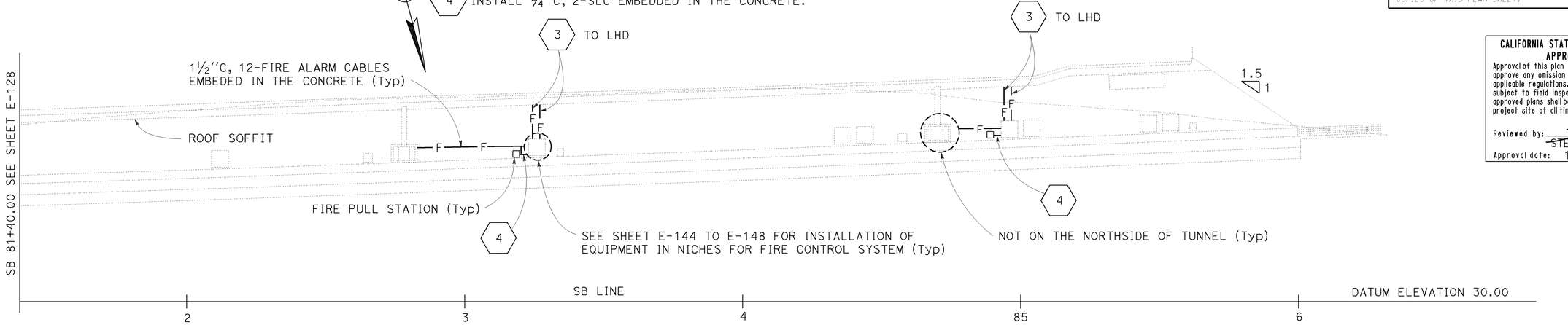

LONGITUDINAL SECTION

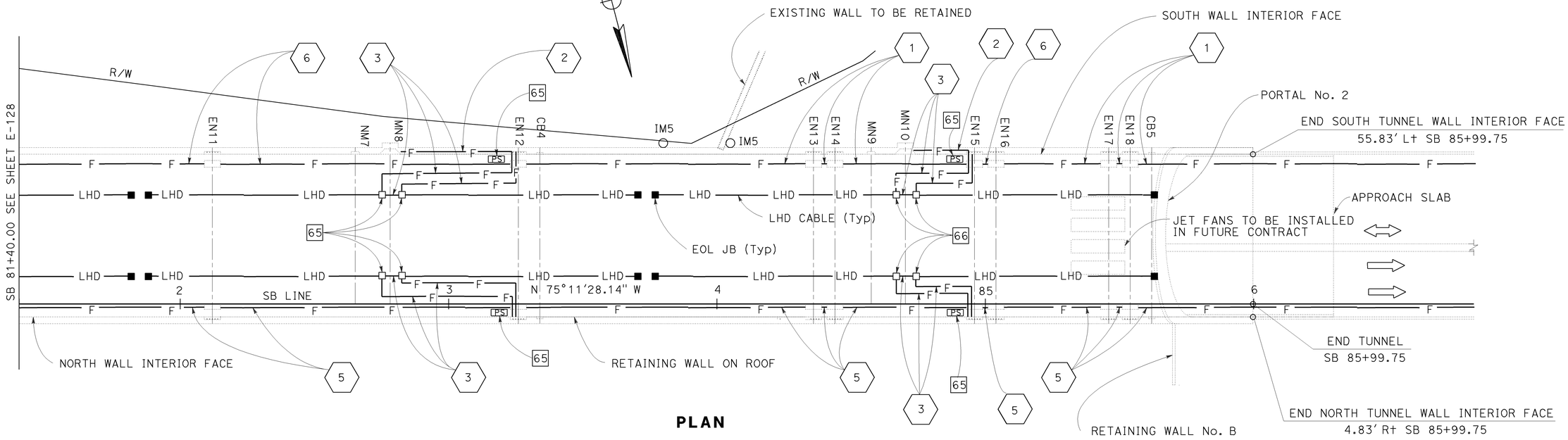

PLAN

BATTERY SUBSTATION AND TUNNEL WORK
(TUNNEL FIRE CONTROL SYSTEM LAYOUT)
SCALE: 1″=20′

E-129

REVISED BY	DATE REVISED
LS	8/01/09
LIONEL J. SUDDS	

CALCULATED-DESIGNED BY: LIONEL J. SUDDS
CHECKED BY:

FUNCTIONAL SUPERVISOR: BEHZAD GOLEMOHAMMADI

STATE OF CALIFORNIA - DEPARTMENT OF TRANSPORTATION
ELECTRICAL

LAST REVISION: DATE PLOTTED => 14-DEC-2009 TIME PLOTTED => 16:56
10-23-09

BORDER LAST REVISED 4/11/2008 | RELATIVE BORDER SCALE IS IN INCHES 0 1 2 3 | USERNAME => trlenard DGN FILE => 416374ua129.dgn | CU 04242 | EA 163741

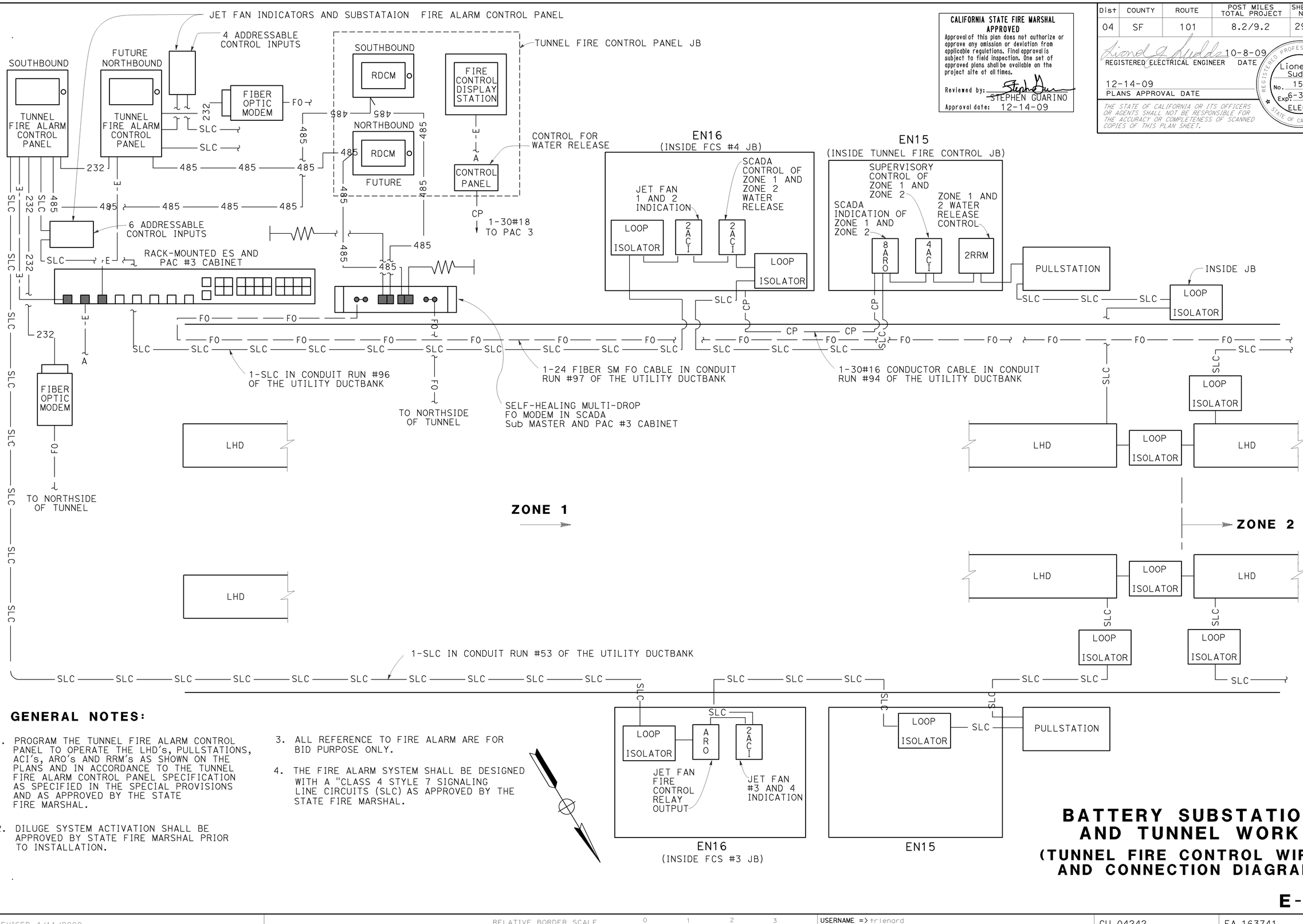

CALIFORNIA STATE FIRE MARSHAL APPROVED

Approval of this plan does not authorize or approve any omission or deviation from applicable regulations. Final approval is subject to field inspection. One set of approved plans shall be available on the project site at all times.

Reviewed by: STEPHEN GUARINO

Approval date: 12-14-09

Dist	COUNTY	ROUTE	POST MILES TOTAL PROJECT	SHEET No.	TOTAL SHEETS
04	SF	101	8.2/9.2	292	654

Lionel J. Sudds 10-8-09
REGISTERED ELECTRICAL ENGINEER DATE

12-14-09
PLANS APPROVAL DATE

Lionel J. Sudds No. 15201 Exp 6-30-10 ELECT — REGISTERED PROFESSIONAL ENGINEER — STATE OF CALIFORNIA

THE STATE OF CALIFORNIA OR ITS OFFICERS OR AGENTS SHALL NOT BE RESPONSIBLE FOR THE ACCURACY OR COMPLETENESS OF SCANNED COPIES OF THIS PLAN SHEET.

GENERAL NOTES:

1. PROGRAM THE TUNNEL FIRE ALARM CONTROL PANEL TO OPERATE THE LHD's, PULLSTATIONS, ACI's, ARO's AND RRM's AS SHOWN ON THE PLANS AND IN ACCORDANCE TO THE TUNNEL FIRE ALARM CONTROL PANEL SPECIFICATION AS SPECIFIED IN THE SPECIAL PROVISIONS AND AS APPROVED BY THE STATE FIRE MARSHAL.
2. DILUGE SYSTEM ACTIVATION SHALL BE APPROVED BY STATE FIRE MARSHAL PRIOR TO INSTALLATION.
3. ALL REFERENCE TO FIRE ALARM ARE FOR BID PURPOSE ONLY.
4. THE FIRE ALARM SYSTEM SHALL BE DESIGNED WITH A "CLASS 4 STYLE 7 SIGNALING LINE CIRCUITS (SLC) AS APPROVED BY THE STATE FIRE MARSHAL.

BATTERY SUBSTATION AND TUNNEL WORK

(TUNNEL FIRE CONTROL WIRING AND CONNECTION DIAGRAM)

E-130

REVISED BY	DATE REVISED
LS	8/01/09

CALCULATED-DESIGNED BY: LIONEL J. SUDDS
CHECKED BY: LIONEL J. SUDDS
FUNCTIONAL SUPERVISOR: BEHZAD GOLEMOHAMMADI

STATE OF CALIFORNIA - DEPARTMENT OF TRANSPORTATION
ELECTRICAL

LAST REVISION: DATE PLOTTED => 15-DEC-2009 TIME PLOTTED => 09:07
10-23-09

BORDER LAST REVISED 4/11/2008

RELATIVE BORDER SCALE IS IN INCHES 0 1 2 3

USERNAME => trlenard
DGN FILE => 416374ua130.dgn

CU 04242

EA 163741

Dist	COUNTY	ROUTE	POST MILES TOTAL PROJECT	SHEET No.	TOTAL SHEETS
04	SF	101	8.2/9.2	293	654

Lionel J. Sudds 10-8-09
REGISTERED ELECTRICAL ENGINEER DATE

12-14-09
PLANS APPROVAL DATE

REGISTERED PROFESSIONAL ENGINEER — Lionel J. Sudds No. 15201 Exp 6-30-10 ELECT — STATE OF CALIFORNIA

THE STATE OF CALIFORNIA OR ITS OFFICERS OR AGENTS SHALL NOT BE RESPONSIBLE FOR THE ACCURACY OR COMPLETENESS OF SCANNED COPIES OF THIS PLAN SHEET.

CALIFORNIA STATE FIRE MARSHAL APPROVED

Approval of this plan does not authorize or approve any omission or deviation from applicable regulations. Final approval is subject to field inspection. One set of approved plans shall be available on the project site at all times.

Reviewed by: STEPHEN GUARINO

Approval date: 12-14-09

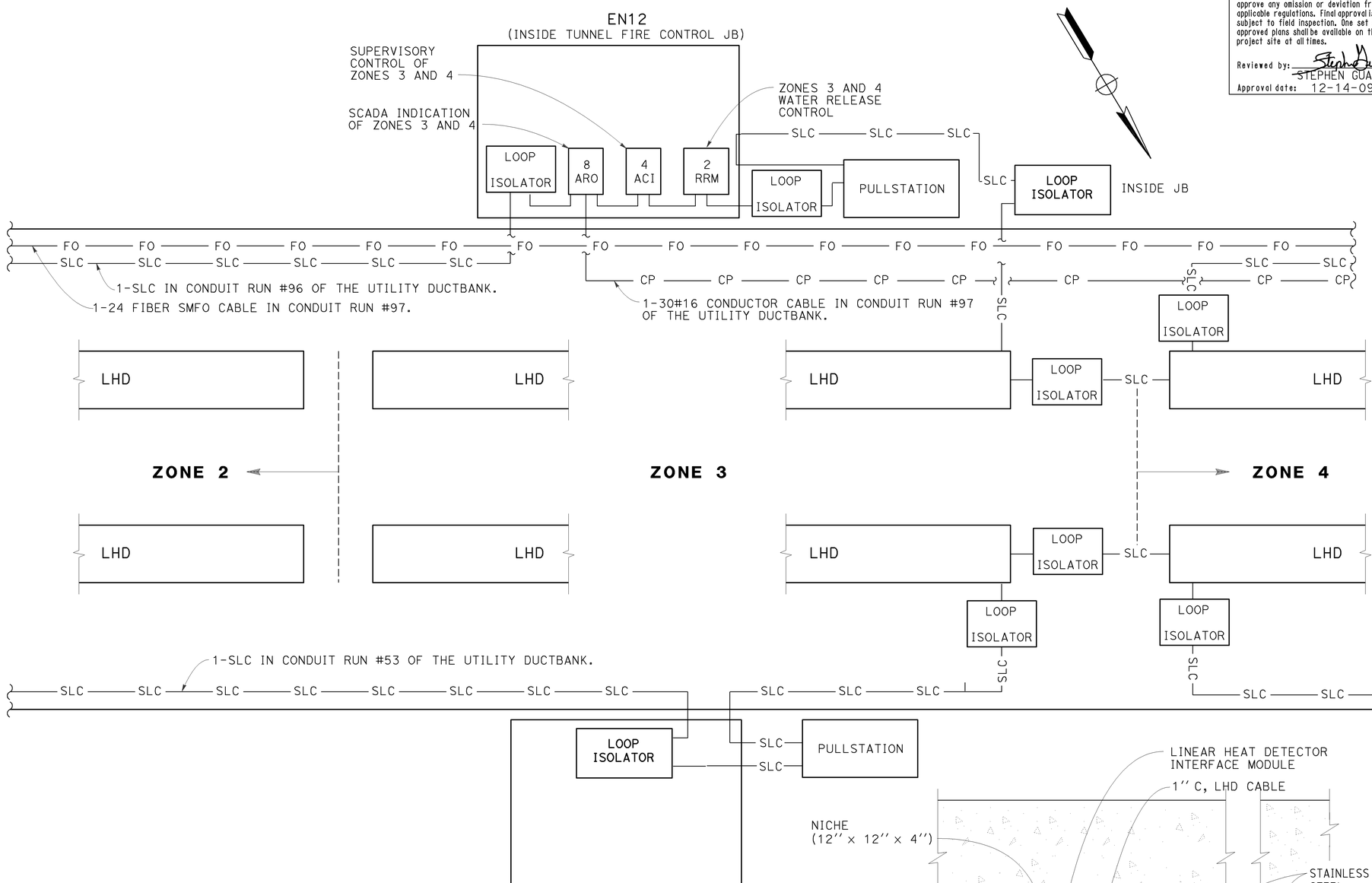

GENERAL NOTES:

1. PROGRAM THE TUNNEL FIRE ALARM CONTROL PANEL TO OPERATE THE LHD's, PULLSTATIONS, ACI's, ARO's AND RRM's AS SHOWN ON THE PLANS AND IN ACCORDANCE TO THE TUNNEL FIRE ALARM CONTROL PANEL SPECIFICATION AS SPECIFIED IN THE SPECIAL PROVISIONS AND AS APPROVED BY THE STATE FIRE MARSHAL.
2. DILUGE SYSTEM ACTIVATION SHALL BE APPROVED BY STATE FIRE MARSHAL PRIOR TO INSTALLATION.
3. ALL REFERENCE TO FIRE ALARM ARE FOR BID PURPOSE ONLY.
4. THE FIRE ALARM SYSTEM SHALL BE DESIGNED WITH A "CLASS 4 STYLE 7 SIGNALING LINE CIRCUITS (SLC) AS APPROVED BY THE STATE FIRE MARSHAL.

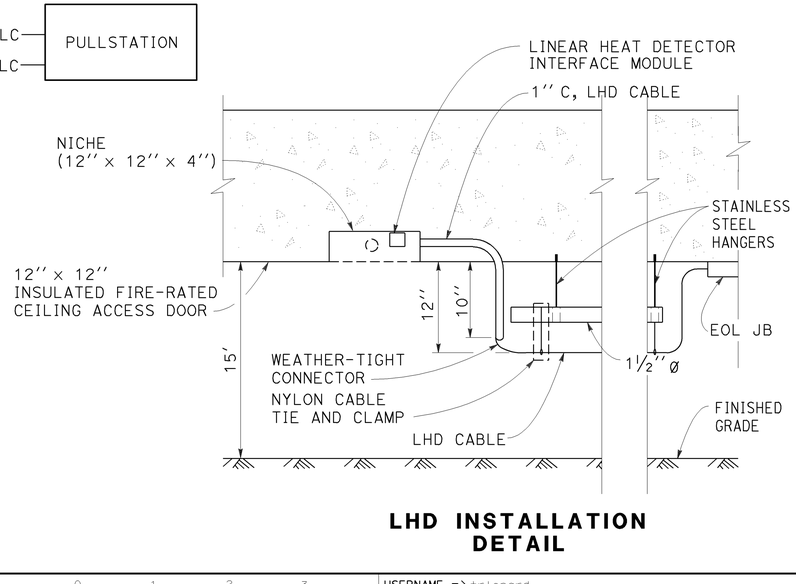

LHD INSTALLATION DETAIL

BATTERY SUBSTATION AND TUNNEL WORK (TUNNEL FIRE CONTROL WIRING AND CONNECTION DIAGRAM)

NO SCALE

E-131

LAST REVISION DATE PLOTTED => 15-DEC-2009
TIME PLOTTED => 04:36
10-28-09

STATE OF CALIFORNIA - DEPARTMENT OF TRANSPORTATION
ELECTRICAL
FUNCTIONAL SUPERVISOR: BEHZAD GOLEMOHAMMADI
CALCULATED-DESIGNED BY
CHECKED BY
REVISED BY: LS — LIONEL J. SUDDS
DATE REVISED: 8/01/09 — LIONEL J. SUDDS

BORDER LAST REVISED 4/11/2008
RELATIVE BORDER SCALE IS IN INCHES 0 1 2 3
USERNAME => trlenard
DGN FILE => 416374ua131.dgn
CU 04242
EA 163741

Dist	COUNTY	ROUTE	POST MILES TOTAL PROJECT	SHEET No.	TOTAL SHEETS
04	SF	101	8.2/9.2	294	654

Lionel J. Sudds 10-8-09
REGISTERED ELECTRICAL ENGINEER DATE

12-14-09
PLANS APPROVAL DATE

Lionel J. Sudds No. 15201 Exp 6-30-10 ELECT — REGISTERED PROFESSIONAL ENGINEER — STATE OF CALIFORNIA

THE STATE OF CALIFORNIA OR ITS OFFICERS OR AGENTS SHALL NOT BE RESPONSIBLE FOR THE ACCURACY OR COMPLETENESS OF SCANNED COPIES OF THIS PLAN SHEET.

CALIFORNIA STATE FIRE MARSHAL APPROVED

Approval of this plan does not authorize or approve any omission or deviation from applicable regulations. Final approval is subject to field inspection. One set of approved plans shall be available on the project site at all times.

Reviewed by: STEPHEN GUARINO

Approval date: 12-14-09

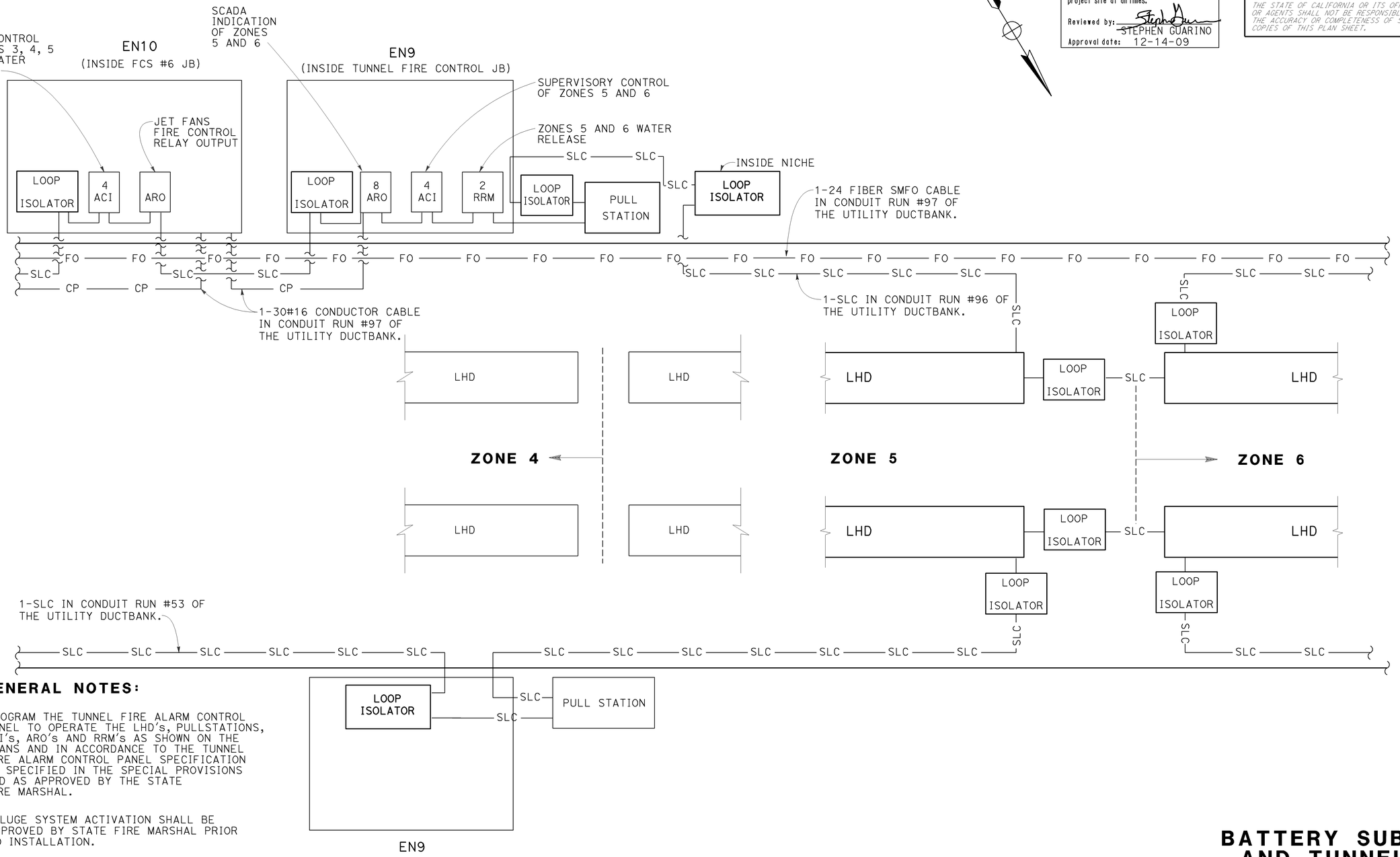

GENERAL NOTES:

1. PROGRAM THE TUNNEL FIRE ALARM CONTROL PANEL TO OPERATE THE LHD's, PULLSTATIONS, ACI's, ARO's AND RRM's AS SHOWN ON THE PLANS AND IN ACCORDANCE TO THE TUNNEL FIRE ALARM CONTROL PANEL SPECIFICATION AS SPECIFIED IN THE SPECIAL PROVISIONS AND AS APPROVED BY THE STATE FIRE MARSHAL.
2. DILUGE SYSTEM ACTIVATION SHALL BE APPROVED BY STATE FIRE MARSHAL PRIOR TO INSTALLATION.
3. ALL REFERENCE TO FIRE ALARM ARE FOR BID PURPOSE ONLY.
4. THE FIRE ALARM SYSTEM SHALL BE DESIGNED WITH A "CLASS 4 STYLE 7 SIGNALING LINE CIRCUITS (SLC) AS APPROVED BY THE STATE FIRE MARSHAL.

BATTERY SUBSTATION AND TUNNEL WORK (TUNNEL FIRE CONTROL WIRING AND CONNECTION DIAGRAM)

NO SCALE

E-132

STATE OF CALIFORNIA - DEPARTMENT OF TRANSPORTATION
ELECTRICAL
Caltrans
FUNCTIONAL SUPERVISOR: BEHZAD GOLEMOHAMMADI
CALCULATED-DESIGNED BY: LIONEL J. SUDDS
CHECKED BY: LS
REVISED BY / DATE REVISED: 8/01/09

LAST REVISION DATE PLOTTED => 15-DEC-2009
TIME PLOTTED => 04:36
10-28-09

BORDER LAST REVISED 4/11/2008
RELATIVE BORDER SCALE IS IN INCHES 0 1 2 3
USERNAME => trlenard
DGN FILE => 416374ua132.dgn
CU 04242
EA 163741

Dist	COUNTY	ROUTE	POST MILES TOTAL PROJECT	SHEET No.	TOTAL SHEETS
04	SF	101	8.2/9.2	295	654

Lionel J. Sudds 10-8-09
REGISTERED ELECTRICAL ENGINEER DATE

12-14-09
PLANS APPROVAL DATE

REGISTERED PROFESSIONAL ENGINEER — Lionel J. Sudds — No. 15201 — Exp 6-30-10 — ELECT — STATE OF CALIFORNIA

THE STATE OF CALIFORNIA OR ITS OFFICERS OR AGENTS SHALL NOT BE RESPONSIBLE FOR THE ACCURACY OR COMPLETENESS OF SCANNED COPIES OF THIS PLAN SHEET.

CALIFORNIA STATE FIRE MARSHAL APPROVED

Approval of this plan does not authorize or approve any omission or deviation from applicable regulations. Final approval is subject to field inspection. One set of approved plans shall be available on the project site at all times.

Reviewed by: STEPHEN GUARINO

Approval date: 12-14-09

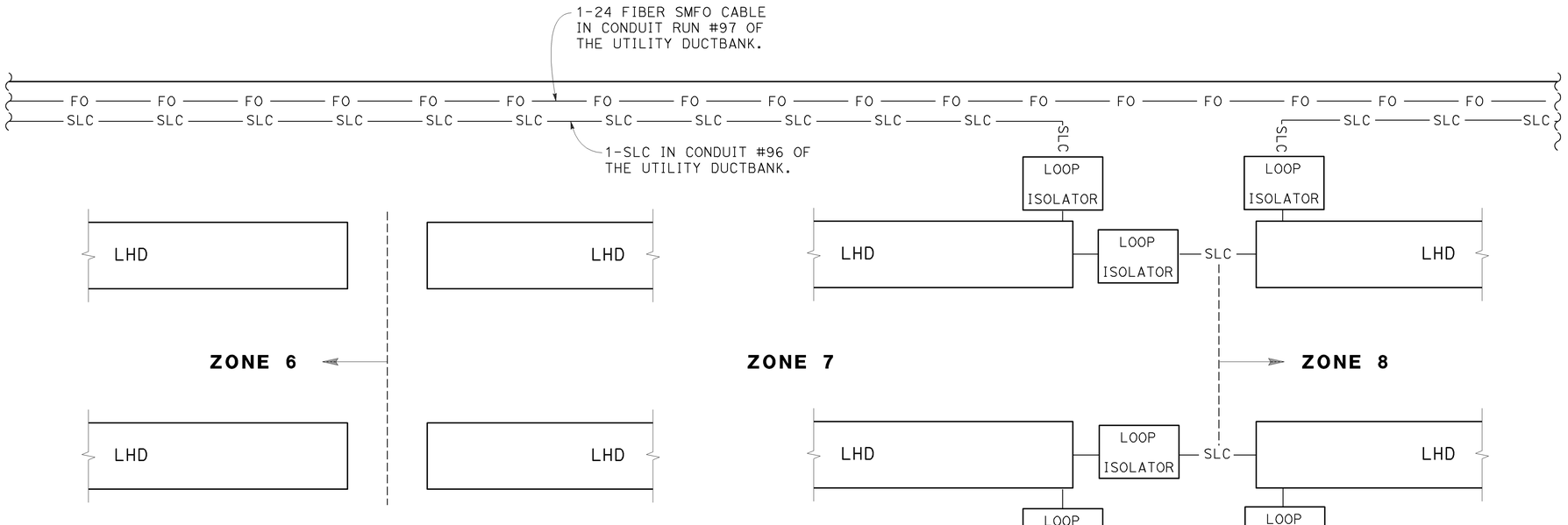

GENERAL NOTES:

1. PROGRAM THE TUNNEL FIRE ALARM CONTROL PANEL TO OPERATE THE LHD's, PULLSTATIONS, ACI's, ARO's AND RRM's AS SHOWN ON THE PLANS AND IN ACCORDANCE TO THE TUNNEL FIRE ALARM CONTROL PANEL SPECIFICATION AS SPECIFIED IN THE SPECIAL PROVISIONS AND AS APPROVED BY THE STATE FIRE MARSHAL.
2. DILUGE SYSTEM ACTIVATION SHALL BE APPROVED BY STATE FIRE MARSHAL PRIOR TO INSTALLATION.
3. ALL REFERENCE TO FIRE ALARM ARE FOR BID PURPOSE ONLY.
4. THE FIRE ALARM SYSTEM SHALL BE DESIGNED WITH A "CLASS 4 STYLE 7 SIGNALING LINE CIRCUITS (SLC) AS APPROVED BY THE STATE FIRE MARSHAL.

BATTERY SUBSTATION AND TUNNEL WORK (TUNNEL FIRE CONTROL WIRING AND CONNECTION DIAGRAM)

NO SCALE

E-133

REVISED BY	DATE REVISED
LS	8/01/09

CALCULATED-DESIGNED BY: LIONEL J. SUDDS
CHECKED BY: LIONEL J. SUDDS

FUNCTIONAL SUPERVISOR: BEHZAD GOLEMOHAMMADI

STATE OF CALIFORNIA - DEPARTMENT OF TRANSPORTATION
ELECTRICAL

LAST REVISION: DATE PLOTTED => 15-DEC-2009 TIME PLOTTED => 04:36
10-28-09

BORDER LAST REVISED 4/11/2008

RELATIVE BORDER SCALE IS IN INCHES 0 1 2 3

USERNAME => trienard
DGN FILE => 416374ua133.dgn

CU 04242

EA 163741

GENERAL NOTES:

1. PROGRAM THE TUNNEL FIRE ALARM CONTROL PANEL TO OPERATE THE LHD's, PULLSTATIONS, ACI's, ARO's AND RRM's AS SHOWN ON THE PLANS AND IN ACCORDANCE TO THE TUNNEL FIRE ALARM CONTROL PANEL SPECIFICATION AS SPECIFIED IN THE SPECIAL PROVISIONS AND AS APPROVED BY THE STATE FIRE MARSHAL.
2. DILUGE SYSTEM ACTIVATION SHALL BE APPROVED BY STATE FIRE MARSHAL PRIOR TO INSTALLATION.
3. ALL REFERENCE TO FIRE ALARM ARE FOR BID PURPOSE ONLY.
4. THE FIRE ALARM SYSTEM SHALL BE DESIGNED WITH A "CLASS 4 STYLE 7 SIGNALING LINE CIRCUITS (SLC) AS APPROVED BY THE STATE FIRE MARSHAL.

CALIFORNIA STATE FIRE MARSHAL APPROVED

Approval of this plan does not authorize or approve any omission or deviation from applicable regulations. Final approval is subject to field inspection. One set of approved plans shall be available on the project site at all times.

Reviewed by: STEPHEN GUARINO

Approval date: 12-14-09

Dist	COUNTY	ROUTE	POST MILES TOTAL PROJECT	SHEET No.	TOTAL SHEETS
04	SF	101	8.2/9.2	296	654

Lionel J. Sudds 10-8-09
REGISTERED ELECTRICAL ENGINEER DATE

Lionel J. Sudds No. 15201 Exp 6-30-10 ELECT — REGISTERED PROFESSIONAL ENGINEER — STATE OF CALIFORNIA

12-14-09
PLANS APPROVAL DATE

THE STATE OF CALIFORNIA OR ITS OFFICERS OR AGENTS SHALL NOT BE RESPONSIBLE FOR THE ACCURACY OR COMPLETENESS OF SCANNED COPIES OF THIS PLAN SHEET.

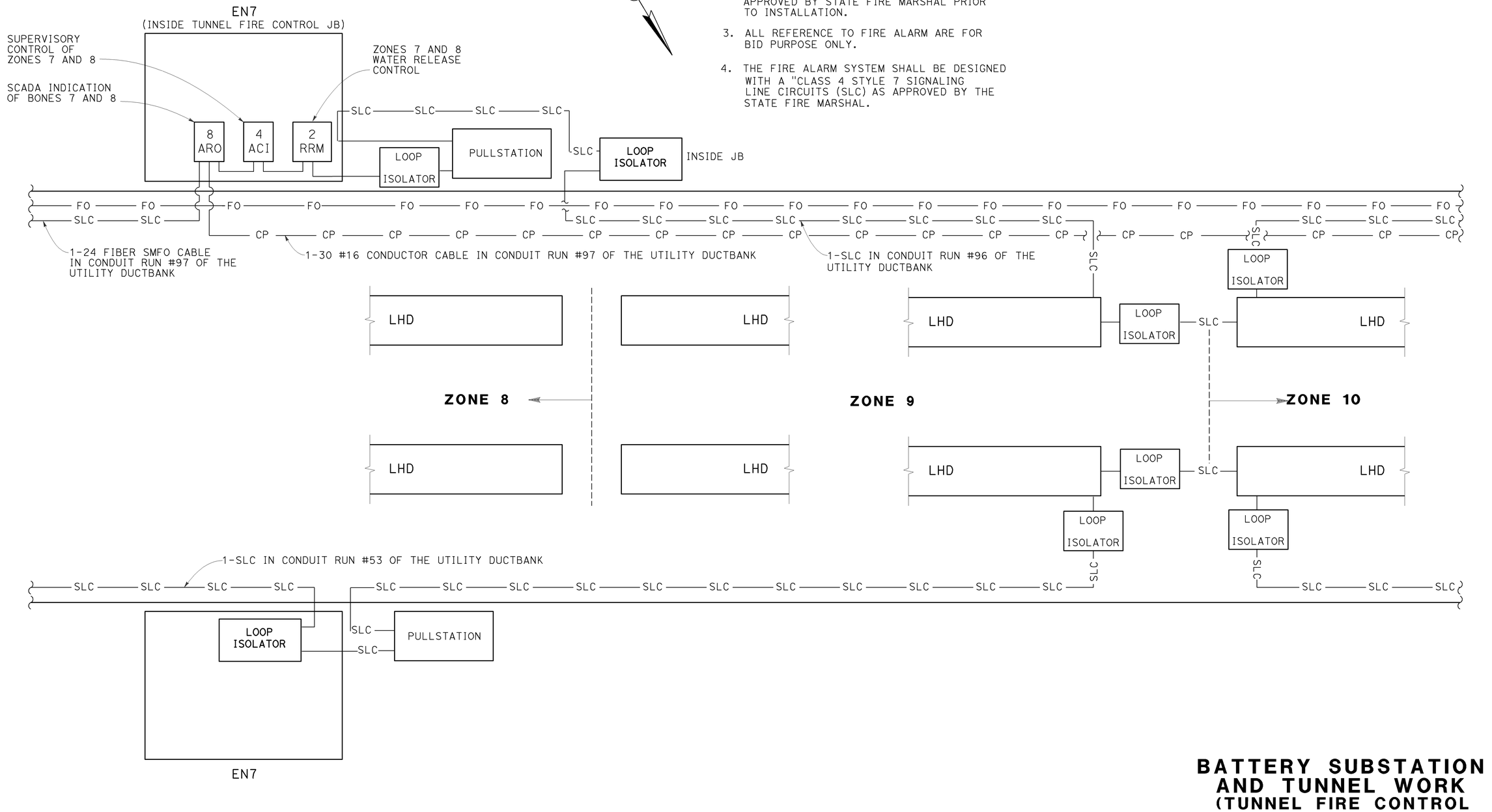

BATTERY SUBSTATION AND TUNNEL WORK (TUNNEL FIRE CONTROL WIRING AND CONNECTION DIAGRAM)

NO SCALE

E-134

REVISED BY	DATE REVISED
LS	8/01/09

CALCULATED-DESIGNED BY: LIONEL J. SUDDS
CHECKED BY: LIONEL J. SUDDS

FUNCTIONAL SUPERVISOR: BEHZAD GOLEMOHAMMADI

STATE OF CALIFORNIA - DEPARTMENT OF TRANSPORTATION
ELECTRICAL

LAST REVISION DATE PLOTTED => 15-DEC-2009
TIME PLOTTED => 09:07
10-23-09

BORDER LAST REVISED 4/11/2008

RELATIVE BORDER SCALE IS IN INCHES 0 1 2 3

USERNAME => trlenard
DGN FILE => 416374ua134.dgn

CU 04242

EA 163741

Dist	COUNTY	ROUTE	POST MILES TOTAL PROJECT	SHEET No.	TOTAL SHEETS
04	SF	101	8.2/9.2	297	654

REGISTERED ELECTRICAL ENGINEER 10-8-09 DATE

12-14-09
PLANS APPROVAL DATE

REGISTERED PROFESSIONAL ENGINEER Lionel J. Sudds No. 15201 Exp. 6-30-10 ELECT STATE OF CALIFORNIA

THE STATE OF CALIFORNIA OR ITS OFFICERS OR AGENTS SHALL NOT BE RESPONSIBLE FOR THE ACCURACY OR COMPLETENESS OF SCANNED COPIES OF THIS PLAN SHEET.

CALIFORNIA STATE FIRE MARSHAL APPROVED
Approval of this plan does not authorize or approve any omission or deviation from applicable regulations. Final approval is subject to field inspection. One set of approved plans shall be available on the project site at all times.
Reviewed by: STEPHEN GUARINO
Approval date: 12-14-09

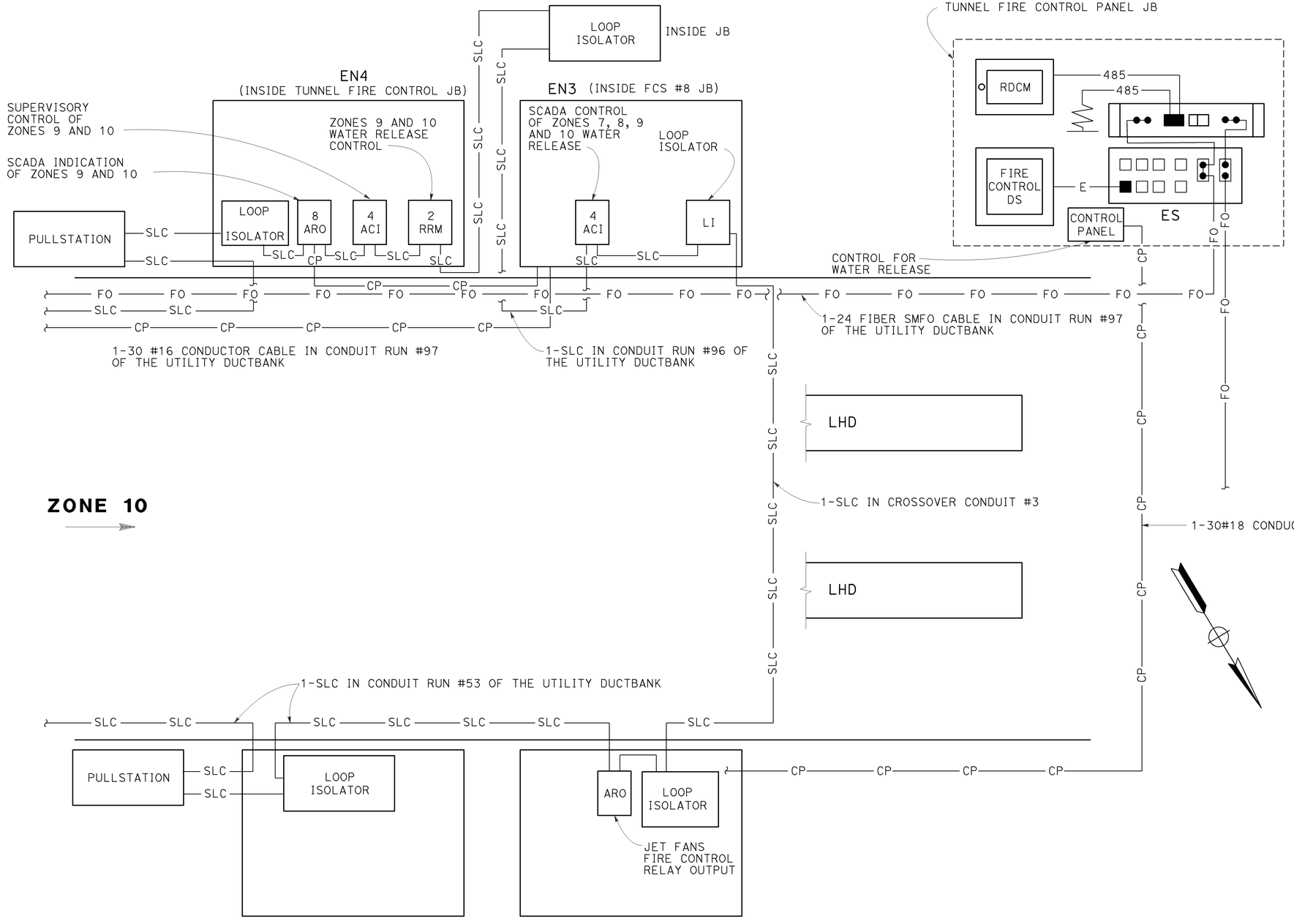

GENERAL NOTES:

1. PROGRAM THE TUNNEL FIRE ALARM CONTROL PANEL TO OPERATE THE LHD's, PULLSTATIONS, ACI's, ARO's AND RRM's AS SHOWN ON THE PLANS AND IN ACCORDANCE TO THE TUNNEL FIRE ALARM CONTROL PANEL SPECIFICATION AS SPECIFIED IN THE SPECIAL PROVISIONS AND AS APPROVED BY THE STATE FIRE MARSHAL.
2. DILUGE SYSTEM ACTIVATION SHALL BE APPROVED BY STATE FIRE MARSHAL PRIOR TO INSTALLATION.
3. ALL REFERENCE TO FIRE ALARM ARE FOR BID PURPOSE ONLY.
4. THE FIRE ALARM SYSTEM SHALL BE DESIGNED WITH A "CLASS 4 STYLE 7 SIGNALING LINE CIRCUITS (SLC) AS APPROVED BY THE STATE FIRE MARSHAL.

BATTERY SUBSTATION AND TUNNEL WORK
(TUNNEL FIRE CONTROL WIRING AND CONNECTION DIAGRAM)

NO SCALE

E-135

STATE OF CALIFORNIA - DEPARTMENT OF TRANSPORTATION
Caltrans
ELECTRICAL

FUNCTIONAL SUPERVISOR: BEHZAD GOLEMOHAMMADI
CALCULATED-DESIGNED BY: LIONEL J. SUDDS
CHECKED BY: LIONEL J. SUDDS
REVISED BY: LS
DATE REVISED: 8/01/09

LAST REVISION 10-23-09
DATE PLOTTED => 15-DEC-2009
TIME PLOTTED => 04:36

Dist	COUNTY	ROUTE	POST MILES TOTAL PROJECT	SHEET No.	TOTAL SHEETS
04	SF	101	8.2/9.2	298	654

Lionel J. Sudds 10-8-09
REGISTERED ELECTRICAL ENGINEER DATE

12-14-09
PLANS APPROVAL DATE

REGISTERED PROFESSIONAL ENGINEER — Lionel J. Sudds No. 15201 Exp 6-30-10 ELECT — STATE OF CALIFORNIA

THE STATE OF CALIFORNIA OR ITS OFFICERS OR AGENTS SHALL NOT BE RESPONSIBLE FOR THE ACCURACY OR COMPLETENESS OF SCANNED COPIES OF THIS PLAN SHEET.

CALIFORNIA STATE FIRE MARSHAL APPROVED
Approval of this plan does not authorize or approve any omission or deviation from applicable regulations. Final approval is subject to field inspection. One set of approved plans shall be available on the project site at all times.
Reviewed by: STEPHEN GUARINO
Approval date: 12-14-09

TO LHD
¾''C, 1-SLC
2½''C, 1-30#16 CONDUCTOR CABLE
TO FCS #4
SLC

ADDRESSABLE RELAY
OUTPUT No. 1 (ARO#1)
LHD ZONE 1 NORTH

ADDRESSABLE RELAY
OUTPUT No. 2 (ARO#2)
LHD ZONE 1 SOUTH

ADDRESSABLE RELAY
OUTPUT No. 3 (ARO#3)
LHD ZONE 2 NORTH

ADDRESSABLE RELAY
OUTPUT No. 4 (ARO#4)
LHD ZONE 2 SOUTH

ADDRESSABLE RELAY
OUTPUT No. 5 (ARO#5)
NORTHSIDE PULLSTATION

ADDRESSABLE RELAY
OUTPUT No. 6 (ARO#6)
SOUTHSIDE PULLSTATION

SLC OUT		SLC IN		OUTPUT DEVICE		
SLC A(+)	SLC B(-)	SLC A(+)	SLC B(-)	N. C.	COM	N. O.
1	2	1	4	5	6	7
1	2	3	4	5	6	7

90

TO LHD
¾''C, 1-SLC
1½''C, 12-FIRE ALARM CABLES
TO SPRINKLER SYSTEM
4-FIRE ALARM CABLES
2-3/4''C, 1-SLC TO PULLSTATION

8	7	6	5	4	3	2	1
LED (-)	LED (+)	SWITCH B	SWITCH A	SLC B(-)	SLC A(+)	SLC B(-)	SLC A(+)
REMOTE LED		INPUT DEVICE		SLC IN		SLC OUT	

ADDRESSABLE CONTACT
INPUT No. 3
ACI #3

ADDRESSABLE CONTACT
INPUT No. 2
ACI #2

REMOTE RELEASE MODULE #1

REMOTE RELEASE MODULE #2

ADDRESSABLE CONTACT
INPUT No. 1
ACI #1

24 VDC		PSU		RELEASE			
+	-	+	- STATUS	+	+	-	-

89
91

FIRE ALARM CABLES
2#12
1#12
3#12
120 VAC
24 VDC RTN
+24 VDC
FIRE ALARM POWER SUPPLY
120 VAC/24 VDC 6A MAXIMUN
92
SWITCH
AC FAIL
BATTERY
LOW BATTERY
JB FAN PWR
FAN ON
LOOP ISOLATOR

ADDRESSABLE CONTACT
INPUT No. 4
ACI #4

SLC OUT		SLC IN		INPUT DEVICE		REMOTE LED	
SLC A(+)	SLC B(-)	SLC A(+)	SLC B(-)	SWITCH A	SWITCH B	LED (+)	LED (-)
1	2	3	4	5	6	7	8

ADDRESSABLE RELAY
OUPUT No. 7 (ARO#7)
ZONE 1 WATER RELEASE

ADDRESSABLE RELAY
OUPUT No. 8 (ARO#8)
ZONE 2 WATER RELEASE

OUTPUT DEVICE		
N. C.	COM	N. O.
5	6	7

TO TUNNEL
¾''C, 1-SLC

GENERAL NOTE:
(THIS SHEET ONLY)

1. PROGRAM THE TUNNEL FIRE ALARM CONTROL PANEL TO OPERATE THE ACI's, ARO's AND RRM's AS SHOWN ON THE PLANS AND IN ACCORDANCE TO THE TUNNEL FIRE ALARM CONTROL PANEL SPECIFICATION AS SPECIFIED IN THE SPECIAL PROVISIONS AND AS APPROVED BY THE STATE FIRE MARSHAL.

BATTERY SUBSTATION AND TUNNEL WORK
(TUNNEL FIRE CONTROL JB LAYOUT AND WIRING CONNECT DIAGRAM @ EN15)

NO SCALE

E-136

LAST REVISION DATE PLOTTED => 15-DEC-2009
TIME PLOTTED => 04:36
10-23-09

STATE OF CALIFORNIA - DEPARTMENT OF TRANSPORTATION
ELECTRICAL
Caltrans
FUNCTIONAL SUPERVISOR: BEHZAD GOLEMOHAMMADI
CALCULATED-DESIGNED BY: LIONEL J. SUDDS
CHECKED BY: LIONEL J. SUDDS
REVISED BY: LS
DATE REVISED: 8/01/09

BORDER LAST REVISED 4/11/2008
RELATIVE BORDER SCALE IS IN INCHES 0 1 2 3
USERNAME => trlenard
DGN FILE => 416374ua136.dgn
CU 04242
EA 163741

Dist	COUNTY	ROUTE	POST MILES TOTAL PROJECT	SHEET No.	TOTAL SHEETS
04	SF	101	8.2/9.2	299	654

Lionel J. Sudds 10-8-09
REGISTERED ELECTRICAL ENGINEER DATE

12-14-09
PLANS APPROVAL DATE

Lionel J. Sudds No. 15201 Exp 6-30-10 ELECT — REGISTERED PROFESSIONAL ENGINEER — STATE OF CALIFORNIA

THE STATE OF CALIFORNIA OR ITS OFFICERS OR AGENTS SHALL NOT BE RESPONSIBLE FOR THE ACCURACY OR COMPLETENESS OF SCANNED COPIES OF THIS PLAN SHEET.

CALIFORNIA STATE FIRE MARSHAL APPROVED
Approval of this plan does not authorize or approve any omission or deviation from applicable regulations. Final approval is subject to field inspection. One set of approved plans shall be available on the project site at all times.
Reviewed by: STEPHEN GUARINO
Approval date: 12-14-09

TO LHD
¾''C, 1-SLC
2½''C, 1-30#16 CONDUCTOR CABLE
TO FCS #6
SLC

90

ADDRESSABLE RELAY
OUTPUT No. 1 (ARO#1)
LHD ZONE 3 NORTH

ADDRESSABLE RELAY
OUTPUT No. 2 (ARO#2)
LHD ZONE 3 SOUTH

ADDRESSABLE RELAY
OUTPUT No. 3 (ARO#3)
LHD ZONE 4 NORTH

ADDRESSABLE RELAY
OUTPUT No. 4 (ARO#4)
LHD ZONE 4 SOUTH

ADDRESSABLE RELAY
OUTPUT No. 5 (ARO#5)
NORTHSIDE PULLSTATION

ADDRESSABLE RELAY
OUTPUT No. 6 (ARO#6)
SOUTHSIDE PULLSTATION

SLC OUT		SLC IN		OUTPUT DEVICE		
SLC A(+)	SLC B(-)	SLC A(+)	SLC B(-)	N. C.	COM	N. O.
1	2	1	4	5	6	7
1	2	3	4	5	6	7

TO LHD
¾''C, 1-SLC
1½''C, 12-FIRE ALARM CABLES
TO SPRINKLER SYSTEM
4-FIRE ALARM CABLES
2-3/4''C, 1-SLC TO PULLSTATION

8	7	6	5	4	3	2	1
LED (-)	LED (+)	SWITCH B	SWITCH A	SLC B(-)	SLC A(+)	SLC B(-)	SLC A(+)
REMOTE LED		INPUT DEVICE		SLC IN		SLC OUT	

ADDRESSABLE CONTACT
INPUT No. 3
ACI #3

ADDRESSABLE CONTACT
INPUT No. 2
ACI #2

REMOTE RELEASE MODULE #1
REMOTE RELEASE MODULE #2

A B A B
SLC

24 VDC		PSU		RELEASE			
+	-	+	-	STATUS	+	+	-	-

89

91

ADDRESSABLE CONTACT
INPUT No. 1
ACI #1

FIRE ALARM CABLES
2#12
1#12
3#12
120 VAC

24 VDC RTN
+24 VDC

FIRE ALARM POWER SUPPLY
120 VAC/24 VDC 6A MAXIMUN

92
SWITCH
AC FAIL
BATTERY
LOW BATTERY
JB FAN PWR
FAN ON

LOOP ISOLATOR

ADDRESSABLE CONTACT
INPUT No. 4
ACI #4

SLC OUT		SLC IN		INPUT DEVICE		REMOTE LED	
SLC A(+)	SLC B(-)	SLC A(+)	SLC B(-)	SWITCH A	SWITCH B	LED (+)	LED (-)
1	2	3	4	5	6	7	8

ADDRESSABLE RELAY
OUPUT No. 7 (ARO#7)
ZONE 3 WATER RELEASE

ADDRESSABLE RELAY
OUPUT No. 8 (ARO#8)
ZONE 4 WATER RELEASE

SLC OUT		SLC IN		OUTPUT DEVICE		
SLC A(+)	SLC B(-)	SLC A(+)	SLC B(-)	N. C.	COM	N. O.
1	2	1	4	5	6	7
1	2	3	4	5	6	7

TO TUNNEL
¾''C, 1-SLC

GENERAL NOTE:
(THIS SHEET ONLY)

1. PROGRAM THE TUNNEL FIRE ALARM CONTROL PANEL TO OPERATE THE ACI's, ARO's AND RRM's AS SHOWN ON THE PLANS AND IN ACCORDANCE TO THE TUNNEL FIRE ALARM CONTROL PANEL SPECIFICATION AS SPECIFIED IN THE SPECIAL PROVISIONS AND AS APPROVED BY THE STATE FIRE MARSHAL.

BATTERY SUBSTATION AND TUNNEL WORK
(TUNNEL FIRE CONTROL JB LAYOUT AND WIRING CONNECT DIAGRAM @ EN12)

NO SCALE

E-137

LAST REVISION DATE PLOTTED => 15-DEC-2009
TIME PLOTTED => 04:36
10-23-09

STATE OF CALIFORNIA - DEPARTMENT OF TRANSPORTATION
ELECTRICAL
Caltrans
FUNCTIONAL SUPERVISOR: BEHZAD GOLEMOHAMMADI
CALCULATED-DESIGNED BY: LIONEL J. SUDDS
CHECKED BY: LS
REVISED BY
DATE REVISED: 8/01/09

BORDER LAST REVISED 4/11/2008
RELATIVE BORDER SCALE IS IN INCHES 0 1 2 3
USERNAME => trlenard
DGN FILE => 416374ua137.dgn
CU 04242
EA 163741

Dist	COUNTY	ROUTE	POST MILES TOTAL PROJECT	SHEET No.	TOTAL SHEETS
04	SF	101	8.2/9.2	300	654

Lionel J. Sudds 10-8-09
REGISTERED ELECTRICAL ENGINEER DATE

12-14-09
PLANS APPROVAL DATE

REGISTERED PROFESSIONAL ENGINEER — Lionel J. Sudds No. 15201 Exp 6-30-10 ELECT — STATE OF CALIFORNIA

THE STATE OF CALIFORNIA OR ITS OFFICERS OR AGENTS SHALL NOT BE RESPONSIBLE FOR THE ACCURACY OR COMPLETENESS OF SCANNED COPIES OF THIS PLAN SHEET.

CALIFORNIA STATE FIRE MARSHAL APPROVED

Approval of this plan does not authorize or approve any omission or deviation from applicable regulations. Final approval is subject to field inspection. One set of approved plans shall be available on the project site at all times.

Reviewed by: STEPHEN GUARINO
Approval date: 12-14-09

TO LHD
¾''C, 1-SLC
2½''C, 1-30#16 CONDUCTOR CABLE
TO FCS #6
SLC

90

ADDRESSABLE RELAY
OUTPUT No. 1 (ARO#1)
LHD ZONE 5 NORTH

ADDRESSABLE RELAY
OUTPUT No. 2 (ARO#2)
LHD ZONE 5 SOUTH

ADDRESSABLE RELAY
OUTPUT No. 3 (ARO#3)
LHD ZONE 6 NORTH

ADDRESSABLE RELAY
OUTPUT No. 4 (ARO#4)
LHD ZONE 6 SOUTH

ADDRESSABLE RELAY
OUTPUT No. 5 (ARO#5)
NORTHSIDE PULLSTATION

ADDRESSABLE RELAY
OUTPUT No. 6 (ARO#6)
SOUTHSIDE PULLSTATION

SLC OUT		SLC IN		OUTPUT DEVICE		
SLC A(+)	SLC B(-)	SLC A(+)	SLC B(-)	N. C.	COM	N. O.
1	2	1	4	5	6	7
1	2	3	4	5	6	7

TO LHD
¾''C, 1-SLC
1½''C, 12-FIRE ALARM CABLES
TO SPRINKLER SYSTEM
4-FIRE ALARM CABLES
2¾''C, 1-SLC TO PULL STATION

8	7	6	5	4	3	2	1
LED (-)	LED (+)	SWITCH B	SWITCH A	SLC B(-)	SLC A(+)	SLC B(-)	SLC A(+)
REMOTE LED		INPUT DEVICE		SLC IN		SLC OUT	

ADDRESSABLE CONTACT
INPUT No. 3
ACI #3

ADDRESSABLE CONTACT
INPUT No. 2
ACI #2

REMOTE RELEASE MODULE #1

REMOTE RELEASE MODULE #2

A	B	A	B
SLC			

24 VDC		PSU	
+	-	+	-

PSU STATUS

RELEASE			
+	+	-	-

89

91

ADDRESSABLE CONTACT
INPUT No. 1
ACI#1

FIRE ALARM CABLES

2#12

1#12

3#12

120 VAC

24 VDC RTN

+24 VDC

FIRE ALARM POWER SUPPLY
120 VAC/24 VDC 6A MAXIMUN

92

SWITCH

AC FAIL

BATTERY

LOW BATTERY

JB FAN POWER

FAN ON

LOOP ISOLATOR

91

ADDRESSABLE CONTACT
INPUT No. 4
ACI #4

SLC OUT		SLC IN		INPUT DEVICE		REMOTE LED	
SLC A(+)	SLC B(-)	SLC A(+)	SLC B(-)	SWITCH A	SWITCH B	LED (+)	LED (-)
1	2	3	4	5	6	7	8

ADDRESSABLE RELAY
OUPUT No. 7 (ARO#7)
ZONE 5 WATER RELEASE

ADDRESSABLE RELAY
OUPUT No. 8 (ARO#8)
ZONE 6 WATER RELEASE

SLC OUT		SLC IN		OUTPUT DEVICE		
SLC A(+)	SLC B(-)	SLC A(+)	SLC B(-)	N. C.	COM	N. O.
1	2	1	4	5	6	7
1	2	3	4	5	6	7

90

1#12

TO TUNNEL
¾''C, 1-SLC

GENERAL NOTE:
(THIS SHEET ONLY)

1. PROGRAM THE TUNNEL FIRE ALARM CONTROL PANEL TO OPERATE THE LHD's, PULLSTATIONS, ACI's, ARO's AND RRM's AS SHOWN ON THE PLANS AND IN ACCORDANCE TO THE TUNNEL FIRE ALARM CONTROL PANEL SPECIFICATION AS SPECIFIED IN THE SPECIAL PROVISIONS AND AS APPROVED BY THE STATE FIRE MARSHAL.

BATTERY SUBSTATION AND TUNNEL WORK
(TUNNEL FIRE CONTROL JB LAYOUT AND WIRING CONNECT DIAGRAM @ EN9)

NO SCALE

E-138

CALCULATED-DESIGNED BY	LS	8/01/09
CHECKED BY	LIONEL J. SUDDS	DATE REVISED
FUNCTIONAL SUPERVISOR	BEHZAD GOLEMOHAMMADI	REVISED BY

STATE OF CALIFORNIA - DEPARTMENT OF TRANSPORTATION
ELECTRICAL
Caltrans

LAST REVISION DATE PLOTTED => 15-DEC-2009
TIME PLOTTED => 04:36
10-23-09

BORDER LAST REVISED 4/11/2008
RELATIVE BORDER SCALE IS IN INCHES 0 1 2 3
USERNAME => trlenard
DGN FILE => 416374ua138.dgn
CU 04242
EA 163741

Dist	COUNTY	ROUTE	POST MILES TOTAL PROJECT	SHEET No.	TOTAL SHEETS
04	SF	101	8.2/9.2	301	654

Lionel J. Sudds 10-8-09
REGISTERED ELECTRICAL ENGINEER DATE

12-14-09
PLANS APPROVAL DATE

REGISTERED PROFESSIONAL ENGINEER — Lionel J. Sudds No. 15201 Exp 6-30-10 ELECT — STATE OF CALIFORNIA

THE STATE OF CALIFORNIA OR ITS OFFICERS OR AGENTS SHALL NOT BE RESPONSIBLE FOR THE ACCURACY OR COMPLETENESS OF SCANNED COPIES OF THIS PLAN SHEET.

CALIFORNIA STATE FIRE MARSHAL APPROVED
Approval of this plan does not authorize or approve any omission or deviation from applicable regulations. Final approval is subject to field inspection. One set of approved plans shall be available on the project site at all times.
Reviewed by: STEPHEN GUARINO
Approval date: 12-14-09

TO LHD
¾"C, 1-SLC
2½"C, 1-30#16 CONDUCTOR CABLE
TO FCS #8
SLC

ADDRESSABLE RELAY
OUTPUT No. 1 (ARO#1)
LHD ZONE 7 NORTH

ADDRESSABLE RELAY
OUTPUT No. 2 (ARO#2)
LHD ZONE 7 SOUTH

ADDRESSABLE RELAY
OUTPUT No. 3 (ARO#3)
LHD ZONE 8 NORTH

ADDRESSABLE RELAY
OUTPUT No. 4 (ARO#4)
LHD ZONE 8 SOUTH

ADDRESSABLE RELAY
OUTPUT No. 5 (ARO#5)
NORTHSIDE PULLSTATION

ADDRESSABLE RELAY
OUTPUT No. 6 (ARO#6)
SOUTHSIDE PULLSTATION

SLC OUT		SLC IN		OUTPUT DEVICE		
SLC A(+)	SLC B(-)	SLC A(+)	SLC B(-)	N. C.	COM	N. O.
1	2	1	4	5	6	7
1	2	3	4	5	6	7

90

TO LHD
¾"C, 1-SLC
1½"C, 12-FIRE ALARM CABLES
TO SPRINKLER SYSTEM
4-FIRE ALARM CABLES
2¾"C, 1-SLC TO PULL STATION

8	7	6	5	4	3	2	1
LED (-)	LED (+)	SWITCH B	SWITCH A	SLC B(-)	SLC A(+)	SLC B(-)	SLC A(+)
REMOTE LED		INPUT DEVICE		SLC IN		SLC OUT	

ADDRESSABLE CONTACT
INPUT No. 3
ACI #3

ADDRESSABLE CONTACT
INPUT No. 2
ACI #2

REMOTE RELEASE MODULE #1

REMOTE RELEASE MODULE #2

A B A B
SLC

24 VDC		PSU STATUS		RELEASE			
+	-	+	-	+	+	-	-

89

ADDRESSABLE CONTACT
INPUT No. 1
ACI #1

91

FIRE ALARM CABLES
2#12
1#12

ADDRESSABLE CONTACT
INPUT No. 4
ACI #4

SLC OUT		SLC IN		INPUT DEVICE		REMOTE LED	
SLC A(+)	SLC B(-)	SLC A(+)	SLC B(-)	SWITCH A	SWITCH B	LED (+)	LED (-)
1	2	3	4	5	6	7	8

ADDRESSABLE RELAY
OUPUT No. 7 (ARO#7)
ZONE 1 WATER RELEASE

ADDRESSABLE RELAY
OUPUT No. 8 (ARO#8)
ZONE 2 WATER RELEASE

OUTPUT DEVICE		
N. C.	COM	N. O.
5	6	7

90

LOOP ISOLATOR

24 VDC RTN
+24 VDC
1#12
3#12
120 VAC

FIRE ALARM POWER SUPPLY
120 VAC/24 VDC 6A MAXIMUN

92

SWITCH

AC FAIL
BATTERY
LOW BATTERY

JB FAN POWER
FAN ON

TO TUNNEL
¾"C, 1-SLC

GENERAL NOTE:
(THIS SHEET ONLY)

1. PROGRAM THE TUNNEL FIRE ALARM CONTROL PANEL TO OPERATE THE LHD's, PULLSTATIONS, ACI's, ARO's AND RRM's AS SHOWN ON THE PLANS AND IN ACCORDANCE TO THE TUNNEL FIRE ALARM CONTROL PANEL SPECIFICATION AS SPECIFIED IN THE SPECIAL PROVISIONS AND AS APPROVED BY THE STATE FIRE MARSHAL.

BATTERY SUBSTATION AND TUNNEL WORK
(TUNNEL FIRE CONTROL JB LAYOUT AND WIRING CONNECT DIAGRAM @ EN7)

NO SCALE

E-139

LAST REVISION DATE PLOTTED => 15-DEC-2009
TIME PLOTTED => 04:36
10-23-09

STATE OF CALIFORNIA - DEPARTMENT OF TRANSPORTATION
ELECTRICAL
Caltrans
FUNCTIONAL SUPERVISOR: BEHZAD GOLEMOHAMMADI
CALCULATED-DESIGNED BY: LIONEL J. SUDDS
CHECKED BY: LS
REVISED BY
DATE REVISED: 8/01/09

BORDER LAST REVISED 4/11/2008
RELATIVE BORDER SCALE IS IN INCHES 0 1 2 3
USERNAME => trlenard
DGN FILE => 416374ua139.dgn
CU 04242
EA 163741

Dist	COUNTY	ROUTE	POST MILES TOTAL PROJECT	SHEET No.	TOTAL SHEETS
04	SF	101	8.2/9.2	302	654

Lionel J. Sudds 10-8-09
REGISTERED ELECTRICAL ENGINEER DATE

12-14-09
PLANS APPROVAL DATE

REGISTERED PROFESSIONAL ENGINEER — Lionel J. Sudds — No. 15201 — Exp 6-30-10 — ELECT — STATE OF CALIFORNIA

THE STATE OF CALIFORNIA OR ITS OFFICERS OR AGENTS SHALL NOT BE RESPONSIBLE FOR THE ACCURACY OR COMPLETENESS OF SCANNED COPIES OF THIS PLAN SHEET.

CALIFORNIA STATE FIRE MARSHAL APPROVED
Approval of this plan does not authorize or approve any omission or deviation from applicable regulations. Final approval is subject to field inspection. One set of approved plans shall be available on the project site at all times.
Reviewed by: STEPHEN GUARINO
Approval date: 12-14-09

TO LHD
¾"C, 1-SLC
2½"C, 1-30#16 CONDUCTOR CABLE
TO FCS #8
¾"C, 1-SLC
SLC

ADDRESSABLE RELAY
OUTPUT No. 1 (ARO#1)
LHD ZONE 9 NORTH

ADDRESSABLE RELAY
OUTPUT No. 2 (ARO#2)
LHD ZONE 9 SOUTH

ADDRESSABLE RELAY
OUTPUT No. 3 (ARO#3)
LHD ZONE 10 NORTH

ADDRESSABLE RELAY
OUTPUT No. 4 (ARO#4)
LHD ZONE 10 SOUTH

ADDRESSABLE RELAY
OUTPUT No. 5 (ARO#5)
NORTHSIDE PULLSTATION

ADDRESSABLE RELAY
OUTPUT No. 6 (ARO#6)
SOUTHSIDE PULLSTATION

SLC OUT		SLC IN		OUTPUT DEVICE		
SLC A(+)	SLC B(-)	SLC A(+)	SLC B(-)	N. C.	COM	N. O.
1	2	1	4	5	6	7
1	2	3	4	5	6	7

90

TO LHD
¾"C, 1-SLC
1½"C, 12-FIRE ALARM CABLES
TO SPRINKLER SYSTEM
4-FIRE ALARM CABLES
2¾"C, 1-SLC TO PULL STATION

8	7	6	5	4	3	2	1
LED (-)	LED (+)	SWITCH B	SWITCH A	SLC B(-)	SLC A(+)	SLC B(-)	SLC A(+)
REMOTE LED		INPUT DEVICE		SLC IN		SLC OUT	

ADDRESSABLE CONTACT
INPUT No. 3
ACI #3

ADDRESSABLE CONTACT
INPUT No. 2
ACI #2

REMOTE RELEASE MODULE #1

REMOTE RELEASE MODULE #2

A B A B
SLC

24 VDC		PSU		RELEASE			
+	-	+	-	STATUS	+	+	-	-

89

91

ADDRESSABLE CONTACT
INPUT No. 1
ACI #1

FIRE ALARM CABLES
2#12
1#12
3#12
120 VAC
24 VDC RTN
+24 VDC
FIRE ALARM POWER SUPPLY
120 VAC/24 VDC 6A MAXIMUN
92
SWITCH
AC FAIL
BATTERY
LOW BATTERY
JB FAN POWER
FAN ON

LOOP ISOLATOR

ADDRESSABLE CONTACT
INPUT No. 4
ACI #4

SLC OUT		SLC IN		INPUT DEVICE		REMOTE LED	
SLC A(+)	SLC B(-)	SLC A(+)	SLC B(-)	SWITCH A	SWITCH B	LED (+)	LED (-)
1	2	3	4	5	6	7	8

ADDRESSABLE RELAY
OUPUT No. 7 (ARO#7)
ZONE 9 WATER RELEASE

ADDRESSABLE RELAY
OUPUT No. 8 (ARO#8)
ZONE 10 WATER RELEASE

SLC OUT		SLC IN		OUTPUT DEVICE		
SLC A(+)	SLC B(-)	SLC A(+)	SLC B(-)	N. C.	COM	N. O.
1	2	1	4	5	6	7
1	2	3	4	5	6	7

90
1#12

TO TUNNEL
¾"C, 1-SLC

GENERAL NOTE:
(THIS SHEET ONLY)

1. PROGRAM THE TUNNEL FIRE ALARM CONTROL PANEL TO OPERATE THE ACI's, ARO's AND RRM's AS SHOWN ON THE PLANS AND IN ACCORDANCE TO THE TUNNEL FIRE ALARM CONTROL PANEL SPECIFICATION AS SPECIFIED IN THE SPECIAL PROVISIONS AND AS APPROVED BY THE STATE FIRE MARSHAL.

BATTERY SUBSTATION AND TUNNEL WORK
(TUNNEL FIRE CONTROL JB LAYOUT AND WIRING CONNECT DIAGRAM @ EN4)

NO SCALE

E-140

REVISED BY	DATE REVISED
LS	8/01/09

CALCULATED-DESIGNED BY: LIONEL J. SUDDS
CHECKED BY: LIONEL J. SUDDS
FUNCTIONAL SUPERVISOR: BEHZAD GOLEMOHAMMADI

STATE OF CALIFORNIA - DEPARTMENT OF TRANSPORTATION
ELECTRICAL

LAST REVISION: DATE PLOTTED => 15-DEC-2009, TIME PLOTTED => 04:36
10-23-09

BORDER LAST REVISED 4/11/2008 | RELATIVE BORDER SCALE IS IN INCHES 0 1 2 3 | USERNAME => trienard, DGN FILE => 416374ua140.dgn | CU 04242 | EA 163741

Dist	COUNTY	ROUTE	POST MILES TOTAL PROJECT	SHEET No.	TOTAL SHEETS
04	SF	101	8.2/9.2	303	654

REGISTERED ELECTRICAL ENGINEER — 10-8-09 DATE

12-14-09
PLANS APPROVAL DATE

Lionel J. Sudds No. 15201 Exp 6-30-10 ELECT — REGISTERED PROFESSIONAL ENGINEER — STATE OF CALIFORNIA

THE STATE OF CALIFORNIA OR ITS OFFICERS OR AGENTS SHALL NOT BE RESPONSIBLE FOR THE ACCURACY OR COMPLETENESS OF SCANNED COPIES OF THIS PLAN SHEET.

CALIFORNIA STATE FIRE MARSHAL APPROVED

Approval of this plan does not authorize or approve any omission or deviation from applicable regulations. Final approval is subject to field inspection. One set of approved plans shall be available on the project site at all times.

Reviewed by: STEPHEN GUARINO

Approval date: 12-14-09

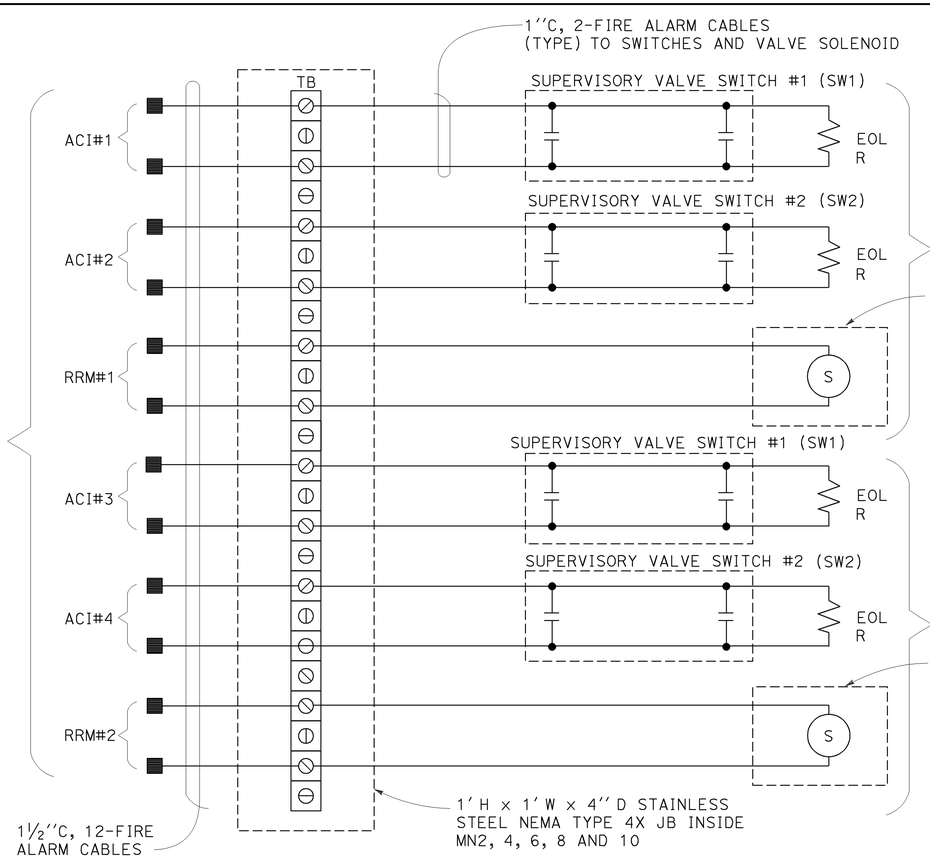

MN FIRE CONTROL SYSTEM WIRING AND CONNECTION DIAGRAM

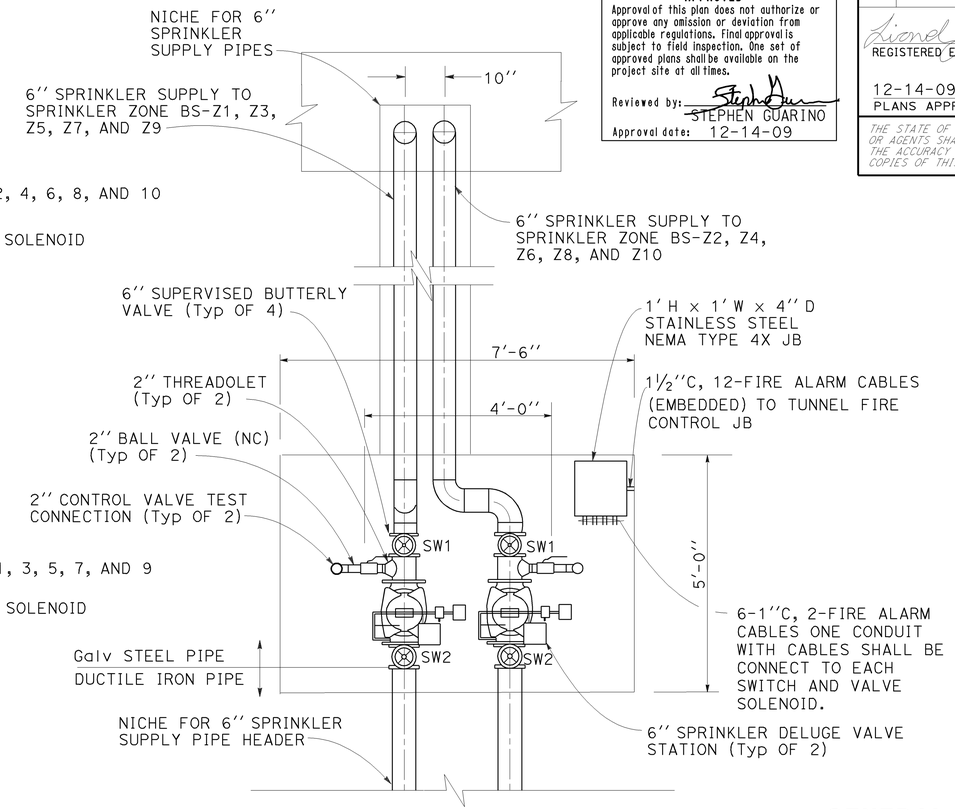

SECTION A-A

GENERAL NOTE:
(THIS SHEET ONLY)

1. PROGRAM THE TUNNEL FIRE ALARM CONTROL PANEL TO OPERATE THE ACI's, AND RRM's AS SHOWN ON THE PLANS AND IN ACCORDANCE TO THE TUNNEL FIRE ALARM CONTROL PANEL SPECIFICATION AS SPECIFIED IN THE SPECIAL PROVISIONS AND AS APPROVED BY THE STATE FIRE MARSHAL.

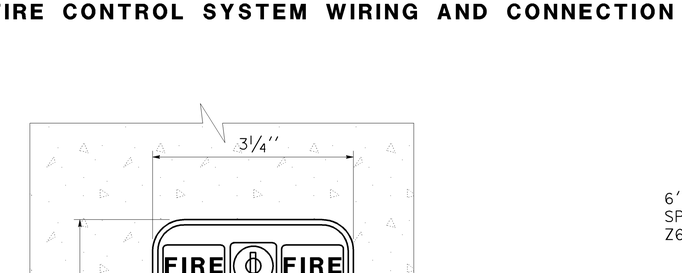

PULLSTATION LAYOUT (ON WALL OF TUNNEL)

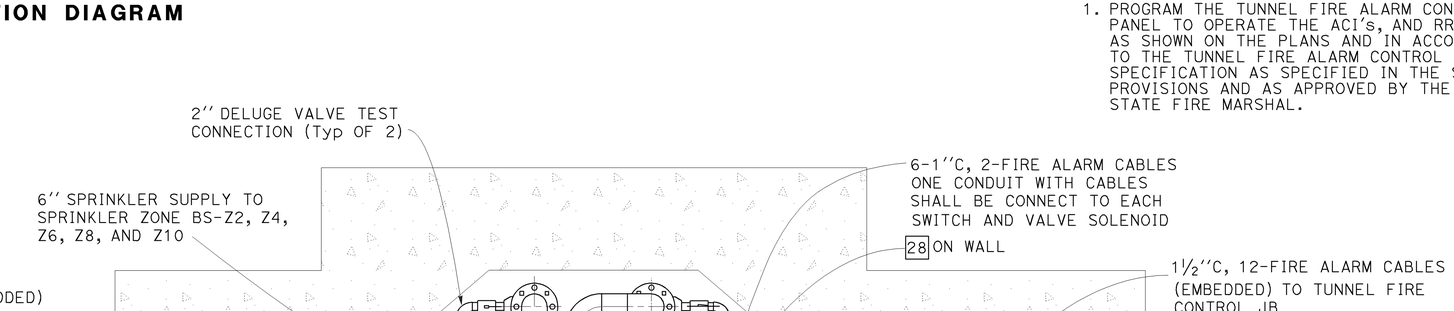

TUNNEL FIRE CONTROL LAYOUT FOR MN2, 4, 6, 8, AND 10

BATTERY SUBSTATION AND TUNNEL WORK

(TUNNEL FIRE CONTROL WIRING CONNECTION DIAGRAM AND EQUIPMENT LAYOUT)

NO SCALE

E-141

LAST REVISION 10-23-09 — DATE PLOTTED => 15-DEC-2009 — TIME PLOTTED => 04:36

		LS	8/01/09
		REVISED BY	DATE REVISED
LIONEL J. SUDDS	LIONEL J. SUDDS		
CALCULATED-DESIGNED BY	CHECKED BY		

FUNCTIONAL SUPERVISOR: BEHZAD GOLEMOHAMMADI

STATE OF CALIFORNIA - DEPARTMENT OF TRANSPORTATION — ELECTRICAL — Caltrans®

BORDER LAST REVISED 4/11/2008 — RELATIVE BORDER SCALE IS IN INCHES 0 1 2 3 — USERNAME => trlenard — DGN FILE => 416374ua141.dgn — CU 04242 — EA 163741

Dist	COUNTY	ROUTE	POST MILES TOTAL PROJECT	SHEET No.	TOTAL SHEETS
04	SF	101	8.2/9.2	304	654

Lionel J. Sudds 10-8-09
REGISTERED ELECTRICAL ENGINEER DATE

12-14-09
PLANS APPROVAL DATE

Lionel J. Sudds No. 15201 Exp 6-30-10 ELECT — REGISTERED PROFESSIONAL ENGINEER — STATE OF CALIFORNIA

THE STATE OF CALIFORNIA OR ITS OFFICERS OR AGENTS SHALL NOT BE RESPONSIBLE FOR THE ACCURACY OR COMPLETENESS OF SCANNED COPIES OF THIS PLAN SHEET.

CALIFORNIA STATE FIRE MARSHAL APPROVED
Approval of this plan does not authorize or approve any omission or deviation from applicable regulations. Final approval is subject to field inspection. One set of approved plans shall be available on the project site at all times.
Reviewed by: STEPHEN GUARINO
Approval date: 12-14-09

NOTES: (THIS SHEET ONLY)

1. INSTALL 1#500 kcmil STANDARD ANNEALED SOFT-DRAWN BARE COPPER CONDUCTOR FOR GEC INSIDE CONCRETE (SEE SHEET E-87 FOR LOCATION).
2. INSTALL 1#500 kcmil STANDARD ANNEALED SOFT-DRAWN BARECOPPER CONDUCTOR PIGTAIL BETWEEN THE GEC AND THE NEARBY REBAR-EMBEDDED INSIDE CONCRETE.
3. INSTALL 1#500 kcmil STANDARD ANNEALED SOFT-DRAWN BARE COPPER CONDUCTOR PIGTAIL BETWEEN THE GEC AND 12′ INSIDE THE ELECTRICAL NICHE.

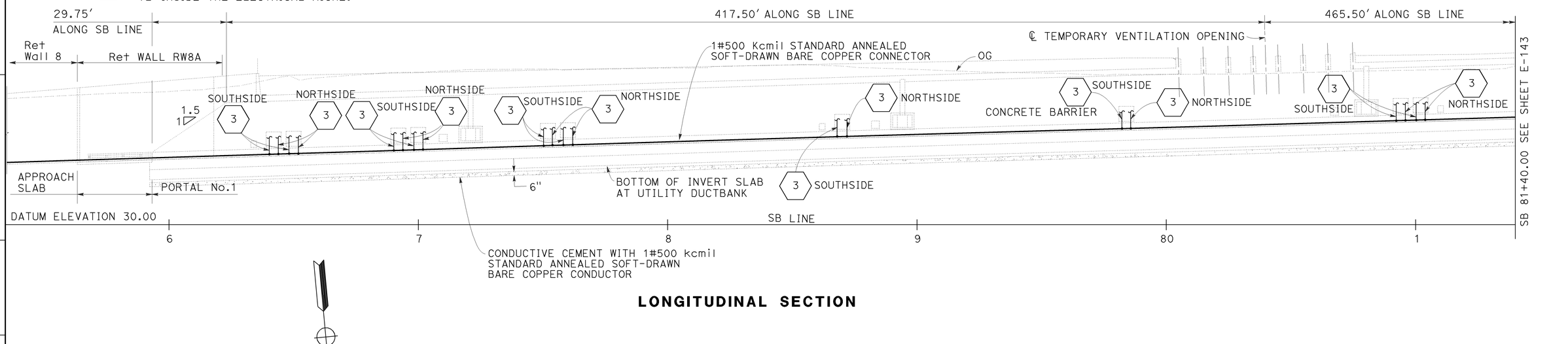

LONGITUDINAL SECTION

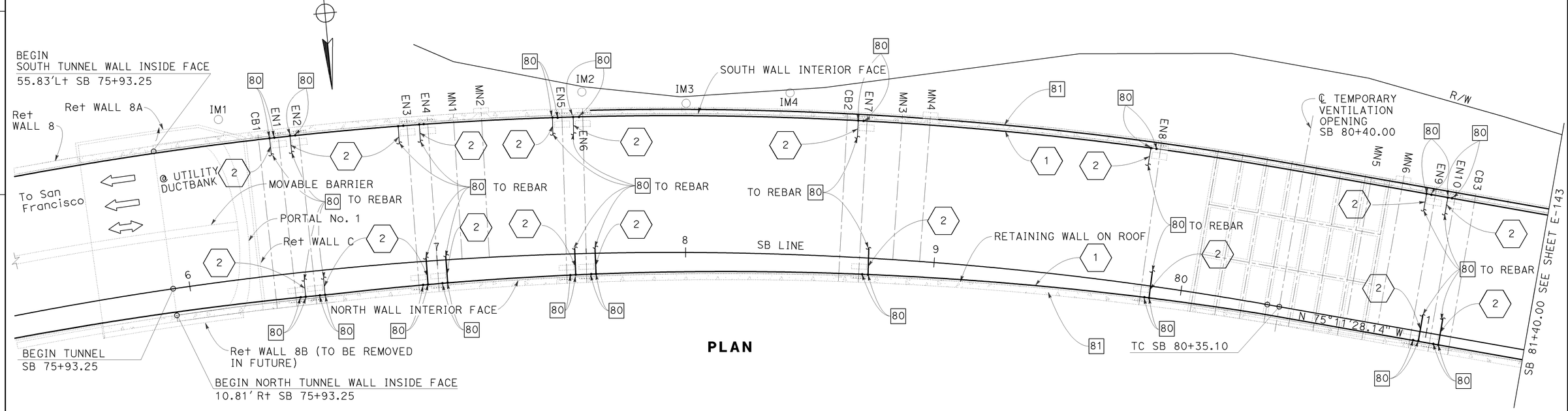

PLAN

GROUNDING, CONDUITS EMBEDDED IN STRUCTURES

TUNNEL GROUNDING ELECTRODE SYSTEM

SCALE: 1″= 20′

E-142

LAST REVISION 10-23-09 | DATE PLOTTED => 14-DEC-2009 | TIME PLOTTED => 16:20

STATE OF CALIFORNIA - DEPARTMENT OF TRANSPORTATION
ELECTRICAL
FUNCTIONAL SUPERVISOR: BEHZAD GOLEMOHAMMADI
CALCULATED-DESIGNED BY | CHECKED BY
REVISED BY: LS | LIONEL J. SUDDS
DATE REVISED: 8/01/09 | LIONEL J. SUDDS

BORDER LAST REVISED 4/11/2008 | RELATIVE BORDER SCALE IS IN INCHES 0 1 2 3 | USERNAME => trlenard | DGN FILE => 416374ua142.dgn | CU 04242 | EA 163741

Dist	COUNTY	ROUTE	POST MILES TOTAL PROJECT	SHEET No.	TOTAL SHEETS
04	SF	101	8.2/9.2	305	654

REGISTERED ELECTRICAL ENGINEER 10-8-09 DATE

12-14-09
PLANS APPROVAL DATE

REGISTERED PROFESSIONAL ENGINEER Lionel J. Sudds No. 15201 Exp. 6-30-10 ELECT STATE OF CALIFORNIA

THE STATE OF CALIFORNIA OR ITS OFFICERS OR AGENTS SHALL NOT BE RESPONSIBLE FOR THE ACCURACY OR COMPLETENESS OF SCANNED COPIES OF THIS PLAN SHEET.

CALIFORNIA STATE FIRE MARSHAL APPROVED
Approval of this plan does not authorize or approve any omission or deviation from applicable regulations. Final approval is subject to field inspection. One set of approved plans shall be available on the project site at all times.
Reviewed by: STEPHEN GUARINO
Approval date: 12-14-09

NOTES: (THIS SHEET ONLY)

1. INSTALL 1#500 kcmil STANDARD ANNEALED SOFT-DRAWN BARE COPPER CONDUCTOR FOR GEC INSIDE CONCRETE (SEE SHEET E-87 FOR LOCATION).
2. INSTALL 1#500 kcmil STANDARD ANNEALED SOFT-DRAWN BARE COPPER CONDUCTOR FROM THE GROUNDING ELECTRODE.
3. INSTALL 1#500 kcmil STANDARD ANNEALED SOFT-DRAWN BARE COPPER CONDUCTOR PIGTAIL BETWEEN THE GEC AND 12' INSIDE THE ELECTRICAL NICHE.
4. INSTALL 1#500 kcmil STANDARD ANNEALED SOFT-DRAWN BARE COPPER CONDUCTOR PIGTAIL BETWEEN THE GEC AND THE NEARLY REBAR EMBEDDED INSIDE CONCRETE.
5. INSTALL 1#500 kcmil STANDARD ANNEALED SOFT-DRAWN BARE COPPER CONDUCTOR PIGTAIL BETWEEN THE GEC AND THE JET FAN.

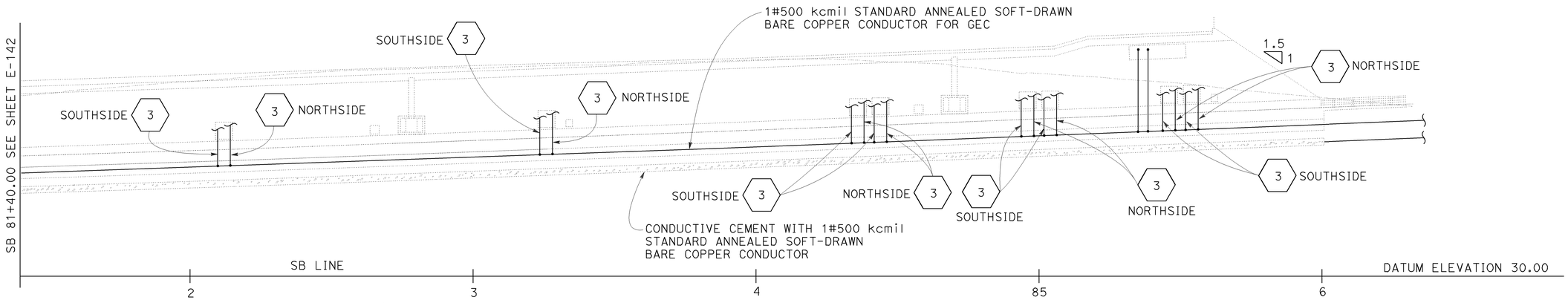

LONGITUDINAL SECTION

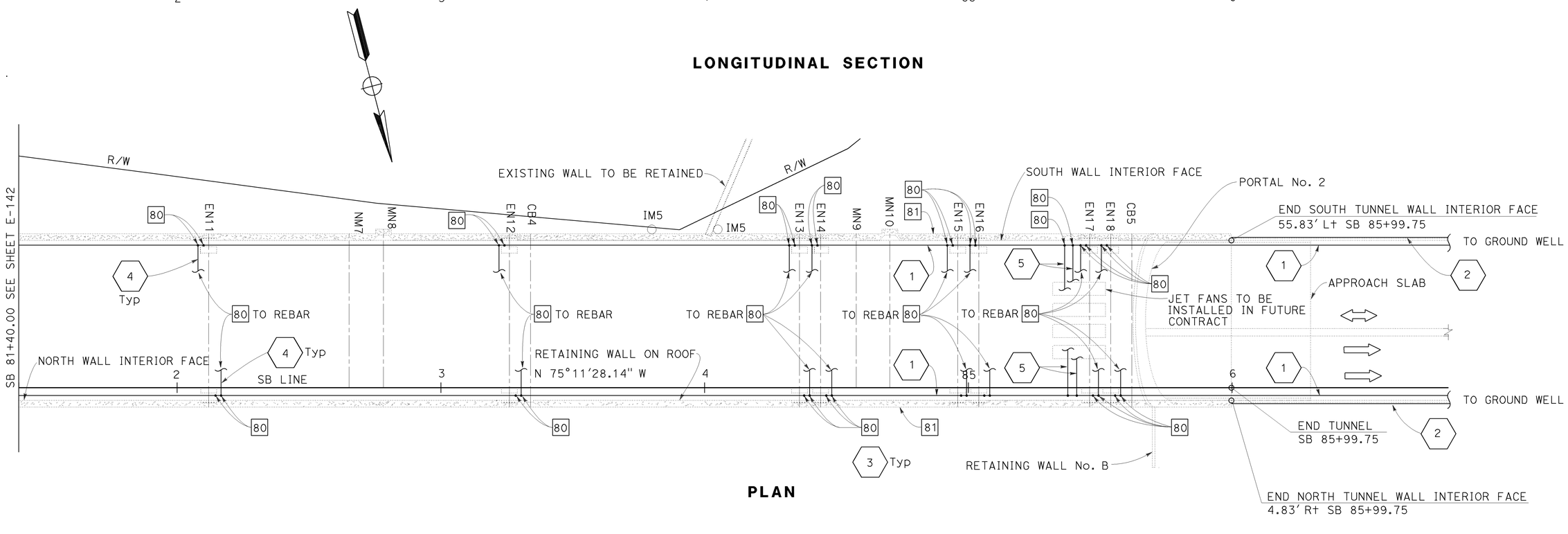

PLAN

GROUNDING, CONDUITS EMBEDDED IN STRUCTURES

TUNNEL GROUNDING ELECTRODE SYSTEM

SCALE: 1"= 20'

E-143

STATE OF CALIFORNIA - DEPARTMENT OF TRANSPORTATION
Caltrans
ELECTRICAL

FUNCTIONAL SUPERVISOR: BEHZAD GOLEMOHAMMADI
CALCULATED-DESIGNED BY: LIONEL J. SUDDS
CHECKED BY: LIONEL J. SUDDS
REVISED BY: LS
DATE REVISED: 8/01/09

LAST REVISION 10-23-09
DATE PLOTTED => 14-DEC-2009
TIME PLOTTED => 16:20

Dist	COUNTY	ROUTE	POST MILES TOTAL PROJECT	SHEET No.	TOTAL SHEETS
04	SF	101	8.2/9.2	306	654

Lionel J. Sudds 10-8-09
REGISTERED ELECTRICAL ENGINEER DATE

12-14-09
PLANS APPROVAL DATE

REGISTERED PROFESSIONAL ENGINEER — Lionel J. Sudds No. 15201 Exp 6-30-10 ELECT — STATE OF CALIFORNIA

THE STATE OF CALIFORNIA OR ITS OFFICERS OR AGENTS SHALL NOT BE RESPONSIBLE FOR THE ACCURACY OR COMPLETENESS OF SCANNED COPIES OF THIS PLAN SHEET.

CALIFORNIA STATE FIRE MARSHAL APPROVED
Approval of this plan does not authorize or approve any omission or deviation from applicable regulations. Final approval is subject to field inspection. One set of approved plans shall be available on the project site at all times.
Reviewed by: STEPHEN GUARINO
Approval date: 12-14-09

GENERAL NOTES: (THIS SHEET ONLY)

1. SEE SHEET E-89 FOR SECTION G-G, H-H AND J-J.
2. SEE SHEET E-89, DETAIL 1 FOR LOCATION OF CONDUITS (COMMUNICATION AND POWER) TO NICHE. INSTALL CONDUCTORS AND CABLE THROUGH COMMUNICATION AND POWER CONDUITS TO NICHE.

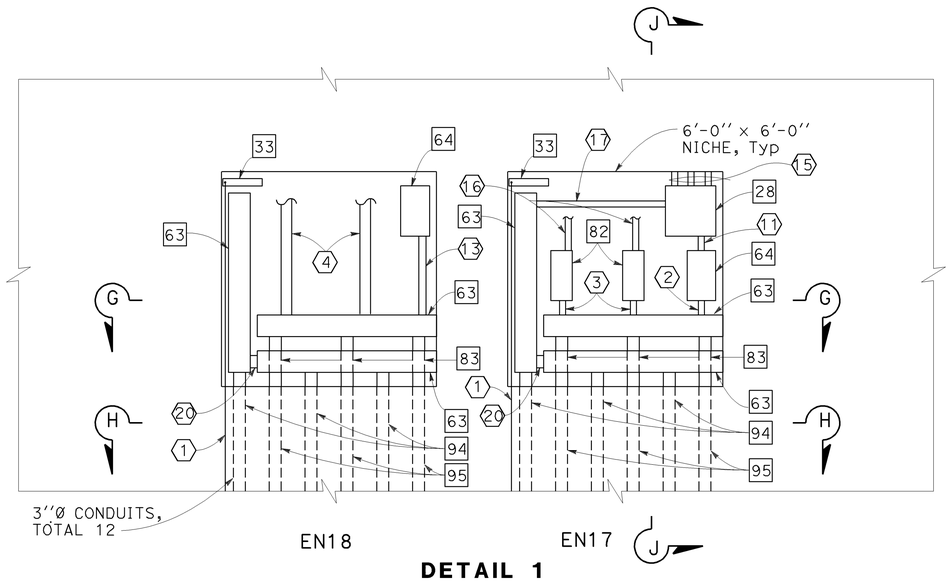

DETAIL 1

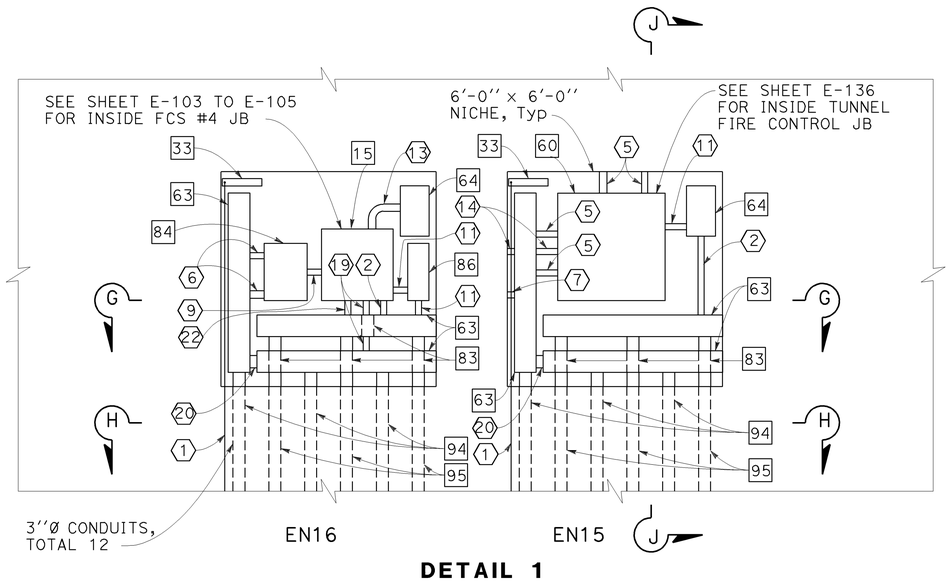

DETAIL 1

SOUTHSIDE

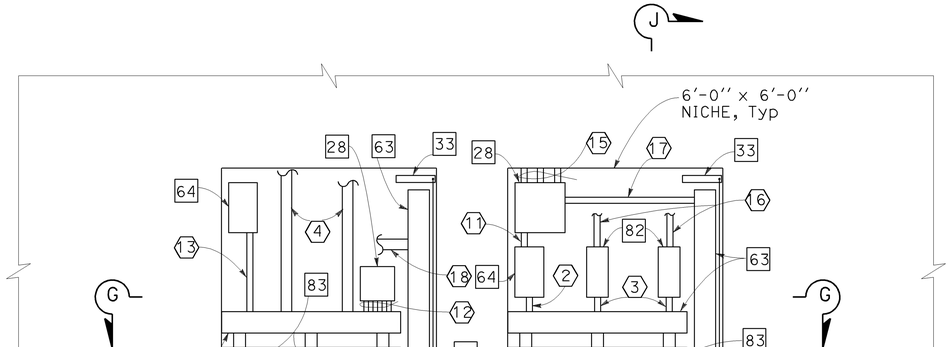

DETAIL 1

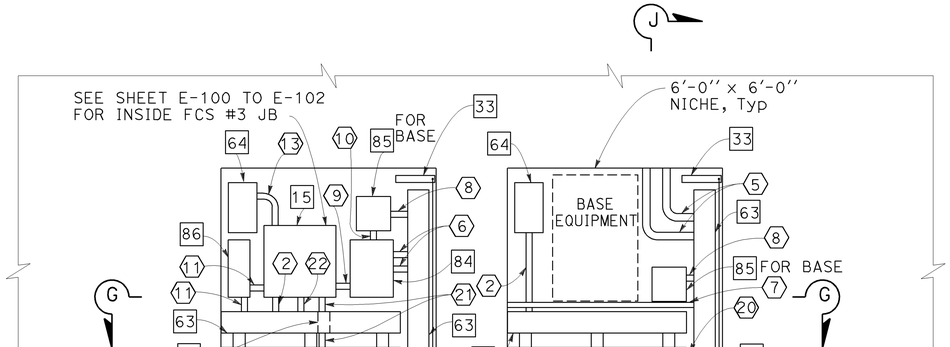

DETAIL 1

NORTHSIDE

NOTES: (THIS SHEET ONLY)

1. 1#500 Kcmil STANDARD ANNEALED SOFT-DRAWN BARE COPPER CONDUCTOR.
2. INSTALL 1½''C, 3#8 CONDUCTORS.
3. INSTALL 3''C, 4#500 Kcmil CONDUCTORS.
4. INSTALL 3''C, 3#250 Kcmil CONDUCTORS AND 1#6 CONDUCTORS. (FOR EGC FOR TUNNEL LIGHTING)
5. INSTALL ¾''C, 1-SLC.
6. INSTALL 1½''C, 1-36 FIBER SM FO CABLE.
7. INSTALL ¾''C, 2-SLC.
8. INSTALL 1½''C, 1-24 FIBER SM FO CABLE. (FOR BASE)
9. INSTALL 1½''C, 4-FO PATCH CABLES.
10. INSTALL 1½''C, 12-FO PATCH CABLES.
11. INSTALL 1½''C, 3#12 CONDUCTORS.
12. INSTALL 3-2''C, 4-2#4 CONDUCTOR CABLE.
13. INSTALL 2''C, 3#8 CONDUCTORS AND 3#12 CONDUCTORS.
14. INSTALL 1½''C, 12-FIRE ALARM CABLES.
15. INSTALL 3-1½''C, MT FOR JET FAN SENSORS.
16. INSTALL 4''C, MT FOR JET FAN POWER.
17. INSTALL 2½''C, 16-2p#18 CONDUCTOR CABLE.
18. INSTALL 2''C, MT FOR BASE.
19. INSTALL 3½''C, 1-RS-485 CABLE, 2-SLC, 1-30#16 CONDUCTOR CABLE, 16-2p#18 CONDUCTOR CABLE AND 1-10#12 CONDUCTOR CABLE.
20. INSTALL 4''C, MT FOR COMMUNICATION.
21. INSTALL 3''C, 1-RS-485 CABLE, 16-2p#18 CONDUCTOR CABLE AND 1-10#12 CONDUCTOR CABLE.
22. INSTALL 2''C, 2-4#14 CONDUCTOR CABLES, 2-2#4 CONDUCTOR CABLES.

BATTERY SUBSTATION AND TUNNEL WORK
(ELECTRICAL NICHE LAYOUTS)

NO SCALE

E-144

THIS PLAN IS ACCURATE FOR ELECTRICAL WORK ONLY

FOR NOTES, ABBREVIATIONS AND LEGEND, SEE SHEET E-??

CALCULATED-DESIGNED BY	CHECKED BY	REVISED BY	DATE REVISED
LIONEL J. SUDDS	LIONEL J. SUDDS	LS	8/01/09

FUNCTIONAL SUPERVISOR: BEHZAD GOLEMOHAMMADI

STATE OF CALIFORNIA - DEPARTMENT OF TRANSPORTATION
ELECTRICAL

Caltrans

LAST REVISION | DATE PLOTTED => 14-DEC-2009 | TIME PLOTTED => 16:20
10-23-09

BORDER LAST REVISED 4/11/2008

RELATIVE BORDER SCALE IS IN INCHES 0 1 2 3

USERNAME => trlenard
DGN FILE => 416374ua144.dgn

CU 04242 | EA 163741

Dist	COUNTY	ROUTE	POST MILES TOTAL PROJECT	SHEET No.	TOTAL SHEETS
04	SF	101	8.2/9.2	307	654

REGISTERED ELECTRICAL ENGINEER 10-8-09 DATE

12-14-09
PLANS APPROVAL DATE

REGISTERED PROFESSIONAL ENGINEER Lionel J. Sudds No. 15201 Exp. 6-30-10 ELECT STATE OF CALIFORNIA

THE STATE OF CALIFORNIA OR ITS OFFICERS OR AGENTS SHALL NOT BE RESPONSIBLE FOR THE ACCURACY OR COMPLETENESS OF SCANNED COPIES OF THIS PLAN SHEET.

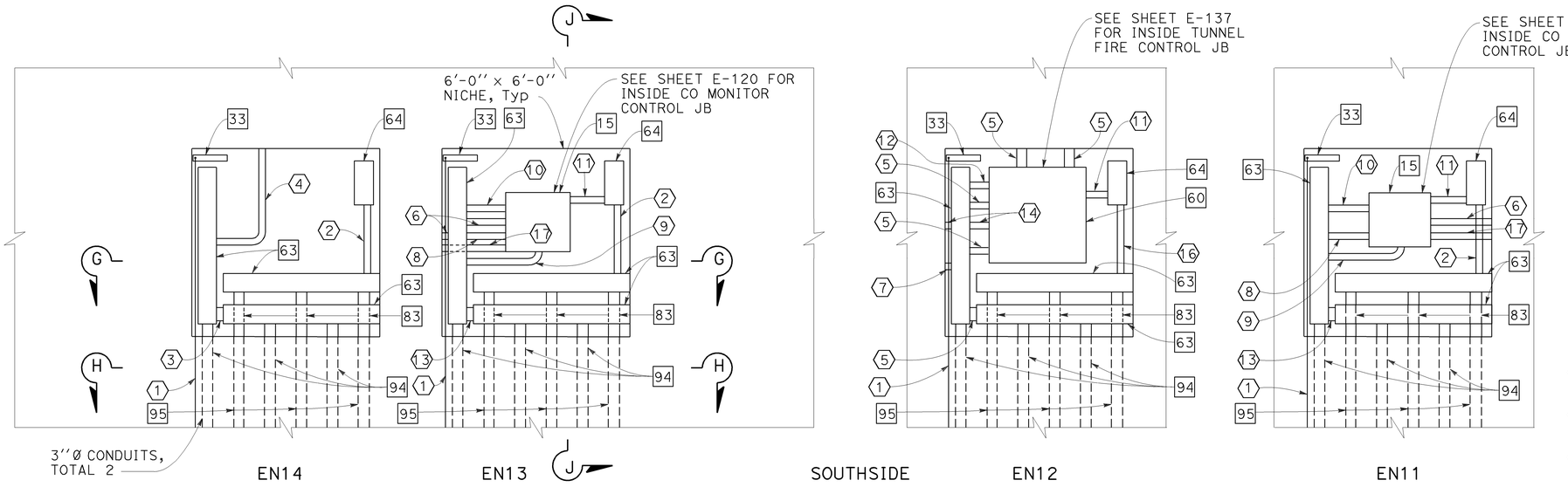

DETAIL 1

CALIFORNIA STATE FIRE MARSHAL APPROVED
Approval of this plan does not authorize or approve any omission or deviation from applicable regulations. Final approval is subject to field inspection. One set of approved plans shall be available on the project site at all times.
Reviewed by: STEPHEN GUARINO
Approval date: 12-14-09

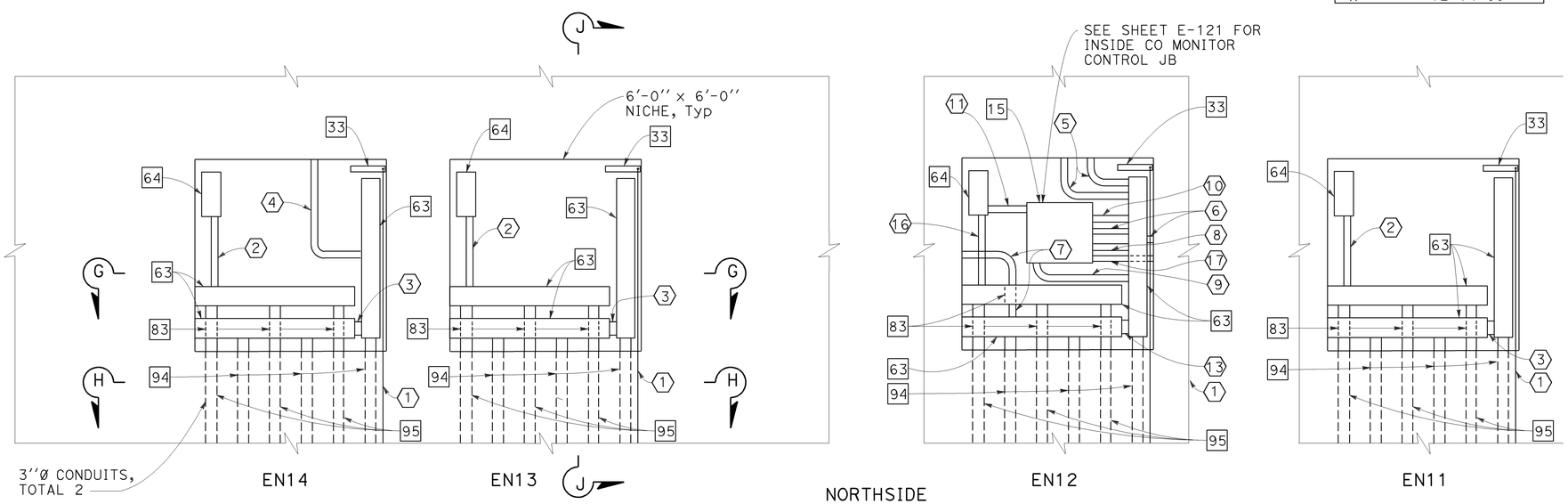

DETAIL 1

GENERAL NOTES: (THIS SHEET ONLY)

1. SEE SHEET E-89 FOR SECTION G-G, H-H AND J-J.
2. SEE SHEET E-89, DETAIL 1 FOR LOCATION OF CONDUITS (COMMUNICATION AND POWER) TO NICHE. INSTALL CONDUCTORS AND CABLE THROUGH COMMUNICATION AND POWER CONDUITS TO NICHE.

NOTES: (THIS SHEET ONLY)

1. 1#500 Kcmil STANDARD ANNEALED SOFT-DRAWN BARE COPPER CONDUCTOR.
2. INSTALL 1½"C, 3#8 CONDUCTORS.
3. INSTALL 4"C, MT FOR COMMUNICATIONS.
4. INSTALL CONDUIT AND CONDUCTORS FOR RADIO REBROADCASTING.
5. INSTALL ¾"C, 1-SLC.
6. INSTALL ¾"C, 2-RS-485 CABLE, 1-CO MONITORING CABLE AND 1-8#12 CONDUCTOR CABLE.
7. INSTALL ¾"C, 2-SLC.
8. INSTALL ¾"C, 1-RS-485 CABLE.
9. INSTALL 1½"C, 1-8#12 CONDUCTOR CABLE AND 1-CO MONITORING CABLE.
10. INSTALL 1½"C, 2-RS-485 CABLES.
11. INSTALL 1½"C, 3#12 CONDUCTORS.
12. INSTALL 2½"C, 1-30#16 CONDUCTOR CABLE.
13. INSTALL 4"C, 2-RS-485 CABLES.
14. INSTALL 1½"C, 12-FIRE ALARM CABLES.
15. INSTALL 4"C, 2-SLC.
16. INSTALL 2"C, 3#8 CONDUCTORS AND 3#12 CONDUCTORS.
17. INSTALL METAL TUBE FOR CO MONITOR CALIBRATION.

BATTERY SUBSTATION AND TUNNEL WORK
(ELECTRICAL NICHE LAYOUTS)
NO SCALE

E-145

STATE OF CALIFORNIA - DEPARTMENT OF TRANSPORTATION
Caltrans
ELECTRICAL

FUNCTIONAL SUPERVISOR: BEHZAD GOLEMOHAMMADI
CALCULATED-DESIGNED BY: LIONEL J. SUDDS
CHECKED BY: LIONEL J. SUDDS
REVISED BY: LS
DATE REVISED: 8/01/09

LAST REVISION: 10-29-09
DATE PLOTTED => 14-DEC-2009
TIME PLOTTED => 16:20

BORDER LAST REVISED 4/11/2008
RELATIVE BORDER SCALE IS IN INCHES 0 1 2 3
USERNAME => trlenard
DGN FILE => 416374ua145.dgn
CU 04242
EA 163741

Dist	COUNTY	ROUTE	POST MILES TOTAL PROJECT	SHEET No.	TOTAL SHEETS
04	SF	101	8.2/9.2	308	654

Lionel J. Sudds 10-8-09
REGISTERED ELECTRICAL ENGINEER DATE

12-14-09
PLANS APPROVAL DATE

Lionel J. Sudds No. 15201 Exp 6-30-10 ELECT — REGISTERED PROFESSIONAL ENGINEER — STATE OF CALIFORNIA

THE STATE OF CALIFORNIA OR ITS OFFICERS OR AGENTS SHALL NOT BE RESPONSIBLE FOR THE ACCURACY OR COMPLETENESS OF SCANNED COPIES OF THIS PLAN SHEET.

CALIFORNIA STATE FIRE MARSHAL APPROVED

Approval of this plan does not authorize or approve any omission or deviation from applicable regulations. Final approval is subject to field inspection. One set of approved plans shall be available on the project site at all times.

Reviewed by: STEPHEN GUARINO

Approval date: 12-14-09

GENERAL NOTES: (THIS SHEET ONLY)

1. SEE SHEET E-89 FOR SECTION G-G, H-H AND J-J.
2. SEE SHEET E-89, DETAIL 1 FOR LOCATION OF CONDUITS (COMMUNICATION AND POWER) TO NICHE. INSTALL CONDUCTORS AND CABLES THROUGH COMMUNICATION AND POWER CONDUITS TO NICHE.

21. INSTALL ¾''C, 2-RS-485 CABLE, AND 1-10#12 CONDUCTOR CABLE. 1-CO MONITORING CABLE.
22. INSTALL 1½''C, 1-8#12 CONDUCTOR CABLE, AND 1-CO MONITORING CABLE.
23. INSTALL 3''C, 1-RS-485 CABLE AND 2-10#12 CONDUCTOR CABLE.
24. INSTALL 2''C, 1-4#14 CONDUCTOR CABLE, AND 2-2#4 CONDUCTOR CABLES.
25. INSTALL METAL TUBE FOR CO MONITOR CALIBRATION.

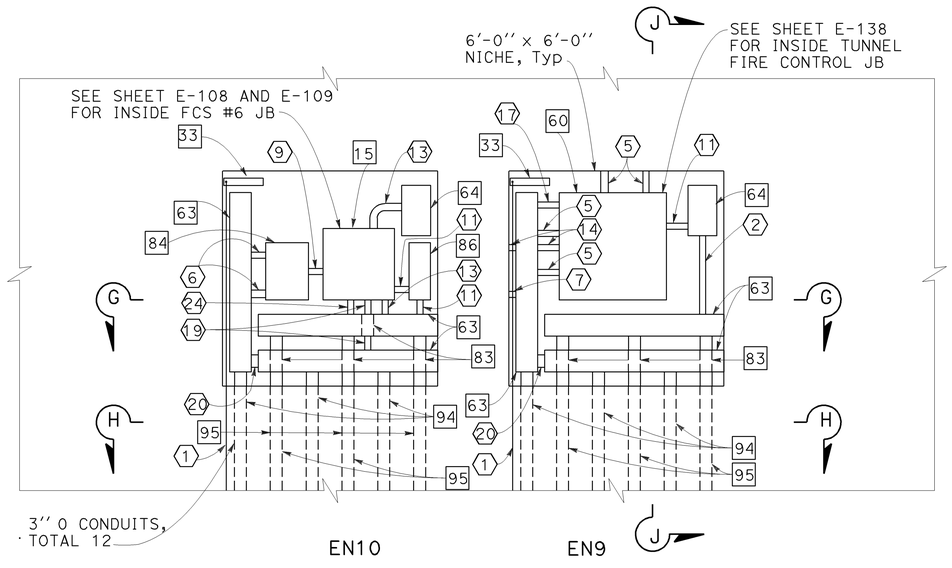

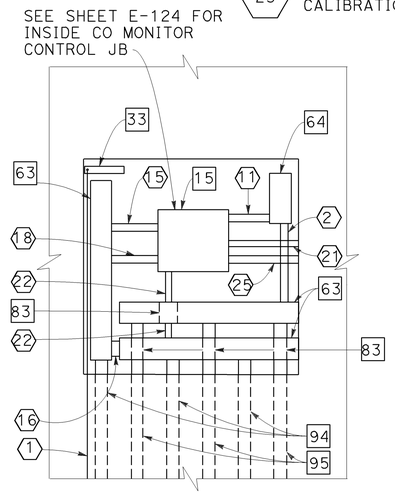

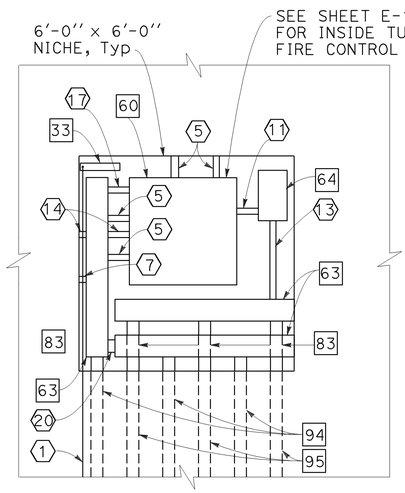

SOUTHSIDE

DETAIL 1

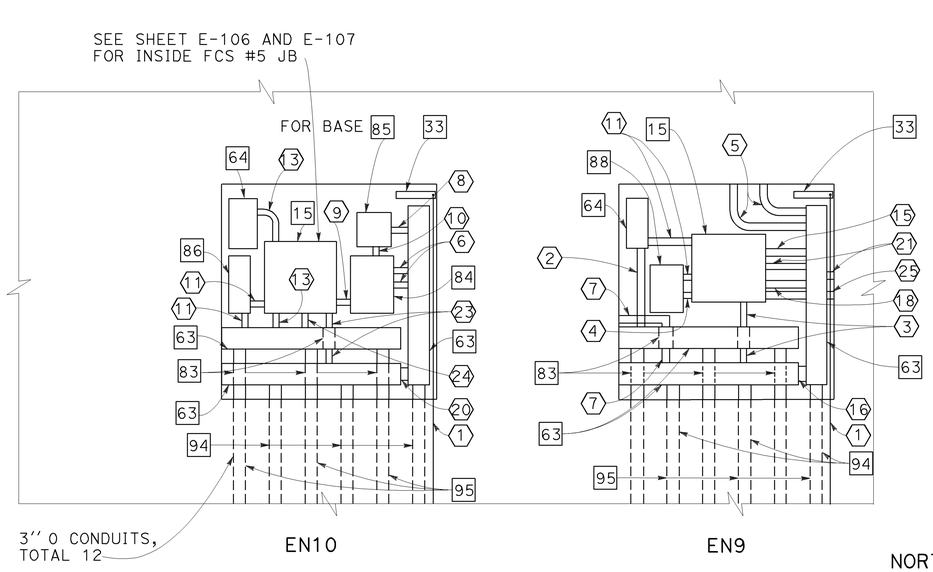

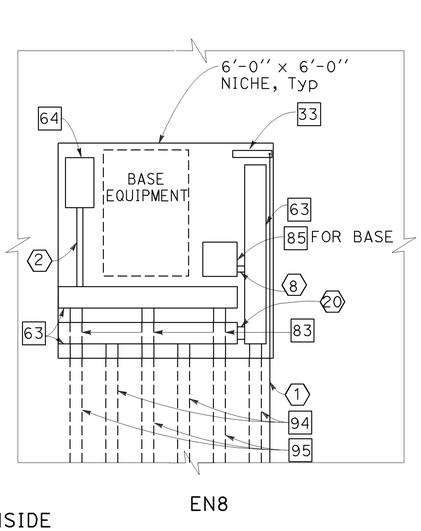

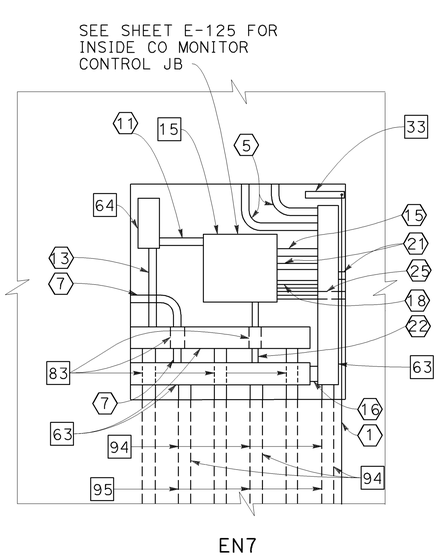

NORTHSIDE

DETAIL 1

NOTES: (THIS SHEET ONLY)

1. 1#500 Kcmil STANDARD ANNEALED SOFT DRAWN BARE COPPER CONDUCTOR.
2. INSTALL 1½''C, 3#8 CONDUCTORS.
3. INSTALL 3''C, 1-10#12 CONDUCTOR CABLE, 7-CO MONITORING CABLE.
4. INSTALL 1½''C, 7-CO MONITORING CABLES.
5. INSTALL ¾''C, 1-SLC.
6. INSTALL 1½''C, 1-36 FIBER SM FO CABLE.
7. INSTALL ¾''C, 2-SLC.
8. INSTALL 1½''C, 1-24 FIBER SM FO CABLE (FOR BASE).
9. INSTALL 1½''C, 4-FO PATCH CABLES.
10. INSTALL 1½''C, 12-FO PATCH CABLES.
11. INSTALL 1½''C, 3#12 CONDUCTORS.
12. INSTALL 3-2''C, 4-2#4 CONDUCTOR CABLE.
13. INSTALL 2''C, 3#8 CONDUCTORS AND 3#12 CONDUCTORS.
14. INSTALL 1½''C, 12-FIRE ALARM CABLES.
15. INSTALL 1½''C, 2-RS-485 CABLES.
16. INSTALL 4''C, 2-RS-485 CABLES.
17. INSTALL 2½''C, 1-30#16 CONDUCTOR CABLE.
18. INSTALL ¾''C, 1-RS-485 CABLES.
19. INSTALL 3½''C, 1-RS-485 CABLE, 2-SLC, 1-30#16 CONDUCTOR CABLE, AND 1-10#12 CONDUCTOR CABLE.
20. INSTALL 4''C, MT FOR COMMUNICATION.

BATTERY SUBSTATION AND TUNNEL WORK
(ELECTRICAL NICHE LAYOUTS)

NO SCALE

E-146

LAST REVISION | DATE PLOTTED => 14-DEC-2009 | TIME PLOTTED => 16:20
10-29-09

STATE OF CALIFORNIA - DEPARTMENT OF TRANSPORTATION
ELECTRICAL
Caltrans
FUNCTIONAL SUPERVISOR: BEHZAD GOLEMOHAMMADI
CALCULATED-DESIGNED BY: LIONEL J. SUDDS
CHECKED BY: LIONEL J. SUDDS
REVISED BY: LS
DATE REVISED: 8/01/09

BORDER LAST REVISED 4/11/2008 | RELATIVE BORDER SCALE IS IN INCHES 0 1 2 3 | USERNAME => trlenard | DGN FILE => 416374ua146.dgn | CU 04242 | EA 163741

Dist	COUNTY	ROUTE	POST MILES TOTAL PROJECT	SHEET No.	TOTAL SHEETS
04	SF	101	8.2/9.2	309	654

Lionel J. Sudds 10-8-09
REGISTERED ELECTRICAL ENGINEER DATE

12-14-09
PLANS APPROVAL DATE

REGISTERED PROFESSIONAL ENGINEER — Lionel J. Sudds No. 15201 Exp 6-30-10 ELECT — STATE OF CALIFORNIA

THE STATE OF CALIFORNIA OR ITS OFFICERS OR AGENTS SHALL NOT BE RESPONSIBLE FOR THE ACCURACY OR COMPLETENESS OF SCANNED COPIES OF THIS PLAN SHEET.

NOTES: (THIS SHEET ONLY)

1. 1 #500 kcmil STANDARD ANNEALED SOFT-DRAWN BARE COPPER CONDUCTOR.
2. INSTALL 1½''C, 3#8 CONDUCTORS.
3. INSTALL 1½''C, 1-10#12 CONDUCTOR CABLE.
4. INSTALL ¾''C, 2-RS-485 CABLE, 1-CO MONITORING CABLE AND 1-10#12 CONDUCTOR CABLE.
5. INSTALL ¾''C, 1-SLC.
6. INSTALL 1½''C, 1-36 FIBER SM FO CABLE.
7. INSTALL ¾''C, 2-SLC.
8. INSTALL 1½''C, 1-24 FIBER SM FO CABLE (FOR BASE).
9. INSTALL 1½''C, 4-FO PATCH CABLES.
10. INSTALL 2''C, 12-FO PATCH CABLES.
11. INSTALL 1½''C, 3#12 CONDUCTORS.
12. INSTALL ¾''C, 1-RS-485 CABLE.
13. INSTALL 2''C, 3#8 CONDUCTOR AND 3#12 CONDUCTORS.
14. INSTALL 1½''C, 12-FIRE ALARM CABLES.
15. INSTALL 1½''C, 2-RS-485 CABLES.
16. INSTALL 4''C, 2-SLC.
17. INSTALL 2½''C, 1-30#16 CONDUCTOR CABLE.
18. INSTALL 4''C, 2-RS-485 CABLE.
19. INSTALL 3½''C, 1-RS-485 CABLE, 2-SLC, 2-30#16 CONDUCTOR CABLE AND 1-10#12 CONDUCTOR CABLE.
20. INSTALL 4''C, MT FOR COMMUNICATION.
21. INSTALL 4''C, 2-30#16 CONDUCTOR CABLE AND 1-10#12 CONDUCTOR CABLE.
22. INSTALL METAL TUBE FOR CO MONITOR CALIBRATION.
23. INSTALL 4''C, 1-10#12 CONDUCTOR CABLE.
24. INSTALL 2''C, 2-4#14 CONDUCTOR CABLES, AND 2-2#4 CONDUCTOR CABLES.

GENERAL NOTE: (THIS SHEET ONLY)

SEE SHEET E-89 FOR SECTION G-G, H-H AND J-J.

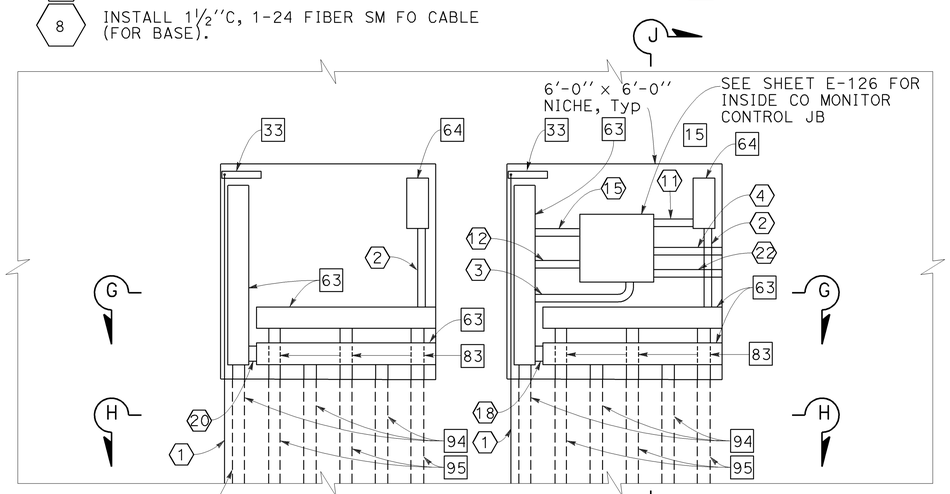

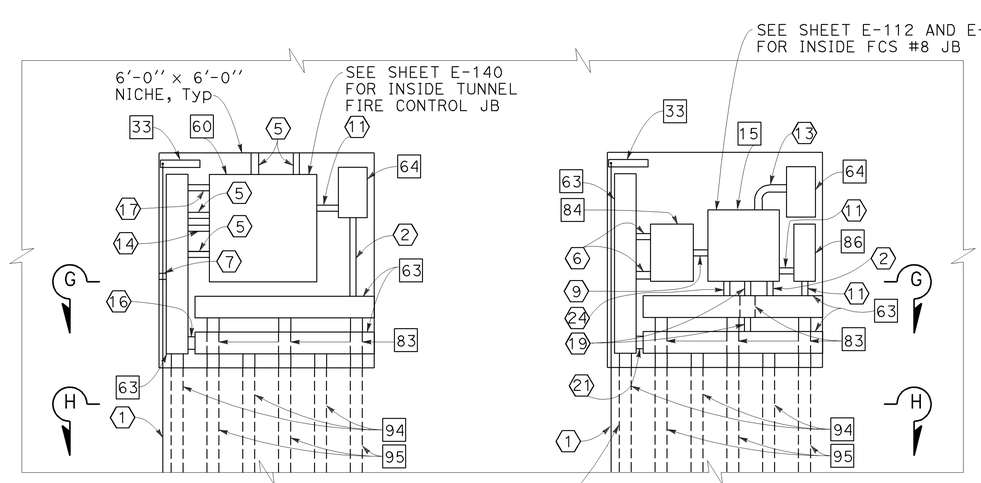

SOUTHSIDE
DETAIL 1

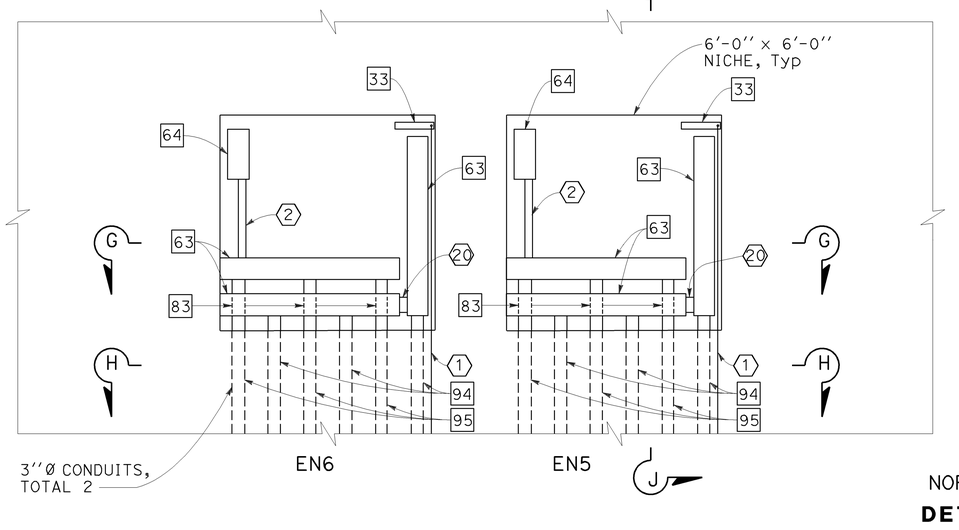

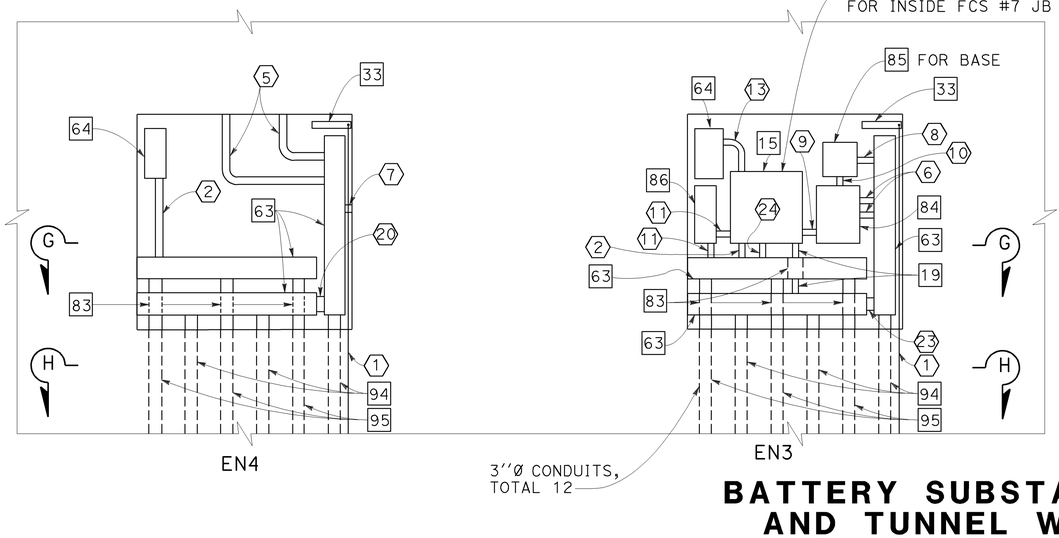

NORTHSIDE
DETAIL 1

THIS PLAN IS ACCURATE FOR ELECTRICAL WORK ONLY

FOR NOTES, ABBREVIATIONS AND LEGEND, SEE SHEET E-??

CALIFORNIA STATE FIRE MARSHAL APPROVED
Approval of this plan does not authorize or approve any omission or deviation from applicable regulations. Final approval is subject to field inspection. One set of approved plans shall be available on the project site at all times.
Reviewed by: STEPHEN GUARINO
Approval date: 12-14-09

BATTERY SUBSTATION AND TUNNEL WORK
(ELECTRICAL NICHE LAYOUTS)

NO SCALE

E-147

REVISED BY	DATE REVISED
LS	8/01/09

LIONEL J. SUDDS — CALCULATED-DESIGNED BY
LIONEL J. SUDDS — CHECKED BY
BEHZAD GOLEMOHAMMADI — FUNCTIONAL SUPERVISOR

STATE OF CALIFORNIA - DEPARTMENT OF TRANSPORTATION
ELECTRICAL

LAST REVISION DATE PLOTTED => 14-DEC-2009
10-24-09 TIME PLOTTED => 16:20

BORDER LAST REVISED 4/11/2008
RELATIVE BORDER SCALE IS IN INCHES 0 1 2 3
USERNAME => trlenard
DGN FILE => 416374ua147.dgn
CU 04242
EA 163741

Dist	COUNTY	ROUTE	POST MILES TOTAL PROJECT	SHEET No.	TOTAL SHEETS
04	SF	101	8.2/9.2	310	654

Lionel J. Sudds 10-8-09
REGISTERED ELECTRICAL ENGINEER DATE

12-14-09
PLANS APPROVAL DATE

REGISTERED PROFESSIONAL ENGINEER — Lionel J. Sudds — No. 15201 — Exp 6-30-10 — ELECT — STATE OF CALIFORNIA

THE STATE OF CALIFORNIA OR ITS OFFICERS OR AGENTS SHALL NOT BE RESPONSIBLE FOR THE ACCURACY OR COMPLETENESS OF SCANNED COPIES OF THIS PLAN SHEET.

CALIFORNIA STATE FIRE MARSHAL APPROVED

Approval of this plan does not authorize or approve any omission or deviation from applicable regulations. Final approval is subject to field inspection. One set of approved plans shall be available on the project site at all times.

Reviewed by: STEPHEN GUARINO

Approval date: 12-14-09

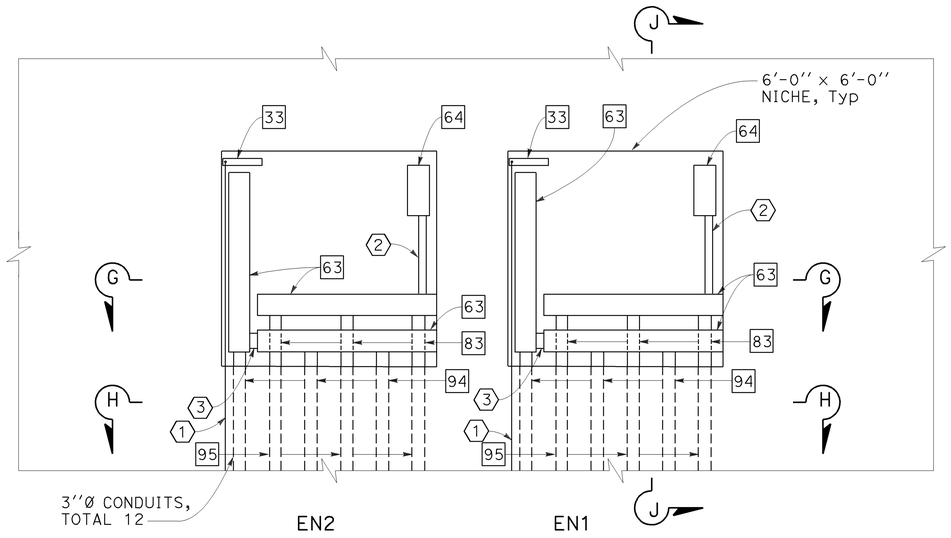

DETAIL 1

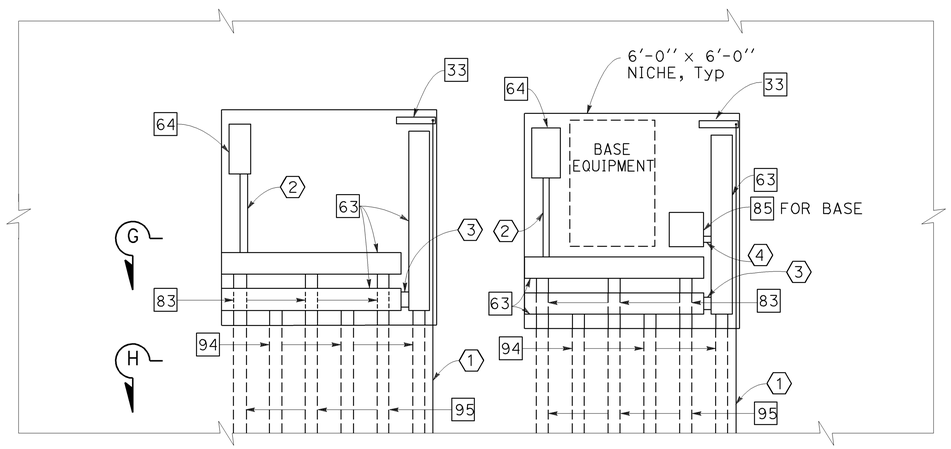

DETAIL 1

GENERAL NOTES: (THIS SHEET ONLY)

1. SEE SHEET E-89 FOR SECTION G-G, H-H, AND J-J.
2. SEE SHEET E-89 FOR DETAIL 1 FOR LOCATON OF CONDUITS (COMMUNICATION AND POWER) TO NICHE; INSTALL CONDUCTORS AND CABLE TROUGH COMMUNICATION AND POWER CONDUITS TO NICHE.

NOTES: (THIS SHEET ONLY)

(1) 1#500 kcmil STANDARD ANNEALED SOFT-DRAWN BARE COOPER CONDUCTOR.

(2) INSTALL 1½''C, 3#8 CONDUCTORS.

(3) INSTALL 3''C, MT FOR COMMUNICATION.

(4) INSTALL 1½''C, FIBER SM FO CABLE.

BATTERY SUBSTATION AND TUNNEL WORK
(ELECTRICAL NICHE LAYOUTS)
NO SCALE

E-148

THIS PLAN IS ACCURATE FOR ELECTRICAL WORK ONLY

FOR NOTES, ABBREVIATIONS AND LEGEND, SEE SHEET E-??

LAST REVISION DATE PLOTTED => 14-DEC-2009
10-09-09 TIME PLOTTED => 16:20

STATE OF CALIFORNIA - DEPARTMENT OF TRANSPORTATION
Caltrans®
ELECTRICAL
FUNCTIONAL SUPERVISOR: BEHZAD GOLEMOHAMMADI
CALCULATED-DESIGNED BY: LIONEL J. SUDDS
CHECKED BY: LIONEL J. SUDDS
REVISED BY: LS
DATE REVISED: 8/01/09

BORDER LAST REVISED 4/11/2008

RELATIVE BORDER SCALE IS IN INCHES 0 1 2 3

USERNAME => trienard
DGN FILE => 416374ua148.dgn

CU 04242

EA 163741

Dist	COUNTY	ROUTE	POST MILES TOTAL PROJECT	SHEET No.	TOTAL SHEETS
04	SF	101	8.2/9.2	311	654

CALIFORNIA STATE FIRE MARSHAL APPROVED

Approval of this plan does not authorize or approve any omission or deviation from applicable regulations. Final approval is subject to field inspection. One set of approved plans shall be available on the project site at all times.

Reviewed by: STEPHEN GUARINO

Approval date: 12-14-09

Lionel J. Sudds 10-8-09
REGISTERED ELECTRICAL ENGINEER DATE

12-14-09
PLANS APPROVAL DATE

REGISTERED PROFESSIONAL ENGINEER — Lionel J. Sudds — No. 15201 — Exp 6-30-10 — ELECT — STATE OF CALIFORNIA

THE STATE OF CALIFORNIA OR ITS OFFICERS OR AGENTS SHALL NOT BE RESPONSIBLE FOR THE ACCURACY OR COMPLETENESS OF SCANNED COPIES OF THIS PLAN SHEET.

ITEM No.	EQUIPMENT CONNECTED TO	FIBER OPTIC PATCH BOX		PANEL		FIBER	
		FROM	TO	FROM	TO	FROM	TO
001	SELF-HEALING FO MODEM IN SCADA JB (SOUTHBOUND)	EQ	A	N/A	P5	Tx1, Rx1	1,2
002	PATCH CABLE	B	B	P2	P10	1,2	1,2
003	SELF-HEALING FO MODEM @ EN16 SOUTH SIDE	J	EQ	P1	N/A	1,2	Rx1,Tx1
004	SELF-HEALING FO MODEM @ EN16 SOUTH SIDE	EQ	J	N/A	P4	Tx2, Rx2	1,2
005	SELF-HEALING FO MODEM @ EN10 SOUTH SIDE	K	EQ	P1	N/A	1,2	Rx1,Tx1
006	SELF-HEALING FO MODEM @ EN10 SOUTH SIDE	EQ	K	N/A	P4	Tx2, Rx2	1,2
007	SELF-HEALING FO MODEM @ EN3 NORTH SIDE	L	EQ	P1	N/A	1,2	Rx1,Tx1
008	SELF-HEALING FO MODEM @ EN3 NORTH SIDE	EQ	L	N/A	P4	Tx2, Rx2	1,2
009	SELF-HEALING FO MODEM @ EN3 NORTH SIDE	I	EQ	P1	N/A	1,2	Rx1,Tx1
010	SELF-HEALING FO MODEM @ EN3 NORTH SIDE	EQ	I	N/A	P4	Tx2, Rx2	1,2
011	SELF-HEALING FO MODEM @ EN10 NORTH SIDE	H	EQ	P1	N/A	1,2	Rx1,Tx1
012	SELF-HEALING FO MODEM @ EN10 NORTH SIDE	EQ	H	N/A	P4	Tx2, Rx2	1,2
013	SELF-HEALING FO MODEM @ EN16 NORTH SIDE	G	EQ	P1	N/A	1,2	Rx1,Tx1
014	SELF-HEALING FO MODEM @ EN16 NORTH SIDE	EQ	G	N/A	P4	Tx2, Rx2	1,2
015	PATCH CABLE	B	B	P9	P2	1,2	3,4
016	SELF-HEALING FO MODEM IN SCADA JB	A	EQ	5	N/A	3,4	Rx2, Tx2
017	RACK-MOUNTED ETHERNET SWITCH (ES) @ PAC3	EQ	B	N/A	P3	Tx1, Rx1	1,2
018	RACK-MOUNTED ETHERNET SWITCH (ES) @ TOS	F	EQ	P12	N/A	1,2	Rx1, Tx1
019	RACK-MOUNTED ETHERNET SWITCH (ES) @ TOS	EQ	F	N/A	P4	Tx2, Rx2	1,2
020	RACK-MOUNTED ETHERNET SWITCH (ES) @ FC	D	EQ	P4	N/A	1, 2	Tx1, Rx1
021	SELF-HEALING FO MODEM @ SUBMASTER AND PAC #3 CABINET	EQ	B	N/A	P1	Tx1, Rx1	1,2
022	PATCH CABLE	A	A	P6	P3	1,2	1,2
023	PATCH CABLE	A	A	P6	P4	3,4	1,2
024							
025							
026							
027							
028							
029							
030							
031							
032							
033							
034							
035							
036							
037							
038							
039							
040							
041							
042							
043							
044							
045							
046							
047							
048							
049							
050							

FO PATCH BOX LISTING

A - WALL- MOUNTED 72-CONNECT OR FO BOX INSIDE SCADA

B - RACK- MOUNTED FO PATCH PANEL INSIDE SCADA SYSTEM SUBMASTER AND PAC #3 CABINET

C - WALL- MOUNTED 24-CONNECT OR FO PATCH BOX THE SECONDARY UNIT SUBSTATION

D - RACK- MOUNTED FO PATCH PANEL INSIDE FO CABINET FOR TC

E - WALL- MOUNTED 24-CONNECT OR FO PATCH BOX INSIDE FO CABINET FOR TOS

F - RACK- MOUNTED FO PATCH PANEL INSIDE FO CABINET FOR TOS

G - WALL- MOUNTED 72-CONNECT NEMA 4X FO PATCH BOX NORTHSIDE EN16

H - WALL- MOUNTED 72-CONNECT NEMA 4X FO PATCH BOX NORTHSIDE EN10

I - WALL- MOUNTED 72-CONNECT NEMA 4X FO PATCH BOX NORTHSIDE EN3

J - WALL- MOUNTED 72-CONNECT NEMA 4X FO PATCH BOX SOUTHSIDE EN16

K - WALL- MOUNTED 72-CONNECT NEMA 4X FO PATCH BOX SOUTHSIDE EN10

L - WALL- MOUNTED 72-CONNECT NEMA 4X FO PATCH BOX SOUTHSIDE EN3

BATTERY SUBSTATION AND TUNNEL WORK
(FO CONNECTION TABLE)

E-149

LAST REVISION | DATE PLOTTED => 14-DEC-2009
10-19-09 | TIME PLOTTED => 16:20

CALCULATED-DESIGNED BY: LS
CHECKED BY: LIONEL J. SUDDS
REVISED BY: LIONEL J. SUDDS
DATE REVISED: 8/01/09
FUNCTIONAL SUPERVISOR: BEHZAD GOLEMOHAMMADI

STATE OF CALIFORNIA - DEPARTMENT OF TRANSPORTATION
Caltrans®
ELECTRICAL

BORDER LAST REVISED 4/11/2008

RELATIVE BORDER SCALE IS IN INCHES 0 1 2 3

USERNAME => trlenard
DGN FILE => 416374ua149.dgn

CU 04242

EA 163741

CALIFORNIA STATE FIRE MARSHAL APPROVED

Approval of this plan does not authorize or approve any omission or deviation from applicable regulations. Final approval is subject to field inspection. One set of approved plans shall be available on the project site at all times.

Reviewed by: STEPHEN GUARINO

Approval date: 12-14-09

Dist	COUNTY	ROUTE	POST MILES TOTAL PROJECT	SHEET No.	TOTAL SHEETS
04	SF	101	8.2/9.2	312	654

Lionel J. Sudds 10-8-09
REGISTERED ELECTRICAL ENGINEER DATE

Lionel J. Sudds No. 15201 Exp 6-30-10 ELECT — REGISTERED PROFESSIONAL ENGINEER — STATE OF CALIFORNIA

12-14-09
PLANS APPROVAL DATE

THE STATE OF CALIFORNIA OR ITS OFFICERS OR AGENTS SHALL NOT BE RESPONSIBLE FOR THE ACCURACY OR COMPLETENESS OF SCANNED COPIES OF THIS PLAN SHEET.

C/I	LOCATION	I/O #	STATUS OF DEVICE		TEXT DISPLAY		ACTION DISPLAY		COLOR		MESSAGE TO BE ON LOG	
			ON	OFF	ON	OFF	ON	OFF	ON	OFF	ON	OFF
1	SCADA SYSTEM JB	I 1	CLOSE	OPEN	CLOSE	OPEN	N/A	N/A	RED	GREEN	480 V MAIN CB CLOSE	480 V MAIN CB OPEN
2		I 2	LOW Batt	NORMAL	LOW Batt	N/A				N/A	T.O.S UPS LOW Batt	N/A
3		I 3	ON Batt		ON Batt						T.O.S UPS ON Batt	
4		I 4	LOW Batt		LOW Batt						TC UPS LOW Batt	
5		I 5	ON Batt	NORMAL	ON Batt					N/A	TC UPS ON Batt	
6		I 6	PRIMARY	SECONDARY CP	CP AT Batt	N/A	N/A	N/A	RED	GREEN	CONTROL POWER ON BATTERY	N/A
7		I 7	DOOR CLOSE	DOOR OPEN	N/A	DOOR OPEN	SHOW DOOR CLOSE	SHOW DOOR OPEN	N/A	N/A	SUBSTATION EQ DOOR CLOSE	SUBSTATION EQ DOOR OPEN
8		I 8	DOOR CLOSE	DOOR OPEN	N/A	DOOR OPEN	SHOW DOOR CLOSE	SHOW DOOR OPEN	N/A		T.O.S AND TC EQ DOOR CLOSE	T.O.S AND TC EQ DOOR OPEN
9		I 9	DOOR CLOSE	DOOR OPEN	N/A	DOOR OPEN	SHOW DOOR CLOSE	SHOW DOOR OPEN	N/A		T.O.S AND TC P DOOR CLOSE	T.O.S AND TC P DOOR OPEN
10		I 15	FAIL	OK	FAIL	N/A	N/A	N/A	RED		ETHERNET SWITCH #1 FAIL	N/A
11		I 16									ETHERNET SWITCH #2 FAIL	
12		I 17									REDUNDANT POWER SUPPLY CNT FAIL	
13		I 18	FAIL	OK	FAIL	N/A	N/A	N/A		N/A	POWER SUPPLY FAIL	N/A
14		I 19	CLOSE	OPEN	CLOSE	OPEN	SHOW SWITCH CLOSE	SHOW SWITCH OPEN	RED	GREEN	DC SWITCH FOR SWITCHGEAR BATTERIES CLOSE	DC SWITCH FOR SWITCHGEAR BATTERIES OPEN
15		I 20	ALARM	OK	FIRE	N/A	N/A	N/A	RED	N/A	FIRE IN SUBSTATION ROOM	CLEAR
16		I 21	ALARM	OK	FIRE						FIRE IN T.O.S AND TC ROOM	CLEAR
17		I 22	ON BATTERY	NORMAL	ON Batt						BATTERY SUPPLYING LOAD	N/A
18		I 23	FAIL		FAIL						BY PASS SOURCE FAIL	BY PASS SOURCE RESTORED
19		I 24	POINT		POINT						INVERTER OUT OF SYNC	INVERTER IN SYNC
20		I 25	FAIL		FAIL						INVERTER FOR FAIL	N/A
21		I 26	LOW DC	NORMAL	LOW DC	N/A					DC VOLTAGE LOW	
22		I 27	ON STAND BY	ON Inv	STAND BY	Inv					INVERTER ON STANDBY	
23		I 28	FAIL	NORMAL	FAIL	N/A					INVERTER FAIL	
24		I 29	HIGH		HIGH						INVERTER OVER HEATED	
25		I 30	H V		H V						HIGH AC VOLTAGE	
26	SCADA SYSTEM JB	I 31	TROUBLE	NORMAL	TROUBLE	N/A				N/A	TROUBLE WITH INVERTER	N/A
27	FCS #1JB	I 1	CLOSE	OPEN	CLOSE	OPEN				GREEN	MVCB #1 CLOSE	MVCB #1 OPEN
28		I 2	FAIL	NORMAL	FAIL	OPEN	N/A		RED	GREEN	PROTECTIVE RELAY #1 FAIL	MVCB #1 OPEN
29		I 3	CHARGING	CHARGED	CHARGING	CHARGED	FLASHING		YELLOW	YELLOW	N/A	MVCB #1 CHARGED
30		I 4	LOCAL	REMOTE	LOCAL	REMOTE	N/A	N/A	WHITE	PURPLE	MVCB #1 ON LOCAL	MVCB #1 REMOTE
31		I 5										
32		I 6	FAIL	NORMAL	FAIL	N/A	N/A	N/A	RED	N/A	BACK-UP PROTECTIVE RELAY FAIL	N/A
33		I 7	LOCKOUT	N/A	LOCKOUT	N/A				N/A	MVCB #1 LOCKOUT	N/A
34		I 8	CLOSE	OPEN	CLOSE	OPEN				GREEN	MVCB #2 CLOSE	MVCB #2 OPEN
35		I 9	FAIL	NORMAL	FAIL	N/A	N/A		RED	N/A	PROTECTIVE RELAY #2 FAIL	N/A
36		I 10	CHARGING	CHARGED	CHARGING	CHARGED	FLASHING		YELLOW	YELLOW	N/A	MEDIUM VOLTAGE CB2 CHARGED
37		I 11	LOCAL	REMOTE	LOCAL	REMOTE	N/A		WHITE	PURPLE	MEDIUM VOLTAGE CB2 ON LOCAL	MEDIUM VOLTAGE CB2 ON REMOTE
38		I 12	LOCKOUT	N/A	LOCKOUT	N/A	N/A		RED	N/A	MEDIUM VOLTAGE CB2 ON LOCKOUT	N/A
39		I 13	CLOSE	OPEN	CLOSE	OPEN	N/A		RED	GREEN	MEDIUM VOLTAGE CB	MVCB #3 OPEN
40		I 14	CHARGING	CHARGED	CHARGING	CHARGED	FLASHING		YELLOW	YELLOW		MVCB #3 CHARGED
41		I 15	FAIL	N/A	FAIL	N/A	N/A		RED	N/A	PROTECTIVE RELAY #3 FAIL	N/A
42		I 16	LOCAL	REMOTE	LOCAL	REMOTE	N/A		WHITE	PURPLE	MVCB #3 ON LOCAL	MVCB #3 ON REMOTE
43		I 17	LOCKOUT	N/A	LOCKOUT	N/A	FLASHING		RED	N/A	MVCB #3 LOCKOUT	N/A
44		I 18	87 FAIL	N/A	87 FAIL	N/A	N/A			N/A	LCDPR#1 87 FAIL	N/A
45		I 19	FAIL	N/A	FAIL	N/A				N/A	LCDPR#1 FAIL	N/A
46		I 20	CLOSE	OPEN	CLOSE	OPEN				GREEN	SWITCHGEAR MCC#1 CB CLOSE	SWITCHGEAR MCC#1 CB OPEN
47		I 21	CLOSE	OPEN	CLOSE	OPEN				GREEN	SWITCHGEAR MCC#2 CB CLOSE	SWITCHGEAR MCC#2 CB OPEN
48		I 22	CLOSE	OPEN	CLOSE	OPEN				GREEN	SWITCHGEAR SWB CB CLOSE	SWITCHGEAR SWB CB OPEN
49		I 23	FAIL	N/A	FAIL	N/A				N/A	POWER SUPPLY FAIL	N/A
50	FCS #1JB	I 24	FAIL	N/A	FAIL	N/A	N/A	N/A	RED	N/A	REDUNDANT PS CONTROLLER FAIL	N/A

ABBREVIATIONS: (THIS SHEET ONLY)

I 30
- 30 — DATA POINT # AT LOCATION
- I — TYPE OF DATA POINT: I - DIGITAL INPUT
  MO - MOMENTARY DIGITAL OUTPUT (10 SECONDS)
  HO - HOLD DIGITAL OUTPUT

BATTERY SUBSTATION AND TUNNEL WORK
(SCADA I/O POINT TABLE)

E-150

LAST REVISION DATE PLOTTED => 14-DEC-2009
11-02-09 TIME PLOTTED => 16:20

STATE OF CALIFORNIA - DEPARTMENT OF TRANSPORTATION
ELECTRICAL
FUNCTIONAL SUPERVISOR: BEHZAD GOLEMOHAMMADI
CALCULATED-DESIGNED BY: LS
CHECKED BY: LIONEL J. SUDDS
REVISED BY: LIONEL J. SUDDS
DATE REVISED: 8/01/09

BORDER LAST REVISED 4/11/2008
RELATIVE BORDER SCALE IS IN INCHES 0 1 2 3
USERNAME => trlenard
DGN FILE => 416374ua150.dgn
CU 04242
EA 163741

Dist	COUNTY	ROUTE	POST MILES TOTAL PROJECT	SHEET No.	TOTAL SHEETS
04	SF	101	8.2/9.2	313	654

Lionel J. Sudds 10-8-09
REGISTERED ELECTRICAL ENGINEER DATE

REGISTERED PROFESSIONAL ENGINEER — Lionel J. Sudds — No. 15201 — Exp 6-30-10 — ELECT — STATE OF CALIFORNIA

12-14-09
PLANS APPROVAL DATE

THE STATE OF CALIFORNIA OR ITS OFFICERS OR AGENTS SHALL NOT BE RESPONSIBLE FOR THE ACCURACY OR COMPLETENESS OF SCANNED COPIES OF THIS PLAN SHEET.

C/I	LOCATION	I/O #	STATUS OF DEVICE		TEXT DISPLAY		ACTION DISPLAY		COLOR		MESSAGE TO BE ON LOG	
			ON	OFF	ON	OFF	ON	OFF	ON	OFF	ON	OFF
51	FCS #1 JB	M 01	CLOSE	N/A	N/A	N/A	N/A	N/A	N/A	N/A	N/A	N/A
52		M 02	OPEN	N/A								
53		M 03	RESET	N/A								
54		M 04	RESET	N/A								
55		H 05	CP ON	N/A								
56		M 06	CLOSE	N/A								
57		M 07	OPEN	N/A								
58		M 08	RESET	N/A								
59		M 09	CLOSE	N/A								
60		M 10	OPEN	N/A								
61		M 11	RESET	N/A								
62		M 12	OPEN	N/A								
63		M 13	OPEN	N/A								
64		M 14	OPEN	N/A								
65	▼	M 15	OPEN	N/A								
66	FCS #1 JB	H 16	ON	OFF								
67	SCADA & PAC 3	H 01	ON	OFF								
68		H 02	ON	OFF								
69		H 03	ON	OFF								
70		H 04	ON	OFF								
71		H 05	ON	OFF								
72		M 06	OPEN	N/A								
73		H 07	ON	OFF								
74		M 08	OPEN	N/A								
75		H 09	ON	OFF								
76		H 10	ON	OFF								
77		H 11	ON	OFF								
78		M 12	OPEN	N/A								
79		H 13	ON	OFF								
80	▼	M 14	OPEN	N/A								
81	SCADA & PAC 3	M 15	ON	OFF								
82	FCS #3 JB	H 01	ON	OFF								
83		H 02	ON	OFF								
84		H 05	ON	OFF								
85		H 06	ON	OFF								
86		H 07	ON	OFF								
87	▼	H 08	ON	OFF								
88	FCS #3 JB	M 09	RESET	N/A								
89	FCS #4 JB	H 01	ON	OFF								
90		H 02	ON	OFF								
91		M 03	ON	N/A								
92		M 04	ON	N/A								
93		H 07	ON	OFF								
94		H 08	ON	OFF								
95	▼	H 09	ON	OFF								
96	FCS #4 JB	H 10	ON	OFF								
97	FCS #5 JB	H 01	ON	OFF								
98		H 02	ON	OFF								
99		H 03	ON	OFF								
100	▼	H 04	ON	OFF	▼	▼	▼	▼	▼	▼	▼	▼
101	FCS #5 JB	H 05	ON	OFF	N/A	N/A	N/A	N/A	N/A	N/A	N/A	N/A

ABBREVIATIONS: (THIS SHEET ONLY)

I 30
- 30 — DATA POINT # AT LOCATION
- I — TYPE OF DATA POINT:
  - I - DIGITAL INPUT
  - MO - MOMENTARY DIGITAL OUTPUT (10 SECONDS)
  - HO - HOLD DIGITAL OUTPUT

CALIFORNIA STATE FIRE MARSHAL APPROVED
Approval of this plan does not authorize or approve any omission or deviation from applicable regulations. Final approval is subject to field inspection. One set of approved plans shall be available on the project site at all times.
Reviewed by: STEPHEN GUARINO
Approval date: 12-14-09

BATTERY SUBSTATION AND TUNNEL WORK
(SCADA I/O POINT TABLE)

E-151

LAST REVISION | DATE PLOTTED => 14-DEC-2009
11-02-09 | TIME PLOTTED => 16:20

LS | 8/01/09 — REVISED BY | DATE REVISED
LIONEL J. SUDDS | LIONEL J. SUDDS — CALCULATED-DESIGNED BY | CHECKED BY
FUNCTIONAL SUPERVISOR: BEHZAD GOLEMOHAMMADI
STATE OF CALIFORNIA - DEPARTMENT OF TRANSPORTATION
Caltrans®
ELECTRICAL

Dist	COUNTY	ROUTE	POST MILES TOTAL PROJECT	SHEET No.	TOTAL SHEETS
04	SF	101	8.2/9.2	314	654

Lionel J. Sudds 10-8-09
REGISTERED ELECTRICAL ENGINEER DATE

12-14-09
PLANS APPROVAL DATE

REGISTERED PROFESSIONAL ENGINEER — Lionel J. Sudds — No. 15201 — Exp 6-30-10 — ELECT — STATE OF CALIFORNIA

THE STATE OF CALIFORNIA OR ITS OFFICERS OR AGENTS SHALL NOT BE RESPONSIBLE FOR THE ACCURACY OR COMPLETENESS OF SCANNED COPIES OF THIS PLAN SHEET.

C/I	LOCATION	I/O #	STATUS OF DEVICE		TEXT DISPLAY		ACTION DISPLAY		COLOR		MESSAGE TO BE ON LOG	
			ON	OFF	ON	OFF	ON	OFF	ON	OFF	ON	OFF
102	FCS #6 JB	M 01	RESET	N/A	N/A	N/A	N/A	N/A	N/A	N/A	N/A	N/A
103		H 02	ON	OFF								
104		M 03	ON	N/A								
105		M 04	ON	N/A								
106		M 05	ON	N/A								
107		M 06	ON	N/A								
108		H 07	ON	OFF								
109		H 08	ON	OFF								
110		H 09	ON	OFF								
111	FCS #6 JB	H 10	ON	OFF								
112	FCS #7 JB	M 01	RESET	N/A								
113		H 03	ON	OFF								
114		H 02		OFF								
115		H 04		OFF								
116		H 05		OFF								
117		H 06		OFF								
118	FCS #7 JB	H 07		OFF								
119	FCS #8 JB	H 01		OFF								
120		H 02		OFF								
121		M 03		N/A								
122		M 04		N/A								
123		M 05		N/A								
124		M 06		N/A								
125		H 07		OFF								
126		H 08		OFF								
127		H 09		OFF								
128	FCS #8 JB	H 10	ON	OFF	N/A				N/A		N/A	
129	SCADA & PAC 3	I 1	BACKUP	NORMAL	BACKUP				RED		MCC #1 JET FAN #1 ON BACK UP CONTROLS	
130		I 8									MCC #1 JET FAN #2 ON BACK UP CONTROLS	
131		I 15									MCC #1 JET FAN #3 ON BACK UP CONTROLS	
132		I 22									MCC #1 JET FAN #4 ON BACK UP CONTROLS	
133		I 43									MCC #2 JET FAN #1 ON BACK UP CONTROLS	
134		I 50	BACKUP	NORMAL	BACKUP	N/A				N/A	MCC #2 JET FAN #2 ON BACK UP CONTROLS	N/A
135		I 2	CLOSE	OPEN	CLOSE	OPEN				GREEN	MCC #1 JET FAN #1 CB CLOSE	MCC #1 JET FAN #1 CB OPEN
136		I 9									MCC #1 JET FAN #2 CB CLOSE	MCC #1 JET FAN #2 CB OPEN
137		I 16									MCC #1 JET FAN #3 CB CLOSE	MCC #1 JET FAN #3 CB OPEN
138		I 23									MCC #1 JET FAN #4 CB CLOSE	MCC #1 JET FAN #4 CB OPEN
139		I 44									MCC #2 JET FAN #1 CB CLOSE	MCC #2 JET FAN #1 CB OPEN
140	SCADA & PAC 3	I 51	CLOSE	OPEN	CLOSE	OPEN	N/A	N/A	RED	GREEN	MCC #2 JET FAN #2 CB CLOSE	MCC #2 JET FAN #2 CB OPEN

ABBREVIATIONS: (THIS SHEET ONLY)

I 30
- 30 — DATA POINT # AT LOCATION
- I — TYPE OF DATA POINT: I - DIGITAL INPUT
  - MO - MOMENTARY DIGITAL OUTPUT (10 SECONDS)
  - HO - HOLD DIGITAL OUTPUT

CALIFORNIA STATE FIRE MARSHAL APPROVED
Approval of this plan does not authorize or approve any omission or deviation from applicable regulations. Final approval is subject to field inspection. One set of approved plans shall be available on the project site at all times.
Reviewed by: STEPHEN GUARINO
Approval date: 12-14-09

BATTERY SUBSTATION AND TUNNEL WORK
(SCADA I/O POINT TABLE)

E-152

LAST REVISION | DATE PLOTTED => 14-DEC-2009 | 11-02-09 | TIME PLOTTED => 16:20

LS | 8/01/09 — REVISED BY | DATE REVISED
LIONEL J. SUDDS | LIONEL J. SUDDS — CALCULATED-DESIGNED BY | CHECKED BY
BEHZAD GOLEMOHAMMADI — FUNCTIONAL SUPERVISOR

STATE OF CALIFORNIA - DEPARTMENT OF TRANSPORTATION
ELECTRICAL
Caltrans

BORDER LAST REVISED 4/11/2008 | RELATIVE BORDER SCALE IS IN INCHES 0 1 2 3 | USERNAME => trienard | DGN FILE => 416374ua152.dgn | CU 04242 | EA 163741

C/I	LOCATION	I/O #	STATUS OF DEVICE		TEXT DISPLAY		ACTION DISPLAY		COLOR		MESSAGE TO BE ON LOG	
			ON	OFF	ON	OFF	ON	OFF	ON	OFF	ON	OFF
141	SCADA & PAC 3	I 3	CLOSE	OPEN	CLOSE	OPEN	N/A	N/A	RED	GREEN	N/A	N/A
142		I 10										
143		I 17										
144		I 24										
145		I 45										
146		I 52	CLOSE	OPEN	CLOSE	OPEN					N/A	N/A
147		I 4	ON	OFF	ON	OFF					MCC #1 JET FAN #1 ON	MCC #1 JET FAN #1 OFF
148		I 11									MCC #1 JET FAN #2 ON	MCC #1 JET FAN #2 OFF
149		I 18									MCC #1 JET FAN #3 ON	MCC #1 JET FAN #3 OFF
150		I 25									MCC #1 JET FAN #4 ON	MCC #1 JET FAN #4 OFF
151		I 46									MCC #2 JET FAN #1 ON	MCC #2 JET FAN #1 OFF
152		I 53	ON	OFF	ON	OFF			RED	GREEN	MCC #2 JET FAN #2 ON	MCC #2 JET FAN #2 OFF
153		I 5	LOCAL	REMOTE	LOCAL	REMOTE			WHITE	PURPLE	N/A	N/A
154		I 12										
155		I 19										
156		I 26										
157		I 47										
158		I 54	LOCAL	REMOTE	LOCAL	REMOTE			WHITE	PURPLE		
159		I 6	CLOSE	OPEN	CLOSE	OPEN			RED	GREEN		
160		I 13										
161		I 20										
162		I 27										
163		I 48										
164		I 55	CLOSE	OPEN	CLOSE	OPEN				GREEN	N/A	
165		I 7	FAULT	N/A	FAULT	N/A				N/A	MCC #1 JET FAN #1 SOFT-START FAIL	
166		I 14									MCC #1 JET FAN #2 SOFT-START FAIL	
167		I 21									MCC #1 JET FAN #3 SOFT-START FAIL	
168		I 28									MCC #1 JET FAN #4 SOFT-START FAIL	
169		I 49									MCC #2 JET FAN #1 SOFT-START FAIL	
170		I 56	FAULT		FAULT				RED		MCC #2 JET FAN #2 SOFT-START FAIL	
171		I 29	LOW		LOW				GREEN		MCC #1 JET FANS ON LOW VENTILATION	
172		I 57	LOW		LOW				GREEN		MCC #2 JET FANS ON LOW VENTILATION	
173		I 30	HIGH		HIGH				RED		MCC #1 JET FANS ON HIGH VENTILATION	
174		I 58	HIGH	N/A	HIGH				RED		MCC #2 JET FANS ON HIGH VENTILATION	
175	SCADA & PAC 3	I 31	ON	OFF	ON	N/A	N/A	N/A	RED	N/A	N/A	N/A

Dist	COUNTY	ROUTE	POST MILES TOTAL PROJECT	SHEET No.	TOTAL SHEETS
04	SF	101	8.2/9.2	315	654

Lionel J. Sudds 10-8-09
REGISTERED ELECTRICAL ENGINEER DATE

12-14-09
PLANS APPROVAL DATE

REGISTERED PROFESSIONAL ENGINEER Lionel J. Sudds No. 15201 Exp 6-30-10 ELECT STATE OF CALIFORNIA

THE STATE OF CALIFORNIA OR ITS OFFICERS OR AGENTS SHALL NOT BE RESPONSIBLE FOR THE ACCURACY OR COMPLETENESS OF SCANNED COPIES OF THIS PLAN SHEET.

ABBREVIATIONS: (THIS SHEET ONLY)

I 30
- 30 — DATA POINT # AT LOCATION
- I — TYPE OF DATA POINT: I - DIGITAL INPUT
  MO - MOMENTARY DIGITAL OUTPUT (10 SECONDS)
  HO - HOLD DIGITAL OUTPUT

CALIFORNIA STATE FIRE MARSHAL APPROVED
Approval of this plan does not authorize or approve any omission or deviation from applicable regulations. Final approval is subject to field inspection. One set of approved plans shall be available on the project site at all times.
Reviewed by: STEPHEN GUARINO
Approval date: 12-14-09

BATTERY SUBSTATION AND TUNNEL WORK (SCADA I/O POINT TABLE)

E-153

LAST REVISION DATE PLOTTED => 14-DEC-2009
10-20-09 TIME PLOTTED => 16:21

LS | 8/01/09 | REVISED BY | DATE REVISED
LIONEL J. SUDDS | LIONEL J. SUDDS | CALCULATED-DESIGNED BY | CHECKED BY
FUNCTIONAL SUPERVISOR: BEHZAD GOLEMOHAMMADI
STATE OF CALIFORNIA - DEPARTMENT OF TRANSPORTATION
ELECTRICAL
Caltrans

BORDER LAST REVISED 4/11/2008
RELATIVE BORDER SCALE IS IN INCHES 0 1 2 3
USERNAME => trlenard
DGN FILE => 416374ua153.dgn
CU 04242
EA 163741

C/I	LOCATION	I/O #	STATUS OF DEVICE		TEXT DISPLAY		ACTION DISPLAY		COLOR		MESSAGE TO BE ON LOG	
			ON	OFF	ON	OFF	ON	OFF	ON	OFF	ON	OFF
176	SCADA & PAC 3	I 34	ON	OFF	ON	N/A	N/A	N/A	RED	N/A	N/A	N/A
177		I 35										
178		I 36										
179		I 59										
180		I 60				N/A				N/A	N/A	N/A
181		I 37				OFF				GREEN	MCC #1 LIGHTING CKT #1 ON	MCC #1 LIGHTING CKT #1 OFF
182		I 40				OFF					MCC #1 LIGHTING CKT #2 ON	MCC #1 LIGHTING CKT #2 OFF
183		I 61				OFF					MCC #2 LIGHTING CKT #1 ON	MCC #2 LIGHTING CKT #1 OFF
184		I 64	ON	OFF	ON	OFF					MCC #2 LIGHTING CKT #2 ON	MCC #2 LIGHTING CKT #2 OFF
185		I 38	CLOSE	OPEN	CLOSE	OPEN					MCC #1 LIGHTING CKT #1 CB CLOSE	MCC #1 LIGHTING CKT #1 CBOPEN
186		I 41									MCC #1 LIGHTING CKT #2 CBCLOSE	MCC #1 LIGHTING CKT #2 CB OPEN
187		I 62									MCC #2 LIGHTING CKT #1 CB CLOSE	MCC #2 LIGHTING CKT #1 CB OPEN
188		I 65	CLOSE	OPEN	CLOSE	OPEN			RED	GREEN	MCC #2 LIGHTING CKT #2 CB CLOSE	MCC #2 LIGHTING CKT #2 CB OPEN
189		I 39	LOCAL	REMOTE	LOCAL	REMOTE			WHITE	PURPLE	N/A	N/A
190		I 42										
191		I 63										
192		I 66	LOCAL	REMOTE	LOCAL	REMOTE	N/A	N/A	WHITE	PURPLE	N/A	N/A
193		I 67	DOOR CLOSE	DOOR OPEN	N/A	N/A	SHOW DOOR CLOSE	SHOW DOOR OPEN	N/A	N/A	SUBSTATION P DOOR CLOSE	SUBSTATION P DOOR OPEN
194		I 68	FAIL	N/A	FAIL		N/A	N/A	RED		N/A	N/A
195		I 69	FAIL		FAIL						RM DC TO DC CONV INPUT FAIL	
196		I 70	FAIL		FAIL						RM DC TO DC CONV OUTPUT FAIL	
197		I 71	OVER LOAD		OVER LOAD						RM DC TO DC CONV OVER LOAD	
198		I 72	FAIL		FAIL						RM INVERTER FAIL	
199		I 73	DC		DC						RM INVERTER DC ABNORMAL	
200		I 74	FAIL		FAIL						N/A	
201		I 75	FAIL	N/A	FAIL	N/A	N/A	N/A	RED		N/A	
202		I 76	ON	OFF	ON	OFF	LIGHTS ON	LIGHTS OFF	YELLOW		N/A	
203		I 77	HIGH	N/A	HIGH	N/A	N/A	N/A	RED	N/A	HIGH HYDROGEN	
204		I 78	ON	OFF	ON	OFF				GREEN	N/A	
205		I 84	ON	OFF	ON	OFF				GREEN	N/A	
206		I 83	FAIL	N/A	FAIL	N/A				N/A	N/A	N/A
207		I 79	CLOSE	OPEN	CLOSE	OPEN				GREEN	DC SWITCH FOR INV BATT CLOSE	DC SWITCH FOR INV BATT OPEN
208		I 80	CLOSE	OPEN	CLOSE	OPEN				GREEN	DC SWITCH FOR INV CLOSE	DC SWITCH FOR INV OPEN
209	SCADA & PAC 3	I 81	CLOSE	OPEN	CLOSE	OPEN	N/A	N/A	RED	GREEN	DC SWITCH FOR RM INV CLOSE	DC SWITCH FOR RM INV OPEN

Dist	COUNTY	ROUTE	POST MILES TOTAL PROJECT	SHEET No.	TOTAL SHEETS
04	SF	101	8.2/9.2	316	654

Lionel J. Sudds 10-8-09
REGISTERED ELECTRICAL ENGINEER DATE

12-14-09
PLANS APPROVAL DATE

REGISTERED PROFESSIONAL ENGINEER — Lionel J. Sudds — No. 15201 — Exp 6-30-10 — ELECT — STATE OF CALIFORNIA

THE STATE OF CALIFORNIA OR ITS OFFICERS OR AGENTS SHALL NOT BE RESPONSIBLE FOR THE ACCURACY OR COMPLETENESS OF SCANNED COPIES OF THIS PLAN SHEET.

ABBREVIATIONS: (THIS SHEET ONLY)

I 30
- 30 — DATA POINT # AT LOCATION
- I — TYPE OF DATA POINT: I - DIGITAL INPUT
  MO - MOMENTARY DIGITAL OUTPUT (10 SECONDS)
  HO - HOLD DIGITAL OUTPUT

CALIFORNIA STATE FIRE MARSHAL APPROVED
Approval of this plan does not authorize or approve any omission or deviation from applicable regulations. Final approval is subject to field inspection. One set of approved plans shall be available on the project site at all times.
Reviewed by: STEPHEN GUARINO
Approval date: 12-14-09

BATTERY SUBSTATION AND TUNNEL WORK
(SCADA I/O POINT TABLE)

E-154

LAST REVISION DATE PLOTTED => 14-DEC-2009
TIME PLOTTED => 16:21
10-20-09

LS 8/01/09 — REVISED BY / DATE REVISED
LIONEL J. SUDDS / LIONEL J. SUDDS — CALCULATED-DESIGNED BY / CHECKED BY
FUNCTIONAL SUPERVISOR: BEHZAD GOLEMOHAMMADI
STATE OF CALIFORNIA - DEPARTMENT OF TRANSPORTATION — ELECTRICAL
Caltrans

BORDER LAST REVISED 4/11/2008
RELATIVE BORDER SCALE IS IN INCHES 0 1 2 3
USERNAME => trlenard
DGN FILE => 416374ua154.dgn
CU 04242
EA 163741

Dist	COUNTY	ROUTE	POST MILES TOTAL PROJECT	SHEET No.	TOTAL SHEETS
04	SF	101	8.2/9.2	317	654

Lionel J. Sudds 10-8-09
REGISTERED ELECTRICAL ENGINEER DATE

12-14-09
PLANS APPROVAL DATE

REGISTERED PROFESSIONAL ENGINEER — Lionel J. Sudds — No. 15201 — Exp 6-30-10 — ELECT — STATE OF CALIFORNIA

THE STATE OF CALIFORNIA OR ITS OFFICERS OR AGENTS SHALL NOT BE RESPONSIBLE FOR THE ACCURACY OR COMPLETENESS OF SCANNED COPIES OF THIS PLAN SHEET.

C/I	LOCATION	I/O #	STATUS OF DEVICE		TEXT DISPLAY		ACTION DISPLAY		COLOR		MESSAGE TO BE ON LOG	
			ON	OFF	ON	OFF	ON	OFF	ON	OFF	ON	OFF
210	SCADA & PAC 3	I 82	ON	OFF	ON	OFF	N/A	N/A	RED	GREEN	N/A	N/A
211	SCADA & PAC 3	I 85	ON	OFF	ON	OFF			RED	GREEN	N/A	N/A
212	SCADA & PAC 3	I 86	CLOSE	OPEN	CLOSE	OPEN			RED	GREEN	DC SWITCH FOR RM DC TO DC CONV CLOSE	DC SWITCH FOR RM DC TO DC CONV OPEN
213	FCS #5 JB	I 1	FAIL	N/A	FAIL	N/A			RED	N/A	SELF HEALING MULTI DROP FO MODEM FAIL	N/A
214		I 2	LOW		LOW				YELLOW		CO LEVELS AT ??	
215		I 3	FAIL		FAIL				RED		CO MONITOR FAIL	
216		I 4	FAIL		FAIL						CO MONITOR UPS FAIL	
217		I 5	FAIL		FAIL						CO MONITOR PS FAIL	
218		I 6	HIGH	N/A	HIGH	N/A				N/A	CO LEVELS AT ??	N/A
219		I 7	ACTIVE	OFF	ACTIVE	OFF				GREEN	CALLBOX #3 NORTHSIDE ACTIVE	CALLBOX #3 NORTHSIDE OFF
220		I 8	ON	OFF	ON	OFF				GREEN	N/A	N/A
221		I 9	FAIL	N/A	FAIL	N/A				N/A		
222		I 10										
223		I 11										
224	FCS #5 JB	I 12									N/A	
225	FCS #7 JB	I 1	FAIL		FAIL				RED		SELF HEALING MULTI DROP FO MODEM FAIL	
226		I 2	LOW		LOW				YELLOW		CO LEVELS AT ??	
227		I 3	FAIL		FAIL				RED		CO MONITOR FAIL	
228		I 4	FAIL		FAIL						CO MONITOR UPS FAIL	
229		I 5	FAIL		FAIL						CO MONITOR PS FAIL	
230		I 6	HIGH	N/A	HIGH	N/A				N/A	CO LEVELS AT ??	N/A
231		I 7	ACTIVE	OFF	ACTIVE	OFF				GREEN	CALLBOX #1 NORTHSIDE ACTIVE	CALLBOX #1 NORTHSIDE OFF
232		I 8	ACTIVE	OFF	ACTIVE	OFF				GREEN	CALLBOX #2 NORTHSIDE ACTIVE	CALLBOX #2 NORTHSIDE OFF
233		I 9	ON	OFF	ON	OFF				GREEN	N/A	N/A
234		I 10	FAIL	N/A	FAIL	N/A				N/A		
235		I 11										
236		I 12										
237	FCS #7 JB	I 13									N/A	
238	FCS #8 JB	I 1	FAIL		FAIL				RED		SELF HEALING MULTI DROP FO MODEM FAIL	
239		I 16	LOW		LOW				YELLOW		CO LEVELS AT ??	
240		I 17	FAIL		FAIL				RED		CO MONITOR FAIL	
241		I 18	FAIL		FAIL						CO MONITOR UPS FAIL	
242		I 19	FAIL		FAIL						CO MONITOR PS FAIL	
243		I 20	HIGH	N/A	HIGH	N/A				N/A	CO LEVELS AT ??	N/A
244		I 21	ACTIVE	OFF	ACTIVE	OFF				GREEN	CALLBOX #1 SOUTHSIDE ACTIVE	CALLBOX #1 SOUTHSIDE OFF
245	FCS #8 JB	I 22	ACTIVE	OFF	ACTIVE	OFF	N/A	N/A	RED	GREEN	CALLBOX #2 SOUTHSIDE ACTIVE	CALLBOX #2 SOUTHSIDE OFF

ABBREVIATIONS: (THIS SHEET ONLY)

I 30
- 30 — DATA POINT # AT LOCATION
- I — TYPE OF DATA POINT: I - DIGITAL INPUT
  MO - MOMENTARY DIGITAL OUTPUT (10 SECONDS)
  HO - HOLD DIGITAL OUTPUT

CALIFORNIA STATE FIRE MARSHAL APPROVED
Approval of this plan does not authorize or approve any omission or deviation from applicable regulations. Final approval is subject to field inspection. One set of approved plans shall be available on the project site at all times.
Reviewed by: STEPHEN GUARINO
Approval date: 12-14-09

BATTERY SUBSTATION AND TUNNEL WORK (SCADA I/O POINT TABLE)

E-155

LAST REVISION DATE PLOTTED => 14-DEC-2009
TIME PLOTTED => 16:21

CALCULATED-DESIGNED BY: LS
CHECKED BY: LIONEL J. SUDDS
REVISED BY: LIONEL J. SUDDS
DATE REVISED: 8/01/09
FUNCTIONAL SUPERVISOR: BEHZAD GOLEMOHAMMADI
STATE OF CALIFORNIA - DEPARTMENT OF TRANSPORTATION
ELECTRICAL

BORDER LAST REVISED 4/11/2008
RELATIVE BORDER SCALE IS IN INCHES 0 1 2 3
USERNAME => trlenard
DGN FILE => 416374ua155.dgn
CU 04242
EA 163741

Dist	COUNTY	ROUTE	POST MILES TOTAL PROJECT	SHEET No.	TOTAL SHEETS
04	SF	101	8.2/9.2	318	654

Lionel J. Sudds 10-8-09
REGISTERED ELECTRICAL ENGINEER DATE

12-14-09
PLANS APPROVAL DATE

REGISTERED PROFESSIONAL ENGINEER — Lionel J. Sudds — No. 15201 — Exp 6-30-10 — ELECT — STATE OF CALIFORNIA

THE STATE OF CALIFORNIA OR ITS OFFICERS OR AGENTS SHALL NOT BE RESPONSIBLE FOR THE ACCURACY OR COMPLETENESS OF SCANNED COPIES OF THIS PLAN SHEET.

C/I	LOCATION	I/O #	STATUS OF DEVICE		TEXT DISPLAY		ACTION DISPLAY		COLOR		MESSAGE TO BE ON LOG	
			ON	OFF	ON	OFF	ON	OFF	ON	OFF	ON	OFF
246	FCS #4 JB	I 2	ACTIVE	OFF	ACTIVE	OFF	FLASHING	N/A	RED	GREEN	LHD ZONE 1 NORTHSIDE ACTIVE	LHD ZONE 1 NORTHSIDE OFF
247		I 3									LHD ZONE 1 SOUTHSIDE ACTIVE	LHD ZONE 1 SOUTHSIDE OFF
248		I 4									LHD ZONE 2 NORTHSIDE ACTIVE	LHD ZONE 2 NORTHSIDE OFF
249		I 5									LHD ZONE 2 SOUTHSIDE ACTIVE	LHD ZONE 2 SOUTHSIDE OFF
250		I 6									PULL STATION Z1/ Z2 NORTHSIDE ACTIVE	PULL STATION Z1/ Z2 NORTHSIDE OFF
251		I 7	ACTIVE		ACTIVE	OFF	FLASHING	N/A	RED	GREEN	PULL STATION Z1/ Z2 SOUTHSIDE ACTIVE	PULL STATION Z1/ Z2 SOUTHSIDE OFF
252		I 8	WATER		WATER	N/A	SNOW WATER	NO	BLUE	N/A	ZONE 1 WATER RELEASE	N/A
253		I 9	WATER	OFF	WATER	N/A	SNOW WATER	WATER	BLUE	N/A	ZONE 2 WATER RELEASE	
254		I 10	FAIL	N/A	FAIL	N/A	N/A	N/A	RED	N/A	REMOTE RELEASE MODULE #1 FAIL	
255		I 11	FAIL	N/A	FAIL	N/A			RED	N/A	REMOTE RELEASE MODULE #2 FAIL	
256		I 12	AC FAIL	N/A	AC FAIL	N/A			RED	N/A	FIRE ALARM PS AC FAIL	N/A
257		I 13	Batt	N/A	Batt	N/A			GREEN	RED	N/A	BATTERIES NOT PRESENT
258		I 14	LOW	N/A	LOW	N/A			RED		BATTERY LOW	N/A
259		I 27	ON	OFF	ON	OFF			RED	GREEN	N/A	
260		I 15	LOW	N/A	LOW	N/A			YELLOW	N/A	CO LEVEL AT	
261		I 16	FAIL	N/A	FAIL	N/A			RED	N/A	CO MONITOR FAIL	
262		I 17	FAIL	N/A	FAIL	N/A				N/A	CO MONITOR UPS FAIL	
263		I 18	FAIL	N/A	FAIL	N/A				N/A	CO MONITOR PS FAIL	
264		I 19	HIGH	N/A	HIGH	N/A				N/A	CO LEVEL AT	N/A
265		I 20	ACTIVE	OFF	ACTIVE	OFF				GREEN	CALLBOX #4 SOUTHSIDE ACTIVE	CALLBOX #4 SOUTHSIDE OFF
266		I 21	ACTIVE	OFF	ACTIVE	OFF				GREEN	CALLBOX #5 SOUTHSIDE ACTIVE	CALLBOX #5 SOUTHSIDE OFF
267		I 26	ON	OFF	ON	OFF				GREEN	N/A	N/A
268		I 22	FAIL	N/A	FAIL	N/A				N/A		
269		I 23										
270		I 24										
271	FCS #4 JB	I 25										
272	FCS #8 JB	I 38										
273	FCS #8 JB	I 39										
274	FCS #8 JB	I 40										
275	FCS #8 JB	I 41									N/A	
276	FCS #3 JB	I 1	FAIL		FAIL				RED		SELF HEALING MULTI-DROP FO MODEM FAIL	
277		I 2	LOW		LOW				YELLOW		CO LEVEL AT	
278		I 3	FAIL		FAIL				RED		CO MONITOR FAIL	
279		I 4	FAIL		FAIL				RED		CO MONITOR UPS FAIL	
280		I 5	FAIL		FAIL				RED		CO MONITOR PS FAIL	
281		I 6	HIGH	N/A	HIGH	N/A			RED	N/A	CO LEVEL AT	
282	FCS #3 JB	I 17	ON	OFF	ON	OFF	N/A	N/A	RED	GREEN	N/A	N/A

ABBREVIATIONS: (THIS SHEET ONLY)

I 30
- 30 — DATA POINT # AT LOCATION
- I — TYPE OF DATA POINT: I - DIGITAL INPUT
  - MO - MOMENTARY DIGITAL OUTPUT (10 SECONDS)
  - HO - HOLD DIGITAL OUTPUT

CALIFORNIA STATE FIRE MARSHAL APPROVED
Approval of this plan does not authorize or approve any omission or deviation from applicable regulations. Final approval is subject to field inspection. One set of approved plans shall be available on the project site at all times.
Reviewed by: STEPHEN GUARINO
Approval date: 12-14-09

BATTERY SUBSTATION AND TUNNEL WORK
(SCADA I/O POINT TABLE)

E-156

REVISED BY: LS | DATE REVISED: 8/01/09
CALCULATED-DESIGNED BY: LIONEL J. SUDDS | CHECKED BY: LIONEL J. SUDDS
FUNCTIONAL SUPERVISOR: BEHZAD GOLEMOHAMMADI
STATE OF CALIFORNIA - DEPARTMENT OF TRANSPORTATION
ELECTRICAL

LAST REVISION | DATE PLOTTED => 14-DEC-2009 | TIME PLOTTED => 16:21 | 11-02-09

C/I	LOCATION	I/O #	STATUS OF DEVICE		TEXT DISPLAY		ACTION DISPLAY		COLOR		MESSAGE TO BE ON LOG	
			ON	OFF	ON	OFF	ON	OFF	ON	OFF	ON	OFF
283	FCS #6 JB	I 2	ACTIVE	OFF	ACTIVE	OFF	FLASHING	N/A	RED	GREEN	LHD ZONE 3 NORTHSIDE ACTIVE	LHD ZONE 3 NORTHSIDE OFF
284		I 3									LHD ZONE 3 SOUTHSIDE ACTIVE	LHD ZONE 3 SOUTHSIDE OFF
285		I 4									LHD ZONE 4 NORTHSIDE ACTIVE	LHD ZONE 4 NORTHSIDE OFF
286		I 5									LHD ZONE 4 SOUTHSIDE ACTIVE	LHD ZONE 4 SOUTHSIDE OFF
287		I 6									PULLSTATION ZONE 3/ ZONE 4 NORTHSIDE ACTIVE	PULLSTATION Z3/Z4 NORTHSIDE OFF
288		I 7	ACTIVE		ACTIVE	OFF	FLASHING	N/A	RED	GREEN	PULLSTATION ZONE 3/ ZONE 4 SOUTHSIDE ACTIVE	PULLSTATION Z3/Z4 SOUTHSIDE OFF
289		I 8	WATER		WATER	N/A	SHOW WATER	NO WATER	BLUE	N/A	ZONE 3 WATER RELEASE	N/A
290		I 9	WATER	OFF	WATER		SHOW WATER	NO WATER	BLUE		ZONE 4 WATER RELEASE	
291		I 10	FAIL	N/A	FAIL		N/A	N/A	RED		REMOTE RELEASE MODULE #1 FAIL	
292		I 11	FAIL		FAIL				RED		REMOTE RELEASE MODULE #2 FAIL	
293		I 12	AC FAIL		AC FAIL				RED	N/A	FIRE ALARM PS AC FAIL	N/A
294		I 13	Batt		Batt				GREEN	RED	N/A	BATTERIES NOT PRESENT
295		I 14	LOW	N/A	LOW	N/A			RED	N/A	BATTERIES LOW	N/A
296	FCS #6 JB	I 15	ON	OFF	ON	OFF					N/A	N/A
297	FCS #4 JB	I 1	FAIL	N/A	FAIL	N/A				N/A	SELF HEALING Multi DROP FO MODEM FAIL	N/A
298		I 28	CLOSE	OPEN	CLOSE	OPEN				GREEN	FUSE DISCONNECT SWITCH CLOSE JET #1	FUSE DISCONNECT SWITCH OPEN JET #1
299		I 29	CLOSE	OPEN	CLOSE	OPEN				GREEN	FUSE DISCONNECT SWITCH CLOSE JET #2	FUSE DISCONNECT SWITCH OPEN JET #2
300		I 30	HIGH	N/A	HIGH	N/A				N/A	JET FAN #1 FLOW HIGH	N/A
301	FCS #4 JB	I 31	HIGH		HIGH						JET FAN #2 FLOW HIGH	
302	FCS #3 JB	I 9	FAIL		FAIL						N/A	
303		I 10	FAIL		FAIL						N/A	
304		I 11	FAIL		FAIL						N/A	
305		I 12	FAIL	N/A	FAIL	N/A				N/A	N/A	N/A
306		I 13	CLOSE	OPEN	CLOSE	OPEN				GREEN	FUSE DISCONNECT SWITCH CLOSE JET #3	FUSE DISCONNECT SWITCH OPEN JET #3
307		I 14	CLOSE	OPEN	CLOSE	OPEN				GREEN	FUSE DISCONNECT SWITCH CLOSE JET #4	FUSE DISCONNECT SWITCH OPEN JET #4
308		I 15	HIGH	N/A	HIGH	N/A				N/A	JET FAN #3 FLOW HIGH	N/A
309		I 16	HIGH	N/A	HIGH	N/A				N/A	JET FAN #4 FLOW HIGH	N/A
310		I 7	ACTIVE	OFF	ACTIVE	OFF				GREEN	CALLBOX #4 NORTHSIDE ACTIVE	CALLBOX #4 NORTHSIDE OFF
311	FCS #3 JB	I 8	ACTIVE	OFF	ACTIVE	OFF				GREEN	CALLBOX #5 NORTHSIDE ACTIVE	CALLBOX #5 NORTHSIDE OFF
312	FCS #6 JB	I 22	ACTIVE	OFF	ACTIVE	OFF				GREEN	CALLBOX #3 SOUTHSIDE ACTIVE	CALLBOX #3 SOUTHSIDE OFF
313	FCS #6 JB	I 1	FAIL	N/A	FAIL	N/A	N/A	N/A	RED	N/A	SELF HEALING Multi DROP FO MODEM FAIL	N/A

Dist	COUNTY	ROUTE	POST MILES TOTAL PROJECT	SHEET No.	TOTAL SHEETS
04	SF	101	8.2/9.2	319	654

Lionel J. Sudds 10-8-09
REGISTERED ELECTRICAL ENGINEER DATE

12-14-09
PLANS APPROVAL DATE

REGISTERED PROFESSIONAL ENGINEER Lionel J. Sudds No. 15201 Exp 6-30-10 ELECT STATE OF CALIFORNIA

THE STATE OF CALIFORNIA OR ITS OFFICERS OR AGENTS SHALL NOT BE RESPONSIBLE FOR THE ACCURACY OR COMPLETENESS OF SCANNED COPIES OF THIS PLAN SHEET.

ABBREVIATIONS: (THIS SHEET ONLY)

I 30
- 30 — DATA POINT # AT LOCATION
- I — TYPE OF DATA POINT:
  - I - DIGITAL INPUT
  - MO - MOMENTARY DIGITAL OUTPUT (10 SECONDS)
  - HO - HOLD DIGITAL OUTPUT

CALIFORNIA STATE FIRE MARSHAL APPROVED
Approval of this plan does not authorize or approve any omission or deviation from applicable regulations. Final approval is subject to field inspection. One set of approved plans shall be available on the project site at all times.
Reviewed by: STEPHEN GUARINO
Approval date: 12-14-09

BATTERY SUBSTATION AND TUNNEL WORK
(SCADA I/O POINT TABLE)

E-157

REVISED BY	LS
DATE REVISED	8/01/09
CALCULATED-DESIGNED BY	LIONEL J. SUDDS
CHECKED BY	LIONEL J. SUDDS
FUNCTIONAL SUPERVISOR	BEHZAD GOLEMOHAMMADI

STATE OF CALIFORNIA - DEPARTMENT OF TRANSPORTATION
Caltrans®
ELECTRICAL

LAST REVISION | DATE PLOTTED => 14-DEC-2009
11-02-09 | TIME PLOTTED => 16:21

BORDER LAST REVISED 4/11/2008
RELATIVE BORDER SCALE IS IN INCHES 0 1 2 3
USERNAME => trlenard
DGN FILE => 416374ua157.dgn
CU 04242
EA 163741

Dist	COUNTY	ROUTE	POST MILES TOTAL PROJECT	SHEET No.	TOTAL SHEETS
04	SF	101	8.2/9.2	320	654

Lionel J. Sudds 10-8-09
REGISTERED ELECTRICAL ENGINEER DATE

REGISTERED PROFESSIONAL ENGINEER — Lionel J. Sudds — No. 15201 — Exp 6-30-10 — ELECT — STATE OF CALIFORNIA

12-14-09
PLANS APPROVAL DATE

THE STATE OF CALIFORNIA OR ITS OFFICERS OR AGENTS SHALL NOT BE RESPONSIBLE FOR THE ACCURACY OR COMPLETENESS OF SCANNED COPIES OF THIS PLAN SHEET.

C/I	LOCATION	I/O #	STATUS OF DEVICE		TEXT DISPLAY		ACTION DISPLAY		COLOR		MESSAGE TO BE ON LOG	
			ON	OFF	ON	OFF	ON	OFF	ON	OFF	ON	OFF
314	FCS #6 JB	I 23	ACTIVE	OFF	ACTIVE	OFF	FLASHING	N/A	RED	GREEN	LHD ZONE 5 NORTHSIDE ACTIVE	LHD ZONE 5 NORTHSIDE OFF
315		I 24	ACTIVE	OFF	ACTIVE	OFF	FLASHING	N/A	RED	GREEN	LHD ZONE 5 SOUTHSIDE ACTIVE	LHD ZONE 5 SOUTHSIDE OFF
316		I 25	ACTIVE	OFF	ACTIVE	OFF	FLASHING	N/A	RED	GREEN	LHD ZONE 6 NORTHSIDE ACTIVE	LHD ZONE 6 NORTHSIDE OFF
317		I 26	ACTIVE	OFF	ACTIVE	OFF	FLASHING	N/A	RED	GREEN	LHD ZONE 6 SOUTHSIDE ACTIVE	LHD ZONE 6 SOUTHSIDE OFF
318		I 27	ACTIVE	OFF	ACTIVE	OFF	FLASHING	N/A	RED	GREEN	PULLSTATION ZONE 5 /ZONE 6 NORTHSIDE ACTIVE	PULLSTATION ZONE 5 /ZONE 6 NORTHSIDE OFF
319		I 28	ACTIVE	OFF	ACTIVE	OFF	FLASHING	N/A	RED	GREEN	PULLSTATION ZONE 5 /ZONE 6 SOUTHSIDE ACTIVE	PULLSTATION ZONE 5 /ZONE 6 SOUTHSIDE OFF
320		I 29	WATER	OFF	WATER	N/A	SHOW WATER	NO WATER	BLUE	N/A	ZONE 5 WATER RELEASE	N/A
321		I 30	WATER	OFF	WATER	N/A	SHOW WATER	NO WATER	BLUE	N/A	ZONE 6 WATER RELEASE	N/A
322		I 31	FAIL	N/A	FAIL	N/A	N/A	N/A	RED	N/A	REMOTE RELEASE MODULE #1 FAIL	N/A
323		I 32	FAIL	N/A	FAIL	N/A			RED	N/A	REMOTE RELEASE MODULE #2 FAIL	N/A
324		I 33	AC FAIL	N/A	AC FAIL	N/A			RED	N/A	FIRE ALARM PS AC FAIL	N/A
325		I 34	Batt	N/A	Batt	N/A			GREEN	RED	N/A	BATTERIES NOT PRESENT
326		I 35	LOW	N/A	LOW	N/A			RED	N/A	BATTERIES LOW	N/A
327		I 36	ON	OFF	ON	OFF			RED	GREEN	N/A	
328		I 16	LOW	N/A	LOW	N/A			YELLOW	N/A	CO LEVELS AT	
329		I 17	FAIL	N/A	FAIL	N/A			RED	N/A	CO MONITOR FAIL	
330		I 18	FAIL	N/A	FAIL	N/A			RED	N/A	CO MONITOR UPS FAIL	
331		I 19	FAIL	N/A	FAIL	N/A			RED	N/A	CO MONITOR PS FAIL	
332		I 20	HIGH	N/A	HIGH	N/A			RED	N/A	CO LEVELS AT	
333		I 21	ON	OFF	ON	OFF			RED	GREEN	N/A	
334		I 37	LOW	N/A	LOW	N/A			YELLOW	N/A	CO LEVELS AT	
335		I 38	FAIL	N/A	FAIL	N/A			RED	N/A	CO MONITOR FAIL	
336		I 39	FAIL	N/A	FAIL	N/A			RED	N/A	CO MONITOR UPS FAIL	
337		I 40	FAIL	N/A	FAIL	N/A			RED	N/A	CO MONITOR PS FAIL	
338	FCS #6 JB	I 41	HIGH	N/A	HIGH	N/A	N/A	N/A	RED	N/A	CO LEVELS AT	N/A

ABBREVIATIONS: (THIS SHEET ONLY)

I 30
- 30 — DATA POINT # AT LOCATION
- I — TYPE OF DATA POINT: I - DIGITAL INPUT
  - MO - MOMENTARY DIGITAL OUTPUT (10 SECONDS)
  - HO - HOLD DIGITAL OUTPUT

CALIFORNIA STATE FIRE MARSHAL APPROVED
Approval of this plan does not authorize or approve any omission or deviation from applicable regulations. Final approval is subject to field inspection. One set of approved plans shall be available on the project site at all times.
Reviewed by: STEPHEN GUARINO
Approval date: 12-14-09

BATTERY SUBSTATION AND TUNNEL WORK
(SCADA I/O POINT TABLE)

E-158

CALCULATED-DESIGNED BY	LS	REVISED BY	
CHECKED BY	8/01/09	DATE REVISED	
LIONEL J. SUDDS			
LIONEL J. SUDDS			
FUNCTIONAL SUPERVISOR			
BEHZAD GOLEMOHAMMADI			

STATE OF CALIFORNIA - DEPARTMENT OF TRANSPORTATION
Caltrans
ELECTRICAL

LAST REVISION | DATE PLOTTED => 14-DEC-2009
11-02-09 | TIME PLOTTED => 16:21

BORDER LAST REVISED 4/11/2008 | RELATIVE BORDER SCALE IS IN INCHES 0 1 2 3 | USERNAME => trlenard | DGN FILE => 416374ua158.dgn | CU 04242 | EA 163741

C/I	LOCATION	I/O #	STATUS OF DEVICE		TEXT DISPLAY		ACTION DISPLAY		COLOR		MESSAGE TO BE ON LOG	
			ON	OFF	ON	OFF	ON	OFF	ON	OFF	ON	OFF
339	FCS #8 JB	I 2	ACTIVE	OFF	ACTIVE	OFF	FLASHING	N/A	RED	GREEN	LHD ZONE 7 NORTHSIDE ACTIVE	LHD ZONE 7 NORTHSIDE OFF
340		I 3									LHD ZONE 7 SOUTHSIDE ACTIVE	LHD ZONE 7 SOUTHSIDE OFF
341		I 4									LHD ZONE 8 NORTHSIDE ACTIVE	LHD ZONE 8 NORTHSIDE OFF
342		I 5									LHD ZONE 8 SOUTHSIDE ACTIVE	LHD ZONE 8 SOUTHSIDE OFF
343		I 6									PULL STATION ZONE 7/ZONE 8 NORTHSIDE ACTIVE	PULL STATION ZONE 7/ZONE 38 NORTHSIDE OFF
344		I 7					FLASHING	N/A	RED	GREEN	PULL STATION ZONE 7/ZONE 8 SOUTHSIDE ACTIVE	PULL STATION ZONE 7/ZONE 8 SOUTHSIDE OFF
345		I 8	WATER	OFF	WATER	N/A	SHOW WATER	NO WATER	BLUE	N/A	ZONE 7 WATER RELEASE	N/A
346		I 9	WATER	OFF	WATER	N/A	SHOW WATER	NO WATER	BLUE		ZONE 8 WATER RELEASE	
347		I 10	FAIL	N/A	FAIL	N/A	N/A	N/A	RED		REMOTE RELEASE MODULE #1 FAIL	
348		I 11	FAIL		FAIL				RED		REMOTE RELEASE MODULE #2 FAIL	
349		I 12	AC FAIL		AC FAIL				RED	N/A	FIRE ALARM PS AC FAIL	N/A
350		I 13	Batt		Batt				GREEN	RED	N/A	BATTERIES NOT PRESENT
351		I 14	LOW	N/A	LOW	N/A			RED	N/A	BATTERIES LOW	N/A
352	FCS #8 JB	I 15	ON	OFF	ON	OFF	N/A	N/A	RED	GREEN	N/A	N/A

Dist	COUNTY	ROUTE	POST MILES TOTAL PROJECT	SHEET No.	TOTAL SHEETS
04	SF	101	8.2/9.2	321	654

Lionel J. Sudds 10-8-09
REGISTERED ELECTRICAL ENGINEER DATE

12-14-09
PLANS APPROVAL DATE

REGISTERED PROFESSIONAL ENGINEER — Lionel J. Sudds — No. 15201 — Exp 6-30-10 — ELECT — STATE OF CALIFORNIA

THE STATE OF CALIFORNIA OR ITS OFFICERS OR AGENTS SHALL NOT BE RESPONSIBLE FOR THE ACCURACY OR COMPLETENESS OF SCANNED COPIES OF THIS PLAN SHEET.

ABBREVIATIONS: (THIS SHEET ONLY)

I 30
- 30 — DATA POINT # AT LOCATION
- I — TYPE OF DATA POINT: I - DIGITAL INPUT
  MO - MOMENTARY DIGITAL OUTPUT (10 SECONDS)
  HO - HOLD DIGITAL OUTPUT

CALIFORNIA STATE FIRE MARSHAL APPROVED
Approval of this plan does not authorize or approve any omission or deviation from applicable regulations. Final approval is subject to field inspection. One set of approved plans shall be available on the project site at all times.
Reviewed by: STEPHEN GUARINO
Approval date: 12-14-09

BATTERY SUBSTATION AND TUNNEL WORK
(SCADA I/O POINT TABLE)

E-159

REVISED BY	DATE REVISED
LS	8/01/09

CALCULATED-DESIGNED BY: LIONEL J. SUDDS
CHECKED BY: LIONEL J. SUDDS

FUNCTIONAL SUPERVISOR: BEHZAD GOLEMOHAMMADI

STATE OF CALIFORNIA - DEPARTMENT OF TRANSPORTATION
ELECTRICAL

LAST REVISION | DATE PLOTTED => 14-DEC-2009 | TIME PLOTTED => 16:21
11-02-09

BORDER LAST REVISED 4/11/2008

RELATIVE BORDER SCALE IS IN INCHES 0 1 2 3

USERNAME => trienard
DGN FILE => 416374ua159.dgn

CU 04242

EA 163741

C/I	LOCATION	I/O #	STATUS OF DEVICE		TEXT DISPLAY		ACTION DISPLAY		COLOR		MESSAGE TO BE ON LOG	
			ON	OFF	ON	OFF	ON	OFF	ON	OFF	ON	OFF
353	FCS #8 JB	I 24	ACTIVE	OFF	ACTIVE	OFF	FLASHING	N/A	RED	GREEN	LHD ZONE 9 NORTHSIDE ACTIVE	LHD ZONE 9 NORTHSIDE OFF
354		I 25									LHD ZONE 9 SOUTHSIDE ACTIVE	LHD ZONE 9 SOUTHSIDE OFF
355		I 26									LHD ZONE 10 NORTHSIDE ACTIVE	LHD ZONE 10 NORTHSIDE OFF
356		I 27									LHD ZONE 10 SOUTHSIDE ACTIVE	LHD ZONE 10 SOUTHSIDE OFF
357		I 28									PULL STATION Z9/ Z10 NORTHSIDE ACTIVE	PULL STATION Z9/ Z10 NORTHSIDE OFF
358		I 29	ACTIVE		ACTIVE	OFF	FLASHING	N/A	RED	GREEN	PULL STATION Z9/ Z10 SOUTHSIDE ACTIVE	PULL STATION Z9/ Z10 SOUTHSIDE OFF
359		I 30	WATER		WATER	N/A	SHOW WATER	NO WATER	BLUE	N/A	ZONE 9 WATER RELEASE	N/A
360		I 31	WATER	OFF	WATER		SHOW WATER	NO WATER	BLUE		ZONE 10 WATER RELEASE	N/A
361		I 32	FAIL	N/A	FAIL		N/A	N/A	RED		REMOTE RELEASE MODULE #1 FAIL	N/A
362		I 33	FAIL		FAIL				RED		REMOTE RELEASE MODULE #2 FAIL	N/A
363		I 34	AC FAIL		AC FAIL				RED	N/A	FIRE ALARM PS AC FAIL	N/A
364		I 35	Batt		Batt				GREEN	RED	N/A	BATTERIES NOT PRESENT
365		I 36	LOW	N/A	LOW	N/A			RED	N/A	BATTERIES LOW	N/A
366	FCS #8 JB	I 37	ON	OFF	ON	OFF	N/A	N/A	RED	GREEN	N/A	N/A

Dist	COUNTY	ROUTE	POST MILES TOTAL PROJECT	SHEET No.	TOTAL SHEETS
04	SF	101	8.2/9.2	322	654

Lionel J. Sudds 10-8-09
REGISTERED ELECTRICAL ENGINEER DATE

12-14-09
PLANS APPROVAL DATE

REGISTERED PROFESSIONAL ENGINEER
Lionel J. Sudds
No. 15201
Exp 6-30-10
ELECT
STATE OF CALIFORNIA

THE STATE OF CALIFORNIA OR ITS OFFICERS OR AGENTS SHALL NOT BE RESPONSIBLE FOR THE ACCURACY OR COMPLETENESS OF SCANNED COPIES OF THIS PLAN SHEET.

ABBREVIATIONS: (THIS SHEET ONLY)

I 30
- 30 — DATA POINT # AT LOCATION
- I — TYPE OF DATA POINT: I - DIGITAL INPUT
  - MO - MOMENTARY DIGITAL OUTPUT (10 SECONDS)
  - HO - HOLD DIGITAL OUTPUT

CALIFORNIA STATE FIRE MARSHAL APPROVED
Approval of this plan does not authorize or approve any omission or deviation from applicable regulations. Final approval is subject to field inspection. One set of approved plans shall be available on the project site at all times.
Reviewed by: STEPHEN GUARINO
Approval date: 12-14-09

BATTERY SUBSTATION AND TUNNEL WORK
(SCADA I/O POINT TABLE)

E-160

REVISED BY	DATE REVISED
LS	8/01/09

CALCULATED-DESIGNED BY: LIONEL J. SUDDS
CHECKED BY: LIONEL J. SUDDS

FUNCTIONAL SUPERVISOR: BEHZAD GOLEMOHAMMADI

STATE OF CALIFORNIA - DEPARTMENT OF TRANSPORTATION
ELECTRICAL

LAST REVISION DATE PLOTTED => 14-DEC-2009
TIME PLOTTED => 16:21

BORDER LAST REVISED 4/11/2008

RELATIVE BORDER SCALE IS IN INCHES 0 1 2 3

USERNAME => trienard
DGN FILE => 416374ua160.dgn

CU 04242

EA 163741

Dist	COUNTY	ROUTE	POST MILES TOTAL PROJECT	SHEET No.	TOTAL SHEETS
04	SF	101	8.2/9.2	323	654

9-9-09
REGISTERED ELECTRICAL ENGINEER DATE

12-14-09
PLANS APPROVAL DATE

Robert Hsu
No. 17114
Exp 9-30-11
ELECT
REGISTERED PROFESSIONAL ENGINEER
STATE OF CALIFORNIA

THE STATE OF CALIFORNIA OR ITS OFFICERS OR AGENTS SHALL NOT BE RESPONSIBLE FOR THE ACCURACY OR COMPLETENESS OF SCANNED COPIES OF THIS PLAN SHEET.

CALIFORNIA STATE FIRE MARSHAL APPROVED

Approval of this plan does not authorize or approve any omission or deviation from applicable regulations. Final approval is subject to field inspection. One set of approved plans shall be available on the project site at all times.

Reviewed by: STEPHEN GUARINO

Approval date: 12-14-09

GENERAL NOTE:

(APPLICABLE FROM E-161 TO E-166)

1. SEE E-167 FOR MOUNTING DETAILS.

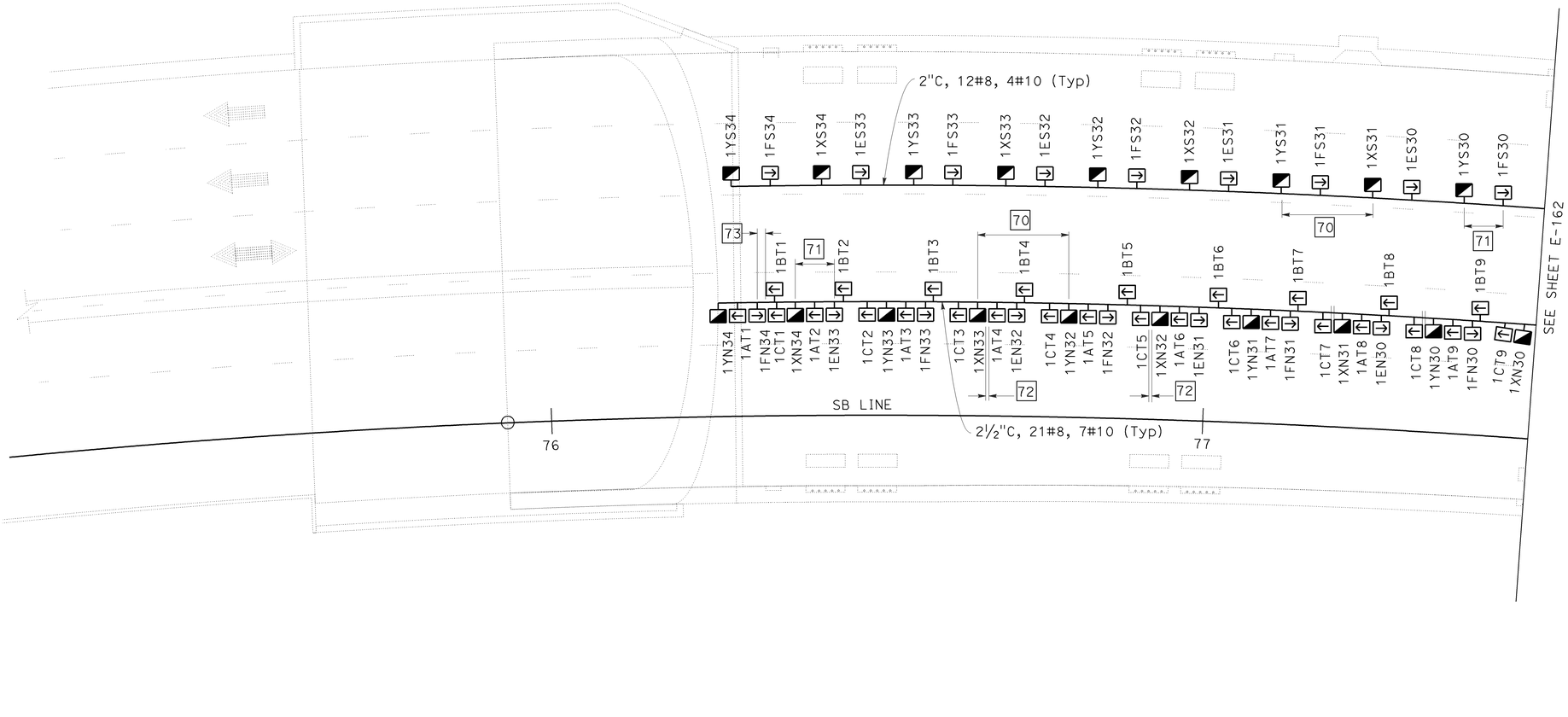

TUNNEL LIGHTING
LUMINAIRE LAYOUT
SCALE: 1" = 10'

THIS PLAN IS ACCURATE FOR ELECTRICAL WORK ONLY

FOR NOTES, ABBREVIATIONS AND LEGEND, SEE SHEET E-32, E-33.

E-161

REVISED BY	DATE REVISED
RH	8/01/09

CALCULATED-DESIGNED BY: ROBERT HSU
CHECKED BY: ROBERT HSU
FUNCTIONAL SUPERVISOR: BEHZAD GOLEMOHAMMADI

STATE OF CALIFORNIA - DEPARTMENT OF TRANSPORTATION
Caltrans
ELECTRICAL

LAST REVISION | DATE PLOTTED => 14-DEC-2009
10-22-09 | TIME PLOTTED => 16:21

Dist	COUNTY	ROUTE	POST MILES TOTAL PROJECT	SHEET No.	TOTAL SHEETS
04	SF	101	8.2/9.2	324	654

9-9-09
REGISTERED ELECTRICAL ENGINEER DATE

12-14-09
PLANS APPROVAL DATE

Robert Hsu
No. 17114
Exp 9-30-11
ELECT
REGISTERED PROFESSIONAL ENGINEER
STATE OF CALIFORNIA

THE STATE OF CALIFORNIA OR ITS OFFICERS OR AGENTS SHALL NOT BE RESPONSIBLE FOR THE ACCURACY OR COMPLETENESS OF SCANNED COPIES OF THIS PLAN SHEET.

CALIFORNIA STATE FIRE MARSHAL
APPROVED
Approval of this plan does not authorize or approve any omission or deviation from applicable regulations. Final approval is subject to field inspection. One set of approved plans shall be available on the project site at all times.
Reviewed by: STEPHEN GUARINO
Approval date: 12-14-09

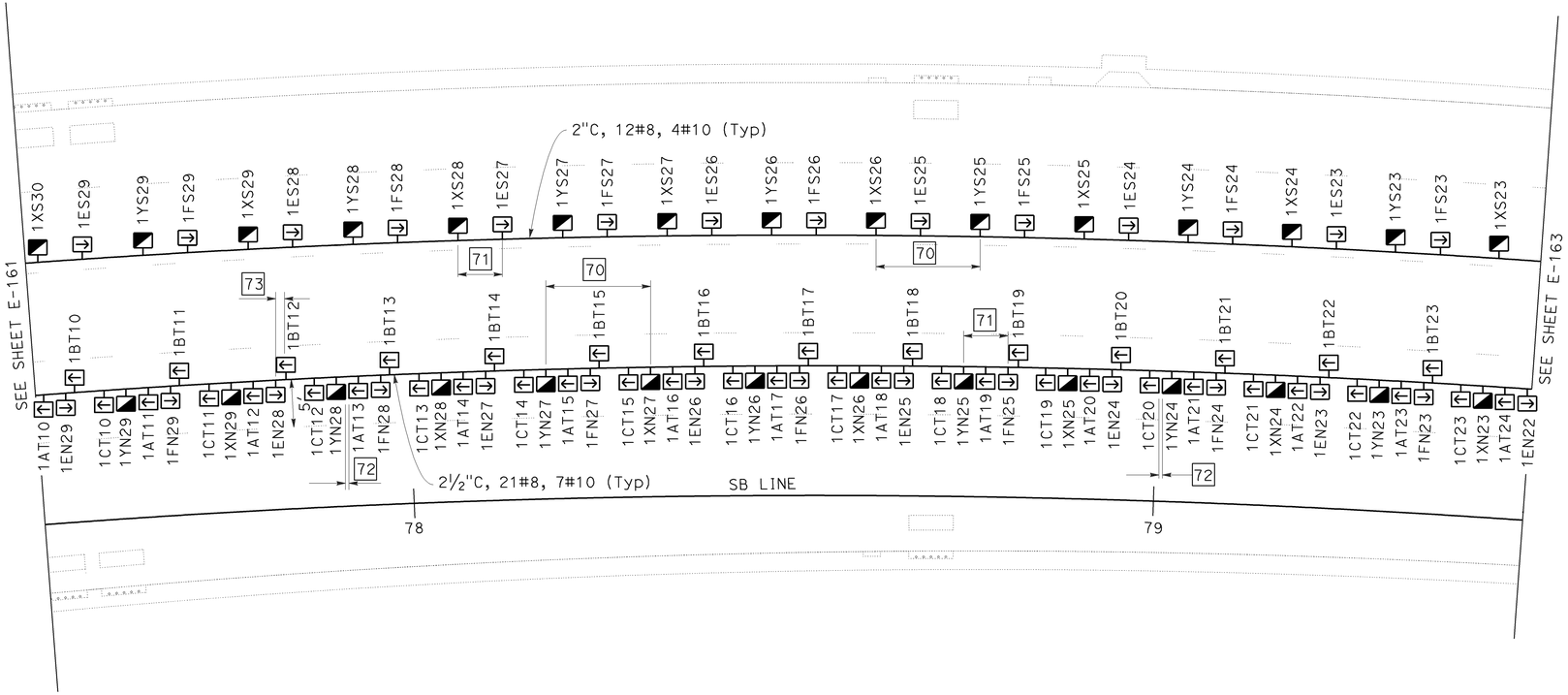

TUNNEL LIGHTING
LUMINAIRE LAYOUT
SCALE: 1" = 10'

THIS PLAN IS ACCURATE FOR ELECTRICAL WORK ONLY

FOR NOTES, ABBREVIATIONS AND LEGEND, SEE SHEET E-32, E-33.

E-162

LAST REVISION DATE PLOTTED => 14-DEC-2009
10-22-09 TIME PLOTTED => 16:21

CALCULATED-DESIGNED BY		
CHECKED BY	ROBERT HSU	RH
	ROBERT HSU	8/01/09
FUNCTIONAL SUPERVISOR	REVISED BY	
BEHZAD GOLEMOHAMMADI	DATE REVISED	

STATE OF CALIFORNIA - DEPARTMENT OF TRANSPORTATION
Caltrans
ELECTRICAL

BORDER LAST REVISED 4/11/2008

RELATIVE BORDER SCALE IS IN INCHES 0 1 2 3

USERNAME => trienard
DGN FILE => 416374ua162.dgn

CU 04242

EA 163741

Dist	COUNTY	ROUTE	POST MILES TOTAL PROJECT	SHEET No.	TOTAL SHEETS
04	SF	101	8.2/9.2	325	654

9-9-09
REGISTERED ELECTRICAL ENGINEER DATE

Robert Hsu
No. 17114
Exp 9-30-11
ELECT
REGISTERED PROFESSIONAL ENGINEER
STATE OF CALIFORNIA

12-14-09
PLANS APPROVAL DATE

THE STATE OF CALIFORNIA OR ITS OFFICERS OR AGENTS SHALL NOT BE RESPONSIBLE FOR THE ACCURACY OR COMPLETENESS OF SCANNED COPIES OF THIS PLAN SHEET.

CALIFORNIA STATE FIRE MARSHAL APPROVED

Approval of this plan does not authorize or approve any omission or deviation from applicable regulations. Final approval is subject to field inspection. One set of approved plans shall be available on the project site at all times.

Reviewed by: STEPHEN GUARINO

Approval date: 12-14-09

GENERAL NOTES: (APPLICABLE TO THIS SHEET ONLY)

- DO NOT INSTALL LUMINAIRES INDICATED BY ✱ WHEN TEMPORARY VENTILATION REMAINS OPEN. HOWEVER, INTSALL T-CONDULETS AND PROVIDE ADDITIONAL FOUR FEET WIRES FOR FUTURE CIRCUIT SPLICING. THESE WIRES SHALL BE LABELED AND SECURED IN PLACE.
- CONTRACTOR SHALL INSTALL THESE ✱ LUMINAIRES AFTER TEMPORARY VENTILATION IS SEALED.

TUNNEL LIGHTING
LUMINAIRE LAYOUT
SCALE: 1" = 10'

THIS PLAN IS ACCURATE FOR ELECTRICAL WORK ONLY

FOR NOTES, ABBREVIATIONS AND LEGEND, SEE SHEET E-32, E-33.

E-163

STATE OF CALIFORNIA - DEPARTMENT OF TRANSPORTATION
ELECTRICAL
FUNCTIONAL SUPERVISOR: BEHZAD GOLEMOHAMMADI
CALCULATED-DESIGNED BY: ROBERT HSU
CHECKED BY: ROBERT HSU
REVISED BY: RH
DATE REVISED: 8/01/09
LAST REVISION DATE PLOTTED => 14-DEC-2009
TIME PLOTTED => 16:21
10-21-09

BORDER LAST REVISED 4/11/2008
RELATIVE BORDER SCALE IS IN INCHES 0 1 2 3
USERNAME => trlenard
DGN FILE => 416374ua163.dgn
CU 04242
EA 163741

Dist	COUNTY	ROUTE	POST MILES TOTAL PROJECT	SHEET No.	TOTAL SHEETS
04	SF	101	8.2/9.2	326	654

CALIFORNIA STATE FIRE MARSHAL APPROVED

Approval of this plan does not authorize or approve any omission or deviation from applicable regulations. Final approval is subject to field inspection. One set of approved plans shall be available on the project site at all times.

Reviewed by: STEPHEN GUARINO

Approval date: 12-14-09

9-9-09
REGISTERED ELECTRICAL ENGINEER DATE

Robert Hsu
No. 17114
Exp 9-30-11
ELECT
REGISTERED PROFESSIONAL ENGINEER
STATE OF CALIFORNIA

12-14-09
PLANS APPROVAL DATE

THE STATE OF CALIFORNIA OR ITS OFFICERS OR AGENTS SHALL NOT BE RESPONSIBLE FOR THE ACCURACY OR COMPLETENESS OF SCANNED COPIES OF THIS PLAN SHEET.

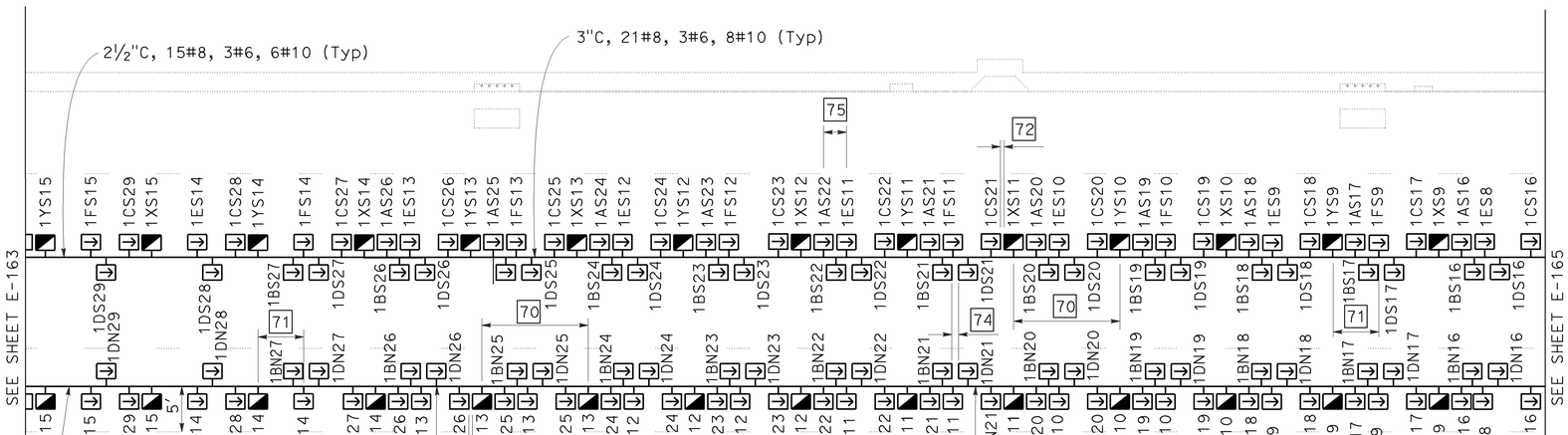

TUNNEL LIGHTING
LUMINAIRE LAYOUT
SCALE: 1" = 10'

THIS PLAN IS ACCURATE FOR ELECTRICAL WORK ONLY

FOR NOTES, ABBREVIATIONS AND LEGEND, SEE SHEET E-32, E-33.

E-164

STATE OF CALIFORNIA - DEPARTMENT OF TRANSPORTATION
Caltrans
ELECTRICAL

CALCULATED-DESIGNED BY	CHECKED BY	FUNCTIONAL SUPERVISOR	REVISED BY	DATE REVISED
ROBERT HSU	ROBERT HSU	BEHZAD GOLEMOHAMMADI	RH	8/01/09

LAST REVISION DATE PLOTTED => 14-DEC-2009
10-21-09 TIME PLOTTED => 16:21

BORDER LAST REVISED 4/11/2008

RELATIVE BORDER SCALE IS IN INCHES 0 1 2 3

USERNAME => trienard
DGN FILE => 416374ua164.dgn

CU 04242

EA 163741

Dist	COUNTY	ROUTE	POST MILES TOTAL PROJECT	SHEET No.	TOTAL SHEETS
04	SF	101	8.2/9.2	327	654

CALIFORNIA STATE FIRE MARSHAL APPROVED

Approval of this plan does not authorize or approve any omission or deviation from applicable regulations. Final approval is subject to field inspection. One set of approved plans shall be available on the project site at all times.

Reviewed by: STEPHEN GUARINO

Approval date: 12-14-09

9-9-09
REGISTERED ELECTRICAL ENGINEER DATE

Robert Hsu
No. 17114
Exp 9-30-11
ELECT
REGISTERED PROFESSIONAL ENGINEER
STATE OF CALIFORNIA

12-14-09
PLANS APPROVAL DATE

THE STATE OF CALIFORNIA OR ITS OFFICERS OR AGENTS SHALL NOT BE RESPONSIBLE FOR THE ACCURACY OR COMPLETENESS OF SCANNED COPIES OF THIS PLAN SHEET.

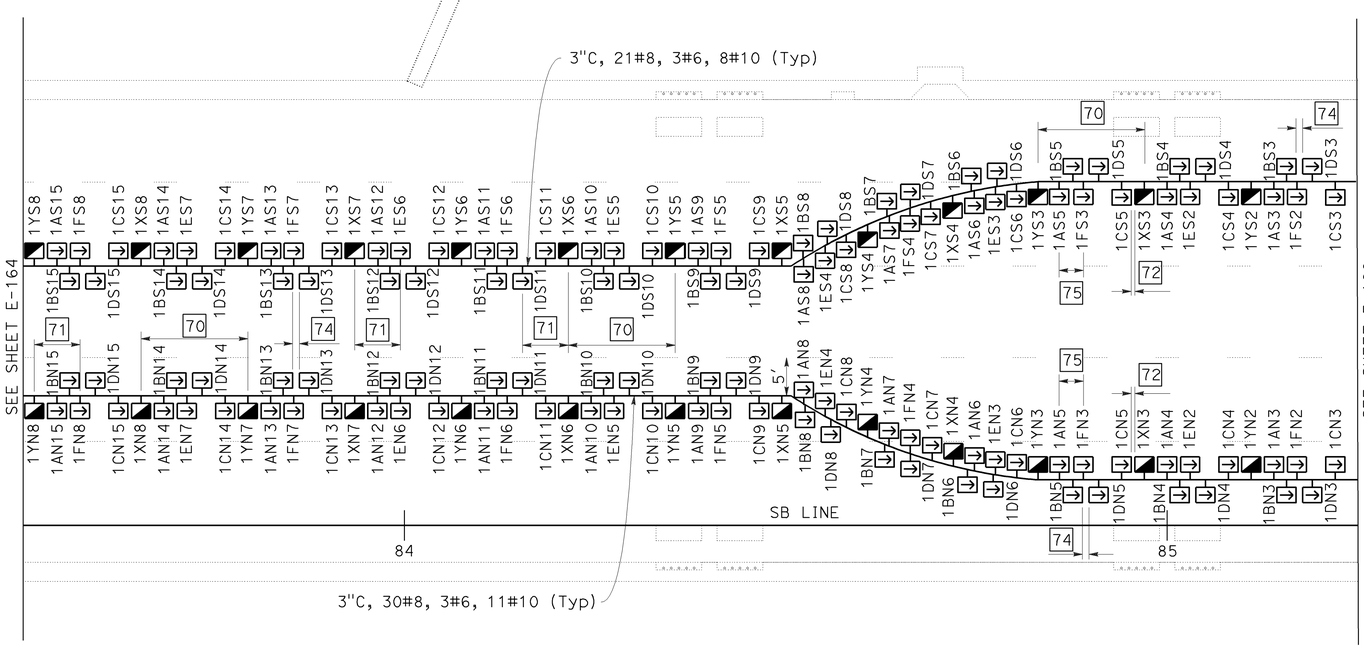

TUNNEL LIGHTING
LUMINAIRE LAYOUT
SCALE: 1" = 10'

THIS PLAN IS ACCURATE FOR ELECTRICAL WORK ONLY

FOR NOTES, ABBREVIATIONS AND LEGEND, SEE SHEET E-32, E-33.

E-165

CALCULATED-DESIGNED BY	ROBERT HSU	REVISED BY	RH
CHECKED BY	ROBERT HSU	DATE REVISED	8/01/09

STATE OF CALIFORNIA - DEPARTMENT OF TRANSPORTATION
ELECTRICAL
FUNCTIONAL SUPERVISOR: BEHZAD GOLEMOHAMMADI

LAST REVISION DATE PLOTTED => 14-DEC-2009
10-21-09 TIME PLOTTED => 16:21

BORDER LAST REVISED 4/11/2008

RELATIVE BORDER SCALE IS IN INCHES 0 1 2 3

USERNAME => trienard
DGN FILE => 416374ua165.dgn

CU 04242

EA 163741

Dist	COUNTY	ROUTE	POST MILES TOTAL PROJECT	SHEET No.	TOTAL SHEETS
04	SF	101	8.2/9.2	328	654

REGISTERED ELECTRICAL ENGINEER 9-9-09 DATE

12-14-09
PLANS APPROVAL DATE

REGISTERED PROFESSIONAL ENGINEER Robert Hsu No. 17114 Exp. 9-30-11 ELECT STATE OF CALIFORNIA

THE STATE OF CALIFORNIA OR ITS OFFICERS OR AGENTS SHALL NOT BE RESPONSIBLE FOR THE ACCURACY OR COMPLETENESS OF SCANNED COPIES OF THIS PLAN SHEET.

CALIFORNIA STATE FIRE MARSHAL APPROVED
Approval of this plan does not authorize or approve any omission or deviation from applicable regulations. Final approval is subject to field inspection. One set of approved plans shall be available on the project site at all times.
Reviewed by: STEPHEN GUARINO
Approval date: 12-14-09

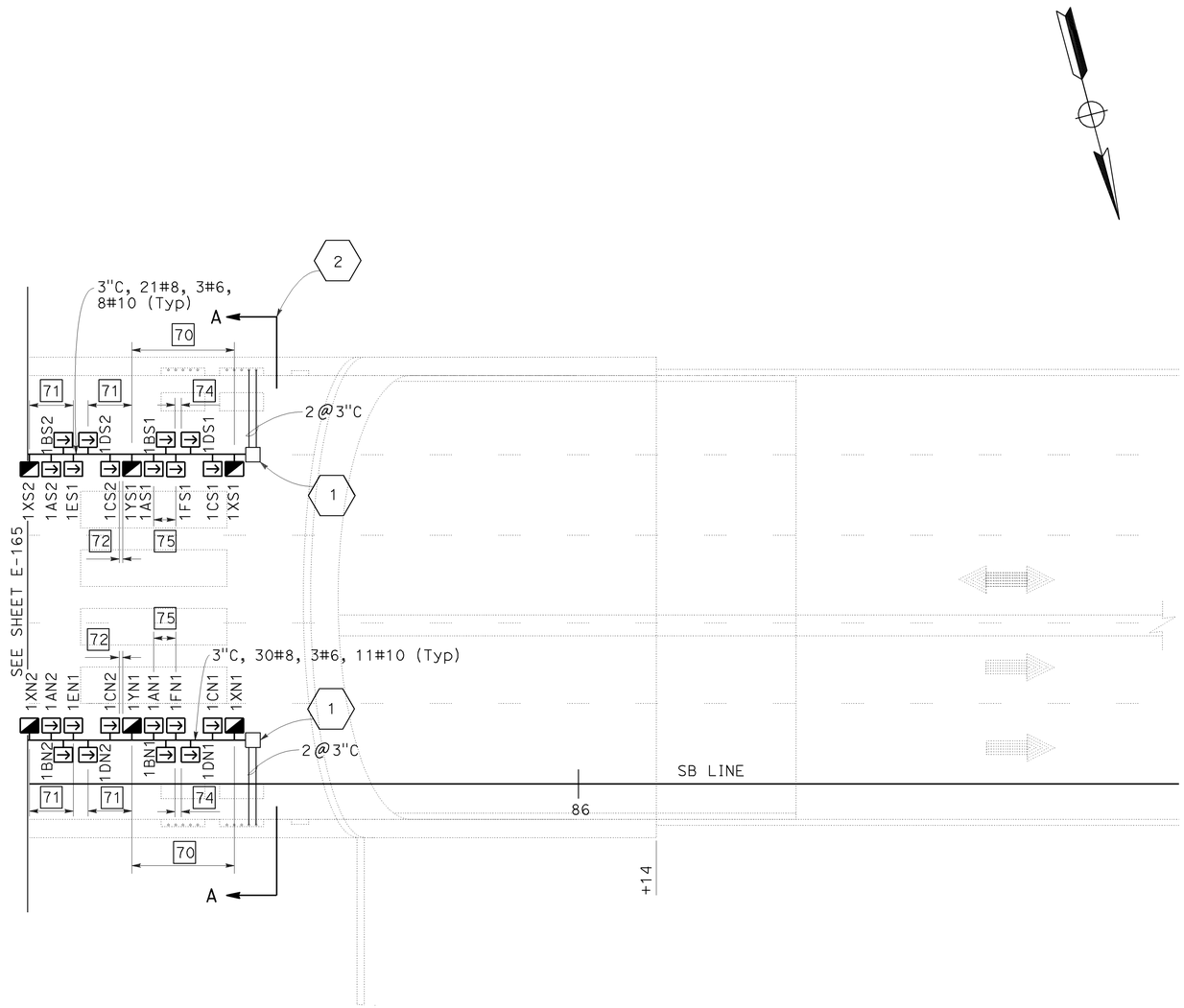

NOTES: (APPLICABLE TO THIS SHEET ONLY)

1. INSTALL AND MOUNT 24"x 24"x 8" NEMA 4X JUNCTION BOX.
2. FOR CROSS SECTION DETAIL, SEE E-167.

TUNNEL LIGHTING
LUMINAIRE LAYOUT
SCALE: 1" = 10'

THIS PLAN IS ACCURATE FOR ELECTRICAL WORK ONLY

FOR NOTES, ABBREVIATIONS AND LEGEND, SEE SHEET E-32, E-33.

E-166

STATE OF CALIFORNIA - DEPARTMENT OF TRANSPORTATION
Caltrans
ELECTRICAL

FUNCTIONAL SUPERVISOR: BEHZAD GOLEMOHAMMADI
CALCULATED-DESIGNED BY: ROBERT HSU
CHECKED BY: ROBERT HSU
REVISED BY: RH
DATE REVISED: 8/01/09

LAST REVISION 10-22-09
DATE PLOTTED => 14-DEC-2009
TIME PLOTTED => 16:21

BORDER LAST REVISED 4/11/2008
RELATIVE BORDER SCALE IS IN INCHES 0 1 2 3
USERNAME => trlenard
DGN FILE => 416374ua166.dgn
CU 04242
EA 163741

Dist	COUNTY	ROUTE	POST MILES TOTAL PROJECT	SHEET No.	TOTAL SHEETS
04	SF	101	8.2/9.2	329	654

9-9-09
REGISTERED ELECTRICAL ENGINEER DATE

Robert Hsu No. 17114 Exp 9-30-11 ELECT
REGISTERED PROFESSIONAL ENGINEER
STATE OF CALIFORNIA

12-14-09
PLANS APPROVAL DATE

THE STATE OF CALIFORNIA OR ITS OFFICERS OR AGENTS SHALL NOT BE RESPONSIBLE FOR THE ACCURACY OR COMPLETENESS OF SCANNED COPIES OF THIS PLAN SHEET.

CALIFORNIA STATE FIRE MARSHAL APPROVED
Approval of this plan does not authorize or approve any omission or deviation from applicable regulations. Final approval is subject to field inspection. One set of approved plans shall be available on the project site at all times.
Reviewed by: STEPHEN GUARINO
Approval date: 12-14-09

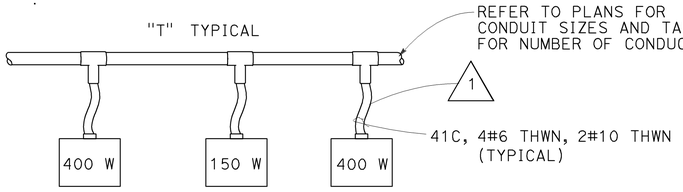

TYPICAL LUMINAIRE CONDUIT CONNECTION SPACING SHALL BE PER PLAN

ELEVATION VIEW

DETAIL 1

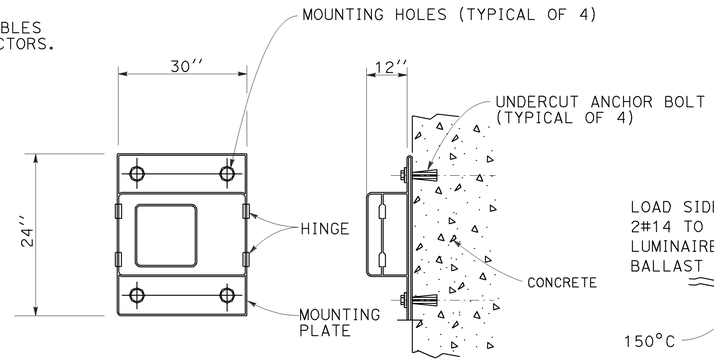

PLAN SECTION

HPS LUMINAIRES CEILING MOUNT

DETAIL 2

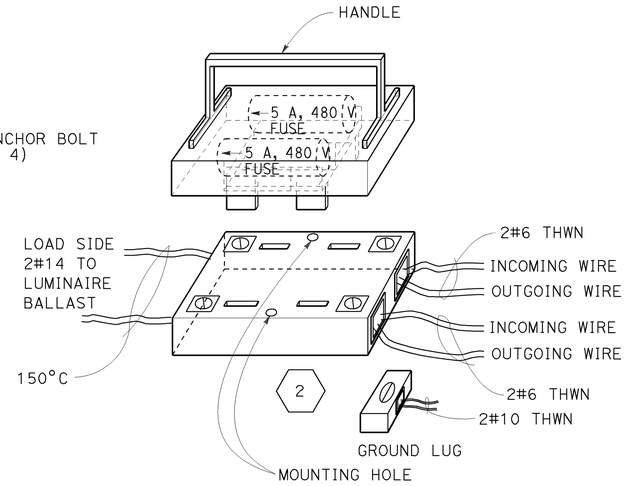

QUICK DISCONNECT TERMINAL BLOCK INSIDE TYPICAL LUMINAIRE (INCLUDING FUSES)

DETAIL 3

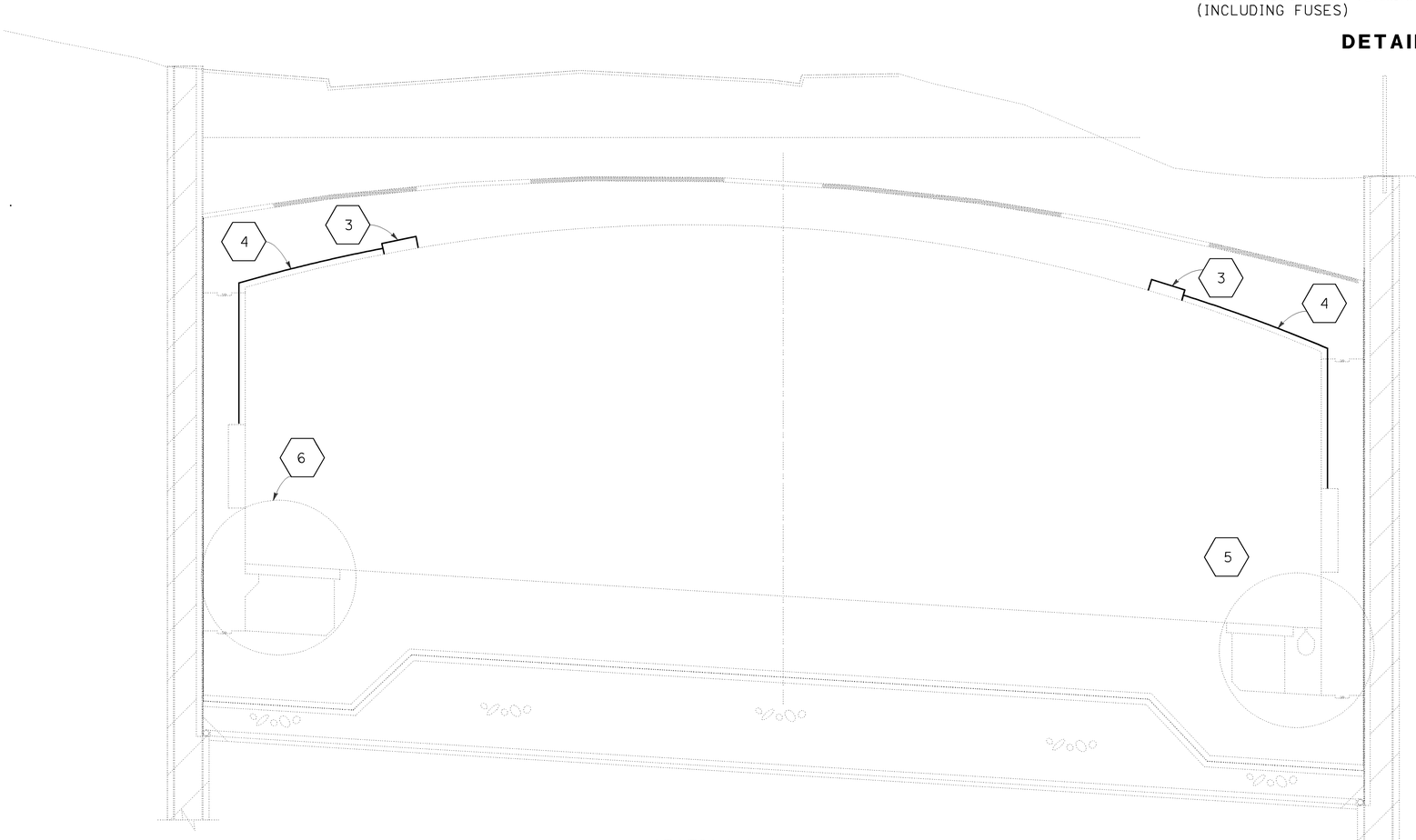

SECTION A-A

NOTES:

1. INSTALL 41C, LTF CONDUIT WITH SEALING GASKETS ON EACH END. LTF CONDUIT SHALL BE A GROUNDED TYPE WITH A CONTINUOUS COPPER GROUND. LIQUID-TIGHT FLEXIBLE STEEL CONDUIT USED IN THE TUBES SHALL COMPLY WITH NFPA 70 AND SHALL HAVE A JACKET MATERIAL WHICH HAS LIMITED SMOKE, LOW FLAME SPREAD AND LOW TOXIC GAS EMISSION CHARACTERISTICS IN THE EVENT OF THE FIRE.
2. TERMINATED CONDUCTORS ON QUICK DISCONNECT TERMINAL BLOCK SHALL BE INSIDE LUMINAIRE. THE LOCATION OF THE BLOCK SHALL BE AWAY FROM THE HEAT GENERATED BY LUMINAIRE. GROUND LUG SHALL BE MOUNTED INSIDE THE FIXTURE ENCLOSURE.
3. PERMANENT 24½" x 24½" x 8½" CONCRETE OPENING.
4. INSTALL TWO OF 3" EMBEDED CONDUITS, REFER 5 AND 6 FOR WIRE INFORMATION.
5. INSTALL 21#8, 3#6, 8#10 Typ CONDUCTORS REFER E-91 AND E-88 FOR CONTINUATION.
6. INSTALL 27#8, 3#6, 10#10 Typ CONDUCTOR REFER E-91 AND E-88 FOR CONTINUATION.

THIS PLAN IS ACCURATE FOR ELECTRICAL WORK ONLY

TUNNEL LIGHTING
INSTALLATION DETAIL
NO SCALE

E-167

CALCULATED-DESIGNED BY	CHECKED BY	REVISED BY	DATE REVISED
ROBERT HSU	ROBERT HSU	RH	8/01/09

FUNCTIONAL SUPERVISOR: BEHZAD GOLEMOHAMMADI

STATE OF CALIFORNIA - DEPARTMENT OF TRANSPORTATION
ELECTRICAL

LAST REVISION DATE PLOTTED => 14-DEC-2009
10-22-09 TIME PLOTTED => 16:22

Dist	COUNTY	ROUTE	POST MILES TOTAL PROJECT	SHEET No.	TOTAL SHEETS
04	SF	101	8.2/9.2	330	654

CALIFORNIA STATE FIRE MARSHAL APPROVED

Approval of this plan does not authorize or approve any omission or deviation from applicable regulations. Final approval is subject to field inspection. One set of approved plans shall be available on the project site at all times.

Reviewed by: STEPHEN GUARINO

Approval date: 12-14-09

9-9-09
REGISTERED ELECTRICAL ENGINEER DATE

12-14-09
PLANS APPROVAL DATE

REGISTERED PROFESSIONAL ENGINEER
Robert Hsu
No. 17114
Exp 9-30-11
ELECT
STATE OF CALIFORNIA

THE STATE OF CALIFORNIA OR ITS OFFICERS OR AGENTS SHALL NOT BE RESPONSIBLE FOR THE ACCURACY OR COMPLETENESS OF SCANNED COPIES OF THIS PLAN SHEET.

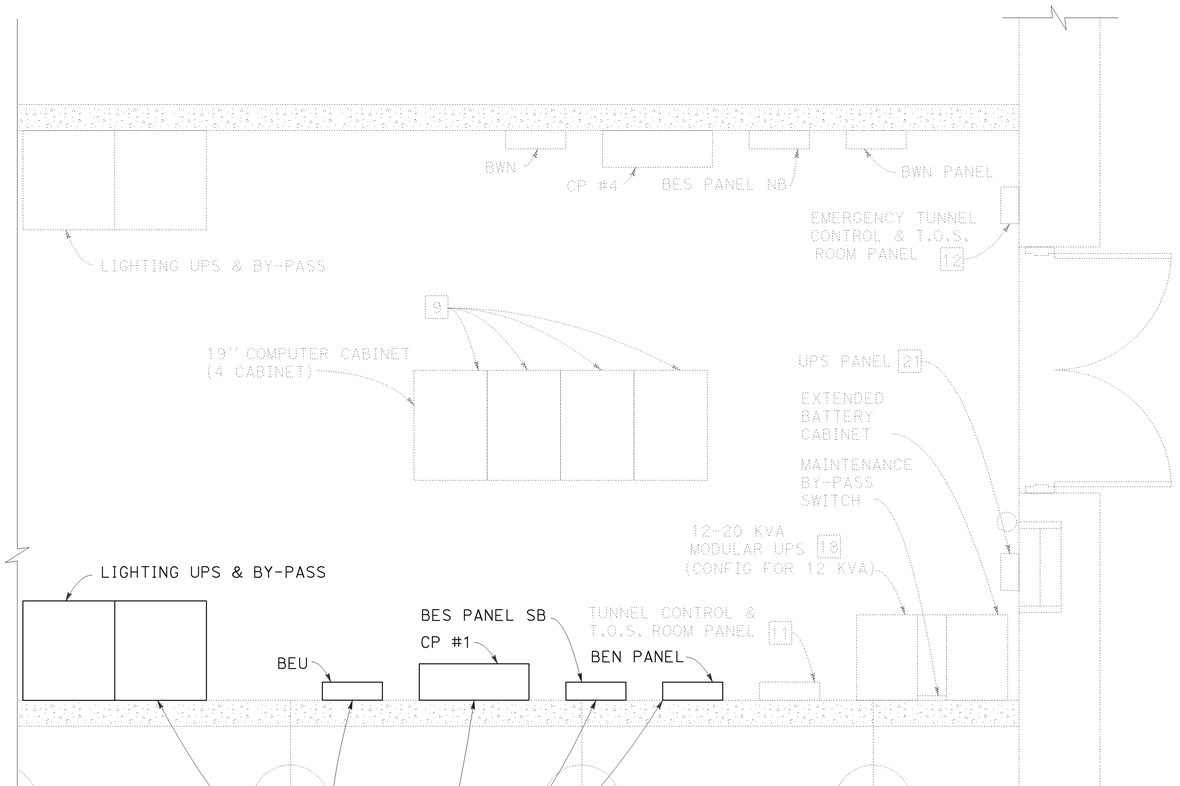

GENERAL NOTE: (THIS SHEET ONLY)

INSTALL LIGHTING EQUIPMENT
BEN, BES, CP#1, BEU AND UPS#1

NOTE: (THIS SHEET ONLY)

1. REFER TO E-170 FOR SINGLE LINE DIAGRAM. EQUIPMENT ELEVATIONS VIEW, WIREWAY AND CONDUITS, SEE SECTION F-F, E-50.

THIS PLAN IS ACCURATE FOR ELECTRICAL WORK ONLY

TUNNEL LIGHTING
EQUIPMENT LAYOUT

SCALE: 1" = 2'

E-168

CALCULATED-DESIGNED BY		
CHECKED BY	RH	8/01/09
	REVISED BY	DATE REVISED
ROBERT HSU	ROBERT HSU	
FUNCTIONAL SUPERVISOR	BEHZAD GOLEMOHAMMADI	

STATE OF CALIFORNIA - DEPARTMENT OF TRANSPORTATION
ELECTRICAL

LAST REVISION 10-09-09 DATE PLOTTED => 14-DEC-2009 TIME PLOTTED => 16:22

BORDER LAST REVISED 4/11/2008

RELATIVE BORDER SCALE IS IN INCHES 0 1 2 3

USERNAME => trienard
DGN FILE => 416374ua168.dgn

CU 04242 EA 163741

Dist	COUNTY	ROUTE	POST MILES TOTAL PROJECT	SHEET No.	TOTAL SHEETS
04	SF	101	8.2/9.2	331	654

REGISTERED ELECTRICAL ENGINEER DATE

12-14-09
PLANS APPROVAL DATE

REGISTERED PROFESSIONAL ENGINEER
No.
Exp.
ELECT
STATE OF CALIFORNIA

THE STATE OF CALIFORNIA OR ITS OFFICERS OR AGENTS SHALL NOT BE RESPONSIBLE FOR THE ACCURACY OR COMPLETENESS OF SCANNED COPIES OF THIS PLAN SHEET.

LEFT INTENTIONALLY BLANK

TUNNEL LIGHTING
PHOTOMETER CONDUIT LAYOUT

E-169

REVISED BY | DATE REVISED
CALCULATED-DESIGNED BY | CHECKED BY
FUNCTIONAL SUPERVISOR

STATE OF CALIFORNIA - DEPARTMENT OF TRANSPORTATION
Caltrans
ELECTRICAL

LAST REVISION | DATE PLOTTED => 14-DEC-2009
10-09-09 | TIME PLOTTED => 16:22

Dist	COUNTY	ROUTE	POST MILES TOTAL PROJECT	SHEET No.	TOTAL SHEETS
04	SF	101	8.2/9.2	332	654

9-9-09
REGISTERED ELECTRICAL ENGINEER DATE

Robert Hsu
No. 17114
Exp 9-30-11
ELECT
REGISTERED PROFESSIONAL ENGINEER
STATE OF CALIFORNIA

12-14-09
PLANS APPROVAL DATE

THE STATE OF CALIFORNIA OR ITS OFFICERS OR AGENTS SHALL NOT BE RESPONSIBLE FOR THE ACCURACY OR COMPLETENESS OF SCANNED COPIES OF THIS PLAN SHEET.

CALIFORNIA STATE FIRE MARSHAL APPROVED
Approval of this plan does not authorize or approve any omission or deviation from applicable regulations. Final approval is subject to field inspection. One set of approved plans shall be available on the project site at all times.
Reviewed by: STEPHEN GUARINO
Approval date: 12-14-09

NOTES: (APPLICABLE TO THIS SHEET ONLY)

1. SCHEMATIC TABLE FOR EACH CIRCUIT, SEE SHEET E-174, E-175 AND E-176.
2. TYPICAL CONNECTION BETWEEN NEUTRAL AND GROUND ON THE BACKPLATE OF PANEL ENCLOSURE.
3. CONNECT GROUND WIRES TO ALL LUMINAIRE ENCLOSURES AS SHOWN (1). SPLIT GROUND WIRES TO SHARE LOADS EQUALLY BETWEEN 9 CIRCUITS.

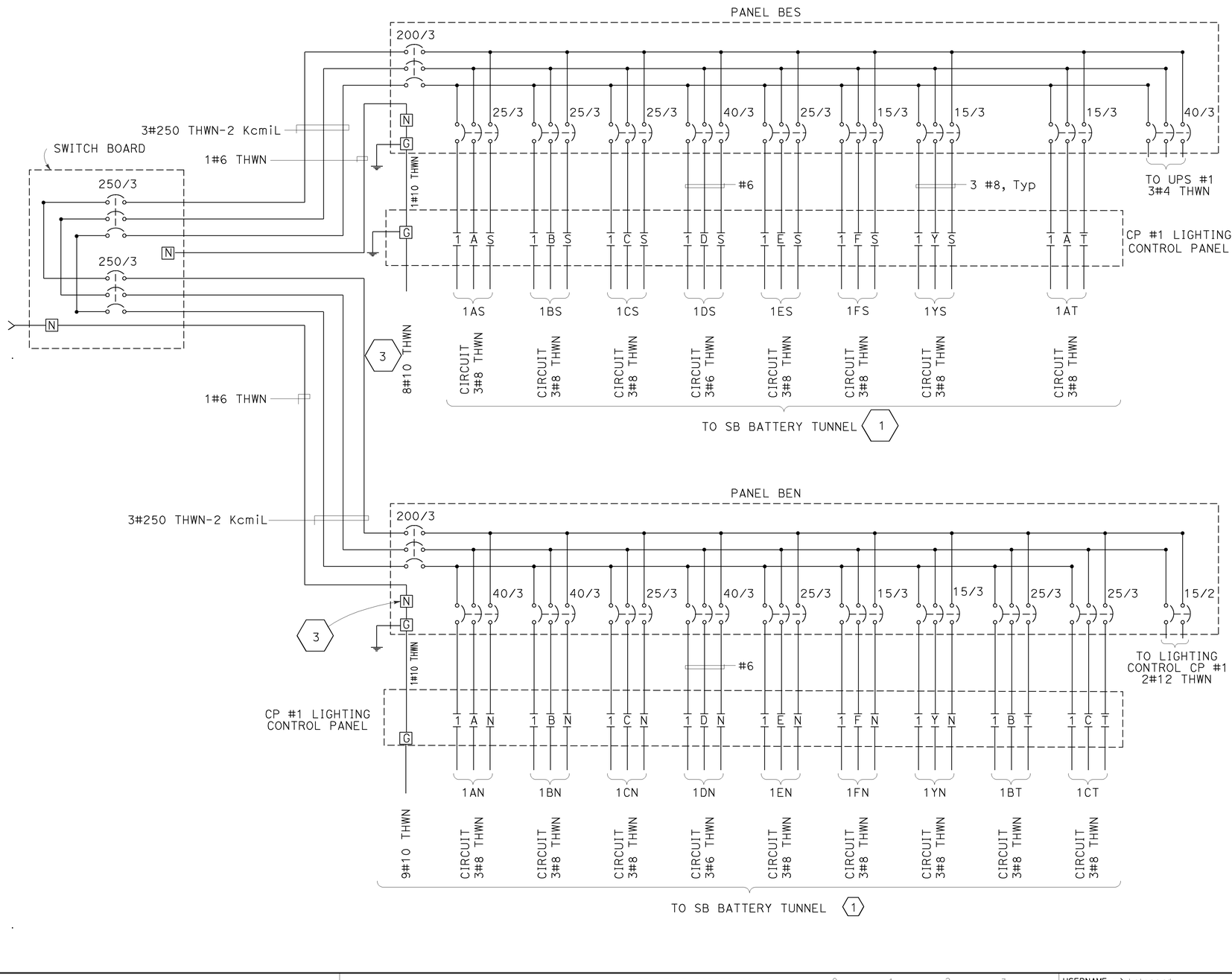

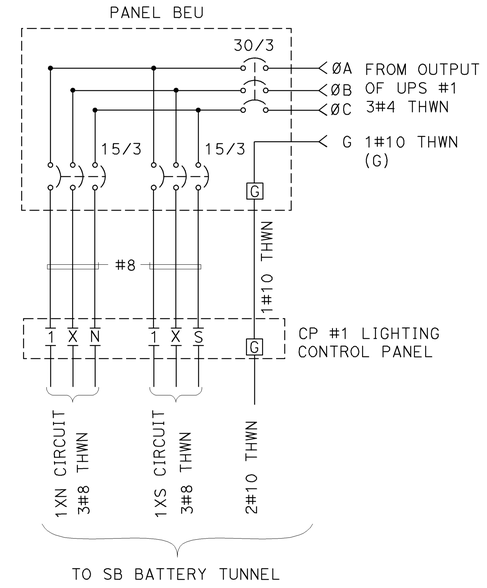

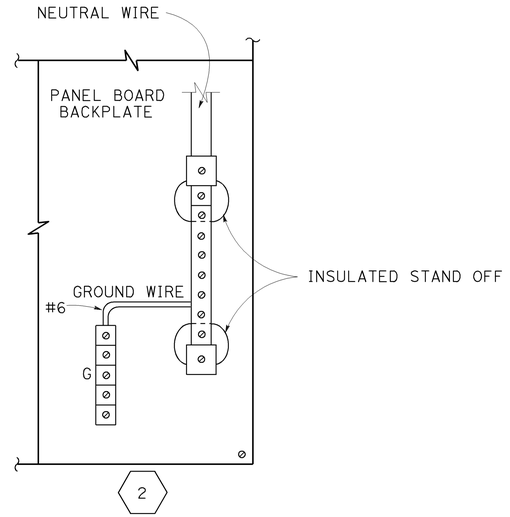

TUNNEL LIGHTING
SB BATTERY TUNNEL
WIRING DETAIL

NO SCALE

E-170

REVISED BY	DATE REVISED
RH	8/01/09

CALCULATED-DESIGNED BY	CHECKED BY
ROBERT HSU	ROBERT HSU

FUNCTIONAL SUPERVISOR: BEHZAD GOLEMOHAMMADI

STATE OF CALIFORNIA - DEPARTMENT OF TRANSPORTATION
ELECTRICAL

LAST REVISION DATE PLOTTED => 14-DEC-2009
10-22-09 TIME PLOTTED => 16:22

BORDER LAST REVISED 4/11/2008

RELATIVE BORDER SCALE IS IN INCHES 0 1 2 3

USERNAME => trienard
DGN FILE => 416374ua170.dgn

CU 04242

EA 163741

NOTES: (APPLICABLE TO THIS SHEET ONLY)

1. FOR NAME PLATE SCHEDULE DETAIL, SEE SHEET E-173.
2. FOR PANEL WIRING DETAIL, SEE SHEET E-170.
3. FOR PANEL BEU SCHEDULE, SEE SHEET E-176.
4. FOR SWITCH BOARD INFORMATION, SEE SHEET E-71.

PANEL BEN 480 VOLT 3 PHASE						
CIRCUIT BREAKER			DESCRIPTION (1)	LOAD		
No.	AMPERE	POLE		AB	AC	BC
1	25	3	TUNNEL LIGHTING CIRCUIT 1AN	4160		
3			TUNNEL LIGHTING CIRCUIT 1AN		4160	
5			TUNNEL LIGHTING CIRCUIT 1AN			4160
7	25	3	TUNNEL LIGHTING CIRCUIT 1CN	5720		
9			TUNNEL LIGHTING CIRCUIT 1CN		5720	
11			TUNNEL LIGHTING CIRCUIT 1CN			5720
13	25	3	TUNNEL LIGHTING CIRCUIT 1EN	5720		
15			TUNNEL LIGHTING CIRCUIT 1EN		5720	
17			TUNNEL LIGHTING CIRCUIT 1EN			5720
19	15	2	LIGHTING CONTROL CP # 1	1000		
21			LIGHTING CONTROL CP # 1		1000	
23						
25	25	3	TUNNEL LIGHTING CIRCUIT 1BT	4160		
27			TUNNEL LIGHTING CIRCUIT 1BT		4160	
29			TUNNEL LIGHTING CIRCUIT 1BT			4160
2	25	3	TUNNEL LIGHTING CIRCUIT 1BN	4160		
4			TUNNEL LIGHTING CIRCUIT 1BN		4160	
6			TUNNEL LIGHTING CIRCUIT 1BN			4160
8	40	3	TUNNEL LIGHTING CIRCUIT 1DN	6552		
10			TUNNEL LIGHTING CIRCUIT 1DN		6552	
12			TUNNEL LIGHTING CIRCUIT 1DN			6552
14	25	3	TUNNEL LIGHTING CIRCUIT 1FN	5720		
16			TUNNEL LIGHTING CIRCUIT 1FN		5720	
18			TUNNEL LIGHTING CIRCUIT 1FN			5720
20	15	3	TUNNEL LIGHTING CIRCUIT 1YN	2322		
22			TUNNEL LIGHTING CIRCUIT 1YN		2322	
24			TUNNEL LIGHTING CIRCUIT 1YN			2322
26	25	3	TUNNEL LIGHTING CIRCUIT 1CT	4160		
28			TUNNEL LIGHTING CIRCUIT 1CT		4160	
30			TUNNEL LIGHTING CIRCUIT 1CT			4160
			TOTAL PHASE kVA	44	44	44
TOTAL kVA 132			MAIN BREAKER 250 A	TOP		X
FEEDER 250 Kcmil THWN-2				BOTTOM		
NEMA 1			18 KAIC FULLY LOAD			

PANEL TABLE BEN

PANEL BES 480 VOLT 3 PHASE						
CIRCUIT BREAKER			DESCRIPTION (1)	LOAD		
No.	AMPERE	POLE		AB	AC	BC
1	25	1	TUNNEL LIGHTING CIRCUIT 1AS	4160		
3			TUNNEL LIGHTING CIRCUIT 1AS		4160	
5			TUNNEL LIGHTING CIRCUIT 1AS			4160
7	25	3	TUNNEL LIGHTING CIRCUIT 1CS	5720		
9			TUNNEL LIGHTING CIRCUIT 1CS		5720	
11			TUNNEL LIGHTING CIRCUIT 1CS			5720
13	25	3	TUNNEL LIGHTING CIRCUIT 1ES	5720		
15			TUNNEL LIGHTING CIRCUIT 1ES		5720	
17			TUNNEL LIGHTING CIRCUIT 1ES			5720
19	40	3	UPS #3 POWER	10000		
21			UPS #3 POWER		10000	
23			UPS #3 POWER			10000
25	25	3	TUNNEL LIGHTING CIRCUIT 1AT	4160		
27			TUNNEL LIGHTING CIRCUIT 1AT		4160	
29			TUNNEL LIGHTING CIRCUIT 1AT			4160
2	25	3	TUNNEL LIGHTING CIRCUIT 1BS	4160		
4			TUNNEL LIGHTING CIRCUIT 1BS		4160	
6			TUNNEL LIGHTING CIRCUIT 1BS			4160
8	40	3	TUNNEL LIGHTING CIRCUIT 1DS	6552		
10			TUNNEL LIGHTING CIRCUIT 1DS		6552	
12			TUNNEL LIGHTING CIRCUIT 1DS			6552
14	25	3	TUNNEL LIGHTING CIRCUIT 1FS	5720		
16			TUNNEL LIGHTING CIRCUIT 1FS		5720	
18			TUNNEL LIGHTING CIRCUIT 1FS			5720
20	15	3	TUNNEL LIGHTING CIRCUIT 1YS	2322		
22			TUNNEL LIGHTING CIRCUIT 1YS		2322	
24			TUNNEL LIGHTING CIRCUIT 1YS			2322
26						
28						
30						
			TOTAL PHASE kVA	49	49	49
TOTAL kVA 147			MAIN BREAKER 250 A	TOP		X
FEEDER 250 Kcmil THWN-2				BOTTOM		
NEMA 1			18 KAIC FULLY LOAD			

PANEL TABLE BES

CALIFORNIA STATE FIRE MARSHAL APPROVED

Approval of this plan does not authorize or approve any omission or deviation from applicable regulations. Final approval is subject to field inspection. One set of approved plans shall be available on the project site at all times.

Reviewed by: STEPHEN GUARINO

Approval date: 12-14-09

Dist	COUNTY	ROUTE	POST MILES TOTAL PROJECT	SHEET No.	TOTAL SHEETS
04	SF	101	8.2/9.2	333	654

9-9-09
REGISTERED ELECTRICAL ENGINEER DATE

Robert Hsu No. 17114 Exp 9-30-11 ELECT — REGISTERED PROFESSIONAL ENGINEER — STATE OF CALIFORNIA

12-14-09
PLANS APPROVAL DATE

THE STATE OF CALIFORNIA OR ITS OFFICERS OR AGENTS SHALL NOT BE RESPONSIBLE FOR THE ACCURACY OR COMPLETENESS OF SCANNED COPIES OF THIS PLAN SHEET.

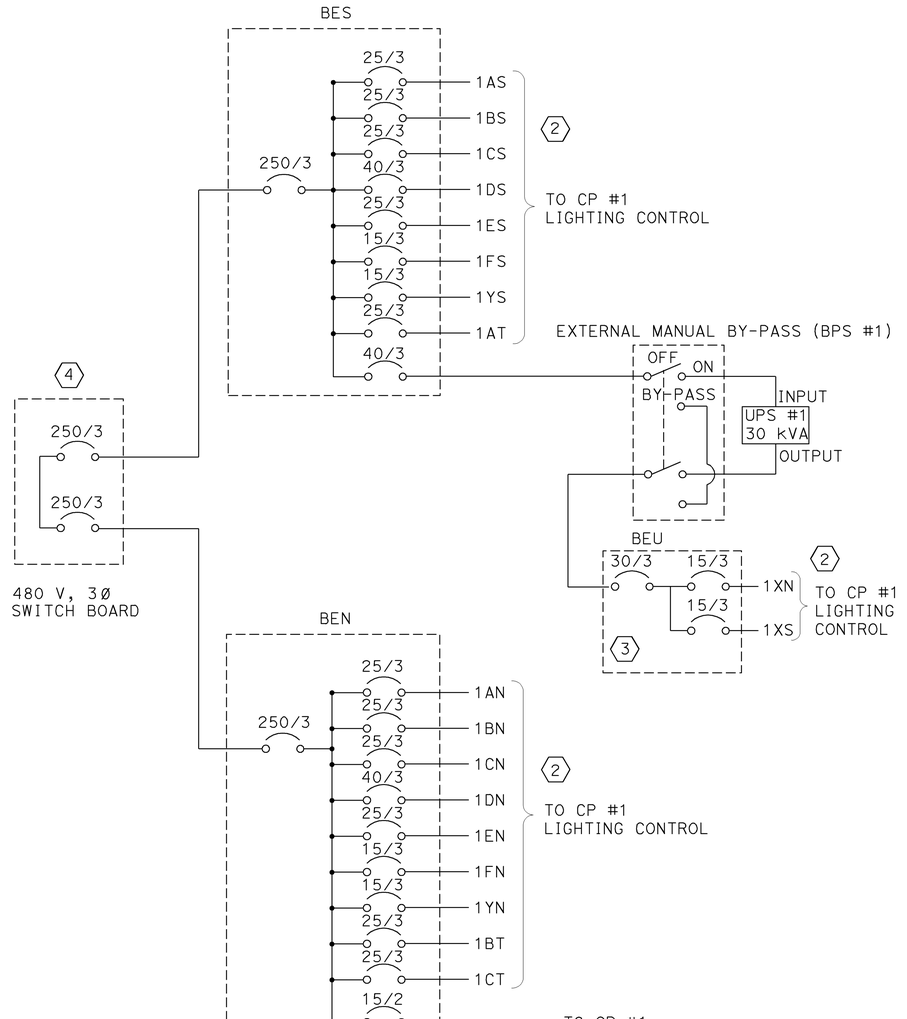

SINGLE LINE DIAGRAM

TUNNEL LIGHTING
SINGLE LINE DIAGRAM, PANEL TABLE

NO SCALE

E-171

STATE OF CALIFORNIA - DEPARTMENT OF TRANSPORTATION
ELECTRICAL
FUNCTIONAL SUPERVISOR: BEHZAD GOLEMOHAMMADI
CALCULATED-DESIGNED BY: ROBERT HSU
CHECKED BY: RH
REVISED BY / DATE REVISED: 8/01/09

LAST REVISION 10-09-09 DATE PLOTTED => 14-DEC-2009 TIME PLOTTED => 16:22

BORDER LAST REVISED 4/11/2008 | RELATIVE BORDER SCALE IS IN INCHES 0 1 2 3 | USERNAME => trienard DGN FILE => 416374ua171.dgn | CU 04242 | EA 163741

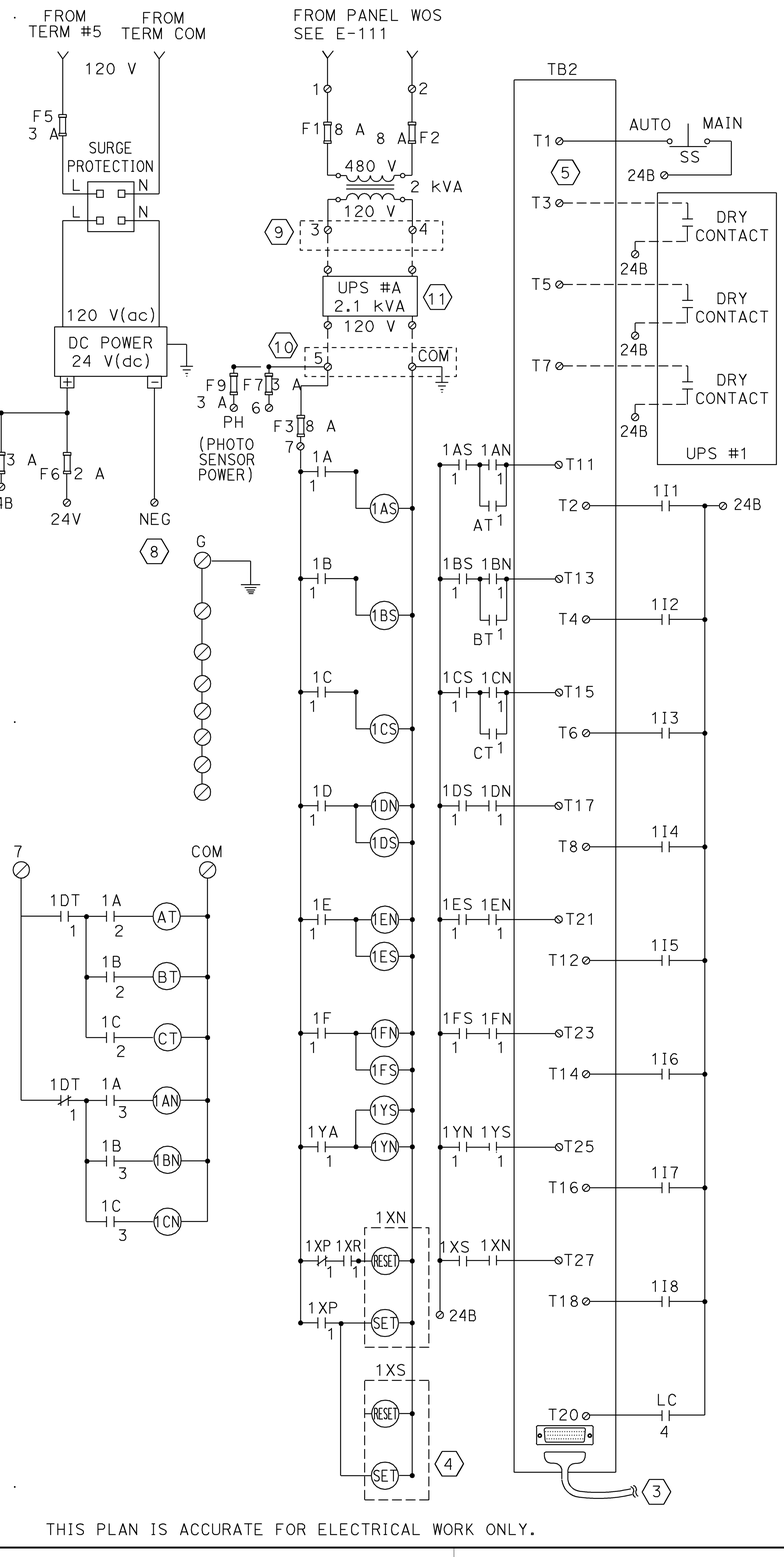

THIS PLAN IS ACCURATE FOR ELECTRICAL WORK ONLY.

CALIFORNIA STATE FIRE MARSHAL APPROVED

Approval of this plan does not authorize or approve any omission or deviation from applicable regulations. Final approval is subject to field inspection. One set of approved plans shall be available on the project site at all times.

Reviewed by: STEPHEN GUARINO

Approval date: 12-14-09

Dist	COUNTY	ROUTE	POST MILES TOTAL PROJECT	SHEET No.	TOTAL SHEETS
04	SF	101	8.2/9.2	334	654

9-9-09
REGISTERED ELECTRICAL ENGINEER DATE

Robert Hsu No. 17114 Exp 9-30-11 ELECT
REGISTERED PROFESSIONAL ENGINEER STATE OF CALIFORNIA

12-14-09
PLANS APPROVAL DATE

THE STATE OF CALIFORNIA OR ITS OFFICERS OR AGENTS SHALL NOT BE RESPONSIBLE FOR THE ACCURACY OR COMPLETENESS OF SCANNED COPIES OF THIS PLAN SHEET.

NOTES: (APPLICABLE TO THIS SHEET ONLY)

1. TB1 SHALL BE A DISCRETE 16 POINTS OF OUTPUT BLOCK, INDIVIDUALLY FUSED.
2. APPLY HIGH POWER SYSTEM CABLE AT RATED 2 A PER POINT TO DO MODULE, 12' CABLE LENGTH MINIMUM.
3. APPLY STANDARD POWER SYSTEM CABLE AT RATED 0.5 A PER POINT TO DI MODULE, 12' MINIMUM.
4. MECHANICALLY HELD CONTACTOR IS REQUIRED ADDITIONAL 110 VOLT SIGNAL TO RESET THE CIRCUIT.
5. TB2 SHALL BE A 32 POINTS OF INPUT BLOCK.
6. CONNECT THE CABLE TO AN ETHERNET SWITCH #2 OF THE SCADA CABINET. SEE E-56.
7. AI MODULE SHALL BE OPERATED AT CURRENT RANGE OF 4 mA TO 20 mA AND SHALL BE COMPATIBLE WITH PHOTO METER SENSOR, SEE SHEET E-169 FOR PHOTO METER SENSOR DETAIL.
8. CONNECT 'NEG' TERMINAL TO GROUP COMMON ON TB2.
9. INSTALL A SINGLE 120 V(ac) RECEPTACLE INSIDE THE ENCLOSURE.
10. INSTALL A 120 Vac POWER CORE, 12' LONG MINIMUM IN LENGTH.
11. UPS SHALL BE PROVIDED WITH A 12' LONG OF 120 V(ac) POWER CORE, AND THE UNIT SHALL BE INSTALLED NEXT TO THE CP #1 UNIT.

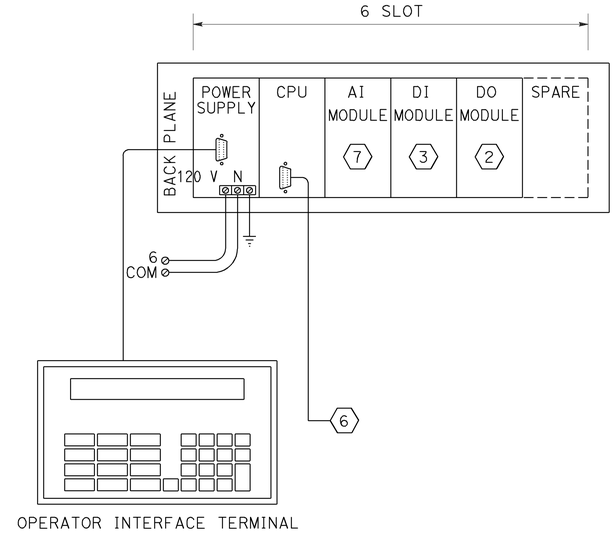

OPERATOR INTERFACE TERMINAL

TUNNEL LIGHTING
CP No. 1 WIRING DETAIL

NO SCALE

E-172

CALCULATED-DESIGNED BY	CHECKED BY	REVISED BY	DATE REVISED
ROBERT HSU	ROBERT HSU	RH	8/01/09

FUNCTIONAL SUPERVISOR: BEHZAD GOLEMOHAMMADI

STATE OF CALIFORNIA - DEPARTMENT OF TRANSPORTATION
ELECTRICAL

LAST REVISION DATE PLOTTED => 14-DEC-2009
TIME PLOTTED => 16:22

BORDER LAST REVISED 4/11/2008

RELATIVE BORDER SCALE IS IN INCHES 0 1 2 3

USERNAME => trienard
DGN FILE => 416374ua172.dgn

CU 04242

EA 163741

Dist	COUNTY	ROUTE	POST MILES TOTAL PROJECT	SHEET No.	TOTAL SHEETS
04	SF	101	8.2/9.2	335	654

REGISTERED ELECTRICAL ENGINEER — 9-9-09 DATE

PLANS APPROVAL DATE — 12-14-09

Robert Hsu No. 17114 Exp 9-30-11 ELECT — REGISTERED PROFESSIONAL ENGINEER — STATE OF CALIFORNIA

THE STATE OF CALIFORNIA OR ITS OFFICERS OR AGENTS SHALL NOT BE RESPONSIBLE FOR THE ACCURACY OR COMPLETENESS OF SCANNED COPIES OF THIS PLAN SHEET.

CALIFORNIA STATE FIRE MARSHAL APPROVED

Approval of this plan does not authorize or approve any omission or deviation from applicable regulations. Final approval is subject to field inspection. One set of approved plans shall be available on the project site at all times.

Reviewed by: STEPHEN GUARINO

Approval date: 12-14-09

NOTES: (APPLICABLE TO THIS SHEET ONLY)

1. A1 TO A16 ARE 30 A, ELECTRICALY HELD, 600/480 V LIGHTING CONTACTORS (TYPICAL).
2. B1 TO B10 AND I1 TO I9 ARE 120 V, 4 PDT, KHAU1711 TYPE. ALL RELAYS SHALL INCLUDE NEON LIGHT INDICATORS. RELAY SOCKETS SHALL BE MOUNTED TO THE RAIL.
3. FOR SWITCHES AND INDICATOR LIGHTS CONFIGURATION DETAIL, SEE NAMEPLATE SCHEDULE
4. D1 AND D2 ARE 30 A, MECHANICALLY HELD, 600/480 V LIGHTING CONDUCTORS.
5. ALL TERMINALS IN LIGHTING CONTACTOR ENCLOSURES SHALL ACCOMODATE #6 OR LARGER CONDUCTORS.
6. THE NAMEPLATE IS LOCATED ON THE FRONT COVER OF THE PANEL.

NAMEPLATE SCHEDULE FOR PANEL BEN

				SIZE OF NAMEPLATES
1	CIRCUIT 1AN	2	CIRCUIT 1BN	1/4" HIGHT BLACK ON A WHITE BACK GROUND, 5/8" H x 2 1/2" W, LAMINATED PLASTIC
3	CIRCUIT 1CN	4	CIRCUIT 1DN	
5	CIRCUIT 1EN	6	CIRCUIT 1FN	
7	CIRCUIT 1BT	8	CIRCUIT 1YN	
9	CP #1 POWER	10	CIRCUIT 1CT	
11	PANEL MAIN	12	PANEL BEN (6)	
13		14		
15		16		

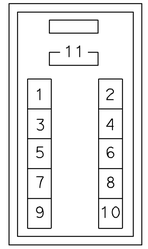

NAMEPLATE SCHEDULE FOR PANEL BEU

				SIZE OF NAMEPLATES
1	CIRCUIT 1XN	2	CIRCUIT 1XS	1/4" HIGHT BLACK ON A WHITE BACK GROUND, 5/8" H x 2 1/2" W, LAMINATED PLASTIC
3	PANEL MAIN	4	PANEL BEU (6)	
5		6		
7		8		
9		10		
11		12		
13		14		
15		16		

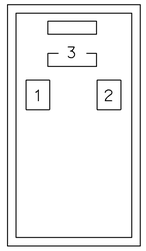

NAMEPLATE SCHEDULE FOR PANEL BES

				SIZE OF NAMEPLATES
1	CIRCUIT 1AS	2	CIRCUIT 1BS	1/4" HIGHT BLACK ON A WHITE BACK GROUND, 5/8" H x 2 1/2" W, LAMINATED PLASTIC
3	CIRCUIT 1CS	4	CIRCUIT 1DS	
5	CIRCUIT 1ES	6	CIRCUIT 1FS	
7	UPS #1 POWER	8	CIRCUIT 1YS	
9	PANEL MAIN	10	CIRCUIT 1AT	
11		12	PANEL BES (6)	
13		14		
15		16		

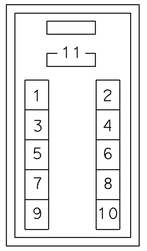

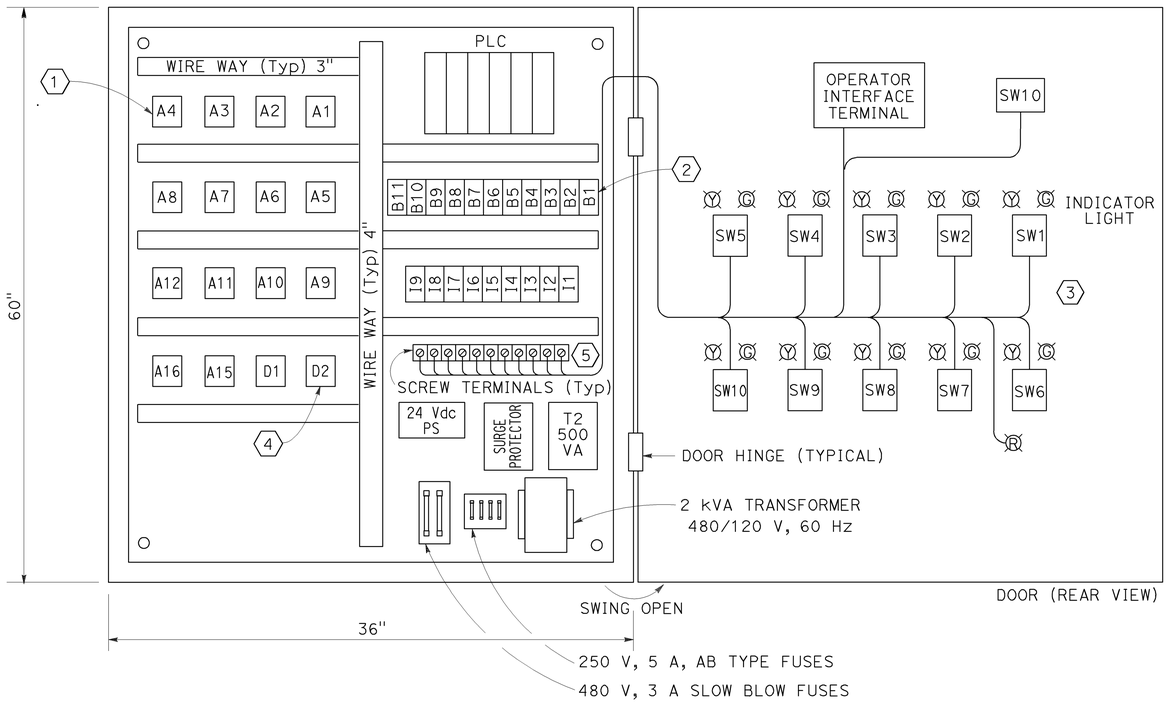

CP #1 ENCLOSURE
NEMA 1
WALL MOUNT, ANSI 61, GRAY

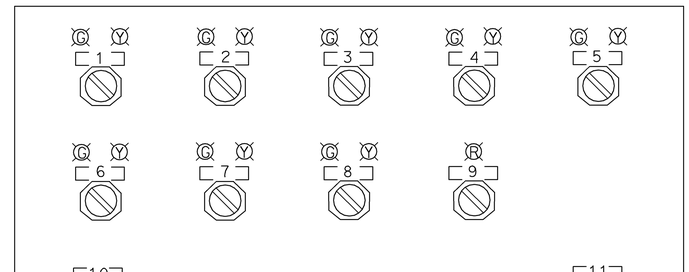

CP #1 FRONT VIEW

CP #1						SIZE OF NAMEPLATES
1	AUTO OFF MANUAL CIRCUIT 1A		7	AUTO OFF MANUAL CIRCUIT 1Y		1/4" HIGHT BLACK ON A WHITE BACK GROUND, 5/8" H x 2 1/2" W, LAMINATED PLASTIC
2	AUTO OFF MANUAL CIRCUIT 1B		8	AUTO OFF MANUAL CIRCUIT 1X		
3	AUTO OFF MANUAL CIRCUIT 1C		9	OFF ON DETOUR		
4	AUTO OFF MANUAL CIRCUIT 1D		10	COMMUNICATION BREAKDOWN		
5	AUTO OFF MANUAL CIRCUIT 1E		11	AUTO MAIN		
6	AUTO OFF MANUAL CIRCUIT 1F					

TUNNEL LIGHTING

FRONT PANEL LAYOUT NAMEPLATE SCHEDULE AND LIGHTING CONTACTOR ENCLOSURE

NO SCALE

E-173

STATE OF CALIFORNIA - DEPARTMENT OF TRANSPORTATION
ELECTRICAL
Caltrans
FUNCTIONAL SUPERVISOR: BEHZAD GOLEMOHAMMADI
CALCULATED-DESIGNED BY: ROBERT HSU
CHECKED BY: ROBERT HSU
REVISED BY: RH
DATE REVISED: 8/01/09

LAST REVISION DATE PLOTTED => 14-DEC-2009
TIME PLOTTED => 16:22
10-22-09

BORDER LAST REVISED 4/11/2008
RELATIVE BORDER SCALE IS IN INCHES 0 1 2 3
USERNAME => trlenard
DGN FILE => 416374ua173.dgn
CU 04242
EA 163741

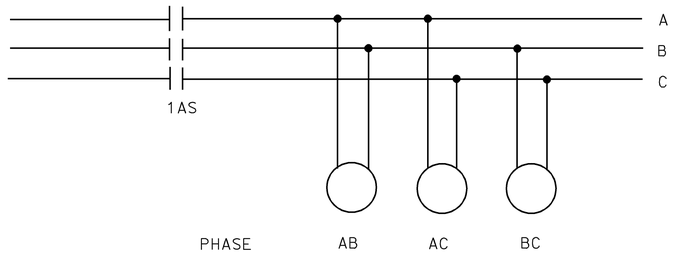

TYPICAL SCHEMATIC DIAGRAM

CALIFORNIA STATE FIRE MARSHAL APPROVED

Approval of this plan does not authorize or approve any omission or deviation from applicable regulations. Final approval is subject to field inspection. One set of approved plans shall be available on the project site at all times.

Reviewed by: STEPHEN GUARINO

Approval date: 12-14-09

Dist	COUNTY	ROUTE	POST MILES TOTAL PROJECT	SHEET No.	TOTAL SHEETS
04	SF	101	8.2/9.2	336	654

9-9-09
REGISTERED ELECTRICAL ENGINEER DATE

Robert Hsu No. 17114 Exp 9-30-11 ELECT
REGISTERED PROFESSIONAL ENGINEER — STATE OF CALIFORNIA

12-14-09
PLANS APPROVAL DATE

THE STATE OF CALIFORNIA OR ITS OFFICERS OR AGENTS SHALL NOT BE RESPONSIBLE FOR THE ACCURACY OR COMPLETENESS OF SCANNED COPIES OF THIS PLAN SHEET.

LUMINAIRE TABLE FOR CONTACTOR 1AS

LUMINAIRE NUMBER	PHASE AB	PHASE AC	PHASE BC
	1AS 1	1AS 2	1AS 3
	1AS 4	1AS 5	1AS 6
	1AS 7	1AS 8	1AS 9
	1AS 10	1AS 11	1AS 12
	1AS 13	1AS 14	1AS 15
	1AS 16	1AS 17	1AS 18
	1AS 19	1AS 20	1AS 21
	1AS 22	1AS 23	1AS 24
	1AS 25	1AS 26	

LUMINAIRE TABLE FOR CONTACTOR 1BS

LUMINAIRE NUMBER	PHASE AB	PHASE AC	PHASE BC
	1BS 1	1BS 2	1BS 3
	1BS 4	1BS 5	1BS 6
	1BS 7	1BS 8	1BS 9
	1BS 10	1BS 11	1BS 12
	1BS 13	1BS 14	1BS 15
	1BS 16	1BS 17	1BS 18
	1BS 19	1BS 20	1BS 21
	1BS 22	1BS 23	1BS 24
	1BS 25		

LUMINAIRE TABLE FOR CONTACTOR 1CS

LUMINAIRE NUMBER	PHASE AB	PHASE AC	PHASE BC
	1CS 1	1CS 2	1CS 3
	1CS 4	1CS 5	1CS 6
	1CS 7	1CS 8	1CS 9
	1CS 10	1CS 11	1CS 12
	1CS 13	1CS 14	1CS 15
	1CS 16	1CS 17	1CS 18
	1CS 19	1CS 20	1CS 21
	1CS 22	1CS 23	1CS 24
	1CS 25	1CS 26	1CS 27
	1CS 28	1CS 29	1CS 30
	1CS 31	1CS 32	

LUMINAIRE TABLE FOR CONTACTOR 1DS

LUMINAIRE NUMBER	PHASE AB	PHASE AC	PHASE BC
	1DS 1	1DS 2	1DS 3
	1DS 4	1DS 5	1DS 6
	1DS 7	1DS 8	1DS 9
	1DS 10	1DS 11	1DS 12
	1DS 13	1DS 14	1DS 15
	1DS 16	1DS 17	1DS 18
	1DS 19	1DS 20	1DS 21
	1DS 22	1DS 23	1DS 24
	1DS 25	1DS 26	1DS 27
	1DS 28	1DS 29	1DS 30
	1DS 31	1DS 32	1DS 33
	1DS 34	1DS 35	1DS 36
	1DS 37	1DS 38	1DS 39
	1DS 40	1DS 41	

LUMINAIRE TABLE FOR CONTACTOR 1ES

LUMINAIRE NUMBER	PHASE AB	PHASE AC	PHASE BC
	1ES 1	1ES 2	1ES 3
	1ES 4	1ES 5	1ES 6
	1ES 7	1ES 8	1ES 9
	1ES 10	1ES 11	1ES 12
	1ES 13	1ES 14	1ES 15
	1ES 16	1ES 17	1ES 18
	1ES 19	1ES 20	1ES 21
	1ES 22	1ES 23	1ES 24
	1ES 25	1ES 26	1ES 27
	1ES 28	1ES 29	1ES 30
	1ES 31	1ES 32	

LUMINAIRE TABLE FOR CONTACTOR 1FS

LUMINAIRE NUMBER	PHASE AB	PHASE AC	PHASE BC
	1FS 1	1FS 2	1FS 3
	1FS 4	1FS 5	1FS 6
	1FS 7	1FS 8	1FS 9
	1FS 10	1FS 11	1FS 12
	1FS 13	1FS 14	1FS 15
	1FS 16	1FS 17	1FS 18
	1FS 19	1FS 20	1FS 21
	1FS 22	1FS 23	1FS 24
	1FS 25	1FS 26	1FS 27
	1FS 28	1FS 29	1FS 30
	1FS 31	1FS 32	1FS 33
	1FS 34		

LUMINAIRE TABLE FOR CONTACTOR 1YS

LUMINAIRE NUMBER	PHASE AB	PHASE AC	PHASE BC
	1YS 1	1YS 2	1YS 3
	1YS 4	1YS 5	1YS 6
	1YS 7	1YS 8	1YS 9
	1YS 10	1YS 11	1YS 12
	1YS 13	1YS 14	1YS 15
	1YS 16	1YS 17	1YS 18
	1YS 19	1YS 20	1YS 21
	1YS 22	1YS 23	1YS 24
	1YS 25	1YS 26	1YS 27
	1YS 28	1YS 29	1YS 30
	1YS 31	1YS 32	1YS 33
	1YS 34		

LUMINAIRE TABLE FOR CONTACTOR 1XS

LUMINAIRE NUMBER	PHASE AB	PHASE AC	PHASE BC
	1XS 1	1XS 2	1XS 3
	1XS 4	1XS 5	1XS 6
	1XS 7	1XS 8	1XS 9
	1XS 10	1XS 11	1XS 12
	1XS 13	1XS 14	1XS 15
	1XS 16	1XS 17	1XS 18
	1XS 19	1XS 20	1XS 21
	1XS 22	1XS 23	1XS 24
	1XS 25	1XS 26	1XS 27
	1XS 28	1XS 29	1XS 30
	1XS 31	1XS 32	1XS 33
	1XS 34		

TUNNEL LIGHTING
LUMINAIRE TABLE

NO SCALE

E-174

REVISED BY	DATE REVISED
RH	8/01/09

CALCULATED-DESIGNED BY: ROBERT HSU
CHECKED BY: ROBERT HSU

FUNCTIONAL SUPERVISOR: BEHZAD GOLEMOHAMMADI

STATE OF CALIFORNIA - DEPARTMENT OF TRANSPORTATION
ELECTRICAL

LAST REVISION DATE PLOTTED => 14-DEC-2009
10-09-09 TIME PLOTTED => 16:22

BORDER LAST REVISED 4/11/2008

RELATIVE BORDER SCALE IS IN INCHES 0 1 2 3

USERNAME => trienard
DGN FILE => 416374ua174.dgn

CU 04242

EA 163741

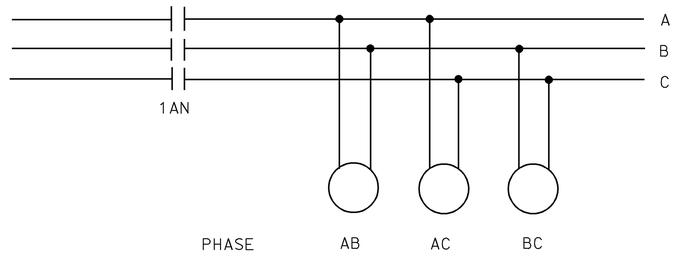

TYPICAL SCHEMATIC DIAGRAM

CALIFORNIA STATE FIRE MARSHAL APPROVED

Approval of this plan does not authorize or approve any omission or deviation from applicable regulations. Final approval is subject to field inspection. One set of approved plans shall be available on the project site at all times.

Reviewed by: STEPHEN GUARINO

Approval date: 12-14-09

Dist	COUNTY	ROUTE	POST MILES TOTAL PROJECT	SHEET No.	TOTAL SHEETS
04	SF	101	8.2/9.2	337	654

9-9-09
REGISTERED ELECTRICAL ENGINEER DATE

12-14-09
PLANS APPROVAL DATE

REGISTERED PROFESSIONAL ENGINEER — Robert Hsu — No. 17114 — Exp 9-30-11 — ELECT — STATE OF CALIFORNIA

THE STATE OF CALIFORNIA OR ITS OFFICERS OR AGENTS SHALL NOT BE RESPONSIBLE FOR THE ACCURACY OR COMPLETENESS OF SCANNED COPIES OF THIS PLAN SHEET.

LUMINAIRE TABLE FOR CONTACTOR 1AN

LUMINAIRE NUMBER	PHASE AB	PHASE AC	PHASE BC
	1AN 1	1AN 2	1AN 3
	1AN 4	1AN 5	1AN 6
	1AN 7	1AN 8	1AN 9
	1AN 10	1AN 11	1AN 12
	1AN 13	1AN 14	1AN 15
	1AN 16	1AN 17	1AN 18
	1AN 19	1AN 20	1AN 21
	1AN 22	1AN 23	1AN 24
	1AN 25	1AN 26	

LUMINAIRE TABLE FOR CONTACTOR 1BN

LUMINAIRE NUMBER	PHASE AB	PHASE AC	PHASE BC
	1BN 1	1BN 2	1BN 3
	1BN 4	1BN 5	1BN 6
	1BN 7	1BN 8	1BN 9
	1BN 10	1BN 11	1BN 12
	1BN 13	1BN 14	1BN 15
	1BN 16	1BN 17	1BN 18
	1BN 19	1BN 20	1BN 21
	1BN 22	1BN 23	1BN 24
	1BN 25		

LUMINAIRE TABLE FOR CONTACTOR 1CN

LUMINAIRE NUMBER	PHASE AB	PHASE AC	PHASE BC
	1CN 1	1CN 2	1CN 3
	1CN 4	1CN 5	1CN 6
	1CN 7	1CN 8	1CN 9
	1CN 10	1CN 11	1CN 12
	1CN 13	1CN 14	1CN 15
	1CN 16	1CN 17	1CN 18
	1CN 19	1CN 20	1CN 21
	1CN 22	1CN 23	1CN 24
	1CN 25	1CN 26	1CN 27
	1CN 28	1CN 29	1CN 30
	1CN 31	1CN 32	

LUMINAIRE TABLE FOR CONTACTOR 1DN

LUMINAIRE NUMBER	PHASE AB	PHASE AC	PHASE BC
	1DN 1	1DN 2	1DN 3
	1DN 4	1DN 5	1DN 6
	1DN 7	1DN 8	1DN 9
	1DN 10	1DN 11	1DN 12
	1DN 13	1DN 14	1DN 15
	1DN 16	1DN 17	1DN 18
	1DN 19	1DN 20	1DN 21
	1DN 22	1DN 23	1DN 24
	1DN 25	1DN 26	1DN 27
	1DN 28	1DN 29	1DN 30
	1DN 31	1DN 32	1DN 33
	1DN 34	1DN 35	1DN 36
	1DN 37	1DN 38	1DN 39
	1DN 40	1DN 41	

LUMINAIRE TABLE FOR CONTACTOR 1EN

LUMINAIRE NUMBER	PHASE AB	PHASE AC	PHASE BC
	1EN 1	1EN 2	1EN 3
	1EN 4	1EN 5	1EN 6
	1EN 7	1EN 8	1EN 9
	1EN 10	1EN 11	1EN 12
	1EN 13	1EN 14	1EN 15
	1EN 16	1EN 17	1EN 18
	1EN 19	1EN 20	1EN 21
	1EN 22	1EN 23	1EN 24
	1EN 25	1EN 26	1EN 27
	1EN 28	1EN 29	1EN 30
	1EN 31	1EN 32	

LUMINAIRE TABLE FOR CONTACTOR 1FN

LUMINAIRE NUMBER	PHASE AB	PHASE AC	PHASE BC
	1FN 1	1FN 2	1FN 3
	1FN 4	1FN 5	1FN 6
	1FN 7	1FN 8	1FN 9
	1FN 10	1FN 11	1FN 12
	1FN 13	1FN 14	1FN 15
	1FN 16	1FN 17	1FN 18
	1FN 19	1FN 20	1FN 21
	1FN 22	1FN 23	1FN 24
	1FN 25	1FN 26	1FN 27
	1FN 28	1FN 29	1FN 30
	1FN 31	1FN 32	1FN 33
	1FN 34		

LUMINAIRE TABLE FOR CONTACTOR 1YN

LUMINAIRE NUMBER	PHASE AB	PHASE AC	PHASE BC
	1YN 1	1YN 2	1YN 3
	1YN 4	1YN 5	1YN 6
	1YN 7	1YN 8	1YN 9
	1YN 10	1YN 11	1YN 12
	1YN 13	1YN 14	1YN 15
	1YN 16	1YN 17	1YN 18
	1YN 19	1YN 20	1YN 21
	1YN 22	1YN 23	1YN 24
	1YN 25	1YN 26	1YN 27
	1YN 28	1YN 29	1YN 30
	1YN 31	1YN 32	1YN 33
	1YN 34		

LUMINAIRE TABLE FOR CONTACTOR 1XN

LUMINAIRE NUMBER	PHASE AB	PHASE AC	PHASE BC
	1XN 1	1XN 2	1XN 3
	1XN 4	1XN 5	1XN 6
	1XN 7	1XN 8	1XN 9
	1XN 10	1XN 11	1XN 12
	1XN 13	1XN 14	1XN 15
	1XN 16	1XN 17	1XN 18
	1XN 19	1XN 20	1XN 21
	1XN 22	1XN 23	1XN 24
	1XN 25	1XN 26	1XN 27
	1XN 28	1XN 29	1XN 30
	1XN 31	1XN 32	1XN 33
	1XN 34		

TUNNEL LIGHTING
LUMINAIRE TABLE

NO SCALE

E-175

REVISED BY	DATE REVISED
RH	8/01/09

CALCULATED-DESIGNED BY: ROBERT HSU
CHECKED BY: ROBERT HSU

FUNCTIONAL SUPERVISOR: BEHZAD GOLEMOHAMMADI

STATE OF CALIFORNIA - DEPARTMENT OF TRANSPORTATION
ELECTRICAL

LAST REVISION DATE PLOTTED => 14-DEC-2009
TIME PLOTTED => 16:22
10-09-09

BORDER LAST REVISED 4/11/2008

RELATIVE BORDER SCALE IS IN INCHES 0 1 2 3

USERNAME => trlenard
DGN FILE => 416374ua175.dgn

CU 04242

EA 163741

Dist	COUNTY	ROUTE	POST MILES TOTAL PROJECT	SHEET No.	TOTAL SHEETS
04	SF	101	8.2/9.2	338	654

REGISTERED ELECTRICAL ENGINEER 9-9-09 DATE

12-14-09
PLANS APPROVAL DATE

REGISTERED PROFESSIONAL ENGINEER Robert Hsu No. 17114 Exp. 9-30-11 ELECT STATE OF CALIFORNIA

THE STATE OF CALIFORNIA OR ITS OFFICERS OR AGENTS SHALL NOT BE RESPONSIBLE FOR THE ACCURACY OR COMPLETENESS OF SCANNED COPIES OF THIS PLAN SHEET.

CALIFORNIA STATE FIRE MARSHAL APPROVED
Approval of this plan does not authorize or approve any omission or deviation from applicable regulations. Final approval is subject to field inspection. One set of approved plans shall be available on the project site at all times.
Reviewed by: STEPHEN GUARINO
Approval date: 12-14-09

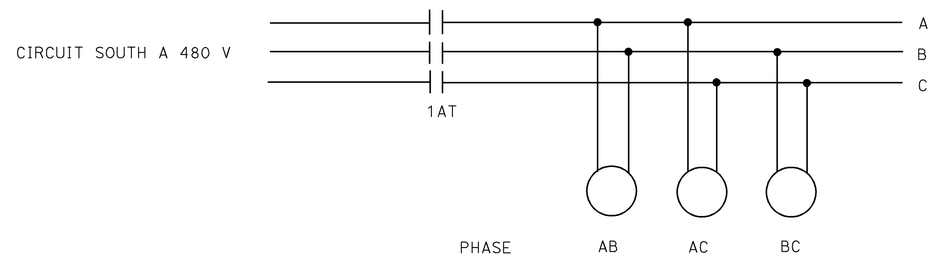

TYPICAL SCHEMATIC DIAGRAM

NOTE: (APPLICABLE TO THIS SHEET ONLY)

1 FOR NAME PLATE SCHEDULE DETAIL, SEE SHEET E-173.

LUMINAIRE TABLE FOR CONTACTOR 1AT

LUMINAIRE NUMBER	PHASE AB	PHASE AC	PHASE BC
	1AT 1	1AT 2	1AT 3
	1AT 4	1AT 5	1AT 6
	1AT 7	1AT 8	1AT 9
	1AT 10	1AT 11	1AT 12
	1AT 13	1AT 14	1AT 15
	1AT 16	1AT 17	1AT 18
	1AT 19	1AT 20	1AT 21
	1AT 22	1AT 23	1AT 24

LUMINAIRE TABLE FOR CONTACTOR 1BT

LUMINAIRE NUMBER	PHASE AB	PHASE AC	PHASE BC
	1BT 1	1BT 2	1BT 3
	1BT 4	1BT 5	1BT 6
	1BT 7	1BT 8	1BT 9
	1BT 10	1BT 11	1BT 12
	1BT 13	1BT 14	1BT 15
	1BT 16	1BT 17	1BT 18
	1BT 19	1BT 20	1BT 21
	1BT 22	1BT 23	1BT 24

LUMINAIRE TABLE FOR CONTACTOR 1CT

LUMINAIRE NUMBER	PHASE AB	PHASE AC	PHASE BC
	1CT 1	1CT 2	1CT 3
	1CT 4	1CT 5	1CT 6
	1CT 7	1CT 8	1CT 9
	1CT 10	1CT 11	1CT 12
	1CT 13	1CT 14	1CT 15
	1CT 16	1CT 17	1CT 18
	1CT 19	1CT 20	1CT 21
	1CT 22	1CT 23	1CT 24

PANEL BEU			480 VOLT	3 PHASE		
CIRCUIT BREAKER			DESCRIPTION 1	LOAD		
No.	AMPERE	POLE		AB	AC	BC
1	15	3	TUNNEL LIGHTING CIRCUIT 1XN	2322		
3			TUNNEL LIGHTING CIRCUIT 1XN		2322	
5			TUNNEL LIGHTING CIRCUIT 1XN			2322
7						
9						
11						
2	15	3	TUNNEL LIGHTING CIRCUIT 1XS	2322		
4			TUNNEL LIGHTING CIRCUIT 1XS		2322	
6			TUNNEL LIGHTING CIRCUIT 1XS			2322
8						
10						
12						
			TOTAL PHASE kVA	4.6	4.6	4.6
TOTAL kVA 13.8			MAIN BREAKER 30 A	TOP		X
FEEDER 1/0 THWN				BOTTOM		
NEMA 1			18 KAIC FULLY LOAD			

PANEL TABLE BEN

TUNNEL LIGHTING
LUMINAIRE TABLE
NO SCALE

E-176

STATE OF CALIFORNIA - DEPARTMENT OF TRANSPORTATION
Caltrans ELECTRICAL

FUNCTIONAL SUPERVISOR: BEHZAD GOLEMOHAMMADI
CALCULATED-DESIGNED BY: ROBERT HSU
CHECKED BY: ROBERT HSU
REVISED BY: RH
DATE REVISED: 8/01/09

LAST REVISION 11-02-09
DATE PLOTTED => 14-DEC-2009
TIME PLOTTED => 16:22

Dist	COUNTY	ROUTE	POST MILES TOTAL PROJECT	SHEET No.	TOTAL SHEETS
04	SF	101	8.2/9.2	339	654

REGISTERED ELECTRICAL ENGINEER — 8-27-09 DATE

Gizachew Merid
No. 18216
Exp. 12-31-09
ELECT
REGISTERED PROFESSIONAL ENGINEER
STATE OF CALIFORNIA

12-14-09
PLANS APPROVAL DATE

THE STATE OF CALIFORNIA OR ITS OFFICERS OR AGENTS SHALL NOT BE RESPONSIBLE FOR THE ACCURACY OR COMPLETENESS OF SCANNED COPIES OF THIS PLAN SHEET.

CALIFORNIA STATE FIRE MARSHAL
APPROVED
Approval of this plan does not authorize or approve any omission or deviation from applicable regulations. Final approval is subject to field inspection. One set of approved plans shall be available on the project site at all times.
Reviewed by: STEPHEN GUARINO
Approval date: 12-14-09

GENERAL NOTES: (THIS SHEET ONLY)

1. FOR WIRING DETAIL SEE SHEETS E-178 AND E-179
2. SEE SECTION VIEWS ON SHEET E-180
3. FOR CALL BOX INSTALLATION DETAIL SEE SHEET E-181 AND E-182

SHEET NOTE: (THIS SHEET ONLY)

(1) CALL BOX AND CALL BOX SIGN

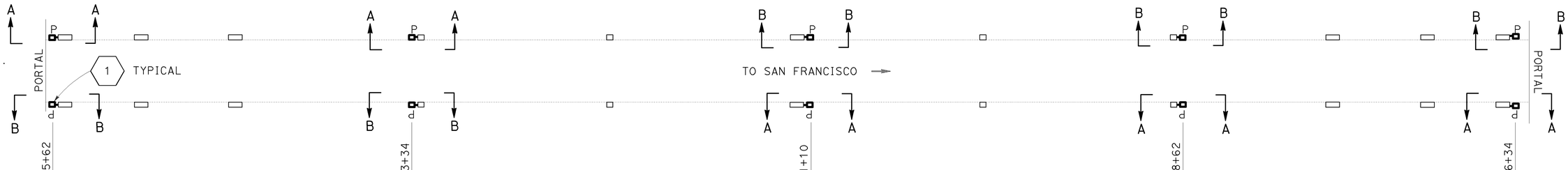

THIS PLAN IS ACCURATE FOR ELECTRICAL WORK ONLY

TUNNEL TRAFFIC OPERATION SYSTEM
(CALL BOX SYSTEM LAYOUT)

NO SCALE

E-177

FOR NOTES, ABBREVIATIONS AND LEGEND, SEE SHEET E-32

REVISED BY	DATE REVISED
GWM	8/01/09

CALCULATED-DESIGNED BY
CHECKED BY

GIZACHEW WORKU MERID
GIZACHEW WORKU MERID

FUNCTIONAL SUPERVISOR
BEHZAD GOLEMOHAMMADI

STATE OF CALIFORNIA - DEPARTMENT OF TRANSPORTATION
ELECTRICAL

LAST REVISION DATE PLOTTED => 14-DEC-2009
10-29-09 TIME PLOTTED => 16:22

Dist	COUNTY	ROUTE	POST MILES TOTAL PROJECT	SHEET No.	TOTAL SHEETS
04	SF	101	8.2/9.2	340	654

REGISTERED ELECTRICAL ENGINEER — 8-27-09 DATE

Gizachew Merid
No. 18216
Exp. 12-31-09
ELECT
REGISTERED PROFESSIONAL ENGINEER
STATE OF CALIFORNIA

12-14-09
PLANS APPROVAL DATE

THE STATE OF CALIFORNIA OR ITS OFFICERS OR AGENTS SHALL NOT BE RESPONSIBLE FOR THE ACCURACY OR COMPLETENESS OF SCANNED COPIES OF THIS PLAN SHEET.

CALIFORNIA STATE FIRE MARSHAL APPROVED

Approval of this plan does not authorize or approve any omission or deviation from applicable regulations. Final approval is subject to field inspection. One set of approved plans shall be available on the project site at all times.

Reviewed by: STEPHEN GUARINO

Approval date: 12-14-09

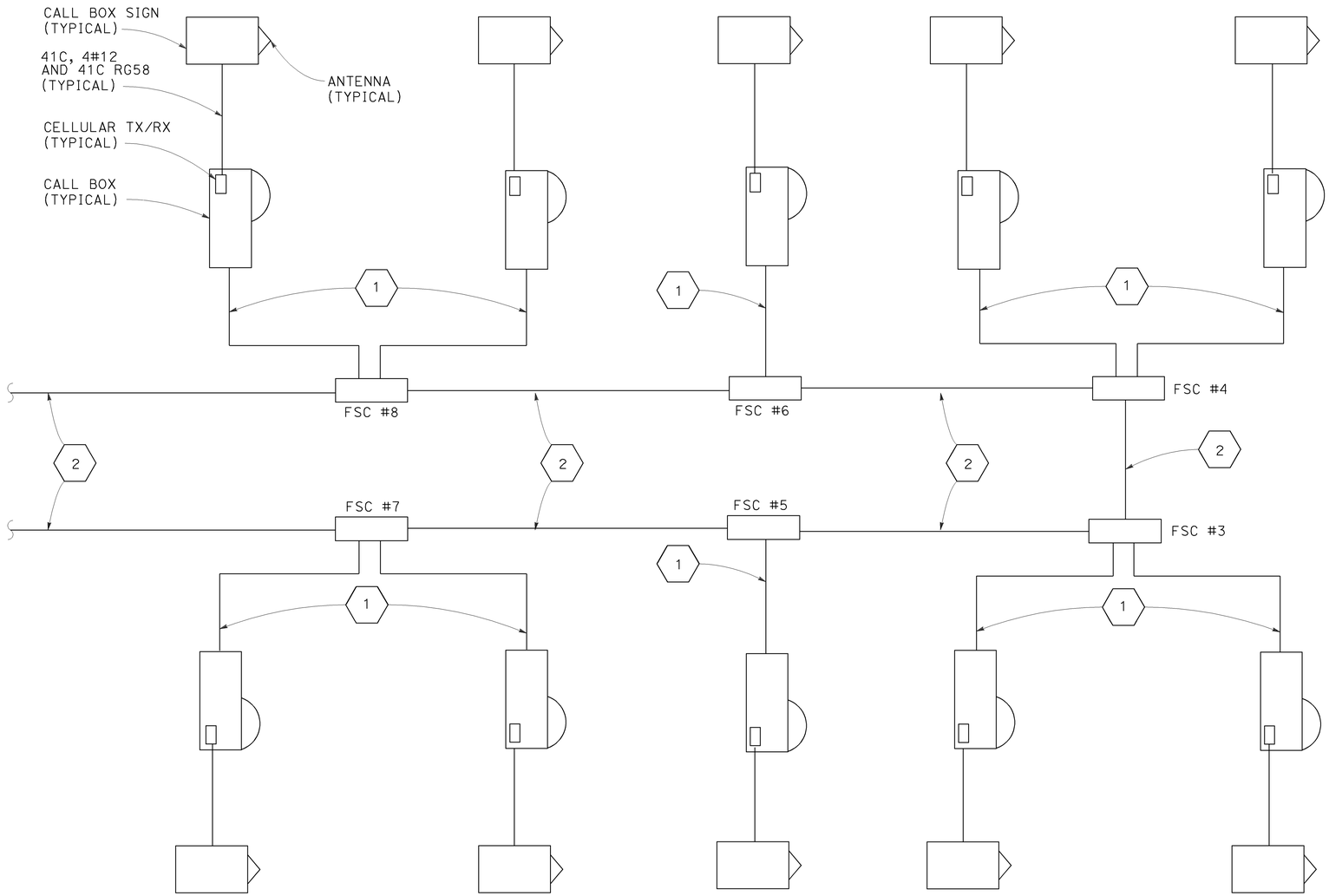

SHEET NOTE: (THIS SHEET ONLY)

1. 41C, 4#12
2. 72 STRAND FIBER OPTIC CABLE FOR CONTROLS WILL BE INSTALLED BY OTHERS

FOR NOTES, ABBREVIATIONS AND LEGEND, SEE SHEET E-32

TUNNEL TRAFFIC OPERATION SYSTEM
(CALL BOX SYSTEM WIRING DIAGRAM)

NO SCALE

E-178

REVISED BY	DATE REVISED
GWM	8/01/09

CALCULATED-DESIGNED BY	CHECKED BY
GIZACHEW WORKU MERID	GIZACHEW WORKU MERID

FUNCTIONAL SUPERVISOR: BEHZAD GOLEMOHAMMADI

STATE OF CALIFORNIA - DEPARTMENT OF TRANSPORTATION
ELECTRICAL

LAST REVISION DATE PLOTTED => 14-DEC-2009
TIME PLOTTED => 16:22
10-09-09

CALIFORNIA STATE FIRE MARSHAL APPROVED

Approval of this plan does not authorize or approve any omission or deviation from applicable regulations. Final approval is subject to field inspection. One set of approved plans shall be available on the project site at all times.

Reviewed by: STEPHEN GUARINO

Approval date: 12-14-09

Dist	COUNTY	ROUTE	POST MILES TOTAL PROJECT	SHEET No.	TOTAL SHEETS
04	SF	101	8.2/9.2	341	654

8-27-09
REGISTERED ELECTRICAL ENGINEER DATE

Gizachew Merid
No. 18216
Exp. 12-31-09
ELECT
REGISTERED PROFESSIONAL ENGINEER
STATE OF CALIFORNIA

12-14-09
PLANS APPROVAL DATE

THE STATE OF CALIFORNIA OR ITS OFFICERS OR AGENTS SHALL NOT BE RESPONSIBLE FOR THE ACCURACY OR COMPLETENESS OF SCANNED COPIES OF THIS PLAN SHEET.

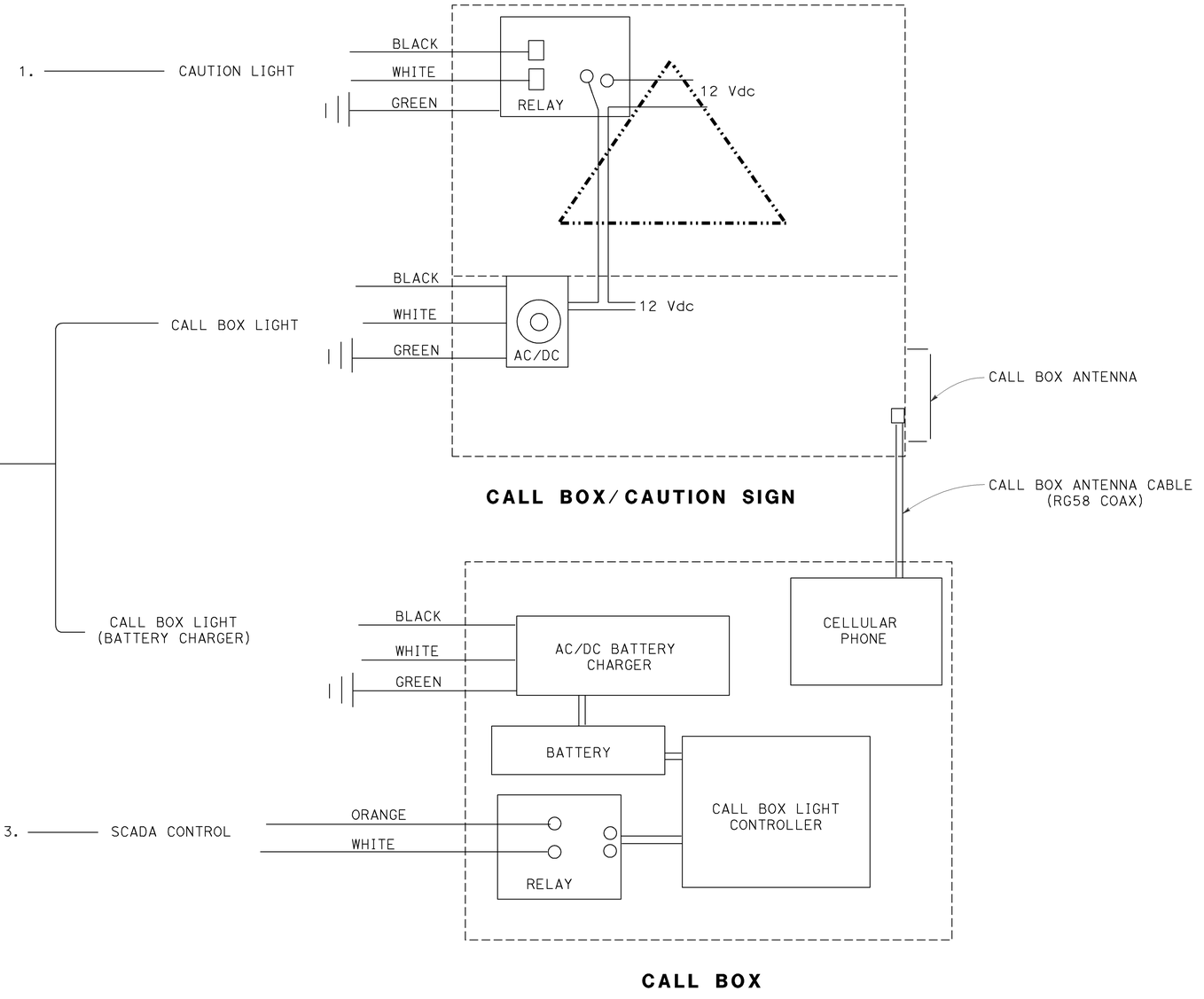

TUNNEL TRAFFIC OPERATION SYSTEM
(CALL BOX SYSTEM WIRING DIAGRAM)

NO SCALE

FOR NOTES, ABBREVIATIONS AND LEGEND, SEE SHEET E-32

E-179

LAST REVISION | DATE PLOTTED => 14-DEC-2009
10-09-09 | TIME PLOTTED => 16:22

STATE OF CALIFORNIA - DEPARTMENT OF TRANSPORTATION
Caltrans
ELECTRICAL

CALCULATED-DESIGNED BY	CHECKED BY	REVISED BY	DATE REVISED
GIZACHEW WORKU MERID	GIZACHEW WORKU MERID	GWM	8/01/09

FUNCTIONAL SUPERVISOR: BEHZAD GOLEMOHAMMADI

GENERAL NOTES: (THIS SHEET ONLY)

1. SEE CALL BOX INSTALLATION DETAILS ON SHEETS E-181 AND E-182.
2. SEE CALL BOX WIRING DETAILS ON SHEETS E-178 AND E-179.

CALIFORNIA STATE FIRE MARSHAL APPROVED
Approval of this plan does not authorize or approve any omission or deviation from applicable regulations. Final approval is subject to field inspection. One set of approved plans shall be available on the project site at all times.
Reviewed by: STEPHEN GUARINO
Approval date: 12-14-09

Dist	COUNTY	ROUTE	POST MILES TOTAL PROJECT	SHEET No.	TOTAL SHEETS
04	SF	101	8.2/9.2	342	654

8-27-09
REGISTERED ELECTRICAL ENGINEER DATE
12-14-09
PLANS APPROVAL DATE
REGISTERED PROFESSIONAL ENGINEER — Gizachew Merid — No. 18216 — Exp. 12-31-09 — ELECT — STATE OF CALIFORNIA

THE STATE OF CALIFORNIA OR ITS OFFICERS OR AGENTS SHALL NOT BE RESPONSIBLE FOR THE ACCURACY OR COMPLETENESS OF SCANNED COPIES OF THIS PLAN SHEET.

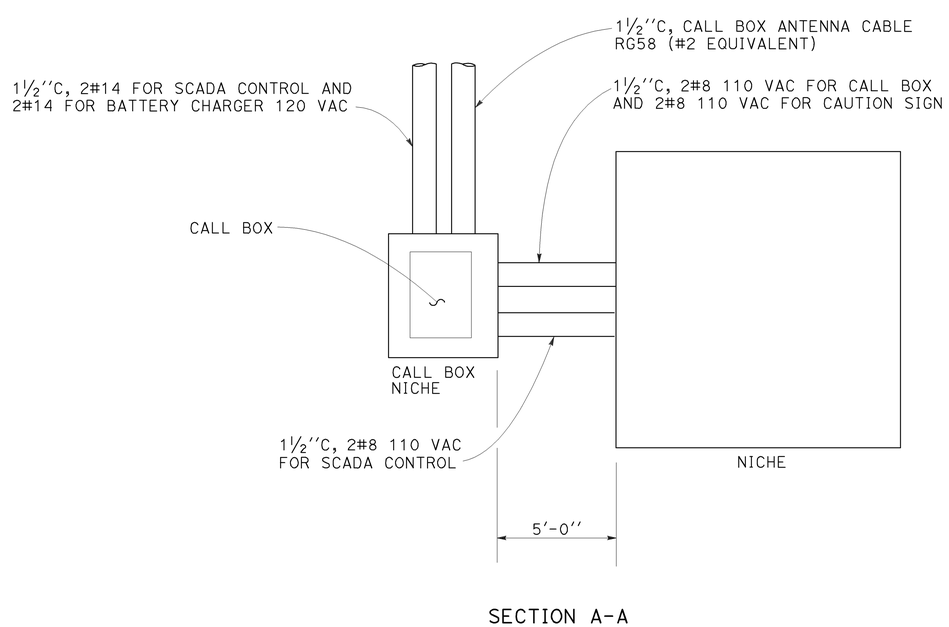

SECTION A-A

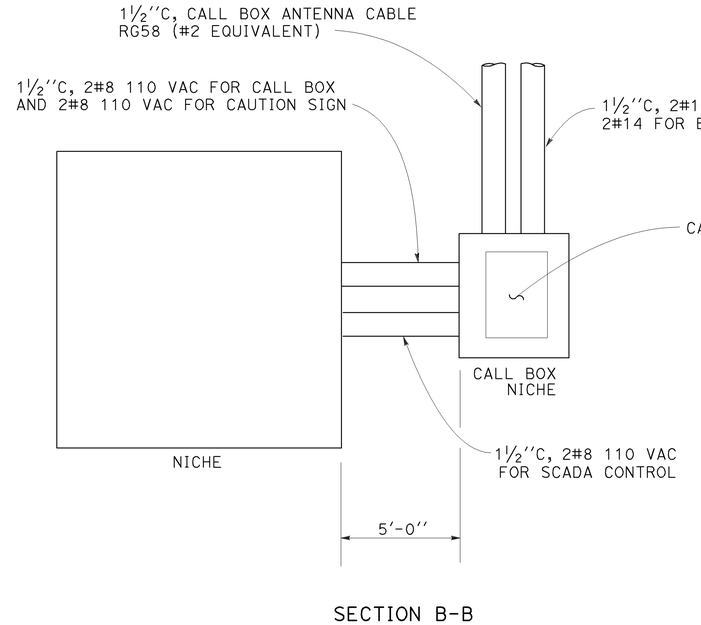

SECTION B-B

TUNNEL TRAFFIC OPERATION SYSTEM
(CALL BOX SYSTEM INSTALLATION DETAIL)

NO SCALE

FOR NOTES, ABBREVIATIONS AND LEGEND, SEE SHEET E-32

E-180

STATE OF CALIFORNIA - DEPARTMENT OF TRANSPORTATION
Caltrans
ELECTRICAL
FUNCTIONAL SUPERVISOR: BEHZAD GOLEMOHAMMADI
CALCULATED-DESIGNED BY: GIZACHEW WORKU MERID
CHECKED BY: GIZACHEW WORKU MERID
REVISED BY: GWM
DATE REVISED: 8/01/09

LAST REVISION DATE PLOTTED => 14-DEC-2009
TIME PLOTTED => 16:23

NOTES: (THIS SHEET ONLY)

1. X CAN BE DETERMINED BY THE RADIUS OF THE CURVATURE OF THE TUNNEL CEILING WHERE THE BOTTOM OF THE CALL BOX SIGN REACHES 17' ABOVE THE TUNNEL FLOOR.
2. SEE THE MOUNTING BRACKET DETAIL ON SHEET E-182.
3. SEE WIRING DIAGRAM ON SHEETS E-178 AND E-179.

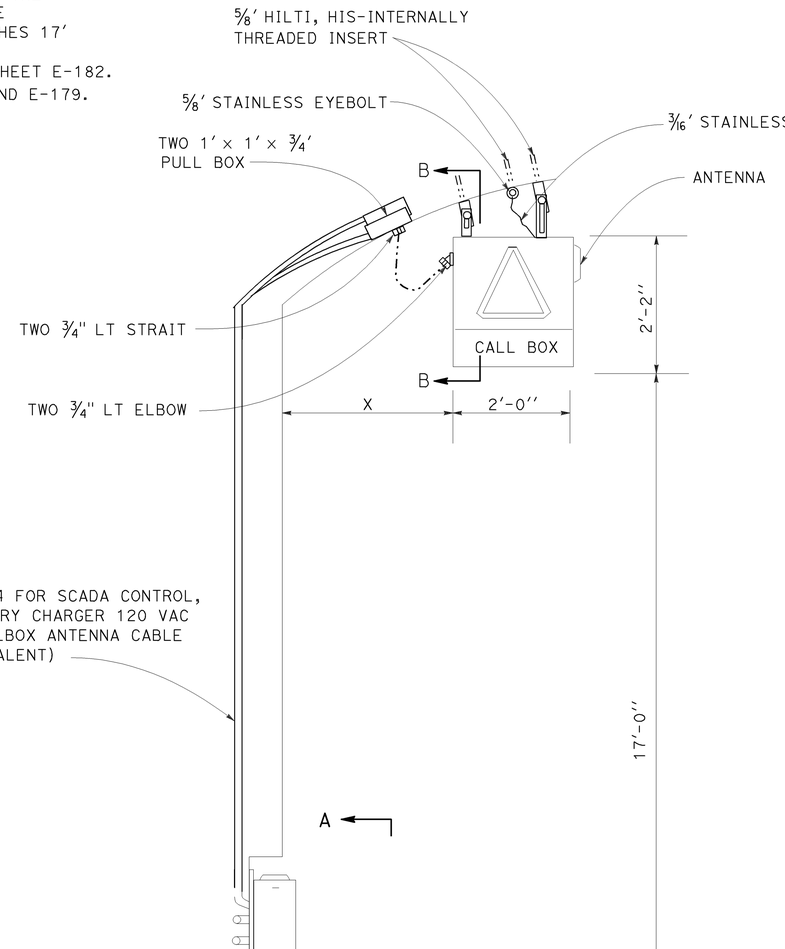

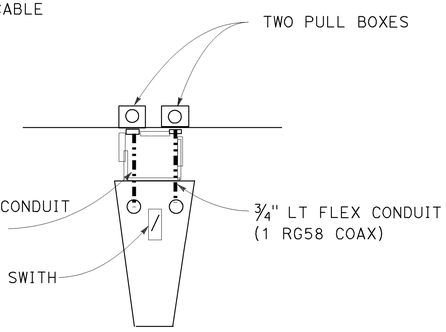

SECTION B-B

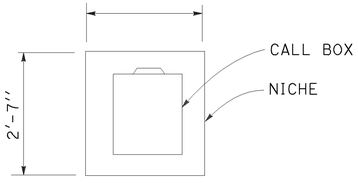

SECTION A-A

NOTE: (THIS SHEET ONLY)

1. X CAN BE DETERMINED BY THE RADIUS OF THE CURVATURE OF THE TUNNEL CEILING WHERE THE BOTTOM OF THE CALL BOX SIGN REACHES 17' ABOVE THE TUNNEL FLOOR.
2. SEE THE MOUNTING BRACKET DETAIL ON SHEET E-305

FOR NOTES, ABBREVIATIONS AND LEGEND, SEE SHEET E-32

TUNNEL TRAFFIC OPERATION SYSTEM
(CALL BOX SYSTEM INSTALLATION DETAIL)

NO SCALE

E-181

CALIFORNIA STATE FIRE MARSHAL APPROVED

Approval of this plan does not authorize or approve any omission or deviation from applicable regulations. Final approval is subject to field inspection. One set of approved plans shall be available on the project site at all times.

Reviewed by: STEPHEN GUARINO

Approval date: 12-14-09

Dist	COUNTY	ROUTE	POST MILES TOTAL PROJECT	SHEET No.	TOTAL SHEETS
04	SF	101	8.2/9.2	343	654

REGISTERED ELECTRICAL ENGINEER — DATE 8-27-09

Gizachew Merid, No. 18216, Exp. 12-31-09, ELECT — REGISTERED PROFESSIONAL ENGINEER — STATE OF CALIFORNIA

12-14-09
PLANS APPROVAL DATE

THE STATE OF CALIFORNIA OR ITS OFFICERS OR AGENTS SHALL NOT BE RESPONSIBLE FOR THE ACCURACY OR COMPLETENESS OF SCANNED COPIES OF THIS PLAN SHEET.

REVISED BY	DATE REVISED
GWM	8/01/09

CALCULATED-DESIGNED BY	CHECKED BY
GIZACHEW WORKU MERID	GIZACHEW WORKU MERID

FUNCTIONAL SUPERVISOR: BEHZAD GOLEMOHAMMADI

STATE OF CALIFORNIA - DEPARTMENT OF TRANSPORTATION
Caltrans®
ELECTRICAL

LAST REVISION: DATE PLOTTED => 14-DEC-2009; TIME PLOTTED => 16:23; 10-09-09

Dist	COUNTY	ROUTE	POST MILES TOTAL PROJECT	SHEET No.	TOTAL SHEETS
04	SF	101	8.2/9.2	344	654

8-27-09
REGISTERED ELECTRICAL ENGINEER DATE

Gizachew Merid
No. 18216
Exp. 12-31-09
ELECT
REGISTERED PROFESSIONAL ENGINEER
STATE OF CALIFORNIA

12-14-09
PLANS APPROVAL DATE

THE STATE OF CALIFORNIA OR ITS OFFICERS OR AGENTS SHALL NOT BE RESPONSIBLE FOR THE ACCURACY OR COMPLETENESS OF SCANNED COPIES OF THIS PLAN SHEET.

CALIFORNIA STATE FIRE MARSHAL
APPROVED
Approval of this plan does not authorize or approve any omission or deviation from applicable regulations. Final approval is subject to field inspection. One set of approved plans shall be available on the project site at all times.
Reviewed by: STEPHEN GUARINO
Approval date: 12-14-09

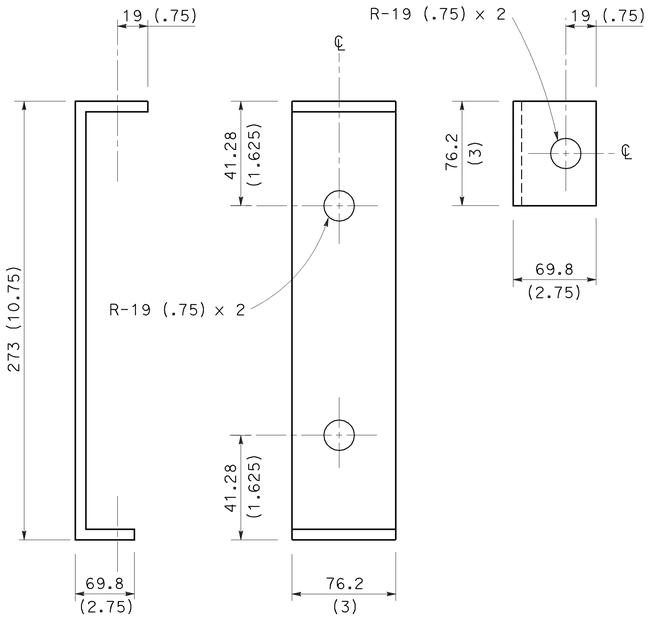

OUTSIDE TOP BRACKET

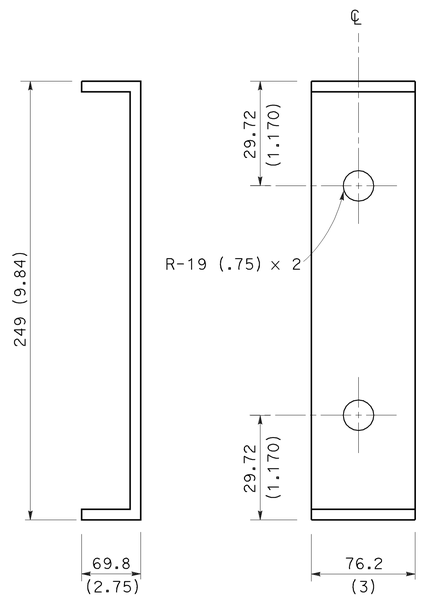

INSIDE TOP BRACKET

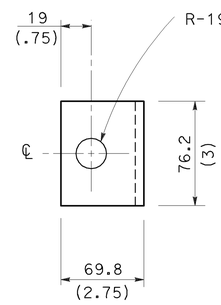

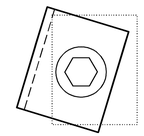

TOP ASSEMBLY

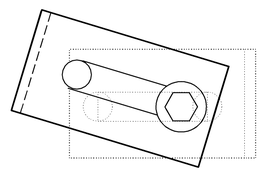

BOTTOM ASSEMBLY

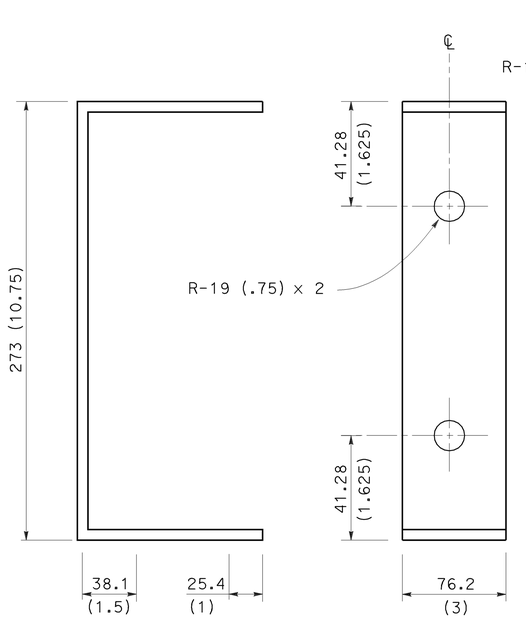

OUTSIDE BOTTOM BRACKET

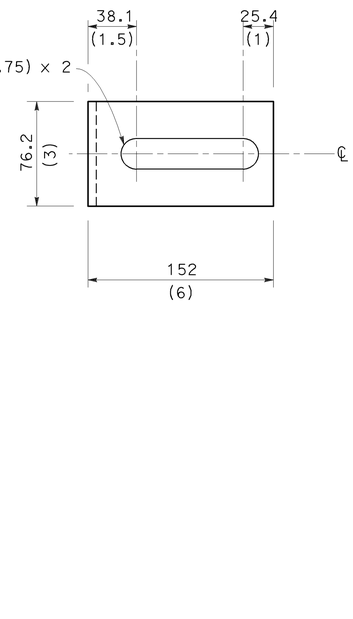

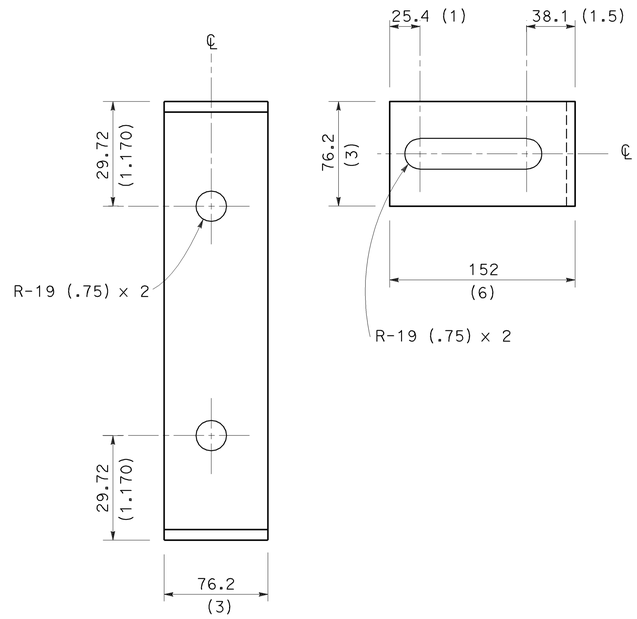

INSIDE BOTTOM BRACKET

NOTES:
1. USE 9.67 (3/8) MILD STEEL
2. HOT DIP GALVANIZE AFTER FABRICATION

TUNNEL TRAFFIC OPERATION SYSTEM
(CALL BOX SYSTEM SIGN MOUNTING BRACKET)

NO SCALE

FOR NOTES, ABBREVIATIONS AND LEGEND, SEE SHEET E-32

E-182

CALCULATED-DESIGNED BY	GWM	8/01/09	
CHECKED BY	GIZACHEW WORKU MERID	DATE REVISED	
FUNCTIONAL SUPERVISOR	GIZACHEW WORKU MERID	REVISED BY	
BEHZAD GOLEMOHAMMADI			

STATE OF CALIFORNIA - DEPARTMENT OF TRANSPORTATION
ELECTRICAL
Caltrans

LAST REVISION DATE PLOTTED => 14-DEC-2009
10-09-09 TIME PLOTTED => 16:23

Dist	COUNTY	ROUTE	POST MILES TOTAL PROJECT	SHEET No.	TOTAL SHEETS
04	SF	101	8.2/9.2	345	654

8-27-09
REGISTERED ELECTRICAL ENGINEER DATE

Gizachew Merid
No. 18216
Exp. 12-31-09
ELECT
REGISTERED PROFESSIONAL ENGINEER
STATE OF CALIFORNIA

12-14-09
PLANS APPROVAL DATE

THE STATE OF CALIFORNIA OR ITS OFFICERS OR AGENTS SHALL NOT BE RESPONSIBLE FOR THE ACCURACY OR COMPLETENESS OF SCANNED COPIES OF THIS PLAN SHEET.

CALIFORNIA STATE FIRE MARSHAL
APPROVED
Approval of this plan does not authorize or approve any omission or deviation from applicable regulations. Final approval is subject to field inspection. One set of approved plans shall be available on the project site at all times.
Reviewed by: STEPHEN GUARINO
Approval date: 12-14-09

SHEET NOTES: (THIS SHEET ONLY)

1. MAINTENANCE CAMERA TO BE INSTALLED BY OTHERS
2. ONE 4"C, MT
3. TWO 4'' C, MT
4. TWO 2'' C, MT
5. 24" x24"x12" FIBERGLASS TYPE 4X WALL MOUNTED WITH INCLOSURE WITH 3-POINT LATCH.
6. HYBRID CAMERA CABLE TO BE INSTALLED BY OTHERS

GENERAL NOTES: (THIS SHEET ONLY)

1. SEE CAMERA INSTALLATION DETAIL ON SHEERS E-184
2. SEE SECTION VIEWS ON SHEET E-185

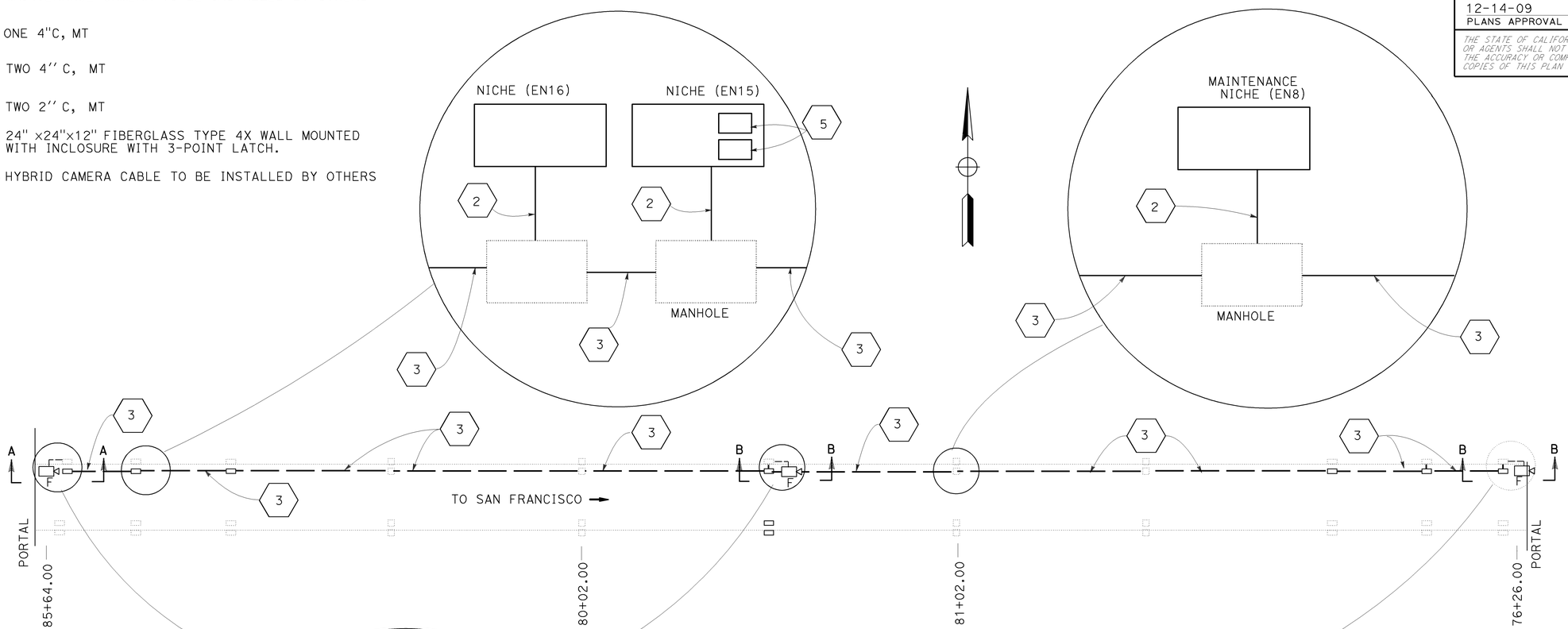

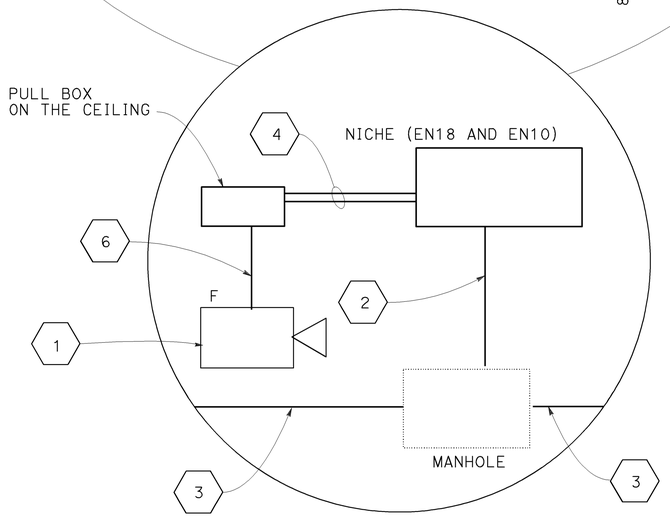

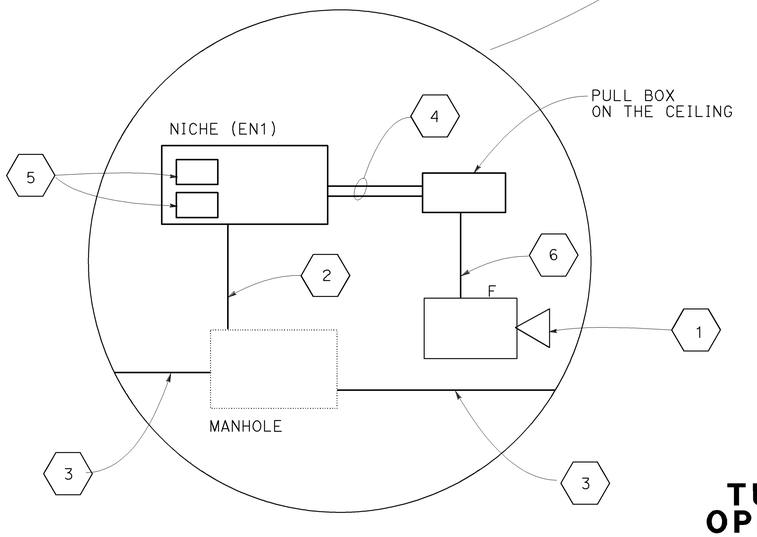

TUNNEL TRAFFIC OPERATION SYSTEM
(MAINTENANCE CAMERA LAYOUT AND DETAIL)
NO SCALE

FOR NOTES, ABBREVIATIONS AND LEGEND, SEE SHEET E-32

E-183

CALCULATED-DESIGNED BY	CHECKED BY	REVISED BY	DATE REVISED
GIZACHEW WORKU MERID	GIZACHEW WORKU MERID	GWM	8/01/09

FUNCTIONAL SUPERVISOR: BEHZAD GOLEMOHAMMADI

STATE OF CALIFORNIA - DEPARTMENT OF TRANSPORTATION
ELECTRICAL

LAST REVISION: DATE PLOTTED => 14-DEC-2009
10-23-09 TIME PLOTTED => 16:23

Dist	COUNTY	ROUTE	POST MILES TOTAL PROJECT	SHEET No.	TOTAL SHEETS
04	SF	101	8.2/9.2	346	654

CALIFORNIA STATE FIRE MARSHAL APPROVED

Approval of this plan does not authorize or approve any omission or deviation from applicable regulations. Final approval is subject to field inspection. One set of approved plans shall be available on the project site at all times.

Reviewed by: STEPHEN GUARINO

Approval date: 12-14-09

8-27-09
REGISTERED ELECTRICAL ENGINEER DATE

Gizachew Merid
No. 18216
Exp. 12-31-09
ELECT
REGISTERED PROFESSIONAL ENGINEER
STATE OF CALIFORNIA

12-14-09
PLANS APPROVAL DATE

THE STATE OF CALIFORNIA OR ITS OFFICERS OR AGENTS SHALL NOT BE RESPONSIBLE FOR THE ACCURACY OR COMPLETENESS OF SCANNED COPIES OF THIS PLAN SHEET.

GENERAL NOTE: (THIS SHEET ONLY)

SEE SECTION VIEW ON SHEET E-185.

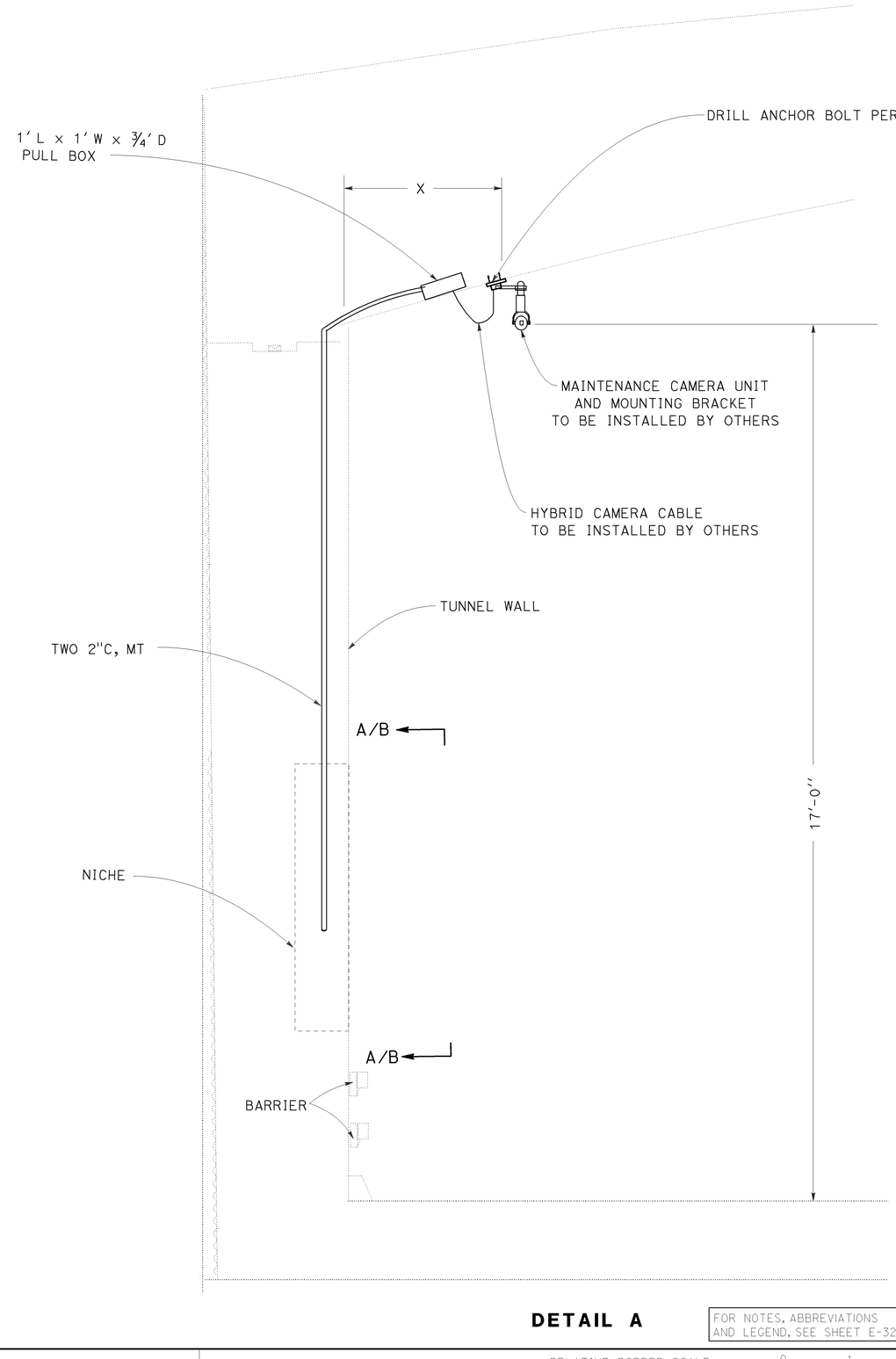

DETAIL A

FOR NOTES, ABBREVIATIONS AND LEGEND, SEE SHEET E-32

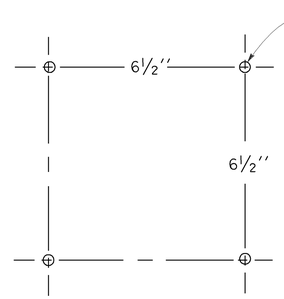

ANCHOR BOLT FOR MOUNTING BRACKET

DETAIL A

TUNNEL TRAFFIC OPERATION SYSTEM
(MAINTENANCE CAMERA INSTALLATION DETAIL)

NO SCALE

E-184

STATE OF CALIFORNIA - DEPARTMENT OF TRANSPORTATION
ELECTRICAL
FUNCTIONAL SUPERVISOR: BEHZAD GOLEMOHAMMADI
CALCULATED-DESIGNED BY: GIZACHEW WORKU MERID
CHECKED BY: GIZACHEW WORKU MERID
REVISED BY: GWM
DATE REVISED: 8/01/09

LAST REVISION DATE PLOTTED => 14-DEC-2009
TIME PLOTTED => 16:23

BORDER LAST REVISED 4/11/2008

RELATIVE BORDER SCALE IS IN INCHES 0 1 2 3

USERNAME => trienard
DGN FILE => 416374ua184.dgn

CU 04242

EA 163741

Dist	COUNTY	ROUTE	POST MILES TOTAL PROJECT	SHEET No.	TOTAL SHEETS
04	SF	101	8.2/9.2	347	654

CALIFORNIA STATE FIRE MARSHAL APPROVED

Approval of this plan does not authorize or approve any omission or deviation from applicable regulations. Final approval is subject to field inspection. One set of approved plans shall be available on the project site at all times.

Reviewed by: STEPHEN GUARINO

Approval date: 12-14-09

8-27-09
REGISTERED ELECTRICAL ENGINEER DATE

Gizachew Merid
No. 18216
Exp. 12-31-09
ELECT
REGISTERED PROFESSIONAL ENGINEER
STATE OF CALIFORNIA

12-14-09
PLANS APPROVAL DATE

THE STATE OF CALIFORNIA OR ITS OFFICERS OR AGENTS SHALL NOT BE RESPONSIBLE FOR THE ACCURACY OR COMPLETENESS OF SCANNED COPIES OF THIS PLAN SHEET.

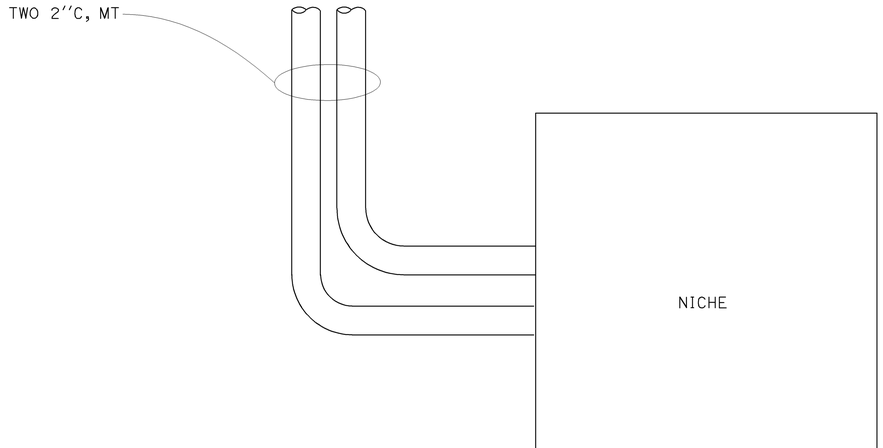

SECTION A-A

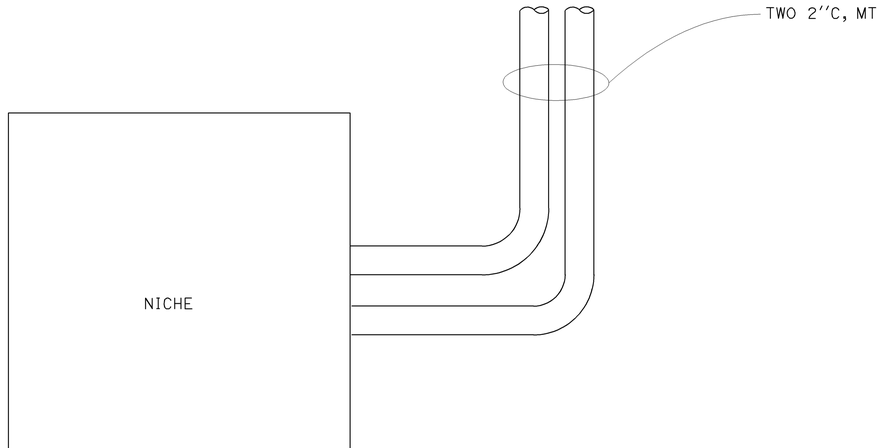

SECTION B-B

TUNNEL TRAFFIC OPERATIONS SYSTEM (MAINTENANCE CAMERA SECTION VIEWS)

NO SCALE

FOR NOTES, ABBREVIATIONS AND LEGEND, SEE SHEET E-32

E-185

CALCULATED-DESIGNED BY	REVISED BY	GWM
CHECKED BY	DATE REVISED	8/01/09
GIZACHEW WORKU MERID		
GIZACHEW WORKU MERID		

FUNCTIONAL SUPERVISOR: BEHZAD GOLEMOHAMMADI

STATE OF CALIFORNIA - DEPARTMENT OF TRANSPORTATION
ELECTRICAL

LAST REVISION | DATE PLOTTED => 14-DEC-2009
10-22-09 | TIME PLOTTED => 16:23

Dist	COUNTY	ROUTE	POST MILES TOTAL PROJECT	SHEET No.	TOTAL SHEETS
04	SF	101	8.2/9.2	348	654

REGISTERED ELECTRICAL ENGINEER 8-27-09 DATE

12-14-09
PLANS APPROVAL DATE

REGISTERED PROFESSIONAL ENGINEER Gizachew Merid No. 18216 Exp. 12-31-09 ELECT STATE OF CALIFORNIA

THE STATE OF CALIFORNIA OR ITS OFFICERS OR AGENTS SHALL NOT BE RESPONSIBLE FOR THE ACCURACY OR COMPLETENESS OF SCANNED COPIES OF THIS PLAN SHEET.

CALIFORNIA STATE FIRE MARSHAL APPROVED
Approval of this plan does not authorize or approve any omission or deviation from applicable regulations. Final approval is subject to field inspection. One set of approved plans shall be available on the project site at all times.
Reviewed by: STEPHEN GUARINO
Approval date: 12-14-09

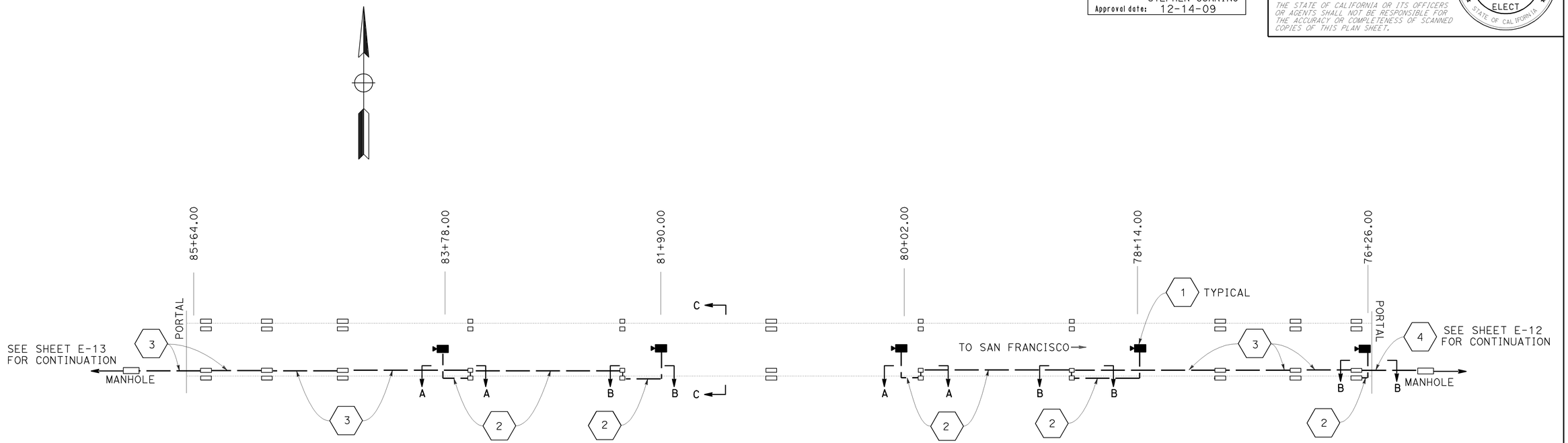

GENERAL NOTES: (THIS SHEET ONLY)

1. SEE SECTION VIEWS ON SHEET E-187
2. SEE THE WIRING DIAGRAM ON SHEET E-190 AND E-191
3. SEE THE MOUNTING DETAIL ON SHEET E-188 AND E-189

SHEET NOTES: (THIS SHEET ONLY)

1. ICU
2. 4'' C, 1 HCC
3. 4'' C, 2 HCC
4. 4'' C, 3 HCC

TUNNEL TRAFFIC OPERATIONS SYSTEM
(TOS CAMERA LAYOUT)
NO SCALE

FOR NOTES, ABBREVIATIONS AND LEGEND, SEE SHEET E-32

THIS PLAN IS ACCURATE FOR ELECTRICAL WORK ONLY

E-186

STATE OF CALIFORNIA - DEPARTMENT OF TRANSPORTATION
Caltrans
ELECTRICAL

FUNCTIONAL SUPERVISOR: BEHZAD GOLEMOHAMMADI
CALCULATED-DESIGNED BY: GIZACHEW WORKU MERID
CHECKED BY: GIZACHEW WORKU MERID
REVISED BY: GWM
DATE REVISED: 8/01/09

LAST REVISION 10-09-09
DATE PLOTTED => 14-DEC-2009
TIME PLOTTED => 16:23

Dist	COUNTY	ROUTE	POST MILES TOTAL PROJECT	SHEET No.	TOTAL SHEETS
04	SF	101	8.2/9.2	349	654

CALIFORNIA STATE FIRE MARSHAL APPROVED
Approval of this plan does not authorize or approve any omission or deviation from applicable regulations. Final approval is subject to field inspection. One set of approved plans shall be available on the project site at all times.
Reviewed by: STEPHEN GUARINO
Approval date: 12-14-09

8-27-09
REGISTERED ELECTRICAL ENGINEER DATE

Gizachew Merid
No. 18216
Exp. 12-31-09
ELECT
REGISTERED PROFESSIONAL ENGINEER
STATE OF CALIFORNIA

12-14-09
PLANS APPROVAL DATE

THE STATE OF CALIFORNIA OR ITS OFFICERS OR AGENTS SHALL NOT BE RESPONSIBLE FOR THE ACCURACY OR COMPLETENESS OF SCANNED COPIES OF THIS PLAN SHEET.

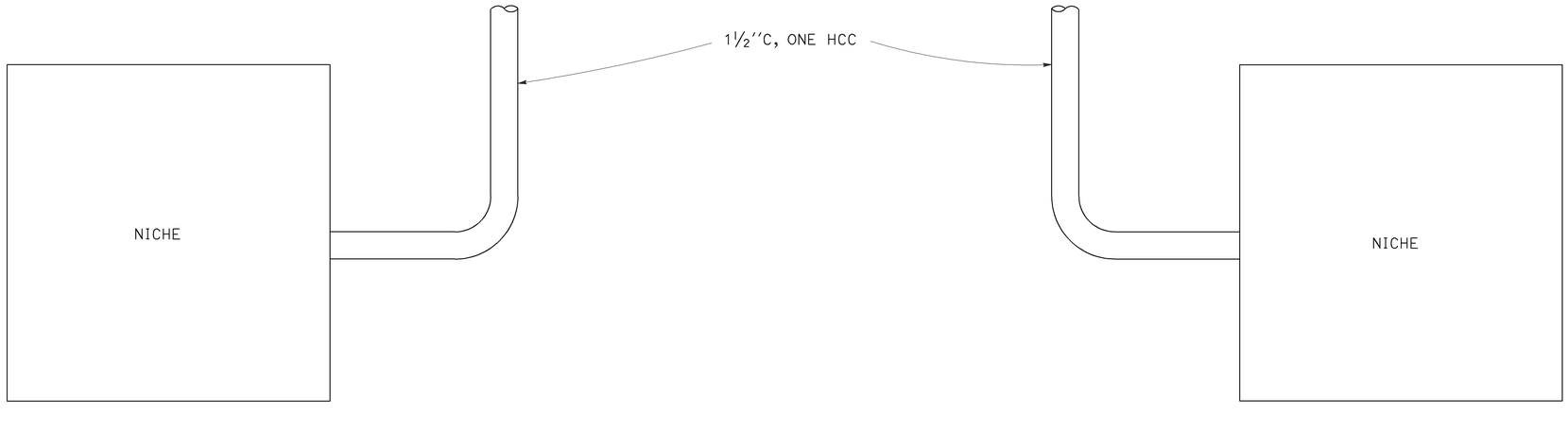

SECTION B-B

SECTION A-A

TUNNEL TRAFFIC OPERATIONS SYSTEM (TOS CAMERA SECTION VIEWS)

NO SCALE

FOR NOTES, ABBREVIATIONS AND LEGEND, SEE SHEET E-32

E-187

LAST REVISION | DATE PLOTTED => 14-DEC-2009
10-09-09 | TIME PLOTTED => 16:23

CALCULATED-DESIGNED BY	REVISED BY	GIZACHEW WORKU MERID	STATE OF CALIFORNIA - DEPARTMENT OF TRANSPORTATION
CHECKED BY	DATE REVISED	GIZACHEW WORKU MERID	ELECTRICAL
	GWM		FUNCTIONAL SUPERVISOR
	8/01/09		BEHZAD GOLEMOHAMMADI

GENERAL NOTE: (THIS SHEET ONLY)

1. CONTRACTOR SHALL MODIFY THE MOUNTING BRACKET TO FIT THE TUNNEL CEILING CURVATURE. SEE SHEET E- 313 FOR THE DETAIL OF THE MOUNTING BRACKET

CALIFORNIA STATE FIRE MARSHAL APPROVED

Approval of this plan does not authorize or approve any omission or deviation from applicable regulations. Final approval is subject to field inspection. One set of approved plans shall be available on the project site at all times.

Reviewed by: STEPHEN GUARINO

Approval date: 12-14-09

Dist	COUNTY	ROUTE	POST MILES TOTAL PROJECT	SHEET No.	TOTAL SHEETS
04	SF	101	8.2/9.2	350	654

8-27-09
REGISTERED ELECTRICAL ENGINEER DATE

Gizachew Merid
No. 18216
Exp. 12-31-09
ELECT
REGISTERED PROFESSIONAL ENGINEER
STATE OF CALIFORNIA

12-14-09
PLANS APPROVAL DATE

THE STATE OF CALIFORNIA OR ITS OFFICERS OR AGENTS SHALL NOT BE RESPONSIBLE FOR THE ACCURACY OR COMPLETENESS OF SCANNED COPIES OF THIS PLAN SHEET.

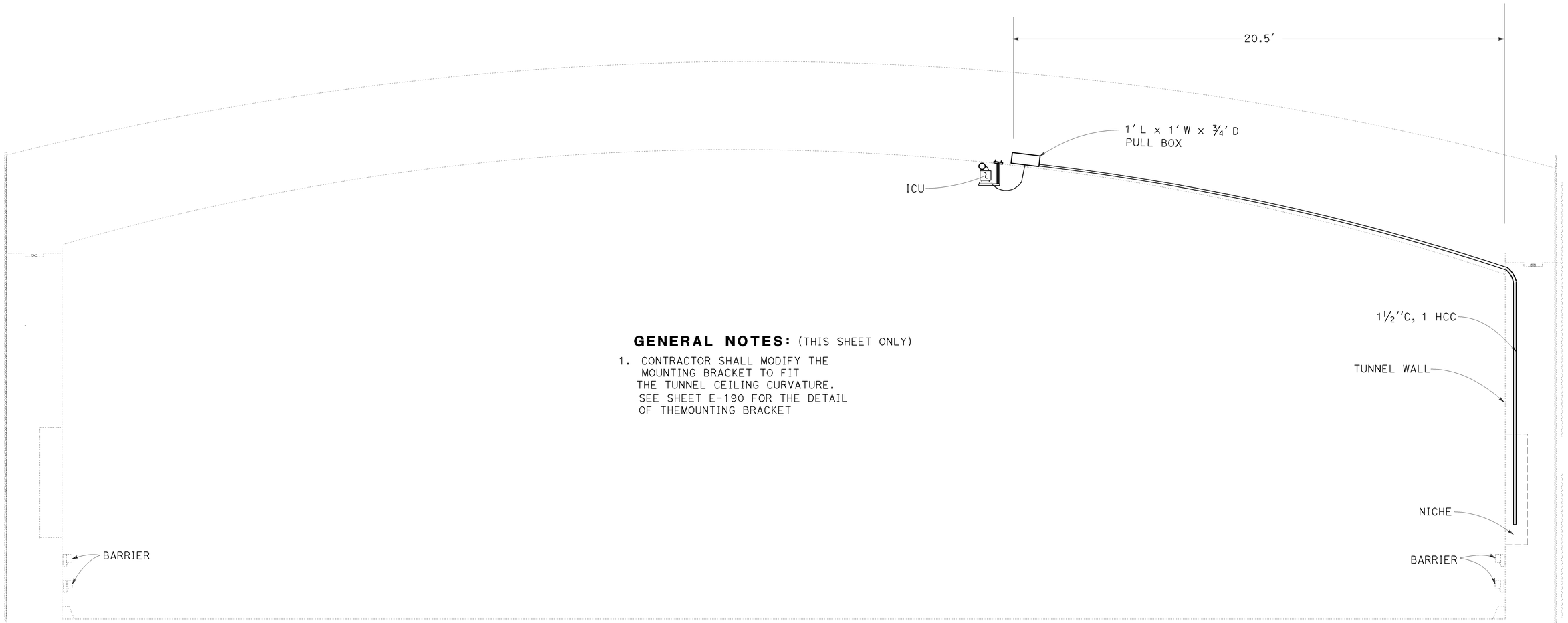

GENERAL NOTES: (THIS SHEET ONLY)

1. CONTRACTOR SHALL MODIFY THE MOUNTING BRACKET TO FIT THE TUNNEL CEILING CURVATURE. SEE SHEET E-190 FOR THE DETAIL OF THEMOUNTING BRACKET

SECTION C-C

FOR NOTES, ABBREVIATIONS AND LEGEND, SEE SHEET E-32

TUNNEL TRAFFIC OPERATIONS SYSTEM (TOS CAMERA INSTALLATION DETAILS)

NO SCALE

E-188

CALCULATED-DESIGNED BY	GWM	8/01/09
CHECKED BY	GIZACHEW WORKU MERID	DATE REVISED
	GIZACHEW WORKU MERID	REVISED BY

FUNCTIONAL SUPERVISOR: BEHZAD GOLEMOHAMMADI

STATE OF CALIFORNIA - DEPARTMENT OF TRANSPORTATION
ELECTRICAL

LAST REVISION DATE PLOTTED => 14-DEC-2009
10-09-09 TIME PLOTTED => 16:23

BORDER LAST REVISED 4/11/2008

RELATIVE BORDER SCALE IS IN INCHES 0 1 2 3

USERNAME => trienard
DGN FILE => 416374ua188.dgn

CU 04242

EA 163741

Dist	COUNTY	ROUTE	POST MILES TOTAL PROJECT	SHEET No.	TOTAL SHEETS
04	SF	101	8.2/9.2	351	654

CALIFORNIA STATE FIRE MARSHAL APPROVED

Approval of this plan does not authorize or approve any omission or deviation from applicable regulations. Final approval is subject to field inspection. One set of approved plans shall be available on the project site at all times.

Reviewed by: STEPHEN GUARINO

Approval date: 12-14-09

Lionel J. Sudds 10-8-09
REGISTERED ELECTRICAL ENGINEER DATE

12-14-09
PLANS APPROVAL DATE

REGISTERED PROFESSIONAL ENGINEER — Lionel J. Sudds No. 15201 Exp 6-30-10 ELECT — STATE OF CALIFORNIA

THE STATE OF CALIFORNIA OR ITS OFFICERS OR AGENTS SHALL NOT BE RESPONSIBLE FOR THE ACCURACY OR COMPLETENESS OF SCANNED COPIES OF THIS PLAN SHEET.

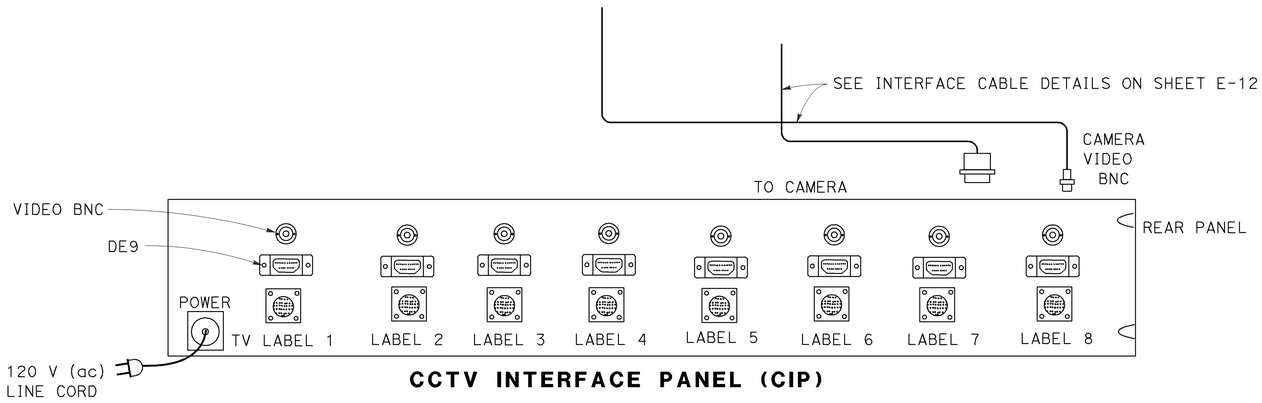

CCTV INTERFACE PANEL (CIP)

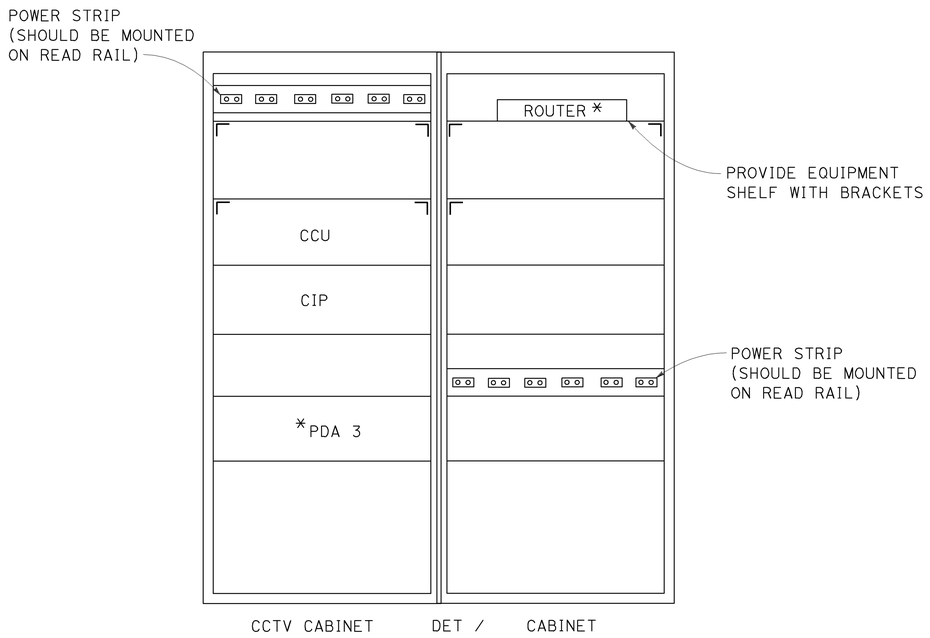

MODEL 334 CONTROLLER CABINET LAYOUT (FRONT VIEW)

* STATE-FURNISHED

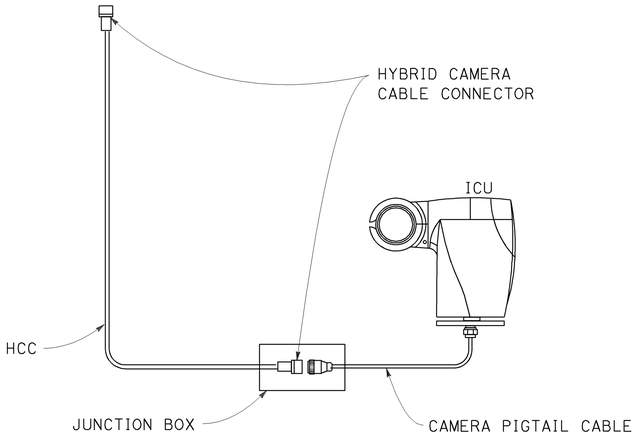

CCTV SYSTEM LAYOUT

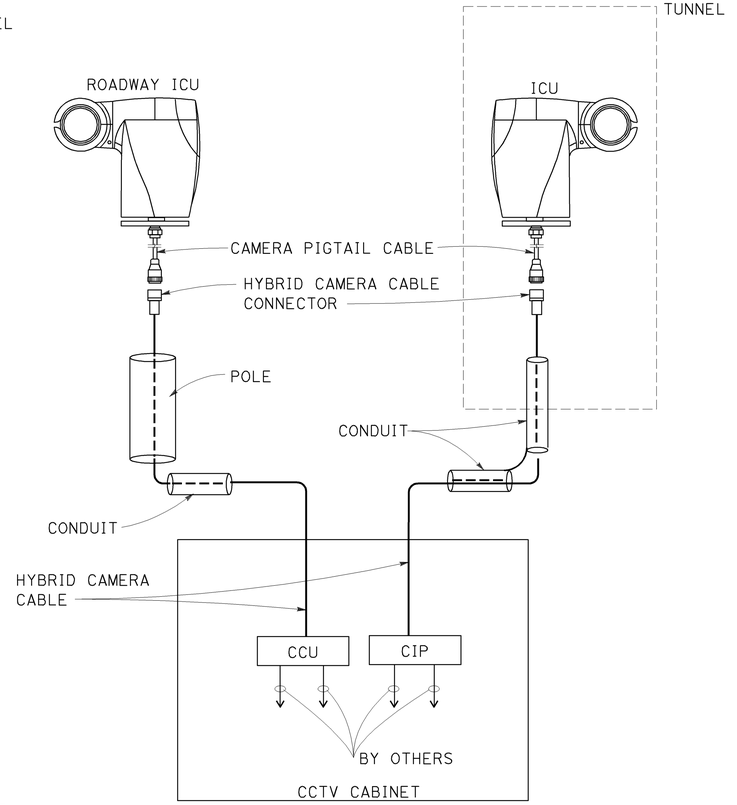

CCTV SYSTEM BLOCK DIAGRAM

HCC - HYBRID CAMERA CABLE
CCU - CAMERA CONTROL UNIT
VEU - VIDEO ENCODER UNIT

TUNNEL TRAFFIC OPERATIONS SYSTEM (TOS CAMERA CCTV WITH TELEPHONE SERVICE SYSTEM AND CABINET LAYOUT)

NO SCALE

E-189

CALCULATED-DESIGNED BY	REVISED BY	DATE REVISED
CHECKED BY	LIONEL J. SUDDS	8/01/09
	LIONEL J. SUDDS	

FUNCTIONAL SUPERVISOR: BEHZAD GOLEMOHAMMADI

STATE OF CALIFORNIA - DEPARTMENT OF TRANSPORTATION
ELECTRICAL

LAST REVISION DATE PLOTTED => 14-DEC-2009
10-09-09 TIME PLOTTED => 16:23

BORDER LAST REVISED 4/11/2008

RELATIVE BORDER SCALE IS IN INCHES 0 1 2 3

USERNAME => trienard
DGN FILE => 416374ua189.dgn

CU 04242

EA 163741

Dist	COUNTY	ROUTE	POST MILES TOTAL PROJECT	SHEET No.	TOTAL SHEETS
04	SF	101	8.2/9.2	352	654

REGISTERED ELECTRICAL ENGINEER 8-25-09 DATE

12-14-09
PLANS APPROVAL DATE

REGISTERED PROFESSIONAL ENGINEER Michael P. Lee No. 13435 Exp. 9-30-10 ELECT STATE OF CALIFORNIA

THE STATE OF CALIFORNIA OR ITS OFFICERS OR AGENTS SHALL NOT BE RESPONSIBLE FOR THE ACCURACY OR COMPLETENESS OF SCANNED COPIES OF THIS PLAN SHEET.

CALIFORNIA STATE FIRE MARSHAL APPROVED
Approval of this plan does not authorize or approve any omission or deviation from applicable regulations. Final approval is subject to field inspection. One set of approved plans shall be available on the project site at all times.
Reviewed by: STEPHEN GUARINO
Approval date: 12-14-09

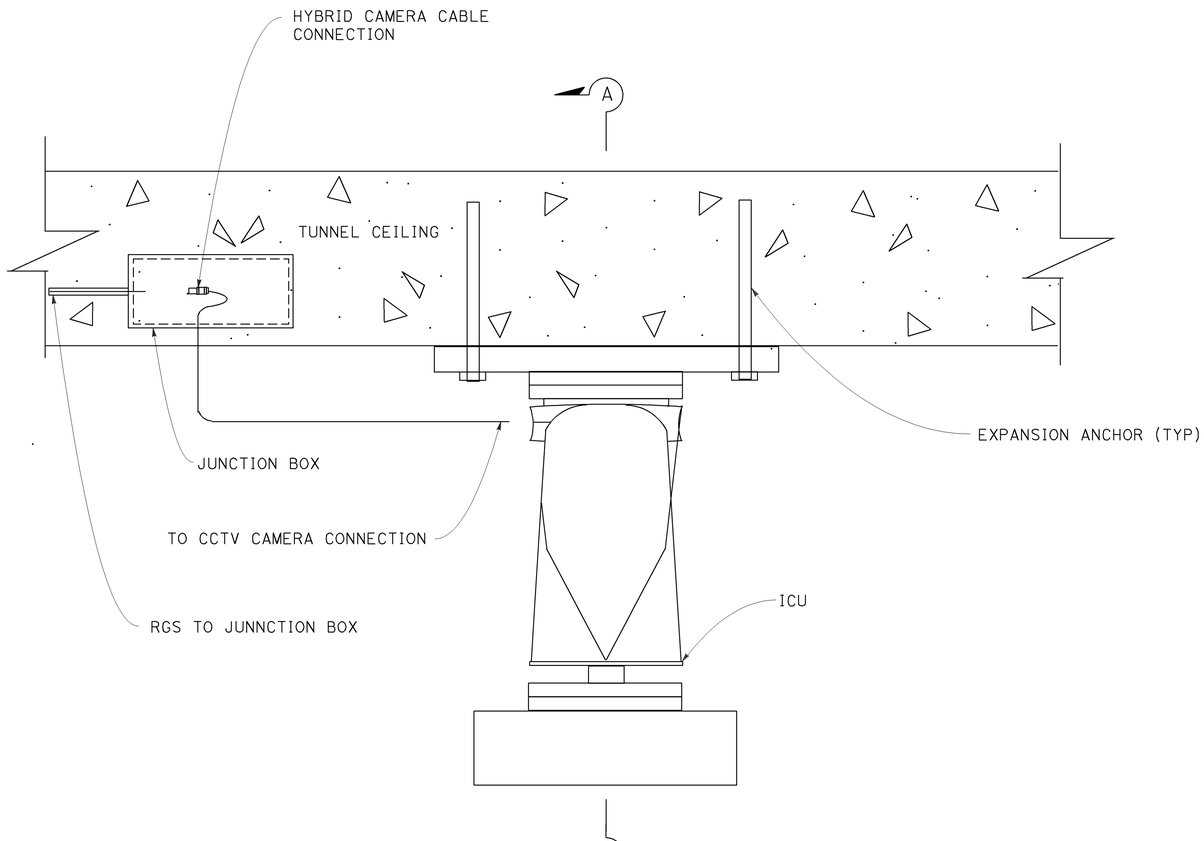

TUNNEL CEILING MOUNTED ICU INSTALLATION

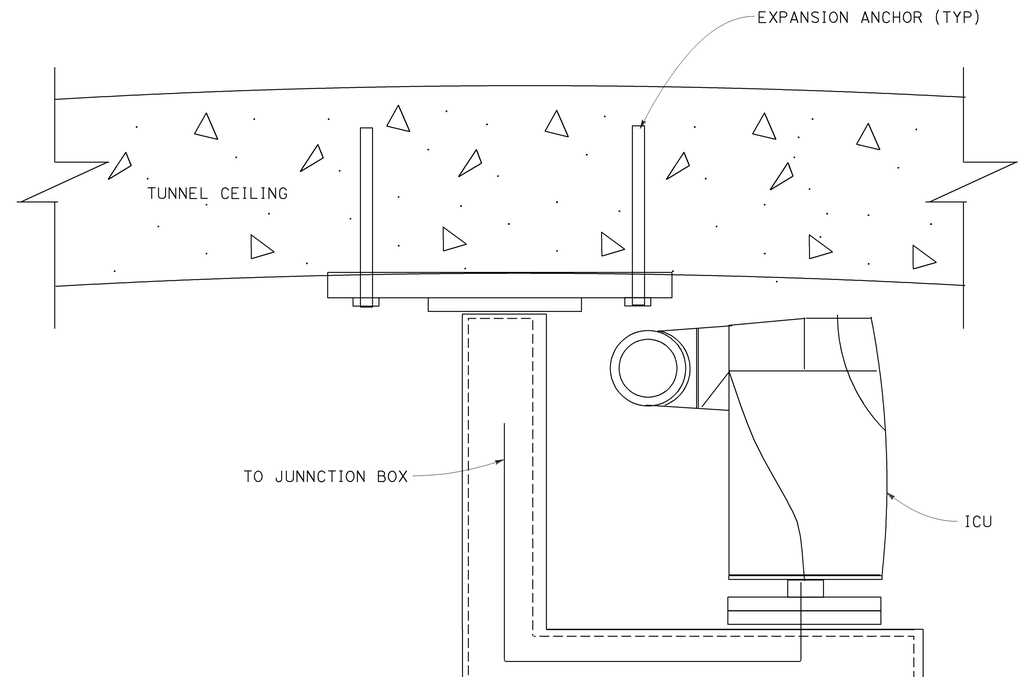

SECTION A-A

TUNNEL TRAFFIC OPERATIONS SYSTEM (TOS CAMERA MOUNTING DETAILS)

NO SCALE

FOR NOTES, ABBREVIATIONS AND LEGEND, SEE SHEET E-32

E-190

STATE OF CALIFORNIA - DEPARTMENT OF TRANSPORTATION
Caltrans
ELECTRICAL

FUNCTIONAL SUPERVISOR: BEHZAD GOLEMOHAMMADI
CALCULATED-DESIGNED BY: MICHAEL P. LEE
CHECKED BY: MICHAEL P. LEE
REVISED BY: ML
DATE REVISED: 8/01/09

LAST REVISION 10-09-09
DATE PLOTTED => 14-DEC-2009
TIME PLOTTED => 16:23

Dist	COUNTY	ROUTE	POST MILES TOTAL PROJECT	SHEET No.	TOTAL SHEETS
04	SF	101	8.2/9.2	353	654

REGISTERED ELECTRICAL ENGINEER — DATE 8-25-09

12-14-09
PLANS APPROVAL DATE

REGISTERED PROFESSIONAL ENGINEER — Michael P. Lee — No. 13435 — Exp 9-30-10 — ELECT — STATE OF CALIFORNIA

THE STATE OF CALIFORNIA OR ITS OFFICERS OR AGENTS SHALL NOT BE RESPONSIBLE FOR THE ACCURACY OR COMPLETENESS OF SCANNED COPIES OF THIS PLAN SHEET.

CALIFORNIA STATE FIRE MARSHAL APPROVED

Approval of this plan does not authorize or approve any omission or deviation from applicable regulations. Final approval is subject to field inspection. One set of approved plans shall be available on the project site at all times.

Reviewed by: STEPHEN GUARINO

Approval date: 12-14-09

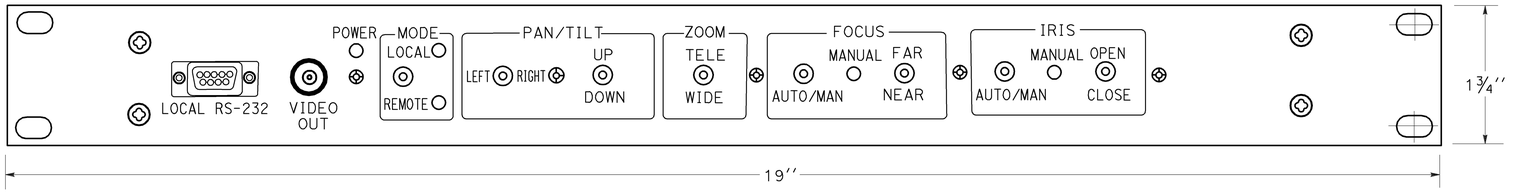

CCU FRONT PANEL LAYOUT

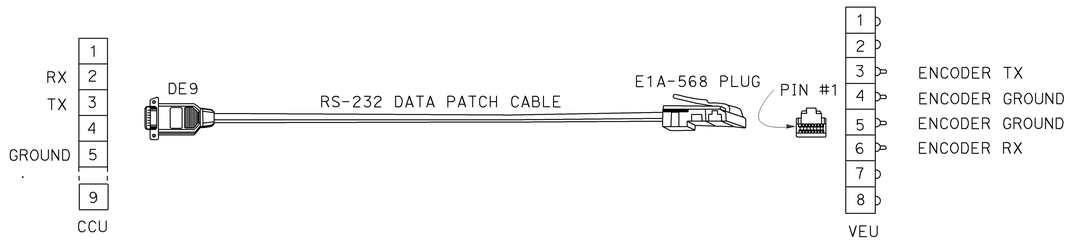

INTERFACE CABLE DETAILS

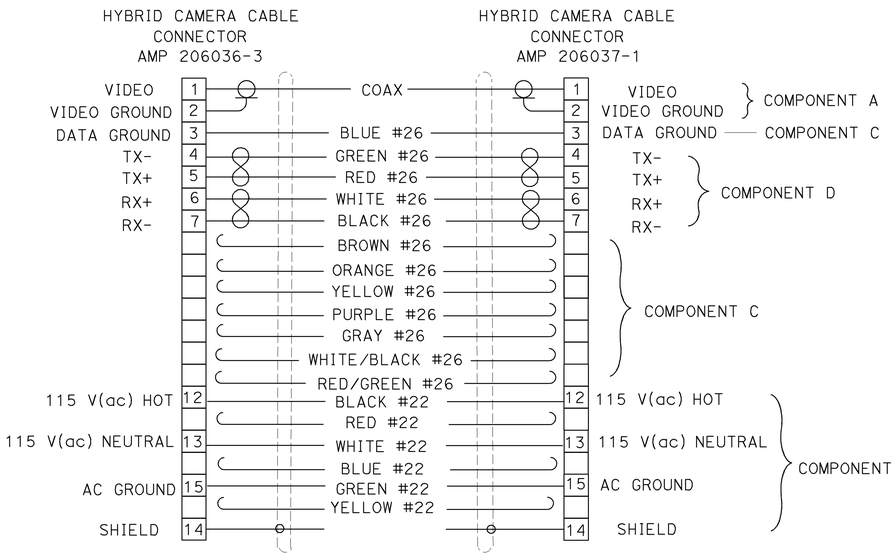

COMPONENT	CONDUCTOR	DESCRIPTION
A	COAX	75 OHM, RG-59/U TYPE, STANDARD ANALOG VIDEO CABLE, 0.242'' NOMINAL DIAMETER
B	6 CONDUCTOR	22 AWG, COPPER INSULATED CONDUCTOR, 0.048'' NOMINAL DIAMETER, COLOR CODED: B1-BLACK, B2-RED, B3-GREEN, B4-WHITE, B5-BLUE, B6-YELLOW
C	8 CONDUCTOR	26 AWG, COPPER INSULATED CONDUCTOR, 0.037'' NOMINAL DIAMETER, COLOR CODED: C1-BROWN, C2-BLUE, C3-ORANGE, C4-YELLOW, C5-PURPLE, C6-GRAY, C7-WHITE/BLACK, C8-RED/GREEN
D	4 CONDUCTOR	26 AWG, COPPER INSULATED CONDUCTOR, 0.037'' NOMINAL DIAMETER, COLOR CODED: D1-BLACK & WHITE, D2-RED & GREEN

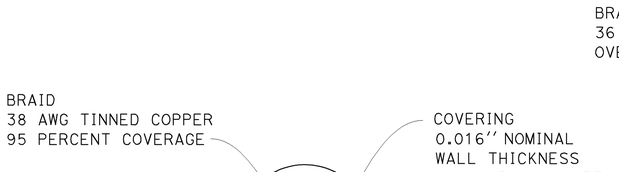

COMPONENT A

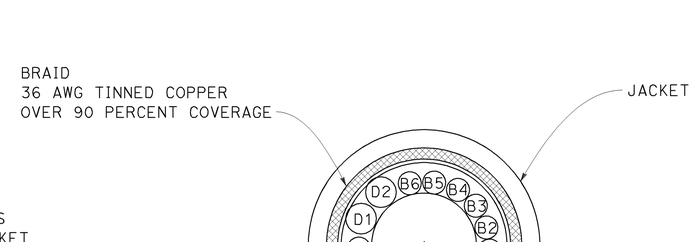

HYBRID CAMERA CABLE CROSS SECTION

FOR NOTES, ABBREVIATIONS AND LEGEND, SEE SHEET E-32

TUNNEL TRAFFIC OPERATIONS SYSTEM (TOS CAMERA HYBRID CAMERA CABLE AND CONNECTORS DETAIL)

NO SCALE

E-191

STATE OF CALIFORNIA - DEPARTMENT OF TRANSPORTATION
ELECTRICAL
FUNCTIONAL SUPERVISOR: BEHZAD GOLEMOHAMMADI
CALCULATED-DESIGNED BY: MICHAEL P. LEE
CHECKED BY: MICHAEL P. LEE
REVISED BY: ML
DATE REVISED: 8/01/09

LAST REVISION DATE PLOTTED => 14-DEC-2009
TIME PLOTTED => 16:23
10-09-09

BORDER LAST REVISED 4/11/2008

RELATIVE BORDER SCALE IS IN INCHES 0 1 2 3

USERNAME => trlenard
DGN FILE => 416374ua191.dgn

CU 04242

EA 163741

Dist	COUNTY	ROUTE	POST MILES TOTAL PROJECT	SHEET No.	TOTAL SHEETS
04	SF	101	8.2/9.2	354	654

REGISTERED ELECTRICAL ENGINEER 11-10-09 DATE

12-14-09
PLANS APPROVAL DATE

REGISTERED PROFESSIONAL ENGINEER Gizachew Merid No. 18216 Exp. 12-31-09 ELECT STATE OF CALIFORNIA

THE STATE OF CALIFORNIA OR ITS OFFICERS OR AGENTS SHALL NOT BE RESPONSIBLE FOR THE ACCURACY OR COMPLETENESS OF SCANNED COPIES OF THIS PLAN SHEET.

CALIFORNIA STATE FIRE MARSHAL APPROVED
Approval of this plan does not authorize or approve any omission or deviation from applicable regulations. Final approval is subject to field inspection. One set of approved plans shall be available on the project site at all times.
Reviewed by: STEPHEN GUARINO
Approval date: 12-14-09

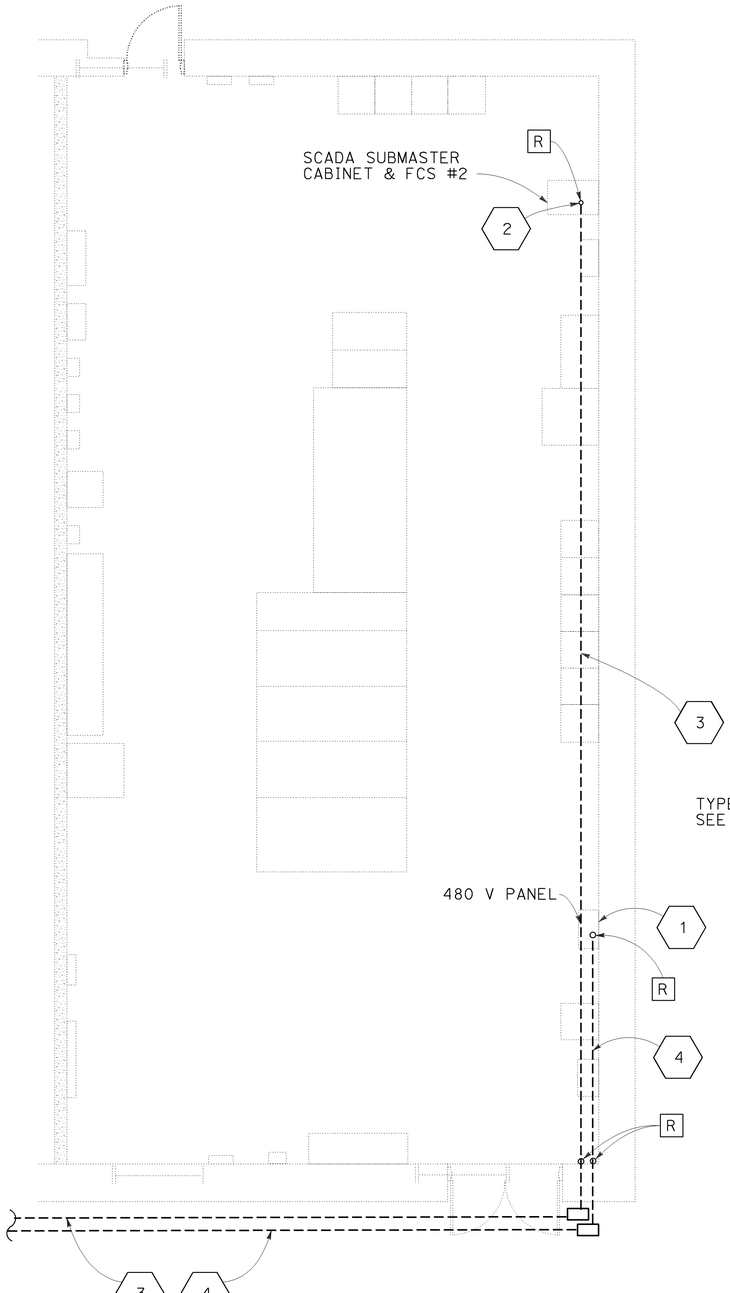

DETAIL A

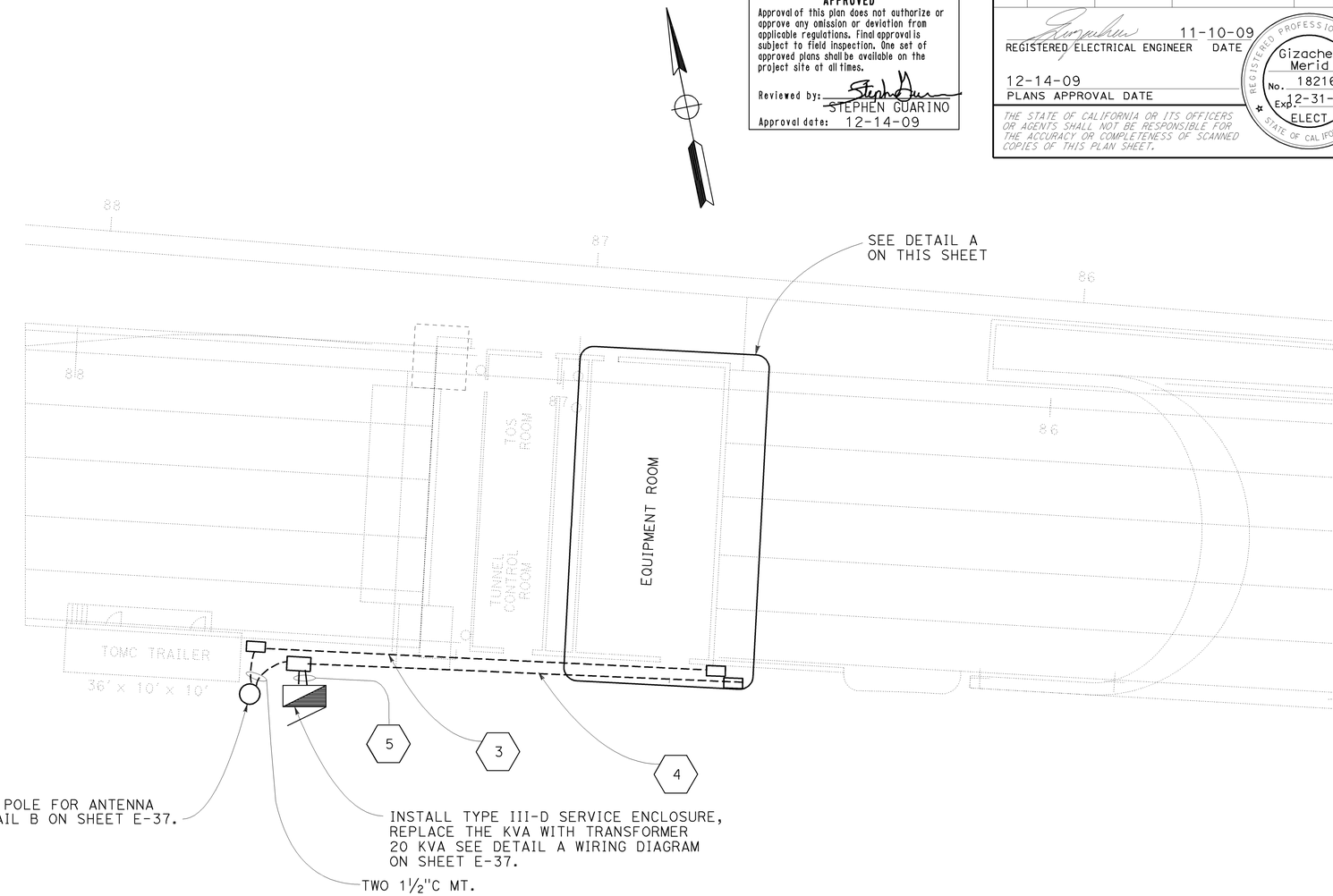

NOTES: (THIS SHEET ONLY)

1. INSTALL 1-2P 100 A BREAKERS INSIDE 480 V PANEL.
2. CONNECT TO THE RACK MOUNTED ETHERNET SWITCH. SEE SHEET E-64 FOR LOCATION AND E-54 FOR CONNECTION.
3. 1½"C, 1-ETHERNET.
4. 2"C, 3#1 (480 VAC).
5. ONE 3"C, MT AND ONE 3", 3#1.

ABBREVIATIONS
(APPLIES FOR SHEETS E-36 AND E-37)

TOMC - TEMPORARY OPERATION AND MAINTENANCE CENTER.

TTCS - TUNNEL TRAFFIC CONTROL SYSTEM.

THIS PLAN IS ACCURATE FOR ELECTRICAL WORK ONLY

TUNNEL TRAFFIC OPERATION SYSTEM
(TOMC TRAILER WIRING DETAIL)

NO SCALE

FOR NOTES, ABBREVIATIONS AND LEGEND, SEE SHEET E-32

E-192

STATE OF CALIFORNIA - DEPARTMENT OF TRANSPORTATION
Caltrans
ELECTRICAL

FUNCTIONAL SUPERVISOR: BEHZAD GOLEMOHAMMADI
CALCULATED-DESIGNED BY: GIZACHEW WORKU MERID
CHECKED BY: GIZACHEW WORKU MERID
REVISED BY: GWM
DATE REVISED: 8/01/09

LAST REVISION 12-7-09
DATE PLOTTED => 14-DEC-2009
TIME PLOTTED => 16:23

Dist	COUNTY	ROUTE	POST MILES TOTAL PROJECT	SHEET No.	TOTAL SHEETS
04	SF	101	8.2/9.2	355	654

REGISTERED ELECTRICAL ENGINEER 11-10-09 DATE

12-14-09
PLANS APPROVAL DATE

REGISTERED PROFESSIONAL ENGINEER Gizachew Merid No. 18216 Exp. 12-31-09 ELECT STATE OF CALIFORNIA

THE STATE OF CALIFORNIA OR ITS OFFICERS OR AGENTS SHALL NOT BE RESPONSIBLE FOR THE ACCURACY OR COMPLETENESS OF SCANNED COPIES OF THIS PLAN SHEET.

CALIFORNIA STATE FIRE MARSHAL APPROVED
Approval of this plan does not authorize or approve any omission or deviation from applicable regulations. Final approval is subject to field inspection. One set of approved plans shall be available on the project site at all times.
Reviewed by: STEPHEN GUARINO
Approval date: 12-14-09

TYPE III-D SERVICE (480-120/240V) EQUIPMENT LEGEND

ITEM No.	COMPONENT	NAME PLATE DESCRIPTION
1	NEUTRAL LUG	
2	LANDING LUG	
3	100A, 480 V, 2P, CB	XFMR PRIMARY (480 V)
4	200A, 240 V, 2P, CB	XFMR SECONDARY (240 V)
5	100A, 120 V, 1P, CB	TRAILER TOMC BUILDING
6	SOLID NEUTRAL TERMINAL STRIP	
7	GROUND LUG	
8	GROUND ROD	
9	15A, 120 V, 1P, CB	ANTENNA POLE
10	40A, 120 V, 1P, CB	TOS/TTCS AND SCADA EQUIPMENT

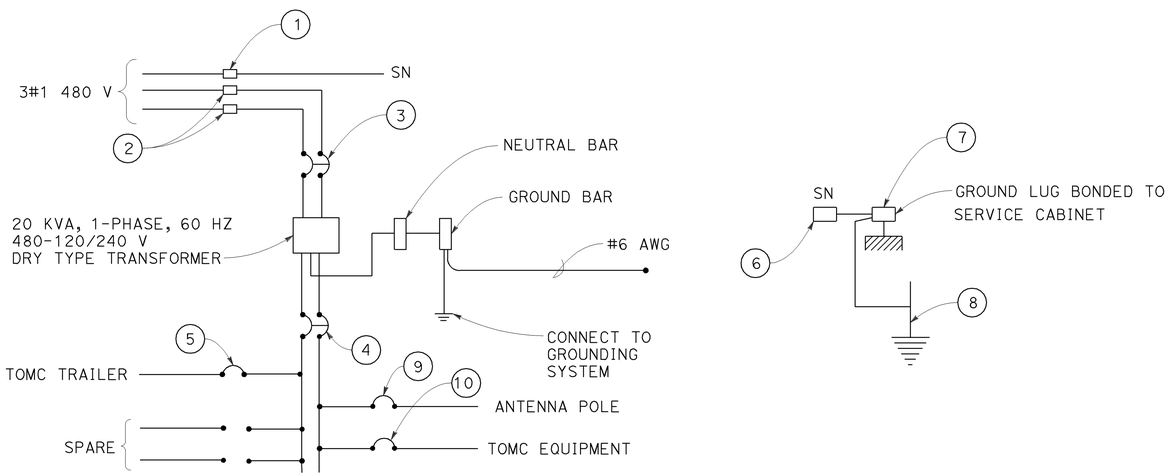

DETAIL A

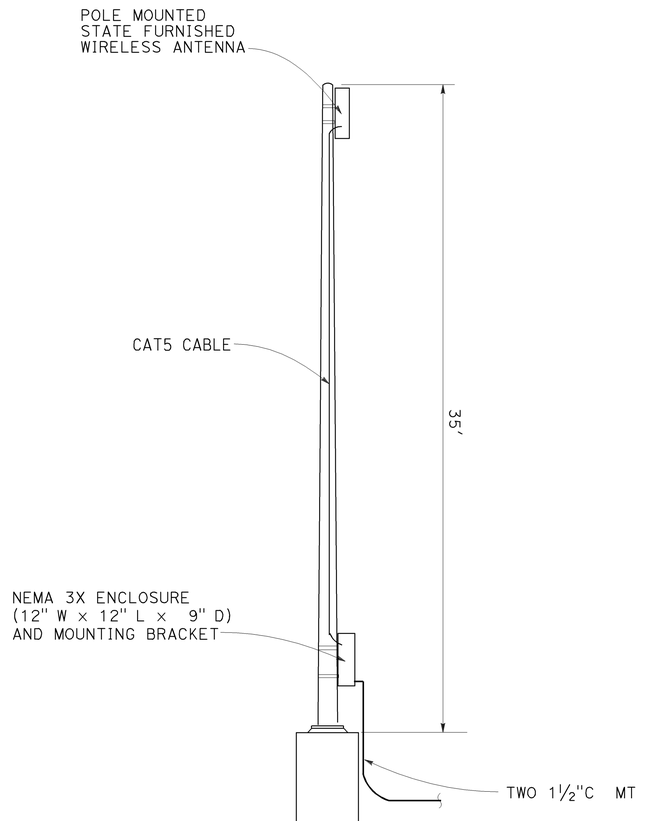

INSTALL TYPE 15 POLE WITHOUT MASTARM
SEE ES-7M AND ES-7N

DETAIL B

LEGEND:

- EXTERNAL CONDUCTOR
- CONDUCTOR OR BUS
- TIE POINT
- ENCLOSURE
- GROUND

ABBREVIATIONS:

A	AMPERE
CB	CIRCUIT BREAKER
M	METERED
NC	NORMALLY CLOSED
NO	NORMALLY OPEN
P	POLE
SN	SOLID NEUTRAL
UM	UNMETERED
V	VOLT

NOTES: (FOR SERVICE EQUIPMENT)

1. VOLTAGE RATINGS OF SERVICE EQUIPMENT SHALL CONFORM TO THE SERVICE VOLTAGES INDICATED ON THE PLANS.
2. UNLESS OTHERWISE INDICATED ON THE PLANS, ALL SERVICE EQUIPMENT ITEMS SHALL BE PROVIDED FOR EACH SERVICE EQUIPMENT ENCLOSURE AS SHOWN.
3. ITEM No. 1 AND 6 SHALL BE INSULATED FORM THE CABINET.
4. METER SOCKETS SHALL BE 7 CLIP TYPE.

THIS PLAN IS ACCURATE FOR ELECTRICAL WORK ONLY

TUNNEL TRAFFIC OPERATION SYSTEM
(TOMC TRAILER WIRING DETAIL)

NO SCALE

E-193

STATE OF CALIFORNIA - DEPARTMENT OF TRANSPORTATION
Caltrans ELECTRICAL

FUNCTIONAL SUPERVISOR: BEHZAD GOLEMOHAMMADI
CALCULATED-DESIGNED BY: GIZACHEW WORKU MERID
CHECKED BY: GIZACHEW WORKU MERID
REVISED BY: GWM
DATE REVISED: 8/01/09

LAST REVISION 12-7-09
DATE PLOTTED => 14-DEC-2009
TIME PLOTTED => 16:23

Dist	COUNTY	ROUTE	POST MILES TOTAL PROJECT	SHEET No.	TOTAL SHEETS
04	SF	101	8.2/9.2	356	654

Parviz Boozarpour 9-10-09
REGISTERED ELECTRICAL ENGINEER DATE

12-14-09
PLANS APPROVAL DATE

REGISTERED PROFESSIONAL ENGINEER — Parviz Boozarpour — No. 12735 — Exp 9-30-10 — ELECT — STATE OF CALIFORNIA

THE STATE OF CALIFORNIA OR ITS OFFICERS OR AGENTS SHALL NOT BE RESPONSIBLE FOR THE ACCURACY OR COMPLETENESS OF SCANNED COPIES OF THIS PLAN SHEET.

CALIFORNIA STATE FIRE MARSHAL APPROVED
Approval of this plan does not authorize or approve any omission or deviation from applicable regulations. Final approval is subject to field inspection. One set of approved plans shall be available on the project site at all times.
Reviewed by: STEPHEN GUARINO
Approval date: 12-14-09

800 MHz ANTENNA
FM ANTENNA
AM ANTENNA
LP
DCI
INDEPENDENT OVERRIDE MESSAGES FOR NORTH & SOUTHBOUNDS
AUDIO MONITOR OUTPUT
AUDIO OR MICROPHONE-LIVE INPUT
INTEGRATED DIGITAL RECORDER AND SYSTEM CONTROLLER
FM REBROADCAST CHANNELISER 36 CH AUDIO SB/NB
AM REBROADCAST CHANNELISER 20 CH AUDIO SB/NB
FM NB
FM SB
AM NB
AM SB
LAN
CENTRAL OPERATIONS & CONTROL CENTER REMOTE CONTROL AND EMERGENCY OVERRIDE CONSOLES
UP TO 16 CHANNELS FULL DUPLEX 800 MHz PUBLIC SAFETY TWO-WAY RADIO FCC CLASS-A NARROWBAND SIGNAL BOOSTER
800 MHz REBROADCAST CHANNELISED SIGNAL BOOSTER 16CH
PD
RF / OPT
AM SB
FM SB
800 MHz DL
800 MHz UL
AM NB
FM NB
FM
AM
NB
SB
800 MHz DIVIDER
FM/ 800 XBC
MAIN POST TUNNELS
2×AM RADIATOR
1×FM/800 MHz LEAKY COAX
SOUTHBOUND (SB)
NORTHBOUND (NB)
OPT / RF
RF OVER FIBER-OPTIC
UL
DL
800 MHz
BATTERY TUNNELS

RADIO REBROADCAST (AM/FM & TWR 800 MHz GENERAL BLOCK DIAGRAM)

NO SCALE

E-194

STATE OF CALIFORNIA - DEPARTMENT OF TRANSPORTATION
ELECTRICAL
Caltrans
FUNCTIONAL SUPERVISOR: BEHZAD GOLEMOHAMMADI
CALCULATED-DESIGNED BY: PARVIZ BOOZARPOUR
CHECKED BY: PARVIZ BOOZARPOUR
REVISED BY: PB
DATE REVISED: 6/01/09

LAST REVISION 12-7-09
DATE PLOTTED => 14-DEC-2009
TIME PLOTTED => 16:24

BORDER LAST REVISED 4/11/2008
RELATIVE BORDER SCALE IS IN INCHES 0 1 2 3
USERNAME => trienard
DGN FILE => 416374ua194.dgn
CU 04242
EA 163741

Dist	COUNTY	ROUTE	POST MILES TOTAL PROJECT	SHEET No.	TOTAL SHEETS
04	SF	101	8.2/9.2	357	654

Parviz Boozarpour 9-10-09
REGISTERED ELECTRICAL ENGINEER DATE

12-14-09
PLANS APPROVAL DATE

REGISTERED PROFESSIONAL ENGINEER
Parviz Boozarpour
No. 12735
Exp 9-30-10
ELECT
STATE OF CALIFORNIA

THE STATE OF CALIFORNIA OR ITS OFFICERS OR AGENTS SHALL NOT BE RESPONSIBLE FOR THE ACCURACY OR COMPLETENESS OF SCANNED COPIES OF THIS PLAN SHEET.

CALIFORNIA STATE FIRE MARSHAL APPROVED
Approval of this plan does not authorize or approve any omission or deviation from applicable regulations. Final approval is subject to field inspection. One set of approved plans shall be available on the project site at all times.
Reviewed by: STEPHEN GUARINO
Approval date: 12-14-09

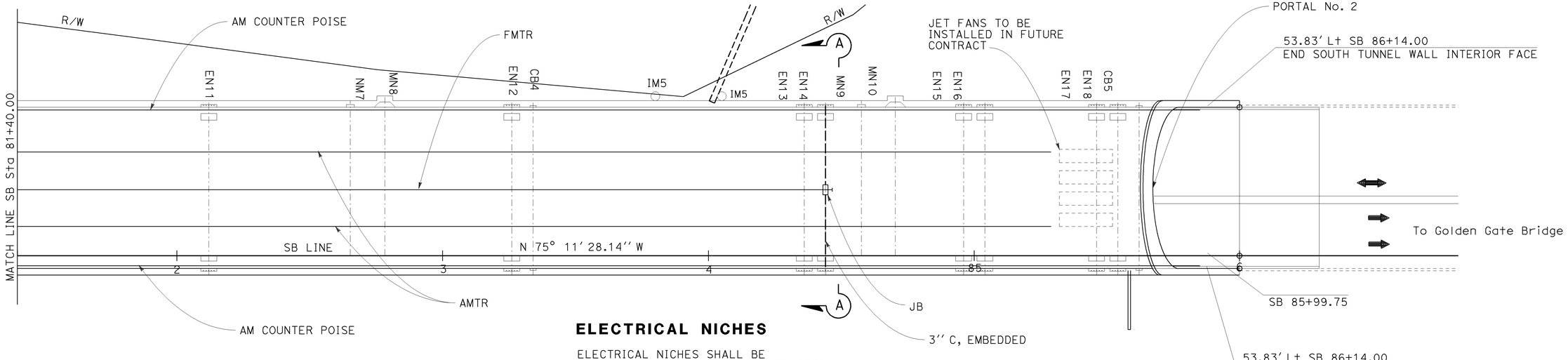

ELECTRICAL NICHES

ELECTRICAL NICHES SHALL BE
6'-0" WIDE x 6'-0" HIGH x 1'-0" DEEP

NICHE	Sta @ CENTERLINE
EN11	82+12.00
EN12	83+26.00
EN13	84+36.00
EN14	84+44.00
EN15	84+96.00
EN16	85+04.00
EN17	85+46.00
EN18	85+54.00

THIS PLAN IS ACCURATE FOR ELECTRICAL WORK ONLY

RADIO REBROADCAST
(AM AND FM ANTENNA LAYOUT PLAN)

SCALE: 1" = 20'

E-195

CALCULATED-DESIGNED BY	CHECKED BY	REVISED BY	DATE REVISED
PARVIZ BOOZARPOUR	PARVIZ BOOZARPOUR	PB	6/01/09

FUNCTIONAL SUPERVISOR: BEHZAD GOLEMOHAMMADI

STATE OF CALIFORNIA - DEPARTMENT OF TRANSPORTATION
Caltrans
ELECTRICAL

LAST REVISION 12-7-09
DATE PLOTTED => 14-DEC-2009
TIME PLOTTED => 16:24

Dist	COUNTY	ROUTE	POST MILES TOTAL PROJECT	SHEET No.	TOTAL SHEETS
04	SF	101	8.2/9.2	358	654

REGISTERED ELECTRICAL ENGINEER 9-10-09 DATE

12-14-09
PLANS APPROVAL DATE

REGISTERED PROFESSIONAL ENGINEER Parviz Boozarpour No. 12735 Exp. 9-30-10 ELECT STATE OF CALIFORNIA

THE STATE OF CALIFORNIA OR ITS OFFICERS OR AGENTS SHALL NOT BE RESPONSIBLE FOR THE ACCURACY OR COMPLETENESS OF SCANNED COPIES OF THIS PLAN SHEET.

CALIFORNIA STATE FIRE MARSHAL APPROVED

Approval of this plan does not authorize or approve any omission or deviation from applicable regulations. Final approval is subject to field inspection. One set of approved plans shall be available on the project site at all times.

Reviewed by: STEPHEN GUARINO

Approval date: 12-14-09

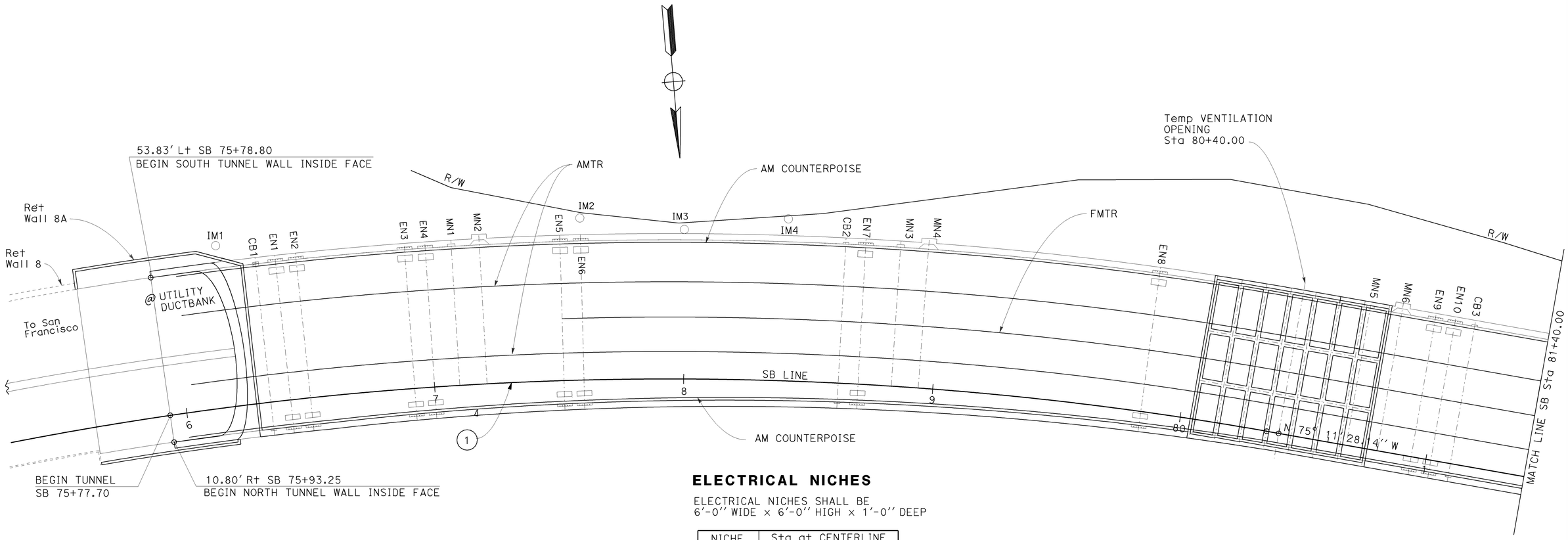

ELECTRICAL NICHES

ELECTRICAL NICHES SHALL BE
6'-0" WIDE x 6'-0" HIGH x 1'-0" DEEP

NICHE	Sta at CENTERLINE
EN1	76+42.00
EN2	76+50.00
EN3	76+92.00
EN4	77+00.00
EN5	77+52.00
EN6	77+60.00
EN7	78+70.00
EN8	79+84.00
EN9	80+94.00
EN10	81+02.00

THIS PLAN IS ACCURATE FOR ELECTRICAL WORK ONLY

RADIO REBROADCAST
(AM AND FM ANTENNA LAYOUT PLAN)

SCALE: 1" = 20'

E-196

STATE OF CALIFORNIA - DEPARTMENT OF TRANSPORTATION
Caltrans
ELECTRICAL

FUNCTIONAL SUPERVISOR: BEHZAD GOLEMOHAMMADI
CALCULATED-DESIGNED BY: PARVIZ BOOZARPOUR
CHECKED BY: PARVIZ BOOZARPOUR
REVISED BY: PB
DATE REVISED: 6/01/09

LAST REVISION 12-7-09
DATE PLOTTED => 14-DEC-2009
TIME PLOTTED => 16:24

BORDER LAST REVISED 4/11/2008
RELATIVE BORDER SCALE IS IN INCHES 0 1 2 3
USERNAME => trlenard
DGN FILE => 416374ua196.dgn
CU 04242
EA 163741

Dist	COUNTY	ROUTE	POST MILES TOTAL PROJECT	SHEET No.	TOTAL SHEETS
04	SF	101	8.2/9.2	359	654

CALIFORNIA STATE FIRE MARSHAL APPROVED

Approval of this plan does not authorize or approve any omission or deviation from applicable regulations. Final approval is subject to field inspection. One set of approved plans shall be available on the project site at all times.

Reviewed by: STEPHEN GUARINO

Approval date: 12-14-09

Parviz Boozarpour 9-10-09
REGISTERED ELECTRICAL ENGINEER DATE

12-14-09
PLANS APPROVAL DATE

REGISTERED PROFESSIONAL ENGINEER — Parviz Boozarpour No. 12735 Exp 9-30-10 ELECT — STATE OF CALIFORNIA

THE STATE OF CALIFORNIA OR ITS OFFICERS OR AGENTS SHALL NOT BE RESPONSIBLE FOR THE ACCURACY OR COMPLETENESS OF SCANNED COPIES OF THIS PLAN SHEET.

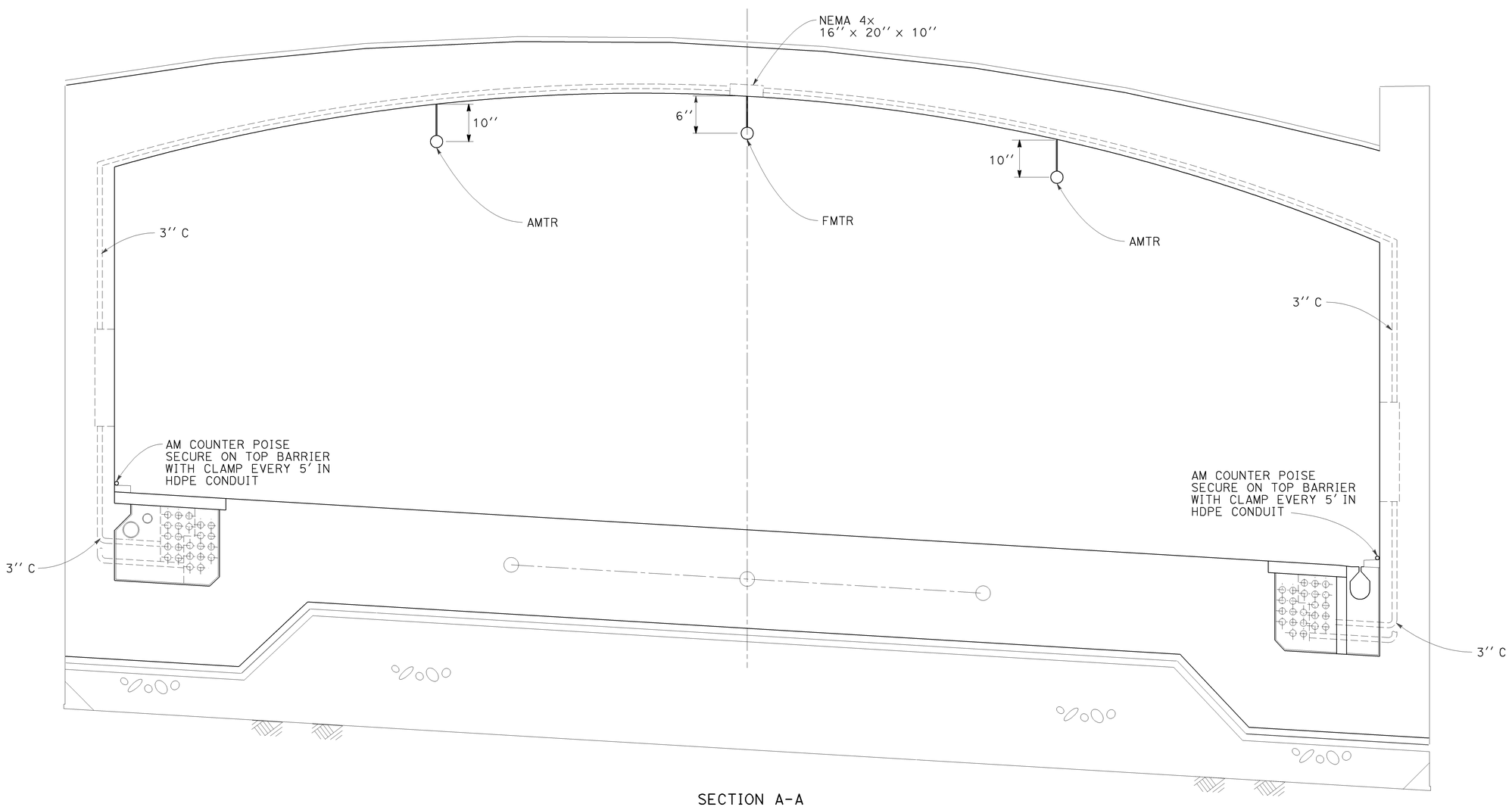

SECTION A-A

RADIO REBROADCAST
(TUNNEL CROSS SECTION)

NO SCALE

THIS PLAN IS ACCURATE FOR ELECTRICAL WORK ONLY

E-197

LAST REVISION 12-7-09 | DATE PLOTTED => 14-DEC-2009 | TIME PLOTTED => 16:24

STATE OF CALIFORNIA - DEPARTMENT OF TRANSPORTATION
ELECTRICAL
FUNCTIONAL SUPERVISOR: BEHZAD GOLEMOHAMMADI
CALCULATED-DESIGNED BY: PARVIZ BOOZARPOUR
CHECKED BY: PARVIZ BOOZARPOUR
REVISED BY: PB
DATE REVISED: 6/01/09

BORDER LAST REVISED 4/11/2008 | RELATIVE BORDER SCALE IS IN INCHES 0 1 2 3 | USERNAME => trlenard | DGN FILE => 416374ua197.dgn | CU 04242 | EA 163741

DIST	COUNTY	ROUTE	POST MILES TOTAL PROJECT	SHEET NO.	TOTAL SHEETS
04	SF	101	8.2/9.2	360	654

Donald E. Howe
REGISTERED CIVIL ENGINEER

June 6, 2008
PLANS APPROVAL DATE

REGISTERED PROFESSIONAL ENGINEER — Donald E. Howe — No. C46402 — Exp. 3-31-09 — CIVIL — STATE OF CALIFORNIA

The State of California or its officers or agents shall not be responsible for the accuracy or completeness of electronic copies of this plan sheet.

To accompany plans dated 12-14-09

2006 REVISED STANDARD PLAN RSP A24C

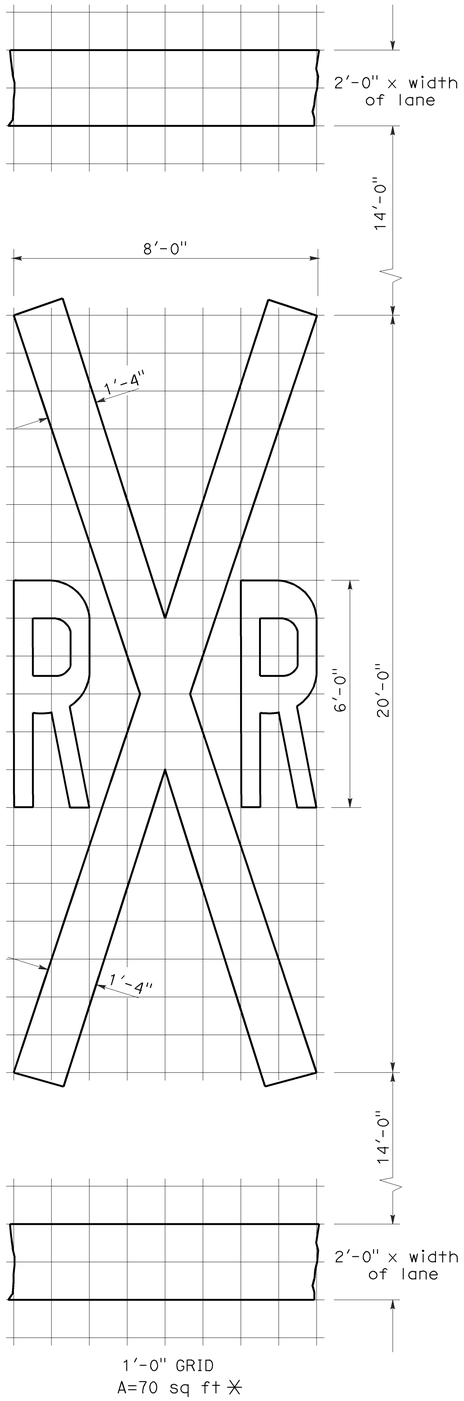

RAILROAD CROSSING SYMBOL

✳70 sq ft DOES NOT INCLUDE THE 2'-0" x VARIABLE WIDTH TRANSVERSE LINES.

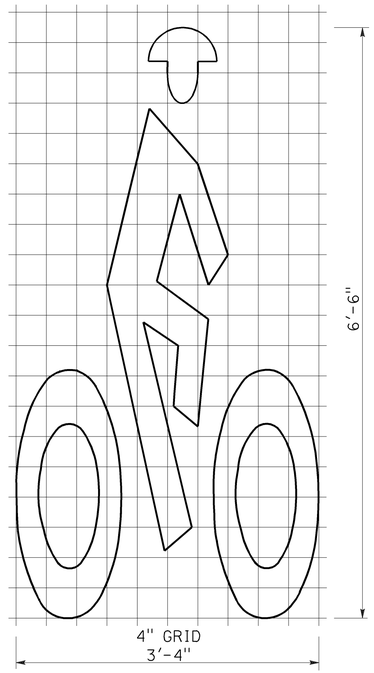

A=7 sq ft

BIKE LANE SYMBOL

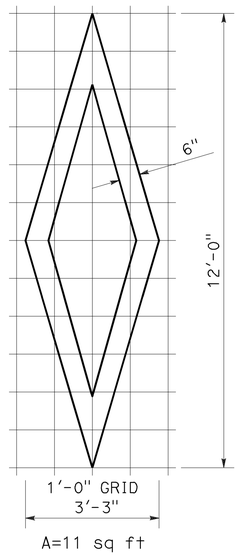

A=11 sq ft

DIAMOND SYMBOL

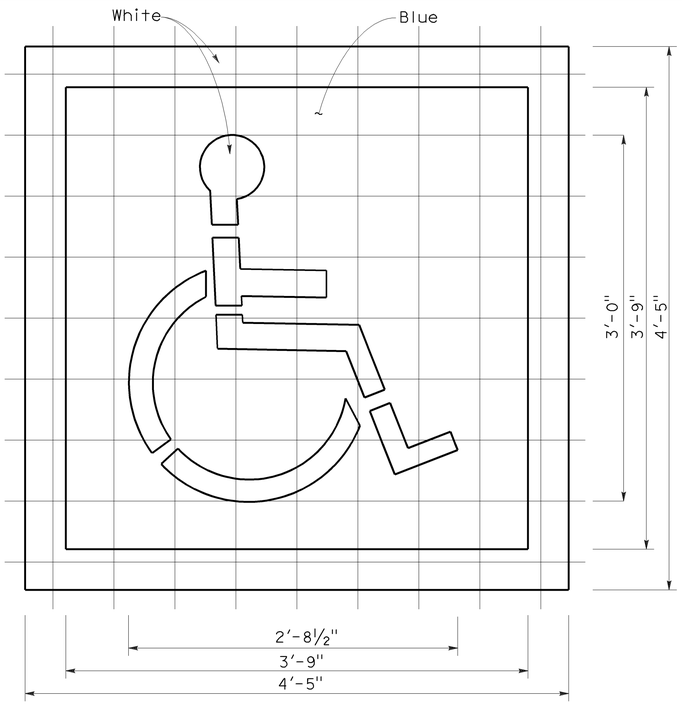

6" GRID
A (White) =9 sq ft
A (Blue) =14 sq ft

INTERNATIONAL SYMBOL OF ACCESSIBILITY MARKING

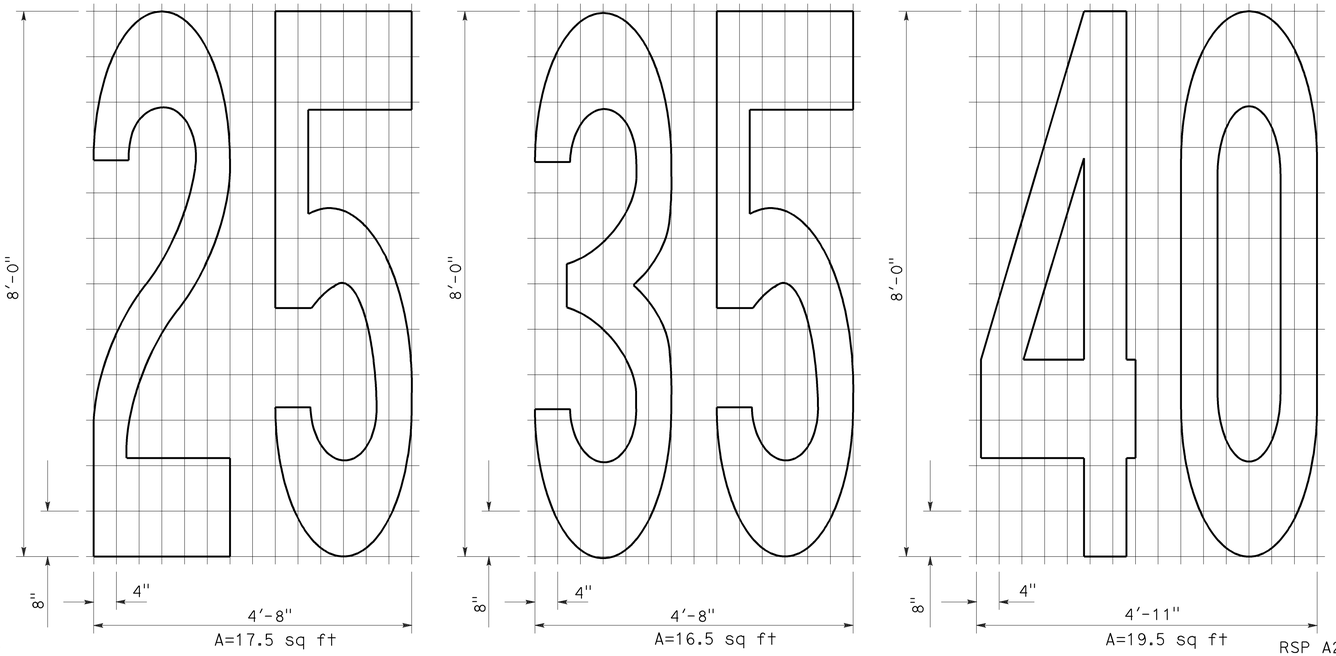

A=17.5 sq ft — A=16.5 sq ft — A=19.5 sq ft

NUMERALS

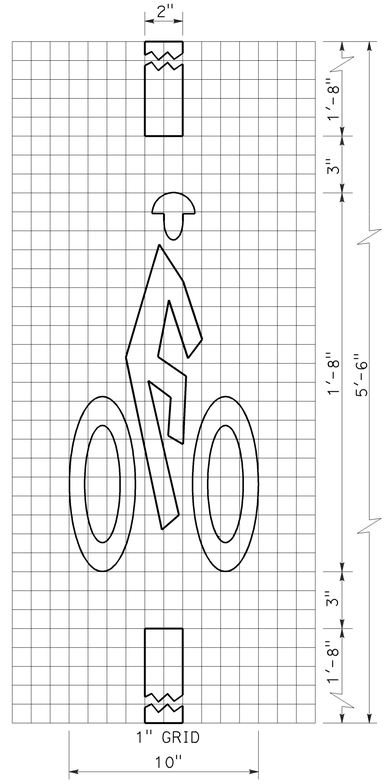

A=2 sq ft

BICYCLE LOOP DETECTOR SYMBOL

NOTE:

1. Minor variations in dimensions may be accepted by the Engineer.

STATE OF CALIFORNIA
DEPARTMENT OF TRANSPORTATION

PAVEMENT MARKINGS SYMBOLS AND NUMERALS

NO SCALE

RSP A24C DATED JUNE 6, 2008 SUPERSEDES STANDARD PLAN A24C DATED MAY 1, 2006 - PAGE 11 OF THE STANDARD PLANS BOOK DATED MAY 2006.

REVISED STANDARD PLAN RSP A24C

5-27-08

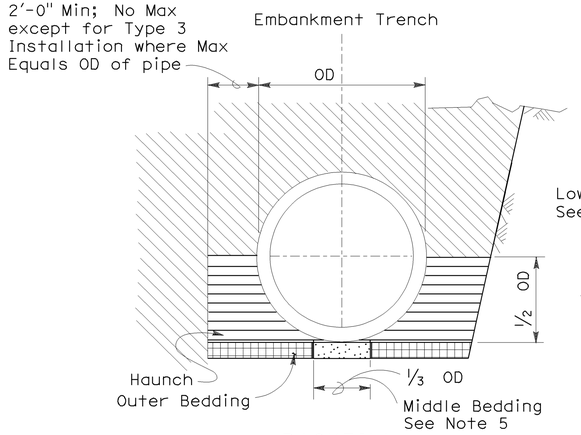

BACKFILL

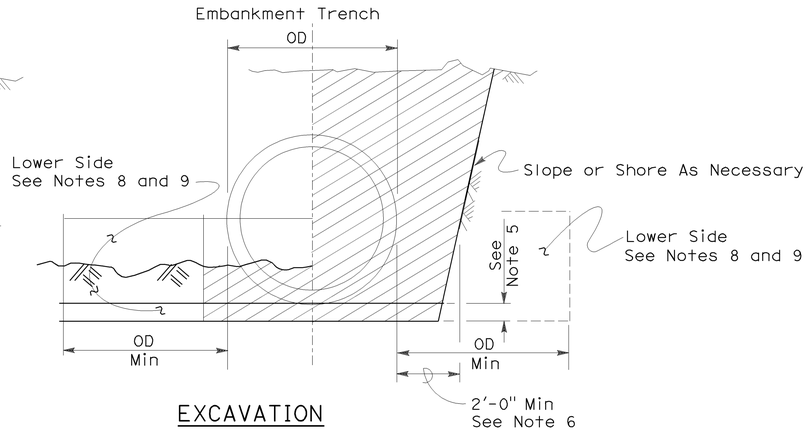

EXCAVATION

Roadway Embankment

Structure Backfill (Culvert) See Note 6

Structure Backfill (Culvert) See Note 6

Loose Backfill

Excavation Structure (Culvert)

TYPE 1 INSTALLATION:

The haunch and outer bedding shall be compacted to a minimum 90 percent relative compaction. In addition, the minimum sand equivalent in these areas shall be 30 and the maximum percentage passing the 75 μm sieve size shall be 12.

TYPE 2 INSTALLATION:

The haunch and outer bedding shall be compacted to a minimum 90 percent relative compaction. In addition, the minimum sand equivalent in these areas shall be 25.

TYPE 3 INSTALLATION:

The haunch and outer bedding shall be compacted to a minimum 85 percent relative compaction. 90 percent relative compaction will be required where the fill over the pipe is less than 4'-0" or 1/2 OD.

INSTALLATION TYPE 1

MINIMUM CLASS AND D-LOAD	COVER	
	108" Dia AND SMALLER	OVER 108" Dia
Class II 1000D	14.9'	12.9'
Class III 1350D	15.0' - 20.9'	13.0' - 18.9'
Class III Special 1700D	21.0' - 26.9'	19.0' - 24.9'
Class IV 2000D	27.0' - 31.9'	25.0' - 29.9'
Class IV Special 2500D	32.0' - 40.9'	30.0' - 38.9'
Class V 3000D	41.0' - 49.9'	39.0' - 46.9'
Class V Special 3600D	50.0' - 59.0'	47.0' - 58.0'

INSTALLATION TYPE 2

MINIMUM CLASS AND D-LOAD	COVER
Class II 1000D	9.9'
Class III 1350D	10.0'- 14.9'
Class III Special 1700D	15.0' - 19.9'
Class IV 2000D	20.0' - 24.9'
Class IV Special 2500D	25.0' - 31.9'
Class V 3000D	32.0' - 38.9'
Class V Special 3600D	39.0' - 47.0'

INSTALLATION TYPE 3

MINIMUM CLASS AND D-LOAD	COVER	
	48" Dia AND SMALLER	OVER 48" Dia
Class II 1000D	7.9'	5.9'
Class III 1350D	8.0' - 10.9'	6.0' - 8.9'
Class III Special 1700D	11.0' - 14.9'	9.0' - 12.9'
Class IV 2000D	15.0' - 17.9'	13.0' - 15.9'
Class IV Special 2500D	18.0' - 21.9'	16.0' - 19.9'
Class V 3000D	22.0' - 26.9'	20.0' - 24.9'
Class V Special 3600D	30.0' - 33.0'	25.0' - 31.0'

DIST	COUNTY	ROUTE	POST MILES TOTAL PROJECT	SHEET NO.	TOTAL SHEETS
04	SF	101	8.2/9.2	361	654

REGISTERED CIVIL ENGINEER

November 17, 2006
PLANS APPROVAL DATE

REGISTERED PROFESSIONAL ENGINEER
Dallas Forester
No. C37765
Exp. 12-31-06
CIVIL
STATE OF CALIFORNIA

The State of California or its officers or agents shall not be responsible for the accuracy or completeness of electronic copies of this plan sheet.

To accompany plans dated 12-14-09

NOTES:

1. Unless otherwise shown on the plans or specified in the special provision, the Contractor shall have the option of selecting the class of RCP and the type of installation to be used, provided the height of cover does not exceed the value shown for the RCP selected.
   Example: 24" RCP culvert with maximum cover of 19'-0" the options are:
   a) Class III or stronger with Installation Type 1.
   b) Class III Special or stronger with Installation Type 2.
   c) Class IV Special or stronger with Installation Type 3.
   Cover is defined as the maximum vertical distance from top of the pipe to finished grade within the length of any given culvert.
2. The class of RCP and Installation Type selected shall be the same throughout the length of any given culvert.
3. The "length of any culvert" is defined as the culvert between:
   a) Successive drainage structure (inlets, junction boxes, headwalls, etc.).
   b) A drainage structure and the inlet or outlet end of the culvert.
   c) The inlet and outlet end of the culvert when there are no intervening drainage structures.
4. Oval and arch shaped RCP shall not be used.
5. 1/25 OD Min, not less than 3".
6. Slurry cement backfill may be substituted for backfill in the outer bedding and haunch areas. If slurry is used the outer and middle beddings shall be omitted. Prior to installation the soil under the middle 1/3 of the outside diameter of the pipe shall be softened by scarifying or other means to a minimum depth of 1/25 OD, but not less than 3". Where slurry cement backfill is used clear distance to trench wall may be reduced as set forth in Section 19-3.062 of the Standard Specifications.
7. Backfill shall be placed full width of excavation except where dimensions are shown for backfill width or thickness. Dimensions shown are minimums.
8. Lower side shall be suitable material as determined by the Engineer. Otherwise it shall be considered unsuitable as set forth in Section 19-2.02 of the Standard Specifications. See Note 9.
9. Where the pipe is placed in a trench, if the trench walls are sloped at 5 vertical to 1 horizontal or steeper for at least 90 percent of the trench height or up to not less than 12" from the grading plane, the firmness of the soil in the lower side need not be considered.
10. Non-reinforced precast concrete pipe sizes 3'-0" or smaller may be placed under installation Types 1, 2 or 3.

STATE OF CALIFORNIA
DEPARTMENT OF TRANSPORTATION

EXCAVATION AND BACKFILL CONCRETE PIPE CULVERTS

NO SCALE

RSP A62DA DATED NOVEMBER 17, 2006 SUPERSEDES STANDARD PLAN A62DA DATED MAY 1, 2006 - PAGE 20 OF THE STANDARD PLANS BOOK DATED MAY 2006.

REVISED STANDARD PLAN RSP A62DA

2006 REVISED STANDARD PLAN RSP A62DA

10-26-06

DIST	COUNTY	ROUTE	POST MILES TOTAL PROJECT	SHEET NO.	TOTAL SHEETS
04	SF	101	8.2/9.2	362	654

Randell D. Hiatt
REGISTERED CIVIL ENGINEER

June 5, 2009
PLANS APPROVAL DATE

REGISTERED PROFESSIONAL ENGINEER — Randell D. Hiatt — No. C50200 — Exp. 6-30-09 — CIVIL — STATE OF CALIFORNIA

The State of California or its officers or agents shall not be responsible for the accuracy or completeness of electronic copies of this plan sheet.

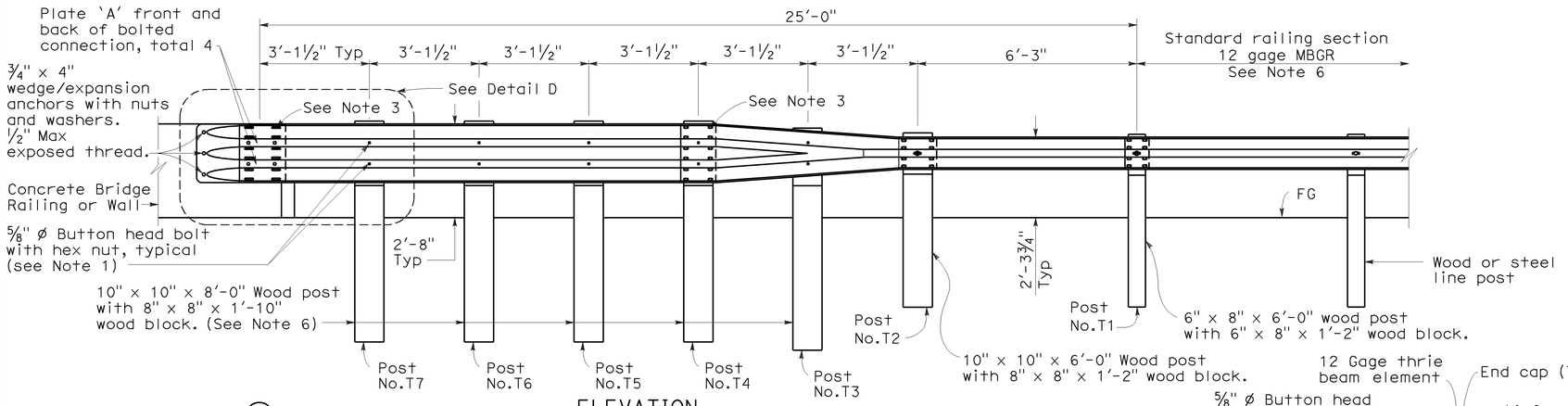

ELEVATION

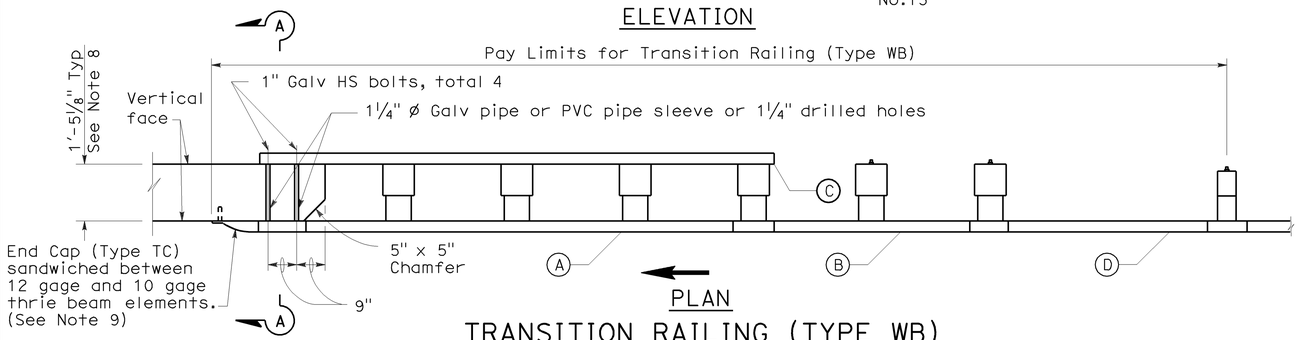

PLAN

TRANSITION RAILING (TYPE WB)

(No Blockout Attachment)

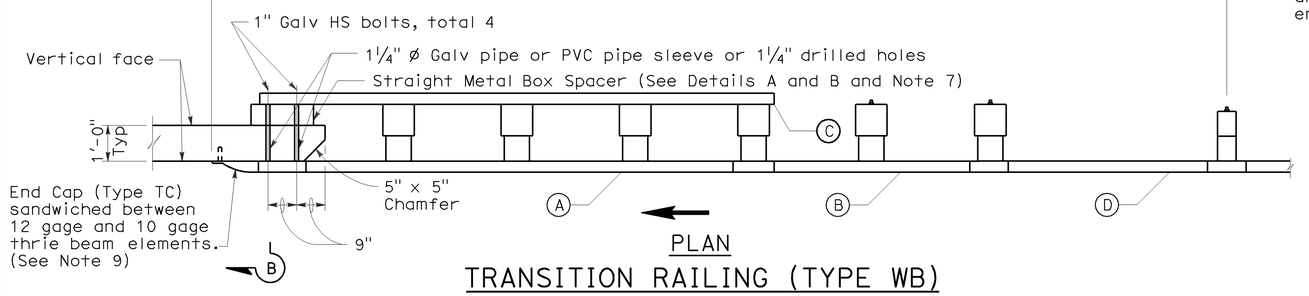

PLAN

TRANSITION RAILING (TYPE WB)

(Blockout Attachment)

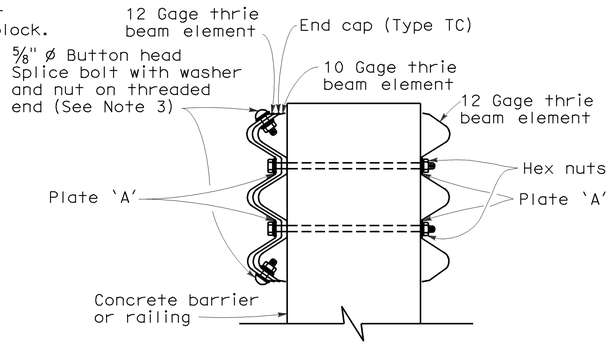

SECTION A-A

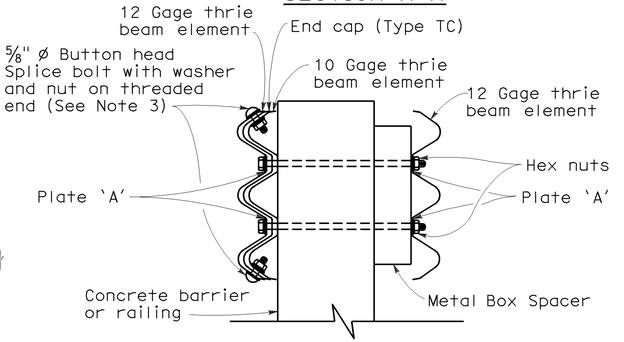

SECTION B-B

LEGEND

- (A) Nested thrie beam elements (one 12 gage element nested over one 10 gage element).
- (B) One 10 gage "W" beam to thrie beam element.
- (C) One 12 gage thrie beam element.
- (D) One 10 gage "W" beam rail element (7'-3½" length)

10 gage = 0.135" thick

12 gage = 0.108" thick

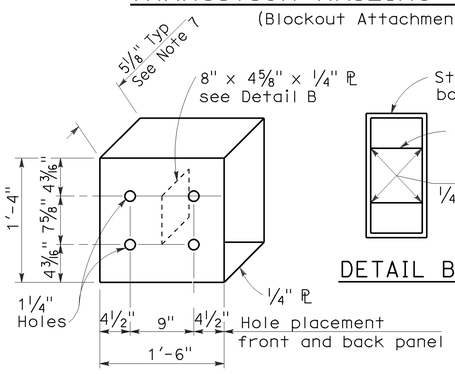

DETAIL A

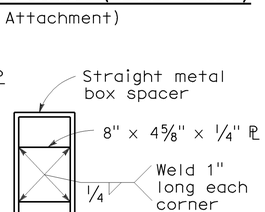

DETAIL B

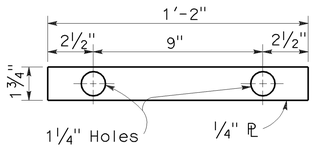

DETAIL C

STRAIGHT METAL BOX SPACER

PLATE 'A'

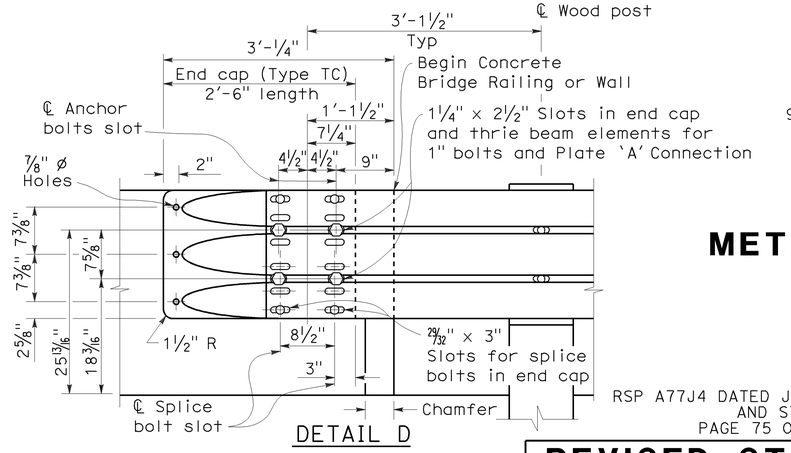

DETAIL D

NOTES:

To accompany plans dated 12-14-09

1. Use 5/8 " ø Button head bolts and hex nuts for connections to posts. No washer on rail face for bolted connections to post.
2. The nested rail elements, end cap, and 'W' beam to thrie beam element may be spliced together prior to bolting the elements to the wood post and concrete barrier or railing.
3. Exterior splice bolt holes for rail element splices at Post No.T4 and the connection to the concrete barrier or railing shall be the standard 29/32 " x 1 1/8 " slot size. Interior splice bolt holes at these locations may be increased up to 1 1/4 " ø. Only the top 2 and the bottom 2 splice bolts with washers and nuts are required for rail splices at Post No.T4 and the connection to the concrete barrier or railing.
4. Direction of adjacent traffic indicated by →.
5. The top elevation of Post Nos.T2 through T7 shall not project more than 1" above the top elevation of the rail element.
6. Typically, the railing connected to Transition Railing (Type WB) will be either standard railing section of metal beam guard railing or an approved Caltrans end treatment attached to Post No.T1.
7. The depth of the metal box spacer varies from the 5 1/8 " to 1 1/2 " and is dependent on the width of the concrete railing or wall. The combined dimension for the depth of the metal box spacer plus the width of railing or wall is typically 17 1/8 ". Where the space between the backside of the concrete railing or wall and the rear thrie beam element is less than 1 1/2 ", metal plates similar to Plate 'A' are to be used as spacers.
8. Where the width of the concrete railing or wall is greater than 17 1/8 ", wood blocks are to be used to fill the space created between the backside of Posts No.4 through No.7 and the rear thrie beam element. These wood blocks shall be 8" in width and 1'-2" in length. The dimension between the front thrie beam element and the rear thrie beam element is to match the width of the concrete railing or wall.
9. End cap may be installed over 12 gage and 10 gage thrie beam elements where transition railing is installed on the departure end of bridge railing.

STATE OF CALIFORNIA
DEPARTMENT OF TRANSPORTATION

METAL BEAM GUARD RAILING TRANSITION RAILING (TYPE WB)

NO SCALE

RSP A77J4 DATED JUNE 5, 2009 SUPERSEDES RSP A77J4 DATED JUNE 6, 2008 AND STANDARD PLAN A77J4 DATED MAY 1, 2006 - PAGE 75 OF THE STANDARD PLANS BOOK DATED MAY 2006.

REVISED STANDARD PLAN RSP A77J4

2006 REVISED STANDARD PLAN RSP A77J4

5-14-09

DIST	COUNTY	ROUTE	POST MILES TOTAL PROJECT	SHEET NO.	TOTAL SHEETS
04	SF	101	8.2/9.2	363	654

REGISTERED CIVIL ENGINEER

June 5, 2009
PLANS APPROVAL DATE

REGISTERED PROFESSIONAL ENGINEER — Glenn DeCou — No. C34547 — Exp. 9-30-09 CIVIL — STATE OF CALIFORNIA

The State of California or its officers or agents shall not be responsible for the accuracy or completeness of electronic copies of this plan sheet.

To accompany plans dated 12-14-09

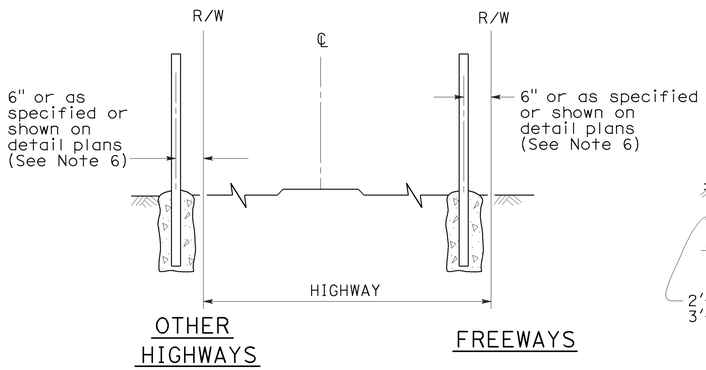

OTHER HIGHWAYS — FREEWAYS

FENCE LOCATION

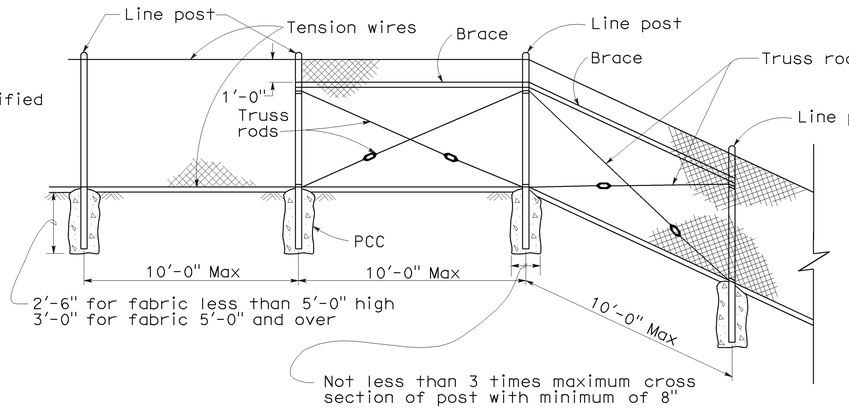

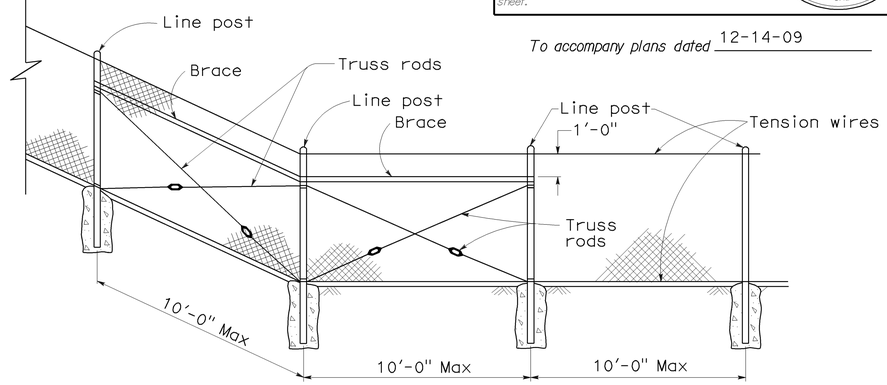

CHAIN LINK FENCE ON SHARP BREAK IN GRADE

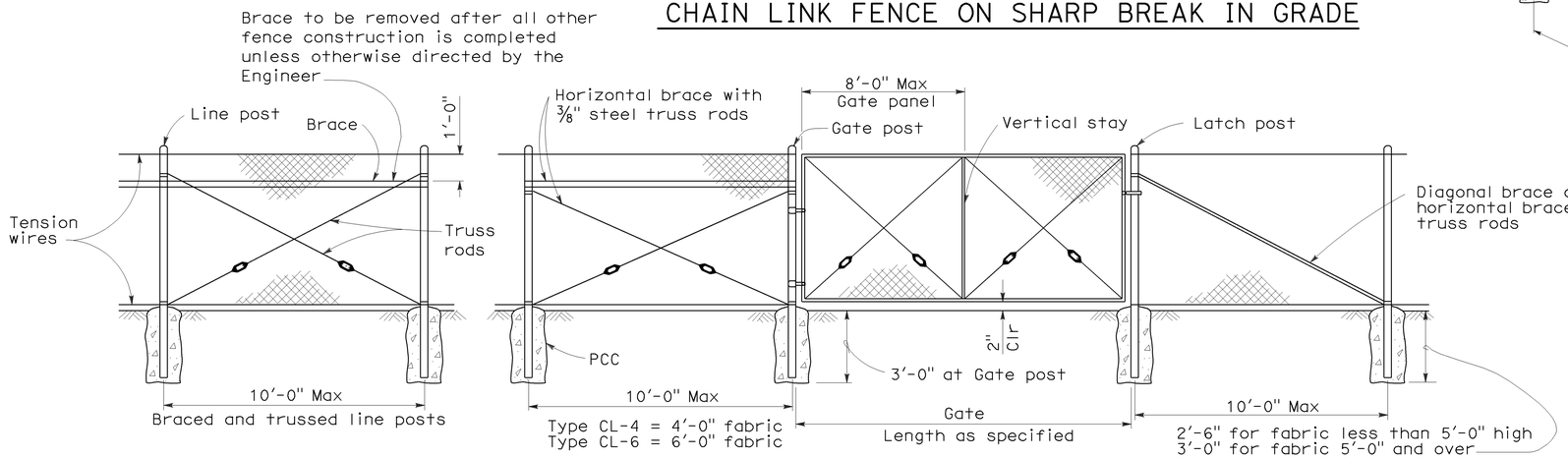

CHAIN LINK GATE INSTALLATION

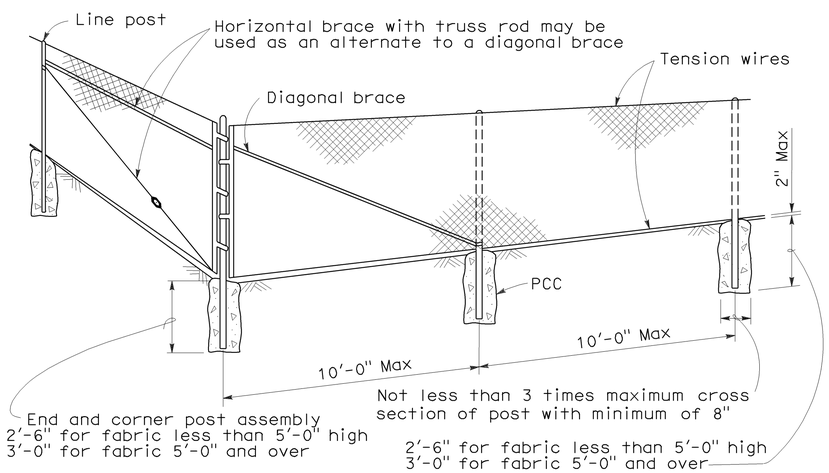

CORNER POST

NOTES:

1. The below table shows examples of post and brace sections which may comply with the Specifications.
2. Sections shown in the tables must also comply with the strength requirements and other provisions of the Specifications.
3. Other sections which comply with the strength requirements and other provisions of the Specifications may be used on approval of the Engineer.
4. Options exercised shall be uniform on any one project.
5. Dimensions shown are nominal.
6. Offset to be 2'-0" at monument locations, measured at right angles to R/W lines. Taper to achieve offset to be at least 20'-0" long.

GATE POST

FENCE HEIGHT	GATE WIDTHS	NOMINAL ID	WEIGHT PER FOOT
6'-0" and Less	Up thru 6'-0"	2½"	4.95 LB
	Over 6'-0" thru 12'-0"	4"	10.79 LB
	Over 12'-0" thru 18'-0"	5"	14.62 LB
	Over 18'-0" to 24'-0" Max	6"	18.97 LB
Over 6'-0"	Up thru 6'-0"	3"	7.58 LB
	Over 6'-0" thru 12'-0"	5"	14.62 LB
	Over 12'-0" thru 18'-0"	6"	18.97 LB
	Over 18'-0" to 24'-0" Max	8"	28.55 LB

Above post dimensions and weights are minimums. Larger sizes may be used on approval of the Engineer.

TYPICAL MEMBER DIMENSIONS (See Notes)

FENCE HEIGHT	LINE POSTS			END, LATCH & CORNER POSTS			BRACES			
	ROUND ID	H	ROLL FORMED	ROUND ID	ROLL FORMED		ROUND ID	H	ROLL FORMED	
					⌐	⊔ ⊓			⊔ ⊓	⌐
6' & less	1½"	1⅞" × 1⅝"	1⅞" × 1⅝"	2"	3½" × 3½"	2" × 1¾"	1¼"	1½" × 1⅝"	1⅝" × 1¼"	1¾" × 1¼"
Over 6'	2"	2¼" × 2"	2" × 1¾"	2½"	3½" × 3½"	2½" × 2½"	1¼"	1½" × 1⅝"	1⅝" × 1¼"	1¾" × 1¼"

STATE OF CALIFORNIA
DEPARTMENT OF TRANSPORTATION

CHAIN LINK FENCE

NO SCALE

RSP A85 DATED JUNE 5, 2009 SUPERSEDES STANDARD PLAN A85
DATED MAY 1, 2006 - PAGE 111 OF THE STANDARD PLANS BOOK DATED MAY 2006.

REVISED STANDARD PLAN RSP A85

2006 REVISED STANDARD PLAN RSP A85

5-7-09

DIST	COUNTY	ROUTE	POST MILES TOTAL PROJECT	SHEET NO.	TOTAL SHEETS
04	SF	101	8.2/9.2	364	654

REGISTERED CIVIL ENGINEER

Glenn DeCou
No. C34547
Exp. 9-30-09
CIVIL
REGISTERED PROFESSIONAL ENGINEER
STATE OF CALIFORNIA

June 5, 2009
PLANS APPROVAL DATE

The State of California or its officers or agents shall not be responsible for the accuracy or completeness of electronic copies of this plan sheet.

To accompany plans dated 12-14-09

NOTES:

1. H is 2'-6" for fabric less than 5'-0" high. H is 3'-0" for fabric 5'-0" and over.
2. T is not less than 3 times maximum cross section of post with minimum of 8".
3. Arms with barbed wire to be used where shown on plans.
4. See Revised Standard Plan RSP A85 for Chain Link Fencing dimensions.
5. Reinforcing must comply with ASTM A 706.
6. See Detail A on New Standard Plan NSP A86B for connection at headwall.

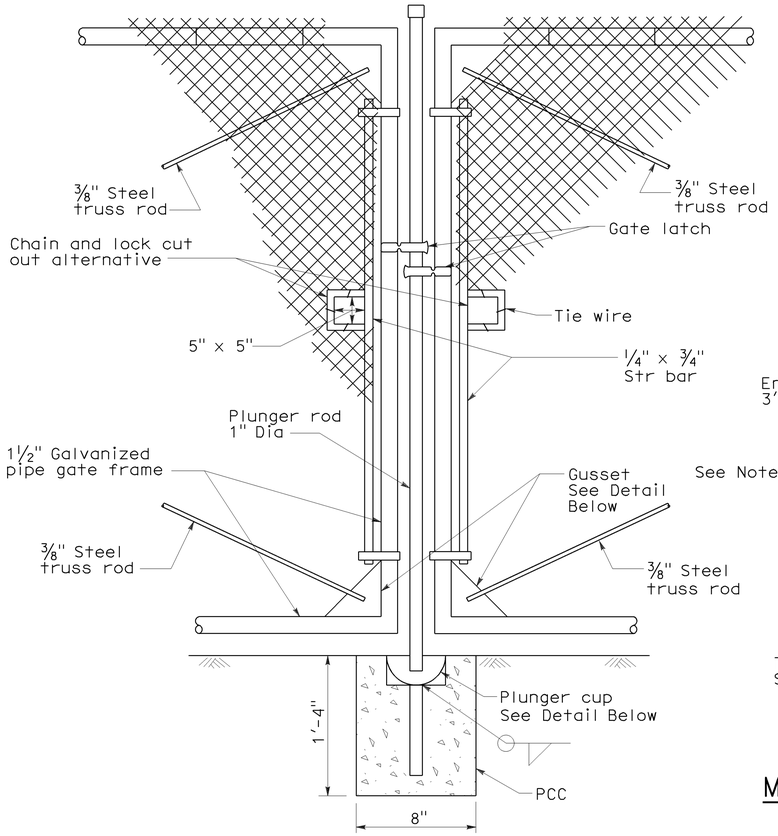

TYPICAL DOUBLE GATE
REMOVABLE CENTER POST

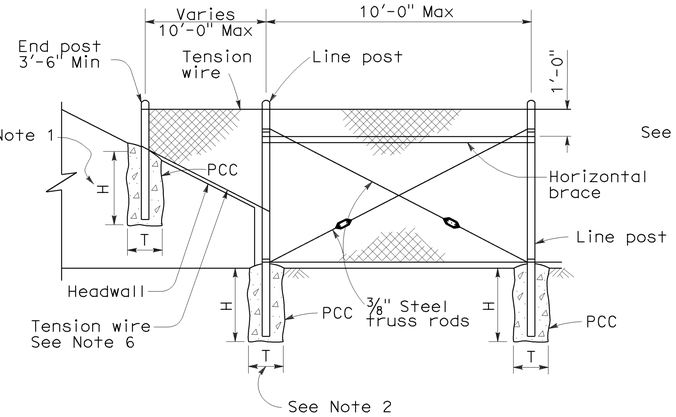

METHOD OF TYING FENCE TO HEADWALL

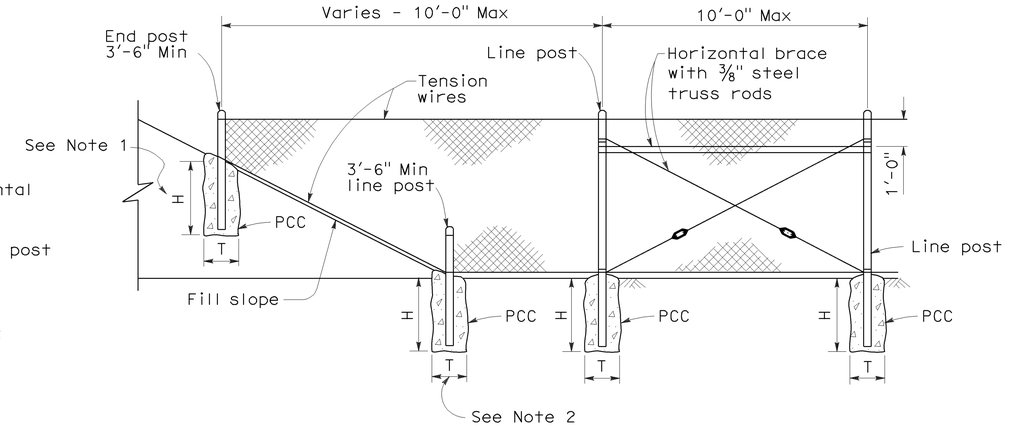

METHOD OF ERECTING FENCE FOR FILL SLOPE

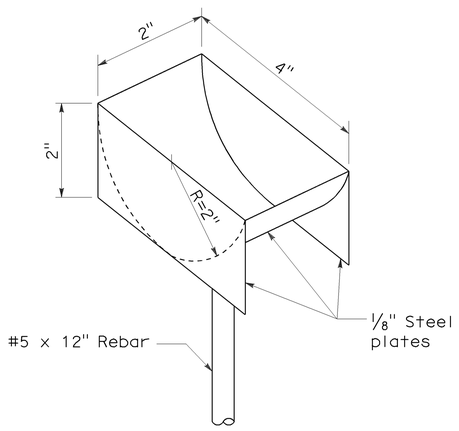

PLUNGER CUP DETAIL

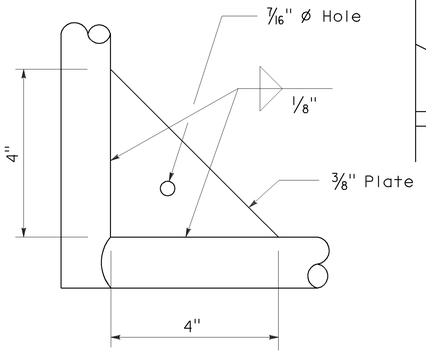

GUSSET DETAIL

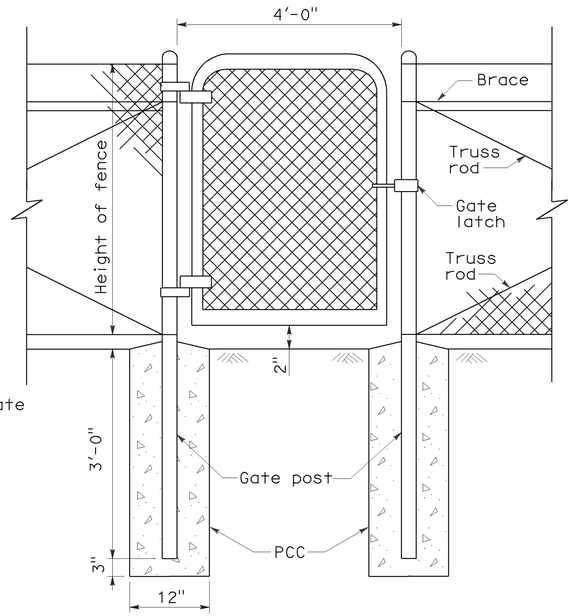

WALK GATE

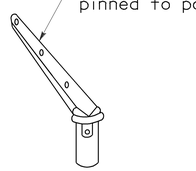

POST TOP END

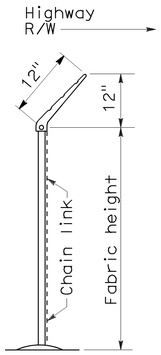

END ELEVATION

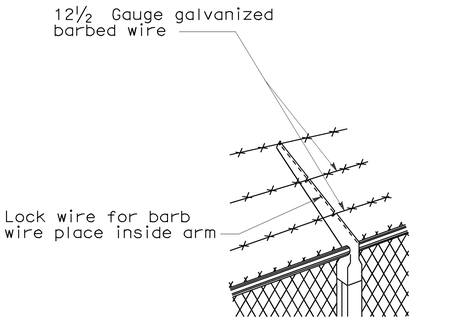

LINE POST TOP
Vertical arms when desired

BARBED WIRE POST TOP
See Note 3

STATE OF CALIFORNIA
DEPARTMENT OF TRANSPORTATION

CHAIN LINK FENCE DETAILS

NO SCALE

NSP A85A DATED JUNE 5, 2009 SUPPLEMENTS THE STANDARD PLANS BOOK DATED MAY 2006.

NEW STANDARD PLAN NSP A85A

2006 NEW STANDARD PLAN NSP A85A

5-7-09

DIST	COUNTY	ROUTE	POST MILES TOTAL PROJECT	SHEET NO.	TOTAL SHEETS
04	SF	101	8.2/9.2	365	654

Glenn DeCou
REGISTERED CIVIL ENGINEER

June 5, 2009
PLANS APPROVAL DATE

REGISTERED PROFESSIONAL ENGINEER — Glenn DeCou — No. C34547 — Exp. 9-30-09 CIVIL — STATE OF CALIFORNIA

The State of California or its officers or agents shall not be responsible for the accuracy or completeness of electronic copies of this plan sheet.

To accompany plans dated 12-14-09

2006 NEW STANDARD PLAN NSP A85B

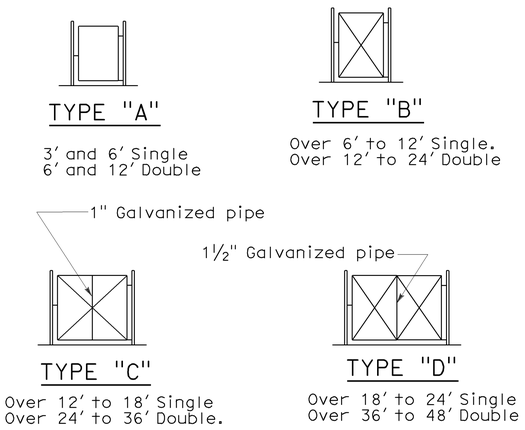

TYPICAL FRAMEWORK SHOWING NUMBER OF BAYS IN GATE

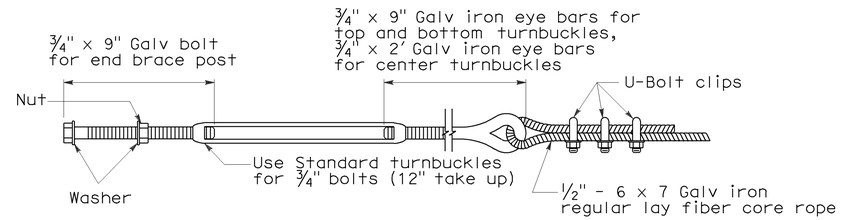

TURNBUCKLE A

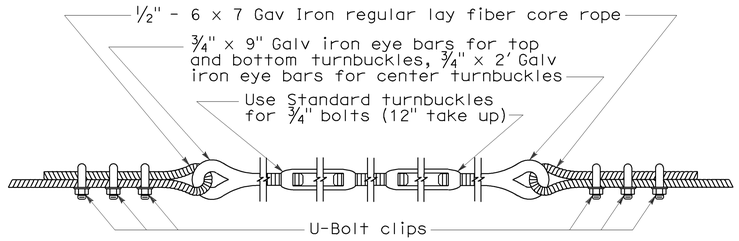

TURNBUCKLE B

NOTES:

1. All material for abutment connection to be galvanized.
2. The chain link fabric shall be replaced by barbed wire strands at 12" maximum centers between the double posts.
3. When the width of the culvert makes it necessary to anchor a post to the top of the culvert, a cast iron shoe or other device approved by the Engineer shall be used.
4. Fencing over stream and around headwall may also use Barbed Wire or Wire Mesh fencing with either wood post or steel post installation.
5. See Revised Standard Plan RSP A85 for Chain Link fence dimensions. See Standard Plan A86 for Barbed Wire and Wire Mesh fence dimensions and for wood post and steel post installation.

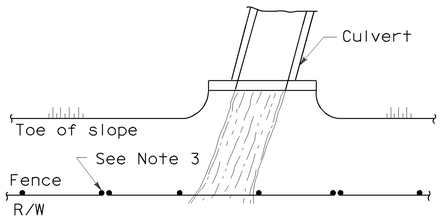

PLAN

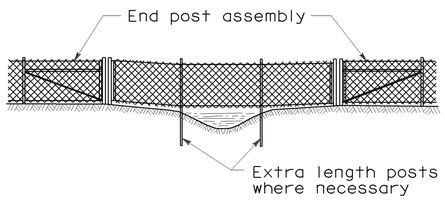

ELEVATION

INSTALLATION OVER STREAM

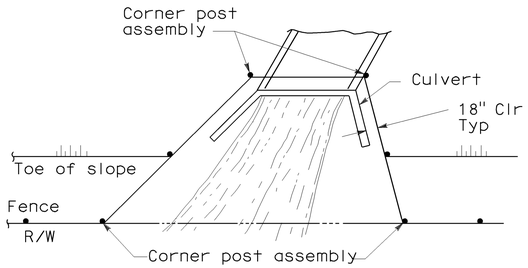

PLAN

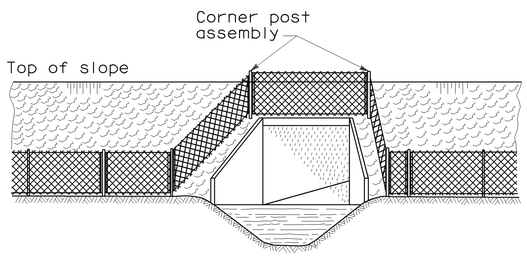

ELEVATION

INSTALLATION AROUND HEADWALL

See Note 4

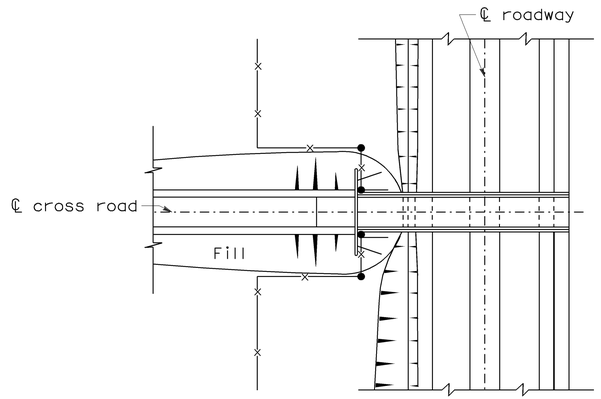

PLAN OF ROADWAY - UNDERPASS

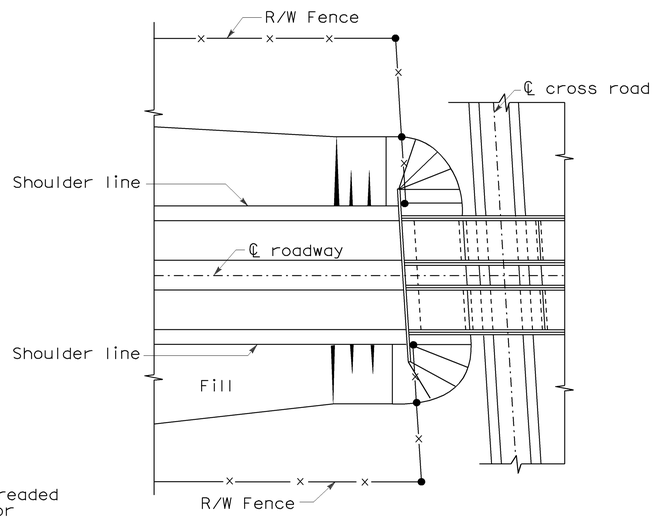

PLAN OF ROADWAY - OVERPASS

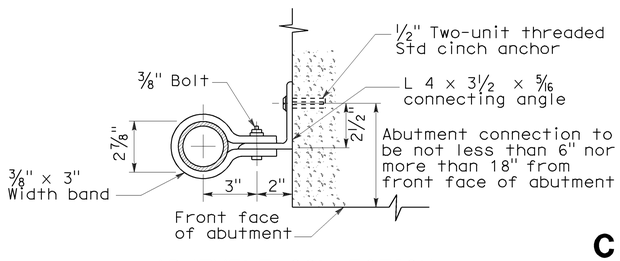

ABUTMENT CONNECTION

TYPICAL INSTALLATION AT BRIDGES

STATE OF CALIFORNIA
DEPARTMENT OF TRANSPORTATION

CHAIN LINK FENCE DETAILS

NO SCALE

NSP A85B DATED JUNE 5, 2009 SUPPLEMENTS THE STANDARD PLANS BOOK DATED MAY 2006.

NEW STANDARD PLAN NSP A85B

5-12-09

DIST	COUNTY	ROUTE	POST MILES TOTAL PROJECT	SHEET NO.	TOTAL SHEETS
04	SF	101	8.2/9.2	366	654

REGISTERED CIVIL ENGINEER

November 17, 2006
PLANS APPROVAL DATE

REGISTERED PROFESSIONAL ENGINEER
Michael Janzen
No. 44788
Exp. 03-31-08
CIVIL
STATE OF CALIFORNIA

The State of California or its officers or agents shall not be responsible for the accuracy or completeness of electronic copies of this plan sheet.

To accompany plans dated 12-14-09

2006 REVISED STANDARD PLAN RSP A87A

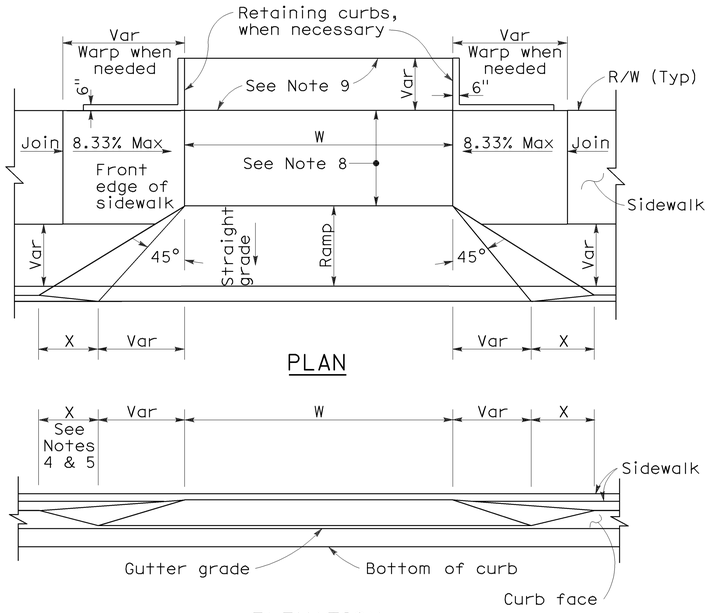

PLAN

ELEVATION

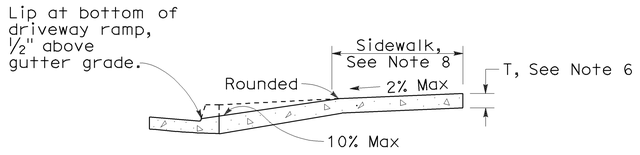

CASE A

Typical driveway, sidewalk not depressed

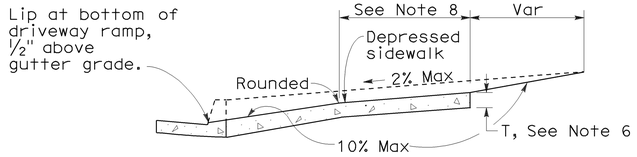

CASE B

Driveway with depressed sidewalk

SECTIONS

CURB QUANTITIES

TYPE	CUBIC YARDS PER LINEAR FOOT
A1-6	0.02585
A1-8	0.03084
A2-6	0.05903
A2-8	0.06379
A3-6	0.01036
A3-8	0.01435
B1-4	0.02185
B1-6	0.02930
B2-4	0.05515
B2-6	0.06171
B3-4	0.00641
B3-6	0.01074
B4	0.05709
D-4	0.04083
D-6	0.06804
E	0.06661

TABLE A

CURB TYPE	DIMENSIONS "H1"	"H2"	"W1"	"W2"
A1-6	1′-2"	6"	7½"	1½"
A1-8	1′-4"	8"	8"	2"
A2-6	1′-0"	6"	2′-7½"	1½"
A2-8	1′-2"	8"	2′-8"	2"
A3-6	6"	5"	7¼"	1¼"
A3-8	8"	7"	7¾"	1¾"
B1-4	1′-0"	4"	7½"	2½"
B1-6	1′-2"	6"	9"	4"
B2-4	10"	4"	2′-7½"	2½"
B2-6	1′-0"	6"	2′-9"	4"
B3-4	4"	3"	7"	2"
B3-6	6"	5"	8½"	3½"
D-4	10"	4"	1′-6"	1′-1"
D-6	1′-0"	6"	2′-2"	1′-8"

DRIVEWAYS

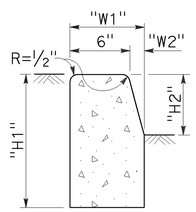

TYPE A1 CURBS

See Table A

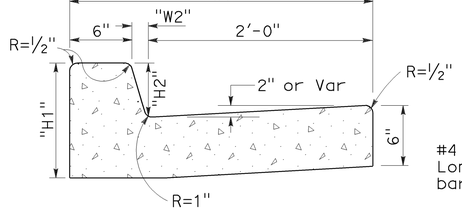

TYPE A2 CURBS

See Table A

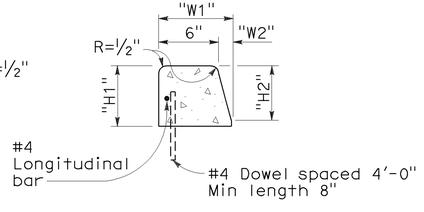

TYPE A3 CURBS

Superimposed on existing pavement
See Table A

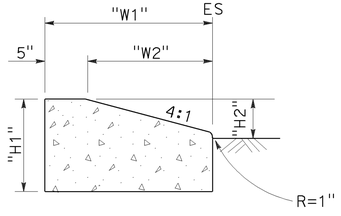

TYPE D CURBS

See Table A

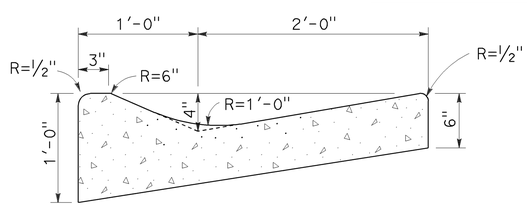

TYPE E CURB

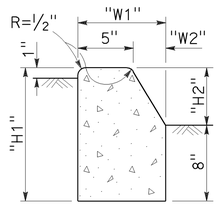

TYPE B1 CURBS

See Table A

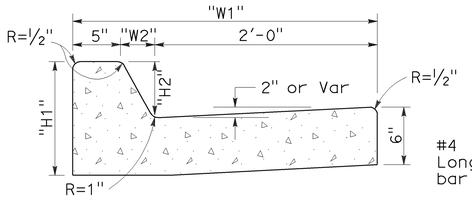

TYPE B2 CURBS

See Table A

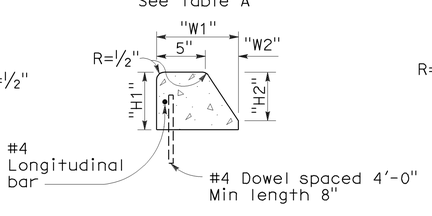

TYPE B3 CURBS

Superimposed on existing pavement
See Table A

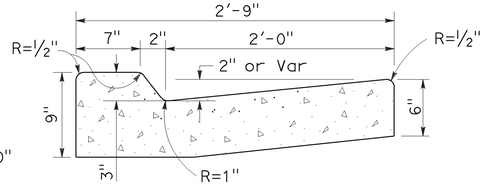

TYPE B4 CURBS

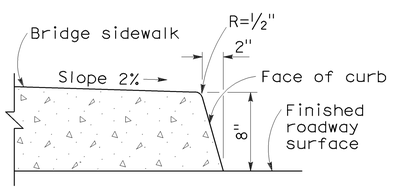

TYPE H CURB

On Bridges

NOTES:

1. Case A driveway section typically applies.
2. Use Case B driveway section when ramp slopes would exceed 10% in Case A.
3. Use Case B driveway section when sidewalk cross slope would exceed 2% in Case A.
4. X=3′-0" except for curb heights over 10" where 4:1 slopes shall be used on curb slope.

CURBS

5. X is a variable when sidewalk is located where wheelchairs may traverse the surface. Slopes shall not exceed 8.33%.
6. Sidewalk and ramp thickness "T" at driveway shall be 4" for residental and 6" for commercial.
7. Difference in slope of the driveway ramp and the slope of a line between the gutter and a point on the roadway 5′-0" from gutter line shall not exceed 15%. Reduce driveway ramp slope, not gutter slope, where required.
8. Minimum width of clear passageway for sidewalk shall be 4′-0".
9. Retaining curbs and acquisition of construction easement may be necessary for narrow sidewalks or curb heights in excess of 6".
10. Across the pedestrian route at curb ramp locations, the gutter pan slope shall not exceed 1" of depth for each 2′-0" of width.

STATE OF CALIFORNIA
DEPARTMENT OF TRANSPORTATION

CURBS AND DRIVEWAYS

NO SCALE

RSP A87A DATED NOVEMBER 17, 2006 SUPERSEDES STANDARD PLAN A87A
DATED MAY 1, 2006 - PAGE 113 OF THE STANDARD PLANS BOOK DATED MAY 2006.

REVISED STANDARD PLAN RSP A87A

10-25-06

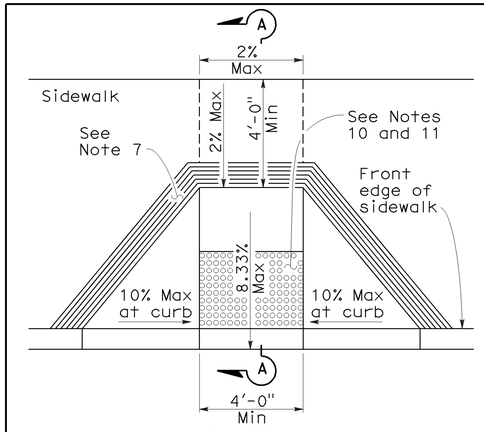

CASE A

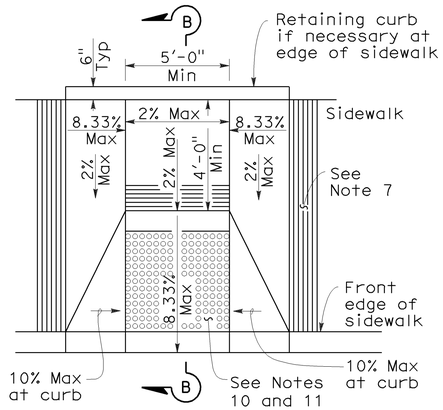

CASE B

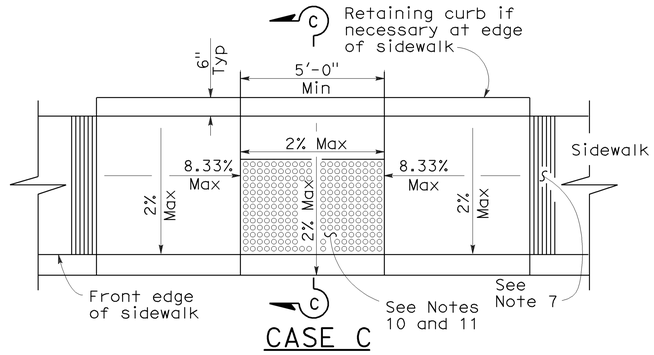

CASE C

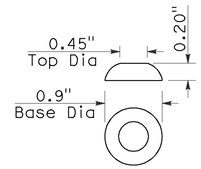

RAISED TRUNCATED DOME

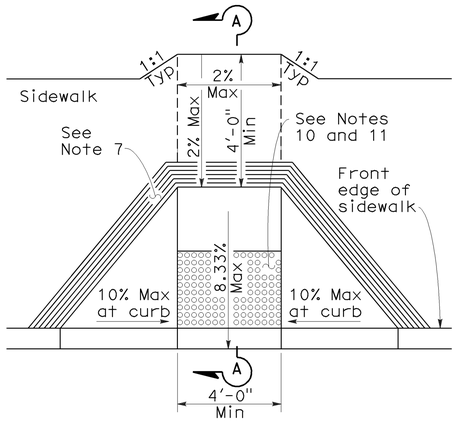

CASE D

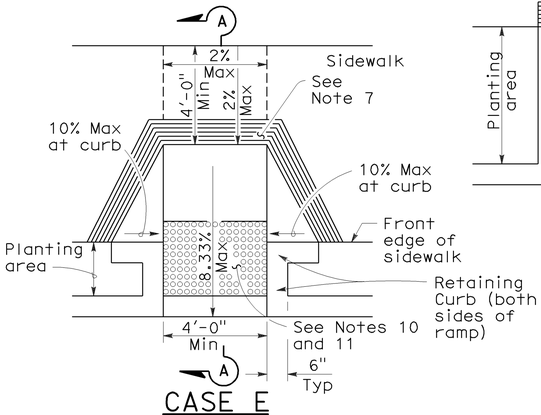

CASE E

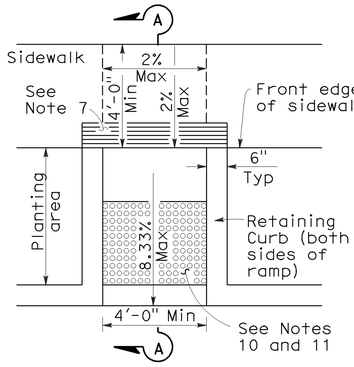

CASE F

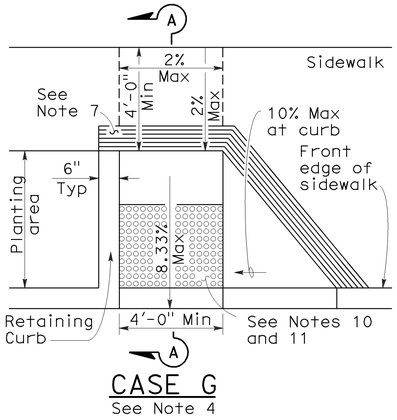

CASE G
See Note 4

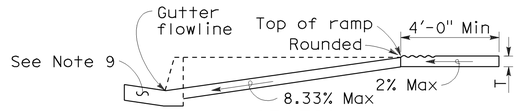

SECTION A-A

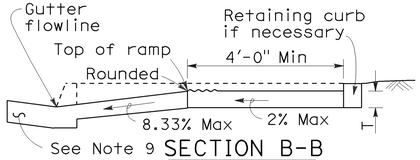

SECTION B-B

Depress entire sidewalk as required

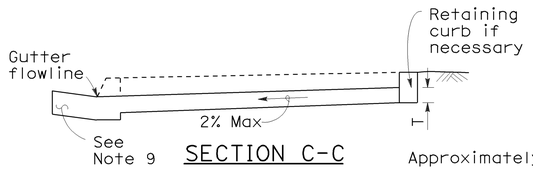

SECTION C-C

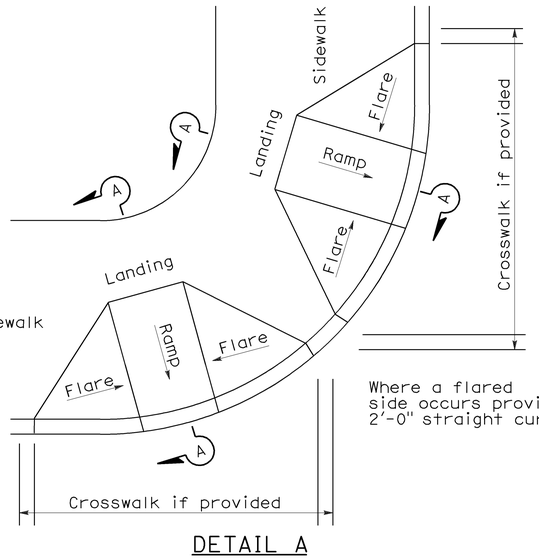

DETAIL A

TYPICAL TWO-RAMP CORNER INSTALLATION

See Note 1

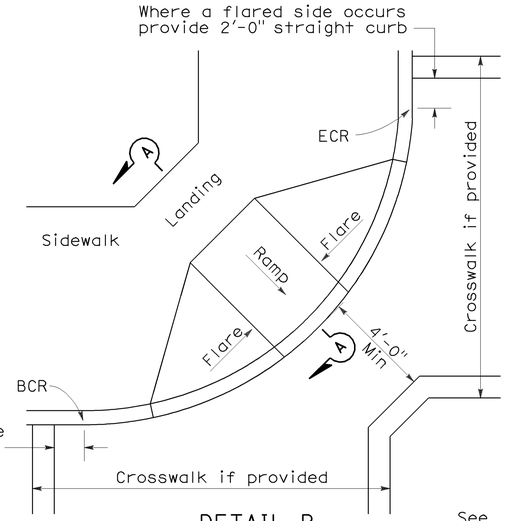

DETAIL B

TYPICAL ONE-RAMP CORNER INSTALLATION

See Notes 1 and 3

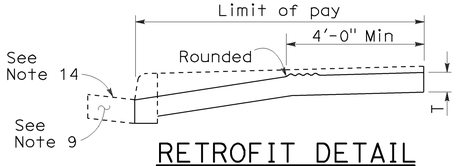

RETROFIT DETAIL

Existing curb and sidewalk

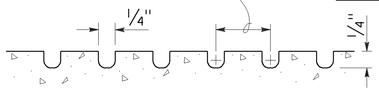

GROOVING DETAIL

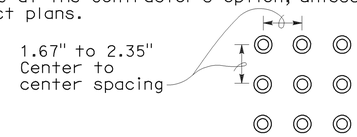

RAISED TRUNCATED DOME PATTERN (IN-LINE)

DETECTABLE WARNING SURFACE

See Note 10

DIST	COUNTY	ROUTE	POST MILES TOTAL PROJECT	SHEET NO.	TOTAL SHEETS
04	SF	101	8.2/9.2	367	654

H. David Cordova
REGISTERED CIVIL ENGINEER

September 1, 2006
PLANS APPROVAL DATE

REGISTERED PROFESSIONAL ENGINEER — Hector David Cordova — No. C41957 — Exp. 3-31-08 CIVIL — STATE OF CALIFORNIA

The State of California or its officers or agents shall not be responsible for the accuracy or completeness of electronic copies of this plan sheet.

To accompany plans dated 12-14-09

NOTES:

1. As site conditions dictate, Case A through Case G curb ramps may be used for corner installations similar to those shown in Detail A and Detail B. The case of curb ramps used in Detail A do not have to be the same. Case A through Case G curb ramps also may be used at mid block locations, as site conditions dictate.
2. If distance from curb to back of sidewalk is too short to accommodate ramp and 4'-0" platform (landing) as shown in Case A, the sidewalk may be depressed longitudinally as in Case B, or C or may be widened as in Case D.
3. When ramp is located in center of curb return, crosswalk configuration must be similar to that shown for Detail B.
4. As site conditions dictate, the retaining curb side and the flared side of the Case G ramp shall be constructed in reversed position.
5. If located on a curve, the sides of the ramp need not be parallel, but the minimum width of the ramp shall be 4'-0".
6. Side slope of ramp flares vary uniformly from a maximum of 10% at curb to conform with longitudinal sidewalk slope adjacent to top of the ramp, except in Case C and Case F.
7. The curb ramp shall be outlined, as shown, with a 1'-0" wide border with ¼" grooves approximately ¾" on center. See grooving detail.
8. Transitions from ramps and landing to walks, gutters or streets shall be flush and free of abrupt changes.
9. Maximum slopes of adjoining gutters, the road surface immediately adjacent to the curb ramp or accessible route shall not exceed 5 percent within 4'-0" of the top and bottom of the curb ramp.
10. Curb ramps shall have a detectable warning surface that extends the full width and 3'-0" depth of the ramp. Detectable Warning Surfaces shall conform to the details on this plan and the requirements in the Special Provisions.
11. The edge of the detectable warning surface nearest the street shall be between 6" and 8" from the gutter flowline.
12. Sidewalk and ramp thickness, "T", shall be 3½" minimum.
13. Utility pull boxes, manholes, vaults and all other utility facilities within the boundaries of the curb ramp will be relocated or adjusted to grade by the owner prior to, or in conjunction with, curb ramp construction.
14. For retrofit conditions, removal and replacement of curb apron will be at the Contractor's option, unless otherwise shown on project plans.

STATE OF CALIFORNIA
DEPARTMENT OF TRANSPORTATION

CURB RAMP DETAILS

NO SCALE

RSP A88A DATED SEPTEMBER 1, 2006 SUPERSEDES STANDARD PLAN A88A DATED MAY 1, 2006 - PAGE 115 OF THE STANDARD PLANS BOOK DATED MAY 2006.

REVISED STANDARD PLAN RSP A88A

2006 REVISED STANDARD PLAN RSP A88A

8-3-06

DIST	COUNTY	ROUTE	POST MILES TOTAL PROJECT	SHEET NO.	TOTAL SHEETS
04	SF	101	8.2/9.2	368	654

William K. Farnbach
REGISTERED CIVIL ENGINEER

June 5, 2009
PLANS APPROVAL DATE

REGISTERED PROFESSIONAL ENGINEER — William K. Farnbach — No. 49042 — Exp. 09-30-10 — CIVIL — STATE OF CALIFORNIA

The State of California or its officers or agents shall not be responsible for the accuracy or completeness of electronic copies of this plan sheet.

2006 REVISED NEW STANDARD PLAN RNSP P4

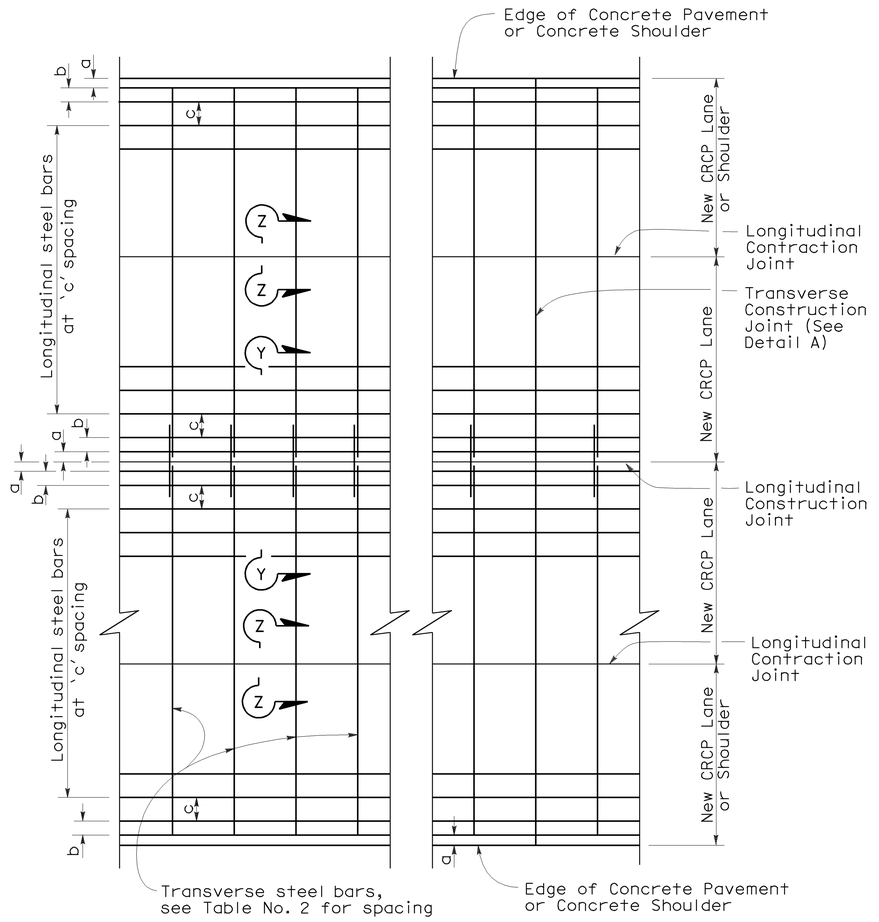

PLAN

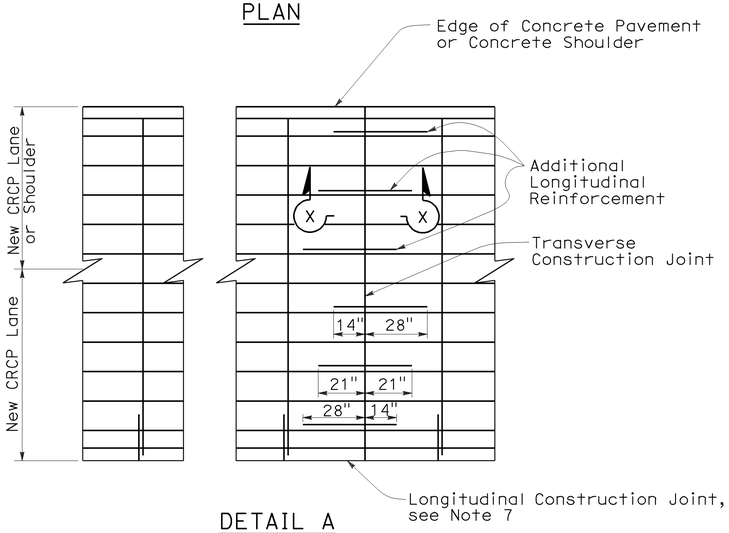

DETAIL A

ADDITIONAL LONGITUDINAL REINFORCEMENT AT TRANSVERSE CONSTRUCTION JOINT

TABLE No. 1 LONGITUDINAL STEEL

Slab Thickness and Bar Size		First Spacing at Edge or Joint	Second Spacing from Edge or Joint	Regular Steel Bars	Additional Reinforcement at Transverse Construction Joint		Clr
D	Bar Size	Spacing a	Spacing b	Spacing c	Spacing 2 x c	Length L	X
.80′	#6	3" TO 4"	3" TO 8"	8"	16"	42"	4"
.85′	#6	3" TO 4"	3" TO 7"	7"	14"	42"	4"
.90′	#6	3" TO 4"	3" TO 6.5"	6.5"	13"	42"	4"
.95′	#6	3" TO 4"	3" TO 6"	6.5"	13"	42"	4"
1.00′	#6	3" TO 4"	3" TO 6"	6"	12"	42"	4.25"
1.05′	#6	3" TO 4"	3" TO 5.5"	6"	12"	42"	4.5"
1.10′	#6	3" TO 4"	3" TO 5.5"	5.5"	11"	42"	4.75"

TABLE No. 2 TRANSVERSE STEEL

Slab Thickness and Bar Size		Pvmt Width (From Edge of Conc Pvmt or Conc Shld to Nearest Edge of Conc Pvmt or Conc Shld)						
		≤ 48′	≤ 60′	≤ 72′	≤ 84′	≤ 96′	≤ 108′	≤ 120′
D	Bar Size	Spacing	Spacing	Spacing	Spacing	Spacing	Spacing	Spacing
.80′	#6	3′	3′	3′	2.5′	2′	2′	1.5′
.85′	#6	3′	3′	2.5′	2.5′	2′	1.5′	1.5′
.90′	#6	3′	2.5′	2.5′	2′	2′	1.5′	1.5′
.95′	#6	3′	2.5′	2′	2′	1.5′	1.5′	1′
1.00′	#6	3′	2.5′	2′	2′	1.5′	1.5′	1′
1.05′	#6	2.5′	2.5′	2′	1.5′	1.5′	1.5′	1′
1.10′	#6	2.5′	2.5′	2′	1.5′	1.5′	1.5′	1′

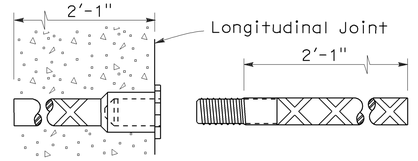

TIE BAR SPLICE DETAIL

(Splice Coupler)

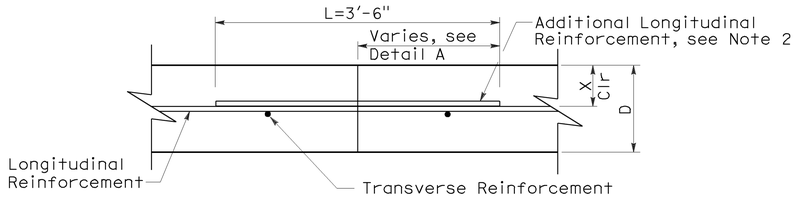

SECTION X-X

TRANSVERSE CONSTRUCTION JOINT

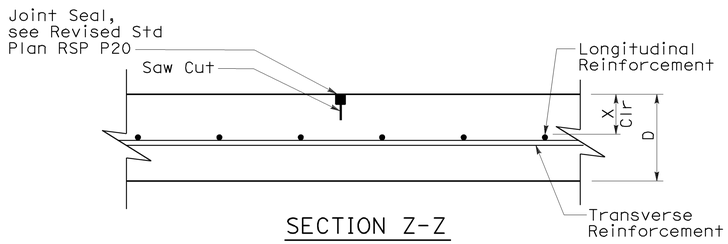

SECTION Z-Z

LONGITUDINAL CONTRACTION JOINT

NOTES:

To accompany plans dated 12-14-09

1. Place tie bar in the same plane as transverse reinforcements.
2. Place additional longitudinal reinforcement in the same horizontal plane as the longitudinal reinforcement without horizontal space.
3. Place tie bar parallel to and within 2" of transverse reinforcement.
4. Joint seals at longitudinal construction joints shall conform to the details shown on Revised Standard Plan RSP P20 for Type C joint.
5. Tie bar spacing shall be equal to transverse bar spacing.
6. Reinforcing bar splices shall be a minimum of 25".
7. Additional longitudinal reinforcement symmetrical about longitudinal construction joint.

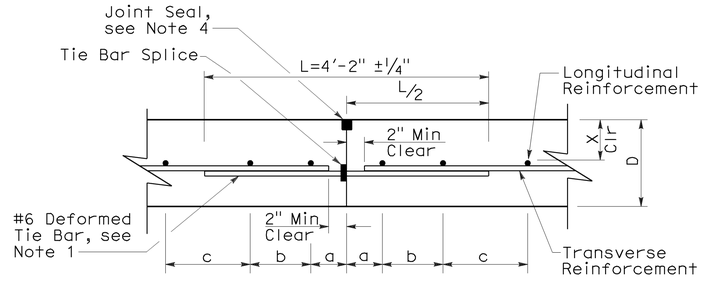

SECTION Y-Y

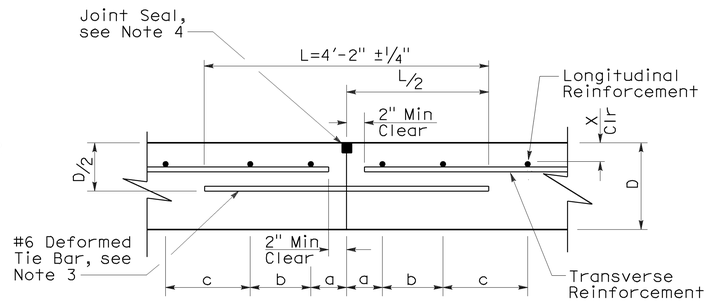

ALTERNATE

LONGITUDINAL CONSTRUCTION JOINT

STATE OF CALIFORNIA
DEPARTMENT OF TRANSPORTATION

CONTINUOUSLY REINFORCED CONCRETE PAVEMENT

NO SCALE

RNSP P4 DATED JUNE 5, 2009 SUPERSEDES NSP P4 DATED MAY 15, 2009 THAT SUPPLEMENTS THE STANDARD PLANS BOOK DATED MAY 2006.

REVISED NEW STANDARD PLAN RNSP P4

5-19-09

DIST	COUNTY	ROUTE	POST MILES TOTAL PROJECT	SHEET NO.	TOTAL SHEETS
04	SF	101	8.2/9.2	369	654

William K. Farnbach
REGISTERED CIVIL ENGINEER

June 5, 2009
PLANS APPROVAL DATE

REGISTERED PROFESSIONAL ENGINEER
William K. Farnbach
No. 49042
Exp. 09-30-10
CIVIL
STATE OF CALIFORNIA

The State of California or its officers or agents shall not be responsible for the accuracy or completeness of electronic copies of this plan sheet.

To accompany plans dated 12-14-09

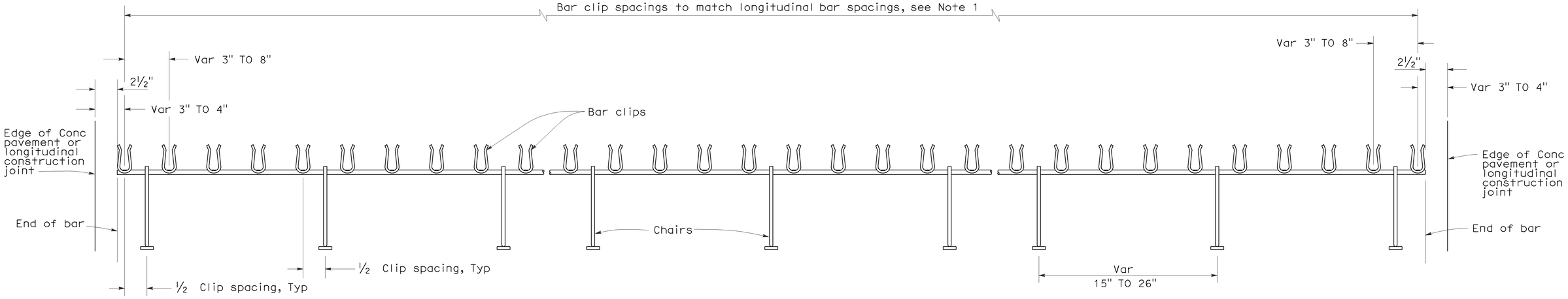

TRANSVERSE BAR ASSEMBLY

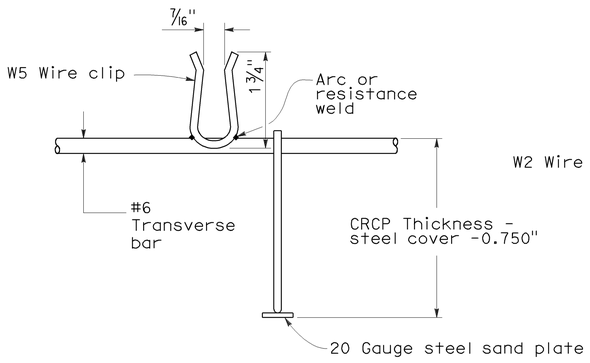

#6 BAR CLIP DETAIL

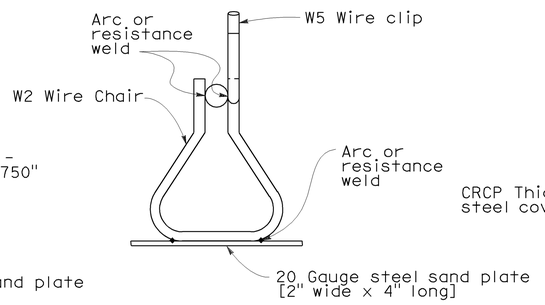

CHAIR DETAIL

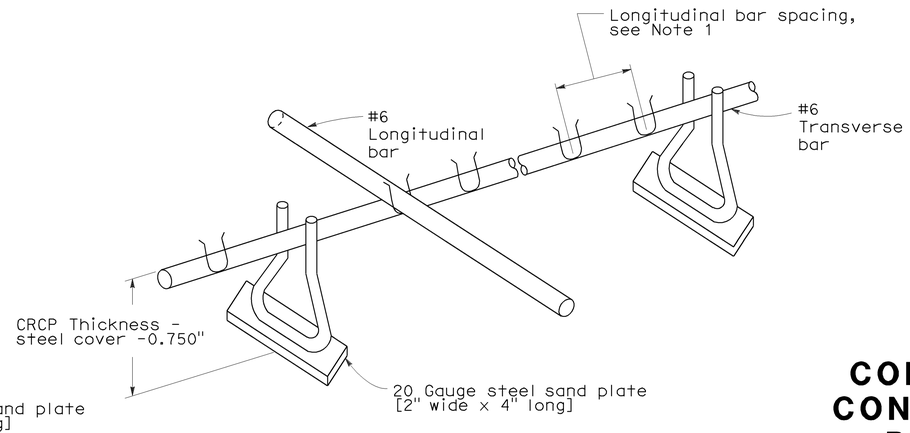

ISOMETRIC VIEW OF CHAIR ASSEMBLY

NOTES:

1. See New Standard Plan NSP P4 for spacing of longitudinal bars.
2. Tensile strength of chair shall be at least 50,000 psi.
3. Wire sizes shown are minimum required.

STATE OF CALIFORNIA
DEPARTMENT OF TRANSPORTATION

CONTINUOUSLY REINFORCED CONCRETE PAVEMENT-SINGLE PIECE TRANSVERSE BAR ASSEMBLY

NO SCALE

NSP P13 DATED JUNE 5, 2009 SUPPLEMENTS THE STANDARD PLANS BOOK DATED MAY 2006.

NEW STANDARD PLAN NSP P13

2006 NEW STANDARD PLAN NSP P13

5-19-09

DIST	COUNTY	ROUTE	POST MILES TOTAL PROJECT	SHEET NO.	TOTAL SHEETS
04	SF	101	8.2/9.2	370	654

William K. Farnbach
REGISTERED CIVIL ENGINEER

June 5, 2009
PLANS APPROVAL DATE

REGISTERED PROFESSIONAL ENGINEER — William K. Farnbach — No. 49042 — Exp. 09-30-10 — STATE OF CALIFORNIA

The State of California or its officers or agents shall not be responsible for the accuracy or completeness of electronic copies of this plan sheet.

To accompany plans dated 12-14-09

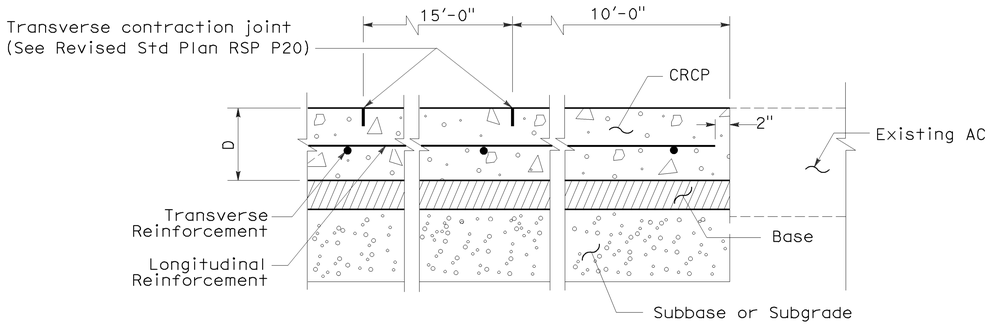

TERMINAL JOINT TYPE A

(For Existing AC)

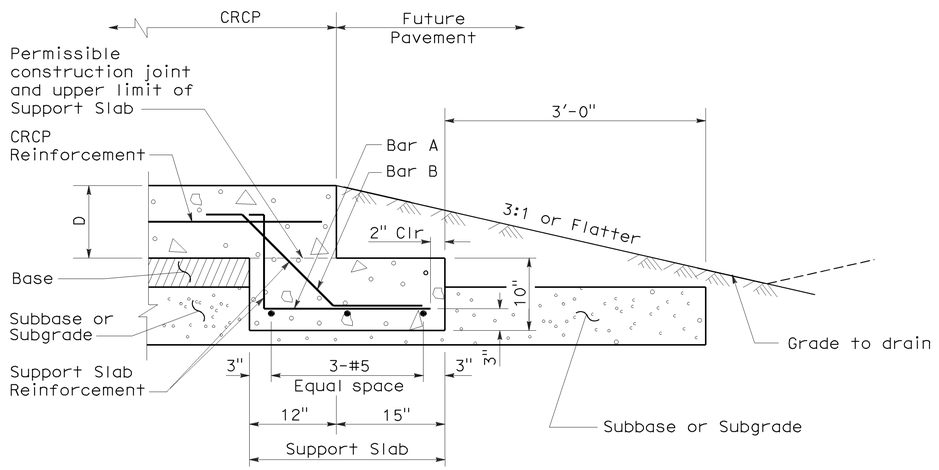

TERMINAL JOINT TYPE B

(For Future Pavement)

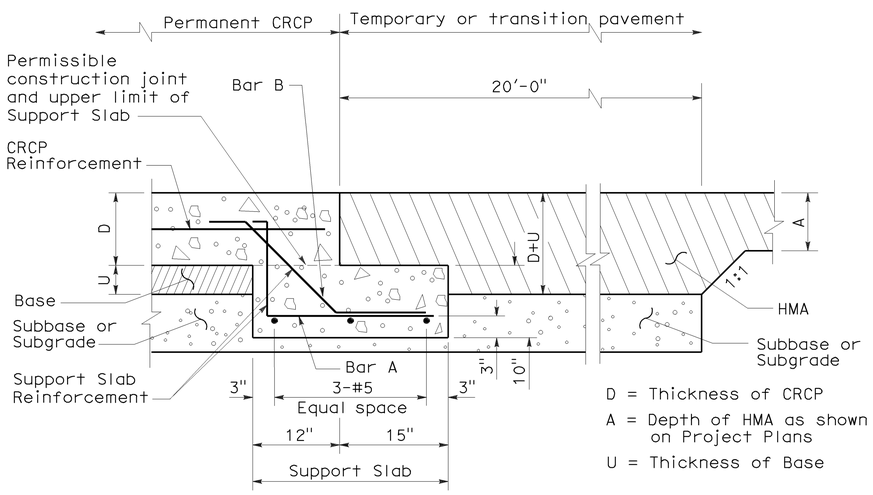

D = Thickness of CRCP

A = Depth of HMA as shown on Project Plans

U = Thickness of Base

TERMINAL JOINT TYPE C

(For Temporary HMA Pavement)

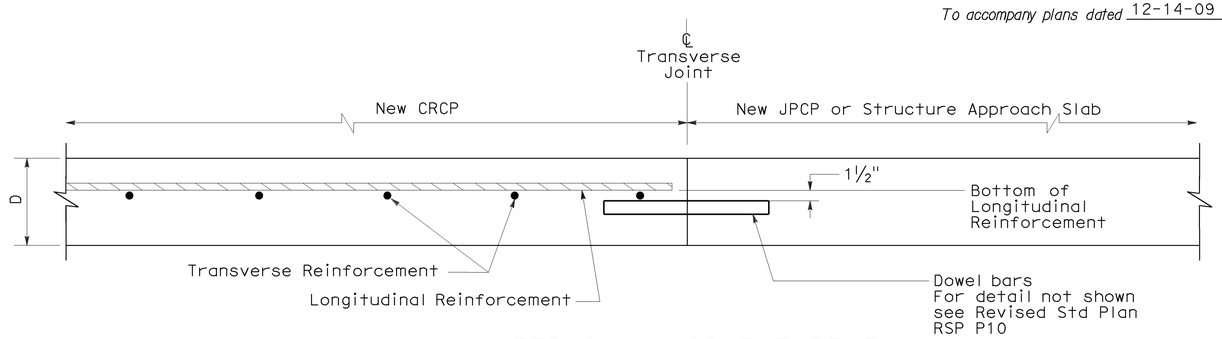

TERMINAL JOINT TYPE E

(For New JPCP or Structure Appproach Slabs)

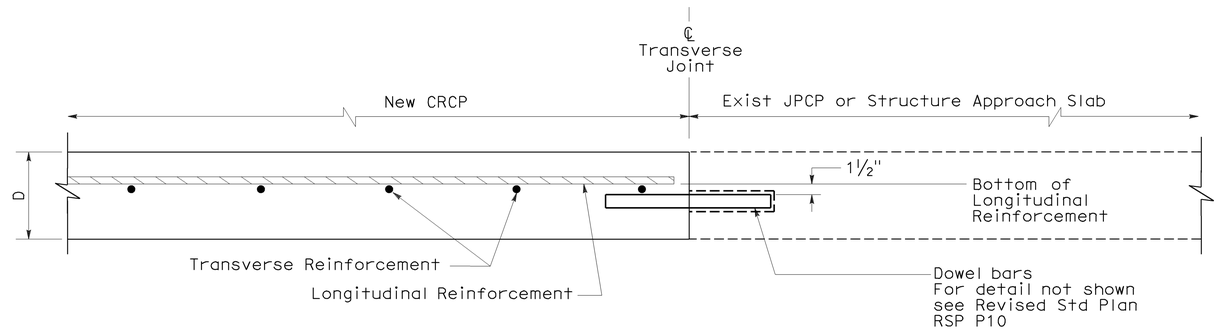

TERMINAL JOINT TYPE D

(For Existing JPCP or Structure Appproach Slabs)

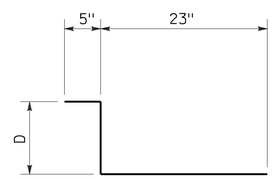

BAR "A" (#5)

AT 12" C-C

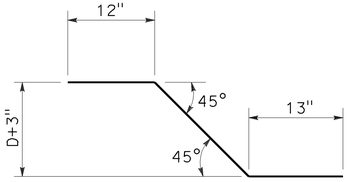

BAR "B" (#5)

AT 12" C-C

STATE OF CALIFORNIA
DEPARTMENT OF TRANSPORTATION

CONTINUOUSLY REINFORCED CONCRETE PAVEMENT- TERMINAL JOINT DETAILS

NO SCALE

NSP P31A DATED JUNE 5, 2009 SUPPLEMENTS THE STANDARD PLANS BOOK DATED MAY 2006.

NEW STANDARD PLAN NSP P31A

2006 NEW STANDARD PLAN NSP P31A

5-19-09

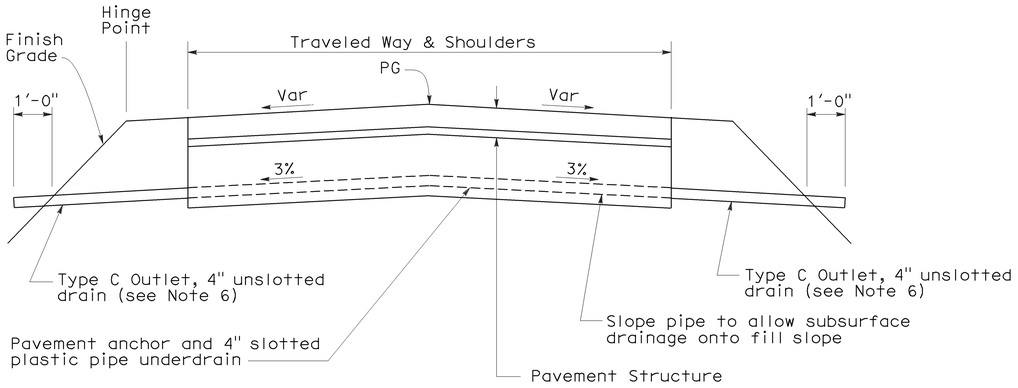

PAVEMENT ANCHOR PROFILE

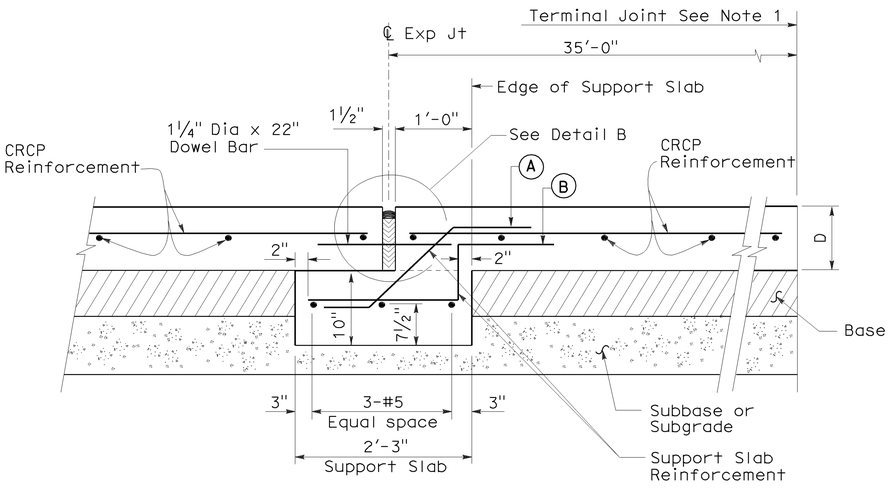

EXPANSION JOINT TYPE AN

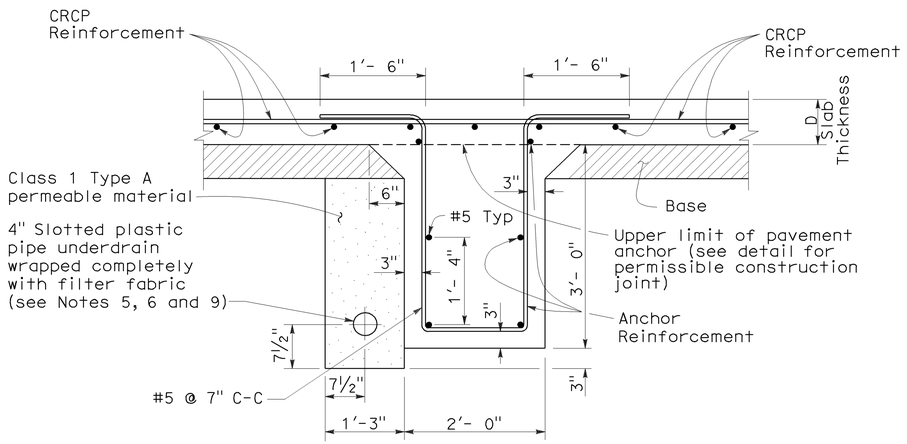

PAVEMENT ANCHOR

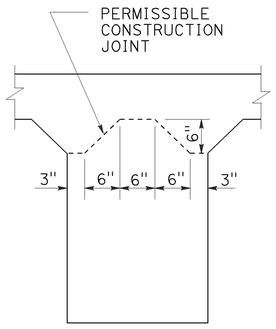

PAVEMENT ANCHOR DETAIL SHOWING PERMISSIBLE CONSTRUCTION JOINT

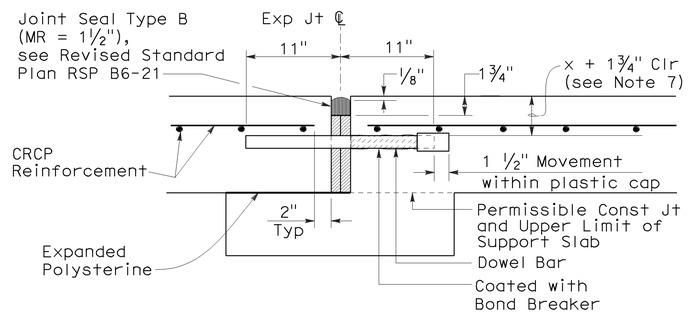

DETAIL B

(For layout, tolerances, and other details not shown, see Revised Standard Plan RSP P10.)

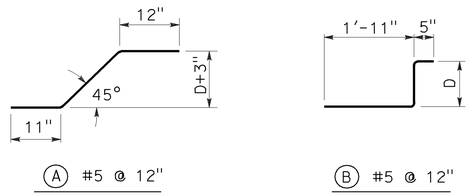

REINFORCEMENT DETAIL

NOTES:

1. For the locations of the terminal joints, expansion joints and pavement anchors, see project plans.
2. The CRCP shall continue across the pavement anchor and expansion joints as shown.
3. Details of reinforcement, tie bars, and longitudinal joints (and if necessary, transverse construction joints) are shown on New Standard Plan NSP P4.
4. Transverse construction joints are not allowed within 20'-0" of the pavement anchor.
5. When placing pipe through concrete barrier, use 4" unslotted plastic pipe wrapped completely with 9/16" polystyrene.
6. See Standard Plan D99B for details not shown.
7. See New Standard Plan NSP P4 for "x".
8. D = thickness of CRCP
9. Place the 4" Slotted Plastic Pipe on the high side of the longitudinal grade.

DIST	COUNTY	ROUTE	POST MILES TOTAL PROJECT	SHEET NO.	TOTAL SHEETS
04	SF	101	8.2/9.2	371	654

William K. Farnbach
REGISTERED CIVIL ENGINEER

June 5, 2009
PLANS APPROVAL DATE

REGISTERED PROFESSIONAL ENGINEER — William K. Farnbach — No. 49042 — Exp. 09-30-10 — STATE OF CALIFORNIA

The State of California or its officers or agents shall not be responsible for the accuracy or completeness of electronic copies of this plan sheet.

To accompany plans dated 12-14-09

STATE OF CALIFORNIA
DEPARTMENT OF TRANSPORTATION

CONTINUOUSLY REINFORCED CONCRETE PAVEMENT- EXPANSION JOINT AND ANCHOR DETAILS

NO SCALE

NSP P31B DATED JUNE 5, 2009 SUPPLEMENTS THE STANDARD PLANS BOOK DATED MAY 2006.

NEW STANDARD PLAN NSP P31B

2006 NEW STANDARD PLAN NSP P31B

5-19-09

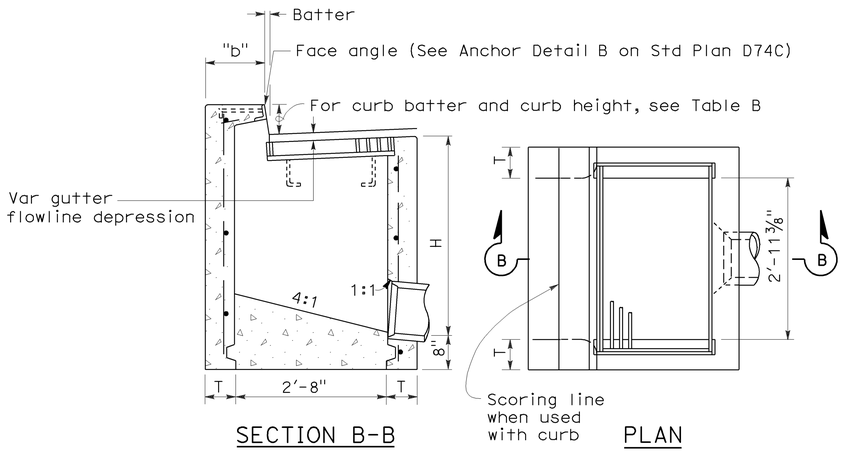

SECTION B-B PLAN

TYPE GO

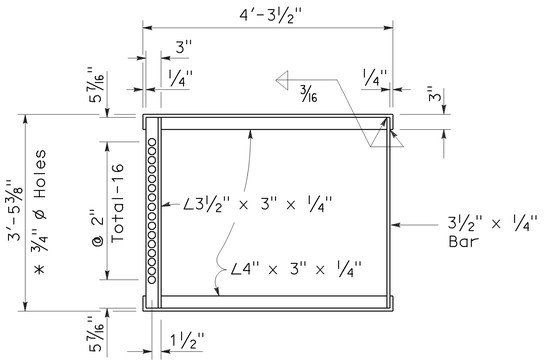

* 3/4" ø Holes required only with trash rack

GRATE FRAME FOR TYPE GDO INLET

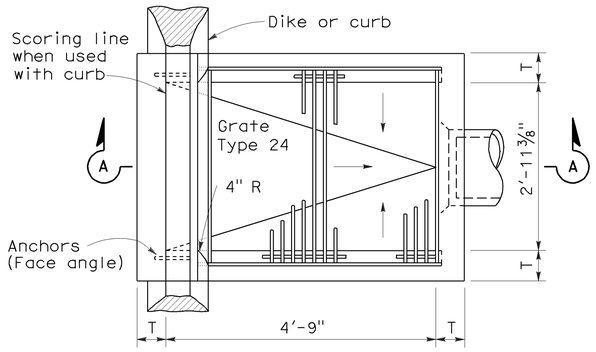

PLAN

TYPE GDO

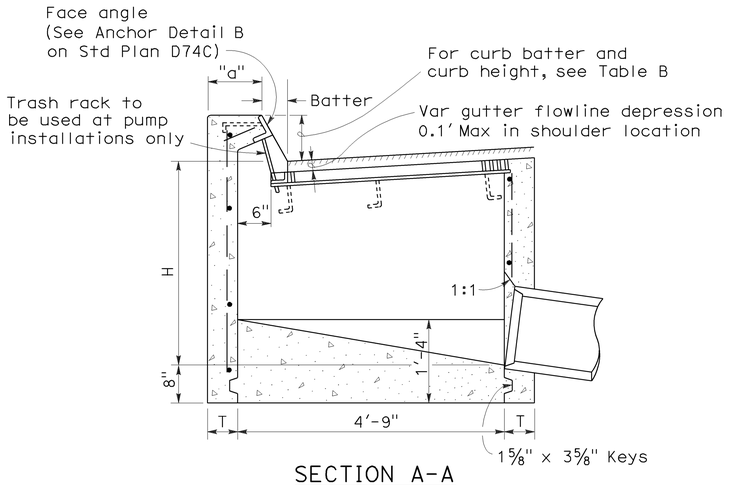

SECTION A-A

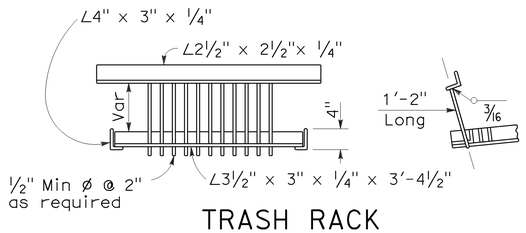

TRASH RACK

(For use with pump installation)

TABLE A

CONCRETE QUANTITIES				
	H=3'-0" TO 8'-0" (T=6")		H=8'-1" TO 20'-0" (T=8")	
TYPE	H=3'-0" (CY)	ADDITIONAL PCC PER FOOT (CY)	H=8'-1" (CY)	ADDITIONAL PCC PER FOOT (CY)
GO	1.24	0.245	3.39	0.346
GDO	1.62	0.322	4.36	0.446

Table based on 8" floor slab, no deduction for pipe openings, and curb type giving highest quantity of concrete. No deductions or adjustments are to be made to these quantities because of pipe openings, different floor alternatives or different curb type.

TABLE B

CURB TYPE	NORMAL CURB HEIGHT	CURB BATTER	"a" DIMENSION	"b" DIMENSION
A1-6	6"	1 1/2"	T+7 1/2"	T+6 1/2"
A1-8	8"	2"	T+7"	T+6"
B1-6	6"	4"	T+5"	T+4"
Type A Dike	6"	3"	T+6"	T+5"

DIST	COUNTY	ROUTE	POST MILES TOTAL PROJECT	SHEET NO.	TOTAL SHEETS
04	SF	101	8.2/9.2	372	654

REGISTERED CIVIL ENGINEER

June 15, 2007
PLANS APPROVAL DATE

REGISTERED PROFESSIONAL ENGINEER — Glenn DeCou — No. C34547 — Exp. 9-30-07 CIVIL — STATE OF CALIFORNIA

The State of California or its officers or agents shall not be responsible for the accuracy or completeness of electronic copies of this plan sheet.

To accompany plans dated 12-14-09

NOTES:

1. "H" is the difference in elevation between the outlet pipe flow line and the normal gutter grade line undepressed.
2. For "T" wall thickness, see Table A below.
3. Wall reinforcing not required when "H" is 8'-0" or less and the unsupported width or length is 7'-0" or less. Walls exceeding these limits shall be reinforced with #4 @ 18"± centers placed 1½" clear to inside of box unless otherwise shown.
4. Inlet bottom reinforcing not required. See Standard Plan D74C for alternative reinforced bottom.
5. Steps - None required where "H" is less than 2'-6" Where "H" is 2'-6" or more, install steps with lowest rung 1'-0" above the floor and highest rung not more than 6" below top of inlet. The distance between steps shall not exceed 1'-0" and shall be uniform throughout the length of the wall. Place steps in the wall without an opening. Step inserts may be substituted for the bar steps. Step Inserts shall comply with State Industrial Safety requirements. See Standard Plan D74C for step details.
6. When shown on the project plans, place a ¾" plain round protection bar horizontally across the length of the opening and bend back 4" into the inlet wall on each side.
7. Pipe(s) can be placed in any wall.
8. Curb section shall match adjacent curb.
9. Basin floors shall have wood trowel finish and shall slope toward the outlet pipe as shown.
10. Galvanizing - See Standard Specifications or Special Provisions.
11. See Standard Plan D77A and D77B for grate and frame details and weights of miscellaneous iron and Steel.
12. See Standard Plan D78A for gutter depression details.
13. Full penetration butt welds may be substituted for the fillet welds on all anchors.
14. Standard square, hexagon, round or equivalent headed anchors may be substituted for the right angle hooks on the anchors shown on this plan.
15. Cast-in-place or precast alternative is optional with contractor. See Standard Specifications.
16. Cast-in-place inlets to be formed around all pipes/stubs intersecing the inlet and concrete poured in one continuous operation. Precast inlets shall have mortared pipe connections conforming to details for Type GCP inlets on Standard Plan D75B. See Standard Specifications for mortar composition.

STATE OF CALIFORNIA
DEPARTMENT OF TRANSPORTATION

DRAINAGE INLETS

NO SCALE

RSP D74B DATED JUNE 15, 2007 SUPERSEDES STANDARD PLAN D74B DATED MAY 1, 2006 - PAGE 150 OF THE STANDARD PLANS BOOK DATED MAY 2006.

REVISED STANDARD PLAN RSP D74B

2006 REVISED STANDARD PLAN RSP D74B

4-16-07

DIST	COUNTY	ROUTE	POST MILES TOTAL PROJECT	SHEET NO.	TOTAL SHEETS
04	SF	101	8.2/9.2	373	654

Raymond Don Tsztoo
REGISTERED CIVIL ENGINEER

January 18, 2008
PLANS APPROVAL DATE

REGISTERED PROFESSIONAL ENGINEER — Raymond Don Tsztoo — No. C37332 — Exp. 6-30-08 — CIVIL — STATE OF CALIFORNIA

The State of California or its officers or agents shall not be responsible for the accuracy or completeness of electronic copies of this plan sheet.

To accompany plans dated 12-14-09

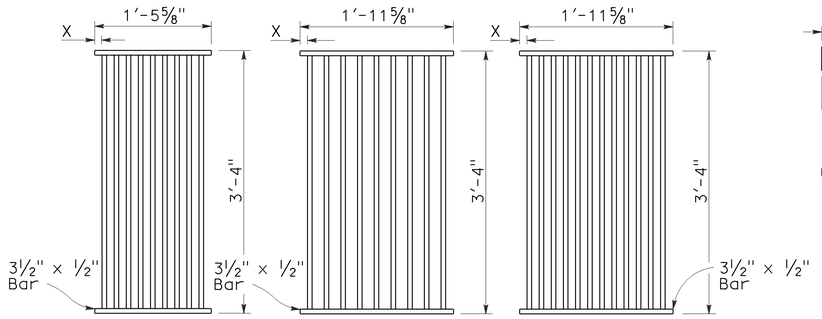

TYPE 18-9

1⅜" Clear spacing. Use within the roadbed on highways where bicycles and pedestrians are excluded.

TYPE 24-9

2" Clear spacing. Use in locations off the roadbed on all types of highways.

TYPE 24-12

1⅜" Clear spacing. Use within the roadbed on highways where bicycles and pedestrians are excluded.

RECTANGULAR GRATE DETAILS

(See table below)

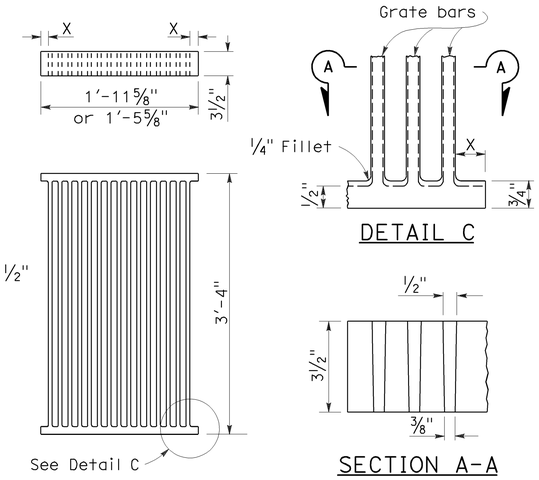

DETAIL C

SECTION A-A

ALTERNATIVE CAST NODULAR IRON GRATE OR CAST STEEL GRATE

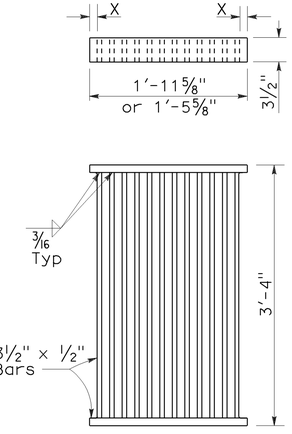

ALTERNATIVE WELDED GRATE

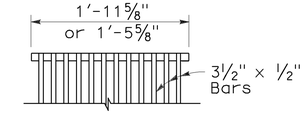

CAST END BLOCK

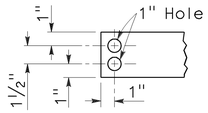

END OF BAR

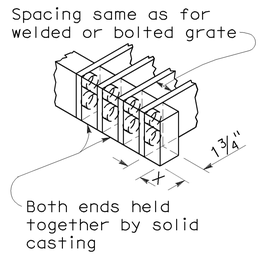

ALTERNATIVE CAST NODULAR IRON OR CAST STEEL END BLOCK GRATE

NOTES:

1. Grate type numbers refer to approximate width of grate in inches and number of bars, respectively.
2. Contractor has the option of using cast nodular iron, cast steel, welded, bolted, or cast end block grate.
3. See Special Provisions for requirements pertaining to galvanizing or asphalt dipping of grates and frames.
4. Rounded top of bars optional on all grates.
5. Pipe inlets with a grate shall be placed so that bars parallel direction of principle surface flow.
6. Full penetration butt welds may be substituted for the fillet welds on all anchors.
7. Standard square, hexagon, round or equivalent headed anchors may be substituted for the right angle hooks on the anchors shown on this plan.
8. Grate and frame weights are based on welded grates (weights of face angles, steps, protection bars, etc. are not included).

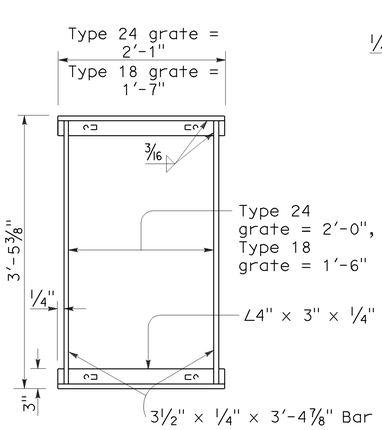

TYPICAL FRAME

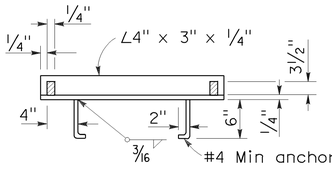

CROSS SECTION
(Thru frame)

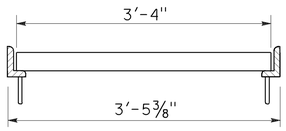

LONGITUDINAL SECTION
(Thru frame and grate)

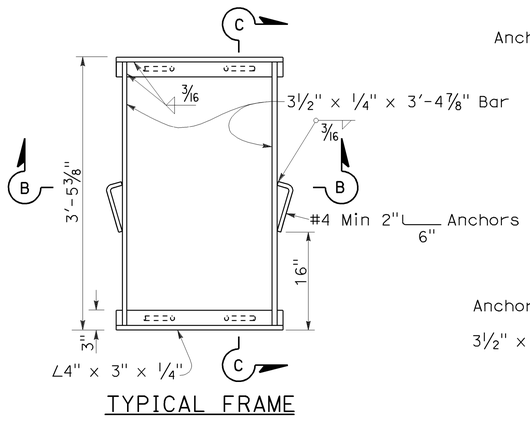

TYPICAL FRAME

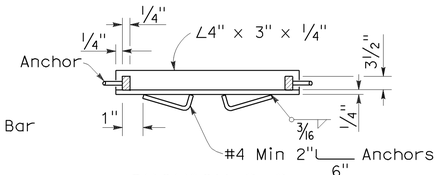

SECTION B-B

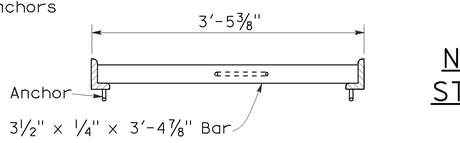

SECTION C-C

RECTANGULAR FRAME DETAILS

(For all rectangular grates)

ALTERNATIVE ANCHOR FOR RECTANGULAR FRAME

(For details not shown, See Rectangular Frame Details)

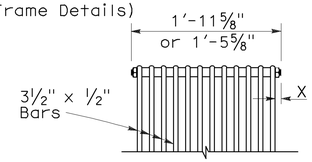

BOLTED END BLOCK

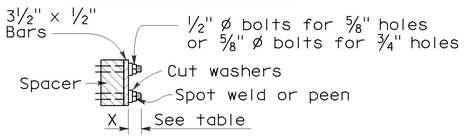

BOLTING DETAIL

ALTERNATIVE BOLTED GRATE

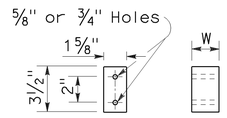

BAR SPACER

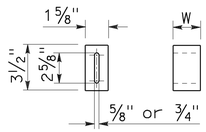

ALTERNATIVE SPACER
W = 1⅜" or 2"

GRATE BAR SPACING TABLE

TYPE	No. OF BARS	CLEAR BAR SPACING	X
18-9	9	1⅜"	1 1/16"
24-9	9	2"	1⅜"
24-12	12	1⅜"	1¼"

INLET TYPE	COVER TYPE	WEIGHT LB
OS	PLATE	174
OL-7	PLATE	170
OL-10	PLATE	170
OL-14	PLATE	170
OL-21	PLATE	170
OCP	PLATE	112
OCPI	PLATE	112
OCPI	REDWOOD	42
OMP	PLATE	177
OMPI	PLATE	177

INLET TYPE	GRATE TYPE	No. OF GRATES	WEIGHT LB
GDO	24-12	2	634
GOL-7	24-12	1	326
GOL-10	24-12	1	326
GO,G1,G2,G3,G4 (TYPE 24)	24-9	1	263
	24-12	1	326
G4 (TYPE 18),G5,G6	18-9	1	249
GT1	18-9	2	498
GT2	18-9	2	498
GT3	24-12	2	652
GT4	24-12	2	652
TRASH RACK			22

BASIS FOR MISC IRON & STEEL FINAL PAY WEIGHTS FOR DRAINAGE INLETS

(See General Notes, No 8)

STATE OF CALIFORNIA
DEPARTMENT OF TRANSPORTATION

GRATE DETAILS

NO SCALE

RSP D77A DATED JANUARY 18, 2008 SUPERSEDES STANDARD PLAN D77A DATED MAY 1, 2006 - PAGE 155 OF THE STANDARD PLANS BOOK DATED MAY 2006.

REVISED STANDARD PLAN RSP D77A

2006 REVISED STANDARD PLAN RSP D77A

12-14-07

DIST	COUNTY	ROUTE	POST MILES TOTAL PROJECT	SHEET NO.	TOTAL SHEETS
04	SF	101	8.2/9.2	374	654

Raymond Don Tsztoo
REGISTERED CIVIL ENGINEER

June 6, 2008
PLANS APPROVAL DATE

REGISTERED PROFESSIONAL ENGINEER
Raymond Don Tsztoo
No. C37332
Exp. 6-30-08
CIVIL
STATE OF CALIFORNIA

The State of California or its officers or agents shall not be responsible for the accuracy or completeness of electronic copies of this plan sheet.

To accompany plans dated 12-14-09

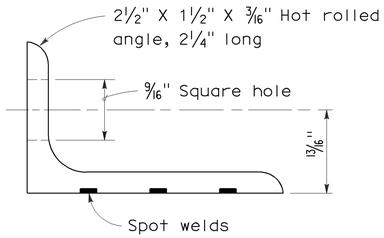

ANGLE

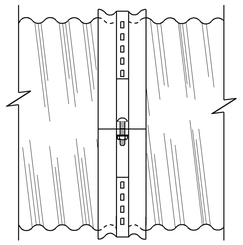

SIDE VIEW
ANGLE

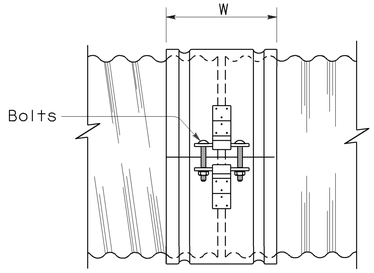

SIDE VIEW
SINGLE BAR AND STRAP

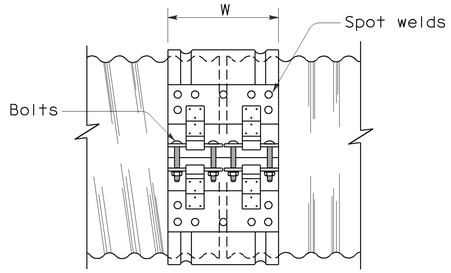

SIDE VIEW
DOUBLE BAR AND STRAP

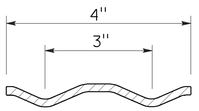

SECTION

H-4 HUGGER BAND

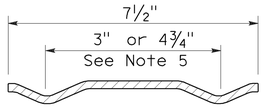

SECTION

H-7 HUGGER BAND

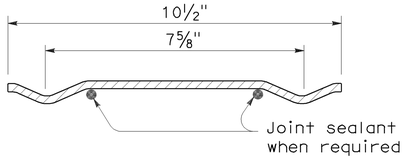

SECTION

H-10 HUGGER BAND

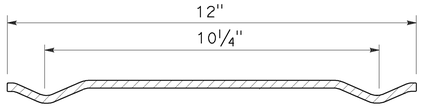

SECTION

H-12 HUGGER BAND

NOTES:

1. All ferrous metal coupling band connection hardware shall be galvanized or electroplated in accordance with the Standard Specifications.
2. Dimensions and thicknesses shown are minimum.
3. Spot welds shall develop minimum required strength of strap.
4. Fillet welds of equivalent strength may be substituted for spot welds or rivets.
5. Dimension depends upon whether end condition is lips up or lips down.

HUGGER COUPLING BANDS

STATE OF CALIFORNIA
DEPARTMENT OF TRANSPORTATION

CORRUGATED METAL PIPE COUPLING DETAILS No. 4 HUGGER COUPLING BANDS

NO SCALE

RSP D97D DATED JUNE 6, 2008 SUPERSEDES STANDARD PLAN D97D
DATED MAY 1, 2006 - PAGE 186 OF THE STANDARD PLANS BOOK DATED MAY 2006.

REVISED STANDARD PLAN RSP D97D

2006 REVISED STANDARD PLAN RSP D97D

3-24-08

ANNULAR AND HELICAL PROFILE

COUPLING TYPE	PIPE CORRUGATION	PIPE SIZE	W OR A	PIPE WALL THICKNESS		BAND THICKNESS		BAR AND STRAP (CSP ONLY)				ANGLE						
												DIMENSIONS		BOLTS (No.- Dia)		RIVETS ANGLE TO BAND		SPOT WELDS ANGLE TO BAND
				CSP	CAP	CSP	CAP	STRAP THICKNESS	BOLTS Dia	BAR Dia	BAR YIELD STRENGTH	CSP	CAP	CSP	CAP	CSP	CAP	CSP
TWO PIECE INTEGRAL FLANGE	1½′ × ¼"	6"-10"	7"	0.052"-0.079"	0.048"-0.060"	0.052"	0.060"							2-⅜"	2-⅜"			
		12"-18"	7"	0.052"-0.079"		0.064"								2-½"				
	2⅔" × ½"	12"-24"	7"	0.052"-0.079"	0.060"-0.105"	0.064"	0.060"							2-½"	2-½"			
UNIVERSAL	2⅔" × ½"	THROUGH 36"	12"	0.052"-0.138"	0.060"-0.135"	0.052"	0.060"					2" × 2" × 3/16"	2" × 2" × 3/16"	3-½"	3-½"	3-⅜"	3-⅜"	3-½"
		42"-60"	12"	0.052"-0.168"	0.075"-0.164"	0.052"	0.060"					2" × 2" × 3/16"	2" × 2" × 3/16"	3-½"	3-½"	3-⅜"	3-⅜"	5-½"
		THROUGH 72"	12"	0.052"-0.168"	0.164"	0.052"	0.105"	0.079"	½"	⅞"	32 ksi	2" × 2" × 3/16"	2" × 2" × 3/16"	3-½"	3-½"	3-⅜"	3-⅜"	5-½"
		78"-84"	16¼"	0.168"		0.079"		DOUBLE 0.079"	½"	⅞"	32 ksi							
ANNULAR	2⅔" × ½"	THROUGH 36"	7"	0.064"-0.138"	0.060"-0.135"	0.052"	0.060"	0.079"	½"	⅞"	32 ksi	2" × 2" × 3/16"	2" × 2" × 3/16"	2-½"	2-½"	3-⅜"	3-⅜"	3-½"
		42"-72"	12"	0.064"-0.168"	0.075"-0.164"	0.052"	0.105"	0.079"	½"	⅞"	32 ksi	2" × 2" × 3/16"	2" × 2" × 3/16"	3-½"	3-½"	3-⅜"	3-⅜"	5-½"
		78"-84"	12"	0.168"		0.079"		0.109"	½"	⅞"	45 ksi	2" × 2" × 3/16"		3-½"		3-⅜"		5-½"
	3" × 1"	48"-90"	14"	0.064"-0.109"		0.052"		0.079"	½"	⅞"	32 ksi	2" × 2" × 3/16"		3-½"		3-⅜"		5-½"
		96"-120"	14"	0.079"-0.109"		0.052"		0.109"	½"	⅞"	45 ksi	2" × 2" × 3/16"		3-½"		4-⅜"		
		42"-108"	14"		0.060"-0.135"		0.060"						2" × 2" × 3/16"		3-½"		3-⅜"	
HELICAL	2⅔" × ½"	THROUGH 36"	12"	0.052"-0.138"	0.060"-0.135"	0.052"	0.060"	0.079"	½"	⅞"	32 ksi	2" × 2" × 3/16"	2" × 2" × 3/16"	3-½"	3-½"	3-⅜"	3-⅜"	3-½"
		42"-72"	12"	0.052"-0.168"	0.075"-0.164"	0.052"	0.060"	0.079"	½"	⅞"	32 ksi	2" × 2" × 3/16"	2" × 2" × 3/16"	3-½"	3-½"	3-⅜"	3-⅜"	5-½"
		78"-84"	12"	0.168"		0.079"		0.109"	½"	⅞"	45 ksi	2" × 2" × 3/16"		3-½"		3-⅜"		5-½"
	3" × 1"	48"-90"	14"	0.064"-0.109"		0.052"		0.079"	½"	⅞"	32 ksi	2" × 2" × 3/16"		3-½"		3-⅜"		5-½"
		96"-120"	14"	0.079"-0.109"		0.052"		0.109"	½"	⅞"	45 ksi	2" × 2" × 3/16"		3-½"		4-⅜"		
		42"-108"	14"		0.060"-0.135"		0.060"						2" × 2" × 3/16"		3-½"		3-⅜"	
HUGGER	2⅔" × ½" REROLLED END	12"-54"	4"	0.052"-0.109"		0.052"						2½" × 1½" × 3/16"	2½" × 1½" × 3/16"	1-½"				3-½"
		60"-66"	4"	0.109"		0.064"						2½" × 1½" × 3/16"	2½" × 1½" × 3/16"	1-½"				3-½"
		36"-48"	4"	0.138"		0.064"						2½" × 1½" × 3/16"	2½" × 1½" × 3/16"	1-½"				3-½"
		THROUGH 72"	10½"	0.052"-0.168"		0.052"		0.079"	½"	⅞"	32 ksi							
		78"-84"	10½"	0.168"		0.079"		0.109"	½"	⅞"	45 ksi							
	3" × 1" REROLLED END	48"-90"	10½"	0.064"-0.109"		0.052"		0.079"	½"	⅞"	32 ksi							
		96"-120"	10½"	0.079"-0.109"		0.052"		0.109"	½"	⅞"	45 ksi							
	5" × 1" REROLLED END	48"-66"	7½"	0.064"-0.109"		0.064"		0.079"	½"	⅞"	32 ksi	2½" × 1½" × 3/16"	2½" × 1½" × 3/16"	1-½"				3-½"
		72"-90"	7½"	0.064"-0.079"		0.064"		0.079"	½"	⅞"	32 ksi	2½" × 1½" × 3/16"	2½" × 1½" × 3/16"	1-½"				3-½"
		48"-90"	7½"	0.064"-0.138"		0.064"		0.079"	½"	⅞"	32 ksi							
		48"-120"	12" SEE	0.064"-0.109"		0.064"		0.079"	½"	⅞"	32 ksi							
		48"-84"	12" NOTE	0.138"		0.064"		0.079"	½"	⅞"	32 ksi							
		90"-120"	12" 11	0.138"		0.064"		DOUBLE 0.079"	½"	⅞"	32 ksi							

SPIRAL RIB PROFILE

COUPLING TYPE	PIPE CORRUGATION	PIPE SIZE	W	PIPE WALL THICKNESS		BAND THICKNESS		BAR AND STRAP (SSRP ONLY)				ANGLE						
												DIMENSIONS		BOLTS (No.- Dia)		RIVETS ANGLE TO BAND		SPOT WELDS ANGLE TO BAND
				SSRP	ASRP	SSRP	ASRP	STRAP THICKNESS	BOLTS Dia	BAR Dia	BAR YIELD STRENGTH	SSRP	ASRP	SSRP	ASRP	SSRP	ASRP	SSRP
ANNULAR	2⅔" × ½" * REROLLED END	24"-36"	12"	0.064"-0.109"	0.060"-0.105"	0.052"	0.060"	0.079"	½"	⅞"	32 ksi	2" × 2" × 3/16"	2" × 2" × 3/16"	3-½"	3-½"	3-⅜"	3-⅜"	5-½"
		42"-60"	12"	0.064"-0.109"	0.075"-0.105"	0.052"	0.105"	0.079"	½"	⅞"	32 ksi	2" × 2" × 3/16"	2" × 2" × 3/16"	3-½"	3-½"	3-⅜"	3-⅜"	5-½"
		66"-72"	12"	0.064"-0.109"		0.052"		0.079"	½"	⅞"	32 ksi	2" × 2" × 3/16"	2" × 2" × 3/16"	3-½"	3-½"	3-⅜"	3-⅜"	5-½"
		78"-114"	12"	0.079"-0.109"		0.079"		0.109"	½"	⅞"	45 ksi	2" × 2" × 3/16"	2" × 2" × 3/16"	3-½"	3-½"	3-⅜"	3-⅜"	5-½"
HUGGER	2⅔" × ½" * REROLLED END	24"-72"	10½"	0.064"-0.109"		0.052"		0.079"	½"	⅞"	32 ksi							
		78"-84"	10½"	0.109"		0.079"		0.109"	½"	⅞"	45 ksi							

* See Note 14.

14. All profiles of Spiral Rib Pipe (¾" × ¾" ribs at 7½" pitch and ¾" × 1" ribs at 11½" pitch in both steel and aluminum and ¾" × 1" ribs at 8½" pitch in steel only) shall be manufactured with rerolled ends. Corrugation profile of the rerolled ends shall be 2⅔" × ½" annual corrugations with a minimum of two full corrugations at each end.

DIST	COUNTY	ROUTE	POST MILES TOTAL PROJECT	SHEET NO.	TOTAL SHEETS
04	SF	101	8.2/9.2	375	654

Raymond Don Tsztoo
REGISTERED CIVIL ENGINEER

June 6, 2008
PLANS APPROVAL DATE

REGISTERED PROFESSIONAL ENGINEER — Raymond Don Tsztoo — No. C37332 — Exp. 6-30-08 — CIVIL — STATE OF CALIFORNIA

The State of California or its officers or agents shall not be responsible for the accuracy or completeness of electronic copies of this plan sheet.

NOTES:

To accompany plans dated 12-14-09

1. All ferrous metal coupling band connection hardware shall be galvanized or electro-plated in accordance with the Standard Specifications.
2. For helically corrugated coupling bands, the connection angles may be oriented parallel to the pipe axis, provided connecting holes are slotted lengthwise sufficiently to allow adjustment for the helix angle.
3. Tension strap may be connected to band with either spot welds or fillet welds that develop minimum required strength of strap.
4. Use 1¼" gage line dimension on attached angle leg for rivets and spot welds.
5. Band thickness shall not be less than:
   a. 3 standard thicknesses lighter than the thickness of the pipe for Corrugated Steel Pipe.
   b. 2 standard thicknesses lighter than the thickness of the pipe and in no case lighter than 0.060" for Corrugated Aluminum Pipe.
6. Dimensions, thicknesses and strengths shown are minimum.
7. For pipe arches use same width band as for round pipe of equal periphery.
8. Fillet welds of equivalent strenght may be substituted for spot welds or rivets.
9. Spot welds shall develop minimum required strength of strap.
10. Pipe with rerolled ends having at least two 2⅔" × ½" annular corrugations at each end with or without an upturned flange may be connected with any of the annular coupling bands shown for pipe of the same diameter and wall thickness and having 2⅔" × ½" corrugations.
11. In the case of H-12 huggerbands, two piece bands are required for diameters through 96" and three piece bands are required for diameters 102" through 120".
12. Two piece bands are required for pipes greater than 42" diameter.
13. The 2¼" × 2" × 0.109" thick galvanized die-formed angle connector may be used in lieu of the 2" × 2" × 3/16" angle connector for standard joints only on pipes through 72" diameter.

STATE OF CALIFORNIA
DEPARTMENT OF TRANSPORTATION

CORRUGATED METAL PIPE COUPLING DETAILS No. 5 STANDARD JOINT

NO SCALE

RSP D97E DATED JUNE 6, 2008 SUPERSEDES STANDARD PLAN D97E
DATED MAY 1, 2006 - PAGE 187 OF THE STANDARD PLANS BOOK DATED MAY 2006.

REVISED STANDARD PLAN RSP D97E

2006 REVISED STANDARD PLAN RSP D97E

4-2-08

DIST	COUNTY	ROUTE	POST MILES TOTAL PROJECT	SHEET NO.	TOTAL SHEETS
04	SF	101	8.2/9.2	376	654

Raymond Don Tsztoo
REGISTERED CIVIL ENGINEER

June 6, 2008
PLANS APPROVAL DATE

REGISTERED PROFESSIONAL ENGINEER — Raymond Don Tsztoo — No. C37332 — Exp. 6-30-08 — CIVIL — STATE OF CALIFORNIA

The State of California or its officers or agents shall not be responsible for the accuracy or completeness of electronic copies of this plan sheet.

To accompany plans dated 12-14-09

ANNULAR AND HELICAL PROFILE

COUPLING TYPE	PIPE CORRUGATION	PIPE SIZE	W OR A	PIPE WALL THICKNESS		BAND THICKNESS		BAR AND STRAP (CSP ONLY)				ANGLE						
												DIMENSIONS		BOLTS (No. - Dia)		RIVETS ANGLE TO BAND		SPOT WELDS ANGLE TO BAND
				CSP	CAP	CSP	CAP	STRAP THICKNESS	BOLTS Dia	BAR Dia	BAR YIELD STRENGTH	CSP	CAP	CSP	CAP	CSP	CAP	CSP
TWO PIECE INTEGRAL FLANGE	1½" × ¼"	6"-10"	7"	0.064"-0.079"	0.060"	0.064"	0.060"							2-⅜"	2-⅜"			
	2⅔" × ½"	12"-24"	12"		0.060"-0.105"		0.060"								3-½"			
UNIVERSAL	2⅔" × ½"	THROUGH 36"	12"	0.064"-0.138"	0.060"-0.135"	0.064"	0.060"	0.079"	½"	⅞"	32 ksi	2" × 2" × 3/16"	2" × 2" × 3/16"	3-½"	3-½"	3-⅜"	3-⅜"	5-½"
		42"-60"	16¼"	0.064"-0.168"	0.060"-0.164"	0.064"	0.060"	DOUBLE 0.079"	½"	⅞"	32 ksi	2" × 2" × ¼"	2" × 2" × ¼"	4-½"	4-½"	5-⅜"	5-⅜"	
ANNULAR	2⅔" × ½"	THROUGH 36"	12"	0.064"-0.138"	0.060"-0.135"	0.064"	0.060"					2" × 2" × 3/16"	2" × 2" × 3/16"	3-½"	3-½"	3-⅜"	3-⅜"	5-½"
		42"-60"	12"	0.064"-0.079"		0.064"						2" × 2" × 3/16"		3-½"		3-⅜"		5-½"
		42"-60"	12"	0.109"-0.168"	0.135"-0.164"	0.064"	0.075"					2" × 2" × ¼"	2" × 2" × ¼"	3-½"	3-½"	5-⅜"	5-⅜"	
		66"-72"	24"		0.164"		0.105"						2" × 2" × ¼"		5-½"		5-½"	
		66"-84"	24"	0.109"-0.168"		0.064"						2" × 2" × ¼"		5-½"		7-⅜"		
		42"-54"	12"		0.060"-0.105"		0.060"						2" × 2" × 3/16"		3-½"		3-⅜"	
	3" × 1"	48"-60"	14"	0.064"-0.079"		0.064"						2" × 2" × 3/16"		3-½"		3-⅜"		5-½"
		48"-60"	14"	0.109"		0.064"						2" × 2" × 3/16"		3-½"		5-⅜"		
		66"-120"	25"	0.064"-0.109"		0.064"						2" × 2" × 3/16"		5-½"		9-⅜"		
		42"-60"	14"		0.060"-0.105"		0.060"						2" × 2" × 3/16"		3-½"		5-⅜"	
		42"-60"	14"		0.135"		0.075"						2" × 2" × ¼"		3-½"		5-⅜"	
		66"-96"	25"		0.060"-0.135"		0.060"						2" × 2" × ¼"		5-½"		7-⅜"	
		96"-108"	25"		0.135"		0.075"						2" × 2" × ¼"		5-½"		7-⅜"	
HELICAL	2⅔" × ½"	THROUGH 36"	12"	0.064"-0.138"	0.060"-0.135"	0.064"	0.060"					2" × 2" × 3/16"	2" × 2" × 3/16"	3-½"	3-½"	3-⅜"	3-⅜"	5-½"
		42"-54"	12"		0.060"-0.105"		0.060"						2" × 2" × 3/16"		3-½"		3-⅜"	
		42"-60"	12"	0.064"-0.079"		0.064"						2" × 2" × 3/16"		3-½"		3-⅜"		5-½"
		42"-60"	12"	0.109"-0.168"	0.135"-0.164"	0.064"	0.075"					2" × 2" × ¼"	2" × 2" × ¼"	3-½"	3-½"	5-⅜"	5-⅜"	
		66'-84"	24"	0.109"-0.168"		0.064"						2" × 2" × ¼"		5-½"		7-⅜"		
		66"-72"	24"		0.164"		0.105"						2" × 2" × ¼"		5-½"		5-⅜"	
	3" × 1"	48"-60"	14"	0.064"-0.079"		0.064"						2" × 2" × 3/16"		3-½"		3-⅜"		5-½"
		48"-60"	14"	0.109"		0.064"						2" × 2" × 3/16"		3-½"		5-⅜"		
		66"-120"	25"	0.064"-0.109"		0.064"						2" × 2" × 3/16"		5-½"		9-⅜"		
		42"-60"	14"		0.060"-0.105"		0.060"						2" × 2" × 3/16"		3-½"		5-⅜"	
		42"-60"	14"		0.135"		0.075"						2" × 2" × ¼"		3-½"		5-⅜"	
		66"-96"	25"		0.060"-0.135"		0.060"						2" × 2" × ¼"		5-½"		7-⅜"	
		96"-108"	25"		0.135"		0.075"						2" × 2" × ¼"		5-½"		7-⅜"	
HUGGER	2⅔" × ½" REROLLED END	THROUGH 48"	10½"	0.109"		0.064"		0.079"	½"	⅞"	32 ksi							
		54"- 66"	10½"	0.109"		0.064"		DOUBLE 0.079"	½"	⅞"	32 ksi							
		THROUGH 54"	10½"	0.064"-0.079"		0.064"		0.079"	½"	⅞"	32 ksi							
		THROUGH 60"	10½"	0.138"		0.079"		DOUBLE 0.079"	½"	⅞"	32 ksi							
		66"-72"	10½"	0.138"		0.109"		DOUBLE 0.079"	½"	⅞"	32 ksi							
		THROUGH 72"	10½"	0.168"		0.109"		DOUBLE 0.109"	½"	⅞"	45 ksi							
	3" × 1" REROLLED END	48"-84"	10½"	0.109"		0.079"		DOUBLE 0.079"	½"	⅞"	32 ksi							
		48"-90"	10½"	0.064"-0.079"		0.064"		DOUBLE 0.079"	½"	⅞"	32 ksi							
		96"-102"	10½"	0.079"		0.079"		DOUBLE 0.079"	½"	⅞"	32 ksi							
		90"-120"	10½"	0.109"		0.109"		DOUBLE 0.109"	½"	⅞"	45 ksi							

SPIRAL RIB PROFILE

COUPLING TYPE	PIPE CORRUGATION	PIPE SIZE	W	PIPE WALL THICKNESS		BAND THICKNESS		BAR AND STRAP (SSRP ONLY)				ANGLE						
												DIMENSIONS		BOLTS (No.- Dia)		RIVETS ANGLE TO BAND		SPOT WELDS ANGLE TO BAND
				SSRP	ASRP	SSRP	ASRP	STRAP THICKNESS	BOLTS Dia	BAR Dia	BAR YIELD STRENGTH	SSRP	ASRP	SSRP	ASRP	SSRP	ASRP	SSRP
ANNULAR	2⅔" × ½" * REROLLED END	24"-36"	12"	0.064"-0.109"	0.060"-0.105"	0.064"	0.060"	0.079"	½"	⅞"	32 ksi	2" × 2" × 3/16"	2" × 2" × 3/16"	3-½"	3-½"	3-⅜"	3-⅜"	5-½"
		42"-60"	12"	0.064"-0.079"	0.075"-0.105"	0.064"	0.075"	0.079"	½"	⅞"	32 ksi	2" × 2" × 3/16"	2" × 2" × 3/16"	3-½"	3-½"	3-⅜"	3-⅜"	5-½"
		42"-60"	12"	0.109"		0.064"		0.079"	½"	⅞"	32 ksi	2" × 2" × ¼"		3-½"		5-⅜"		
		66"-84"	24"	0.109"		0.064"		0.079"	½"	⅞"	32 ksi	2" × 2" × ¼"		5-½"		7-⅜"		
HUGGER	2⅔" × ½" * REROLLED END	24"-54"	10½"	0.064"-0.079"		0.064"		0.079"	½"	⅞"	32 ksi							
		24"-48"	10½"	0.109"		0.064"		0.079"	½"	⅞"	32 ksi							
		54"-66"	10½"	0.109"		0.064"		Double 0.079"	½"	⅞"	32 ksi							

* See Note 13.

NOTES:

1. All ferrous metal coupling band connection hardware shall be galvanized or electro-plated in accordance with the Standard Specifications.
2. For helically corrugated coupling bands, the connection angles may be oriented parallel to the pipe axis, provided connecting holes are slotted lengthwise sufficiently to allow adjustment for the helix angle.
3. Tension strap may be connected to band with either spot welds or fillet welds that develop minimum required strength of strap.
4. Use 1¼" gage line dimension on attached angle leg for rivets and spot welds.
5. Band thickness shall not be less than:
   a. 3 standard thicknesses lighter than the thickness of the pipe for Corrugated Steel Pipe.
   b. 2 standard thicknesses lighter than the thickness of the pipe and in no case lighter than 0.060" for Corrugated Aluminum Pipe.
6. Dimensions, thicknesses and strengths shown are minimum.
7. For pipe arches use same width band as for round pipe of equal periphery.
8. Fillet welds of equivalent strength may be substituted for spot welds or rivets.
9. Spot welds shall develop minimum required strength of strap.
10. Pipe with rerolled ends having at least two 2⅔" × ½" annular corrugations at each end with or without an upturned flange may be connected with any of the annular coupling bands shown for pipe of the same diameter and wall thickness and having 2⅔" × ½" corrugations.
11. In the case of H-12 huggerbands, two piece bands are required for diameters through 96" and three piece bands are required for diameters 102" through 120".
12. Two piece bands are required for pipes greater than 42" diameter.
13. All profiles of Spiral Rib Pipe (¾" × ¾" ribs at 7½" pitch and ¾" × 1" ribs at 11½" pitch in both steel and aluminum and ¾" × 1" ribs at 8½" pitch in steel only) shall be manufactured with rerolled ends. Corrugation profile of the rerolled ends shall be 2⅔" × ½" annual corrugations with a minimum of two full corrugations at each end.

STATE OF CALIFORNIA
DEPARTMENT OF TRANSPORTATION

CORRUGATED METAL PIPE COUPLING DETAILS No. 6 POSITIVE JOINT

NO SCALE

RSP D97F DATED JUNE 6, 2008 SUPERSEDES STANDARD PLAN D97F
DATED MAY 1, 2006 - PAGE 188 OF THE STANDARD PLANS BOOK DATED MAY 2006.

REVISED STANDARD PLAN RSP D97F

2006 REVISED STANDARD PLAN RSP D97F

4-2-08

DIST	COUNTY	ROUTE	POST MILES TOTAL PROJECT	SHEET NO.	TOTAL SHEETS
04	SF	101	8.2/9.2	377	654

Raymond Don Tsztoo
REGISTERED CIVIL ENGINEER

June 6, 2008
PLANS APPROVAL DATE

REGISTERED PROFESSIONAL ENGINEER
Raymond Don Tsztoo
No. C37332
Exp. 6-30-08
CIVIL
STATE OF CALIFORNIA

The State of California or its officers or agents shall not be responsible for the accuracy or completeness of electronic copies of this plan sheet.

To accompany plans dated 12-14-09

ANNULAR AND HELICAL PROFILE

COUPLING TYPE	PIPE CORRUGATION	PIPE SIZE	W OR A	PIPE WALL THICKNESS		BAND THICKNESS		BAR AND STRAP (CSP ONLY)			ANGLE						
											DIMENSIONS		BOLTS (No.- Dia)		RIVETS ANGLE TO BAND		SPOT WELDS ANGLE TO BAND
				CSP	CAP	CSP	CAP	STRAP THICKNESS	BOLTS Dia	BAR Dia	CSP	CAP	CSP	CAP	CSP	CAP	CSP
TWO PIECE INTEGRAL FLANGE	1½′ × ¼"	6"	7"	0.064"-0.168"		0.052"							3-⅜"				
	1½′ × ¼"	8"-10"	7"	0.064"-0.168"	0.060"-0.164"	0.064"	0.060"						3-⅜"	3-⅜"			
ANNULAR	2⅔" × ½"	THROUGH 24"	12"	0.064"-0.168"	0.060"-0.164"	0.064"	0.060"				2" × 2" × 3/16"	2" × 2" × 3/16"	3-½"	3-½"	3-⅜"	3-⅜"	3-½"
HUGGER	2⅔" × ½" REROLLED END	THROUGH 24"	10½"	0.064"-0.168"		0.064"		0.079"	½"	⅞"							

SPIRAL RIB PROFILE

COUPLING TYPE	PIPE CORRUGATION	PIPE SIZE	W	PIPE WALL THICKNESS		BAND THICKNESS		BAR AND STRAP (SSRP ONLY)			ANGLE						
											DIMENSIONS		BOLTS (No.- Dia)		RIVETS ANGLE TO BAND		SPOT WELDS ANGLE TO BAND
				SSRP	ASRP	SSRP	ASRP	STRAP THICKNESS	BOLTS Dia	BAR Dia	SSRP	ASRP	SSRP	ASRP	SSRP	ASRP	SSRP
ANNULAR	2⅔" × ½" * REROLLED END	24"	12"	0.064"-0.168"	0.060"-0.164"	0.064"	0.060"				2" × 2" × 3/16"	2" × 2" × 3/16"	3-½"	3-½"	3-⅜"	3-⅜"	3-½"
HUGGER	2⅔" × ½" * REROLLED END	24"	10½"	0.064"-0.168"		0.064"		0.079"	½"	⅞"							

* See Note 12.

NOTES:

1. All ferrous metal coupling band connection hardware shall be galvanized or electro-plated in accordance with the Standard Specifications.
2. For helically corrugated coupling bands, the connection angles may be oriented parallel to the pipe axis, provided connecting holes are slotted lengthwise sufficiently to allow adjustment for the helix angle.
3. Tension strap may be connected to band with either spot welds or fillet welds that develop minimum required strength of strap.
4. Use 1¼" gage line dimension on attached angle leg for rivets and spot welds.
5. Band thickness shall not be less than:
   a. 3 standard thicknesses lighter than the thickness of the pipe for Corrugated Steel Pipe.
   b. 2 standard thicknesses lighter than the thickness of the pipe and in no case lighter than 0.060" for Corrugated Aluminum Pipe.
6. Dimensions, thicknesses and strengths shown are minimum.
7. For pipe arches use same width band as for round pipe of equal periphery.
8. Fillet welds of equivalent strenght may be substituted for spot welds or rivets.
9. Spot welds shall develop minimum required strength of strap.
10. Pipe with rerolled ends having at least two 2⅔" × ½" annular corrugations at each end with or without an upturned flange may be connected with any of the annular coupling bands shown for pipe of the same diameter and wall thickness and having 2⅔" × ½" corrugations.
11. For downdrain applications, two piece integral flange couplers shall have factory applied sleeve type rubber gaskets with a minimum length of 7" measured along the length of the pipe.
12. All profiles of Spiral Rib Pipe (¾" × ¾" ribs at 7½" pitch and ¾" × 1" ribs at 11½" pitch in both steel and aluminum and ¾" × 1" ribs at 8½" pitch in steel only) shall be manufactured with rerolled ends. Corrugation profile of the rerolled ends shall be 2⅔" × ½" annual corrugations with a minimum of two full corrugations at each end.

STATE OF CALIFORNIA
DEPARTMENT OF TRANSPORTATION

CORRUGATED METAL PIPE COUPLING DETAILS No. 7 DOWNDRAIN

NO SCALE

RSP D97G DATED JUNE 6, 2008 SUPERSEDES STANDARD PLAN D97G
DATED MAY 1, 2006 - PAGE 189 OF THE STANDARD PLANS BOOK DATED MAY 2006.

REVISED STANDARD PLAN RSP D97G

2006 REVISED STANDARD PLAN RSP D97G

4-4-08

DIST	COUNTY	ROUTE	POST MILES TOTAL PROJECT	SHEET NO.	TOTAL SHEETS
04	SF	101	8.2/9.2	378	654

Raymond Don Tsztoo
REGISTERED CIVIL ENGINEER

March 7, 2008
PLANS APPROVAL DATE

REGISTERED PROFESSIONAL ENGINEER
Raymond Don Tsztoo
No. C37332
Exp. 6-30-08
CIVIL
STATE OF CALIFORNIA

The State of California or its officers or agents shall not be responsible for the accuracy or completeness of electronic copies of this plan sheet.

To accompany plans dated 12-14-09

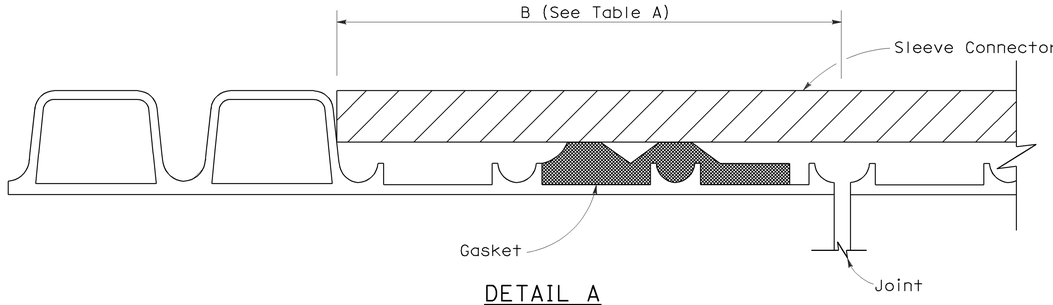

DETAIL A

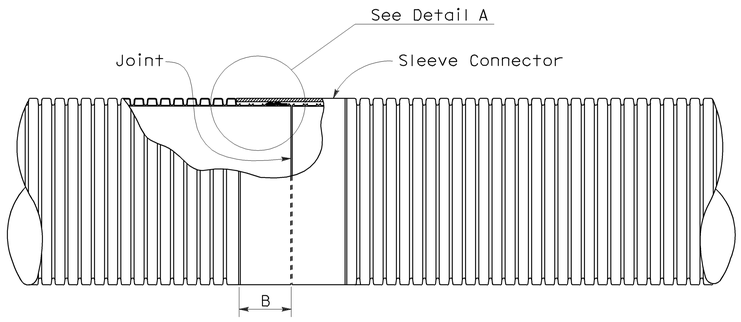

PLAN VIEW
Liner Insert
See Note 4

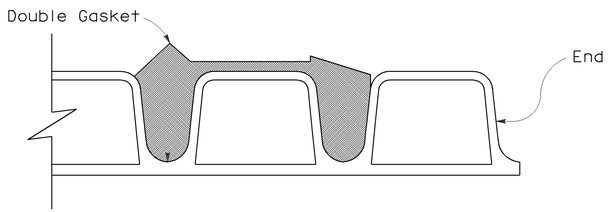

Double Gasket

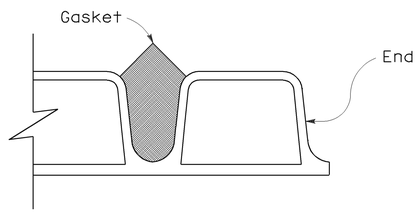

Single Gasket

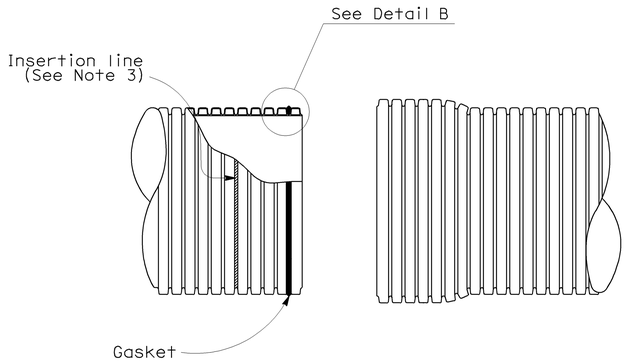

SPIGOT

BELL

DETAIL B

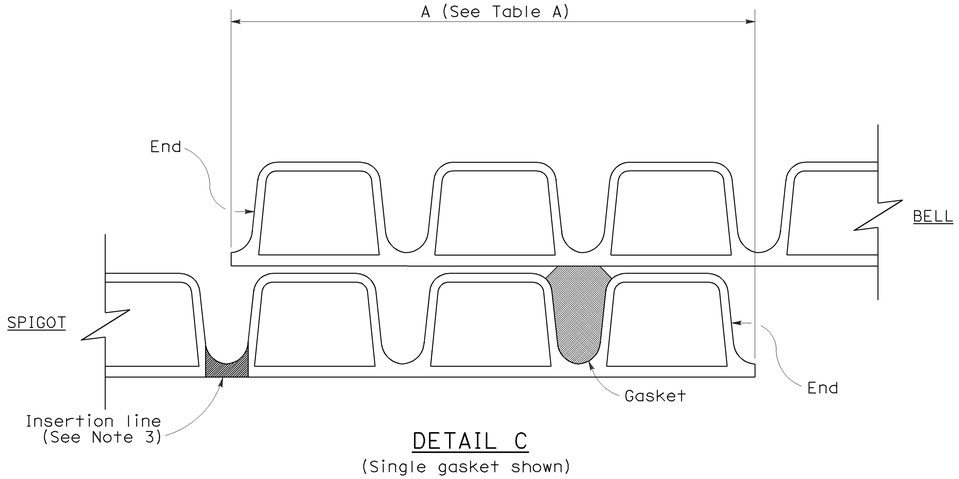

DETAIL C
(Single gasket shown)

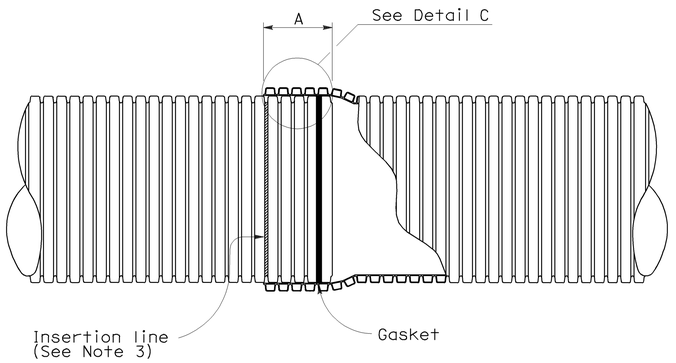

BELL AND SPIGOT JOINT

NOTES:

1. For pipe sections installed on straight alignment, the pipe sections shall be joined to achieve maxium joint overlap at all points on the periphery as indicated in Table A where the plans call for positive or watertight joints. Maxium joint overlap is recommended where the plans call for standard joints, but in no case shall the joint overlap be less than 3½".
2. For pipe sections installed on curved alignment, the maxium angle of deflection from straight alignment at any joint shall not exceed two degrees. Where the plans call for watertightness, field testing for compliance is required. Where plans call for positive joints, the pipe sections shall be joined to achieve Table A Dimensions on one side of the joint. Joints classified as standard shall have no less than 3½" joint overlap at any point on the periphery.
3. Factory applied insertion line limit shall be placed on spigot.
4. Liner insert to be used inside of existing pipe.

TABLE A

JOINT OVERLAP DIMENSIONS		
PIPE Dia (NOMINAL)	A	B
12"	5¾"	4¼"
15"	6¾"	5⅝"
18"	6¾"	5⅝"
21"	8½"	5⅝"
24"	8½"	6⅛"
30"	8½"	7⅛"
36"	8½"	8⅛"

STATE OF CALIFORNIA
DEPARTMENT OF TRANSPORTATION

CORRUGATED POLYVINYL CHLORIDE PIPE WITH SMOOTH INTERIOR STANDARD AND POSITIVE JOINTS

NO SCALE

NSP D97I DATED MARCH 7, 2008 SUPPLEMENTS THE STANDARD PLANS BOOK DATED MAY 2006.

NEW STANDARD PLAN NSP D97I

2006 NEW STANDARD PLAN NSP D97I

2-13-08

DIST	COUNTY	ROUTE	POST MILES TOTAL PROJECT	SHEET NO.	TOTAL SHEETS
04	SF	101	8.2/9.2	379	654

Raymond Don Tsztoo
REGISTERED CIVIL ENGINEER

June 6, 2008
PLANS APPROVAL DATE

REGISTERED PROFESSIONAL ENGINEER
Raymond Don Tsztoo
No. C37332
Exp. 6-30-08
CIVIL
STATE OF CALIFORNIA

The State of California or its officers or agents shall not be responsible for the accuracy or completeness of electronic copies of this plan sheet.

To accompany plans dated 12-14-09

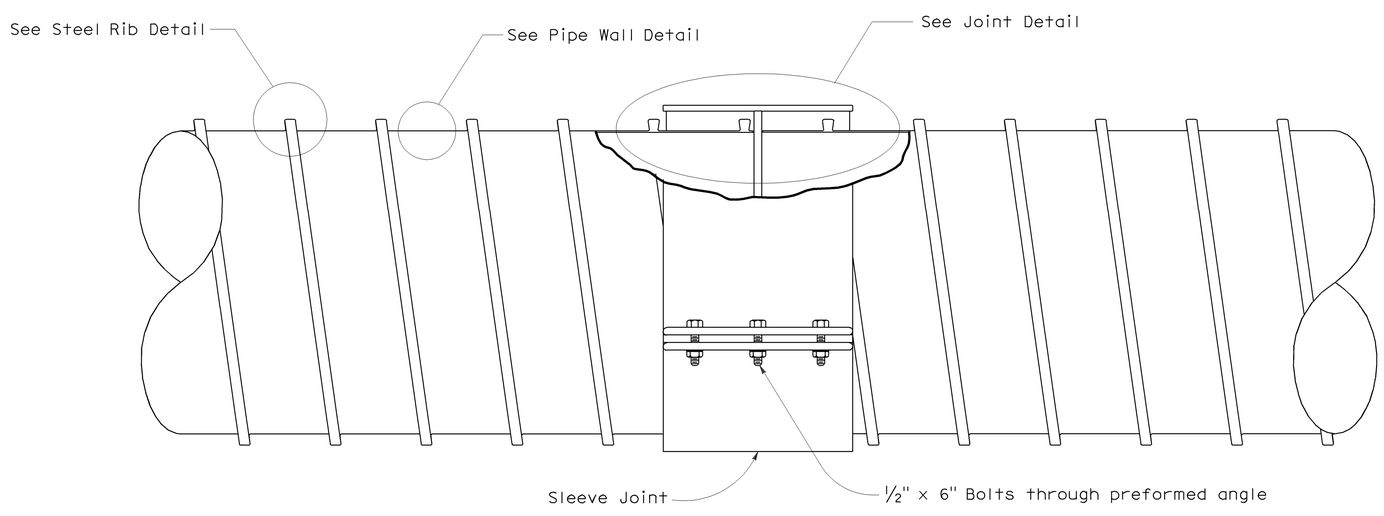

COMPOSITE STEEL SPIRAL RIB PIPE

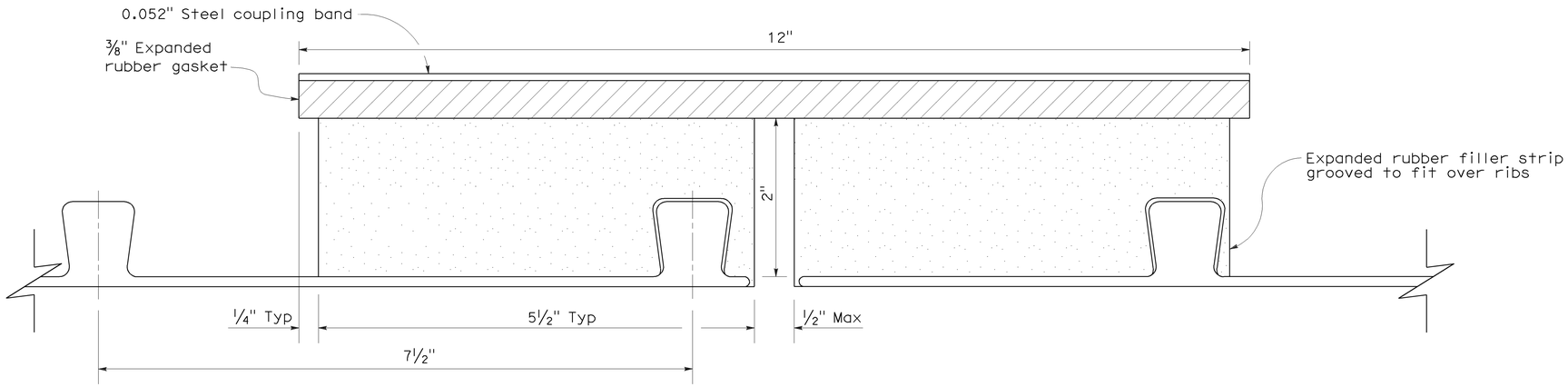

JOINT DETAIL

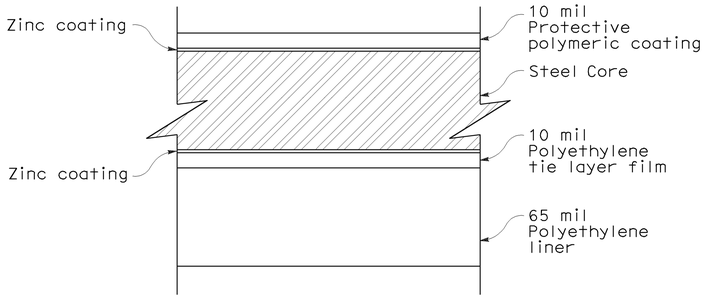

PIPE WALL DETAIL

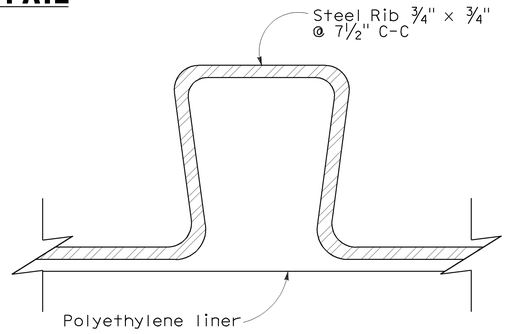

STEEL RIB DETAIL

NOTES:

1. Pipe to conform to ASTM A 978.
2. See Standard Plan A62F for backfill details.
3. Protective polymer film to conform to ASTM A 742 and AASHTO M 246.
4. See Standard Plan D97C for Universal Coupling details.
5. Strap joint connection shall consist of 2 separate bolted preformed connectors joined to form one strap when pipe inside diameter is greater than or equal to 60".

STATE OF CALIFORNIA
DEPARTMENT OF TRANSPORTATION

COMPOSITE STEEL SPIRAL RIB PIPE WITH SMOOTH INTERIOR STANDARD JOINT

NO SCALE

NSP D97J DATED JUNE 6, 2008 SUPPLEMENTS THE STANDARD PLANS BOOK DATED MAY 2006.

NEW STANDARD PLAN NSP D97J

2006 NEW STANDARD PLAN NSP D97J

4-24-08

DIST	COUNTY	ROUTE	POST MILES TOTAL PROJECT	SHEET NO.	TOTAL SHEETS
04	SF	101	8.2/9.2	380	654

Gregory A. Balzer
LICENSED LANDSCAPE ARCHITECT

June 5, 2009
PLANS APPROVAL DATE

LICENSED LANDSCAPE ARCHITECT
Gregory A. Balzer 2576
Signature
2-28-11
Renewal Date
5-14-09
Date
STATE OF CALIFORNIA

The State of California or its officers or agents shall not be responsible for the accuracy or completeness of electronic copies of this plan sheet.

To accompany plans dated 12-14-09

EXISTING	PROPOSED	ITEM DESCRIPTION
		WATER METER (WM)
		BACKFLOW PREVENTER ASSEMBLY (BPA)
		BACKFLOW PREVENTER ASSEMBLY IN ENCLOSURE (BPAE)
		BACKFLOW PREVENTER ENCLOSURE (BPE)
		BOOSTER PUMP (BP)
		TRUCK LOADING STANDPIPE (TLS)
FS	FS	FLOW SENSOR (FS)
		MASTER IRRIGATION CONTROLLER (MIC)
		AUXILIARY IRRIGATION CONTROLLER (AIC)
		IRRIGATION CONTROLLER (IC)/ IRRIGATION CONTROLLER (IC) (BATTERY) IRRIGATION CONTROLLER (IC) (SOLAR)
		IRRIGATION CONTROLLER(S) IN CONTROLLER ENCLOSURE CABINET (ICC)
		CONTROL AND NEUTRAL CONDUCTORS (CNC)
SCC	SCC	SPRINKLER CONTROL CONDUIT (SCC)
		IRRIGATION CROSSOVER
		EXTEND IRRIGATION CROSSOVER
		IRRIGATION SLEEVE
dip	DIP	DUCTILE IRON PIPE (SUPPLY LINE) (MAIN) (DIP)
		GALVANIZED STEEL PIPE (SUPPLY LINE) (MAIN) (GSP)
		GALVANIZED STEEL PIPE (SUPPLY LINE) (LATERAL) (GSP)
		PLASTIC PIPE (PR 200) (SUPPLY LINE) (MAIN)
		PLASTIC PIPE (PR 200) (SUPPLY LINE) (LATERAL)
		PLASTIC PIPE (IRRIGATION LINE)
		REMOTE CONTROL VALVE (RCV) REMOTE CONTROL VALVE (MASTER) (RCVM) REMOTE CONTROL VALVE (MASTER) W/FLOW METER (RCVMF)
		MANUAL CONTROL VALVE (MCV)
		VALVE ASSEMBLY UNIT (VAU)
		WYE STRAINER (WS)
		FILTER ASSEMBLY UNIT (FAU)
		GATE VALVE (GV)
		BALL VALVE (BV)

EXISTING	PROPOSED	ITEM DESCRIPTION
		QUICK COUPLING VALVE (QCV)
		CAM COUPLER ASSEMBLY (CCA)
		PRESSURE REDUCING VALVE (PRV)
		PRESSURE RELIEF VALVE (PRLV)
		FLOW CONTROL VALVE (FCV)
		COMBINATION AIR RELEASE VALVE (CARV)
		CHECK VALVE (CV)
		FLUSH VALVE (FV)
		NOZZLE LINE W/TURNING UNION
		IRRIGATION SYSTEM
		IRRIGATION SYSTEM TO BE REMOVED
		CHAIN LINK GATE
		QUICK COUPLING VALVE W/SPRINKLER PROTECTOR
3	3	SPRINKLER W/SPRINKLER PROTECTOR
		CONNECT TO EXISTING SYSTEM
		CAP
		CAP EXISTING

VALVE CODE

RCV SIZE
IRRIGATION CONTROLLER
CONTROLLER STATION
VALVE IN PARALLEL (IF APPLICABLE)
GPM
QUANTITY OF SPRINKLERS (WHEN SHOWN)

* 2½"-A-2b-40 -60

MCV SIZE
VALVE NUMBER
GPM
QUANTITY OF TYPE SPRINKLERS (WHEN SHOWN)

* 2"-3-30 -50

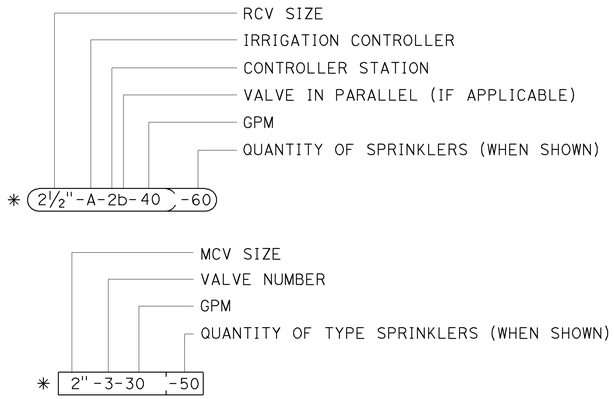

* VALVE CODES FOR EXISTING VALVES ARE SHOWN IN A DASHED ENCLOSURE.

STATE OF CALIFORNIA
DEPARTMENT OF TRANSPORTATION

PLANTING AND IRRIGATION SYMBOLS

NO SCALE

RSP H2 DATED JUNE 5, 2009 SUPERSEDES RSP H2 DATED MARCH 7, 2008 AND STANDARD PLAN H2 DATED MAY 1, 2006 - PAGE 202 OF THE STANDARD PLANS BOOK DATED MAY 2006.

REVISED STANDARD PLAN RSP H2

2006 REVISED STANDARD PLAN RSP H2

5-11-09

DIST	COUNTY	ROUTE	POST MILES TOTAL PROJECT	SHEET NO.	TOTAL SHEETS
04	SF	101	8.2/9.2	381	654

LICENSED LANDSCAPE ARCHITECT

April 3, 2009
PLANS APPROVAL DATE

The State of California or its officers or agents shall not be responsible for the accuracy or completeness of electronic copies of this plan sheet.

LICENSED LANDSCAPE ARCHITECT
Gregory A. Balzer 2978
02-28-11
Renewal Date
03-04-09
Date
STATE OF CALIFORNIA

To accompany plans dated 12-14-09

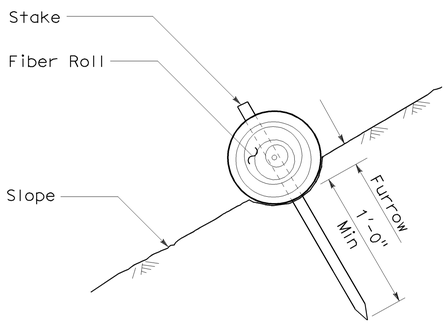

SECTION

FIBER ROLL
(TYPE 1)

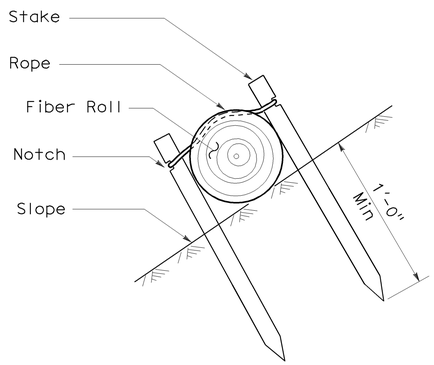

SECTION

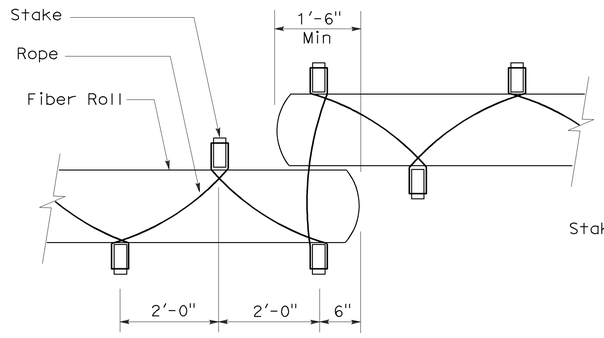

PLAN

FIBER ROLL
(TYPE 2)

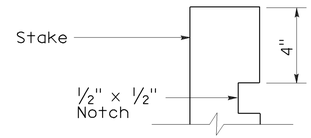

ELEVATION

STAKE NOTCH DETAIL

NOTES:

1. Fiber roll spacing varies depending upon slope inclination.
2. Installations shown in the perspectives are for slope inclination of 10:1 and steeper.

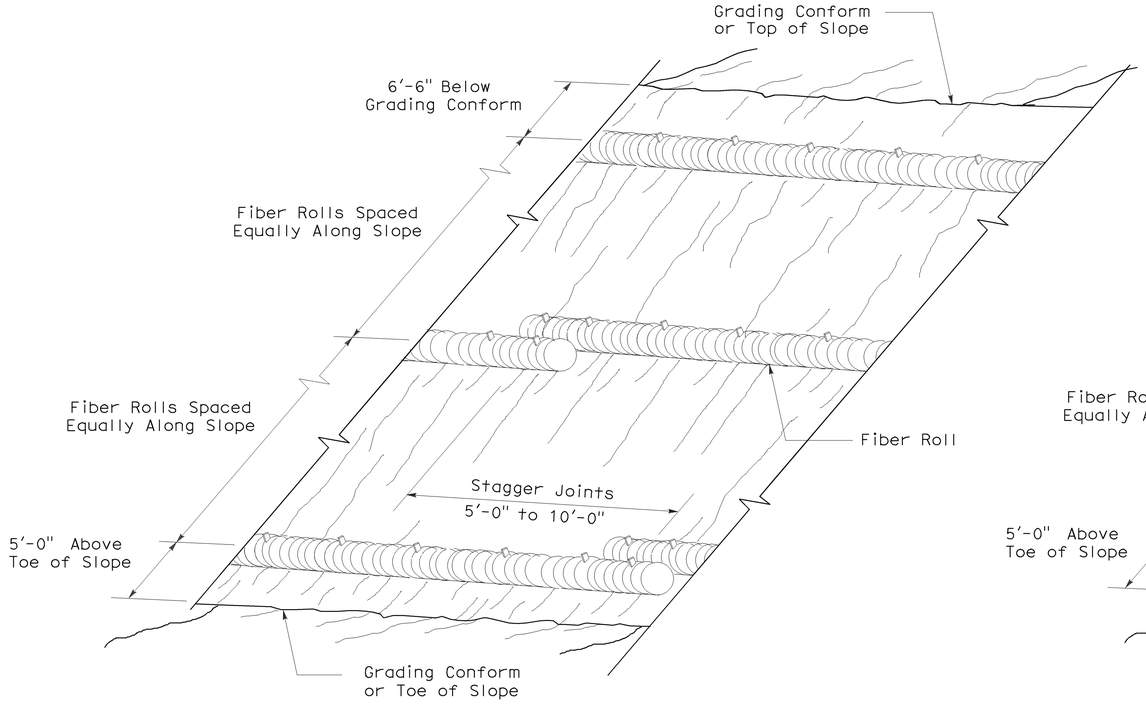

PERSPECTIVE

FIBER ROLL (TYPE 1)

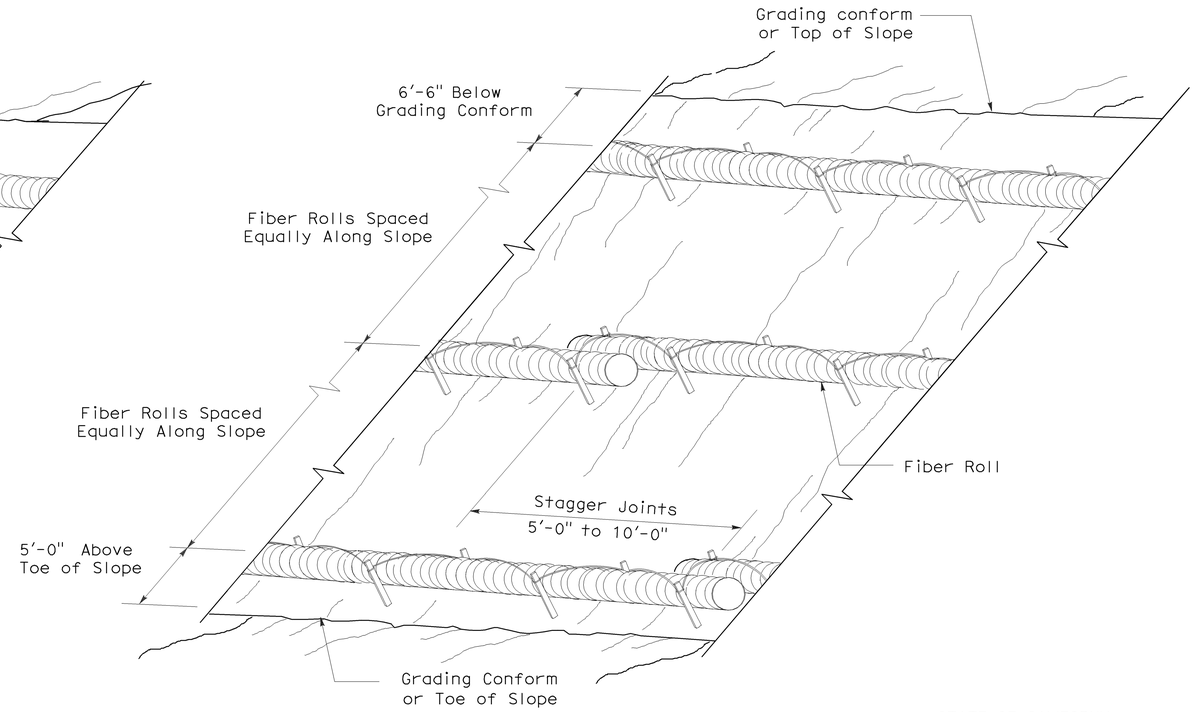

PERSPECTIVE

FIBER ROLL (TYPE 2)

STATE OF CALIFORNIA
DEPARTMENT OF TRANSPORTATION

EROSION CONTROL DETAILS (FIBER ROLL)

NO SCALE

RNSP H51 DATED APRIL 3, 2009 SUPERSEDES NSP H51 DATED DECEMBER 1, 2006
THAT SUPPLEMENTS THE STANDARD PLANS BOOK DATED MAY 2006.

REVISED NEW STANDARD PLAN RNSP H51

2006 REVISED NEW STANDARD PLAN RNSP H51

DIST	COUNTY	ROUTE	POST MILES TOTAL PROJECT	SHEET NO.	TOTAL SHEETS
04	SF	101	8.2/9.2	382	654

LICENSED LANDSCAPE ARCHITECT

April 3, 2009
PLANS APPROVAL DATE

LICENSED LANDSCAPE ARCHITECT — Gregory A. Balzer — 02-28-11 Renewal Date — 03-04-09 Date — STATE OF CALIFORNIA

The State of California or its officers or agents shall not be responsible for the accuracy or completeness of electronic copies of this plan sheet.

To accompany plans dated 12-14-09

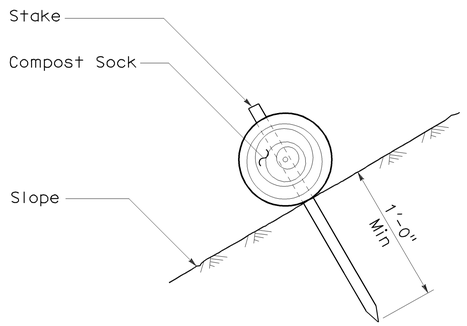

SECTION

COMPOST SOCK (TYPE 1)

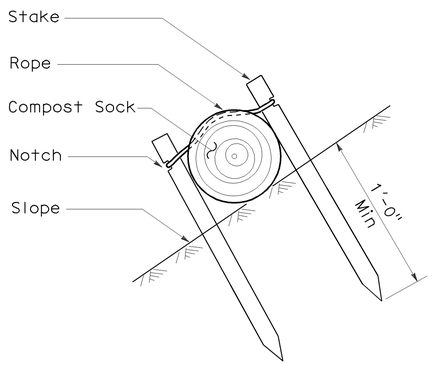

SECTION

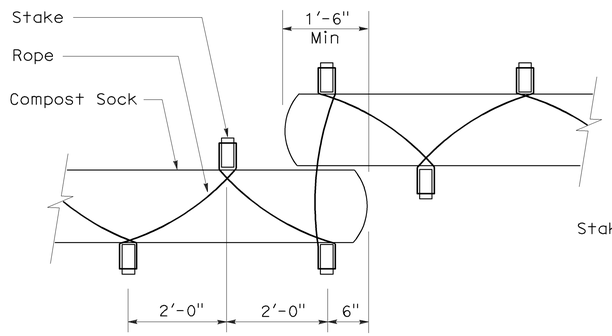

PLAN

COMPOST SOCK (TYPE 2)

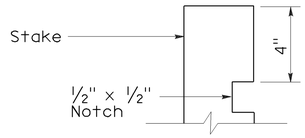

ELEVATION

STAKE NOTCH DETAIL

NOTE:

Compost sock spacing varies depending upon slope inclination.

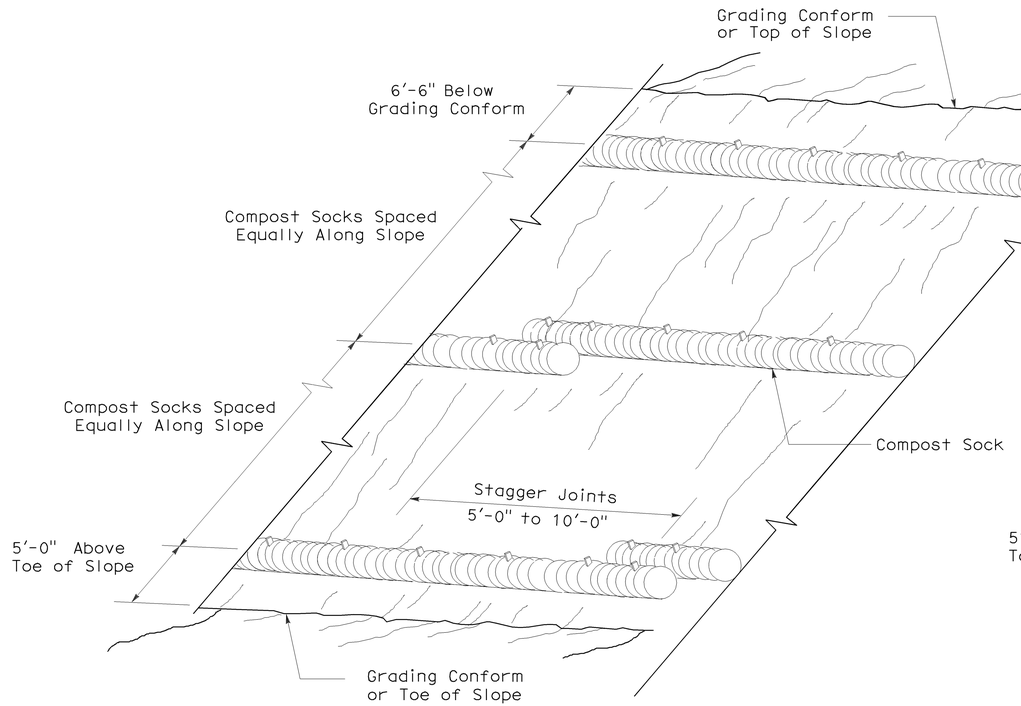

PERSPECTIVE

COMPOST SOCK (TYPE 1)

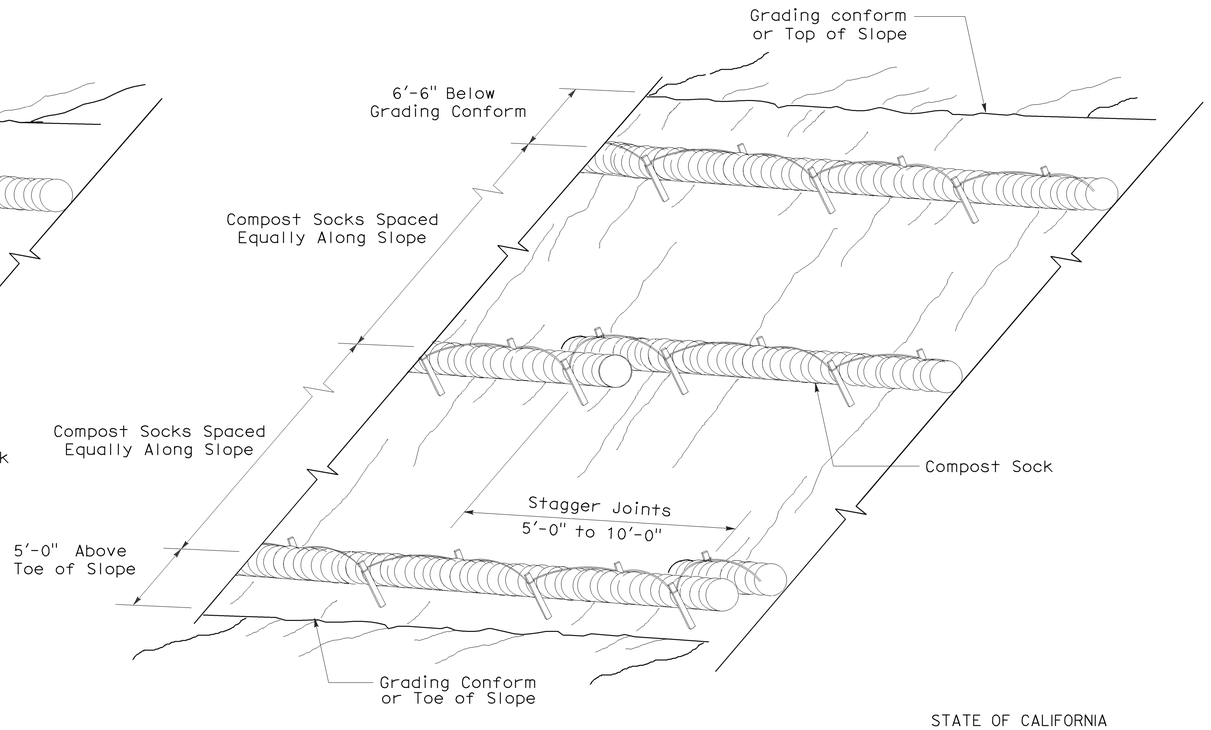

PERSPECTIVE

COMPOST SOCK (TYPE 2)

STATE OF CALIFORNIA
DEPARTMENT OF TRANSPORTATION

EROSION CONTROL DETAILS (COMPOST SOCK)

NO SCALE

NSP H52 DATED APRIL 3, 2009 SUPPLEMENTS THE STANDARD PLANS BOOK DATED MAY 2006.

NEW STANDARD PLAN NSP H52

2006 NEW STANDARD PLAN NSP H52

3-3-09

DIST	COUNTY	ROUTE	POST MILES TOTAL PROJECT	SHEET NO.	TOTAL SHEETS
04	SF	101	8.2/9.2	383	654

Gregory A. Balzer
LICENSED LANDSCAPE ARCHITECT

June 5, 2009
PLANS APPROVAL DATE

The State of California or its officers or agents shall not be responsible for the accuracy or completeness of electronic copies of this plan sheet.

LICENSED LANDSCAPE ARCHITECT
Gregory A. Balzer 2378
Signature
2-28-11
Renewal Date
5-14-09
Date
STATE OF CALIFORNIA

To accompany plans dated 12-14-09

NOTE:

1. Fiber Roll/Compost Sock shown for reference purposes only.
2. If transverse rolled erosion control product joints are required on slopes, see Detail B.

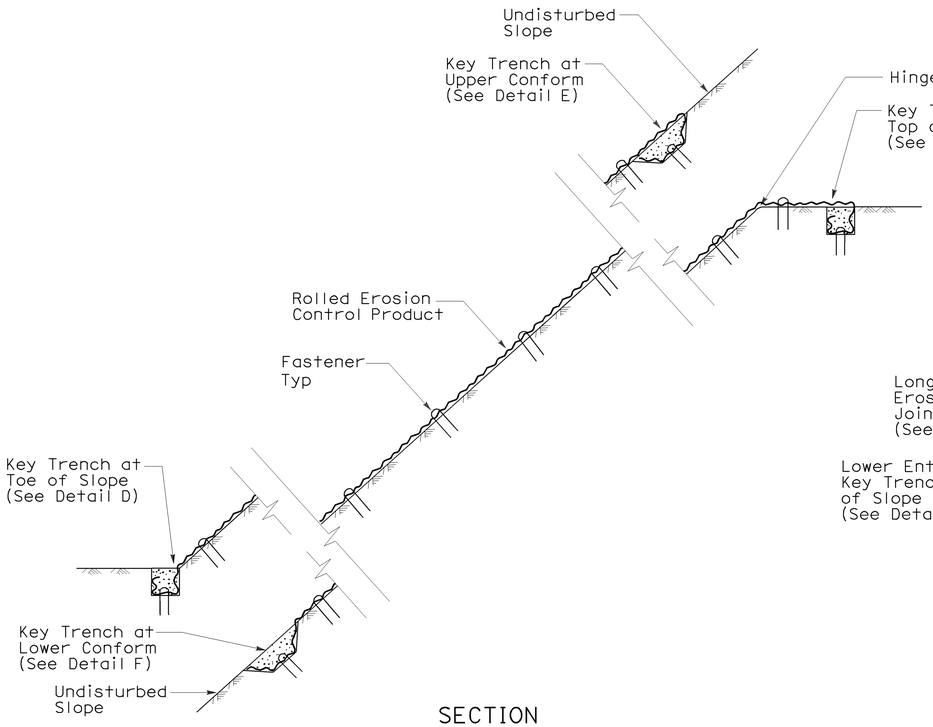

SECTION

ROLLED EROSION CONTROL PRODUCT ON SLOPE WITH VARIOUS KEY ENTRENCHMENTS

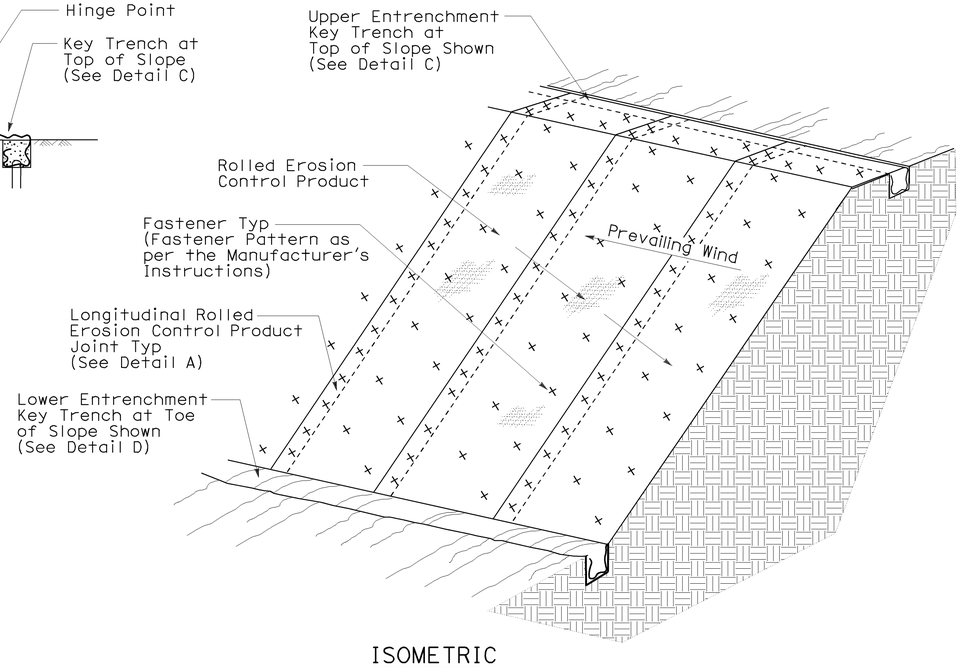

ISOMETRIC

ROLLED EROSION CONTROL PRODUCT ON SLOPE

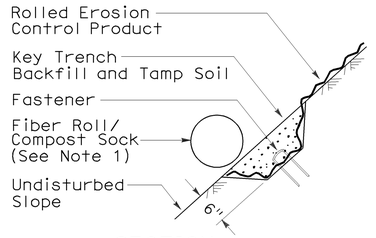

SECTION

DETAIL F KEY TRENCH AT LOWER CONFORM

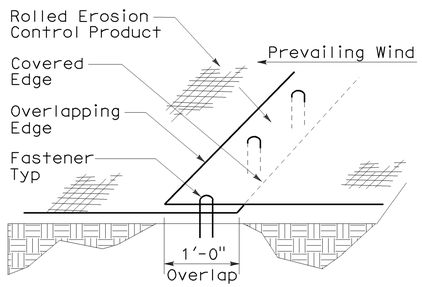

PERSPECTIVE

DETAIL A LONGITUDINAL ROLLED EROSION CONTROL PRODUCT JOINT

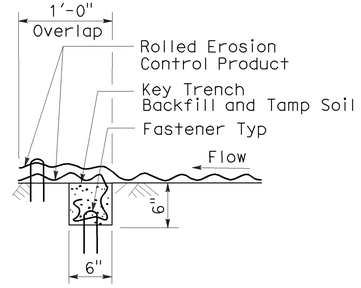

SECTION

DETAIL B TRANSVERSE ROLLED EROSION CONTROL PRODUCT JOINT

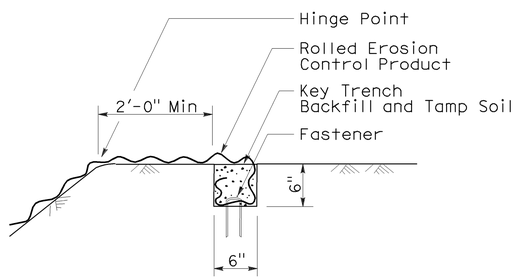

SECTION

DETAIL C KEY TRENCH AT TOP OF SLOPE

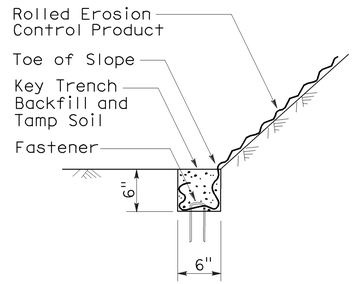

SECTION

DETAIL D KEY TRENCH AT TOE OF SLOPE

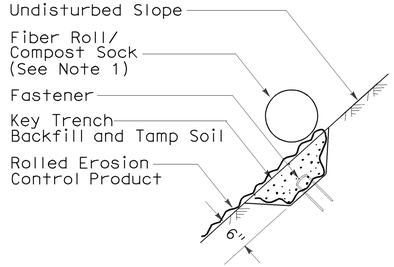

SECTION

DETAIL E KEY TRENCH AT UPPER CONFORM

STATE OF CALIFORNIA
DEPARTMENT OF TRANSPORTATION

ROLLED EROSION CONTROL PRODUCT

NO SCALE

NSP H53 DATED JUNE 5, 2009 SUPPLEMENTS THE STANDARD PLANS BOOK DATED MAY 2006.

NEW STANDARD PLAN NSP H53

2006 NEW STANDARD PLAN NSP H53

3-4-09

DIST	COUNTY	ROUTE	POST MILES TOTAL PROJECT	SHEET NO.	TOTAL SHEETS
04	SF	101	8.2/9.2	384	654

Randell D. Hiatt
REGISTERED CIVIL ENGINEER

June 6, 2008
PLANS APPROVAL DATE

Randell D. Hiatt
No. C50200
Exp. 6-30-09
CIVIL
REGISTERED PROFESSIONAL ENGINEER
STATE OF CALIFORNIA

The State of California or its officers or agents shall not be responsible for the accuracy or completeness of electronic copies of this plan sheet.

To accompany plans dated 12-14-09

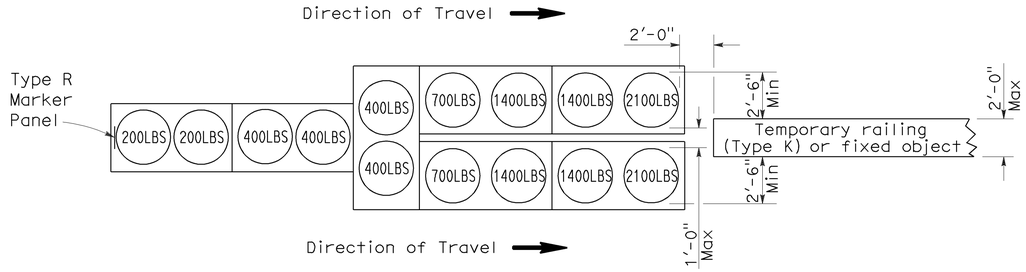

ARRAY 'TU14'

Approach speed 45 mph or more

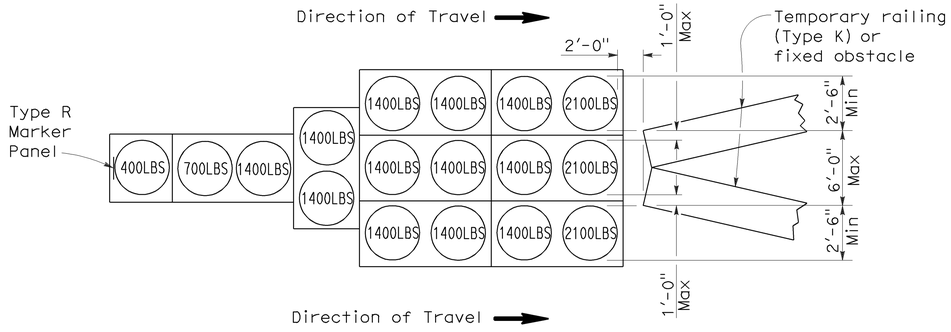

ARRAY 'TU17'

Approach speed less than 45 mph

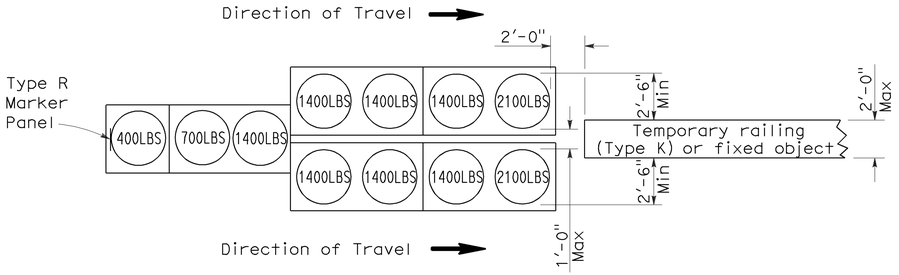

ARRAY 'TU11'

Approach speed less than 45 mph

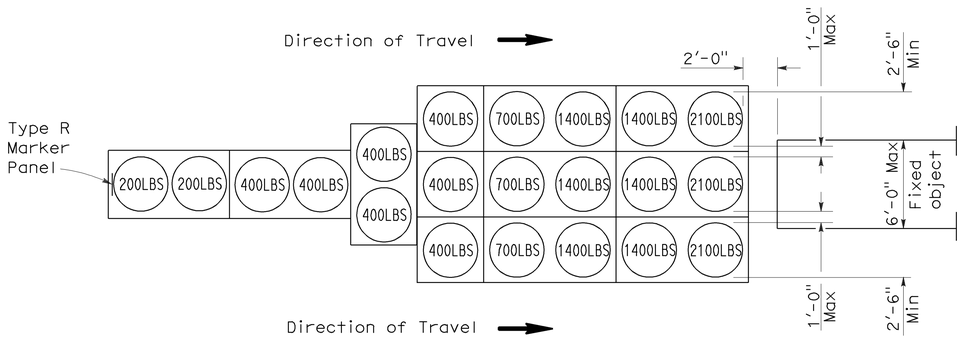

ARRAY 'TU21'

Approach speed 45 mph or more

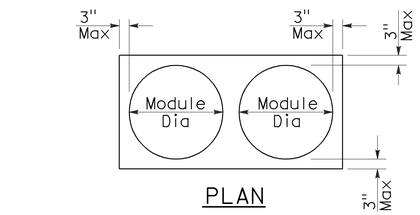

PLAN

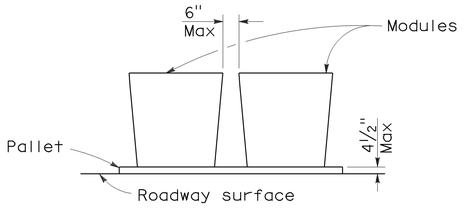

ELEVATION

CRASH CUSHION PALLET DETAIL

See Note 7

NOTES:

1. (654) Indicates sand filled module location and weight of sand in pounds for each module. Module spacing is based on the greater diameter of the module.
2. All sand weights are nominal.
3. Temporary crash cushion arrays shall not encroach on the traveled way.
4. Place the top of Type R marker panel 1" below the module lid.
5. Refer to Standard Plan A73B for marker details.
6. Approach speeds indicated conform to NCHRP 350 Report criteria.
7. Use of pallets is optional.

STATE OF CALIFORNIA
DEPARTMENT OF TRANSPORTATION

TEMPORARY CRASH CUSHION, SAND FILLED (UNIDIRECTIONAL)

NO SCALE

RSP T1A DATED JUNE 6, 2008 SUPERSEDES STANDARD PLAN T1A
DATED MAY 1, 2006 - PAGE 211 OF THE STANDARD PLANS BOOK DATED MAY 2006.

REVISED STANDARD PLAN RSP T1A

2006 REVISED STANDARD PLAN RSP T1A

5-15-08

DIST	COUNTY	ROUTE	POST MILES TOTAL PROJECT	SHEET NO.	TOTAL SHEETS
04	SF	101	8.2/9.2	385	654

Randell D. Hiatt
REGISTERED CIVIL ENGINEER

June 6, 2008
PLANS APPROVAL DATE

REGISTERED PROFESSIONAL ENGINEER
Randell D. Hiatt
No. C50200
Exp. 6-30-09
CIVIL
STATE OF CALIFORNIA

The State of California or its officers or agents shall not be responsible for the accuracy or completeness of electronic copies of this plan sheet.

To accompany plans dated 12-14-09

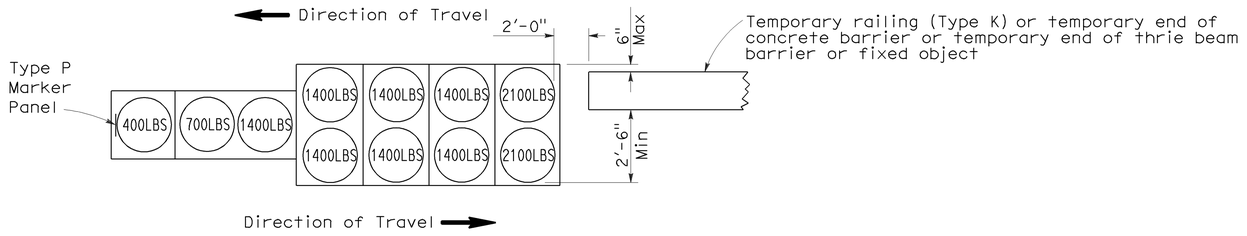

ARRAY 'TB11'

Approach speed less than 45 mph

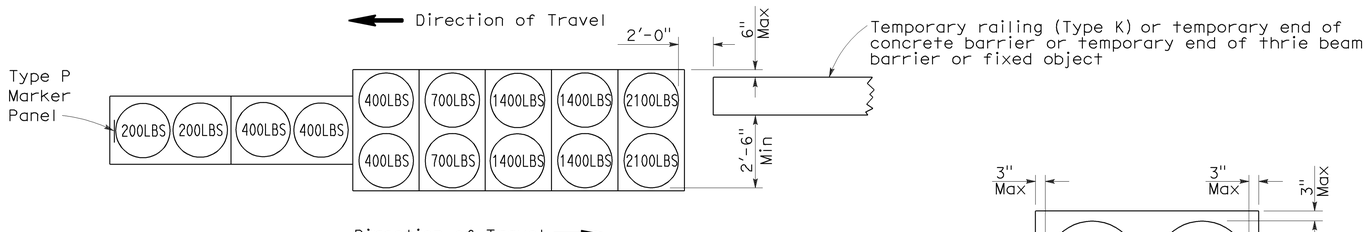

ARRAY 'TB14'

Approach speed 45 mph or more

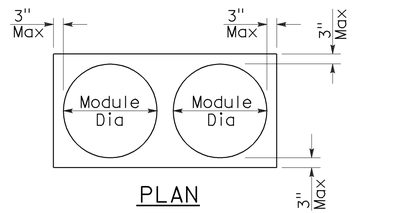

PLAN

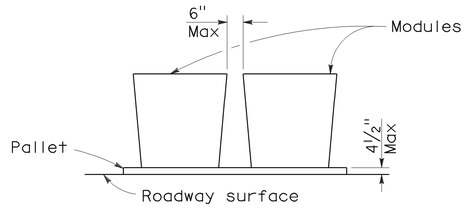

ELEVATION

CRASH CUSHION PALLET DETAIL

See Note 7

NOTES:

1. (654) Indicates sand filled module location and weight of sand in pounds for each module. Module spacing is based on the greater diameter of the module.
2. All sand weights are nominal.
3. Temporary crash cushion arrays shall not encroach on the traveled way.
4. Place the Type P marker panel so that the bottom of the panel rests upon the pallet.
5. Refer to Standard Plan A73B for marker details.
6. Approach speeds indicated conform to NCHRP 350 Report criteria.
7. Use of pallets is optional.

STATE OF CALIFORNIA
DEPARTMENT OF TRANSPORTATION

TEMPORARY CRASH CUSHION, SAND FILLED (BIDIRECTIONAL)

NO SCALE

RSP T1B DATED JUNE 6, 2008 SUPERSEDES STANDARD PLAN T1B
DATED MAY 1, 2006 - PAGE 212 OF THE STANDARD PLANS BOOK DATED MAY 2006.

REVISED STANDARD PLAN RSP T1B

2006 REVISED STANDARD PLAN RSP T1B

5-15-08

DIST	COUNTY	ROUTE	POST MILES TOTAL PROJECT	SHEET NO.	TOTAL SHEETS
04	SF	101	8.2/9.2	386	654

Randell D. Hiatt
REGISTERED CIVIL ENGINEER

June 6, 2008
PLANS APPROVAL DATE

REGISTERED PROFESSIONAL ENGINEER
Randell D. Hiatt
No. C50200
Exp. 6-30-09
CIVIL
STATE OF CALIFORNIA

The State of California or its officers or agents shall not be responsible for the accuracy or completeness of electronic copies of this plan sheet.

To accompany plans dated 12-14-09

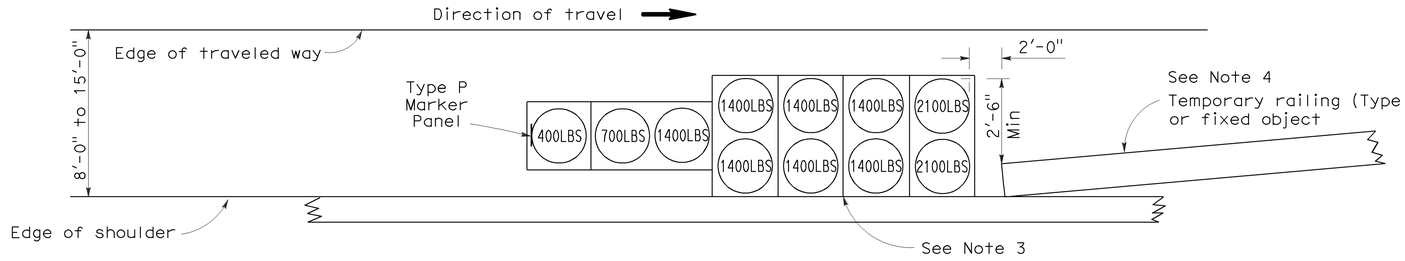

ARRAY 'TS11'

Approach speed less than 45 mph
See Note 9

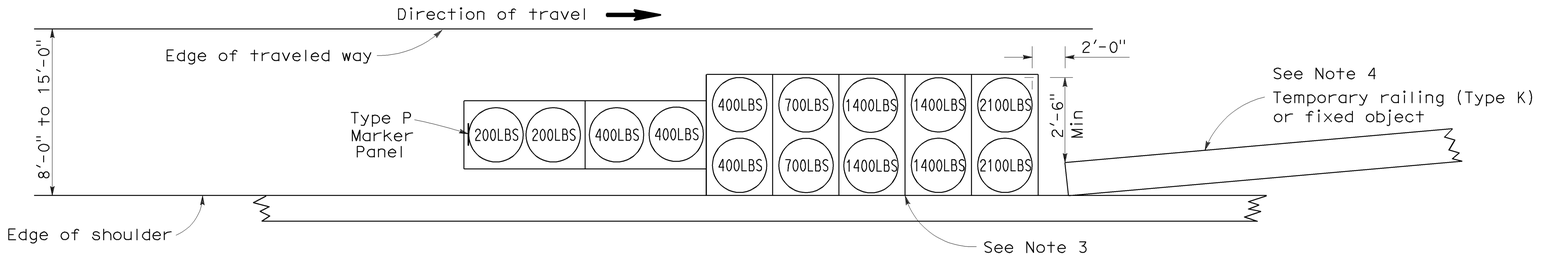

ARRAY 'TS14'

Approach speed 45 mph or more
See Note 9

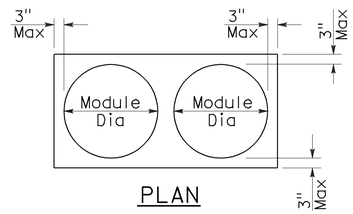

PLAN

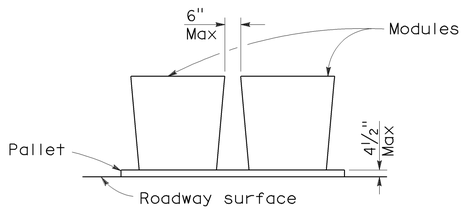

ELEVATION

CRASH CUSHION PALLET DETAIL

See Note 11

NOTES:

1. (654) Indicates sand filled module location and weight of sand in pounds for each module. Module spacing is based on the greater diameter of the module.
2. All sand weights are nominal.
3. The temporary crash cushion arrays shown on this plan shall be used only in locations where there will be traffic on one side of the temporary crash cushion array.
4. If the fixed object or approach end of the temporary railing is less than 15'-0" from the edge of traveled way, a temporary crash cushion is required in a construction or work zone.
5. Temporary crash cushion arrays shall not encroach on the traveled way.
6. Arrays for median shoulders shall conform to details shown on this plan for outside shoulders.
7. Place the Type P marker panel so that the bottom of the panel rests upon the pallet and faces traffic.
8. Refer to Standard Plan A73B for marker details.
9. For shoulder widths less than 8'-0", appropriate approved crash cushion protection, other than sand filled modules, shall be provided at fixed objects and at approach ends of temporary railing. The specific type of crash cushion shall be as shown on the project plans or as specified in the Special Provisions, or if not shown on the project plans or specified in the Special Provisions, shall be as approved by the Engineer.
10. Approach speeds indicated conform to NCHRP 350 Report criteria.
11. Use of pallets is optional.

STATE OF CALIFORNIA
DEPARTMENT OF TRANSPORTATION

TEMPORARY CRASH CUSHION, SAND FILLED (SHOULDER INSTALLATIONS)

NO SCALE

RSP T2 DATED JUNE 6, 2008 SUPERSEDES STANDARD PLAN T2
DATED MAY 1, 2006 - PAGE 213 OF THE STANDARD PLANS BOOK DATED MAY 2006.

REVISED STANDARD PLAN RSP T2

2006 REVISED STANDARD PLAN RSP T2

5-15-08

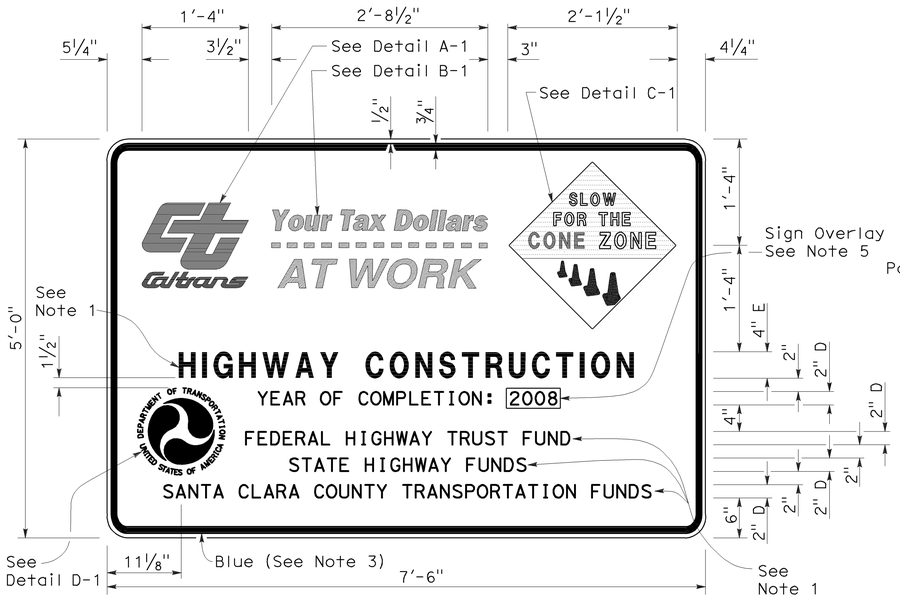

TYPE 1

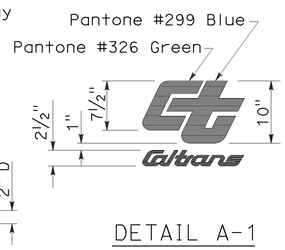

DETAIL A-1

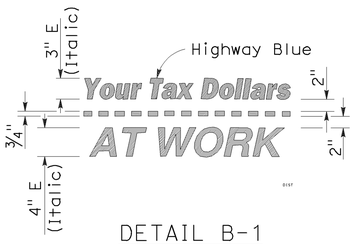

DETAIL B-1
(See Note 3)

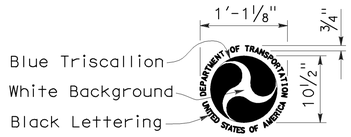

DETAIL D-1
(See Note 6)

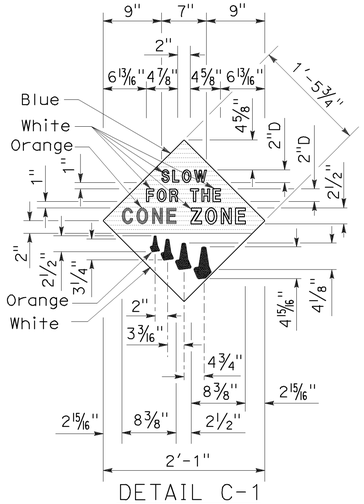

DETAIL C-1
(See Note 4)

NOTES:

1. The sign messages shown for type of project and fund types are examples only. See the Special Provisions for the applicable type of project and fund type messages to be used.
2. Except as otherwise shown, the legend of sign shall be black on a white background (non-reflective).
3. The border of the signs and details "B-1" and "B-2" shall be blue (non-reflective).
4. The diamond in details "C-1" and "C-2" shall be blue for the background of message, " SLOW FOR THE CONE ZONE", and white background for the orange cones. The color and type of font for the "SLOW FOR THE CONE ZONE" message shall be: "SLOW" white D; "FOR THE" white D; "CONE" orange Arial font; "ZONE" white Arial font.
5. Year of completion of project construction shown on the overlay is an example only. See the Special Provisions.
6. Use when the Project involves Federal Highway Trust Fund.

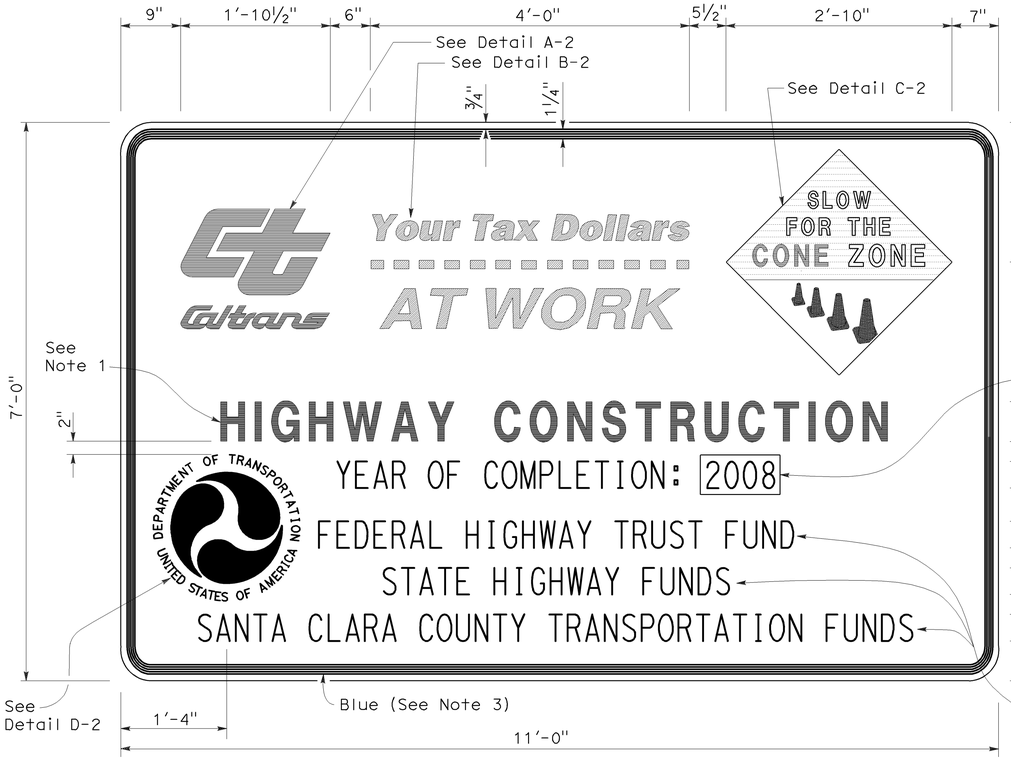

TYPE 2

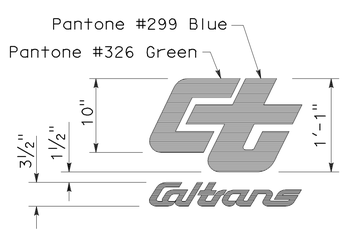

DETAIL A-2

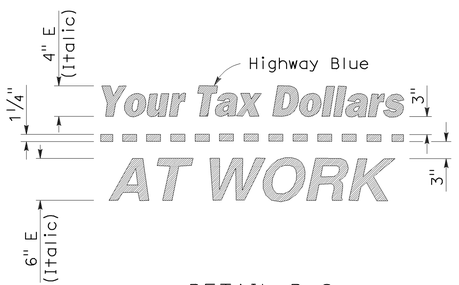

DETAIL B-2
(See Note 3)

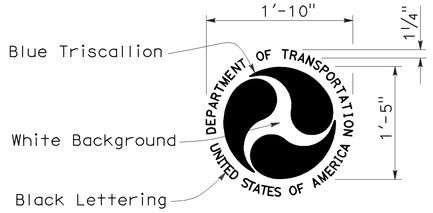

DETAIL D-2
(See Note 6)

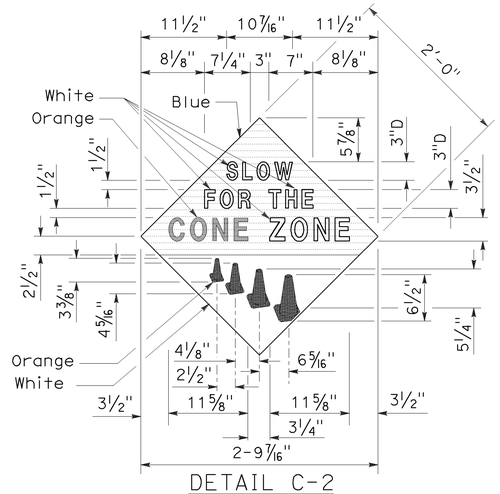

DETAIL C-2
(See Note 4)

STATE OF CALIFORNIA
DEPARTMENT OF TRANSPORTATION

CONSTRUCTION PROJECT FUNDING IDENTIFICATION SIGNS

NO SCALE

RSP T7 DATED NOVEMBER 17, 2006 SUPERSEDES STANDARD PLAN T7
DATED MAY 1, 2006 - PAGE 217 OF THE STANDARD PLANS BOOK DATED MAY 2006.

REVISED STANDARD PLAN RSP T7

DIST	COUNTY	ROUTE	POST MILES TOTAL PROJECT	SHEET NO.	TOTAL SHEETS
04	SF	101	8.2/9.2	387	654

Greg W. Edwards
REGISTERED CIVIL ENGINEER

November 17, 2006
PLANS APPROVAL DATE

REGISTERED PROFESSIONAL ENGINEER — Greg W. Edwards — No. C36386 — Exp. 6-30-08 CIVIL — STATE OF CALIFORNIA

The State of California or its officers or agents shall not be responsible for the accuracy or completeness of electronic copies of this plan sheet.

To accompany plans dated 12-14-09

2006 REVISED STANDARD PLAN RSP T7

9-7-06

DIST	COUNTY	ROUTE	POST MILES TOTAL PROJECT	SHEET NO.	TOTAL SHEETS
04	SF	101	8.2/9.2	388	654

Robert B Schott
LICENSED LANDSCAPE ARCHITECT

April 3, 2009
PLANS APPROVAL DATE

The State of California or its officers or agents shall not be responsible for the accuracy or completeness of electronic copies of this plan sheet.

LICENSED LANDSCAPE ARCHITECT — Robert B. Schott 3835 — 11-30-10 Renewal Date — 2-25-09 Date — STATE OF CALIFORNIA

To accompany plans dated 12-14-09

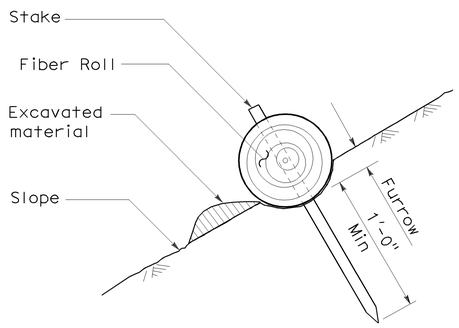

SECTION

TEMPORARY FIBER ROLL (TYPE 1)

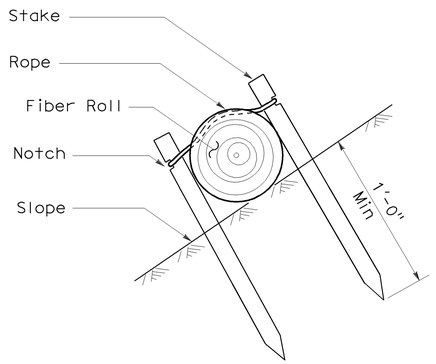

SECTION

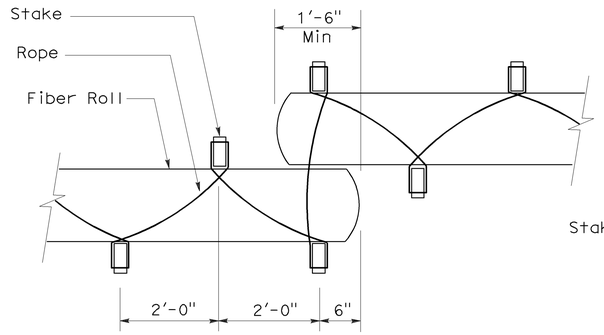

PLAN

TEMPORARY FIBER ROLL (TYPE 2)

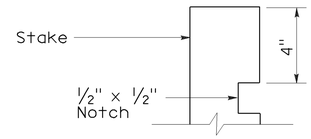

ELEVATION

STAKE NOTCH DETAIL

NOTES:

1. Temporary fiber roll spacing varies depending upon slope inclination.
2. Installations shown in the perspectives are for slope inclination of 10:1 and steeper.

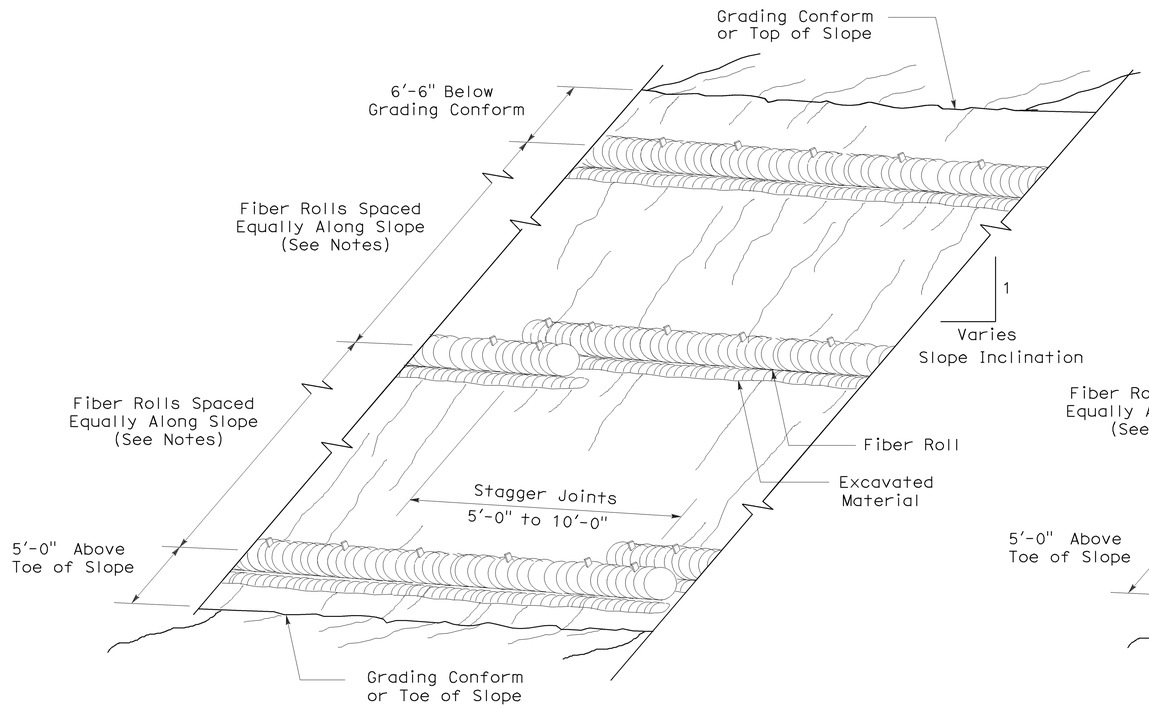

PERSPECTIVE

TEMPORARY FIBER ROLL (TYPE 1)

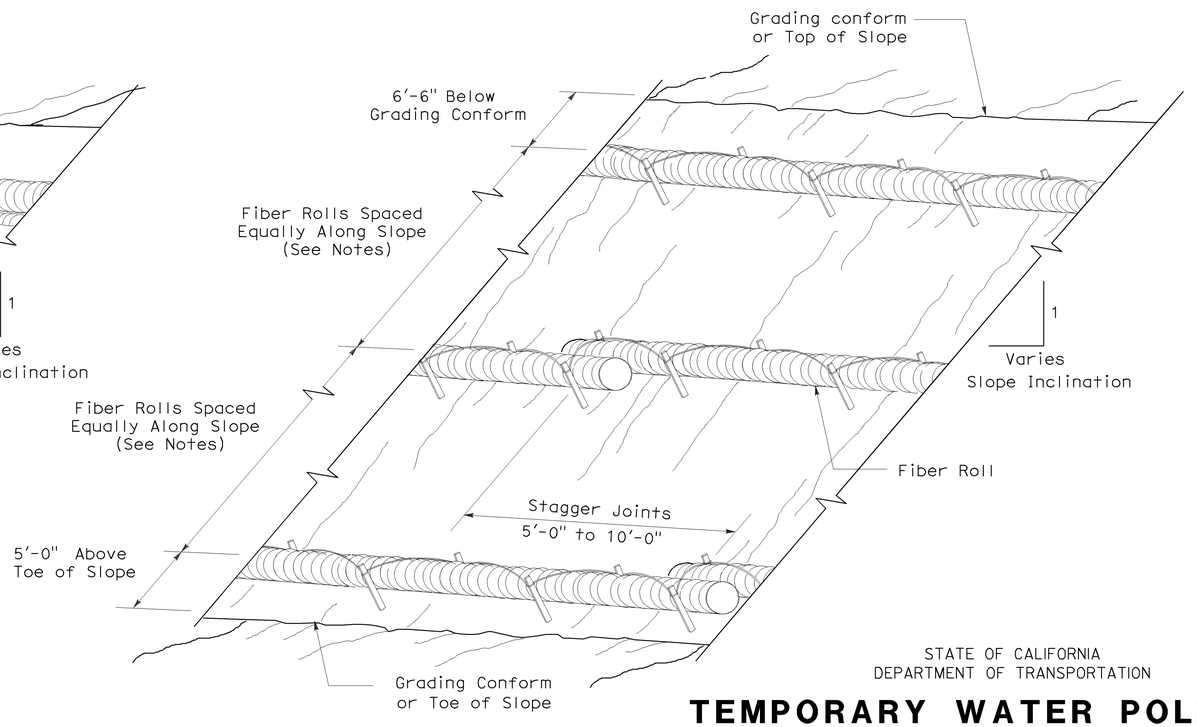

PERSPECTIVE

TEMPORARY FIBER ROLL (TYPE 2)

STATE OF CALIFORNIA
DEPARTMENT OF TRANSPORTATION

TEMPORARY WATER POLLUTION CONTROL DETAILS (TEMPORARY FIBER ROLL)

NO SCALE

RSP T56 DATED APRIL 3, 2009 SUPERSEDES STANDARD PLAN T56
DATED MAY 1, 2006 - PAGE 232 OF THE STANDARD PLANS BOOK DATED MAY 2006.

REVISED STANDARD PLAN RSP T56

2006 REVISED STANDARD PLAN RSP T56

2-23-09

DIST	COUNTY	ROUTE	POST MILES TOTAL PROJECT	SHEET NO.	TOTAL SHEETS
04	SF	101	8.2/9.2	389	654

Robert B Schott
LICENSED LANDSCAPE ARCHITECT

April 3, 2009
PLANS APPROVAL DATE

The State of California or its officers or agents shall not be responsible for the accuracy or completeness of electronic copies of this plan sheet.

LICENSED LANDSCAPE ARCHITECT — Robert B. Schott 3035 — Signature — 11-30-10 Renewal Date — 2-25-09 Date — STATE OF CALIFORNIA

To accompany plans dated 12-14-09

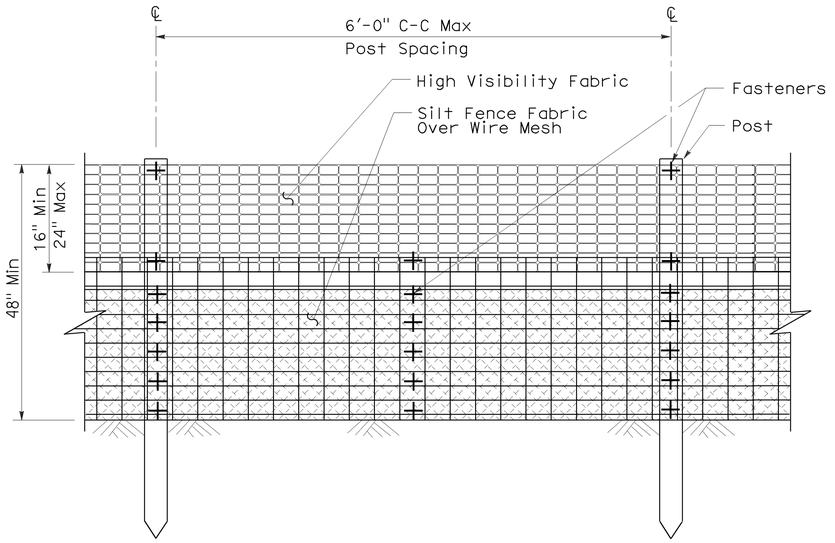

ELEVATION

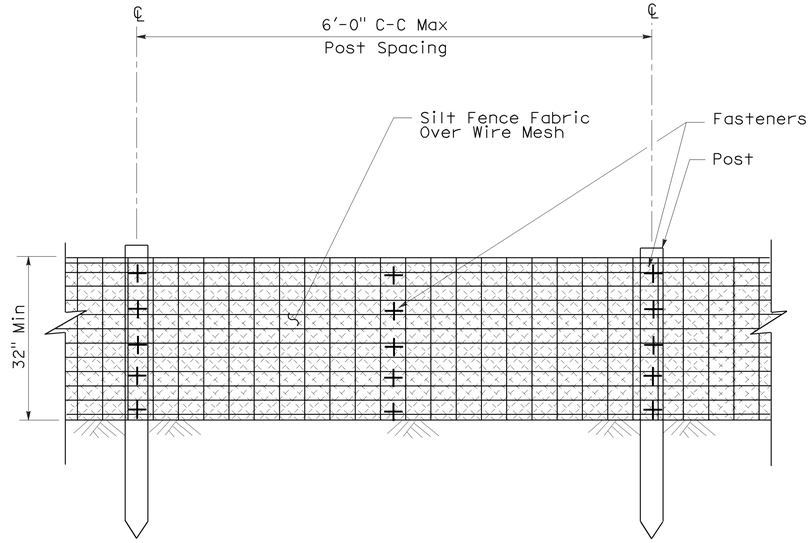

ELEVATION

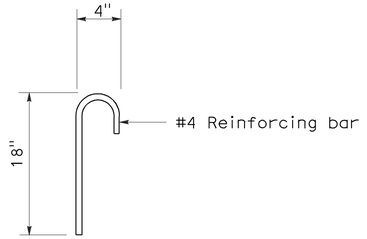

ANCHOR

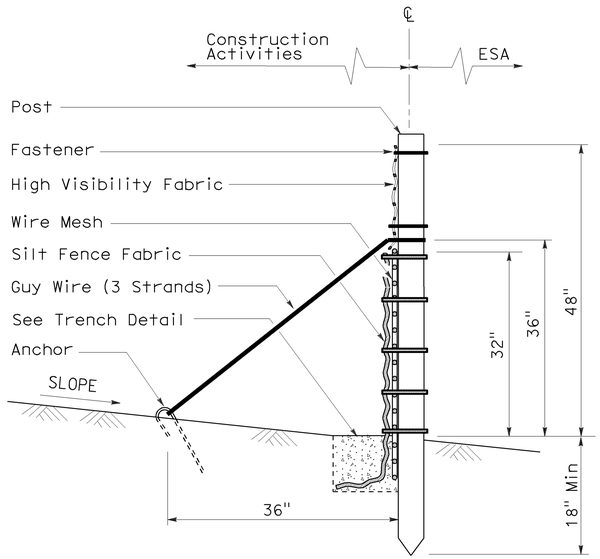

SECTION

TEMPORARY REINFORCED SILT FENCE (TYPE 1)

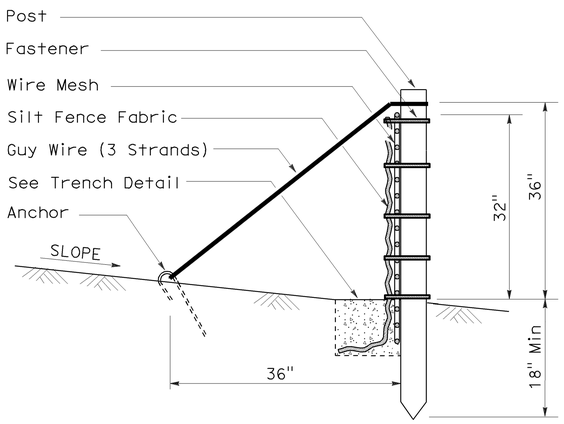

SECTION

TEMPORARY REINFORCED SILT FENCE (TYPE 2)

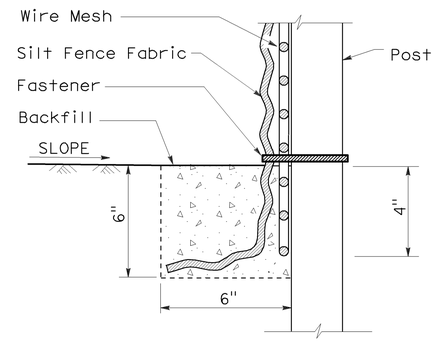

SECTION

TRENCH DETAIL

STATE OF CALIFORNIA
DEPARTMENT OF TRANSPORTATION

TEMPORARY WATER POLLUTION CONTROL DETAILS (TEMPORARY REINFORCED SILT FENCE)

NO SCALE

NSP T60 DATED APRIL 3, 2009 SUPPLEMENTS
THE STANDARD PLANS BOOK DATED MAY 2006.

NEW STANDARD PLAN NSP T60

2006 NEW STANDARD PLAN NSP T60

1-7-09

DIST	COUNTY	ROUTE	POST MILES TOTAL PROJECT	SHEET NO.	TOTAL SHEETS
04	SF	101	8.2/9.2	390	654

Robert B Schott
LICENSED LANDSCAPE ARCHITECT

August 15, 2008
PLANS Approval DATE

The State of California or its officers or agents shall not be responsible for the accuracy or completeness of electronic copies of this plan sheet.

LICENSED LANDSCAPE ARCHITECT — Robert B. Schott 3825 — Signature — 11-04-08 Renewal Date — 08-11-08 Date — STATE OF CALIFORNIA

To accompany plans dated 12-14-09

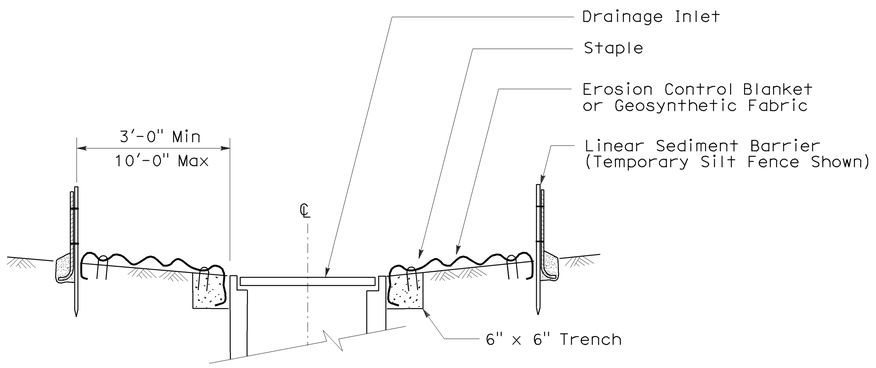

SECTION A-A

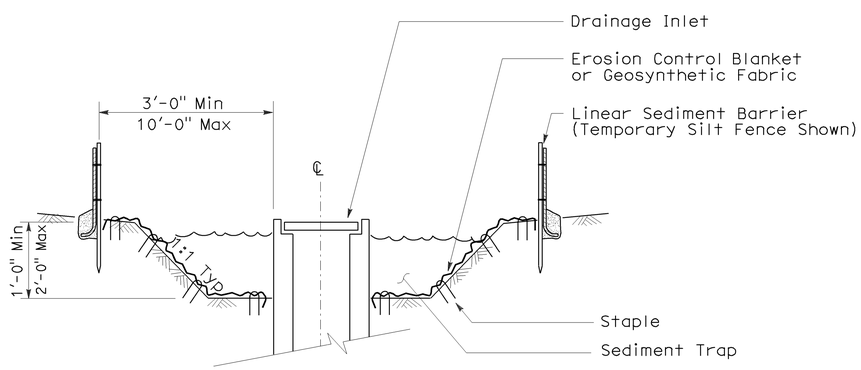

SECTION B-B

NOTES:

1. See Standard Plan T51 for Temporary Silt Fence.
2. Dimensions may vary to fit field conditions.

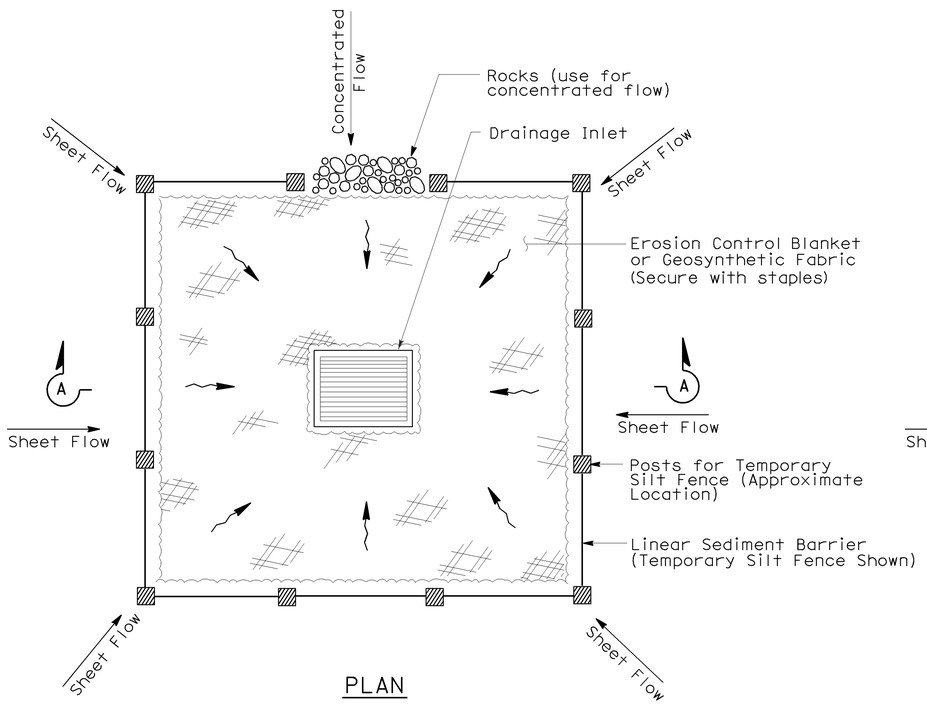

PLAN

TEMPORARY DRAINAGE INLET PROTECTION (TYPE 1)

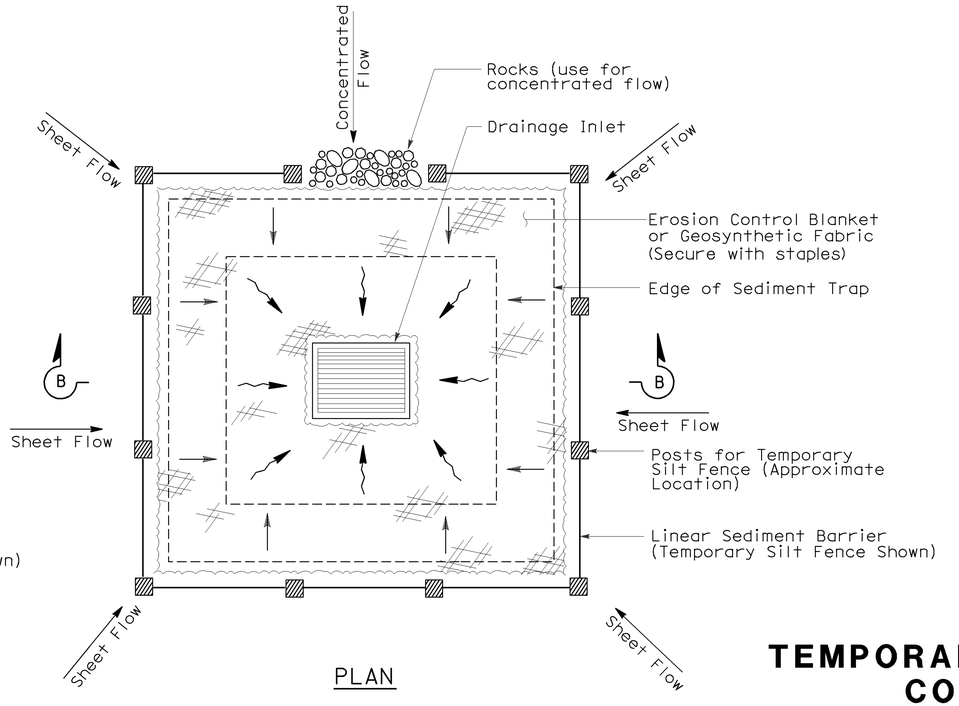

PLAN

TEMPORARY DRAINAGE INLET PROTECTION (TYPE 2) (EXCAVATED SEDIMENT TRAP)

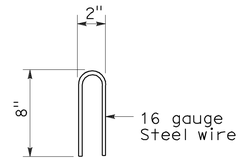

STAPLE DETAIL

STATE OF CALIFORNIA
DEPARTMENT OF TRANSPORTATION

TEMPORARY WATER POLLUTION CONTROL DETAILS (TEMPORARY DRAINAGE INLET PROTECTION)

NO SCALE

NSP T61 DATED AUGUST 15, 2008 SUPPLEMENTS THE STANDARD PLANS BOOK DATED MAY 2006.

NEW STANDARD PLAN NSP T61

2006 NEW STANDARD PLAN NSP T61

7-11-08

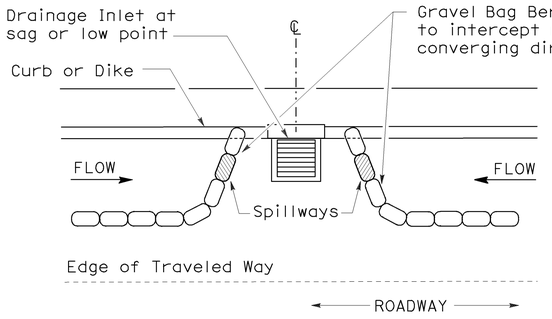

PLAN

CONFIGURATION FOR SAG POINT INLET (GRAVEL BAG BERM)

GRAVEL BAG BERM (TYPE 3A) SPACING TABLE

SLOPE OF ROADWAY (PERCENT)	1 to 3.9	4 to 5.9	6 to 7.9	8 to 10	10+
INTERVAL BETWEEN BERM	100′	75′	50′	25′	12′

For slope of less than 1%, install barriers only if erosion/sediment is prevalent

DIST	COUNTY	ROUTE	POST MILES TOTAL PROJECT	SHEET NO.	TOTAL SHEETS
04	SF	101	8.2/9.2	391	654

Robert B Schott
LICENSED LANDSCAPE ARCHITECT

August 15, 2008
PLANS APPROVAL DATE

LICENSED LANDSCAPE ARCHITECT Robert B. Schott 3825 Signature 11-04-08 Renewal Date 08-11-08 Date STATE OF CALIFORNIA

The State of California or its officers or agents shall not be responsible for the accuracy or completeness of electronic copies of this plan sheet.

To accompany plans dated 12-14-09

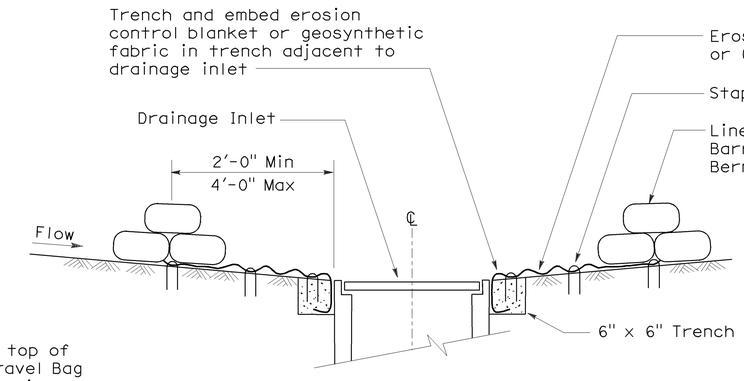

SECTION A-A

NOTES:

1. Place safety cones adjacent to drainage inlet protection.
2. Dimensions may vary to fit field conditions.
3. Install a minimum of 3 gravel bag berms upstream of each drainage inlet to be protected.
4. Position erosion control blanket or geosynthetic fabric at edge of concrete apron and secure in trench.
5. Erosion control blanket or geosynthetic fabric is not required if the area adjacent to the drainage inlet is vegetated or paved.

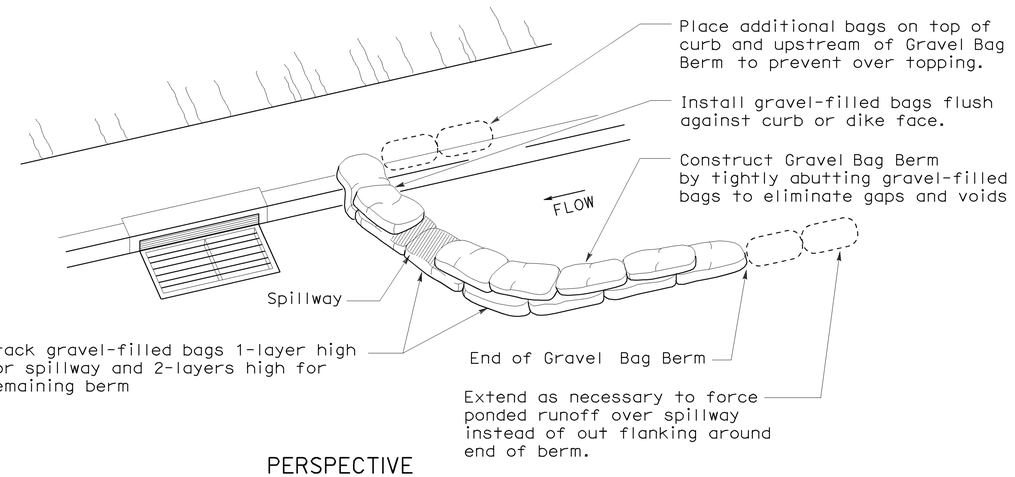

PERSPECTIVE

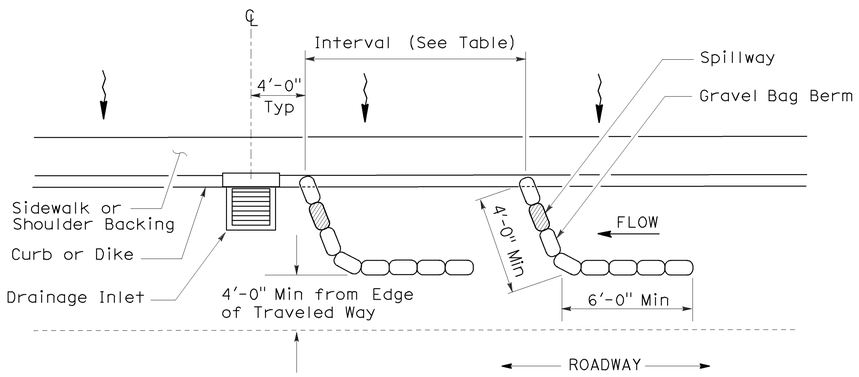

PLAN

TEMPORARY DRAINAGE INLET PROTECTION (TYPE 3A) (GRAVEL BAG BERM)

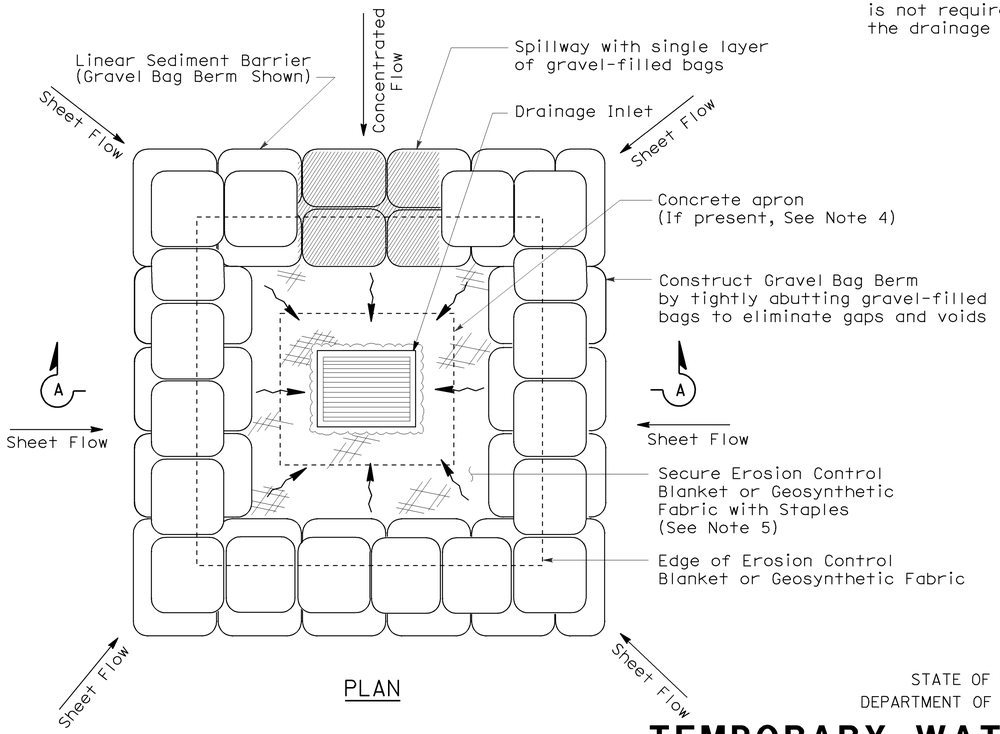

PLAN

TEMPORARY DRAINAGE INLET PROTECTION (TYPE 3B)

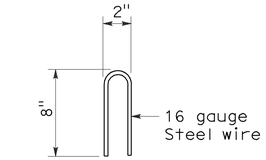

STAPLE DETAIL

STATE OF CALIFORNIA
DEPARTMENT OF TRANSPORTATION

TEMPORARY WATER POLLUTION CONTROL DETAILS (TEMPORARY DRAINAGE INLET PROTECTION)

NO SCALE

NSP T62 DATED AUGUST 15, 2008 SUPPLEMENTS THE STANDARD PLANS BOOK DATED MAY 2006.

NEW STANDARD PLAN NSP T62

2006 NEW STANDARD PLAN NSP T62

7-11-08

DIST	COUNTY	ROUTE	POST MILES TOTAL PROJECT	SHEET NO.	TOTAL SHEETS
04	SF	101	8.2/9.2	392	654

Robert B Schott
LICENSED LANDSCAPE ARCHITECT

August 15, 2008
PLANS APPROVAL DATE

LICENSED LANDSCAPE ARCHITECT — Robert B. Schott 3825 — Signature — 11-04-08 Renewal Date — 08-11-08 Date — STATE OF CALIFORNIA

The State of California or its officers or agents shall not be responsible for the accuracy or completeness of electronic copies of this plan sheet.

To accompany plans dated 12-14-09

FLEXIBLE SEDIMENT BARRIER SPACING TABLE

SLOPE OF ROADWAY (PERCENT)	0 to 0.9	1 to 1.9	2 to 2.9	3 to 4	5+
INTERVAL BETWEEN BARRIERS	50′	35′	30′	25′	20′
ANGLE FROM FACE OF CURB	70°	70°	70°	45°	45°
SUGGESTED BARRIER LENGTH	6′	6′	6′	6′	6′

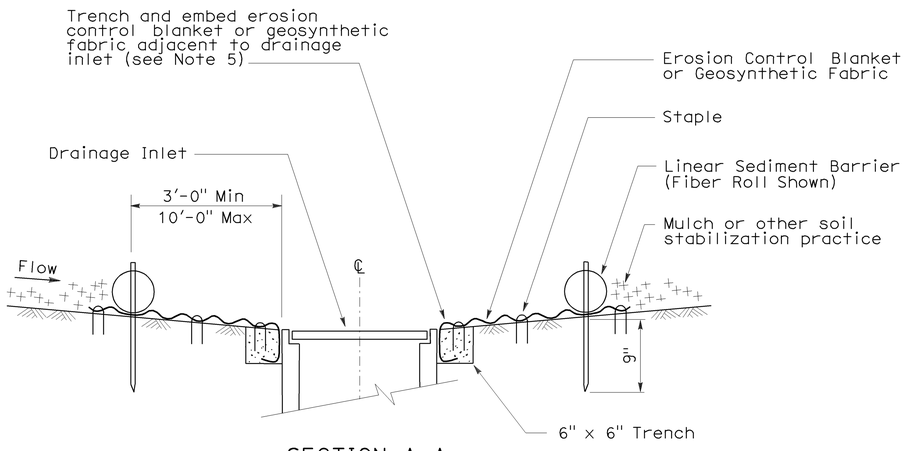

SECTION A-A

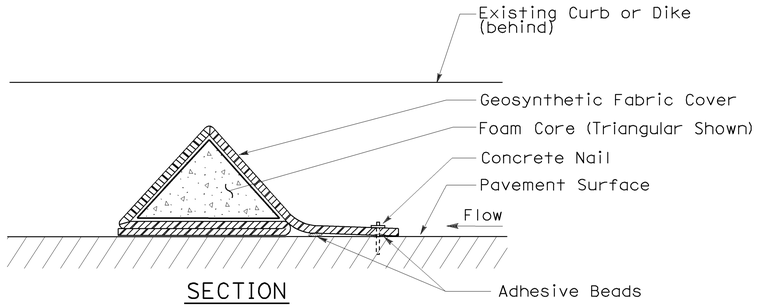

SECTION

FLEXIBLE SEDIMENT BARRIER DETAIL (FOAM BARRIER SHOWN)

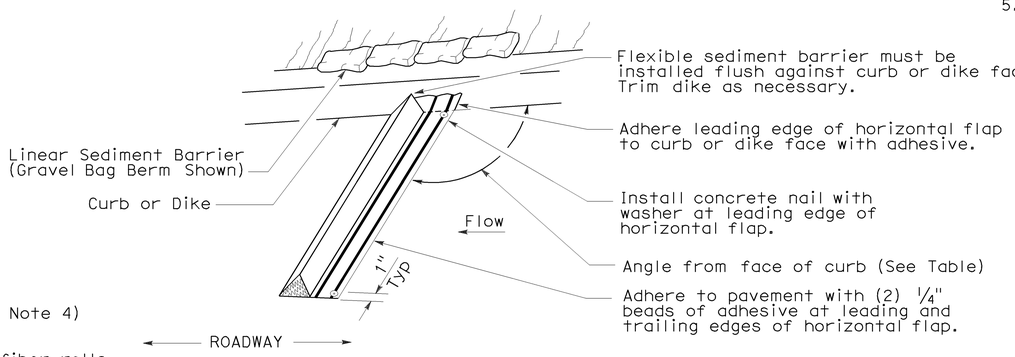

PERSPECTIVE

NOTES:

1. See Standard Plan T51 for Temporary Silt Fence.
2. Dimensions may vary to fit field conditions.
3. Install a minimum of 3 flexible sediment barriers upstream of each drainage inlet to be protected.
4. Position erosion control blanket or geosynthetic fabric at edge of concrete apron and secure in trench.
5. Erosion control blanket or geosynthetic fabric is not required if the area adjacent to the drainage inlet is vegetated.

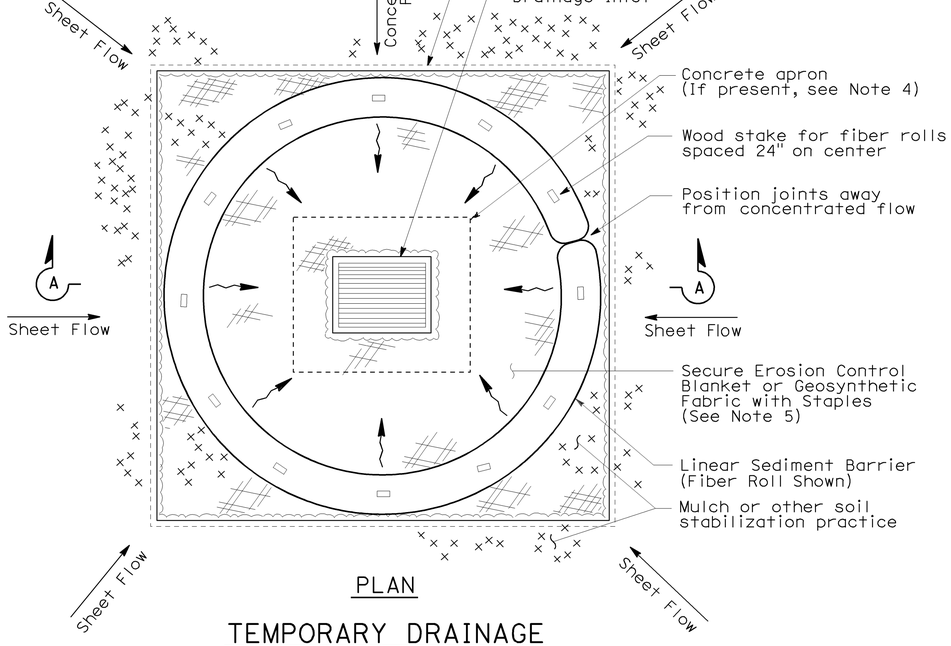

PLAN

TEMPORARY DRAINAGE INLET PROTECTION (TYPE 4A)

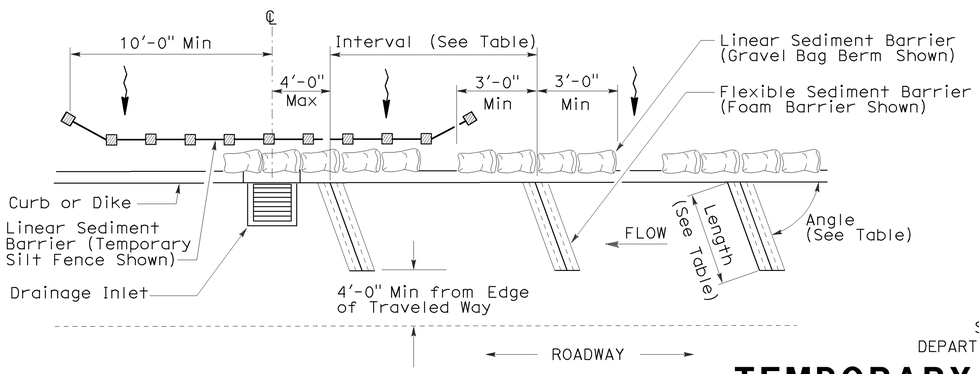

PLAN

TEMPORARY DRAINAGE INLET PROTECTION (TYPE 4B) FLEXIBLE SEDIMENT BARRIER

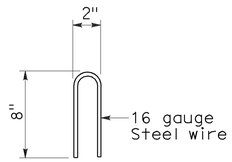

STAPLE DETAIL

STATE OF CALIFORNIA
DEPARTMENT OF TRANSPORTATION

TEMPORARY WATER POLLUTION CONTROL DETAILS (TEMPORARY DRAINAGE INLET PROTECTION)

NO SCALE

NSP T63 DATED AUGUST 15, 2008 SUPPLEMENTS THE STANDARD PLANS BOOK DATED MAY 2006.

NEW STANDARD PLAN NSP T63

2006 NEW STANDARD PLAN NSP T63

7-11-08

DIST	COUNTY	ROUTE	POST MILES TOTAL PROJECT	SHEET NO.	TOTAL SHEETS
04	SF	101	8.2/9.2	393	654

Robert B Schott
LICENSED LANDSCAPE ARCHITECT

August 15, 2008
PLANS APPROVAL DATE

LICENSED LANDSCAPE ARCHITECT — Robert B. Schott 3835 — Signature — 11-04-08 Renewal Date — 08-11-08 Date — STATE OF CALIFORNIA

The State of California or its officers or agents shall not be responsible for the accuracy or completeness of electronic copies of this plan sheet.

To accompany plans dated 12-14-09

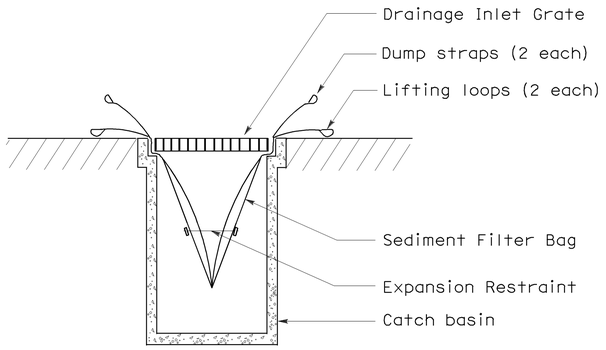

SECTION B-B

SEDIMENT FILTER BAG DETAIL

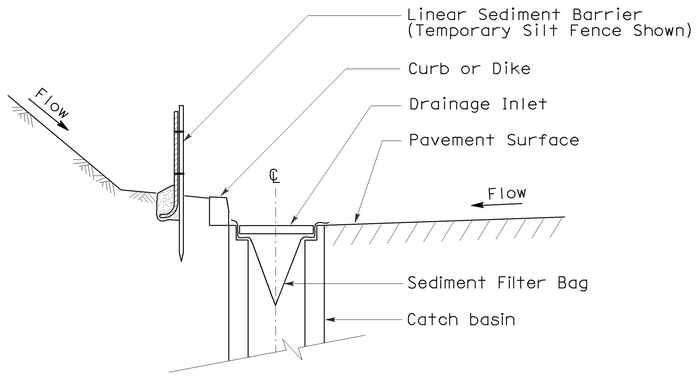

SECTION A-A

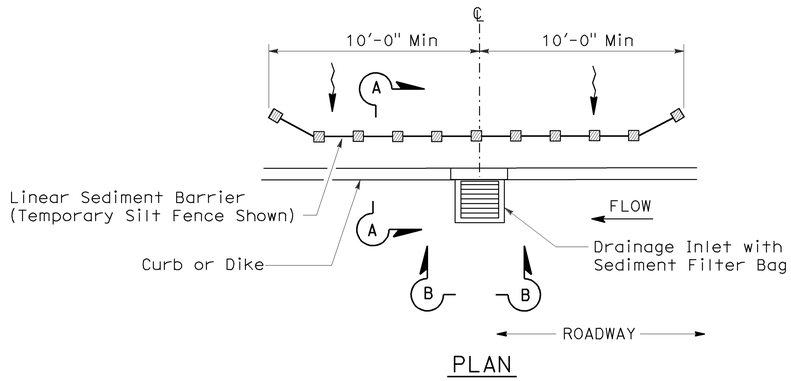

PLAN

TEMPORARY DRAINAGE INLET PROTECTION (TYPE 5) (SEDIMENT FILTER BAG)

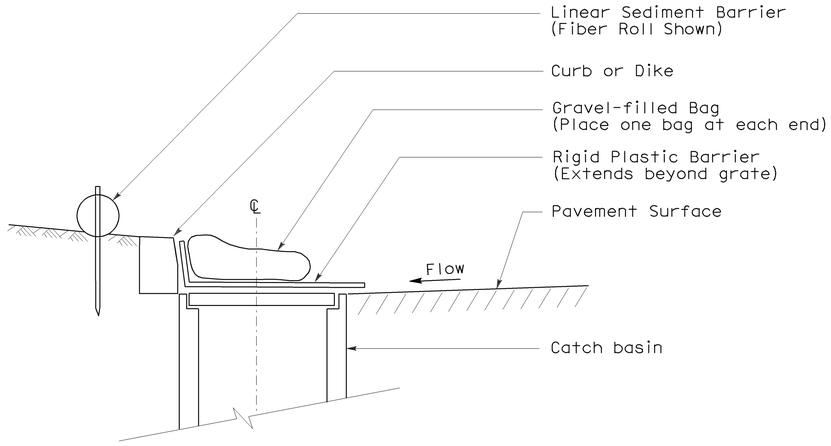

SECTION

TEMPORARY DRAINAGE INLET PROTECTION (TYPE 6A) (CATCH BASIN WITH GRATE)

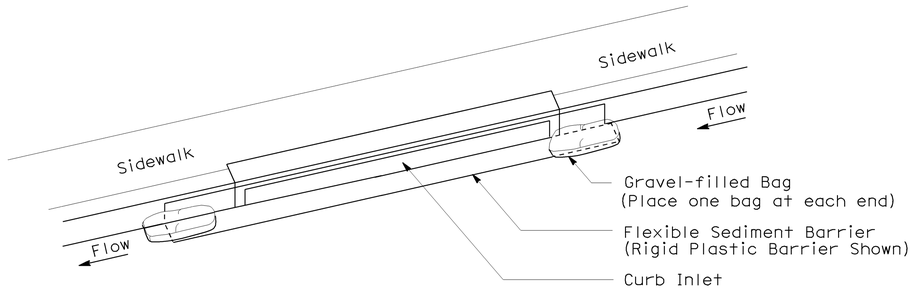

PERSPECTIVE

TEMPORARY DRAINAGE INLET PROTECTION (TYPE 6B) (CURB INLET WITHOUT GRATE)

NOTES:

1. See Standard Plan T51 for Temporary Silt Fence.
2. Dimensions may vary to fit field conditions.

STATE OF CALIFORNIA
DEPARTMENT OF TRANSPORTATION

TEMPORARY WATER POLLUTION CONTROL DETAILS (TEMPORARY DRAINAGE INLET PROTECTION)

NO SCALE

NSP T64 DATED AUGUST 15, 2008 SUPPLEMENTS THE STANDARD PLANS BOOK DATED MAY 2006.

NEW STANDARD PLAN NSP T64

2006 NEW STANDARD PLAN NSP T64

7-11-08

DIST	COUNTY	ROUTE	POST MILES TOTAL PROJECT	SHEET NO.	TOTAL SHEETS
04	SF	101	8.2/9.2	394	654

Robert B Schott
LICENSED LANDSCAPE ARCHITECT

April 3, 2009
PLANS APPROVAL DATE

LICENSED LANDSCAPE ARCHITECT — Robert B. Schott 3625 — Signature — 11-30-10 Renewal Date — 2-25-09 Date — STATE OF CALIFORNIA

The State of California or its officers or agents shall not be responsible for the accuracy or completeness of electronic copies of this plan sheet.

To accompany plans dated 12-14-09

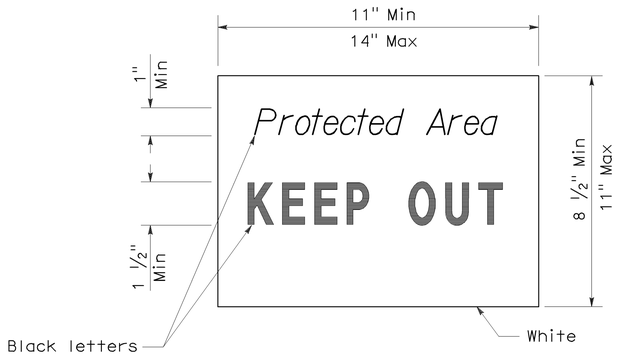

SIGN DETAIL

NOTE:

1. Temporary silt fence and temporary straw bale barrier shown for reference purposes only.

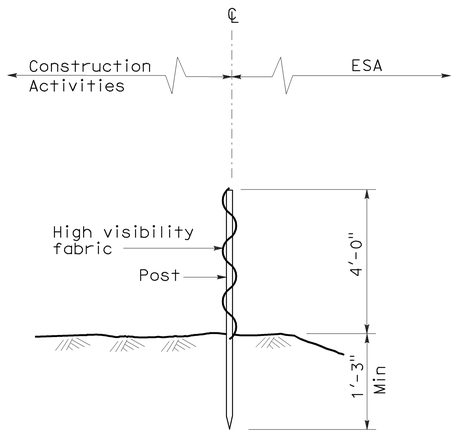

SECTION
TEMPORARY FENCE (TYPE ESA)

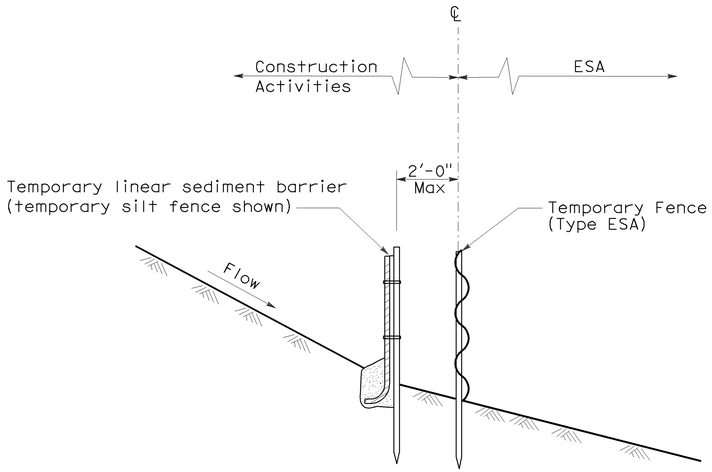

SECTION
PLACEMENT DETAIL
FOR TEMPORARY LINEAR SEDIMENT BARRIER
USED WITH TEMPORARY
FENCE (TYPE ESA)
(See Note 1)

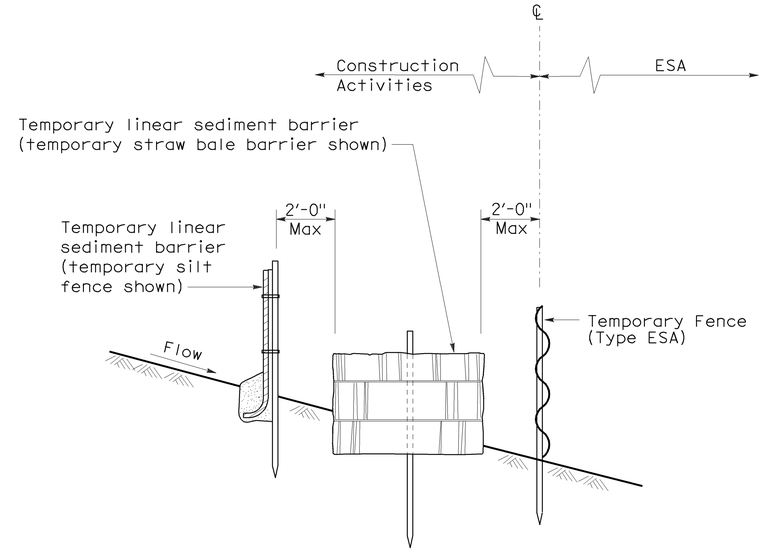

SECTION
PLACEMENT DETAIL
FOR TEMPORARY SILT FENCE
AND TEMPORARY STRAW BALE BARRIER
USED WITH TEMPORARY FENCE (TYPE ESA)
(See Note 1)

STATE OF CALIFORNIA
DEPARTMENT OF TRANSPORTATION

TEMPORARY WATER POLLUTION CONTROL DETAILS [TEMPORARY FENCE (TYPE ESA)]

NO SCALE

NSP T65 DATED APRIL 3, 2009 SUPPLEMENTS
THE STANDARD PLANS BOOK DATED MAY 2006.

NEW STANDARD PLAN NSP T65

2006 NEW STANDARD PLAN NSP T65

1-7-09

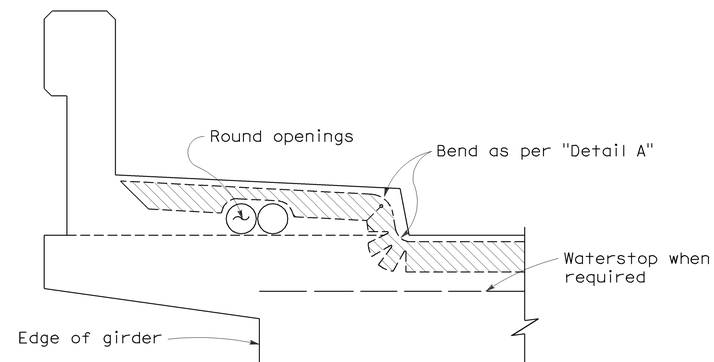

NOTE:

Type "B" seal shown. Type "A" seals to comform to the general path of seal shown, cuts for bending not required. Bend Type "A" seals 3" up into curb or barrier rail on only the low end of the seal.

CONCRETE BARRIER AND SIDEWALK

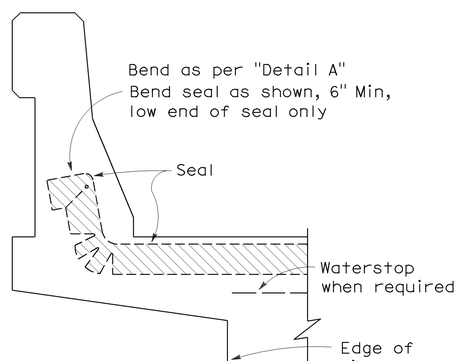

CONCRETE BARRIER

JOINT SEALS DETAILS

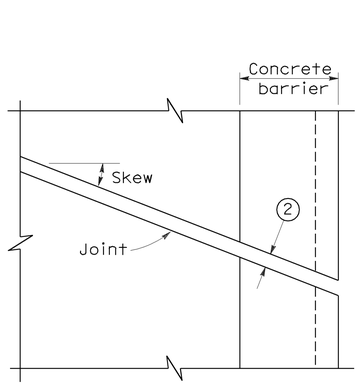

PLAN OF JOINT (SKEW ≤ 20°)

Min ℄ radius to be 4 times uncompressed width of seal or as recommended by the manufacturer, whichever is greater

In lieu of saw cutting, this area may be blocked out and reconstructed to match saw cutting on both sides.

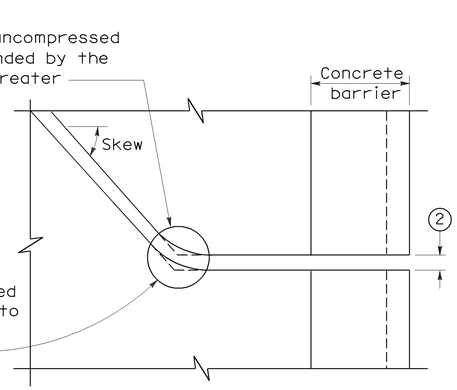

PLAN OF JOINT (SKEW > 20°)

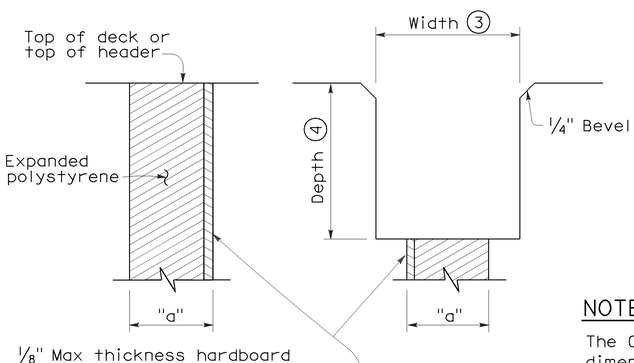

FORMING DETAIL SAWCUT DETAIL

NOTE:

The Contractor shall verify all controlling field dimensions before ordering or fabricatiing any material.

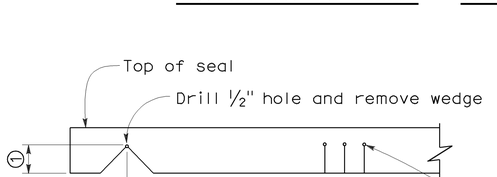

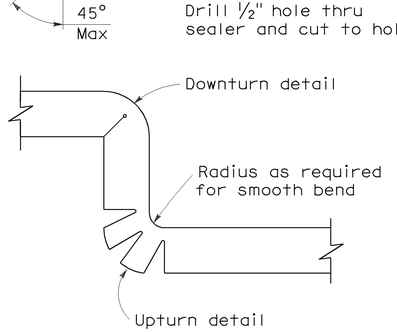

DETAIL A

NOTES:

1. Make smooth cuts from the bottom of seal to 1½" clear of top leaving at least one complete cell between the top of the cut and top of the seal. When necessary cut back of seal to clear conduit and round openings.
2. Opening in barrier to match width of sawn deck joint.
3. Sawcut groove widths shall be as ordered by the Engineer.
4. Depth of sawcut: Type A - Depth to be 2" minimum.
   Type B - Depth to be equal to or greater than the depth of seal measured along the contact surface, when compressed to minimum width position (W_2) plus dimensions shown.
5. MR (movement rating) as shown on other plan sheets.
6. Other depths must be approved by the Engineer.

DIMENSIONS "a" OF JOINT REQUIRED

Movement Rating (MR) (5)	Bridge Type	"a" Dimension Deck Concrete Placed		
		Winter	Fall-Spring	Summer
2"	All except CIP/PS	1½"	1¼"	¾"
	CIP/PS	1¼"	1"	½"
1½"	All except CIP/PS	1¼"	1"	½"
	CIP/PS	1"	¾"	½"
1"	All except CIP/PS	1"	¾"	½"
	CIP/PS	¾"	½"	½"
½"	All except CIP/PS	¾"	¾"	½"
	CIP/PS	½"	½"	½"

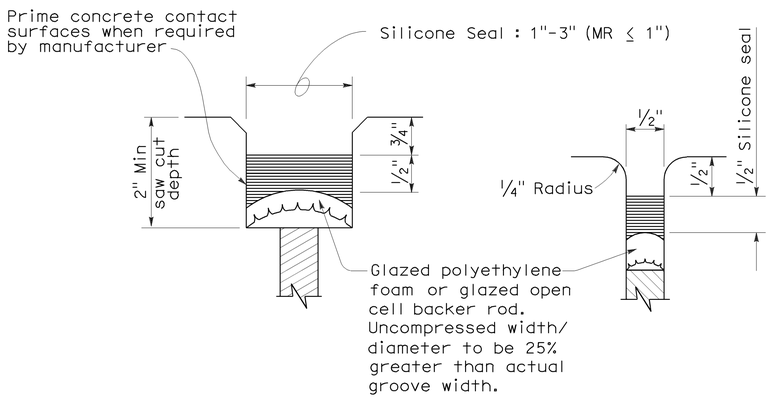

TYPE A SEAL

Movement rating : Silicone = 1" Max

TYPE AL SEAL

Longitudinal joints only

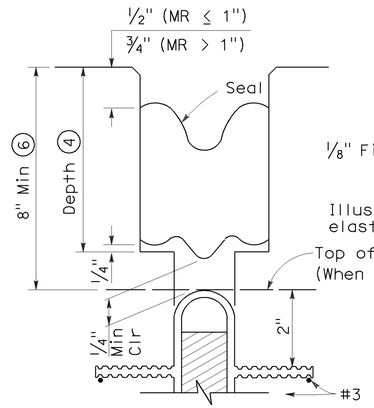

TYPE B JOINT SEAL
IN MINIMUM WIDTH POSITION (W_2)

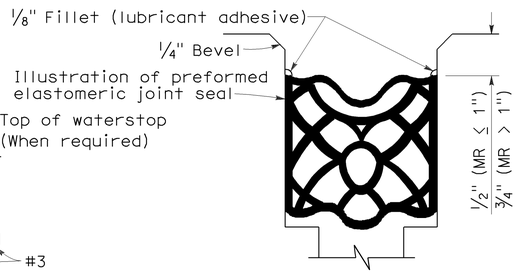

TYPE B SEAL

Movement Rating ≤ 2"

DIST	COUNTY	ROUTE	POST MILES TOTAL PROJECT	SHEET NO.	TOTAL SHEETS
04	SF	101	8.2/9.2	395	654

REGISTERED CIVIL ENGINEER

Efthymios Delis
No. C51434
Exp. 6-30-08
CIVIL
REGISTERED PROFESSIONAL ENGINEER
STATE OF CALIFORNIA

October 5, 2007
PLANS APPROVAL DATE

The State of California or its officers or agents shall not be responsible for the accuracy or completeness of electronic copies of this plan sheet.

To accompany plans dated 12-14-09

STATE OF CALIFORNIA
DEPARTMENT OF TRANSPORTATION

JOINT SEALS (MAXIMUM MOVEMENT RATING = 2")

NO SCALE

RSP B6-21 DATED OCTOBER 5, 2007 SUPERSEDES STANDARD PLAN B6-21 DATED MAY 1, 2006 - PAGE 258 OF THE STANDARD PLANS BOOK DATED MAY 2006.

REVISED STANDARD PLAN RSP B6-21

2006 REVISED STANDARD PLAN RSP B6-21

5-8-07

DIST	COUNTY	ROUTE	POST MILES TOTAL PROJECT	SHEET NO.	TOTAL SHEETS
04	SF	101	8.2/9.2	396	654

REGISTERED CIVIL ENGINEER

June 30, 2006
PLANS APPROVAL DATE

REGISTERED PROFESSIONAL ENGINEER
Tillat Satter
No. C42892
Exp. 03-31-08
CIVIL
STATE OF CALIFORNIA

The State of California or its officers or agents shall not be responsible for the accuracy or completeness of electronic copies of this plan sheet.

To accompany plans dated 12-14-09

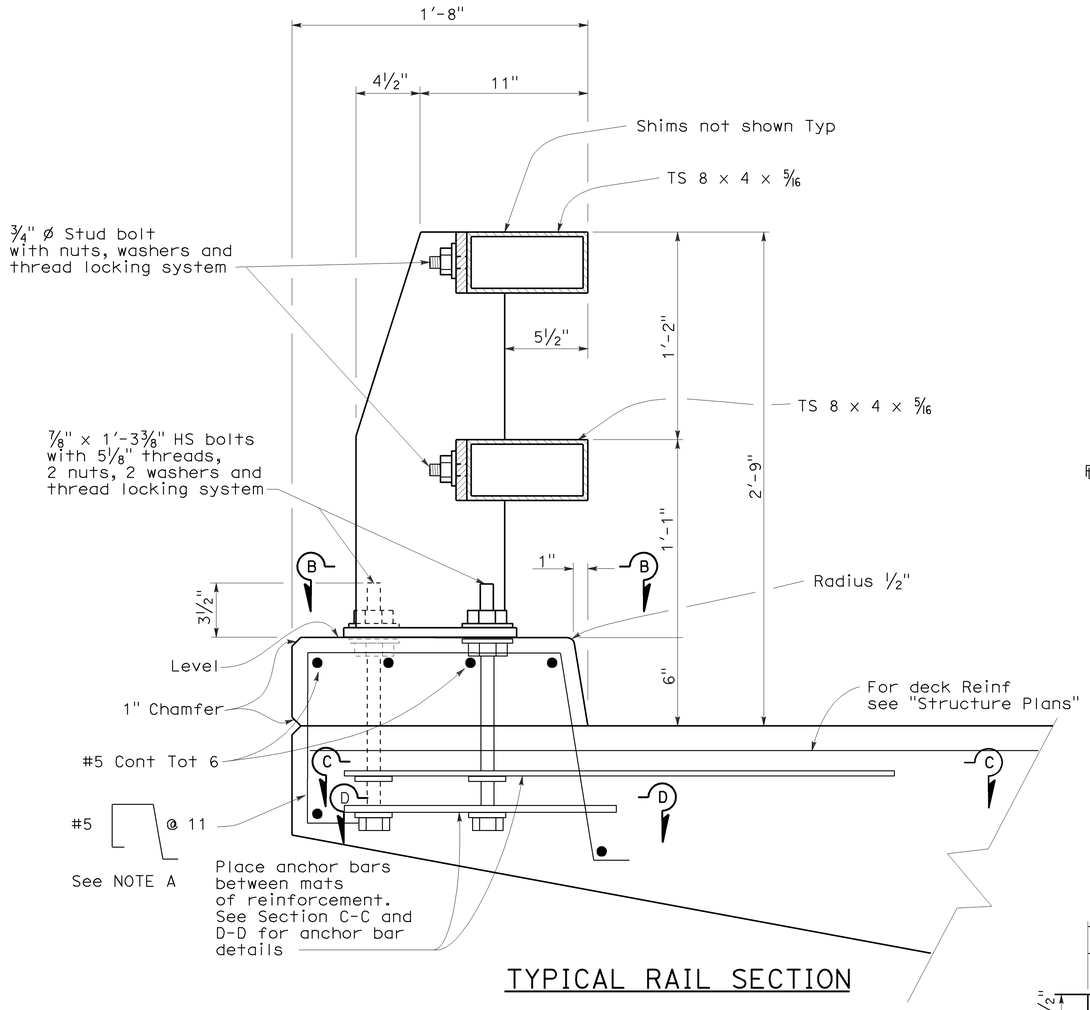

TYPICAL RAIL SECTION

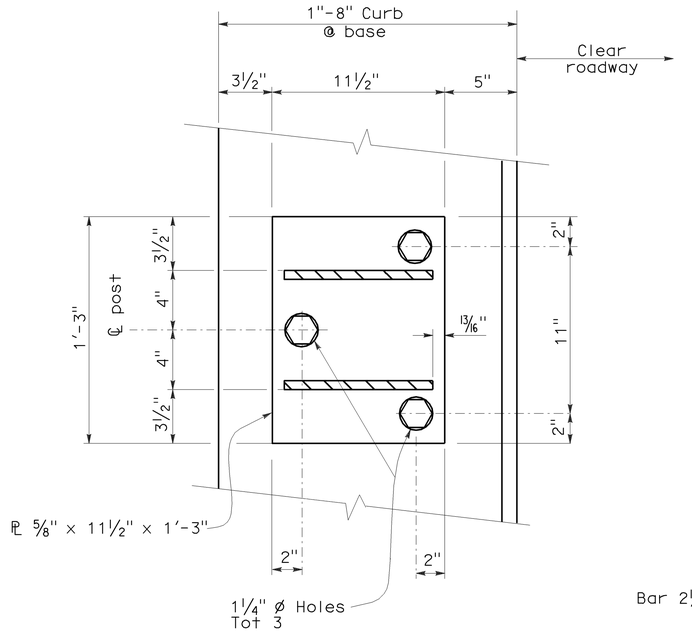

SECTION B-B

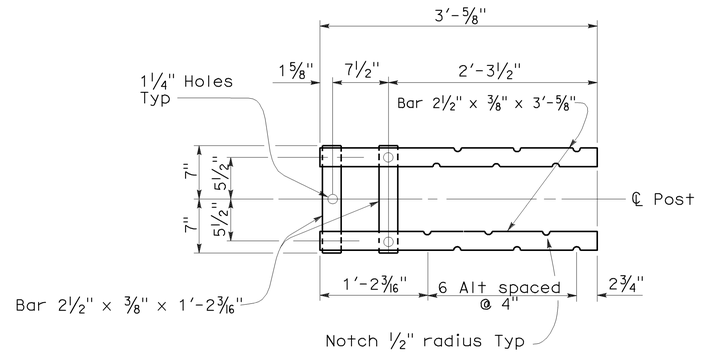

SECTION C-C
Top Anchorage

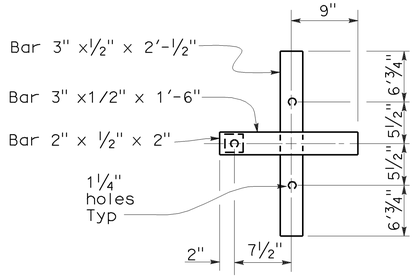

SECTION D-D
Lower Anchorage

NOTE A

Adjust spacing to clear scupper opening by 2" if applicable.

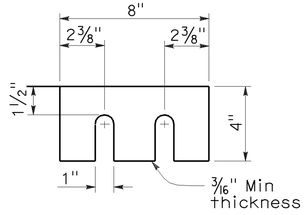

SHIMS REQUIRED FOR TOP AND BOTTOM RAIL

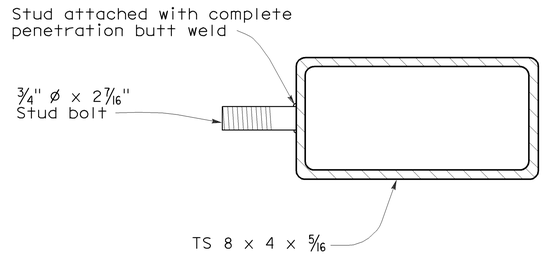

SECTION AT POST

STUD BOLT DETAIL

STATE OF CALIFORNIA
DEPARTMENT OF TRANSPORTATION

CALIFORNIA ST-10 BRIDGE RAIL (SHEET 1 OF 3)

NO SCALE

RSP B11-68 DATED JUNE 30, 2006 SUPERSEDES STANDARD PLAN DATED MAY 1, 2006 - PAGE 284 OF THE STANDARD PLANS BOOK DATED MAY 2006.

REVISED STANDARD PLAN RSP B11-68

2006 REVISED STANDARD PLAN RSP B11-68

6-19-06

DIST	COUNTY	ROUTE	POST MILES TOTAL PROJECT	SHEET NO.	TOTAL SHEETS
04	SF	101	8.2/9.2	397	654

Jeffery G. McRae
REGISTERED ELECTRICAL ENGINEER

October 5, 2007
PLANS APPROVAL DATE

REGISTERED PROFESSIONAL ENGINEER — Jeffery G. McRae — No. E14512 — Exp. 6-30-08 — ELECTRICAL — STATE OF CALIFORNIA

The State of California or its officers or agents shall not be responsible for the accuracy or completeness of electronic copies of this plan sheet.

To accompany plans dated 12-14-09

ELECTROLIERS

STANDARD TYPES
15, 15D
15 STRUCTURE
21, 21D STRUCTURE
30
31
32
35
36-20A

High mast light pole

Double Arm lighting standard

Existing electrolier

Electrolier foundation (Future installation)

NOTES:

1. Luminaires shall be 310 W HPS when installed on Type 21, 21D, 30, 31, 32, 35 and 36-20A Standards, unless otherwise specified. Luminaires shall be 200 W HPS when installed on other type standards or poles, unless otherwise specified.
2. Luminaires shall be the cutoff type, ANSI Type III medium cutoff lighting distribution, unless otherwise specified.
3. Variations noted adjacent to symbol on project plans.

Electrolier (see project notes or project plans)

Luminaire on wood pole

STANDARD NOTES:

AB	Abandon. If applied to conduit, remove conductors.
BC	Install pull box in existing conduit run.
BP	Pedestrian barricade, type as indicated on plan.
CB	Install conduit into existing pull box.
CC	Connect new and existing conduit. Remove existing conductors and install conductors as indicated.
CF	Conduit to remain for future use. Remove conductors. Install pull wire or rope.
DH	Detector handhole.
FA	Foundation to be abandoned.
IS	Install sign on signal mast arm.
NS	No slip base on standard.
PEC	Photoelectric control.
PEU	Photoelectric unit.
RC	Equipment or material to be removed and become the property of the Contractor.
RE	Remove electrolier, fuses and ballast. Tape ends of conductors.
RL	Relocate equipment.
RR	Remove and reuse equipment.
RS	Remove and salvage equipment.
SC	Splice new to existing conductors.
SD	Service disconnect.
SF	Standard to remain for future use. Remove luminaire, pole conductors, fuses and ballast.
TSP	Telephone service point.

ABBREVIATIONS AND EQUIPMENT DESIGNATIONS

PROPOSED	EXISTING	
BBS	bbs	Battery backup system
BC	bc	Bolt circle
C	C	Conduit
CCTV	cctv	Closed circuit television
CKT	ckt	Circuit
CMS	cms	Changeable message sign
DLC	dlc	Loop detector lead-in cable
EMS	ems	Extinguishable message sign
EVC	evc	Emergency vehicle cable
EVD	evd	Emergency vehicle detector
FB	fb	Flashing beacon
FBCA	fbca	Flashing beacon control assembly
FBS	fbs	Flashing beacon with slip base
FO	fo	Fiber optic
G	G	Ground (Equipment Grounding Conductor)
GFCI	GFCI	Ground fault circuit interrupt
HAR	har	Highway advisory radio
HEX	hex	Hexagonal
HPS	hps	High pressure sodium
IISNS	iisns	Internally illuminated street name sign
ISL	isl	Induction sign lighting
LED	led	Light emitting diode
LMA	lma	Luminaire mast arm
LPS	lps	Low pressure sodium
LTG	ltg	Lighting
LUM	lum	Luminaire
MAT	mat	Mast arm mounting vehicle signal faces, top attachment
MAS	mas	Mast arm mounting vehicle signal faces, side attachment
MAS-4A	mas-4A	Mast arm mounting vehicle signal faces,
MAS-4B	mas-4B	side attachment - 4 signal section
MAS-4C	mas-4C	
MAS-5A	mas-5A	Mast arm mounting vehicle signal faces,
MAS-5B	mas-5B	side attachment - 5 signal section
MC	mc	Mercury contactor
M/M	m/m	Multiple to multiple transformer
MT	mt	Conduit with pull wire or rope only
MTG	mtg	Mounting
	mv	Mercury vapor lighting fixture
N	N	Neutral (Grounded Conductor)
NC	NC	Normally closed
NO	NO	Normally open
PB	pb	Pull box
PEC	pec	Photoelectric control (Type I, II, III, IV or V as shown)
PED	ped	Pedestrian
PEU	peu	Photoelectric unit
PPB	ppb	Pedestrian push button
RL		Relocated equipment
RM	rm	Ramp metering
SB	sb	Slip base
SIC	sic	Signal interconnect cable
SIG	sig	Signal
SMA	sma	Signal mast arm
SNS	sns	Street name sign
SP	sp	Service point
TDC	tdc	Telephone demarcation cabinet
TMS	tms	Traffic monitoring station
TOS	tos	Traffic Operations System
VEH	veh	Vehicle
XFMR	xfmr	Transformer
COMM	comm	Communication
RWIS	rwis	Roadway weather information system

SOFFIT AND WALL MOUNTED LUMINAIRES

Pendant, 70 W HPS unless otherwise specified.

Flush, 70 W HPS unless otherwise specified.

Wall surface, 70 W HPS unless otherwise specified.

Existing soffit or wall luminaire to remain unmodified.

Existing soffit or wall luminaire to be modified as specified.

NOTE:
Arrow indicates "street side" of luminaire.

STATE OF CALIFORNIA
DEPARTMENT OF TRANSPORTATION

ELECTRICAL SYSTEMS (SYMBOLS AND ABBREVIATIONS)

NO SCALE

RSP ES-1A DATED OCTOBER 5, 2007 SUPERSEDES STANDARD PLAN ES-1A
DATED MAY 1, 2006 - PAGE 400 OF THE STANDARD PLANS BOOK DATED MAY 2006.

REVISED STANDARD PLAN RSP ES-1A

2006 REVISED STANDARD PLAN RSP ES-1A

7-10-07

DIST	COUNTY	ROUTE	POST MILES TOTAL PROJECT	SHEET NO.	TOTAL SHEETS
04	SF	101	8.2/9.2	398	654

REGISTERED ELECTRICAL ENGINEER

October 5, 2007
PLANS APPROVAL DATE

REGISTERED PROFESSIONAL ENGINEER — Jeffery G. McRae — No. E14512 — Exp. 6-30-08 — ELECTRICAL — STATE OF CALIFORNIA

The State of California or its officers or agents shall not be responsible for the accuracy or completeness of electronic copies of this plan sheet.

To accompany plans dated 12-14-09

CONDUIT

PROPOSED	EXISTING	
— — —	— — —	Lighting Conduit, unless otherwise indicated or noted
— - — - —	— - — - —	Traffic signal conduit
—C— —	—c— —	Communication conduit
—T— —	—t— —	Telephone conduit
—F— —	—f— —	Fire alarm conduit
—FO— —	—fo— —	Fiber optic conduit
— — —]	— — —]	Conduit termination (RSP ES-9A C)
R	r	Conduit riser in/on structure or service pole

SERVICE EQUIPMENT

PROPOSED	EXISTING	
—OH—	—oh—	Overhead lines
U	U	Wood pole "U" indicates utility owned
		Pole guy with anchor
		Utility transformer - ground mounted
III		Service equipment enclosure type
		Service equipment enclosure door indicates front of enclosure
T	t	Telephone demarcation cabinet

POLE-MOUNTED SERVICE DESIGNATION

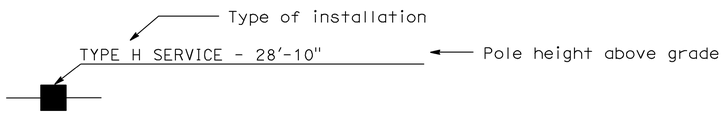

ILLUMINATED OVERHEAD SIGN

PROPOSED	EXISTING	
		Overhead sign - Single post
		Overhead sign - Two post
		Overhead sign - Mounted on structure
		Overhead sign with electrolier

SIGNAL EQUIPMENT

PROPOSED	EXISTING	
		Pedestrian signal face
		Pedestrian push button post
		Pedestrian barricade
		Vehicle signal face (with backplate, 3-Section: red, yellow and green)
		Vehicle signal face with angle visors
PV	PV	Modifications of basic symbols: "L" Indicates all non-arrow sections louvered "LG" Indicates louvered green section only "PV" Indicates 12" programmed visibility sections "8" indicates all 8" sections (only when specified)
		Type 15TS and Vehicle signal face
		Vehicle signal face with red, yellow and green left arrow sections
		Vehicle signal face with red and yellow sections and up green arrow
		Vehicle signal face (5 Section) with red, yellow and green sections and yellow and green right arrows
		Type 1 Standard and attached vehicle signal faces
		Standard with signal mast arm only and attached vehicle signal faces and internally illuminated street name sign
		Type 33 Standard, Left-turn vehicle signal face and sign
		Standard with luminaire and signal mast arms and attached vehicle signal faces
		Cantilever flashing beacon Type 9 Frame, with a sign unless otherwise specified or indicated
		Type 15-FBS Standard with two vehicle signal face sections with lens, backplate and visor with a sign
R	Y	Flashing beacon. One vehicle signal face section with lens, backplate and visor. "R" indicates red indication, "Y" indicates yellow indication
		Controller assembly. Door indicates front of cabinet

SIGNAL EQUIPMENT Cont

PROPOSED	EXISTING	
		Guard post
		Type 1 Standard with "Meter On" sign
		Emergency Vehicle detector

NOTES:

1. All signal sections shall be 12" unless shown otherwise.
2. Signal heads shall be provided with backplates unless shown otherwise.
3. Signal indication shall be LED.

STATE OF CALIFORNIA
DEPARTMENT OF TRANSPORTATION

ELECTRICAL SYSTEMS (SYMBOLS AND ABBREVIATIONS)

NO SCALE

RSP ES-1B DATED OCTOBER 5, 2007 SUPERCEDES STANDARD PLAN ES-1B
DATED MAY 1, 2006 - PAGE 401 OF THE STANDARD PLANS BOOK DATED MAY 2006.

REVISED STANDARD PLAN RSP ES-1B

2006 REVISED STANDARD PLAN RSP ES-1B

7-10-07

DIST	COUNTY	ROUTE	POST MILES TOTAL PROJECT	SHEET NO.	TOTAL SHEETS
04	SF	101	8.2/9.2	399	654

Jeffery G. McRae
REGISTERED ELECTRICAL ENGINEER

October 5, 2007
PLANS APPROVAL DATE

REGISTERED PROFESSIONAL ENGINEER — Jeffery G. McRae — No. E14512 — Exp. 6-30-08 — ELECTRICAL — STATE OF CALIFORNIA

The State of California or its officers or agents shall not be responsible for the accuracy or completeness of electronic copies of this plan sheet.

To accompany plans dated 12-14-09

EQUIPMENT IDENTIFICATION

ILLUMINATED SIGN IDENTIFICATION NUMBER:

Sign No. 12345
10 ISL SCI 1.0

- Sign number - Place on post or structure
- Transformer rating (kVA)
- Lighting control type
- Number and type of fixtures

Do NOT place on standard or structure

ELECTROLIER OR EQUIPMENT IDENTIFICATION NUMBER:

12345 - 15'-0"

- Mast arm length, if shown. Do not place on standard or structure.
- Equipment number - Place on standard or structure. Existing equipment numbers are shown in parenthesis

CONDUIT AND CONDUCTOR IDENTIFICATION:

1½"C, 2#10, 15#14, 2 DLC

- Number and size of conductors and cables
- Size of conduit in inches

ø1, ø2, ø2P, etc. — Traffic phase identification for signal faces, detectors and phase diagrams

[1] [2] [3] — Project note numbers

(A) (B) (C) — Equipment description, installation or item numbers

△1 △2 △3 — Conduit run numbers

SIGNAL AND LIGHTING STANDARD (TYPICAL DESIGNATION):

19A - 3 - 100

- Wind velocity = 100 mph
- Case 3 arm loading
- Standard type
- Standard Plan sheet number
- Detail number or letter

MISCELLANEOUS EQUIPMENT

PROPOSED	EXISTING	
CMS	cms	Changeable message sign
		Closed circuit television camera
		Highway advisory radio pole and antenna
EMS	ems	Extinguishable message sign
M V	m v	Detection device M = Microwave sensor V = Video image sensor

WIRING DIAGRAM LEGEND

P	Pole
CB	Circuit breaker
A	Ampere
V	Volt
M	Metered
UM	Unmetered
NB	Neutral bus
GB	Ground bus
G	Equipment grounding conductor
N	Grounded conductor (Neutral)

- External conductor
- Conductor or bus
- Tie point
- Contactor coil
- Contactor, Contact NO
- Terminal blocks
- Contactor, Contact NC
- Enclosure bond
- Grounding electrode
- Circuit breaker
- Receptacle

PULL BOXES

PROPOSED — EXISTING

Pull box-No. 5 unless otherwise indicated or noted.

3 — 9A(21)

Pull box-Additional designations or descriptions

3 = No. 3½ pull box
5 = No. 5 pull box
6 = No. 6 pull box
7 = No. 7 (Ceiling pull box)
8 = No. 8 (Pendant soffit pull box)
9 = No. 9 pull box
9A = No. 9A pull box

(C) = Communications pull box
(E) = Pull box with extension
(S) = Sprinkler control pull box
(21) = Anchor bolts and conduit for future installation of Type 21 Standard
(T) = Traffic pull box

VEHICLE DETECTORS

5 J 9 U

- Vehicle detector designation
- U = Upper, L = Lower
- Slot number in input file
- Input file (I or J)
- Phase

PROPOSED — EXISTING

- Type A detector loop. Outline of sawcut shown.
- Type B detector loop. Outline of sawcut shown.
- Type C detector loop. Outline of sawcut shown.
- Type D detector loop. Outline of sawcut shown.
- Type E detector loop. Outline of sawcut shown.
- Type Q detector loop. Outline of sawcut shown.
- Magnetic detector
- Detector handhole (DH / dh)
- Microwave or video detection zone

STATE OF CALIFORNIA
DEPARTMENT OF TRANSPORTATION

ELECTRICAL SYSTEMS (SYMBOLS AND ABBREVIATIONS)

NO SCALE

RSP ES-1C DATED OCTOBER 5, 2007 SUPERCEDES STANDARD PLAN ES-1C
DATED MAY 1, 2006 - PAGE 402 OF THE STANDARD PLANS BOOK DATED MAY 2006.

REVISED STANDARD PLAN RSP ES-1C

2006 REVISED STANDARD PLAN RSP ES-1C

7-10-07

DIST	COUNTY	ROUTE	POST MILES TOTAL PROJECT	SHEET NO.	TOTAL SHEETS
04	SF	101	8.2/9.2	400	654

Jeffery G. McRae
REGISTERED ELECTRICAL ENGINEER

REGISTERED PROFESSIONAL ENGINEER
Jeffery G. McRae
No. E14512
Exp. 6-30-08
ELECTRICAL
STATE OF CALIFORNIA

October 5, 2007
PLANS APPROVAL DATE

The State of California or its officers or agents shall not be responsible for the accuracy or completeness of electronic copies of this plan sheet.

To accompany plans dated 12-14-09

NOTES-TYPE III SERVICE EQUIPMENT ENCLOSURES:

1. Service equipment enclosure and metering equipment shall meet the requirements of the service utility. The meter area shall have a sealable, lockable, weathertight cover that can be removed without the use of tools.

2. Service equipment enclosures shall be factory wired and conform to NEMA standards.

3. Dimensions of service equipment enclosures shall meet the requirements of the service utility.

4. The dead front panels on Type III service equipment enclosures shall have a continuous stainless steel or aluminum piano hinge. The panel in front of the breakers shall be secured with a latch or captive screws. No live parts shall be mounted on the dead front panel.

5. The exterior door shall have provisions for padlocking. The padlock hole shall be a minimum diameter of 7/16".

6. Enclosures housing transformers of more than one kVA shall have effective screened ventilation louver of not less than 50 square inches. Screen shall be stainless steel No. 304, with a No. 10 size mesh. Framed screen shall be secured with at least four bolts.

7. Fasteners on the exterior of the enclosure shall be vandal-resistant and shall not be removable from the exterior. Exterior screws, nuts, bolts and washers shall be stainless steel.

8. Landing lugs for incoming service conductors shall be compatible with either copper or aluminum conductors sized to suit the conductors shown on the plan. Landing lugs shall be copper or tin-plated aluminum. Neutral bus shall be rated for 125 A and be suitable for copper or aluminum conductors unless otherwise specified. The terminal shall include but not be limited to:

   a) Incoming terminals (landing lugs)
   b) Neutral lugs
   c) Solid neutral terminal strip

9. At least 6 standard single pole circuit breaker spaces, 3/4" nominal, shall be provided for branch circuits. Circuit breaker interiors shall be copper. Interiors of enclosure shall accept plug-in or cable-in/cable-out circuit breakers.

10. Control wiring shall be 600 V, 14 stranded machine tool wire. Where subject to flexing, 19 strand wire shall be used.

11. Main bus shall be rated for 125 A and shall be tin-plated copper.

12. A plastic laminated wiring diagram shall be provided with brass mounting eyelets and attached to the inside of the enclosure and the wiring diagram shall be affixed to the interior with a UL or ETL approved method.

13. An engraved phenolic nameplate on the dead front panel indicating the function of each circuit or device shall be installed with stainless steel rivets or stainless steel screws:

    a) Adjacent to the breaker or device with character size a minimum of 1/8".

    b) At the top of the exterior door panel indicating State system number, voltage level and number of phases with character size a minimum of 3/16".

14. The plan shows the approximate location of devices within the enclosure. Components may be rearranged, however, the "working" clearances within the service equipment enclosure shall be maintained.

15. In unpaved areas a raised portland cement concrete pad 2'-0" x 4" x width of foundation shall be constructed in front of new service equipment enclosure installation. Pad shall be set to elevation of foundation.

16. Foundation shall extend 2" minimum beyond edge of service equipment enclosure.

17. Internal bus, where shown, is typical only. Alternative design of proposed service equipment enclosure shall be submitted to the Engineer for approval.

18. Plug-in circuit breakers may be mounted in the vertical or horizontal position. Cable-in/cable-out circuit breakers shall be mounted in the vertical position.

19. Type III-AF and Type III-BF service equipment enclosures shall have the meter viewing windows located on the front side of the service equipment enclosures.

20. Type III-AR and Type III-BR service equipment enclosures shall be similarly constructed as Type III-AF and Type III-BF respectively, except the meter viewing windows shall be located on the back side of the service equipment enclosures.

21. Minimum clearance shall be required for front and back of service equipment enclosure per National Electrical Code, Article 110.26, "Spaces About Electric Equipment (600 Volts, Nominal, or Less)."

STATE OF CALIFORNIA
DEPARTMENT OF TRANSPORTATION

ELECTRICAL SYSTEMS (SERVICE EQUIPMENT NOTES TYPE III SERIES)

NO SCALE

RSP ES-2C DATED OCTOBER 5, 2007 SUPERCEDES STANDARD PLAN ES-2C
DATED MAY 1, 2006 - PAGE 405 OF THE STANDARD PLANS BOOK DATED MAY 2006.

REVISED STANDARD PLAN RSP ES-2C

2006 REVISED STANDARD PLAN RSP ES-2C

7-10-07

DIST	COUNTY	ROUTE	POST MILES TOTAL PROJECT	SHEET NO.	TOTAL SHEETS
04	SF	101	8.2/9.2	401	654

REGISTERED ELECTRICAL ENGINEER

Jeffery G. McRae
No. E14512
Exp. 6-30-08
ELECTRICAL
REGISTERED PROFESSIONAL ENGINEER
STATE OF CALIFORNIA

October 5, 2007
PLANS APPROVAL DATE

The State of California or its officers or agents shall not be responsible for the accuracy or completeness of electronic copies of this plan sheet.

To accompany plans dated 12-14-09

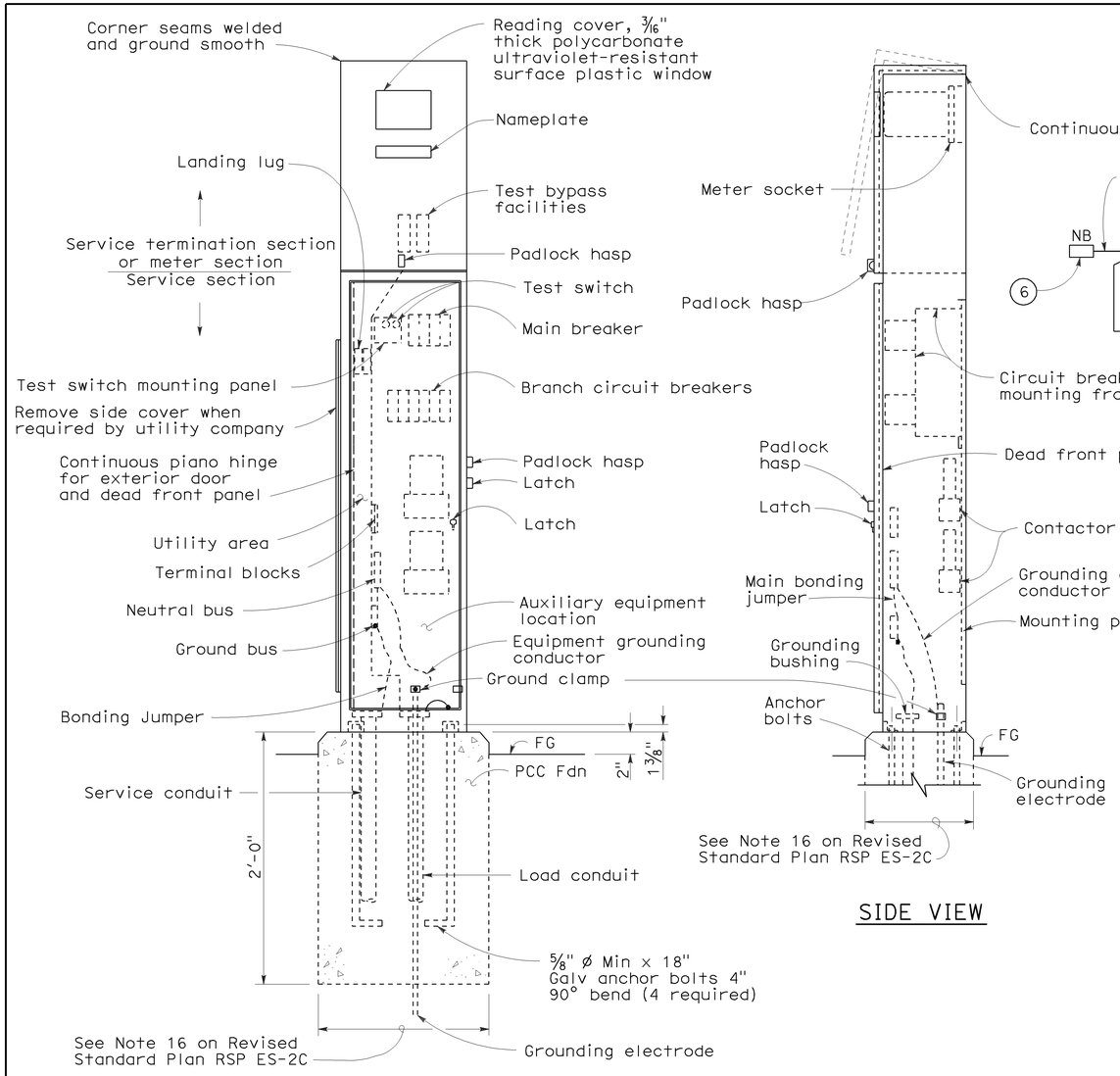

SIDE VIEW

FRONT VIEW

TYPE Ⅲ-AF SERVICE EQUIPMENT ENCLOSURE (TYPICAL)

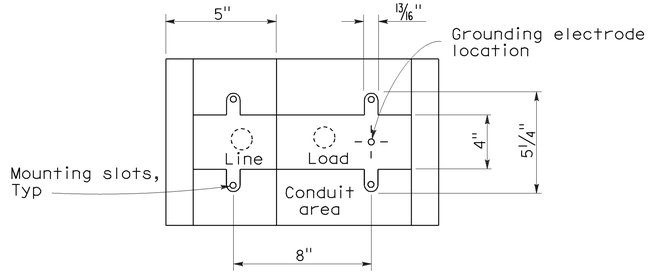

BASE FOR TYPE Ⅲ-A SERVICE EQUIPMENT ENCLOSURE

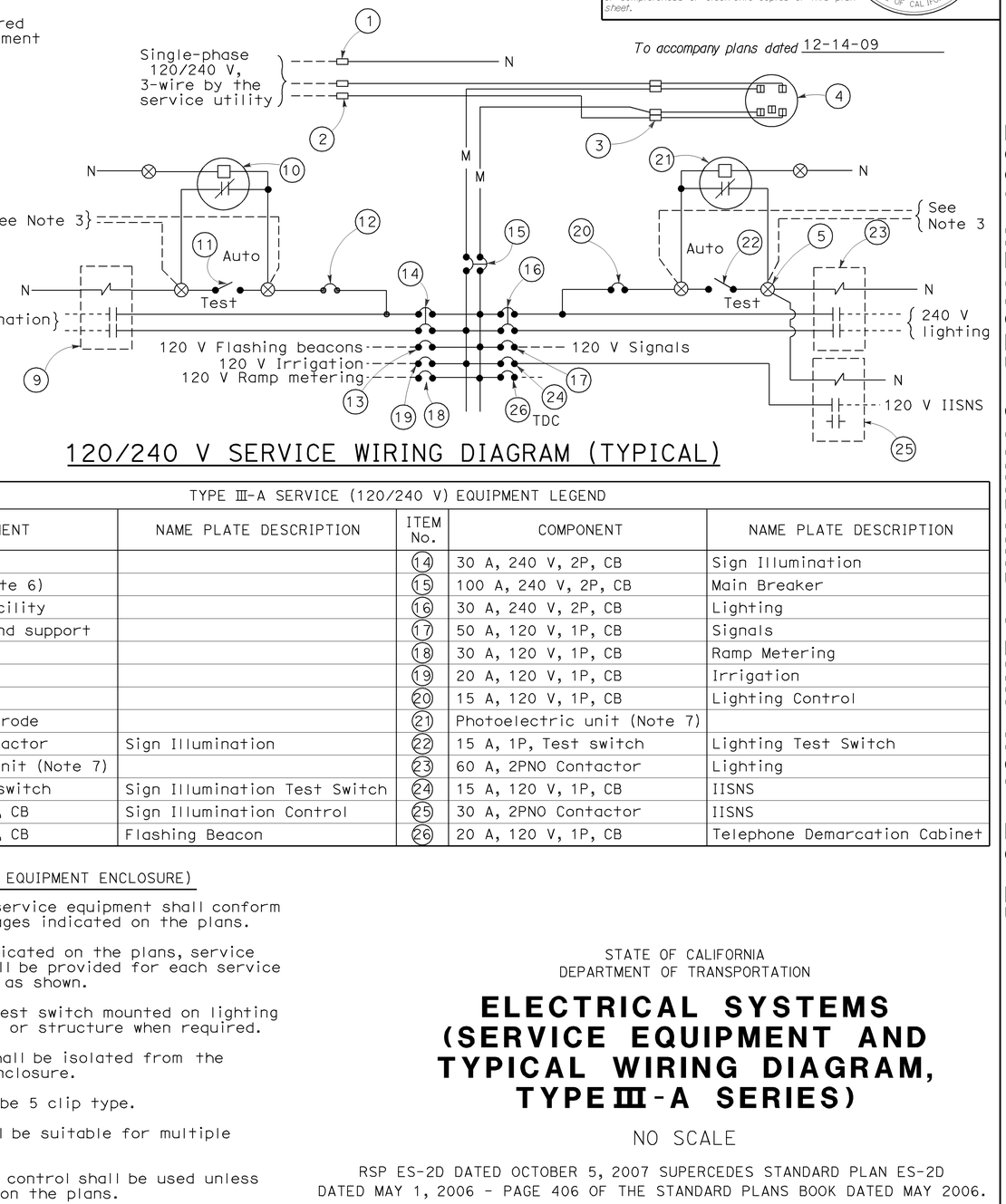

120/240 V SERVICE WIRING DIAGRAM (TYPICAL)

TYPE Ⅲ-A SERVICE (120/240 V) EQUIPMENT LEGEND

ITEM No.	COMPONENT	NAME PLATE DESCRIPTION	ITEM No.	COMPONENT	NAME PLATE DESCRIPTION
(1)	Neutral lug		(14)	30 A, 240 V, 2P, CB	Sign Illumination
(2)	Landing lug (Note 6)		(15)	100 A, 240 V, 2P, CB	Main Breaker
(3)	Test bypass facility		(16)	30 A, 240 V, 2P, CB	Lighting
(4)	Meter socket and support		(17)	50 A, 120 V, 1P, CB	Signals
(5)	Terminal blocks		(18)	30 A, 120 V, 1P, CB	Ramp Metering
(6)	Neutral bus		(19)	20 A, 120 V, 1P, CB	Irrigation
(7)	Ground bus		(20)	15 A, 120 V, 1P, CB	Lighting Control
(8)	Grounding electrode		(21)	Photoelectric unit (Note 7)	
(9)	30 A, 2PNO Contactor	Sign Illumination	(22)	15 A, 1P, Test switch	Lighting Test Switch
(10)	Photoelectric unit (Note 7)		(23)	60 A, 2PNO Contactor	Lighting
(11)	15 A, 1P, Test switch	Sign Illumination Test Switch	(24)	15 A, 120 V, 1P, CB	IISNS
(12)	15 A, 120 V, 1P, CB	Sign Illumination Control	(25)	30 A, 2PNO Contactor	IISNS
(13)	15 A, 120 V, 1P, CB	Flashing Beacon	(26)	20 A, 120 V, 1P, CB	Telephone Demarcation Cabinet

NOTES: (FOR SERVICE EQUIPMENT ENCLOSURE)

1. Voltage ratings of service equipment shall conform to the service voltages indicated on the plans.
2. Unless otherwise indicated on the plans, service equipment items shall be provided for each service equipment enclosure as shown.
3. Connect to remote test switch mounted on lighting standards, sign post or structure when required.
4. Items No. (1) and (6) shall be isolated from the service equipment enclosure.
5. Meter sockets shall be 5 clip type.
6. The landing lug shall be suitable for multiple conductors.
7. Type Ⅴ photoelectric control shall be used unless otherwise indicated on the plans.

STATE OF CALIFORNIA
DEPARTMENT OF TRANSPORTATION

ELECTRICAL SYSTEMS (SERVICE EQUIPMENT AND TYPICAL WIRING DIAGRAM, TYPE Ⅲ-A SERIES)

NO SCALE

RSP ES-2D DATED OCTOBER 5, 2007 SUPERCEDES STANDARD PLAN ES-2D DATED MAY 1, 2006 - PAGE 406 OF THE STANDARD PLANS BOOK DATED MAY 2006.

REVISED STANDARD PLAN RSP ES-2D

2006 REVISED STANDARD PLAN RSP ES-2D

7-10-07

DIST	COUNTY	ROUTE	POST MILES TOTAL PROJECT	SHEET NO.	TOTAL SHEETS
04	SF	101	8.2/9.2	402	654

Jeffery G. McRae
REGISTERED ELECTRICAL ENGINEER

REGISTERED PROFESSIONAL ENGINEER
Jeffery G. McRae
No. E14512
Exp. 6-30-10
ELECTRICAL
STATE OF CALIFORNIA

June 6, 2008
PLANS APPROVAL DATE

The State of California or its officers or agents shall not be responsible for the accuracy or completeness of electronic copies of this plan sheet.

To accompany plans dated 12-14-09

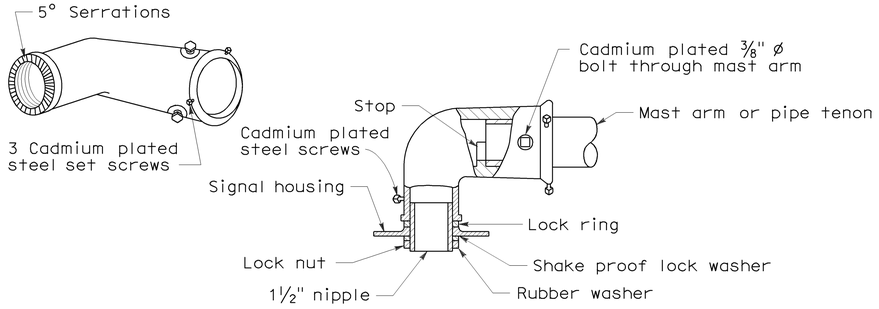

MAST ARM MOUNTING - TYPE "MAT"

For 2 NPS pipe, see Note 1.

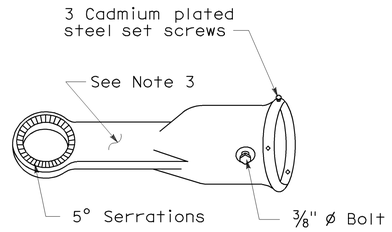

MAST ARM MOUNTING - TYPE "MAS"

For 2 NPS pipe. See Note 1.

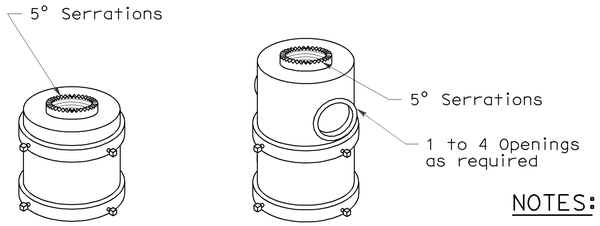

For one mounting For mulitiple mountings

TOP MOUNTINGS

For 4 NPS pipe, see Note 2.

NOTES:

1. After mast arm signal has been plumbed and secured, drill 7/16" hole through mast arm tenon in line with slip fitter hole. Place a cadmium plated ⅜" ø galvanized bolt with washer under bolt head through hole and secure with washer, nut, and locknut. Seal openings between mast arm mountings and mast arm with mastic.
2. (a) Threaded top mounted slip fitter openings shall be 1½ NPS.
   (b) Serrations in fittings shall match those on bottom of signal heads or in lock ring.
   (c) Top opening shall be offset when backplate is used.
3. Wireway shall have a cross section area of 0.95 square inch minimum. Minimum width of ½".

SIGNAL SLIP FITTERS

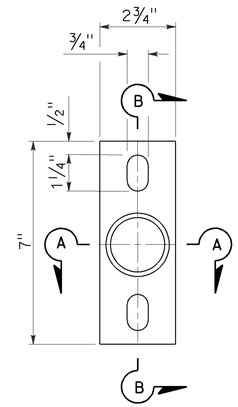

POLE PLATE

For side mountings

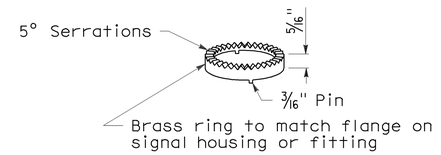

LOCK RING

Use where locking ring is not integral with signal housing or fitting.

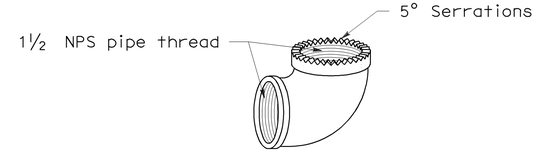

SPECIAL 90° ELBOW

One for each signal head, except those with special slip fitter mounting

MISCELLANEOUS MOUNTING HARDWARE

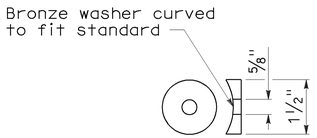

DETAIL "C"

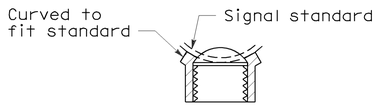

SECTION A-A

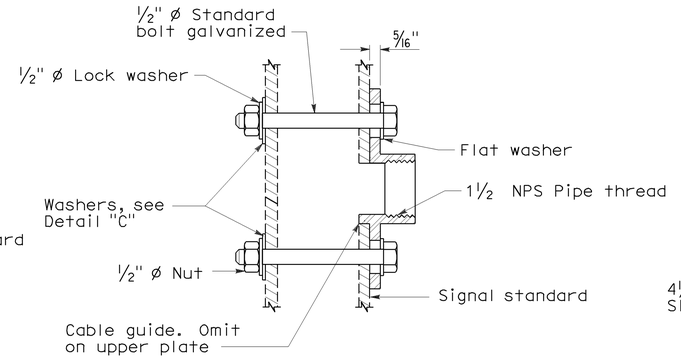

SECTION B-B

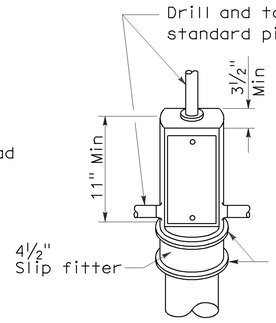

TOP MOUNTING

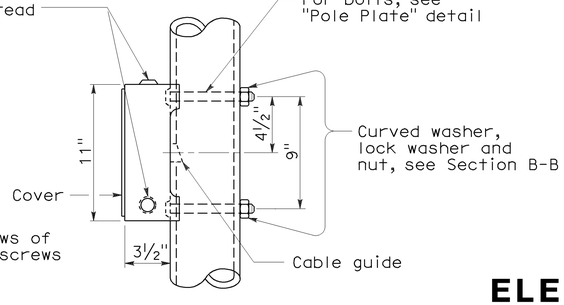

SIDE MOUNTING

TERMINAL COMPARTMENTS

STATE OF CALIFORNIA
DEPARTMENT OF TRANSPORTATION

ELECTRICAL SYSTEMS (SIGNAL HEADS AND MOUNTINGS)

NO SCALE

RSP ES-4D DATED June 6, 2008 SUPERSEDES STANDARD PLAN ES-4D
DATED MAY 1, 2006 - PAGE 421 OF THE STANDARD PLANS BOOK DATED MAY 2006.

REVISED STANDARD PLAN RSP ES-4D

2006 REVISED STANDARD PLAN RSP ES-4D

5-19-08

DIST	COUNTY	ROUTE	POST MILES TOTAL PROJECT	SHEET NO.	TOTAL SHEETS
04	SF	101	8.2/9.2	403	654

Jeffery G. McRae
REGISTERED ELECTRICAL ENGINEER

REGISTERED PROFESSIONAL ENGINEER
Jeffery G. McRae
No. E14512
Exp. 6-30-08
ELECTRICAL
STATE OF CALIFORNIA

October 5, 2007
PLANS APPROVAL DATE

The State of California or its officers or agents shall not be responsible for the accuracy or completeness of electronic copies of this plan sheet.

To accompany plans dated 12-14-09

LOOP INSTALLATION PROCEDURE

1. Loops shall be centered in lanes.
2. Saw slots in pavement for loop conductors as shown in details.
3. Distance between side of loop and a lead-in saw cut from adjacent detectors shall be 2'-0" minimum. Distance between lead-in saw cuts shall be 6" minimum.
4. Bottom of saw slot shall be smooth with no sharp edges.
5. Slots shall be washed until clean, blown out and thoroughly dried before installing loop conductors.
6. Adjacent loops on the same sensor unit channel shall be wound in opposite directions.
7. Identify and tag loop circuit pairs in the pull box with loop number, start (S) and finish (F) of conductor. Identify and tag lead-in-cable with sensor number and phase.
8. Install loop conductor in slot using a 3/16" to 1/4" thick wood paddle. Hold loop conductors with wood paddles (at the bottom of the sawed slot) during sealant placement.
9. No more than 2 twisted pairs shall be installed in one sawed slot.
10. Allow additional 5'-0" of slack length of conductor for the lead-in run to pull box.
11. The additional length of each conductor for each loop shall be twisted together into a pair (6 turns per 3'-4" minimum) before being placed in the slot and conduit leading to pull box.
12. Test each loop circuit for continuity, circuit resistance and insulation resistance at the pull box before filling slots.
13. Fill slots as shown in details.
14. Splice loop conductors to lead-in-cable. Splices shall be soldered.
15. End of lead-in-cable and Type 2 loop conductor shall be waterproofed prior to installing in conduit to prevent moisture from entering the cable.
16. Lead-in-cable shall not be spliced between the pull box and the controller cabinet terminals.
17. Test each loop circuit for continuity, circuit resistance and insulation resistance at the controller cabinet location.
18. Where loop conductors are not to be spliced to a lead-in-cable, the ends of the conductors shall be taped and waterproofed with electrical insulating coating.

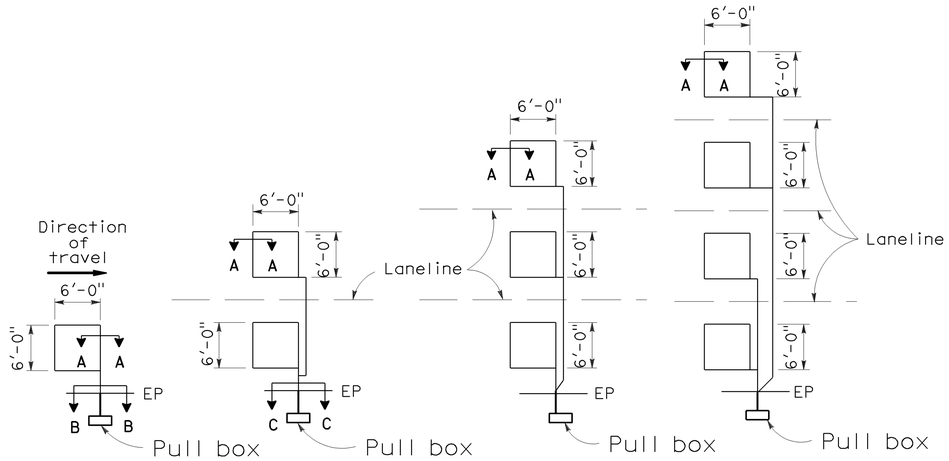

TYPE 1A INSTALLATION | TYPE 2A INSTALLATION | TYPE 3A INSTALLATION | TYPE 4A INSTALLATION

SAWCUT DETAILS

(Type A loop detector configurations illustrated)

1. 1A thru 4A = 1 Type A loop configuration in each lane.
2. 1B thru 4B = 1 Type B loop configuration in each lane.
3. 1C = 1 Type C loop configuration entering lanes as required.
4. 1D thru 4D = 1 Type D loop configuration in each lane.
5. 1E thru 4E = 1 Type E loop configuration in each lane.
6. 1Q thru 4Q = 1 Type Q loop configuration in each lane. (Use Type A, B, C, D, E or Q loop detector configurations only when specified or shown on plans)

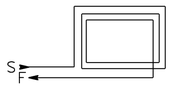

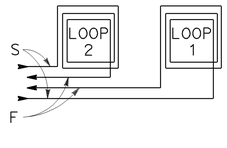

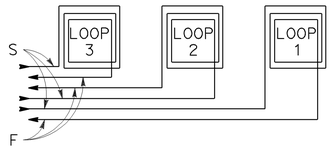

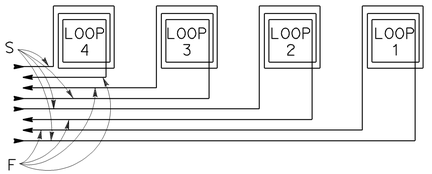

WINDING DETAILS

See Notes 6 and 7

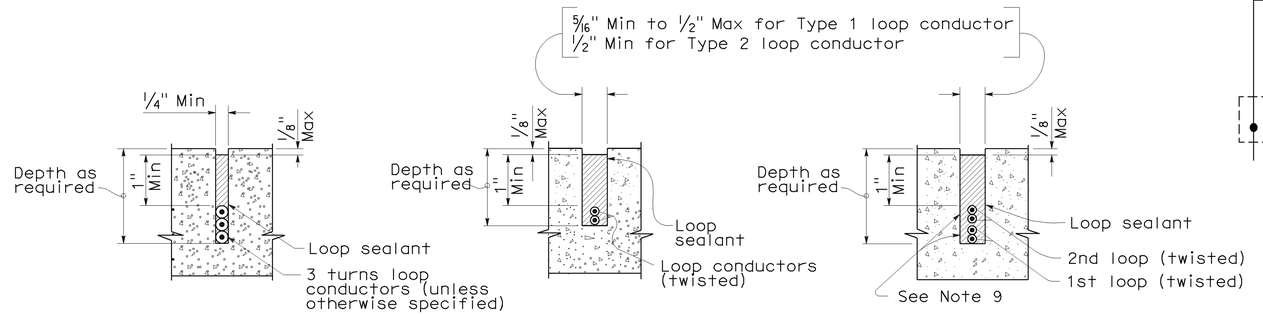

SECTION A-A | SECTION B-B | SECTION C-C

SLOT DETAILS - TYPE 1 AND TYPE 2 LOOP CONDUCTOR

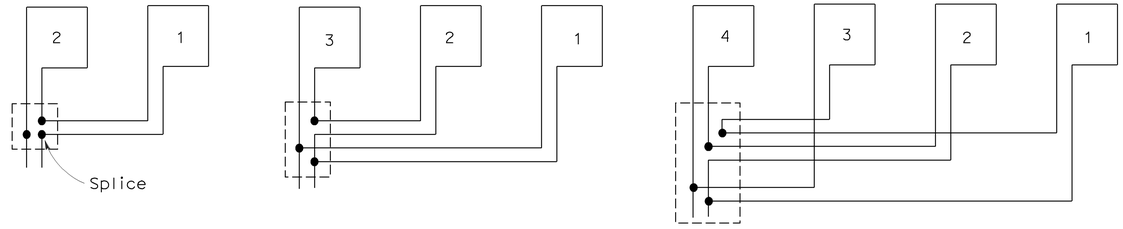

TYPICAL LOOP CONNECTIONS

(Dashed lines represent the pull box)

STATE OF CALIFORNIA
DEPARTMENT OF TRANSPORTATION

ELECTRICAL SYSTEMS (DETECTORS)

NO SCALE

RSP ES-5A DATED OCTOBER 5, 2007 SUPERCEDES STANDARD PLAN ES-5A
DATED MAY 1, 2006 - PAGE 423 OF THE STANDARD PLANS BOOK DATED MAY 2006.

REVISED STANDARD PLAN RSP ES-5A

2006 REVISED STANDARD PLAN RSP ES-5A

8-17-07

DIST	COUNTY	ROUTE	POST MILES TOTAL PROJECT	SHEET NO.	TOTAL SHEETS
04	SF	101	8.2/9.2	404	654

REGISTERED CIVIL ENGINEER

Stanley P. Johnson
No. C57793
Exp. 3-31-08
CIVIL
REGISTERED PROFESSIONAL ENGINEER
STATE OF CALIFORNIA

October 5, 2007
PLANS APPROVAL DATE

The State of California or its officers or agents shall not be responsible for the accuracy or completeness of electronic copies of this plan sheet.

To accompany plans dated 12-14-09

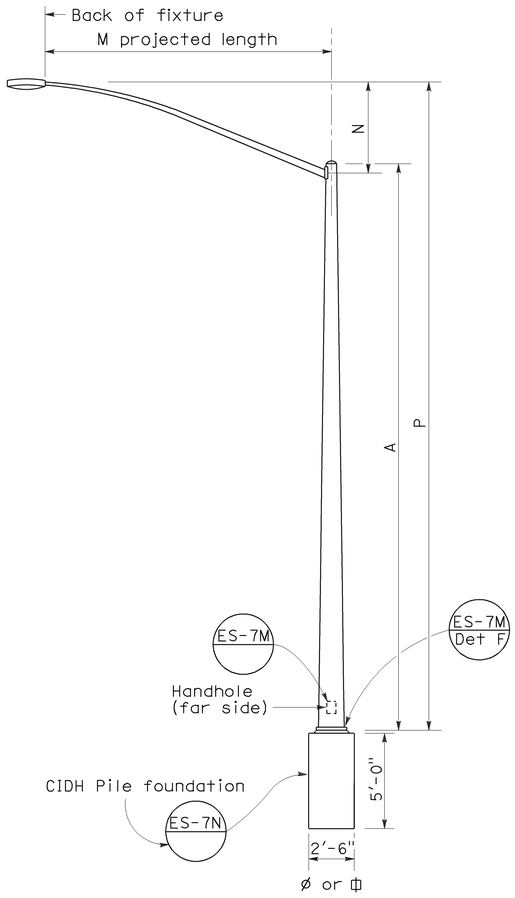

ELEVATION
TYPE 15 AND TYPE 21

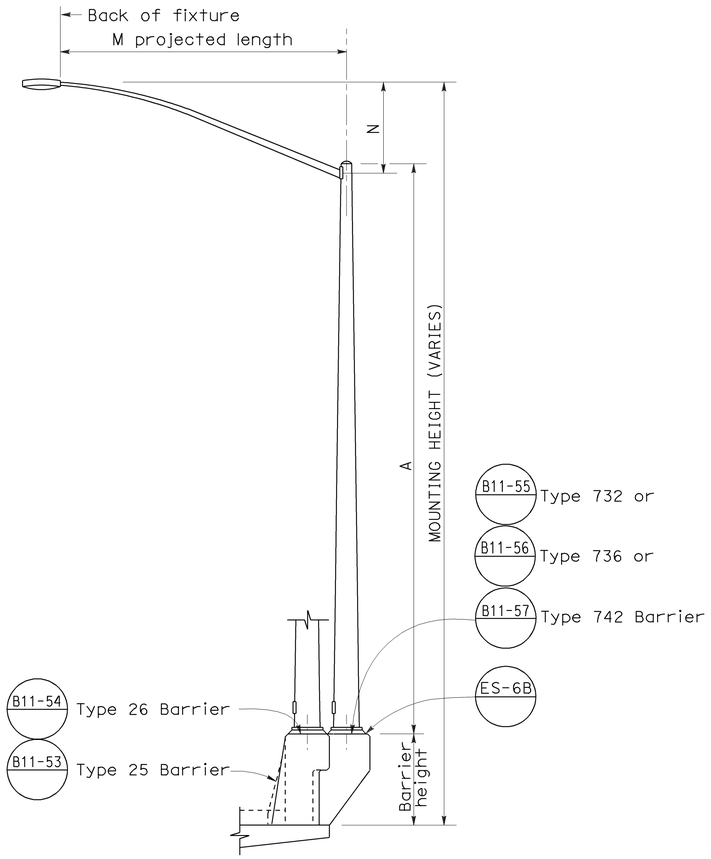

ELEVATION
TYPE 15 AND TYPE 21 BARRIER RAIL MOUNTED

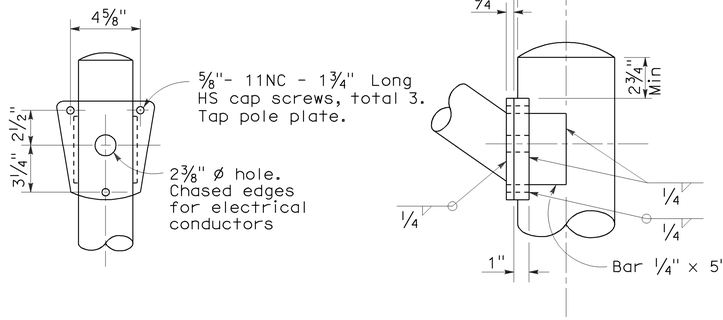

DETAIL R
LUMINAIRE ARM CONNECTION

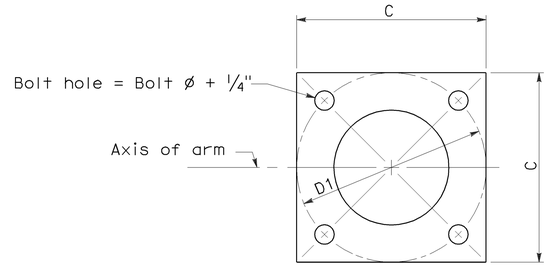

BASE PLATE

POLE TYPE	POLE DATA				BASE PLATE DATA				LUMINAIRE ARM
	A Height	Min OD		Wall Thickness	C	D1 Bolt Circle	Thick-ness	Anchor Bolts Size	
		Base	Top						
15	30′	8"	3 7/8"	0.1196"	1′-0"	1′-0"	1"	1" ø x 3′-0" x 4"*	6′ - 15′ [12′]
21	35′	8 5/8"	3 7/8"	0.1196"	1′-0"	1′-0"	1"	1 1/4"ø x 3′-0" x 4"*	6′ - 15′ [12′]

* For barrier rail bolts, see Standard Plan ES-6B.

LUMINAIRE ARM DATA					
M Projected Length	N Rise	Min OD At Pole	Nominal Thickness	P	
				Type 15	Type 21
6′-0"	2′-0"±	3 1/4"	0.1196"	31′-6"±	36′-6"±
8′-0"	2′-6"±	3 1/2"	0.1196"	32′-0"±	37′-0"±
10′-0"	3′-3"±	3 7/8"	0.1196"	32′-9"±	37′-9"±
12′-0"	4′-3"±	3 7/8"	0.1196"	33′-9"±	38′-9"±
15′-0"	4′-9"±	4 1/4"	0.1196"	34′-3"±	39′-3"±

NOTES:

1. □ Indicates arm length to be used unless otherwise noted on the plans.
2. For Type 15-SB, use Type 15 standard with Type 30 slip base plate details, see Standard Plan ES-6F.
3. For additional notes, see Standard Plan ES-7M and ES-7N.

STATE OF CALIFORNIA
DEPARTMENT OF TRANSPORTATION

ELECTRICAL SYSTEMS (LIGHTING STANDARD TYPES 15 AND 21)

NO SCALE

RSP ES-6A DATED OCTOBER 5, 2007 SUPERCEDES STANDARD PLAN ES-6A
DATED MAY 1, 2006 - PAGE 427 OF THE STANDARD PLANS BOOK DATED MAY 2006.

REVISED STANDARD PLAN RSP ES-6A

2006 REVISED STANDARD PLAN RSP ES-6A

7-10-07

DIST	COUNTY	ROUTE	POST MILES TOTAL PROJECT	SHEET NO.	TOTAL SHEETS
04	SF	101	8.2/9.2	405	654

REGISTERED CIVIL ENGINEER

January 18, 2008
PLANS APPROVAL DATE

REGISTERED PROFESSIONAL ENGINEER
Stanley P. Johnson
No. C57793
Exp. 03-31-08
CIVIL
STATE OF CALIFORNIA

The State of California or its officers or agents shall not be responsible for the accuracy or completeness of electronic copies of this plan sheet.

To accompany plans dated 12-14-09

LUMINAIRE ARM DATA

PROJECTED LENGTH	THICKNESS	MINIMUM OD @ POLE	MOUNTING HEIGHT
* 6'-0"	0.1196"	3¼"	36'-9"±
8'-0"		3½"	37'-3"±
10'-0"		3¾"	38'-0"±
12'-0"		3¾"	39'-0"±
15'-0"		4¼"	39'-6"±
** 20'-0"	0.1793"	5"	37'-0"±

* Type 30 - arm length 6'-0" - 15'-0" maximum
** Type 31 - arm lengths 20'-0"

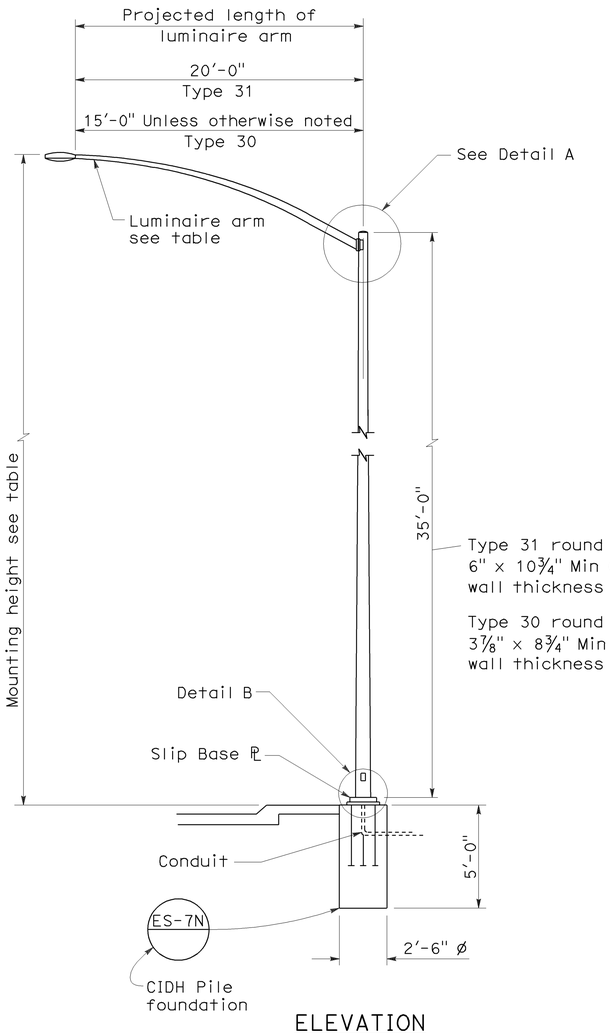

ELEVATION

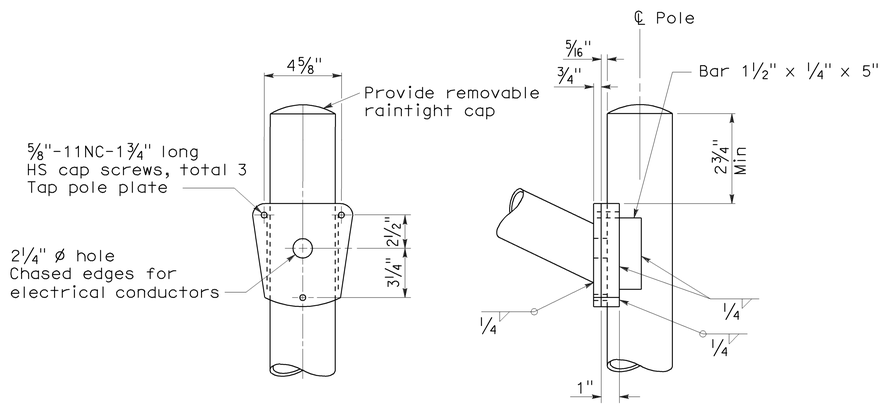

DETAIL A - TYPE 30

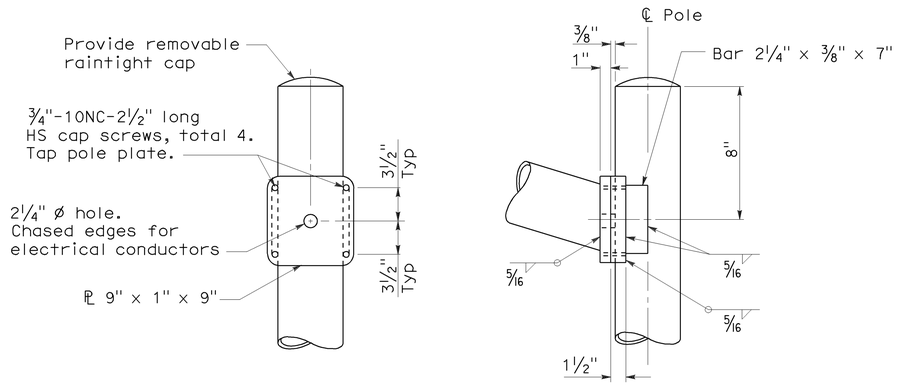

DETAIL A - TYPE 31

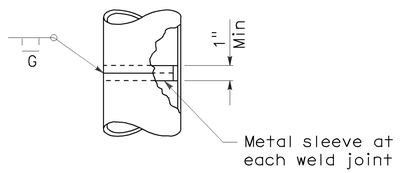

POLE SPLICE

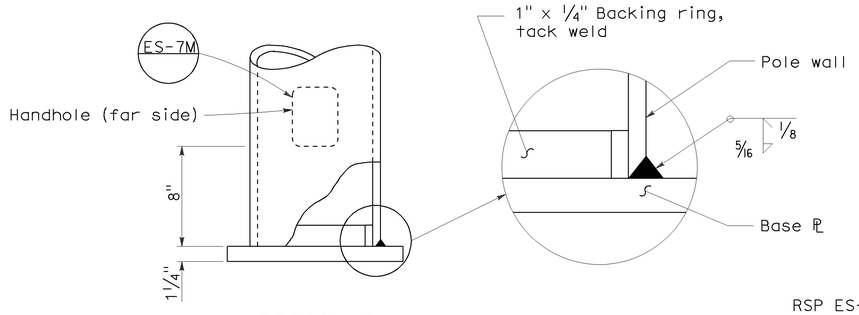

DETAIL B

NOTES:

1. Sheet steel shall have a minimum yield of 48,000 psi.
2. For slip base details see Standard Plan ES-6F.
3. For Type 30 fixed base use Type 15 base plate, and foundation shown on Revised Standard Plan RSP ES-6A. Use 1¼" Dia x 3'-6" x 4" anchor bolts.
4. For Type 31 fixed base use Type 32 base plate, anchor bolts and foundation on Standard Plan ES-6G.
5. Handhole shall be located on downstream side of traffic unless noted otherwise on plans.
6. For additional general notes refer to Standard Plan ES-7M.

STATE OF CALIFORNIA
DEPARTMENT OF TRANSPORTATION

ELECTRICAL SYSTEMS (LIGHTING STANDARD TYPES 30 AND 31)

NO SCALE

RSP ES-6E DATED JANUARY 18, 2008 SUPERCEDES STANDARD PLAN ES-6E
DATED MAY 1, 2006 - PAGE 430 OF THE STANDARD PLANS BOOK DATED MAY 2006.

REVISED STANDARD PLAN RSP ES-6E

2006 REVISED STANDARD PLAN RSP ES-6E

11-19-07

DIST	COUNTY	ROUTE	POST MILES TOTAL PROJECT	SHEET NO.	TOTAL SHEETS
04	SF	101	8.2/9.2	406	654

REGISTERED CIVIL ENGINEER

October 5, 2007
PLANS APPROVAL DATE

Stanley P. Johnson
No. C57793
Exp. 3-31-08
CIVIL
REGISTERED PROFESSIONAL ENGINEER
STATE OF CALIFORNIA

The State of California or its officers or agents shall not be responsible for the accuracy or completeness of electronic copies of this plan sheet.

To accompany plans dated 12-14-09

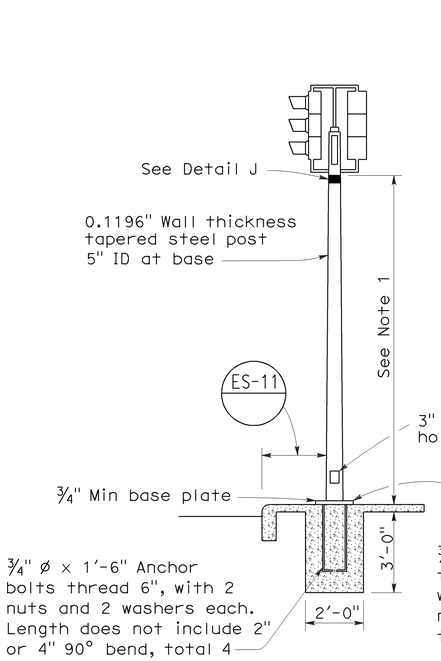

TYPE 1-A STANDARD

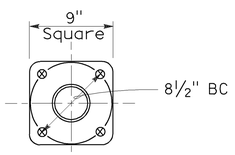

BASE PLATE
For Type 1-A
For Type 1-C
For Type 1-D

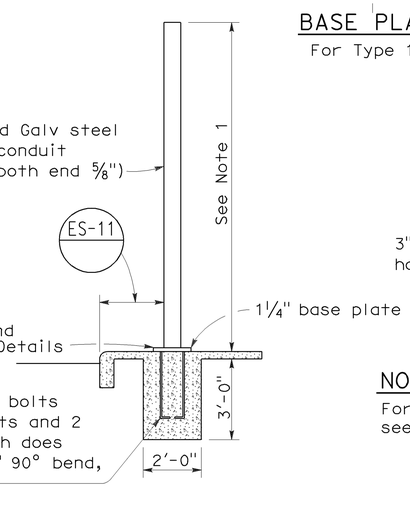

TYPE 1-B STANDARD

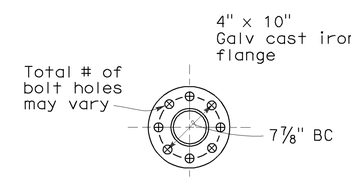

BASE PLATE
For Type 1-B

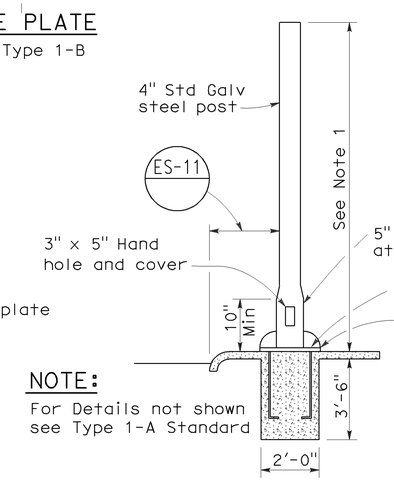

NOTE:
For Details not shown see Type 1-A Standard

TYPE 1-C STANDARD

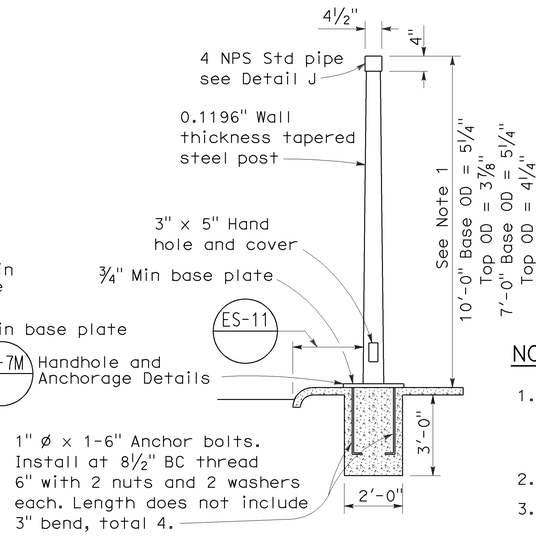

TYPE 1-D STANDARD

TYPE 1 SIGNAL STANDARDS

NOTES:

1. Standards shall be 10'-0" ± 2" for vehicle signals and 7'-0" ± 2" for pedestrian signals unless otherwise noted on plans.
2. Top of standards shall be 4½" OD.
3. Conduits shall extend 2" maximum above finished surface of foundation and for Types 1-A, 1-C and 1-D shall be sloped toward handhole.
4. Anchor bolts shall be bonded to conduit or grounding conductor.
5. Conduit between standard and adjacent pull box shall be 2" minimum.
6. Paint numbers on roadway side facing traffic when electrolier or post is left of direction of traffic.

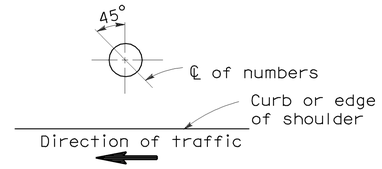

PLAN

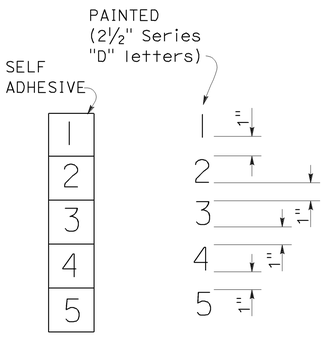

NUMBER DETAIL

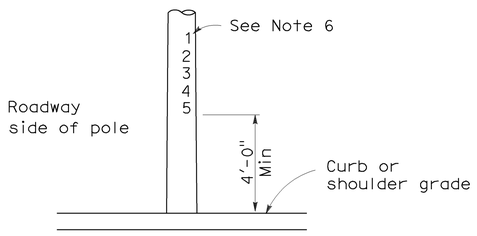

TYPICAL NUMBER FORMAT

LOCATION OF EQUIPMENT NUMBERS ON STANDARDS AND POSTS

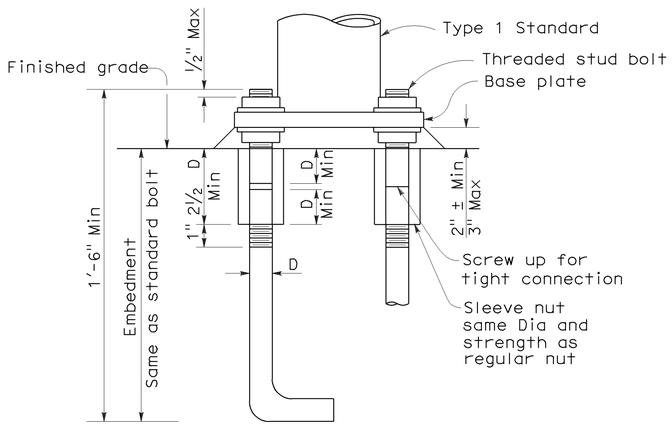

ANCHOR BOLTS WITH SLEEVE NUTS

Sleeve nuts to be used only when shown or specified on Project Plans

D = Diameter of anchor bolt

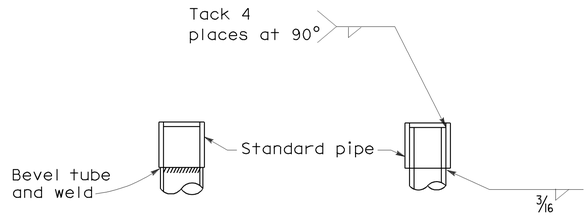

DETAIL J

Tube may be inserted into pipe or butted as required

STATE OF CALIFORNIA
DEPARTMENT OF TRANSPORTATION

ELECTRICAL SYSTEMS (SIGNAL AND LIGHTING STANDARD TYPE 1 STANDARD AND EQUIPMENT NUMBERING)

NO SCALE

RSP ES-7B DATED OCTOBER 5, 2007 SUPERCEDES STANDARD PLAN ES-7B DATED MAY 1, 2006 - PAGE 438 OF THE STANDARD PLANS BOOK DATED MAY 2006.

REVISED STANDARD PLAN RSP ES-7B

2006 REVISED STANDARD PLAN RSP ES-7B

7-10-07

DIST	COUNTY	ROUTE	POST MILES TOTAL PROJECT	SHEET NO.	TOTAL SHEETS
04	SF	101	8.2/9.2	407	654

Stanley P Johnson
REGISTERED CIVIL ENGINEER

June 15, 2007
PLANS APPROVAL DATE

REGISTERED PROFESSIONAL ENGINEER — Stanley P. Johnson — No. C57793 — Exp. 3-31-08 CIVIL — STATE OF CALIFORNIA

The State of California or its officers or agents shall not be responsible for the accuracy or completeness of electronic copies of this plan sheet.

To accompany plans dated 12-14-09

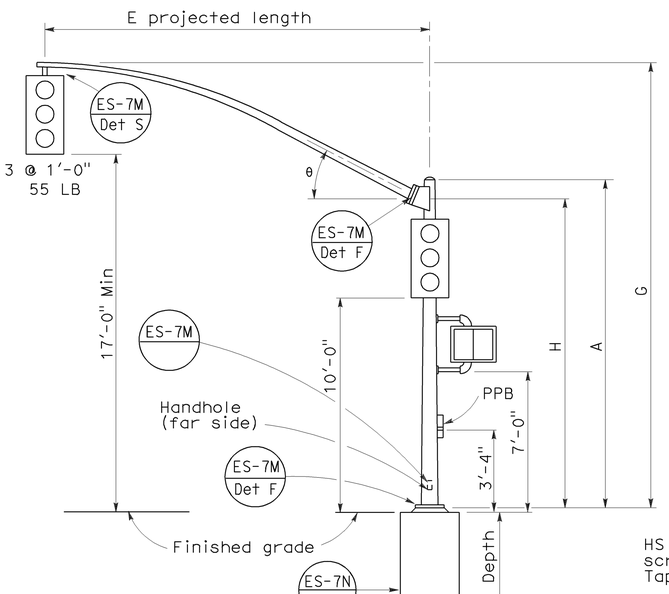

ELEVATION

TYPE 16-1-100, 18-1-100

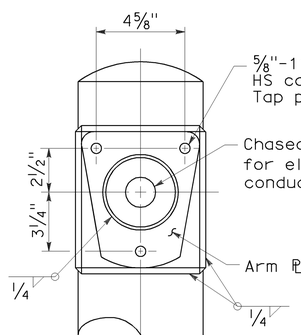

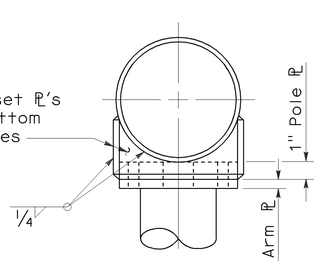

DETAIL W

LUMINAIRE ARM CONNECTION

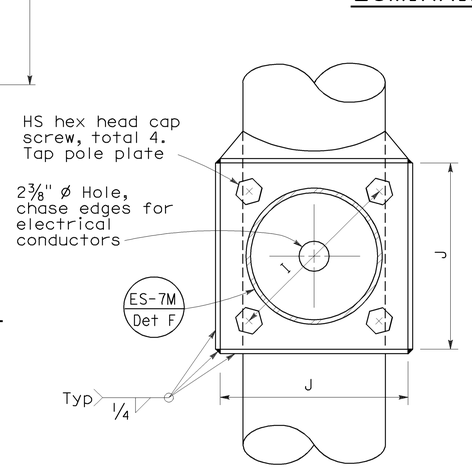

VIEW A-A

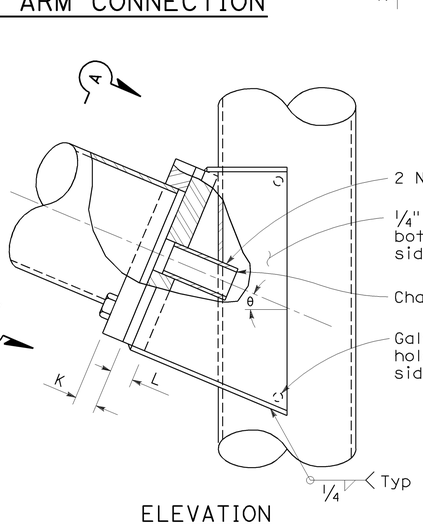

ELEVATION

SIGNAL ARM CONNECTION DETAILS

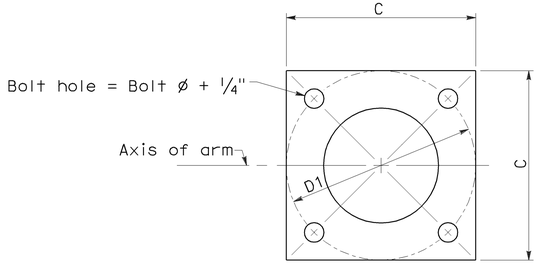

BASE PLATE

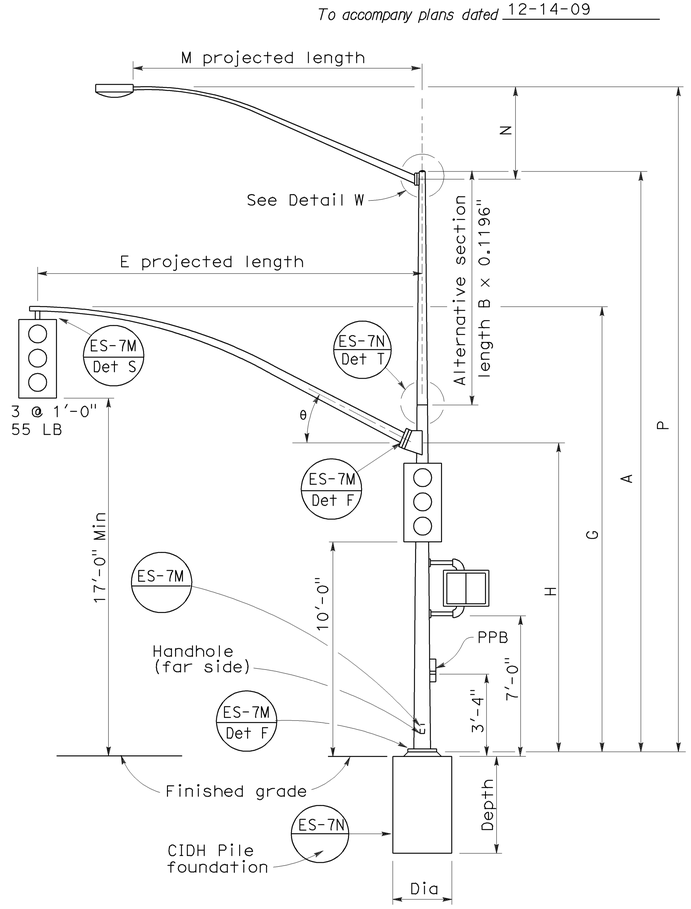

ELEVATION

TYPE 19-1-100, 19A-1-100

SIGNAL ARM DATA										
E Projected Length	G Mounting Height	H	Min OD At Pole	Thickness	I Bolt Circle	HS Cap Screws	J Plate size	K Arm ℄ Thickness	L Pole ℄ Thickness	θ
15'-0"	21'-8"±	17'-6"	7"	0.1196"	12"	1¼"-7NC-3"	1'-0"	1¼"	1½"	23°
20'-0"	21'-8"±		7⅛"							
25'-0"	22'-8"±	16'-0"	7⅝"							
30'-0"	23'-0"±		8"							

LUMINAIRE ARM DATA						
M Projected Length	N Rise	Min OD at Pole	Thickness	P Mounting Height		
				30'-0" Pole	35'-0" Pole	
6'-0"	2'-0"±	3¼"	0.1196"	31'-6"±	36'-6"±	
8'-0"	2'-6"±	3½"		32'-0"±	37'-0"±	
10'-0"	3'-3"±	3⅞"		32'-9"±	37'-9"±	
12'-0"	4'-3"±			33'-9"±	38'-9"±	
15'-0"	4'-9"±	4¼"		34'-3"±	39'-3"±	

POLE DATA								BASE PLATE DATA				LUMINAIRE ARM	SIGNAL ARM	CIDH PILE FOUNDATION		
Pole Type	Load Case	Wind Velocity mph	A Height	Min OD		Thickness	Alternative Section			C	D1 Bolt Circle	Thickness	Anchor Bolts			Diameter	Depth	Reinforced
				Base	Top		B Length	Bottom	Top				Size					
16-1-100	1	100	18'-6"	10¾"	8¼"	0.1793"	None			1'-6"	1'-5½"	1¼"	1½" ø x 42" x 6"	None	15'-0", 20'-0"	2'-6"	7'-2"	Yes
18-1-100			17'-0"		8⅜16"		None							None				
19-1-100			30'-0"		6⅝"		10'-0"	8"	6⅝"					6'-15' 12'-0"	25'-0", 30'-0"			
19A-1-100			35'-0"		5¹⁵⁄₁₆"		15'-0"		5¹⁵⁄₁₆"					6'-15' 15'-0"				

☐ Indicates arm length to be used unless otherwise noted on plans.

STATE OF CALIFORNIA
DEPARTMENT OF TRANSPORTATION

ELECTRICAL SYSTEMS (SIGNAL AND LIGHTING STANDARD CASE 1 ARM LOADING WIND VELOCITY = 100 MPH ARM LENGTHS 15' TO 30')

NO SCALE

RSP ES-7C DATED JUNE 15, 2007 SUPERSEDES STANDARD PLAN ES-7C DATED MAY 1, 2006 - PAGE 439 OF THE STANDARD PLANS BOOK DATED MAY 2006.

REVISED STANDARD PLAN RSP ES-7C

2006 REVISED STANDARD PLAN RSP ES-7C

1-26-07

DIST	COUNTY	ROUTE	POST MILES TOTAL PROJECT	SHEET NO.	TOTAL SHEETS
04	SF	101	8.2/9.2	408	654

REGISTERED CIVIL ENGINEER

October 5, 2007
PLANS APPROVAL DATE

Stanley P. Johnson
No. C57793
Exp. 3-31-08
CIVIL
REGISTERED PROFESSIONAL ENGINEER
STATE OF CALIFORNIA

The State of California or its officers or agents shall not be responsible for the accuracy or completeness of electronic copies of this plan sheet.

To accompany plans dated 12-14-09

2006 REVISED STANDARD PLAN RSP ES-7D

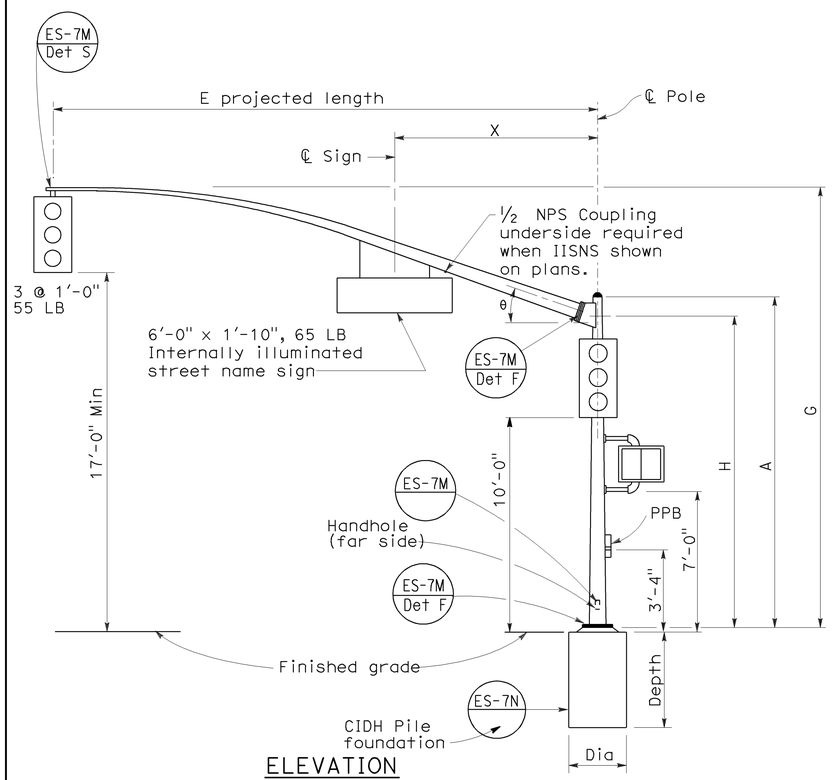

ELEVATION

TYPE 16-2-100, 18-2-100

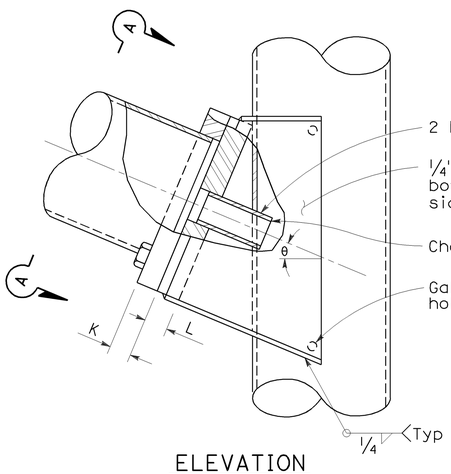

ELEVATION

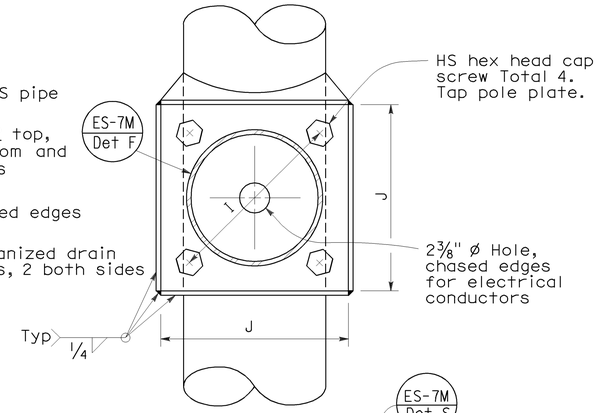

VIEW A-B

SIGNAL ARM CONNECTION DETAILS

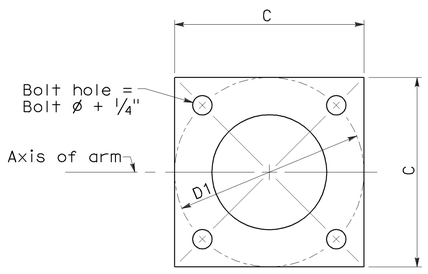

BASE PLATE

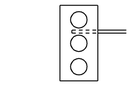

Required for Type 17-2-100 Type 17A-2-100

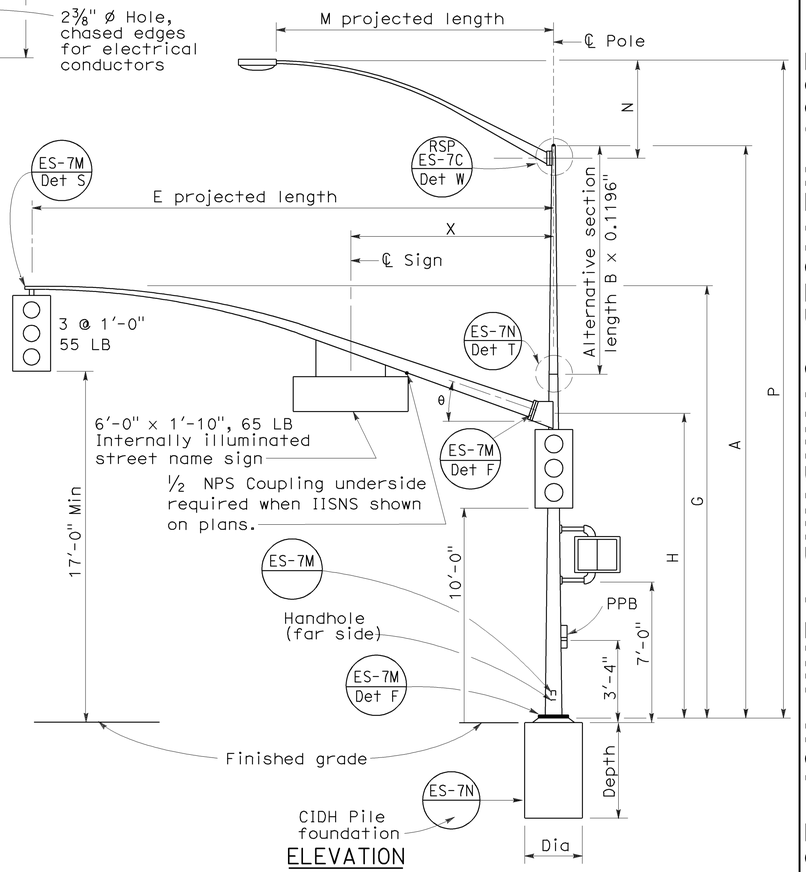

ELEVATION

TYPE 17-2-100, 17A-2-100, 19-2-100, 19A-2-100

SIGNAL ARM DATA											
E Projected Length	G Mounting Height	H	Min OD At Pole	Thickness	I Bolt Circle	HS Cap Screws	J Plate Size	K Arm ℙ Thickness	L Pole ℙ Thickness	θ	X Max
15'-0"	21'-8"±	17'-6"	6⅝"	0.1793"	12"	1¼"-7NC-3"	1'-0"	1¼"	1½"	23°	10'-6"
20'-0"	21'-8"±		6⅝"								
25'-0"	22'-8"±	16'-0"	7⅝"								
30'-0"	23'-0"±		8"								

LUMINAIRE ARM DATA					
M Projected Length	N Rise	Min OD at Pole	Thickness	P Mounting Height 30'-0" Pole	P Mounting Height 35'-0" Pole
6'-0"	2'-0"±	3¼"	0.1196"	31'-6"±	36'-6"±
8'-0"	2'-6"±	3½"		32'-0"±	37'-0"±
10'-0"	3'-3"±	3⅞"		32'-9"±	37'-9"±
12'-0"	4'-3"±			33'-9"±	38'-9"±
15'-0"	4'-9"±	4¼"		34'-3"±	39'-3"±

POLE DATA									BASE PLATE DATA				LUMINAIRE ARM	SIGNAL ARM	CIDH PILE FOUNDATION		
Pole Type	Load Case	Wind Velocity mph	A Height	Min OD Base	Min OD Top	Thickness	Alternative Section B Length	Alternative Section Bottom	Alternative Section Top	C	D1 Bolt Circle	Thickness	Anchor Bolts Size			Diameter	Depth	Reinforced
16-2-100	2	100	18'-6"	10¾"	8¼"	0.1793"	None			1'-6"	1'-5½"	1½"	2"ø x 42" x 6"	None	15'-0", 20'-0"	2'-6"	7'-2"	Yes
17-2-100			30'-0"		6⅝"		10'-0"	8"	6⅝"					6'-15' 12'-0"				
17A-2-100			35'-0"		5¹⁵⁄₁₆"		15'-0"		5¹⁵⁄₁₆"					6'-15' 15'-0"				
18-2-100			17'-0"		8⅞"		None							None	25'-0", 30'-0"			
19-2-100			30'-0"		6⅝"	0.2391"	10'-0"	8"	6⅝"					6'-15' 12'-0"				
19A-2-100			35'-0"		5¹⁵⁄₁₆"		15'-0"		5⅝"					6'-15' 15'-0"				

☐ Indicates arm length to be used unless otherwise noted on plans.

STATE OF CALIFORNIA
DEPARTMENT OF TRANSPORTATION

ELECTRICAL SYSTEMS (SIGNAL AND LIGHTING STANDARD CASE 2 ARM LOADING WIND VELOCITY=100 MPH ARM LENGTHS 15' TO 30')

NO SCALE

RSP ES-7D DATED OCTOBER 5, 2007 SUPERCEDES STANDARD PLAN ES-7D DATED MAY 1, 2006 - PAGE 440 OF THE STANDARD PLANS BOOK DATED MAY 2006.

REVISED STANDARD PLAN RSP ES-7D

7-10-07

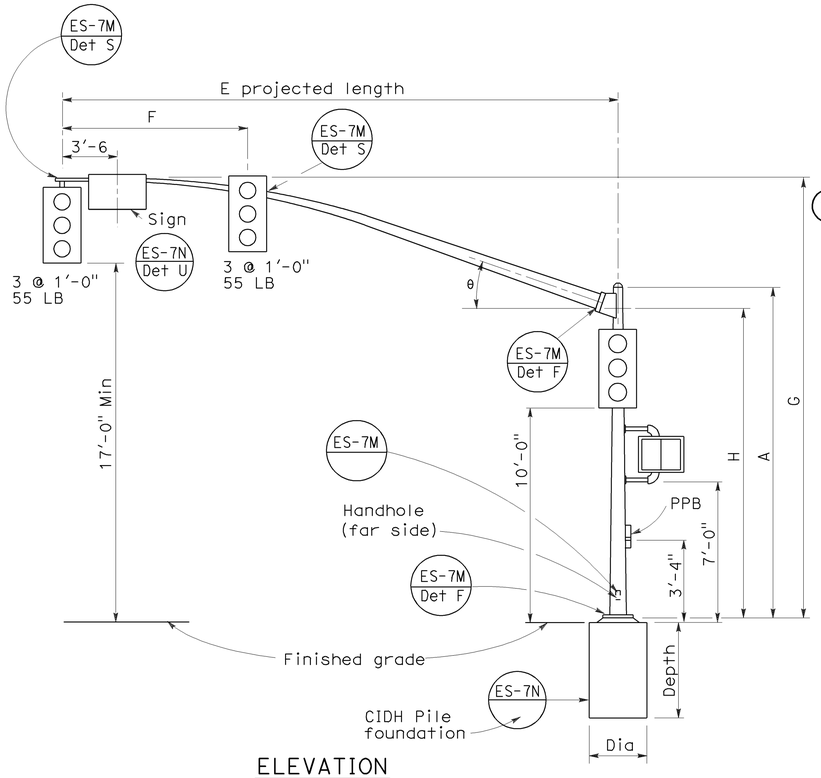

ELEVATION

TYPE 16-3-100, 18-3-100, 23-3-100, 27-3-100

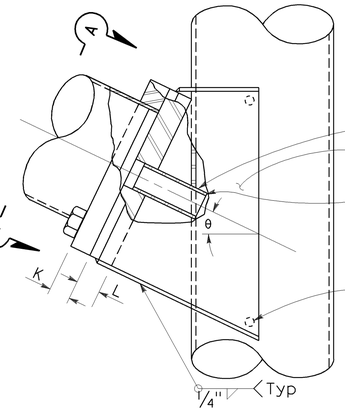

ELEVATION

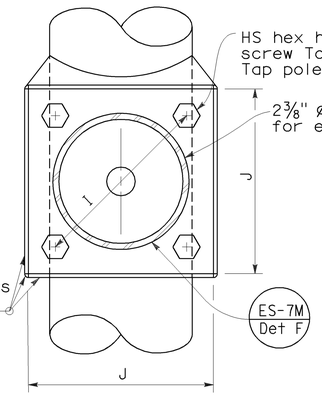

VIEW A-A

SIGNAL ARM CONNECTION DETAILS

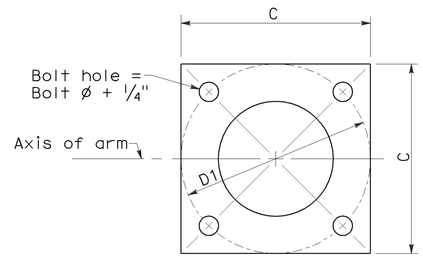

BASE PLATE

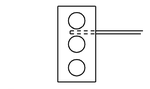

Type 17-3-100

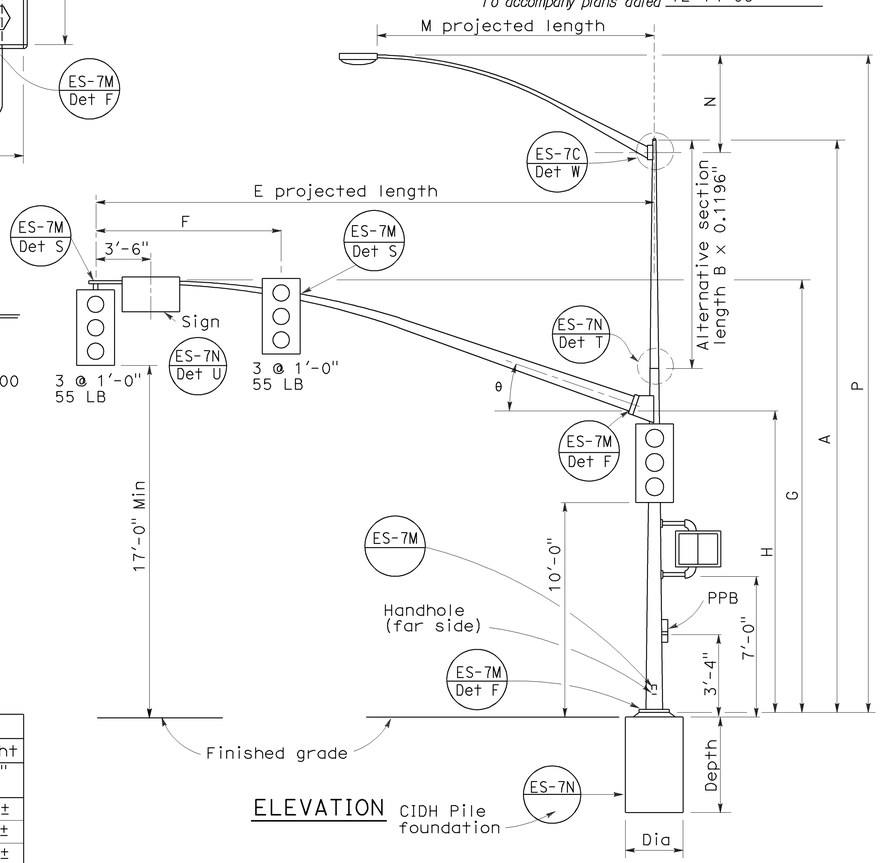

ELEVATION

TYPE 17-3-100, 24A-3-100, 19-3-100, 26-3-100, 19A-3-100, 26A-3-100, 24-3-100

SIGNAL ARM DATA											
E Projected Length	F Min Spacing	G Mounting Height	H	Min OD At Pole	Thickness	I Bolt Circle	HS Cap Screws	J Plate Size	K Arm ℄ Thickness	L Pole ℄ Thickness	θ
15'-0"	8'-0"	21'-8"±	17'-6"	6⅝"	0.1793"	12"	1¼"-7NC-3"	1'-0"	1¼"	1½"	23°
20'-0"		21'-8"±		7"							
25'-0"	12'-0"	22'-8"±	16'-0"	7 5/16"	0.2391"						
30'-0"				8"							
35'-0"	14'-0"	23'-0"±		8¾"		13"		1'-1"	1½"	1¾"	21°
40'-0"	15'-0"			9⅜"							15°
45'-0"		23'-8"±		10 1/16"							

LUMINAIRE ARM DATA					
M Projected Length	N Rise	Min OD at Pole	Thickness	P Mounting Height 30'-0" Pole	P Mounting Height 35'-0" Pole
6'-0"	2'-0"±	3¼"	0.1196"	31'-6"±	36'-6"±
8'-0"	2'-6"±	3½"		32'-0"±	37'-0"±
10'-0"	3'-3"±	3⅜"		32'-9"±	37'-9"±
12'-0"	4'-3"±			33'-9"±	38'-9"±
15'-0"	4'-9"±	4¼"		34'-3"±	39'-3"±

POLE DATA									BASE PLATE DATA						CIDH PILE FOUNDATION		
Pole Type	Load Case	Wind Velocity mph	A Height	Min OD Base	Min OD Top	Thickness	Alternative Section B Length	Alternative Section Bottom	Alternative Section Top	C	D1 Bolt Circle	Thickness	Anchor Bolts Size	Luminaire Arm	Signal Arm	Diameter	Depth	Reinforced
16-3-100	3	100	18'-6"	10¾"	8¼"	0.1793"	None			1'-6"	1'-5½"	1½"	2"ø x 42" x 6"	None	15'-0", 20'-0"	3'-0"	9'-0"	Yes
17-3-100			30'-0"		6⅝"		10'-0"	8"	7 5/16"					6'-15' [12'-0"]				
18-3-100			17'-0"		8 1/16"	0.2391"	None							None	25'-0", [30'-0"]			
19-3-100			30'-0"	1'-0"	7⅞"		10'-0"	9¼"	7⅞"					6'-15' [12'-0"]				
19A-3-100			35'-0"		7 3/16"		15'-0"		7 3/16"					6'-15' [15'-0"]				
23-3-100			17'-0"		9⅝"		None							None	35'-0"			
24-3-100			30'-0"		7⅞"		10'-0"	9¼"	7⅞"					6'-15' [12'-0"]				
24A-3-100			35'-0"		7 3/16"		15'-0"		7 3/16"					6'-15' [15'-0"]				
26-3-100			30'-0"	1'-1/8"	8"	0.3125"	10'-0"	9⅜"	8"					6'-15' [12'-0"]	40'-0", [45'-0"]			
26A-3-100			35'-0"		7 5/16"		15'-0"		7 5/16"					6'-15' [15'-0"]				
27-3-100			17'-0"		9¾"		None							None				

☐ Indicates arm length to be used unless otherwise noted on plans.

DIST	COUNTY	ROUTE	POST MILES TOTAL PROJECT	SHEET NO.	TOTAL SHEETS
04	SF	101	8.2/9.2	409	654

Jeffrey B. Woody
REGISTERED CIVIL ENGINEER

June 30, 2006
PLANS APPROVAL DATE

REGISTERED PROFESSIONAL ENGINEER — Jeffrey B. Woody — No. C41260 — Exp. 3-31-07 CIVIL — STATE OF CALIFORNIA

The State of California or its officers or agents shall not be responsible for the accuracy or completeness of electronic copies of this plan sheet.

To accompany plans dated 12-14-09

STATE OF CALIFORNIA
DEPARTMENT OF TRANSPORTATION

ELECTRICAL SYSTEMS (SIGNAL AND LIGHTING STANDARD CASE 3 ARM LOADING WIND VELOCITY=100 MPH ARM LENGTHS 15' TO 45')

NO SCALE

RSP ES-7E DATED JUNE 30, 2006 SUPERSEDES STANDARD PLAN DATED MAY 1, 2006 - PAGE 441 OF THE STANDARD PLANS BOOK DATED MAY 2006.

REVISED STANDARD PLAN RSP ES-7E

2006 REVISED STANDARD PLAN RSP ES-7E

5-9-06

DIST	COUNTY	ROUTE	POST MILES TOTAL PROJECT	SHEET NO.	TOTAL SHEETS
04	SF	101	8.2/9.2	410	654

REGISTERED CIVIL ENGINEER

October 5, 2007
PLANS APPROVAL DATE

REGISTERED PROFESSIONAL ENGINEER — Stanley P. Johnson — No. C57793 — Exp. 3-31-08 — CIVIL — STATE OF CALIFORNIA

The State of California or its officers or agents shall not be responsible for the accuracy or completeness of electronic copies of this plan sheet.

To accompany plans dated 12-14-09

2006 REVISED STANDARD PLAN RSP ES-7F

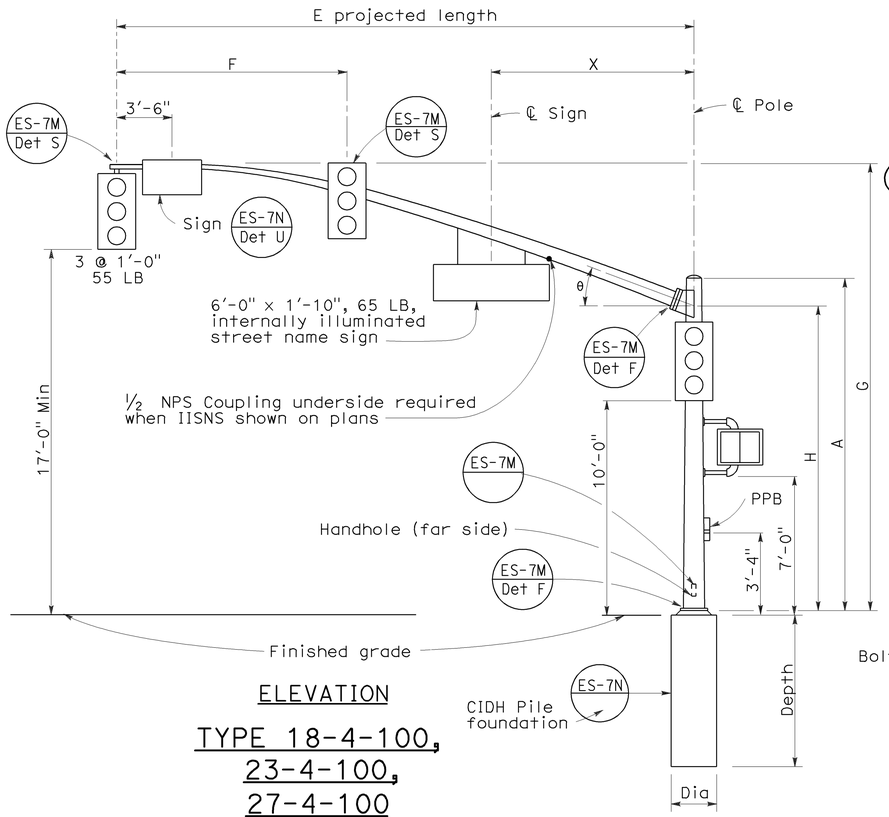

ELEVATION

TYPE 18-4-100, 23-4-100, 27-4-100

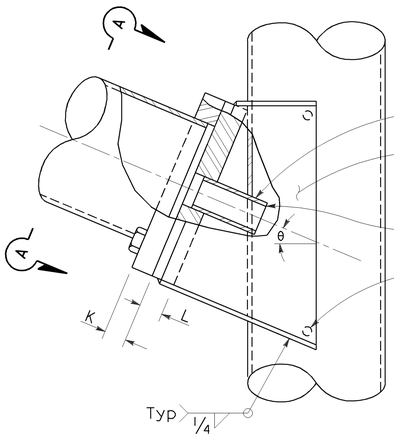

ELEVATION

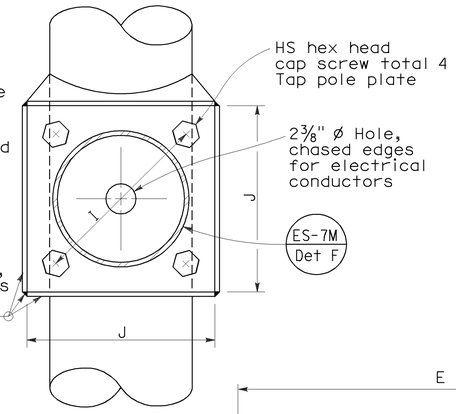

VIEW A-A

SIGNAL ARM CONNECTION DETAILS

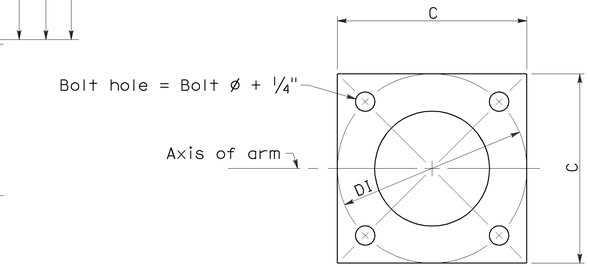

BASE PLATE

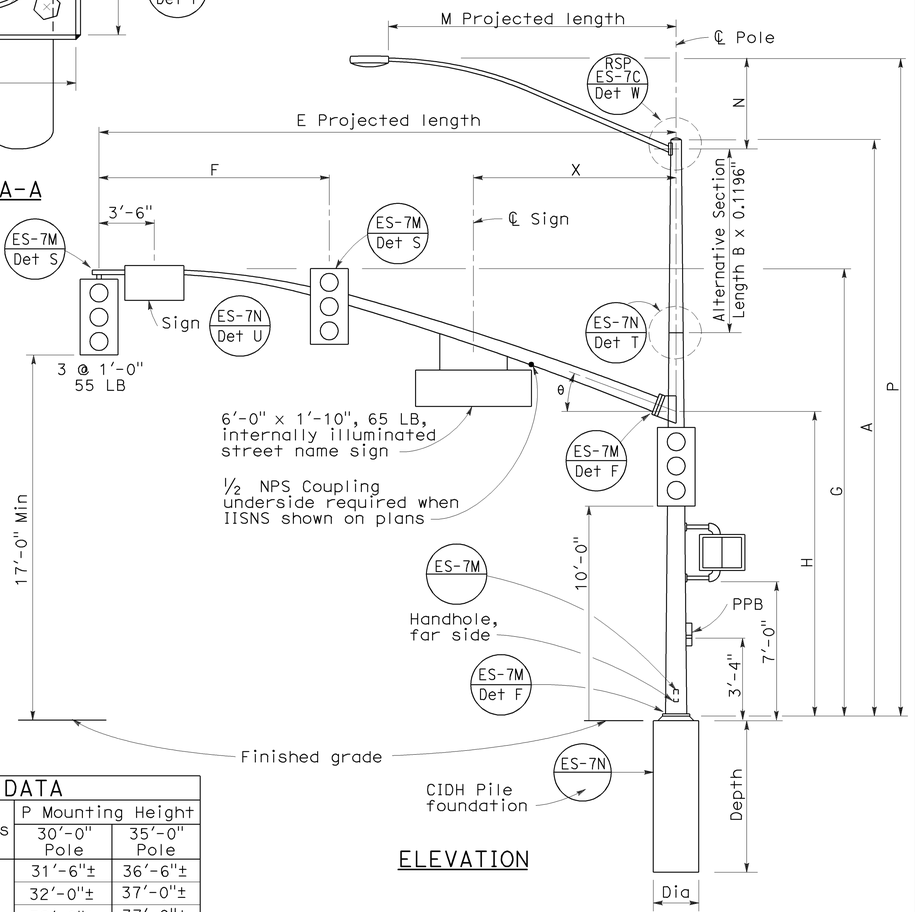

ELEVATION

TYPE 19-4-100, 19A-4-100, 24-4-100, 24A-4-100, 26-4-100, 26A-4-100

SIGNAL ARM DATA

E Projected Length	F Min Spacing	G Mounting Height	H	Min OD at Pole	Thickness	I Bolt Circle	HS Cap Screws	J Plate Size	K Arm ℙ Thickness	L Pole ℙ Thickness	θ	X Max
25'-0"	10'-0"	22'-8"±	16'-0"	7 5/16"	0.2391"	12"	1¼"-7NC-3"	1'-0"	1¼"	1½"	23°	10'-6"
30'-0"	12'-0"	23'-0"±		8"		13½"		1'-1½"	1½"	1¾"	21°	
35'-0"	14'-0"			8 11/16"							15°	13'-0"
40'-0"	15'-0"			9⅜"								
45'-0"		23'-8"±		10¼"								

LUMINAIRE ARM DATA

M Projected Length	N Rise	Min OD at Pole	Thickness	P Mounting Height 30'-0" Pole	P Mounting Height 35'-0" Pole
6'-0"	2'-0"±	3¼"	0.1196"	31'-6"±	36'-6"±
8'-0"	2'-6"±	3½"		32'-0"±	37'-0"±
10'-0"	3'-3"±	3⅞"		32'-9"±	37'-9"±
12'-0"	4'-3"±			33'-9"±	38'-9"±
15'-0"	4'-9"±	4¼"		34'-3"±	39'-3"±

POLE DATA / BASE PLATE DATA / CIDH PILE FOUNDATION

Pole Type	Load Case	Wind Velocity mph	POLE DATA: A Height	Min OD: Base	Min OD: Top	Thickness	Alternative Section: B Length	Alternative Section: Bottom	Alternative Section: Top	BASE PLATE DATA: C	DI Bolt Circle	Thickness	Anchor Bolts Size	Luminaire Arm	Signal Arm	CIDH PILE FOUNDATION: Dia	Depth	Reinforced
18-4-100	4	100	17'-0"	12"	9"	0.2391"	None	9⅜"		1'-6"	1'-6"	1½"	2" Ø x 42" x 6"	None	25'-0", [30'-0"]	3'-0"	9'-0"	Yes
19-4-100			30'-0"		8"		10'-0"		8"					6'-15' [12'-0"]				
19A-4-100			35'-0"		7 5/16"		15'-0'		7 5/16"					6'-15' [15'-0"]				
23-4-100			17'-0"		9"		None							None	35'-0"			
24-4-100			30'-0"		8"		10'-0"	9⅜"	8"					6'-15' [12'-0"]				
24A-4-100			35'-0"		7 5/16"		15'-0"		7 5/16"					6'-15' [15'-0"]				
26-4-100			30'-0"	12½"	8"	0.3125"	10'-0"	9¾"	8 3/8"					6'-15' [12'-0"]	40'-0", [45'-0"]			
26A-4-100			35'-0"		7 5/16"		15'-0"		7 11/16"					6'-15' [15'-0"]				
27-4-100			17'-0"		9¾"		None							None				

☐ Indicates arm length to be used unless otherwise noted on plans.

STATE OF CALIFORNIA
DEPARTMENT OF TRANSPORTATION

ELECTRICAL SYSTEMS (SIGNAL AND LIGHTING STANDARD CASE 4 ARM LOADING WIND VELOCITY=100 MPH ARM LENGTHS 25' TO 45')

NO SCALE

RSP ES-7F DATED OCTOBER 5, 2007 SUPERCEDES RSP ES-7F DATED NOVEMBER 17, 2006 AND STANDARD PLAN ES-7F DATED MAY 1, 2006 - PAGE 442 OF THE STANDARD PLANS BOOK DATED MAY 2006.

REVISED STANDARD PLAN RSP ES-7F

7-10-07

DIST	COUNTY	ROUTE	POST MILES TOTAL PROJECT	SHEET NO.	TOTAL SHEETS
04	SF	101	8.2/9.2	411	654

REGISTERED CIVIL ENGINEER

October 5, 2007
PLANS APPROVAL DATE

Stanley P. Johnson
No. C57793
Exp. 3-31-08
CIVIL
REGISTERED PROFESSIONAL ENGINEER
STATE OF CALIFORNIA

The State of California or its officers or agents shall not be responsible for the accuracy or completeness of electronic copies of this plan sheet.

To accompany plans dated 12-14-09

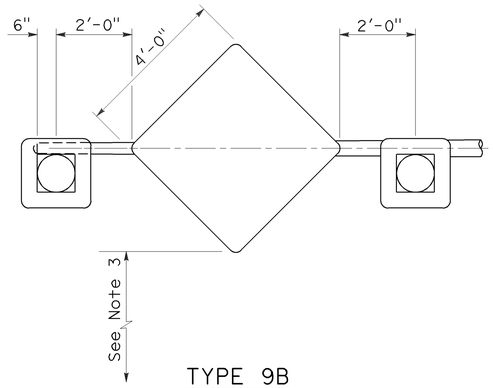

TYPE 9B

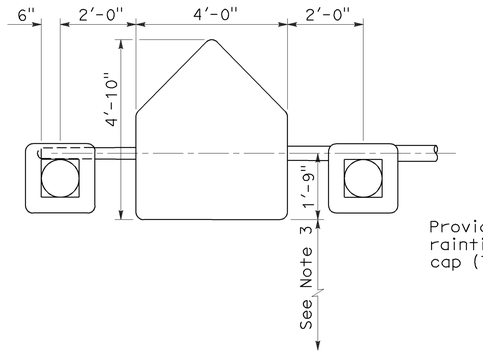

TYPE 9A

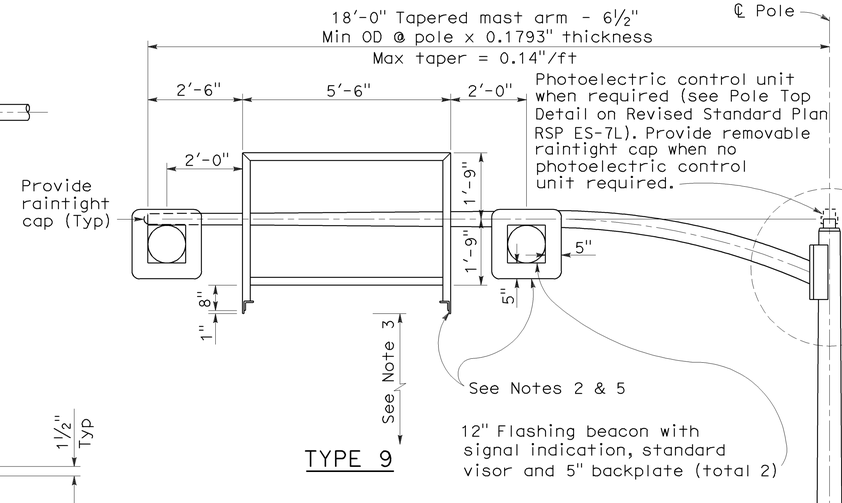

TYPE 9

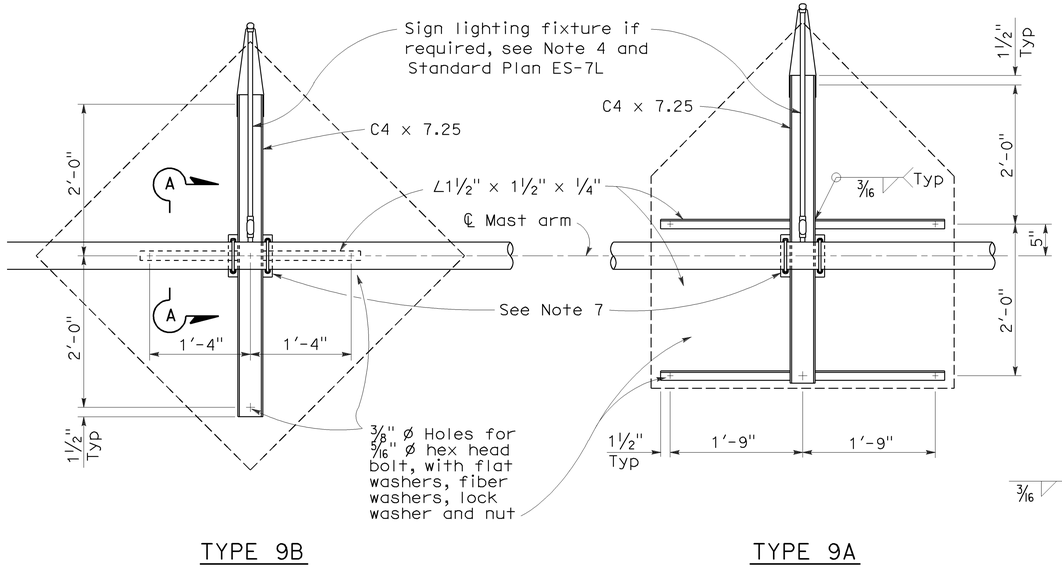

TYPE 9B

TYPE 9A

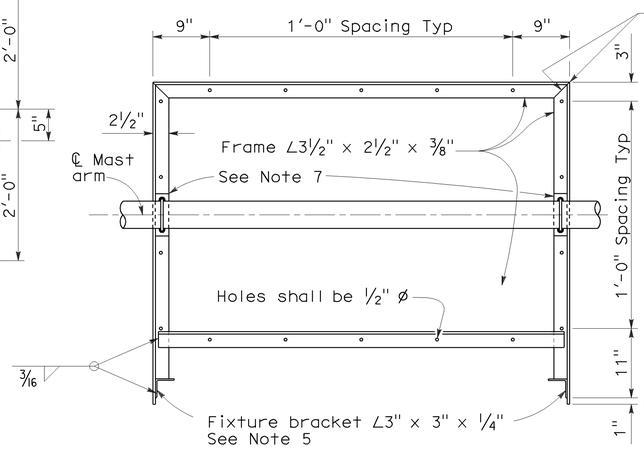

TYPE 9

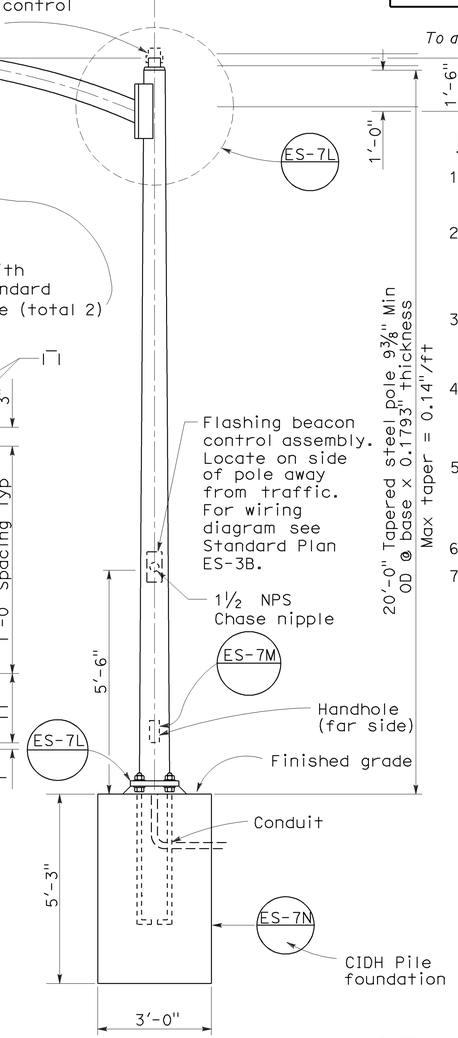

ELEVATION

NOTES:

1. Splices between fluorescent fixture sockets shall be waterproof.
2. Install flashing beacons and sign frame. Flashing beacons shall be MAT mounted on pipe tenon. (See Standard Plan ES-7M, Detail S).
3. Vertical clearance to be 17'-0" minimum between roadway and bottom of signal panel or lighting fixture bracket.
4. Special provisions or plans will indicate when sign lighting fixture is required on Type 9A or 9B sign frames.
5. Type 9 sign frames shall be provided with a 3'-0" fluorescent fixture. For fluorescent lighting details see Standard Plan ES-15B.
6. Anchor bolts shall be ASTM A-307.
7. See Revised Standard Plan RSP ES-7L for sign frame mounting details.

FRAME DETAILS

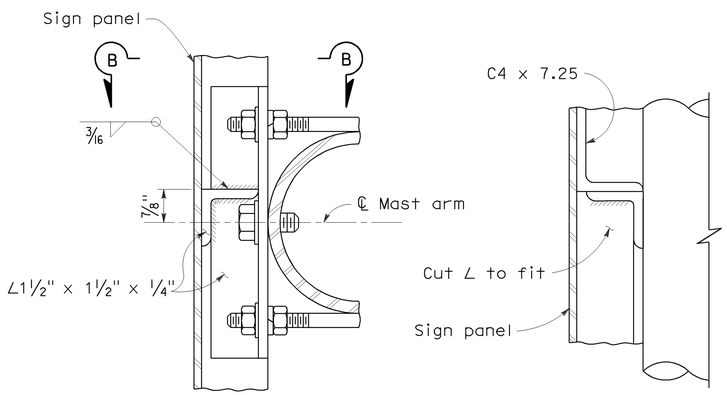

SECTION A-A

SECTION B-B

TYPE 9B

STATE OF CALIFORNIA
DEPARTMENT OF TRANSPORTATION

ELECTRICAL SYSTEMS (SIGNAL AND LIGHTING STANDARD CANTILEVER FLASHING BEACON TYPES 9, 9A AND 9B)

NO SCALE

RSP ES-7K DATED OCTOBER 5, 2007 SUPERCEDES STANDARD PLAN ES-7K
DATED MAY 1, 2006 - PAGE 447 OF THE STANDARD PLANS BOOK DATED MAY 2006.

REVISED STANDARD PLAN RSP ES-7K

2006 REVISED STANDARD PLAN RSP ES-7K

7-10-07

DIST	COUNTY	ROUTE	POST MILES TOTAL PROJECT	SHEET NO.	TOTAL SHEETS
04	SF	101	8.2/9.2	412	654

REGISTERED ELECTRICAL ENGINEER

October 5, 2007
PLANS APPROVAL DATE

Jeffery G. McRae
No. E14512
Exp. 6-30-08
ELECTRICAL
REGISTERED PROFESSIONAL ENGINEER
STATE OF CALIFORNIA

The State of California or its officers or agents shall not be responsible for the accuracy or completeness of electronic copies of this plan sheet.

To accompany plans dated 12-14-09

NOTES: (FOR LIGHTING AND SIGN ILLUMINATION CONTROL)

1. The ballast voltages of lighting fixtures and luminaires shall match line service voltages.
2. Voltage rating of photoelectric controls shall conform to the service voltage indicated on the plans.
3. Terminal strip shall be provided for wiring to fixtures.
4. Type SC1A, SC2A, SC3A controls are similar to Types SC1, SC2 and SC3 controls respectively except test switch and wiring are not required.

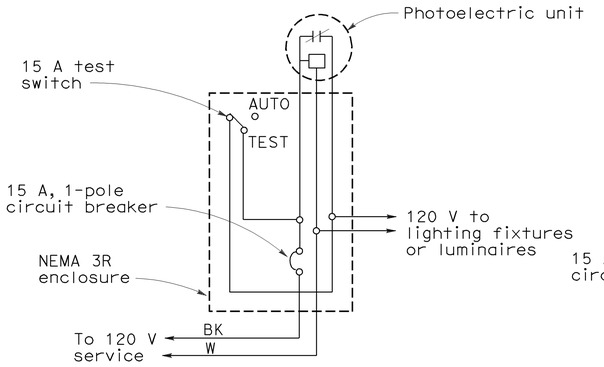

TYPE LC1 CONTROL

For 120 V unswitched circuit with no more than 800 W load.

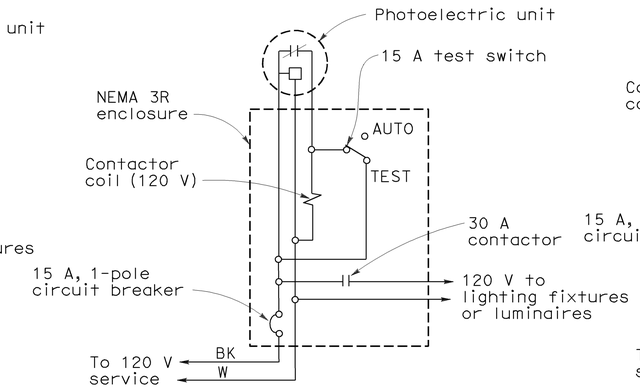

TYPE LC2 CONTROL

For 120 V unswitched circuit

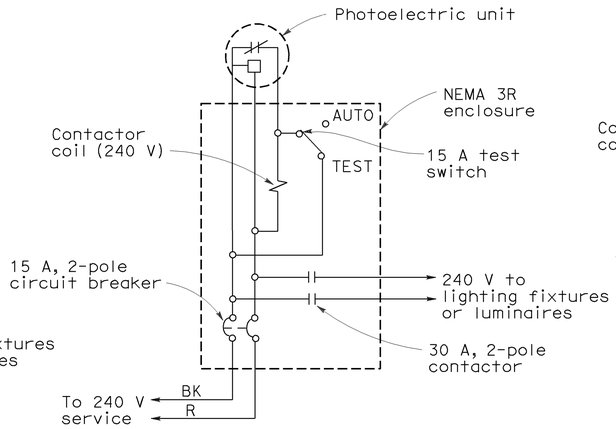

TYPE LC3 CONTROL

For 240 V and 480 V unswitched circuits

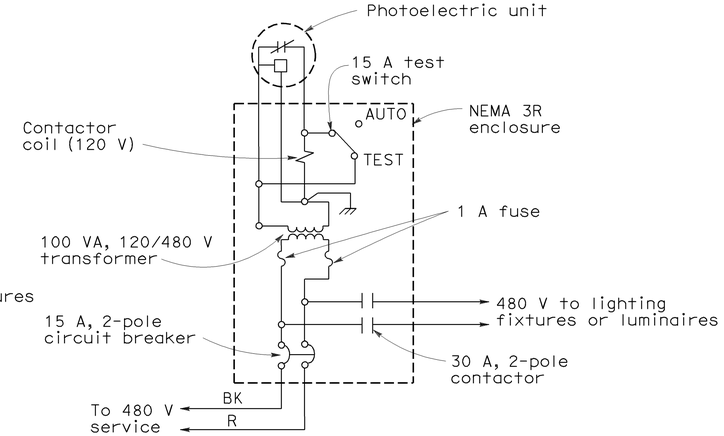

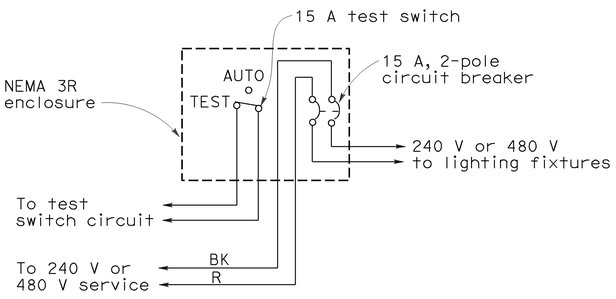

TYPE SC1 CONTROL

For 240 V or 480 V switched circuit, see Note 4 for Type SC1A

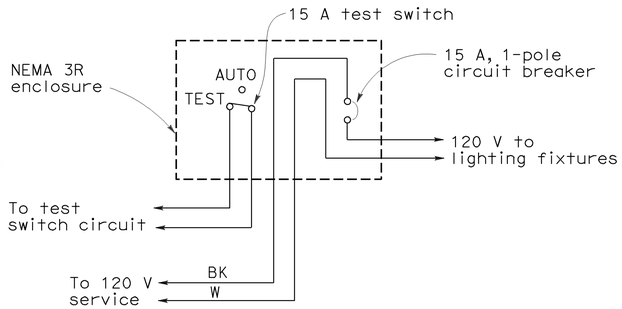

TYPE SC2 CONTROL

For 120 V switched circuit, see Note 4 for Type SC2A

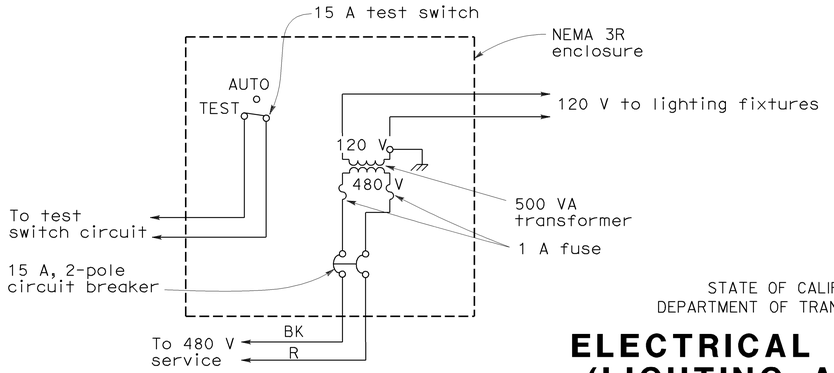

TYPE SC3 CONTROL

For 480 V switched sign circuit, see Note 4 for Type SC3A

STATE OF CALIFORNIA
DEPARTMENT OF TRANSPORTATION

ELECTRICAL SYSTEMS (LIGHTING AND SIGN ILLUMINATION CONTROL)

NO SCALE

RSP ES-15D DATED OCTOBER 5, 2007 SUPERCEDES STANDARD PLAN ES-15D DATED MAY 1, 2006 - PAGE 472 OF THE STANDARD PLANS BOOK DATED MAY 2006.

REVISED STANDARD PLAN RSP ES-15D

2006 REVISED STANDARD PLAN RSP ES-15D

9-10-07

DIST	COUNTY	ROUTE	POST MILES TOTAL PROJECT	SHEET No	TOTAL SHEETS
04	SF	101	8.2/9.2	413	654

majid madani 8-31-09
REGISTERED CIVIL ENGINEER DATE

12-14-09
PLANS APPROVAL DATE

REGISTERED PROFESSIONAL ENGINEER — Majid Madani No. 40902 Exp. 3-31-11 CIVIL — STATE OF CALIFORNIA

The State of California or its officers or agents shall not be responsible for the accuracy or completeness of electronic copies of this plan sheet.

INDEX TO PLANS

SHEET NO.	TITLE
1	BRIDGE REMOVAL PLAN NO. 1
2	BRIDGE REMOVAL PLAN NO. 2
3	BRIDGE REMOVAL PLAN NO. 3
4	BRIDGE REMOVAL DETAILS

BRIDGE REMOVAL SEQUENCE:

1. Close traffic on existing structure.
2. Perform Stage 1 Bridge Removal.
3. Build Detour Roadway.
4. Transfer traffic to Detour Roadway.
5. Perform Stage 2 Bridge Removal.

LEGEND:

Indicates Stage 1 Bridge Removal.

Indicates Stage 2 Bridge Removal.

Indicates existing structure.

NOTES:

For details of Stage 1 Bridge Removal limits and Section A-A, see "BRIDGE REMOVAL DETAILS" sheet.

For Detour Information, see "Roadway Plans." Verify field dimensions before commencing Bridge Removal.

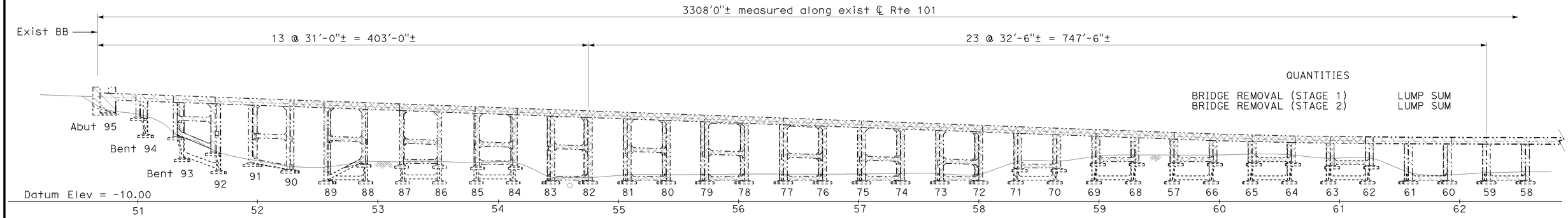

QUANTITIES

BRIDGE REMOVAL (STAGE 1)	LUMP SUM
BRIDGE REMOVAL (STAGE 2)	LUMP SUM

ELEVATION
1" = 40'

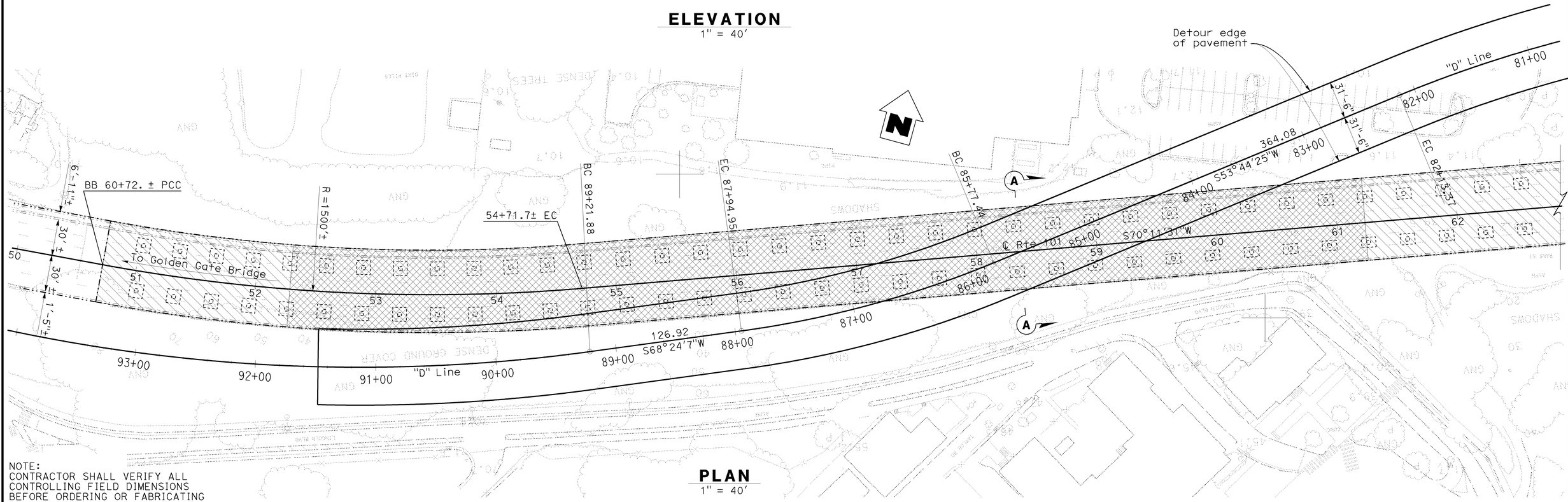

PLAN
1" = 40'

NOTE:
CONTRACTOR SHALL VERIFY ALL CONTROLLING FIELD DIMENSIONS BEFORE ORDERING OR FABRICATING ANY MATERIALS.

DESIGN	BY A. Alcantara	CHECKED S. Hegazi	LOAD & RESISTANCE FACTOR DESIGN			STATE OF CALIFORNIA DEPARTMENT OF TRANSPORTATION	DIVISION OF ENGINEERING SERVICES STRUCTURE DESIGN DESIGN BRANCH 13
DETAILS	BY J. Casarino	CHECKED A. Alcantara	LAYOUT	BY A. Alcantara	CHECKED S. Hegazi		
QUANTITIES	BY A. Alcantara	CHECKED S. Hegazi	SPECIFICATIONS	BY X	PLANS AND SPECS COMPARED X		

xmajid madani
DESIGN ENGINEER

STRUCTURES DESIGN GENERAL PLAN SHEET (ENGLISH) (REV. 10/25/05)

ORIGINAL SCALE IN INCHES FOR REDUCED PLANS 0 1 2 3

CU 04
EA 163741

BRIDGE NO. 34-0014
POST MILE 9.18

MARINA VIADUCT
BRIDGE REMOVAL PLAN NO. 1

DISREGARD PRINTS BEARING EARLIER REVISION DATES →

REVISION DATES: 08-06-09 | 8-18-09 | 8-27-09 | 11-10-09

SHEET 1 OF 4

FILE => 34-0014_gp1r1.dgn

STRUCTURES DESIGN GENERAL PLAN SHEET (ENGLISH) (REV.07-24-06)

USERNAME => trlenord DATE PLOTTED => 14-DEC-2009 TIME PLOTTED => 15:37

DIST	COUNTY	ROUTE	POST MILES TOTAL PROJECT	SHEET No	TOTAL SHEETS
04	SF	101	8.2/9.2	414	654

majid madani 8-31-09
REGISTERED CIVIL ENGINEER DATE

12-14-09
PLANS APPROVAL DATE

REGISTERED PROFESSIONAL ENGINEER — Majid Madani No. 40902 Exp. 3-31-11 CIVIL — STATE OF CALIFORNIA

The State of California or its officers or agents shall not be responsible for the accuracy or completeness of electronic copies of this plan sheet.

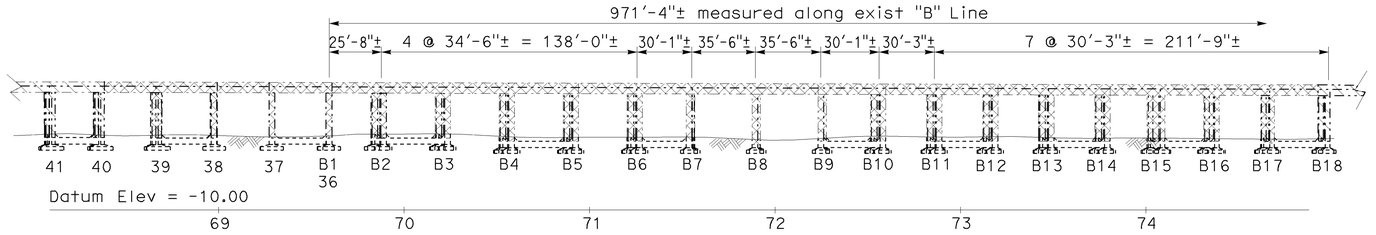

ELEVATION "B" LINE
1" = 40'

LEGEND:

Indicates Stage 1 Bridge Removal.

Indicates Stage 2 Bridge Removal.

Indicates existing structure.

NOTES:

For details of Stage 1 Bridge Removal limits and Section C-C, Section D-D and Section E-E, see "BRIDGE REMOVAL DETAILS"sheet.

For Detour Information, see "Roadway Plans." Verify field dimensions before commencing Bridge Removal.

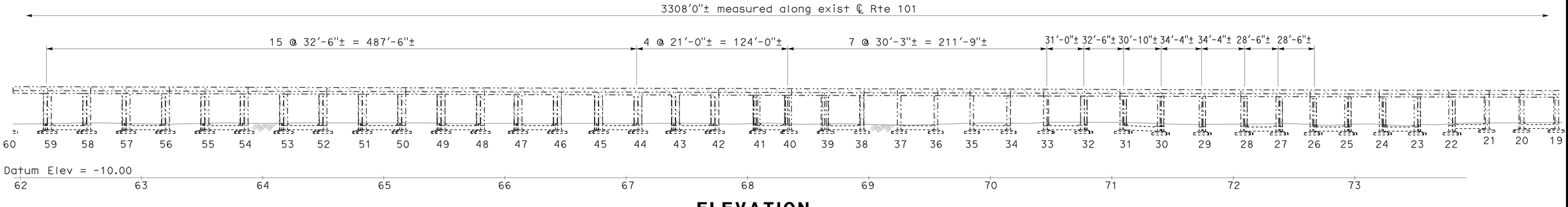

ELEVATION
1" = 40'

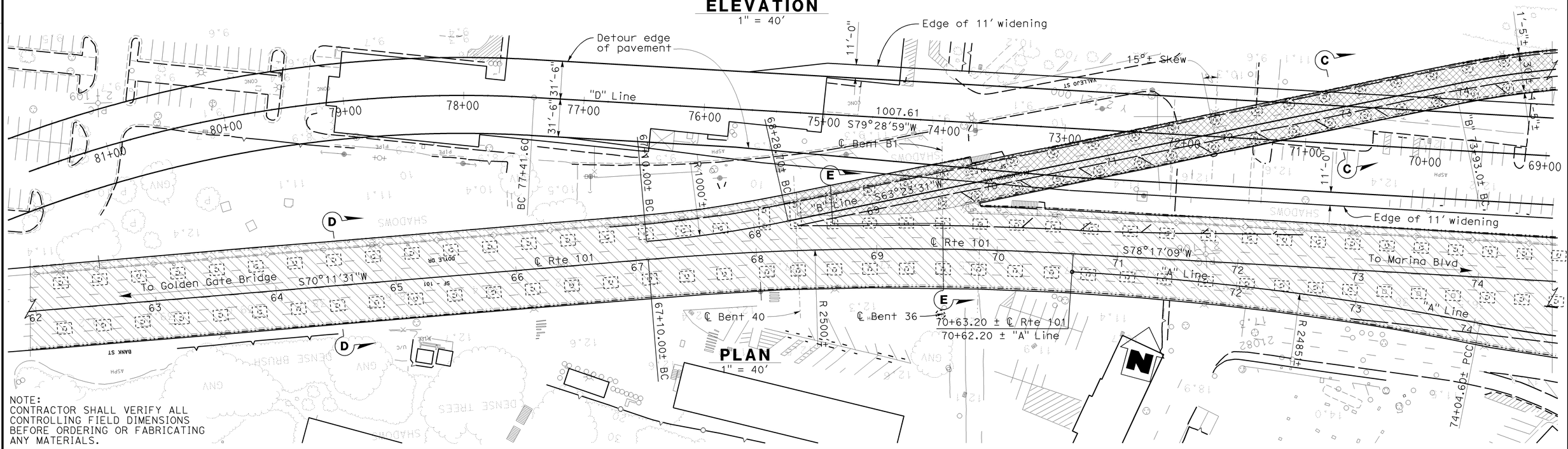

PLAN
1" = 40'

NOTE:
CONTRACTOR SHALL VERIFY ALL CONTROLLING FIELD DIMENSIONS BEFORE ORDERING OR FABRICATING ANY MATERIALS.

DESIGN	BY A. Alcantara	CHECKED S. Hegazi	LOAD & RESISTANCE FACTOR DESIGN			
DETAILS	BY J. Casarino	CHECKED A. Alcantara	LAYOUT	BY A. Alcantara	CHECKED S. Hegazi	
QUANTITIES	BY A. Alcantara	CHECKED S. Hegazi	SPECIFICATIONS	BY X	PLANS AND SPECS COMPARED X	

x majid madani
DESIGN ENGINEER

STATE OF CALIFORNIA
DEPARTMENT OF TRANSPORTATION

DIVISION OF ENGINEERING SERVICES
STRUCTURE DESIGN
DESIGN BRANCH 13

BRIDGE NO.	34-0014
POST MILE	9.18

MARINA VIADUCT
BRIDGE REMOVAL PLAN NO. 2

STRUCTURES DESIGN GENERAL PLAN SHEET (ENGLISH) (REV. 10/25/05)

ORIGINAL SCALE IN INCHES FOR REDUCED PLANS 0 1 2 3

CU 04
EA 163741

DISREGARD PRINTS BEARING EARLIER REVISION DATES →

REVISION DATES: 08-06-09 | 9-10-09 | 08-26-09 | 11-10-09

SHEET 2 OF 4

FILE => 34-0014_gp2r1.dgn

STRUCTURES DESIGN GENERAL PLAN SHEET (ENGLISH) (REV.07-24-06)

USERNAME => trfenord DATE PLOTTED => 14-DEC-2009 TIME PLOTTED => 15:37

DIST	COUNTY	ROUTE	POST MILES TOTAL PROJECT	SHEET No	TOTAL SHEETS
04	SF	101	8.2/9.2	415	654

majid madani 8-31-09
REGISTERED CIVIL ENGINEER DATE

12-14-09
PLANS APPROVAL DATE

REGISTERED PROFESSIONAL ENGINEER — Majid Madani No. 40902 Exp. 3-31-11 CIVIL — STATE OF CALIFORNIA

The State of California or its officers or agents shall not be responsible for the accuracy or completeness of electronic copies of this plan sheet.

LEGEND:

- Indicates Stage 1 Bridge Removal.
- Indicates Stage 2 Bridge Removal.
- Indicates existing structure.

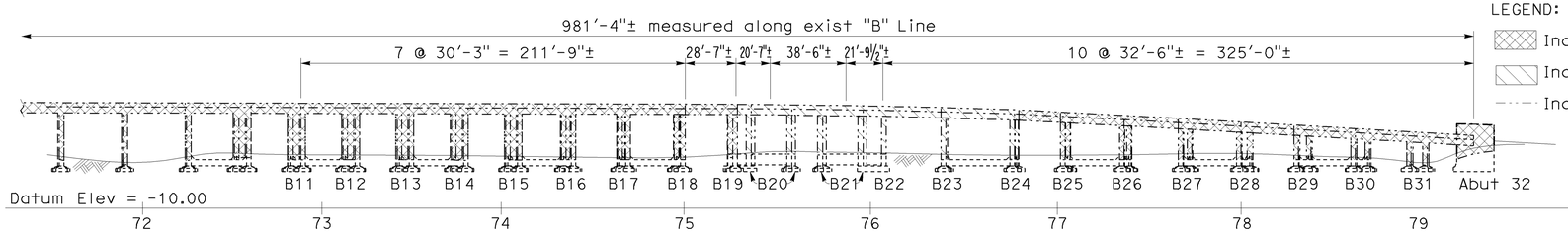

ELEVATION "B" LINE
1" = 40'

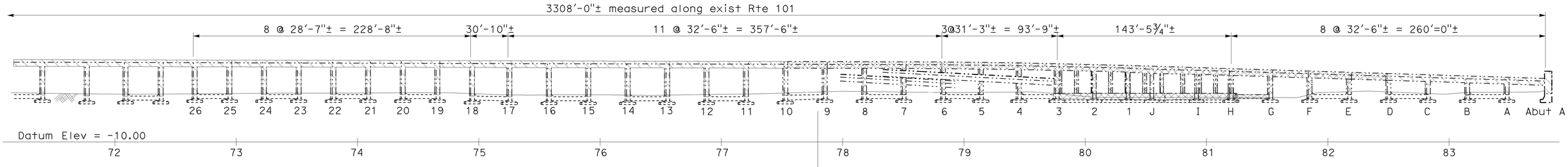

ELEVATION
1" = 40'

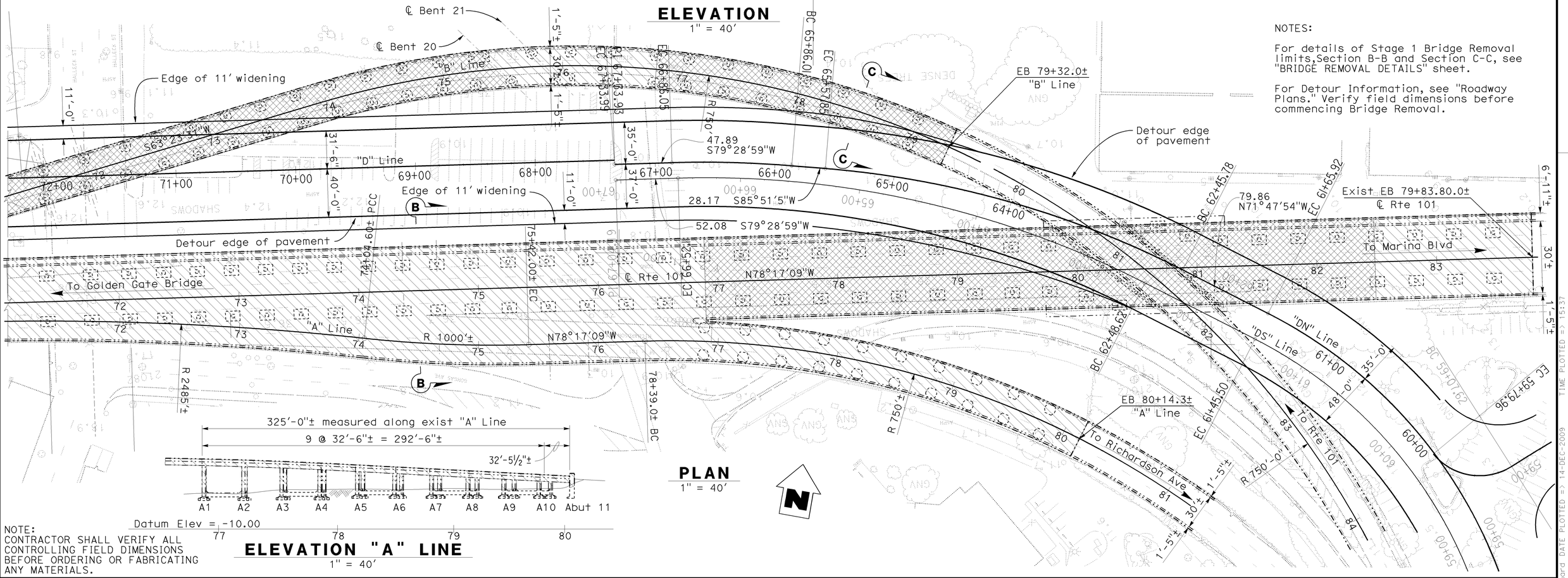

NOTES:

For details of Stage 1 Bridge Removal limits,Section B-B and Section C-C, see "BRIDGE REMOVAL DETAILS" sheet.

For Detour Information, see "Roadway Plans." Verify field dimensions before commencing Bridge Removal.

PLAN
1" = 40'

NOTE:
CONTRACTOR SHALL VERIFY ALL CONTROLLING FIELD DIMENSIONS BEFORE ORDERING OR FABRICATING ANY MATERIALS.

ELEVATION "A" LINE
1" = 40'

DESIGN	BY A. Alcantara	CHECKED S. Hegazi	LOAD & RESISTANCE FACTOR DESIGN			
DETAILS	BY J. Casarino	CHECKED A. Alcantara	LAYOUT	BY A. Alcantara	CHECKED S. Hegazi	
QUANTITIES	BY A. Alcantara	CHECKED S. Hegazi	SPECIFICATIONS	BY X	PLANS AND SPECS COMPARED X	

majid madani
DESIGN ENGINEER

STATE OF CALIFORNIA
DEPARTMENT OF TRANSPORTATION

DIVISION OF ENGINEERING SERVICES
STRUCTURE DESIGN
DESIGN BRANCH 13

BRIDGE NO.	34-0014
POST MILE	9.18

MARINA VIADUCT
BRIDGE REMOVAL PLAN NO. 3

STRUCTURES DESIGN GENERAL PLAN SHEET (ENGLISH) (REV. 10/25/05)

ORIGINAL SCALE IN INCHES FOR REDUCED PLANS 0 1 2 3

CU 04
EA 163741

DISREGARD PRINTS BEARING EARLIER REVISION DATES →

REVISION DATES: 08-06-09 | 8-10-09 | 08-26-09 | 11-10-09

SHEET 3 OF 4

FILE => 34-0014_gp3r1.dgn

STRUCTURES DESIGN GENERAL PLAN SHEET (ENGLISH) (REV.07-24-06)

USERNAME => ftrenard DATE PLOTTED => 14-DEC-2009 TIME PLOTTED => 15:37

DIST	COUNTY	ROUTE	POST MILES TOTAL PROJECT	SHEET No	TOTAL SHEETS
04	SF	101	8.2/9.2	416	654

Majid Madani 8-31-09
REGISTERED CIVIL ENGINEER DATE

12-14-09
PLANS APPROVAL DATE

REGISTERED PROFESSIONAL ENGINEER
Majid Madani
No. 40902
Exp. 3-31-11
CIVIL
STATE OF CALIFORNIA

The State of California or its officers or agents shall not be responsible for the accuracy or completeness of electronic copies of this plan sheet.

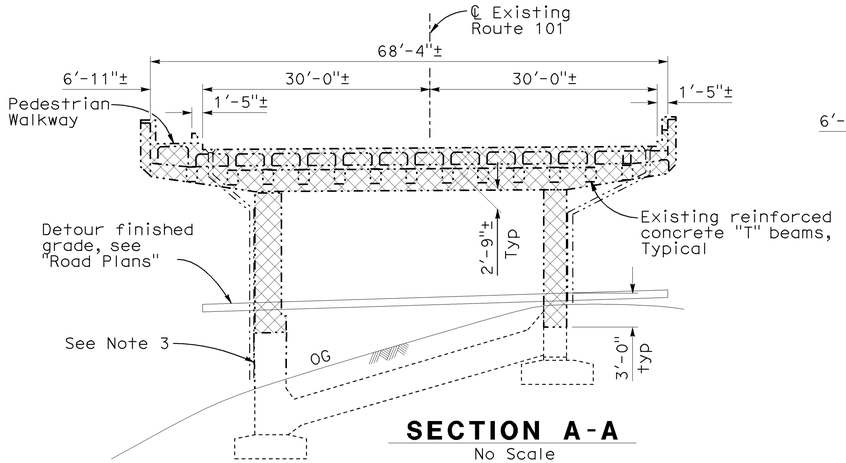

SECTION A-A
No Scale

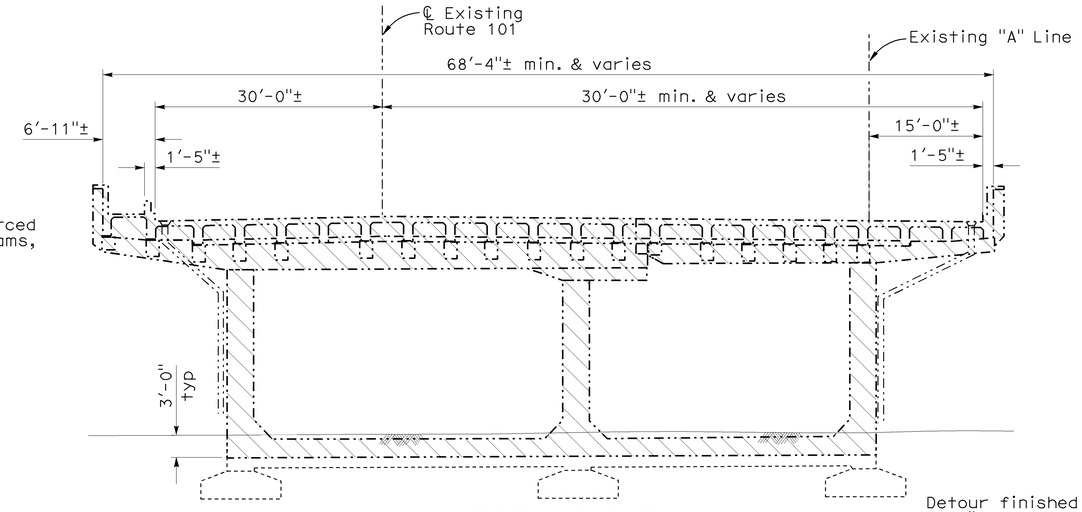

SECTION B-B
No Scale

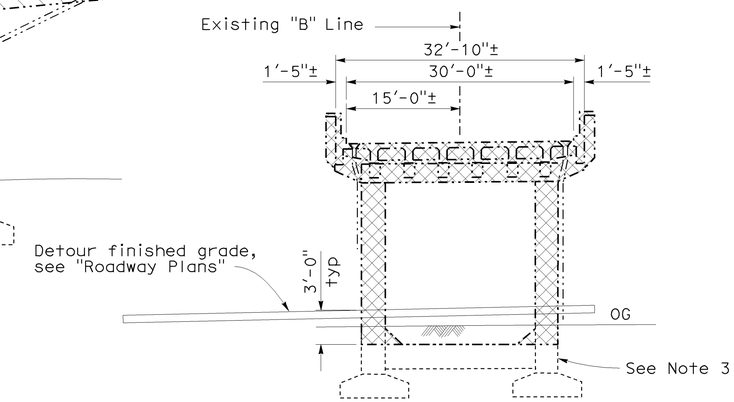

SECTION C-C
No Scale

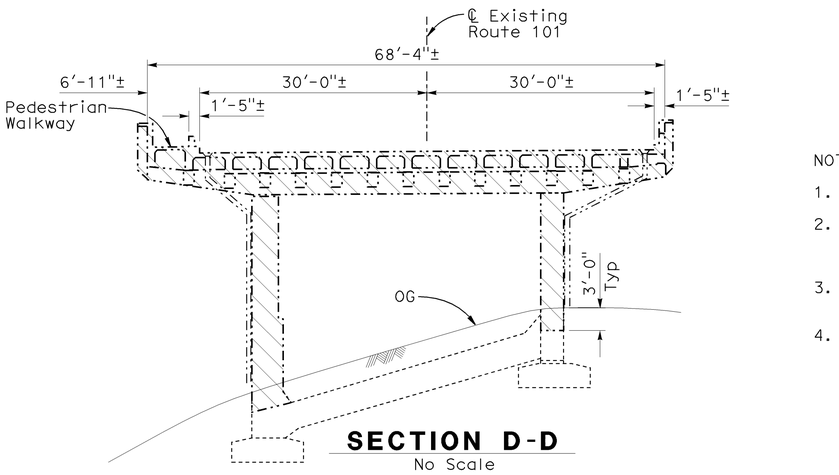

SECTION D-D
No Scale

NOTES:

1. Remove 3' below OG or Detour Finished Grade
2. Remaining existing structure to be removed after detour is constructed and detour traffic is transferred to it.
3. Remaining existing structure underneath Detour to be removed in future contracts.
4. Place Temporary Railing as shown.

LEGEND:

- Indicates Stage 1 Bridge Removal.
- Indicates Stage 2 Bridge Removal.
- Indicates existing structure.

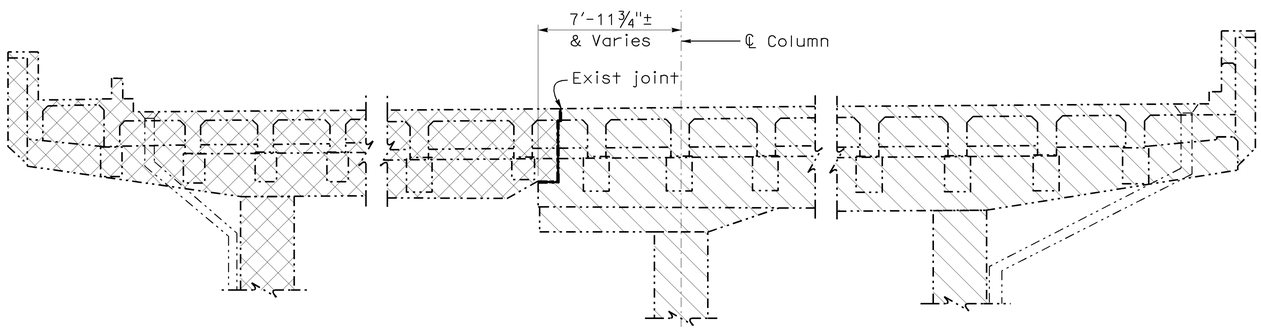

SECTION E-E
TYPICAL @ BENTS 36, 37, 38, AND 39
No Scale

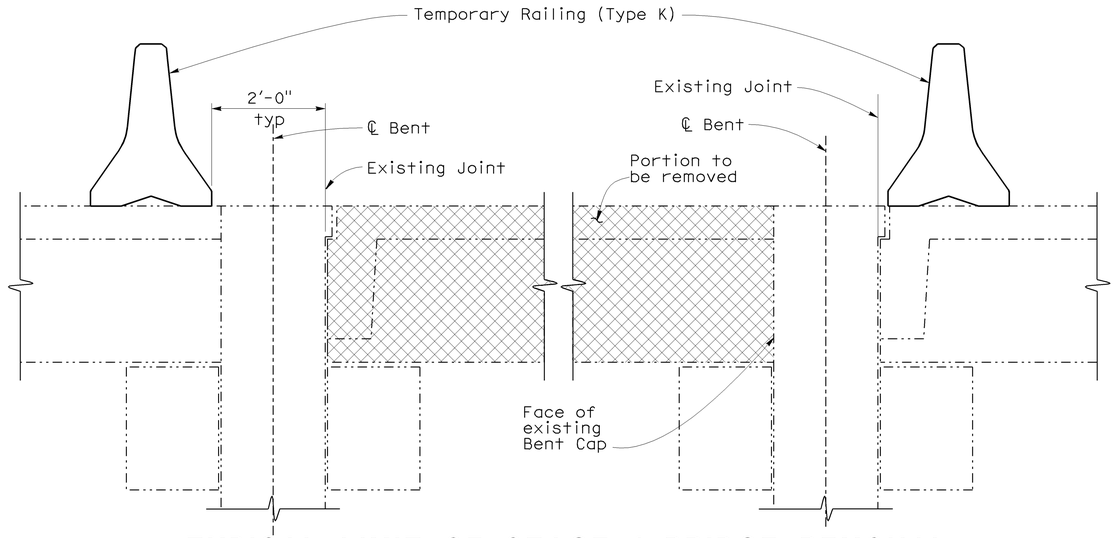

TYPICAL LIMIT OF STAGE 1 BRIDGE REMOVAL
No Scale

NOTE:
CONTRACTOR SHALL VERIFY ALL CONTROLLING FIELD DIMENSIONS BEFORE ORDERING OR FABRICATING ANY MATERIALS.

	BY	CHECKED
DESIGN	A. Alcantara	S. Hegazi
DETAILS	JFCasarino/CCancino	A. Alcantara
QUANTITIES	A. Alcantara	S. Hegazi

STATE OF CALIFORNIA
DEPARTMENT OF TRANSPORTATION

DIVISION OF ENGINEERING SERVICES
STRUCTURE DESIGN
DESIGN BRANCH 13

BRIDGE NO. 34-0014
POST MILE 9.18

MARINA VIADUCT
BRIDGE REMOVAL DETAILS

STRUCTURES DESIGN DETAIL SHEET (ENGLISH) (REV. 10/25/05)

ORIGINAL SCALE IN INCHES FOR REDUCED PLANS 0 1 2 3

CU 04
EA 163741

DISREGARD PRINTS BEARING EARLIER REVISION DATES

REVISION DATES: 08-06-09 8-10-09 8-19-09 08-24-09 11-10-09

SHEET 4 OF 4

FILE => 34-0014_remdr1.dgn

USERNAME => trlenard DATE PLOTTED => 14-DEC-2009 TIME PLOTTED => 15:37

DIST	COUNTY	ROUTE	POST MILES TOTAL PROJECT	SHEET No	TOTAL SHEETS
04	SF	101	8.2/9.2	417	654

REGISTERED CIVIL ENGINEER — 8-31-09 DATE

12-14-09
PLANS APPROVAL DATE

The State of California or its officers or agents shall not be responsible for the accuracy or completeness of electronic copies of this plan sheet.

REGISTERED PROFESSIONAL ENGINEER — LINAN WANG No. C54714 Exp. 12-31-09 CIVIL — STATE OF CALIFORNIA

NOTE:
THE CONTRACTOR SHALL VERIFY ALL CONTROLLING FIELD DIMENSIONS BEFORE ORDERING OR FABRICATING ANY MATERIAL.

CALIFORNIA STATE FIRE MARSHAL APPROVED
Approval of this plan does not authorize or approve any omission or deviation from applicable regulations. Final approval is subject to field inspection. One set of approved plans shall be available on the project site at all times.
Reviewed by: STEPHEN GUARINO
Approval date: 12-14-09

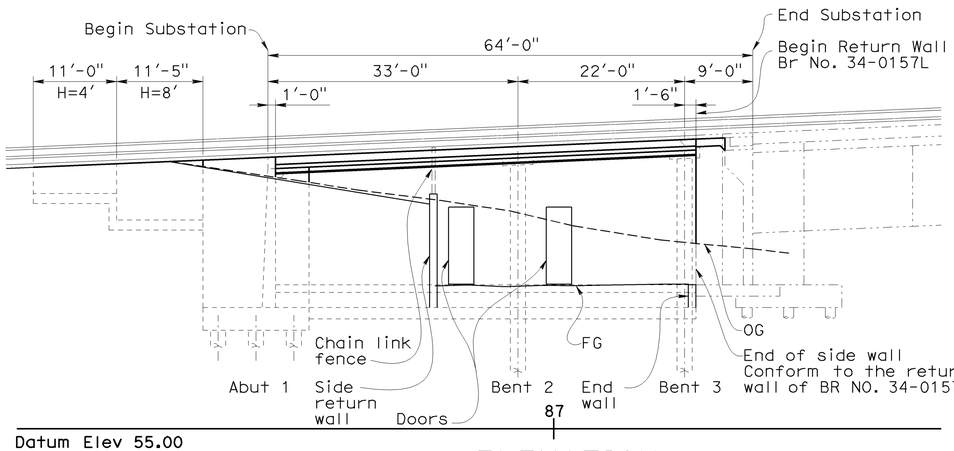

ELEVATION
1" = 10'-0"

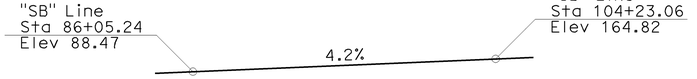

"SB" LINE PROFILE GRADE
No Scale

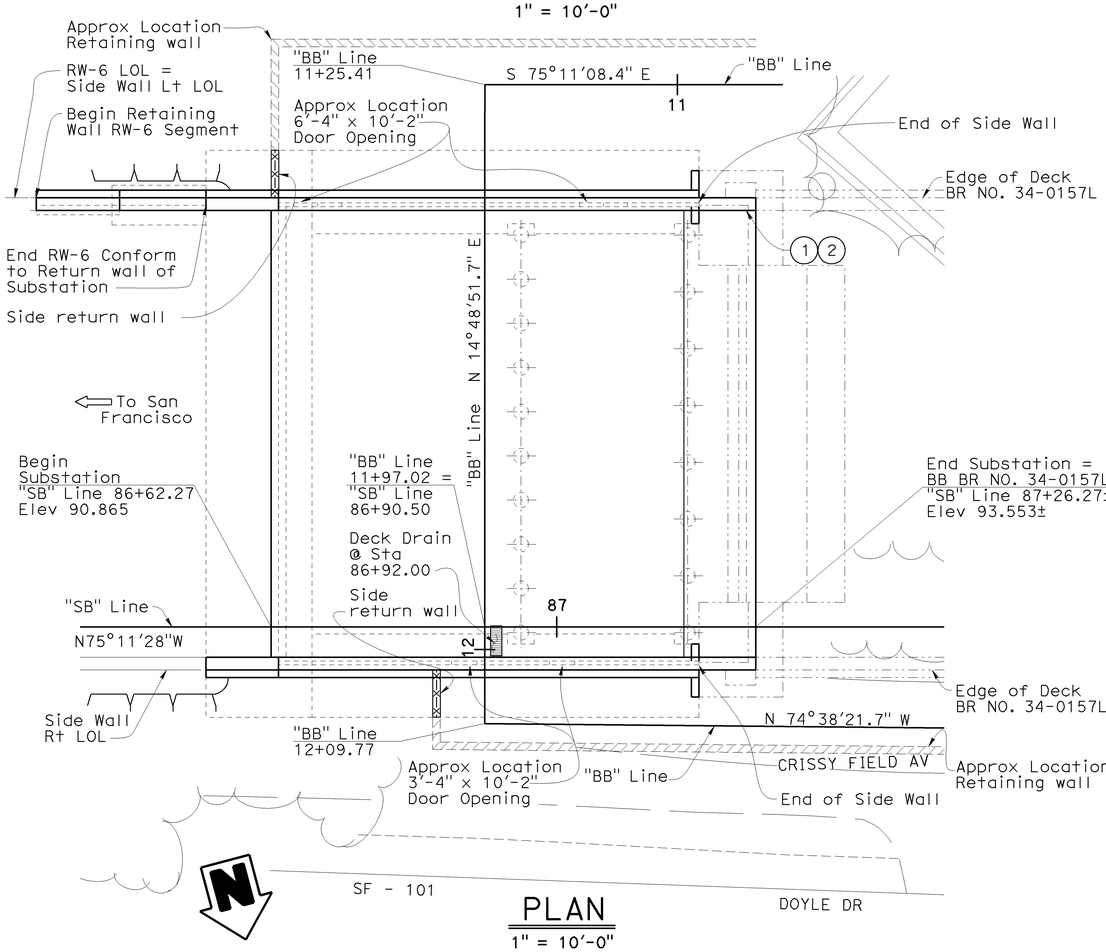

PLAN
1" = 10'-0"

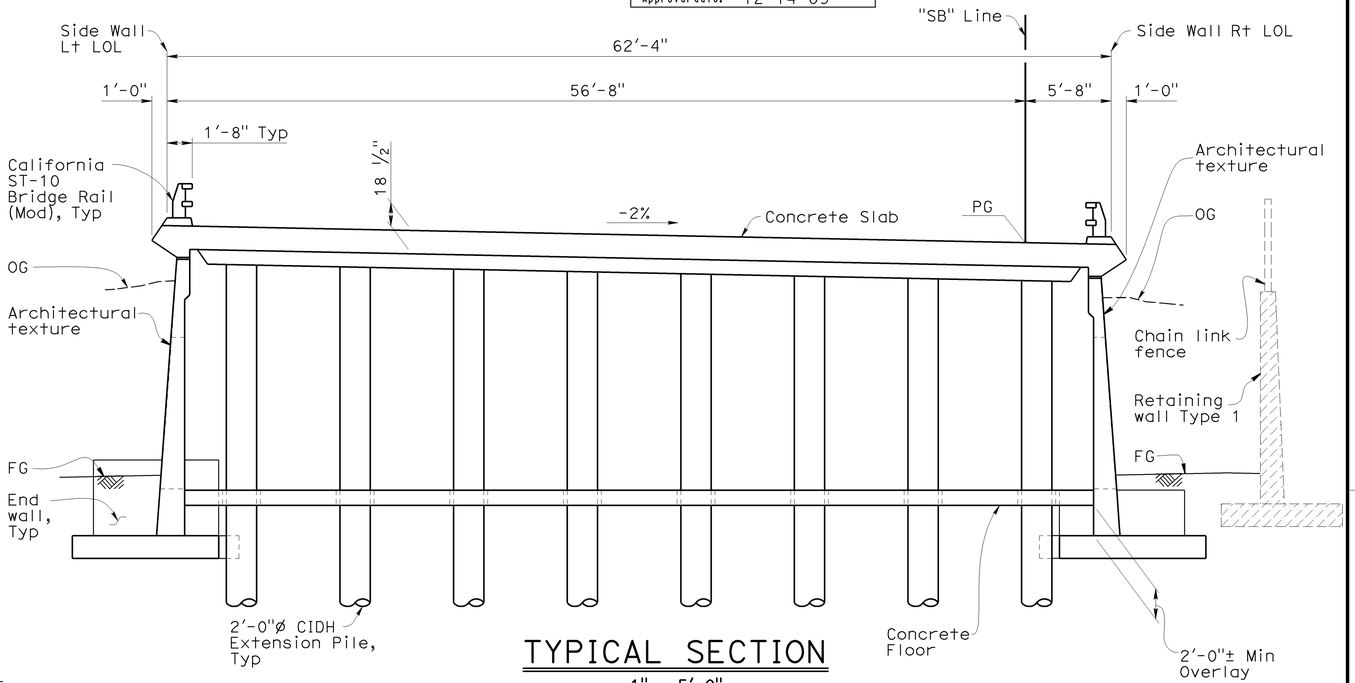

TYPICAL SECTION
1" = 5'-0"

NOTES:
1. Paint "BRIDGE NO. 34-0157W"
2. Paint "BATTERY SUBSTATION"

Indicates Bridge No. 34-0157L
Indicates Chain Link Fence (CL-6), see "ROADWAY PLANS."
Indicates Retaining wall, see "ROADWAY PLANS."

For Door Opening locations and Concrete Floor, see "BATTERY SUBSTATION PLANS".

QUANTITIES

STRUCTURE EXCAVATION (BRIDGE)	1,465	CY
STRUCTURE EXCAVATION (RETAINING WALL)	30	CY
STRUCTURE BACKFILL (BRIDGE)	590	CY
STRUCTURE BACKFILL (RETAINING WALL)	30	CY
24" CAST-IN-DRILLED-HOLE CONCRETE PILING	1,922	LF
STRUCTURAL CONCRETE, BRIDGE FOOTING	115	CY
STRUCTURAL CONCRETE, BRIDGE	380	CY
STRUCTURAL CONCRETE, RETAINING WALL	175	CY
ARCHITECTURAL TEXTURE (LIGHT BOARD FINISH)	2,200	SQFT
JOINT SEAL (MR1/2")	60	LF
BAR REINFORCING STEEL (BRIDGE)	165,000	LB
BAR REINFORCING STEEL (RETAINING WALL)	43,800	LB
BRIDGE DECK DRAINAGE SYSTEM	340	LB
CALIFORNIA ST-10 BRIDGE RAIL (MODIFIED)	153	LF

majid madani
DESIGN ENGINEER

DESIGN	BY L. Wang	CHECKED L. Barnard	LOAD & RESISTANCE FACTOR DESIGN	LIVE LOADING: HL93 W/"LOW-BOY"; PERMIT DESIGN VEHICLE	
DETAILS	BY E. Hallstrom/T. Kusumi	CHECKED L. Wang/L. Barnard	LAYOUT BY L. Wang	CHECKED L. Barnard	
QUANTITIES	BY L. Barnard	CHECKED S. Hegazi	SPECIFICATIONS BY K. Meier	PLANS AND SPECS COMPARED L. Wang	

STATE OF CALIFORNIA
DEPARTMENT OF TRANSPORTATION

DIVISION OF ENGINEERING SERVICES
STRUCTURE DESIGN
DESIGN BRANCH 4

CU 04242
EA 163741

BRIDGE NO. 34-0157W
POST MILE 9.0

BATTERY SUBSTATION (BRIDGE)
GENERAL PLAN

ORIGINAL SCALE IN INCHES FOR REDUCED PLANS 0 1 2 3

DISREGARD PRINTS BEARING EARLIER REVISION DATES →

REVISION DATES: 8-11-09 | 8-26-09 | 8-27-09 | 9-14-09 | 11-10-09 | | 7-15-09 | 7-28-09 | 7-29-09 | 8-18-09

SHEET 1 OF 20

STRUCTURES DESIGN GENERAL PLAN SHEET (ENGLISH) (REV.07-24-06)

FILE => 34-0157w-a-gp01.dgn

USERNAME => trleonard DATE PLOTTED => 14-DEC-2009 TIME PLOTTED => 15:37

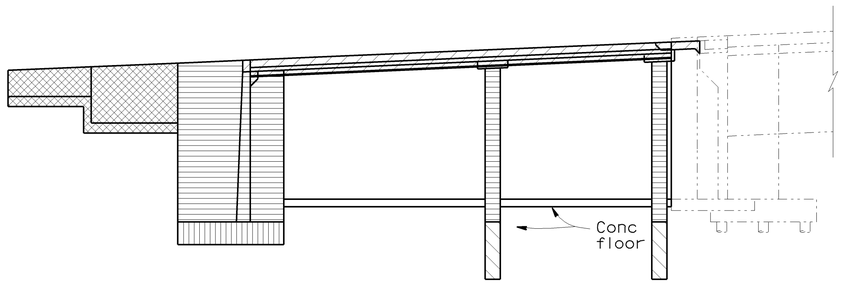

ELEVATION

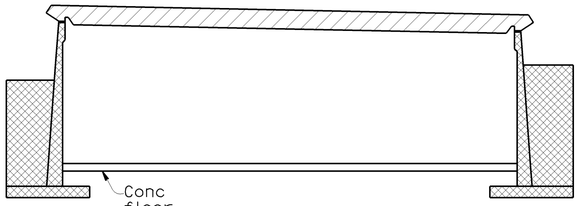

CROSS SECTION

Note:
Piles not shown.

- Structural Concrete, Bridge (f'c = 5 ksi @ 28 days)
- Structural Concrete, Bridge Substructure (f'c = 4 ksi @ 28 days)
- Structural Concrete, Bridge Footing (f'c = 4 ksi @ 28 days)
- Cast In Drilled Hole Concrete Pile (f'c = 4 ksi @ 28 days)
- Structural Concrete, Side Wall and retaining Wall (f'c = 4 ksi @ 28 days)

CONCRETE STRENGTH AND TYPE LIMITS

No scale

Note:
Concrete strength and type limits for Conc floor, see "BATTERY SUBSTATION PLANS."

PILE DATA TABLE

Location	Pile Type	Nominal Resistance		Design Tip Elev (ft)	Specified Tip Elevation (ft)
		Compression (Kips)	Tension (Kips)		
Abut 1	24" CIDH	400	NA	34.5 (d)	34.5
Bent 2,3	24" CIDH	400	NA	36.0 (d)	36.0

Notes:
1. Design tip elevations are controlled by
   (a) Compression
   (b) Tension
   (c) Settlement
   (d) Lateral Load.
2. The CIDH specified tip elevation shall not be raised.

NOTE:
THE CONTRACTOR SHALL VERIFY ALL CONTROLLING FIELD DIMENSIONS BEFORE ORDERING OR FABRICATING ANY MATERIAL.

GENERAL NOTES
LOAD AND RESISTANCE FACTOR DESIGN

DESIGN:
AASHTO LRFD Bridge Design Specifications, Fourth Edition, and California Amendments; except abutments, bridge details taken from Standard Plans March 2006 and earlier versions, and Bridge Standards Sheets (XS Sheets) designed using Bridge Design Specifications LFD Version April 2000 (1996 AASHTO with interim revisions and amendments by Caltrans).

SEISMIC DESIGN:
Caltrans Seismic Design Criteria (SDC), Ver. 1.4 dated June 2006

DEAD LOAD:
Includes 35 psf for future wearing surface.

LIVE LOADING:
HL93 and permit design load.

SEISMIC LOADING:
See "SITE SPECIFIC ACCELERATION RESPONSE SPECTRA CURVE"
M = 6.75 ± 0.25
Peak Rock Acceleration = 1.45g

CONCRETE:
fy = 60,000 psi
f'c = 4,000 psi for substructure
f'c = 5,000 psi for superstructure
n = 8

PILES:
See "Pile Data Table" on "INDEX TO PLANS" sheet.

EXPOSURE CONDITION: Marine Atmosphere
Minimum concrete cover (inches) unless shown otherwise on plan
- Footing & Pile Caps: 3"
- Walls, Columns & Cast -In-Place Piles: 3"
- Top surface of Deck Slab: 2½"
- Bottom surface of Deck Slab: 1½"
- Curbs & Railings: 2½"
- Concrete surface not exposed to weather, soil or water
  Principal reinforcement: 2"
  Stirrups, Ties and Spirals: 1½"

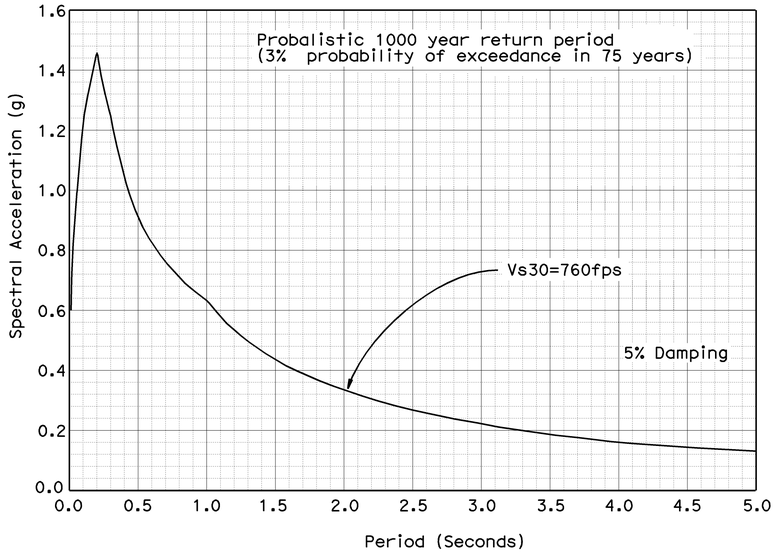

SEE ARS CURVE

CALIFORNIA STATE FIRE MARSHAL APPROVED
Approval of this plan does not authorize or approve any omission or deviation from applicable regulations. Final approval is subject to field inspection. One set of approved plans shall be available on the project site at all times.
Reviewed by: STEPHEN GUARINO
Approval date: 12-14-09

DIST	COUNTY	ROUTE	POST MILES TOTAL PROJECT	SHEET No	TOTAL SHEETS
04	SF	101	8.2/9.2	418	654

8-31-09
REGISTERED CIVIL ENGINEER DATE

12-14-09
PLANS APPROVAL DATE

REGISTERED PROFESSIONAL ENGINEER
LINAN WANG
No. C54714
Exp. 12-31-09
CIVIL
STATE OF CALIFORNIA

The State of California or its officers or agents shall not be responsible for the accuracy or completeness of electronic copies of this plan sheet.

INDEX TO PLANS

SHEET NO.	TITLE
1	GENERAL PLAN
2	INDEX TO PLANS
3	DECK CONTOUR
4	FOUNDATION PLAN
5	ABUTMENT 1 LAYOUT
6	ABUTMENT 1 DETAILS NO. 1
7	ABUTMENT 1 DETAILS NO. 2
8	RETAINING WALL RW-6 SEGMENT LAYOUT
9	BENT 2 DETAILS
10	BENT 3 DETAILS
11	SLAB REINFORCEMENT
12	SLAB REINFORCEMENT DETAILS
13	DECK DRAINAGE DETAILS
14	GEOCOMPOSITE DRAIN DETAILS
15	MISCELLANEOUS DETAILS NO. 1
16	MISCELLANEOUS DETAILS NO. 2
17	LOG OF TEST BORINGS NO. 1
18	LOG OF TEST BORINGS NO. 2
19	LOG OF TEST BORINGS NO. 3
20	LOG OF TEST BORINGS NO. 4

STANDARD PLANS DATED MAY 2006

DETAIL	DESCRIPTION
A10A	ACRONYMS AND ABBREVIATIONS A-L
A10B	ACRONYMS AND ABBREVIATIONS M-Z
A10C	SYMBOLS (SHEET 1 OF 2)
A10D	SYMBOLS (SHEET 2 OF 2)
A62B	LIMITS OF PAYMENT FOR EXCAVATION AND BACKFILL BRIDGE SURCHARGE AND WALL
A62C	LIMITS OF PAYMENT FOR EXCAVATION AND BACKFILL BRIDGE
B0-3	BRIDGE DETAILS
B2-3	16" AND 24" CAST-IN-DRILLED-HOLE CONCRETE PILE
B3-1	RETAINING WALL TYPE 1 H=4' THROUGH 30'
B3-8	RETAINING WALL DETAILS NO. 1
B6-21	JOINT SEALS (MAXIMUM MOVEMENT RATING=2")
B7-6	DECK DRAINS TYPES D-1 AND D-2
RSP B11-68	CALIFORNIA ST-10 BRIDGE RAIL (SHEET 1 OF 3)
B11-69	CALIFORNIA ST-10 BRIDGE RAIL (SHEET 2 OF 3)
B11-70	CALIFORNIA ST-10 BRIDGE RAIL (SHEET 3 OF 3)

STANDARD PLAN SHEET NO.
DETAIL NO.

DESIGN	BY L. Wang	CHECKED L. Barnard	STATE OF CALIFORNIA DEPARTMENT OF TRANSPORTATION	DIVISION OF ENGINEERING SERVICES STRUCTURE DESIGN DESIGN BRANCH 4	BRIDGE NO. 34-0157W
DETAILS	BY E. Hallstrom/T. Kusumi	CHECKED L. Wang/L. Barnard			POST MILE 9.0
QUANTITIES	BY L. Barnard	CHECKED S. Hegazi			

BATTERY SUBSTATION (BRIDGE)
INDEX TO PLANS

STRUCTURES DESIGN DETAIL SHEET (ENGLISH) (REV. 10/25/05)
ORIGINAL SCALE IN INCHES FOR REDUCED PLANS 0 1 2 3
CU 04242
EA 163741
DISREGARD PRINTS BEARING EARLIER REVISION DATES →
REVISION DATES: 6-26-09 6-29-09 7-13-09 7-29-09 7-29-09 8-13-09 8-19-09 8-21-09 11-10-09
SHEET 2 OF 20
FILE => 34-0157w-a-itp.dgn

USERNAME => ttrenard DATE PLOTTED => 14-DEC-2009 TIME PLOTTED => 15:38

DIST	COUNTY	ROUTE	POST MILES TOTAL PROJECT	SHEET No	TOTAL SHEETS
04	SF	101	8.2/9.2	419	654

8-31-09
REGISTERED CIVIL ENGINEER DATE

12-14-09
PLANS APPROVAL DATE

LINAN WANG
No. C54714
Exp. 12-31-09
CIVIL
REGISTERED PROFESSIONAL ENGINEER
STATE OF CALIFORNIA

The State of California or its officers or agents shall not be responsible for the accuracy or completeness of electronic copies of this plan sheet.

NOTE:
THE CONTRACTOR SHALL VERIFY ALL CONTROLLING FIELD DIMENSIONS BEFORE ORDERING OR FABRICATING ANY MATERIAL.

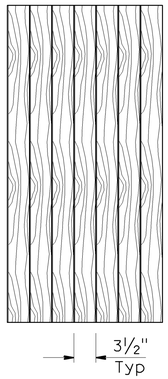

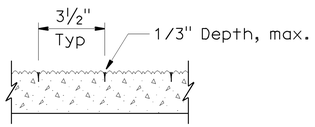

ELEVATION SECTION

ARCHITECTURAL TEXTURE (LIGHT BOARD FINISH)

No Scale

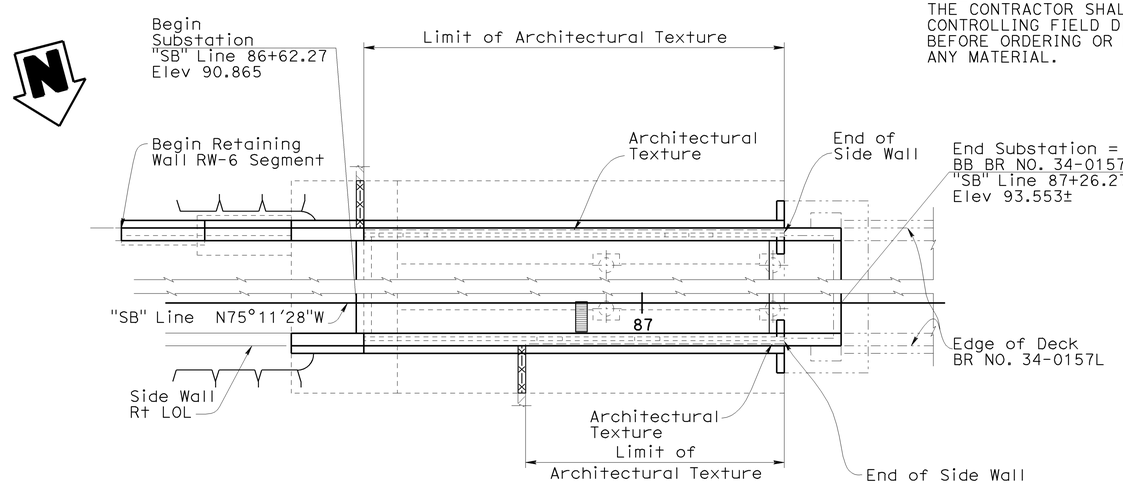

Notes:
Architectural Texture extended 1'-0" below finished grade

CALIFORNIA STATE FIRE MARSHAL APPROVED
Approval of this plan does not authorize or approve any omission or deviation from applicable regulations. Final approval is subject to field inspection. One set of approved plans shall be available on the project site at all times.
Reviewed by: STEPHEN GUARINO
Approval date: 12-14-09

LIMITS OF ARCHITECTURAL TEXTURE

1" = 10'-0"

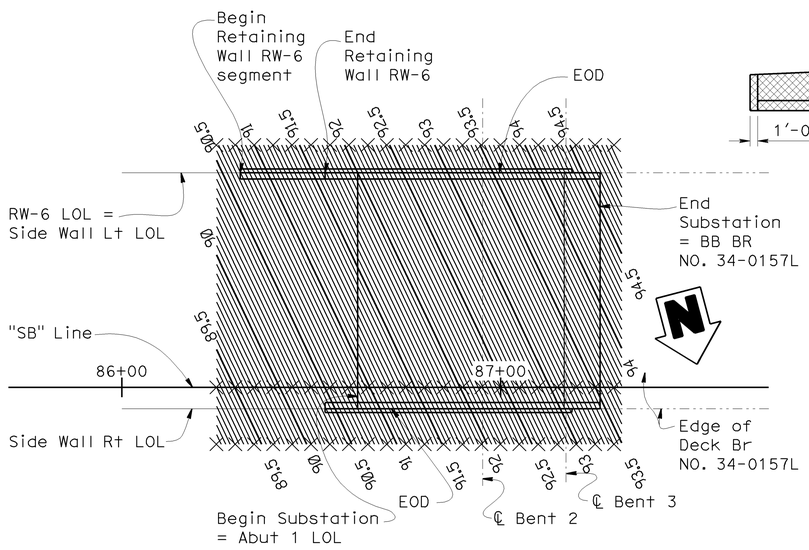

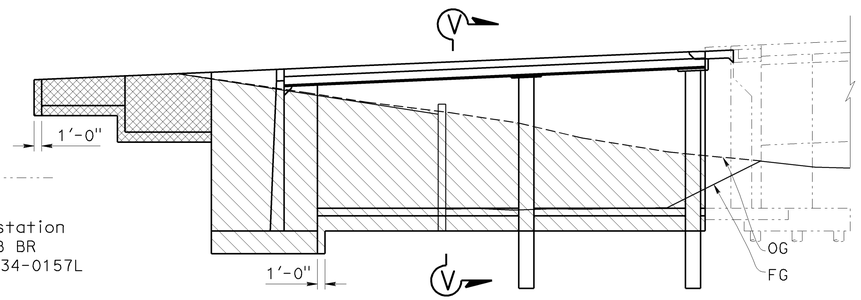

EXCAVATION

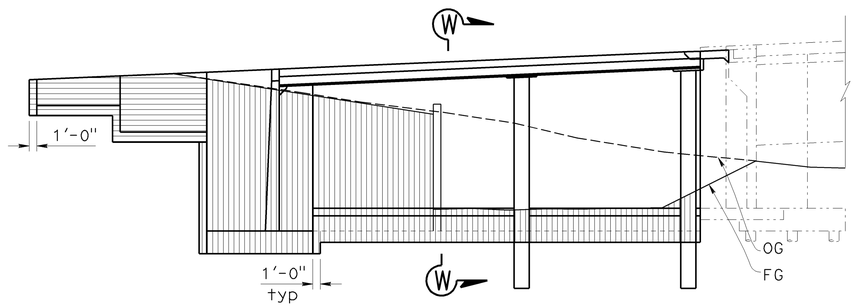

BACKFILL

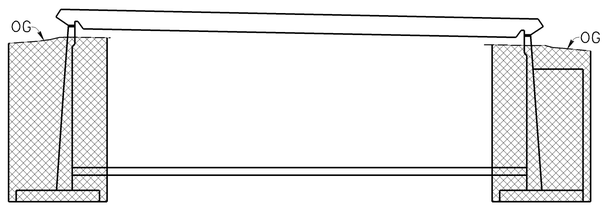

EXCAVATION - SECTION V-V

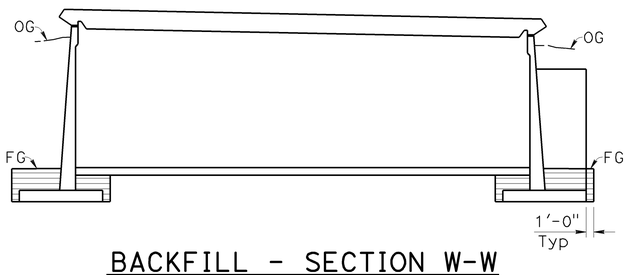

BACKFILL - SECTION W-W

Notes:
1. 0.05 feet Contour interval
2. x - 5 feet Station interval
3. Contours do not include camber

DECK CONTOURS PLAN

1" = 20'-0"

Structural Excavation (Bridge)
Structural Backfill (Bridge)
Structural Excavation (Retaining Wall)
Structural Backfill (Retaining Wall)

STRUCTURAL EXCAVATION / BACKFILL LIMITS OF PAYMENT

No scale

A62-B A62-C

DESIGN	BY L. Wang	CHECKED L. Barnard	STATE OF CALIFORNIA DEPARTMENT OF TRANSPORTATION	DIVISION OF ENGINEERING SERVICES STRUCTURE DESIGN DESIGN BRANCH 4	BRIDGE NO. 34-0157W	BATTERY SUBSTATION (BRIDGE)	
DETAILS	BY E. Hallstrom/T. Kusumi	CHECKED L. Wang/L. Barnard			POST MILE 9.0	DECK CONTOURS	
QUANTITIES	BY L. Barnard	CHECKED S. Hegazi					

STRUCTURES DESIGN DETAIL SHEET (ENGLISH) (REV. 10/25/05)

ORIGINAL SCALE IN INCHES FOR REDUCED PLANS 0 1 2 3

CU 04242
EA 163741

DISREGARD PRINTS BEARING EARLIER REVISION DATES →

REVISION DATES: 7-15-09 | 7-28-09 | 7-29-09 | 8-5-09 | 8-11-09 | 8-18-09 | 8-26-09 | 9-14-09 | 11-10-09

SHEET 3 OF 20

FILE => 34-0157w-d-dc01.dgn

USERNAME => trlenard DATE PLOTTED => 14-DEC-2009 TIME PLOTTED => 15:38

CALIFORNIA STATE FIRE MARSHAL APPROVED

Approval of this plan does not authorize or approve any omission or deviation from applicable regulations. Final approval is subject to field inspection. One set of approved plans shall be available on the project site at all times.

Reviewed by: STEPHEN GUARINO

Approval date: 12-14-09

DIST	COUNTY	ROUTE	POST MILES TOTAL PROJECT	SHEET No	TOTAL SHEETS
04	SF	101	8.2/9.2	420	654

REGISTERED CIVIL ENGINEER — 8-31-09 DATE

12-14-09
PLANS APPROVAL DATE

REGISTERED PROFESSIONAL ENGINEER — LINAN WANG No. C54714 Exp. 12-31-09 CIVIL — STATE OF CALIFORNIA

The State of California or its officers or agents shall not be responsible for the accuracy or completeness of electronic copies of this plan sheet.

Arup PB Joint Venture
560 Mission Street
Suite 700
San Francisco, CA 94105

CURVE DATA

No.	R	Δ	T	L
56	250.00	16°10'21"	35.52	70.57
57	350.00	18°05'35"	55.73	110.52
58	180.00	47°17'02"	78.80	148.55
59	425.00	26°33'16"	100.29	196.97

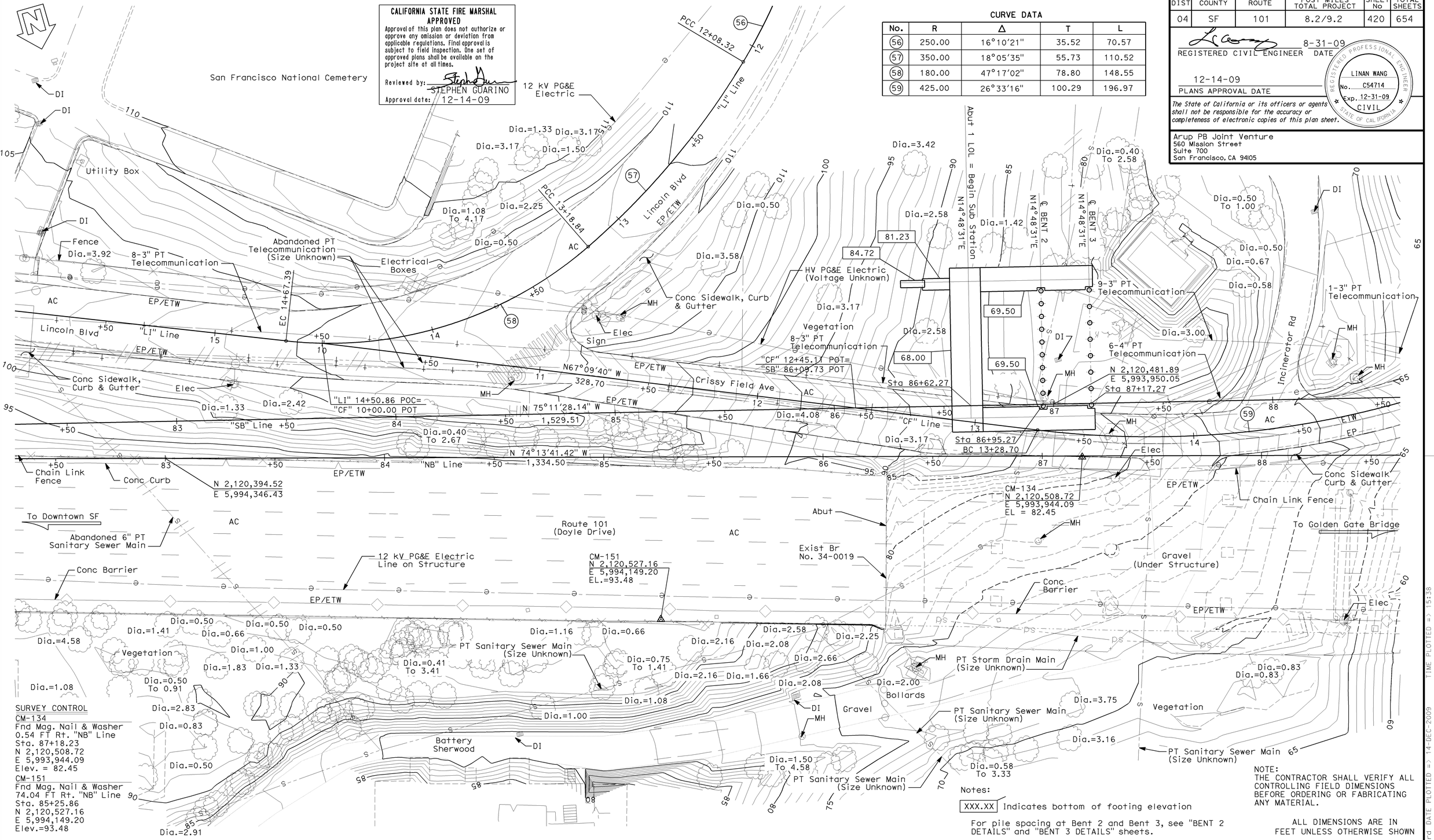

SURVEY CONTROL

CM-134
Fnd Mag. Nail & Washer
0.54 FT Rt. "NB" Line
Sta. 87+18.23
N 2,120,508.72
E 5,993,944.09
Elev. = 82.45

CM-151
Fnd Mag. Nail & Washer
74.04 FT Rt. "NB" Line
Sta. 85+25.86
N 2,120,527.16
E 5,994,149.20
Elev.=93.48

Notes:

XXX.XX Indicates bottom of footing elevation

For pile spacing at Bent 2 and Bent 3, see "BENT 2 DETAILS" and "BENT 3 DETAILS" sheets.

NOTE:
THE CONTRACTOR SHALL VERIFY ALL CONTROLLING FIELD DIMENSIONS BEFORE ORDERING OR FABRICATING ANY MATERIAL.

ALL DIMENSIONS ARE IN FEET UNLESS OTHERWISE SHOWN

PRELIMINARY INVESTIGATION SECTION							
SCALE	VERT.DATUM NAVD88	PHOTOGRAMMETRY AS OF: 9/24/2008					
1"=20'	HORZ.DATUM NAD83	SURVEYED	BY Chaudhary & Assoc.	CHECKED	BY E. Lilly 3/20/09		
ALIGNMENT TIES Dist.Traverse Sheet		DRAFTED	BY L. Reyes 3/2009	CHECKED	BY E. Lilly 3/20/09		

	BY	CHECKED
DESIGN	L. Wang	L. Barnard
DETAILS	E. Hallstrom/T. Kusumi	L. Wang/L. Barnard
QUANTITIES	L. Barnard	S. Hegazi

STATE OF CALIFORNIA
DEPARTMENT OF TRANSPORTATION

DIVISION OF ENGINEERING SERVICES
STRUCTURE DESIGN
DESIGN BRANCH 4

CU 04247
EA 163741

BRIDGE NO. 34-0157W
POST MILE 9.0

BATTERY SUBSTATION (BRIDGE)
FOUNDATION PLAN

STRUCTURES FOUNDATION PLAN SHEET (ENGLISH) (REV. 10/25/05)

ORIGINAL SCALE IN INCHES FOR REDUCED PLANS 0 1 2 3

DISREGARD PRINTS BEARING EARLIER REVISION DATES

REVISION DATES: 6-19-09 | 6-30-09 | 7-23-09 | 7-29-09 | 8-18-09 | 8-11-09 | 8-19-09 | 11-10-09

SHEET 4 OF 20

FILE => 34-0157w-e-fp01.dgn

USERNAME => rtleonard DATE PLOTTED => 14-DEC-2009 TIME PLOTTED => 15:38

DIST	COUNTY	ROUTE	POST MILES TOTAL PROJECT	SHEET No	TOTAL SHEETS
04	SF	101	8.2/9.2	421	654

REGISTERED CIVIL ENGINEER 8-31-09 DATE

12-14-09
PLANS APPROVAL DATE

The State of California or its officers or agents shall not be responsible for the accuracy or completeness of electronic copies of this plan sheet.

REGISTERED PROFESSIONAL ENGINEER LINAN WANG No. C54714 Exp. 12-31-09 CIVIL STATE OF CALIFORNIA

CALIFORNIA STATE FIRE MARSHAL APPROVED

Approval of this plan does not authorize or approve any omission or deviation from applicable regulations. Final approval is subject to field inspection. One set of approved plans shall be available on the project site at all times.

Reviewed by: STEPHEN GUARINO
Approval date: 12-14-09

NOTE:
Chain Link Fence not Shown for clarity.

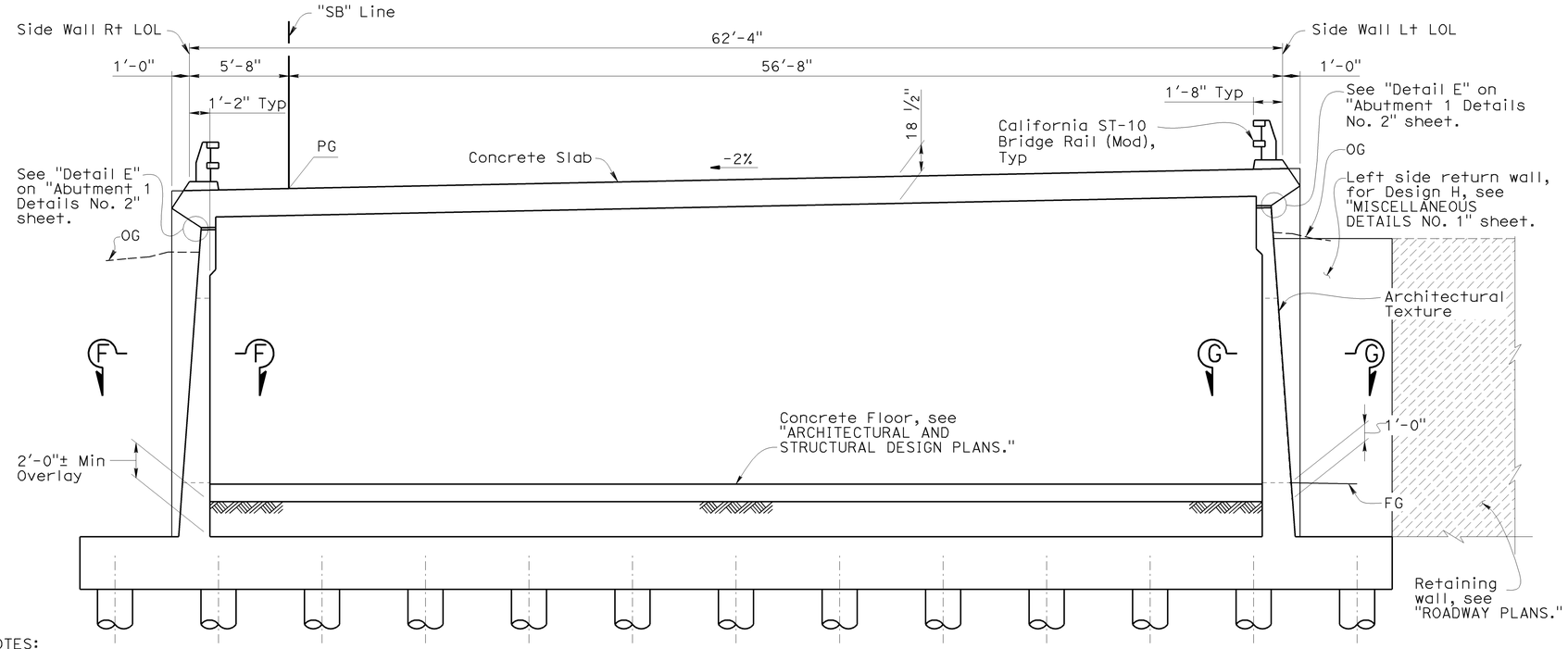

NOTES:
1. For "Section A-A", "Section B-B", and "Section D-D", see "Abutment 1 Details No. 1" sheet.
2. For "Section E-E", "Section F-F", and "Section G-G", see "Abutment 1 Details No. 2" sheet.
3. For Retaining Wall RW-6 segment, see "Retaining Wall Layout" sheet.
4. Section cut and View on left side of abutment similar.

(View looking down station)

ABUTMENT 1 ELEVATION

1/4" = 1'-0"

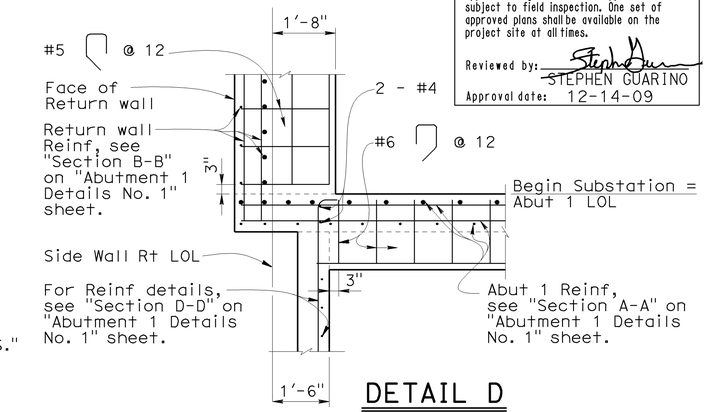

DETAIL D

1/2" = 1'-0"

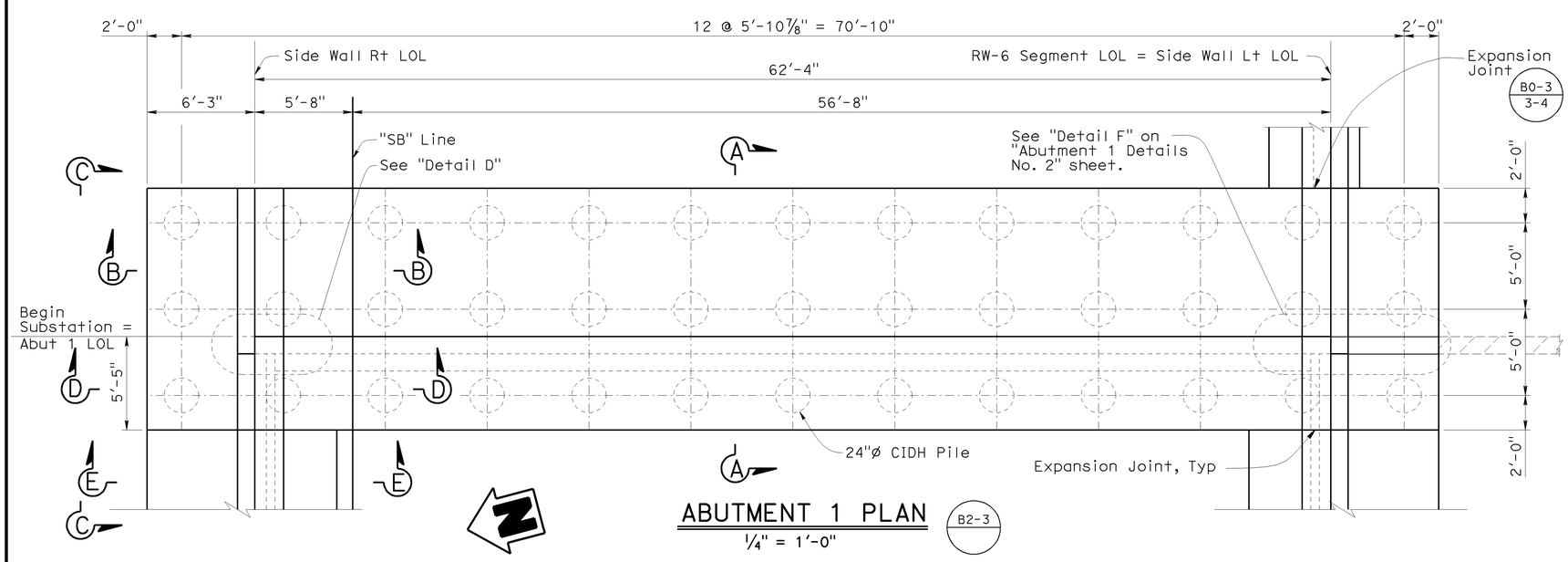

ABUTMENT 1 PLAN

1/4" = 1'-0"

B2-3

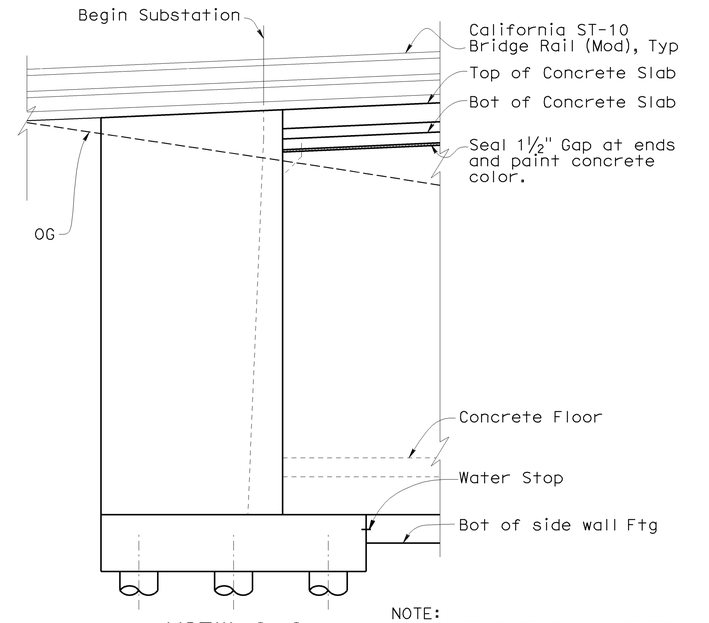

VIEW C-C

1/4" = 1'-0"

NOTE:
THE CONTRACTOR SHALL VERIFY ALL CONTROLLING FIELD DIMENSIONS BEFORE ORDERING OR FABRICATING ANY MATERIAL.

	BY	CHECKED
DESIGN	L. Wang	L. Barnard
DETAILS	E. Hallstrom/T. Kusumi	L. Wang/L. Barnard
QUANTITIES	L. Barnard	S. Hegazi

STATE OF CALIFORNIA
DEPARTMENT OF TRANSPORTATION

DIVISION OF ENGINEERING SERVICES
STRUCTURE DESIGN
DESIGN BRANCH 4

BRIDGE NO. 34-0157W
POST MILE 9.0

BATTERY SUBSTATION (BRIDGE)
ABUTMENT 1 LAYOUT

STRUCTURES DESIGN DETAIL SHEET (ENGLISH) (REV. 10/25/05)

ORIGINAL SCALE IN INCHES FOR REDUCED PLANS 0 1 2 3

CU 04242
EA 1637441

DISREGARD PRINTS BEARING EARLIER REVISION DATES

REVISION DATES: 8-20-09 8-25-09 8-27-09 9-14-09 11-10-09 11-12-09 7-29-09 8-11-09 8-13-09

SHEET 5 OF 20

FILE => 34-0157w-f-a01lo01.dgn

USERNAME => trlenard DATE PLOTTED => 14-DEC-2009 TIME PLOTTED => 15:38

DIST	COUNTY	ROUTE	POST MILES TOTAL PROJECT	SHEET No	TOTAL SHEETS
04	SF	101	8.2/9.2	422	654

REGISTERED CIVIL ENGINEER — 8-31-09 DATE

12-14-09
PLANS APPROVAL DATE

REGISTERED PROFESSIONAL ENGINEER — LINAN WANG No. C54714 Exp. 12-31-09 CIVIL — STATE OF CALIFORNIA

The State of California or its officers or agents shall not be responsible for the accuracy or completeness of electronic copies of this plan sheet.

NOTES:
1. For locations of "SECTION A-A," "SECTION B-B," and "SECTION D-D," see "ABUTMENT 1 LAYOUT" sheet.

Note:
1. For details not shown, see B0-3, B3-1, B3-8

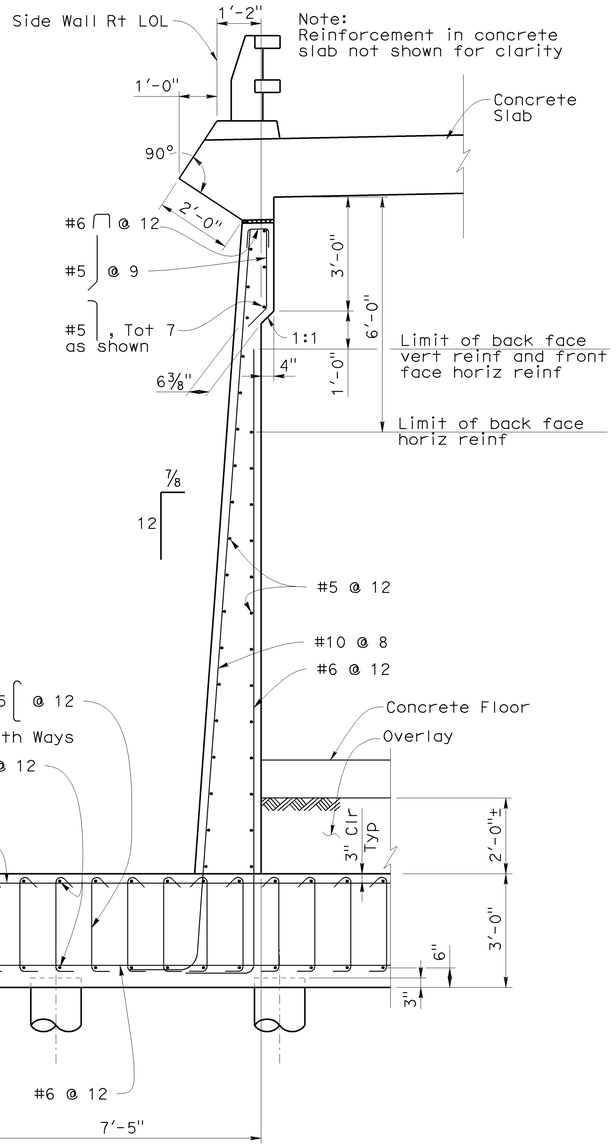

SECTION D-D
1/2" = 1'-0"

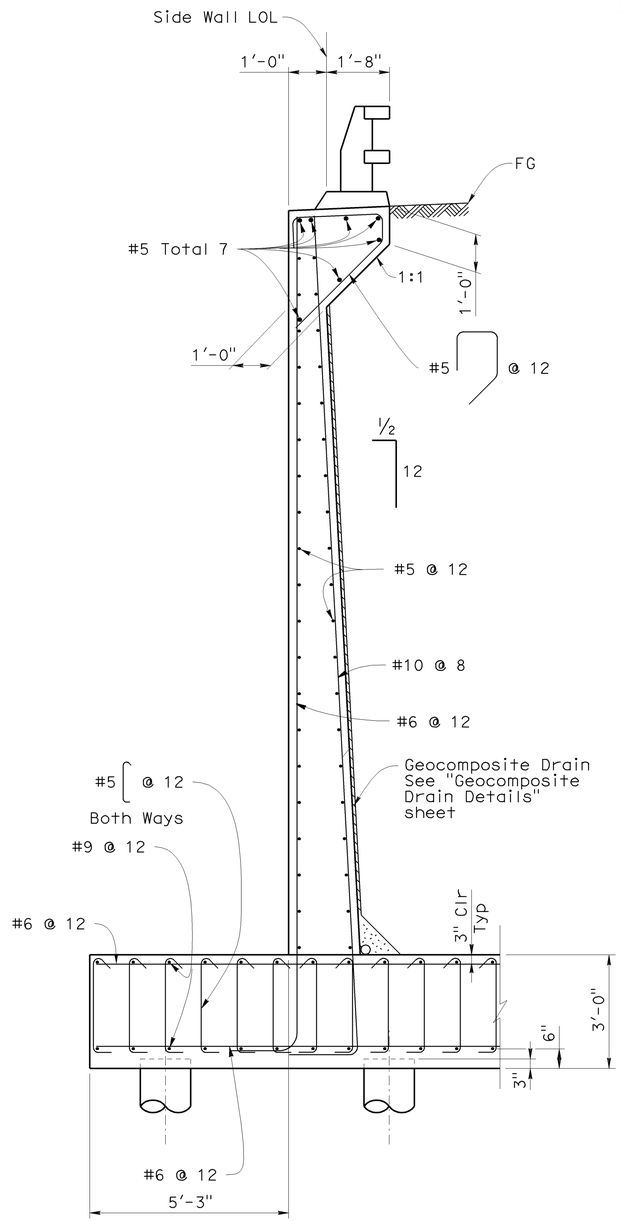

SECTION B-B
1/2" = 1'-0"

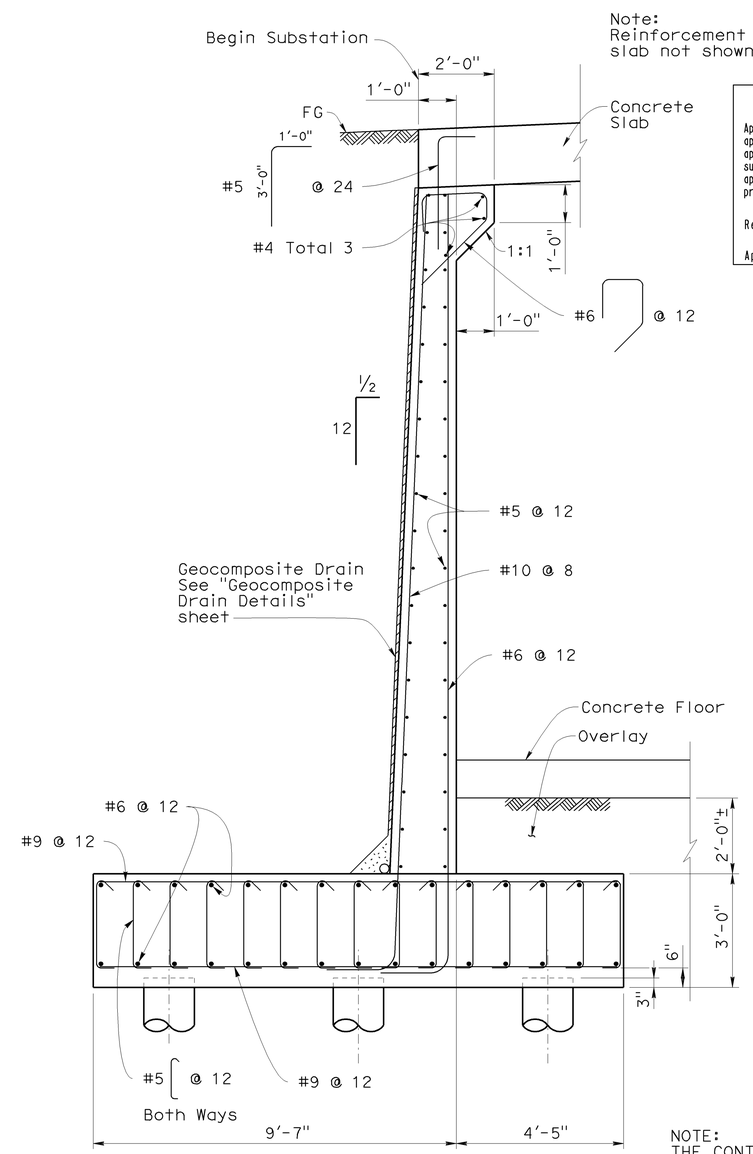

SECTION A-A
1/2" = 1'-0"

Note:
Reinforcement in concrete slab not shown for clarity

CALIFORNIA STATE FIRE MARSHAL APPROVED
Approval of this plan does not authorize or approve any omission or deviation from applicable regulations. Final approval is subject to field inspection. One set of approved plans shall be available on the project site at all times.
Reviewed by: STEPHEN GUARINO
Approval date: 12-14-09

NOTE:
THE CONTRACTOR SHALL VERIFY ALL CONTROLLING FIELD DIMENSIONS BEFORE ORDERING OR FABRICATING ANY MATERIAL.

	BY	CHECKED
DESIGN	L. Wang	L. Barnard
DETAILS	E. Hallstrom/T. Kusumi	L. Wang/L. Barnard
QUANTITIES	L. Barnard	S. Hegazi

STATE OF CALIFORNIA
DEPARTMENT OF TRANSPORTATION

DIVISION OF ENGINEERING SERVICES
STRUCTURE DESIGN
DESIGN BRANCH 4

BRIDGE NO. 34-0157W
POST MILE 9.0

BATTERY SUBSTATION (BRIDGE)
ABUTMENT 1 DETAILS NO. 1

STRUCTURES DESIGN DETAIL SHEET (ENGLISH) (REV. 10/25/05)

ORIGINAL SCALE IN INCHES FOR REDUCED PLANS 0 1 2 3

CU 04242
EA 163741

DISREGARD PRINTS BEARING EARLIER REVISION DATES

REVISION DATES: 8-26-09 | 8-25-09 | 9-14-09 | 11-10-09 | 11-12-09 | 7-23-09 | 7-29-09 | 8-11-09 | 8-18-09

SHEET 6 OF 20

FILE => 34-0157w-g-a01det01.dgn

USERNAME => ttrenard DATE PLOTTED => 14-DEC-2009 TIME PLOTTED => 15:38

NOTE:
For locations of "SECTION E-E," "SECTION F-F," "SECTION G-G," and "DETAIL F," see "ABUTMENT 1 LAYOUT" sheet.

NOTE:
THE CONTRACTOR SHALL VERIFY ALL CONTROLLING FIELD DIMENSIONS BEFORE ORDERING OR FABRICATING ANY MATERIAL.

DIST	COUNTY	ROUTE	POST MILES TOTAL PROJECT	SHEET No	TOTAL SHEETS
04	SF	101	8.2/9.2	423	654

REGISTERED CIVIL ENGINEER — 8-31-09 DATE

12-14-09
PLANS APPROVAL DATE

LINAN WANG No. C54714 Exp. 12-31-09 CIVIL — REGISTERED PROFESSIONAL ENGINEER — STATE OF CALIFORNIA

The State of California or its officers or agents shall not be responsible for the accuracy or completeness of electronic copies of this plan sheet.

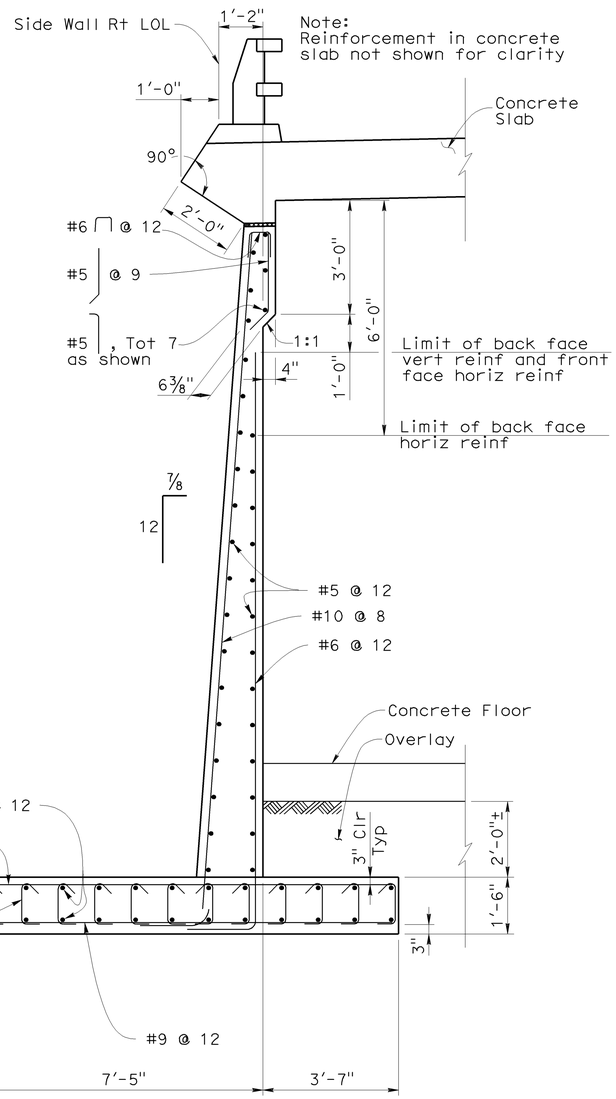

SECTION E-E
1/2" = 1'-0"

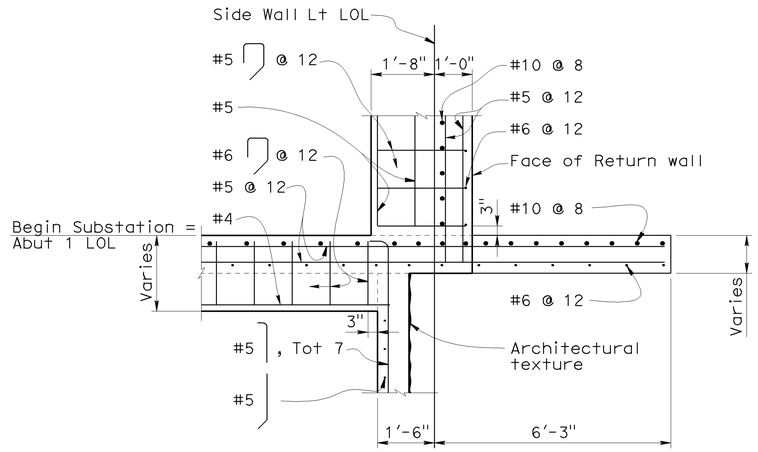

DETAIL F
1/2" = 1'-0"

For information not shown, see "Abutment 1 Details No. 1" sheet.

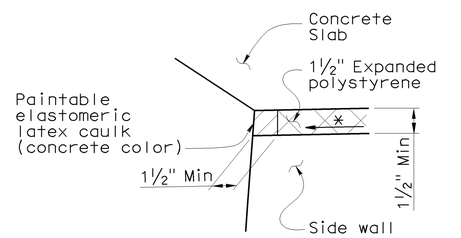

DETAIL E
No Scale

SECTION F-F
1/2" = 1'-0"

For information not shown see "Abutment Details No. 1" sheet and "Section E-E" on this sheet.

SECTION G-G
1/2" = 1'-0"

CALIFORNIA STATE FIRE MARSHAL APPROVED
Approval of this plan does not authorize or approve any omission or deviation from applicable regulations. Final approval is subject to field inspection. One set of approved plans shall be available on the project site at all times.
Reviewed by: STEPHEN GUARINO
Approval date: 12-14-09

	BY	CHECKED
DESIGN	L. Wang	L. Barnard
DETAILS	E. Hallstrom/T. Kusumi	L. Wang/L. Barnard
QUANTITIES	L. Barnard	S. Hegazi

STATE OF CALIFORNIA
DEPARTMENT OF TRANSPORTATION

DIVISION OF ENGINEERING SERVICES
STRUCTURE DESIGN
DESIGN BRANCH 4

BRIDGE NO. 34-0157W
POST MILE 9.0

BATTERY SUBSTATION (BRIDGE)
ABUTMENT 1 DETAILS NO. 2

STRUCTURES DESIGN DETAIL SHEET (ENGLISH) (REV. 10/25/05)

ORIGINAL SCALE IN INCHES FOR REDUCED PLANS 0 1 2 3

CU 04242
EA 163741

DISREGARD PRINTS BEARING EARLIER REVISION DATES

REVISION DATES: 8-26-09 | 8-25-09 | 9-14-09 | 11-10-09 | 11-12-09 | | 7-29-09 | 8-11-09 | 8-12-09 | 8-19-09

SHEET 7 OF 20

FILE => 34-0157w-g-a01det02.dgn

USERNAME => Friemond DATE PLOTTED => 14-DEC-2009 TIME PLOTTED => 15:38

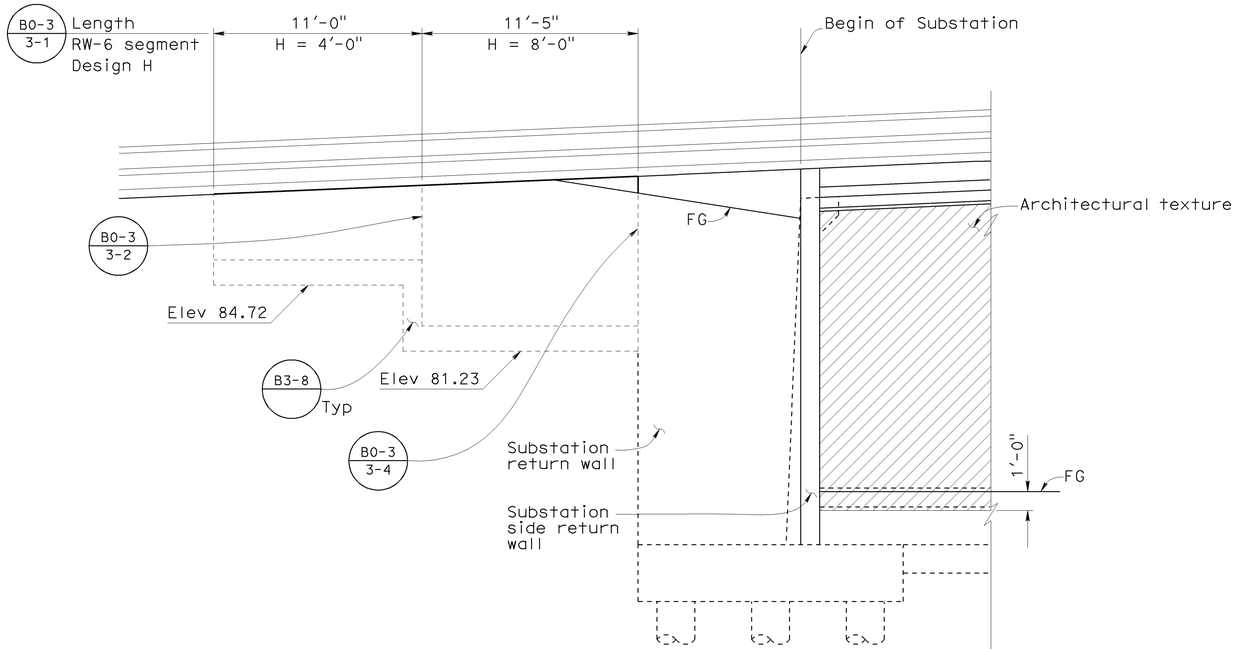

RETAINING WALL RW-6 SEGMENT MIRRORED ELEVATION

1/4" = 1'-0"

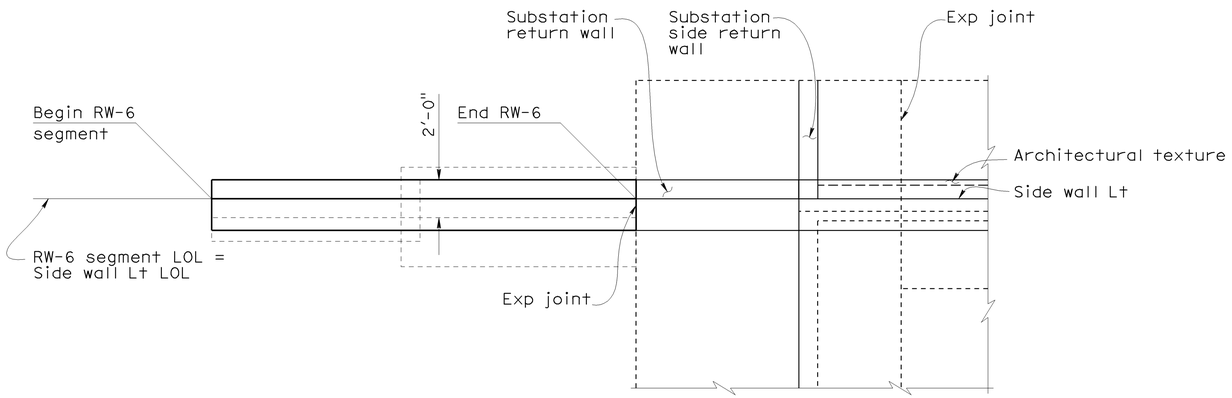

RETAINING WALL RW-6 PLAN

1/4" = 1'-0"

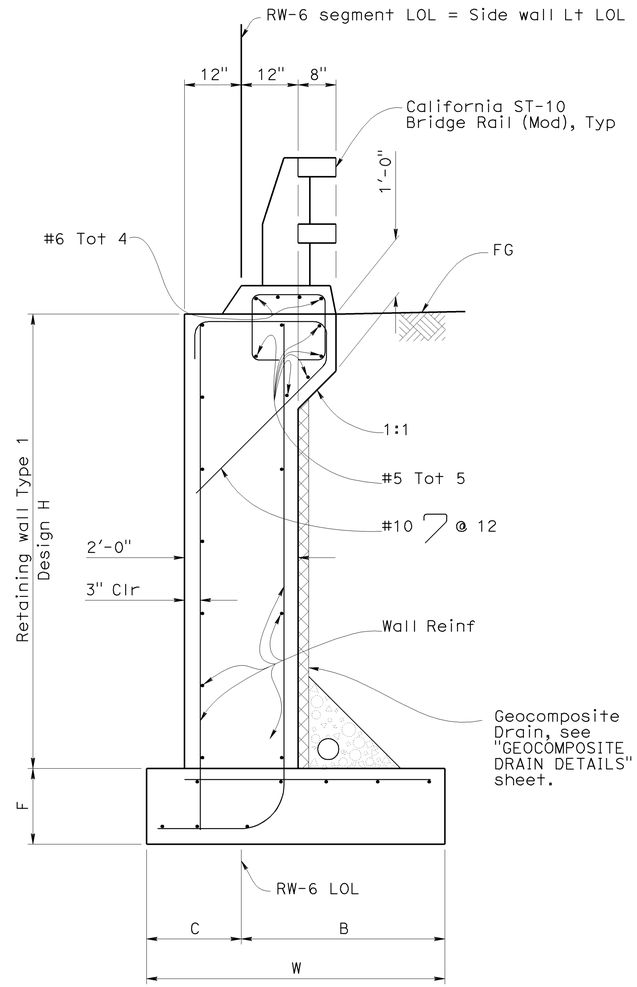

TYPICAL SECTION

3/4" = 1'-0"

B3-1

NOTE:
THE CONTRACTOR SHALL VERIFY ALL CONTROLLING FIELD DIMENSIONS BEFORE ORDERING OR FABRICATING ANY MATERIAL.

CALIFORNIA STATE FIRE MARSHAL APPROVED

Approval of this plan does not authorize or approve any omission or deviation from applicable regulations. Final approval is subject to field inspection. One set of approved plans shall be available on the project site at all times.

Reviewed by: STEPHEN GUARINO

Approval date: 12-14-09

DIST	COUNTY	ROUTE	POST MILES TOTAL PROJECT	SHEET No	TOTAL SHEETS
04	SF	101	8.2/9.2	424	654

8-31-09
REGISTERED CIVIL ENGINEER DATE

12-14-09
PLANS APPROVAL DATE

REGISTERED PROFESSIONAL ENGINEER
LINAN WANG
No. C54714
Exp. 12-31-09
CIVIL
STATE OF CALIFORNIA

The State of California or its officers or agents shall not be responsible for the accuracy or completeness of electronic copies of this plan sheet.

DESIGN	BY L. Wang	CHECKED L. Barnard	STATE OF CALIFORNIA DEPARTMENT OF TRANSPORTATION
DETAILS	BY E. Hallstrom/T. Kusumi	CHECKED L. Wang/L. Barnard	
QUANTITIES	BY L. Barnard	CHECKED S. Hegazi	

DIVISION OF ENGINEERING SERVICES
STRUCTURE DESIGN
DESIGN BRANCH 4

CU 04242
EA 163741

BRIDGE NO. 34-0157W
POST MILE 9.0

BATTERY SUBSTATION (BRIDGE)
RETAINING WALL RW-6 SEGMENT LAYOUT

STRUCTURES DESIGN DETAIL SHEET (ENGLISH) (REV. 10/25/05)

ORIGINAL SCALE IN INCHES FOR REDUCED PLANS 0 1 2 3

DISREGARD PRINTS BEARING EARLIER REVISION DATES →

REVISION DATES: 11-10-09 | 11-12-09 | 7-13-09 | 7-29-09 | 8-11-09 | 8-11-09 | 8-26-09 | 8-25-09 | 9-14-09

SHEET 8 OF 20

FILE => 34-0157w-g-rw-lo01.dgn

USERNAME => trlenard DATE PLOTTED => 14-DEC-2009 TIME PLOTTED => 15:38

DIST	COUNTY	ROUTE	POST MILES TOTAL PROJECT	SHEET No	TOTAL SHEETS
04	SF	101	8.2/9.2	425	654

8-31-09
REGISTERED CIVIL ENGINEER DATE

12-14-09
PLANS APPROVAL DATE

REGISTERED PROFESSIONAL ENGINEER — LINAN WANG No. C54714 Exp. 12-31-09 CIVIL — STATE OF CALIFORNIA

The State of California or its officers or agents shall not be responsible for the accuracy or completeness of electronic copies of this plan sheet.

CALIFORNIA STATE FIRE MARSHAL APPROVED

Approval of this plan does not authorize or approve any omission or deviation from applicable regulations. Final approval is subject to field inspection. One set of approved plans shall be available on the project site at all times.

Reviewed by: STEPHEN GUARINO

Approval date: 12-14-09

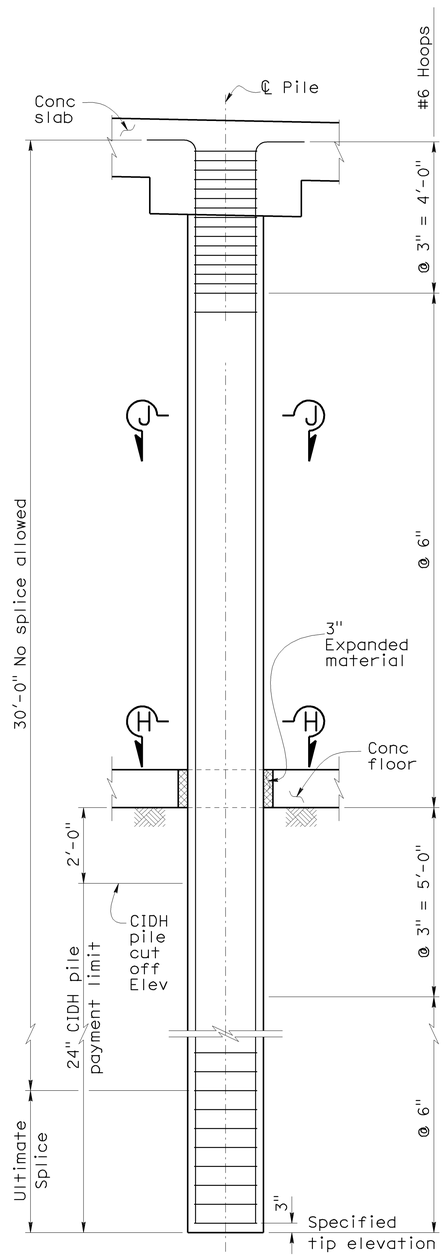

PILE DETAILS FOR BENT 2 AND BENT 3 ELEVATION

½" = 1'-0"

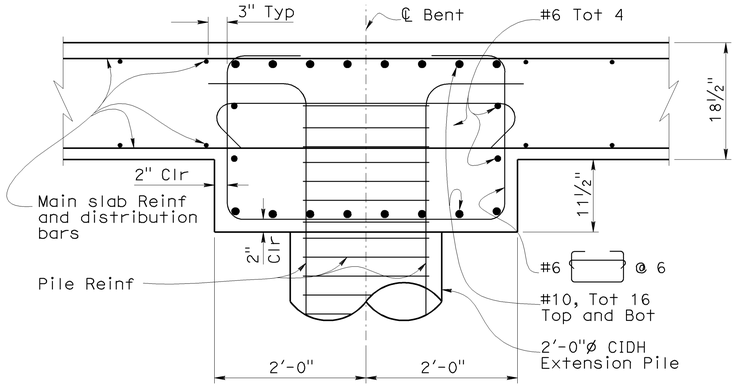

SECTION K-K

1" = 1'-0"

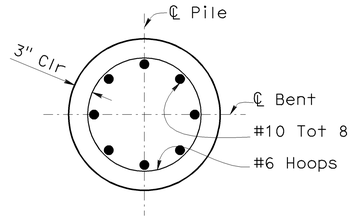

SECTION J-J

1" = 1'-0"

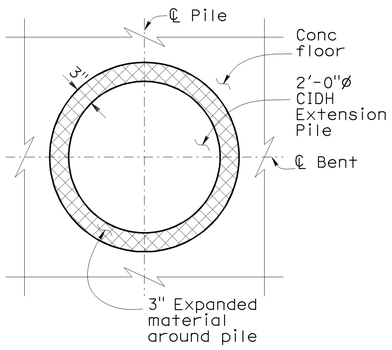

SECTION H-H

1" = 1'-0"

NOTE:
For specified tip elevation, see "PILE DATA" on "INDEX TO PLANS" sheet.

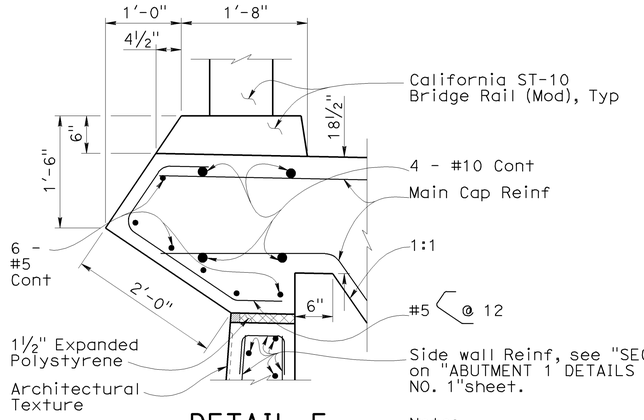

DETAIL F

No Scale

Note:
For information not shown, see " DETAIL E" on "ABUTMENT 1 DETAILS NO. 1" sheet.

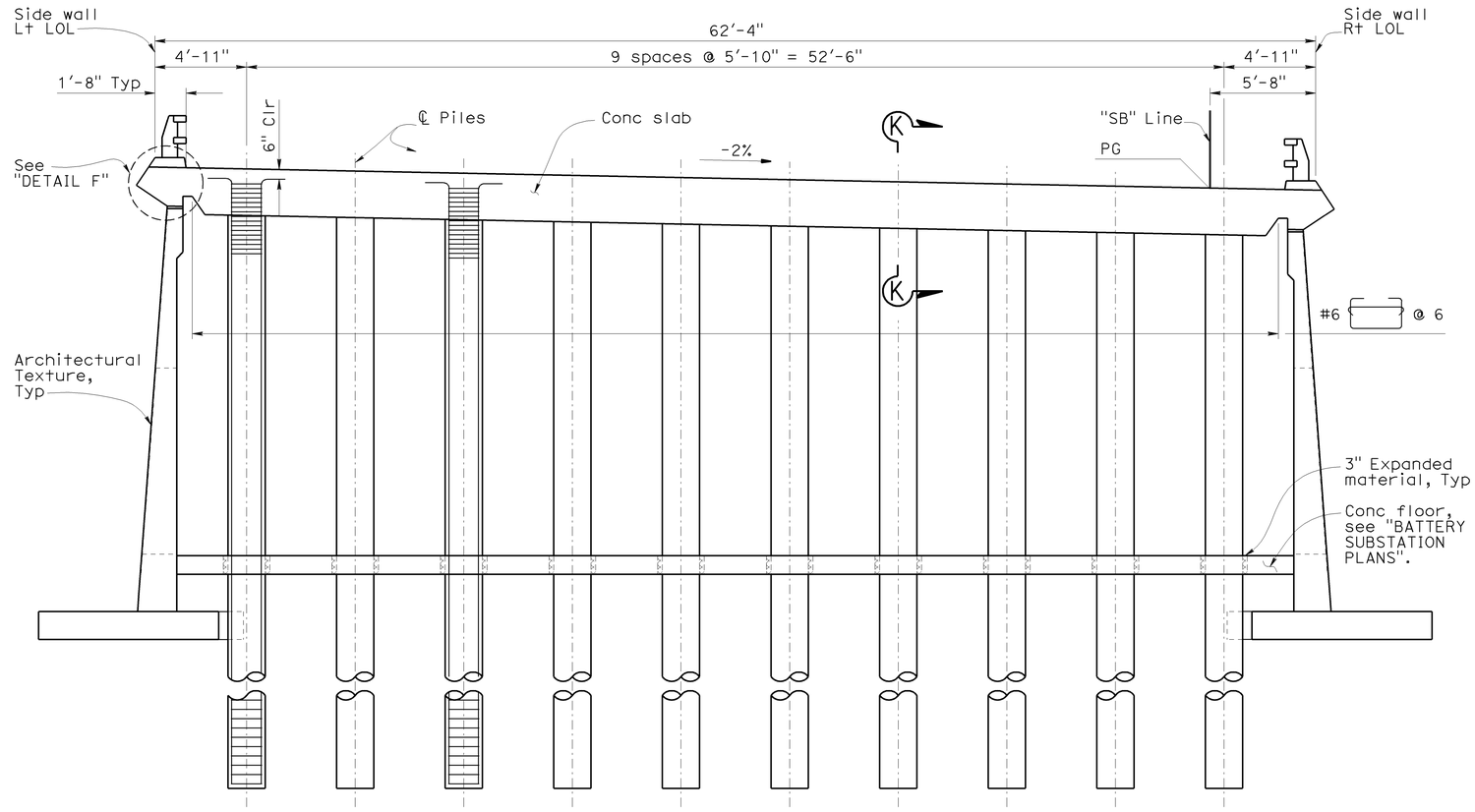

BENT 2 ELEVATION

¼" = 1'-0"

NOTE:
THE CONTRACTOR SHALL VERIFY ALL CONTROLLING FIELD DIMENSIONS BEFORE ORDERING OR FABRICATING ANY MATERIAL.

	BY	CHECKED
DESIGN	L. Wang	L. Barnard
DETAILS	E. Hallstrom/T. Kusumi	L. Wang/L. Barnard
QUANTITIES	L. Barnard	S. Hegazi

STATE OF CALIFORNIA
DEPARTMENT OF TRANSPORTATION

DIVISION OF ENGINEERING SERVICES
STRUCTURE DESIGN
DESIGN BRANCH 4

CU 04242
EA 163741

BRIDGE NO. 34-0157W
POST MILE 9.0

BATTERY SUBSTATION (BRIDGE)
BENT 2 DETAILS

STRUCTURES DESIGN DETAIL SHEET (ENGLISH) (REV. 10/25/05)

ORIGINAL SCALE IN INCHES FOR REDUCED PLANS 0 1 2 3

DISREGARD PRINTS BEARING EARLIER REVISION DATES →

REVISION DATES									SHEET	OF
11-10-09		6-26-09	6-30-09	7-15-09	7-29-09	8-11-09	8-19-09	8-25-09	9-14-09	9	20

FILE => 34-0157w-h-b02dt01.dgn

USERNAME => trlenard DATE PLOTTED => 14-DEC-2009 TIME PLOTTED => 15:38

DIST	COUNTY	ROUTE	POST MILES TOTAL PROJECT	SHEET No	TOTAL SHEETS
04	SF	101	8.2/9.2	426	654

REGISTERED CIVIL ENGINEER — 8-31-09 DATE

12-14-09
PLANS APPROVAL DATE

REGISTERED PROFESSIONAL ENGINEER — LINAN WANG No. C54714 Exp. 12-31-09 CIVIL — STATE OF CALIFORNIA

The State of California or its officers or agents shall not be responsible for the accuracy or completeness of electronic copies of this plan sheet.

NOTE:
THE CONTRACTOR SHALL VERIFY ALL CONTROLLING FIELD DIMENSIONS BEFORE ORDERING OR FABRICATING ANY MATERIAL.

CALIFORNIA STATE FIRE MARSHAL APPROVED
Approval of this plan does not authorize or approve any omission or deviation from applicable regulations. Final approval is subject to field inspection. One set of approved plans shall be available on the project site at all times.
Reviewed by: STEPHEN GUARINO
Approval date: 12-14-09

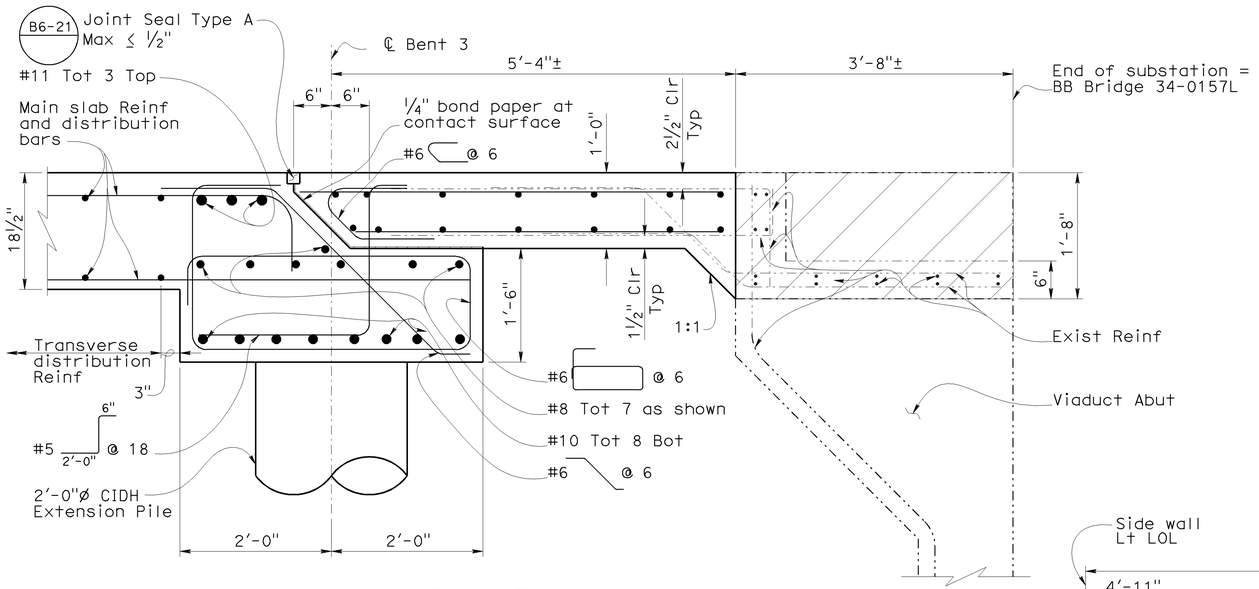

SECTION L-L
1" = 1'-0"

LEGEND:
Indicates concrete block out

Note:
For Viaduct abutment reinforcing, see "PRESIDIO VIADUCT PLANS."

CAMBER DIAGRAM
No scale

(Does not include allowance for falsework settlement)

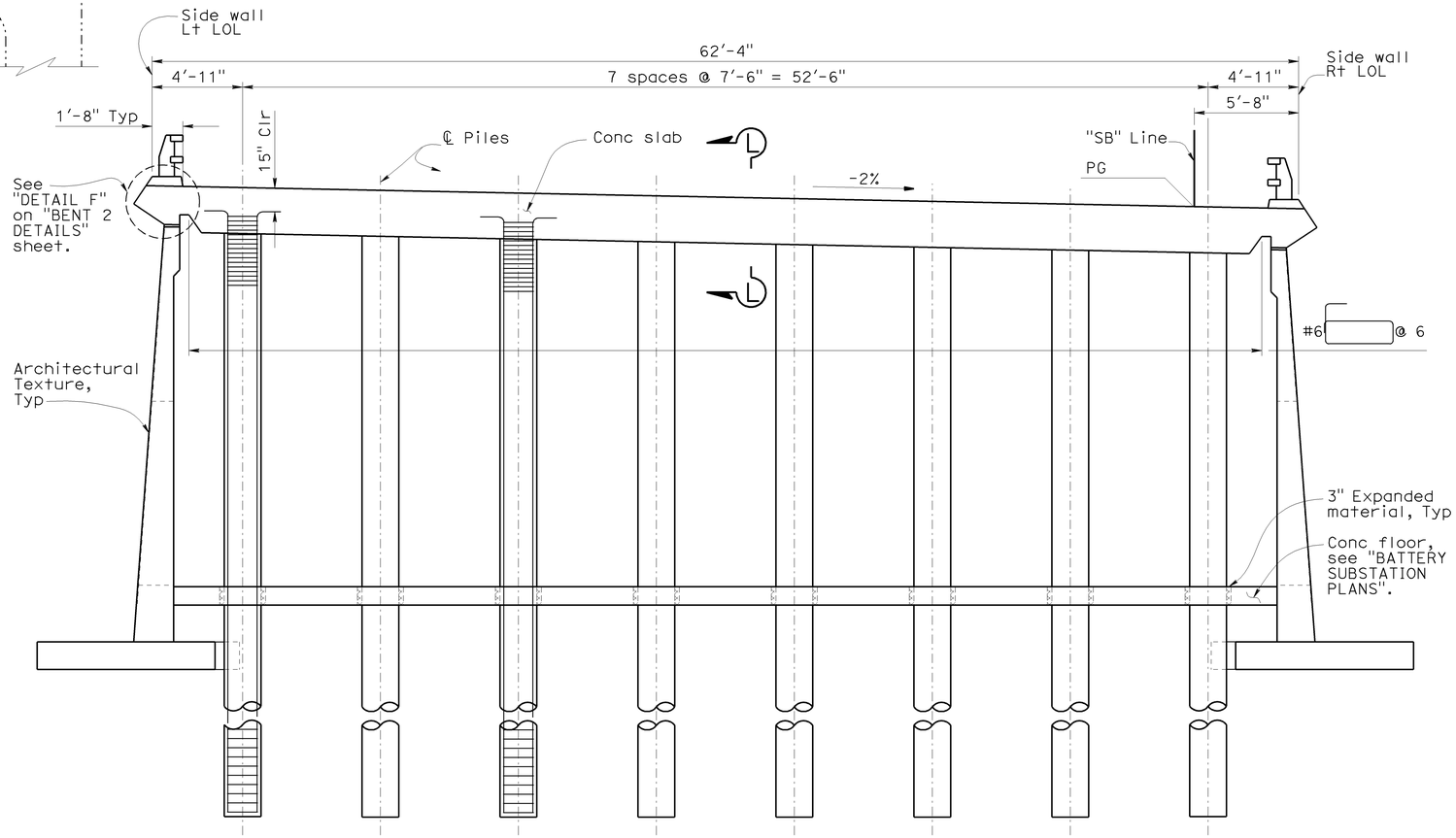

Note:
For pile details and "DETAIL F," see "BENT 2 DETAILS" sheet.

BENT 3 ELEVATION
¼" = 1'-0"

DESIGN	BY L. Wang	CHECKED L. Barnard	STATE OF CALIFORNIA DEPARTMENT OF TRANSPORTATION
DETAILS	BY E. Hallstrom/T. Kusumi	CHECKED L. Wang/L. Barnard	DIVISION OF ENGINEERING SERVICES STRUCTURE DESIGN — DESIGN BRANCH 4
QUANTITIES	BY L. Barnard	CHECKED S. Hegazi	BRIDGE NO. 34-0157W; POST MILE 9.0

BATTERY SUBSTATION (BRIDGE)
BENT 3 DETAILS

STRUCTURES DESIGN DETAIL SHEET (ENGLISH) (REV. 10/25/05)

ORIGINAL SCALE IN INCHES FOR REDUCED PLANS 0 1 2 3

CU 04242
EA 163741

DISREGARD PRINTS BEARING EARLIER REVISION DATES →

REVISION DATES: 9-14-09 | 11-10-09 | 6-26-09 | 6-30-09 | 7-15-09 | 7-29-09 | 8-11-09 | 8-18-09 | 8-21-09

SHEET 10 OF 20

FILE => 34-0157w-h-b03dt01.dgn

USERNAME => trlenard DATE PLOTTED => 14-DEC-2009 TIME PLOTTED => 15:38

CALIFORNIA STATE FIRE MARSHAL APPROVED

Approval of this plan does not authorize or approve any omission or deviation from applicable regulations. Final approval is subject to field inspection. One set of approved plans shall be available on the project site at all times.

Reviewed by: STEPHEN GUARINO

Approval date: 12-14-09

DIST	COUNTY	ROUTE	POST MILES TOTAL PROJECT	SHEET No	TOTAL SHEETS
04	SF	101	8.2/9.2	427	654

REGISTERED CIVIL ENGINEER — 8-31-09 DATE

12-14-09
PLANS APPROVAL DATE

REGISTERED PROFESSIONAL ENGINEER
LINAN WANG
No. C54714
Exp. 12-31-09
CIVIL
STATE OF CALIFORNIA

The State of California or its officers or agents shall not be responsible for the accuracy or completeness of electronic copies of this plan sheet.

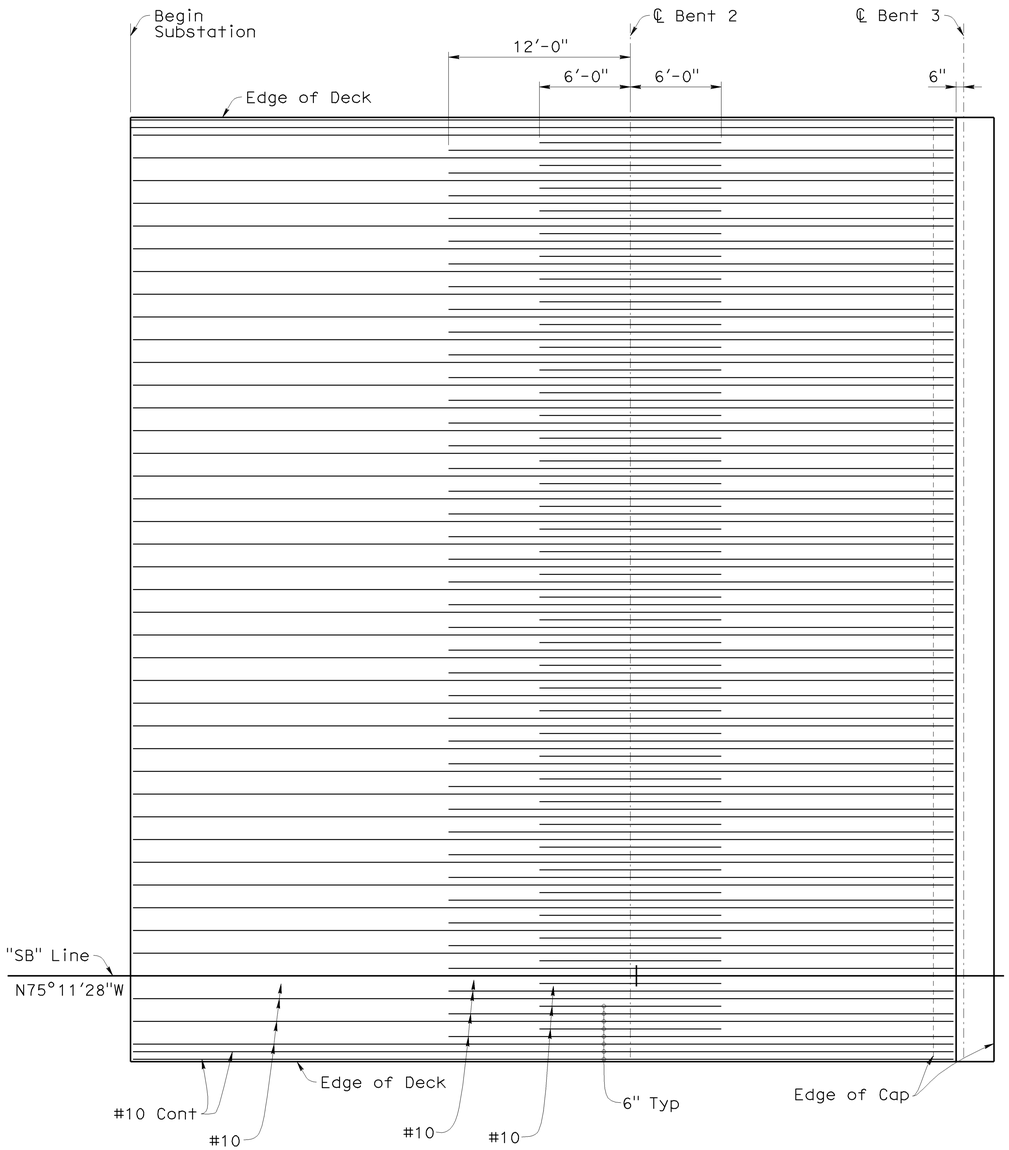

TOP OF SLAB REINFORCEMENT

1" = 5'-0"

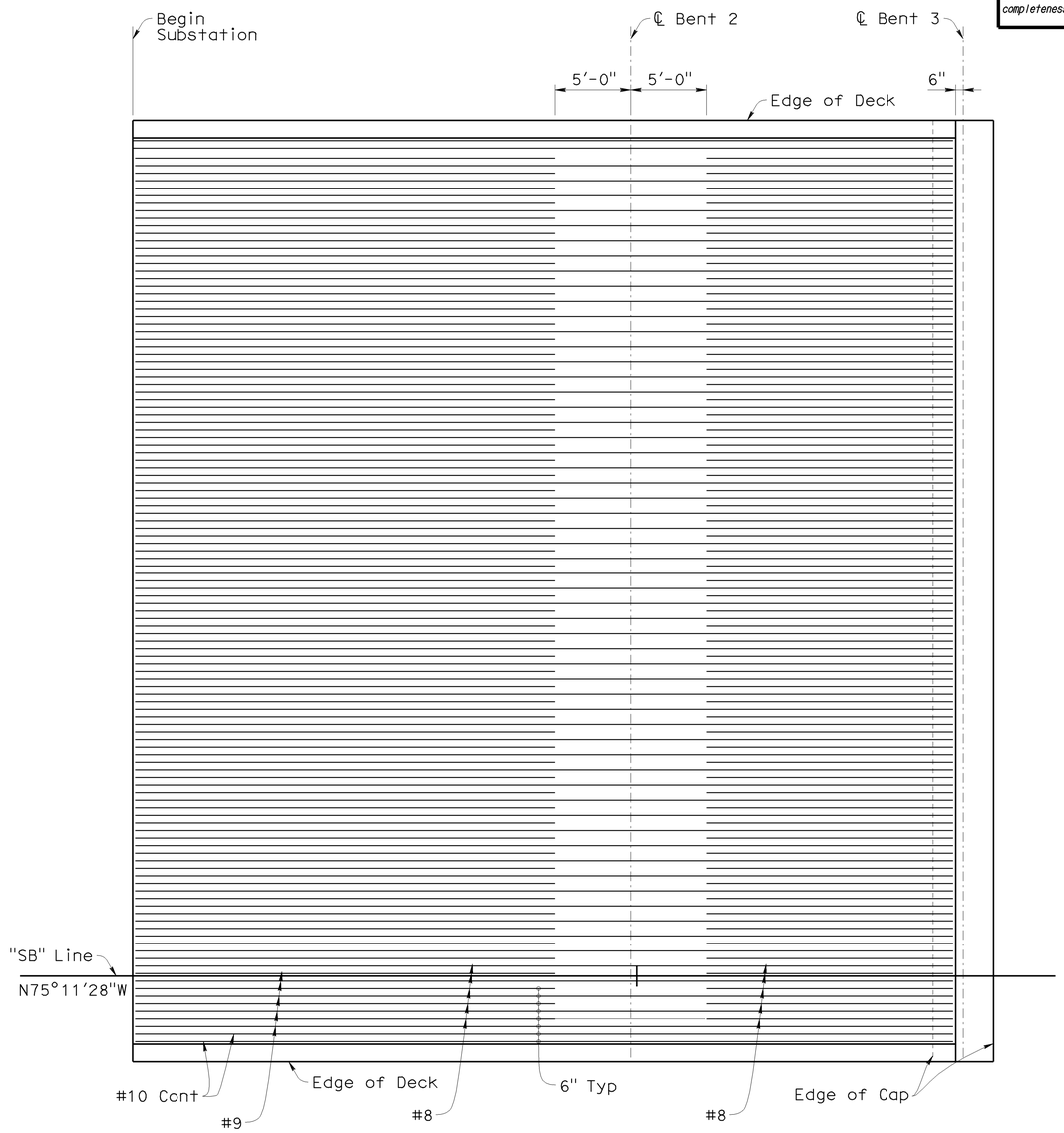

BOTTOM OF SLAB REINFORCEMENT

1" = 5'-0"

NOTE:
THE CONTRACTOR SHALL VERIFY ALL CONTROLLING FIELD DIMENSIONS BEFORE ORDERING OR FABRICATING ANY MATERIAL.

DESIGN	BY L. Wang	CHECKED L. Barnard	
DETAILS	BY E. Hallstrom/T. Kusumi	CHECKED L. Wang/L. Barnard	
QUANTITIES	BY L. Barnard	CHECKED S. Hegazi	

STATE OF CALIFORNIA
DEPARTMENT OF TRANSPORTATION

DIVISION OF ENGINEERING SERVICES
STRUCTURE DESIGN
DESIGN BRANCH 4

CU 04242
EA 163741

BRIDGE NO. 34-0157W
POST MILE 9.0

BATTERY SUBSTATION (BRIDGE)
SLAB REINFORCEMENT

STRUCTURES DESIGN DETAIL SHEET (ENGLISH) (REV. 10/25/05)

ORIGINAL SCALE IN INCHES FOR REDUCED PLANS 0 1 2 3

DISREGARD PRINTS BEARING EARLIER REVISION DATES →

REVISION DATES: 6-9-09 | 6-15-09 | 6-26-09 | 7-13-09 | 7-29-09 | 8-11-09 | 11-10-09

SHEET 11 OF 20

FILE => 34-0157w-i-sr01.dgn

USERNAME => rtreherd DATE PLOTTED => 14-DEC-2009 TIME PLOTTED => 15:38

RELEASED 11-20-97

DIST	COUNTY	ROUTE	POST MILES TOTAL PROJECT	SHEET No	TOTAL SHEETS
04	SF	101	8.2/9.2	428	654

REGISTERED CIVIL ENGINEER 8-31-09 DATE

12-14-09
PLANS APPROVAL DATE

REGISTERED PROFESSIONAL ENGINEER LINAN WANG No. C54714 Exp. 12-31-09 CIVIL STATE OF CALIFORNIA

The State of California or its officers or agents shall not be responsible for the accuracy or completeness of electronic copies of this plan sheet.

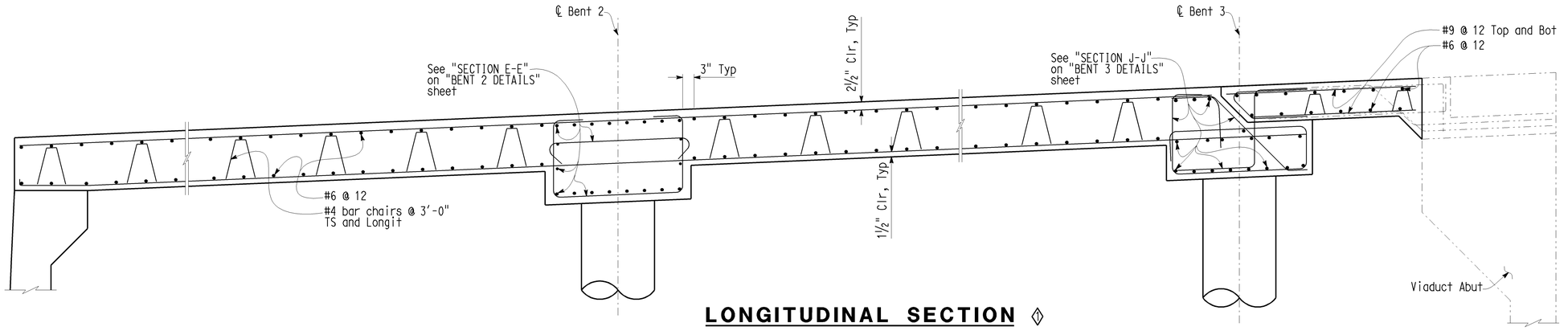

LONGITUDINAL SECTION ◊1

BAR SPLICE LENGTH								
Bar size	#4	#5	#6	#7	#8	#9	#10	#11
All bars, except top bars in spans over 24'	23"	28"	34"	39"	45"	68"	76"	85"
Top bars in spans over 24'	23"	28"	34"	53"	60"	77"	97"	120"

Reinforcement notes:

Splices in top main bars to be located near center of span.
Splices in bottom main bars to be located near bent.
Spacing of all transverse bars is measured along ℄ roadway.
Skew 0° to 20°: Place all transverse bars parallel to bent.
Skew over 20°: Place transverse slab bars perpendicular to ℄ bridge. See details at right and below.

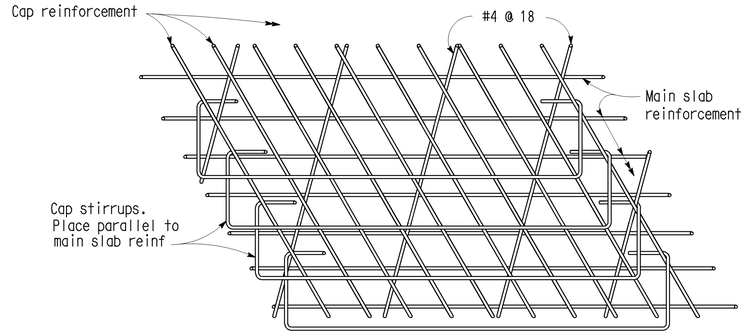

TOP SLAB REINFORCEMENT AT BENT

Note: View for main span over 24'.
Bar placement similar for spans under 24'

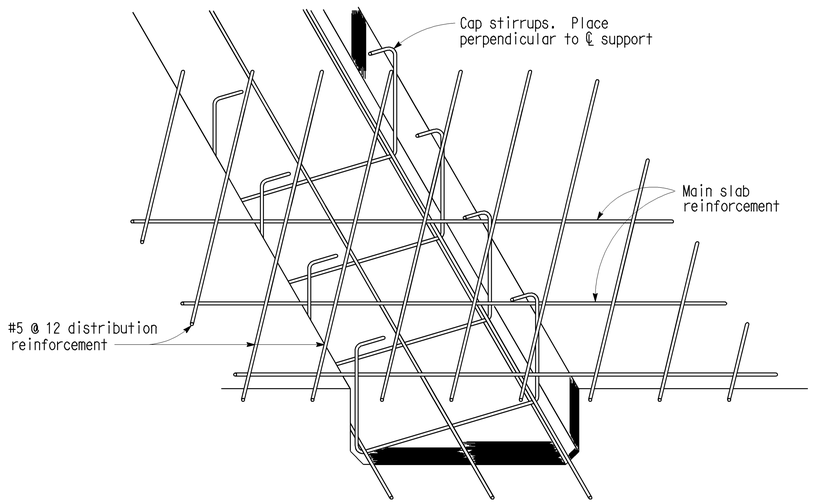

DROPPED CAP

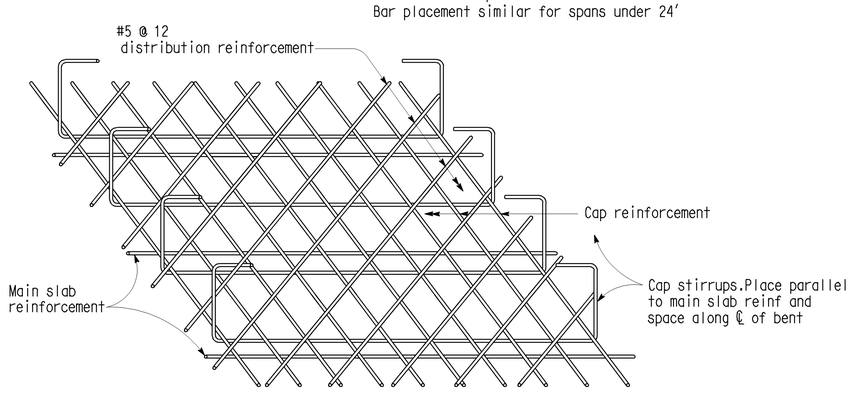

FLUSH CAP

BOTTOM SLAB REINFORCEMENT AT BENT

CALIFORNIA STATE FIRE MARSHAL APPROVED
Approval of this plan does not authorize or approve any omission or deviation from applicable regulations. Final approval is subject to field inspection. One set of approved plans shall be available on the project site at all times.
Reviewed by: STEPHEN GUARINO
Approval date: 12-14-09

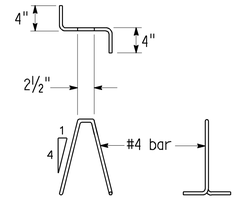

BAR CHAIR DETAIL

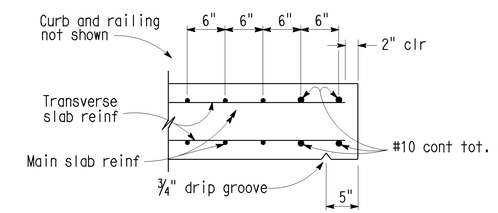

EDGE OF SLAB DETAILS

◊2

NOTE:
THE CONTRACTOR SHALL VERIFY ALL CONTROLLING FIELD DIMENSIONS BEFORE ORDERING OR FABRICATING ANY MATERIAL.

NO SCALE

SPECIAL DETAILS

STANDARD DRAWING				
FILE NO. XS 12-55	DESIGN	BY L.Y. LEE	CHECKED T. FARNAN	APPROVAL RECOMMENDED BY
DESIGN DATE Revised	DETAILS	BY R. YEE	CHECKED T. FARNAN	DESIGN SUPERVISOR
	SUBMITTED BY R.S. WATANABE			

◊1 MODIFIED DETAILS
◊2 DELETED GENERAL NOTES

STATE OF CALIFORNIA
DEPARTMENT OF TRANSPORTATION

DIVISION OF STRUCTURES
STRUCTURE DESIGN 4

BRIDGE NO. 34-0157W
POST MILE 9.0

BATTERY SUBSTATION (BRIDGE)
SLAB REINFORCEMENT DETAILS

DS OSD 2147A (CADD 7/97)

ORIGINAL SCALE IN INCHES FOR REDUCED PLANS 0 1 2 3

CU 04242
EA 163741

DISREGARD PRINTS BEARING EARLIER REVISION DATES → REVISION DATES (PRELIMINARY STAGE ONLY) 6-15-09 6-17-09 6-26-09 7-13-09 7-29-09 8-11-09 8-27-09 11-10-09

SHEET 12 OF 20

FILE => 34-0157w-i-srd.dgn

XS1255.DGN V1=1

USERNAME => trlenard DATE PLOTTED => 14-DEC-2009 TIME PLOTTED => 15:38

DIST	COUNTY	ROUTE	POST MILES TOTAL PROJECT	SHEET No	TOTAL SHEETS
04	SF	101	8.2/9.2	429	654

REGISTERED CIVIL ENGINEER — 8-31-09 DATE

12-14-09
PLANS APPROVAL DATE

REGISTERED PROFESSIONAL ENGINEER — LINAN WANG — No. C54714 — Exp. 12-31-09 — STRUCTURAL — STATE OF CALIFORNIA

The State of California or its officers or agents shall not be responsible for the accuracy or completeness of electronic copies of this plan sheet.

CALIFORNIA STATE FIRE MARSHAL APPROVED

Approval of this plan does not authorize or approve any omission or deviation from applicable regulations. Final approval is subject to field inspection. One set of approved plans shall be available on the project site at all times.

Reviewed by: STEPHEN GUARINO

Approval date: 12-14-09

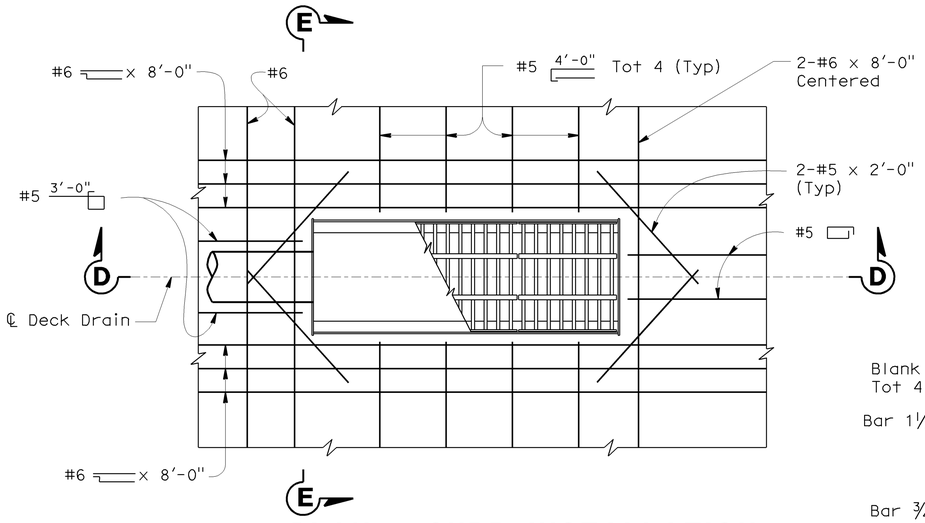

PLAN - CURB INSTALLATION

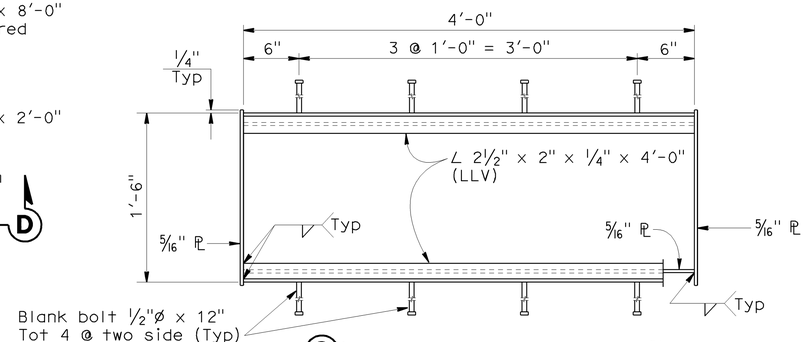

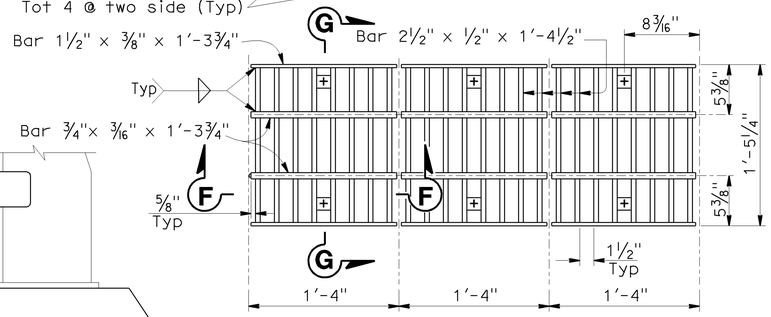

PLAN - FRAME & GRATE

Note:
Grating consists of 3 identical units except for baffle plate.
Baffle plate is required only for the grate over the 6"ø pipe

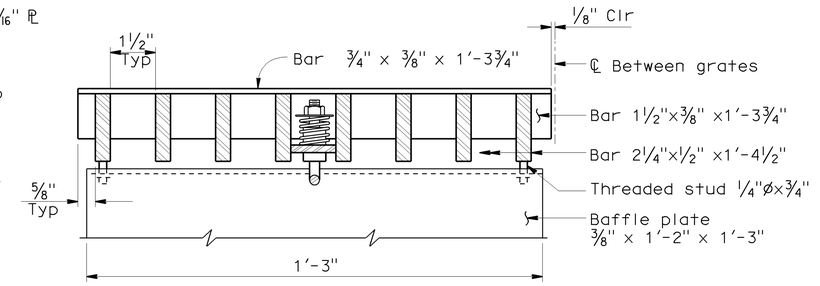

SECTION F-F

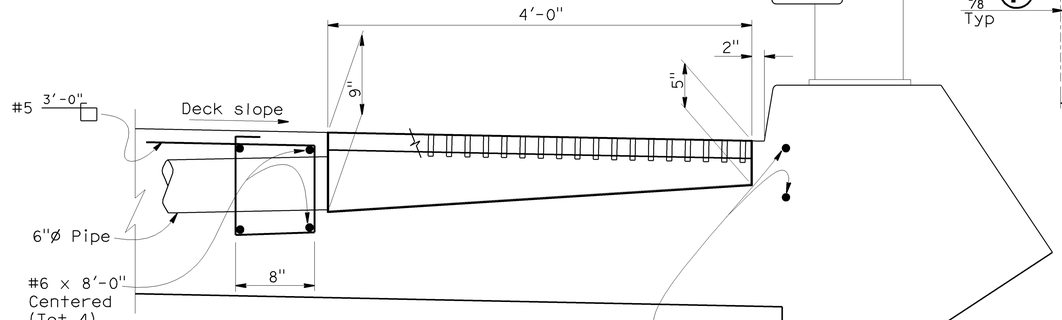

SECTION D-D

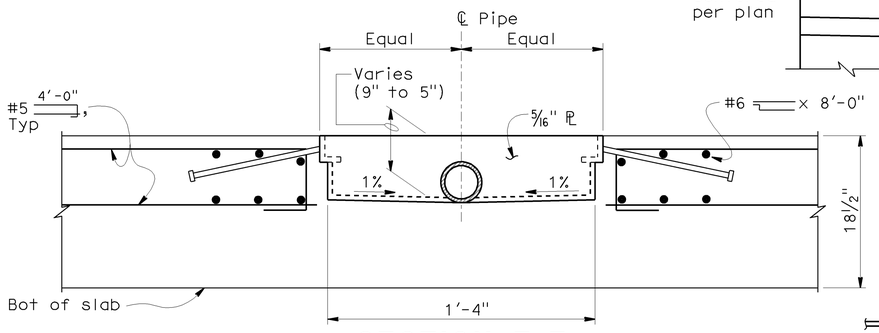

SECTION E-E

NOTES:
1. Galvanize deck drain assembly after fabrication.
2. Reinforcement shown at drains is to be placed in addition to typical slab reinforcement.
3. Typical slab reinforcement not shown
4. For "DECK DRAIN SECTION", see "MISCELLANEOUS DETAILS NO. 1" sheet.

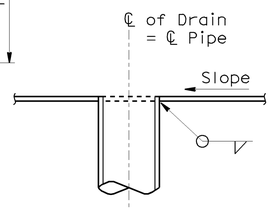

PIPE CONNECTION

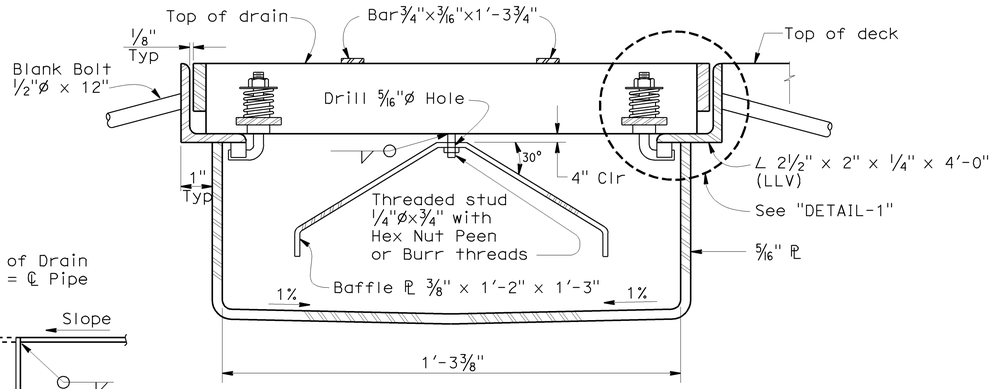

SECTION G-G (FRAME & GRATE)

3/8"Ø Bent threaded rod with 1" Hex Nut & 1 1/4" O.D. washer Tack weld Nut to rod

1" O.D. Spring 3/32" W & M gage stainless steel 2" free length Spring constant of 24 lb/in Spring to have flat ground ends

Bar 2 1/4"x1/2" x1'-4 1/2"

Bushing 3/4"O.D. 1/2" I.D. x1 1/8"

Bar 1 1/2"x 1/4" x1 1/2" with 13/16"Ø Hole

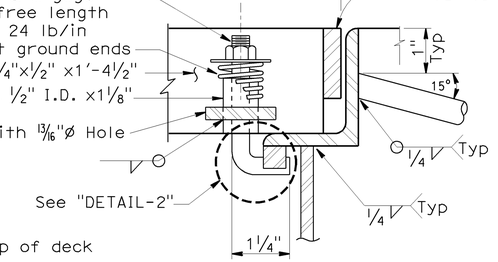

DETAIL - 1

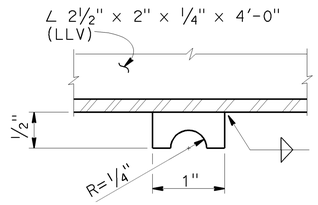

DETAIL - 2

LOCK BAR

NO SCALE

NOTE:
THE CONTRACTOR SHALL VERIFY ALL CONTROLLING FIELD DIMENSIONS BEFORE ORDERING OR FABRICATING ANY MATERIAL.

DESIGN	BY L. Wang	CHECKED L. Barnard	STATE OF CALIFORNIA DEPARTMENT OF TRANSPORTATION	DIVISION OF ENGINEERING SERVICES STRUCTURE DESIGN DESIGN BRANCH 4	BRIDGE NO. 34-0157W
DETAILS	BY E. Hallstrom/T. Kusumi	CHECKED L. Wang/L. Barnard			POST MILE 9.0
QUANTITIES	BY L. Barnard	CHECKED S. Hegazi			

BATTERY SUBSTATION (BRIDGE)
DECK DRAINAGE DETAILS

STRUCTURES DESIGN DETAIL SHEET (ENGLISH) (REV. 10/25/05)

ORIGINAL SCALE IN INCHES FOR REDUCED PLANS 0 1 2 3

CU 04242
EA 163741

DISREGARD PRINTS BEARING EARLIER REVISION DATES →

REVISION DATES: 7-15-09 | 7-29-09 | 8-11-09 | 8-26-09 | 9-14-09 | 11-10-09

SHEET 13 OF 20

FILE => 34-0157w-r-ddet01.dgn

USERNAME => lriehard DATE PLOTTED => 14-DEC-2009 TIME PLOTTED => 15:38

DIST	COUNTY	ROUTE	POST MILES TOTAL PROJECT	SHEET No	TOTAL SHEETS
04	SF	101	8.2/9.2	430	654

8-31-09
REGISTERED CIVIL ENGINEER DATE

12-14-09
PLANS APPROVAL DATE

REGISTERED PROFESSIONAL ENGINEER
LINAN WANG
No. C54714
Exp. 12-31-09
CIVIL
STATE OF CALIFORNIA

The State of California or its officers or agents shall not be responsible for the accuracy or completeness of electronic copies of this plan sheet.

CALIFORNIA STATE FIRE MARSHAL APPROVED

Approval of this plan does not authorize or approve any omission or deviation from applicable regulations. Final approval is subject to field inspection. One set of approved plans shall be available on the project site at all times.

Reviewed by: STEPHEN GUARINO
Approval date: 12-14-09

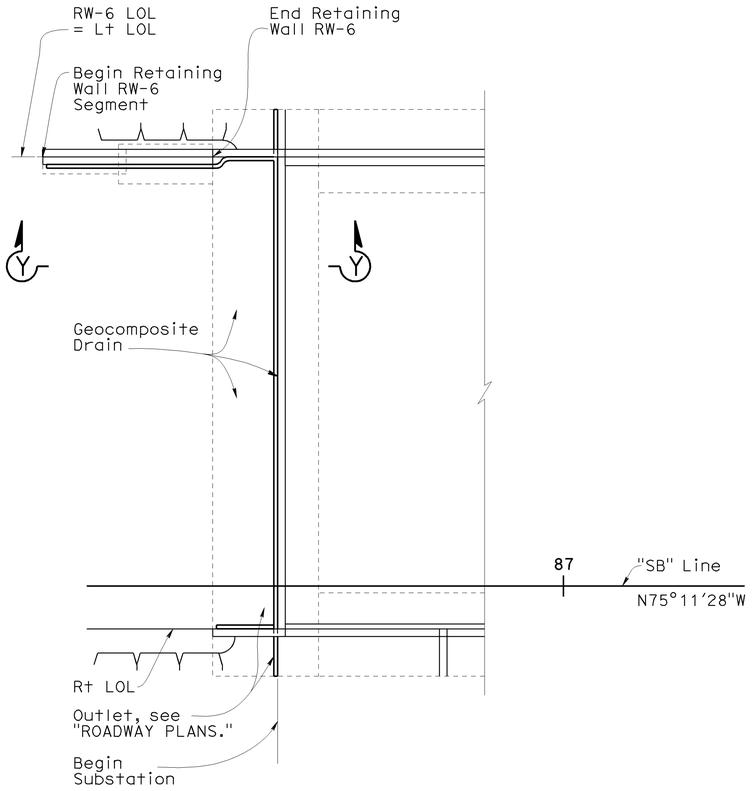

PLAN
No Scale

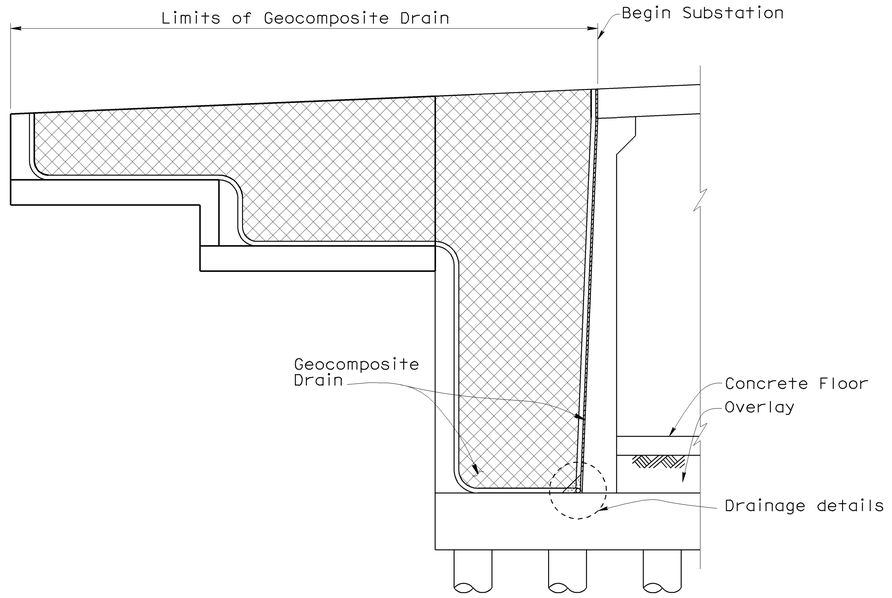

SECTION Y-Y
(GEOCOMPOSITE DRAIN)
No Scale

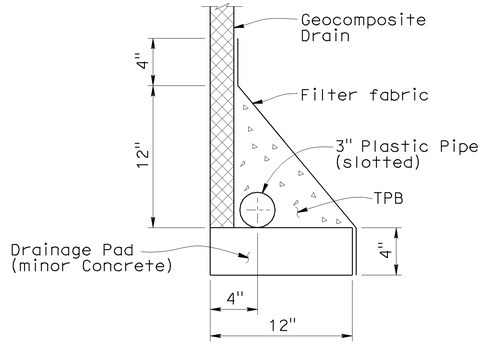

WITHOUT FOOTING

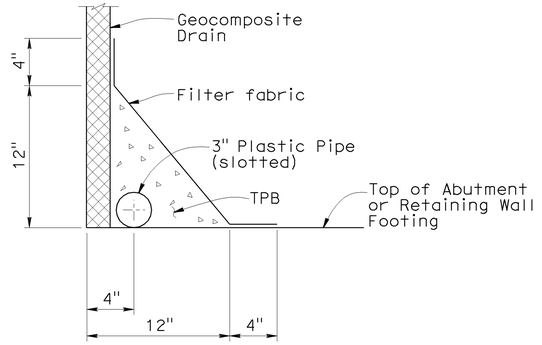

WITH FOOTING

DRAINAGE DETAILS
No Scale

NOTE:
THE CONTRACTOR SHALL VERIFY ALL CONTROLLING FIELD DIMENSIONS BEFORE ORDERING OR FABRICATING ANY MATERIAL.

DESIGN	BY L. Wang	CHECKED L. Barnard	STATE OF CALIFORNIA DEPARTMENT OF TRANSPORTATION	DIVISION OF ENGINEERING SERVICES STRUCTURE DESIGN DESIGN BRANCH 4	BRIDGE NO. 34-0157W	BATTERY SUBSTATION (BRIDGE)
DETAILS	BY E. Hallstrom/T. Kusumi	CHECKED L. Wang/L. Barnard			POST MILE 9.0	GEOCOMPOSITE DRAIN DETAILS
QUANTITIES	BY L. Barnard	CHECKED S. Hegazi				

STRUCTURES DESIGN DETAIL SHEET (ENGLISH) (REV. 10/25/05)

ORIGINAL SCALE IN INCHES FOR REDUCED PLANS 0 1 2 3

CU 04242
EA 163741

DISREGARD PRINTS BEARING EARLIER REVISION DATES →

REVISION DATES: 7-15-09 | 7-29-09 | 8-14-09 | 8-17-09 | 8-19-09 | 11-10-09

SHEET 14 OF 20

FILE => 34-0157w-s-sasd01.dgn

USERNAME => trlenord DATE PLOTTED => 14-DEC-2009 TIME PLOTTED => 15:38

DIST	COUNTY	ROUTE	POST MILES TOTAL PROJECT	SHEET No	TOTAL SHEETS
04	SF	101	8.2/9.2	431	654

REGISTERED CIVIL ENGINEER — 8-31-09 DATE

12-14-09
PLANS APPROVAL DATE

REGISTERED PROFESSIONAL ENGINEER — LINAN WANG No. C54714 Exp. 12-31-09 CIVIL — STATE OF CALIFORNIA

The State of California or its officers or agents shall not be responsible for the accuracy or completeness of electronic copies of this plan sheet.

Side Return Wall Design Height	
Location	H (ft)
Left	17.0±
Right	15.0±

Note:
For Reinforcing of Left Side Return wall, see "ABUTMENT 1 DETAILS NO. 1" sheet.

CALIFORNIA STATE FIRE MARSHAL APPROVED
Approval of this plan does not authorize or approve any omission or deviation from applicable regulations. Final approval is subject to field inspection. One set of approved plans shall be available on the project site at all times.
Reviewed by: STEPHEN GUARINO
Approval date: 12-14-09

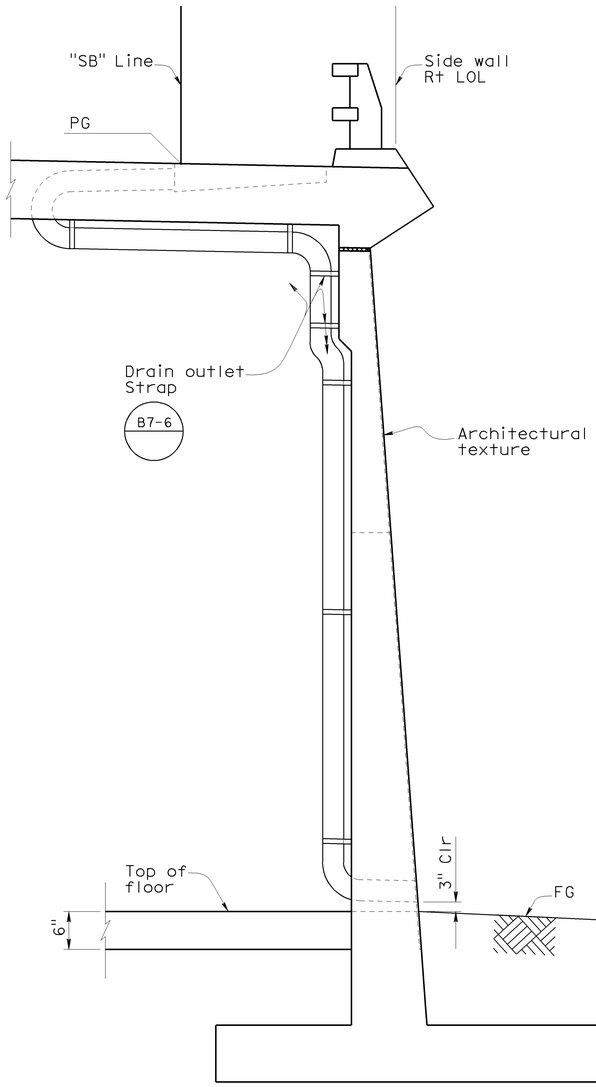

DECK DRAIN SECTION
No Scale

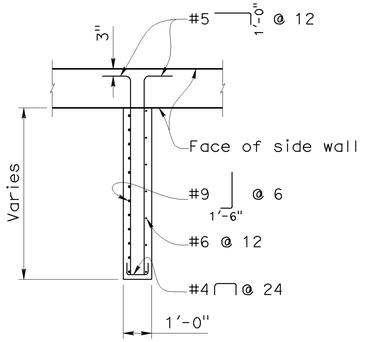

SECTION N-N
3/8" = 1'-0"

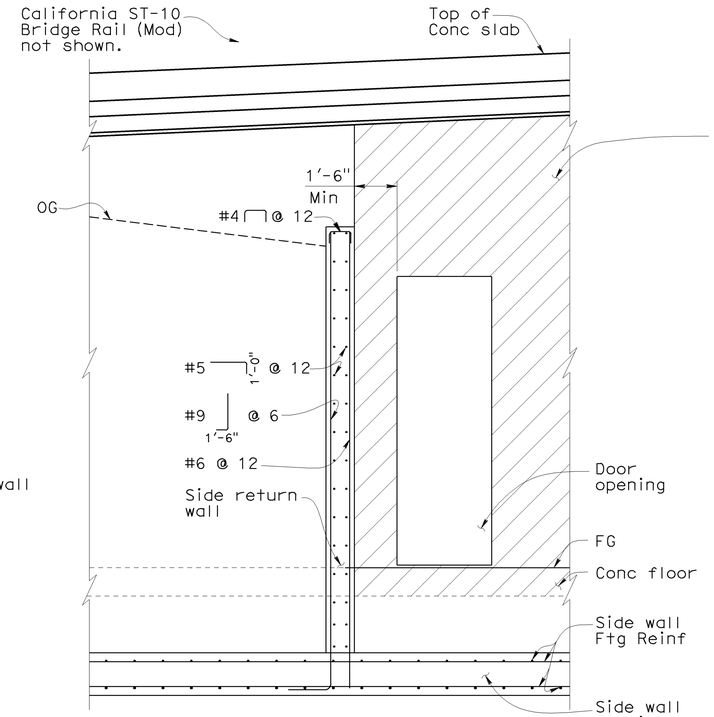

SECTION M-M
3/8" = 1'-0"

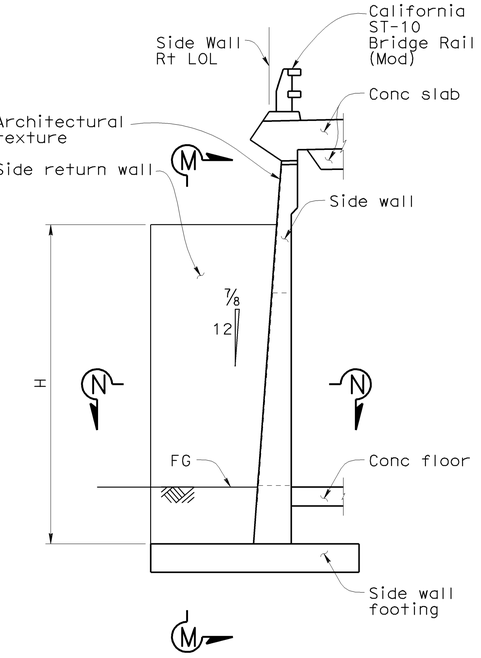

ELEVATION
RIGHT SIDE RETURN WALL
No Scale

NOTE:
All pipe to be NPS 6 x 0.135" welded steel pipe except as noted and galvanized if not encased in concrete. Fittings and bends shall have a minimum wall thickness of 1/8". All joints or connections to be butt welded or connected by a steel pipe sleeve and to be smooth throughout inside of pipe except as noted. All bends to be on 1'-6" minimum radius measured along ℄ pipe. All bends to be supported by suitable galvanized hangers @ 10'-0" maximum spacing throughout. Galvanized deck drain assembly after fabrication.

NOTES:
1. For information not shown, see "SECTION E-E" on "ABUTMENT 1 DETAILS NO. 2" sheet.
2. Chain Link Fence, see "ROADWAY PLANS".
3. Chain Link Fence not shown for clarity.

NOTE:
THE CONTRACTOR SHALL VERIFY ALL CONTROLLING FIELD DIMENSIONS BEFORE ORDERING OR FABRICATING ANY MATERIAL.

DESIGN	BY L. Wang	CHECKED L. Barnard	STATE OF CALIFORNIA DEPARTMENT OF TRANSPORTATION	DIVISION OF ENGINEERING SERVICES STRUCTURE DESIGN DESIGN BRANCH 4	BRIDGE NO. 34-0157W
DETAILS	BY E. Hallstrom/T. Kusumi	CHECKED L. Wang/L. Barnard			POST MILE 9.0
QUANTITIES	BY L. Barnard	CHECKED S. Hegazi			

BATTERY SUBSTATION (BRIDGE)
MISCELLANEOUS DETAILS NO. 1

STRUCTURES DESIGN DETAIL SHEET (ENGLISH) (REV. 10/25/05)

ORIGINAL SCALE IN INCHES FOR REDUCED PLANS 0 1 2 3

CU 04242
EA 163741

DISREGARD PRINTS BEARING EARLIER REVISION DATES →

REVISION DATES: 7-15-09 | 7-29-09 | 8-19-09 | 8-11-09 | 8-20-09 | 8-25-09 | 8-24-09 | 9-14-09 | 11-10-09

SHEET 15 OF 20

FILE => 34-0157w-x-miscdt01.dgn

USERNAME => ttrenord DATE PLOTTED => 14-DEC-2009 TIME PLOTTED => 15:38

DIST	COUNTY	ROUTE	POST MILES TOTAL PROJECT	SHEET No	TOTAL SHEETS
04	SF	101	8.2/9.2	432	654

REGISTERED CIVIL ENGINEER — 8-31-09 DATE

12-14-09
PLANS APPROVAL DATE

REGISTERED PROFESSIONAL ENGINEER — LINAN WANG No. C54714 Exp. 12-31-09 CIVIL — STATE OF CALIFORNIA

The State of California or its officers or agents shall not be responsible for the accuracy or completeness of electronic copies of this plan sheet.

NOTE:
THE CONTRACTOR SHALL VERIFY ALL CONTROLLING FIELD DIMENSIONS BEFORE ORDERING OR FABRICATING ANY MATERIAL.

CALIFORNIA STATE FIRE MARSHAL APPROVED
Approval of this plan does not authorize or approve any omission or deviation from applicable regulations. Final approval is subject to field inspection. One set of approved plans shall be available on the project site at all times.
Reviewed by: STEPHEN GUARINO
Approval date: 12-14-09

NOTES:
1. For information not shown, see "SECTION E-E" on "ABUTMENT 1 DETAILS NO. 2" sheet.
2. Side wall Rt footing shown, Lt footing similar.
3. Contractor shall take measures to protect the Exist footing foundation of out of phase structures.

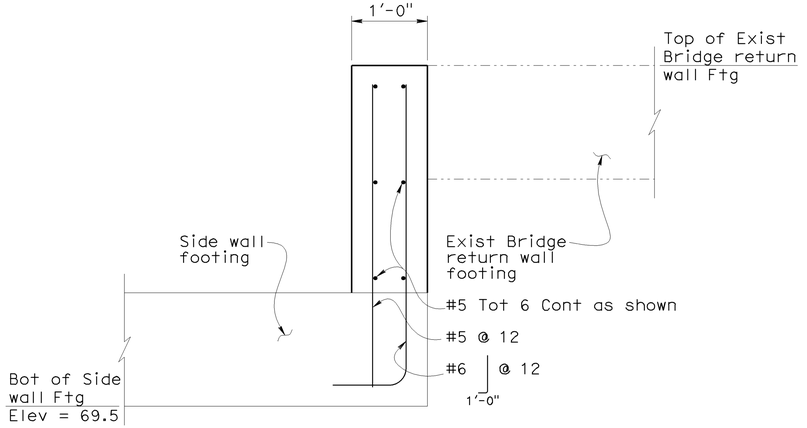

SECTION P-P
1" = 1'-0"

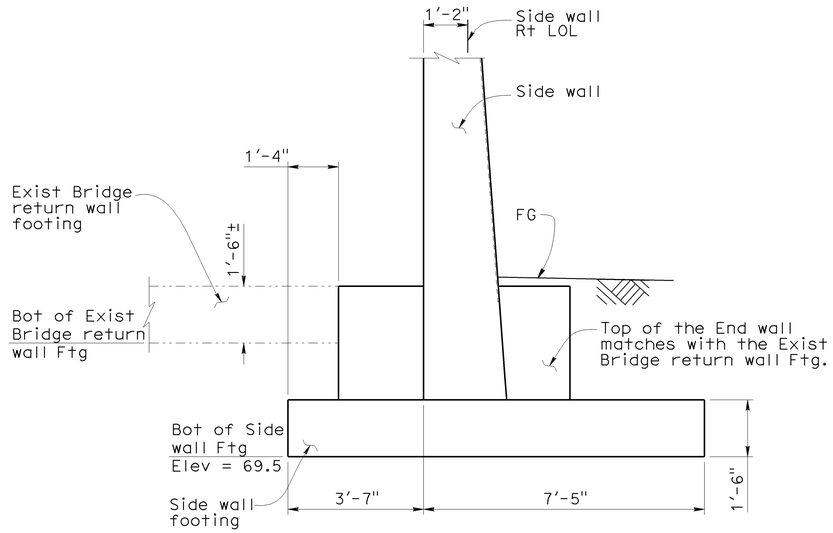

Note:
Column not shown for clarity

VIEW O-O
½" = 1'-0"

Notes:
1. For information not shown, see "SECTION E-E" on "ABUTMENT 1 DETAILS NO. 2" sheet.
2. Reinf symmetrical to ℄ door opening

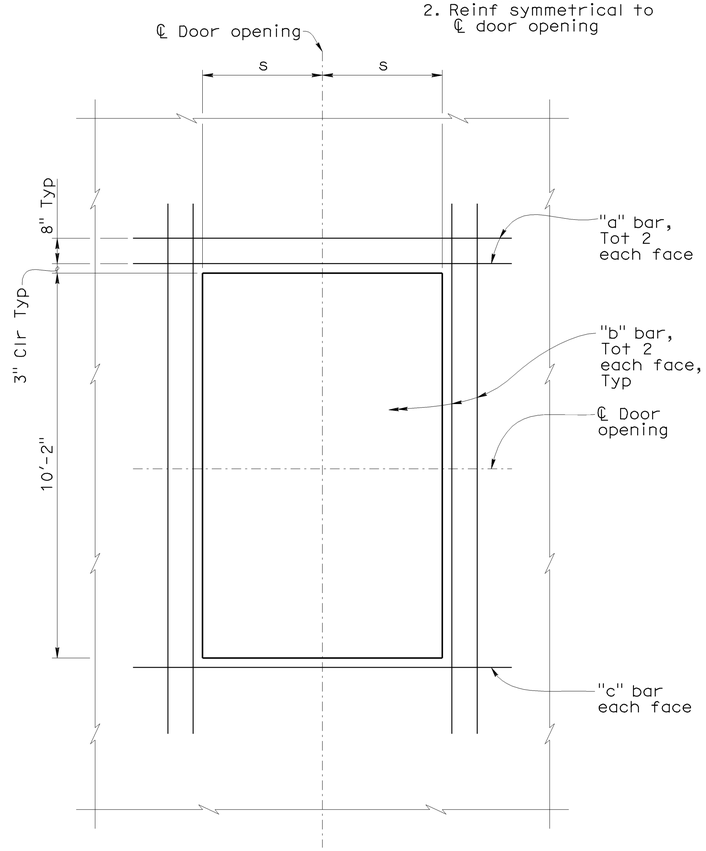

(Side wall footing @ end Substation)

PLAN
¼" = 1'-0"

Note:
Right side shown,
Left side similar.

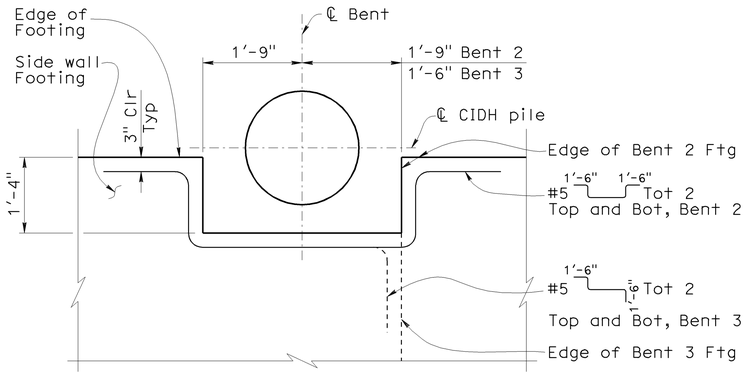

(Side wall footing @ Bents)

PLAN
No Scale

Door Opening Size	Bar Size and Length			
	s	a	b	c
6'-4" x 10'-2"	3'-2"	#6 x 10'-0"	#6 x 14'-0"	#6 x 10'-0"
3'-4" x 10'-2"	1'-8"	#6 x 7'-0"	#6 x 14'-0"	#6 x 7'-0"

ADDITIONAL SIDE WALL OPENING REINFORCING DETAILS
½" = 1'-0"

DESIGN	BY L. Wang	CHECKED L. Barnard	STATE OF CALIFORNIA DEPARTMENT OF TRANSPORTATION	DIVISION OF ENGINEERING SERVICES STRUCTURE DESIGN DESIGN BRANCH 4	BRIDGE NO. 34-0157W
DETAILS	BY E. Hallstrom/T. Kusumi	CHECKED L. Wang/L. Barnard			POST MILE 9.0
QUANTITIES	BY L. Barnard	CHECKED S. Hegazi			

BATTERY SUBSTATION (BRIDGE)
MISCELLANEOUS DETAILS NO. 2

STRUCTURES DESIGN DETAIL SHEET (ENGLISH) (REV. 10/25/05)

ORIGINAL SCALE IN INCHES FOR REDUCED PLANS 0 1 2 3

CU 04242
EA 163741

DISREGARD PRINTS BEARING EARLIER REVISION DATES

REVISION DATES: 7-1-09 | 7-29-09 | 8-11-09 | 8-12-09 | 8-13-09 | 8-19-09 | 8-24-09 | 9-14-09 | 11-10-09

SHEET 16 OF 20

FILE => 34-0157w-x-miscdt02.dgn

USERNAME => Friemond DATE PLOTTED => 14-DEC-2009 TIME PLOTTED => 15:33

DIST	COUNTY	ROUTE	POST MILES TOTAL PROJECT	SHEET No	TOTAL SHEETS
04	SF	101	8.2/9.2	433	654

CERTIFIED ENGINEERING GEOLOGIST 7-15-09

12-14-09
PLANS APPROVAL DATE

REGISTERED GEOLOGIST — Grant Wilcox — No. 2300 — Exp. 4-30-10 — CERTIFIED ENGINEERING GEOLOGIST — STATE OF CALIFORNIA

The State of California or its officers or agents shall not be responsible for the accuracy or completeness of electronic copies of this plan sheet.

CALIFORNIA STATE FIRE MARSHAL APPROVED

Approval of this plan does not authorize or approve any omission or deviation from applicable regulations. Final approval is subject to field inspection. One set of approved plans shall be available on the project site at all times.

Reviewed by: STEPHEN GUARINO

Approval date: 12-14-09

This LOTB sheet was prepared in accordance with the Caltrans Soil & Rock Logging, Classification, & Presentation Manual (June 2007) with the exception of Section 2.3.

BENCH MARK

SURVEY CONTROL

CM-131
Fnd Mag. Nail & Washer
43.66 FT Lt. "SB" Line
Sta. 89+63.11
N 2,1205,06.93
E 5,993,684.52
Elev. = 52.78

CM-134
Fnd Mag. Nail & Washer
0.54 FT Rt. "NB" Line
Sta. 87+18.23
N 2,120,508.72
E 5,993,944.09
Elev. = 82.45
NAVD 1998 Datum

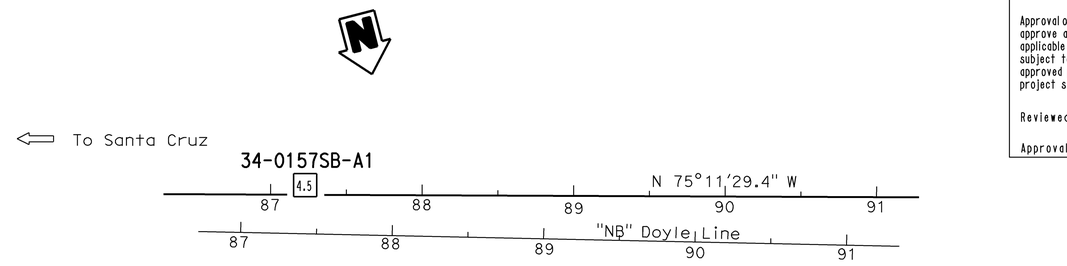

PLAN
1" = 50'

PROFILE
HOR. 1"=10'
VER. 1"=10'

ENGINEERING SERVICES	GEOTECHNICAL SERVICES		STATE OF CALIFORNIA DEPARTMENT OF TRANSPORTATION	DIVISION OF ENGINEERING SERVICES STRUCTURE DESIGN	BRIDGE NO. 34-0157W	BATTERY SUBSTATION (BRIDGE)
FUNCTIONAL SUPERVISOR	DRAWN BY: F. Nguyen 3/09, I.G-Remmen 7/09	FIELD INVESTIGATION BY:		DESIGN BRANCH	POST MILES 9.0	LOG OF TEST BORINGS 1 OF 4
NAME: T. Pokrywka	CHECKED BY: R. Price	R. Nashed				

OGS CIVIL LOG OF TEST BORINGS SHEET

ORIGINAL SCALE IN INCHES FOR REDUCED PLANS 0 1 2 3

CU 04
EA 163731

DISREGARD PRINTS BEARING EARLIER REVISION DATES →

REVISION DATES: 07-15-09 | 08-11-09 | 11-10-09

SHEET 17 OF 20

FILE => 34-0157w-z-lotb1.dgn

USERNAME => ttrenard DATE PLOTTED => 14-DEC-2009 TIME PLOTTED => 15:39

REFERENCE: CALTRANS SOIL & ROCK LOGGING, CLASSIFICATION, AND PRESENTATION MANUAL (JUNE 2007)

DIST	COUNTY	ROUTE	POST MILES TOTAL PROJECT	SHEET No	TOTAL SHEETS
04	SF	101	8.2/9.2	434	654

CERTIFIED ENGINEERING GEOLOGIST 7-15-09

12-14-09
PLANS APPROVAL DATE

REGISTERED GEOLOGIST — Grant Wilcox — No. 2300 — Exp. 4-30-10 — CERTIFIED ENGINEERING GEOLOGIST — STATE OF CALIFORNIA

The State of California or its officers or agents shall not be responsible for the accuracy or completeness of electronic copies of this plan sheet.

CALIFORNIA STATE FIRE MARSHAL APPROVED

Approval of this plan does not authorize or approve any omission or deviation from applicable regulations. Final approval is subject to field inspection. One set of approved plans shall be available on the project site at all times.

Reviewed by: STEPHEN GUARINO

Approval date: 12-14-09

CEMENTATION

Description	Criteria
Weak	Crumbles or breaks with handling or little finger pressure.
Moderate	Crumbles or breaks with considerable finger pressure.
Strong	Will not crumble or break with finger pressure.

CONSISTENCY OF COHESIVE SOILS

Description	Unconfined Compressive Strength (tsf)	Pocket Penetrometer Measurement (tsf)	Torvane Measurement (tsf)	Field Approximation
Very Soft	< 0.25	< 0.25	< 0.12	Easily penetrated several inches by fist
Soft	0.25 to 0.50	0.25 to 0.50	0.12 to 0.25	Easily penetrated several inches by thumb
Medium Stiff	0.50 to 1.0	0.50 to 1.0	0.25 to 0.50	Penetrated several inches by thumb with moderate effort
Stiff	1 to 2	1 to 2	0.50 to 1.0	Readily indented by thumb but penetrated only with great effort
Very Stiff	2 to 4	2 to 4	1.0 to 2.0	Readily indented by thumbnail
Hard	> 4.0	> 4.0	> 2.0	Indented by thumbnail with difficulty

BOREHOLE IDENTIFICATION

Symbol	Hole Type	Description
Size	A	Auger Boring
Size	R P	Rotary drilled boring Rotary percussion boring (air)
Size	R	Rotary drilled diamond core
Size	HD HA	Hand driven (1-inch soil tube) Hand Auger
●	D	Dynamic Cone Penetration Boring
▲	CPT	Cone Penetration Test (ASTM D 5778-95)
⬚	O	Other

Note: Size in inches.

PLASTICITY OF FINE-GRAINED SOILS

Description	Criteria
Nonplastic	A 1/8-inch thread cannot be rolled at any water content.
Low	The thread can barely be rolled and the lump cannot be formed when drier than the plastic limit.
Medium	The thread is easy to roll and not much time is required to reach the plastic limit. The thread cannot be rerolled after reaching the plastic limit. The lump crumbles when drier than the plastic limit.
High	It takes considerable time rolling and kneading to reach the plastic limit. The thread can be rerolled several times after reaching the plastic limit. The lump can be formed without crumbling when drier than the plastic limit.

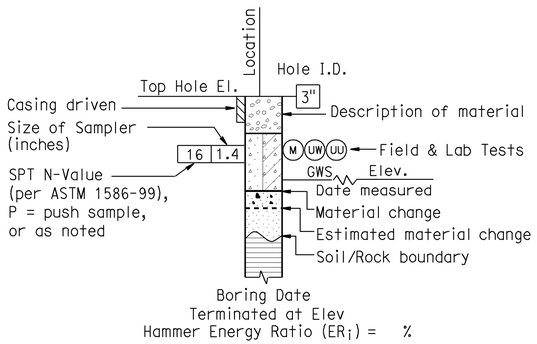

ROTARY BORING

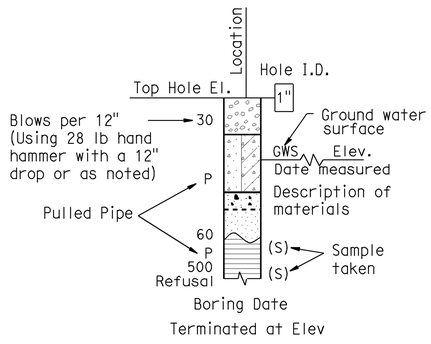

HAND BORING

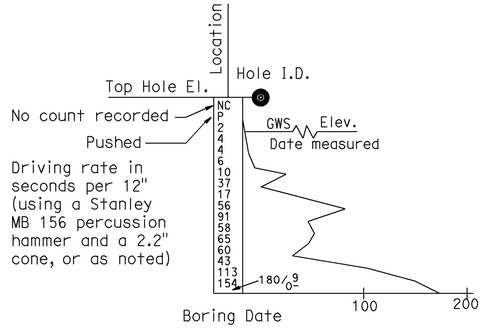

DYNAMIC CONE PENETRATION BORING

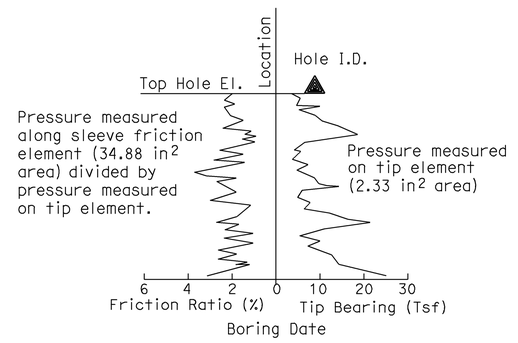

CONE PENETRATION TEST (CPT) SOUNDING

ENGINEERING SERVICES	GEOTECHNICAL SERVICES	STATE OF CALIFORNIA DEPARTMENT OF TRANSPORTATION	DIVISION OF ENGINEERING SERVICES STRUCTURE DESIGN	BRIDGE NO. 34-0157W	BATTERY SUBSTATION (BRIDGE)
	PREPARED BY: I.G-REMMEN, 7/09		DESIGN BRANCH	POST MILE 9.02	LOG OF TEST BORINGS 2 OF 4

GS LOTB SOIL LEGEND

ORIGINAL SCALE IN INCHES FOR REDUCED PLANS 0 1 2 3

CU 04 EA 163731

DISREGARD PRINTS BEARING EARLIER REVISION DATES →

REVISION DATES: 07-15-09 | 08-11-09 | 11-10-09

SHEET 18 OF 20

FILE => 34-0157w-z-lotb2.dgn

USERNAME => ttrienard DATE PLOTTED => 14-DEC-2009 TIME PLOTTED => 15:39

REFERENCE: CALTRANS SOIL & ROCK LOGGING, CLASSIFICATION, AND PRESENTATION MANUAL (JUNE 2007)

GROUP SYMBOLS AND NAMES

Graphic/Symbol	Group Names	Graphic/Symbol	Group Names
GW	Well-graded GRAVEL Well-graded GRAVEL with SAND	CL	Lean CLAY Lean CLAY with SAND Lean CLAY with GRAVEL SANDY lean CLAY SANDY lean CLAY with GRAVEL GRAVELLY lean CLAY GRAVELLY lean CLAY with SAND
GP	Poorly graded GRAVEL Poorly graded GRAVEL with SAND		
GW-GM	Well-graded GRAVEL with SILT Well-graded GRAVEL with SILT and SAND	CL-ML	SILTY CLAY SILTY CLAY with SAND SILTY CLAY with GRAVEL SANDY SILTY CLAY SANDY SILTY CLAY with GRAVEL GRAVELLY SILTY CLAY GRAVELLY SILTY CLAY with SAND
GW-GC	Well-graded GRAVEL with CLAY (or SILTY CLAY) Well-graded GRAVEL with CLAY and SAND (or SILTY CLAY and SAND)		
GP-GM	Poorly graded GRAVEL with SILT Poorly graded GRAVEL with SILT and SAND	ML	SILT SILT with SAND SILT with GRAVEL SANDY SILT SANDY SILT with GRAVEL GRAVELLY SILT GRAVELLY SILT with SAND
GP-GC	Poorly graded GRAVEL with CLAY (or SILTY CLAY) Poorly graded GRAVEL with CLAY and SAND (or SILTY CLAY and SAND)		
GM	SILTY GRAVEL SILTY GRAVEL with SAND	OL	ORGANIC lean CLAY ORGANIC lean CLAY with SAND ORGANIC lean CLAY with GRAVEL SANDY ORGANIC lean CLAY SANDY ORGANIC lean CLAY with GRAVEL GRAVELLY ORGANIC lean CLAY GRAVELLY ORGANIC lean CLAY with SAND
GC	CLAYEY GRAVEL CLAYEY GRAVEL with SAND		
GC-GM	SILTY, CLAYEY GRAVEL SILTY, CLAYEY GRAVEL with SAND	OL	ORGANIC SILT ORGANIC SILT with SAND ORGANIC SILT with GRAVEL SANDY ORGANIC SILT SANDY ORGANIC SILT with GRAVEL GRAVELLY ORGANIC SILT GRAVELLY ORGANIC SILT with SAND
SW	Well-graded SAND Well-graded SAND with GRAVEL		
SP	Poorly graded SAND Poorly graded SAND with GRAVEL	CH	Fat CLAY Fat CLAY with SAND Fat CLAY with GRAVEL SANDY fat CLAY SANDY fat CLAY with GRAVEL GRAVELLY fat CLAY GRAVELLY fat CLAY with SAND
SW-SM	Well-graded SAND with SILT Well-graded SAND with SILT and GRAVEL		
SW-SC	Well-graded SAND with CLAY (or SILTY CLAY) Well-graded SAND with CLAY and GRAVEL (or SILTY CLAY and GRAVEL)	MH	Elastic SILT Elastic SILT with SAND Elastic SILT with GRAVEL SANDY elastic SILT SANDY elastic SILT with GRAVEL GRAVELLY elastic SILT GRAVELLY elastic SILT with SAND
SP-SM	Poorly graded SAND with SILT Poorly graded SAND with SILT and GRAVEL		
SP-SC	Poorly graded SAND with CLAY (or SILTY CLAY) Poorly graded SAND with CLAY and GRAVEL (or SILTY CLAY and GRAVEL)	OH	ORGANIC fat CLAY ORGANIC fat CLAY with SAND ORGANIC fat CLAY with GRAVEL SANDY ORGANIC fat CLAY SANDY ORGANIC fat CLAY with GRAVEL GRAVELLY ORGANIC fat CLAY GRAVELLY ORGANIC fat CLAY with SAND
SM	SILTY SAND SILTY SAND with GRAVEL		
SC	CLAYEY SAND CLAYEY SAND with GRAVEL	OH	ORGANIC elastic SILT ORGANIC elastic SILT with SAND ORGANIC elastic SILT with GRAVEL SANDY ORGANIC elastic SILT SANDY ORGANIC elastic SILT with GRAVEL GRAVELLY ORGANIC elastic SILT GRAVELLY ORGANIC elastic SILT with SAND
SC-SM	SILTY, CLAYEY SAND SILTY, CLAYEY SAND with GRAVEL		
PT	PEAT	OL/OH	ORGANIC SOIL ORGANIC SOIL with SAND ORGANIC SOIL with GRAVEL SANDY ORGANIC SOIL SANDY ORGANIC SOIL with GRAVEL GRAVELLY ORGANIC SOIL GRAVELLY ORGANIC SOIL with SAND
	COBBLES COBBLES and BOULDERS BOULDERS		

FIELD AND LABORATORY TESTING

- (C) Consolidation (ASTM D 2435)
- (CL) Collapse Potential (ASTM D 5333)
- (CP) Compaction Curve (CTM 216)
- (CR) Corrosivity Testing (CTM 643, CTM 422, CTM 417)
- (CU) Consolidated Undrained Triaxial (ASTM D 4767)
- (DS) Direct Shear (ASTM D 3080)
- (EI) Expansion Index (ASTM D 4829)
- (M) Moisture Content (ASTM D 2216)
- (OC) Organic Content-% (ASTM D 2974)
- (P) Permeability (CTM 220)
- (PA) Particle Size Analysis (ASTM D 422)
- (PI) Plasticity Index (AASHTO T 90) Liquid Limit (AASHTO T 89)
- (PL) Point Load Index (ASTM D 5731)
- (PM) Pressure Meter
- (PP) Pocket Penetrometer
- (R) R-Value (CTM 301)
- (SE) Sand Equivalent (CTM 217)
- (SG) Specific Gravity (AASHTO T 100)
- (SL) Shrinkage Limit (ASTM D 427)
- (SW) Swell Potential (ASTM D 4546)
- (TV) Pocket Torvane
- (UC) Unconfined Compression-Soil (ASTM D 2166) Unconfined Compression-Rock (ASTM D 2938)
- (UU) Unconsolidated Undrained Triaxial (ASTM D 2850)
- (UW) Unit Weight (ASTM D 4767)
- (VS) Vane Shear (AASHTO T 223)

CALIFORNIA STATE FIRE MARSHAL APPROVED

Approval of this plan does not authorize or approve any omission or deviation from applicable regulations. Final approval is subject to field inspection. One set of approved plans shall be available on the project site at all times.

Reviewed by: STEPHEN GUARINO

Approval date: 12-14-09

DIST	COUNTY	ROUTE	POST MILES TOTAL PROJECT	SHEET No	TOTAL SHEETS
04	SF	101	8.2/9.2	435	654

CERTIFIED ENGINEERING GEOLOGIST 7-15-09

12-14-09
PLANS APPROVAL DATE

REGISTERED GEOLOGIST — Grant Wilcox — No. 2300 — Exp. 4-30-10 — CERTIFIED ENGINEERING GEOLOGIST — STATE OF CALIFORNIA

The State of California or its officers or agents shall not be responsible for the accuracy or completeness of electronic copies of this plan sheet.

APPARENT DENSITY OF COHESIONLESS SOILS

Description	SPT N_{60} (Blows / 12 inches)
Very loose	0 - 4
Loose	5 - 10
Medium Dense	11 - 30
Dense	31 - 50
Very Dense	> 50

MOISTURE

Description	Criteria
Dry	Absence of moisture, dusty, dry to the touch
Moist	Damp but no visible water
Wet	Visible free water, usually soil is below water table

PERCENT OR PROPORTION OF SOILS

Description	Criteria
Trace	Particles are present but estimated to be less than 5%
Few	5 to 10%
Little	15 to 25%
Some	30 to 45%
Mostly	50 to 100%

PARTICLE SIZE

Description		Size
Boulder		> 12"
Cobble		3" to 12"
Gravel	Coarse	3/4" to 3"
	Fine	No. 4 to 3/4"
Sand	Coarse	No. 10 to No. 4
	Medium	No. 40 to No. 10
	Fine	No. 200 to No. 40

ENGINEERING SERVICES	GEOTECHNICAL SERVICES	STATE OF CALIFORNIA DEPARTMENT OF TRANSPORTATION	DIVISION OF ENGINEERING SERVICES STRUCTURE DESIGN	BRIDGE NO. 34-0157W	BATTERY SUBSTATION (BRIDGE)
	PREPARED BY: I.G-REMMEN, 7/09		DESIGN BRANCH	POST MILE 9.02	LOG OF TEST BORINGS 3 OF 4

GS LOTB SOIL LEGEND

ORIGINAL SCALE IN INCHES FOR REDUCED PLANS 0 1 2 3

CU 04
EA 163731

DISREGARD PRINTS BEARING EARLIER REVISION DATES →

REVISION DATES: 07-15-09 | 08-14-09 | 11-10-09

SHEET 19 OF 20

FILE => 34-0157w-z-lotb3.dgn

USERNAME => mtreynol DATE PLOTTED => 14-DEC-2009 TIME PLOTTED => 15:39

REFERENCE: CALTRANS SOIL & ROCK LOGGING, CLASSIFICATION, AND PRESENTATION MANUAL (JUNE 2007)

DIST	COUNTY	ROUTE	POST MILES TOTAL PROJECT	SHEET No	TOTAL SHEETS
04	SF	101	8.2/9.2	436	654

CERTIFIED ENGINEERING GEOLOGIST 7-15-09

12-14-09
PLANS APPROVAL DATE

REGISTERED GEOLOGIST — Grant Wilcox — No. 2300 — Exp. 4-30-10 — CERTIFIED ENGINEERING GEOLOGIST — STATE OF CALIFORNIA

The State of California or its officers or agents shall not be responsible for the accuracy or completeness of electronic copies of this plan sheet.

PERCENT CORE RECOVERY (REC) & ROCK QUALITY DESIGNATION (RQD)

$$REC = \frac{\sum \text{Length of the recovered core pieces (inches)}}{\text{Total length of core run (inches)}} \times 100\%$$

$$RQD = \frac{\sum \text{Length of intact core pieces} \geq 4\text{"}}{\text{Total length of core run (inches)}} \times 100\%$$

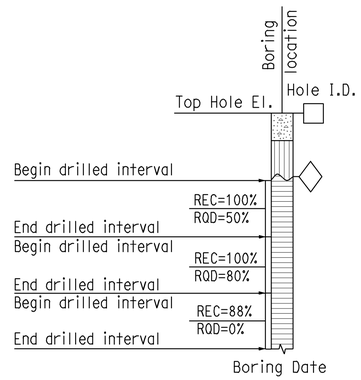

RELATIVE STRENGTH OF INTACT ROCK

Term	Uniaxial Compressive Strength (PSI)
Extremely Strong	> 30,000
Very Strong	14,500 - 30,000
Strong	7,000 - 14,500
Medium Strong	3,500 - 7,000
Weak	700 - 3,500
Very Weak	150 - 700
Extremely Weak	< 150

BEDDING SPACING

Description	Thickness / Spacing
Massive	Greater than 10 ft
Very thickly bedded	3 to 10 ft
Thickly bedded	1 to 3 ft
Moderately bedded	3-5/8" to 1 ft
Thinly bedded	1-1/4" to 3-5/8"
Very thinly bedded	3/8" to 1-1/4"
Laminated	Less than 3/8"

LEGEND OF ROCK MATERIALS

IGNEOUS ROCK

SEDIMENTARY ROCK

METAMORPHIC ROCK

CALIFORNIA STATE FIRE MARSHAL APPROVED
Approval of this plan does not authorize or approve any omission or deviation from applicable regulations. Final approval is subject to field inspection. One set of approved plans shall be available on the project site at all times.
Reviewed by: STEPHEN GUARINO
Approval date: 12-14-09

ROCK HARDNESS

Description	Criteria
Extremely Hard	Specimen cannot be scratched with a pocket knife or sharp pick; can only be chipped with repeated heavy hammer blows.
Very Hard	Specimen cannot be scratched with a pocket knife or sharp pick. Breaks with repeated heavy hammer blows.
Hard	Specimen can be scratched with a pocket knife or sharp pick with difficulty (heavy pressure). Heavy hammer blows required to break specimen.
Moderately Hard	Specimen can be scratched with pocket knife or sharp pick with light or moderate pressure. Core breaks with moderate hammer blows.
Moderately Soft	Specimen can be grooved 1/6" deep with a pocket knife or sharp pick with moderate or heavy pressure. Breaks with light hammer blow or heavy manual pressure.
Soft	Specimen can be grooved or gouged easily by a pocket knife or sharp pick with light pressure, can be scratched with fingernail. Breaks with light to moderate manual pressure.
Very Soft	Specimen can be readily indented, grooved or gouged with fingernail, or carved with a pocket knife. Breaks with light manual pressure.

FRACTURE DENSITY

Description	Observed Fracture Density
Unfractured	No fractures.
Very slightly fractured	Lengths greater than 3 feet.
Slightly fractured	Lengths from 1 to 3 feet with few lengths less than 1 foot or greater than 3 feet.
Moderately fractured	Lengths mostly in 4" to 1 foot range with most lengths about 8"
Intensely fractured	Lengths average from 1 to 4" with scattered fragmented intervals with lengths less than 4"
Very intensely fractured	Mostly chips and fragments with a few scattered short core lengths.

Combination descriptors (such as "Very intensely to intensely fractured") are used where equal distribution of both fracture density characteristics is present over a significant interval or exposure, or where characteristics are "in between" the descriptor definitions. Only two adjacent descriptors may be combined.

WEATHERING DESCRIPTORS FOR INTACT ROCK

Description	Diagnostic features: Chemical Weathering-Discoloration and/or oxidation — Body of Rock	Diagnostic features: Chemical Weathering-Discoloration and/or oxidation — Fracture Surfaces	Diagnostic features: Mechanical Weathering-Grain boundary conditions (disaggregation) primarily for granitics and some coarse-grained sediments	Diagnostic features: Texture and Solutioning — Texture	Diagnostic features: Texture and Solutioning — Solutioning	General Characteristics
Fresh	No discoloration, not oxidized.	No discoloration or oxidation.	No separation, intact (tight).	No change.	No solutioning.	Hammer rings when crystalline rocks are struck.
Slightly Weathered	Discoloration or oxidation is limited to surface of, or short distance from, fractures; some feldspar crystals are dull.	Minor to complete discoloration or oxidation of most surfaces.	No visible separation, intact (tight).	Preserved.	Minor leaching of some soluble minerals may be noted.	Hammer rings when crystalline rocks are struck. Body of rock not weakened.
Moderately Weathered	Discoloration or oxidation extends from fractures usually throughout; Fe-Mg minerals are "rusty," feldspar crystals are "cloudy."	All fracture surfaces are discolored or oxidized.	Partial separation of boundaries visible.	Generally preserved.	Soluble minerals may be mostly leached.	Hammer does not ring when rock is struck. Body of rock is slightly weakened.
Intensely Weathered	Discoloration or oxidation throughout; all feldspars and Fe-Mg minerals are altered to clay to some extent; or chemical alteration produces in-situ disaggregation, see grain boundary conditions.	All fracture surfaces are discolored or oxidized, surfaces friable.	Partial separation, rock is friable; in semiarid conditions granitics are disaggregated.	Texture altered by chemical disintegration (hydration, argillation).	Leaching of soluble minerals may be complete.	Dull sound when struck with hammer, usually can be broken with moderate to heavy manual pressure or by light hammer blow without reference to planes of weakness such as incipient or hairline fractures, or veinlets. Rock is significantly weakened.
Decomposed	Discolored or oxidized throughout, but resistant minerals such as quartz may be unaltered; all feldspars and Fe-Mg minerals are completely altered to clay.		Complete separation of grain boundaries (disaggregated).	Resembles a soil, partial or complete remnant rock structure may be preserved; leaching of soluble minerals usually complete.		Can be granulated by hand. Resistant minerals such as quartz may be present as "stringers" or "dikes."

Combination descriptors (such as "slightly weathered to fresh") are permissible where equal distribution of both weathering characteristics is present over significant intervals or where characteristics present are "in between" the diagnostic feature. However, combination descriptors should not be used where significant, identifiable zones can be delineated. Only two adjacent descriptors may be combined. "Very intensely weathered" is the combination descriptor for "intensely weathered to decomposed."

ENGINEERING SERVICES	GEOTECHNICAL SERVICES	STATE OF CALIFORNIA DEPARTMENT OF TRANSPORTATION	DIVISION OF ENGINEERING SERVICES STRUCTURE DESIGN	BRIDGE NO.	BATTERY SUBSTATION (BRIDGE)
	PREPARED BY: I.G-REMMEN, 7/09		DESIGN BRANCH	34-0157W	LOG OF TEST BORINGS 4 OF 4
				POST MILE 9.0	

GS LOTB ROCK LEGEND

ORIGINAL SCALE IN INCHES FOR REDUCED PLANS 0 1 2 3

CU 04 EA 163731

DISREGARD PRINTS BEARING EARLIER REVISION DATES →

REVISION DATES: 07-15-09 | 08-14-09 | 11-10-09

SHEET 20 OF 20

FILE => 34-0157w-z-lotb4.dgn

USERNAME => trlenard DATE PLOTTED => 14-DEC-2009 TIME PLOTTED => 15:39

DIST	COUNTY	ROUTE	POST MILES TOTAL PROJECT	SHEET No	TOTAL SHEETS
04	SF	101	8.2/9.2	437	654

REGISTERED CIVIL ENGINEER — 10/30/09 DATE

12-14-09
PLANS APPROVAL DATE

REGISTERED PROFESSIONAL ENGINEER — Qiyu Liu — No. C-58082 — Exp. 6/30/10 — CIVIL — STATE OF CALIFORNIA

The State of California or its officers or agents shall not be responsible for the accuracy or completeness of electronic copies of this plan sheet.

Arup PB Joint Venture
560 Mission Street, Suite 700
San Francisco, CA 94105

CALIFORNIA STATE FIRE MARSHAL APPROVED

Approval of this plan does not authorize or approve any omission or deviation from applicable regulations. Final approval is subject to field inspection. One set of approved plans shall be available on the project site at all times.

Reviewed by: STEPHEN GUARINO

Approval date: 12-14-09

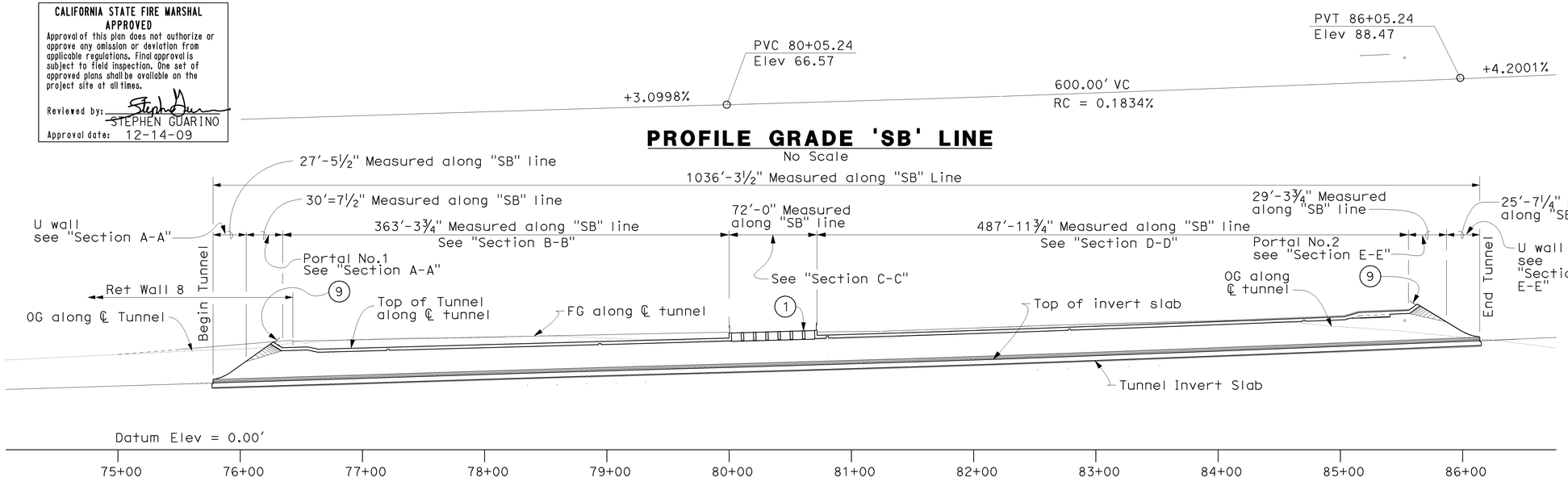

PROFILE GRADE 'SB' LINE

No Scale

LONGITUDINAL SECTION

Scale: 1"=50'

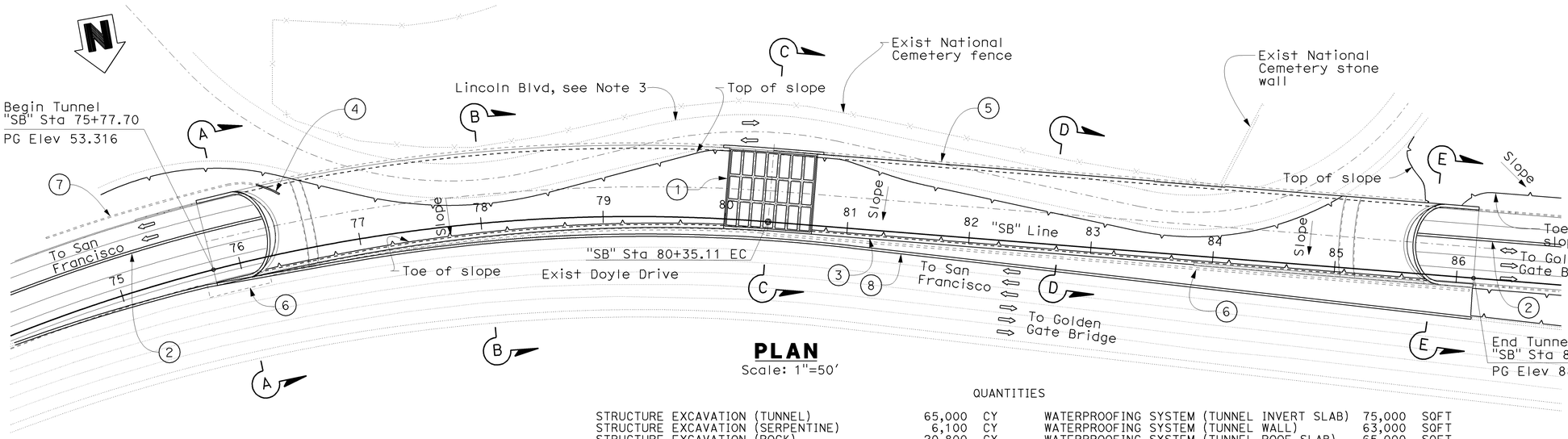

PLAN

Scale: 1"=50'

QUANTITIES

STRUCTURE EXCAVATION (TUNNEL)	65,000	CY	WATERPROOFING SYSTEM (TUNNEL INVERT SLAB)	75,000	SQFT
STRUCTURE EXCAVATION (SERPENTINE)	6,100	CY	WATERPROOFING SYSTEM (TUNNEL WALL)	63,000	SQFT
STRUCTURE EXCAVATION (ROCK)	20,800	CY	WATERPROOFING SYSTEM (TUNNEL ROOF SLAB)	65,000	SQFT
STRUCTURE BACKFILL (TUNNEL)	215	CY	4" SLOTTED HDPE PIPE UNDERDRAIN	3,070	LF
STRUCTURE BACKFILL (SLURRY CEMENT)	985	CY	4" UNSLOTTED HDPE PIPE UNDERDRAIN	1,310	LF
STRUCTURE BACKFILL (LIGHTWEIGHT AGGREGATE)	5,700	CY	GEOCOMPOSITE DRAIN	126,000	SQFT
CLASS 2 AGGREGATE BASE	10,680	CY	MINOR CONCRETE (GUTTER)	169	LF
LEAN CONCRETE BASE	2,400	CY	MISCELLANEOUS METAL (TUNNEL)	120,700	LB
STRUCTURAL CONCRETE (TUNNEL INVERT SLAB)	12,670	CY	CHAIN LINK FENCE (TYPE CL-3, VINYL-CLAD)	800	LF
STRUCTURAL CONCRETE (TUNNEL WALL)	3,850	CY	CHAIN LINK FENCE (TYPE CL-6, VINYL-CLAD)	290	LF
STRUCTURAL CONCRETE (TUNNEL ROOF SLAB)	7,860	CY	ARCHITECTURAL FENCE	20	LF
ANTI-GRAFFITI COATING	90,000	SQFT	CALIFORNIA ST-10 BRIDGE RAIL	2,068	LF
JOINT SEAL (MR 1½")	137	LF	(WALL MOUNTED)(MODIFIED)		
JOINT SEAL (TYPE AL)	3,900	LF	SAFETY RAILING (TYPE A)	190	LF
BAR REINFORCING STEEL(TUNNEL)	6,330,000	LB	SAFETY RAILING (TYPE B)	170	LF

Legend:

1. Temporary ventilation opening.
2. Quickchange Movable Barrier, see "Roadway" plans.
3. Concrete parapet on tunnel roof.
4. Retaining Wall C on tunnel roof, see sheets "SBBT-ST32" and "SBBT-ST33".
5. Retaining Wall A, see "Retaining Wall A & B" plans.
6. Retaining Wall B, see "Retaining Wall A & B" plans.
7. Retaining Wall 8, see "Retaining Wall No. 8" plans.
8. Temporary railings, see "Roadway" plans.
9. Safety railing, see "Architectural" plans.

⇨ Indicates direction of traffic.

⇔ Indicates reversible traffic lane.

Notes:

1. For Standard Plan lists, Quantities and General Notes, see sheet "SBBT-ST5".
2. For "Section A-A", "Section B-B", "Section C-C" and "Section D-D", see sheet "SBBT-ST2". For "Section E-E", see sheet "SBBT-ST3".
3. For street improvement on Lincoln Blvd, see "Roadway" plans.
4. For tunnel mechanical utilities, see "Tunnel System" plans.
5. For tunnel electrical utilities, see "Roadway" plans.
6. For tunnel drainage layout, see "Tunnel System" plans.

SBBT-ST1

DESIGN	BY	CHECKED M. YUCEKUL	LOAD RESISTANCE FACTOR DESIGN	LIVE LOADING: HL93 W/ "LOW-BOY"; PERMIT DESIGN VEHICLE			
DETAILS	BY	CHECKED M. YUCEKUL	LAYOUT	BY	CHECKED H. LEE		
QUANTITIES	BY	CHECKED J. YANG	SPECIFICATIONS	BY	PLANS AND SPECS COMPARED Q. LIU		

PREPARED FOR THE STATE OF CALIFORNIA
DEPARTMENT OF TRANSPORTATION

PROJECT ENGINEER

BRIDGE NO. 34-0161RL
POST MILES 9.0/9.2

SOUTHBOUND BATTERY TUNNEL
GENERAL PLAN NO. 1

DESIGN GENERAL PLAN SHEET (ENGLISH) (REV. 06-01-09)

ORIGINAL SCALE IN INCHES FOR REDUCED PLANS 0 1 2 3

CU 04
EA 163741

DISREGARD PRINTS BEARING EARLIER REVISION DATES

REVISION DATES (PRELIMINARY STAGE ONLY): 06/01/09 07/15/09 08/03/09 09/15/09 10/30/09

SHEET 1 OF 72

FILE => 34-0161rl-st001.dgn

USERNAME => trlenard DATE PLOTTED => 14-DEC-2009 TIME PLOTTED => 15:18

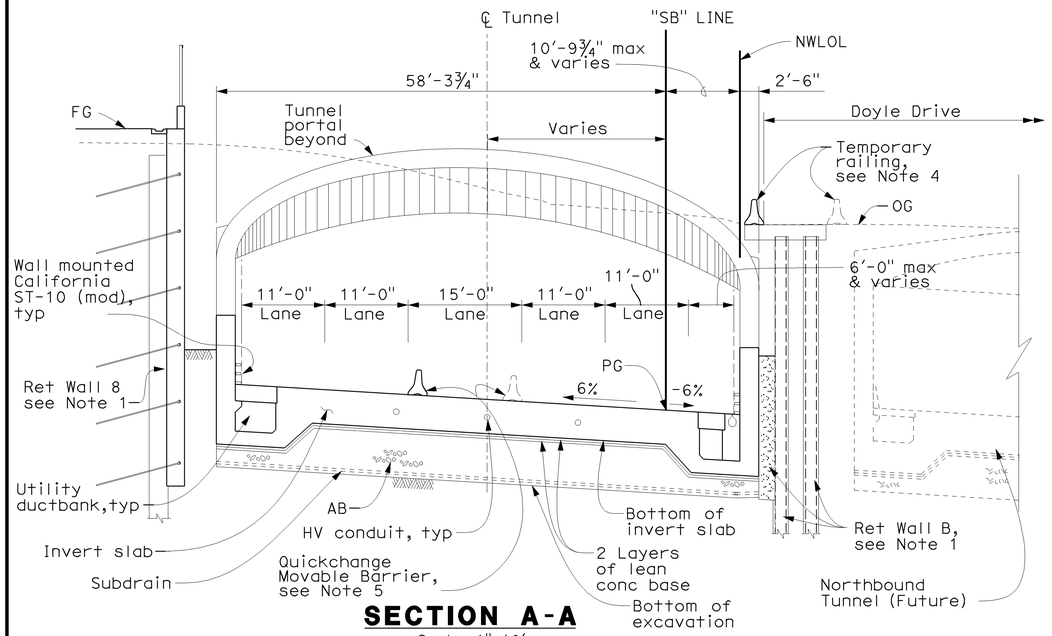

SECTION A-A

Scale: 1"=10′

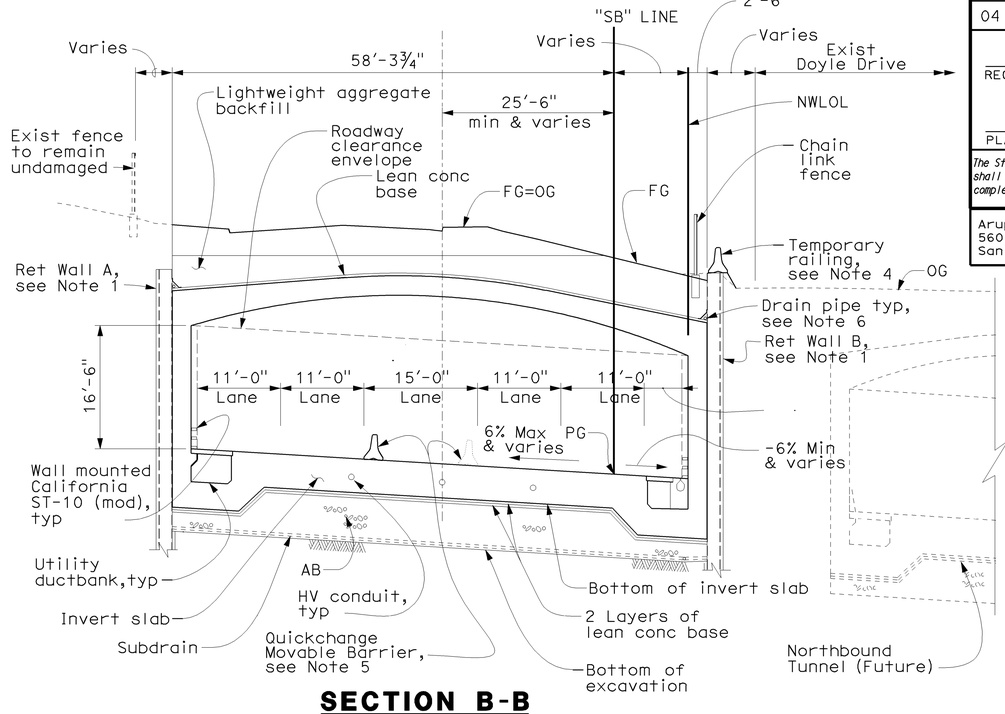

SECTION B-B

Scale: 1"=10′

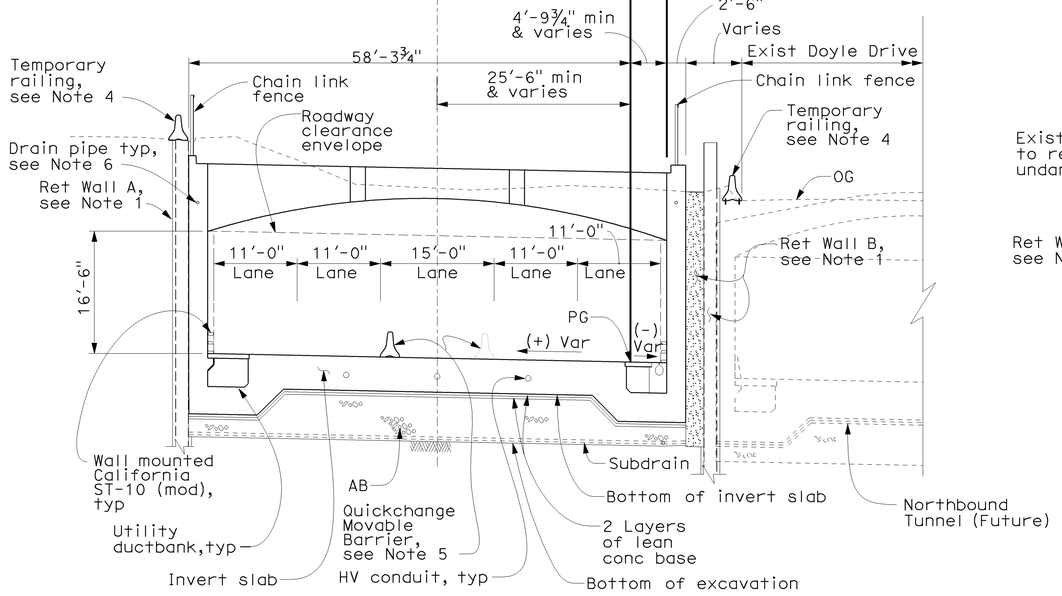

SECTION C-C

Scale: 1"=10′

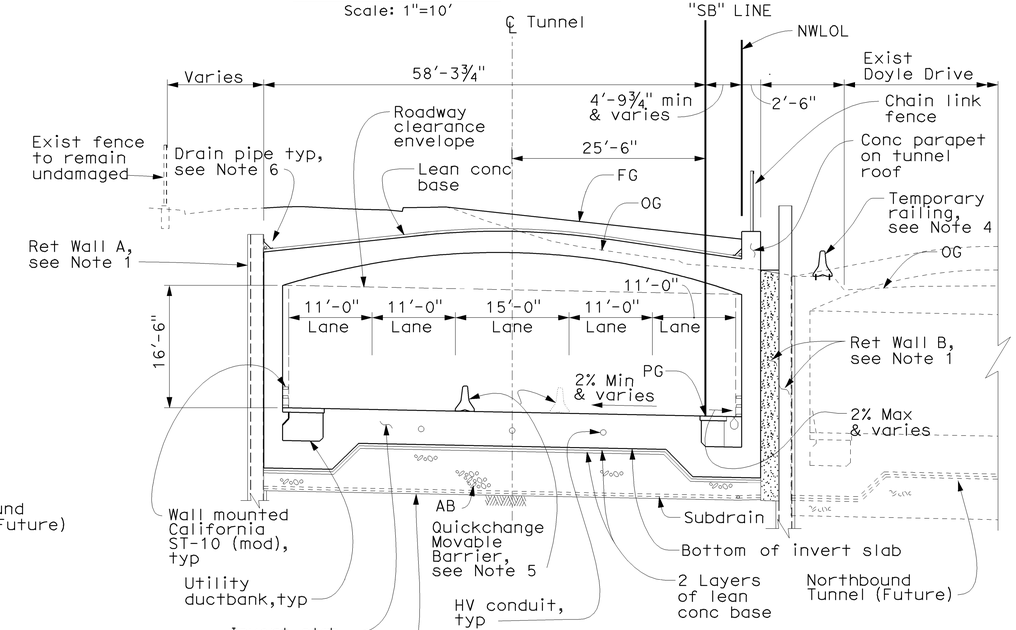

SECTION D-D

Scale: 1"=10′

Notes:

1. For details of Retaining Wall A & B, see "Retaining Wall A & B" plans. For details of Retaining Wall 8, see "Retaining Wall No. 8" plans.
2. For locations of "Section A-A" thru "Section D-D", see sheet "SBBT-ST1".
3. For tunnel geometry, see sheets "SBBT-ST12" thru "SBBT-ST14"
4. For details of temporary railing, see "Roadway" plans.
5. For layout and details of Quickchange Movable Barrier, see "Roadway" plans.
6. For drain pipes on tunnel roof, see "Roadway" plans.

DIST	COUNTY	ROUTE	POST MILES TOTAL PROJECT	SHEET No	TOTAL SHEETS
04	SF	101	8.2/9.2	438	654

REGISTERED CIVIL ENGINEER — 10/30/09 DATE

12-14-09
PLANS APPROVAL DATE

REGISTERED PROFESSIONAL ENGINEER — Qiyu Liu — No. C-58082 — Exp. 6/30/10 — CIVIL — STATE OF CALIFORNIA

The State of California or its officers or agents shall not be responsible for the accuracy or completeness of scanned copies of this plan sheet.

Arup PB Joint Venture
560 Mission Street, Suite 700
San Francisco, CA 94105

CALIFORNIA STATE FIRE MARSHAL APPROVED

Approval of this plan does not authorize or approve any omission or deviation from applicable regulations. Final approval is subject to field inspection. One set of approved plans shall be available on the project site at all times.

Reviewed by: STEPHEN GUARINO

Approval date: 12-14-09

SBBT-ST2

DESIGN	BY Y. REN	CHECKED M. YUCEKUL	PREPARED FOR THE STATE OF CALIFORNIA DEPARTMENT OF TRANSPORTATION	QIYU LIU PROJECT ENGINEER	BRIDGE NO. 34-0161L; POST MILES 9.0/9.2
DETAILS	BY P.A.TONKIN	CHECKED M. YUCEKUL			
QUANTITIES	BY W. ASHWOOD	CHECKED J. YANG			

SOUTHBOUND BATTERY TUNNEL
GENERAL PLAN NO.2

DESIGN DETAIL SHEET (ENGLISH) (REV. 06-01-09)

ORIGINAL SCALE IN INCHES FOR REDUCED PLANS 0 1 2 3

CU 04
EA 163741

DISREGARD PRINTS BEARING EARLIER REVISION DATES →

REVISION DATES (PRELIMINARY STAGE ONLY): 06/30/09 | 07/15/09 | 08/31/09 | 09/24/09 | 09/30/09 | 10/30/09

SHEET 2 OF 72

FILE => 34-0161rl-st002.dgn

USERNAME => rtrenord DATE PLOTTED => 14-DEC-2009 TIME PLOTTED => 15:18

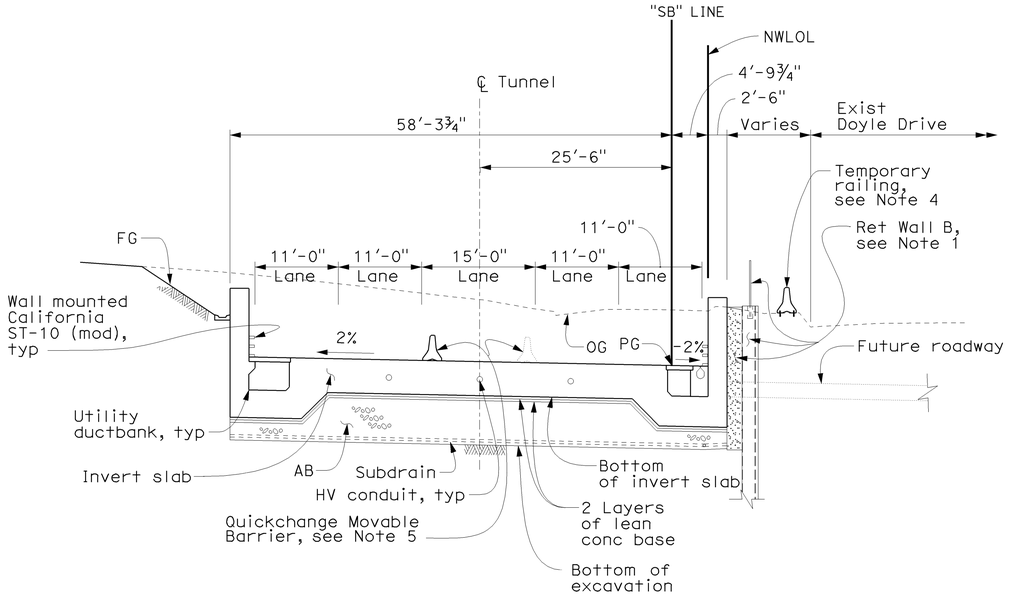

SECTION E-E

Scale: 1"=10′

CALIFORNIA STATE FIRE MARSHAL
APPROVED
Approval of this plan does not authorize or approve any omission or deviation from applicable regulations. Final approval is subject to field inspection. One set of approved plans shall be available on the project site at all times.
Reviewed by: STEPHEN GUARINO
Approval date: 12-14-09

DIST	COUNTY	ROUTE	POST MILES TOTAL PROJECT	SHEET No	TOTAL SHEETS
04	SF	101	8.2/9.2	439	654

REGISTERED CIVIL ENGINEER — 10/30/09 DATE

12-14-09
PLANS APPROVAL DATE

REGISTERED PROFESSIONAL ENGINEER — Qiyu Liu — No. C-58082 — Exp 6/30/10 — CIVIL — STATE OF CALIFORNIA

The State of California or its officers or agents shall not be responsible for the accuracy or completeness of scanned copies of this plan sheet.

Arup PB Joint Venture
560 Mission Street, Suite 700
San Francisco, CA 94105

Notes:

1. For details of Retaining Wall B, see "Retaining Wall A & B" plans.
2. For locations of "Section E-E", see sheet "SBBT-ST1".
3. For tunnel geometry, see sheets "SBBT-ST12" thru "SBBT-ST14".
4. For details of temporary railing, see "Roadway" plans.
5. For layout and details of Quickchange Movable Barrier, see "Roadway" plans.

SBBT-ST3

DESIGN	BY Y. REN	CHECKED M. YUCEKUL	PREPARED FOR THE STATE OF CALIFORNIA DEPARTMENT OF TRANSPORTATION	QIYU LIU, PROJECT ENGINEER	BRIDGE NO. 34-0161L; POST MILES 9.0/9.2
DETAILS	BY P.A.TONKIN	CHECKED M. YUCEKUL			
QUANTITIES	BY W. ASHWOOD	CHECKED J. YANG			

SOUTHBOUND BATTERY TUNNEL
GENERAL PLAN NO.3

DESIGN DETAIL SHEET (ENGLISH) (REV. 06-01-09)

ORIGINAL SCALE IN INCHES FOR REDUCED PLANS 0 1 2 3

CU 04
EA 163741

DISREGARD PRINTS BEARING EARLIER REVISION DATES →

REVISION DATES (PRELIMINARY STAGE ONLY): 06/01/09 | 07/15/09 | 08/17/09 | 09/21/09 | 10/30/09

SHEET 3 OF 72

FILE => 34-0161r1-st003.dgn

USERNAME => trrichard DATE PLOTTED => 14-DEC-2009 TIME PLOTTED => 15:19

INDEX OF PLANS

Sheet No.	Sheet Title
SBBT-ST1	General Plan No.1
SBBT-ST2	General Plan No.2
SBBT-ST3	General Plan No.3
SBBT-ST4	Index to Plans
SBBT-ST5	General Notes
SBBT-ST6	Concrete Strength & Type Limits
SBBT-ST7	Excavation & Backfill Pay Limits
SBBT-ST8	Structural Plan No.1
SBBT-ST9	Structural Plan No.2
SBBT-ST10	Foundation Plan
SBBT-ST11	Tunnel Roadway Contours
SBBT-ST12	Tunnel Geometry No.1
SBBT-ST13	Tunnel Geometry No.2
SBBT-ST14	Tunnel Geometry No.3
SBBT-ST15	Typical Section No.1
SBBT-ST16	Typical Section No.2
SBBT-ST17	Typical Section No.3
SBBT-ST18	Typical Section No.4
SBBT-ST19	Typical Section No.5
SBBT-ST20	Typical Section No.6
SBBT-ST21	Ventilation Opening Layout
SBBT-ST22	Ventilation Opening Details No.1
SBBT-ST23	Ventilation Opening Details No.2
SBBT-ST24	Invert Slab Details No.1
SBBT-ST25	Invert Slab Details No.2
SBBT-ST26	Invert Slab Details No.3
SBBT-ST27	Wall Details No.1
SBBT-ST28	Wall Details No.2
SBBT-ST29	Wall Details No.3
SBBT-ST30	Roof Details No.1
SBBT-ST31	Roof Details No.2
SBBT-ST32	Roof Details No.3
SBBT-ST33	Roof Details No.4
SBBT-ST34	Roof Details No.5
SBBT-ST35	Roof Details No.6
SBBT-ST36	Portal Details No.1
SBBT-ST37	Portal Details No.2
SBBT-ST38	Portal Details No.3
SBBT-ST39	Waterproofing Details
SBBT-ST39.1	Waterproofing Pay Limits No.1
SBBT-ST39.2	Waterproofing Pay Limits No.2
SBBT-ST40	Subdrain Layout
SBBT-ST41	Subdrain Details
SBBT-ST42	Interceptor Drain Details No.1
SBBT-ST43	Interceptor Drain Details No.2
SBBT-ST44	Wall Mounted California ST-10 (Mod)
SBBT-ST45	Construction Joint Details
SBBT-ST46	Construction Sequence No.1
SBBT-ST47	Construction Sequence No.2
SBBT-AT1	Architectural Details No.1
SBBT-AT2	Architectural Details No.2
SBBT-AT3	Architectural Details No.3
SBBT-AT4	Architectural Details No.4
SBBT-AT5	Architectural Details No.5
SBBT-AT6	Architectural Details No.6
SBBT-LTB1	Log of Test Borings 1 of 17
SBBT-LTB2	Log of Test Borings 2 of 17
SBBT-LTB3	Log of Test Borings 3 of 17
SBBT-LTB4	Log of Test Borings 4 of 17
SBBT-LTB5	Log of Test Borings 5 of 17
SBBT-LTB6	Log of Test Borings 6 of 17
SBBT-LTB7	Log of Test Borings 7 of 17
SBBT-LTB8	Log of Test Borings 8 of 17
SBBT-LTB9	Log of Test Borings 9 of 17
SBBT-LTB10	Log of Test Borings 10 of 17
SBBT-LTB11	Log of Test Borings 11 of 17
SBBT-LTB12	Log of Test Borings 12 of 17
SBBT-LTB13	Log of Test Borings 13 of 17
SBBT-LTB14	Log of Test Borings 14 of 17
SBBT-LTB15	Log of Test Borings 15 of 17
SBBT-LTB16	Log of Test Borings 16 of 17
SBBT-LTB17	Log of Test Borings 17 of 17

CALIFORNIA STATE FIRE MARSHAL
APPROVED
Approval of this plan does not authorize or approve any omission or deviation from applicable regulations. Final approval is subject to field inspection. One set of approved plans shall be available on the project site at all times.
Reviewed by: STEPHEN GUARINO
Approval date: 12-14-09

DIST	COUNTY	ROUTE	POST MILES TOTAL PROJECT	SHEET No	TOTAL SHEETS
04	SF	101	8.2/9.2	440	654

REGISTERED CIVIL ENGINEER 10/30/09 DATE

12-14-09
PLANS APPROVAL DATE

REGISTERED PROFESSIONAL ENGINEER — Qiyu Liu — No. C-58082 — Exp. 6/30/10 — CIVIL — STATE OF CALIFORNIA

The State of California or its officers or agents shall not be responsible for the accuracy or completeness of scanned copies of this plan sheet.

Arup PB Joint Venture
560 Mission Street, Suite 700
San Francisco, CA 94105

SBBT-ST4

DESIGN	BY Y. REN	CHECKED M. YUCEKUL	PREPARED FOR THE STATE OF CALIFORNIA DEPARTMENT OF TRANSPORTATION	QIYU LIU PROJECT ENGINEER	BRIDGE NO. 34-0161L	SOUTHBOUND BATTERY TUNNEL	
DETAILS	BY T. MARTARELLA	CHECKED M. YUCEKUL			POST MILES 9.0/9.2	INDEX TO PLANS	
QUANTITIES	BY N. VIVAR	CHECKED J. YANG					

DESIGN DETAIL SHEET (ENGLISH) (REV. 06-01-09)

ORIGINAL SCALE IN INCHES FOR REDUCED PLANS 0 1 2 3

CU 04
EA 163741

DISREGARD PRINTS BEARING EARLIER REVISION DATES →

REVISION DATES (PRELIMINARY STAGE ONLY): 06/01/09 | 07/15/09 | 08/14/09 | 08/28/09 | 09/11/09 | 10/30/09

SHEET 4 OF 72

FILE => 34-0161rl-st004.dgn

USERNAME => rlenard DATE PLOTTED => 14-DEC-2009 TIME PLOTTED => 15:19

DIST	COUNTY	ROUTE	POST MILES TOTAL PROJECT	SHEET No	TOTAL SHEETS
04	SF	101	8.2/9.2	441	654

REGISTERED CIVIL ENGINEER — 10/30/09 DATE

12-14-09
PLANS APPROVAL DATE

REGISTERED PROFESSIONAL ENGINEER — Qiyu Liu — No. C-58082 — Exp. 6/30/10 — CIVIL — STATE OF CALIFORNIA

The State of California or its officers or agents shall not be responsible for the accuracy or completeness of electronic copies of this plan sheet.

Arup PB Joint Venture
560 Mission Street, Suite 700
San Francisco, CA 94105

CALIFORNIA STATE FIRE MARSHAL APPROVED
Approval of this plan does not authorize or approve any omission or deviation from applicable regulations. Final approval is subject to field inspection. One set of approved plans shall be available on the project site at all times.
Reviewed by: STEPHEN GUARINO
Approval date: 12-14-09

STANDARD PLANS DATED MAY 2006

A10A	ACRONYMS AND ABBREVIATIONS (SHEET 1 OF 2)
A10B	ACRONYMS AND ABBREVIATIONS (SHEET 2 OF 2)
A10C	SYMBOLS (SHEET 1 OF 2)
A10D	SYMBOLS (SHEET 2 OF 2)
RSP A85	CHAIN LINK FENCE
BO-3	BRIDGE DETAILS
BO-13	BRIDGE DETAILS
B3-8	RETAINING WALL DETAILS No. 1
B3-9	RETAINING WALL DETAILS No. 2
RSP B6-21	JOINT SEALS (MAXIMUM MOVEMENT RATING = 2")
B7-11	UTILITY DETAILS
B11-7	CHAIN LINK RAILING
RSP B11-68	CALIFORNIA ST-10 BRIDGE RAIL (SHEET 1 OF 3)
B11-69	CALIFORNIA ST-10 BRIDGE RAIL (SHEET 2 OF 3)
B11-70	CALIFORNIA ST-10 BRIDGE RAIL (SHEET 3 OF 3)

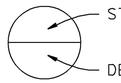

SUPPLEMENTAL ABBREVIATIONS

CB	call box	EW	each way
DVC	deluge valve cabinet	FHVC	fire hose valve cabinet
EF	each face	HV	high voltage
EMH	electrical manhole	NWLOL	North wall layout line
EN	electrical niche	TW	top of wall
		WP	work point

SUPPLEMENTAL SYMBOLS

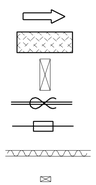

GENERAL NOTES

DESIGN: LRFD Bridge Design Specifications, Fourth Edition (2007) published by the American Association of State Highway and Transportation Officials with California Amendment (V3.06.01)

Doyle Drive Structural Design Criteria, Cut-and-Cover Tunnels and Non-Standard Retaining Walls (March 2009)

DEAD LOAD: 4 feet min soil cover over roof crown or actual soil cover as indicated on "Structural" and "Roadway" plans, whichever governs

LIVE LOADING: HL-93 w/ "Low-Boy" permit design vehicle load

SEISMIC DESIGN: Three-component (Fault-Normal, Fault-Parallel, and Vertical with respect to the San Andreas seismic fault system) acceleration response spectra (ARS) for Safety Evaluation Earthquake (SEE) and Functionality Evaluation Earthquake (FEE), generated from probabilistic seismic hazard assessment (PSHA) based on Next Generation Attenuation (NGA) model rock motion spectra for V_{S30} =3,000 ft/sec and 5% spectral damping.

SEE is based on larger of median ground motion from Maximum Credible Earthquake or ground motion with a 1,000-year return period. FEE is based on ground motion with a 108-year return period. The Construction Evaluation Earthquake (CEE) is also based on ground motion with 108-year return period.

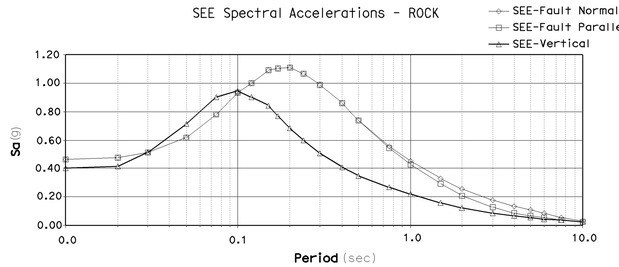

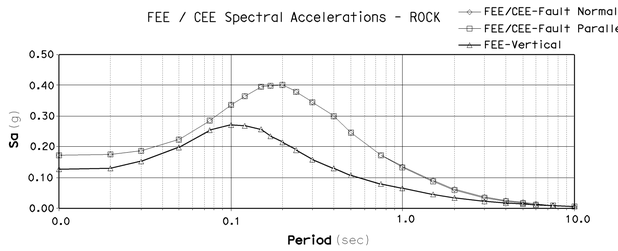

REINFORCED CONCRETE: ASTM A706 fy = 60 ksi
f'c = see sheet "SBBT-ST6"
n = 8

STRUCTURAL STEEL: Plate and Shape: ASTM A709 (Grade 50)
Bolt: ASTM A325, UON

DESIGN SOIL PARAMETERS

'SB' Sta 75+77.70 to 78+50.00

Depth* (ft)	γ	Φ	c'
0 to 17	120 (530)	32	0
17 to 36.5	130	38	0
36.5 to 45	120	32	0
below 45	165	0	1400

'SB' Sta 78+50.00 to 82+50.00

Depth* (ft)	γ	Φ	c'
0 to 20	120	32	0
below 20	165	55	0

'SB' Sta 82+50.00 to 86+14.00

Depth* (ft)	γ	Φ	c'
0 to 8.5	120	32	0
8.5 to 18	130	38	0
below 18	165	55	0

* Depth is measured from original grade

SBBT-ST5

	BY	CHECKED
DESIGN	Y. REN	M. YUCEKUL
DETAILS	E. CANTILLER	M. YUCEKUL
QUANTITIES	W. ASHWOOD	J. YANG

PREPARED FOR THE STATE OF CALIFORNIA DEPARTMENT OF TRANSPORTATION

QIYU LIU
PROJECT ENGINEER

CU 04242
EA 163731

BRIDGE NO. 34-0161L
POST MILES 9.0/9.2

SOUTHBOUND BATTERY TUNNEL
GENERAL NOTES

DESIGN GENERAL PLAN SHEET (ENGLISH) (REV. 2/25/05)

ORIGINAL SCALE IN INCHES FOR REDUCED PLANS 0 1 2 3

DISREGARD PRINTS BEARING EARLIER REVISION DATES →

REVISION DATES (PRELIMINARY STAGE ONLY): 06/01/09 | 07/01/09 | 08/01/09 | 08/26/09 | 10/30/09

SHEET 5 OF 72

FILE => 34-0161rl-st005.dgn

USERNAME => trlenard DATE PLOTTED => 14-DEC-2009 TIME PLOTTED => 15:19

DIST	COUNTY	ROUTE	POST MILES TOTAL PROJECT	SHEET No	TOTAL SHEETS
04	SF	101	8.2/9.2	442	654

CALIFORNIA STATE FIRE MARSHAL APPROVED

Approval of this plan does not authorize or approve any omission or deviation from applicable regulations. Final approval is subject to field inspection. One set of approved plans shall be available on the project site at all times.

Reviewed by: STEPHEN GUARINO

Approval date: 12-14-09

REGISTERED CIVIL ENGINEER — 8/26/09 DATE

12-14-09
PLANS APPROVAL DATE

REGISTERED PROFESSIONAL ENGINEER — Qiyu Liu — No. C-58082 — Exp. 6/30/10 — CIVIL — STATE OF CALIFORNIA

The State of California or its officers or agents shall not be responsible for the accuracy or completeness of scanned copies of this plan sheet.

Arup PB Joint Venture
560 Mission Street, Suite 700
San Francisco, CA 94105

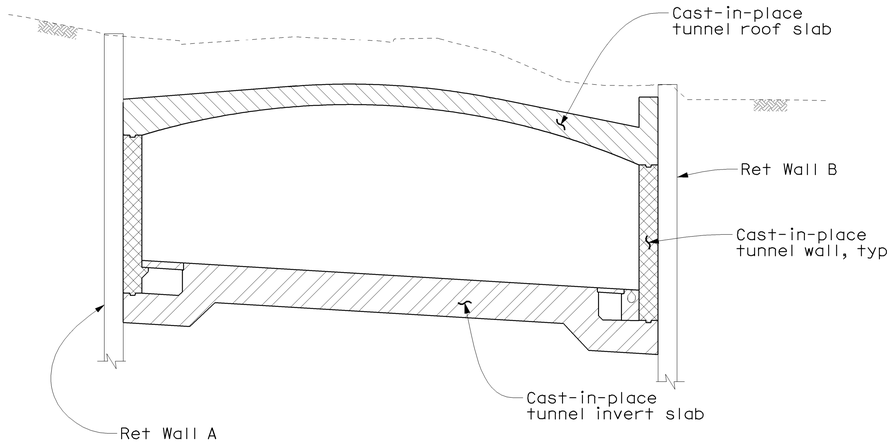

TYPICAL TUNNEL SECTION
Scale: 1" = 10'

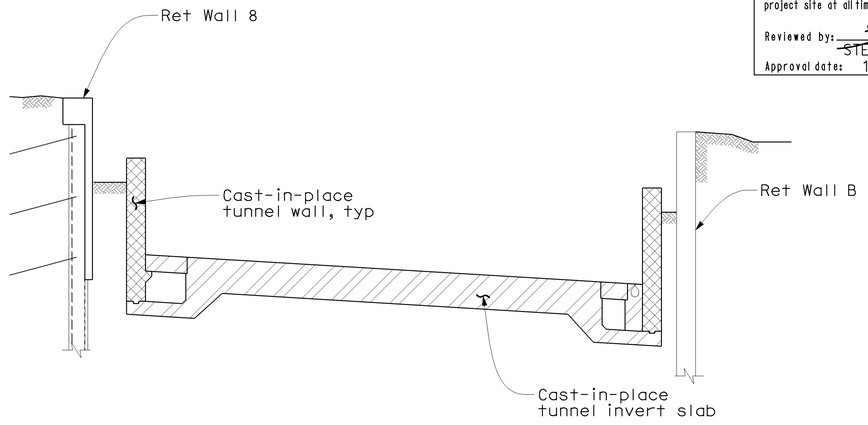

TYPICAL U WALL SECTION
Scale: 1" = 10'

Notes:

1. For concrete strength and type limits for Retaining Wall A and B, see "Retaining Wall A & B" plans.
2. For concrete strength and type limits for Retaining Wall 8, see "Retaining Wall No. 8" plans.

CONCRETE STRENGTH AND TYPE LIMITS

- Structural concrete, Tunnel Roof Slab (f'c = 4 ksi @ 28 days)
- Structural concrete, Tunnel Wall (f'c = 4 ksi @ 28 days)
- Structural concrete, Tunnel Invert Slab (f'c = 4 ksi @ 28 days)
- Structural concrete, Retaining Wall (f'c = 4 ksi @ 28 days)

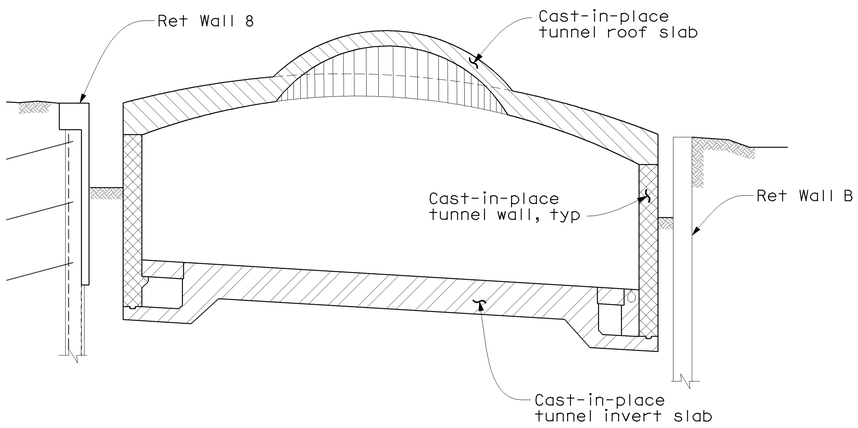

TYPICAL PORTAL SECTION
Scale: 1" = 10'

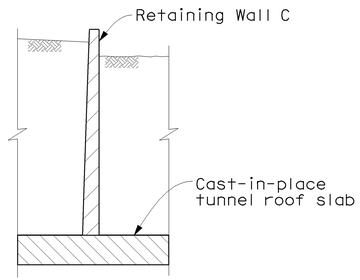

RETAINING WALL C SECTION
Scale: 1/8" = 1'-0"

SBBT-ST6

DESIGN	BY Q. LIU	CHECKED M. YUCEKUL	PREPARED FOR THE STATE OF CALIFORNIA DEPARTMENT OF TRANSPORTATION	QIYU LIU PROJECT ENGINEER	BRIDGE NO. 34-0161L	SOUTHBOUND BATTERY TUNNEL	
DETAILS	BY E.CANTILLER	CHECKED M. YUCEKUL			POST MILES 9.0/9.2	CONCRETE STRENGTH & TYPE LIMITS	
QUANTITIES	BY W. ASHWOOD	CHECKED J. YANG		CU 04 EA 163741			

DESIGN DETAIL SHEET (ENGLISH) (REV. 06-01-09)

ORIGINAL SCALE IN INCHES FOR REDUCED PLANS 0 1 2 3

DISREGARD PRINTS BEARING EARLIER REVISION DATES →

REVISION DATES (PRELIMINARY STAGE ONLY): 06/05/09 | 07/10/09 | 08/05/09 | 08/26/09

SHEET 6 OF 72

FILE => 34-0161r1-st006.dgn

USERNAME => #USER# DATE PLOTTED => #DATE# TIME PLOTTED => #TIME#

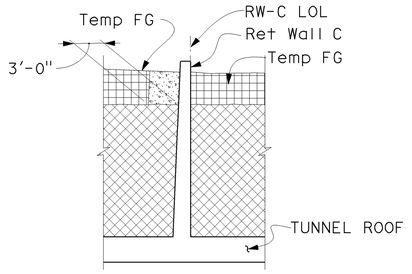

RETAINING WALL C SECTION

No scale

LEGEND:

- Structure Excavation (Tunnel)
- Structure Excavation (Rock), see Note 4
- Structure Excavation (Serpentine), see Note 3 & 4
- Structure Backfill (Lightweight Aggregate)
- Structure Backfill (Tunnel)
- Structure Backfill (Slurry Cement)
- Embankment, see "Roadway" plans

Notes:

1. For locations of "Section A-A","Section B-B", "Section D-D", and "Section E-E", see sheet "SBBT-ST2"
2. Structural backfill (lightweight aggregate) shall be used on tunnel roof between "SB" 76+35.79 and 79+99.11
3. For Serpentine profile, see sheets "SBBT-LTB1" thru "SBBT-LTB14".
4. Structure excavation (rock) and structure excavation (serpentine) is required from "SB" 78+00 to 86+14.

CALIFORNIA STATE FIRE MARSHAL APPROVED

Approval of this plan does not authorize or approve any omission or deviation from applicable regulations. Final approval is subject to field inspection. One set of approved plans shall be available on the project site at all times.

Reviewed by: STEPHEN GUARINO

Approval date: 12-14-09

DIST	COUNTY	ROUTE	POST MILES TOTAL PROJECT	SHEET No	TOTAL SHEETS
04	SF	101	8.2/9.2	443	654

REGISTERED CIVIL ENGINEER — 9/02/09 DATE

12-14-09
PLANS APPROVAL DATE

REGISTERED PROFESSIONAL ENGINEER — Qiyu Liu — No. C-58082 — Exp. 6/30/10 — CIVIL — STATE OF CALIFORNIA

The State of California or its officers or agents shall not be responsible for the accuracy or completeness of scanned copies of this plan sheet.

Arup PB Joint Venture
560 Mission Street, Suite 700
San Francisco, CA 94105

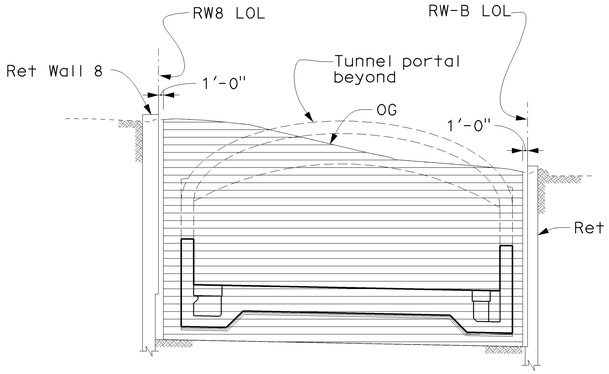

EXCAVATION

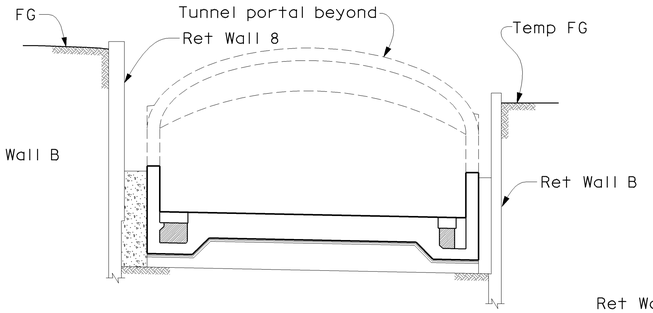

BACKFILL

SECTION A-A

No scale

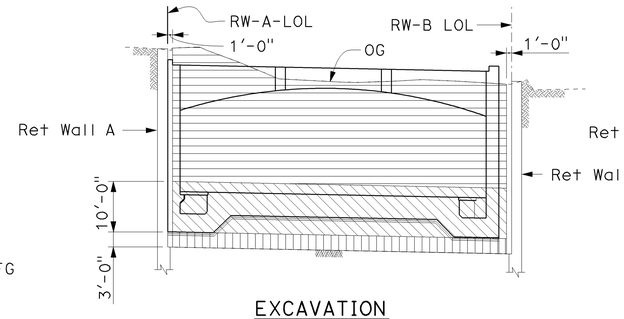

EXCAVATION

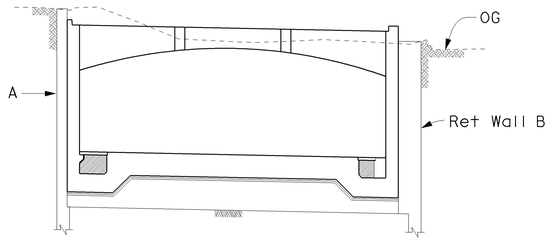

BACKFILL

SECTION C-C

No scale

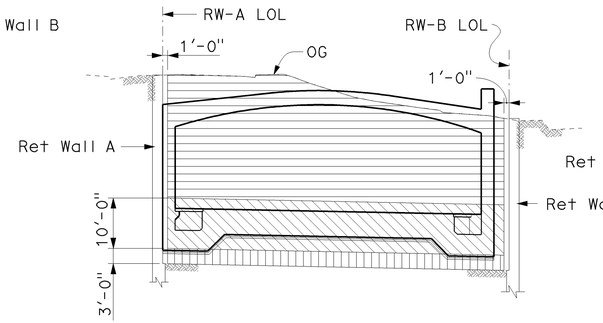

EXCAVATION

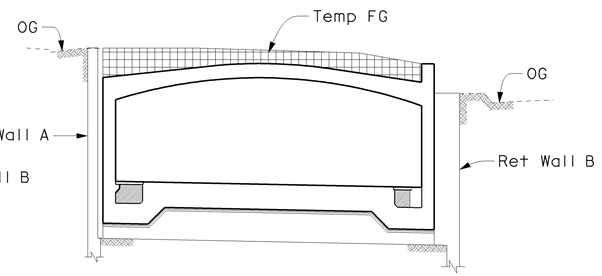

BACKFILL

SECTION D-D

No scale

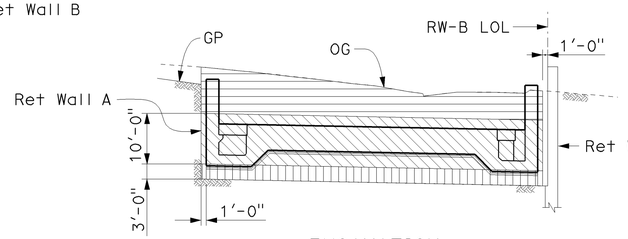

EXCAVATION

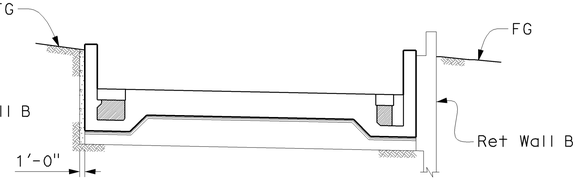

BACKFILL

SECTION E-E

No scale

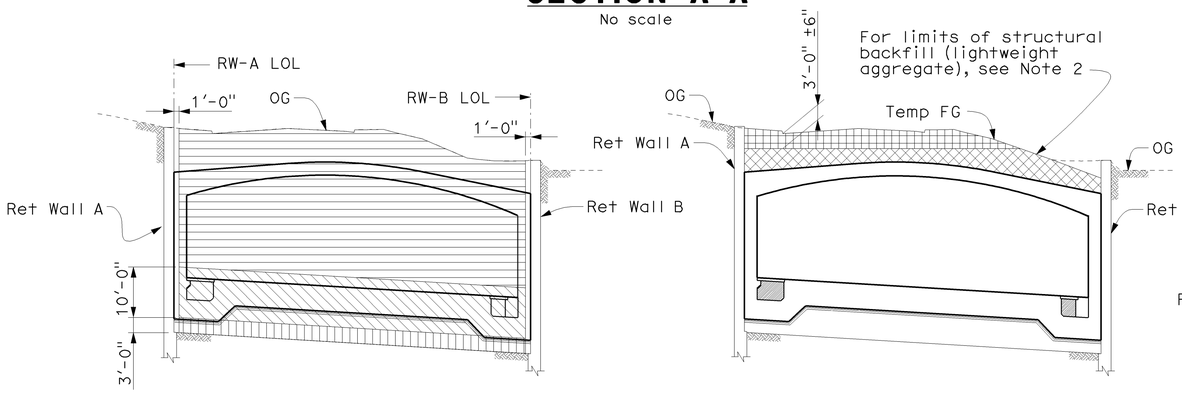

EXCAVATION

BACKFILL

SECTION B-B

No scale

SBBT-ST7

DESIGN	BY Q. LIU	CHECKED M. YUCEKUL	PREPARED FOR THE STATE OF CALIFORNIA DEPARTMENT OF TRANSPORTATION	QIYU LIU PROJECT ENGINEER	BRIDGE NO. 34-0161RL / POST MILES 9.0/9.2
DETAILS	BY E.CANTILLER	CHECKED M. YUCEKUL			SOUTHBOUND BATTERY TUNNEL
QUANTITIES	BY W. ASHWOOD	CHECKED J. YANG			EXCAVATION & BACKFILL PAY LIMITS

DESIGN DETAIL SHEET (ENGLISH) (REV. 06-01-09)

ORIGINAL SCALE IN INCHES FOR REDUCED PLANS 0 1 2 3

CU 04
EA 163741

DISREGARD PRINTS BEARING EARLIER REVISION DATES

REVISION DATES (PRELIMINARY STAGE ONLY): 06/01/09 | 07/15/09 | 08/07/09 | 08/28/09 | 09/02/09

SHEET 7 OF 72

FILE => 34-0161r1-st007.dgn

USERNAME => #USER# DATE PLOTTED => #DATE# TIME PLOTTED => #TIME#

Notes:

1. For retaining wall layout, see "Retaining Wall" plans.
2. For street improvement on Lincoln Blvd, restriping of existing Doyle Drive and layout of Quickchange Movable Barrier, see "Roadway" plans.
3. For layout and details of electrical conduits, see "Roadway" plans.
4. For layout and details of mechanical conduits, see "Tunnel System" plans.
5. For "Section M-M" and "Section N-N", see sheet "SBBT-ST24".
6. For EN niche details, see "Detail 1" on sheet "SBBT-ST27".
7. For details of CB niche and FHVC niche, see "Detail 2" on sheet "SBBT-ST27".
8. For DVC niche details, see "Detail 3" on sheet "SBBT-ST28".
9. For wall recess details, see "Detail 4" on sheet "SBBT-ST28".
10. For roof recess details, see "Detail 5" on sheet "SBBT-ST30".
11. For "Ventilation Opening Detail", see sheet "SBBT-ST21".
12. For location and details of electrical manholes (EMH), see sheet "SBBT-ST25".
13. For longitudinal section of tunnel entrance, see sheet "SBBT-ST12".
14. For Retaining Wall C, see sheets "SBBT-ST32" and "SBBT-ST33".
15. For lightweight aggregate backfill, see sheets "SBBT-ST7" and "SBBT-ST18".
16. For locations and sizes of call boxes, and elec/mech niches, see sheet "SBBT-ST27".
17. For definition of parapet "W", see sheet "SBBT-ST13".
18. For subdrain layout and details, see sheets "SBBT-ST40" and "SBBT-ST41".
19. For roof transition, see "Roof Transition Detail" on sheet "SBBT-ST31".
20. For drain interceptor, see "Drain Interceptor Detail" on sheet "SBBT-ST42". For tunnel drainage layout, see "Tunnel System" plans.
21. For architectural fence and safety railing, see "Architectural" plans.

DIST	COUNTY	ROUTE	POST MILES TOTAL PROJECT	SHEET No	TOTAL SHEETS
04	SF	101	8.2/9.2	444	654

REGISTERED CIVIL ENGINEER — 10/30/09 DATE

12-14-09
PLANS APPROVAL DATE

REGISTERED PROFESSIONAL ENGINEER — Qiyu Liu, No. C-58082, Exp. 6/30/10, CIVIL, STATE OF CALIFORNIA

The State of California or its officers or agents shall not be responsible for the accuracy or completeness of scanned copies of this plan sheet.

Arup PB Joint Venture
560 Mission Street, Suite 700
San Francisco, CA 94105

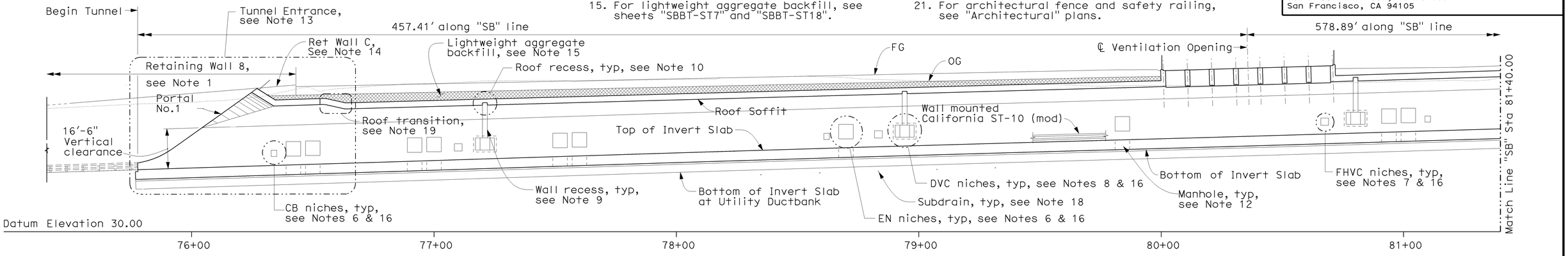

LONGITUDINAL SECTION

Scale: 1"=20′

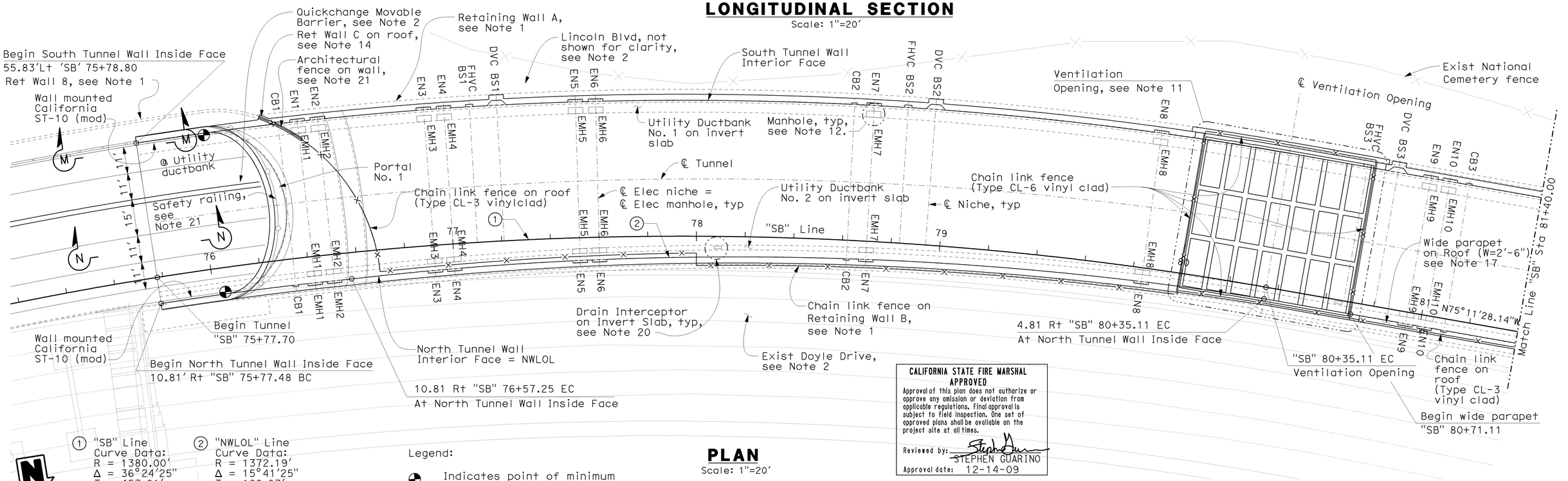

PLAN

Scale: 1"=20′

① "SB" Line
Curve Data:
R = 1380.00′
Δ = 36°24′25"
T = 453.81′
L = 876.88′

② "NWLOL" Line
Curve Data:
R = 1372.19′
Δ = 15°41′25"
T = 189.07′
L = 375.77′

Legend:

Indicates point of minimum vertical clearance.

CALIFORNIA STATE FIRE MARSHAL APPROVED
Approval of this plan does not authorize or approve any omission or deviation from applicable regulations. Final approval is subject to field inspection. One set of approved plans shall be available on the project site at all times.
Reviewed by: STEPHEN GUARINO
Approval date: 12-14-09

SBBT-ST8

DESIGN	BY Q. LIU	CHECKED M. YUCEKUL	PREPARED FOR THE STATE OF CALIFORNIA DEPARTMENT OF TRANSPORTATION	QIYU LIU, PROJECT ENGINEER	BRIDGE NO. 34-0161L
DETAILS	BY P.A.TONKIN	CHECKED M. YUCEKUL			POST MILES 9.0/9.2
QUANTITIES	BY W. ASHWOOD	CHECKED J. YANG			

SOUTHBOUND BATTERY TUNNEL
STRUCTURE PLAN NO.1

DESIGN DETAIL SHEET (ENGLISH) (REV. 06-01-09)

ORIGINAL SCALE IN INCHES FOR REDUCED PLANS 0 1 2 3

CU 04
EA 163741

DISREGARD PRINTS BEARING EARLIER REVISION DATES →

REVISION DATES (PRELIMINARY STAGE ONLY): 06/05/09 07/10/09 08/05/09 09/04/09 10/30/09

SHEET 8 OF 72

FILE => 34-0161rl-st008.dgn

USERNAME => trienard DATE PLOTTED => 14-DEC-2009 TIME PLOTTED => 15:19

Notes: (For Notes 1 through 21 see sheet "SBBT-ST8"

22. Paint "BRIDGE NO. 34-0161L".

23. Paint "BATTERY TUNNEL SB".

24. For details of jet fan anchorage assembly, see sheets "SBBT-ST34".

25. For wall transition detail, see sheet "SBBT-ST29".

26. For "Section U-U", see sheet "SBBT-ST35".

CALIFORNIA STATE FIRE MARSHAL APPROVED
Approval of this plan does not authorize or approve any omission or deviation from applicable regulations. Final approval is subject to field inspection. One set of approved plans shall be available on the project site at all times.
Reviewed by: STEPHEN GUARINO
Approval date: 12-14-09

DIST	COUNTY	ROUTE	POST MILES TOTAL PROJECT	SHEET No	TOTAL SHEETS
04	SF	101	8.2/9.2	445	654

REGISTERED CIVIL ENGINEER — 10/30/09 DATE

12-14-09
PLANS APPROVAL DATE

REGISTERED PROFESSIONAL ENGINEER — Qiyu Liu — No. C-58082 — Exp. 6/30/10 — CIVIL — STATE OF CALIFORNIA

The State of California or its officers or agents shall not be responsible for the accuracy or completeness of scanned copies of this plan sheet.

Arup PB Joint Venture
560 Mission Street, Suite 700
San Francisco, CA 94105

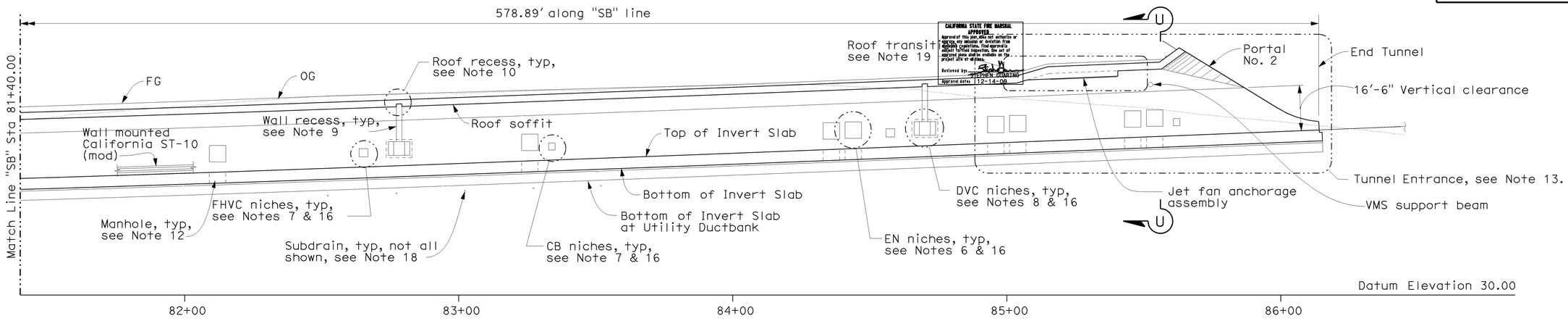

LONGITUDINAL SECTION

Scale: 1"=20′

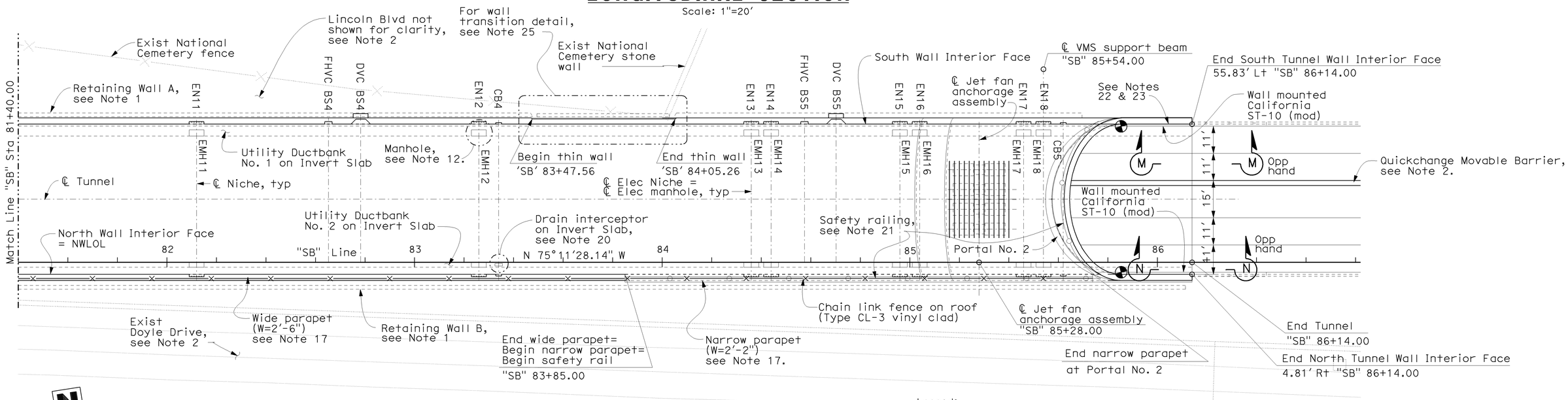

PLAN

Scale: 1"=20′

Legend:

℄ indicates point of minimum vertical clearance

SBBT-ST9

DESIGN	BY Q. LIU	CHECKED M. YUCEKUL	PREPARED FOR THE STATE OF CALIFORNIA DEPARTMENT OF TRANSPORTATION	QIYU LIU PROJECT ENGINEER	BRIDGE NO. 34-0161L
DETAILS	BY P.A. TONKIN	CHECKED M. YUCEKUL			POST MILES 9.0/9.2
QUANTITIES	BY W. ASHWOOD	CHECKED J. YANG			

SOUTHBOUND BATTERY TUNNEL STRUCTURE PLAN NO.2

DESIGN DETAIL SHEET (ENGLISH) (REV. 06-01-09)

ORIGINAL SCALE IN INCHES FOR REDUCED PLANS 0 1 2 3

CU 04
EA 163741

DISREGARD PRINTS BEARING EARLIER REVISION DATES →

REVISION DATES (PRELIMINARY STAGE ONLY): 06/26/09 | 07/17/09 | 08/07/09 | 08/24/09 | 09/11/09 | 10/30/09

SHEET 9 OF 72

FILE => 34-0161r1-st009.dgn

USERNAME => trfriend DATE PLOTTED => 14-DEC-2009 TIME PLOTTED => 15:19

Notes:

1. For utilities, see "Utility" plans.
2. For Retaining Wall A and B, see "Retaining Wall A & B" plans. For Retaining Wall 8, see "Retaining Wall No. 8" plans.

CONSTRUCTION CONTROL SURVEY DATA

MONUMENT	NORTHING	EASTING	ELEV.	LOCATION & DESCRIPTION
SF14	2121118.081	5992820.017	96.261	Set 1" Caltrans brass plug in concrete, northbound Lincoln Blvd, approx. 205′ north of the north over-crossing of Doyle Drive, on a concrete vista point structure, 21.1′ north of the first bollard after a bus turnout, 14.4′ southeast of a 1.3′ wide raised wall in the vista point structure, 2′ west of the east edge.
SF15	2120923.973	5995469.423	10.090	Set 1" Caltrans brass plug in concrete, south side of Mason Street, approx. 1900′ west of Hallbeck St., on the southwest side of a concrete drainage structure, 9.8′ east of a curb island nose at entrance at the west end of a 'Sports Basement' building, & 5.8′ south of curb angle point inlet at south edge of Mason St.

DIST	COUNTY	ROUTE	POST MILES TOTAL PROJECT	SHEET No	TOTAL SHEETS
04	SF	101	8.2/9.2	446	654

REGISTERED CIVIL ENGINEER — 10/30/09 DATE

12-14-09
PLANS APPROVAL DATE

REGISTERED PROFESSIONAL ENGINEER — Qiyu Liu — No. C-58082 — Exp. 6/30/10 — CIVIL — STATE OF CALIFORNIA

The State of California or its officers or agents shall not be responsible for the accuracy or completeness of electronic copies of this plan sheet.

Arup PB Joint Venture
560 Mission Street, Suite 700
San Francisco, CA 94105

CALIFORNIA STATE FIRE MARSHAL APPROVED

Approval of this plan does not authorize or approve any omission or deviation from applicable regulations. Final approval is subject to field inspection. One set of approved plans shall be available on the project site at all times.

Reviewed by: STEPHEN GUARINO

Approval date: 12-14-09

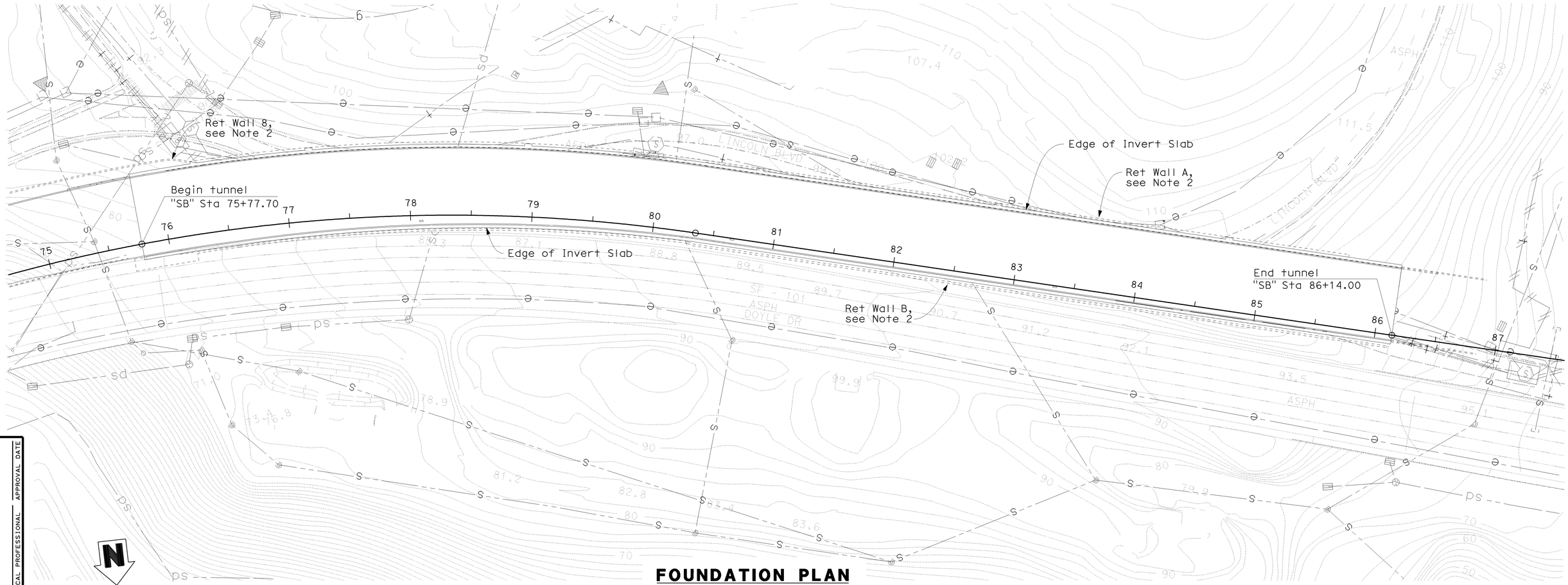

FOUNDATION PLAN

Scale: 1" = 50′

GEOTECHNICAL PROFESSIONAL APPROVAL DATE

SBBT-ST10

DESIGN OVERSIGHT	SCALE: 1:50	VERT.DATUM NAVD 88		HORZ.DATUM NAD 83		DESIGN	BY Y. REN	CHECKED M. YUCEKUL	PREPARED FOR THE STATE OF CALIFORNIA DEPARTMENT OF TRANSPORTATION
	PHOTOGRAMMETRY AS OF: 9/24/2008		ALIGNMENT TIES DIST. TRAVERSE SHEET			DETAILS	BY P.A.TONKIN	CHECKED M. YUCEKUL	
	SURVEYED	BY CHAUDHARY & ASSOCS	DRAFTED	BY L. REYES - 3/20/2009		QUANTITIES	BY W. ASHWOOD	CHECKED M. YUCEKUL	
SIGN OFF DATE	FIELD CHECKED	BY E. LILLY - 3/20/2009	CHECKED	BY E. LILLY - 3/20/2009					

QIYU LIU
PROJECT ENGINEER

CU 04242
EA 163741

BRIDGE NO. 34-0161L
POST MILE 9.0/9.2

SOUTHBOUND BATTERY TUNNEL
FOUNDATION PLAN

FOUNDATION PLAN SHEET (ENGLISH) (REV. 06-01-09)

ORIGINAL SCALE IN INCHES FOR REDUCED PLANS 0 1 2 3

DISREGARD PRINTS BEARING EARLIER REVISION DATES →

REVISION DATES (PRELIMINARY STAGE ONLY): 06/01/09 07/15/09 07/31/09 10/30/09

SHEET 10 OF 72

FILE => 34-0161r1-st010.dgn

USERNAME => trlenard DATE PLOTTED => 14-DEC-2009 TIME PLOTTED => 15:19

DIST	COUNTY	ROUTE	POST MILES TOTAL PROJECT	SHEET No	TOTAL SHEETS
04	SF	101	8.2/9.2	447	654

CALIFORNIA STATE FIRE MARSHAL APPROVED

Approval of this plan does not authorize or approve any omission or deviation from applicable regulations. Final approval is subject to field inspection. One set of approved plans shall be available on the project site at all times.

Reviewed by: STEPHEN GUARINO

Approval date: 12-14-09

REGISTERED CIVIL ENGINEER — 10/30/09 DATE

12-14-09
PLANS APPROVAL DATE

REGISTERED PROFESSIONAL ENGINEER — Qiyu Liu — No. C-58082 — Exp. 6/30/10 — CIVIL — STATE OF CALIFORNIA

The State of California or its officers or agents shall not be responsible for the accuracy or completeness of scanned copies of this plan sheet.

Arup PB Joint Venture
560 Mission Street, Suite 700
San Francisco, CA 94105

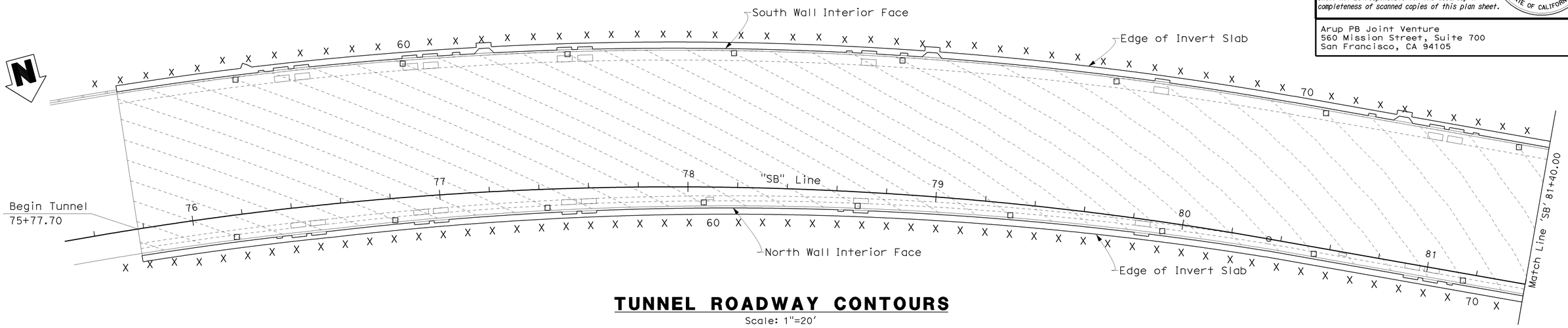

TUNNEL ROADWAY CONTOURS

Scale: 1"=20'

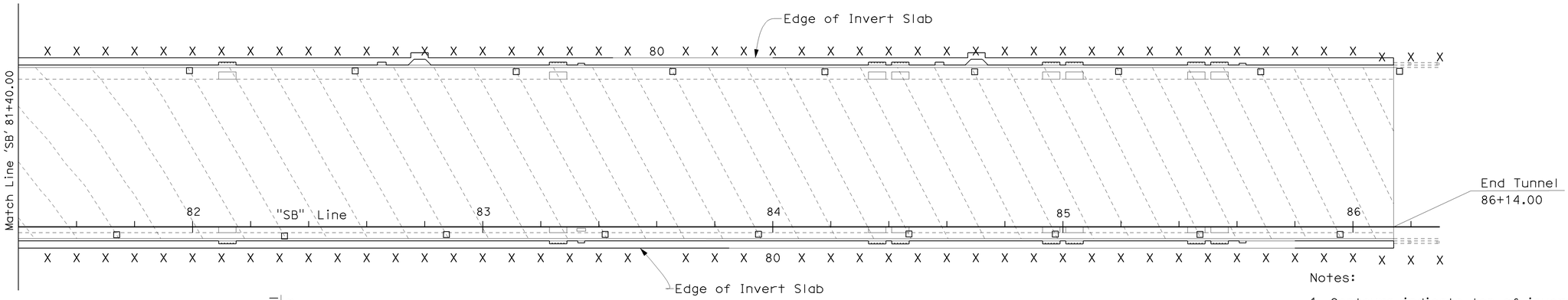

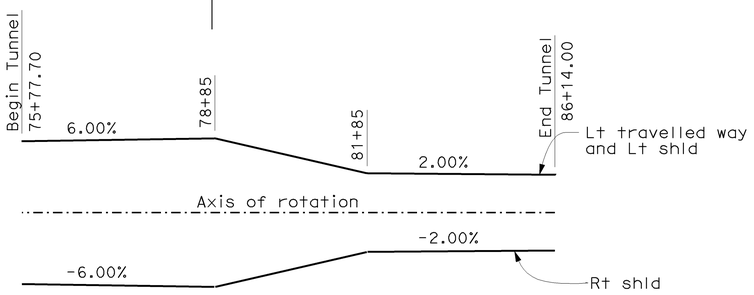

SUPERELEVATION DIAGRAM

Not To Scale

TUNNEL ROADWAY CONTOURS

Scale: 1"=20'

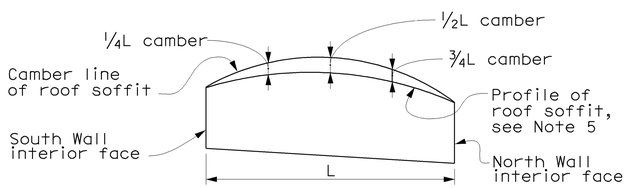

CAMBER DIAGRAM

Not to Scale

CAMBER TABLE (Ft)

Limits of camber	1/4L	1/2L	3/4L
"SB" 76+05.17 to 76+56.71	0.13	0.21	0.13
"SB" 76+56.71 to 76+64.58	see Note 6		
"SB" 76+64.58 to 85+06.64	0.20	0.34	0.20
"SB" 85+06.64 to 85+18.64	see Note 6		
"SB" 85+18.64 to 85.88.40	0.18	0.29	0.18

Notes:

1. Contours indicate top of invert slab.
2. Contour interval = 0.5'.
3. □ Indicates contour elevations in even feet.
4. X indicates 10' intervals measured along 'SB' Line.
5. Camber shall only be applied for roof soffit. No camber is needed for portal soffit. For limits of soffits, see "Longitudinal Section along ℄ Tunnel" on sheet "SBBT-ST12".
6. Camber shall be linearly interpolated between two stations.

SBBT-ST11

	BY	CHECKED
DESIGN	N. VIVAR	M. YUCEKUL
DETAILS	J. TAI	M. YUCEKUL
QUANTITIES	W. ASHWOOD	J. YANG

PREPARED FOR THE STATE OF CALIFORNIA DEPARTMENT OF TRANSPORTATION

QIYU LIU
PROJECT ENGINEER

CU 04
EA 163741

BRIDGE NO. 34-0161L
POST MILES 9.0/9.2

SOUTHBOUND BATTERY TUNNEL
TUNNEL ROADWAY CONTOURS

DESIGN DETAIL SHEET (ENGLISH) (REV. 06-01-09)

ORIGINAL SCALE IN INCHES FOR REDUCED PLANS 0 1 2 3

DISREGARD PRINTS BEARING EARLIER REVISION DATES →

REVISION DATES (PRELIMINARY STAGE ONLY): 06/01/09 | 07/15/09 | 08/01/09 | 10/30/09

SHEET 11 OF 72

FILE => 34-0161rl-st011.dgn

USERNAME => ttrenord DATE PLOTTED => 14-DEC-2009 TIME PLOTTED => 15:19

DIST	COUNTY	ROUTE	POST MILES TOTAL PROJECT	SHEET No	TOTAL SHEETS
04	SF	101	8.2/9.2	448	654

CALIFORNIA STATE FIRE MARSHAL APPROVED
Approval of this plan does not authorize or approve any omission or deviation from applicable regulations. Final approval is subject to field inspection. One set of approved plans shall be available on the project site at all times.
Reviewed by: STEPHEN GUARINO
Approval date: 12-14-09

Notes:
1. For "Section F-F", "Section G-G", "Section H-H", see sheet "SBBT-ST13".
2. "View A-A" and "View B-B" shown perpendicular to tunnel portal soffit.
3. For horizontal curve data, see sheet "SBBT-ST8".
4. For geometry of roof, see sheet "SBBT-ST13".
5. For geometry of portal, see sheet "SBBT-ST14".
6. For "View A-A" & "View B-B", see sheet "SBBT-ST14".
7. For concrete curb, see "Section C-C" on sheet "SBBT-ST38"

10/30/09
REGISTERED CIVIL ENGINEER DATE

12-14-09
PLANS APPROVAL DATE

REGISTERED PROFESSIONAL ENGINEER — Qiyu Liu — No. C-58082 — Exp. 6/30/10 — CIVIL — STATE OF CALIFORNIA

The State of California or its officers or agents shall not be responsible for the accuracy or completeness of scanned copies of this plan sheet.

Arup PB Joint Venture
560 Mission Street, Suite 700
San Francisco, CA 94105

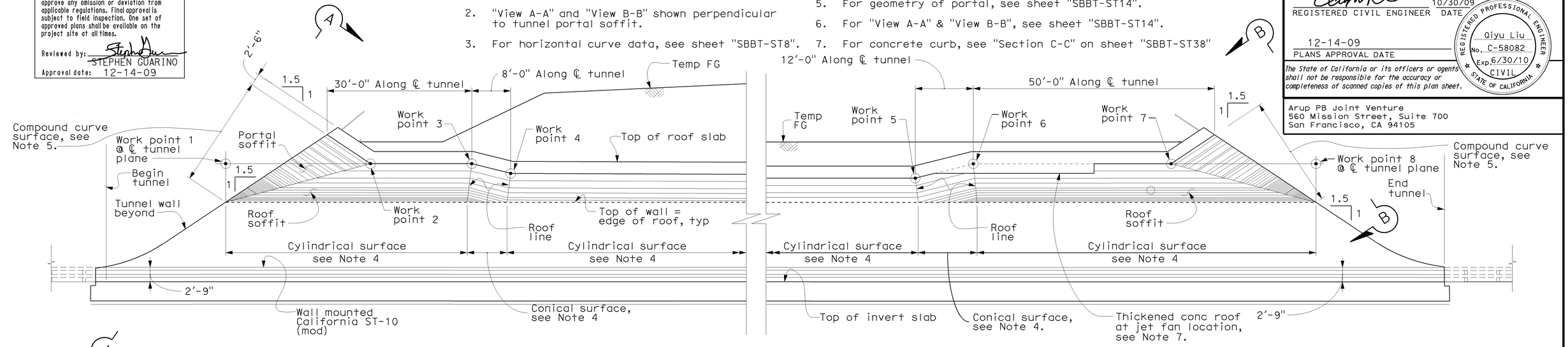

LONGITUDINAL SECTION ALONG ℄ TUNNEL
Scale 1" = 10'-0"

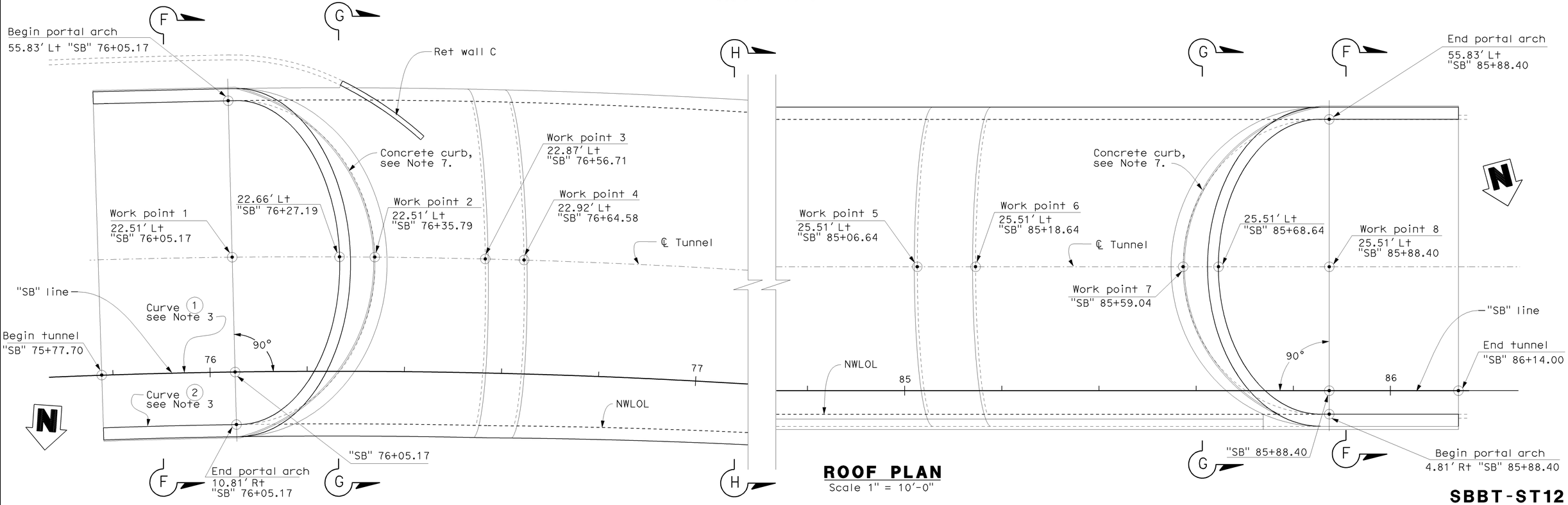

ROOF PLAN
Scale 1" = 10'-0"

SBBT-ST12

DESIGN	BY N. VIVAR	CHECKED M. YUCEKUL	PREPARED FOR THE STATE OF CALIFORNIA DEPARTMENT OF TRANSPORTATION	QIYU LIU PROJECT ENGINEER	BRIDGE NO. 34-0161L
DETAILS	BY E. SUDHAUSEN	CHECKED M. YUCEKUL			POST MILES 9.0/9.2
QUANTITIES	BY W. ASHWOOD	CHECKED J. YANG			

SOUTHBOUND BATTERY TUNNEL
TUNNEL GEOMETRY NO.1

DESIGN DETAIL SHEET (ENGLISH) (REV. 06-01-09)

ORIGINAL SCALE IN INCHES FOR REDUCED PLANS 0 1 2 3

CU 04
EA 163741

DISREGARD PRINTS BEARING EARLIER REVISION DATES

REVISION DATES (PRELIMINARY STAGE ONLY): 06/05/09 | 07/10/09 | 08/07/09 | 09/11/09 | 10/30/09

SHEET 12 OF 72

FILE => 34-0161rl-st012.dgn

USERNAME => trlenard DATE PLOTTED => 14-DEC-2009 TIME PLOTTED => 15:19

DIST	COUNTY	ROUTE	POST MILES TOTAL PROJECT	SHEET No	TOTAL SHEETS
04	SF	101	8.2/9.2	449	654

REGISTERED CIVIL ENGINEER — 10/30/09 DATE

12-14-09
PLANS APPROVAL DATE

REGISTERED PROFESSIONAL ENGINEER — Qiyu Liu — No. C-58082 — Exp. 6/30/10 — CIVIL — STATE OF CALIFORNIA

The State of California or its officers or agents shall not be responsible for the accuracy or completeness of scanned copies of this plan sheet.

Arup PB Joint Venture
560 Mission Street, Suite 700
San Francisco, CA 94105

Notes:

1. Roof soffit radius under zero dead load is shown in "Roof Geometry Table".
2. Distance to be derived from alignments of "SB" line and NWLOL line. For alignments of "SB" line and NWLOL line, see sheets "SBBT-ST8" and "SBBT-ST9".
3. For work point locations on plan and longitudinal section, see sheet "SBBT-ST12".
4. For location of "Section F-F", "Section G-G" and "Section H-H", see sheet "SBBT-ST12".
5. For sizes of utility ductbanks, see sheet "SBBT-ST24".
6. For limits of parapet and dimension "W", see sheets "SBBT-ST8" and "SBBT-ST9".
7. Spring line and top of wall line shall be parallel to top of invert slab.
8. For limits of thin wall, see sheet "SBBT-ST9".

CALIFORNIA STATE FIRE MARSHAL APPROVED

Approval of this plan does not authorize or approve any omission or deviation from applicable regulations. Final approval is subject to field inspection. One set of approved plans shall be available on the project site at all times.

Reviewed by: STEPHEN GUARINO

Approval date: 12-14-09

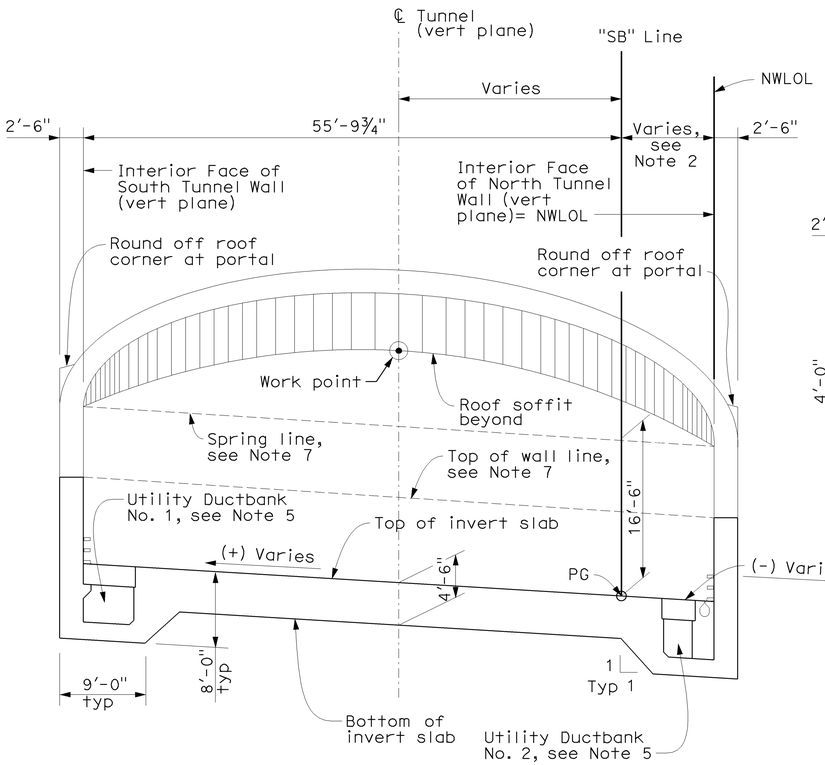

SECTION F-F

Scale: ⅛" = 1'-0"

ROOF GEOMETRY TABLE

Surface between Work Points*	Roof Soffit Radius (ft)
1-3	72.222
3-4	72.222 to 94.439**
4-5	94.439
5-6	94.439 to 61.462**
6-8	61.462

* See Note 3
** Roof radius vary linearly between "SB" stations

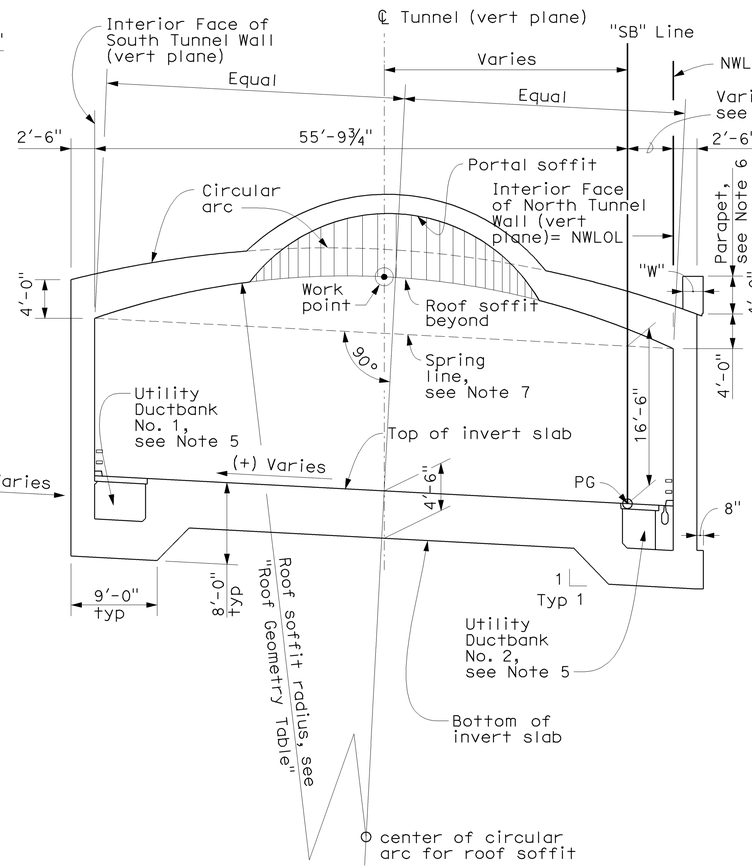

SECTION G-G

Scale: ⅛" = 1'-0"

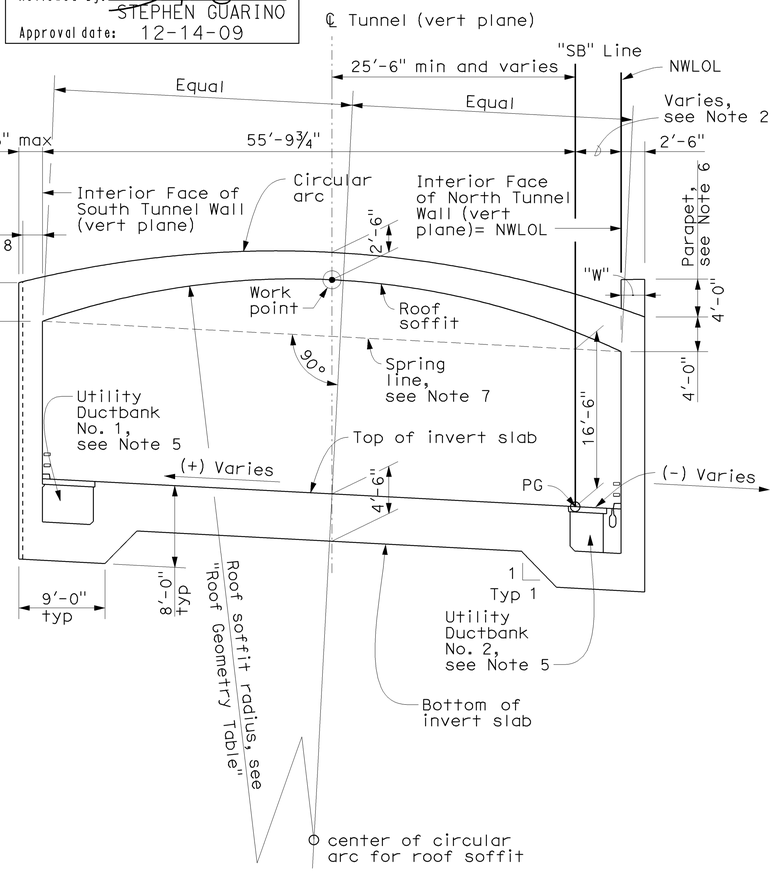

SECTION H-H

Scale: ⅛" = 1'-0"

SBBT-ST13

DESIGN	BY Q. LIU	CHECKED M. YUCEKUL	PREPARED FOR THE STATE OF CALIFORNIA DEPARTMENT OF TRANSPORTATION	QIYU LIU, PROJECT ENGINEER	BRIDGE NO. 34-0161L; POST MILES 9.0/9.2
DETAILS	BY T. MARTARELLA	CHECKED M. YUCEKUL			
QUANTITIES	BY W. ASHWOOD	CHECKED J. YANG		CU 04 EA 163741	

SOUTHBOUND BATTERY TUNNEL
TUNNEL GEOMETRY NO.2

DESIGN DETAIL SHEET (ENGLISH) (REV. 06-01-09)

ORIGINAL SCALE IN INCHES FOR REDUCED PLANS 0 1 2 3

DISREGARD PRINTS BEARING EARLIER REVISION DATES →

REVISION DATES (PRELIMINARY STAGE ONLY): 06/01/09 | 07/15/09 | 08/03/09 | 08/28/09 | 09/14/09 | 10/30/09

SHEET 13 OF 72

FILE => 34-0161rl-st013.dgn

USERNAME => ttleonard DATE PLOTTED => 14-DEC-2009 TIME PLOTTED => 15:19

DIST	COUNTY	ROUTE	POST MILES TOTAL PROJECT	SHEET No	TOTAL SHEETS
04	SF	101	8.2/9.2	450	654

REGISTERED CIVIL ENGINEER — 10/30/09 DATE

12-14-09
PLANS APPROVAL DATE

The State of California or its officers or agents shall not be responsible for the accuracy or completeness of scanned copies of this plan sheet.

REGISTERED PROFESSIONAL ENGINEER — Qiyu Liu — No. C-58082 — Exp. 6/30/10 — CIVIL — STATE OF CALIFORNIA

Arup PB Joint Venture
560 Mission Street, Suite 700
San Francisco, CA 94105

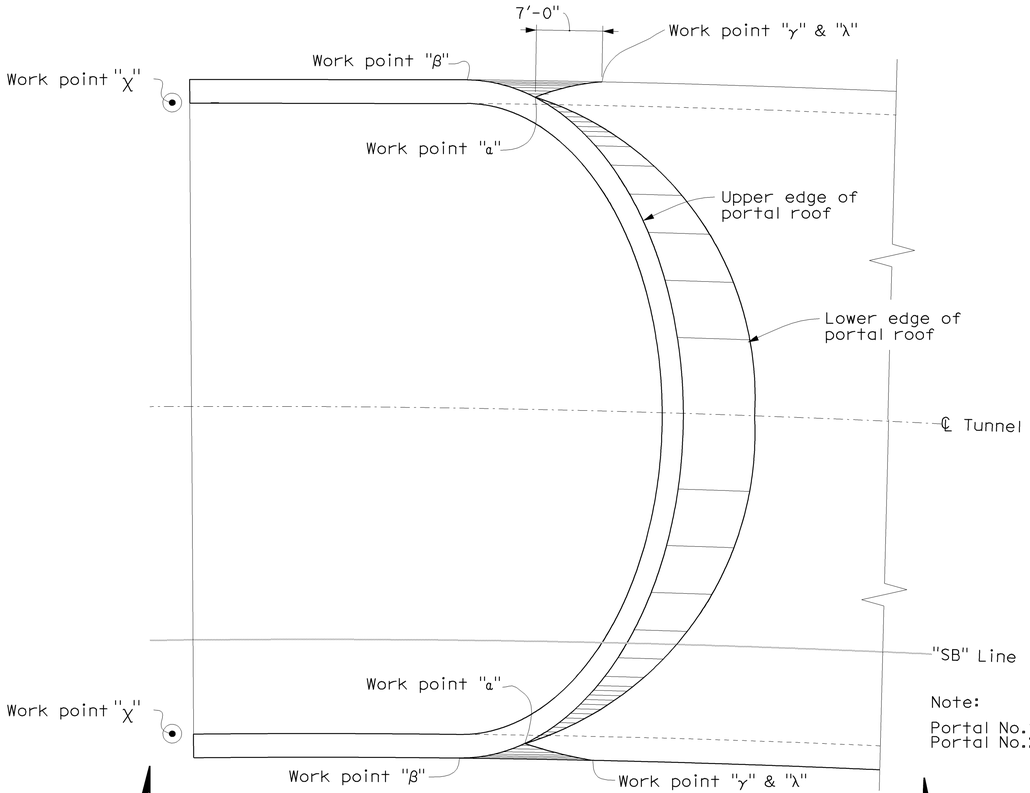

PORTAL PARTIAL PLAN

Scale: 1/8" = 1'-0"

Note:

Portal No.1 shown.
Portal No.2 similar.

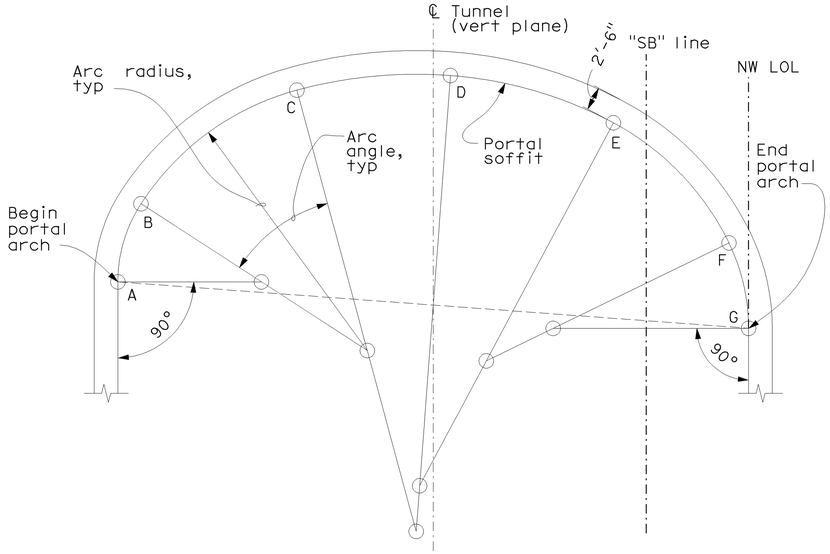

VIEW A-A

No Scale

Note:

For locations of "View A-A" and "View B-B", see sheet "SBBT-ST12".

CALIFORNIA STATE FIRE MARSHAL APPROVED

Approval of this plan does not authorize or approve any omission or deviation from applicable regulations. Final approval is subject to field inspection. One set of approved plans shall be available on the project site at all times.

Reviewed by: STEPHEN GUARINO

Approval date: 12-14-09

BARRIER TRANSITION GEOMETRY

Portal	WP "X" Station	WP "X" Offset	WP "X" Elev.	Radius (ft)
1	75+73.92	55.81′ L+	93.86	37.16
1	75+72.85	10.81′ R+	89.64	36.98
2	86+16.32	55.81′ L+	122.14	32.92
2	86+16.32	4.81′ R+	120.92	32.92

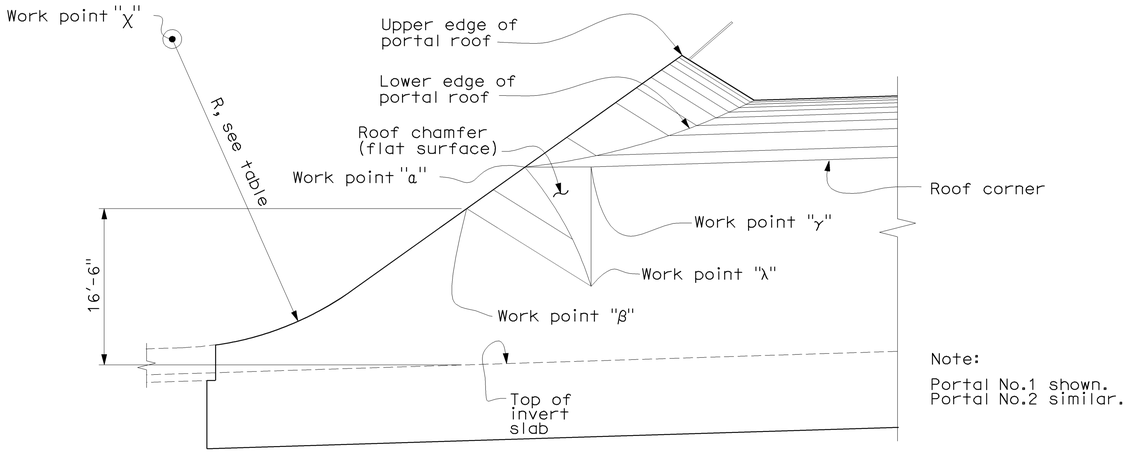

VIEW C-C

Scale: 1/8" = 1'-0"

Note:

Portal No.1 shown.
Portal No.2 similar.

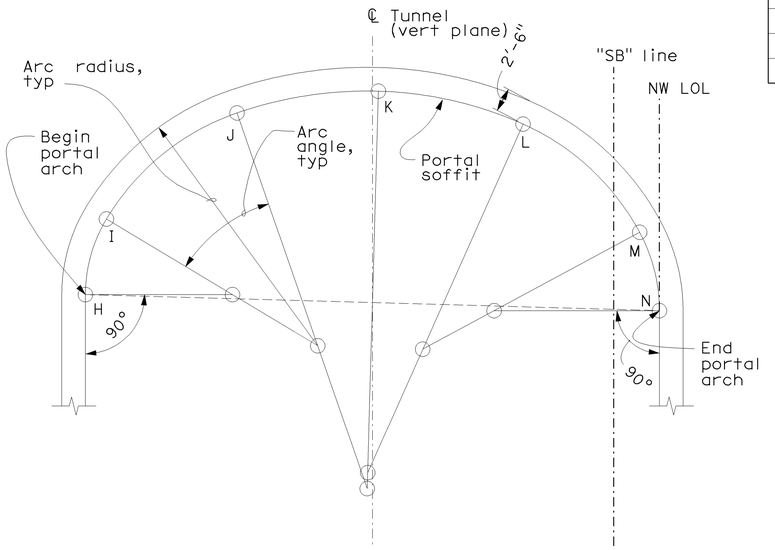

VIEW B-B

No Scale

PORTAL NO.1 CONSTRUCTION GEOMETRY

Arc	Arc radius (ft)	Arc angle
AB	15.162	32°57′34.042"
BC	28.496	41°53′59.670"
CD	48.290	19°25′39.697"
DE	43.455	23°47′22.990"
EF	28.503	35°59′12.672"
FG	20.650	25°56′10.930"

PORTAL NO.2 CONSTRUCTION GEOMETRY

Arc	Arc radius (ft)	Arc angle
HI	15.533	30°58′26.261"
IJ	26.033	39°54′5.660"
JK	41.993	20°43′23.288"
KL	40.301	22°24′54.107"
LM	26.033	37°40′18.456"
MN	17.460	28°18′52.229"

SBBT-ST14

DESIGN	BY Q. LIU	CHECKED M. YUCEKUL	PREPARED FOR THE STATE OF CALIFORNIA DEPARTMENT OF TRANSPORTATION	QIYU LIU PROJECT ENGINEER	BRIDGE NO. 34-0161L	SOUTHBOUND BATTERY TUNNEL	
DETAILS	BY T. MARTARELLA	CHECKED M. YUCEKUL			POST MILES 9.0/9.2	TUNNEL GEOMETRY NO.3	
QUANTITIES	BY W. ASHWOOD	CHECKED J. YANG					

DESIGN DETAIL SHEET (ENGLISH) (REV. 06-01-09)

ORIGINAL SCALE IN INCHES FOR REDUCED PLANS 0 1 2 3

CU 04
EA 163741

DISREGARD PRINTS BEARING EARLIER REVISION DATES →

REVISION DATES (PRELIMINARY STAGE ONLY): 06/01/09 07/13/09 08/07/09 08/21/09 10/30/09

SHEET 14 OF 72

FILE => 34-0161rl-st014.dgn

USERNAME => trlenard DATE PLOTTED => 14-DEC-2009 TIME PLOTTED => 15:19

DIST	COUNTY	ROUTE	POST MILES TOTAL PROJECT	SHEET No	TOTAL SHEETS
04	SF	101	8.2/9.2	451	654

REGISTERED CIVIL ENGINEER — 10/30/09 DATE

12-14-09
PLANS APPROVAL DATE

Qiyu Liu No. C-58082 Exp. 6/30/10 CIVIL — REGISTERED PROFESSIONAL ENGINEER — STATE OF CALIFORNIA

The State of California or its officers or agents shall not be responsible for the accuracy or completeness of scanned copies of this plan sheet.

Arup PB Joint Venture
560 Mission Street, Suite 700
San Francisco, CA 94105

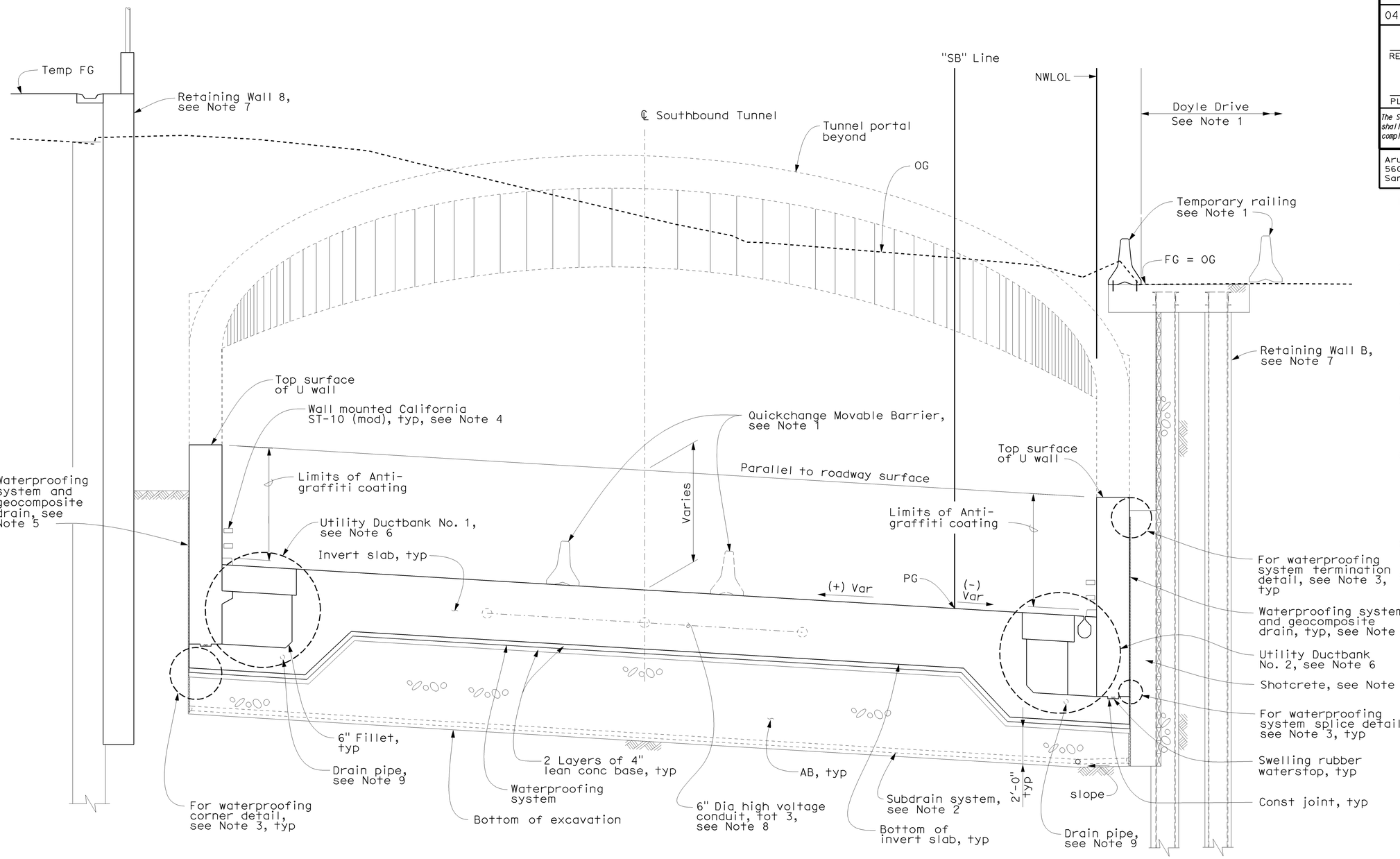

TYPICAL SECTION AT U WALL TO PORTAL NO. 1

"SB" 75+77.70 to 76+05.17
Scale: 1/4"=1'-0"

Notes:

1. For restriping of existing roadway, temporary railing, and Quickchange Movable Barrier, see "Roadway" plans.
2. For subdrain details see sheets "SBBT-ST40" and "SBBT-ST41".
3. For "Invert Slab Waterproofing Detail", "Waterproofing System Termination Detail" and "Tunnel Wall Waterproofing Detail", see sheet "SBBT-ST39".
4. For wall mounted California ST-10 (mod), see sheet "SBBT-ST44".
5. For waterproofing between tunnel wall and Retaining Wall 8, see "Waterproofing Transition Detail" on sheet "SBBT-ST39.2"
6. For details of utility ductbank, see sheet "SBBT-ST24".
7. For details of Retaining Wall B, see "Retaining Wall A & B" plans. For details of Retaining Wall 8, see "Retaining Wall No. 8" plans.
8. For electrical conduit layout & details, see "Roadway" plans.
9. For drain pipe layout & details, see "Tunnel System" plans.

CALIFORNIA STATE FIRE MARSHAL APPROVED

Approval of this plan does not authorize or approve any omission or deviation from applicable regulations. Final approval is subject to field inspection. One set of approved plans shall be available on the project site at all times.

Reviewed by: STEPHEN GUARINO
Approval date: 12-14-09

SBBT-ST15

DESIGN	BY Y. REN	CHECKED M. YUCEKUL	PREPARED FOR THE STATE OF CALIFORNIA DEPARTMENT OF TRANSPORTATION	QIYU LIU PROJECT ENGINEER	BRIDGE NO. 34-0161L
DETAILS	BY T.MARTARELLA	CHECKED M. YUCEKUL			POST MILES 9.0/9.2
QUANTITIES	BY W. ASHWOOD	CHECKED J. YANG		CU 04 EA 163741	

SOUTHBOUND BATTERY TUNNEL
TYPICAL SECTION NO.1

DESIGN DETAIL SHEET (ENGLISH) (REV. 06-01-09)

ORIGINAL SCALE IN INCHES FOR REDUCED PLANS 0 1 2 3

DISREGARD PRINTS BEARING EARLIER REVISION DATES →

REVISION DATES (PRELIMINARY STAGE ONLY): 06/01/09 | 07/15/09 | 08/01/09 | 08/28/09 | 09/01/09 | 09/15/09 | 10/30/09

SHEET 15 OF 72

FILE => 34-0161rl-st015.dgn

USERNAME => rlreinhard DATE PLOTTED => 14-DEC-2009 TIME PLOTTED => 15:13

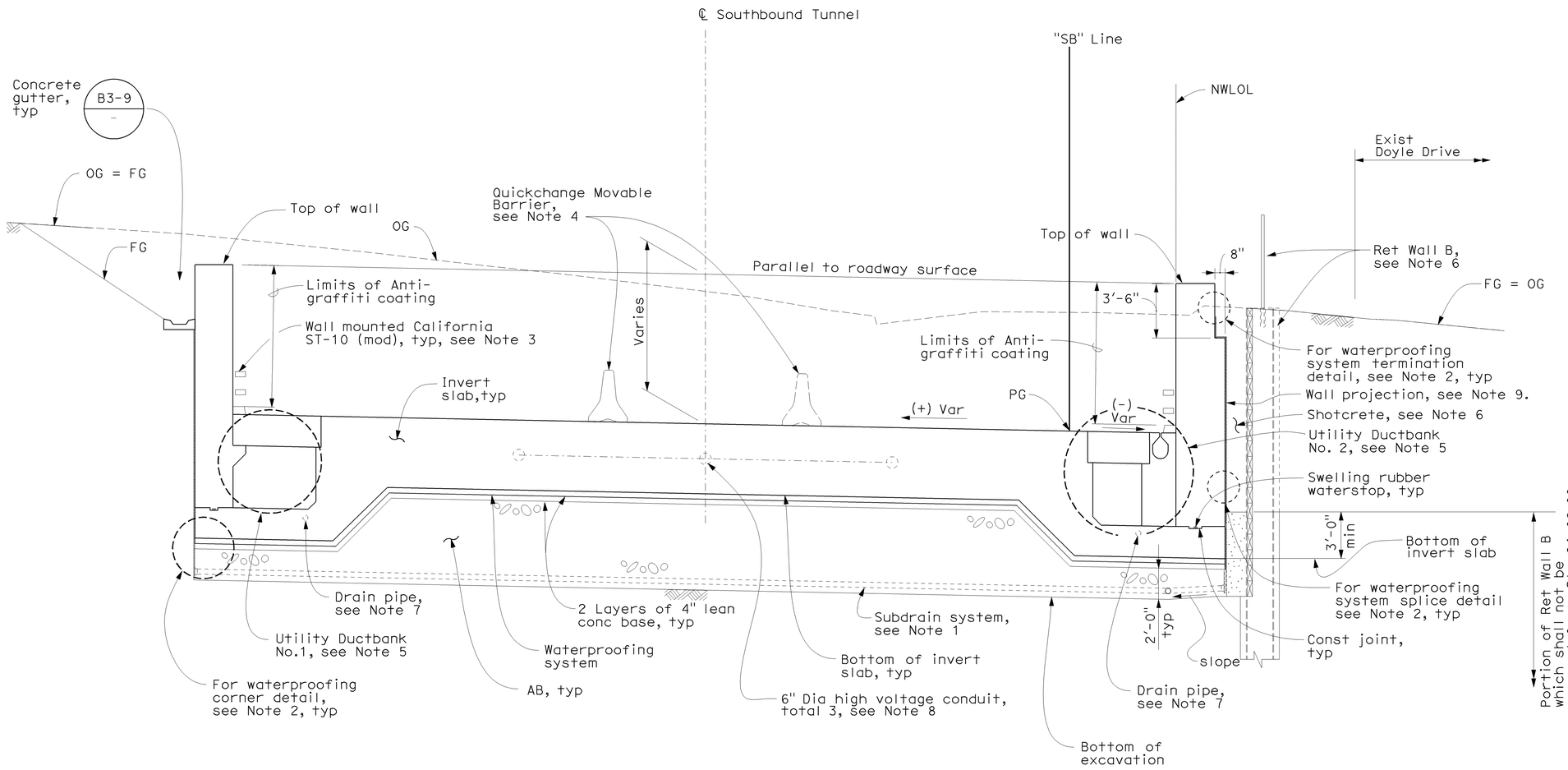

TYPICAL SECTION AT U WALL TO PORTAL NO. 2

"SB" 85+88.40 to 86+14.00

Scale: 1/4"=1'-0"

DIST	COUNTY	ROUTE	POST MILES TOTAL PROJECT	SHEET No	TOTAL SHEETS
04	SF	101	8.2/9.2	452	654

REGISTERED CIVIL ENGINEER — 10/30/09 DATE

12-14-09
PLANS APPROVAL DATE

REGISTERED PROFESSIONAL ENGINEER — Qiyu Liu — No. C-58082 — Exp. 6/30/10 — CIVIL — STATE OF CALIFORNIA

The State of California or its officers or agents shall not be responsible for the accuracy or completeness of scanned copies of this plan sheet.

Arup PB Joint Venture
560 Mission Street, Suite 700
San Francisco, CA 94105

Notes:

1. For subdrain details see sheet "SBBT-ST40" and sheet "SBBT-ST41".
2. For "Invert Slab Waterproofing Detail", "Waterproofing Membrane Termination Detail" and "Tunnel Wall Waterproofing Detail" see sheet "SBBT-ST39".
3. For details of wall mounted California ST-10 (mod), see sheet "SBBT-ST44".
4. For Quickchange Movable Barrier, see "Roadway" plans.
5. For utility ductbank details, see sheet "SBBT-ST24".
6. For details of retaining wall B, see "Retaining Wall A & B" plans.
7. For drain pipe layout & details, see "Tunnel System" plans.
8. For electrical condiut layout and details, see "Roadway" plans.
9. For limits of 8" wall projection, see "North Wall Elevation" on sheet "SBBT-ST29".

CALIFORNIA STATE FIRE MARSHAL APPROVED

Approval of this plan does not authorize or approve any omission or deviation from applicable regulations. Final approval is subject to field inspection. One set of approved plans shall be available on the project site at all times.

Reviewed by: STEPHEN GUARINO

Approval date: 12-14-09

SBBT-ST16

DESIGN	BY Q. LIU	CHECKED M. YUCEKUL	PREPARED FOR THE STATE OF CALIFORNIA DEPARTMENT OF TRANSPORTATION	QIYU LIU PROJECT ENGINEER	BRIDGE NO. 34-0161L	SOUTHBOUND BATTERY TUNNEL	
DETAILS	BY T.MARTARELLA	CHECKED M. YUCEKUL			POST MILES 9.0/9.2	TYPICAL SECTION NO.2	
QUANTITIES	BY W. ASHWOOD	CHECKED J. YANG					

DESIGN DETAIL SHEET (ENGLISH) (REV. 06-01-09)

ORIGINAL SCALE IN INCHES FOR REDUCED PLANS 0 1 2 3

CU 04
EA 163741

DISREGARD PRINTS BEARING EARLIER REVISION DATES →

REVISION DATES (PRELIMINARY STAGE ONLY): 06/22/09 | 07/15/09 | 08/12/09 | 08/26/09 | 09/16/09 | 10/30/09

SHEET 16 OF 72

FILE => 34-0161rl-st016.dgn

USERNAME => rrlenard DATE PLOTTED => 14-DEC-2009 TIME PLOTTED => 15:20

Notes:

1. For details not noted, see sheets "SBBT-ST15" and "SBBT-ST16".
2. For stirrups details, see "135° Hook Detail" on sheet "SBBT-ST20".
3. For details of stainless steel slot drain, see "Tunnel System" plans.

REINFORCING SCHEDULE			
Limits of Reinforcement	"SB" 75+77.70 to 75+87.08	"SB" 75+87.08 to 76+05.17 and "SB" 85+88.40 to 86+04.63	"SB" 86+04.63 to 86+14.00
ⓐ	#4@8"	#5@6"	#4@8"
ⓑ	#4@8"	#6@6"	#4@8"
ⓒ	#4@8"	#5@6"	#4@8"
ⓓ	None	#5@12" vert and @6" horiz	None
ⓔ	#4@8"	#6@12"	#4@8"

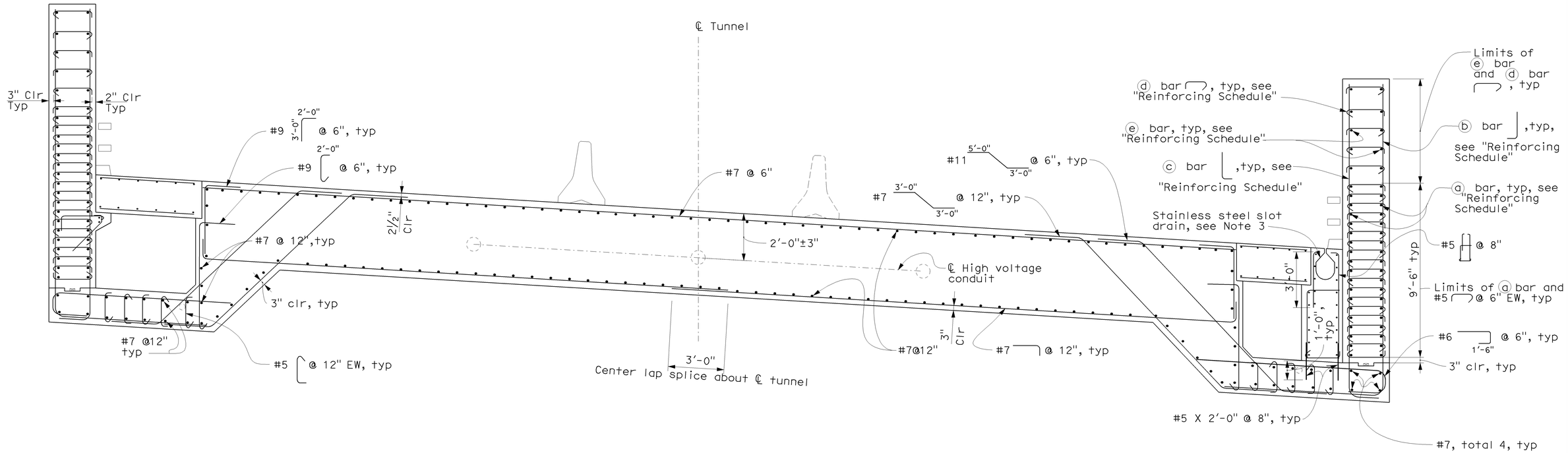

TYPICAL REINFORCEMENT AT U WALL

"SB" 75+77.70 to 76+05.17

Scale: 3/8" = 1'-0"

SBBT-ST17

CALIFORNIA STATE FIRE MARSHAL
APPROVED
Approval of this plan does not authorize or approve any omission or deviation from applicable regulations. Final approval is subject to field inspection. One set of approved plans shall be available on the project site at all times.
Reviewed by: STEPHEN GUARINO
Approval date: 12-14-09

DIST	COUNTY	ROUTE	POST MILES TOTAL PROJECT	SHEET No	TOTAL SHEETS
04	SF	101	8.2/9.2	453	654

REGISTERED CIVIL ENGINEER — 10/30/09 DATE

12-14-09
PLANS APPROVAL DATE

REGISTERED PROFESSIONAL ENGINEER — Qiyu Liu — No. C-58082 — Exp. 6/30/10 — CIVIL — STATE OF CALIFORNIA

The State of California or its officers or agents shall not be responsible for the accuracy or completeness of scanned copies of this plan sheet.

Arup PB Joint Venture
560 Mission Street, Suite 700
San Francisco, CA 94105

DESIGN	BY H. LEE	CHECKED M. YUCEKUL	PREPARED FOR THE STATE OF CALIFORNIA DEPARTMENT OF TRANSPORTATION	QIYU LIU PROJECT ENGINEER	BRIDGE NO. 34-0161L	SOUTHBOUND BATTERY TUNNEL	
DETAILS	BY T.MARTARELLA	CHECKED M. YUCEKUL			POST MILES 9.0/9.2	TYPICAL SECTION NO.3	
QUANTITIES	BY W. ASHWOOD	CHECKED J. YANG		CU 04 EA 163741			

DESIGN DETAIL SHEET (ENGLISH) (REV. 06-01-09)

ORIGINAL SCALE IN INCHES FOR REDUCED PLANS 0 1 2 3

DISREGARD PRINTS BEARING EARLIER REVISION DATES →

REVISION DATES (PRELIMINARY STAGE ONLY): 06/05/09 | 07/10/09 | 08/05/09 | 08/28/09 | 10/30/09

SHEET 17 OF 72

FILE => 34-0161r1-st017.dgn

USERNAME => rtriteford DATE PLOTTED => 14-DEC-2009 TIME PLOTTED => 15:20

DIST	COUNTY	ROUTE	POST MILES TOTAL PROJECT	SHEET No	TOTAL SHEETS
04	SF	101	8.2/9.2	454	654

REGISTERED CIVIL ENGINEER — 10/30/09 DATE

12-14-09
PLANS APPROVAL DATE

REGISTERED PROFESSIONAL ENGINEER — Qiyu Liu — No. C-58082 — Exp. 6/30/10 — CIVIL — STATE OF CALIFORNIA

The State of California or its officers or agents shall not be responsible for the accuracy or completeness of scanned copies of this plan sheet.

Arup PB Joint Venture
560 Mission Street, Suite 700
San Francisco, CA 94105

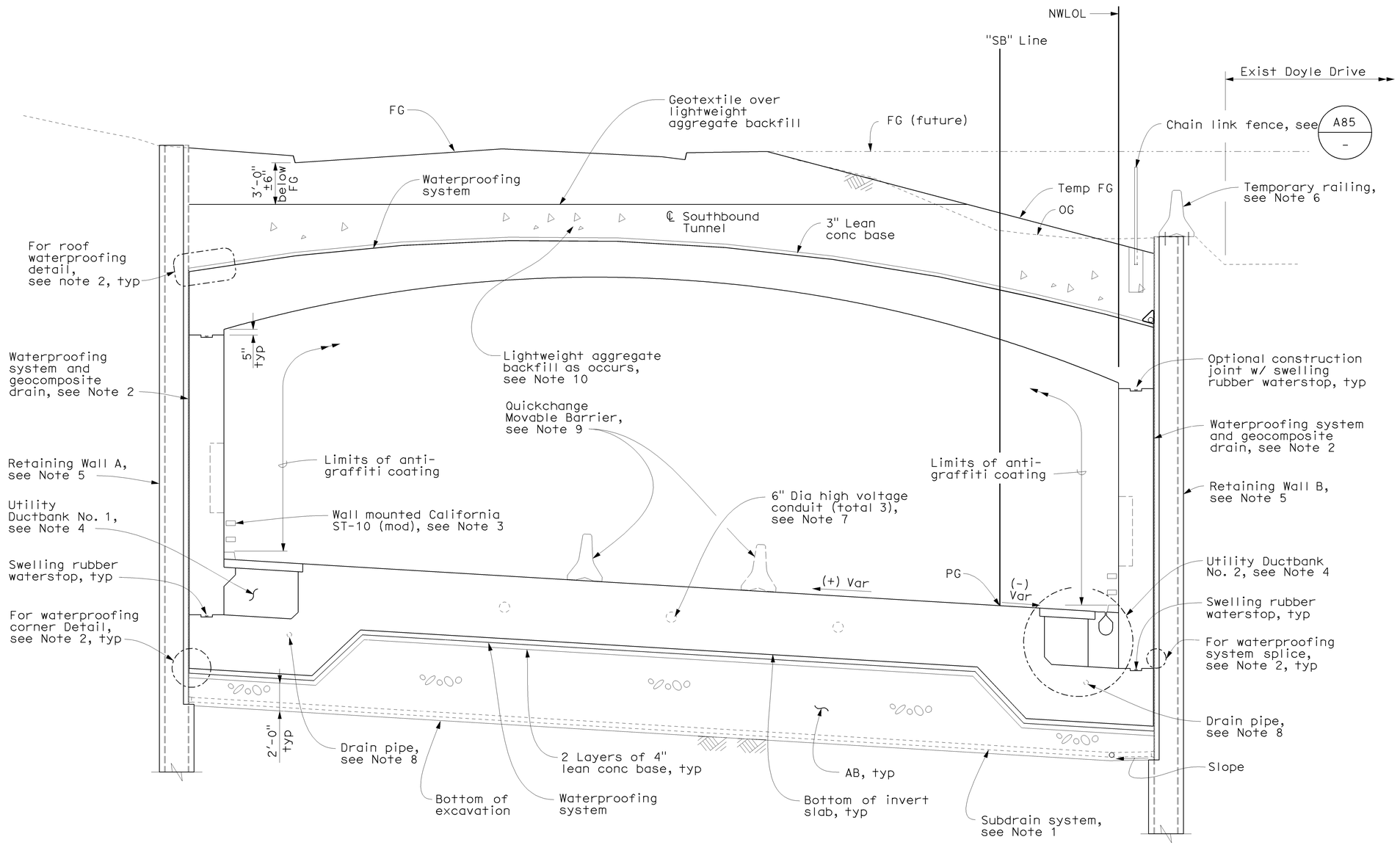

TYPICAL SECTION AT TUNNEL

"SB" 76+35.79 to 79+99.11

Scale: 1/4"=1'-0"

Notes:

1. For subdrain details see sheets "SBBT-ST40" and "SBBT-ST41".
2. For "Invert Slab Waterproofing Detail", "Tunnel Wall Waterproofing Detail","Roof Waterproofing Detail" and "Parapet Waterproofing Detail", see sheet "SBBT-ST39".
3. For details of wall mounted California ST-10 (mod), see sheet "SBBT-ST44".
4. For "Utility Ductbank No.1 Detail" and "Utility Ductbank No.2 Detail" see sheet "SBBT-ST24".
5. For Retaining Wall A & B details, see "Retaining Wall A & B" plans.
6. For temporary railing, see "Roadway" plans.
7. For electrical conduit layout and details, see "Roadway" plans.
8. For drain pipe layout, see "Tunnel System" plans.
9. For Quickchange Movable Barrier, see "Roadway" plans.
10. For limits of lightweight aggregate backfill, see sheet "SBBT-ST7".

CALIFORNIA STATE FIRE MARSHAL APPROVED

Approval of this plan does not authorize or approve any omission or deviation from applicable regulations. Final approval is subject to field inspection. One set of approved plans shall be available on the project site at all times.

Reviewed by: STEPHEN GUARINO

Approval date: 12-14-09

SBBT-ST18

DESIGN	BY Y. REN	CHECKED M. YUCEKUL	PREPARED FOR THE STATE OF CALIFORNIA DEPARTMENT OF TRANSPORTATION	QIYU LIU PROJECT ENGINEER	BRIDGE NO. 34-0161L
DETAILS	BY T.MARTARELLA	CHECKED M. YUCEKUL			POST MILES 9.0/9.2
QUANTITIES	BY W. ASHWOOD	CHECKED J. YANG			

SOUTHBOUND BATTERY TUNNEL
TYPICAL SECTION NO.4

DESIGN DETAIL SHEET (ENGLISH) (REV. 06-01-09)

ORIGINAL SCALE IN INCHES FOR REDUCED PLANS 0 1 2 3

CU 04
EA 163741

DISREGARD PRINTS BEARING EARLIER REVISION DATES →

REVISION DATES (PRELIMINARY STAGE ONLY): 06/05/09 | 07/31/09 | 08/05/09 | 08/28/09 | 09/08/09 | 10/30/09

SHEET 18 OF 72

FILE => 34-0161rl-st018.dgn

USERNAME => trlenard DATE PLOTTED => 14-DEC-2009 TIME PLOTTED => 15:20

DIST	COUNTY	ROUTE	POST MILES TOTAL PROJECT	SHEET No	TOTAL SHEETS
04	SF	101	8.2/9.2	455	654

REGISTERED CIVIL ENGINEER 10/30/09 DATE

12-14-09
PLANS APPROVAL DATE

REGISTERED PROFESSIONAL ENGINEER Qiyu Liu No. C-58082 Exp. 6/30/10 CIVIL STATE OF CALIFORNIA

The State of California or its officers or agents shall not be responsible for the accuracy or completeness of scanned copies of this plan sheet.

Arup PB Joint Venture
560 Mission Street, Suite 700
San Francisco, CA 94105

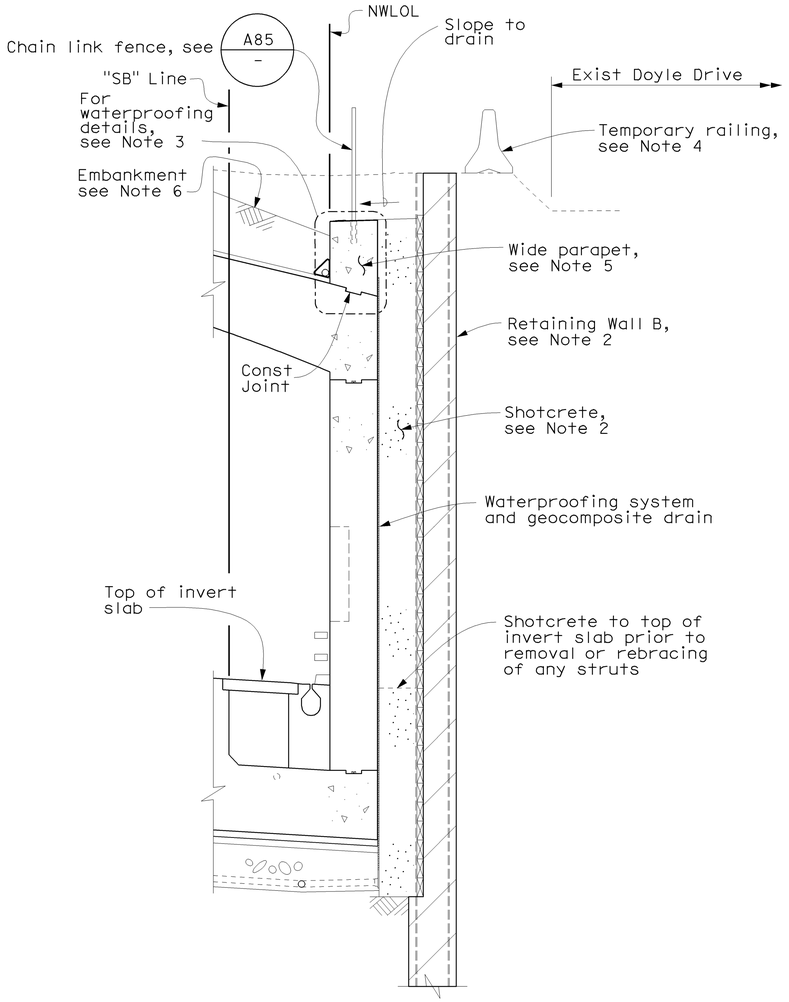

PARTIAL TYPICAL SECTION AT TUNNEL

"SB" 80+71.11 to 83+85.00
Scale: 1/4"=1'-0"

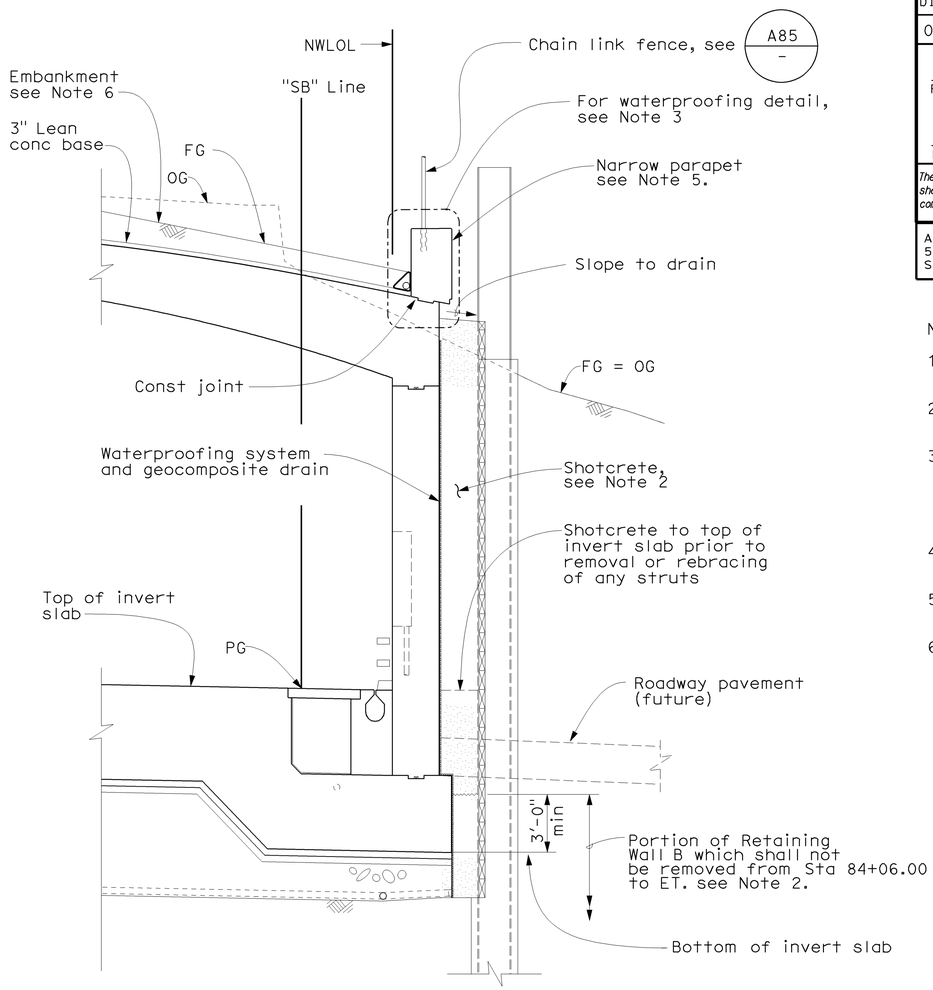

PARTIAL TYPICAL SECTION AT TUNNEL

"SB" 83+85.00 to 85+59.04
Scale: 1/4" = 1'-0"

Notes:

1. For details not noted, see sheet "SBBT-ST18".
2. For retaining wall details, see "Retaining Wall A & B" plans.
3. For parapet and penetration waterproofing, details see "Parapet Waterproofing Detail" and "Penetration Waterproofing Detail" on sheet "SBBT-ST39".
4. For temporary railing, see "Roadway" plans.
5. For limits of parapet, see sheets "RWAB-ST8" and "RWAB-ST9".
6. For embankment, see "Roadway" plans.

CALIFORNIA STATE FIRE MARSHAL APPROVED

Approval of this plan does not authorize or approve any omission or deviation from applicable regulations. Final approval is subject to field inspection. One set of approved plans shall be available on the project site at all times.

Reviewed by: STEPHEN GUARINO
Approval date: 12-14-09

SBBT-ST19

DESIGN	BY Q. LIU	CHECKED M. YUCEKUL	PREPARED FOR THE STATE OF CALIFORNIA DEPARTMENT OF TRANSPORTATION	QIYU LIU PROJECT ENGINEER	BRIDGE NO. 34-0161L
DETAILS	BY T MARTARELLA	CHECKED M. YUCEKUL			POST MILES 9.0/9.2
QUANTITIES	BY W. ASHWOOD	CHECKED J. YANG			

SOUTHBOUND BATTERY TUNNEL
TYPICAL SECTION NO.5

DESIGN DETAIL SHEET (ENGLISH) (REV. 06-01-09)

ORIGINAL SCALE IN INCHES FOR REDUCED PLANS 0 1 2 3

CU 04
EA 163741

DISREGARD PRINTS BEARING EARLIER REVISION DATES

REVISION DATES (PRELIMINARY STAGE ONLY) 06/01/09 07/15/09 08/07/09 08/26/09 09/16/09 10/30/09

SHEET 19 OF 72

FILE => 34-0161rl-st019.dgn

USERNAME => trlenard DATE PLOTTED => 14-DEC-2009 TIME PLOTTED => 15:20

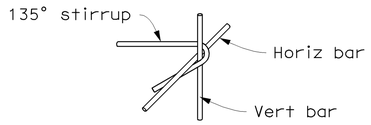

135° HOOK DETAIL

No Scale

REINFORCING SCHEDULE						
Limits of Reinforcement	"SB" 76+35.79 to 77+00	"SB" 77+00 to 78+50	"SB" 78+50 to 79+99.11 and "SB" 80+71.11 to 81+50	"SB" 81+50 to 83+45.42 and "SB" 83+99.58 to 84+70	"SB" 83+45.42 to 83+99.58	"SB" 84+70 to 85+59.04
ⓐ	#9 bundle @6"	#11@6"	#10@6"	#11@6"	#11@6"	#9 bundle @6"
ⓑ	#11@6"	#11@6"	#10@6"	#10@6"	#11@6"	#10@6"
ⓒ	#11@6"	#9@6"	#9@6"	#10@6"	#10@6"	#11@6"
ⓓ	#10@6"	#9@6"	#9@6"	#10@6"	#10@6"	#10@6"
ⓔ	#6@6"	#6@12"	#6@12"	#6@12"	#6@12"	#6@6"
ⓕ	#9@6"	#6@12"	#6@12"	#6@12"	#6@12"	#9@6"
ⓖ	#9@6"	#9@12"	#9@12"	#9@12"	#9@12"	#9@6"

Notes:

1. For details not noted, see sheets "SBBT-ST18" and "SBBT-ST19"
2. Ties in wall shall be hooked to vertical bars.
3. For details of slot drain, see "Tunnel System" plans.
4. For details of concrete cap over utility ductbank, see "Utility Ductbank Details" on sheet "SBBT-ST24".
5. #11 bars w/ different bend radii to be bundled vertically.
6. For details of thickened conc roof, see sheet "SBBT-ST31".

DIST	COUNTY	ROUTE	POST MILES TOTAL PROJECT	SHEET No	TOTAL SHEETS
04	SF	101	8.2/9.2	456	654

REGISTERED CIVIL ENGINEER — 10/30/09 DATE

12-14-09
PLANS APPROVAL DATE

REGISTERED PROFESSIONAL ENGINEER — Qiyu Liu — No. C-58082 — Exp. 6/30/10 — CIVIL — STATE OF CALIFORNIA

The State of California or its officers or agents shall not be responsible for the accuracy or completeness of scanned copies of this plan sheet.

Arup PB Joint Venture
560 Mission Street, Suite 700
San Francisco, CA 94105

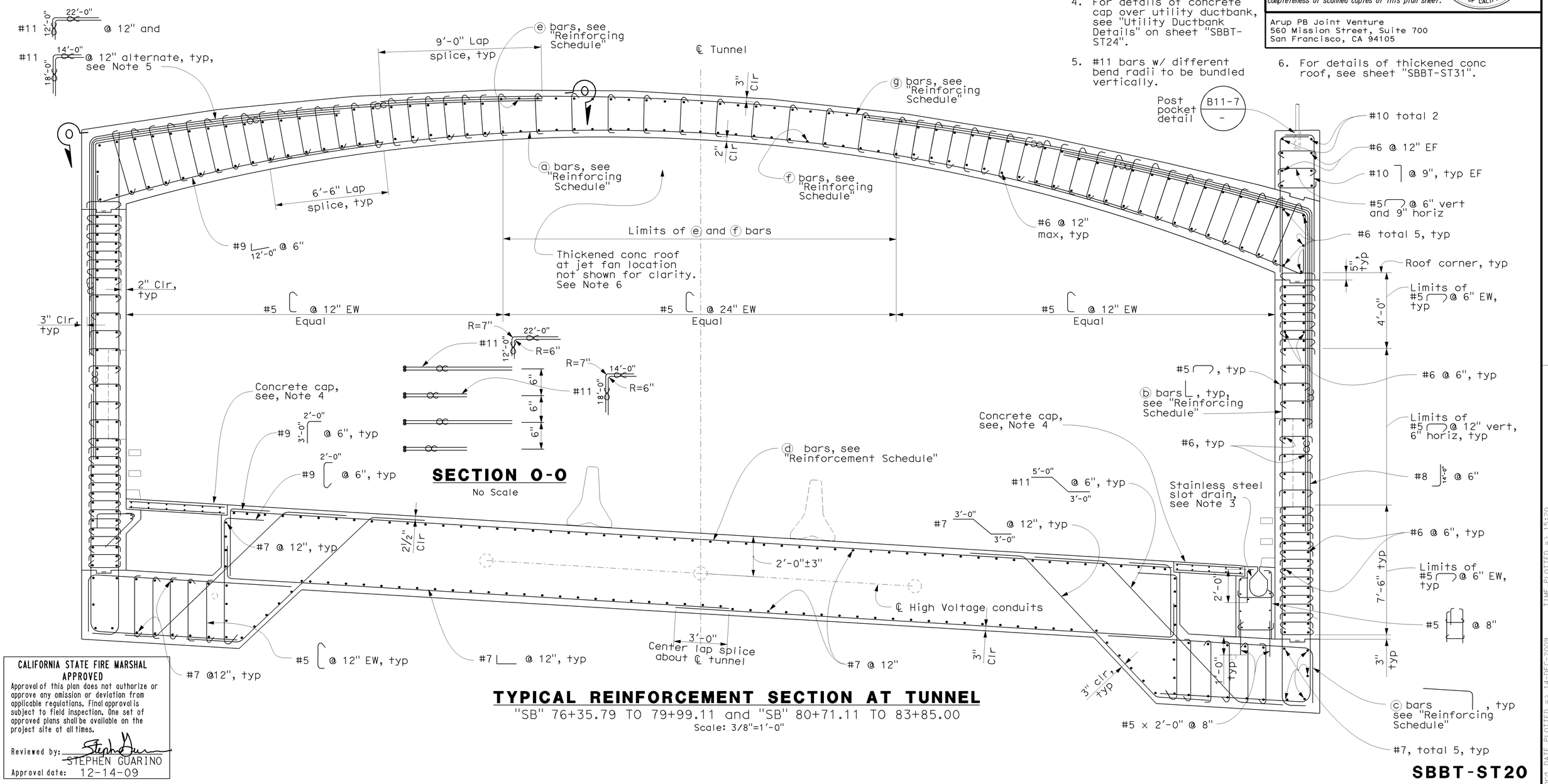

SECTION O-O

No Scale

TYPICAL REINFORCEMENT SECTION AT TUNNEL

"SB" 76+35.79 TO 79+99.11 and "SB" 80+71.11 TO 83+85.00

Scale: 3/8"=1'-0"

CALIFORNIA STATE FIRE MARSHAL APPROVED

Approval of this plan does not authorize or approve any omission or deviation from applicable regulations. Final approval is subject to field inspection. One set of approved plans shall be available on the project site at all times.

Reviewed by: STEPHEN GUARINO

Approval date: 12-14-09

DESIGN	BY H. LEE	CHECKED M. YUCEKUL	PREPARED FOR THE STATE OF CALIFORNIA DEPARTMENT OF TRANSPORTATION	QIYU LIU PROJECT ENGINEER	BRIDGE NO. 34-0161L	SOUTHBOUND BATTERY TUNNEL	
DETAILS	BY T MARTARELLA	CHECKED M. YUCEKUL			POST MILES 9.0/9.2	TYPICAL SECTION NO.6	
QUANTITIES	BY W. ASHWOOD	CHECKED J. YANG					

DESIGN DETAIL SHEET (ENGLISH) (REV. 06-01-09)

ORIGINAL SCALE IN INCHES FOR REDUCED PLANS 0 1 2 3

CU 04 EA 163741

DISREGARD PRINTS BEARING EARLIER REVISION DATES

REVISION DATES (PRELIMINARY STAGE ONLY): 06/30/09 07/15/09 08/17/09 08/24/09 09/11/09 10/30/09

SHEET 20 OF 72

SBBT-ST20

FILE => 34-0161rl-st020.dgn

USERNAME => trlenard DATE PLOTTED => 14-DEC-2009 TIME PLOTTED => 15:20

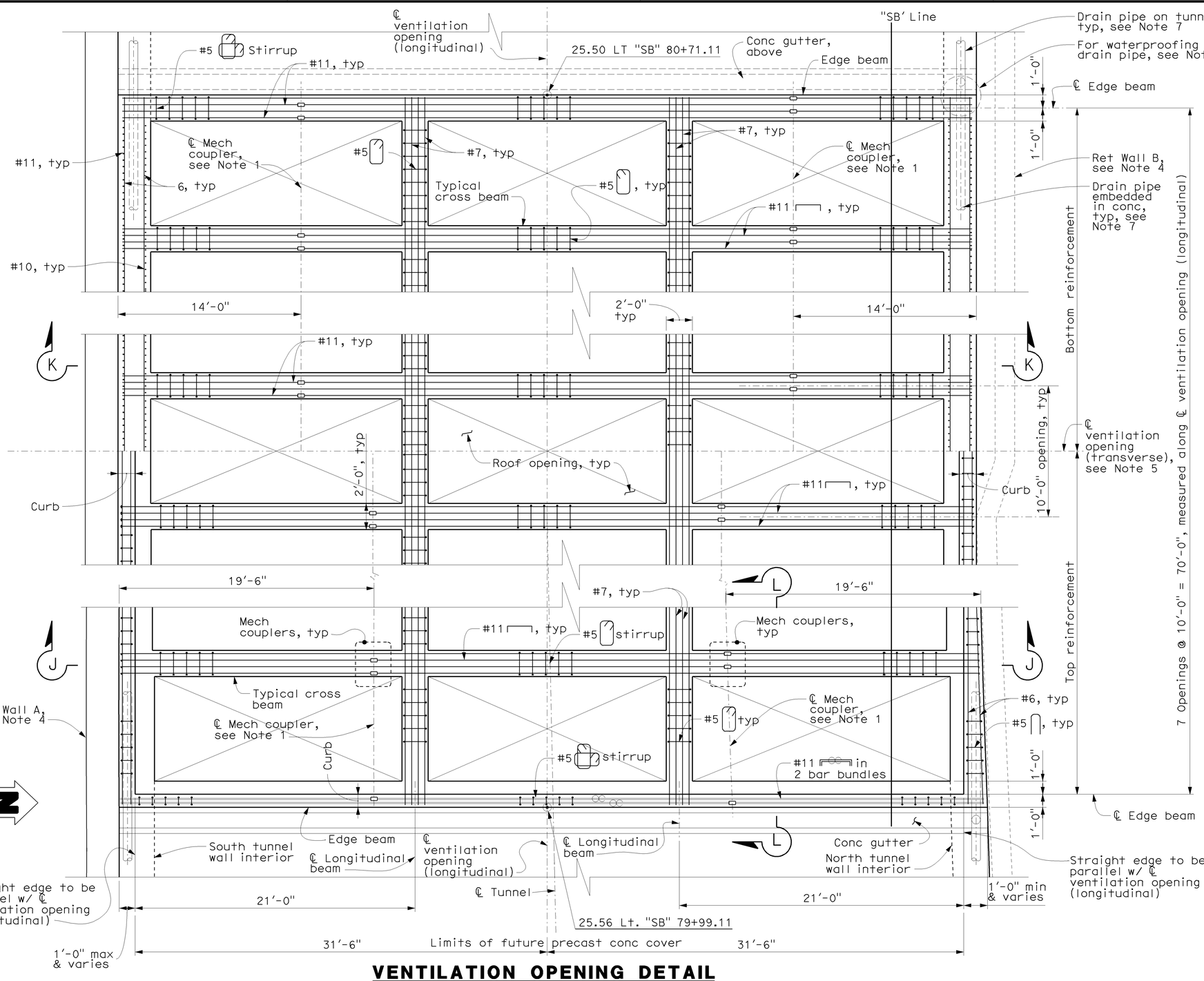

VENTILATION OPENING DETAIL

Scale: 1/4" = 1'-0"

DIST	COUNTY	ROUTE	POST MILES TOTAL PROJECT	SHEET No	TOTAL SHEETS
04	SF	101	8.2/9.2	457	654

REGISTERED CIVIL ENGINEER — 10/30/09 DATE

12-14-09
PLANS APPROVAL DATE

REGISTERED PROFESSIONAL ENGINEER — Qiyu Liu — No. C-58082 — Exp. 6/30/10 — CIVIL — STATE OF CALIFORNIA

The State of California or its officers or agents shall not be responsible for the accuracy or completeness of scanned copies of this plan sheet.

Arup PB Joint Venture
560 Mission Street, Suite 700
San Francisco, CA 94105

Notes:

1. Mechanical couplers to be "service level" coupler, UON.
2. For "Section J-J", see sheet "SBBT-ST22".
3. For "Section K-K" and "Section L-L", see sheet "SBBT-ST23".
4. For layout and details of Retaining Walls A & B, see "Retaining Wall" plans.
5. For location of "Ventilation Opening Detail", see sheet "SBBT-ST8".
6. For Waterproofing Penetration Detail", see sheet "SBBT-ST39".
7. For drain pipe, see "Roadway" plans.

Legend:

—□— indicates mechanical coupler

—∞— indicates bundle bar

CALIFORNIA STATE FIRE MARSHAL APPROVED

Approval of this plan does not authorize or approve any omission or deviation from applicable regulations. Final approval is subject to field inspection. One set of approved plans shall be available on the project site at all times.

Reviewed by: STEPHEN GUARINO

Approval date: 12-14-09

SBBT-ST21

DESIGN	BY Y. REN	CHECKED M. YUCEKUL	PREPARED FOR THE STATE OF CALIFORNIA DEPARTMENT OF TRANSPORTATION	QIYU LIU PROJECT ENGINEER	BRIDGE NO. 34-0161L
DETAILS	BY E.SUDHAUSEN	CHECKED M. YUCEKUL			POST MILES 9.0/9.2
QUANTITIES	BY W. ASHWOOD	CHECKED J. YANG			

SOUTHBOUND BATTERY TUNNEL
VENTILATION OPENING LAYOUT

DESIGN DETAIL SHEET (ENGLISH) (REV. 06-01-09)

ORIGINAL SCALE IN INCHES FOR REDUCED PLANS 0 1 2 3

CU 04
EA 163741

DISREGARD PRINTS BEARING EARLIER REVISION DATES

REVISION DATES (PRELIMINARY STAGE ONLY): 06/05/09 | 07/15/09 | 08/07/09 | 09/11/09 | 10/30/09

SHEET 21 OF 72

FILE => 34-0161rl-st021.dgn

USERNAME => frlenard DATE PLOTTED => 14-DEC-2009 TIME PLOTTED => 16:20

DIST	COUNTY	ROUTE	POST MILES TOTAL PROJECT	SHEET No	TOTAL SHEETS
04	SF	101	8.2/9.2	458	654

REGISTERED CIVIL ENGINEER 10/30/09 DATE

12-14-09
PLANS APPROVAL DATE

The State of California or its officers or agents shall not be responsible for the accuracy or completeness of scanned copies of this plan sheet.

REGISTERED PROFESSIONAL ENGINEER CIVIL ENGINEER No. C 66082 Exp. 06/30/10 CIVIL STATE OF CALIFORNIA

Arup PB Joint Venture
560 Mission Street, Suite 700
San Francisco, CA 94105

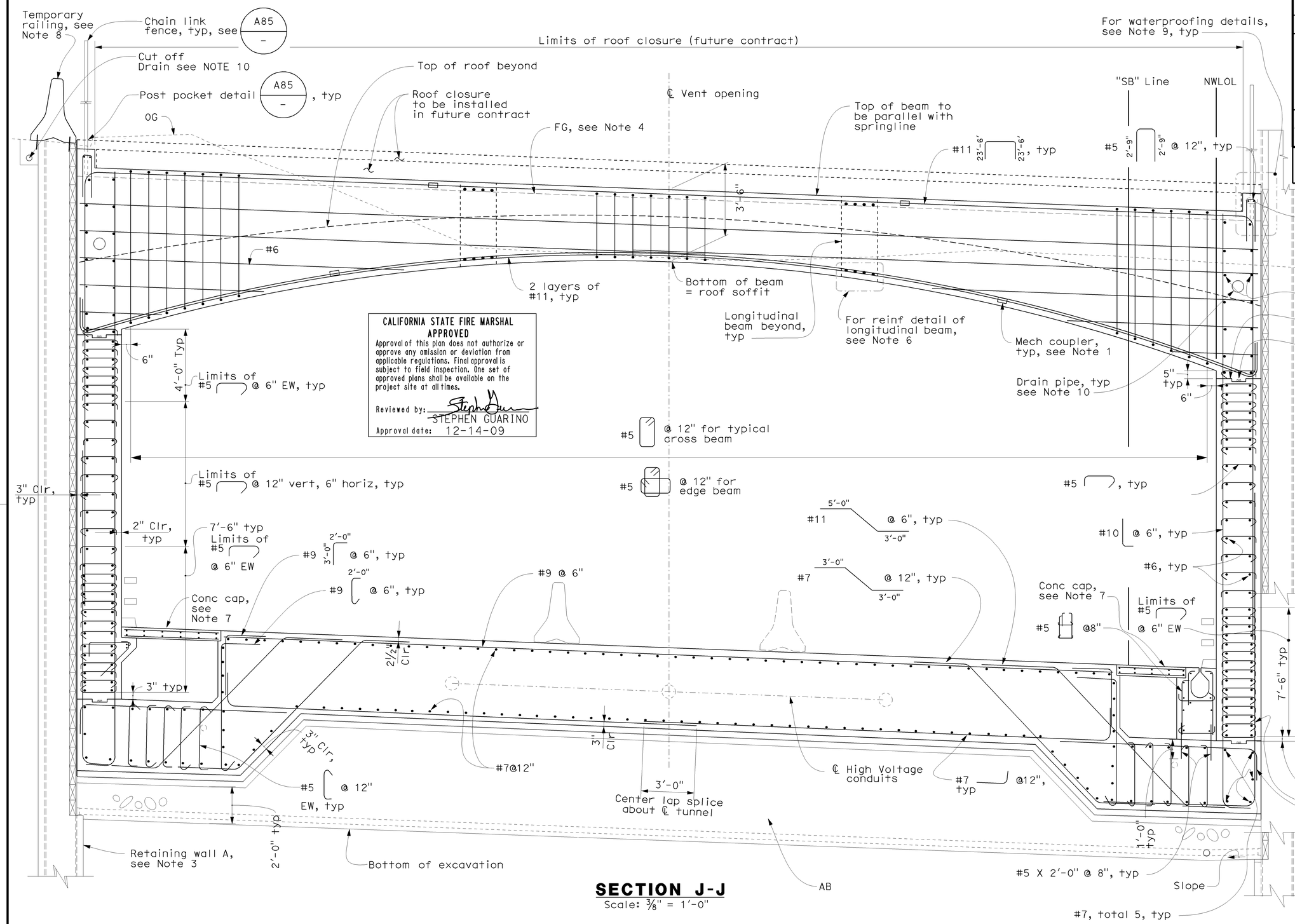

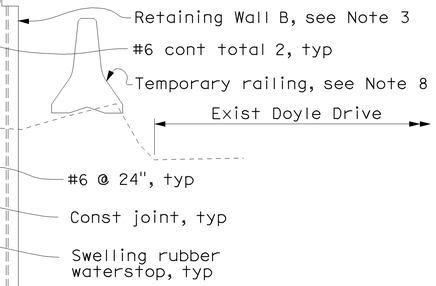

CALIFORNIA STATE FIRE MARSHAL APPROVED
Approval of this plan does not authorize or approve any omission or deviation from applicable regulations. Final approval is subject to field inspection. One set of approved plans shall be available on the project site at all times.
Reviewed by: STEPHEN GUARINO
Approval date: 12-14-09

SECTION J-J
Scale: 3/8" = 1'-0"

Notes:

1. Mechanical couplers to be 'service level' couplers, UON. Locations of mechanical couplers to be staggered, see sheet "SBBT-ST27".
2. For details not noted, see sheets "SBBT-ST18" and "SBBT-ST19".
3. For layout and details of Retaining Wall A & B, see "Retaining Wall A & B" plans.
4. For FG on top of SB Battery Tunnel, see "Roadway" plan.
5. For locations of "Section J-J", see sheet "SBBT-ST21".
6. For longitudinal beam reinf detail, see "Longitudinal Beam Detail" on sheet "SBBT-ST23".
7. For details of conc cap over utility ductbank, see "Utility Ductbank Details" on sheet "SBBT-ST24".
8. For temporary railing see "Roadway" plans.
9. For waterproofing around ventilation opening, see "Wall Waterproofing Detail" and "Waterproofing Penetration Detail" on sheet "SBBT-ST39".
10. For drainage details, see "Roadway" plans.

SBBT-ST22

DESIGN	BY H. LEE	CHECKED M. YUCEKUL	PREPARED FOR THE STATE OF CALIFORNIA DEPARTMENT OF TRANSPORTATION	QIYU LIU PROJECT ENGINEER	BRIDGE NO. 34-0161L
DETAILS	BY E. SUDHAUSEN	CHECKED M. YUCEKUL			POST MILES 9.0/9.2
QUANTITIES	BY W. ASHWOOD	CHECKED J. YANG			

SOUTHBOUND BATTERY TUNNEL
VENTILATION OPENING DETAILS NO.1

DESIGN DETAIL SHEET (ENGLISH) (REV. 06-01-09)

ORIGINAL SCALE IN INCHES FOR REDUCED PLANS 0 1 2 3

CU 04
EA 163741

DISREGARD PRINTS BEARING EARLIER REVISION DATES

REVISION DATES (PRELIMINARY STAGE ONLY) 06/01/09 07/15/09 08/07/09 08/28/09 09/18/09 10/30/09

SHEET 22 OF 72

FILE => 34-0161rl-st022.dgn

USERNAME => trlenard DATE PLOTTED => 14-DEC-2009 TIME PLOTTED => 15:20

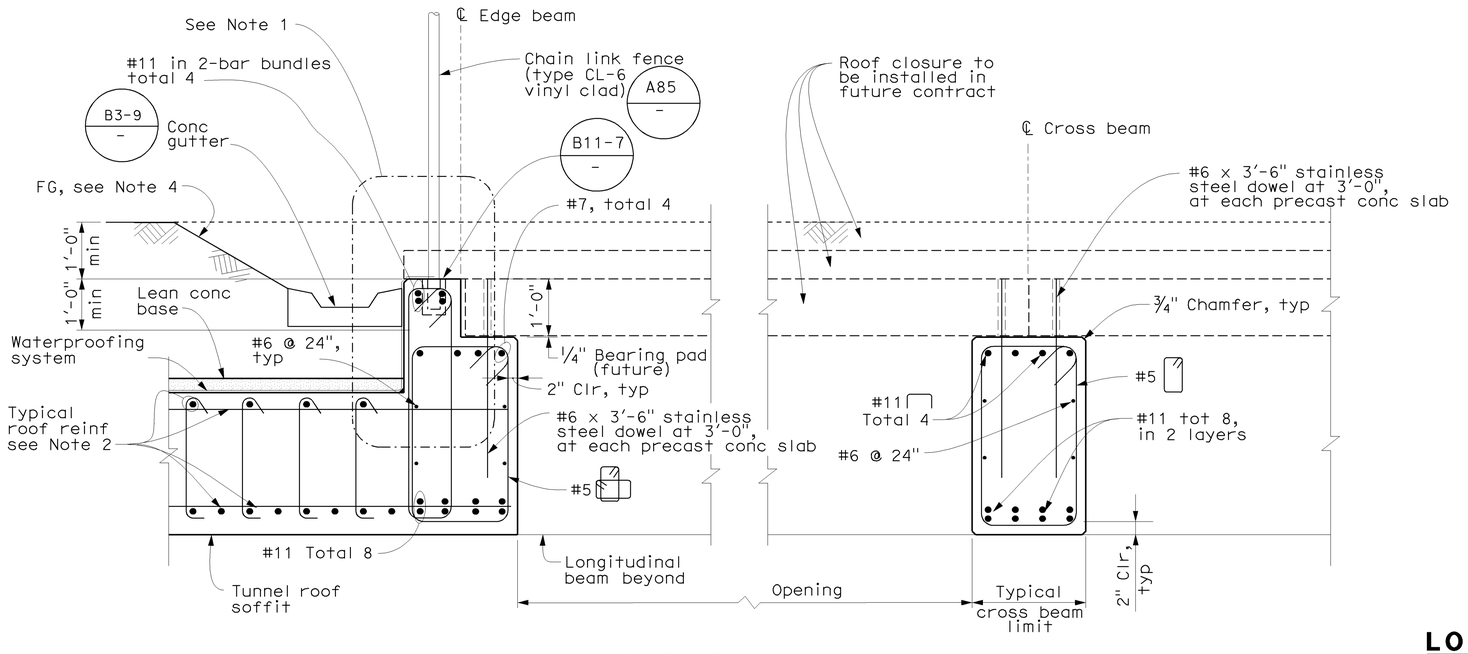

SECTION L-L

Scale: 3/4" = 1'0"

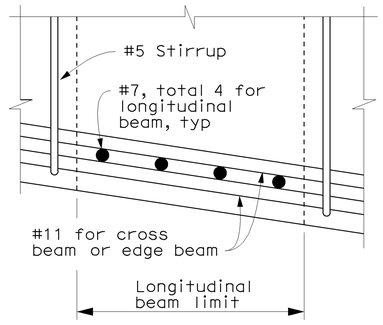

LONGITUDINAL BEAM DETAIL

Scale: 1" = 1'-0"

Notes:

1. For waterproofing around ventilation opening, see "Wall Waterproofing Detail" and "Waterproofing Penetration Detail" on sheet "SBBT-ST39".
2. For typical reinf details not noted, see sheet "SBBT-ST20".
3. For layout and details of Retaining Walls A & B, see "Retaining Wall A & B" plans.
4. For FG on top of SB Battery Tunnel, see "Roadway" plan.
5. For location of "Section K-K", "Section L-L" and "Longitudinal Beam Detail", see sheet "SBBT-ST21".

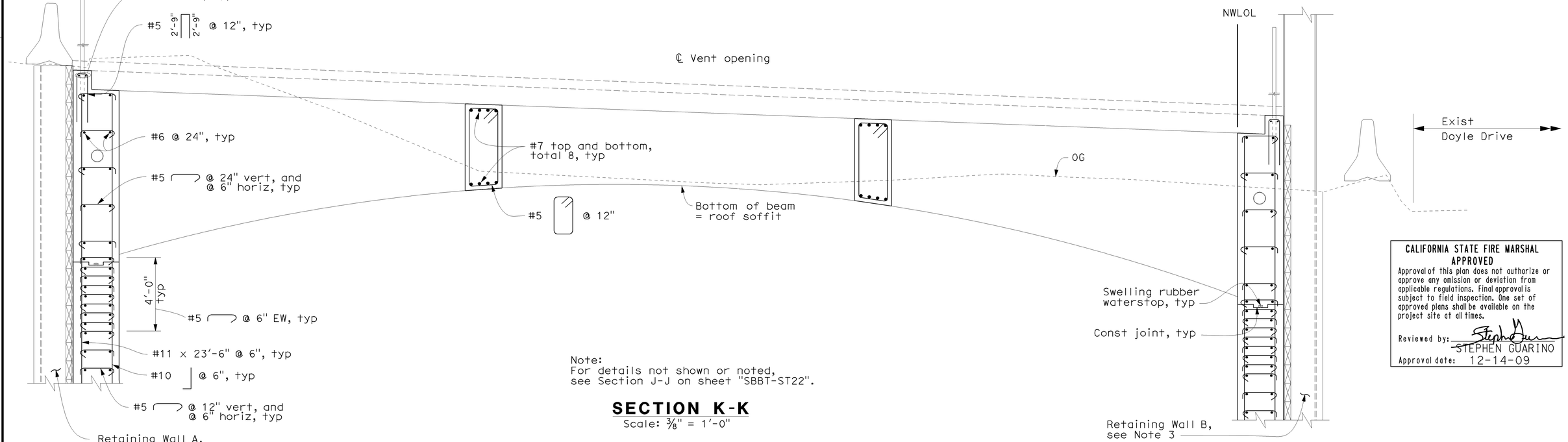

Note:
For details not shown or noted, see Section J-J on sheet "SBBT-ST22".

SECTION K-K

Scale: 3/8" = 1'-0"

CALIFORNIA STATE FIRE MARSHAL APPROVED

Approval of this plan does not authorize or approve any omission or deviation from applicable regulations. Final approval is subject to field inspection. One set of approved plans shall be available on the project site at all times.

Reviewed by: STEPHEN GUARINO

Approval date: 12-14-09

SBBT-ST23

DIST	COUNTY	ROUTE	POST MILES TOTAL PROJECT	SHEET No	TOTAL SHEETS
04	SF	101	8.2/9.2	459	654

REGISTERED CIVIL ENGINEER — 10/30/09 DATE

12-14-09
PLANS APPROVAL DATE

REGISTERED PROFESSIONAL ENGINEER — Qiyu Liu — No. C-58082 — Exp. 6/30/10 — CIVIL — STATE OF CALIFORNIA

The State of California or its officers or agents shall not be responsible for the accuracy or completeness of scanned copies of this plan sheet.

Arup PB Joint Venture
560 Mission Street, Suite 700
San Francisco, CA 94105

DESIGN	BY H. LEE	CHECKED M. YUCEKUL	PREPARED FOR THE STATE OF CALIFORNIA DEPARTMENT OF TRANSPORTATION
DETAILS	BY E. SUDHAUSEN	CHECKED M. YUCEKUL	
QUANTITIES	BY W. ASHWOOD	CHECKED J. YANG	

QIYU LIU
PROJECT ENGINEER

BRIDGE NO. 34-0161L
POST MILES 9.0/9.2

SOUTHBOUND BATTERY TUNNEL
VENTILATION OPENING DETAILS NO.2

DESIGN DETAIL SHEET (ENGLISH) (REV. 06-01-09)

ORIGINAL SCALE IN INCHES FOR REDUCED PLANS 0 1 2 3

CU 04
EA 163741

DISREGARD PRINTS BEARING EARLIER REVISION DATES →

REVISION DATES (PRELIMINARY STAGE ONLY): 06/30/09 07/15/09 08/14/09 09/14/09 10/30/09

SHEET 23 OF 72

FILE => 34-0161rl-st023.dgn

USERNAME => trlenard DATE PLOTTED => 14-DEC-2009 TIME PLOTTED => 15:20

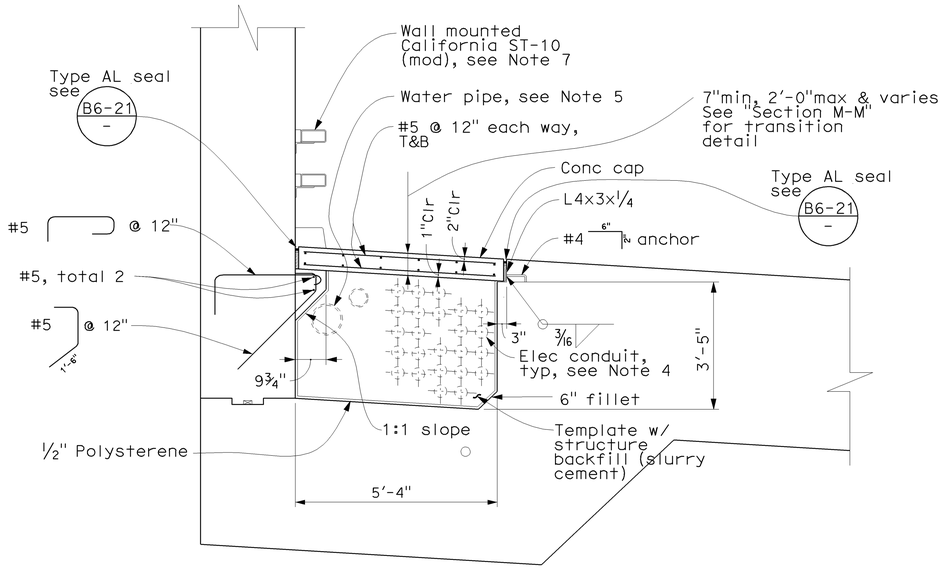

UTILITY DUCTBANK NO. 1 DETAIL

Scale: 1/2" = 1'-0"

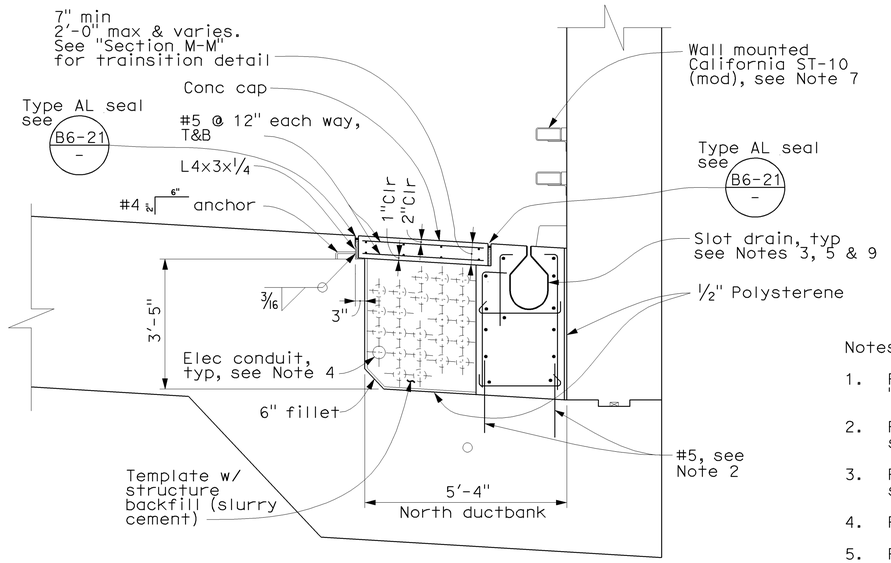

UTILITY DUCTBANK NO. 2 DETAIL

Scale: 1/2" = 1'-0"

DIST	COUNTY	ROUTE	POST MILES TOTAL PROJECT	SHEET No	TOTAL SHEETS
04	SF	101	8.2/9.2	460	654

REGISTERED CIVIL ENGINEER — 8/26/09 DATE

12-14-09
PLANS APPROVAL DATE

REGISTERED PROFESSIONAL ENGINEER — Qiyu Liu — No. C-58082 — Exp. 6/30/10 — CIVIL — STATE OF CALIFORNIA

The State of California or its officers or agents shall not be responsible for the accuracy or completeness of scanned copies of this plan sheet.

Arup PB Joint Venture
560 Mission Street, Suite 700
San Francisco, CA 94105

Notes:

1. For waterproofing termination detail see sheet "SBBT-ST39".
2. For typical invert slab reinforcement, see sheet "SBBT-ST17".
3. For reinforcing details of slot drain, see sheets "SBBT-ST17" and "SBBT-ST20".
4. For electrical conduits, see "Roadway" plans.
5. For layout and details of water pipes and stainless steel slot drain, see "Tunnel System" plans.
6. For concrete pavement, see "Roadway" plans.
7. For wall mounted Calfironia ST-10 (mod), see sheet "SBBT-ST44".
8. For locations of "Section M-M" and "Section N-N" see sheets "SBBT-ST8" and "SBBT-ST9".
9. For reinforcing details of drain interceptor, see sheet "SBBT-ST42".
10. For subdrain, see sheets "SBBT-ST40" and "SBBT-ST41".

CALIFORNIA STATE FIRE MARSHAL APPROVED

Approval of this plan does not authorize or approve any omission or deviation from applicable regulations. Final approval is subject to field inspection. One set of approved plans shall be available on the project site at all times.

Reviewed by: STEPHEN GUARINO

Approval date: 12-14-09

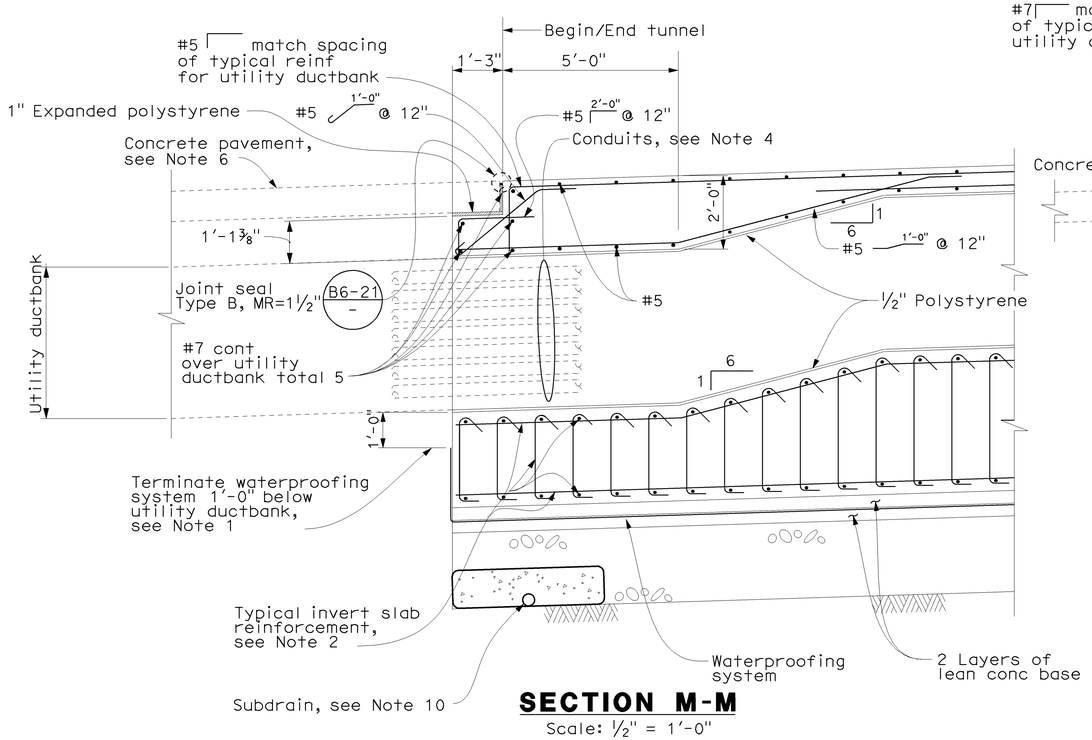

SECTION M-M

Scale: 1/2" = 1'-0"

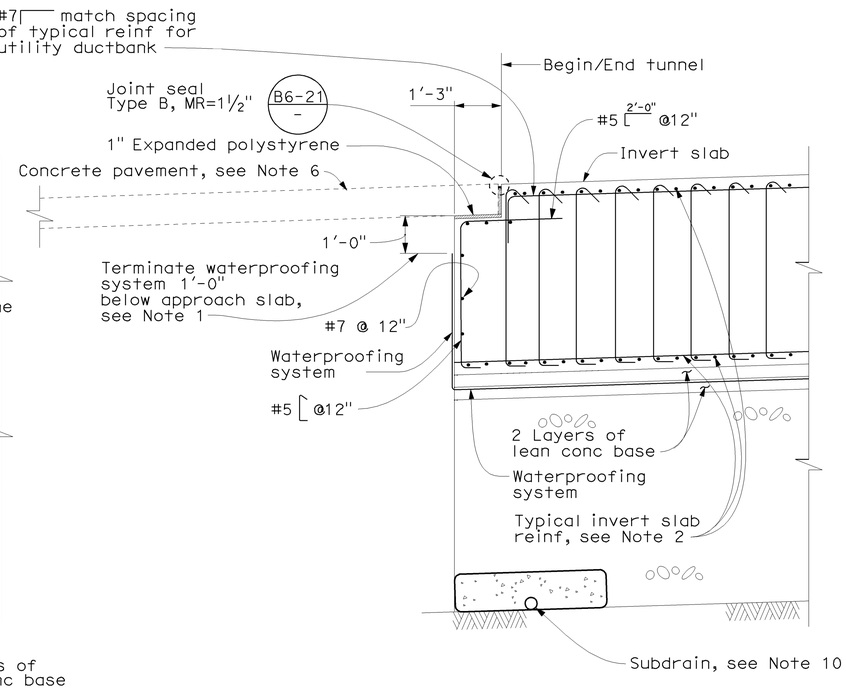

SECTION N-N

Scale: 1/2" = 1'-0"

SBBT-ST24

DESIGN	BY K. CLINCH	CHECKED M. YUCEKUL	PREPARED FOR THE STATE OF CALIFORNIA DEPARTMENT OF TRANSPORTATION	QIYU LIU, PROJECT ENGINEER	BRIDGE NO. 34-0161L; POST MILES 9.0/9.2
DETAILS	BY J. TAI	CHECKED M. YUCEKUL			
QUANTITIES	BY W. ASHWOOD	CHECKED J. YANG			

SOUTHBOUND BATTERY TUNNEL
INVERT SLAB DETAILS NO.1

DESIGN DETAIL SHEET (ENGLISH) (REV. 06-01-09)

ORIGINAL SCALE IN INCHES FOR REDUCED PLANS 0 1 2 3

CU 04
EA 163741

DISREGARD PRINTS BEARING EARLIER REVISION DATES

REVISION DATES (PRELIMINARY STAGE ONLY): 06/05/09 | 07/15/09 | 08/07/09 | 08/26/09

SHEET 24 OF 72

FILE => 34-0161r1-st024.dgn

DATE PLOTTED => #DATE# TIME PLOTTED => #TIME# USERNAME => #USER#

DIST	COUNTY	ROUTE	POST MILES TOTAL PROJECT	SHEET No	TOTAL SHEETS
04	SF	101	8.2/9.2	461	654

REGISTERED CIVIL ENGINEER — 8/26/09 DATE

12-14-09
PLANS APPROVAL DATE

REGISTERED PROFESSIONAL ENGINEER — Qiyu Liu — No. C-58082 — Exp. 6/30/10 — CIVIL — STATE OF CALIFORNIA

The State of California or its officers or agents shall not be responsible for the accuracy or completeness of scanned copies of this plan sheet.

Arup PB Joint Venture
560 Mission Street, Suite 700
San Francisco, CA 94105

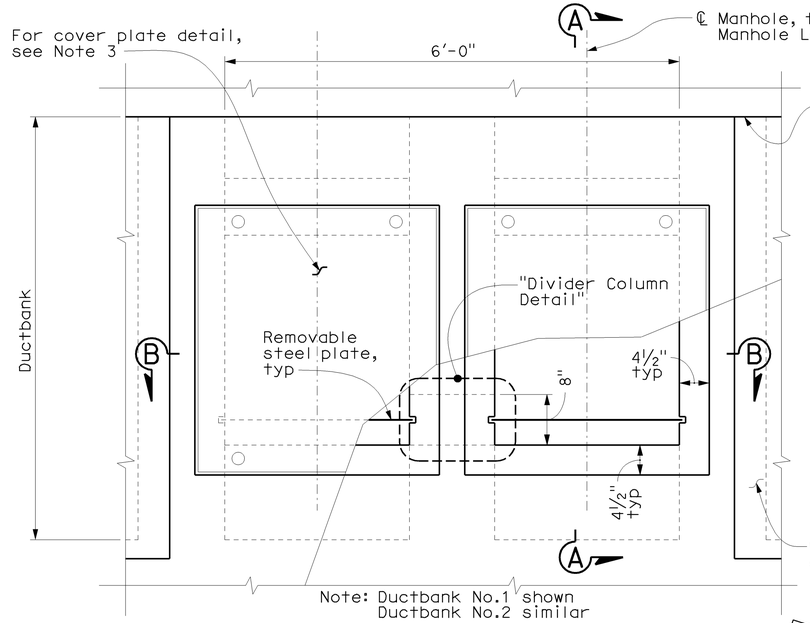

ELECTRICAL MANHOLE DETAIL
Scale: 1"=1'-0"

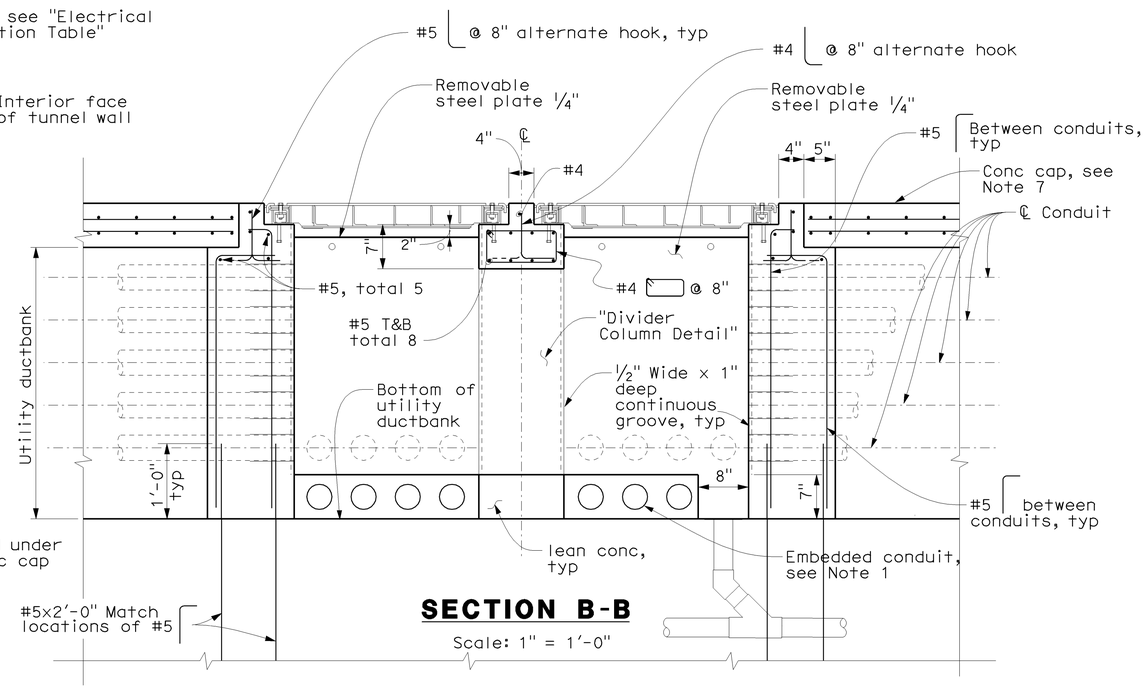

SECTION B-B
Scale: 1" = 1'-0"

Notes:

1. For electric conduit layout, see "Roadway" plan.
2. For layout and details of water pipes, slot drains and drain pipes, see "Tunnel System" plan.
3. For cover plate detail, see sheet "SBBT-ST26".
4. For wall mounted Calfironia ST-10 (mod), see sheet "SBBT-ST44".
5. For locations of "Electrical Manhole Detail", see sheets "SBBT-ST8 and "SBBT-ST9".
6. Electrical manhole cover shall be galvanized after fabrication.
7. For conc cap details, see "Utility Ductbank No.1 Detail" and "Utility Ductbank No.2 Detail" on sheet "SBBT-ST24".

ELECTRICAL MANHOLE LOCATION TABLE				
NICHE	STA @ ℄	NICHE	STA @ ℄	
EN1	76+42.00	EN10	81+02.00	
EN2	76+50.00	EN11	82+12.00	
EN3	76+92.00	EN12	83+26.00	
EN4	77+00.00	EN13	84+36.00	
EN5	77+52.00	EN14	84+44.00	
EN6	77+60.00	EN15	84+96.00	
EN7	78+70.00	EN16	85+04.00	
EN8	79+84.00	EN17	85+46.00	
EN9	80+94.00	EN18	85+54.00	

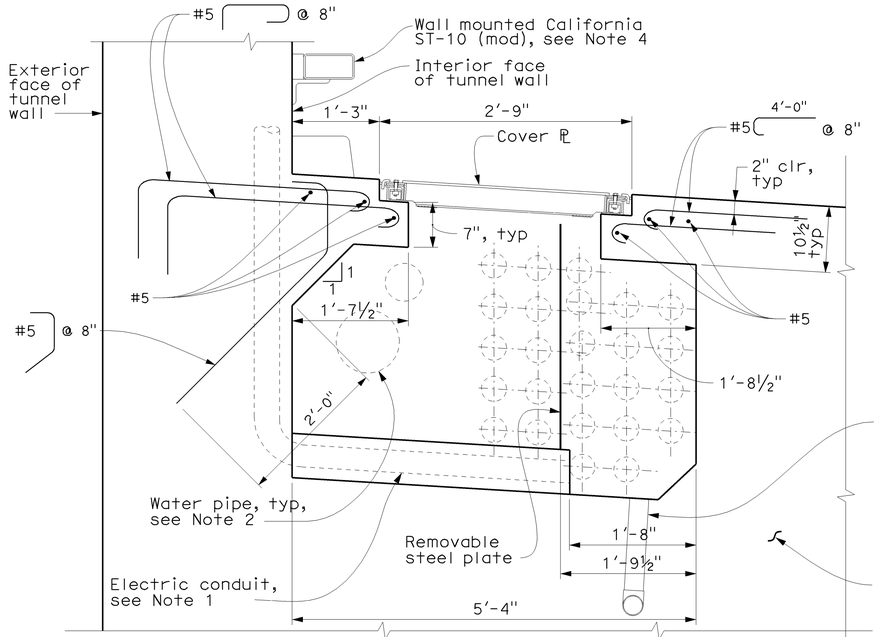

UTILITY DUCTBANK NO.1

SECTION A-A
Scale: 1"=1'-0"

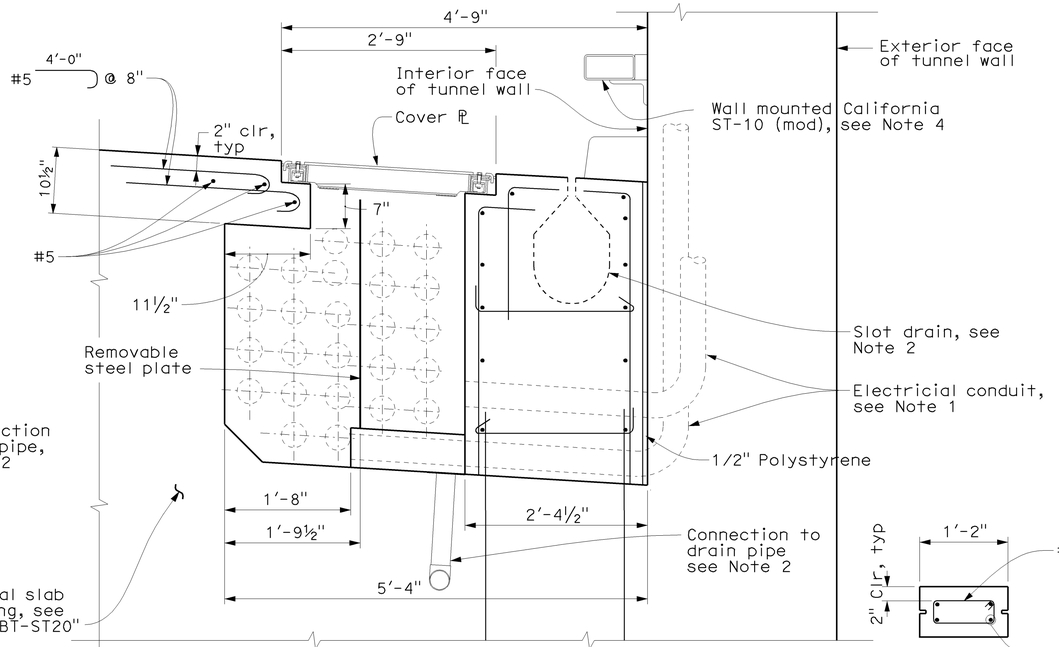

UTILITY DUCTBANK NO.2

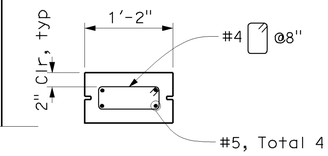

DIVIDER COLUMN DETAIL
Scale: 1" = 1'-0"

CALIFORNIA STATE FIRE MARSHAL APPROVED

Approval of this plan does not authorize or approve any omission or deviation from applicable regulations. Final approval is subject to field inspection. One set of approved plans shall be available on the project site at all times.

Reviewed by: STEPHEN GUARINO
Approval date: 12-14-09

SBBT-ST25

DESIGN	BY K. CLINCH	CHECKED M. YUCEKUL	PREPARED FOR THE STATE OF CALIFORNIA DEPARTMENT OF TRANSPORTATION	QIYU LIU PROJECT ENGINEER	BRIDGE NO. 34-0161L
DETAILS	BY E.CANTILLER	CHECKED M. YUCEKUL			POST MILES
QUANTITIES	BY W. ASHWOOD	CHECKED J. YANG			

SOUTHBOUND BATTERY TUNNEL
INVERT SLAB DETAILS NO.2

DESIGN DETAIL SHEET (ENGLISH) (REV. 06-01-09)

ORIGINAL SCALE IN INCHES FOR REDUCED PLANS 0 1 2 3

CU 04
EA 163741

DISREGARD PRINTS BEARING EARLIER REVISION DATES

REVISION DATES (PRELIMINARY STAGE ONLY): 06/05/09 07/15/09 08/07/09 08/26/09

SHEET 25 OF 72

FILE => 34-0161rl-st025.dgn

USERNAME => $USER$ DATE PLOTTED => $DATE$ TIME PLOTTED => $TIME$

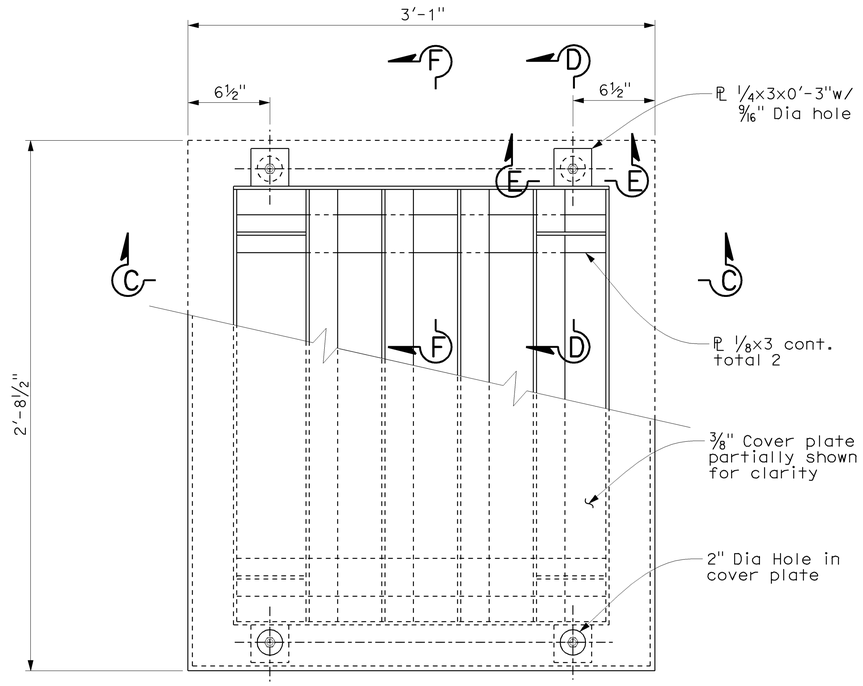

COVER PLATE DETAIL
Scale: 2" = 1'-0"

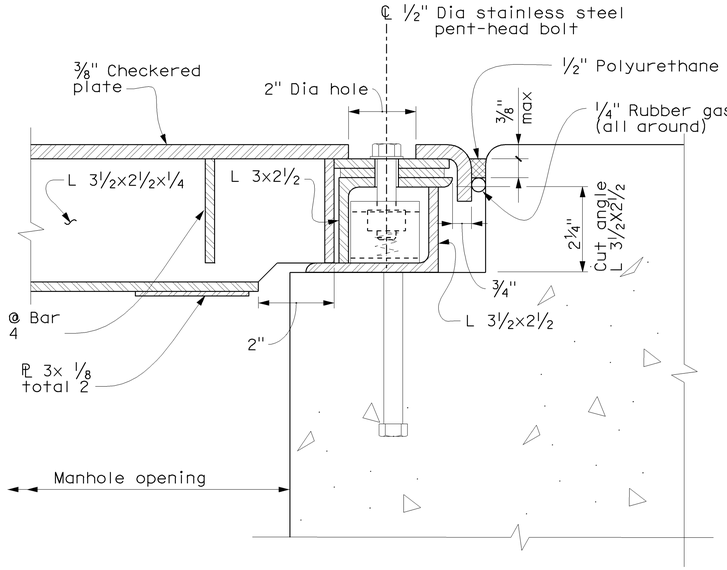

SECTION D-D
Scale: 6" = 1'-0"

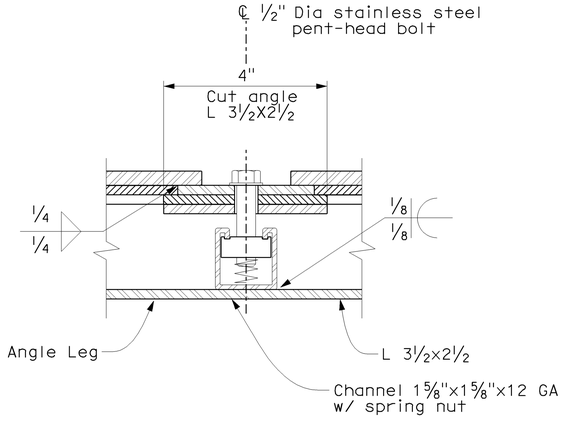

SECTION E-E
Scale: 6" = 1'-0"

Note: For location of "Cover Plate Detail", see "Electrical Manhole Detail" on sheet "SBBT-ST25".

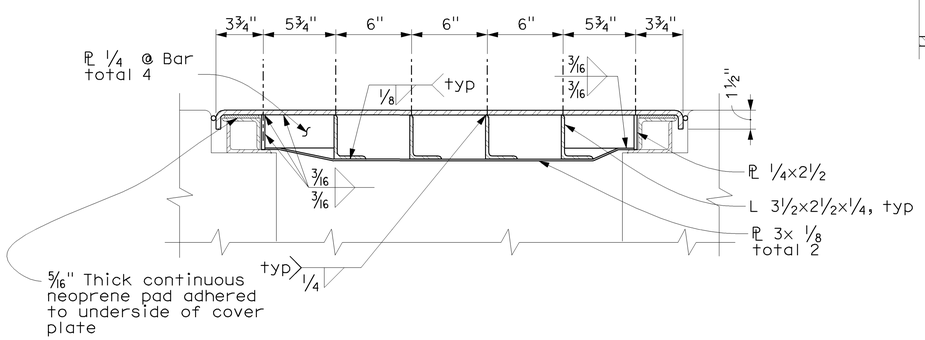

SECTION C-C
Scale: 2" = 1'-0"

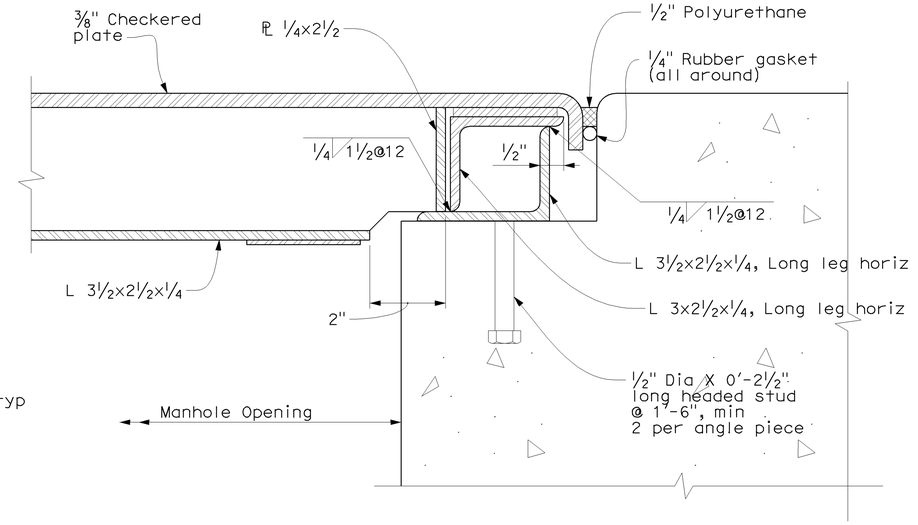

SECTION F-F
Scale: 6" = 1'-0"

DIST	COUNTY	ROUTE	POST MILES TOTAL PROJECT	SHEET No	TOTAL SHEETS
04	SF	101	8.2/9.2	462	654

CALIFORNIA STATE FIRE MARSHAL APPROVED
Approval of this plan does not authorize or approve any omission or deviation from applicable regulations. Final approval is subject to field inspection. One set of approved plans shall be available on the project site at all times.
Reviewed by: STEPHEN GUARINO
Approval date: 12-14-09

REGISTERED CIVIL ENGINEER — 8/26/09 DATE

12-14-09
PLANS APPROVAL DATE

REGISTERED PROFESSIONAL ENGINEER — Qiyu Liu — No. C-58082 — Exp. 6/30/10 — CIVIL — STATE OF CALIFORNIA

The State of California or its officers or agents shall not be responsible for the accuracy or completeness of scanned copies of this plan sheet.

Arup PB Joint Venture
560 Mission Street, Suite 700
San Francisco, CA 94105

SBBT-ST26

DESIGN	BY K. CLINCH	CHECKED M. YUCEKUL	PREPARED FOR THE STATE OF CALIFORNIA DEPARTMENT OF TRANSPORTATION	QIYU LIU PROJECT ENGINEER	BRIDGE NO. 34-0161L
DETAILS	BY E.CANTILLER	CHECKED M. YUCEKUL			POST MILES
QUANTITIES	BY W. ASHWOOD	CHECKED J. YANG			

SOUTHBOUND BATTERY TUNNEL
INVERT SLAB DETAILS NO.3

DESIGN DETAIL SHEET (ENGLISH) (REV. 06-01-09)

ORIGINAL SCALE IN INCHES FOR REDUCED PLANS 0 1 2 3

CU 04
EA 163741

DISREGARD PRINTS BEARING EARLIER REVISION DATES →

REVISION DATES (PRELIMINARY STAGE ONLY): 06/05/09 07/01/09 08/05/09 08/26/09

SHEET 26 OF 72

FILE => 34-0161r1-st026.dgn

USERNAME => #USER# DATE PLOTTED => #DATE# TIME PLOTTED => #TIME#

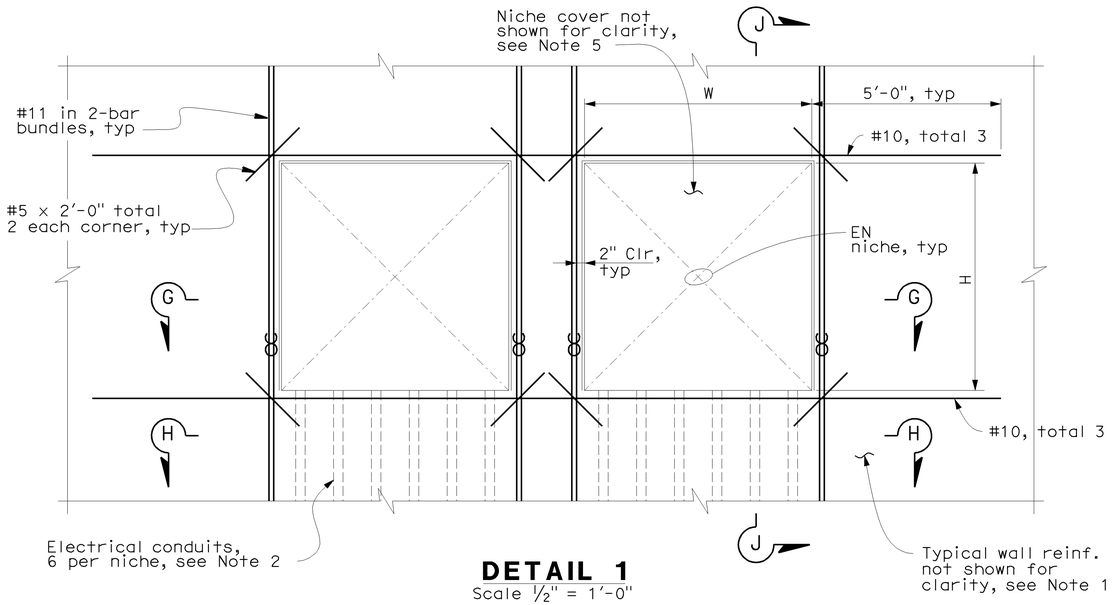

DETAIL 1
Scale ½" = 1'-0"

ELECTRICAL NICHES

NICHE	STA @ ℄	Size (WxHxD)
EN1	76+42.00	6'-0" x 6'-0" x 1'-0"
EN2	76+50.00	6'-0" x 6'-0" x 1'-0"
EN3	76+92.00	6'-0" x 6'-0" x 1'-0"
EN4	77+00.00	6'-0" x 6'-0" x 1'-0"
EN5	77+52.00	6'-0" x 6'-0" x 1'-0"
EN6	77+60.00	6'-0" x 6'-0" x 1'-0"
EN7	78+70.00	6'-0" x 6'-0" x 1'-0"
EN8	79+84.00	6'-0" x 6'-0" x 1'-0"
EN9	80+94.00	6'-0" x 6'-0" x 1'-0"
EN10	81+02.00	6'-0" x 6'-0" x 1'-0"
EN11	82+12.00	6'-0" x 6'-0" x 1'-0"
EN12	83+26.00	6'-0" x 6'-0" x 1'-0"
EN13	84+36.00	6'-0" x 6'-0" x 1'-0"
EN14	84+44.00	6'-0" x 6'-0" x 1'-0"
EN15	84+96.00	6'-0" x 6'-0" x 1'-0"
EN16	85+04.00	6'-0" x 6'-0" x 1'-0"
EN17	85+46.00	6'-0" x 6'-0" x 1'-0"
EN18	85+54.00	6'-0" x 6'-0" x 1'-0"

MECHANICAL NICHES

NICHE	STA @ ℄	Size (WxHxD)
FHVC BS1	77+10.00	3'-0" x 3'-0" x 1'-0"
DVC BS1	77+21.00	7'-6" x 5'-0" x 2'-0"
FHVC BS2	78+83.35	3'-0" x 3'-0" x 1'-0"
DVC BS2	78+94.18	7'-6" x 5'-0" x 2'-0"
FHVC BS3	80+67.50	3'-0" x 3'-0" x 1'-0"
DVC BS3	80+80.25	7'-6" x 5'-0" x 2'-0"
FHVC BS4	82+65.25	3'-0" x 3'-0" x 1'-0"
DVC BS4	82+78.25	7'-6" x 5'-0" x 2'-0"
FHVC BS5	84+57.51	3'-0" x 3'-0" x 1'-0"
DVC BS5	84+70.26	7'-6" x 5'-0" x 2'-0"

CALL BOX NICHES

NICHE	STA @ ℄	Size (WxHxD)
CB1	76+34.00	2'-4" x 2'-7" x 0'-8"
CB2	78+62.00	2'-4" x 2'-7" x 0'-8"
CB3	81+10.00	2'-4" x 2'-7" x 0'-8"
CB4	83+34.00	2'-4" x 2'-7" x 0'-8"
CB5	85+62.00	2'-4" x 2'-7" x 0'-8"

Notes:

1. For typical reinforcement, see sheet "SBBT-ST20".
2. For electrical conduit layout, see "Roadway" plans.
3. For standpipe layout, see "Tunnel System" plans.
4. For wall mounted Calfironia ST-10 (mod) details, see sheet SBBT-ST44.
5. For niche cover details, see "Architectural" plans.
6. For locations of "Detail 1" and "Detail 2", see sheets "SBBT-ST8 and "SBBT-ST9".

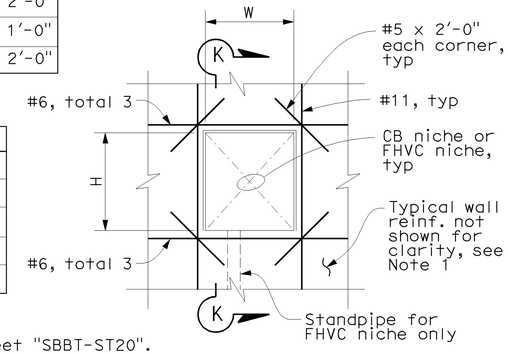

DETAIL 2
Scale ½" = 1'-0"

Note:
Double niches shown.
Single niche similar.

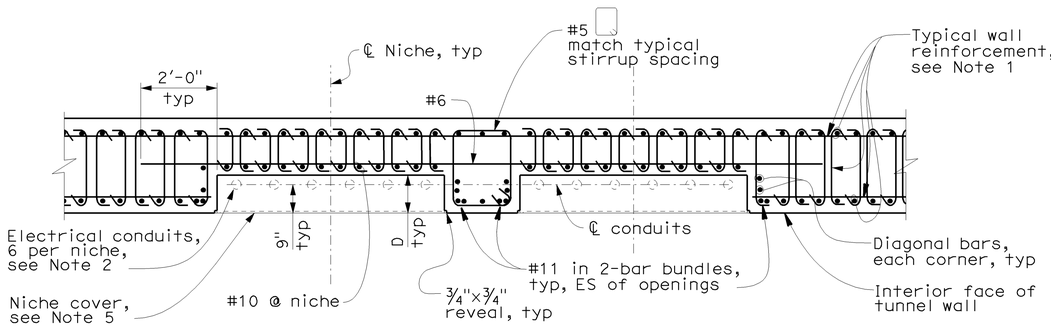

SECTION G-G
Scale ½" = 1'-0"

Note:
Double niches shown.
Single niche similar.

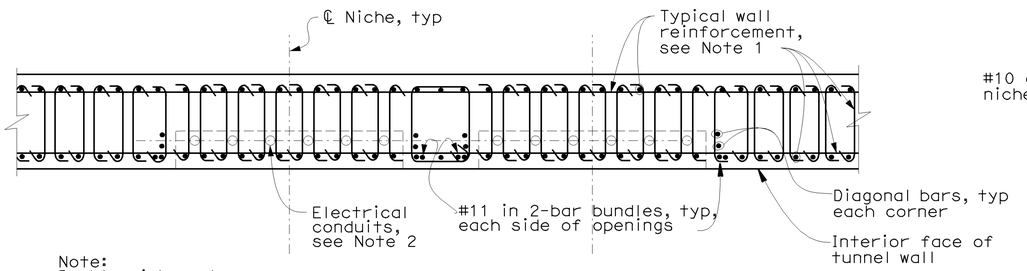

Note:
Double niches shown.
Single niche similar.

For detail not noted, see "Section G-G"

SECTION H-H
Scale ½" = 1'-0"

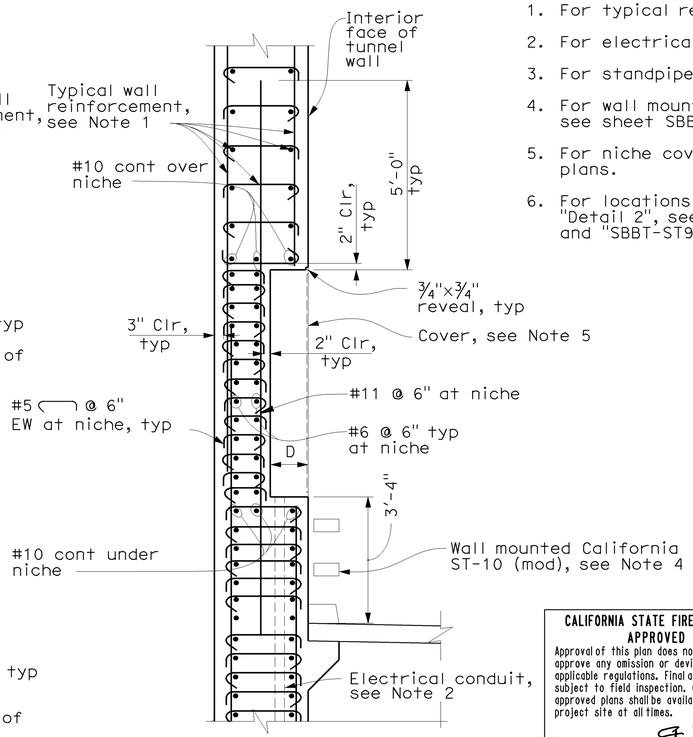

SECTION J-J
Scale ½" = 1'-0"

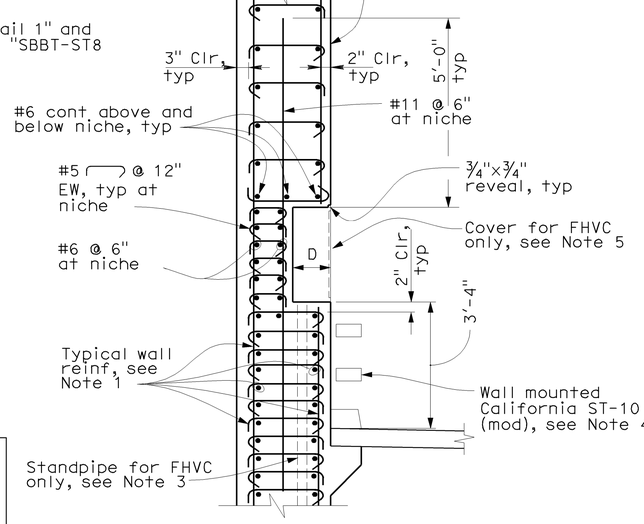

SECTION K-K
Scale ½" = 1'-0"

CALIFORNIA STATE FIRE MARSHAL APPROVED
Approval of this plan does not authorize or approve any omission or deviation from applicable regulations. Final approval is subject to field inspection. One set of approved plans shall be available on the project site at all times.
Reviewed by: STEPHEN GUARINO
Approval date: 12-14-09

DIST	COUNTY	ROUTE	POST MILES TOTAL PROJECT	SHEET No	TOTAL SHEETS
04	SF	101	8.2/9.2	463	654

REGISTERED CIVIL ENGINEER — 10/30/09 DATE
12-14-09 PLANS APPROVAL DATE
REGISTERED PROFESSIONAL ENGINEER — Qiyu Liu — No. C-58082 — Exp. 6/30/10 — CIVIL — STATE OF CALIFORNIA
The State of California or its officers or agents shall not be responsible for the accuracy or completeness of scanned copies of this plan sheet.

Arup PB Joint Venture
560 Mission Street, Suite 700
San Francisco, CA 94105

SBBT-ST27

DESIGN	BY Q. LIU	CHECKED M. YUCEKUL	PREPARED FOR THE STATE OF CALIFORNIA DEPARTMENT OF TRANSPORTATION	QIYU LIU PROJECT ENGINEER	BRIDGE NO. 34-0161L
DETAILS	BY T. MARTARELLA	CHECKED M. YUCEKUL			POST MILES 9.0/9.2
QUANTITIES	BY W. ASHWOOD	CHECKED J. YANG			

SOUTHBOUND BATTERY TUNNEL
WALL DETAILS NO.1

DESIGN DETAIL SHEET (ENGLISH) (REV. 06-01-09)
ORIGINAL SCALE IN INCHES FOR REDUCED PLANS 0 1 2 3
CU 04 EA 163741
DISREGARD PRINTS BEARING EARLIER REVISION DATES
REVISION DATES (PRELIMINARY STAGE ONLY): 06/30/09 | 07/15/09 | 08/07/09 | 09/25/09 | 10/30/09
SHEET 27 OF 72
FILE => 34-0161rl-st027.dgn
USERNAME => trlenard DATE PLOTTED => 14-DEC-2009 TIME PLOTTED => 15:20

LEGEND:

Indicates lean concrete removal

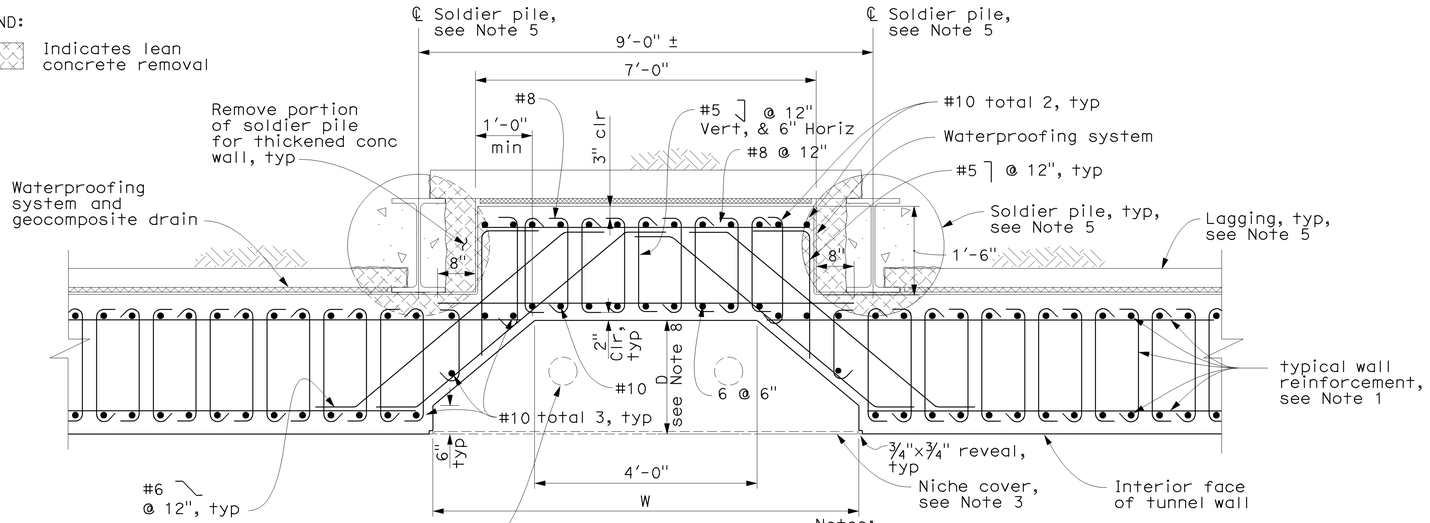

SECTION L-L

Scale: ¾" =1'-0"

Notes:

1. For typical reinf details not noted, see sheet "SBBT-ST20".
2. For layout and details of standpipes and sprinkler supply pipes, see "Tunnel System" plans.
3. For details of niche cover ℙ, see "Architectural" plans.
4. For details of wall mounted California ST-10 (mod), see sheet "SBBT-ST44".
5. For soldier piles and laggings, see "Retaining Wall A & B" plans.
6. For locations of "Detail 3" and "Detail 4", see sheets "SBBT-ST8" and "SBBT-ST9".
7. For details of recess cover ℙ, see "Architectural" plans.
8. For dimensions of niches, see "Mechanical Niches" table on sheet "SBBT-27".

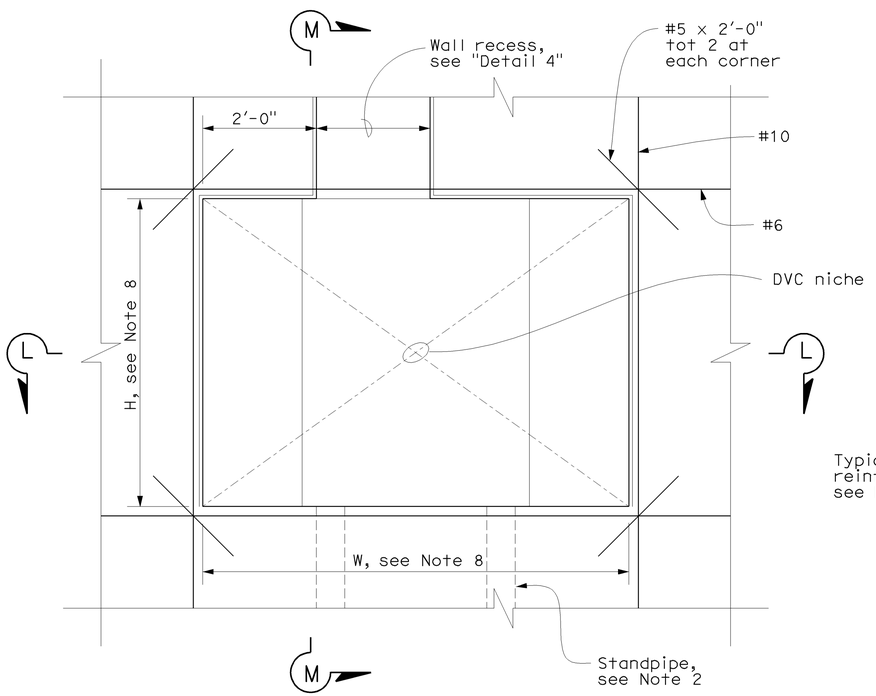

DETAIL 3

Scale: ¾" =1'-0"

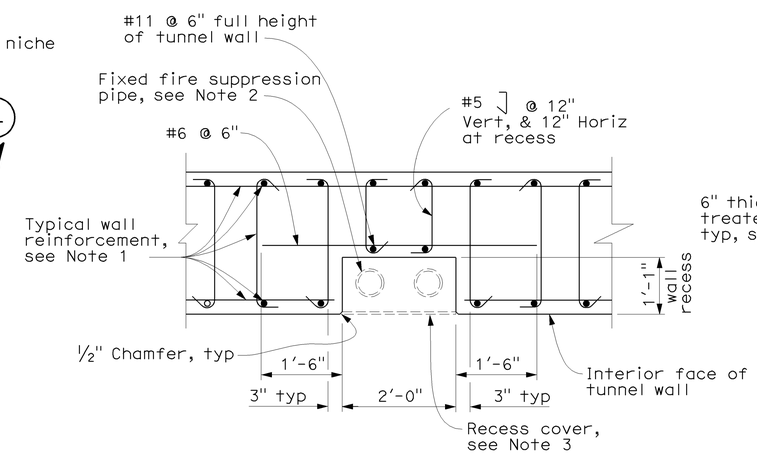

DETAIL 4

Scale: ¾" =1'-0"

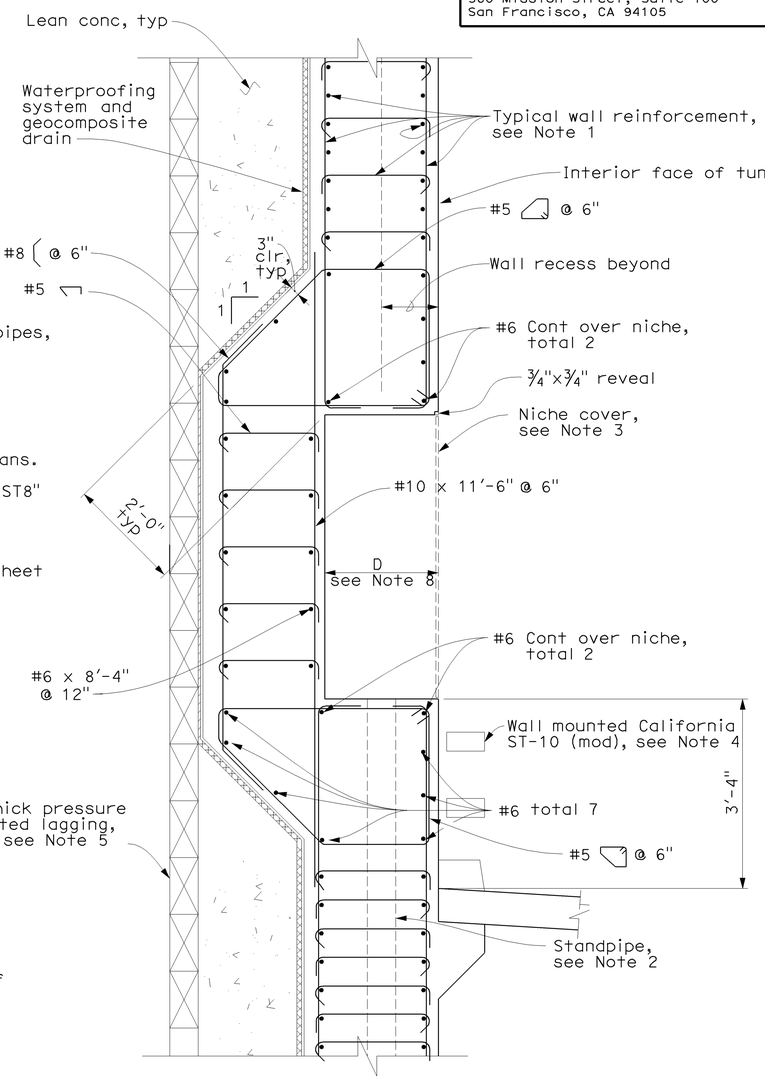

SECTION M-M

Scale: ¾" =1'-0"

CALIFORNIA STATE FIRE MARSHAL APPROVED

Approval of this plan does not authorize or approve any omission or deviation from applicable regulations. Final approval is subject to field inspection. One set of approved plans shall be available on the project site at all times.

Reviewed by: STEPHEN GUARINO

Approval date: 12-14-09

DIST	COUNTY	ROUTE	POST MILES TOTAL PROJECT	SHEET No	TOTAL SHEETS
04	SF	101	8.2/9.2	464	654

REGISTERED CIVIL ENGINEER 10/30/09 DATE

12-14-09 PLANS APPROVAL DATE

REGISTERED PROFESSIONAL ENGINEER Qiyu Liu No. C-58082 Exp. 6/30/10 CIVIL STATE OF CALIFORNIA

The State of California or its officers or agents shall not be responsible for the accuracy or completeness of scanned copies of this plan sheet.

Arup PB Joint Venture
560 Mission Street, Suite 700
San Francisco, CA 94105

SBBT-ST28

DESIGN	BY Q. LIU	CHECKED M. YUCEKUL	PREPARED FOR THE STATE OF CALIFORNIA DEPARTMENT OF TRANSPORTATION	QIYU LIU PROJECT ENGINEER	BRIDGE NO. 34-0161L
DETAILS	BY E.SUDHAUSEN	CHECKED M. YUCEKUL			POST MILES 9.0/9.2
QUANTITIES	BY W. ASHWOOD	CHECKED J. YANG			

SOUTHBOUND BATTERY TUNNEL
WALL DETAILS NO.2

DESIGN DETAIL SHEET (ENGLISH) (REV. 06-01-09)

ORIGINAL SCALE IN INCHES FOR REDUCED PLANS 0 1 2 3

CU 04
EA 163741

DISREGARD PRINTS BEARING EARLIER REVISION DATES

REVISION DATES (PRELIMINARY STAGE ONLY) 06/01/09 07/15/09 08/07/09 08/28/09 10/30/09

SHEET 28 OF 72

FILE => 34-0161rl-st028.dgn

USERNAME => trlenard DATE PLOTTED => 14-DEC-2009 TIME PLOTTED => 15:20

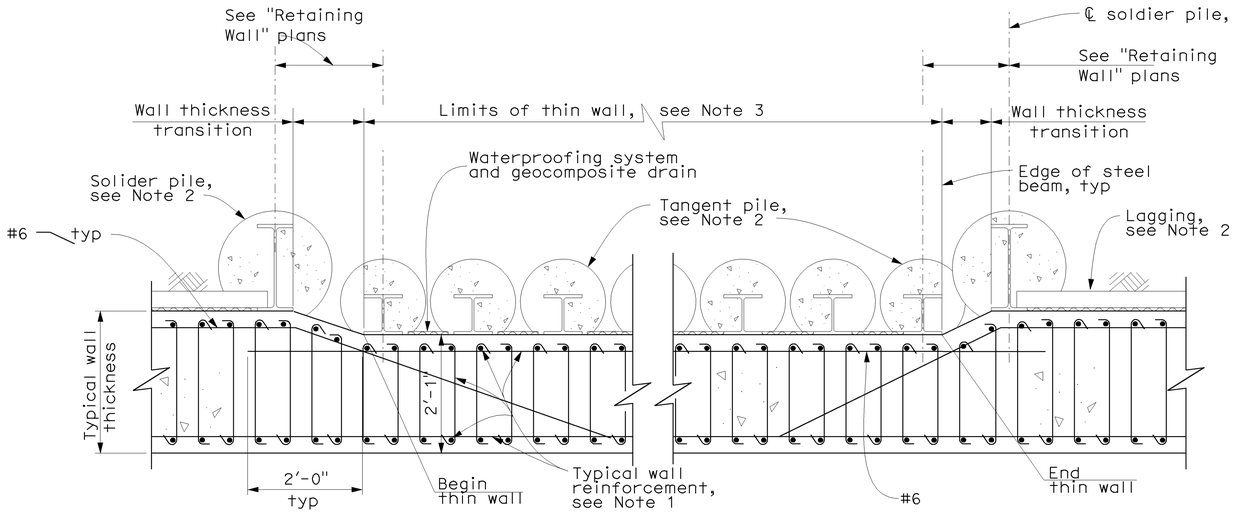

WALL TRANSITION DETAIL

Scale: 3/4" = 1'-0"

Notes:

1. For typical reinforcement details not noted, see sheet "SBBT-ST20" and "SBBT-ST37"
2. For soldier piles, tangent piles and lagging, see "Retaining Wall A & B" plans.
3. For location of "Wall Transition Detail" and limits of thin wall, see sheet "SBBT-ST9".
4. Coordinate location of post pocket with safety railing plate. See "Architectural" plans.
5. For limits of narrow parapet, see sheet "SBBT-ST9".
6. For typical reinforcement details not noted, see sheet "SBBT-ST17".

DIST	COUNTY	ROUTE	POST MILES TOTAL PROJECT	SHEET No	TOTAL SHEETS
04	SF	101	8.2/9.2	465	654

REGISTERED CIVIL ENGINEER — 10/30/09 DATE

12-14-09
PLANS APPROVAL DATE

REGISTERED PROFESSIONAL ENGINEER — Qiyu Liu — No. C-58082 — Exp. 6/30/10 — CIVIL — STATE OF CALIFORNIA

The State of California or its officers or agents shall not be responsible for the accuracy or completeness of scanned copies of this plan sheet.

Arup PB Joint Venture
560 Mission Street, Suite 700
San Francisco, CA 94105

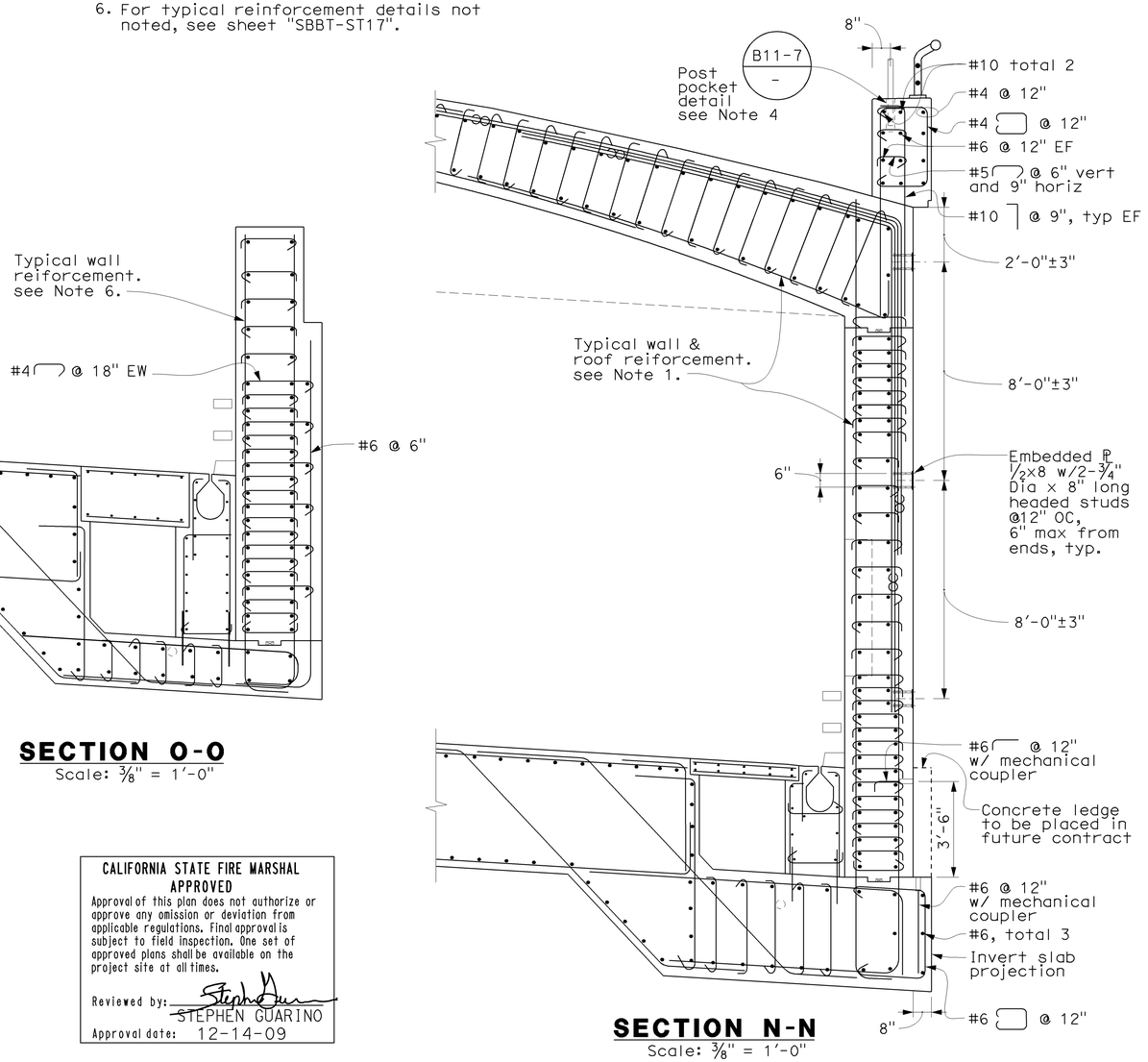

SECTION N-N

Scale: 3/8" = 1'-0"

SECTION O-O

Scale: 3/8" = 1'-0"

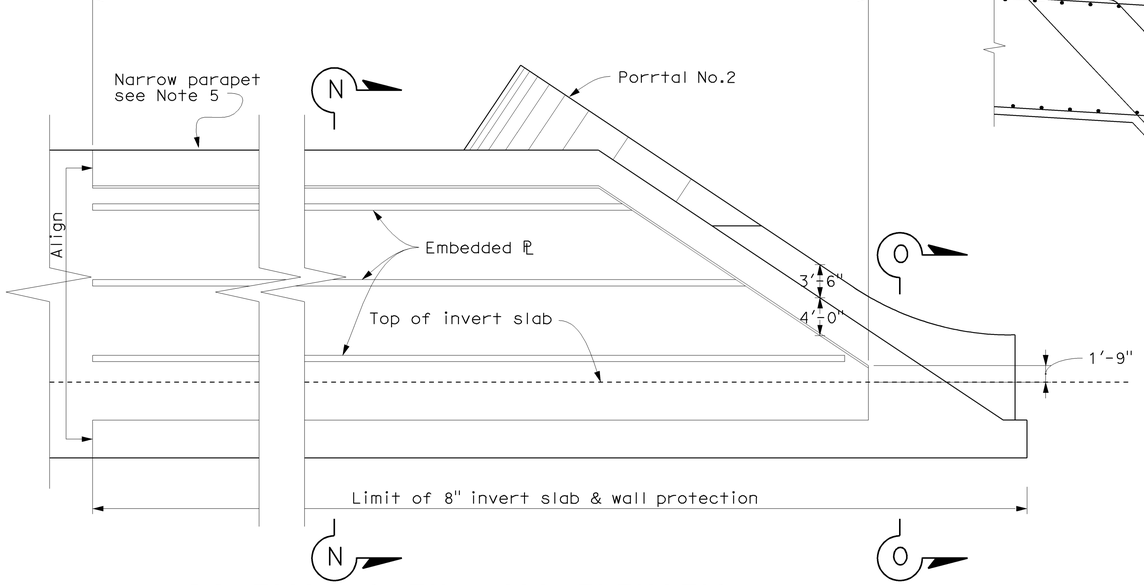

PARTIAL NORTH WALL ELEVATION

Scale: 1/8" = 1'-0"

CALIFORNIA STATE FIRE MARSHAL APPROVED

Approval of this plan does not authorize or approve any omission or deviation from applicable regulations. Final approval is subject to field inspection. One set of approved plans shall be available on the project site at all times.

Reviewed by: STEPHEN GUARINO

Approval date: 12-14-09

SBBT-ST29

DESIGN	BY Y. REN	CHECKED M. YUCEKUL	PREPARED FOR THE STATE OF CALIFORNIA DEPARTMENT OF TRANSPORTATION	QIYU LIU PROJECT ENGINEER	BRIDGE NO. 34-0161L / POST MILES 9.0/9.2
DETAILS	BY T. MARTARELLA	CHECKED M. YUCEKUL			
QUANTITIES	BY W. ASHWOOD	CHECKED J. YANG			

SOUTHBOUND BATTERY TUNNEL
WALL DETAILS NO.3

DESIGN DETAIL SHEET (ENGLISH) (REV. 06-01-09)

ORIGINAL SCALE IN INCHES FOR REDUCED PLANS 0 1 2 3

CU 04
EA 163741

DISREGARD PRINTS BEARING EARLIER REVISION DATES

REVISION DATES (PRELIMINARY STAGE ONLY): 06/01/09 | 07/10/09 | 08/07/09 | 10/30/09

SHEET 29 OF 72

FILE => 34-0161rl-st029.dgn

USERNAME => rriehord DATE PLOTTED => 14-DEC-2009 TIME PLOTTED => 15:21

DIST	COUNTY	ROUTE	POST MILES TOTAL PROJECT	SHEET No	TOTAL SHEETS
04	SF	101	8.2/9.2	466	654

REGISTERED CIVIL ENGINEER — 8/26/09 DATE

12-14-09
PLANS APPROVAL DATE

REGISTERED PROFESSIONAL ENGINEER — Qiyu Liu — No. C-58082 — Exp. 6/30/10 — CIVIL — STATE OF CALIFORNIA

The State of California or its officers or agents shall not be responsible for the accuracy or completeness of scanned copies of this plan sheet.

CALIFORNIA STATE FIRE MARSHAL APPROVED

Approval of this plan does not authorize or approve any omission or deviation from applicable regulations. final approval is subject to field inspection. One set of approved plans shall be available on the project site at all times.

Reviewed by: STEPHEN GUARINO

Approval date: 12-14-09

Arup PB Joint Venture
560 Mission Street, Suite 700
San Francisco, CA 94105

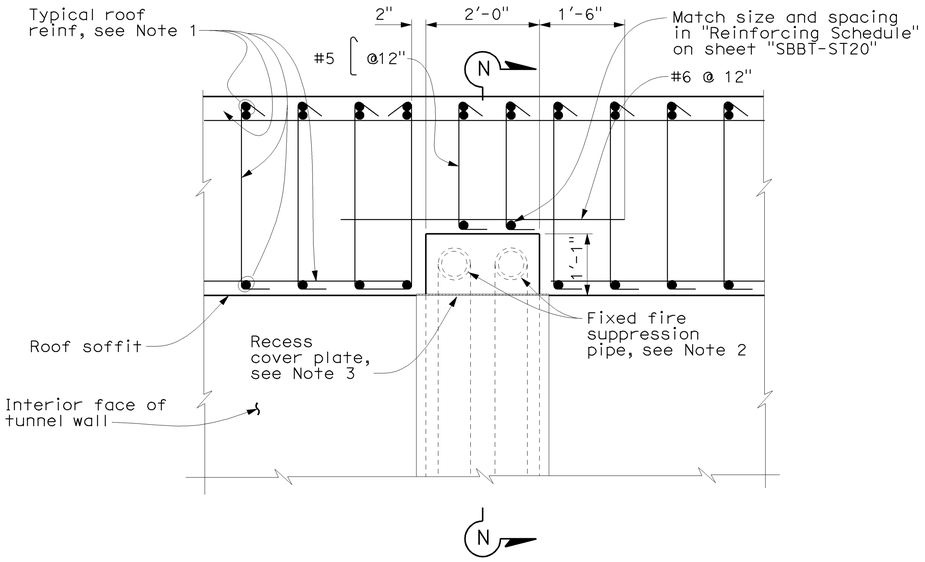

DETAIL 5
Scale: 3/4" = 1'0"

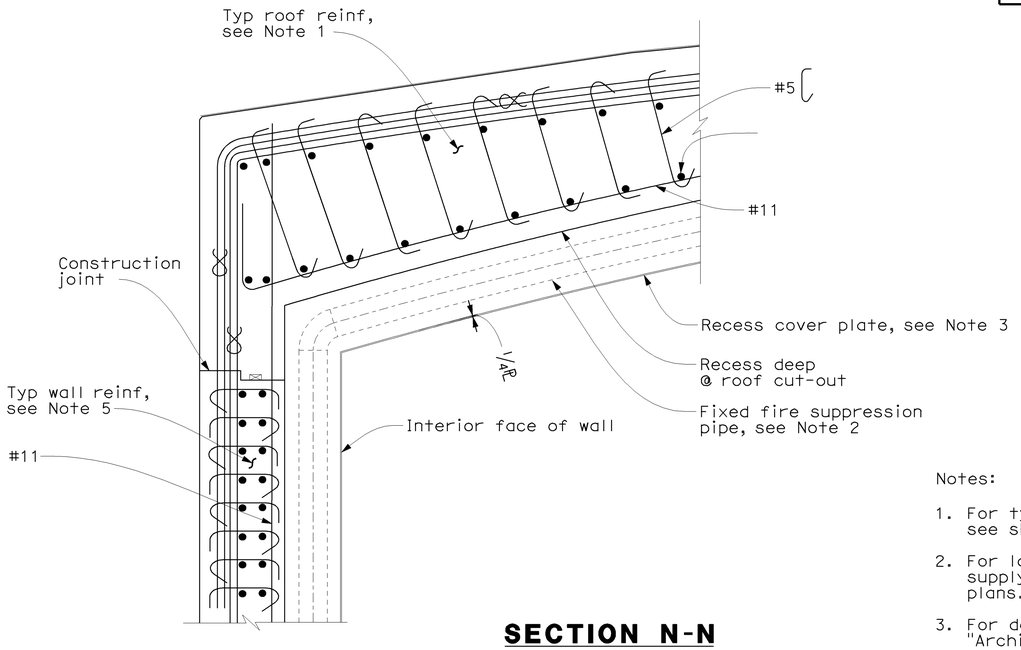

SECTION N-N
Scale: 3/4" = 1'0"

Notes:

1. For typical roof reinforcement details, see sheet "SBBT-ST20"
2. For layout and details of sprinkler supply pipe, see "Tunnel System" plans.
3. For details of recess cover, see "Architectural" plans.
4. For locations of "Detail 5", see sheets "SBBT-ST8" and "SBBT-ST9".
5. For reinforcement at wall recess, see "Detail 4" on sheet "SBBT-ST28".

SBBT-ST30

DESIGN	BY Y. REN	CHECKED M. YUCEKUL	PREPARED FOR THE STATE OF CALIFORNIA DEPARTMENT OF TRANSPORTATION	QIYU LIU, PROJECT ENGINEER	BRIDGE NO. 34-0161L; POST MILES 9.0/9.2
DETAILS	BY E.SUDHAUSEN	CHECKED M. YUCEKUL			
QUANTITIES	BY W. ASHWOOD	CHECKED J. YANG			

SOUTHBOUND BATTERY TUNNEL
ROOF DETAILS NO.1

DESIGN DETAIL SHEET (ENGLISH) (REV. 06-01-09)

ORIGINAL SCALE IN INCHES FOR REDUCED PLANS 0 1 2 3

CU 04
EA 163741

DISREGARD PRINTS BEARING EARLIER REVISION DATES →

REVISION DATES (PRELIMINARY STAGE ONLY): 06/01/09 | 07/15/09 | 08/07/09 | 08/26/09

SHEET 30 OF 72

FILE => 34-0161r1-st030.dgn

USERNAME => #USER# DATE PLOTTED => #DATE# TIME PLOTTED => #TIME#

DIST	COUNTY	ROUTE	POST MILES TOTAL PROJECT	SHEET No	TOTAL SHEETS
04	SF	101	8.2/9.2	467	654

REGISTERED CIVIL ENGINEER — 9/18/09 DATE

12-14-09
PLANS APPROVAL DATE

REGISTERED PROFESSIONAL ENGINEER — Qiyu Liu — No. C-58082 — Exp. 6/30/10 — CIVIL — STATE OF CALIFORNIA

The State of California or its officers or agents shall not be responsible for the accuracy or completeness of scanned copies of this plan sheet.

Arup PB Joint Venture
560 Mission Street, Suite 700
San Francisco, CA 94105

CALIFORNIA STATE FIRE MARSHAL APPROVED

Approval of this plan does not authorize or approve any omission or deviation from applicable regulations. Final approval is subject to field inspection. One set of approved plans shall be available on the project site at all times.

Reviewed by: STEPHEN GUARINO
Approval date: 12-14-09

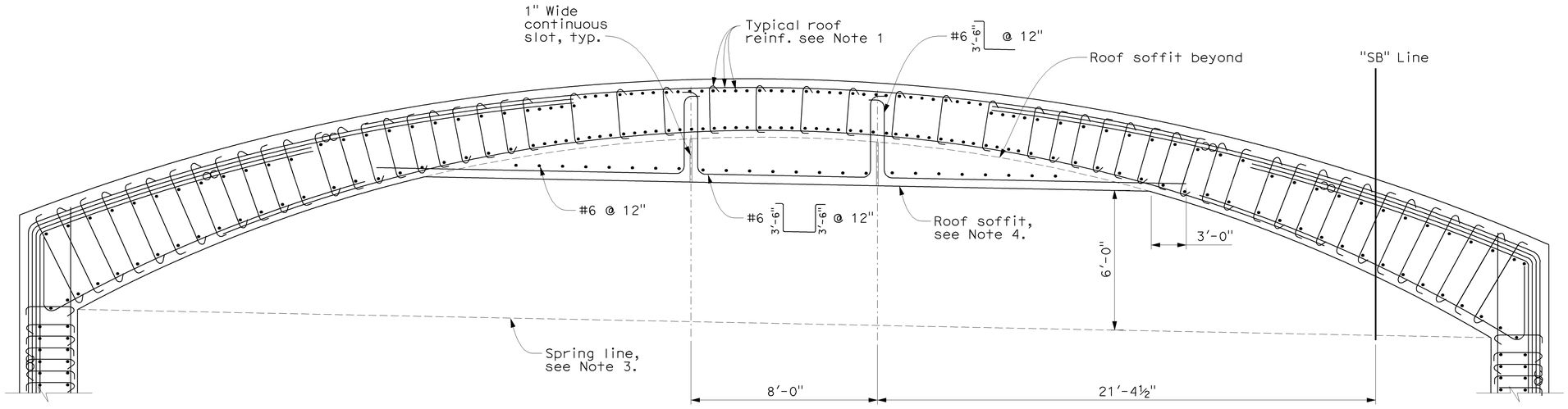

SECTION S-S

Scale: 3/8" = 1'-0"

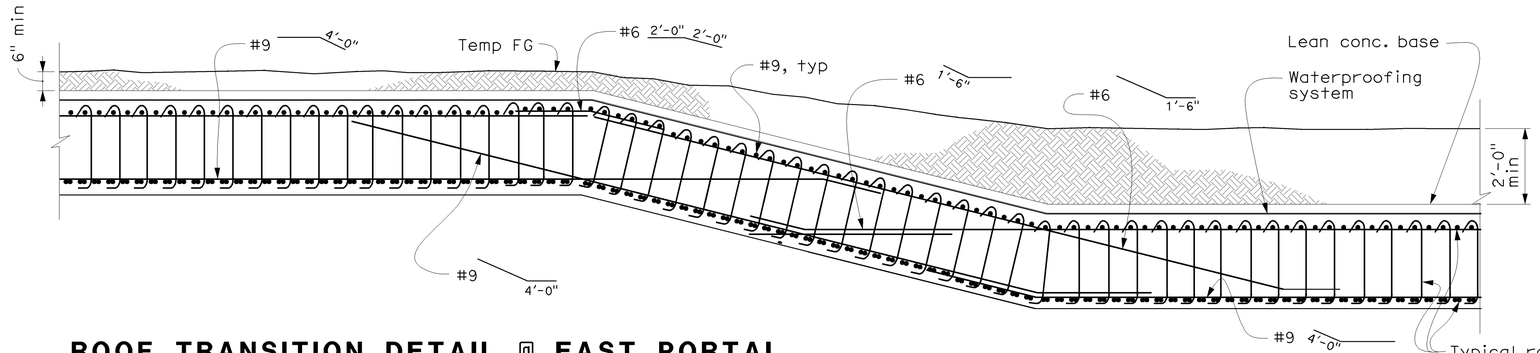

ROOF TRANSITION DETAIL @ EAST PORTAL

Scale: 3/8" = 1'-0"

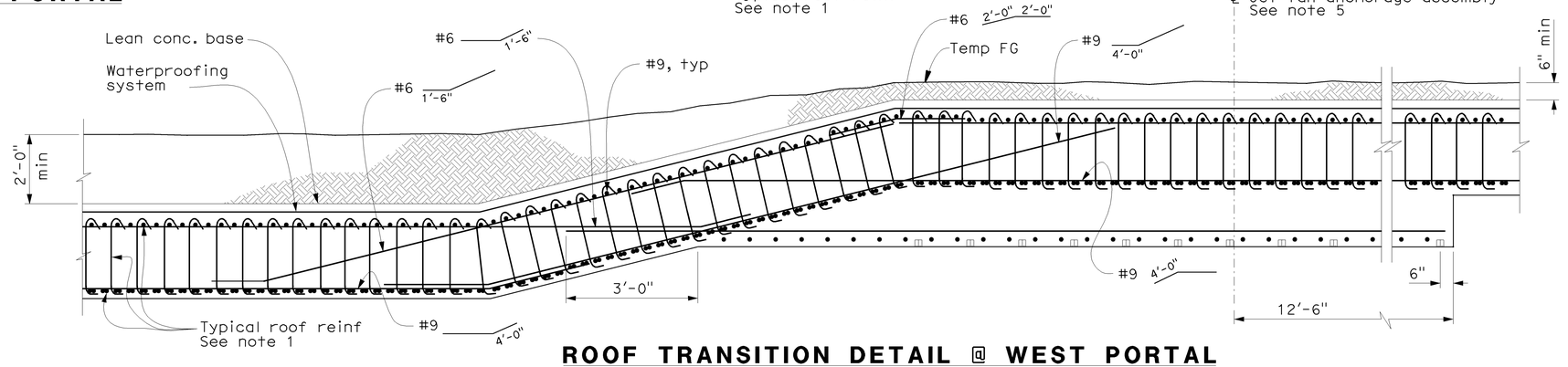

ROOF TRANSITION DETAIL @ WEST PORTAL

Scale: 3/8" = 1'-0"

Notes:

1. For details of typical roof reinforcement, see sheet "SBBT-ST20".
2. For locations of "Roof Transition Detail", see sheets "SBBT-ST8" and "SBBT-ST9".
3. For springline, see sheet "SBBT-ST13".
4. Roof soffit shall be parallel to the springline.
5. For location of jet fan anchorage assembly, see sheet "SBBT-ST9".

SBBT-ST31

DESIGN	BY H. LEE	CHECKED M. YUCEKUL	PREPARED FOR THE STATE OF CALIFORNIA DEPARTMENT OF TRANSPORTATION	QIYU LIU PROJECT ENGINEER	BRIDGE NO. 34-0161L; POST MILES 9.0/9.2
DETAILS	BY T. MARTARELLA	CHECKED M. YUCEKUL			
QUANTITIES	BY W. ASHWOOD	CHECKED J. YANG			

SOUTHBOUND BATTERY TUNNEL
ROOF DETAILS NO.2

DESIGN DETAIL SHEET (ENGLISH) (REV. 06-01-09)

ORIGINAL SCALE IN INCHES FOR REDUCED PLANS 0 1 2 3

CU 04
EA 163741

DISREGARD PRINTS BEARING EARLIER REVISION DATES →

REVISION DATES (PRELIMINARY STAGE ONLY): 06/01/09 | 07/15/09 | 08/07/09 | 08/28/09 | 09/18/09

SHEET 31 OF 72

FILE => 34-0161rl-st031.dgn

USERNAME => hrlenard DATE PLOTTED => 14-DEC-2009 TIME PLOTTED => 15:21

DIST	COUNTY	ROUTE	POST MILES TOTAL PROJECT	SHEET No	TOTAL SHEETS
04	SF	101	8.2/9.2	468	654

REGISTERED CIVIL ENGINEER 10/30/09 DATE

12-14-09
PLANS APPROVAL DATE

REGISTERED PROFESSIONAL ENGINEER Qiyu Liu No. C-58082 Exp. 6/30/10 CIVIL STATE OF CALIFORNIA

The State of California or its officers or agents shall not be responsible for the accuracy or completeness of scanned copies of this plan sheet.

Arup PB Joint Venture
560 Mission Street, Suite 700
San Francisco, CA 94105

Notes:

1. For details of Retaining Wall A and B see "Retaining Wall A & B" plans. For details of Retaining Wall 8, see "Retaining Wall No.8" plans.
2. For 'Section Q-Q' and 'Section R-R', see sheet "SBBT-ST33".
3. For size and spacing of (c) bars, see sheet "SBBT-ST33".
4. For typical wall reinforcement, see sheet "SBBT-ST20".
5. For architectural fence and safety railing, see "Architectural" plans.
6. For limits of chain link fence and safety railing, see sheet "SBBT-ST8".
7. For "Waterproofing Transition Detail", see sheet "SBBT-ST39.2".

CALIFORNIA STATE FIRE MARSHAL APPROVED
Approval of this plan does not authorize or approve any omission or deviation from applicable regulations. Final approval is subject to field inspection. One set of approved plans shall be available on the project site at all times.
Reviewed by: STEPHEN GUARINO
Approval date: 12-14-09

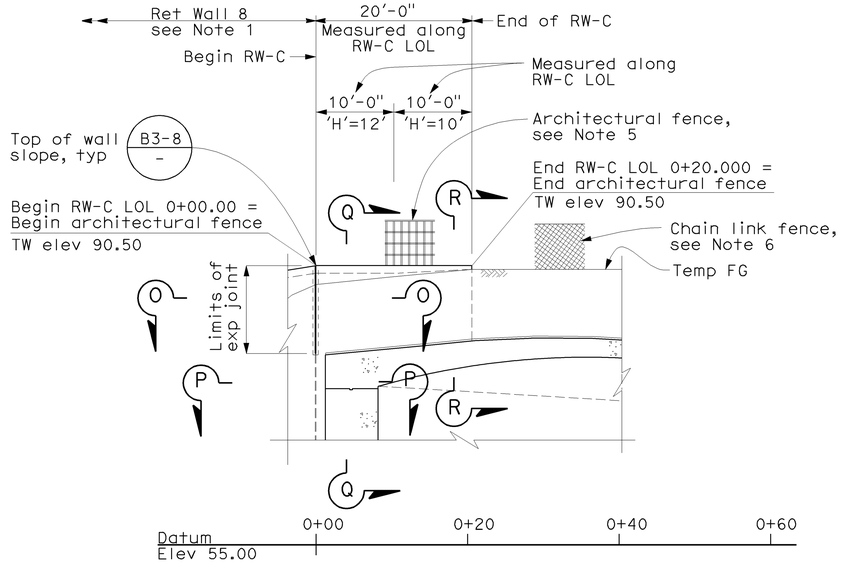

DEVELOPED WALL ELEVATION
Scale: 1"=10'

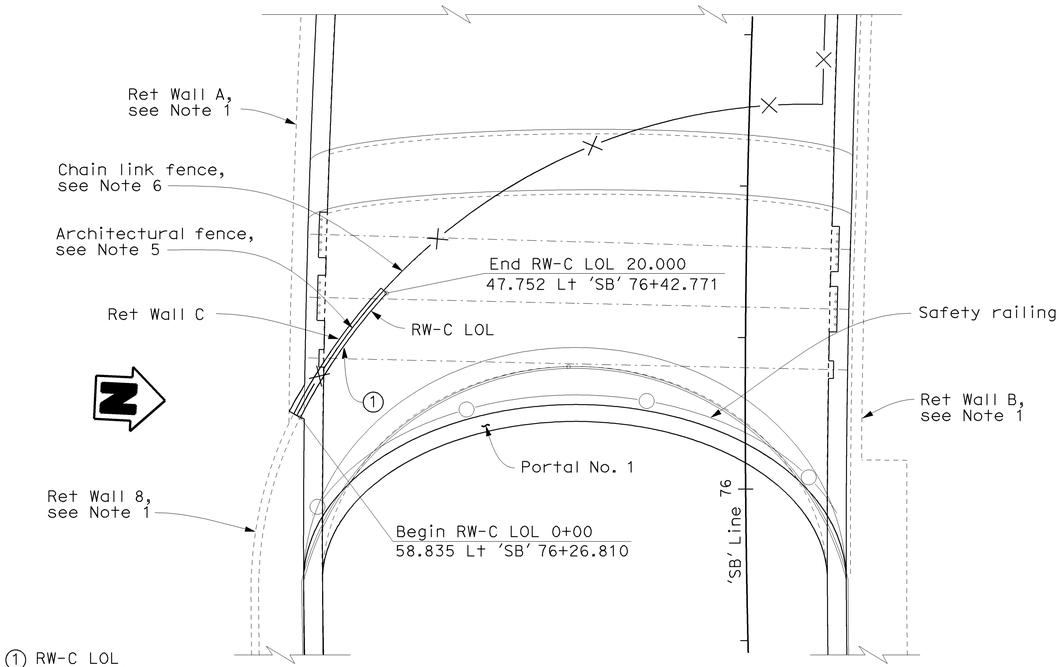

(1) RW-C LOL
Curve Data
R = 75'
Δ = 15°16'44"
T = 10.060'
L = 20.000'

PLAN
Scale: 1"=10'

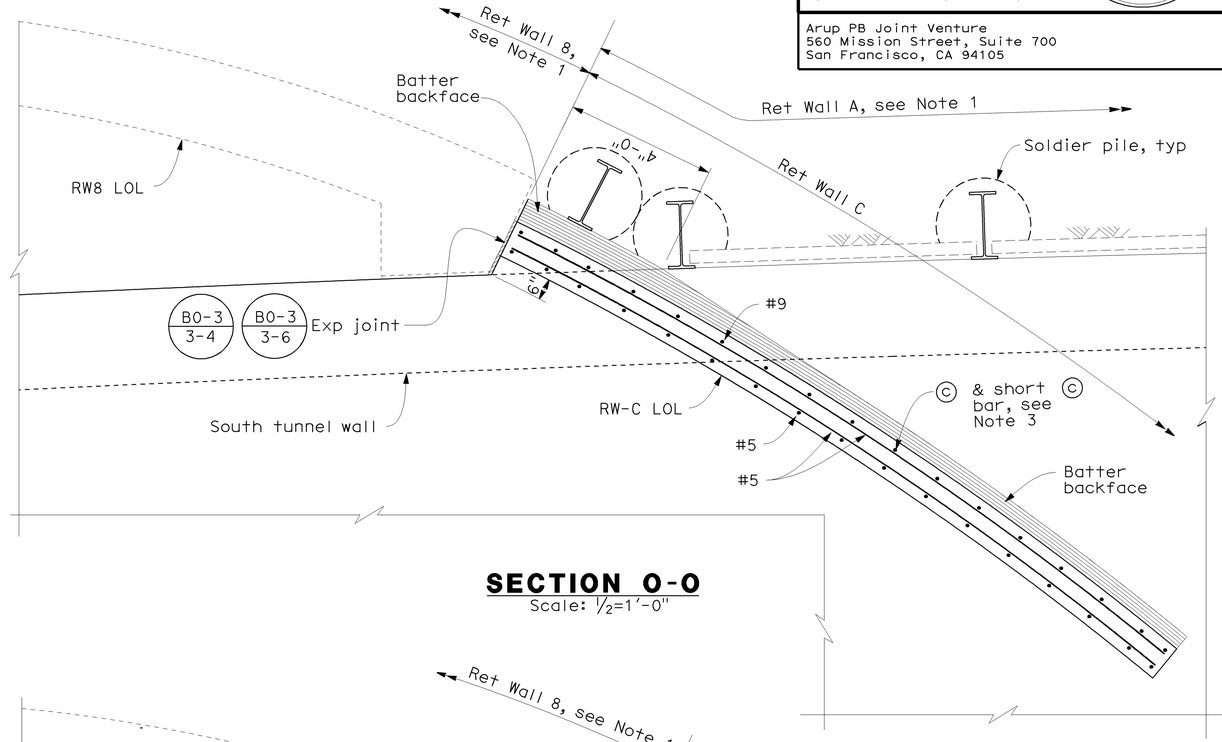

SECTION O-O
Scale: 1/2=1'-0"

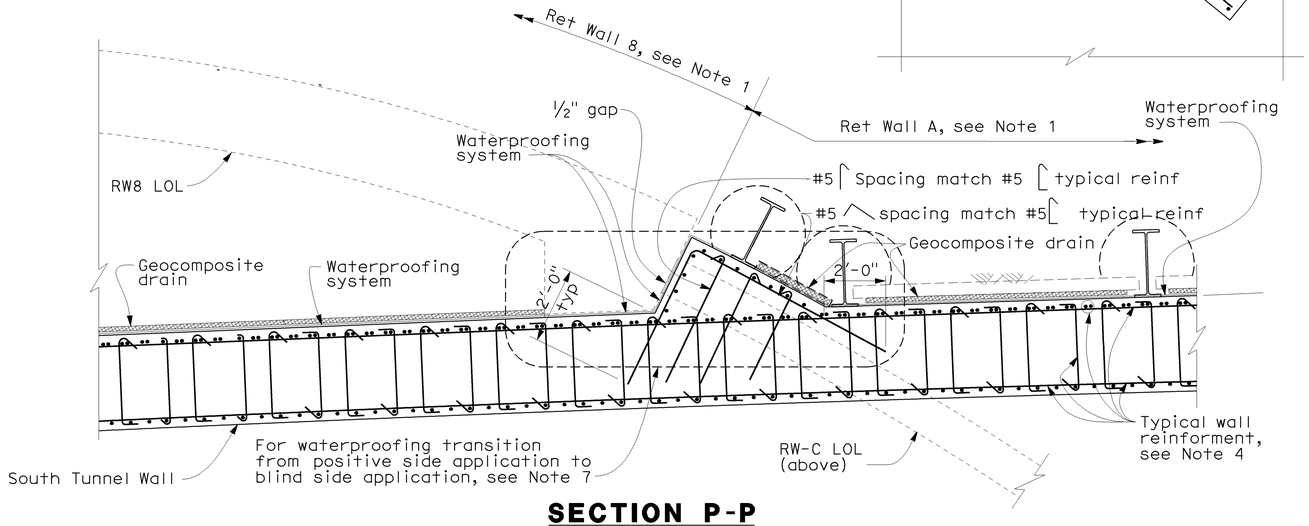

SECTION P-P
Scale: 1/2=1'-0"

SBBT-ST32

DESIGN	BY Y. REN	CHECKED M. YUCEKUL	PREPARED FOR THE STATE OF CALIFORNIA DEPARTMENT OF TRANSPORTATION	QIYU LIU PROJECT ENGINEER	BRIDGE NO. 34-0161L
DETAILS	BY E.CANTILLER	CHECKED M. YUCEKUL			POST MILES 9.0/9.2
QUANTITIES	BY W. ASHWOOD	CHECKED J. YANG			

SOUTHBOUND BATTERY TUNNEL
ROOF DETAILS NO.3

DESIGN DETAIL SHEET (ENGLISH) (REV. 06-01-09)

ORIGINAL SCALE IN INCHES FOR REDUCED PLANS 0 1 2 3

CU 04
EA 163741

DISREGARD PRINTS BEARING EARLIER REVISION DATES

REVISION DATES (PRELIMINARY STAGE ONLY) 06/01/09 07/15/09 08/07/09 08/26/09 09/18/09 10/30/09

SHEET 32 OF 72

FILE => 34-0161rl-st032.dgn

USERNAME => trlenard DATE PLOTTED => 14-DEC-2009 TIME PLOTTED => 15:21

DIST	COUNTY	ROUTE	POST MILES TOTAL PROJECT	SHEET No	TOTAL SHEETS
04	SF	101	8.2/9.2	469	654

REGISTERED CIVIL ENGINEER 10/30/09 DATE

12-14-09
PLANS APPROVAL DATE

REGISTERED PROFESSIONAL ENGINEER Qiyu Liu No. C-58082 Exp. 6/30/10 CIVIL STATE OF CALIFORNIA

The State of California or its officers or agents shall not be responsible for the accuracy or completeness of scanned copies of this plan sheet.

Arup PB Joint Venture
560 Mission Street, Suite 700
San Francisco, CA 94105

Notes:

1. For "Waterproofing Termination Detail", see sheet "SBBT-ST39".
2. For details not shown, see B3-8
3. For location of "Section Q-Q" and "Section R-R", see sheet "SBBT-ST32.
4. For architectural fence, see "Architectural" plans.

CALIFORNIA STATE FIRE MARSHAL APPROVED
Approval of this plan does not authorize or approve any omission or deviation from applicable regulations. Final approval is subject to field inspection. One set of approved plans shall be available on the project site at all times.
Reviewed by: STEPHEN GUARINO
Approval date: 12-14-09

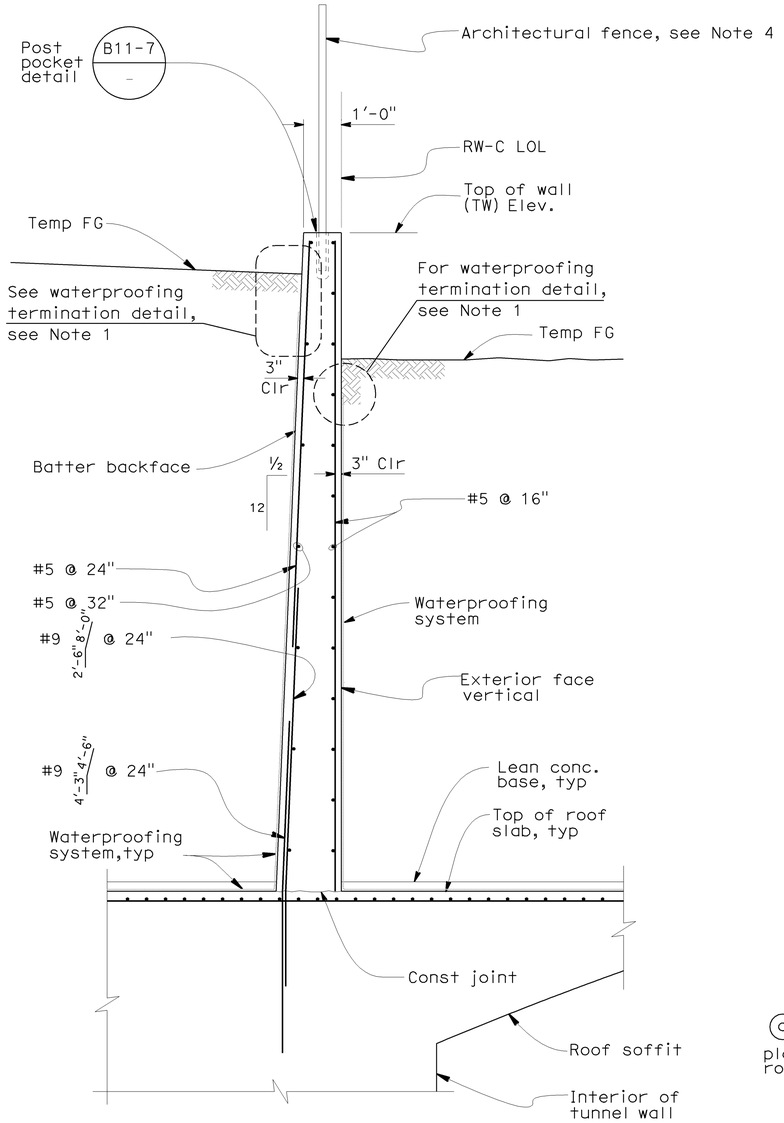

SECTION Q-Q
Scale: ½" = 1'-0"

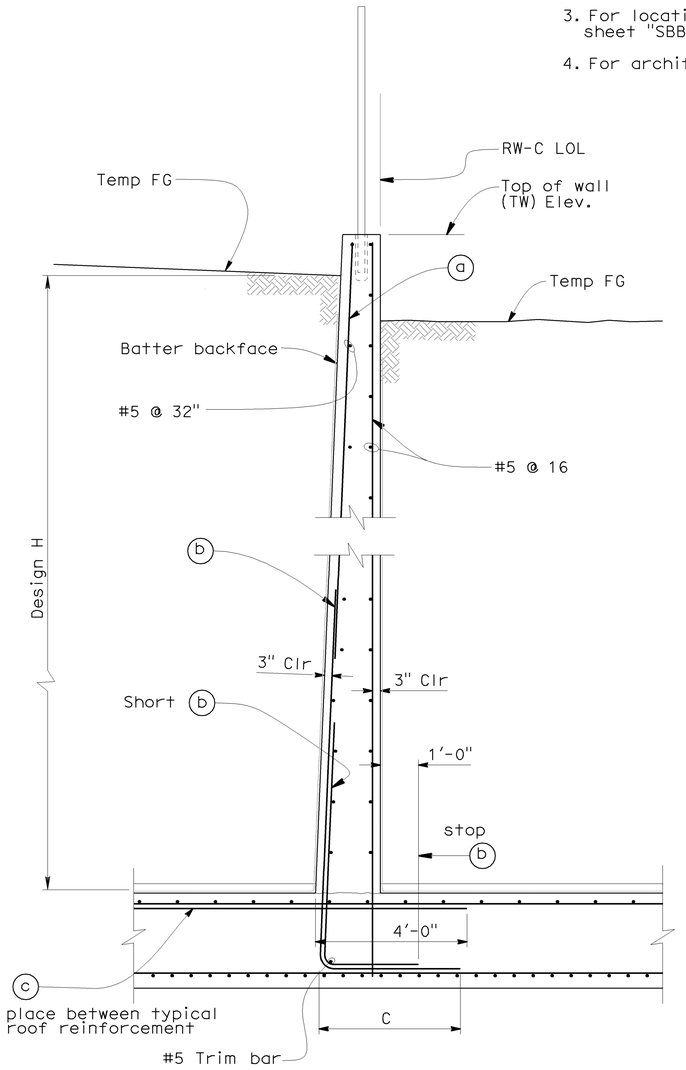

SECTION R-R
Scale: ½" = 1'-0"

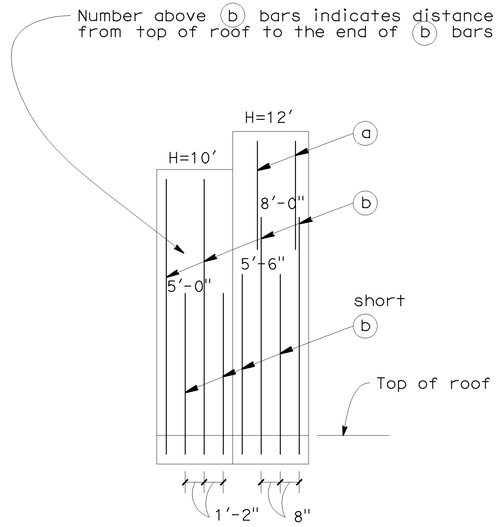

ELEVATION

TABLE OF REINFORCING STEEL DIMENSION AND DATA		
Design H	10'	12'
C	6'-0"	8'-0"
Batter	½:12	½:12
a	—	#5@16
b	#6@14	#6@8
c	#5@14	#5@8

SBBT-ST33

DESIGN	BY H. LEE	CHECKED M. YUCEKUL	PREPARED FOR THE STATE OF CALIFORNIA DEPARTMENT OF TRANSPORTATION	QIYU LIU PROJECT ENGINEER	BRIDGE NO. 34-0161L
DETAILS	BY E. CANTILLER	CHECKED M. YUCEKUL			POST MILES 9.0/9.2
QUANTITIES	BY W. ASHWOOD	CHECKED J. YANG			

SOUTHBOUND BATTERY TUNNEL
ROOF DETAIL NO.4

DESIGN DETAIL SHEET (ENGLISH) (REV. 06-01-09)

ORIGINAL SCALE IN INCHES FOR REDUCED PLANS 0 1 2 3

CU 04
EA 163741

DISREGARD PRINTS BEARING EARLIER REVISION DATES

REVISION DATES (PRELIMINARY STAGE ONLY) 06/01/09 07/13/09 08/07/09 08/28/09 09/18/09 10/30/09

SHEET 33 OF 72

FILE => 34-0161rl-st033.dgn

USERNAME => trlenard DATE PLOTTED => 14-DEC-2009 TIME PLOTTED => 15:21

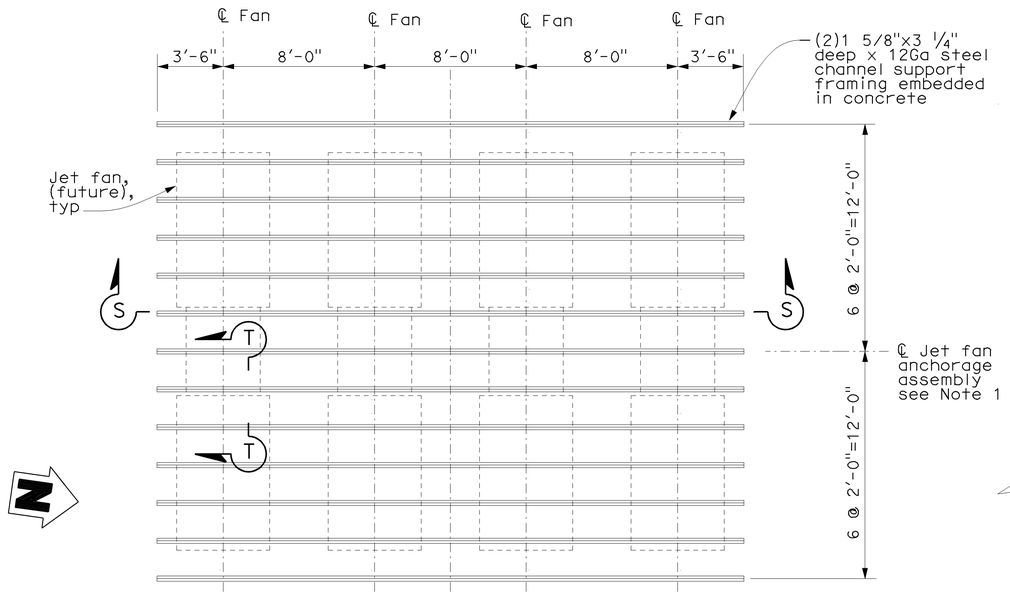

JET FAN ANCHORAGE ASSEMBLY PLAN

Scale: 1/4" = 1'-0"

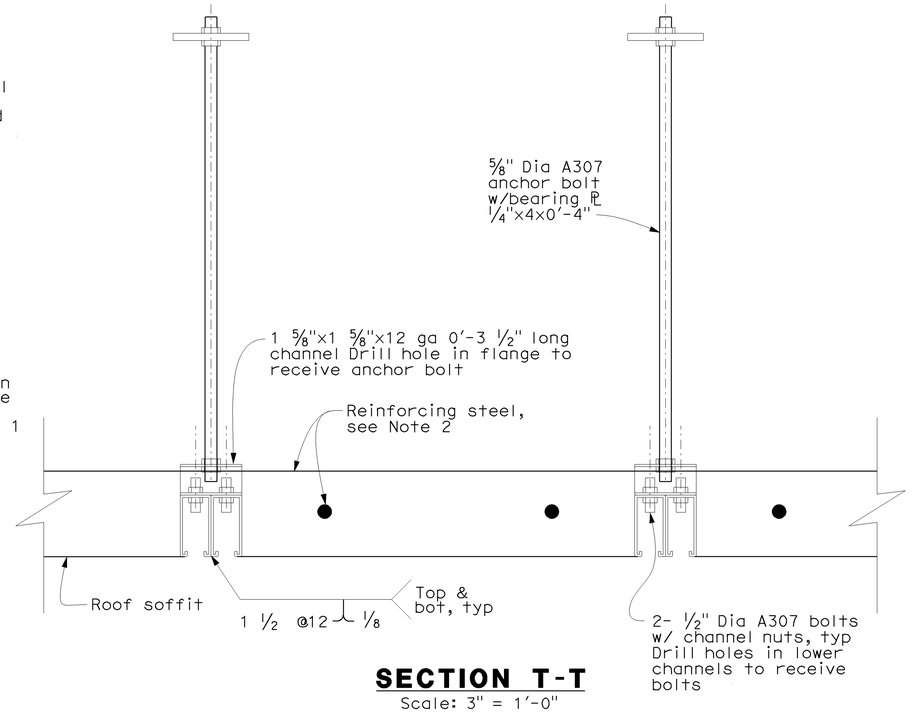

SECTION T-T

Scale: 3" = 1'-0"

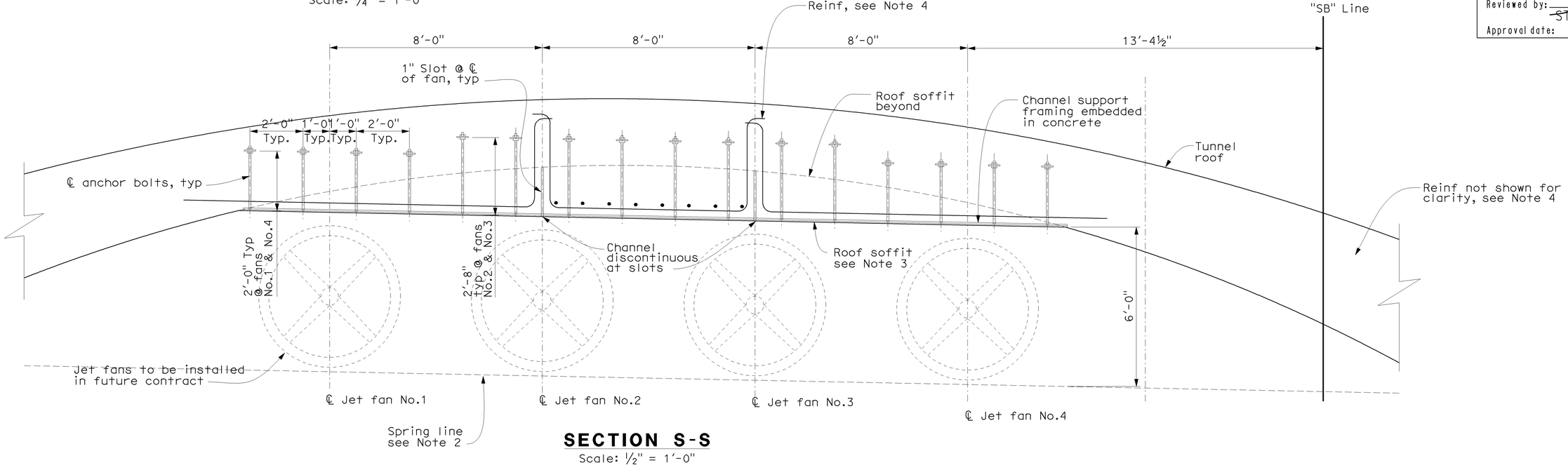

SECTION S-S

Scale: 1/2" = 1'-0"

DIST	COUNTY	ROUTE	POST MILES TOTAL PROJECT	SHEET No	TOTAL SHEETS
04	SF	101	8.2/9.2	470	654

REGISTERED CIVIL ENGINEER — 10/30/09 DATE

12-14-09
PLANS APPROVAL DATE

REGISTERED PROFESSIONAL ENGINEER — Qiyu Liu — No. C-58082 — Exp 6/30/10 — CIVIL — STATE OF CALIFORNIA

The State of California or its officers or agents shall not be responsible for the accuracy or completeness of scanned copies of this plan sheet.

Arup PB Joint Venture
560 Mission Street, Suite 700
San Francisco, CA 94105

Notes:

1. For location of ℄ jet fan anchorage assembly, see sheet "SBBT-ST9".
2. For Spring line, see sheet "SBBT-ST13".
3. Roof soffit shall be parallel to spring line.
4. For roof reinforcing steel, see sheet "SBBT-ST31".

CALIFORNIA STATE FIRE MARSHAL APPROVED

Approval of this plan does not authorize or approve any omission or deviation from applicable regulations. Final approval is subject to field inspection. One set of approved plans shall be available on the project site at all times.

Reviewed by: STEPHEN GUARINO
Approval date: 12-14-09

SBBT-ST34

DESIGN	BY K. CLINCH	CHECKED M. YUCEKUL	PREPARED FOR THE STATE OF CALIFORNIA DEPARTMENT OF TRANSPORTATION	QIYU LIU PROJECT ENGINEER	BRIDGE NO. 34-0161L
DETAILS	BY T MARTARELLA	CHECKED M. YUCEKUL			POST MILES
QUANTITIES	BY W. ASHWOOD	CHECKED J. YANG			

SOUTHBOUND BATTERY TUNNEL
ROOF DETAILS NO.5

DESIGN DETAIL SHEET (ENGLISH) (REV. 06-01-09)

ORIGINAL SCALE IN INCHES FOR REDUCED PLANS 0 1 2 3

CU 04
EA 163741

DISREGARD PRINTS BEARING EARLIER REVISION DATES

REVISION DATES (PRELIMINARY STAGE ONLY): 06/05/09 | 07/10/09 | 08/07/09 | 08/28/09 | 09/11/09 | 10/30/09

SHEET 34 OF 72

FILE => 34-0161rl-st034.dgn

USERNAME => rlrichard DATE PLOTTED => 14-DEC-2009 TIME PLOTTED => 15:21

DIST	COUNTY	ROUTE	POST MILES TOTAL PROJECT	SHEET No	TOTAL SHEETS
04	SF	101	8.2/9.2	471	654

REGISTERED CIVIL ENGINEER — 10/30/09 DATE

12-14-09
PLANS APPROVAL DATE

REGISTERED PROFESSIONAL ENGINEER — Qiyu Liu — No. C-58082 — Exp 6/30/10 — CIVIL — STATE OF CALIFORNIA

The State of California or its officers or agents shall not be responsible for the accuracy or completeness of scanned copies of this plan sheet.

Arup PB Joint Venture
560 Mission Street, Suite 700
San Francisco, CA 94105

CALIFORNIA STATE FIRE MARSHAL
APPROVED
Approval of this plan does not authorize or approve any omission or deviation from applicable regulations. Final approval is subject to field inspection. One set of approved plans shall be available on the project site at all times.
Reviewed by: STEPHEN GUARINO
Approval date: 12-14-09

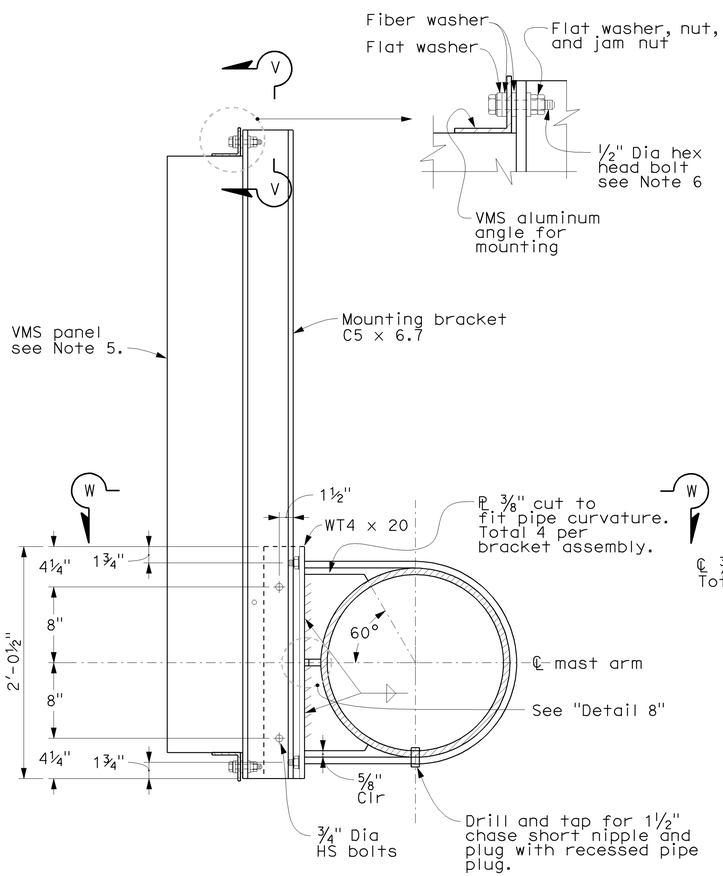

DETAIL 7
Scale 1½" = 1'-0"

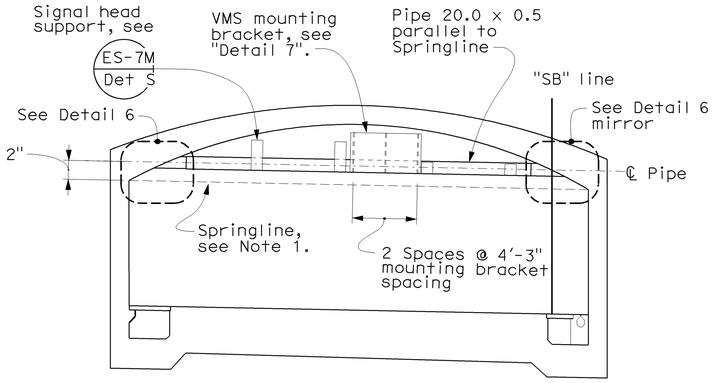

SECTION U-U
Scale 1" = 10'

Notes:
1. For Springline, see sheet "SBBT-ST13".
2. For roof reinforcing steel, see sheet "SBBT-ST31".
3. For location of "Section U-U" see sheet "SBBT-ST9".
4. All steel shall be galvanized.
5. For VMS Panel, see "Electrical" plans.
6. Refer to VMS manufacturer to verify bolt hole layout and length.

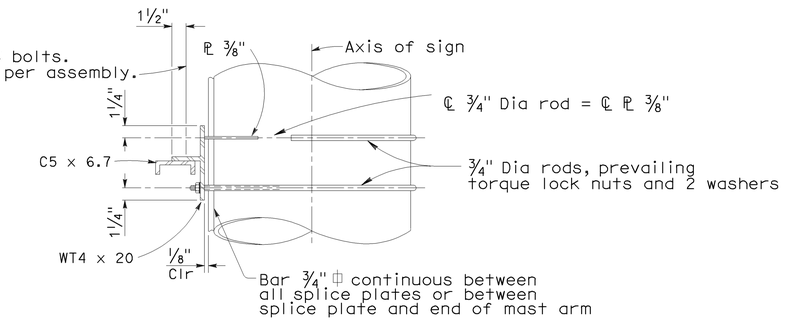

SECTION W-W

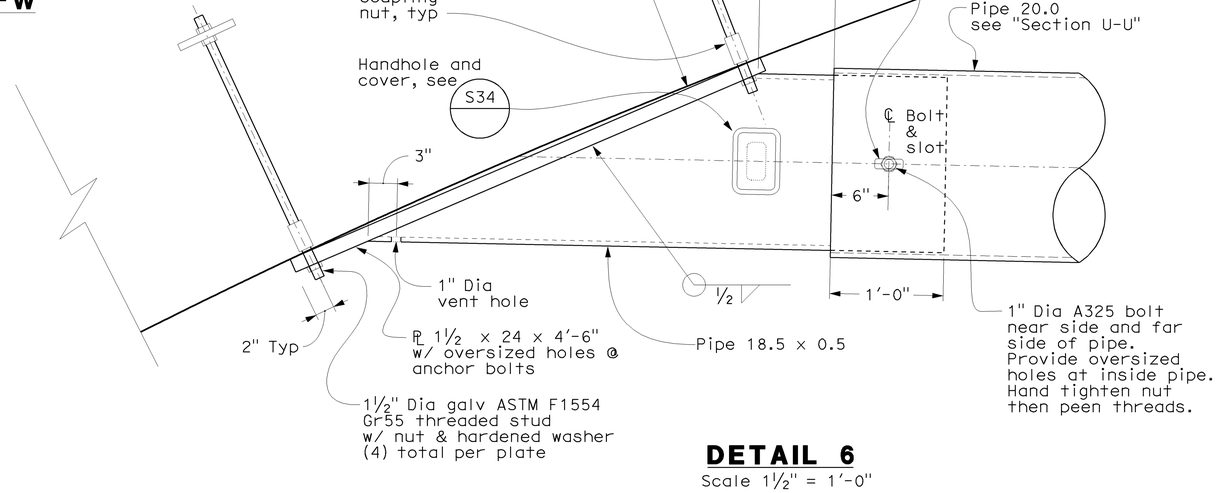

DETAIL 6
Scale 1½" = 1'-0"

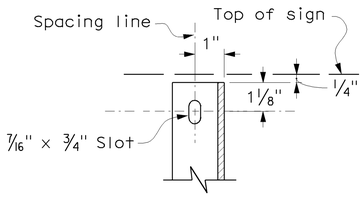

SECTION V-V

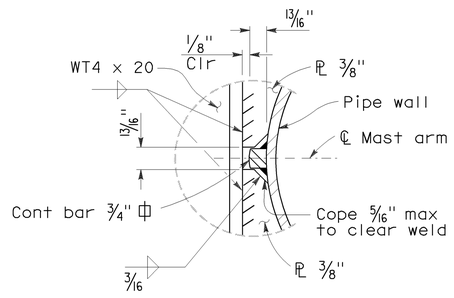

DETAIL 8

SBBT-ST35

DESIGN	BY K. CLINCH	CHECKED M. YUCEKUL	PREPARED FOR THE STATE OF CALIFORNIA DEPARTMENT OF TRANSPORTATION	QIYU LIU PROJECT ENGINEER	BRIDGE NO. 34-0161L	SOUTHBOUND BATTERY TUNNEL	
DETAILS	BY T MARTARELLA	CHECKED M. YUCEKUL			POST MILES	ROOF DETAILS NO.6	
QUANTITIES	BY W. ASHWOOD	CHECKED J. YANG					

DESIGN DETAIL SHEET (ENGLISH) (REV. 06-01-09)

ORIGINAL SCALE IN INCHES FOR REDUCED PLANS 0 1 2 3

CU 04
EA 163741

DISREGARD PRINTS BEARING EARLIER REVISION DATES →

REVISION DATES (PRELIMINARY STAGE ONLY): 06/05/09 | 07/15/09 | 08/07/09 | 08/21/09 | 09/18/09 | 10/30/09

SHEET 35 OF 72

FILE => 34-0161rl-st035.dgn

USERNAME = trlenard DATE PLOTTED => 14-DEC-2009 TIME PLOTTED => 15:21

DIST	COUNTY	ROUTE	POST MILES TOTAL PROJECT	SHEET No	TOTAL SHEETS
04	SF	101	8.2/9.2	472	654

REGISTERED CIVIL ENGINEER — 8/26/09 DATE

12-14-09
PLANS APPROVAL DATE

REGISTERED PROFESSIONAL ENGINEER — Qiyu Liu — No. C-58082 — Exp. 6/30/10 — CIVIL — STATE OF CALIFORNIA

The State of California or its officers or agents shall not be responsible for the accuracy or completeness of scanned copies of this plan sheet.

Arup PB Joint Venture
560 Mission Street, Suite 700
San Francisco, CA 94105

Notes:

1. For "Section A-A", see sheet "SBBT-ST37"
2. For "Section B-B" and "Section C-C", see sheet "SBBT-ST38"
3. Portal No.1 shown, Portal No.2 similar

CALIFORNIA STATE FIRE MARSHAL APPROVED

Approval of this plan does not authorize or approve any omission or deviation from applicable regulations. Final approval is subject to field inspection. One set of approved plans shall be available on the project site at all times.

Reviewed by: STEPHEN GUARINO

Approval date: 12-14-09

PORTAL WALL OUTER REINFORCEMENT

Scale: 1/4" = 1'-0"

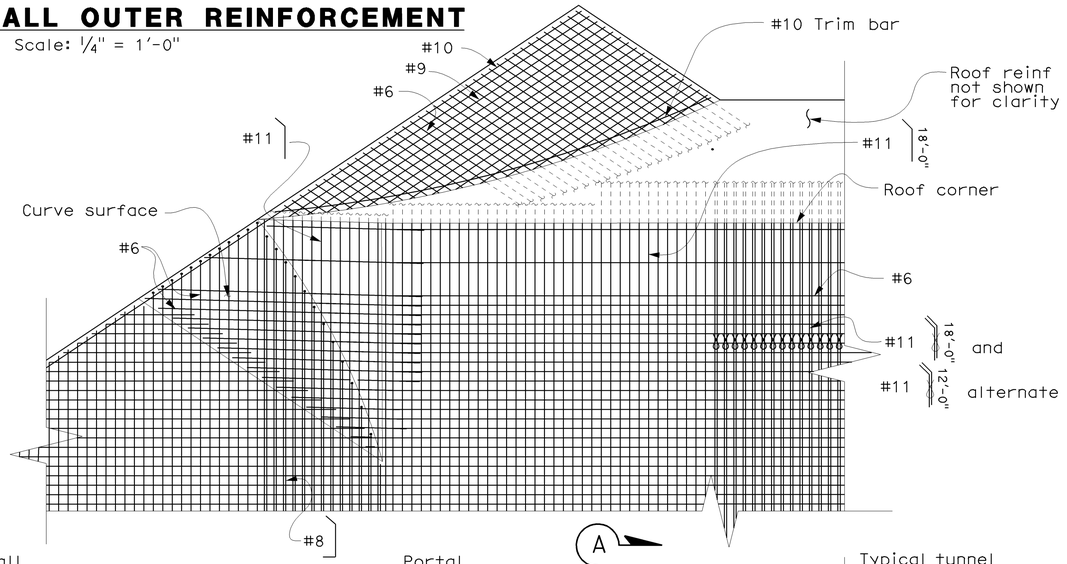

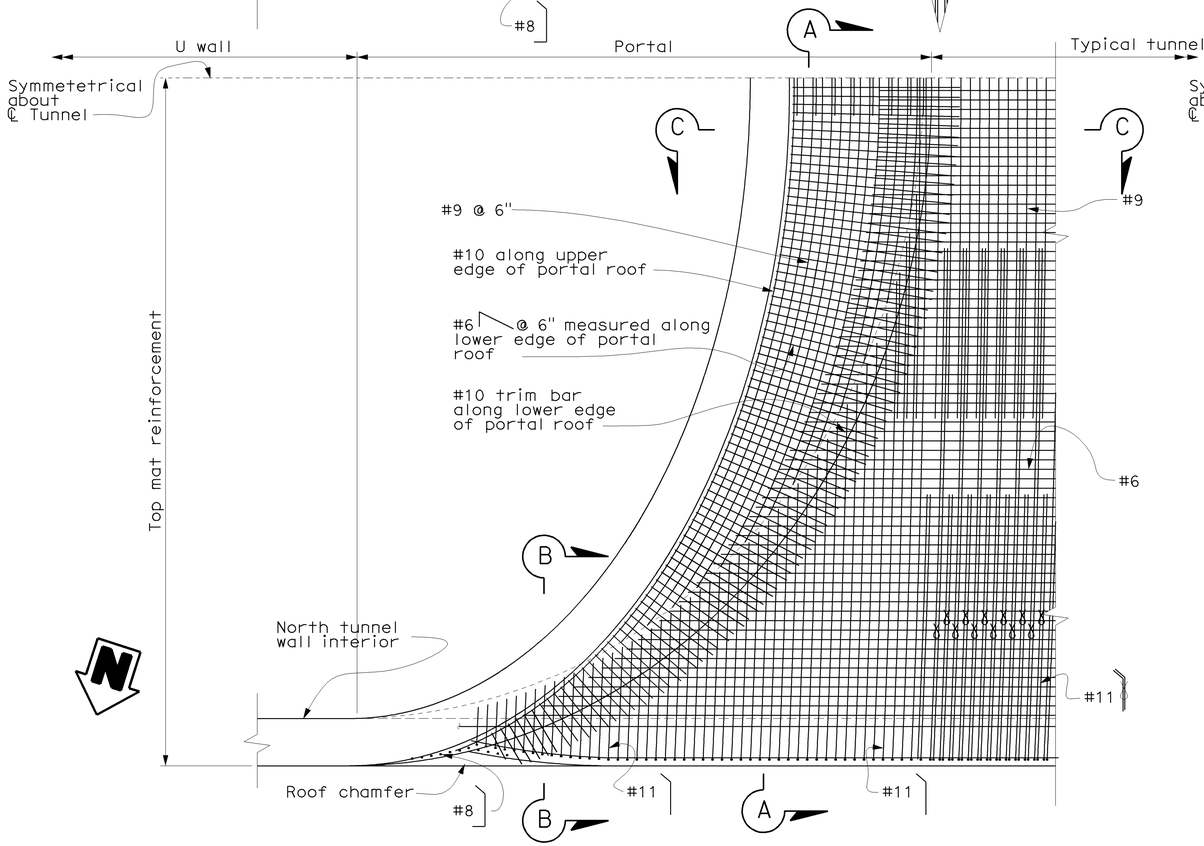

PORTAL ROOF TOP REINFORCEMENT

Scale: 1/4" = 1'-0"

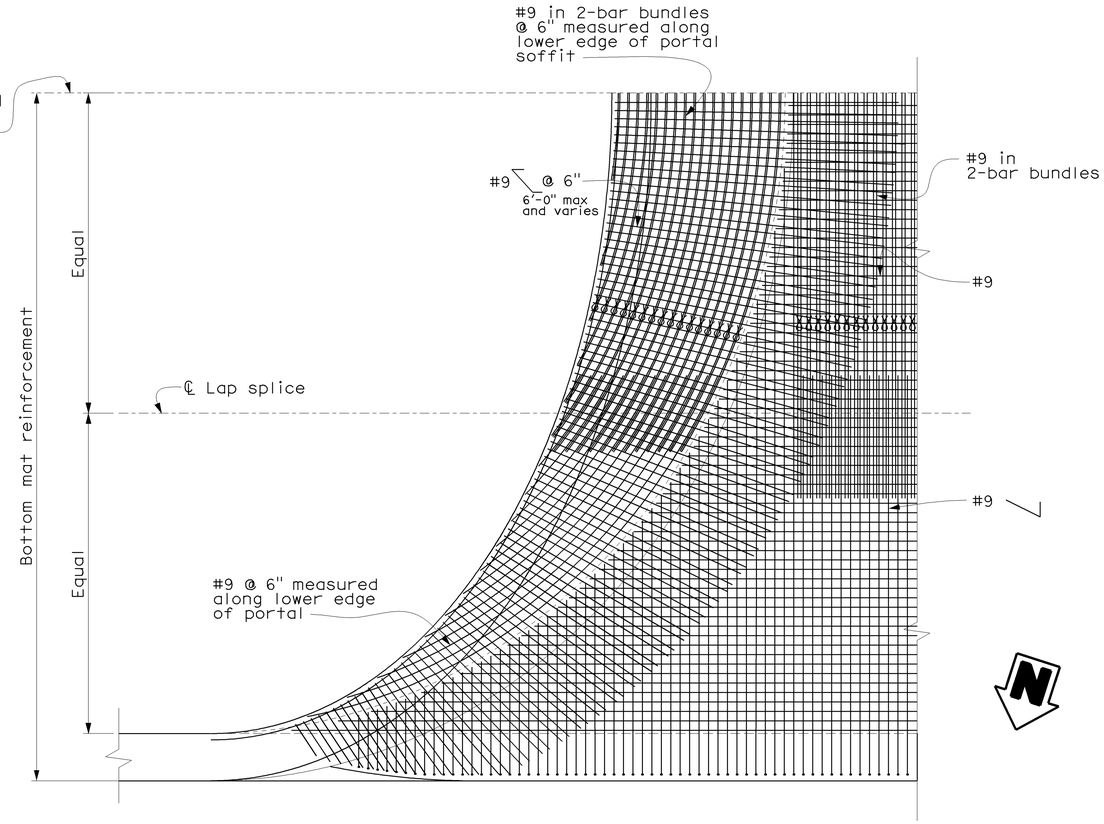

PORTAL ROOF BOTTOM REINFORCEMENT

Scale: 1/4" = 1'-0"

SBBT-ST36

DESIGN	BY Q. LIU	CHECKED M. YUCEKUL	PREPARED FOR THE STATE OF CALIFORNIA DEPARTMENT OF TRANSPORTATION	QIYU LIU PROJECT ENGINEER	BRIDGE NO. 34-0161L
DETAILS	BY E. SUDHAUSEN	CHECKED M. YUCEKUL			POST MILES 8.0/9.6
QUANTITIES	BY W. ASHWOOD	CHECKED J. YANG		CU 04 EA 163741	

SOUTHBOUND BATTERY TUNNEL
PORTAL DETAILS NO.1

DESIGN DETAIL SHEET (ENGLISH) (REV. 06-01-09)

ORIGINAL SCALE IN INCHES FOR REDUCED PLANS 0 1 2 3

DISREGARD PRINTS BEARING EARLIER REVISION DATES →

REVISION DATES (PRELIMINARY STAGE ONLY): 06/01/09 | 07/10/09 | 08/04/09 | 08/26/09

SHEET 36 OF 72

FILE => 34-0161r1-st036.dgn

USERNAME => #USER$ DATE PLOTTED => $DATE$ TIME PLOTTED => $TIME$

Notes:

1. For layout of portal roof reinforcement, see sheet "SBBT-ST36".
2. For location of "Section A-A", see sheet "SBBT-ST36".
3. For subdrain details, see sheets "SBBT-ST40" and "SBBT-ST41".
4. For details not shown or noted, see sheets "SBBT-ST15", "SBBT-ST16" and "SBBT-ST20".

DIST	COUNTY	ROUTE	POST MILES TOTAL PROJECT	SHEET No	TOTAL SHEETS
04	SF	101	8.2/9.2	473	654

REGISTERED CIVIL ENGINEER 10/30/09 DATE

12-14-09
PLANS APPROVAL DATE

REGISTERED PROFESSIONAL ENGINEER Qiyu Liu No. C-58082 Exp. 6/30/10 CIVIL STATE OF CALIFORNIA

The State of California or its officers or agents shall not be responsible for the accuracy or completeness of scanned copies of this plan sheet.

Arup PB Joint Venture
560 Mission Street, Suite 700
San Francisco, CA 94105

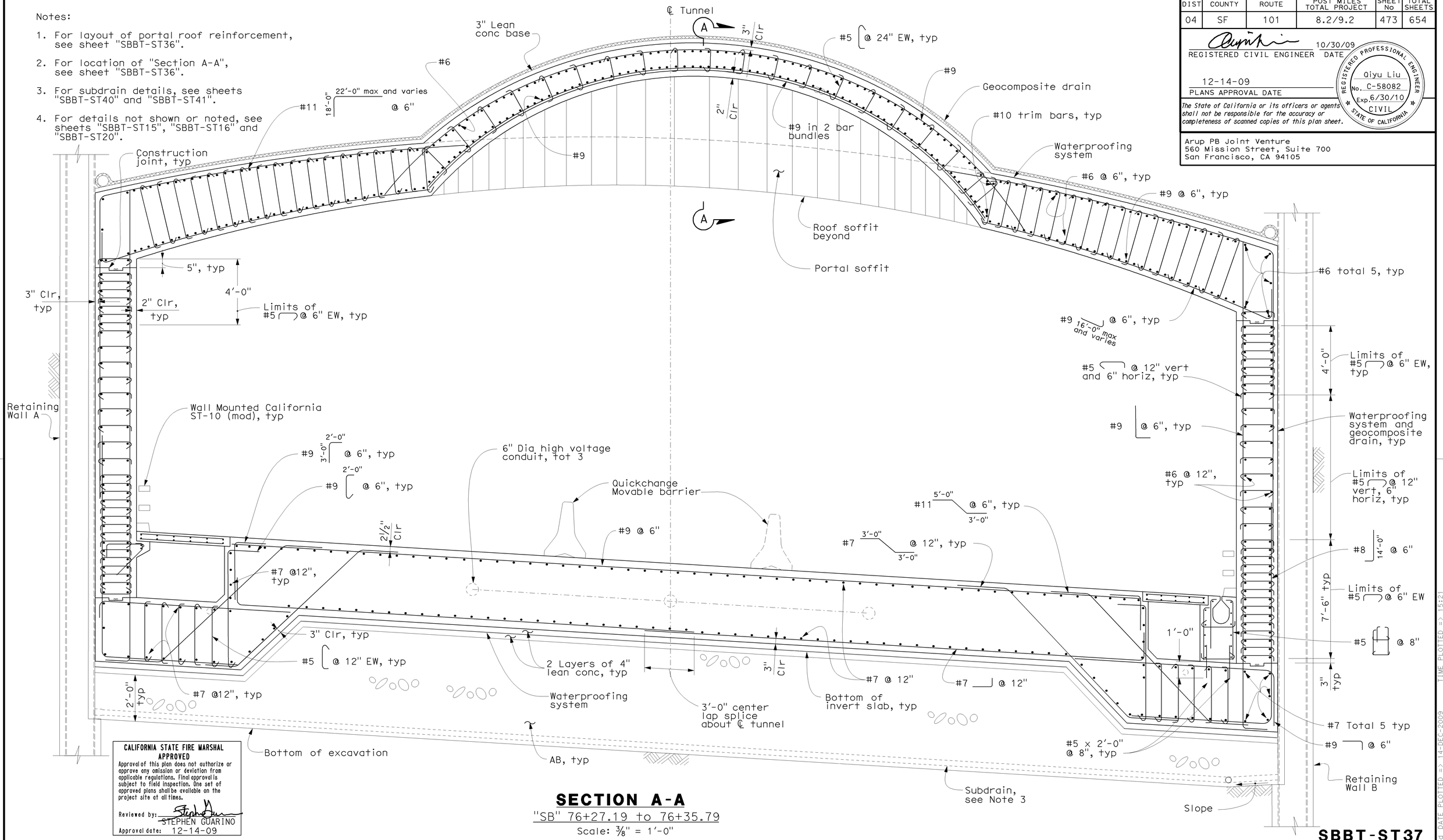

CALIFORNIA STATE FIRE MARSHAL APPROVED
Approval of this plan does not authorize or approve any omission or deviation from applicable regulations. Final approval is subject to field inspection. One set of approved plans shall be available on the project site at all times.
Reviewed by: STEPHEN GUARINO
Approval date: 12-14-09

SECTION A-A

"SB" 76+27.19 to 76+35.79

Scale: 3/8" = 1'-0"

SBBT-ST37

DESIGN	BY Q. LIU	CHECKED M. YUCEKUL	PREPARED FOR THE STATE OF CALIFORNIA DEPARTMENT OF TRANSPORTATION	QIYU LIU PROJECT ENGINEER	BRIDGE NO. 34-0161L
DETAILS	BY T. MARTARELLA	CHECKED M. YUCEKUL			POST MILES 8.8/9.2
QUANTITIES	BY W. ASHWOOD	CHECKED J. YANG			

SOUTHBOUND BATTERY TUNNEL
PORTAL DETAILS NO.2

DESIGN DETAIL SHEET (ENGLISH) (REV. 06-01-09)

ORIGINAL SCALE IN INCHES FOR REDUCED PLANS 0 1 2 3

CU 04
EA 163741

DISREGARD PRINTS BEARING EARLIER REVISION DATES

REVISION DATES (PRELIMINARY STAGE ONLY) 06/01/09 07/15/09 08/07/09 08/26/09 09/18/09 10/30/09

SHEET 37 OF 72

FILE => 34-0161rl-st037.dgn

USERNAME => trlenard DATE PLOTTED => 14-DEC-2009 TIME PLOTTED => 15:21

DIST	COUNTY	ROUTE	POST MILES TOTAL PROJECT	SHEET No	TOTAL SHEETS
04	SF	101	8.2/9.2	474	654

REGISTERED CIVIL ENGINEER — 10/30/09 DATE

12-14-09
PLANS APPROVAL DATE

REGISTERED PROFESSIONAL ENGINEER — Qiyu Liu — No. C-58082 — Exp. 6/30/10 — CIVIL — STATE OF CALIFORNIA

The State of California or its officers or agents shall not be responsible for the accuracy or completeness of scanned copies of this plan sheet.

Arup PB Joint Venture
560 Mission Street, Suite 700
San Francisco, CA 94105

CALIFORNIA STATE FIRE MARSHAL
APPROVED
Approval of this plan does not authorize or approve any omission or deviation from applicable regulations. Final approval is subject to field inspection. One set of approved plans shall be available on the project site at all times.
Reviewed by: STEPHEN GUARINO
Approval date: 12-14-09

Note:

For detail not shown or noted, see "Reinforcement Section at Portal" on sheet "SBBT-ST36".

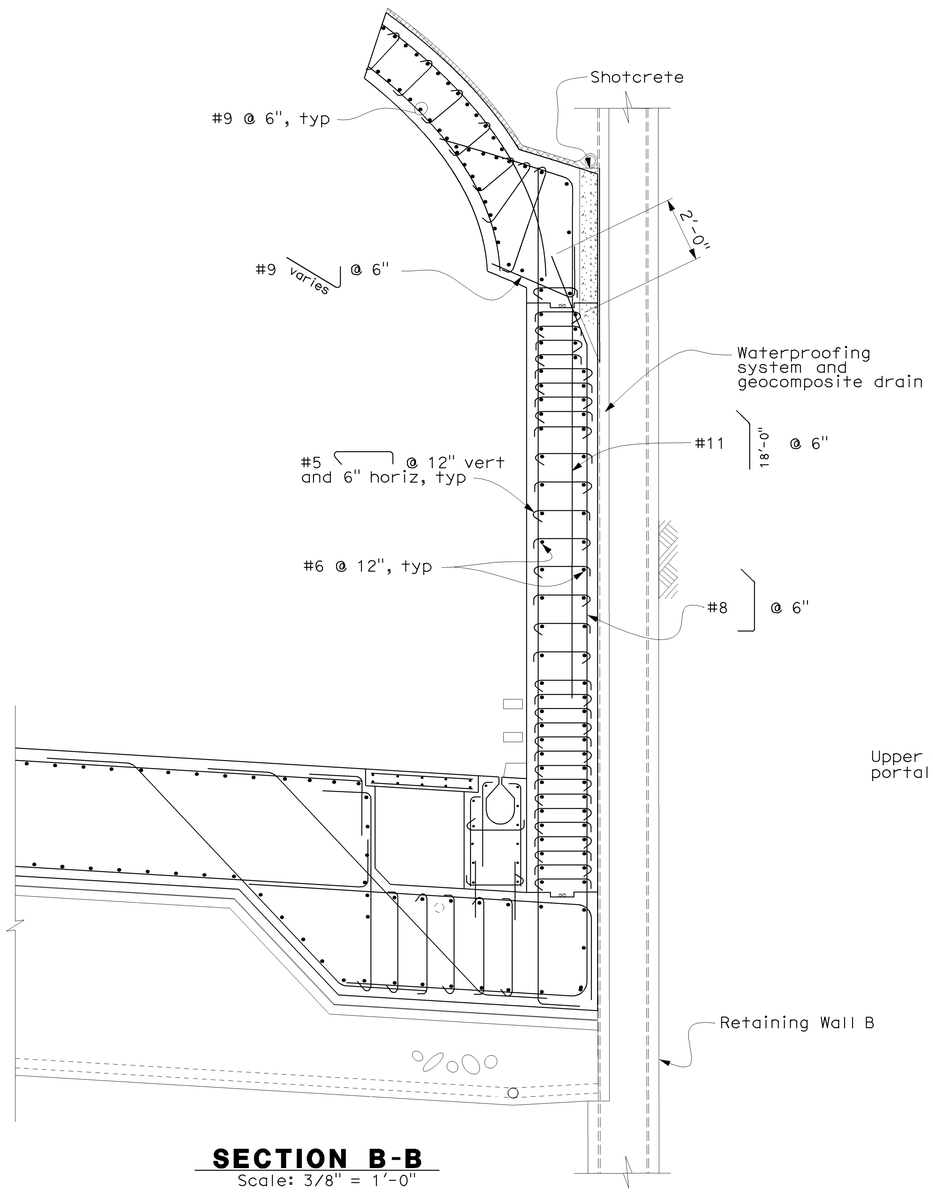

SECTION B-B
Scale: 3/8" = 1'-0"

Notes:

1. For "Waterproofing Termination Detail", see sheet "SBBT-ST39".
2. For location of "Section B-B" and "Section C-C", see sheet "SBBT-ST36".
3. For details of safety railing, see sheet "SBBT-A2".
4. For typical roof reinforcement, see sheet "SBBT-ST20".
5. For temporary grading, see "Roadway" plans.

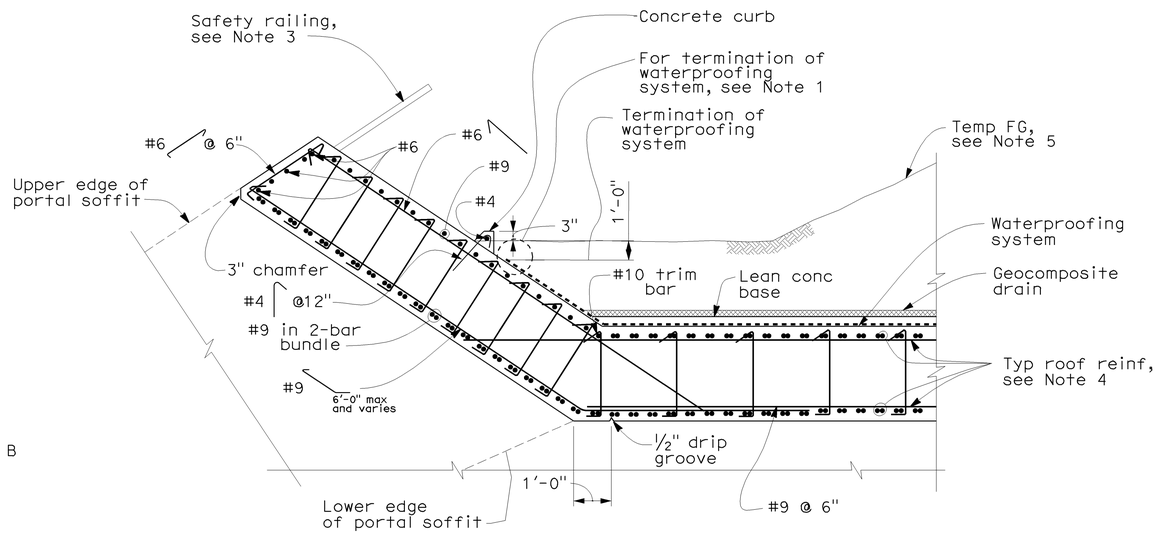

SECTION C-C
Scale: ½" = 1'-0"

SBBT-ST38

DESIGN	BY Q. LIU	CHECKED M. YUCEKUL	PREPARED FOR THE STATE OF CALIFORNIA DEPARTMENT OF TRANSPORTATION	QIYU LIU PROJECT ENGINEER	BRIDGE NO. 34-0161L	SOUTHBOUND BATTERY TUNNEL	
DETAILS	BY E. CANTILLER	CHECKED M. YUCEKUL			POST MILES 9.0/9.2	PORTAL DETAILS NO.3	
QUANTITIES	BY W.ASHWOOD	CHECKED J. YANG		CU 04 EA 163741	DISREGARD PRINTS BEARING EARLIER REVISION DATES →	REVISION DATES (PRELIMINARY STAGE ONLY) 06/01/09 07/15/09 08/07/09 09/04/09 09/18/09 10/30/09	SHEET 38 OF 72

DESIGN DETAIL SHEET (ENGLISH) (REV. 06-01-09)

ORIGINAL SCALE IN INCHES FOR REDUCED PLANS 0 1 2 3

FILE => 34-0161r1-st038.dgn

USERNAME => ttreherd DATE PLOTTED => 14-DEC-2009 TIME PLOTTED => 15:21

DIST	COUNTY	ROUTE	POST MILES TOTAL PROJECT	SHEET No	TOTAL SHEETS
04	SF	101	8.2/9.2	475	654

REGISTERED CIVIL ENGINEER 10/30/09 DATE

12-14-09
PLANS APPROVAL DATE

REGISTERED PROFESSIONAL ENGINEER Qiyu Liu No. C-58082 Exp. 6/30/10 CIVIL STATE OF CALIFORNIA

The State of California or its officers or agents shall not be responsible for the accuracy or completeness of scanned copies of this plan sheet.

Arup PB Joint Venture
560 Mission Street, Suite 700
San Francisco, CA 94105

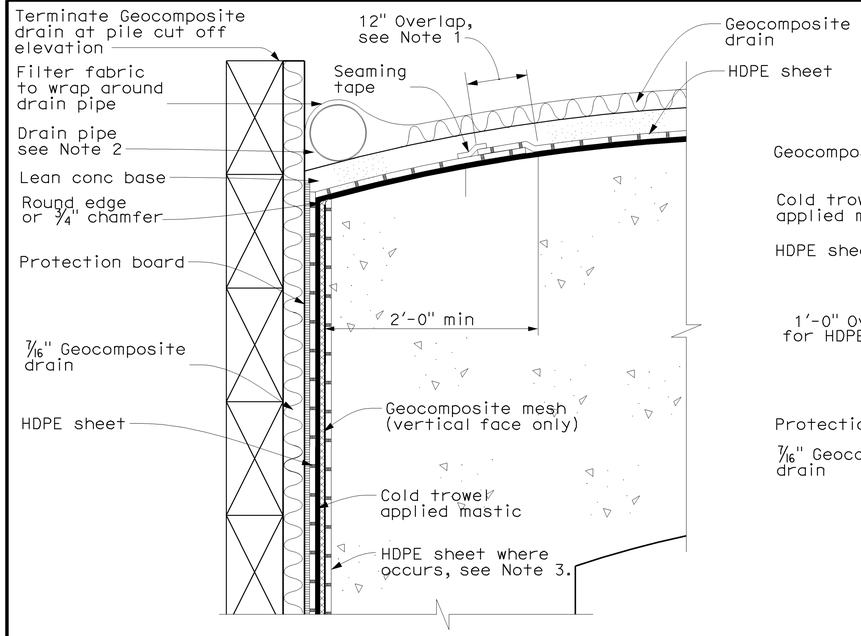

ROOF WATERPROOFING DETAIL
No scale

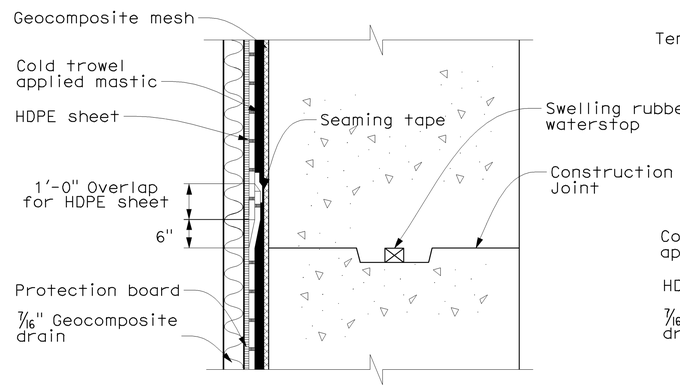

TUNNEL WALL WATERPROOFING DETAIL
No scale

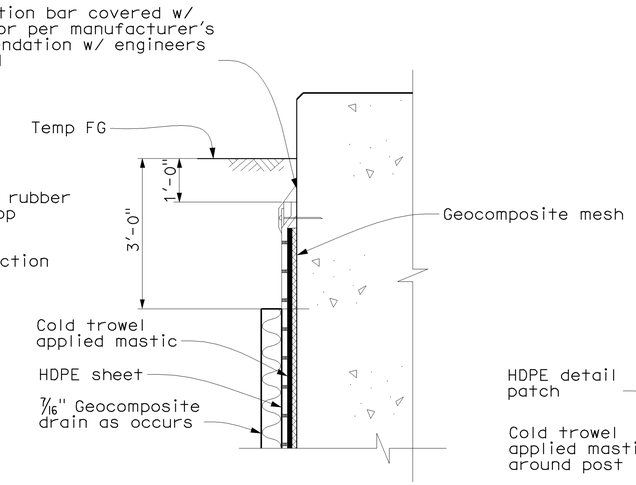

WATERPROOFING TERMINATION DETAIL
No scale

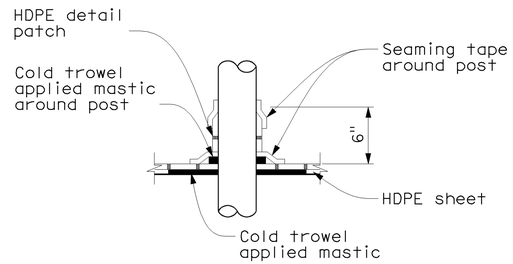

PENETRATION WATERPROOFING DETAIL
No scale

Notes:

1. Waterproofing system overlap and corner protection per manufacturer's requirements and approved by Engineer.
2. For drain pipe, see "Roadway" plans.
3. Apply HDPE sheet over geocomposite mesh at North tunnel wall from Sta 80+30.30 to ET

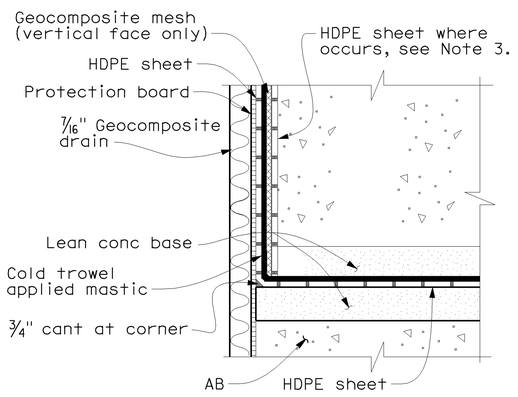

INVERT SLAB WATERPROOFING DETAIL
No scale

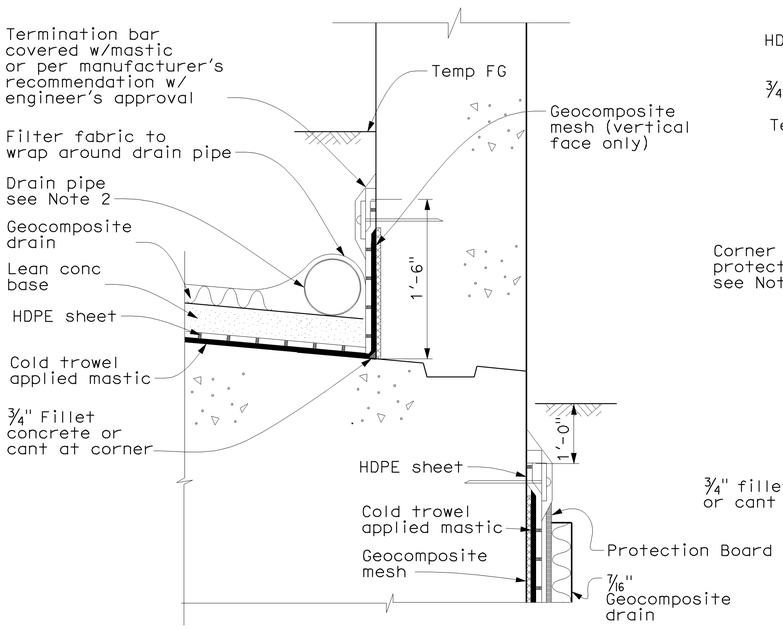

PARAPET WATERPROOFING DETAIL
No scale

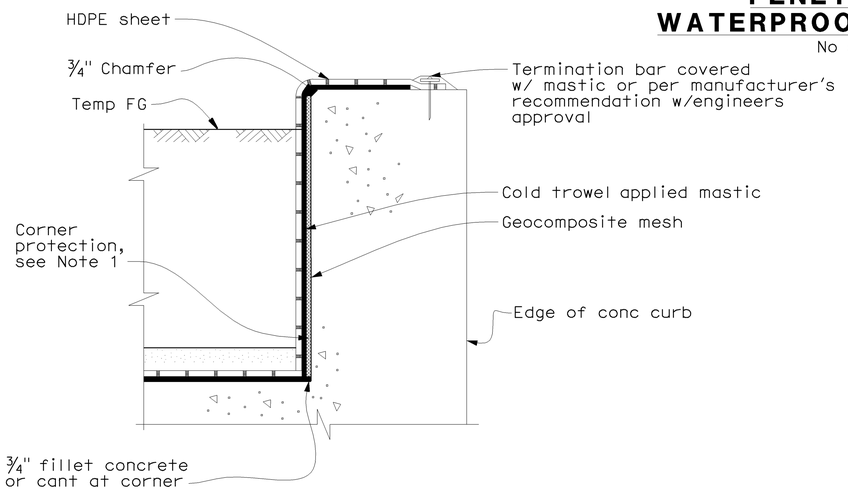

WALL WATERPROOFING DETAIL
No scale

CALIFORNIA STATE FIRE MARSHAL APPROVED

Approval of this plan does not authorize or approve any omission or deviation from applicable regulations. Final approval is subject to field inspection. One set of approved plans shall be available on the project site at all times.

Reviewed by: STEPHEN GUARINO
Approval date: 12-14-09

SBBT-ST39

DESIGN	BY Q. LIU	CHECKED M. YUCEKUL	PREPARED FOR THE STATE OF CALIFORNIA DEPARTMENT OF TRANSPORTATION	QIYU LIU PROJECT ENGINEER	BRIDGE NO. 34-0161L
DETAILS	BY E.SUDHAUSEN	CHECKED M. YUCEKUL			POST MILES 9.0/9.2
QUANTITIES	BY W. ASHWOOD	CHECKED J. YANG			

SOUTHBOUND BATTERY TUNNEL WATERPROOFING DETAILS

DESIGN DETAIL SHEET (ENGLISH) (REV. 06-01-09)

ORIGINAL SCALE IN INCHES FOR REDUCED PLANS 0 1 2 3

CU 04
EA 163741

DISREGARD PRINTS BEARING EARLIER REVISION DATES

REVISION DATES (PRELIMINARY STAGE ONLY) 06/01/09 07/15/09 08/07/09 09/18/09 10/30/09

SHEET 39 OF 72

FILE => 34-0161rl-st039.dgn

USERNAME => trlenard DATE PLOTTED => 14-DEC-2009 TIME PLOTTED => 15:21

DIST	COUNTY	ROUTE	POST MILES TOTAL PROJECT	SHEET No	TOTAL SHEETS
04	SF	101	8.2/9.2	476	654

REGISTERED CIVIL ENGINEER — 9/18/09 DATE

12-14-09
PLANS APPROVAL DATE

REGISTERED PROFESSIONAL ENGINEER — Qiyu Liu — No. C-58082 — Exp. 6/30/10 — CIVIL — STATE OF CALIFORNIA

The State of California or its officers or agents shall not be responsible for the accuracy or completeness of scanned copies of this plan sheet.

Arup PB Joint Venture
560 Mission Street, Suite 700
San Francisco, CA 94105

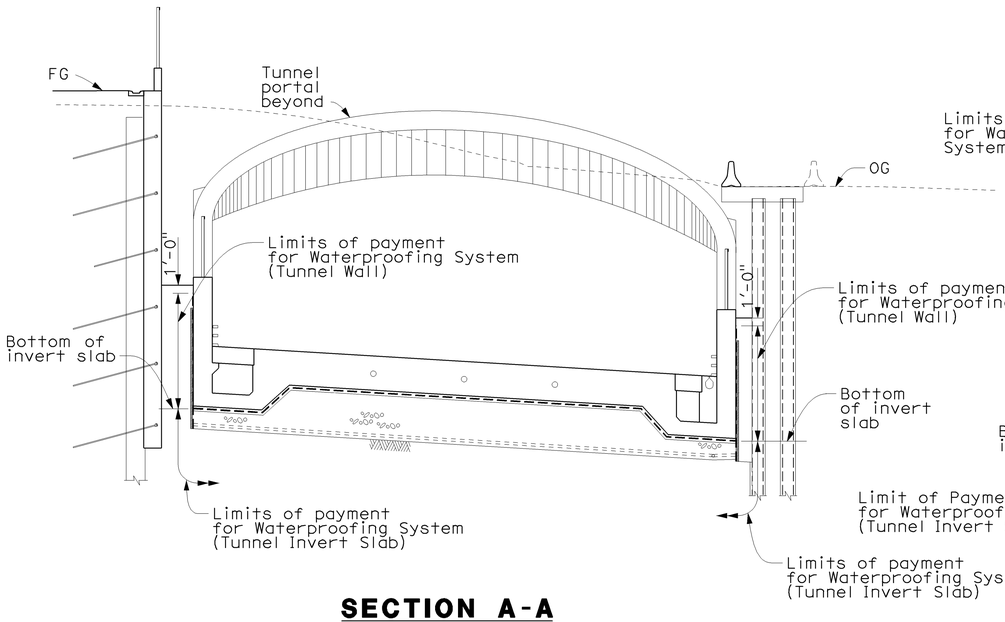

SECTION A-A
Scale: 1"=10'

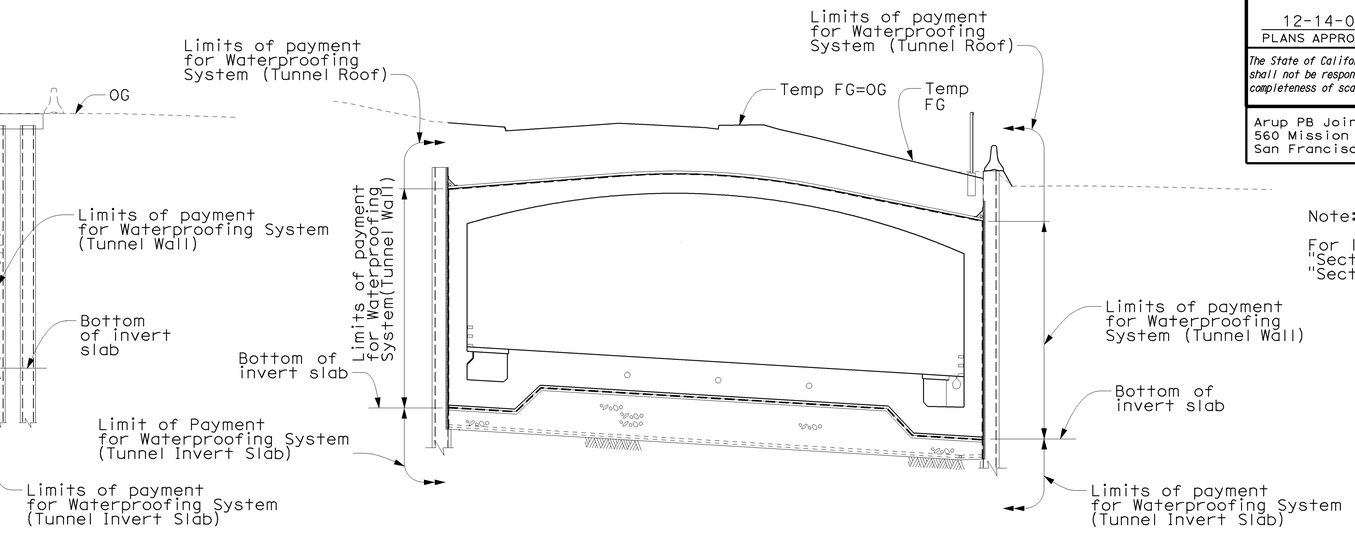

SECTION B-B
Scale: 1"=10'

Note:

For locations of "Section A-A", "Section B-B" "Section C-C" and "Section D-D", see sheet "SBBT-ST2".

CALIFORNIA STATE FIRE MARSHAL APPROVED

Approval of this plan does not authorize or approve any omission or deviation from applicable regulations. Final approval is subject to field inspection. One set of approved plans shall be available on the project site at all times.

Reviewed by: STEPHEN GUARINO

Approval date: 12-14-09

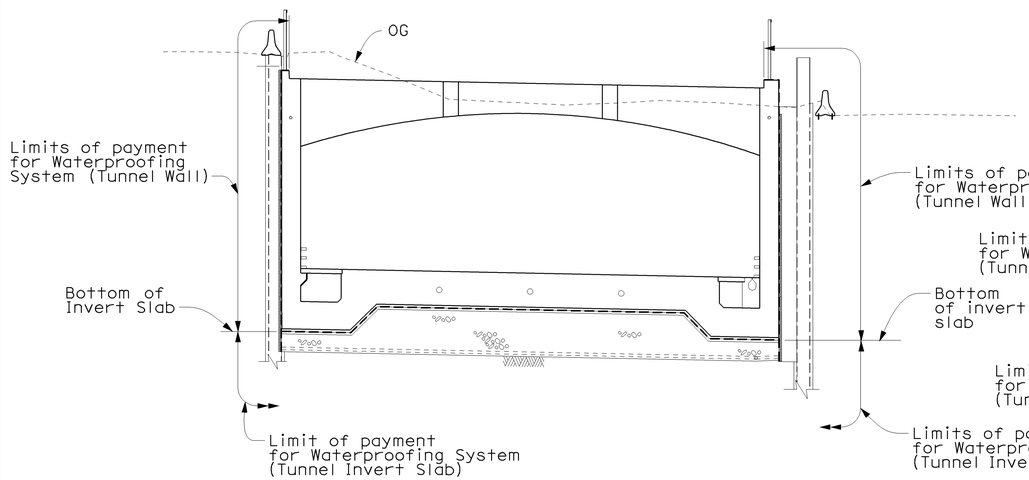

SECTION C-C
Scale: 1"=10'

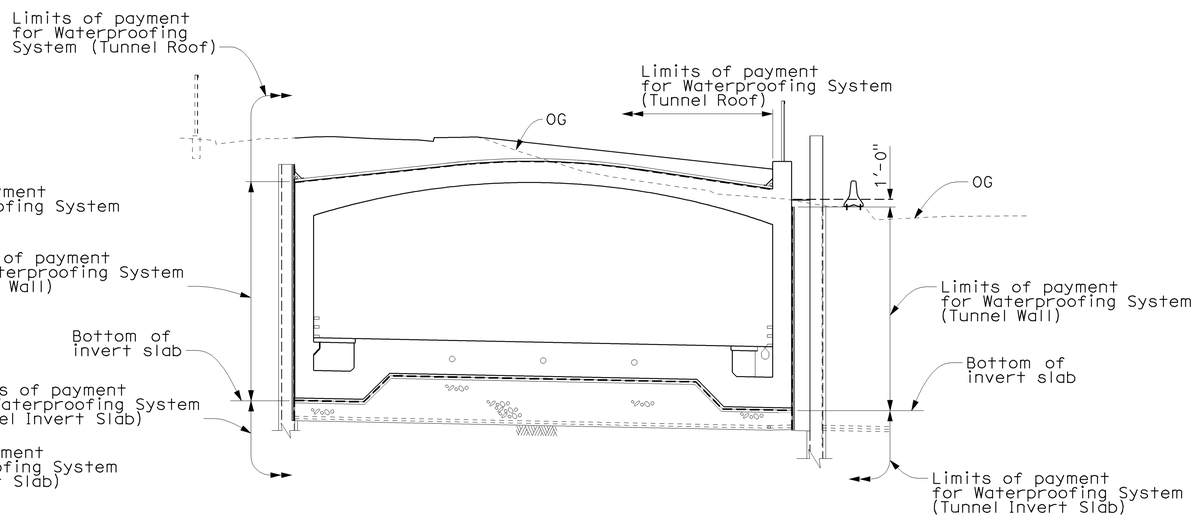

SECTION D-D
Scale: 1"=10'

SBBT-ST39.1

DESIGN	BY Y. REN	CHECKED M. YUCEKUL	PREPARED FOR THE STATE OF CALIFORNIA DEPARTMENT OF TRANSPORTATION	QIYU LIU, PROJECT ENGINEER	BRIDGE NO. 34-0161L; POST MILES 9.0/9.2
DETAILS	BY M. LAMAGNA	CHECKED M. YUCEKUL			
QUANTITIES	BY W. ASHWOOD	CHECKED J. YANG			

SOUTHBOUND BATTERY TUNNEL
WATERPROOFING PAYLIMITS NO.1

DESIGN DETAIL SHEET (ENGLISH) (REV. 06-01-09)

ORIGINAL SCALE IN INCHES FOR REDUCED PLANS 0 1 2 3

CU 04
EA 163741

DISREGARD PRINTS BEARING EARLIER REVISION DATES

REVISION DATES (PRELIMINARY STAGE ONLY): 06/01/09 | 07/15/09 | 08/17/09 | 09/14/09 | 09/18/09

SHEET 40 OF 72

FILE => 34-0161rl-st039_1.dgn

USERNAME => ttrhenard DATE PLOTTED => 14-DEC-2009 TIME PLOTTED => 15:21

DIST	COUNTY	ROUTE	POST MILES TOTAL PROJECT	SHEET No	TOTAL SHEETS
04	SF	101	8.2/9.2	477	654

CALIFORNIA STATE FIRE MARSHAL APPROVED

Approval of this plan does not authorize or approve any omission or deviation from applicable regulations. Final approval is subject to field inspection. One set of approved plans shall be available on the project site at all times.

Reviewed by: STEPHEN GUARINO

Approval date: 12-14-09

REGISTERED CIVIL ENGINEER — 10/30/09 DATE

Qiyu Liu No. C-58082 Exp 6/30/10 CIVIL — REGISTERED PROFESSIONAL ENGINEER — STATE OF CALIFORNIA

12-14-09
PLANS APPROVAL DATE

The State of California or its officers or agents shall not be responsible for the accuracy or completeness of scanned copies of this plan sheet.

Arup PB Joint Venture
560 Mission Street, Suite 700
San Francisco, CA 94105

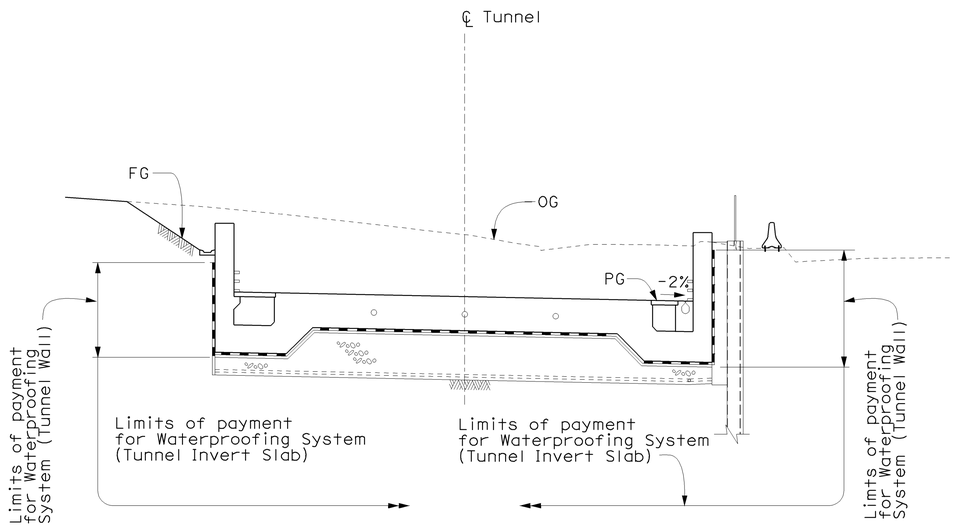

SECTION E-E

Scale: 1"=10'

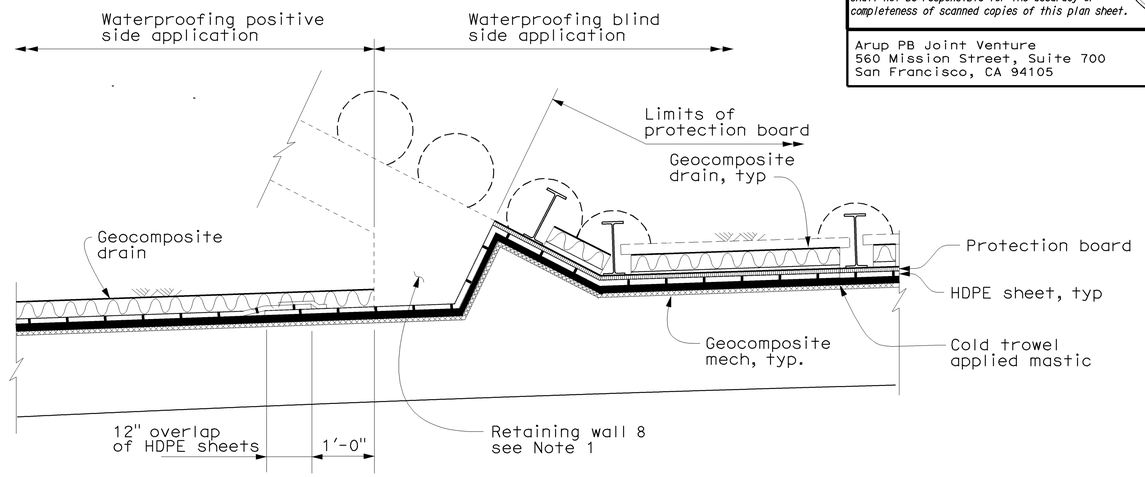

WATERPROOFING TRANSITION DETAIL

No Scale

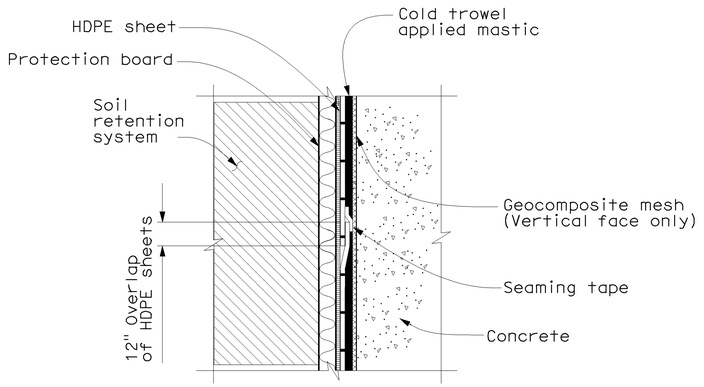

BLIND SIDE APPLICATION

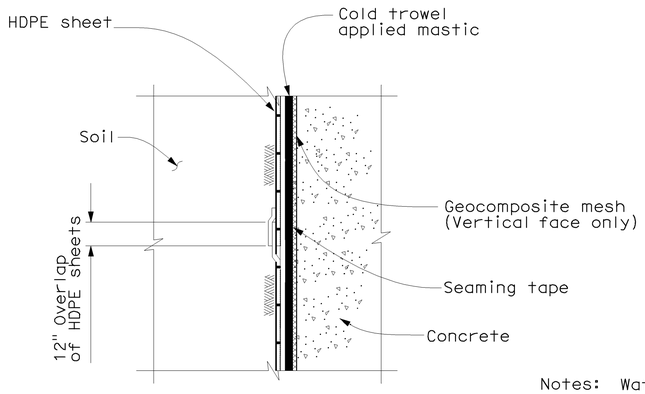

POSITIVE SIDE APPLICATION

Notes: Waterproofing for wall shown, waterproofing for roof and invert slab similar

TYPICAL WATERPROOFING SPLICE DETAIL

No Scale

Notes:

1. For details of Retaining wall 8, see "Retaining Wall No.8" plans.

SBBT-ST39.2

DESIGN	BY Y. REN	CHECKED M. YUCEKUL	PREPARED FOR THE STATE OF CALIFORNIA DEPARTMENT OF TRANSPORTATION	QIYU LIU PROJECT ENGINEER	BRIDGE NO. 34-0161L
DETAILS	BY P.A.TONKIN	CHECKED M. YUCEKUL			POST MILES 9.0/9.2
QUANTITIES	BY W. ASHWOOD	CHECKED J. YANG			

SOUTHBOUND BATTERY TUNNEL
WATERPROOFING PAY LIMITS NO.2

DESIGN DETAIL SHEET (ENGLISH) (REV. 06-01-09)

ORIGINAL SCALE IN INCHES FOR REDUCED PLANS 0 1 2 3

CU 04
EA 163741

DISREGARD PRINTS BEARING EARLIER REVISION DATES →

REVISION DATES (PRELIMINARY STAGE ONLY): 09/15/09 | 10/05/09 | 10/30/09

SHEET 41 OF 72

FILE => 34-0161r1-st039.2.dgn

USERNAME => rtrenard DATE PLOTTED => 14-DEC-2009 TIME PLOTTED => 15:22

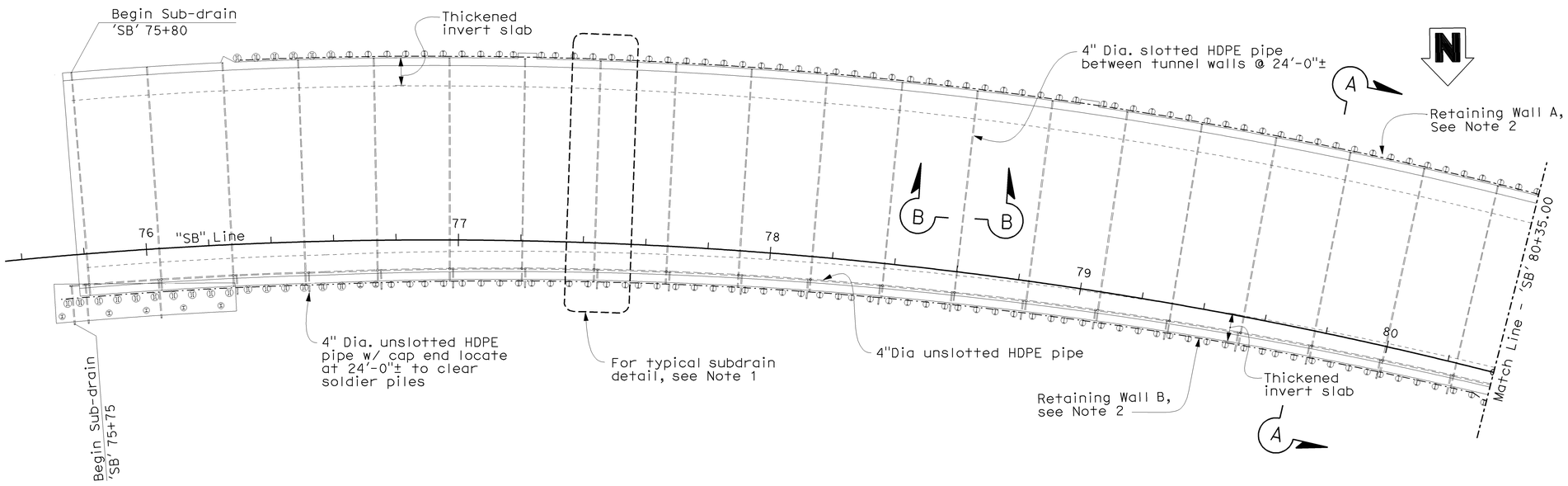

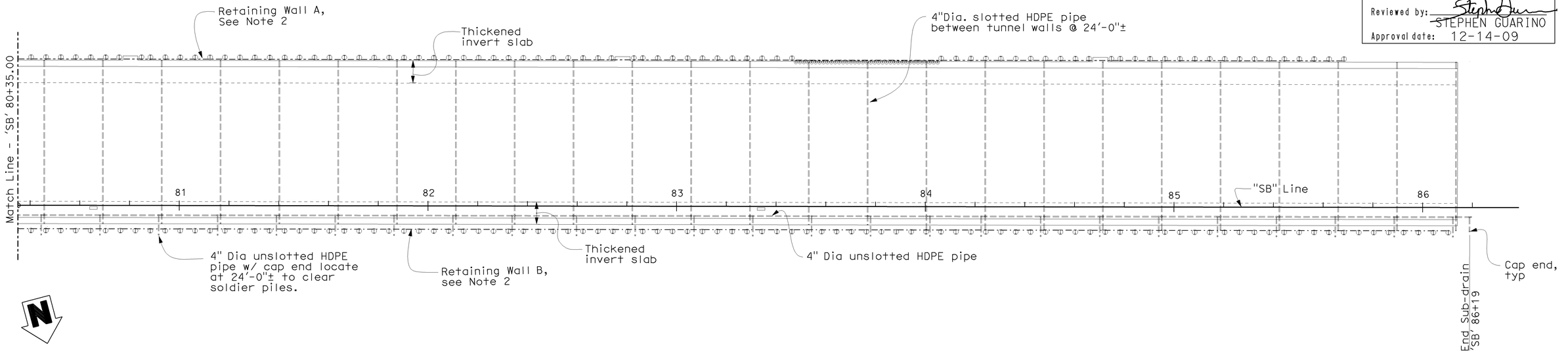

SUBDRAIN LAYOUT PLAN

Scale: 1"=20'

DIST	COUNTY	ROUTE	POST MILES TOTAL PROJECT	SHEET No	TOTAL SHEETS
04	SF	101	8.2/9.2	478	654

REGISTERED CIVIL ENGINEER — 8/26/09 DATE

12-14-09
PLANS APPROVAL DATE

REGISTERED PROFESSIONAL ENGINEER — Qiyu Liu — No. C-58082 — Exp. 6/30/10 — CIVIL — STATE OF CALIFORNIA

The State of California or its officers or agents shall not be responsible for the accuracy or completeness of scanned copies of this plan sheet.

Arup PB Joint Venture
560 Mission Street, Suite 700
San Francisco, CA 94105

Notes:

1. For subdrain details, see "Typical Subdrain Detail" sheet "SBBT-ST41".
2. For layout and details of Retainging Wall A & B, see "Retaining Wall A & B" plans.
3. For "Section A-A" and "Section B-B", see sheet "SBBT-ST41".

CALIFORNIA STATE FIRE MARSHAL APPROVED

Approval of this plan does not authorize or approve any omission or deviation from applicable regulations. Final approval is subject to field inspection. One set of approved plans shall be available on the project site at all times.

Reviewed by: STEPHEN GUARINO

Approval date: 12-14-09

SBBT-ST40

DESIGN	BY Q.LIU	CHECKED M. YUCEKUL	PREPARED FOR THE STATE OF CALIFORNIA DEPARTMENT OF TRANSPORTATION	QIYU LIU PROJECT ENGINEER	BRIDGE NO. 34-0161L	SOUTHBOUND BATTERY TUNNEL	
DETAILS	BY T. MARTARELLA	CHECKED M. YUCEKUL			POST MILES 9.0/9.2	SUBDRAIN LAYOUT	
QUANTITIES	BY N. VIVAR	CHECKED J. YANG					

DESIGN DETAIL SHEET (ENGLISH) (REV. 06-01-09)

ORIGINAL SCALE IN INCHES FOR REDUCED PLANS 0 1 2 3

CU 04
EA 163741

DISREGARD PRINTS BEARING EARLIER REVISION DATES →

REVISION DATES (PRELIMINARY STAGE ONLY): 06/05/09 | 07/10/09 | 08/07/09 | 08/26/09

SHEET 42 OF 72

FILE => 34-0161r1-st040.dgn

USERNAME => $USER$ DATE PLOTTED => $DATE$ TIME PLOTTED => $TIME$

Notes:

1. For location of "Typical Subdrain Detail", "Section A-A" and "Section B-B", see sheet "SBBT-ST40".
2. For drain pipe on tunnel roof, see "Roadway" plans.

CALIFORNIA STATE FIRE MARSHAL APPROVED
Approval of this plan does not authorize or approve any omission or deviation from applicable regulations. Final approval is subject to field inspection. One set of approved plans shall be available on the project site at all times.
Reviewed by: STEPHEN GUARINO
Approval date: 12-14-09

DIST	COUNTY	ROUTE	POST MILES TOTAL PROJECT	SHEET No	TOTAL SHEETS
04	SF	101	8.2/9.2	479	654

REGISTERED CIVIL ENGINEER — 10/30/09 DATE
12-14-09 PLANS APPROVAL DATE
REGISTERED PROFESSIONAL ENGINEER — Qiyu Liu — No. C-58082 — Exp. 6/30/10 — CIVIL — STATE OF CALIFORNIA

The State of California or its officers or agents shall not be responsible for the accuracy or completeness of scanned copies of this plan sheet.

Arup PB Joint Venture
560 Mission Street, Suite 700
San Francisco, CA 94105

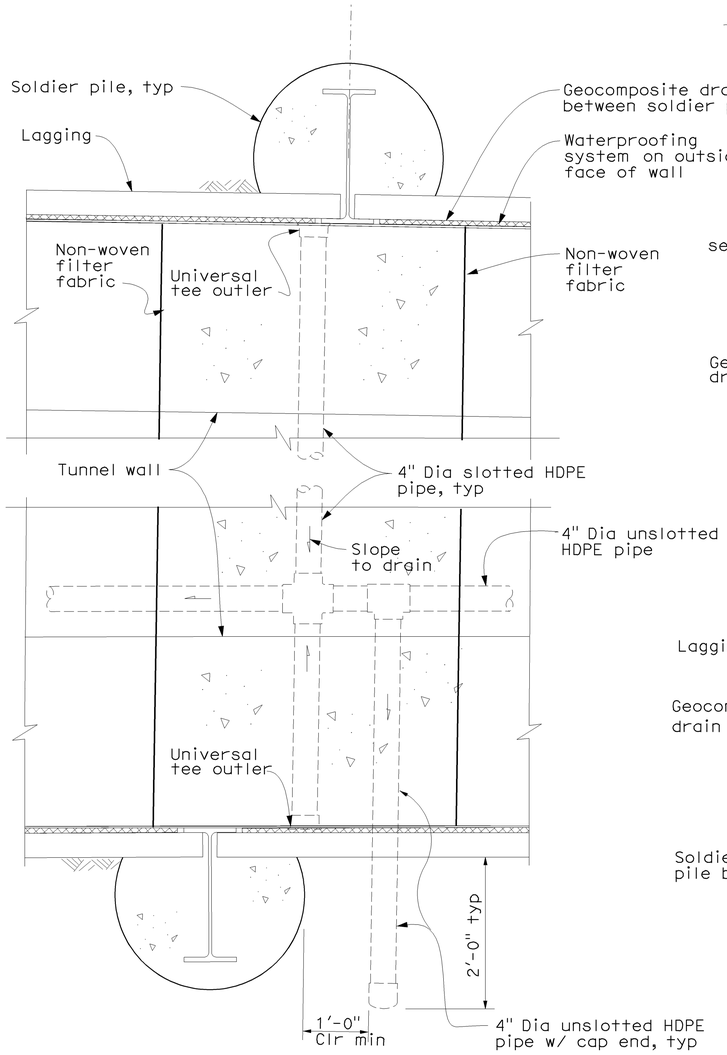

TYPICAL SUBDRAIN DETAIL
Scale: 1" = 1'-0"

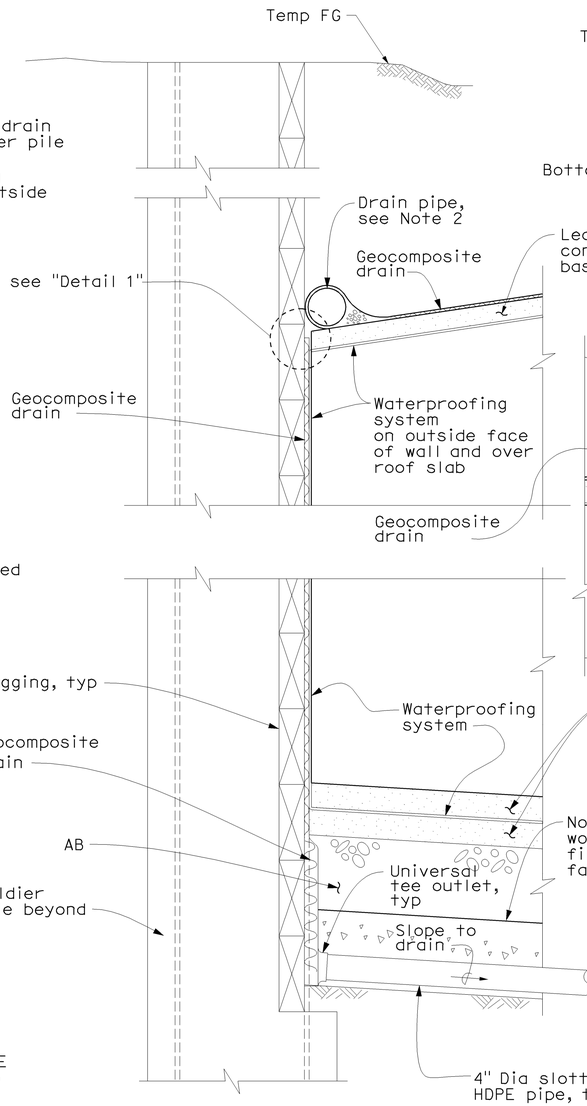

SECTION A-A
Scale: 1" = 1'-0"

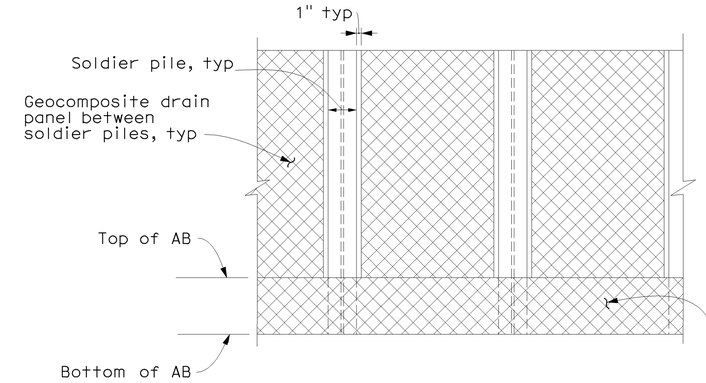

GEOCOMPOSITE DRAIN PANEL ELEVATION
No Scale

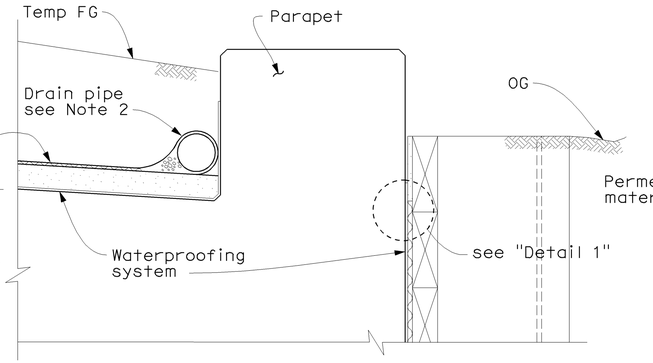

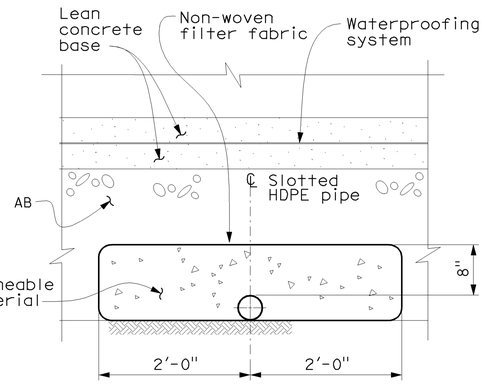

SECTION B-B
Scale: 1" = 1'-0"

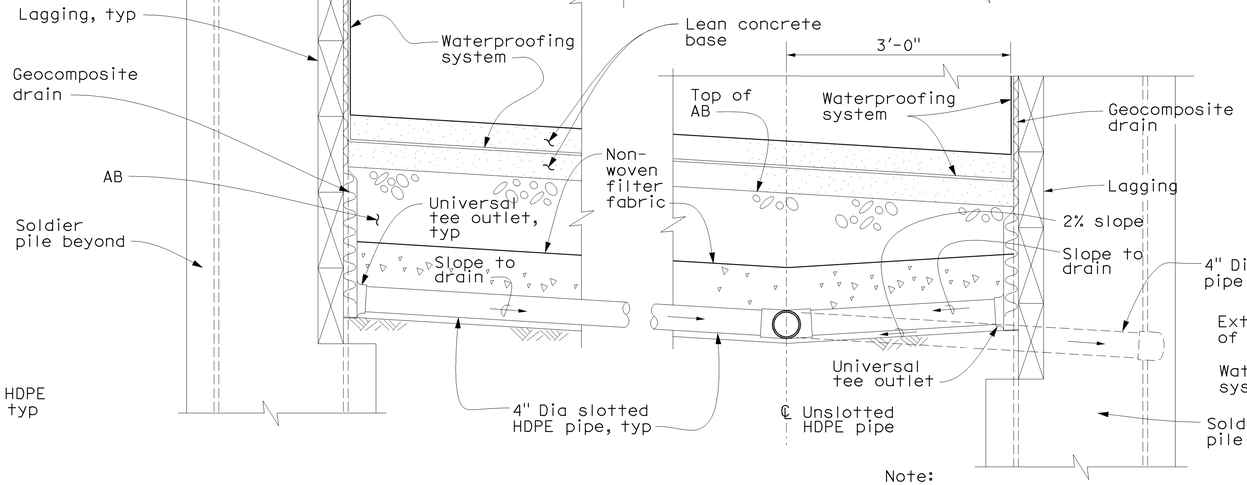

Note:
Subdrain for construction w/o rock excavation shown.
Subdrain for construction w/ rock excavation similar.

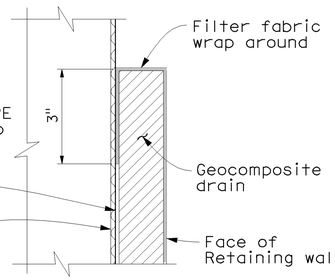

DETAIL 1
No Scale

SBBT-ST41

DESIGN	BY Q. LIU	CHECKED M. YUCEKUL	PREPARED FOR THE STATE OF CALIFORNIA DEPARTMENT OF TRANSPORTATION	QIYU LIU PROJECT ENGINEER	BRIDGE NO. 34-0161L	SOUTHBOUND BATTERY TUNNEL SUBDRAIN DETAILS	
DETAILS	BY T.MARTARELLA	CHECKED M. YUCEKUL			POST MILES 9.0/9.2		
QUANTITIES	BY W. ASHWOOD	CHECKED J. YANG		CU 04 EA 163741			

DESIGN DETAIL SHEET (ENGLISH) (REV. 06-01-09)
ORIGINAL SCALE IN INCHES FOR REDUCED PLANS 0 1 2 3
DISREGARD PRINTS BEARING EARLIER REVISION DATES
REVISION DATES (PRELIMINARY STAGE ONLY): 06/01/09 | 07/15/09 | 08/03/09 | 08/28/09 | 09/11/09 | 10/30/09
SHEET 43 OF 72

FILE => 34-0161rl-st041.dgn
USERNAME => rlleonard DATE PLOTTED => 14-DEC-2009 TIME PLOTTED => 15:22

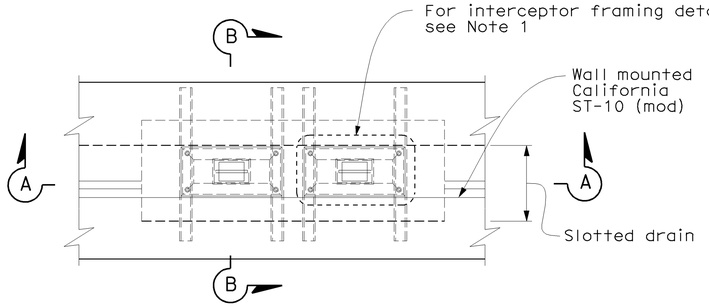

DRAIN INTERCEPTOR DETAIL

Scale: 1" = 1'-0"

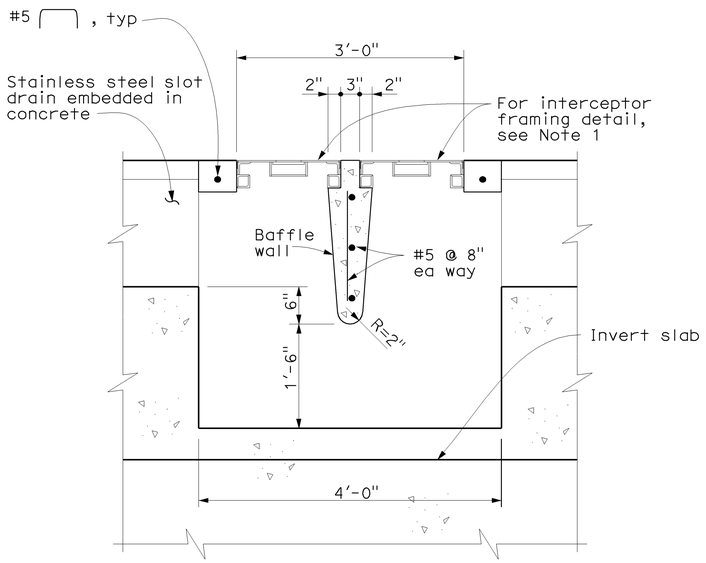

SECTION A-A

Scale: 1" = 1'-0"

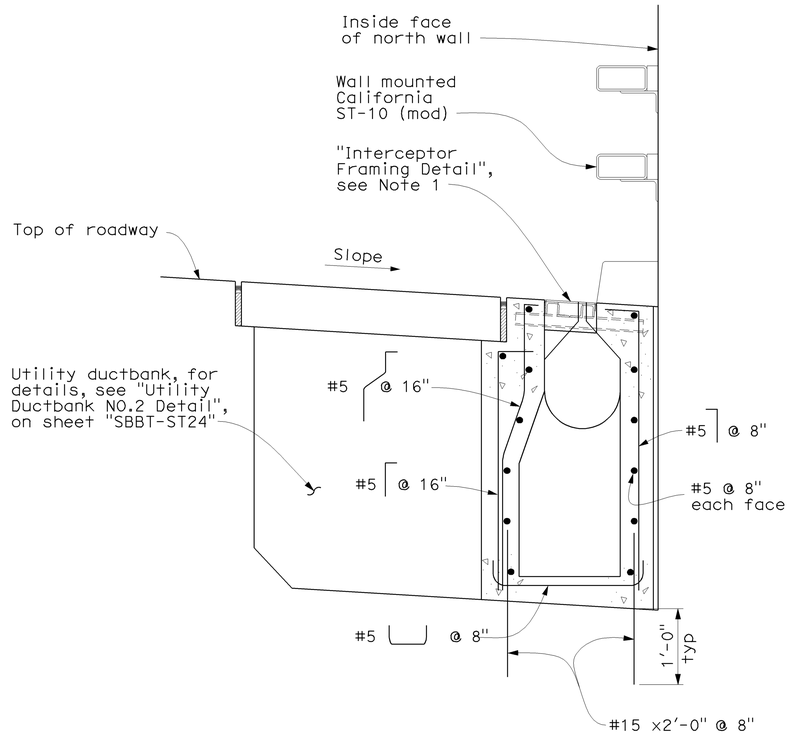

SECTION B-B

Scale: 1" = 1'-0"

Notes:

1. For interceptor cover and frame, see "Interceptor Framing Detail" on sheet "SBBT-ST43".
2. For details of Wall Mounted California ST-10 (mod), see "SBBT-ST44".
3. For tunnel drainage layout, see "Tunnel System" plans.
4. For details of stainless steel slot drain, see "Tunnel System" plans.

DIST	COUNTY	ROUTE	POST MILES TOTAL PROJECT	SHEET No	TOTAL SHEETS
04	SF	101	8.2/9.2	480	654

REGISTERED CIVIL ENGINEER — 10/30/09 DATE

12-14-09
PLANS APPROVAL DATE

REGISTERED PROFESSIONAL ENGINEER — Qiyu Liu — No. C-58082 — Exp. 6/30/10 — CIVIL — STATE OF CALIFORNIA

The State of California or its officers or agents shall not be responsible for the accuracy or completeness of scanned copies of this plan sheet.

Arup PB Joint Venture
560 Mission Street, Suite 700
San Francisco, CA 94105

CALIFORNIA STATE FIRE MARSHAL APPROVED

Approval of this plan does not authorize or approve any omission or deviation from applicable regulations. Final approval is subject to field inspection. One set of approved plans shall be available on the project site at all times.

Reviewed by: STEPHEN GUARINO
Approval date: 12-14-09

SBBT-ST42

DESIGN	BY K. CLINCH	CHECKED M. YUCEKUL	PREPARED FOR THE STATE OF CALIFORNIA DEPARTMENT OF TRANSPORTATION	QIYU LIU PROJECT ENGINEER	BRIDGE NO. 34-0161L	SOUTHBOUND BATTERY TUNNEL	
DETAILS	BY T MARTARELLA	CHECKED M. YUCEKUL			POST MILES 9.09.2	DRAIN INTERCEPTOR DETAILS NO.1	
QUANTITIES	BY W. ASHWOOD	CHECKED J. YANG					

DESIGN DETAIL SHEET (ENGLISH) (REV. 06-01-09)

ORIGINAL SCALE IN INCHES FOR REDUCED PLANS 0 1 2 3

CU 04
EA 163741

DISREGARD PRINTS BEARING EARLIER REVISION DATES

REVISION DATES (PRELIMINARY STAGE ONLY): 06/01/09 | 07/10/09 | 08/07/09 | 08/28/09 | 10/30/09

SHEET 44 OF 72

FILE => 34-0161r1-st042.dgn

USERNAME => ttrenord DATE PLOTTED => 14-DEC-2009 TIME PLOTTED => 15:22

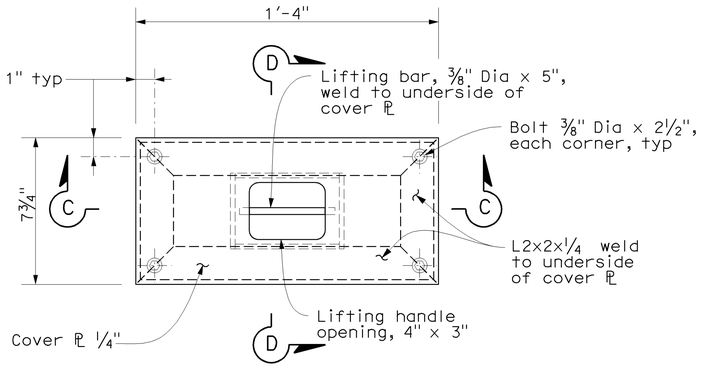

INTERCEPTOR FRAMING DETAIL

Scale: 3" = 1'-0"

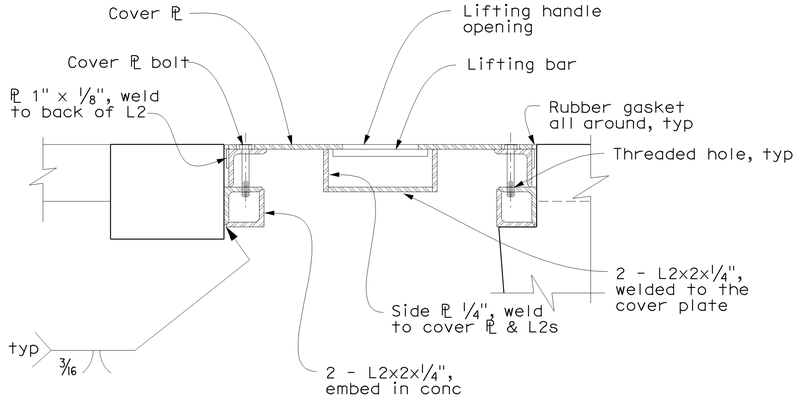

SECTION C-C

Scale: 3" = 1'-0"

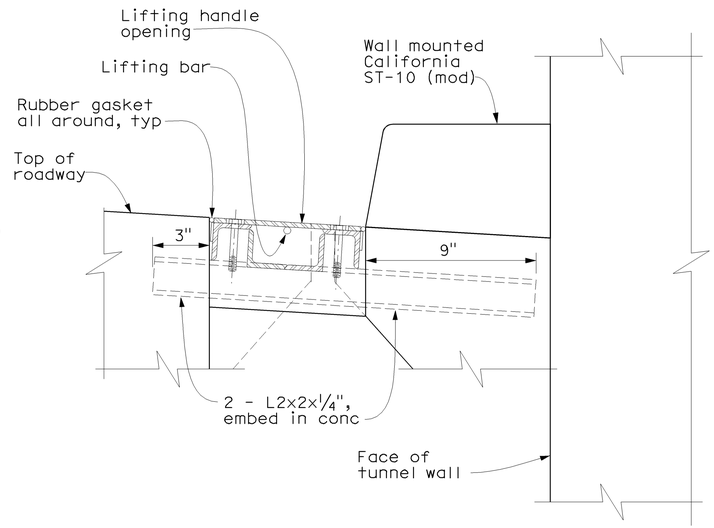

SECTION D-D

Scale: 3" = 1'-0"

CALIFORNIA STATE FIRE MARSHAL
APPROVED

Approval of this plan does not authorize or approve any omission or deviation from applicable regulations. Final approval is subject to field inspection. One set of approved plans shall be available on the project site at all times.

Reviewed by: STEPHEN GUARINO

Approval date: 12-14-09

DIST	COUNTY	ROUTE	POST MILES TOTAL PROJECT	SHEET No	TOTAL SHEETS
04	SF	101	8.2/9.2	481	654

REGISTERED CIVIL ENGINEER — 10/30/09 DATE

12-14-09
PLANS APPROVAL DATE

REGISTERED PROFESSIONAL ENGINEER — Qiyu Liu — No. C-58082 — Exp. 6/30/10 — CIVIL — STATE OF CALIFORNIA

The State of California or its officers or agents shall not be responsible for the accuracy or completeness of scanned copies of this plan sheet.

Arup PB Joint Venture
560 Mission Street, Suite 700
San Francisco, CA 94105

Notes:

1. The cover plate and its connection to the interceptor shall be watertight.
2. All parts of the covers shall be galvanized after fabrication.

SBBT-ST43

DESIGN	BY K. CLINCH	CHECKED M. YUCEKUL	PREPARED FOR THE STATE OF CALIFORNIA DEPARTMENT OF TRANSPORTATION	QIYU LIU, PROJECT ENGINEER	BRIDGE NO. 34-0161L; POST MILES 9.0/9.2
DETAILS	BY T MARTARELLA	CHECKED M. YUCEKUL			
QUANTITIES	BY W.ASHWOOD	CHECKED J. YANG			

SOUTHBOUND BATTERY TUNNEL
DRAIN INTERCEPTOR DETAILS NO.2

DESIGN DETAIL SHEET (ENGLISH) (REV. 06-01-09)

ORIGINAL SCALE IN INCHES FOR REDUCED PLANS 0 1 2 3

CU 04
EA 163741

DISREGARD PRINTS BEARING EARLIER REVISION DATES →

REVISION DATES (PRELIMINARY STAGE ONLY): 06/01/09 | 07/15/09 | 08/07/09 | 08/21/09 | 10/30/09

SHEET 45 OF 72

FILE => 34-0161rl-st043.dgn

USERNAME => ttrehard DATE PLOTTED => 14-DEC-2009 TIME PLOTTED => 15:22

DIST	COUNTY	ROUTE	POST MILES TOTAL PROJECT	SHEET No	TOTAL SHEETS
04	SF	101	8.2/9.2	482	654

CALIFORNIA STATE FIRE MARSHAL APPROVED

Approval of this plan does not authorize or approve any omission or deviation from applicable regulations. Final approval is subject to field inspection. One set of approved plans shall be available on the project site at all times.

Reviewed by: STEPHEN GUARINO

Approval date: 12-14-09

Genaro M. Doria
REGISTERED CIVIL ENGINEER DATE

12-14-09
PLANS APPROVAL DATE

REGISTERED PROFESSIONAL ENGINEER
GENARO M. DORIA
No. C63583
Exp. 9/30/10
CIVIL
STATE OF CALIFORNIA

The State of California or its officers or agents shall not be responsible for the accuracy or completeness of electronic copies of this plan sheet.

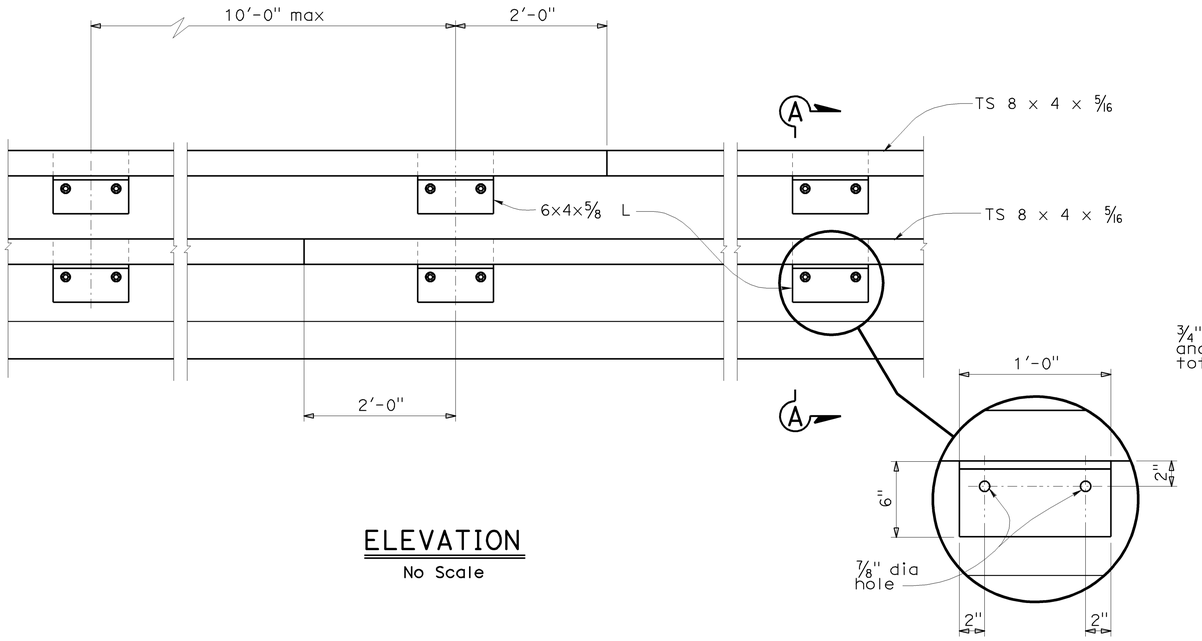

ELEVATION
No Scale

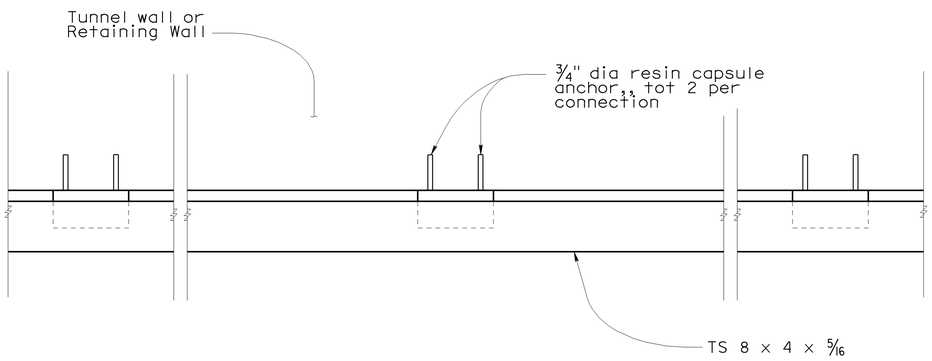

PLAN
No Scale

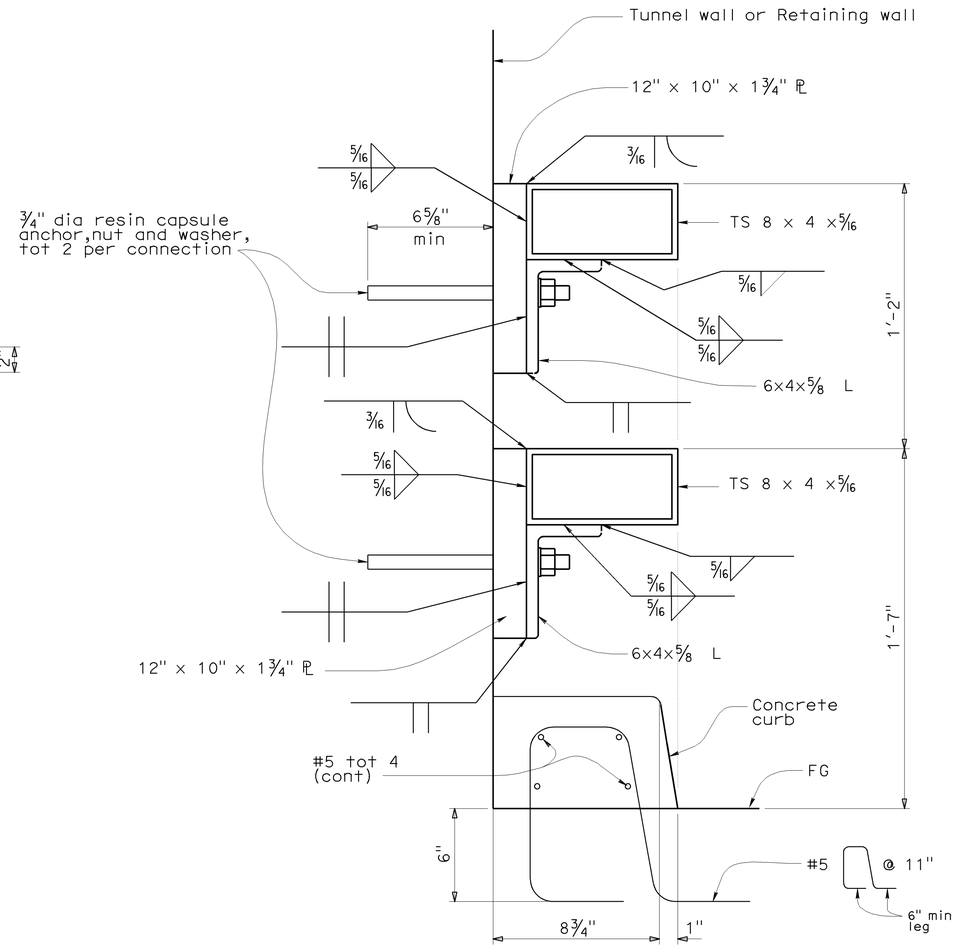

SECTION A-A
No Scale

Notes:

1) For Transition of other barrier rails, see "ROAD PLANS".
2) See "STANDARD PLANS" B11-70 for details not shown.
3) All steel shall be galvanized after fabrication.
4) For alignment, see "ROAD PLANS".

CONSTRUCTION DETAILS
No Scale

SBBT-ST44

DESIGN	BY G. Doria	CHECKED J Magana	STATE OF CALIFORNIA DEPARTMENT OF TRANSPORTATION	DIVISION OF ENGINEERING SERVICES STRUCTURE DESIGN SPECIAL DESIGNS BRANCH	BRIDGE NO. 34-0161L
DETAILS	BY P C Wells	CHECKED G Doria			POST MILE 9.0/9.2
QUANTITIES	BY L Johnson	CHECKED S Singh		CU 04 EA 163741	

SOUTHBOUND BATTERY TUNNEL
WALL MOUNTED CALIFORNIA ST-10 (MOD)

STRUCTURES DESIGN SPECIAL DESIGN SHEET (ENGLISH) (REV. 10-25-05)

ORIGINAL SCALE IN INCHES FOR REDUCED PLANS 0 1 2 3

DISREGARD PRINTS BEARING EARLIER REVISION DATES →

REVISION DATES: 6/11/09

SHEET 46 OF 72

FILE => 34-0161rl-st044.dgn

USERNAME => ttrenord DATE PLOTTED => 14-DEC-2009 TIME PLOTTED => 15:22

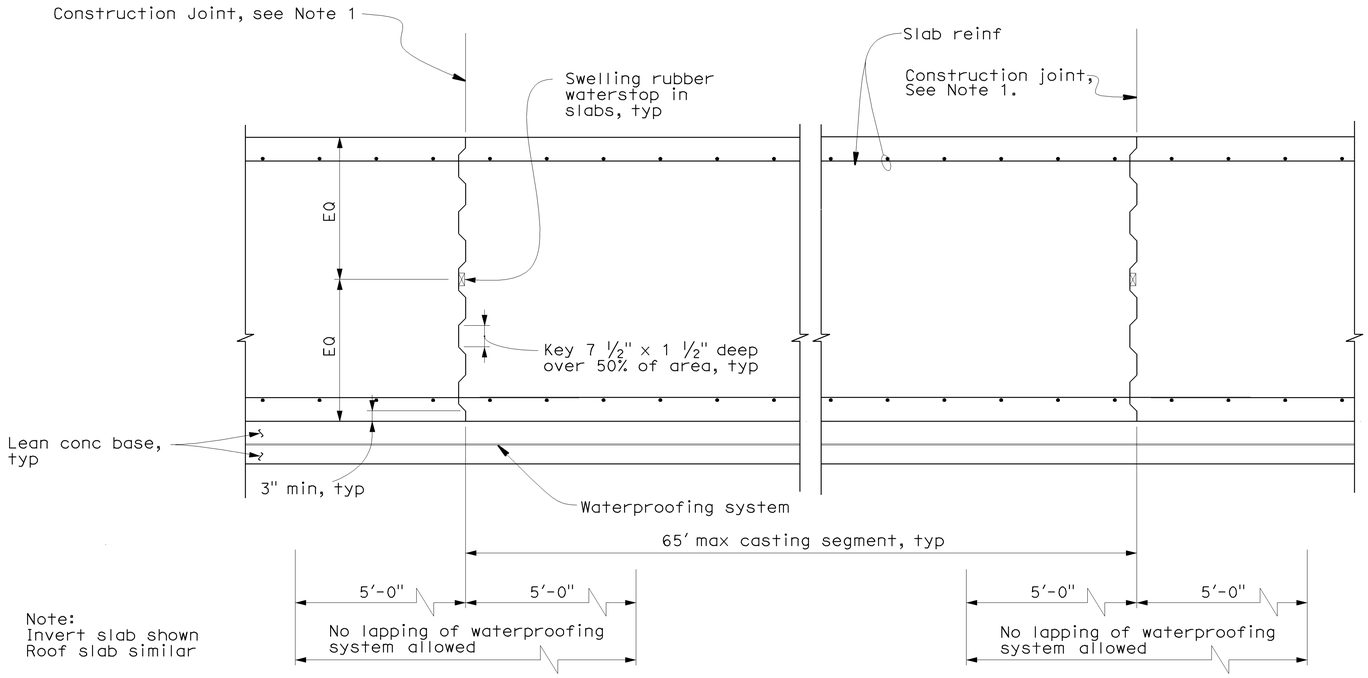

Note:
Invert slab shown
Roof slab similar

SLAB CONSTRUCTION JOINT DETAIL

Scale: 3/4" = 1'-0"

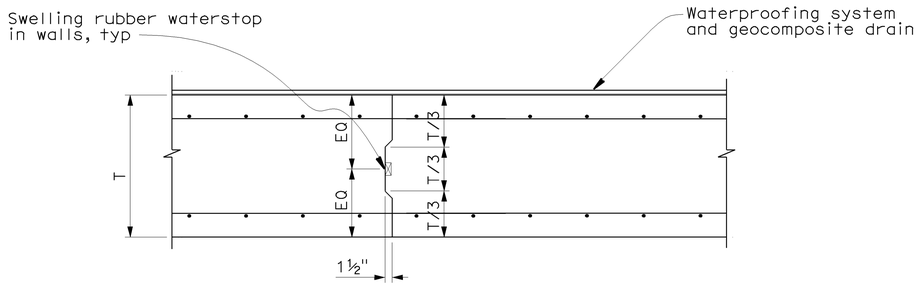

Note:
Horiz const joint shown.
Vert const joint similar.

WALL CONSTRUCTION JOINT DETAIL

Scale: 3/4" = 1'-0"

CALIFORNIA STATE FIRE MARSHAL APPROVED

Approval of this plan does not authorize or approve any omission or deviation from applicable regulations. Final approval is subject to field inspection. One set of approved plans shall be available on the project site at all times.

Reviewed by: STEPHEN GUARINO

Approval date: 12-14-09

DIST	COUNTY	ROUTE	POST MILES TOTAL PROJECT	SHEET No	TOTAL SHEETS
04	SF	101	8.2/9.2	483	654

REGISTERED CIVIL ENGINEER — 8/26/09 DATE

12-14-09
PLANS APPROVAL DATE

REGISTERED PROFESSIONAL ENGINEER — Qiyu Liu — No. C-58082 — Exp. 6/30/10 — CIVIL — STATE OF CALIFORNIA

The State of California or its officers or agents shall not be responsible for the accuracy or completeness of scanned copies of this plan sheet.

Arup PB Joint Venture
560 Mission Street, Suite 700
San Francisco, CA 94105

Notes:

1. Construction joints shall be placed normal to ℄ roadway

SBBT-ST45

DESIGN	BY K. CLINCH	CHECKED M. YUCEKUL	PREPARED FOR THE STATE OF CALIFORNIA DEPARTMENT OF TRANSPORTATION	QIYU LIU PROJECT ENGINEER	BRIDGE NO. 34-0161L	SOUTHBOUND BATTERY TUNNEL	
DETAILS	BY E.SUDHAUSEN	CHECKED M. YUCEKUL			POST MILES 9.0/9.2	CONSTRUCTION JOINT DETAILS	
QUANTITIES	BY W. ASHWOOD	CHECKED J. YANG					

DESIGN DETAIL SHEET (ENGLISH) (REV. 06-01-09)

ORIGINAL SCALE IN INCHES FOR REDUCED PLANS 0 1 2 3

CU 04
EA 163741

DISREGARD PRINTS BEARING EARLIER REVISION DATES

REVISION DATES (PRELIMINARY STAGE ONLY): 06/01/09 | 07/15/09 | 08/07/09

SHEET 47 OF 72

FILE => 34-0161rl-st045.dgn

USERNAME => #USER# DATE PLOTTED => #DATE# TIME PLOTTED => #TIME#

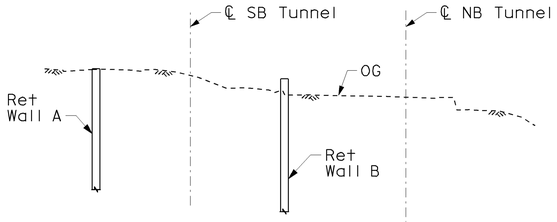

STAGE 1

A. Install Retaining Walls A & B

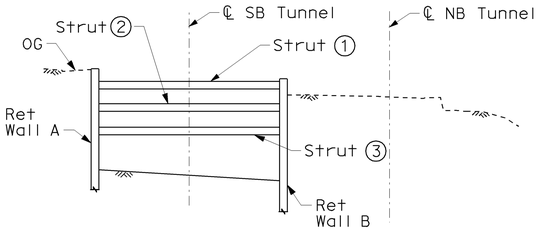

STAGE 4

A. Excavate to bottom of Strut ③

B. Install Strut ③

C. Excavate to bottom elevation of tunnel

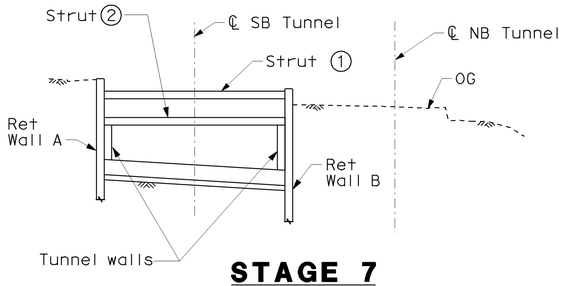

STAGE 7

A. Cast tunnel walls to underside of Strut ②

DIST	COUNTY	ROUTE	POST MILES TOTAL PROJECT	SHEET No	TOTAL SHEETS
04	SF	101	8.2/9.2	484	654

REGISTERED CIVIL ENGINEER — 8/26/09 DATE

12-14-09
PLANS APPROVAL DATE

REGISTERED PROFESSIONAL ENGINEER — Qiyu Liu — No. C-58082 — Exp. 6/30/10 — CIVIL — STATE OF CALIFORNIA

The State of California or its officers or agents shall not be responsible for the accuracy or completeness of scanned copies of this plan sheet.

Arup PB Joint Venture
560 Mission Street, Suite 700
San Francisco, CA 94105

Notes:

1. Construction sequence shown is applicable to tunnel construction from "SB" 76+62 (±) to "SB" 86+10 (±).
2. Three levels bracing shown, two levels bracing similar without strut ①.

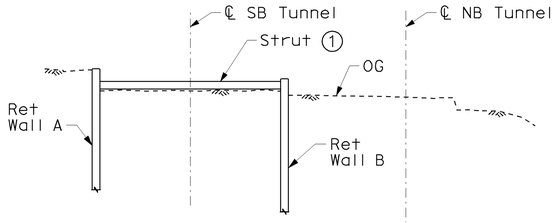

STAGE 2

A. Excavate to bottom of Strut ①

B. Install Strut ①

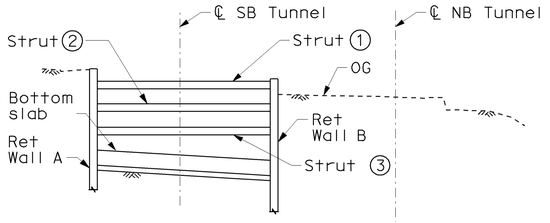

STAGE 5

A. Construct bottom slab

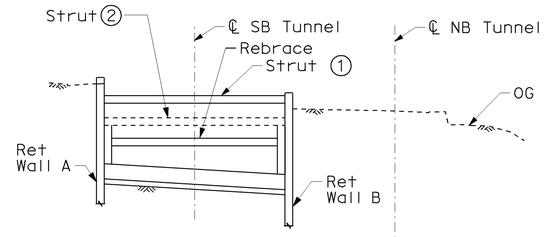

STAGE 8

A. Cure tunnel walls for 7 days

B. Install rebrace

C. Remove Strut ②

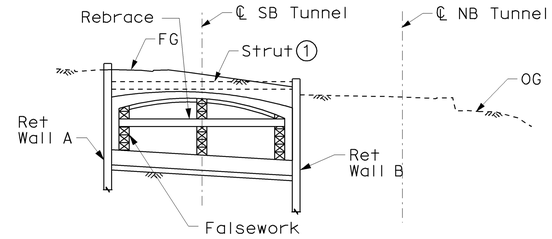

STAGE 10

A. Cure tunnel for 7 days

B. Remove Strut ①

C. Backfill to FG

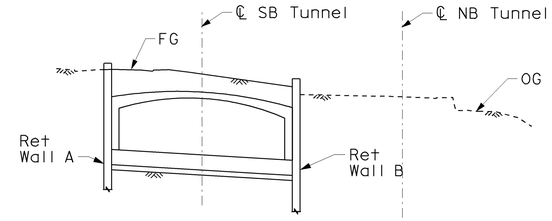

STAGE 11

A. Remove falsework and rebrace after 28 days

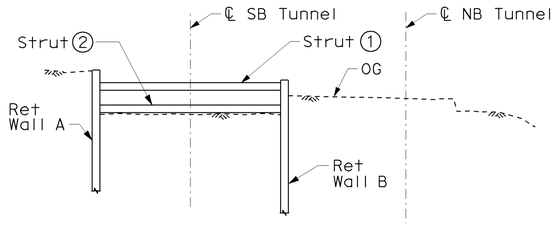

STAGE 3

A. Excavate to bottom of Strut ②

B. Install Strut ②

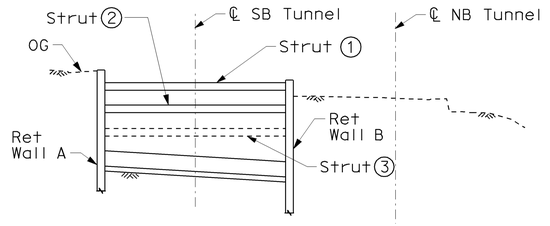

STAGE 6

A. Cure bottom slab for 7 days

B. Remove Strut ③

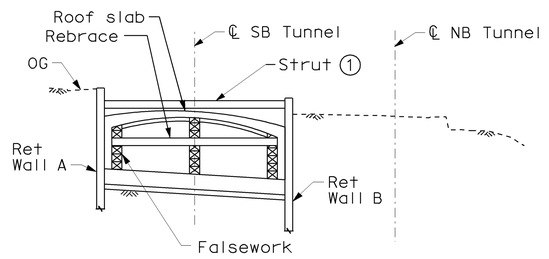

STAGE 9

A. Cast remainder of tunnel walls

B. Install falsework for tunnel roof construction

C. Cast tunnel roof slab

CALIFORNIA STATE FIRE MARSHAL APPROVED

Approval of this plan does not authorize or approve any omission or deviation from applicable regulations. Final approval is subject to field inspection. One set of approved plans shall be available on the project site at all times.

Reviewed by: STEPHEN GUARINO

Approval date: 12-14-09

SBBT-ST46

DESIGN	BY Q.LIU	CHECKED M. YUCEKUL	PREPARED FOR THE STATE OF CALIFORNIA DEPARTMENT OF TRANSPORTATION	QIYU LIU PROJECT ENGINEER	BRIDGE NO. 34-0161L
DETAILS	BY P.A.TONKIN	CHECKED M. YUCEKUL			POST MILES 9.0/9.2
QUANTITIES	BY W.ASHWOOD	CHECKED J. YANG			

SOUTHBOUND BATTERY TUNNEL
CONSTRUCTION SEQUENCE NO.1

DESIGN DETAIL SHEET (ENGLISH) (REV. 06-01-09)

ORIGINAL SCALE IN INCHES FOR REDUCED PLANS 0 1 2 3

CU 04
EA 163741

DISREGARD PRINTS BEARING EARLIER REVISION DATES →

REVISION DATES (PRELIMINARY STAGE ONLY): 06/09/09 | 07/07/09 | 08/07/09

SHEET 48 OF 72

FILE => 34-0161rl-st046.dgn

USERNAME => #USER# DATE PLOTTED => #DATE# TIME PLOTTED => #TIME#

DIST	COUNTY	ROUTE	POST MILES TOTAL PROJECT	SHEET No	TOTAL SHEETS
04	SF	101	8.2/9.2	485	654

REGISTERED CIVIL ENGINEER — 08/26/09 DATE

12-14-09
PLANS APPROVAL DATE

REGISTERED PROFESSIONAL ENGINEER — Qiyu Liu — No. C-58082 — Exp. 6/30/10 — CIVIL — STATE OF CALIFORNIA

The State of California or its officers or agents shall not be responsible for the accuracy or completeness of scanned copies of this plan sheet.

Arup PB Joint Venture
560 Mission Street, Suite 700
San Francisco, CA 94105

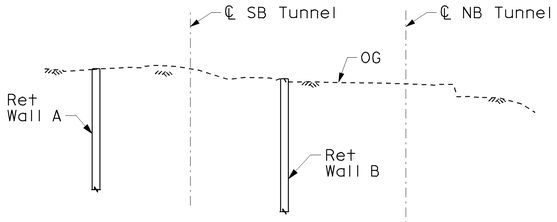

STAGE 1

A. Install Retaining Walls A & B

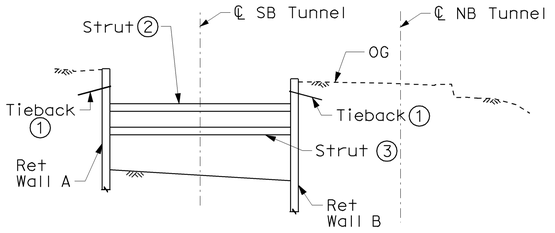

STAGE 4

A. Excavate to bottom of Strut ③

B. Install Strut ③

C. Excavate to bottom elevation of tunnel

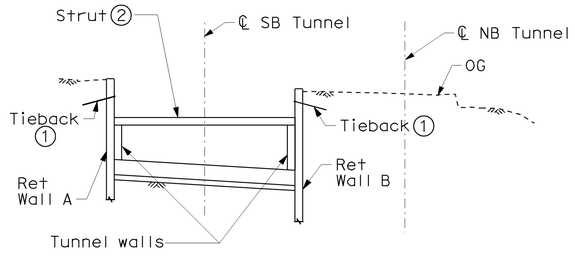

STAGE 7

A. Cast tunnel walls to underside of Strut ②

Notes:

Construction sequence shown is applicable to tunnel construction from "SB" 76+32± to 76+62±

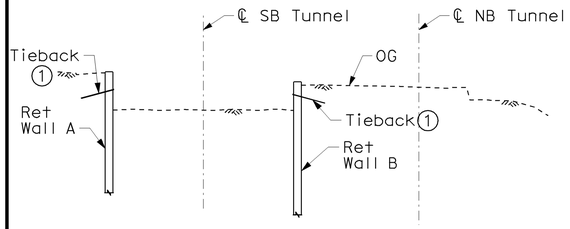

STAGE 2

A. Excavate below Tieback ①

B. Install Tieback ①

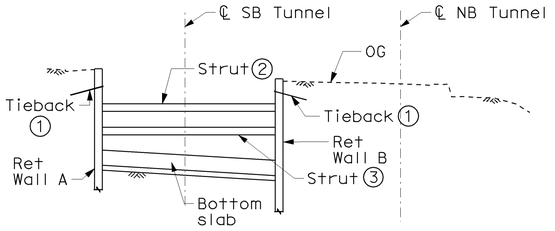

STAGE 5

A. Construct bottom slab

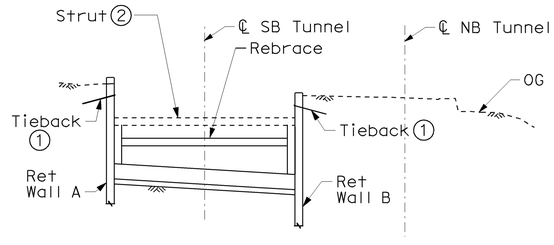

STAGE 8

A. Cure tunnel walls for 7 days

B. Install rebrace

C. Remove Strut ②

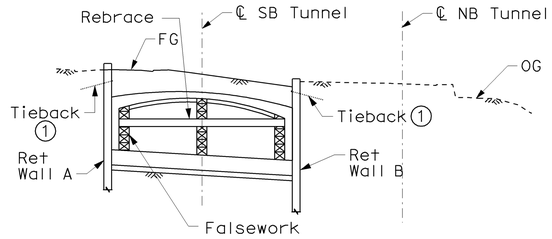

STAGE 10

A. Cure tunnel for 7 days

B. Release Tieback ①

C. Backfill to FG

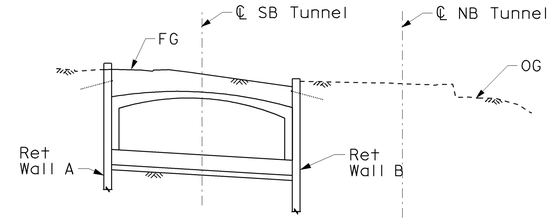

STAGE 11

A. Remove falsework and rebrace after 28 days

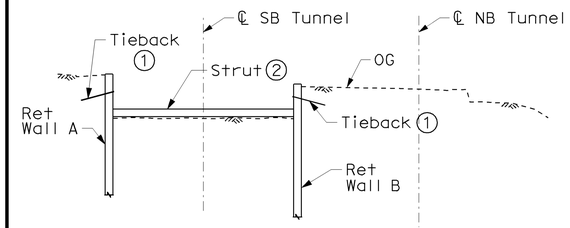

STAGE 3

A. Excavate to bottom of Strut ②

B. Install Strut ②

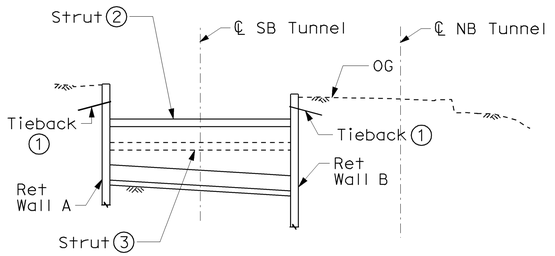

STAGE 6

A. Cure bottom slab for 7 days

B. Remove Strut ③

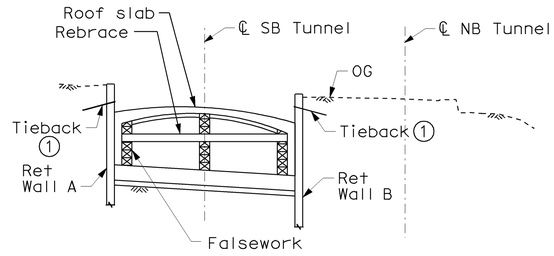

STAGE 9

A. Cast remainder of tunnel walls

B. Install falsework for tunnel roof construction

C. Cast tunnel roof slab

CALIFORNIA STATE FIRE MARSHAL APPROVED

Approval of this plan does not authorize or approve any omission or deviation from applicable regulations. Final approval is subject to field inspection. One set of approved plans shall be available on the project site at all times.

Reviewed by: STEPHEN GUARINO

Approval date: 12-14-09

SBBT-ST47

DESIGN OVERSIGHT		DESIGN	BY Q.LIU	CHECKED M. YUCEKUL	PREPARED FOR THE STATE OF CALIFORNIA DEPARTMENT OF TRANSPORTATION
SIGN OFF DATE		DETAILS	BY P.A.TONKIN	CHECKED M. YUCEKUL	
		QUANTITIES	BY W.ASHWOOD	CHECKED J. YANG	

QIYU LIU
PROJECT ENGINEER

CU 04
EA 163741

BRIDGE NO.	SOUTHBOUND BATTERY TUNNEL
34-0161L	
POST MILES	CONSTRUCTION SEQUENCE NO.2
9.0/9.2	

DESIGN DETAIL SHEET (ENGLISH) (REV. 06-01-09)

ORIGINAL SCALE IN INCHES FOR REDUCED PLANS 0 1 2 3

DISREGARD PRINTS BEARING EARLIER REVISION DATES →

REVISION DATES (PRELIMINARY STAGE ONLY): 06/09/09 | 07/07/09 | 08/07/09

SHEET 49 OF 72

FILE => 34-0161rl-st047.dgn

USERNAME => #USER# DATE PLOTTED => #DATE# TIME PLOTTED => #TIME#

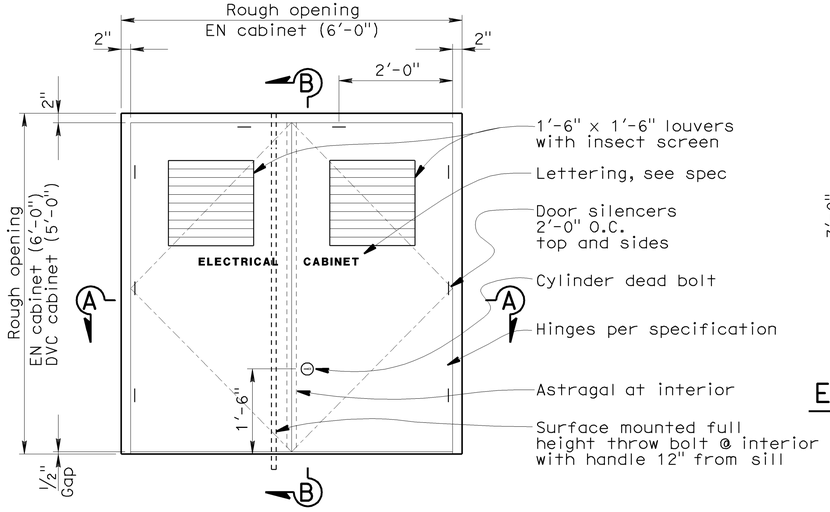

ELEVATION - EN CABINETS

SCALE: 3/4" = 1'-0"

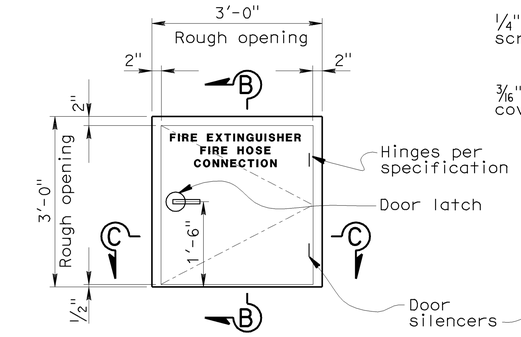

ELEVATION - FHVC CABINETS

SCALE: 3/4" = 1'-0"

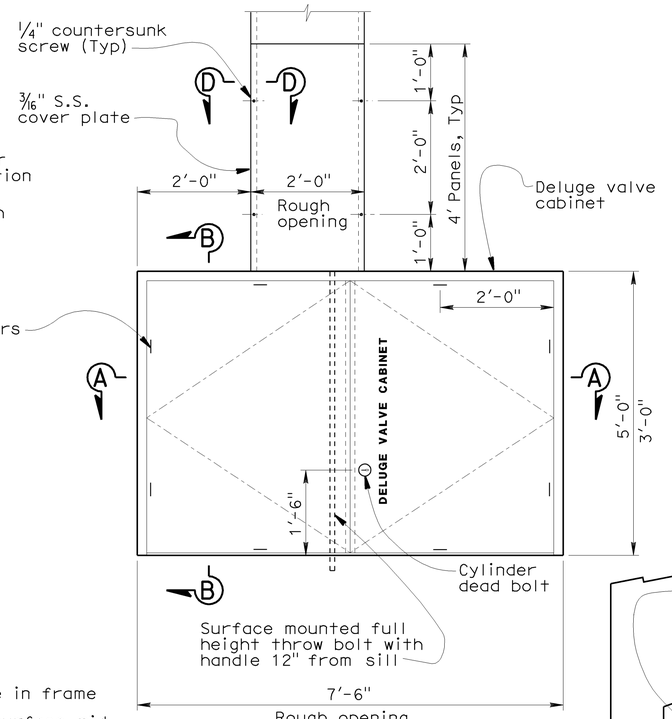

ELEVATION - DVC CABINETS

SCALE: 3/4" = 1'-0"

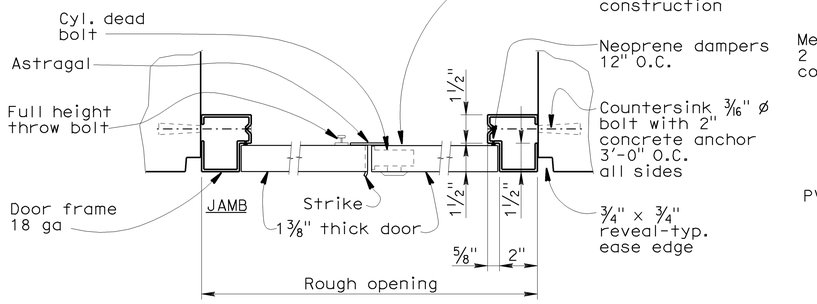

SECTION A-A

SCALE: 3" = 1'-0"

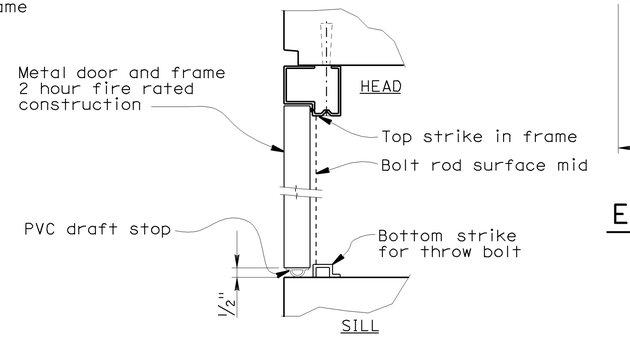

SECTION B-B

SCALE: 3" = 1'-0"

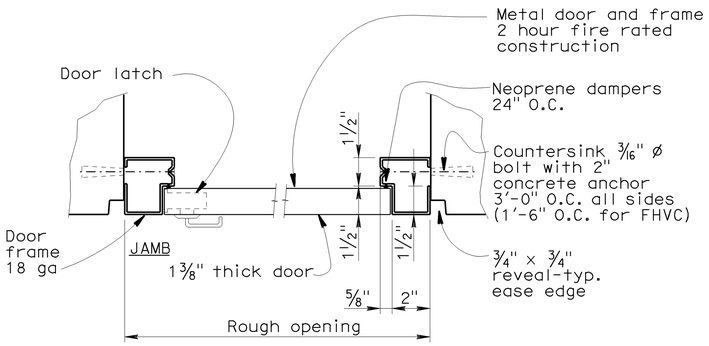

SECTION C-C

SCALE: 3" = 1'-0"

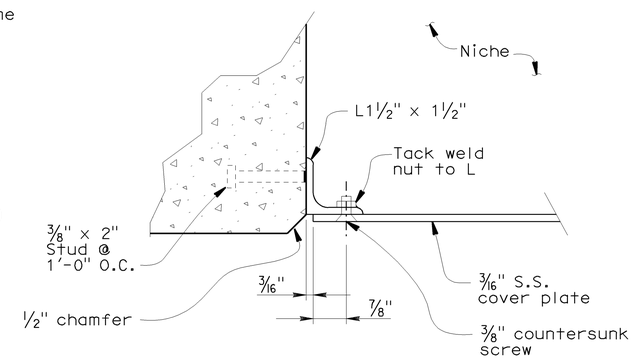

SECTION D-D

SCALE: 6" = 1'-0"

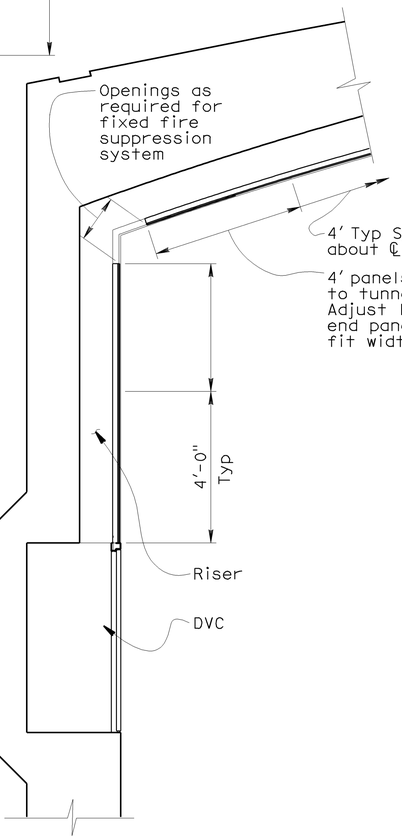

SECTION THRU DVC CABINET & RISER

SCALE: 1/2" = 1'-0"

DIST	COUNTY	ROUTE	POST MILES TOTAL PROJECT	SHEET No	TOTAL SHEETS
04	SF	101	8.2/9.2	486	654

Scott L. Danielson 10/30/09
REGISTERED ARCHITECT DATE

12-14-09
PLANS APPROVAL DATE

STATE OF CALIFORNIA ★ SCOTT L. DANIELSON ★ CERTIFICATE NO. C 6918 REGISTERED ARCHITECT 6/30/2011

The State of California or its officers or agents shall not be responsible for the accuracy or completeness of electronic copies of this plan sheet.

Arup PB Joint Venture
303 Second Street, Suite 700N
San Francisco, CA 94107

CALIFORNIA STATE FIRE MARSHAL APPROVED

Approval of this plan does not authorize or approve any omission or deviation from applicable regulations. Final approval is subject to field inspection. One set of approved plans shall be available on the project site at all times.

Reviewed by: STEPHEN GUARINO
Approval date: 12-14-09

SBBT-AT1

	BY	CHECKED
DESIGN	S. DANIELSON	R. DONIKIAN
DETAILS	L. REYES	S. DANIELSON
QUANTITIES	W. ASHWOOD	J. YANG

PREPARED FOR THE STATE OF CALIFORNIA DEPARTMENT OF TRANSPORTATION

QIYU LIU
PROJECT ENGINEER

BRIDGE NO.	SOUTHBOUND BATTERY TUNNEL
34-0161L	
POST MILE	ARCHITECTURAL DETAILS NO. 1
9.0/9.2	

DESIGN DETAIL SHEET (ENGLISH) (REV. 2/25/05)

ORIGINAL SCALE IN INCHES FOR REDUCED PLANS 0 1 2 3

CU 04
EA 163741

DISREGARD PRINTS BEARING EARLIER REVISION DATES →

REVISION DATES (PRELIMINARY STAGE ONLY): 10-09-09

SHEET 50 OF 72

FILE => 34-0161rl-u-at01.dgn

USERNAME => trlenord DATE PLOTTED => 14-DEC-2009 TIME PLOTTED => 15:22

DIST	COUNTY	ROUTE	POST MILES TOTAL PROJECT	SHEET No	TOTAL SHEETS
04	SF	101	8.2/9.2	487	654

REGISTERED ARCHITECT — DATE 10/30/09

12-14-09
PLANS APPROVAL DATE

STATE OF CALIFORNIA — SCOTT L. DANIELSON — 6/30/2011 — CERTIFICATE NO. C 6918 — REGISTERED ARCHITECT

The State of California or its officers or agents shall not be responsible for the accuracy or completeness of electronic copies of this plan sheet.

Arup PB Joint Venture
303 Second Street, Suite 700N
San Francisco, CA 94107

CALIFORNIA STATE FIRE MARSHAL APPROVED

Approval of this plan does not authorize or approve any omission or deviation from applicable regulations. Final approval is subject to field inspection. One set of approved plans shall be available on the project site at all times.

Reviewed by: STEPHEN GUARINO

Approval date: 12-14-09

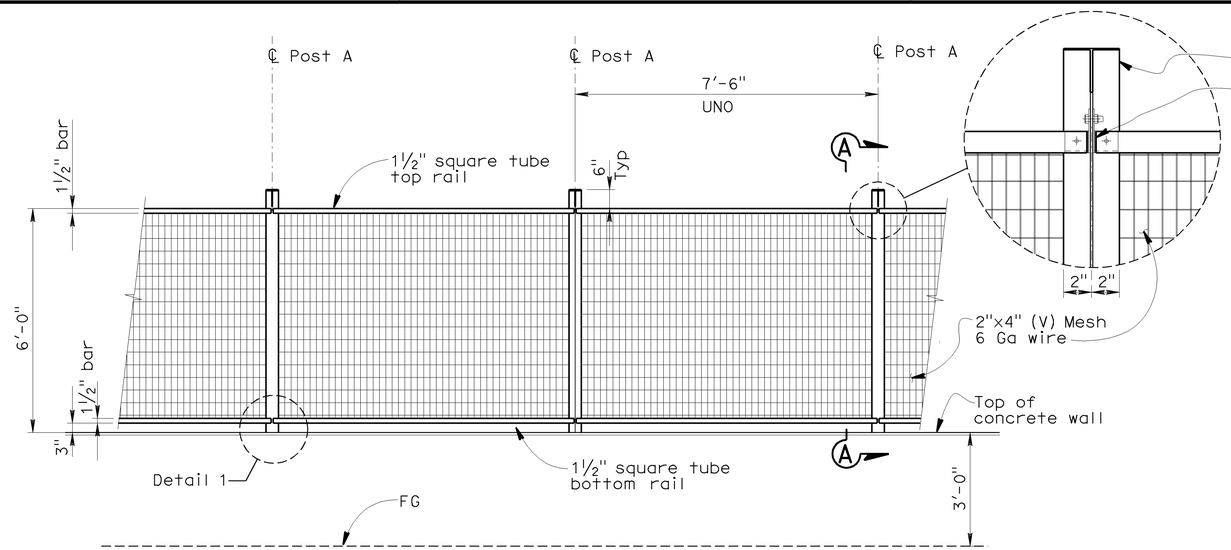

TYPICAL FENCING

SCALE: ½" = 1'-0"

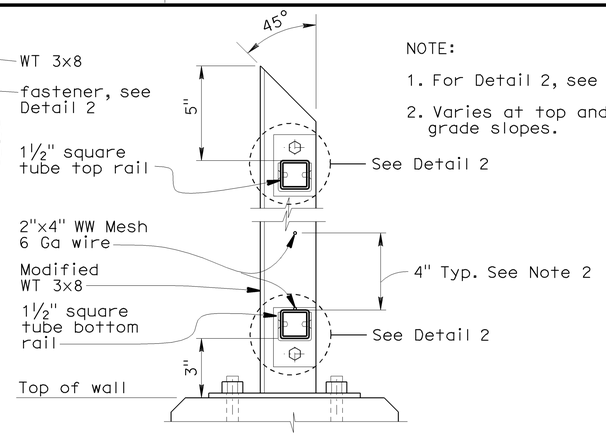

NOTE:

1. For Detail 2, see sheet SBBT-AT3.
2. Varies at top and bottom where grade slopes.

SECTION A-A

SCALE: 3" = 1'-0"

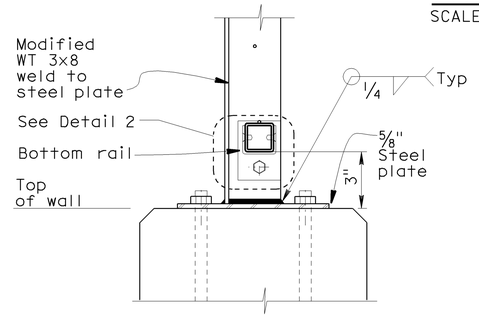

SECTION

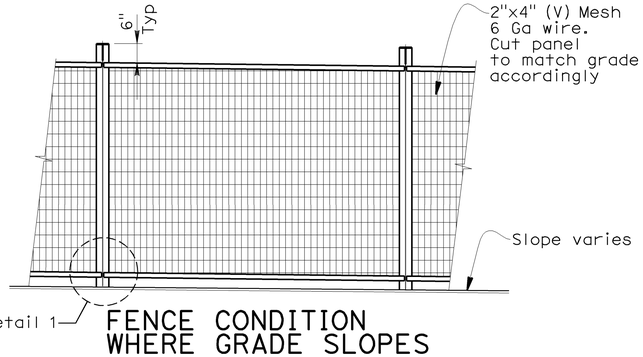

FENCE CONDITION WHERE GRADE SLOPES

SCALE: ½" = 1'-0"

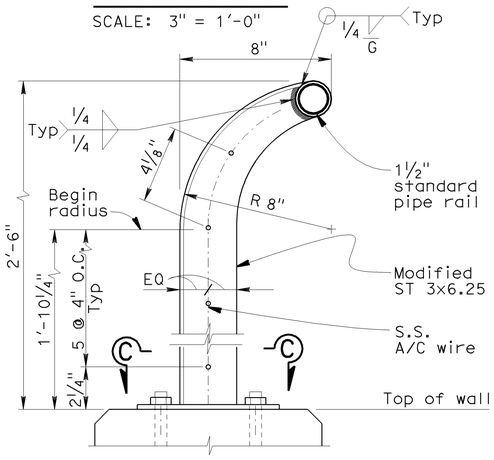

SECTION B-B

SCALE: 3" = 1'-0"

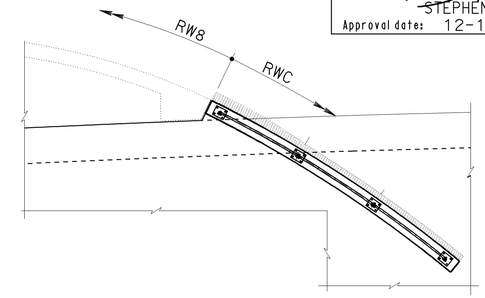

PLAN

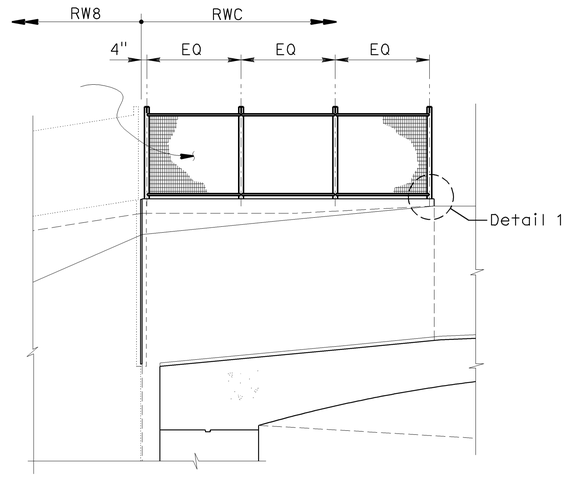

ELEVATION

RETAINING WALL C DETAIL

SCALE: 3/16" = 1'-0"

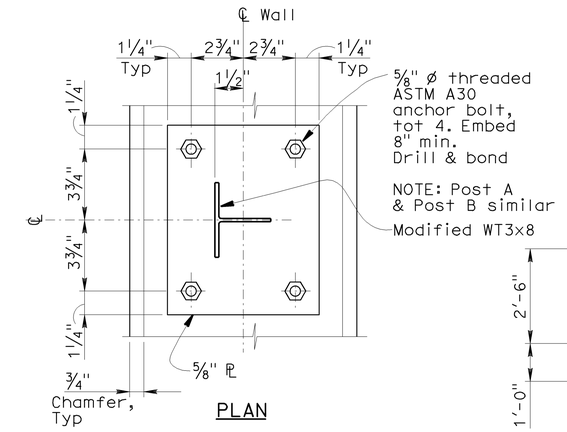

PLAN

DETAIL 1

SCALE: 3" = 1'-0"

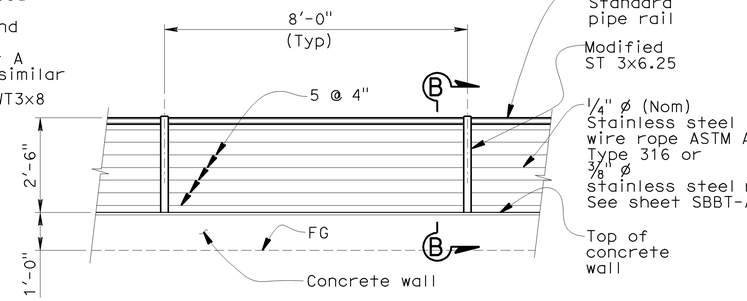

SAFETY RAILING (TYPE A)

SCALE: ½" = 1'-0"

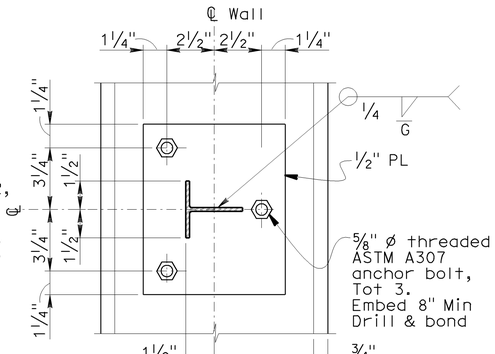

SECTION C-C

SCALE: 3" = 1'-0"

SBBT-AT2

DESIGN	BY S. DANIELSON	CHECKED R. DONIKIAN
DETAILS	BY L. REYES	CHECKED S. DANIELSON
QUANTITIES	BY W. ASHWOOD	CHECKED J. YANG

PREPARED FOR THE STATE OF CALIFORNIA DEPARTMENT OF TRANSPORTATION

QIYU LIU
PROJECT ENGINEER

BRIDGE NO.	34-0161L
POST MILE	9.0/9.2

SOUTHBOUND BATTERY TUNNEL
ARCHITECTURAL DETAILS NO. 2

DESIGN DETAIL SHEET (ENGLISH) (REV. 2/25/05)

ORIGINAL SCALE IN INCHES FOR REDUCED PLANS 0 1 2 3

CU 04
EA 163741

DISREGARD PRINTS BEARING EARLIER REVISION DATES →

REVISION DATES (PRELIMINARY STAGE ONLY): 10-09-09

SHEET 51 OF 72

FILE => 34-0161rl-u-at02.dgn

USERNAME => trlenard DATE PLOTTED => 14-DEC-2009 TIME PLOTTED => 15:22

DIST	COUNTY	ROUTE	POST MILES TOTAL PROJECT	SHEET No	TOTAL SHEETS
04	SF	101	8.2/9.2	488	654

CALIFORNIA STATE FIRE MARSHAL APPROVED

Approval of this plan does not authorize or approve any omission or deviation from applicable regulations. Final approval is subject to field inspection. One set of approved plans shall be available on the project site at all times.

Reviewed by: STEPHEN GUARINO

Approval date: 12-14-09

REGISTERED ARCHITECT — 10/30/09 DATE

12-14-09
PLANS APPROVAL DATE

STATE OF CALIFORNIA — SCOTT L. DANIELSON — 6/30/2011 — CERTIFICATE NO. C 6118 — REGISTERED ARCHITECT

The State of California or its officers or agents shall not be responsible for the accuracy or completeness of electronic copies of this plan sheet.

Arup PB Joint Venture
303 Second Street, Suite 700N
San Francisco, CA 94107

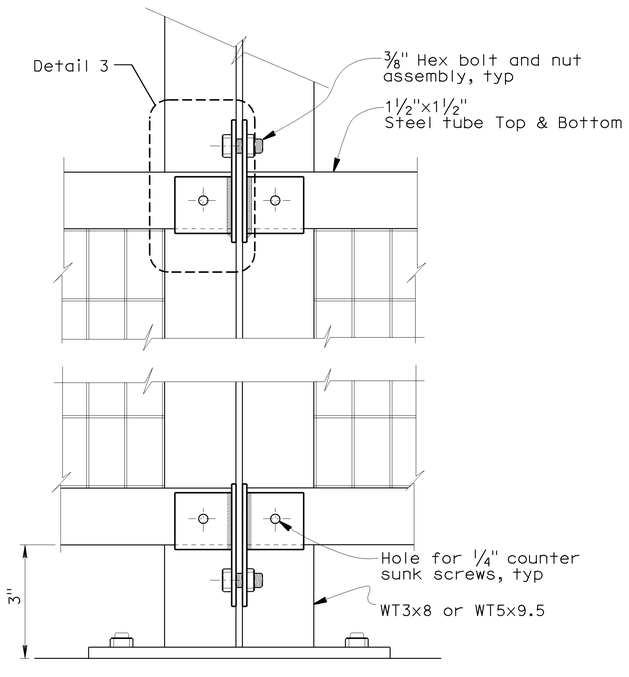

DETAIL 2
NO SCALE

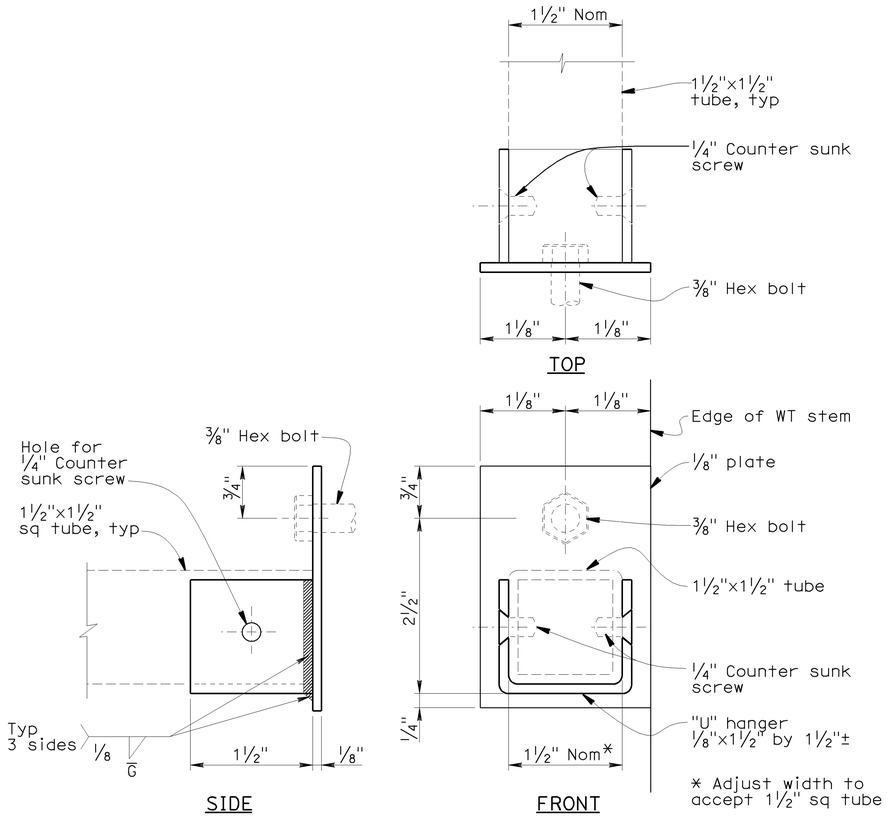

DETAIL 3
(TOP SHOWN)
NO SCALE

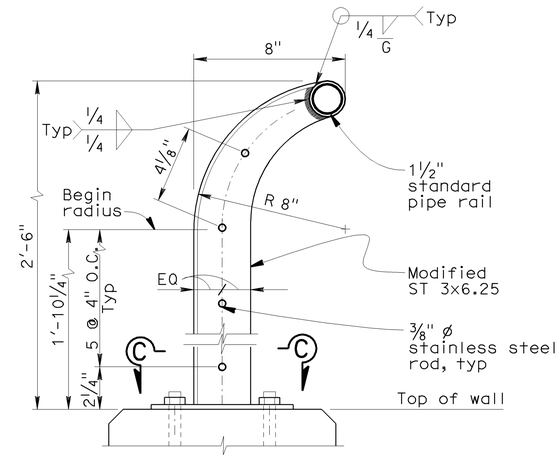

DETAIL 6
SCALE: 3" = 1'-0"

SBBT-AT3

DESIGN	BY S. DANIELSON	CHECKED R. DONIKIAN	PREPARED FOR THE STATE OF CALIFORNIA DEPARTMENT OF TRANSPORTATION	QIYU LIU, PROJECT ENGINEER	BRIDGE NO. 34-0161L; POST MILE 9.0/9.2
DETAILS	BY L. REYES	CHECKED S. DANIELSON			
QUANTITIES	BY W. ASHWOOD	CHECKED J. YANG			

SOUTHBOUND BATTERY TUNNEL
ARCHITECTURAL DETAILS NO. 3

DESIGN DETAIL SHEET (ENGLISH) (REV. 2/25/05)

ORIGINAL SCALE IN INCHES FOR REDUCED PLANS 0 1 2 3

CU 04
EA 163741

DISREGARD PRINTS BEARING EARLIER REVISION DATES →

REVISION DATES (PRELIMINARY STAGE ONLY): 10-09-09

SHEET 52 OF 72

FILE => 34-0161r1-u-at03.dgn

USERNAME => rtrinard DATE PLOTTED => 14-DEC-2009 TIME PLOTTED => 15:22

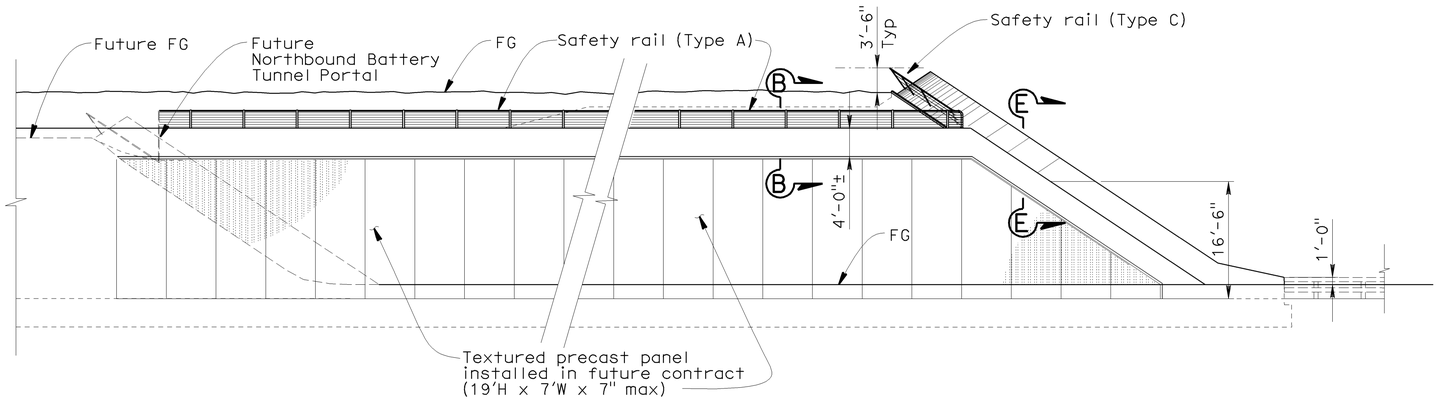

TUNNEL ELEVATION

SCALE: 3/32" = 1'-0"

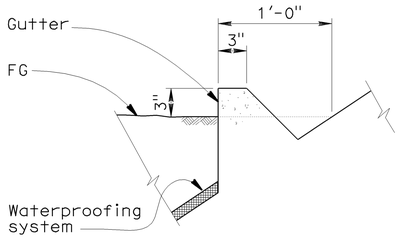

DETAIL 5

SCALE: 1½" = 1'-0"

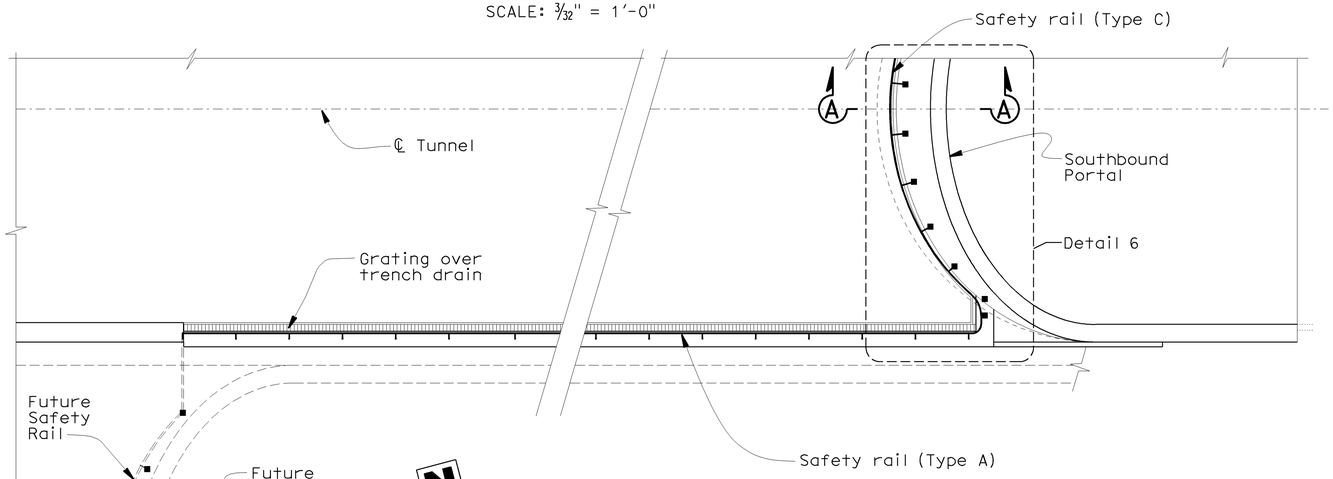

ROOF PLAN

SCALE: 3/32" = 1'-0"

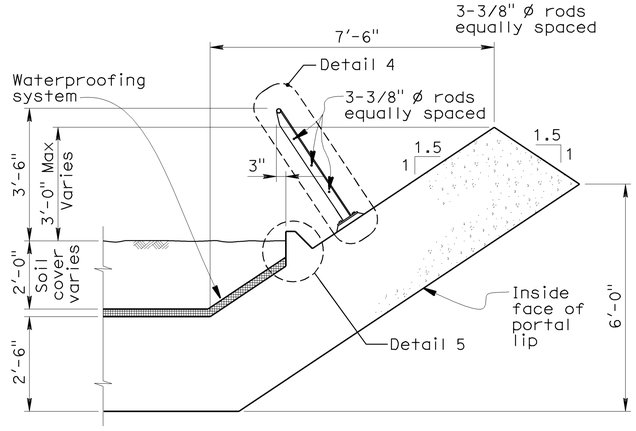

SECTION A-A

SCALE: ½" = 1'-0"

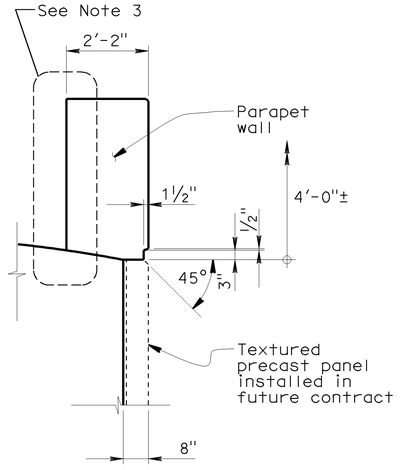

SECTION B-B

SCALE: ½" = 1'-0"

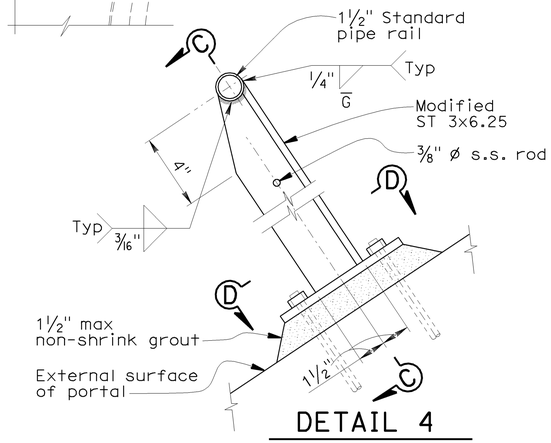

DETAIL 4

SCALE: 3" = 1'-0"

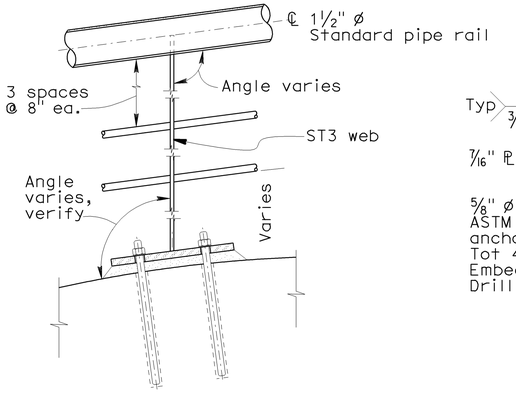

SECTION C-C

SCALE: 3" = 1'-0"

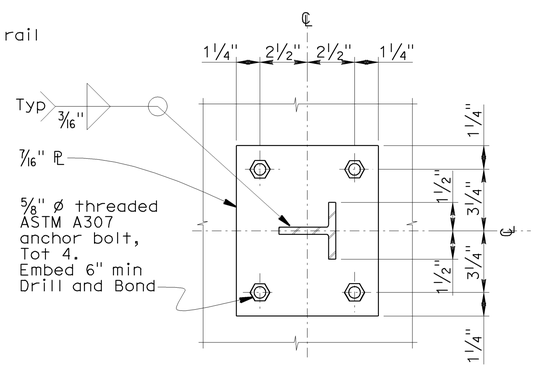

SECTION D-D

SCALE: 3" = 1'-0"

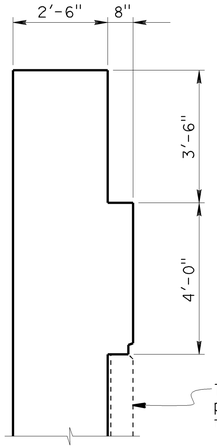

SECTION E-E

SCALE: ½" = 1'-0"

NOTE:

1. For Detail 6, see sheet SBBT-AT5.
2. For "Architectural Texture (Fluted Fin)", see Detail 7 at sheet SBBT-AT5.
3. See Section A-A on sheet SBBT-AT5.

CALIFORNIA STATE FIRE MARSHAL APPROVED

Approval of this plan does not authorize or approve any omission or deviation from applicable regulations. Final approval is subject to field inspection. One set of approved plans shall be available on the project site at all times.

Reviewed by: STEPHEN GUARINO

Approval date: 12-14-09

SBBT-AT4

DIST	COUNTY	ROUTE	POST MILES TOTAL PROJECT	SHEET No	TOTAL SHEETS
04	SF	101	8.2/9.2	489	654

Scott L. Danielson 10/30/09
REGISTERED ARCHITECT DATE

12-14-09
PLANS APPROVAL DATE

STATE OF CALIFORNIA ☆ SCOTT L. DANIELSON ☆ CERTIFICATE NO. C 6118 6/30/2011 REGISTERED ARCHITECT

The State of California or its officers or agents shall not be responsible for the accuracy or completeness of electronic copies of this plan sheet.

Arup PB Joint Venture
303 Second Street, Suite 700N
San Francisco, CA 94107

DESIGN	BY S. DANIELSON	CHECKED R. DONIKIAN	
DETAILS	BY L. REYES	CHECKED S. DANIELSON	
QUANTITIES	BY W. ASHWOOD	CHECKED J. YANG	

PREPARED FOR THE STATE OF CALIFORNIA DEPARTMENT OF TRANSPORTATION

QIYU LIU
PROJECT ENGINEER

BRIDGE NO.	34-0161L
POST MILE	9.0/9.2

SOUTHBOUND BATTERY TUNNEL
ARCHITECTURAL DETAILS NO. 4

DESIGN DETAIL SHEET (ENGLISH) (REV. 2/25/05)

ORIGINAL SCALE IN INCHES FOR REDUCED PLANS 0 1 2 3

CU 04
EA 163741

DISREGARD PRINTS BEARING EARLIER REVISION DATES →

REVISION DATES (PRELIMINARY STAGE ONLY): 10-09-09

SHEET 53 OF 72

FILE => 34-0161rl-u-at04.dgn

USERNAME => ttriebord DATE PLOTTED => 14-DEC-2009 TIME PLOTTED => 15:22

DIST	COUNTY	ROUTE	POST MILES TOTAL PROJECT	SHEET No	TOTAL SHEETS
04	SF	101	8.2/9.2	490	654

REGISTERED ARCHITECT 10/30/09 DATE

12-14-09
PLANS APPROVAL DATE

The State of California or its officers or agents shall not be responsible for the accuracy or completeness of electronic copies of this plan sheet.

STATE OF CALIFORNIA SCOTT L. DANIELSON 6/30/2011 CERTIFICATE NO. C 6148 REGISTERED ARCHITECT

Arup PB Joint Venture
303 Second Street, Suite 700N
San Francisco, CA 94107

CALIFORNIA STATE FIRE MARSHAL APPROVED
Approval of this plan does not authorize or approve any omission or deviation from applicable regulations. Final approval is subject to field inspection. One set of approved plans shall be available on the project site at all times.
Reviewed by: STEPHEN GUARINO
Approval date: 12-14-09

NOTES:

1. For Detail 4, see Sheet SBBT-AT4.

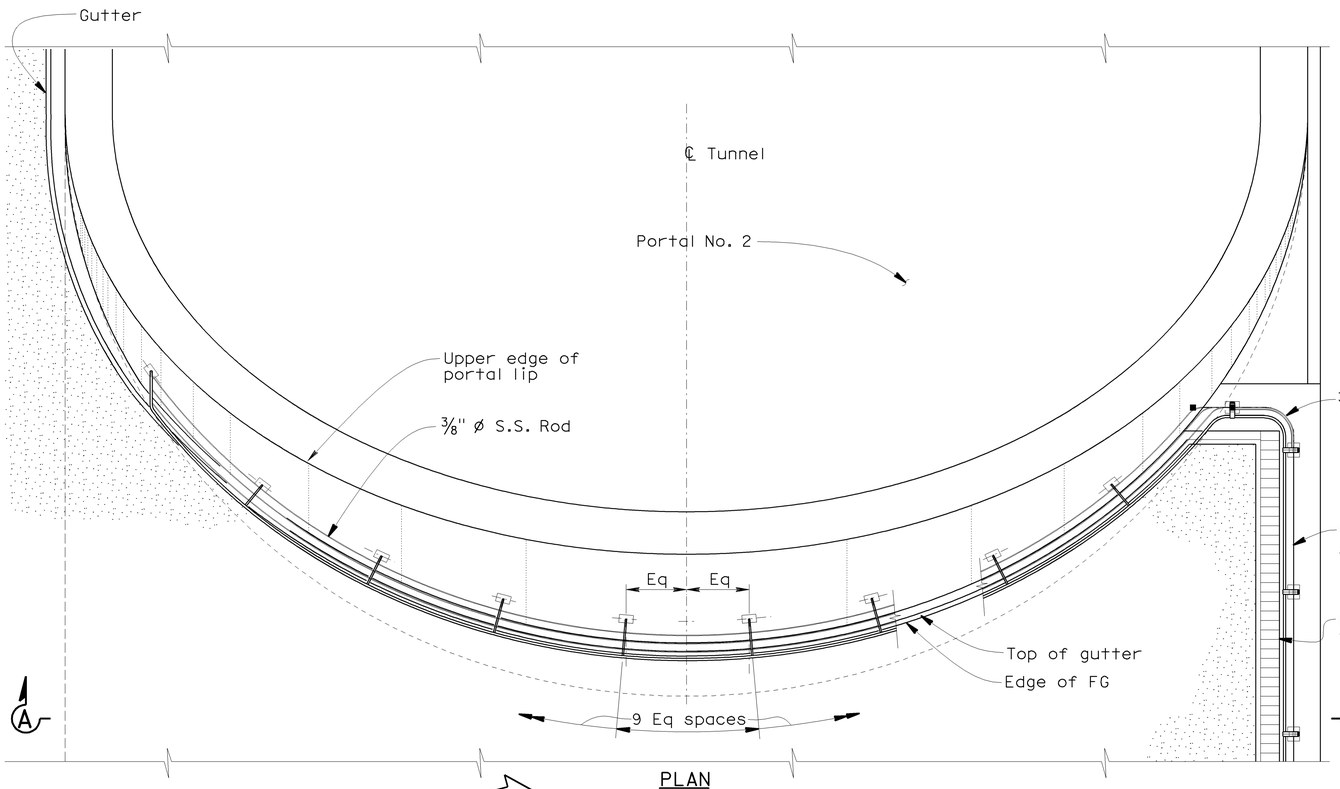

PLAN

DETAIL 6

SCALE: 1/4" = 1'-0"

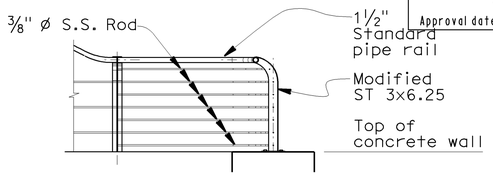

SAFETY RAIL (TYPE B)

SCALE: 1/2" = 1'-0"

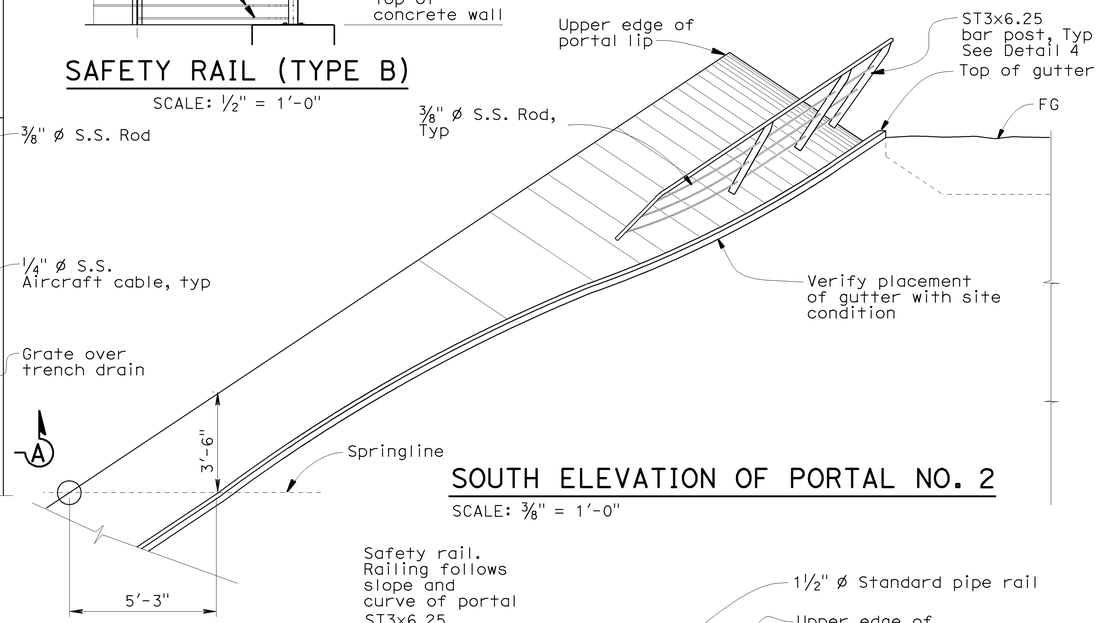

SOUTH ELEVATION OF PORTAL NO. 2

SCALE: 3/8" = 1'-0"

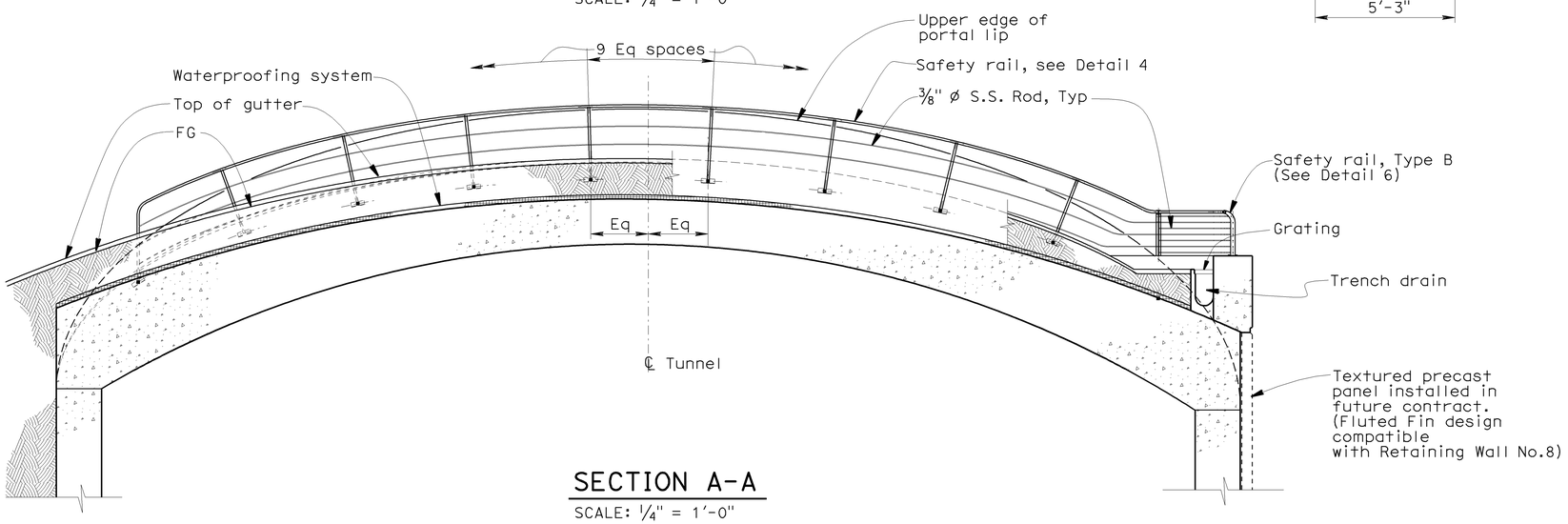

SECTION A-A

SCALE: 1/4" = 1'-0"

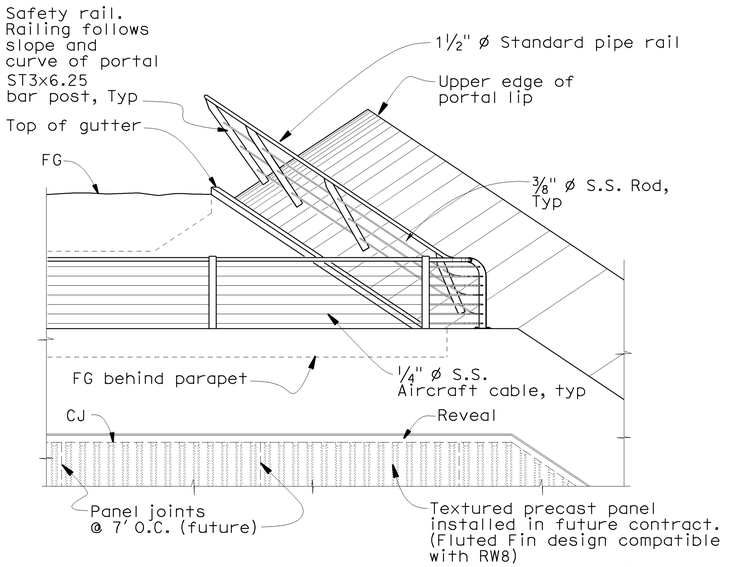

NORTH ELEVATION OF PORTAL NO. 2

SCALE: 3/8" = 1'-0"

SBBT-AT5

DESIGN	BY S. DANIELSON	CHECKED R. DONIKIAN	
DETAILS	BY L. REYES	CHECKED S. DANIELSON	
QUANTITIES	BY W. ASHWOOD	CHECKED J. YANG	

PREPARED FOR THE STATE OF CALIFORNIA DEPARTMENT OF TRANSPORTATION

QIYU LIU
PROJECT ENGINEER

BRIDGE NO. 34-0161L
POST MILE 9.0/9.2

SOUTHBOUND BATTERY TUNNEL
ARCHITECTURAL DETAILS NO. 5

DESIGN DETAIL SHEET (ENGLISH) (REV. 2/25/05)

ORIGINAL SCALE IN INCHES FOR REDUCED PLANS 0 1 2 3

CU 04
EA 163741

DISREGARD PRINTS BEARING EARLIER REVISION DATES

REVISION DATES (PRELIMINARY STAGE ONLY) 10-09-09

SHEET 54 OF 72

FILE => 34-0161rl-u-at05.dgn

USERNAME => trlenard DATE PLOTTED => 14-DEC-2009 TIME PLOTTED => 15:23

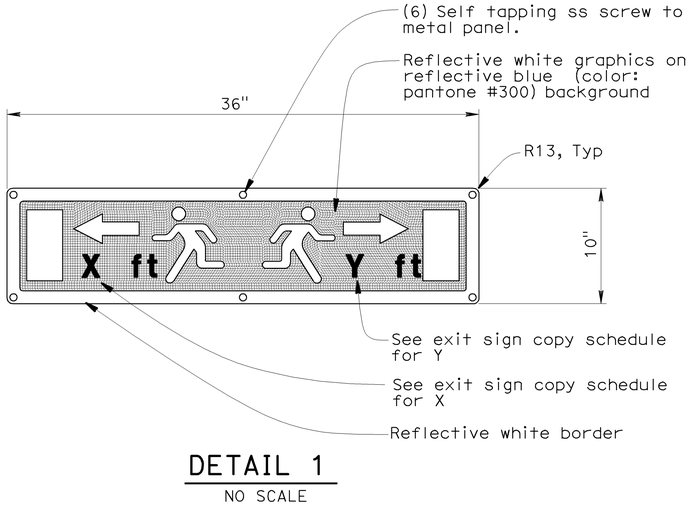

DETAIL 1
NO SCALE

DISTANCE SIGN COPY SCHEDULE

SIGN	LOCATION	x (Ft)	y (Ft)
CB1 N	76+34	56	980
CB1 S			
CB2 N	78+62	284	863
CB2 S			
CB3 N	81+09	531	505
CB3 S			
CB4 N	83+32	754	282
CB4 S			
CB5 N	85+62	984	52
CB5 S			

CALIFORNIA STATE FIRE MARSHAL APPROVED

Approval of this plan does not authorize or approve any omission or deviation from applicable regulations. Final approval is subject to field inspection. One set of approved plans shall be available on the project site at all times.

Reviewed by: STEPHEN GUARINO

Approval date: 12-14-09

DIST	COUNTY	ROUTE	POST MILES TOTAL PROJECT	SHEET No	TOTAL SHEETS
04	SF	101	8.2/9.2	491	654

Scott L. Danielson 10/30/09
REGISTERED ARCHITECT DATE

12-14-09
PLANS APPROVAL DATE

STATE OF CALIFORNIA ☆ SCOTT L. DANIELSON ☆ 6/30/2011 CERTIFICATE NO. C 6118 REGISTERED ARCHITECT

The State of California or its officers or agents shall not be responsible for the accuracy or completeness of electronic copies of this plan sheet.

Arup PB Joint Venture
303 Second Street, Suite 700N
San Francisco, CA 94107

SBBT-AT6

DESIGN	BY S. DANIELSON	CHECKED R. DONIKIAN	PREPARED FOR THE STATE OF CALIFORNIA DEPARTMENT OF TRANSPORTATION	QIYU LIU PROJECT ENGINEER	BRIDGE NO. 34-0161L
DETAILS	BY L. REYES	CHECKED S. DANIELSON			POST MILE 9.0/9.2
QUANTITIES	BY W. ASHWOOD	CHECKED J. YANG			

SOUTHBOUND BATTERY TUNNEL
ARCHITECTURAL DETAILS NO. 6

DESIGN DETAIL SHEET (ENGLISH) (REV. 2/25/05)

ORIGINAL SCALE IN INCHES FOR REDUCED PLANS 0 1 2 3

CU 04
EA 163741

DISREGARD PRINTS BEARING EARLIER REVISION DATES →

REVISION DATES (PRELIMINARY STAGE ONLY): 10-09-09

SHEET 55 OF 72

FILE => 34-0161r1-u-at06.dgn

USERNAME => trrichard DATE PLOTTED => 14-DEC-2009 TIME PLOTTED => 15:23

DIST	COUNTY	ROUTE	POST MILES TOTAL PROJECT	SHEET No	TOTAL SHEETS
04	SF	101	8.2/9.2	492	654

REGISTERED CIVIL ENGINEER 10/30/09 DATE

12-14-09
PLANS APPROVAL DATE

REGISTERED PROFESSIONAL ENGINEER
Terrence Carroll
No. C68869
Exp. 9/30/2011
CIVIL
STATE OF CALIFORNIA

The State of California or its officers or agents shall not be responsible for the accuracy or completeness of electronic copies of this plan sheet.

Arup PB Joint Venture
560 Mission Street, Suite 700
San Francisco, CA 94105

CALIFORNIA STATE FIRE MARSHAL APPROVED

Approval of this plan does not authorize or approve any omission or deviation from applicable regulations. Final approval is subject to field inspection. One set of approved plans shall be available on the project site at all times.

Reviewed by: STEPHEN GUARINO
Approval date: 12-14-09

NOTE:- This LOTB sheet was prepared in accordance with the CALTRANS Soil & Rock Logging, Classification, and Presentation Manual (June 2007), with the exception of Section 2.3.

BENCH MARK
BM SF 14 Elev 96.261
N 2121118.081
S 5992820.017

DATUM:
Horizontal NAD83
Vertical NAVD88

LOCATION AND DESCRIPTION:
Set 1" Caltrans brass plug in concrete, northbound Lincold Blvd, approx. 205' north of the north over-crossing of Doyle Drive, on a concrete vista point structure, 21.1' north of the first bollard after a bus turnout, 14.4' southeast of 1.3' wide raised wall in the vista point structure, 2' west of the east edge.

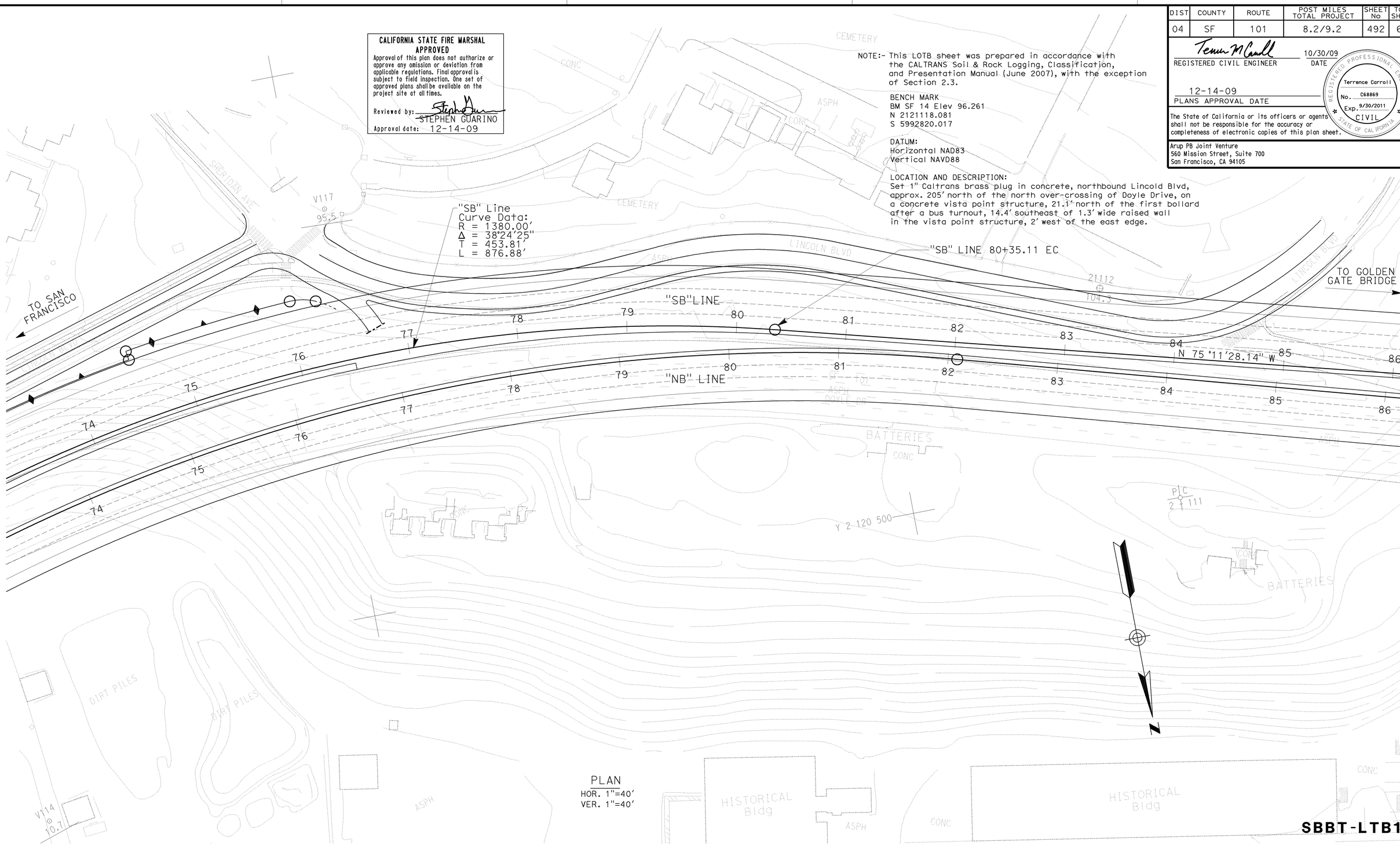

PLAN
HOR. 1"=40'
VER. 1"=40'

SBBT-LTB1

RANDY ANDERSON DESIGN OVERSIGHT SIGN OFF DATE	FUNCTIONAL SUPERVISOR NAME: FRANK GREGURAS	DRAWN BY: PAUL TONKIN CHECKED BY: TERRENCE CARROLL	FIELD INVESTIGATION BY: TERRENCE CARROLL	PREPARED FOR THE STATE OF CALIFORNIA DEPARTMENT OF TRANSPORTATION	FRANK GREGURAS PROJECT ENGINEER	BRIDGE NO. 34-161L POST MILES 9.0/9.2

SOUTHBOUND BATTERY TUNNEL
LOG OF TEST BORINGS 1 of 17

OGS CIVIL LOG OF TEST BORINGS SHEET

ORIGINAL SCALE IN INCHES FOR REDUCED PLANS 0 1 2 3

CU 04
EA 163741

DISREGARD PRINTS BEARING EARLIER REVISION DATES

REVISION DATES: 07/22/09 08/07/09 08/20/09 10/30/09

SHEET 56 OF 72

FILE => 34-0161rl-z-ltb01.dgn

USERNAME => trlenard DATE PLOTTED => 14-DEC-2009 TIME PLOTTED => 15:23

DIST	COUNTY	ROUTE	POST MILES TOTAL PROJECT	SHEET No	TOTAL SHEETS
04	SF	101	8.2/9.2	493	654

CALIFORNIA STATE FIRE MARSHAL APPROVED
Approval of this plan does not authorize or approve any omission or deviation from applicable regulations. final approval is subject to field inspection. One set of approved plans shall be available on the project site at all times.
Reviewed by: STEPHEN GUARINO
Approval date: 12-14-09

Terrence McCarroll 10/30/09
REGISTERED CIVIL ENGINEER DATE

12-14-09
PLANS APPROVAL DATE

REGISTERED PROFESSIONAL ENGINEER — Terrence Carroll — No. C68869 — Exp. 9/30/2011 — CIVIL — STATE OF CALIFORNIA

The State of California or its officers or agents shall not be responsible for the accuracy or completeness of electronic copies of this plan sheet.

Arup PB Joint Venture
560 Mission Street, Suite 700
San Francisco, CA 94105

BENCH MARK
BM SF 14 Elev 96.261′

FOR PLAN VIEW SEE "LOG OF TEST BORINGS 1 OF 17"

NOTES:- This LOTB sheet was prepared in accordance with the CALTRANS Soil & Rock Logging, Classification, and Presentation Manual (June 2007), with the exception of Section 2.3.

PROFILE
HOR. 1"=10′
VER. 1"=10′

SBBT-LTB2

RANDY ANDERSON DESIGN OVERSIGHT SIGN OFF DATE	FUNCTIONAL SUPERVISOR NAME: FRANK GREGURAS	DRAWN BY: PAUL TONKIN CHECKED BY: TERRENCE CARROLL	FIELD INVESTIGATION BY: STEPHEN MCLANDRICH	PREPARED FOR THE STATE OF CALIFORNIA DEPARTMENT OF TRANSPORTATION	FRANK GREGURAS PROJECT ENGINEER	BRIDGE NO. 34-161L POST MILES 9.0/9.2	SOUTHBOUND BATTERY TUNNEL LOG OF TEST BORINGS 2 of 17
OGS CIVIL LOG OF TEST BORINGS SHEET			ORIGINAL SCALE IN INCHES FOR REDUCED PLANS 0 1 2 3	CU 04242 EA 163741		DISREGARD PRINTS BEARING EARLIER REVISION DATES →	REVISION DATES 07/31/09 08/07/09 08/28/09 10/30/09 — SHEET 57 OF 72

FILE => 34-0161rl-z-ltb02.dgn

USERNAME => ttrenard DATE PLOTTED => 14-DEC-2009 TIME PLOTTED => 15:23

DIST	COUNTY	ROUTE	POST MILES TOTAL PROJECT	SHEET No	TOTAL SHEETS
04	SF	101	8.2/9.2	494	654

CALIFORNIA STATE FIRE MARSHAL
APPROVED
Approval of this plan does not authorize or approve any omission or deviation from applicable regulations. Final approval is subject to field inspection. One set of approved plans shall be available on the project site at all times.
Reviewed by: STEPHEN GUARINO
Approval date: 12-14-09

REGISTERED CIVIL ENGINEER 10/30/09 DATE
12-14-09
PLANS APPROVAL DATE
REGISTERED PROFESSIONAL ENGINEER Terrence Carroll No. C68869 Exp. 9/30/2011 CIVIL STATE OF CALIFORNIA
The State of California or its officers or agents shall not be responsible for the accuracy or completeness of electronic copies of this plan sheet.
Arup PB Joint Venture
560 Mission Street, Suite 700
San Francisco, CA 94105

FOR PLAN VIEW SEE "LOG OF TEST BORINGS 1 OF 17"

BENCH MARK
BM SF 14 Elev 96.261'

PROFILE
HOR. 1"=10'
VER. 1"=10'

BTNB-R4-PZ

CLAYEY GRAVEL (GC), medium dense, reddish brown, dry to moist, fine, angular, with fine to coarse sand, with black organic mottling. [FILL]
Elev 67.9', piece of plastic.
SANDY ORGANIC SOIL (OL), soft to medium stiff, very dark brown, moist, SAND is fine, with decayed vegetation up to 1.5" diameter, slight organic odor detected.
SILT with SAND (ML), medium stiff, yellowish brown, dry to moist, with light yellowish brown mottling and black specks, strongly cemented, with piece of decayed vegetation.

Grades dense with iron-oxide staining.
Grades to SANDY SILT, yellowish to reddish brown, dry to moist, SAND is fine, with light yellowish brown mottling, with black specks.

Grades with pockets of SANDY CLAY.
Poorly graded SAND (SP), dense, reddish brown, moist, fine, trace fines.
Black carbon nodule up to 1/4" diameter.
Grades dark yellowish brown.
Poorly graded SAND with CLAY (SP-SC), very dense, reddish brown, moist, fine.
Grades yellowish brown.
Grades reddish brown with yellowish brown layer, with occasional black specks.
Grades very dense, yellowish brown.
Grades fine to medium, with pockets of slight cementation, with occasional black specks and iron-oxide staining.

Grades fine.
Grades dense, dark yellowish brown and light yellowish brown, trace fines, grades fine to medium.

25.4', grades clayey.
Grades yellowish brown, fine, moist, horizontally laminated, with iron-oxide mottling.
Poorly graded SAND (SP), medium dense, dark yellowish brown, wet, fine to medium, with iron-oxide mottling, with crushable black carbon nodules.
Poorly graded SAND with CLAY (SP-SC), dense, dark yellowish brown, moist, fine to very fine, with iron-oxide mottling.

Lean CLAY with SAND (CL), very stiff, grayish and yellowish brown, moist, pockets of cemented SAND up to 1/8" diameter, occasional piece of angular fine GRAVEL.

METAMORPHIC ROCK (SERPENTINITE), dark greenish gray, moderately weathered, gabbroic recovery is broken with largest core length 0.2'.

Greenish gray non-gabbroic, pervasively sheared, slightly weathered to fresh, soft.
Elev 8.9', reddish brown slightly oxidized zone.
Recovery is dark gray gabbroic blocks only.
Elev 1.9', green and dark gray, moderately soft, moderately fractured.
Break at Elev 68.95' is mechanical.
Elev 1.4' to Elev -0.1', surface of core is slightly pitted.
Elev -0.1', 0.15' thick diagonal white mineral vein, moderate iron-oxide staining on fracture surfaces at Elev 1.0' to Elev -0.2'.

Elev -0.6' to Elev -1.1', light green mineral vein infilling (chlorite?).
Elev -1.2', white minearl vein (0.08' thick) with fibrous texture.
Elev -1.7', white mineral vein (0.08' thick).
Elev -2.6', green and greenish gray, very soft, slightly weathered.
Elev -3.6', surface pitted.
Elev -4.6', very soft.
Dark purple blocks of harder serpentinite (gabbroic) at -6.1', -7.1', and -6.6' (each 0.2' thick).

Elev -8.1' to Elev -8.4', dark purple block of harder serpentinite (gabbroic).
Elev -10.1', 0.3' block of greenish gray harder serpentinite (gabbroic).
Elev -12.1' to Elev -12.9', dark greenish gray, intensely fractured, moderately hard, moderately strong, slightly weathered.

Elev -12.9', light greenish gray, very soft to soft.
Elev -13.9' to Elev -14.3', harder blocks.
Elev -20.1', iron-oxide staining.
Elev -21.1', diagonal white secondary mineral vein filliing.
Elev -23.6', soft, secondary white mineral disceminated throughout.
Elev -25.4' to Elev -26.6', dark greenish gray, moderately hard, intensely to moderately fractured (no secondary, not internally sheared), fibrous mineralization noted along fractures.

Elev -34.3' to Elev -35.2' and Elev -36.6' to Elev -37.6', recovery is broken, moderately hard, dark gray and green gabbroic serpentinite up to 2.5" in length.

Elev -34.6' to Elev -35.0', recovery is only loose, moderately strong, moderately hard, fresh blocks of dark gray and green serpentinite up to 1" in length.

76+000 77+000 78+000

Termination at El -38.6
ERi = 72.9%

SBBT-LTB3

CALIFORNIA STATE FIRE MARSHAL APPROVED
Approval of this plan does not authorize or approve any omission or deviation from applicable regulations. Final approval is subject to field inspection. One set of approved plans shall be available on the project site at all times.
Reviewed by: STEPHEN GUARINO
Approval date: 12-14-09

DIST	COUNTY	ROUTE	POST MILES TOTAL PROJECT	SHEET No	TOTAL SHEETS
04	SF	101	8.2/9.2	495	654

Terrence McCarroll — REGISTERED CIVIL ENGINEER — 10/30/09 DATE

12-14-09 PLANS APPROVAL DATE

REGISTERED PROFESSIONAL ENGINEER — Terrence Carroll — No. C68869 — Exp. 9/30/2011 — CIVIL — STATE OF CALIFORNIA

The State of California or its officers or agents shall not be responsible for the accuracy or completeness of electronic copies of this plan sheet.

Arup PB Joint Venture
560 Mission Street, Suite 700
San Francisco, CA 94105

BENCH MARK
BM SF 14 Elev 96.261′

FOR PLAN VIEW SEE "LOG OF TEST BORINGS 1 OF 17"

NOTES:- This LOTB sheet was prepared in accordance with the CALTRANS Soil & Rock Logging, Classification, and Presentation Manual (June 2007), with the exception of Section 2.3.

PROFILE
HOR. 1"=10′
VER. 1"=10′

BTSB-R2

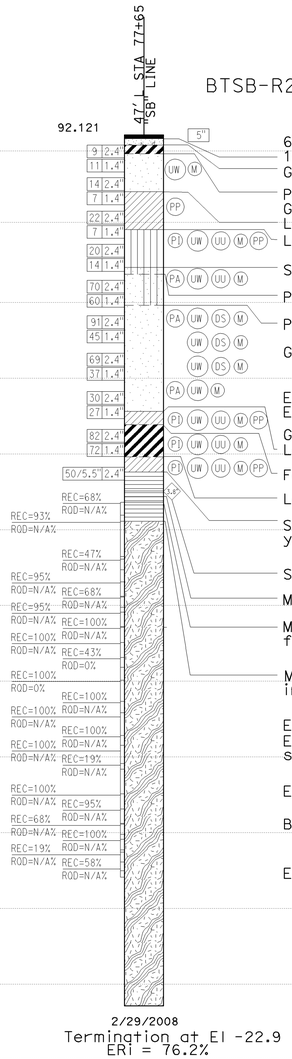

Elev (ft) 90 / 80 / 70 / 60 / 50 / 40 / 30 / 20 / 10 / 0 / -10 / -20 / -30 / -40

6" ASPHALT CONCRETE.
10" Unreinforced CONCRETE.
GRAVELLY fat CLAY (CH), dark brown, moist, GRAVEL is angular, with SAND, poorly compacted. [FILL]
Poorly graded SAND (SP), loose, dark yellowish brown, dry to moist, fine, trace fines. [FILL]
Grades dark brown.
Lean CLAY (CL), medium stiff, dark brown, moist, trace fine SAND.
Lean CLAY (CL), medium stiff, yellowish brown, moist, trace fine SAND, frequent dark brown oxidized nodules (up to 1/2" diameter).
SILTY SAND (SM), medium dense, yellowish brown, moist to wet, fine, with root hairs (up to 1/16" diameter), with black oxidized nodules (up to 1/16" diameter).
Poorly graded SAND with SILT (SP-SM), medium dense, yellowish brown, moist to wet, fine to medium.
Poorly graded SAND (SP), dense, yellowish brown, moist, fine, trace fines.
Grades medium dense, yellowish brown
Elev 58.3′, grades weakly cemented.
Elev 57.1′, occasional fine GRAVEL (up to 1/2" diameter), subrounded, reddish brown (chert fragment).
Grades with occasional pockets of SANDY CLAY (up to 1/8" diameter).
Lean CLAY (CL), very stiff, yellowish brown and reddish brown, moist, trace fine SAND, with black specks.
Fat CLAY (CH), stiff, yellowish brown and grayish brown, dry to moist, trace SAND, with black specks, mottled.
Lean CLAY (CL), hard, yellowish brown and light gray, trace fine SAND, mottled, with iron-oxide staining, with black specks
SEDIMENTARY ROCK (SANDSTONE), fine to coarse grained, light yellowish brown, decomposed, very soft, very intensely fractured. (CLAYEY SAND (SC), very dense, light yellowish brown, dry, fine to coarse, faint dark reddish brown predefined fracture planes, slight rock structure, with frequent manganese oxide staining.)
SEDIMENTARY ROCK (SILTSTONE), dark brown, intensely weathered, moderately hard, very intensely fractured.
METAMORPHIC ROCK (SERPENTINITE), greenish gray and yellowish brown, very intensely weathered, moderately soft, very intensely fractured.
METAMORPHIC ROCK (GRANULITE), medium to coarse SAND and fine GRAVEL-sized, yellowish brown and light greenish gray, intensely weathered, soft, very intensely fractured (crushed), intensely mylonized, localized sheared surfaces on more competent 0.1′ to 0.2′ thick blocks.
METAMORPHIC ROCK (SERPENTINITE), greenish gray and dark gray, intensely weathered, variably very soft to moderately hard, very intensely fractured, sharp changes in rock texture (non-grading), more intensely weathered intervals exhibit texture of SILT (ML), with SAND, soft, moist, SAND is fine.
Elev 23.7′, white secondary mineralization forming a banding effect.
Elev 23.1′, dark olive gray and very dark gray, moderately weathered, moderately hard to locally soft, inensely fractured, fractures dipping 15° to 25°, common secondary mineralization along closely spaced fractured/sheared surfaces throughout interval, commonly breaks 0.1′ to 0.2′ fragments (hard).
Elev 16.3′, greenish gray and dark gray, intensely weathered, variably very soft to moderately hard, very intensely fractured.
Bluish gray and very dark gray.
Elev -4.2′ to Elev -4.7′, sand-like texture.

Station (ft) 77+000 / 78+000 / 79+000 / 80+000

SBBT-LTB4

RANDY ANDERSON DESIGN OVERSIGHT SIGN OFF DATE	FUNCTIONAL SUPERVISOR NAME: FRANK GREGURAS	DRAWN BY: PAUL TONKIN CHECKED BY: TERRENCE CARROLL	FIELD INVESTIGATION BY: STEPHEN MCLANDRICH	PREPARED FOR THE STATE OF CALIFORNIA DEPARTMENT OF TRANSPORTATION	FRANK GREGURAS PROJECT ENGINEER	BRIDGE NO. 34-161L POST MILES 9.0/9.2	SOUTHBOUND BATTERY TUNNEL LOG OF TEST BORINGS 4 of 17
OGS CIVIL LOG OF TEST BORINGS SHEET			ORIGINAL SCALE IN INCHES FOR REDUCED PLANS 0 1 2 3		CU 04242 EA 163741	DISREGARD PRINTS BEARING EARLIER REVISION DATES →	REVISION DATES 07/31/09 08/07/09 08/28/09 10/30/09 — SHEET 59 OF 72

FILE => 34-0161r1-z-ltb04.dgn

USERNAME => trlenard DATE PLOTTED => 14-DEC-2009 TIME PLOTTED => 15:23

DIST	COUNTY	ROUTE	POST MILES TOTAL PROJECT	SHEET No	TOTAL SHEETS
04	SF	101	8.2/9.2	496	654

CALIFORNIA STATE FIRE MARSHAL APPROVED
Approval of this plan does not authorize or approve any omission or deviation from applicable regulations. Final approval is subject to field inspection. One set of approved plans shall be available on the project site at all times.
Reviewed by: STEPHEN GUARINO
Approval date: 12-14-09

Terrence Carroll — REGISTERED CIVIL ENGINEER — 10/30/09 DATE

12-14-09 PLANS APPROVAL DATE

REGISTERED PROFESSIONAL ENGINEER — Terrence Carroll — No. C68869 — Exp. 9/30/2011 — CIVIL — STATE OF CALIFORNIA

The State of California or its officers or agents shall not be responsible for the accuracy or completeness of electronic copies of this plan sheet.

Arup PB Joint Venture
560 Mission Street, Suite 700
San Francisco, CA 94105

FOR PLAN VIEW SEE "LOG OF TEST BORINGS 1 OF 17"

BENCH MARK
BM SF 14 Elev 96.261′

PROFILE
HOR. 1"=10′
VER. 1"=10′

BTNB-R7-PZ-D

188′ R STA 78+17 "NB" LINE

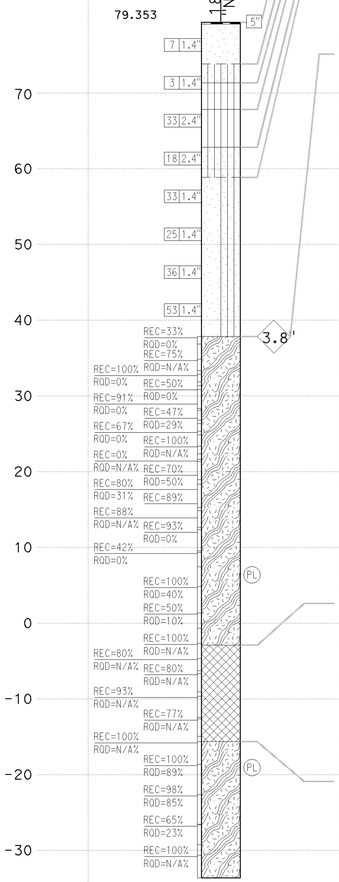

4/1/2008
Termination at El -33.6
ERi=72.9%

GRAVEL with SAND (GP), dark gray and brown, moist, angular, sand is fine. [FILL]
Poorly graded SAND (SP), loose, dark yellowish brown, moist, fine. [FILL]
SILTY SAND (SM), loose, dark brown, wet, fine to very fine.
SILT (ML), soft, dark brown, wet, trace fine SAND, with crushable iron-oxide nodules.
SILT with SAND (ML), medium stiff, yellowish brown, moist, SAND is fine, with pockets of dark brown iron-oxide staining up to 1/4" diameter.
Elev 67.4′, black vertical seam of organic filling.
SILTY SAND (SM), medium dense, yellowish brown to reddish brown, moist, with crushable iron-oxide nodules, fine.
Poorly graded SAND with SILT (SM), dense, dark yellowish to reddish brown, moist, fine.
Grades yellowish brown, with iron-oxide mottling, with black nodules (up to 1/8" diameter).

Grades very dense.
METAMORPHIC ROCK (GREENSTONE), dark greenish gray, intensely fractured, moderately hard, modergtely weathered, iron-manganese rich mineral composition, internally folliated with elongated crystals, iron-oxide staining throughout, prominent healed fractures filled with white mineral dipping 68°.
Elev 34.9′, soft, moderately weathered, with moderately soft zones.
Elev 34.3′ to Elev 34.2′ and Elev 34.1′ to Elev 33.9′, soft, 0.1′ to 0.2′ thick intensely sheared zones, locally very intensely weathered, thin mineral filled fractures in soft zones, predominantlyn sub-horizontal very soft zones with intersecting 45° fractures, manganese-oxide coating on fracture planes.
Elev 32.4′, abrupt color change to purplish brown, moderately soft, moderately strong, moderately to slightly weathered. Orthogonal filled fractures up to 45° dip.
Elev 31.9′, greenish gray, core broken into fragments ranging from 0.05′ to 0.2′.
Elev 30.9′, intensely fractured.
Crushed zones at Elev 49.0′, Elev 49.3, and Elev 49.8′. Common manganese-oxide coating on fracture planes.
Elev 29.2′, very intensely fractured (clayey), intensely sheared, moderately weathered.
Elev 28.1′, intensely fractured, moderately hard, slightly weathered, orthogonal fracture planes.
Elev 26.4′, sub-horizontal and dipping 30° fractures.
Elev 24.9′, moderately fractured, very soft to soft, intensely to moderately weathered.
Elev 23.8′, 1/4" thick mylonized clayey fracture filling.
Elev 23.6′, internally crushed, very soft, intensely to moderately weathered.
Elev 22.1′ to Elev 21.9′, intensely fractured zone.
Elev 21.4′, intensely fractured, soft to moderately soft, moderately weathered, iron-oxide staining on micro-fractures.
Elev 21.4′, medium fractured, moderately hard, moderately strong, moderately weathered.
Elev 21.2′, white preciptate on fracture face (calcite?), 1/16" thick precipitate filling on additional micro-fractures throughout.
Elev 19.7′, intensely fractured, friable, very weak, severe to moderate weathering. Highly sheared zone.
Elev 18.4′, slightly fractured, moderately hard, slightly weathered, variably oriented fractures, commonly filled with tan to light brown (calcite?) filling. Fractures are commonly closed (intensely spaced internally), localized iron-oxide staining.
Elev 17.4′, intensely fractured, soft, locally internally sheared, moderately to slightly weathered, up to 1/4" thick tan to very light brown (calcite?) filling.
Elev 17.3′, serpentinized zone (0.2′).
Elev 14.9′, moderately weathered, locally intensely sheared/crushed.
Elev 12.4′, slightly fractured, moderately hard.
Elev 10.4′, variably oriented fractures, grades green, with anastomozing veins of (clear) gray mineral filling (translucent).
Elev 9.4′, intensely fractured, localized iron-oxide staining, translucent vein fillings up to 0.08′ thick, variably oriented (healed shear zones), commonly fractured.
Elev 4.9′, slightly fractured (internally intensely sheared), serpentinitic, soft (locally plastic), moderately to slightly weathered, continued translucent vein filling.
Elev 3.4′, moderately hard, slightly weathered, abundant closed fractures, abundant fine to medium sand-sized particles along fractues, ferro-magnesium minerals predominate, localized iron-oxide staining (minor).
Elev 1.4′, minor localized iron-oxide staining.
Elev 1.0′, horizontal contact.
Elev 0.5′, intensely fractured, very soft, moderately weathered (internally crushed), predominantly comprised of talc. Remnant rock fabric with serpentinite appearance, highly sheared.
IGNEOUS ROCK (GABBRO), dark gray and bluish gray, moderately fractured (internally sheared and crushed), very soft to moderately hard, moderately to slightly weathered. Serpentinite appearance with platey mineral structure common.

Elev -4.6′, very intensely to intensely fractured, moderately soft, slightly weathered. Highly weathered (40° to 90°), intensely sheared planes/fractures. Locally phyllitic in appearance, secondary mineralization along micro-fractures, locally serpentinized appearance (chlorite?).

Elev -4.4′ to Elev -4.2′, approximately 40° dipping shistosity.
Elev -6.6′, intensely fractured, intensely sheared with foliated appearance, alternating light green and dark gray. Green mineral (chlorite?) fibrous, perpendicular to veins. Locally crushed, friable, plastic. Primary orientation of folliation is vertical.

Elev -9.6′, same as above, with irregular sub-horizontal surfaces.
Elev -12.6′, intensely to moderately fractured (internally sheared/crushed).
METAMORPHIC ROCK (SERPENTINITE), bluish gray, very slightly fractured, slightly weathered (internally highly sheared), with "platey" texture, talc? on internal fracture planes.
Elev -18.2′, slightly weathered to fresh.
Elev -17.6′, dipping 70°.
Grades to shaley serpentinite, moderately fractured, soft to moderately hard, with soft intervals (up to 0.4′ at Elev -22.7′), slightly weathered to fresh.
Elev -22.5′, sub-horizontal fracture.
Elev -25.3′, healed fractures with secondary mineral formation, vein fillings.
Elev -26.6′, intensely fractured to crushed (internally sheared), slightly weathered to fresh, abundant chlorite? fracture and vein filling up to 1/8" wide (healed fractures).
Elev -27.5′, moderately fractured, moderately hard, fresh.
Elev -27.5′ to Elev -27.9′, dipping 40°.
Elev -27.5′ to Elev -28.4′, gabbroic.
Elev -28.4′, intensely fractured (internally sheared), soft, slightly weathered.
Elev -30.6′, very slightly fractured (very intensely micro-fractured), fresh (much of core has appearance of highly sheared shale with secondary (chlorite?) mineral formation along weak zones).

78+000 79+000

SBBT-LTB5

RANDY ANDERSON DESIGN OVERSIGHT SIGN OFF DATE	FUNCTIONAL SUPERVISOR NAME: FRANK GREGURAS	DRAWN BY: PAUL TONKIN CHECKED BY: TERRENCE CARROLL	FIELD INVESTIGATION BY: TERRENCE CARROLL	PREPARED FOR THE STATE OF CALIFORNIA DEPARTMENT OF TRANSPORTATION	FRANK GREGURAS PROJECT ENGINEER	BRIDGE NO. 34-161L POST MILES 9.0/9.2	SOUTHBOUND BATTERY TUNNEL LOG OF TEST BORINGS 5 of 17
OGS CIVIL LOG OF TEST BORINGS SHEET			ORIGINAL SCALE IN INCHES FOR REDUCED PLANS 0 1 2 3		CU 04242 EA 163741	DISREGARD PRINTS BEARING EARLIER REVISION DATES →	REVISION DATES: 07/29/09 08/07/09 08/25/09 10/30/09 — SHEET 60 OF 72

FILE => 34-0161r1-z-ltb05.dgn

USERNAME => trlenord DATE PLOTTED => 14-DEC-2009 TIME PLOTTED => 15:23

DIST	COUNTY	ROUTE	POST MILES TOTAL PROJECT	SHEET No	TOTAL SHEETS
04	SF	101	8.2/9.2	497	654

CALIFORNIA STATE FIRE MARSHAL APPROVED
Approval of this plan does not authorize or approve any omission or deviation from applicable regulations. Final approval is subject to field inspection. One set of approved plans shall be available on the project site at all times.
Reviewed by: STEPHEN GUARINO
Approval date: 12-14-09

Terrence Carroll — REGISTERED CIVIL ENGINEER — 10/30/09 DATE

12-14-09 PLANS APPROVAL DATE

REGISTERED PROFESSIONAL ENGINEER — Terrence Carroll — No. C68869 — Exp. 9/30/2011 — CIVIL — STATE OF CALIFORNIA

The State of California or its officers or agents shall not be responsible for the accuracy or completeness of electronic copies of this plan sheet.

Arup PB Joint Venture
560 Mission Street, Suite 700
San Francisco, CA 94105

FOR PLAN VIEW SEE "LOG OF TEST BORINGS 1 OF 17"

BENCH MARK
BM SF 14 Elev 96.261'

PROFILE
HOR. 1"=10'
VER. 1"=10'

BTNB-R3

67' R STA 79+10 NB LINE

86.286

5"

GSW El. 21.6

3.8"

7/26/2008
Termination at El -13.7
ERi = 72.9%

Elev 85.4' ASPHALT CONCRETE; 6" UNREINFORCED CONCRETE.
SILTY SAND (SM), yellowish brown, moist, SAND is fine to medium, with trace subangular serpentinite fragments, with dark brown oxidized nodules. [FILL]
Elev 84.3', serpentinite cobble up to 1/8" diameter.
SANDY SILT (ML), medium stiff, dark yellowish brown, moist, SAND is fine, with black specks. [FILL]
Elev 82.3', block of serpentinite, yellowish brown and greenish brown, fine-grained, decomposed (SILT (ML), stiff, dry to moist).
Poorly graded SAND (SP), medium dense, dark brown, moist, trace SILT, fine to medium, with occasional rootlets up to 1/16" diameter. [FILL]
SANDY SILT (ML), very stiff, yellowish brown to dark yellowish brown, moist, SAND is fine, with dark brown specks, with thin gray CLAY seams.
Cuttings are yellowish brown SANDY SILT.
CLAYEY SAND (SC), medium dense, yellowish brown, moist, fine to medium, with black specks, slightly cemented.
Grades with increased SAND content.
Poorly graded SAND with CLAY (SP-SC), medium dense, yellowish brown, moist, fine to medium, with black specks.
Grades very dense.
Grades with iron-oxide mottling, with moderate cementation.
Grades light yellowish brown and olive gray, mottled.
Poorly graded SAND (SP), dense, yellowish brown to grayish brown, moist, fine to medium.
Grades grayish brown with iron-oxide mottling, fine.
Poorly graded SAND with CLAY (SP-SC), medium dense, yellowish brown, moist, fine, with very dark brown mottling.
Lean CLAY with SAND and GRAVEL (CL), medium stiff to stiff, yellowish brown, moist, GRAVEL is fine to coarse, subangular serpentinite fragments.
METAMORPHIC ROCK (Serpentinite), fine-grained, yellow and greenish gray, decomposed, very soft (SILT (ML), stiff, horizontally laminated, dry).
greenish gray, light gray and reddish brown, intensely weathered, very intensely fractured, internally crushed and sheared (SILT (ML), medium stiff, moist to wet, trace fine to medium SAND), pervasively sheared, iron-oxide staining throughout rock mass.
Elev 36.05', white clay seam infilling.
Elev 34.8', 0.2' thick zone, horizontally fissured, soft, dark mineral fragments up to 0.01' in diameter.
Elev 34.3' to Elev 33.7', moderately hard, gabbroic with localized shearing.
Elev 28.3', moderately hard, with localized shearing.
Elev 27.8' to Elev 27.6', white minerals common with tan CLAY infilling.
Elev 25.8', intensely weathered, very soft, heavy iron-oxide staining.
Elev 24.7' to Elev 24.3' and Elev 23.9' to Elev 23.7', 45° dipping fractures.
Elev 24.25', Elev 23.8', and Elev 23.65', black staining on fracture surfaces (manganese-oxide?).
Elev 23.6', moderately weathered, moderately hard, iron-oxide staining limited to fracture planes.
Elev 23.0', Elev 22.85', and Elev 22.5', light yellowish brown CLAY infilling.
Elev 21.3' to Elev 21.0' and Elev 20.75' to Elev 20.5', zones of very soft serpentinite.
Heavy iron-oxide staining throughout run.
Elev 17.2', white secondary mineral deposit on fracture plane, moderately to intensely weathered, moderately hard.
Elev 16.7', sub-horizontal shearing planes with heavy iron-oxide staining.
Elev 13.9', light orangish brown staining.
Elev 13.4' to Elev 12.6', intensely weathered, very soft serpentinite.
IGNEOUS ROCK (Gabbro), aphanitic, very dark gray to black, moderately to slightly weathered, moderately hard to hard, very intensely fractured.
Elev 11.9', thin light gray secondary mineral deposit, localized shearing on through fractures, color change to very dark gray/black.
Elev 10.3', very intensely fractured (entire run).
Elev 9.9' to Elev 9.1', heavy iron-oxide staining.
METAMORPHIC ROCK (Serpentinite), intensely weathered, moderately soft, light greenish gray.
Elev 7.8' to Elev 7.6', very soft.
Elev 6.8' to Elev 6.7', very soft (CLAY-like).
Elev 6.6' to Elev 6.0', reduced diameter.
Elev 5.3', color change to dark bluish gray.
Elev 4.1', very light gray.
Elev 1.6', very soft (CLAY-like), bluish gray (gabbroic), secondary white mineral on shearing planes.
Elev -1.1' to Elev -1.3', Elev -1.7' to Elev -1.9', and Elev -2.2' to Elev -2.4', severely weathered,very soft.
Elev -1.9' to Elev -2.2', reduced diameter.
Elev -2.5', moderately weathered, intensely fractured, moderately hard, dark to very dark gray, predominantly gabbroic.
Elev -3.2' to Elev -3.5', mechanical breaks.
Elev -3.6' to Elev -4.2', very soft (CLAY-like), light bluish gray.
Elev -4.2' to Elev -5.2', variable softness (very soft to moderately hard).
Elev -5.7' to Elev -7.4', moderately hard, with horizontal markings from drill bit.
Elev -7.9' to Elev -8.3', slightly weathered, very soft.
Elev -10.2' to Elev -10.5', secondary white mineral on predominant fracture plane, ipping approximately 70°.
Elev -11.2' to Elev -11.5', intensely fractured, slightly weathered to fresh, ery soft.

NOTE:- This LOTB sheet was prepared in accordance with the CALTRANS Soil & Rock Logging, Classification, and Presentation Manual (June 2007), with the exception of Section 2.3.

SBBT-LTB6

79+000 80+000 81+000 82+000

RANDY ANDERSON DESIGN OVERSIGHT SIGN OFF DATE	FUNCTIONAL SUPERVISOR NAME: FRANK GREGURAS	DRAWN BY: PAUL TONKIN CHECKED BY: TERRENCE CARROLL	FIELD INVESTIGATION BY: TERRENCE CARROLL AND BRANDAN KLUZNIAR	PREPARED FOR THE STATE OF CALIFORNIA DEPARTMENT OF TRANSPORTATION	FRANK GREGURAS PROJECT ENGINEER	BRIDGE NO. 34-161L POST MILES 9.0/9.2	SOUTHBOUND BATTERY TUNNEL LOG OF TEST BORINGS 6 of 17
OGS CIVIL LOG OF TEST BORINGS SHEET			ORIGINAL SCALE IN INCHES FOR REDUCED PLANS 0 1 2 3		CU 04242 EA 163741	DISREGARD PRINTS BEARING EARLIER REVISION DATES →	REVISION DATES: 07/29/09, 08/07/09, 08/28/09, 10/30/09 — SHEET 61 OF 72

FILE => 34-0161ri-z-ltb06.dgn

USERNAME => rtriefford DATE PLOTTED => 14-DEC-2009 TIME PLOTTED => 15:23

DIST	COUNTY	ROUTE	POST MILES TOTAL PROJECT	SHEET No	TOTAL SHEETS
04	SF	101	8.2/9.2	498	654

CALIFORNIA STATE FIRE MARSHAL APPROVED

Approval of this plan does not authorize or approve any omission or deviation from applicable regulations. Final approval is subject to field inspection. One set of approved plans shall be available on the project site at all times.

Reviewed by: STEPHEN GUARINO

Approval date: 12-14-09

Terrence M Carroll — REGISTERED CIVIL ENGINEER — 10/30/09 DATE

12-14-09 PLANS APPROVAL DATE

REGISTERED PROFESSIONAL ENGINEER — Terrence Carroll — No. C68869 — Exp. 9/30/2011 — CIVIL — STATE OF CALIFORNIA

The State of California or its officers or agents shall not be responsible for the accuracy or completeness of electronic copies of this plan sheet.

Arup PB Joint Venture
560 Mission Street, Suite 700
San Francisco, CA 94105

BENCH MARK
BM SF 14 Elev 96.261′

FOR PLAN VIEW SEE "LOG OF TEST BORINGS 1 OF 17"

NOTE:- This LOTB sheet was prepared in accordance with the CALTRANS Soil & Rock Logging, Classification, and Presentation Manual (June 2007), with the exception of Section 2.3.

PROFILE
HOR. 1"=10′
VER. 1"=10′

BTSB-R3-PZ-D

93′ L STA 80+49 "SB" LINE

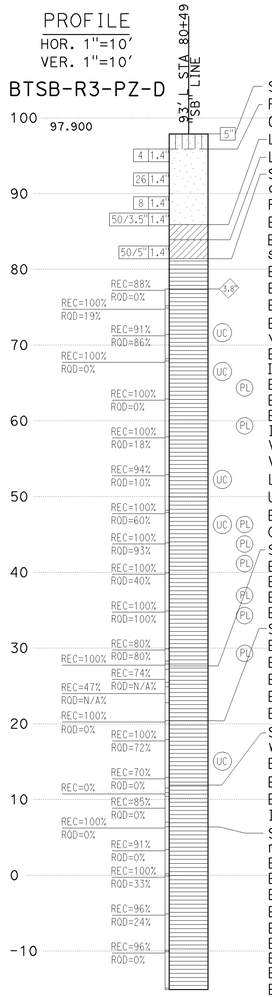

4/22/2008
Termination at El -15.1
ERi = 72.9%

SILTY SAND (SM), loose, very dark brown, moist, fine, occasional fine gravel and coarse sand, slight organic odor, trace fine roots. [FILL]
Poorly graded SAND (SP), loose, dark yellowish brown, moist, fine to very fine, occasional roots (up to 1/8" thick).
Grades with dark gray to black laminations (horizontal), with occasional dark brown CLAY.
Lean CLAY with SAND (CL), medium stiff, dark brown, moist, SAND is fine.
Lean CLAY with SAND (CL), medium stiff, yellowish brown, moist, with iron-oxide nodules and mottling.
SEDIMENTARY ROCK (SANDSTONE), fine to medium grained, yellowish brown, very soft, decomposed, intensely fractured, with vertical and sub-horizontal partings, with manganese-oxide staining on vertical fracture planes, angular to subangular gravels, individual grains commonly altered around perimeter (poorly graded SAND with CLAY (SP-SC), moist, with iron-oxide mottling and nodules).
Fine to medium grained, no indication of bedding, yellowish brown, intensely to moderately weathered, moderately hard, intensely fractured, manganese-oxide staining on fracture planes.
Elev 76.8′, approximately 1/2 face manganese-oxide stained separated by fracture from thin clay filling.
Elev 74.9′, fine to coarse grained, pitted texture, continued manganese-oxide staining of fractures at Elev 74.6′, Elev 74.4′, and Elev 73.6′; clay filling on fractures (up to 0.01′ thick), fracture dips range from sub-horizontal to 30° with occasional up to 80°.
Elev 71.4′, increase in darker minerals, fracture dips range from horizontal to 45°.
Elev 67.9′, intensely fractured.
Elev 64.9′, bluish gray, moderately weathered.
Elev 59.9′ to Elev 59.1′, very intensely fractured (crushed), with localized mylonization (variably oriented fractures with clay filling), minor pitting along some fractures, most fractures dip 20° to 40° with occasional vertical fractures. 40° common near vertical fractures, continued localized pitting, grain size is variable and mixed suggesting soft sediment deposition.
Elev 55.5′ to Elev 54.9′, irregular fracture not measured (sub-vertical).
Iron-oxide staining only, limited to fracture planes, very intensely fractured zones Elev 52.3′ to Elev 52.1′ and Elev 50.7′ to Elev 50.3′.
Elev 51.7′ to Elev 51.1′, sub-vertical.
Elev 49.9′, occasional white (quartz?) veins, aphinitic dark rock fragments (fine grained sized) within fine to medium matrix, slightly weathered.
Elev 47.9′, elongated rock fragments (aphinitic) are sub-parallel, dark minerals predominate, moderately fractured, hard.
Increased iron-oxide staining at Elev 46.9′.
Very slight iron-oxide staining, moderately to slightly fractured.
Very intensely fractured zones at 38.5′ to 38.1′ and 36.3′ to 35.8′.
Localized banding appearance of dark mineral fragments.
Unfractured, continued <0.02′ thick quartz veins, continued localized dark mineral "banding", strong, fresh to slightly weathered.
Elev 33.0′, mechanical break.
One core break is mechanical.
SEDIMENTARY ROCK (SHALE), aphanitic, no indication of bedding, dark gray, fresh, moderately hard where intact otherwise sheared, very intensely to intensely fractured, weak to moderately strong.
Elev 26.2′ to Elev 25.6′, crushed.
Elev 26.1′, Elev 0.1′ thick clay zone <50°.
Elev 24.9′ to Elev 24.7′, hard.
Elev 24.7′ to Elev 22.8′, crushed/sheared, highly variable orientation to shears, minor green serpentine fragments.
SEDIMENTARY ROCK (SANDSTONE), fine to medium grained, dark gray, slightly weathered, moderately hard, intensely fractured, slight iron-oxide staining on some fractures, fractures ~45-90°.
Elev 17.9′, fresh, continued quartz veins, with dark mineral veins, localized soft sediment deposition.
Elev 15.4′ to Elev 10.0′, sheared zone (clayey).
Elev 14.0′, slickensides parallel to strike, rake is 18° down to SE.
Elev 12.75′, dip ~18° with slickensides on fracture surface.
Elev 12.4′, dip ~37°.
SEDIMENTARY ROCK (SANDSTONE and SHALE), commonly crushed to fragments up to 0.1′ diameter, SANDSTONE is fine grained, variably oriented quartz veins within SANDSTONE intervals, light green mineral (chlorite?) within SHALE intervals, soft, moderately weathered.
Elev 11.8′, 0.2′ clay zone.
Elev 9.8′ to Elev 9.3′, crushed (not clayey).
Elev 9.1′ to Elev 8.6′, sheared zone (clayey).
Iron-oxide along fracture planes.
SEDIMENTARY ROCK (SANDSTONE), fine to medium grained, laminated to thinly bedded (contact between fine to medium grained and very fine gravel at 6.0′ ~60° to 80° dip), dark gray, moderately to slightly weathered, moderately hard to moderately soft, intensely fractured, numerous closed fractures, fractures are randomly oriented, numerous healed micro faults.
Elev 3.4′, moderately fractured with localized very intensely fractured (crushed) zones along fractures, limited to fracture planes.
Elev 0.9′, contact to medium to fine grained, moderately hard, dipping ~45°.
Elev -0.1′, slightly to moderately weathered. From Elev -1.1′ to Elev -1.9′, fracture with localized crushing and slickensides. Increase in iron-oxide staining.
Elev -3.1′ to Elev -4.3′, fine to very fine grained, moderately soft, indicating soft sediment disposition.
Elev -4.5′ to Elev -5.0′, very intensely fractured (crushed), moderately weathered, with evidence of shearing.
Elev -6.2′, quartz vein infilling.
Elev -7.1′ to Elev -7.6′, contact to fine grained.
Elev -7.6′, frequent closed/healed fractures, ruggy, (occasional iron-oxide stained openings in the core that are not, through fracturesup to 0.2′ in length and 0.03′ wide oriented near vertical to dipping ~80°).
Elev -10.1′, near parallel, sub-vertical fractures (to 110.5′), fine to medium grained from Elev -11.3, Elev -12.1′ AND Elev -13.1′ TO Elev -13.3′.
Elev -10.1′ to Elev -11.3′, very thinly bedded.
Elev -13.1′ to Elev -14.9′, frequent randomly oriented whie mineral veins (calcite?).

SBBT-LTB7

81+000 82+000 83+000

RANDY ANDERSON DESIGN OVERSIGHT SIGN OFF DATE	FUNCTIONAL SUPERVISOR NAME: FRANK GREGURAS	DRAWN BY: PAUL TONKIN CHECKED BY: TERRENCE CARROLL	FIELD INVESTIGATION BY: TERRENCE CARROLL	PREPARED FOR THE STATE OF CALIFORNIA DEPARTMENT OF TRANSPORTATION	FRANK GREGURAS PROJECT ENGINEER	BRIDGE NO. 34-161L POST MILES 9.0/9.2	SOUTHBOUND BATTERY TUNNEL LOG OF TEST BORINGS 7 OF 17
OGS CIVIL LOG OF TEST BORINGS SHEET			ORIGINAL SCALE IN INCHES FOR REDUCED PLANS 0 1 2 3	CU 04242 EA 163741	DISREGARD PRINTS BEARING EARLIER REVISION DATES →	REVISION DATES: 07/29/09, 08/07/09, 08/20/09, 10/30/09	SHEET 62 OF 72

FILE => 34-0161r1-z-ltb07.dgn

USERNAME => ttreford DATE PLOTTED => 14-DEC-2009 TIME PLOTTED => 15:23

DIST	COUNTY	ROUTE	POST MILES TOTAL PROJECT	SHEET No	TOTAL SHEETS
04	SF	101	8.2/9.2	499	654

REGISTERED CIVIL ENGINEER — 10/30/09 DATE

12-14-09
PLANS APPROVAL DATE

Terrence Carroll No. C68869 Exp. 9/30/2011 CIVIL — REGISTERED PROFESSIONAL ENGINEER — STATE OF CALIFORNIA

The State of California or its officers or agents shall not be responsible for the accuracy or completeness of electronic copies of this plan sheet.

Arup PB Joint Venture
560 Mission Street, Suite 700
San Francisco, CA 94105

CALIFORNIA STATE FIRE MARSHAL APPROVED

Approval of this plan does not authorize or approve any omission or deviation from applicable regulations. Final approval is subject to field inspection. One set of approved plans shall be available on the project site at all times.

Reviewed by: STEPHEN GUARINO

Approval date: 12-14-09

FOR PLAN VIEW SEE "LOG OF TEST BORINGS 1 OF 17"

BENCH MARK
BM SF 14 Elev 96.261′

PROFILE
HOR. 1"=10′
VER. 1"=10′

NOTE:- This LOTB sheet was prepared in accordance with the CALTRANS Soil & Rock Logging, Classification, and Presentation Manual (June 2007), with the exception of Section 2.3.

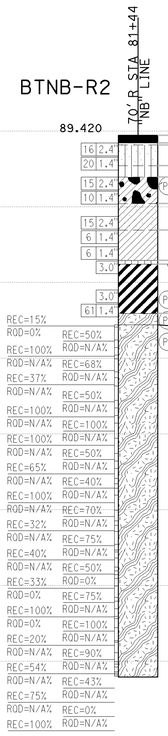

6/1/2008
Termination at El 17.9
ERi = 76.2%

4" ASPHALT CONCRETE.
7-8" UNREINFORCED CONCRETE.
3" Poorly graded SAND (SP), yellowish brown, dry to moist, fine, clean, frequent roots up to 1/4" diameter. [FILL]
SILTY SAND with GRAVEL (SM), medium dense, yellowish brown, moist, fine, GRAVEL is fine to coarse, slight horizontal laminations (from compaction?). [FILL]
SANDY SILT (ML), medium dense, yellowish brown, moist, SAND is fine to medium, piece of coarse GRAVEL. [FILL]
CLAYEY GRAVEL (GC), loose, yellowish brown and green, moist, coarse, rounded, serpentinite fragments (up to 3" diameter in shoe at 8.5′). [FILL]
CLAYEY SAND (SC),medium dense, yellowish brown, fine to coarse, with fine GRAVEL (subrounded to rounded, serpentinite fragments in CLAYEY SAND matrix). [FILL]
Lean CLAY with GRAVEL and SAND (CL), soft, brown and greenish gray, moist to wet, GRAVEL is angular serpentinite fragments, GRAVEL is fine to coarse, SAND is fine to coarse. [FILL]
Elev 72.9′, rig chatter.
SILTY SAND (SM), loose, very dark brown, wet, fine, very strong hydrocarbon/oily odor.
Fat CLAY with SAND, medium stiff to stiff, very dark brown, wet, SAND is fine, with rootlets, very strong hydrocarbon odor.
Elev 68.9′, grades grayish brown, stiff, without odor, without organics.
METAMORPHIC ROCK (SERPENTINITE), very soft, yellowish brown, greenish gray and dark gray, moist, decomposed, very intensely fractured (SANDY SILT (ML), medium stiff, sand is fine - moist).
dark greenish gray and dark gray, moderately to intensely weathered, very soft, very intensely fractured, common iron-oxide staining (localized), occasional small moderately soft zones.
Elev 60.4′, grades soft, intensely sheared throughout, fibrous texture common throughout (ML - SANDY SILT, SAND is fine, moist).
Elev 57.4′, slight iron-oxide staining, slightly weathered, harder fragments (angular) of SERPENTINITE with softer material washed away, fragments are moderately hard, up to 0.1′ in diameter (SM - SILTY SAND, fine to coarse, angular, with fine GRAVEL fragments, angular to subangular, moist).
Elev 52.0′, soft to moderately soft, faint iron-oxide staining on fracture surfaces.
Elev 51.7′, fibrous texture noted as long as 0.02′.
Elev 51.5′, moderately soft, bluish gray.
Elev 51.4′, soft.
Elev 51.4′, dark bluish gray with infilling of light greenish gray.
Elev 50.75′, fibrous texture noted as long as 0.02′.
Elev 50.25′, thin (0.01′ thick) white mineral (talc?) vein dipping 50°.
Elev 49.4′, moderately weathered with common iron-oxide staining.
Elev 48.1′, slightly weathered, very soft,
Elev 45.05′, angular fragments up to 0.1′ diameter.
Elev 41.5′ to Elev 40.8′, moderately hard, very intensely fractured, fragments of harder rock, dark gray.
Elev 39.4′, soft to moderately soft.
Elev 37.9′, very soft.
Elev 35.2′, very intensely fractured zone, fragments are moderately hard, dark bluish gray, overall matrix is very soft.
Elev 34.7′, fibrous texture noted.
Elev 33.7′, concentration of white mineral.
Elev 31.9′ to Elev 29.9′, recovery is light gray meta-sandstone and gabbro, moderately weathered, hard, 0.1′ to 0.2′ fragments, significant iron-oxide staining, hard to moderately hard.
Elev 29.9′, moderately weathered, soft, light greenish gray and orangish brown, heavy iron-oxide staining.
Elev 29.7′, concentrated iron-oxide weathering along shear planes.
Elev 27.9′, moderately soft, slightly weathered, greenish gray to olive gray, with moderately hard, white and dark gray minerals (white mineral has very fine, fibrous texture developed along planar surfaces, asbestos? White mineral also common with powdery texture disseminated thorught rock mass).
Elev 27.6′, horizontal buff sheared seam (0.01′ thick), fibrous texture noted.
Elev 26.9′, bluish gray, clayey, with green chlorite? minerals, moderately to slightly weathered, very soft.
Elev 22.4′, moderately weathered, increase in iron-oxide staining.
Elev 22.0′ to Elev 21.7′, moderately hard rock fragments (gabbro?).
Elev 19.2′, moderately to slightly weathered, increase in white mineral (talc) disseminated throughout.
Elev 17.9′, hard rock fragments.

90 80 70 60 50 40 30 20 10 0 -10 -20 -30

81+000 82+000 83+000 84+000

SBBT-LTB8

RANDY ANDERSON DESIGN OVERSIGHT SIGN OFF DATE	FUNCTIONAL SUPERVISOR NAME: FRANK GREGURAS	DRAWN BY: PAUL TONKIN CHECKED BY: TERRENCE CARROLL	FIELD INVESTIGATION BY: TERRENCE CARROLL	PREPARED FOR THE STATE OF CALIFORNIA DEPARTMENT OF TRANSPORTATION	FRANK GREGURAS PROJECT ENGINEER	BRIDGE NO. 34-161L POST MILES 9.0/9.2	SOUTHBOUND BATTERY TUNNEL LOG OF TEST BORINGS 8 of 17
OGS CIVIL LOG OF TEST BORINGS SHEET			ORIGINAL SCALE IN INCHES FOR REDUCED PLANS 0 1 2 3	CU 04242 EA 163741	DISREGARD PRINTS BEARING EARLIER REVISION DATES →	REVISION DATES: 07/24/09 08/07/09 08/26/09 10/30/09	SHEET 63 OF 72

FILE => 34-0161r1-z-ltb08.dgn

USERNAME => trlenord DATE PLOTTED => 14-DEC-2009 TIME PLOTTED => 15:24

DIST	COUNTY	ROUTE	POST MILES TOTAL PROJECT	SHEET No	TOTAL SHEETS
04	SF	101	8.2/9.2	500	654

CALIFORNIA STATE FIRE MARSHAL APPROVED
Approval of this plan does not authorize or approve any omission or deviation from applicable regulations. Final approval is subject to field inspection. One set of approved plans shall be available on the project site at all times.
Reviewed by: STEPHEN GUARINO
Approval date: 12-14-09

Terrence M Carroll
REGISTERED CIVIL ENGINEER — 10/30/09 DATE

12-14-09
PLANS APPROVAL DATE

REGISTERED PROFESSIONAL ENGINEER — Terrence Carroll — No. C68869 — Exp. 9/30/2011 — CIVIL — STATE OF CALIFORNIA

The State of California or its officers or agents shall not be responsible for the accuracy or completeness of electronic copies of this plan sheet.

Arup PB Joint Venture
560 Mission Street, Suite 700
San Francisco, CA 94105

BENCH MARK
BM SF 14 Elev 96.261′

FOR PLAN VIEW SEE "LOG OF TEST BORINGS 1 OF 17"

NOTES:- This LOTB sheet was prepared in accordance with the CALTRANS Soil & Rock Logging, Classification, and Presentation Manual (June 2007), with the exception of Section 2.3.

PROFILE
HOR. 1"=10′
VER. 1"=10′

BTNB-R6-PZ-D

222′ R STA 81+67
NB LINE

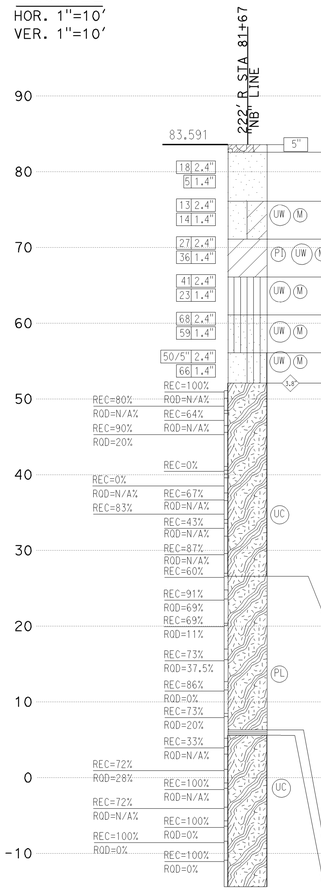

90
80
70
60
50
40
30
20
10
0
-10
-20
-30
-40

Poorly graded SAND (SP), loose, yellowish brown, moist, fine, trace fines, trace medium sand. [FILL]
Grades dark brown, grades without medium SAND, with pockets of black organic material (up to 1/8" diameter).
Poorly graded SAND with CLAY (SP-SC), medium dense, reddish brown, moist, fine, with shell fragments. [FILL]
Elev 74.5′, grades with yellowish brown mottling.
Elev 73.9′, 1/4" diameter root.
Lean CLAY (CL), stiff, yellowish brown and grayish brown, moist, mottled, trace fine to medium sand, with black oxidized nodules (up to 1/8" diameter).
Grades to CLAY with SAND, with black specks, rootlets.
SANDY SILT (ML), stiff, light yellowish brown, moist, with thin horizontal laminations.
Elev 64.6′, grades with slight iron-oxide mottling.
SILTY SAND (SM), very dense, yellowish brown, moist, fine to medium, with trace rock fragments up to 1/4" diameter, rock fragments are subangular SILTSTONE and SERPENTINITE, with SANDY CLAY partings, with black specks.
Poorly graded SAND with SILT (SP-SM), very dense, yellowish brown, moist, fine to medium, with trace rock fragments up to 1/4" diameter, rock fragments are subangular SILTSTONE and SERPENTINITE.
METAMORPHIC ROCK (Serpentinite), dark greenish gray and very dark bluish gray, moderately weathered, very soft, moderately fractured (intensely crushed), fractures are planar to sub-planar 20° from horizontal, highly sheared throughout, with micro-slickensided surfaces throughout, light brown iron-oxide staining throughout, local sub-horizontal folliation.
Elev 50.1′, grades soft, decreased iron-oxide staining.
Elev 47.4′ and 47.0′, 40° dip highly polished.
Elev 47.4′ to 47.0′, dark greenish gray, moderately hard, slightly weathered.
Elev 45.6′, sub-horizontal fracture, moderately hard.
Elev 44.0′ to 43.4′ near vertical (80°) 1/8" thick mylonized zone along fracture.
Elev 43.6′, soft to very soft, abundant very light green mineral (talc?).
Elev 42.6′, sub-horizontal fracture surfaces typically polished and sheared.
Straight drill from Elev 40.1′ to 39.6′.
Talc? is non-fibrous.
Grades soft, very dark greenish gray, with chlorite and talc? vein fillings variably oriented throughout mass, no indication of fibrous texture, fractures are irregular (sub-horizontal).
Core breaks along preferred orientation (strike N/S dip 45° west), platey appearance parallel to joints.
Elev 38.4′, additional random fractures (1/16" thick) with talc? infilling.
With less talc?
Preferential fracture planes parallel to platey structure, alternately zones of very soft to moderately soft.
Elev 29.6′, very soft to soft.
Elev 28.3′, mechanized fracture dips ~45°.
Elev 27.8′, grades with abundant iron-oxide staining, indirect fractures are sub-horizontal, continued internally sheared polished surfaces.
METAMORPHIC ROCK (Greenstone), dark greenish gray, slightly weathered, moderately hard to hard, intensely fractured with very intensely to intensely fractured zones, fractures franging from horizontal to 20° dip.
Open and healed fractures with filling and staining of black magnesium oxide. Subrounded vitreous crystals predominant throughout mass (pyroxene/olivine?), localized black vugular zones (maximum 0.2′ thick).
Elev 23.6 to 22.8′, intensely fractured (open and closed, internal shearing characterized by microstriations on plane surfaces).
Elev 23.2′, dip 40°.
Elev 22.8′, intensely fractured, moderately hard.
Grades less crystalline (micro crystalline).
Elev 21.2′, dip 70°.
Elev 20.7′, dip 70°.
Elev 20.2′ to 18.0′, very intensely fractured, very soft (with hard pieces, crumbles to 1/16" to 1" pieces, moderately weathered, with abundant iron-oxide staining).
Elev 18.0′, moderately weathered.
Elev 15.6′, intensely fractured, moderately hard, moderately weathered, fractures horizontal to 45°, filled (vertical at 70.5′), fracture with similar appearance to rest of rock, scattered fibrous minerals at random orientations (asbestos?), few apparent unique crystals.
Elev 14.0′ to 13.2′, very intensely fractured.
Elev 11.6′, fractures infilled with fibrous mineral (asbestos?)
Elev 11.3′, moderately weathered with abundant iron-oxide staining throughout, very soft, very intensely fractured.
Elev 10.6′, moderately to slightly fractured, hard, moderately weathered.
Elev 7.6′ to 6.2′ and 5.6′ to 5.2′, crushed zones (very soft, severely weathered, with abundant iron-oxide staining).
SEDIMENTARY ROCK (Greywacke), fine grained to aphanitic, yellowish brown, slightly weathered, hard, healed very thin fractures.
METAMORPHIC ROCK (Serpentinite), green and yellowish brown, moderately weathered, soft.
Recovery is dark greenish gray and dark gray pieces of serpentine and greenstone, moderately hard - not representative of rock layer.
Very dark gray, intensely fractured, moderately hard, severely weathered, talc/chlorite in fractures.
Elev 0.1′ to -0.7′, slightly fractured, veinlettes of fibrous minerals.
Elev -3.4′, very intensely fractured and sheared (crushed), soft to very soft, moderately weathered.
Elev -5.5′, very soft with zones of moderately hard, common green vitreous appearance (chlorite?).
Elev -7.5′, moderately fractured, moderately hard, slightly weathered at 90.0°, platey secondary mineral formation (chlorite?) pervasively throughout.
Elev -7.6′, fibrous, light green, translucent minerals oriented parallel to dip.
Elev -8.7′, internally sheared/crushed, very soft to soft, moderately weathered, platey secondary mineral formation pervasively throughout (chlorite?) portions of core - one locally micro-fractured with chlorite? filling.
Elev -10.9′, very dark gray, intensely fractured, moderately hard, slightly weathered.
Elev -11.4′, internally sheared/crushed.
Elev -13.4′ to -13.9′, very intensely to intensely fractured.

82+000 83+000 84+000

SBBT-LTB9

RANDY ANDERSON DESIGN OVERSIGHT SIGN OFF DATE	FUNCTIONAL SUPERVISOR NAME: FRANK GREGURAS	DRAWN BY: PAUL TONKIN CHECKED BY: TERRENCE CARROLL	FIELD INVESTIGATION BY: TERRENCE CARROLL	PREPARED FOR THE STATE OF CALIFORNIA DEPARTMENT OF TRANSPORTATION	FRANK GREGURAS PROJECT ENGINEER	BRIDGE NO. 34-161L POST MILES 9.0/9.2	SOUTHBOUND BATTERY TUNNEL LOG OF TEST BORINGS 9 of 17
OGS CIVIL LOG OF TEST BORINGS SHEET			ORIGINAL SCALE IN INCHES FOR REDUCED PLANS 0 1 2 3	CU 04242 EA 163741		DISREGARD PRINTS BEARING EARLIER REVISION DATES →	REVISION DATES: 07/29/09, 08/07/09, 08/28/09, 10/30/09 — SHEET 64 OF 72

FILE => 34-0161rl-z-ltb09.dgn

USERNAME => rtriebord DATE PLOTTED => 14-DEC-2009 TIME PLOTTED => 15:24

DIST	COUNTY	ROUTE	POST MILES TOTAL PROJECT	SHEET No	TOTAL SHEETS
04	SF	101	8.2/9.2	501	654

CALIFORNIA STATE FIRE MARSHAL APPROVED
Approval of this plan does not authorize or approve any omission or deviation from applicable regulations. Final approval is subject to field inspection. One set of approved plans shall be available on the project site at all times.
Reviewed by: STEPHEN GUARINO
Approval date: 12-14-09

Terrence M Carroll
REGISTERED CIVIL ENGINEER — 10/30/09 DATE

12-14-09
PLANS APPROVAL DATE

REGISTERED PROFESSIONAL ENGINEER — Terrence Carroll — No. C68869 — Exp. 9/30/2011 — CIVIL — STATE OF CALIFORNIA

The State of California or its officers or agents shall not be responsible for the accuracy or completeness of electronic copies of this plan sheet.

Arup PB Joint Venture
560 Mission Street, Suite 700
San Francisco, CA 94105

BENCH MARK
BM SF 14 Elev 96.261′

FOR PLAN VIEW SEE "LOG OF TEST BORINGS 1 OF 17"

NOTE:- This LOTB sheet was prepared in accordance with the CALTRANS Soil & Rock Logging, Classification, and Presentation Manual (June 2007), with the exception of Section 2.3.

PROFILE
HOR. 1"=10′
VER. 1"=10′

BTSB-R1-PZ
101.030
35′ L STA 82+30 SB LINE

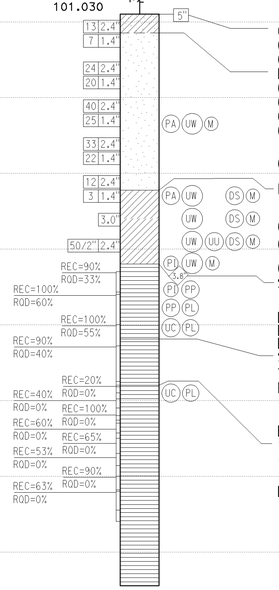

1/22/2008
Termination at El 25.5
ERi = 72.8%

100
90
80
70
60
50
40
30
20
10
0
-10
-20

CLAYEY SAND (SC), loose, dark brown, dry, fine, with GRAVEL. [FILL]
Grades dry to moist.
Grades no GRAVEL, grades with pockets of yellowish brown CLAY.
Poorly graded SAND, loose, reddish brown, dry to moist, fine. [FILL]
Grades dark yellowish brown.
Grades yellowish brown to light yellowish brown, medium dense.
Grades fine to medium.
Grades fine.

Grades moist.

Lean CLAY with SAND (CL), soft, very dark gray to black, wet, with brown mottling, occasional small decayed vegetation.

Grades brown.
Grades yellowish brown with gray clay lenses and pocket of very stiff gray CLAYEY SAND.

Grades with black organic mottling, medium stiff to stiff.
SEDIMENTARY ROCK (SANDSTONE), fine to medium grained, massive gray to dark gray, moderately weathered, moderately hard, intensely fractured, anastomizing white secondary mineral vein infilling.

Elev 65.8′, slightly weathered, moderately to intensely fractured.
Elev 63.4′ to Elev 63.1′, intensely fractured.
Elev 59.2′, slightly weathered to fresh.
SEDIMENTARY ROCK, SANDSTONE and SHALE, sandstone is medium to fine grained, laminated to moderately bedded (distorted by soft sediment deformation and micro faulting white secondary mineral vein infilling occurs along faults), gray to dark gray, slightly weathered to fresh, moderately hard, moderately fractured, surface of core is occasionally pitted, fractures are commonly polished and slickensided.

Elev 53.7′ to Elev 53.4′, surface of core is commonly pitted.
SEDIMENTARY ROCK, MELANGE MATRIX, very dark gray gravel, slightly weathered to fresh, very soft, very intensely fractured (hard meta-sandstone fragments in sheared shale matrix) (lean clay with gravel (CL), soft, gravel is fine to coarse, angular, moist to wet).

Elev 41.7′, hard piece of meta-sandstone (0.3′).

82+000 83+000 84+000 85+000

SBBT-LTB10

RANDY ANDERSON
DESIGN OVERSIGHT
SIGN OFF DATE

FUNCTIONAL SUPERVISOR
NAME: FRANK GREGURAS

DRAWN BY: PAUL TONKIN
CHECKED BY: TERRENCE CARROLL

FIELD INVESTIGATION BY:
STEPHEN MCLANDRICH

PREPARED FOR THE
STATE OF CALIFORNIA
DEPARTMENT OF TRANSPORTATION

FRANK GREGURAS
PROJECT ENGINEER

BRIDGE NO. 34-161L
POST MILES 9.0/9.2

SOUTHBOUND BATTERY TUNNEL
LOG OF TEST BORINGS 10 OF 17

OGS CIVIL LOG OF TEST BORINGS SHEET

ORIGINAL SCALE IN INCHES FOR REDUCED PLANS 0 1 2 3

CU 04242
EA 163741

FILE => 34-0161r1-z-ltb10.dgn

DISREGARD PRINTS BEARING EARLIER REVISION DATES →
REVISION DATES: 07/23/09 08/07/09 08/20/09 10/30/09

SHEET 65 OF 72

USERNAME => rfriend DATE PLOTTED => 14-DEC-2009 TIME PLOTTED => 15:24

DIST	COUNTY	ROUTE	POST MILES TOTAL PROJECT	SHEET No	TOTAL SHEETS
04	SF	101	8.2/9.2	502	654

NOTE:- This LOTB sheet was prepared in accordance with the CALTRANS Soil & Rock Logging, Classification, and Presentation Manual (June 2007), with the exception of Section 2.3.

Terrence M Carroll 10/30/09
REGISTERED CIVIL ENGINEER DATE

12-14-09
PLANS APPROVAL DATE

REGISTERED PROFESSIONAL ENGINEER — Terrence Carroll — No. C68869 — Exp. 9/30/2011 — CIVIL — STATE OF CALIFORNIA

The State of California or its officers or agents shall not be responsible for the accuracy or completeness of electronic copies of this plan sheet.

Arup PB Joint Venture
560 Mission Street, Suite 700
San Francisco, CA 94105

CALIFORNIA STATE FIRE MARSHAL APPROVED
Approval of this plan does not authorize or approve any omission or deviation from applicable regulations. Final approval is subject to field inspection. One set of approved plans shall be available on the project site at all times.
Reviewed by: STEPHEN GUARINO
Approval date: 12-14-09

FOR PLAN VIEW SEE "LOG OF TEST BORINGS 1 OF 17"

BTNB-R1
BENCH MARK
BM SF 14 Elev 96.261′

PROFILE
HOR. 1"=10′
VER. 1"=10′

77′ R STA 83+61 NB1 LINE
91.378

5" 3.75" ASPHALT, 7.5" CONCRETE.
SILTY SAND with GRAVEL (SM), light brown, dry, fine to medium, GRAVEL is fine, angular to subangular. [FILL]
64
64
SILT with SAND (ML), hard, brown and yellowish brown, dry, trace GRAVEL, GRAVEL is angular to subangular.
82
50/5.5"
91/9"
SILTY SAND (SM), very dense, brown to reddish brown, moist, trace GRAVEL, GRAVEL is fine to coarse, highly weathered sandstone fragments.
3.8" SEDIMENTARY ROCK (SANDSTONE BRECCIA), reddish brown, fine grained moderately weathered,core is broken, contains CLAY and SILT, SANDSTONE pieces are hard, with soft CLAYEY, thinly weathered portions.
Grades yellow brown.
SEDIMENTARY ROCK (MELANGE MATRIX), gray, intensely fractured, moderately weathered, moderately hard, fine-grained SANDSTONE fragments (up to 0.25′ thick) in sheared SHALE matrix.

REC=100% ROD=0%
REC=20% ROD=0%
REC=85% ROD=0%
REC=60% ROD=0%
REC=37% ROD=0%
REC=65% ROD=0%
REC=75% ROD=0%
REC=65% ROD=0%
REC=70% ROD=0%
REC=57% ROD=0%
REC=75% ROD=0%
REC=100% ROD=0%
REC=90% ROD=0%
REC=75% ROD=0%
REC=90% ROD=0%
REC=90% ROD=0%
REC=60% ROD=0%
REC=50% ROD=0%
REC=50% ROD=0%
REC=50% ROD=0%
REC=30% ROD=0%
REC=40% ROD=0%
REC=50% ROD=0%
REC=90% ROD=0%
REC=80% ROD=0%
REC=80% ROD=0%
REC=65% ROD=0%
REC=80% ROD=0%
REC=100% ROD=0%
REC=100% ROD=0%
REC=80% ROD=0%
REC=45% ROD=0%
REC=80% ROD=0%
REC=70% ROD=0%
REC=60% ROD=0%
REC=90% ROD=0%

Elev 68.4′ to Elev 68.0′, SANDSTONE piece.
Elev 66.4′ to Elev 66.1′, hard SILTSTONE piece.
Grades with SANDSTONE, SILTSTONE, and SHALE fragments.
Elev 61.4′ to Elev 60.6′, slightly serpentinized or chloritized interval.
Elev 58.4′, slightly weathered.
Grades with SHALE fragments.
Elev 53.9′ to Elev 53.1′, moderately hard SILTSTONE fragments with some SERPENTINITE.
Elev 49.9′ to Elev 49.75′, reddish brown (CHERT?) fragment.
Elev 49.4′, SHALE fragments, moderately soft.
Elev 48.4′, SILTSTONE and fine grained SANDSTONE fragments (up to 0.1 thick) in sheared SHALE matrix.

Elev 44.9′, 1.5" greenish gray, serpentinized interval.
Elev 41.6′, light gray, completely sheared throughout.
Fragments are up to 0.02′ thick.
Elev 36.0′ to Elev 35.4′, fragments are meta-SANDSTONE (up to 0.25′ thick).

Elev 30.4′, moderately weathered, with slight iron-oxide staining throughout.
Elev 28.4′, slightly weathered.
CLAY matrix is dark greenish gray, serpentinized.
Elev 22.9′, white secondary mineral deposit.
Grades slightly more gray than green and slightly more SILTSTONE layer.
Elev 22.4′ to Elev 21.6′, crushed granular interval.
White secondary mineral is more common.
Elev 17.4′, sheared SHALE matrix commonly has sandy intervals.

6/1/2008
Termination at El -6.6
ERi = 72.9%

90 80 70 60 50 40 30 20 10 0 -10 -20 -30

84+000 85+000 86+000

SBBT-LTB11

RANDY ANDERSON DESIGN OVERSIGHT SIGN OFF DATE	FUNCTIONAL SUPERVISOR NAME: FRANK GREGURAS	DRAWN BY: PAUL TONKIN CHECKED BY: TERRENCE CARROLL	FIELD INVESTIGATION BY: STEPHEN MCLANDRICH	PREPARED FOR THE **STATE OF CALIFORNIA** DEPARTMENT OF TRANSPORTATION	FRANK GREGURAS PROJECT ENGINEER	BRIDGE NO. 34-161L POST MILES 9.0/9.2	**SOUTHBOUND BATTERY TUNNEL** **LOG OF TEST BORINGS 11 of 17**
OGS CIVIL LOG OF TEST BORINGS SHEET			ORIGINAL SCALE IN INCHES FOR REDUCED PLANS 0 1 2 3	CU 04242 EA 163741		DISREGARD PRINTS BEARING EARLIER REVISION DATES →	REVISION DATES: 01/23/09 08/07/09 08/20/09 10/30/09 — SHEET 66 OF 72

FILE => 34-0161r1-z-ltb11.dgn

USERNAME => ttriefor DATE PLOTTED => 14-DEC-2009 TIME PLOTTED => 15:24

DIST	COUNTY	ROUTE	POST MILES TOTAL PROJECT	SHEET No	TOTAL SHEETS
04	SF	101	8.2/9.2	503	654

Terrence McCarroll
REGISTERED CIVIL ENGINEER — 10/30/09 DATE

12-14-09
PLANS APPROVAL DATE

REGISTERED PROFESSIONAL ENGINEER — Terrence Carroll — No. C68869 — Exp. 9/30/2011 — CIVIL — STATE OF CALIFORNIA

The State of California or its officers or agents shall not be responsible for the accuracy or completeness of electronic copies of this plan sheet.

Arup PB Joint Venture
560 Mission Street, Suite 700
San Francisco, CA 94105

NOTE:- This LOTB sheet was prepared in accordance with the CALTRANS Soil & Rock Logging, Classification, and Presentation Manual (June 2007), with the exception of Section 2.3.

CALIFORNIA STATE FIRE MARSHAL APPROVED
Approval of this plan does not authorize or approve any omission or deviation from applicable regulations. Final approval is subject to field inspection. One set of approved plans shall be available on the project site at all times.
Reviewed by: STEPHEN GUARINO
Approval date: 12-14-09

FOR PLAN VIEW SEE "LOG OF TEST BORINGS 1 OF 17"

BENCH MARK
BM SF 14 Elev 96.261′

PROFILE
HOR. 1"=10′
VER. 1"=10′

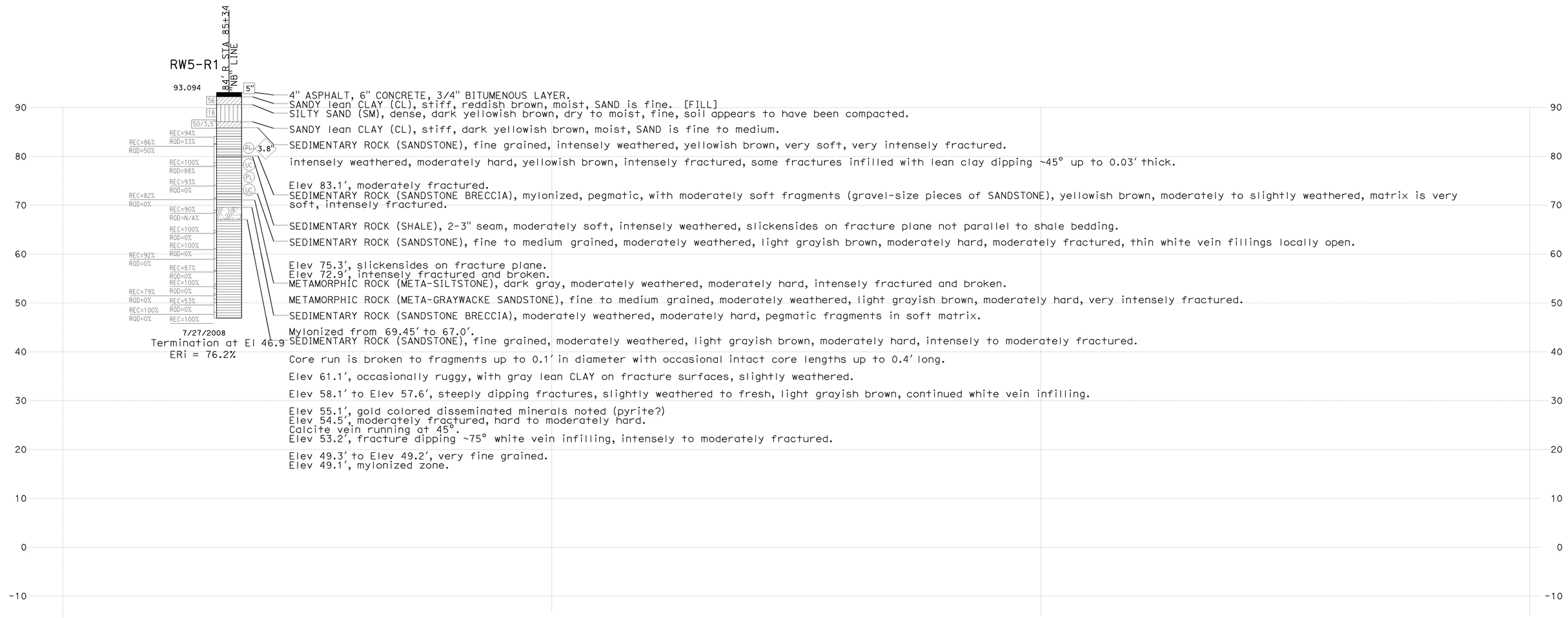

SBBT-LTB12

RANDY ANDERSON DESIGN OVERSIGHT SIGN OFF DATE	FUNCTIONAL SUPERVISOR NAME: FRANK GREGURAS	DRAWN BY: PAUL TONKIN CHECKED BY: TERRENCE CARROLL	FIELD INVESTIGATION BY: PETER RYAN	PREPARED FOR THE STATE OF CALIFORNIA DEPARTMENT OF TRANSPORTATION	FRANK GREGURAS PROJECT ENGINEER	BRIDGE NO. 34-161L POST MILES 9.0/9.2	SOUTHBOUND BATTERY TUNNEL LOG OF TEST BORINGS 12 of 17
OGS CIVIL LOG OF TEST BORINGS SHEET			ORIGINAL SCALE IN INCHES FOR REDUCED PLANS 0 1 2 3	CU 04242 EA 163741		DISREGARD PRINTS BEARING EARLIER REVISION DATES →	REVISION DATES: 07/27/09 08/31/09 08/28/09 10/30/09 — SHEET 67 OF 72

FILE => 34-0161r1-z-ltb12.dgn

USERNAME => trtemord DATE PLOTTED => 14-DEC-2009 TIME PLOTTED => 15:24

DIST	COUNTY	ROUTE	POST MILES TOTAL PROJECT	SHEET No	TOTAL SHEETS
04	SF	101	8.2/9.2	504	654

CALIFORNIA STATE FIRE MARSHAL APPROVED
Approval of this plan does not authorize or approve any omission or deviation from applicable regulations. Final approval is subject to field inspection. One set of approved plans shall be available on the project site at all times.
Reviewed by: STEPHEN GUARINO
Approval date: 12-14-09

NOTE:- This LOTB sheet was prepared in accordance with the CALTRANS Soil & Rock Logging, Classification, and Presentation Manual (June 2007), with the exception of Section 2.3.

Terrence M Carroll 10/30/09
REGISTERED CIVIL ENGINEER DATE

12-14-09
PLANS APPROVAL DATE

Terrence Carroll No. C68869 Exp. 9/30/2011 CIVIL — REGISTERED PROFESSIONAL ENGINEER — STATE OF CALIFORNIA

The State of California or its officers or agents shall not be responsible for the accuracy or completeness of electronic copies of this plan sheet.

Arup PB Joint Venture
560 Mission Street, Suite 700
San Francisco, CA 94105

FOR PLAN VIEW SEE "LOG OF TEST BORINGS 1 OF 17"

BENCH MARK
BM SF 14 Elev 96.261′

PROFILE BTNB-R5-PZ-D
HOR. 1"=10′
VER. 1"=10′

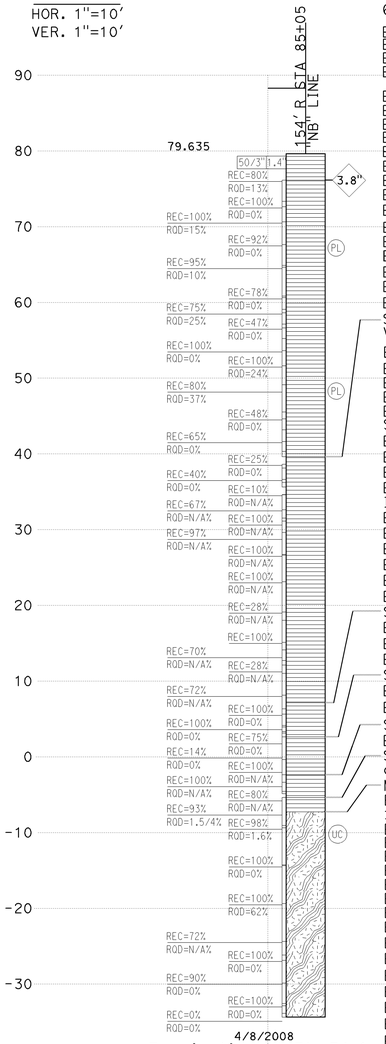

1/2" ASPHALT CONCRETE.
SEDIMENTARY ROCK (SANDSTONE), fine, dark gray, intensely weathered, moderately soft, intensely fractured, with yellowish brown CLAY infilling.
medium grained to fine grained, no indication of bedding, dark grayish brown, moderately weathered, moderately hard, moderately fractured, heavy iron-oxide staining on fracture surfaces, light staining within rock mass at Elev 75.1′, vein infilling up to 0.02′ thick (calcite?), grades very thinly bedded, intensely fractured, fracture dipping ranges from 20° to 70°, fractures are typically intensely weathered. Grains are angular to subangular, uniform, numerous insipient fractures, very dense/lithified.
Elev 72.8′, finer grained with decrease in medium grained, darker minerals, moderately to slightly weathered.
69.6′, clayey sand sheared filling, entire interval appears massive (no Elev indication of bedding).
Elev 67.6′, fracture orientation and spacings remain consistent with above.
Elev 63.7′, seam infilling with clay.
Elev 63.1′, slickensides parallel to dip.
Elev 61.7′ to Elev 60.6′, near vertical fracture, undulating surface intersecting fractures average orientation is 345/81E.
Elev 60.6′, slightly weathered (slight iron-oxide staining).
Elev 58.6′, very intensely to intensely fractured with one length from 58.1′ to
Elev 57.6′, intact.
Elev 56.6′, hard, fresh to slightly weathered (absence of iron-oxide stains).
Elev 56.6′, multiple vertical fractures entire length of core with additional sub-horizontal fractures.
Elev 56.2′, white mineral, vein, hard (non-quartz).
Elev 56.0′, CLAY seam infilling.
Elev 52.6′ to Elev 51.6′, white mineral vein fillings (unrelated to fracturing) pervasively fractured (from fragments to 0.2′).
Elev 51.6′, intensely fractured, fractures dipping commonly 60° to 70°, continued localized white mineral vein fillings.
Elev 48.7′, 0.08′ thick shear zone (light gray, silty, fine sand).
Elev 48.6′, contact to fine grained SAND (medium grained above).
Elev 46.2′, fine to medium grained (core broken with silty fine SAND fragments (0.01′ to 0.2′).
Elev 43.2′, very intensely fractured (crushed) (silty, fine SAND shear zone).
Elev 41.6′, 0.3′ intact fragment (laminated showing soft sediment deformation), no visible sand grains.
Elev 41.3′, 0.05′ quartz vein.
SEDIMENTARY ROCK (MELANGE MATRIX), dark gray (consisting of fine grained SANDSTONE, very hard SILTSTONE, and fragmented hard SHALE), very intensely fractured (crushed), slightly weathered to fresh.
Very soft to hard.
Elev 31.1′, fresh, fragments are fine grained, lithic SANDSTONE, occasional quartz? veins, fragments range from <0.01′ to core diameter.
Elev 29.6′ to Elev 28.5′, crushed, very fine grained.
Elev 28.5′ to Elev 27.5′, clayey (primarily clay with hard fragments).
Elev 27.5′ to Elev 27.2′, crushed, very fine grained.
Elev 27.2′ to Elev 26.7′, clayey.
Scattered green mineral filling within small cavities (up to 0.08" diameter) (chlorite?).
Elev 26.6′, highly sheared shale with internal slickensided shear planes within rock mass and very fine grained sandstone fragments.
Elev 23.1′, less clayey (more intact shale).
Elev 22.8′ to Elev 19.2′, Elev 0.15′ hard resistant rock fragments, core breaks are irregular sub-horizontal to 10°dip.
Elev 20.4′, crushed/sheared zone without clay.
Iron-oxide staining common on fracture faces, moderately weathered.
Elev 15.1′, very minor local staining on surfaces (chlorite?), iron-oxide staining throughout, primarily sheared fragments with sub-horizontal fissility.
Elev 14.1′, interval ranges from pervasively sheared shale (clayey) to hard gray sandstone fragments (up to 0.25′).
Elev 13.85′, dipping 35°.
Elev 12.1′, continued highly sheared shale.
Elev 12.1′ to Elev 11.4′, scattered quartz vein filling.
Elev 11.4′, subangular sandstone fragments (up to 0.05′) in olive brown clay matrix.
SEDIMENTARY ROCK (SANDSTONE), fine grained, hard, very intensely fractured, moderately weathered with heavy iron-oxide staining on fracture surfaces and extending slightly into the rock mass.
Elev 7.1′, iron-oxide staining on some surfaces, but not all, suggesting mechanical breaks.
Elev 5.6′, continued mechanical breaks, multiple fracture orientations, quartz vein (20° dip) at 74.7′ (0.02′ thick).
Elev 3.9′, horizontal to 10° fractures, clay filled sheared fracture at Elev 3.3′.
SEDIMENTARY ROCK (MELANGE MATRIX), dark gray, fresh, very soft.
Elev -1.5′, chlorite? vein (1/4" thick).
Elev -2.0′, quartz vein (1/4" thick), sheared shale with hard sandstone pieces (up to 1/4"diameter).
SEDIMENTARY ROCK (SANDSTONE), dark gray, fine grained, moderately hard, very intensely fractured, fresh, not clayey.
Elev -2.7′ to Elev -3.0′, crushed zone.
SEDIMENTARY ROCK (MELANGE MATRIX), dark gray, slightly weathered to fresh, soft, very intensely fractured (crushed), mylonized (CLAY-like) with subangular sandstone fragments, variably oriented contacts dipping up to 30°. SANDSTONE fragments up to 0.2′ thick localized shearing along thin fractures.
METAMORPHIC ROCK (META-SANDSTONE), steeply dipping, laminated relic bedding offset by healed micro-faults, dark gray, fresh, hard, moderately to slightly fractured, milky white vein filling.
Elev -9.4′, clayey infilling common, very intensely fractured (crushed), random quartzitic vein filling, locally associated with fractures and planes of weakness, harder pieces within mylonized zone are moderately hard overall matrixes soft.
Elev -10.0′ to Elev -11.4′, fractured mylonized zones.
Elev -11.4′, hard, moderately fractured.
Elev -12.4′, mylonized seam (0.02′ thick).
Elev -14.8′, intensely to moderately fractured, mylonized zone.
Elev -15.4′, crushed zone.
Elev -16.8′, mylonized clay zone with quartz vein filling.
Elev -19.4′, continued quartz vein filling, parallel and not parallel to fractures, moderately fractured.
Elev -23.6′, sheared/mylonized, dark gray and yellowish brown, iron-oxide staining throughout fractures, very intensely fractured (crushed), slickensides of fractures at Elev -23.6′ parallel to dip.
Elev -24.4′, pervasively fractured, mylonized, with pervasive secondary clay formation, remanant intersecting fracture planes at 30° to 40° dip, moderately weathered.
Elev -26.9′, predominantly moderately hard, intensely weathered, clay smearing and iron-oxide staining on fractures at Elev -29.4′.
Elev -26.9′ to Elev -27.3′ and Elev -28.9′ to Elev -28.6′, clayey mylonized zones (with subangular sandstone fragments in clay matrix).
Elev -28.7′ to Elev -29.9′, additional sub-vertical fractures.
Elev -29.4′, gray clay along predominant fracture. Quartz? veins continued, primarily unrelated to fracures. Multiple fracture sets primarily between 50° - 30°.
Elev -31.1 to Elev -32.6′, pervasively sheared with a substantial portion mylonized, random fracture orientations.
Elev -32.9′, pervasively oxidized, intensely fractured, variably oriented fractures.

SBBT-LTB13

RANDY ANDERSON DESIGN OVERSIGHT SIGN OFF DATE	FUNCTIONAL SUPERVISOR NAME: FRANK GREGURAS	DRAWN BY: PAUL TONKIN CHECKED BY: TERRENCE CARROLL	FIELD INVESTIGATION BY: TERRENCE CARROLL	PREPARED FOR THE STATE OF CALIFORNIA DEPARTMENT OF TRANSPORTATION	FRANK GREGURAS PROJECT ENGINEER	BRIDGE NO. 34-161L POST MILES 9.0/9.2	SOUTHBOUND BATTERY TUNNEL LOG OF TEST BORINGS 13 of 17
OGS CIVIL LOG OF TEST BORINGS SHEET			ORIGINAL SCALE IN INCHES FOR REDUCED PLANS 0 1 2 3	CU 04242 EA 163741	DISREGARD PRINTS BEARING EARLIER REVISION DATES →	REVISION DATES: 07/29/09, 08/07/09, 08/28/09, 10/30/09	SHEET 68 OF 72

FILE => 34-0161ri-z-ltb13.dgn

USERNAME => rtriebord DATE PLOTTED => 14-DEC-2009 TIME PLOTTED => 15:24

DIST	COUNTY	ROUTE	POST MILES TOTAL PROJECT	SHEET No	TOTAL SHEETS
04	SF	101	8.2/9.2	505	654

CALIFORNIA STATE FIRE MARSHAL APPROVED

Approval of this plan does not authorize or approve any omission or deviation from applicable regulations. Final approval is subject to field inspection. One set of approved plans shall be available on the project site at all times.

Reviewed by: STEPHEN GUARINO

Approval date: 12-14-09

Terrence Carroll — 10/30/09
REGISTERED CIVIL ENGINEER — DATE

12-14-09
PLANS APPROVAL DATE

REGISTERED PROFESSIONAL ENGINEER — Terrence Carroll — No. C68869 — Exp. 9/30/2011 — CIVIL — STATE OF CALIFORNIA

The State of California or its officers or agents shall not be responsible for the accuracy or completeness of electronic copies of this plan sheet.

Arup PB Joint Venture
560 Mission Street, Suite 700
San Francisco, CA 94105

BENCH MARK
BM SF 14 Elev 96.261′

FOR PLAN VIEW SEE "LOG OF TEST BORINGS 1 OF 17"

NOTE:- This LOTB sheet was prepared in accordance with the CALTRANS Soil & Rock Logging, Classification, and Presentation Manual (June 2007), with the exception of Section 2.3.

PROFILE
HOR. 1"=10′
VER. 1"=10′

RW6-R1-PZ
108.507

58′ LT STA 85+24
SBT LINE

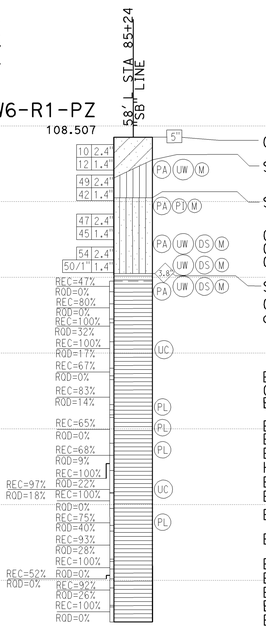

Termination at El 44.5
ERi = 72.9%

CLAYEY SAND (SC), loose, dark brown, dry to moist, fine, with occasional roots, with pieces of crushable black nodules, strong organic odor. [FILL]

SILT with SAND (ML), stiff, yellowish brown, dry to moist, with iron-oxide staining, SAND is very fine, with black organic mottling and pieces of decayed vegetation.

SILTY SAND (SM), medium dense, yellowish brown, dry to moist, very fine, with frequent black specks and piece of decayed vegetation up to 1/8" diameter.

Grades dense.
Grades reddish brown, moist, fine, with slight black carbon mottling.
Grades yellowish brown, medium dense, with iron-oxide mottling, and seams of light yellowish brown CLAY.

SEDIMENTARY ROCK (SANDSTONE), yellowish brown, decomposed, soft (poorly graded SAND with CLAY (SP-SC), very dense, moist, SAND is fine with light gray CLAY infilling and black organic mottling).
Grades fine to medium grained, massive, yellowish brown and grayish brown, moderately weathered, moderately hard, obscure in-situ fractures with some evidence of variably oriented natural fractures ranging from 50° to 80°.

Elev 84.0′, intensely fractured, moderate oxidation staining on fractured planes.
Crushed zones (0.05′ thick) at Elev 83.3′, Elev 83.0′, and Elev 82.4′.
Elev 82.3′, medium fractured, variably oriented dark gray lamination due to soft sediment deformation.
Elev 79.5′ to Elev 75.2′, crushed zone with clay.
Elev 75.3′, dark gray.
Elev 71.5′, slightly weathered.
Healed and open fractures ranging from 30° to sub-vertical.
Elev 60.8′ to Elev 59.7′, multiple near vertical fractures.
Elev 58.2′ to Elev 57.3′, crushed zone.
Elev 57.75′, fresh, moderately hard to hard, with mineral precipitate infilling of fractures (no evidence of shearing).
Elev 55.5′, white mineral veins aligned at 45° occasionally correspond to fractures, additional fractures not aligned with veins.
Elev 52.5′, crushed (mechanical?)
Elev 51.5′ to Elev 50.2′, vertical fracture.
Elev 49.0′, mineral precipitate on naturally occuring fracture planes.
Elev 46.5′, crushed (primarily mechanical?)
Elev 46.0′ to Elev 45.4′, very closely fractured (mechanical).
Elev 45.4′, crushed (primarily mechanical?).

110 100 90 80 70 60 50 40 30 20 10 0 -10

85+000 86+000 87+000 88+000

SBBT-LTB14

RANDY ANDERSON DESIGN OVERSIGHT SIGN OFF DATE	FUNCTIONAL SUPERVISOR NAME: FRANK GREGURAS	DRAWN BY: PAUL TONKIN CHECKED BY: TERRENCE CARROLL	FIELD INVESTIGATION BY: TERRENCE CARROLL	PREPARED FOR THE **STATE OF CALIFORNIA** DEPARTMENT OF TRANSPORTATION	**FRANK GREGURAS** **PROJECT ENGINEER**	BRIDGE NO. 34-161L POST MILES 9.0/9.2	**SOUTHBOUND BATTERY TUNNEL** **LOG OF TEST BORINGS 14 of 17**
OGS CIVIL LOG OF TEST BORINGS SHEET			ORIGINAL SCALE IN INCHES FOR REDUCED PLANS 0 1 2 3	CU 04242 EA 163741		DISREGARD PRINTS BEARING EARLIER REVISION DATES →	REVISION DATES: 07/29/09, 08/07/09, 08/26/09, 10/30/09 — SHEET 69 OF 72

FILE => 34-0161r1-z-ltb14.dgn

USERNAME => ttrenard DATE PLOTTED => 14-DEC-2009 TIME PLOTTED => 15:24

REFERENCE: CALTRANS SOIL & ROCK LOGGING, CLASSIFICATION, AND PRESENTATION MANUAL (JUNE 2007)

DIST	COUNTY	ROUTE	POST MILES TOTAL PROJECT	SHEET No	TOTAL SHEETS
04	SF	101	8.2/9.2	506	654

Terrence M Carroll — 10/30/09
REGISTERED CIVIL ENGINEER — DATE

12-14-09
PLANS APPROVAL DATE

REGISTERED PROFESSIONAL ENGINEER — Terrence Carroll — No. C68869 — Exp. 9/30/2011 — CIVIL — STATE OF CALIFORNIA

The State of California or its officers or agents shall not be responsible for the accuracy or completeness of electronic copies of this plan sheet.

Arup PB Joint Venture
560 Mission Street, Suite 700
San Francisco, CA 94105

CALIFORNIA STATE FIRE MARSHAL APPROVED

Approval of this plan does not authorize or approve any omission or deviation from applicable regulations. Final approval is subject to field inspection. One set of approved plans shall be available on the project site at all times.

Reviewed by: STEPHEN GUARINO

Approval date: 12-14-09

CEMENTATION

Description	Criteria
Weak	Crumbles or breaks with handling or little finger pressure.
Moderate	Crumbles or breaks with considerable finger pressure.
Strong	Will not crumble or break with finger pressure.

CONSISTENCY OF COHESIVE SOILS

Description	Unconfined Compressive Strength (tsf)	Pocket Penetrometer Measurement (tsf)	Torvane Measurement (tsf)	Field Approximation
Very Soft	< 0.25	< 0.25	< 0.12	Easily penetrated several inches by fist
Soft	0.25 to 0.50	0.25 to 0.50	0.12 to 0.25	Easily penetrated several inches by thumb
Medium Stiff	0.50 to 1.0	0.50 to 1.0	0.25 to 0.50	Penetrated several inches by thumb with moderate effort
Stiff	1 to 2	1 to 2	0.50 to 1.0	Readily indented by thumb but penetrated only with great effort
Very Stiff	2 to 4	2 to 4	1.0 to 2.0	Readily indented by thumbnail
Hard	> 4.0	> 4.0	> 2.0	Indented by thumbnail with difficulty

BOREHOLE IDENTIFICATION

Symbol	Hole Type	Description
Size	A	Auger Boring
Size	R P	Rotary drilled boring Rotary percussion boring (air)
Size	R	Rotary drilled diamond core
Size	HD HA	Hand driven (1-inch soil tube) Hand Auger
●	D	Dynamic Cone Penetration Boring
▲	CPT	Cone Penetration Test (ASTM D 5778-95)
⬚	O	Other

Note: Size in inches.

PLASTICITY OF FINE-GRAINED SOILS

Description	Criteria
Nonplastic	A 1/8-inch thread cannot be rolled at any water content.
Low	The thread can barely be rolled and the lump cannot be formed when drier than the plastic limit.
Medium	The thread is easy to roll and not much time is required to reach the plastic limit. The thread cannot be rerolled after reaching the plastic limit. The lump crumbles when drier than the plastic limit.
High	It takes considerable time rolling and kneading to reach the plastic limit. The thread can be rerolled several times after reaching the plastic limit. The lump can be formed without crumbling when drier than the plastic limit.

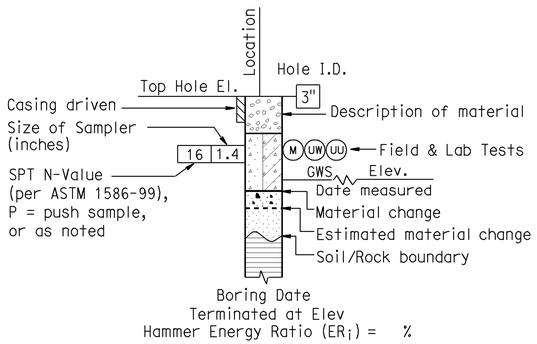

ROTARY BORING

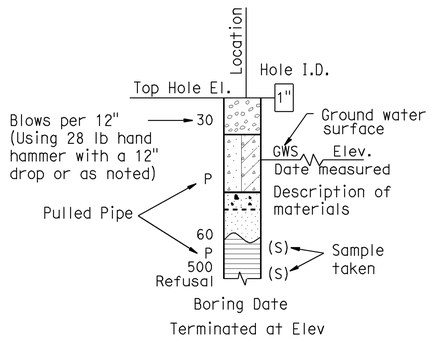

HAND BORING

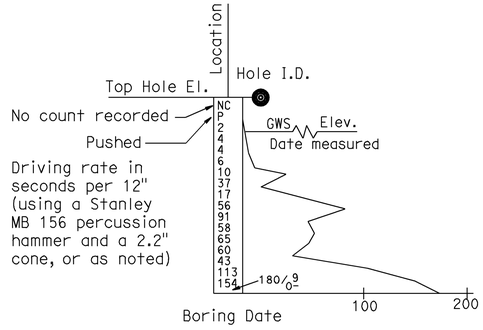

DYNAMIC CONE PENETRATION BORING

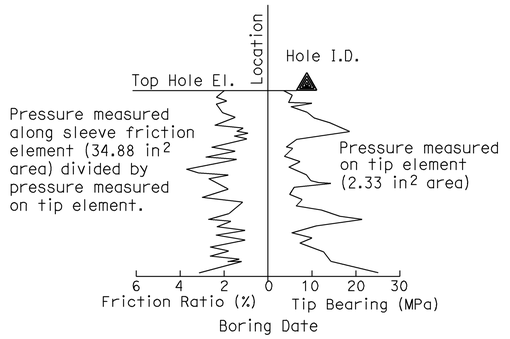

CONE PENETRATION TEST (CPT) SOUNDING

SBBT-LTB15

RANDY ANDERSON DESIGN OVERSIGHT SIGN OFF DATE	FUNCTIONAL SUPERVISOR NAME: FRANK GREGURAS	DRAWN BY: PAUL TONKIN CHECKED BY: TERRENCE CARROLL	FIELD INVESTIGATION BY:	PREPARED FOR THE STATE OF CALIFORNIA DEPARTMENT OF TRANSPORTATION	FRANK GREGURAS PROJECT ENGINEER	BRIDGE NO. 34-161L POST MILES 9.0/9.2	SOUTHBOUND BATTERY TUNNEL LOG OF TEST BORINGS 15 of 17
OGS CIVIL LOG OF TEST BORINGS SHEET			ORIGINAL SCALE IN INCHES FOR REDUCED PLANS 0 1 2 3		CU 04 EA 163741	DISREGARD PRINTS BEARING EARLIER REVISION DATES →	REVISION DATES 07/29/09 08/07/09 08/20/09 10/30/09 — SHEET 70 OF 72

FILE => 34-0161r1-z-ltb15.dgn

USERNAME => ftriebord DATE PLOTTED => 14-DEC-2009 TIME PLOTTED => 15:24

REFERENCE: CALTRANS SOIL & ROCK LOGGING, CLASSIFICATION, AND PRESENTATION MANUAL (JUNE 2007)

GROUP SYMBOLS AND NAMES

Graphic/Symbol	Group Names	Graphic/Symbol	Group Names
GW	Well-graded GRAVEL Well-graded GRAVEL with SAND	CL	Lean CLAY Lean CLAY with SAND Lean CLAY with GRAVEL SANDY lean CLAY SANDY lean CLAY with GRAVEL GRAVELLY lean CLAY GRAVELLY lean CLAY with SAND
GP	Poorly graded GRAVEL Poorly graded GRAVEL with SAND		
GW-GM	Well-graded GRAVEL with SILT Well-graded GRAVEL with SILT and SAND	CL-ML	SILTY CLAY SILTY CLAY with SAND SILTY CLAY with GRAVEL SANDY SILTY CLAY SANDY SILTY CLAY with GRAVEL GRAVELLY SILTY CLAY GRAVELLY SILTY CLAY with SAND
GW-GC	Well-graded GRAVEL with CLAY (or SILTY CLAY) Well-graded GRAVEL with CLAY and SAND (or SILTY CLAY and SAND)		
GP-GM	Poorly graded GRAVEL with SILT Poorly graded GRAVEL with SILT and SAND	ML	SILT SILT with SAND SILT with GRAVEL SANDY SILT SANDY SILT with GRAVEL GRAVELLY SILT GRAVELLY SILT with SAND
GP-GC	Poorly graded GRAVEL with CLAY (or SILTY CLAY) Poorly graded GRAVEL with CLAY and SAND (or SILTY CLAY and SAND)		
GM	SILTY GRAVEL SILTY GRAVEL with SAND	OL	ORGANIC lean CLAY ORGANIC lean CLAY with SAND ORGANIC lean CLAY with GRAVEL SANDY ORGANIC lean CLAY SANDY ORGANIC lean CLAY with GRAVEL GRAVELLY ORGANIC lean CLAY GRAVELLY ORGANIC lean CLAY with SAND
GC	CLAYEY GRAVEL CLAYEY GRAVEL with SAND		
GC-GM	SILTY, CLAYEY GRAVEL SILTY, CLAYEY GRAVEL with SAND	OL	ORGANIC SILT ORGANIC SILT with SAND ORGANIC SILT with GRAVEL SANDY ORGANIC SILT SANDY ORGANIC SILT with GRAVEL GRAVELLY ORGANIC SILT GRAVELLY ORGANIC SILT with SAND
SW	Well-graded SAND Well-graded SAND with GRAVEL		
SP	Poorly graded SAND Poorly graded SAND with GRAVEL	CH	Fat CLAY Fat CLAY with SAND Fat CLAY with GRAVEL SANDY fat CLAY SANDY fat CLAY with GRAVEL GRAVELLY fat CLAY GRAVELLY fat CLAY with SAND
SW-SM	Well-graded SAND with SILT Well-graded SAND with SILT and GRAVEL		
SW-SC	Well-graded SAND with CLAY (or SILTY CLAY) Well-graded SAND with CLAY and GRAVEL (or SILTY CLAY and GRAVEL)	MH	Elastic SILT Elastic SILT with SAND Elastic SILT with GRAVEL SANDY elastic SILT SANDY elastic SILT with GRAVEL GRAVELLY elastic SILT GRAVELLY elastic SILT with SAND
SP-SM	Poorly graded SAND with SILT Poorly graded SAND with SILT and GRAVEL		
SP-SC	Poorly graded SAND with CLAY (or SILTY CLAY) Poorly graded SAND with CLAY and GRAVEL (or SILTY CLAY and GRAVEL)	OH	ORGANIC fat CLAY ORGANIC fat CLAY with SAND ORGANIC fat CLAY with GRAVEL SANDY ORGANIC fat CLAY SANDY ORGANIC fat CLAY with GRAVEL GRAVELLY ORGANIC fat CLAY GRAVELLY ORGANIC fat CLAY with SAND
SM	SILTY SAND SILTY SAND with GRAVEL		
SC	CLAYEY SAND CLAYEY SAND with GRAVEL	OH	ORGANIC elastic SILT ORGANIC elastic SILT with SAND ORGANIC elastic SILT with GRAVEL SANDY ORGANIC elastic SILT SANDY ORGANIC elastic SILT with GRAVEL GRAVELLY ORGANIC elastic SILT GRAVELLY ORGANIC elastic SILT with SAND
SC-SM	SILTY, CLAYEY SAND SILTY, CLAYEY SAND with GRAVEL		
PT	PEAT	OL/OH	ORGANIC SOIL ORGANIC SOIL with SAND ORGANIC SOIL with GRAVEL SANDY ORGANIC SOIL SANDY ORGANIC SOIL with GRAVEL GRAVELLY ORGANIC SOIL GRAVELLY ORGANIC SOIL with SAND
	COBBLES COBBLES and BOULDERS BOULDERS		

FIELD AND LABORATORY TESTING

- (C) Consolidation (ASTM D 2435)
- (CL) Collapse Potential (ASTM D 5333)
- (CP) Compaction Curve (CTM 216)
- (CR) Corrosivity Testing (CTM 643, CTM 422, CTM 417)
- (CU) Consolidated Undrained Triaxial (ASTM D 4767)
- (DS) Direct Shear (ASTM D 3080)
- (EI) Expansion Index (ASTM D 4829)
- (M) Moisture Content (ASTM D 2216)
- (OC) Organic Content-% (ASTM D 2974)
- (P) Permeability (CTM 220)
- (PA) Particle Size Analysis (ASTM D 422)
- (PI) Plasticity Index (AASHTO T 90) Liquid Limit (AASHTO T 89)
- (PL) Point Load Index (ASTM D 5731)
- (PM) Pressure Meter
- (PP) Pocket Penetrometer
- (R) R-Value (CTM 301)
- (SE) Sand Equivalent (CTM 217)
- (SG) Specific Gravity (AASHTO T 100)
- (SL) Shrinkage Limit (ASTM D 427)
- (SW) Swell Potential (ASTM D 4546)
- (TV) Pocket Torvane
- (UC) Unconfined Compression-Soil (ASTM D 2166) Unconfined Compression-Rock (ASTM D 2938)
- (UU) Unconsolidated Undrained Triaxial (ASTM D 2850)
- (UW) Unit Weight (ASTM D 4767)
- (VS) Vane Shear (AASHTO T 223)

CALIFORNIA STATE FIRE MARSHAL APPROVED
Approval of this plan does not authorize or approve any omission or deviation from applicable regulations. Final approval is subject to field inspection. One set of approved plans shall be available on the project site at all times.
Reviewed by: STEPHEN GUARINO
Approval date: 12-14-09

DIST	COUNTY	ROUTE	POST MILES TOTAL PROJECT	SHEET No	TOTAL SHEETS
04	SF	101	8.2/9.2	507	654

Terrence Carroll 10/30/09
REGISTERED CIVIL ENGINEER DATE

12-14-09
PLANS APPROVAL DATE

REGISTERED PROFESSIONAL ENGINEER — Terrence Carroll — No. C68869 — Exp. 9/30/2011 — CIVIL — STATE OF CALIFORNIA

The State of California or its officers or agents shall not be responsible for the accuracy or completeness of electronic copies of this plan sheet.

Arup PB Joint Venture
560 Mission Street, Suite 700
San Francisco, CA 94105

APPARENT DENSITY OF COHESIONLESS SOILS

Description	SPT N_{60} (Blows / 12 inches)
Very loose	0 - 4
Loose	5 - 10
Medium Dense	11 - 30
Dense	31 - 50
Very Dense	> 50

MOISTURE

Description	Criteria
Dry	Absence of moisture, dusty, dry to the touch
Moist	Damp but no visible water
Wet	Visible free water, usually soil is below water table

PERCENT OR PROPORTION OF SOILS

Description	Criteria
Trace	Particles are present but estimated to be less than 5%
Few	5 to 10%
Little	15 to 25%
Some	30 to 45%
Mostly	50 to 100%

PARTICLE SIZE

Description		Size
Boulder		> 12"
Cobble		3" to 12"
Gravel	Coarse	3/4" to 3"
	Fine	No. 4 to 3/4"
Sand	Coarse	No. 10 to No. 4
	Medium	No. 40 to No. 10
	Fine	No. 200 to No. 40

SBBT-LTB16

RANDY ANDERSON
DESIGN OVERSIGHT
SIGN OFF DATE

FUNCTIONAL SUPERVISOR
NAME: FRANK GREGURAS

DRAWN BY: PAUL TONKIN
CHECKED BY: TERRENCE CARROLL

FIELD INVESTIGATION BY:

PREPARED FOR THE
STATE OF CALIFORNIA
DEPARTMENT OF TRANSPORTATION

FRANK GREGURAS
PROJECT ENGINEER

BRIDGE NO. 34-161L
POST MILES 9.0/9.2

SOUTHBOUND BATTERY TUNNEL
LOG OF TEST BORINGS 16 of 17

OGS CIVIL LOG OF TEST BORINGS SHEET

ORIGINAL SCALE IN INCHES FOR REDUCED PLANS 0 1 2 3

CU 04
EA 163741

DISREGARD PRINTS BEARING EARLIER REVISION DATES →

REVISION DATES: 07/31/09 | 08/07/09 | 08/28/09 | 10/30/09

SHEET 71 OF 72

FILE => 34-0161r1-z-ltb16.dgn

USERNAME => trlenord DATE PLOTTED => 14-DEC-2009 TIME PLOTTED => 15:24

REFERENCE: CALTRANS SOIL & ROCK LOGGING, CLASSIFICATION, AND PRESENTATION MANUAL (JUNE 2007)

DIST	COUNTY	ROUTE	POST MILES TOTAL PROJECT	SHEET No	TOTAL SHEETS
04	SF	101	8.2/9.2	508	654

Terrence M Carroll 10/30/09
REGISTERED CIVIL ENGINEER DATE

12-14-09
PLANS APPROVAL DATE

REGISTERED PROFESSIONAL ENGINEER — Terrence Carroll — No. C68869 — Exp. 9/30/2011 — CIVIL — STATE OF CALIFORNIA

The State of California or its officers or agents shall not be responsible for the accuracy or completeness of electronic copies of this plan sheet.

Arup PB Joint Venture
560 Mission Street, Suite 700
San Francisco, CA 94105

PERCENT CORE RECOVERY (REC) & ROCK QUALITY DESIGNATION (RQD)

$$REC = \frac{\sum \text{Length of the recovered core pieces (inches)}}{\text{Total length of core run (inches)}} \times 100\%$$

$$RQD = \frac{\sum \text{Length of intact core pieces} \geq 4\text{"}}{\text{Total length of core run (inches)}} \times 100\%$$

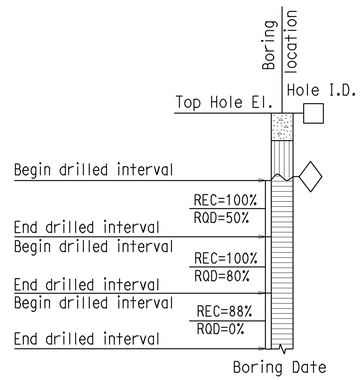

RELATIVE STRENGTH OF INTACT ROCK

Term	Uniaxial Compressive Strength (PSI)
Extremely Strong	> 30,000
Very Strong	14,500 - 30,000
Strong	7,000 - 14,500
Medium Strong	3,500 - 7,000
Weak	700 - 3,500
Very Weak	150 - 700
Extremely Weak	< 150

BEDDING SPACING

Description	Thickness / Spacing
Massive	Greater than 10 ft
Very thickly bedded	3 to 10 ft
Thickly bedded	1 to 3 ft
Moderately bedded	3-5/8" to 1 ft
Thinly bedded	1-1/4" to 3-5/8"
Very thinly bedded	3/8" to 1-1/4"
Laminated	Less than 3/8"

LEGEND OF ROCK MATERIALS

- IGNEOUS ROCK
- SEDIMENTARY ROCK
- METAMORPHIC ROCK

CALIFORNIA STATE FIRE MARSHAL APPROVED
Approval of this plan does not authorize or approve any omission or deviation from applicable regulations. Final approval is subject to field inspection. One set of approved plans shall be available on the project site at all times.
Reviewed by: STEPHEN GUARINO
Approval date: 12-14-09

ROCK HARDNESS

Description	Criteria
Extremely Hard	Specimen cannot be scratched with a pocket knife or sharp pick; can only be chipped with repeated heavy hammer blows.
Very Hard	Specimen cannot be scratched with a pocket knife or sharp pick. Breaks with repeated heavy hammer blows.
Hard	Specimen can be scratched with a pocket knife or sharp pick with difficulty (heavy pressure). Heavy hammer blows required to break specimen.
Moderately Hard	Specimen can be scratched with pocket knife or sharp pick with light or moderate pressure. Core breaks with moderate hammer blows.
Moderately Soft	Specimen can be grooved 1/6" deep with a pocket knife or sharp pick with moderate or heavy pressure. Breaks with light hammer blow or heavy manual pressure.
Soft	Specimen can be grooved or gouged easily by a pocket knife or sharp pick with light pressure, can be scratched with fingernail. Breaks with light to moderate manual pressure.
Very Soft	Specimen can be readily indented, grooved or gouged with fingernail, or carved with a pocket knife. Breaks with light manual pressure.

FRACTURE DENSITY

Description	Observed Fracture Density
Unfractured	No fractures.
Very slightly fractured	Lengths greater than 3 feet.
Slightly fractured	Lengths from 1 to 3 feet with few lengths less than 1 foot or greater than 3 feet.
Moderately fractured	Lengths mostly in 4" to 1 foot range with most lengths about 8"
Intensely fractured	Lengths average from 1 to 4" with scattered fragmented intervals with lengths less than 4"
Very intensely fractured	Mostly chips and fragments with a few scattered short core lengths.

Combination descriptors (such as "Very intensely to intensely fractured") are used where equal distribution of both fracture density characteristics is present over a significant interval or exposure, or where characteristics are "in between" the descriptor definitions. Only two adjacent descriptors may be combined.

WEATHERING DESCRIPTORS FOR INTACT ROCK

Description	Diagnostic features: Chemical Weathering-Discoloration and/or oxidation — Body of Rock	Diagnostic features: Chemical Weathering-Discoloration and/or oxidation — Fracture Surfaces	Diagnostic features: Mechanical Weathering-Grain boundary conditions (disaggregation) primarily for granitics and some coarse-grained sediments	Diagnostic features: Texture and Solutioning — Texture	Diagnostic features: Texture and Solutioning — Solutioning	General Characteristics
Fresh	No discoloration, not oxidized.	No discoloration or oxidation.	No separation, intact (tight).	No change.	No solutioning.	Hammer rings when crystalline rocks are struck.
Slightly Weathered	Discoloration or oxidation is limited to surface of, or short distance from, fractures; some feldspar crystals are dull.	Minor to complete discoloration or oxidation of most surfaces.	No visible separation, intact (tight).	Preserved.	Minor leaching of some soluble minerals may be noted.	Hammer rings when crystalline rocks are struck. Body of rock not weakened.
Moderately Weathered	Discoloration or oxidation extends from fractures usually throughout; Fe-Mg minerals are "rusty," feldspar crystals are "cloudy."	All fracture surfaces are discolored or oxidized.	Partial separation of boundaries visible.	Generally preserved.	Soluble minerals may be mostly leached.	Hammer does not ring when rock is struck. Body of rock is slightly weakened.
Intensely Weathered	Discoloration or oxidation throughout; all feldspars and Fe-Mg minerals are altered to clay to some extent; or chemical alteration produces in-situ disaggregation, see grain boundary conditions.	All fracture surfaces are discolored or oxidized, surfaces friable.	Partial separation, rock is friable; in semiarid conditions granitics are disaggregated.	Texture altered by chemical disintegration (hydration, argillation).	Leaching of soluble minerals may be complete.	Dull sound when struck with hammer, usually can be broken with moderate to heavy manual pressure or by light hammer blow without reference to planes of weakness such as incipient or hairline fractures, or veinlets. Rock is significantly weakened.
Decomposed	Discolored or oxidized throughout, but resistant minerals such as quartz may be unaltered; all feldspars and Fe-Mg minerals are completely altered to clay.		Complete separation of grain boundaries (disaggregated).	Resembles a soil, partial or complete remnant rock structure may be preserved; leaching of soluble minerals usually complete.		Can be granulated by hand. Resistant minerals such as quartz may be present as "stringers" or "dikes."

Combination descriptors (such as "slightly weathered to fresh") are permissible where equal distribution of both weathering characteristics is present over significant intervals or where characteristics present are "in between" the diagnostic feature. However, combination descriptors should not be used where significant, identifiable zones can be delineated. Only two adjacent descriptors may be combined. "Very intensely weathered" is the combination descriptor for "intensely weathered to decomposed."

SBBT-LTB17

RANDY ANDERSON, DESIGN OVERSIGHT SIGN OFF DATE	FUNCTIONAL SUPERVISOR NAME: FRANK GREGURAS	DRAWN BY: PAUL TONKIN CHECKED BY: TERRENCE CARROLL	FIELD INVESTIGATION BY:	PREPARED FOR THE STATE OF CALIFORNIA DEPARTMENT OF TRANSPORTATION	FRANK GREGURAS PROJECT ENGINEER	BRIDGE NO. 34-161L POST MILES 9.0/9.2
OGS CIVIL LOG OF TEST BORINGS SHEET			ORIGINAL SCALE IN INCHES FOR REDUCED PLANS 0 1 2 3	CU 04 EA 163741	DISREGARD PRINTS BEARING EARLIER REVISION DATES →	SOUTHBOUND BATTERY TUNNEL LOG OF TEST BORINGS 17 of 17 REVISION DATES: 07/07/09 08/07/09 08/28/09 10/30/09 SHEET 72 OF 72

FILE => 34-0161r1-z-ltb17.dgn

USERNAME => trlenord DATE PLOTTED => 14-DEC-2009 TIME PLOTTED => 15:24

DIST	COUNTY	ROUTE	POST MILES TOTAL PROJECT	SHEET No	TOTAL SHEETS
04	SF	101	8.8/9.2	509	654

REGISTERED CIVIL ENGINEER — 10/30/09 DATE

12-14-09
PLANS APPROVAL DATE

REGISTERED PROFESSIONAL ENGINEER — KEVIN BARRY CLINCH — No. C-48926 — Exp. 9/30/10 — CIVIL — STATE OF CALIFORNIA

The State of California or its officers or agents shall not be responsible for the accuracy or completeness of electronic copies of this plan sheet.

Arup PB Joint Venture
560 Mission Street, Suite 700
San Francisco, CA 94105

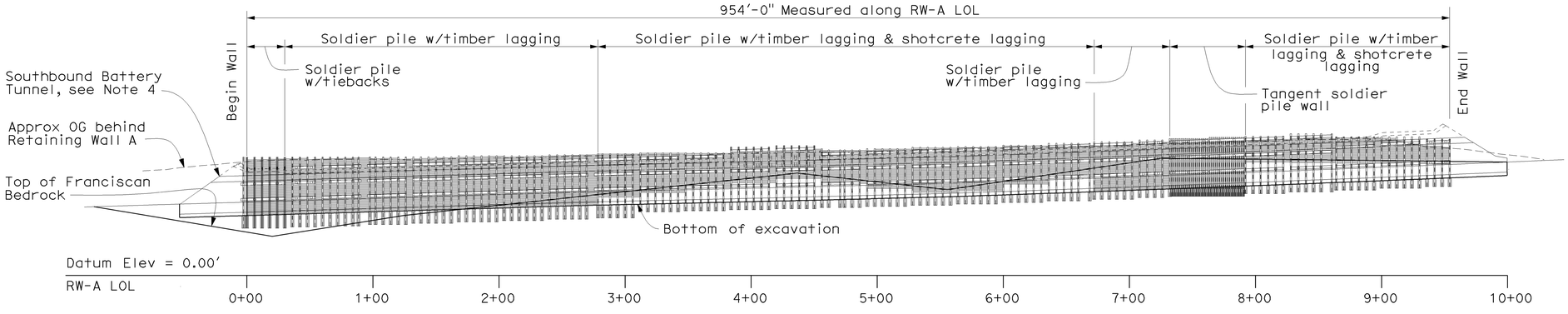

RETAINING WALL A DEVELOPED ELEVATION

Scale: 1"=50'

LEGEND:

⇨ Indicates direction of traffic.

IM3 • Indicates inclinometer

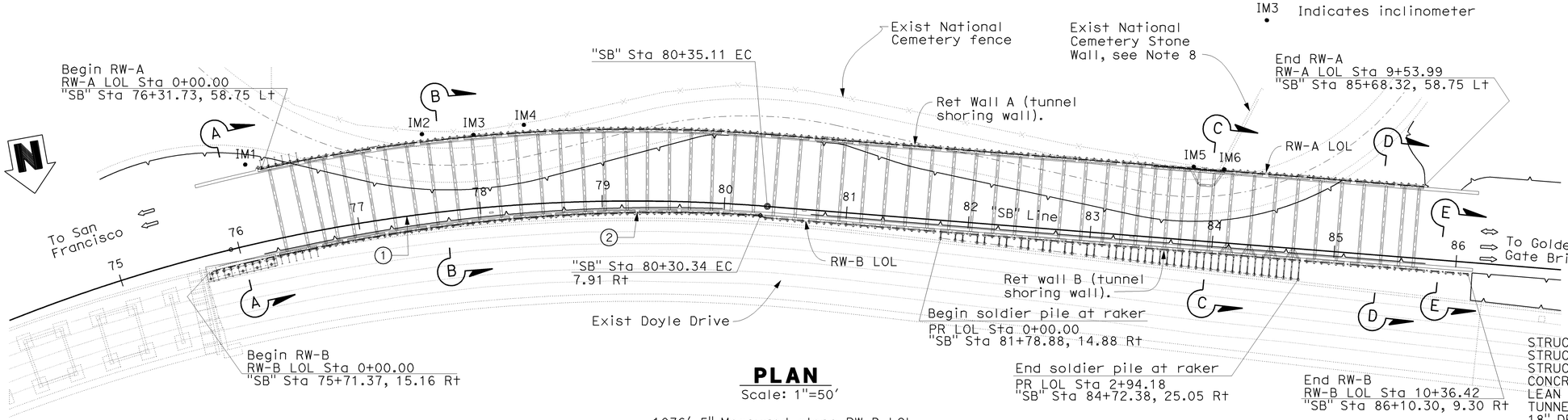

PLAN

Scale: 1"=50'

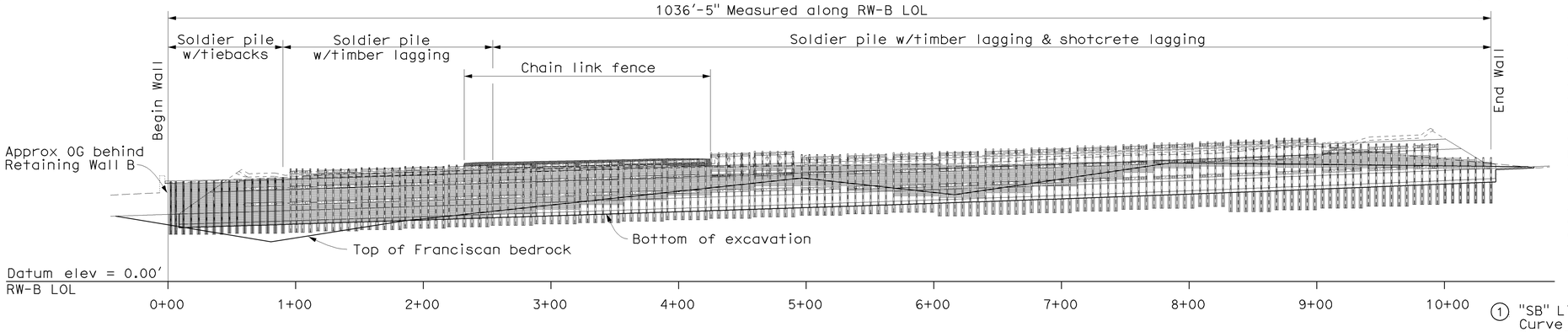

RETAINING WALL B DEVELOPED ELEVATION (MIRROR)

Scale: 1"=50'

NOTES:

1. For quantities, see sheet "RWAB-ST1"
2. For general notes, see sheet "RWAB-ST4".
3. For "SECTION A-A" thru "SECTION E-E", see sheet "RWAB-ST2".
4. For details of SB Battery Tunnel, see "SOUTHBOUND BATTERY TUNNEL" plans.
5. For pile & lagging data, details and dimensions not shown, see sheets "RWAB-ST6" thru "RWAB-ST10" for Retaining Wall A and sheets "RWAB-ST11" thru "RWAB-ST15" for Retaining Wall B.
6. For inclinometer locations see sheet "RWAB-ST37". The Contractor may make minor modifications to these locations as approved by the Engineer.
7. For inclinometer detail, see sheet "RWAB-ST37".
8. Existing National Cemetary stonewall to be deconstructed prior to construction of Retaining Wall A, and to be restored after completion of Southbound Battery Tunnel construction.

QUANTITIES

STRUCTURE EXCAVATION (SERPENTINE)	200	CY
STRUCTURE EXCAVATION (ROCK)	790	CY
STRUCTURE EXCAVATION (SOLDIER PILE WALL)	2,950	CY
CONCRETE BACKFILL	730	CY
LEAN CONCRETE BACKFILL	2,130	CY
TUNNEL EXCAVATION MONITORING	LUMP	SUM
18" DRILLED HOLE	1,510	LF
24" DRILLED HOLE	305	LF
30" DRILLED HOLE	15,000	LF
STEEL SOLDIER PILE (2 - MC 18 X 42.7)	1,060	LF
STEEL SOLDIER PILE (W 8 X 48)	1,578	LF
STEEL SOLDIER PILE (W 14 X 99)	876	LF
STEEL SOLDIER PILE (W 18 X 65)	13,650	LF
STEEL SOLDIER PILE (W 18 X 86)	232	LF
STEEL SOLDIER PILE (W 18 X 119)	1,465	LF
TIEBACK ANCHOR	42	EA
STRUCTURAL CONCRETE (SLAB ON PILE)	46	CY
BAR REINFORCING STEEL (SLAB ON PILE)	9,700	LB
SHOTCRETE	1,400	CY
STRUCTURAL STEEL (RETAINING WALL)	2,230,000	LB
TIMBER LAGGING	200	MFBM
4" SLOTTED HDPE PIPE UNDERDRAIN	450	LF
GEOCOMPOSITE DRAIN	2,700	SQFT
CHAIN LINK FENCE (TYPE CL-3, VINYL-CLAD)	200	LF

① "SB" Line
Curve Data:
R = 1380.00'
Δ = 36°24'25"
T = 453.81'
L = 876.88'

② "RWBLOL" Line
Curve Data:
R = 1369.19'
Δ = 19°11'49"
T = 229.70'
L = 455.16'

RWAB-ST1

DESIGN	BY K. CLINCH	CHECKED M. YUCEKUL	LOAD RESISTANCE FACTOR DESIGN	LIVE LOADING: HL93 W/ "LOW-BOY"; PERMIT DESIGN VEHICLE		PREPARED FOR THE STATE OF CALIFORNIA DEPARTMENT OF TRANSPORTATION	QIYU LIU PROJECT ENGINEER
DETAILS	BY P. A. TONKIN	CHECKED M. YUCEKUL	LAYOUT	BY K. CLINCH	CHECKED Q. LIU		
QUANTITIES	BY N. VIVAR	CHECKED J. YANG	SPECIFICATIONS	BY K. CHEN	PLANS AND SPECS COMPARED K. CLINCH		

DESIGN GENERAL PLAN SHEET (ENGLISH) (REV. 06-01-09)

ORIGINAL SCALE IN INCHES FOR REDUCED PLANS 0 1 2 3

CU 04
EA 163741

BRIDGE NO. 34-0161RL
POST MILES 9.0/9.2

RETAINING WALL A & B
GENERAL PLAN NO.1

DISREGARD PRINTS BEARING EARLIER REVISION DATES →

REVISION DATES (PRELIMINARY STAGE ONLY): 06/01/09 | 07/13/09 | 08/07/09 | 08/21/09 | 10/30/09

SHEET 1 OF 37

FILE => 34-0161r1-ab-st001.dgn

USERNAME = trrene DATE PLOTTED => 11-DEC-2009 TIME PLOTTED => 13:06

DIST	COUNTY	ROUTE	POST MILES TOTAL PROJECT	SHEET No	TOTAL SHEETS
04	SF	101	8.2/9.2	510	654

REGISTERED CIVIL ENGINEER — 8/28/09 DATE

12-14-09
PLANS APPROVAL DATE

REGISTERED PROFESSIONAL ENGINEER — KEVIN BARRY CLINCH — No. C-48926 — Exp. 9/30/10 — CIVIL — STATE OF CALIFORNIA

The State of California or its officers or agents shall not be responsible for the accuracy or completeness of scanned copies of this plan sheet.

Arup PB Joint Venture
560 Mission Street, Suite 700
San Francisco, CA 94105

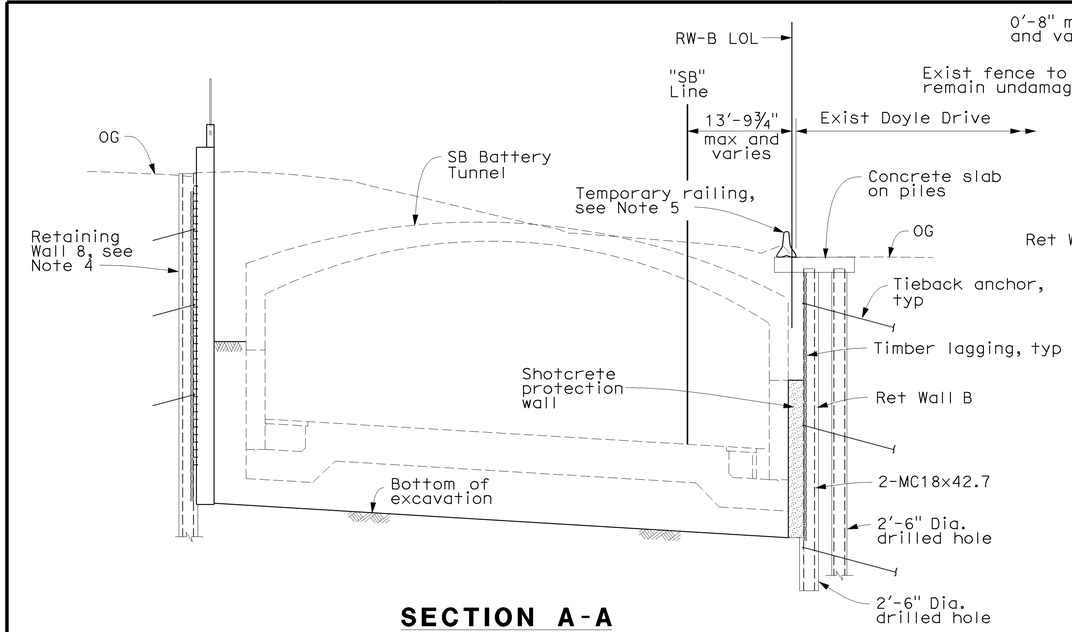

SECTION A-A
Scale: 1" = 10'

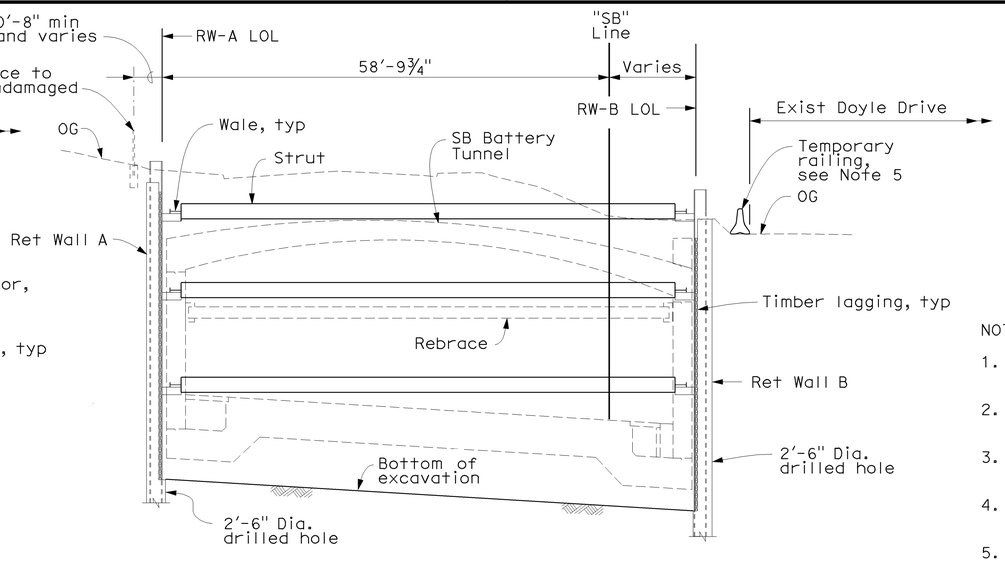

SECTION B-B
Scale: 1" = 10'

NOTES:

1. For SB Battery Tunnel details, see "Southbound Battery Tunnel" plans.
2. For locations of "Section A-A" thru "Section E-E", see sheet "RWAB-ST1".
3. For locations of inclinometers, see sheet "RWAB-ST37".
4. For Retaining Wall No. 8, see "Retaining Wall No. 8" plans.
5. For details of temporary railing, see "Roadway" plans.

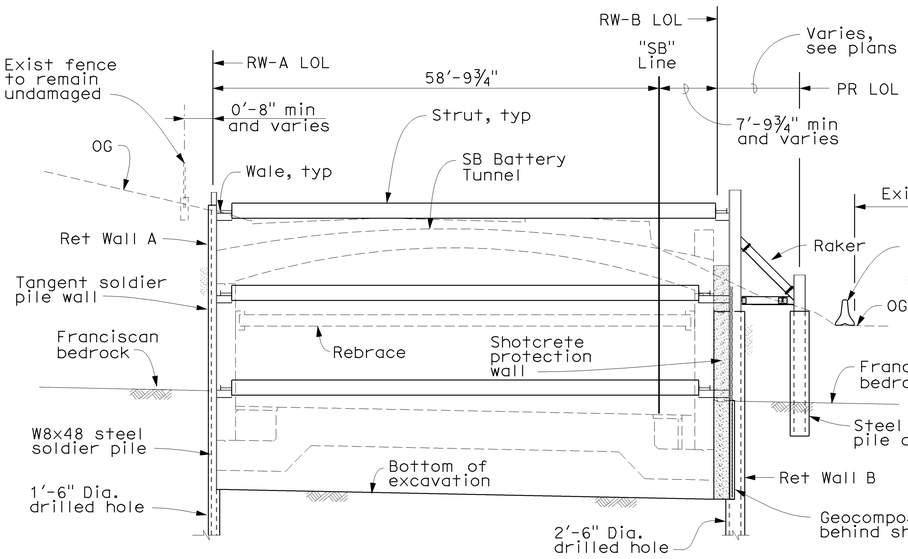

SECTION C-C
Scale: 1" = 10'

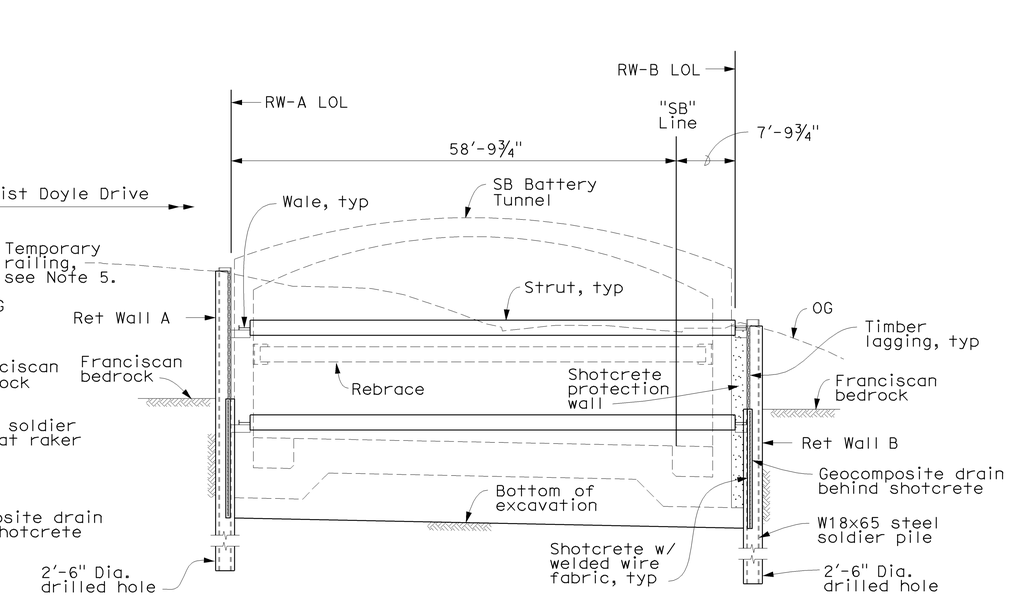

SECTION D-D
Scale: 1" = 10'

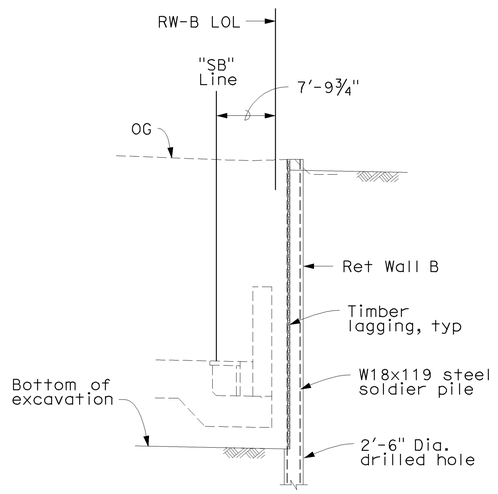

SECTION E-E
Scale: 1" = 10'

RWAB-ST2

DESIGN	BY K. CLINCH	CHECKED M. YUCEKUL	PREPARED FOR THE STATE OF CALIFORNIA DEPARTMENT OF TRANSPORTATION	QIYU LIU PROJECT ENGINEER	BRIDGE NO. 34-0161RL	RETAINING WALL A & B	
DETAILS	BY T. MARTARELLA	CHECKED M. YUCEKUL			POST MILES 9.0/9.2	GENERAL PLAN NO.2	
QUANTITIES	BY N. VIVAR	CHECKED J. YANG		CU 04 EA 163741			

DESIGN DETAIL SHEET (ENGLISH) (REV. 06-01-09)

ORIGINAL SCALE IN INCHES FOR REDUCED PLANS 0 1 2 3

DISREGARD PRINTS BEARING EARLIER REVISION DATES →

REVISION DATES (PRELIMINARY STAGE ONLY): 06/09/09 | 07/01/09 | 08/05/09 | 08/26/09

SHEET 2 OF 37

FILE => 34-0161rl-ab-st002.dgn

USERNAME => trrene DATE PLOTTED => 11-DEC-2009 TIME PLOTTED => 13:06

INDEX OF PLANS

Sheet no.	Sheet Title
RWAB-ST1	General Plan No.1
RWAB-ST2	General Plan No.2
RWAB-ST3	Index to Plans
RWAB-ST4	General Notes
RWAB-ST5	Excavation and Backfill
RWAB-ST6	Structure Plan No.1
RWAB-ST7	Structure Plan No.2
RWAB-ST8	Structure Plan No.3
RWAB-ST9	Structure Plan No.4
RWAB-ST10	Structure Plan No.5
RWAB-ST11	Structure Plan No.6
RWAB-ST12	Structure Plan No.7
RWAB-ST13	Structure Plan No.8
RWAB-ST14	Structure Plan No.9
RWAB-ST15	Structure Plan No.10
RWAB-ST16	Typical Section No.1
RWAB-ST17	Typical Section No.2
RWAB-ST18	Typical Section No.3
RWAB-ST19	Typical Section No.4
RWAB-ST20	Typical Section No.5
RWAB-ST21	Typical Section No.6
RWAB-ST22	Wall Details No.1
RWAB-ST23	Wall Details No.2
RWAB-ST24	Wall Details No.3
RWAB-ST25	Wall Details No.4
RWAB-ST26	Wall Details No.5
RWAB-ST27	Wall Details No.6
RWAB-ST28	Wall Details No.7
RWAB-ST29	Wall Details No.8
RWAB-ST30	Schedule Sheet No.1
RWAB-ST31	Schedule Sheet No.2
RWAB-ST32	Schedule Sheet No.3
RWAB-ST33	Schedule Sheet No.4
RWAB-ST34	Schedule Sheet No.5
RWAB-ST35	Schedule Sheet No.6
RWAB-ST36	Tieback Details
RWAB-ST37	Excavation Monitoring

DIST	COUNTY	ROUTE	POST MILES TOTAL PROJECT	SHEET No	TOTAL SHEETS
04	SF	101	8.2/9.2	511	654

REGISTERED CIVIL ENGINEER — 8/28/09 DATE

12-14-09
PLANS APPROVAL DATE

REGISTERED PROFESSIONAL ENGINEER — KEVIN BARRY CLINCH — No. C-48926 — Exp. 9/30/10 — CIVIL — STATE OF CALIFORNIA

The State of California or its officers or agents shall not be responsible for the accuracy or completeness of scanned copies of this plan sheet.

Arup PB Joint Venture
560 Mission Street, Suite 700
San Francisco, CA 94105

RWAB-ST3

	BY	CHECKED
DESIGN	K. CLINCH	M. YUCEKUL
DETAILS	T. MARTARELLA	M. YUCEKUL
QUANTITIES	N. VIVAR	J. YANG

PREPARED FOR THE STATE OF CALIFORNIA DEPARTMENT OF TRANSPORTATION

QIYU LIU
PROJECT ENGINEER

BRIDGE NO. 34-0161RL
POST MILES 9.0/9.2

RETAINING WALL A & B
INDEX TO PLANS

DESIGN DETAIL SHEET (ENGLISH) (REV. 06-01-09)

ORIGINAL SCALE IN INCHES FOR REDUCED PLANS 0 1 2 3

CU 04
EA 163741

DISREGARD PRINTS BEARING EARLIER REVISION DATES →

REVISION DATES (PRELIMINARY STAGE ONLY): 06/01/09 | 07/31/09 | 08/07/09 | 08/26/09

SHEET 3 OF 37

FILE => 34-0161rl-ab-st003.dgn

DATE PLOTTED => $DATE$ TIME PLOTTED => $TIME$
USERNAME => $USER$

GENERAL NOTES

1. Construction equipment, materials and installations including tiebacks shall not cross through nor under, nor in any way affect, the existing National Cemetary fence.

2. For Log of Test Borings, see "Southbound Battery Tunnel" plans.

DESIGN: LRFD Bridge Design Specifications, Fourth Edition (2007) published by the American Association of State Highway and Transportation Officials with California Amendment (V3.06.01).

Doyle Drive Structural Design Criteria, Cut-and-Cover Tunnels and Non-Standard Retaining Walls (March 2009)

REINFORCED CONCRETE: ASTM A706 fy = 60 ksi
f'c = 4000 psi
n = 8

SHOTCRETE: f'c = 4000 psi

STRUCTURAL STEEL:
Plate and Shape: ASTM A709 (Grade 50)
Struts and rakers: ASTM A252, Grade 2 or better, Fy = 35 ksi
HSS: ASTM A325, UON
Bolt: ASTM A500, Grade B, Fy = 42 ksi

STRUCTURAL TIMBER: Pressure treated douglas fir, construction grade or better timber to be rough sawn
Fb = 1,000 psi
Fv = 95 psi

SEISMIC LOADING: Three-component (Fault-Normal, Fault-Parallel, and Vertical with respect to the San Andreas seismic fault system) acceleration response spectra (ARS) for Construction Evaluation Earthquake (CEE), generated from probabilistic seismic hazard assessment (PSHA) based on Next Generation Attenuation (NGA) model rock motion spectra for V_{S30} =3,000 ft/sec and 5% spectral damping. The CEE is based on ground motion with a 108-year return period.

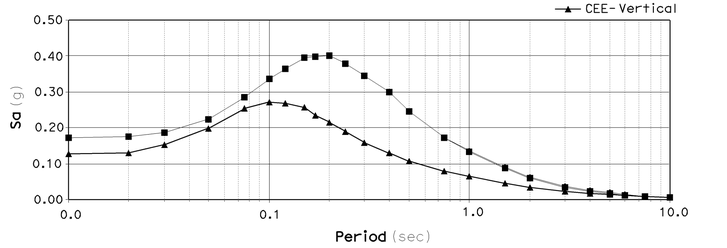

TIEBACKS:

Strands - ASTM Designation = A416

Bar - ASTM Designation = A722, Type II

T = Design Force per Tieback = See "Tieback Schedule"

fpu = Minimum Tensile Strength of prestressing steel (ksi)

As (min) = Minimum cross sectional area of prestressing steel in Tieback measured in square inches

$$As\ (min) = \frac{1.5T}{0.75\ fpu}$$

Note:
The contractor shall verify all controlling field dimensions before ordering or fabricating any materials

STANDARD PLANS DATED MAY 2006

A10A	ACRONYMS AND ABBREVIATIONS (Sheet 1 of 2)
A10B	ACRONYMS AND ABBREVIATIONS (Sheet 2 of 2)
A10C	SYMBOLS (Sheet 1 of 2)
A10D	SYMBOLS (Sheet 2 of 2)
A85	CHAINLINK FENCE

STANDARD PLAN SHEET NO.

DETAIL NO.

DIST	COUNTY	ROUTE	POST MILES TOTAL PROJECT	SHEET No	TOTAL SHEETS
04	SF	101	8.2/9.2	512	654

REGISTERED CIVIL ENGINEER — DATE 9/11/09

12-14-09
PLANS APPROVAL DATE

REGISTERED PROFESSIONAL ENGINEER
KEVIN BARRY CLINCH
No. C-48926
Exp. 9/30/10
CIVIL
STATE OF CALIFORNIA

The State of California or its officers or agents shall not be responsible for the accuracy or completeness of scanned copies of this plan sheet.

Arup PB Joint Venture
560 Mission Street, Suite 700
San Francisco, CA 94105

SOIL DESIGN PARAMETERS

'SB' Sta 75+71.42 to 78+50

Depth (ft)	γ	Φ	c'
0 to 17	120	32	0
17 to 36.5	130	38	0
36.5 to 45	120	32	0
below 45	165	0	1400

'SB' Sta 78+50 to 82+50

Depth (ft)	γ	Φ	c'
0 to 20	120	32	0
below 20	165	55	0

'SB' Sta 82+50 to 86+10.30

Depth (ft)	γ	Φ	c'
0 to 8.5	120	32	0
8.5 to 18	130	38	0
below 18	165	55	0

RWAB-ST4

DESIGN	BY K. CLINCH	CHECKED M. YUCEKUL	PREPARED FOR THE STATE OF CALIFORNIA DEPARTMENT OF TRANSPORTATION	QIYU LIU PROJECT ENGINEER	BRIDGE NO. 34-0161L
DETAILS	BY P. A. TONKIN	CHECKED M. YUCEKUL			POST MILES 9.0/9.2
QUANTITIES	BY N. VIVAR	CHECKED J. YANG			

RETAINING WALL A&B
GENERAL NOTES

DESIGN DETAIL SHEET (ENGLISH) (REV. 06-01-09)

ORIGINAL SCALE IN INCHES FOR REDUCED PLANS 0 1 2 3

CU 04
EA 163741

DISREGARD PRINTS BEARING EARLIER REVISION DATES →

REVISION DATES (PRELIMINARY STAGE ONLY): 06/01/09 | 07/15/09 | 08/01/09 | 08/15/09 | 09/11/09

SHEET 4 OF 37

FILE => 34-0161rl-ab-st004.dgn

USERNAME = rrrene DATE PLOTTED => 11-DEC-2009 TIME PLOTTED => 13:07

DIST	COUNTY	ROUTE	POST MILES TOTAL PROJECT	SHEET No	TOTAL SHEETS
04	SF	101	8.2/9.2	513	654

REGISTERED CIVIL ENGINEER — 8/28/09 DATE

12-14-09
PLANS APPROVAL DATE

REGISTERED PROFESSIONAL ENGINEER — KEVIN BARRY CLINCH — No. C-48926 — Exp. 9/30/10 — CIVIL — STATE OF CALIFORNIA

The State of California or its officers or agents shall not be responsible for the accuracy or completeness of scanned copies of this plan sheet.

Arup PB Joint Venture
560 Mission Street, Suite 700
San Francisco, CA 94105

LEGEND

- Structure excavation (soldier pile wall)
- Structure excavation (rock)
- Structure excavation (serpentine)

Notes:
1. For excavation and backfill at tunnel, see "Southbound Battery Tunnel" plans.

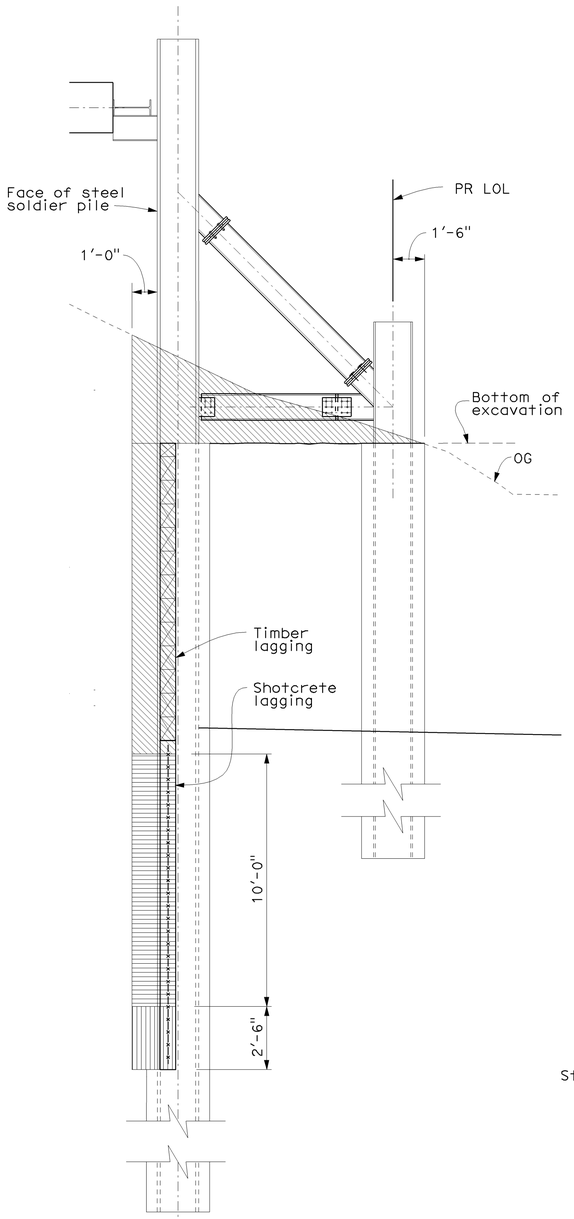

LIMITS OF EXCAVATION WALL B (SOLDIER PILE WALL)

RW-B "SB" 81+78.38 to 84+72.38

NTS

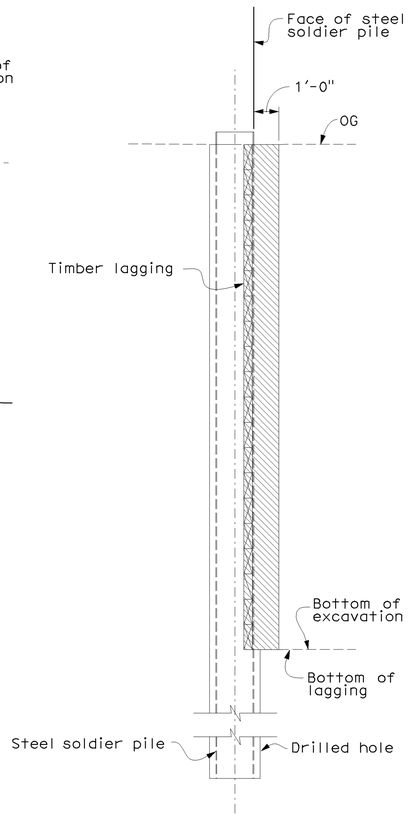

LIMITS OF EXCAVATION WALL A&B (SOLDIER PILE WALL)

RW-A "SB" 76+31.73 to 78+00
RW-B "SB" 76+25.90 to 78+00

NTS

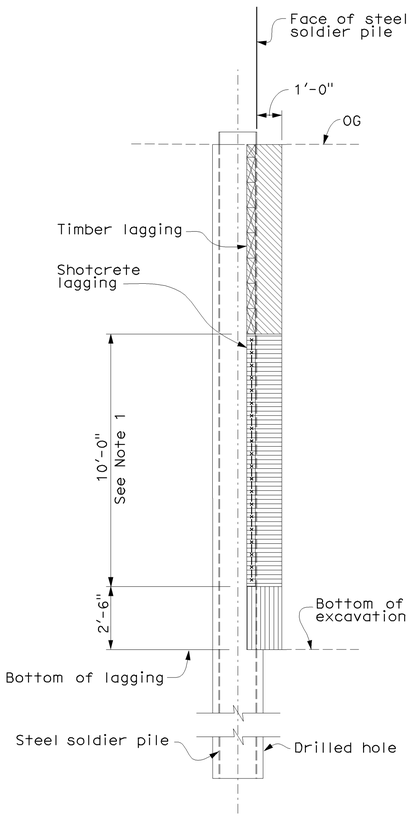

LIMITS OF EXCAVATION WALL A&B (SOLDIER PILE WALL)

RW-A "SB" 78+00 to 83+47.90
and 84+04.92 to 85+68.32
RW-B "SB" 78+00 to 81+78.38
and 84+72.38 to 86+10.30

NTS

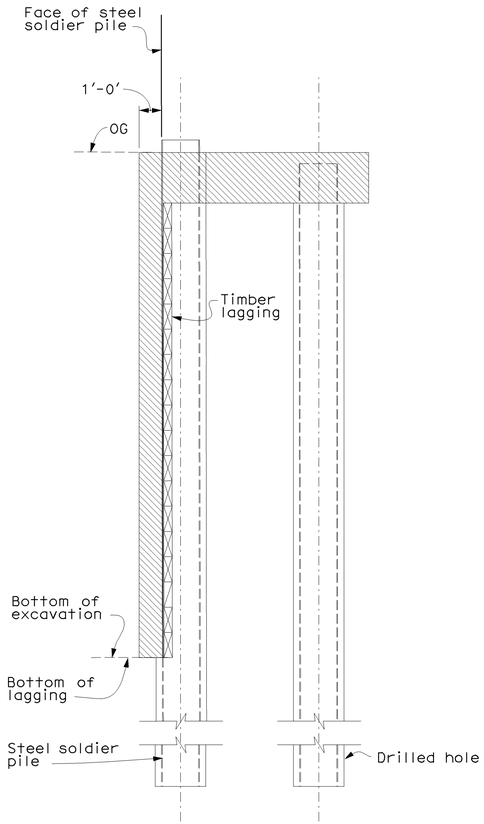

LIMITS OF EXCAVATION WALL B (SOLDIER PILE WALL)

RW-B "SB" 75+71.25 to 76+25.90

NTS

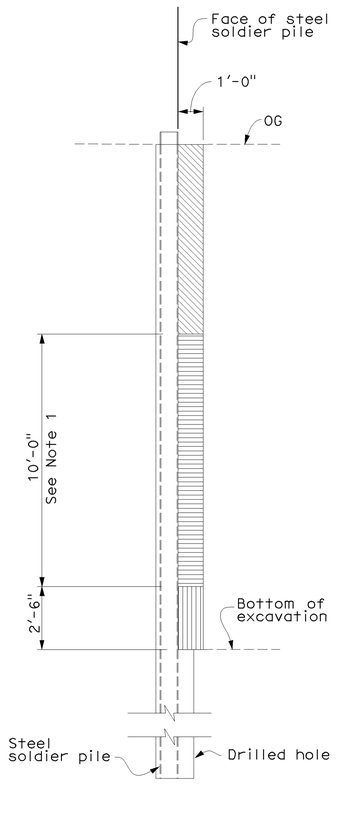

LITIMS OF EXCAVATION WALL A (SOLDIER PILE WALL, TANGENT PILES)

RW-A "SB" 83+47.90 to 84+04.92

NTS

RWAB-ST5

DESIGN	BY K. CLINCH	CHECKED M. YUCEKUL	PREPARED FOR THE STATE OF CALIFORNIA DEPARTMENT OF TRANSPORTATION	QIYU LIU PROJECT ENGINEER	BRIDGE NO. 34-0161RL	RETAINING WALL A & B	
DETAILS	BY E. SUDHAUSEN	CHECKED M. YUCEKUL			POST MILES 9.0/9.2	EXCAVATION AND BACKFILL	
QUANTITIES	BY N. VIVAR	CHECKED J. YANG					

DESIGN DETAIL SHEET (ENGLISH) (REV. 06-01-09)

ORIGINAL SCALE IN INCHES FOR REDUCED PLANS 0 1 2 3

CU 04
EA 163741

DISREGARD PRINTS BEARING EARLIER REVISION DATES →

REVISION DATES (PRELIMINARY STAGE ONLY): 06/01/09 | 07/15/09 | 08/07/09 | 08/26/09

SHEET 5 OF 37

FILE => 34-0161rl-ab-st005.dgn

USERNAME => #USER# DATE PLOTTED => #DATE# TIME PLOTTED => #TIME#

DIST	COUNTY	ROUTE	POST MILES TOTAL PROJECT	SHEET No	TOTAL SHEETS
04	SF	101	8.2/9.2	514	654

REGISTERED CIVIL ENGINEER — 8/28/09 DATE

12-14-09
PLANS APPROVAL DATE

REGISTERED PROFESSIONAL ENGINEER — KEVIN BARRY CLINCH — No. C-48926 — Exp. 9/30/10 — CIVIL — STATE OF CALIFORNIA

The State of California or its officers or agents shall not be responsible for the accuracy or completeness of scanned copies of this plan sheet.

Arup PB Joint Venture
560 Mission Street, Suite 700
San Francisco, CA 94105

WALE SCHEDULE

Wales	Bracing Level	Size
WA1-WA10	NOT USED	
WA11	2	W14x176
	3	W14x257
WA12-WA20	1	W18x119
	2	W14x176
	3	W14x257
WA21-WA35	1	W18x119
	2, 3	W14x176
WA36-WA38	2, 3	W14x176

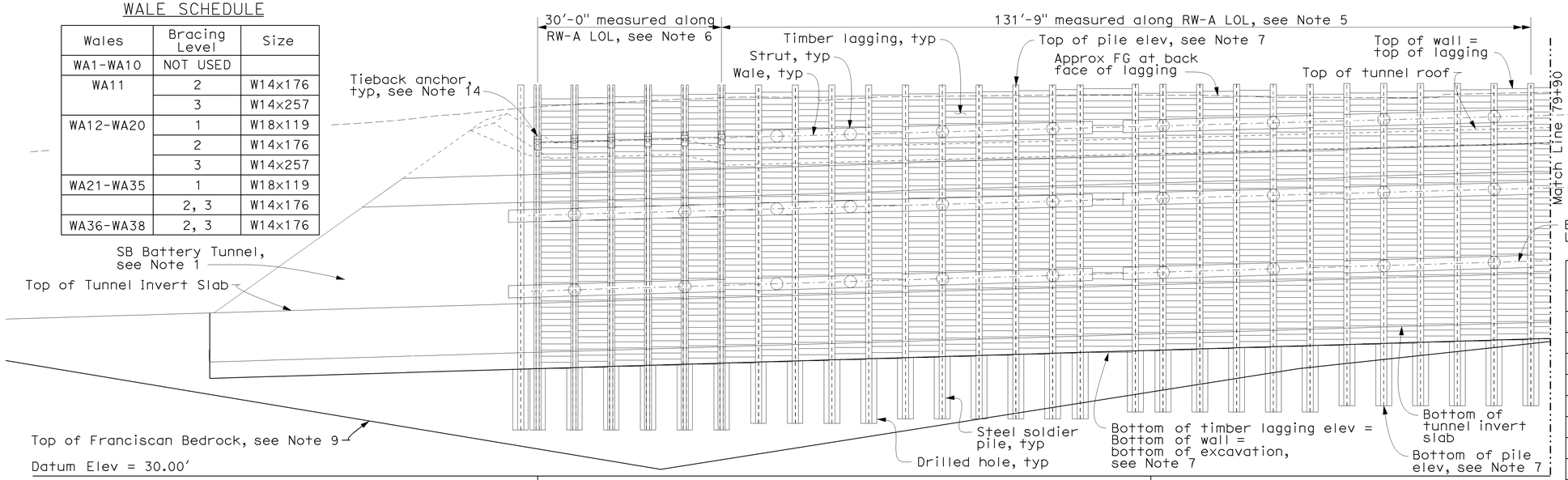

STRUT SCHEDULE

Strut	Bracing Level	Size	Pre-load (kip)
S1-S11	NOT USED		
S12-S13	2	Pipe 24.0x0.375	120
	3	Pipe 30.0x0.5	120
S14-S31	1	Pipe 24.0x0.375	72
	2	Pipe 24.0x0.375	120
	3, Rebrace	Pipe 30.0x0.5	120
S32-S62	1	Pipe 24.0x0.375	72
	2	Pipe 24.0x0.375	120
	3, Rebrace	Pipe 24.0x0.375	120
S63-S68	2, 3, Rebrace	Pipe 24.0x0.375	72

RETAINING WALL A ELEVATION

Scale: 1"=10'

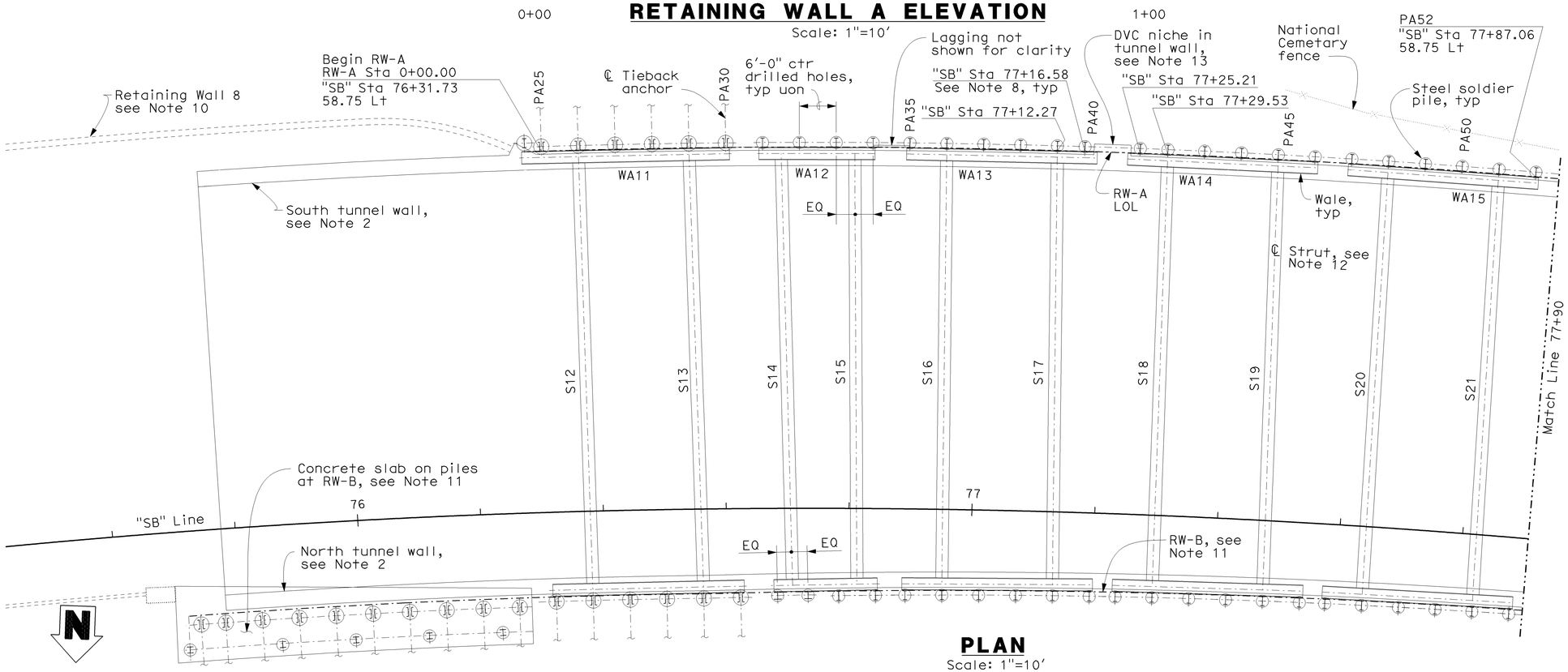

PLAN

Scale: 1"=10'

Notes:

1. For General Notes, see sheet "RWAB-ST4".
2. For "SB Battery Tunnel", see "Southbound Battery Tunnel" plans.
3. For typical section at retaining walls between piles PA25-PA30, (PB25-PB30) inclusive, see sheet "RWAB-ST16".
4. For typical section at retaining walls between piles PA31-PA52, (PB31-PB52) inclusive, see sheet "RWAB-ST17".
5. For "Typical Section at Steel Soldier Pile With Lagging", see sheet "RWAB-ST25".
6. For "Typical Section at Soldier Pile With Tieback & Struts", see sheet "RWAB-ST28".
7. For soldier pile schedule and lagging panel schedule, see sheets "RWAB-ST30" thru "RWAB-ST35".
8. Soldier pile stations are located at the center of flange nearest tunnel wall.
9. For approx profile of Franciscan bedrock along SB Battery Tunnel, see "Doyle Drive Replacement Project Southbound Battery Tunnel Foundation Report".
10. For Retaining Wall No. 8, see "Retaining Wall No. 8" plans.
11. For Retaining Wall B, see sheet "RWAB-ST11".
12. Strut ℄ work points are located at soldier pile stations, uon.
13. For detail at DVC niche in tunnel wall, see "Detail 3" on sheet "RWAB-ST25".
14. For tieback anchor design criteria, see sheet "RWAB-ST4".

RWAB-ST6

DESIGN	BY K. CLINCH	CHECKED M. YUCEKUL	PREPARED FOR THE STATE OF CALIFORNIA DEPARTMENT OF TRANSPORTATION	QIYU LIU, PROJECT ENGINEER	BRIDGE NO. 34-0161RL; POST MILES 9.0/9.2
DETAILS	BY P. A. TONKIN	CHECKED M. YUCEKUL			
QUANTITIES	BY N. VIVAR	CHECKED J. YANG			

RETAINING WALL A & B
STRUCTURE PLAN NO.1

DESIGN DETAIL SHEET (ENGLISH) (REV. 06-01-09)

ORIGINAL SCALE IN INCHES FOR REDUCED PLANS 0 1 2 3

CU 04
EA 163741

DISREGARD PRINTS BEARING EARLIER REVISION DATES →

REVISION DATES (PRELIMINARY STAGE ONLY): 06/26/09 | 07/17/09 | 08/07/09 | 08/26/09

SHEET 6 OF 37

FILE => 34-0161rl-ab-st006.dgn

USERNAME => #USER# DATE PLOTTED => #DATE# TIME PLOTTED => #TIME#

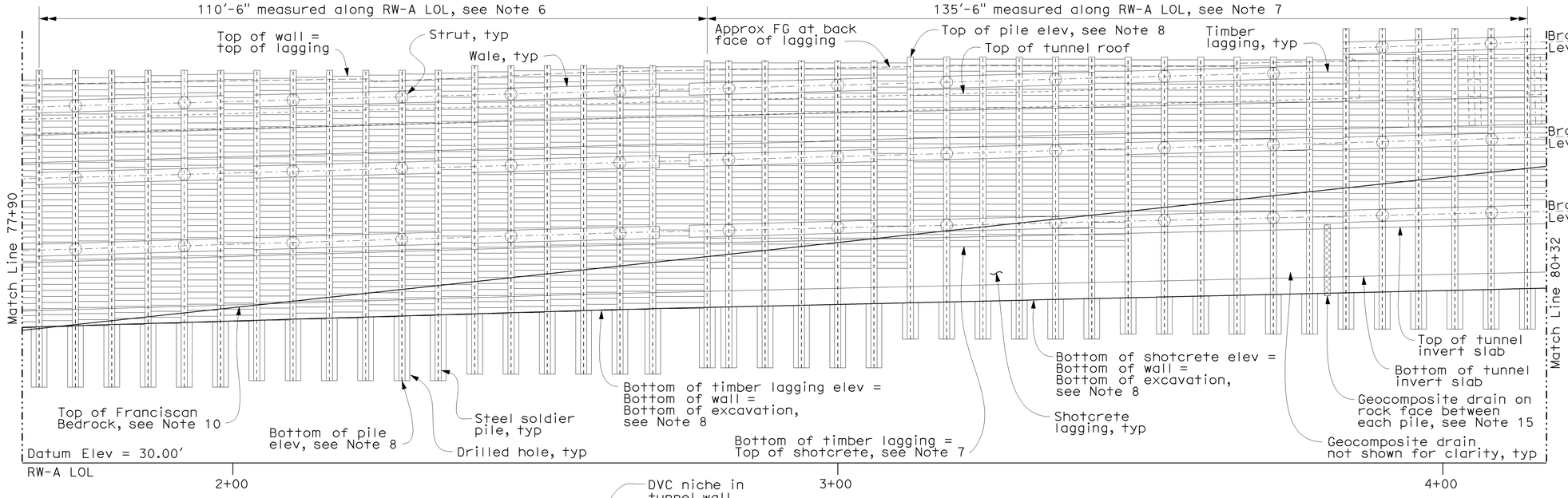

RETAINING WALL A ELEVATION

Scale: 1"=10'

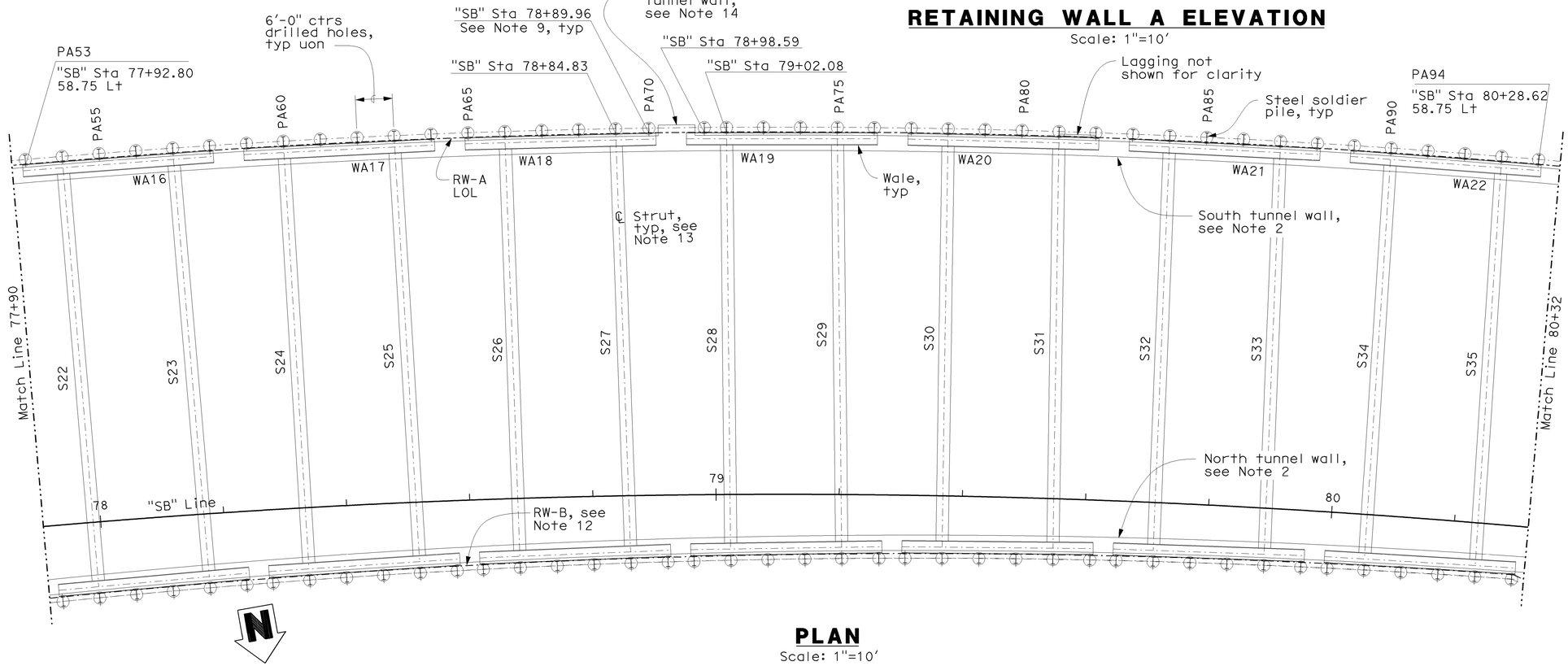

PLAN

Scale: 1"=10'

Notes:

1. For General Notes, see sheet "RWAB-ST4".
2. For "SB Battery Tunnel", see "Southbound Battery Tunel" plans.
3. For "Typical Section at Retaining Walls" between piles PA53-PA71, inclusive, see sheet "RWAB-ST17".
4. For "Part. Typical Section at RW-A" between piles PA72-PA88, inclusive, see sheet "RWAB-ST18".
5. For "Part. Typical Section at RW-A" between piles PA89-PA94, inclusive, see sheet "RWAB-ST18".
6. For "Typical Section at Steel Soldier Pile With Lagging", see sheet "RWAB-ST25".
7. For "Typical Section at Steel Soldier Pile With Shotcrete Lagging", see sheet "RWAB-ST26".
8. For "Soldier Pile Schedule" and "Lagging Panel Schedule", see sheets "RWAB-ST30" thru "RWAB-ST35".
9. Soldier pile stations are located at the center of flange nearest tunnel wall.
10. For approx profile of Franciscan bedrock along SB Battery Tunnel, see "Doyle Drive Replacement Project Southbound Battery Tunnel Foundation Report".
11. For wale and strut schedule, see sheet "RWAB-ST6".
12. For Retaining Wall B, see sheet "RWAB-ST12".
13. Strut ℄ work points are located at soldier pile stations, uon.
14. For detail at DVC niche in tunnel wall, see "Detail 3" on sheet "RWAB-ST25".
15. For details of geocomposite drain, see sheet "RWAB-ST26".

DIST	COUNTY	ROUTE	POST MILES TOTAL PROJECT	SHEET No	TOTAL SHEETS
04	SF	101	8.2/9.2	515	654

REGISTERED CIVIL ENGINEER — 8/28/09 DATE

12-14-09
PLANS APPROVAL DATE

REGISTERED PROFESSIONAL ENGINEER — KEVIN BARRY CLINCH — No. C-48926 — Exp. 9/30/10 — CIVIL — STATE OF CALIFORNIA

The State of California or its officers or agents shall not be responsible for the accuracy or completeness of scanned copies of this plan sheet.

Arup PB Joint Venture
560 Mission Street, Suite 700
San Francisco, CA 94105

RWAB-ST7

DESIGN	BY K. CLINCH	CHECKED M. YUCEKUL	PREPARED FOR THE STATE OF CALIFORNIA DEPARTMENT OF TRANSPORTATION	QIYU LIU PROJECT ENGINEER	BRIDGE NO. 34-0161RL
DETAILS	BY P. A. TONKIN	CHECKED M. YUCEKUL			POST MILES 9.0/9.2
QUANTITIES	BY N. VIVAR	CHECKED J. YANG		CU 04 EA 163741	

RETAINING WALL A & B
STRUCTURE PLAN NO.2

DESIGN DETAIL SHEET (ENGLISH) (REV. 06-01-09)

ORIGINAL SCALE IN INCHES FOR REDUCED PLANS 0 1 2 3

DISREGARD PRINTS BEARING EARLIER REVISION DATES

REVISION DATES (PRELIMINARY STAGE ONLY): 06/01/09 | 07/15/09 | 08/07/09 | 08/26/09

SHEET 7 OF 37

FILE => 34-0161rl-ab-st007.dgn

USERNAME => #USER# DATE PLOTTED => $DATE$ TIME PLOTTED => $TIME$

DIST	COUNTY	ROUTE	POST MILES TOTAL PROJECT	SHEET No	TOTAL SHEETS
04	SF	101	8.2/9.2	516	654

REGISTERED CIVIL ENGINEER — 8/28/09 DATE

12-14-09
PLANS APPROVAL DATE

REGISTERED PROFESSIONAL ENGINEER — KEVIN BARRY CLINCH — No. C-48926 — Exp. 9/30/10 — CIVIL — STATE OF CALIFORNIA

The State of California or its officers or agents shall not be responsible for the accuracy or completeness of scanned copies of this plan sheet.

Arup PB Joint Venture
560 Mission Street, Suite 700
San Francisco, CA 94105

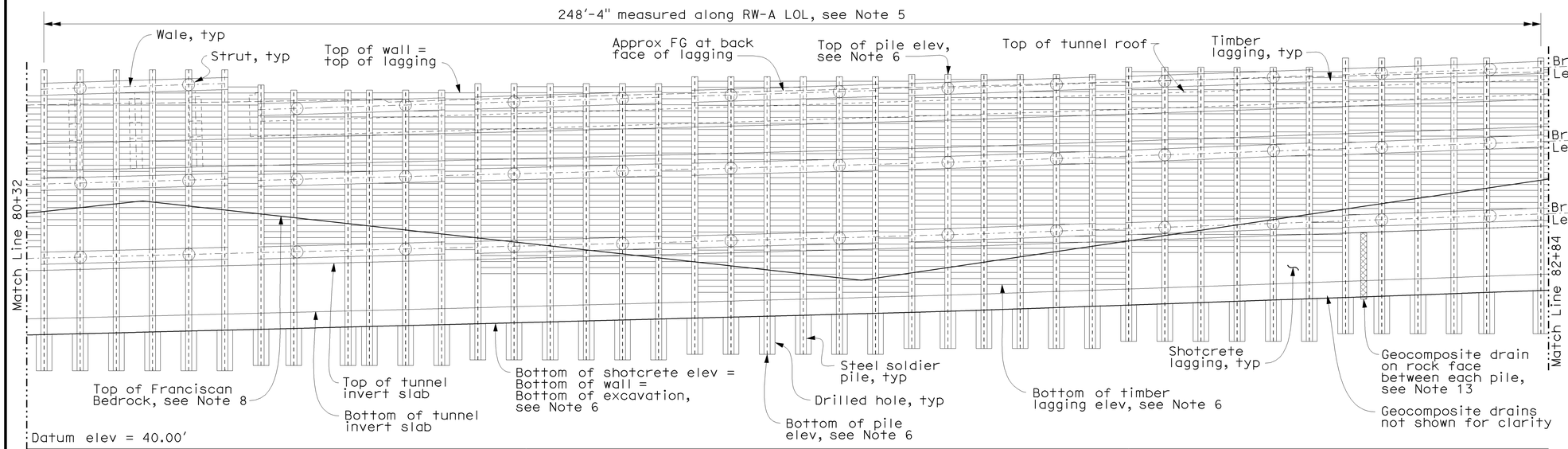

RETAINING WALL A ELEVATION

Scale: 1"=10'

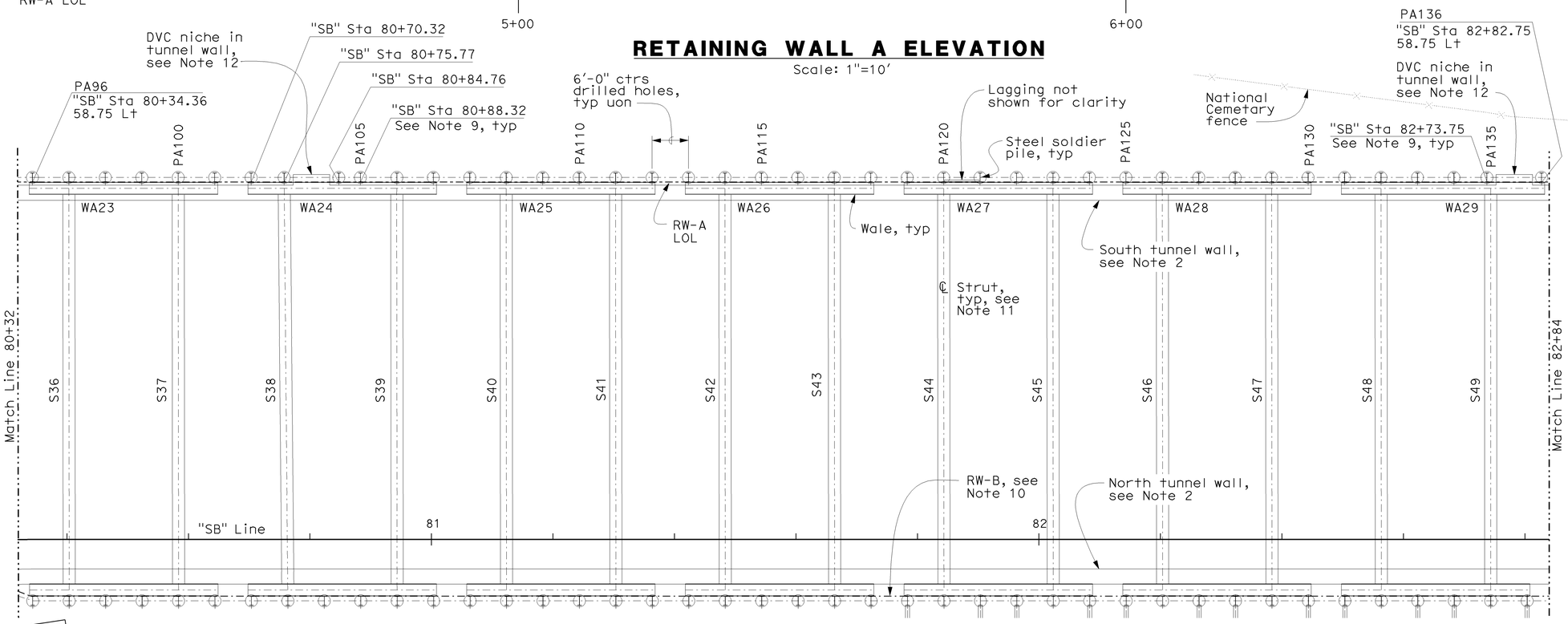

PLAN

Scale: 1"=10'

Notes:

1. For general notes, see sheet "RWAB-ST4".
2. For SB Battery Tunnel, see "Southbound Battery Tunnel" plans.
3. For part. typical section at RW-A between piles PA95-PA100, inclusive, see sheet "RWAB-ST18".
4. For part. typical section at RW-A between piles PA101-PA136, inclusive, see sheet "RWAB-ST18".
5. For typical section at steel soldier pile with shotcrete lagging, see sheet "RWAB-ST26".
6. For "Soldier Pile Schedule" and "Lagging Panel Schedule", see sheets "RWAB-ST30" thru "RWAB-ST35"
7. Soldier pile stations are located at the center of flange nearest tunnel wall.
8. For approx profile of Franciscan bedrock along SB Battery Tunnel, see "Doyle Drive Replacement Project Southbound Battery Tunnel Foundation Report".
9. For "Wale Schedule" and "Strut Schedules", see sheet "RWAB-ST6".
10. For Retaining Wall B, see sheet "RWAB-ST13".
11. Strut ℄ work points are located at soldier pile stations, uon.
12. For detail at DVC niche in tunnel wall, see "Detail 3" on sheet "RWAB-ST25".
13. For details of geocomposite drain, see sheet "RWAB-ST26".

RWAB-ST8

DESIGN	BY K. CLINCH	CHECKED M. YUCEKUL	PREPARED FOR THE STATE OF CALIFORNIA DEPARTMENT OF TRANSPORTATION	QIYU LIU, PROJECT ENGINEER	BRIDGE NO. 34-0161RL; POST MILES 9.0/9.2
DETAILS	BY P. A. TONKIN	CHECKED M. YUCEKUL			
QUANTITIES	BY N. VIVAR	CHECKED J. YANG			

RETAINING WALL A & B
STRUCTURE PLAN NO.3

DESIGN DETAIL SHEET (ENGLISH) (REV. 06-01-09)

ORIGINAL SCALE IN INCHES FOR REDUCED PLANS 0 1 2 3

CU 04
EA 163741

DISREGARD PRINTS BEARING EARLIER REVISION DATES

REVISION DATES (PRELIMINARY STAGE ONLY): 06/27/09 | 07/15/09 | 08/05/09 | 08/26/09

SHEET 8 OF 37

FILE => 34-0161rl-ab-st008.dgn

USERNAME => #USER#$ DATE PLOTTED => $DATE$ TIME PLOTTED => $TIME$

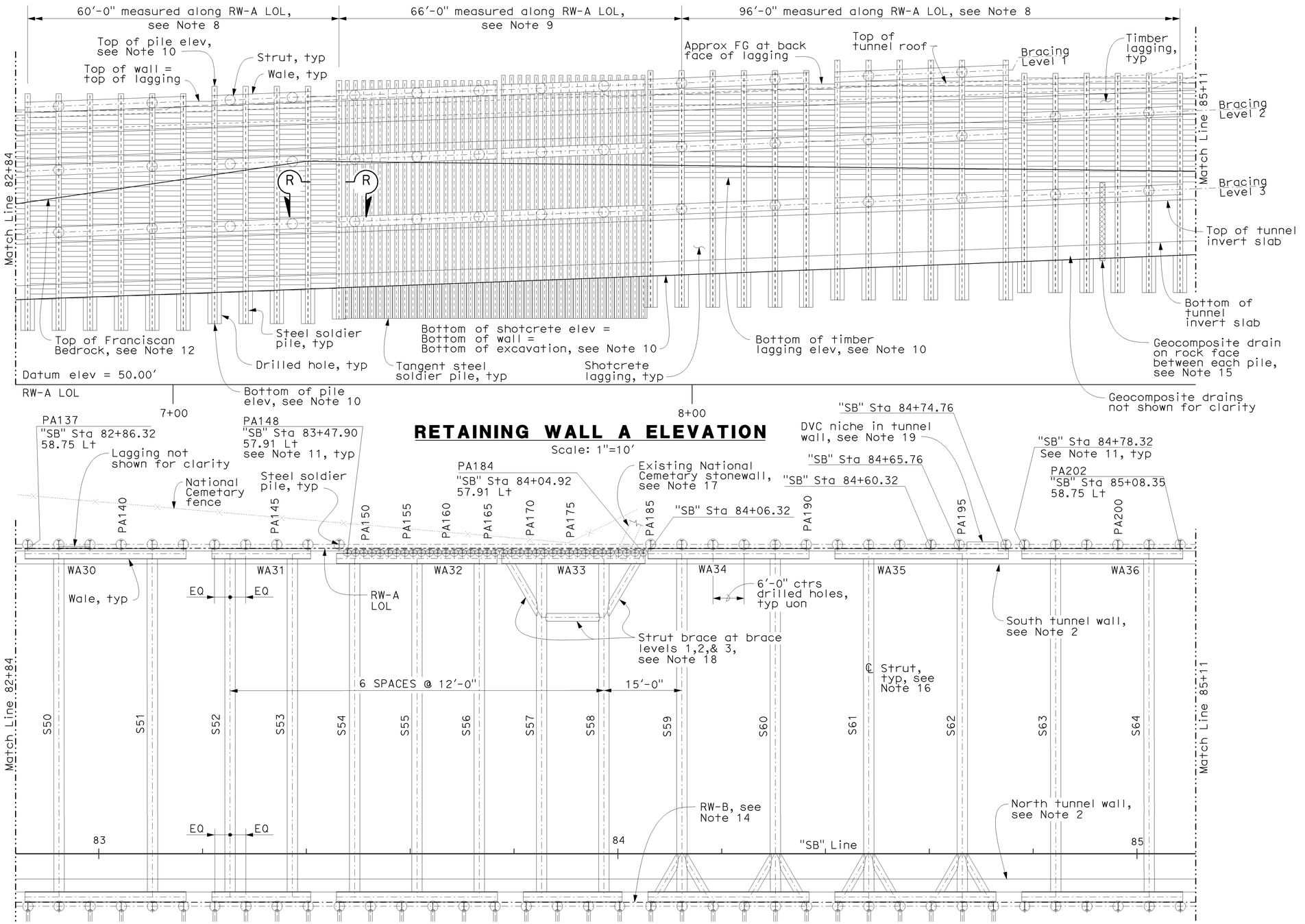

RETAINING WALL A ELEVATION

Scale: 1"=10'

PLAN

Scale: 1"=10'

DIST	COUNTY	ROUTE	POST MILES TOTAL PROJECT	SHEET No	TOTAL SHEETS
04	SF	101	8.2/9.2	517	654

REGISTERED CIVIL ENGINEER — DATE 10/30/09

KEVIN BARRY CLINCH, No. C-48926, Exp. 9/30/10, CIVIL, REGISTERED PROFESSIONAL ENGINEER, STATE OF CALIFORNIA

12-14-09
PLANS APPROVAL DATE

The State of California or its officers or agents shall not be responsible for the accuracy or completeness of scanned copies of this plan sheet.

Arup PB Joint Venture
560 Mission Street, Suite 700
San Francisco, CA 94105

Notes:

1. For General Notes, see sheet "RWAB-ST4".
2. For "SB Battery Tunnel", see "Southbound Battery Tunel" plans.
3. For "Typical Section at Retaining Walls" between piles PA137-PA146, inclusive, see sheet "RWAB-ST17".
4. For "Typical Section at Retaining Walls" between piles PA147-PA184, inclusive, see sheet "RWAB-ST20".
5. For "Part. Typical Section at RW-A" between piles PA185-PA196, inclusive, see sheet "RWAB-ST18".
6. For "Typical Section at Retaining Walls" between piles PA197-PA202, inclusive, see sheet "RWAB-ST21".
7. For "Typical Section at Steel Soldier Pile With Lagging", see sheet "RWAB-ST25".
8. For "Typical Section at Steel Soldier Pile With Shotcrete Lagging", see sheet "RWAB-ST26".
9. For "Typical Section at Tangent Steel Soldier Pile", see sheet "RWAB-ST27".
10. For "Soldier Pile Schedule" and "Lagging Panel Schedule", see sheets "RWAB-ST30" through "RWAB-ST35".
11. Soldier pile stations are located at the center of flange nearest tunnel wall.
12. For approx profile of Franciscan bedrock along SB Battery Tunnel, see "Doyle Drive Replacement Project Southbound Battery Tunnel Foundation Report".
13. For wale and strut schedules, see sheet "RWAB-ST6".
14. For Retaining Wall B, see sheet "RWAB-ST14".
15. For "Section R-R", see sheet "RWAB-ST27".
16. Strut ℄ work points are located at soldier pile stations, uon.
17. Existing National Cemetary stonewall to be deconstructed prior to construction of Retaining Wall A, and to be restored after completion of Southbound Battery Tunnel construction.
18. For strut brace details, see "Detail 6" on sheet "RWAB-ST27".
19. For detail at DVC niche in tunnel wall, see "Detail 3" on sheet "RWAB-ST25".
20. For details of geocomposite drain, see sheet "RWAB-ST 26".

RWAB-ST9

DESIGN	BY K. CLINCH	CHECKED M. YUCEKUL	PREPARED FOR THE STATE OF CALIFORNIA DEPARTMENT OF TRANSPORTATION	QIYU LIU, PROJECT ENGINEER	BRIDGE NO. 34-0161L; POST MILES 9.0/9.2
DETAILS	BY P. A. TONKIN	CHECKED M. YUCEKUL			
QUANTITIES	BY N. VIVAR	CHECKED J. YANG			

RETAINING WALL A & B
STRUCTURE PLAN NO.4

DESIGN DETAIL SHEET (ENGLISH) (REV. 06-01-09)

ORIGINAL SCALE IN INCHES FOR REDUCED PLANS 0 1 2 3

CU 04
EA 163741

DISREGARD PRINTS BEARING EARLIER REVISION DATES

REVISION DATES (PRELIMINARY STAGE ONLY): 06/05/09 | 07/10/2009 | 08/05/09 | 08/28/2009 | 10/30/09

SHEET 9 OF 37

FILE => 34-0161rl-ab-st009.dgn

DATE PLOTTED => 11-DEC-2009 TIME PLOTTED => 13:07

USERNAME => rtrente

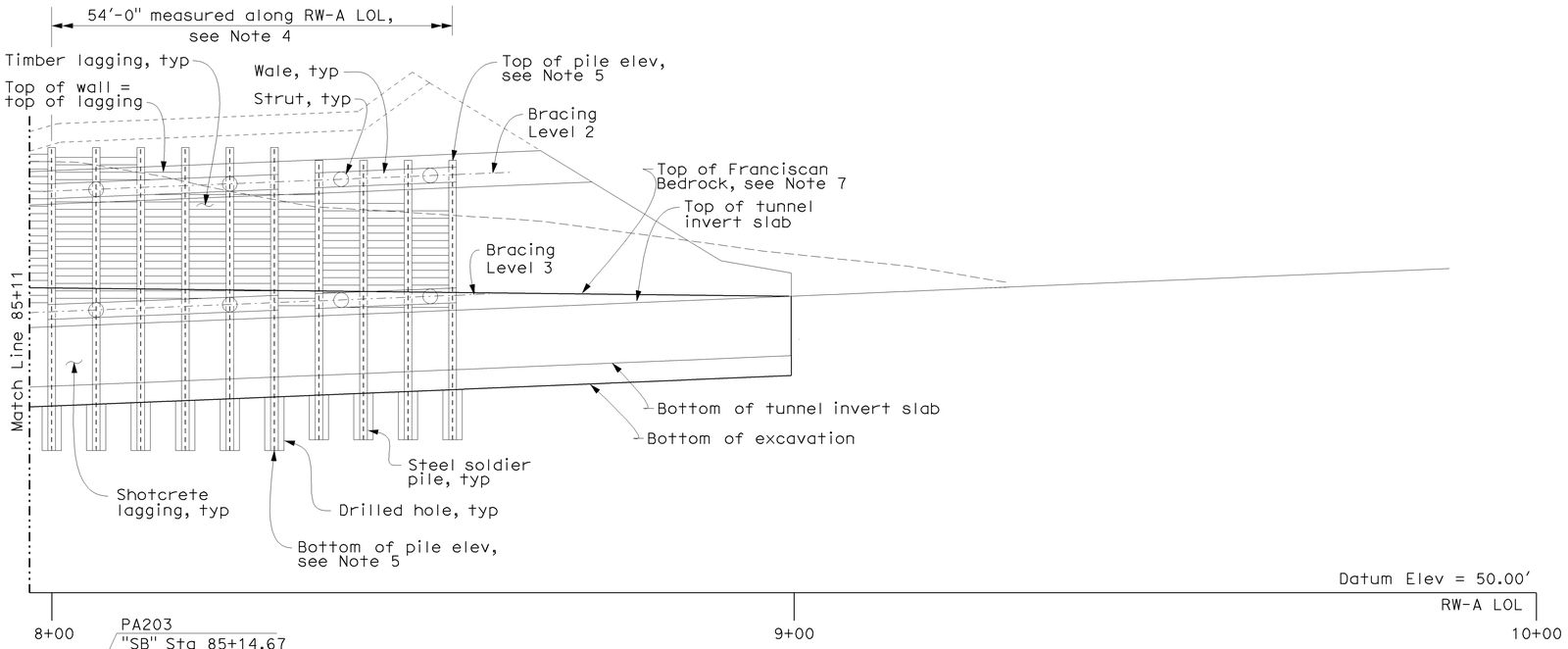

RETAINING WALL A ELEVATION

Scale: 1"=10'

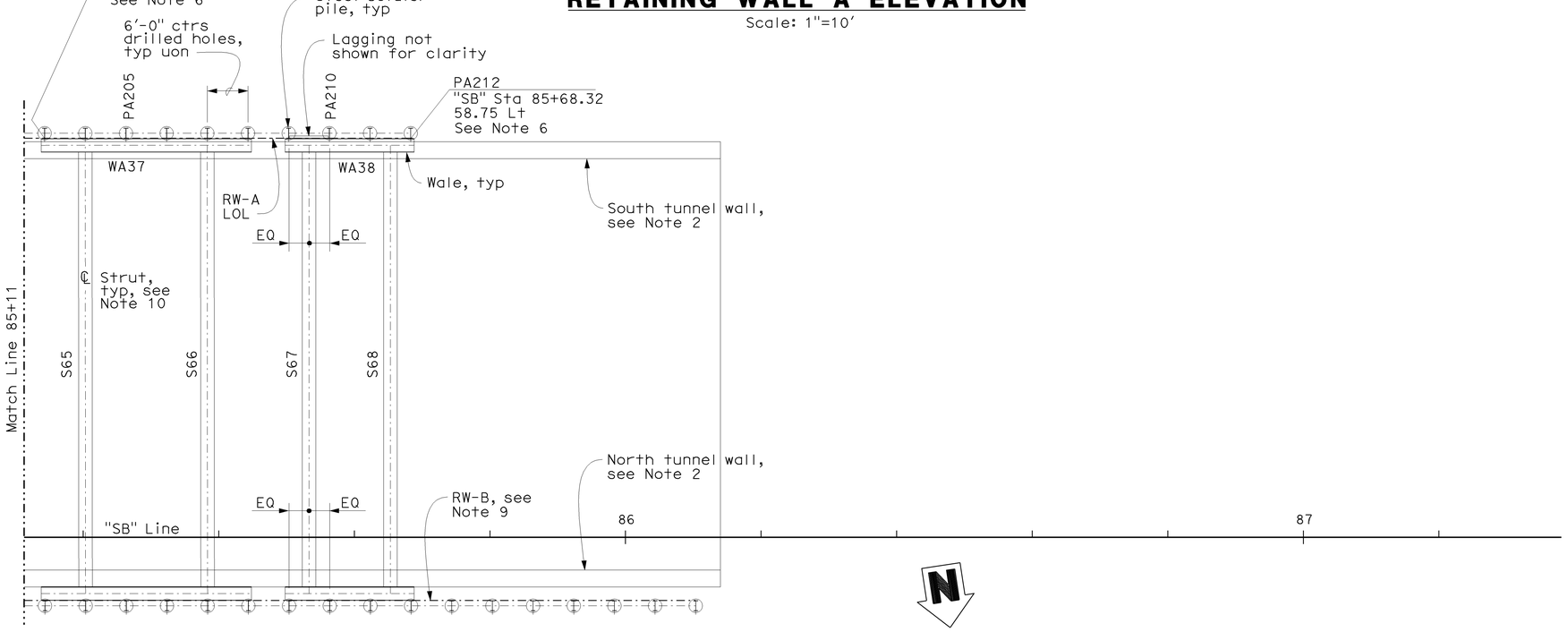

PLAN

Scale: 1"=10'

Notes:

1. For general notes, see sheet "RWAB-ST4".
2. For SB Battery Tunnel, see "Southbound Battery Tunnel" plans.
3. For typical section at retaining walls between piles PA203-PA212, inclusive, see sheet "RWAB-ST21".
4. For typical section at steel soldier pile with shotcrete lagging, see sheet "RWAB-ST26".
5. For "Soldier Pile Schedule" and "Lagging Panel Schedule" see sheets "RWAB-ST30" thru "RWAB-ST35"
6. Soldier pile stations are located at the center of flange nearest tunnel wall.
7. For approx profile of Franciscan bedrock along SB Battery Tunnel, see "Doyle Drive Replacement Project Southbound Battery Tunnel Foundation Report".
8. For wale and strut schedules, see sheet "RWAB-ST6".
9. For Retaining Wall B, see sheet "RWAB-ST15".
10. Strut ℄ work points are located at soldier pile stations, uon.

DIST	COUNTY	ROUTE	POST MILES TOTAL PROJECT	SHEET No	TOTAL SHEETS
04	SF	101	8.2/9.2	518	654

REGISTERED CIVIL ENGINEER — DATE 10/30/09

12-14-09
PLANS APPROVAL DATE

REGISTERED PROFESSIONAL ENGINEER — KEVIN BARRY CLINCH — No. C-48926 — Exp. 9/30/10 — CIVIL — STATE OF CALIFORNIA

The State of California or its officers or agents shall not be responsible for the accuracy or completeness of scanned copies of this plan sheet.

Arup PB Joint Venture
560 Mission Street, Suite 700
San Francisco, CA 94105

RWAB-ST10

	BY	CHECKED
DESIGN	K. CLINCH	M. YUCEKUL
DETAILS	P. A. TONKIN	M. YUCEKUL
QUANTITIES	N. VIVAR	J. YANG

PREPARED FOR THE STATE OF CALIFORNIA DEPARTMENT OF TRANSPORTATION

QIYU LIU
PROJECT ENGINEER

BRIDGE NO. 34-0161L
POST MILES 9.0/9.2

RETAINING WALL A & B
STRUCTURE PLAN NO.5

DESIGN DETAIL SHEET (ENGLISH) (REV. 06-01-09)

ORIGINAL SCALE IN INCHES FOR REDUCED PLANS 0 1 2 3

CU 04
EA 163741

DISREGARD PRINTS BEARING EARLIER REVISION DATES →

REVISION DATES (PRELIMINARY STAGE ONLY): 06/01/09 | 07/31/09 | 08/07/09 | 08/21/09 | 10/30/09

SHEET 10 OF 37

FILE => 34-0161r1-ab-st010.dgn

USERNAME => trrene DATE PLOTTED => 11-DEC-2009 TIME PLOTTED => 13:07

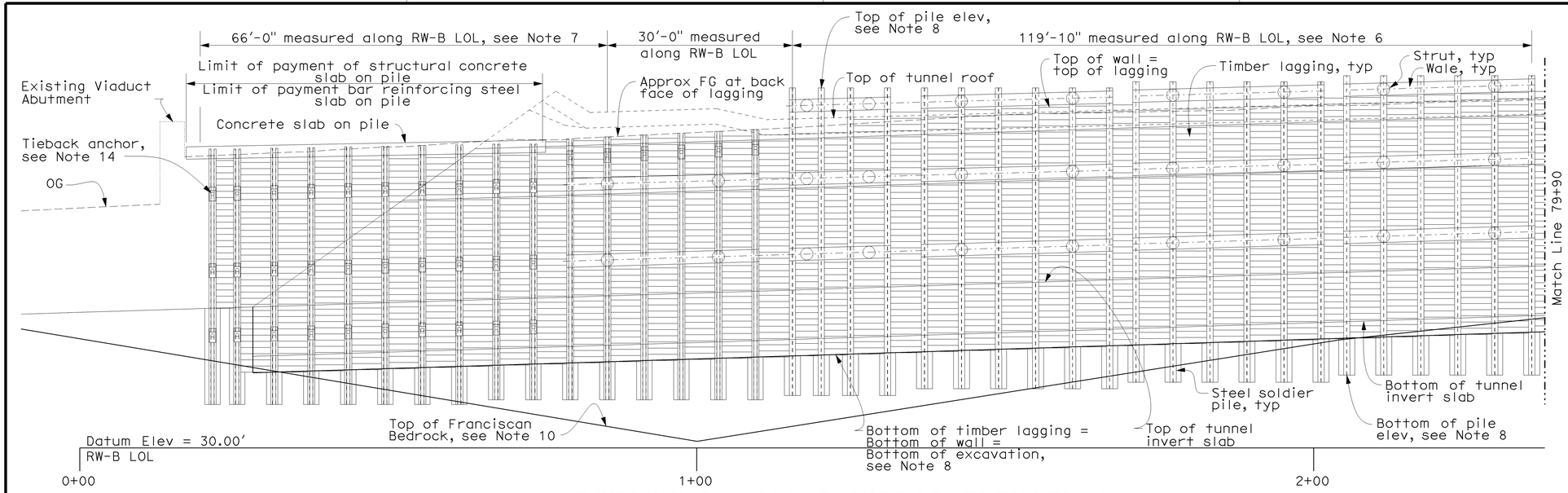

RETAINING WALL B MIRROR ELEVATION

Scale: 1"=10'

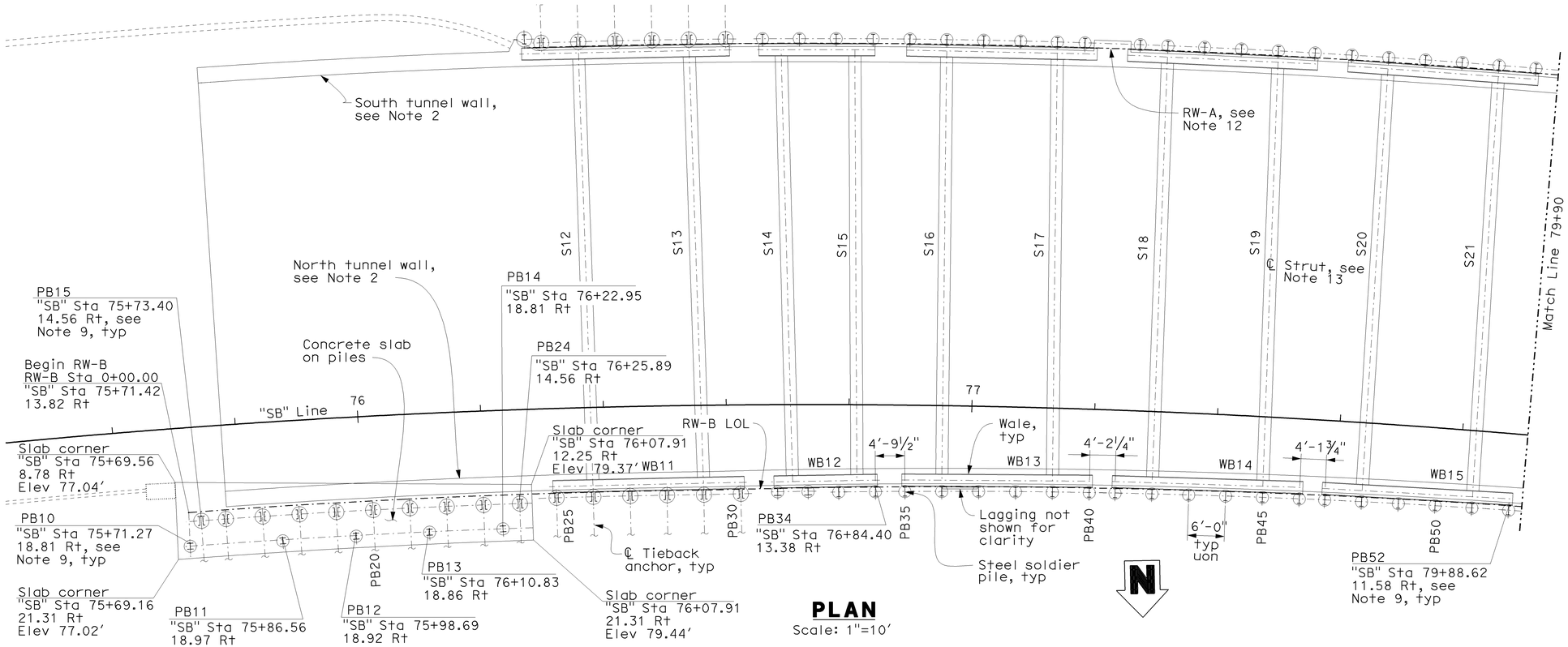

PLAN

Scale: 1"=10'

DIST	COUNTY	ROUTE	POST MILES TOTAL PROJECT	SHEET No	TOTAL SHEETS
04	SF	101	8.2/9.2	519	654

REGISTERED CIVIL ENGINEER — 8/28/09 DATE

12-14-09
PLANS APPROVAL DATE

REGISTERED PROFESSIONAL ENGINEER — KEVIN BARRY CLINCH — No. C-48926 — Exp. 9/30/10 — CIVIL — STATE OF CALIFORNIA

The State of California or its officers or agents shall not be responsible for the accuracy or completeness of scanned copies of this plan sheet.

Arup PB Joint Venture
560 Mission Street, Suite 700
San Francisco, CA 94105

WALE SCHEDULE

Wales	Bracing Level	Size
WB1-WB10	NOT USED	
WB11	2	W14x176
	3	W14x257
WB12-WB20	1	W18x119
	2	W14x176
	3	W14x257
WB21-WB35	1	W18x119
	2, 3	W14x176
WB36-WB38	2, 3	W14x176

Notes:

1. For General Notes, see sheet "RWAB-ST4".
2. For "SB Battery Tunnel", see "Southbound Battery Tunnel" plans.
3. See sheet "RWAB-ST16" for "Part. Typical Section at RW-B" between piles PB15-PB24, inclusive.
4. For "Typical Section at Retaining Walls" between piles PB25-PB30, inclusive, see sheet "RWAB-ST16"
5. For "Typical Section at Retaining Walls" between piles PB31-PB52, inclusive, see sheet "RWAB-ST17"
6. For "Typical Section at Steel Soldier Pile With Lagging", see sheet "RWAB-ST25".
7. For "Typical Section at Soldier Pile With Tieback & Struts", see sheet "RWAB-ST28".
8. For "Soldier Pile Schedule" and Lagging Panel Schedule", see sheets "RWAB-ST30" thru "RWAB-ST35"
9. Soldier pile stations are located at the center of flange nearest tunnel wall. See "Section L-L" on sheet "RWAB-ST25" and "Section V-V" on sheet "RWAB-ST29"
10. For approx profile of Franciscan bedrock along SB Battery Tunnel, see "Doyle Drive Replacement Project Southbound Battery Tunnel Foundation Report".
11. For strut schedule, see sheet "RWAB-ST6".
12. For Retaining Wall A, see sheet "RWAB-ST6".
13. Strut ℄ work points are located at soldier pile stations, uon.
14. For tieback anchor design criteria, see sheet "RWAB-ST4".

RWAB-ST11

DESIGN	BY K. CLINCH	CHECKED M. YUCEKUL	PREPARED FOR THE STATE OF CALIFORNIA DEPARTMENT OF TRANSPORTATION	QIYU LIU PROJECT ENGINEER	BRIDGE NO. 34-0161RL
DETAILS	BY P. A. TONKIN	CHECKED M. YUCEKUL			POST MILES 9.0/9.2
QUANTITIES	BY N. VIVAR	CHECKED J. YANG			

RETAINING WALL A&B
STRUCTURE PLAN NO.6

DESIGN DETAIL SHEET (ENGLISH) (REV. 06-01-09)

ORIGINAL SCALE IN INCHES FOR REDUCED PLANS 0 1 2 3

CU 04
EA 163741

DISREGARD PRINTS BEARING EARLIER REVISION DATES →

REVISION DATES (PRELIMINARY STAGE ONLY): 06/01/09 07/01/09 08/01/09 08/26/09

SHEET 11 OF 37

FILE => 34-0161rl-ab-st011.dgn

USERNAME => #USER# DATE PLOTTED => #DATE# TIME PLOTTED => #TIME#

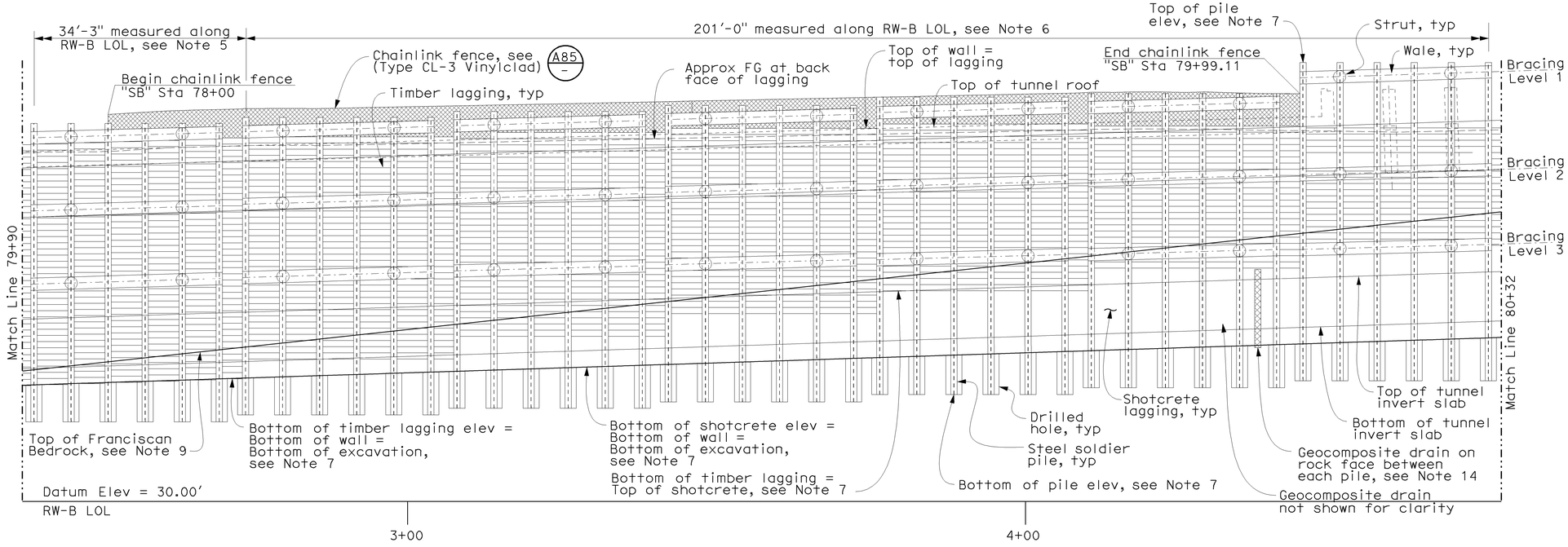

RETAINING WALL B MIRROR ELEVATION

Scale: 1"=10'

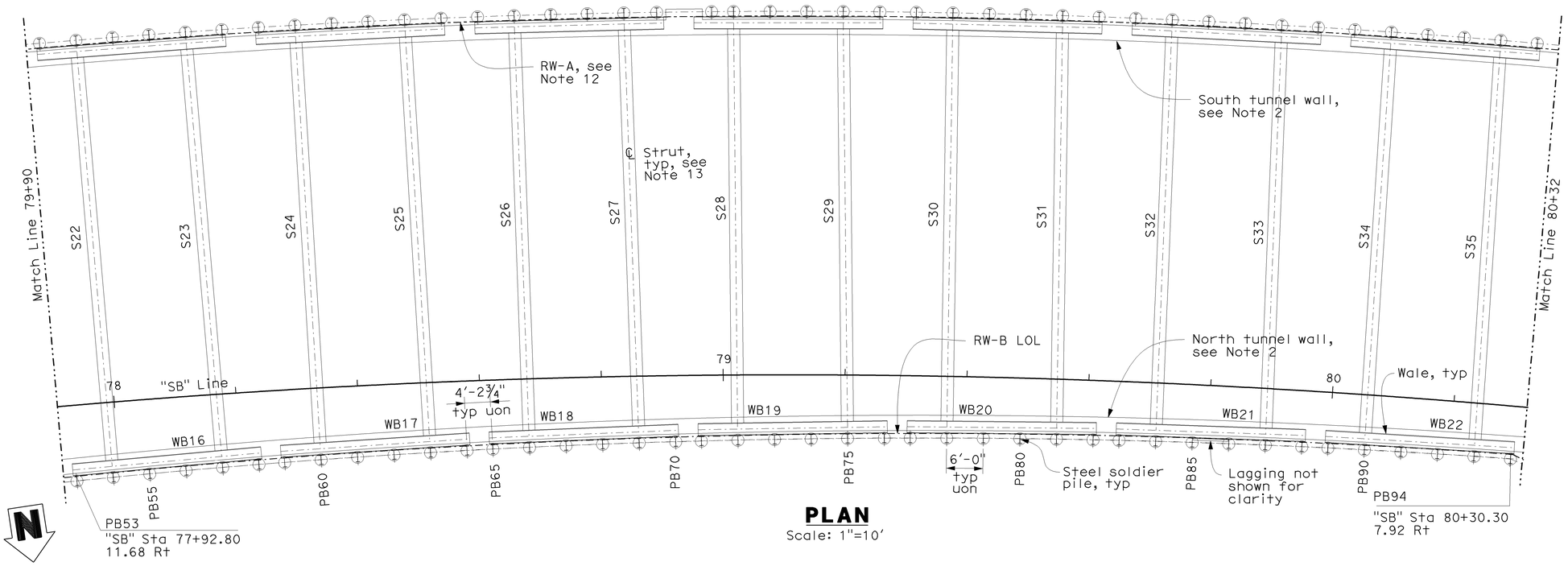

PLAN

Scale: 1"=10'

Notes:

1. For General Notes, see sheet "RWAB-ST4".
2. For "SB Battery Tunnel", see "Southbound Battery Tunnel" plans.
3. For "Typical Section at Retaining Walls" between piles PB53-PB59, inclusive, see sheet "RWAB-ST17".
4. For "Part. Typical Section at RW-B" between piles PB60-PB94, inclusive, see sheet "RWAB-ST19".
5. For "Typical Section at Steel Soldier Pile With Lagging", see sheet "RWAB-ST25".
6. For "Typical Section at Steel Soldier Pile Shotcrete Lagging, see sheet "RWAB-ST26".
7. For "Soldier Pile Schedule" and Lagging Panel Schedule", see sheets "RWAB-ST30" thru "RWAB-ST35".
8. Soldier pile stations are located at the center of flange nearest tunnel wall. See "Section L-L" on sheet "RWAB-ST25".
9. For approx profile of Franciscan bedrock along SB Battery Tunnel, see "Doyle Drive Replacement Project Southbound Battery Tunnel Foundation Report".
10. For strut schedule, see sheet "RWAB-ST6".
11. For wale schedule, see sheet "RWAB-ST11".
12. For Retaining Wall A, see sheet "RWAB-ST7".
13. Strut ℄ work points located at soldier pile stations, uon.
14. For details of geocomposite drain, see sheet "RWAB-ST26".

DIST	COUNTY	ROUTE	POST MILES TOTAL PROJECT	SHEET No	TOTAL SHEETS
04	SF	101	8.2/9.2	520	654

REGISTERED CIVIL ENGINEER — 8/28/09 DATE

12-14-09
PLANS APPROVAL DATE

REGISTERED PROFESSIONAL ENGINEER — KEVIN BARRY CLINCH — No. C-48926 — Exp. 9/30/10 — CIVIL — STATE OF CALIFORNIA

The State of California or its officers or agents shall not be responsible for the accuracy or completeness of scanned copies of this plan sheet.

Arup PB Joint Venture
560 Mission Street, Suite 700
San Francisco, CA 94105

RWAB-ST12

DESIGN	BY K. CLINCH	CHECKED M. YUCEKUL	PREPARED FOR THE STATE OF CALIFORNIA DEPARTMENT OF TRANSPORTATION	QIYU LIU PROJECT ENGINEER	BRIDGE NO. 34-0161RL
DETAILS	BY P. A. TONKIN	CHECKED M. YUCEKUL			POST MILES 9.0/9.2
QUANTITIES	BY N. VIVAR	CHECKED J. YANG			

RETAINING WALL A & B
STRUCTURE PLAN NO.7

DESIGN DETAIL SHEET (ENGLISH) (REV. 06-01-09)

ORIGINAL SCALE IN INCHES FOR REDUCED PLANS 0 1 2 3

CU 04
EA 163741

DISREGARD PRINTS BEARING EARLIER REVISION DATES →

REVISION DATES (PRELIMINARY STAGE ONLY): 06/05/09 | 07/31/09 | 08/05/09 | 08/26/09

SHEET 12 OF 37

FILE => 34-0161rl-ab-st012.dgn

USERNAME => trrene DATE PLOTTED => 11-DEC-2009 TIME PLOTTED => 13:08

DIST	COUNTY	ROUTE	POST MILES TOTAL PROJECT	SHEET No	TOTAL SHEETS
04	SF	101	8.2/9.2	521	654

REGISTERED CIVIL ENGINEER 8/28/09 DATE

12-14-09
PLANS APPROVAL DATE

REGISTERED PROFESSIONAL ENGINEER KEVIN BARRY CLINCH No. C-48926 Exp. 9/30/10 CIVIL STATE OF CALIFORNIA

The State of California or its officers or agents shall not be responsible for the accuracy or completeness of scanned copies of this plan sheet.

Arup PB Joint Venture
560 Mission Street, Suite 700
San Francisco, CA 94105

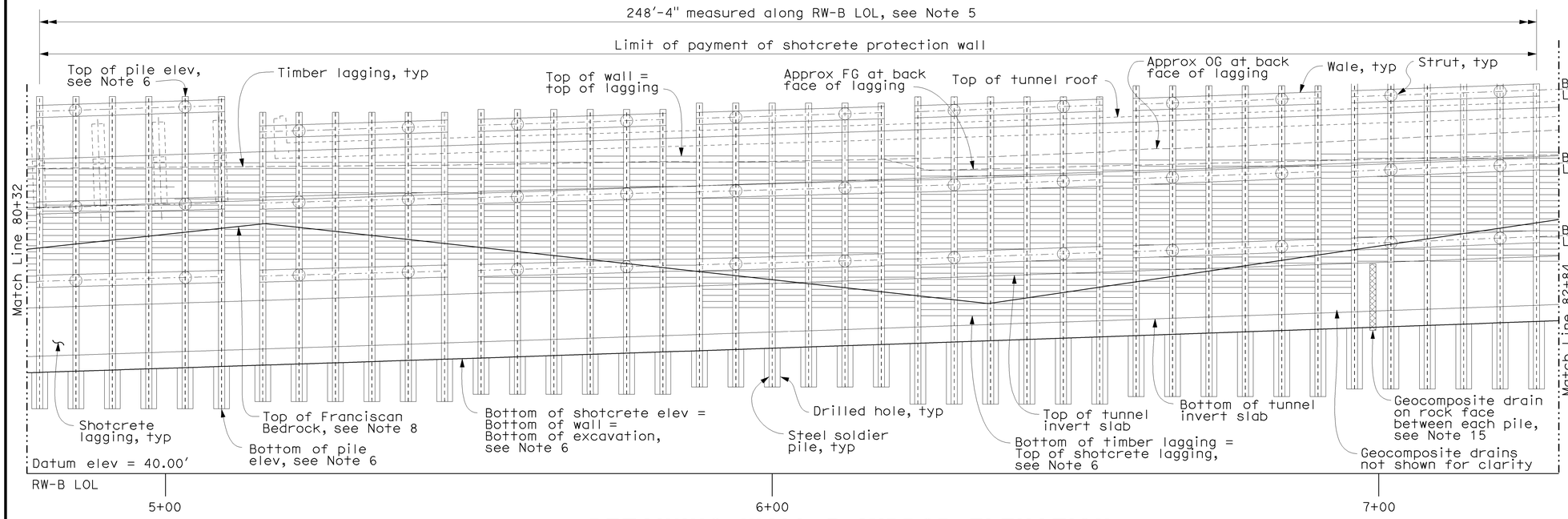

RETAINING WALL B MIRROR ELEVATION

Scale: 1"=10'

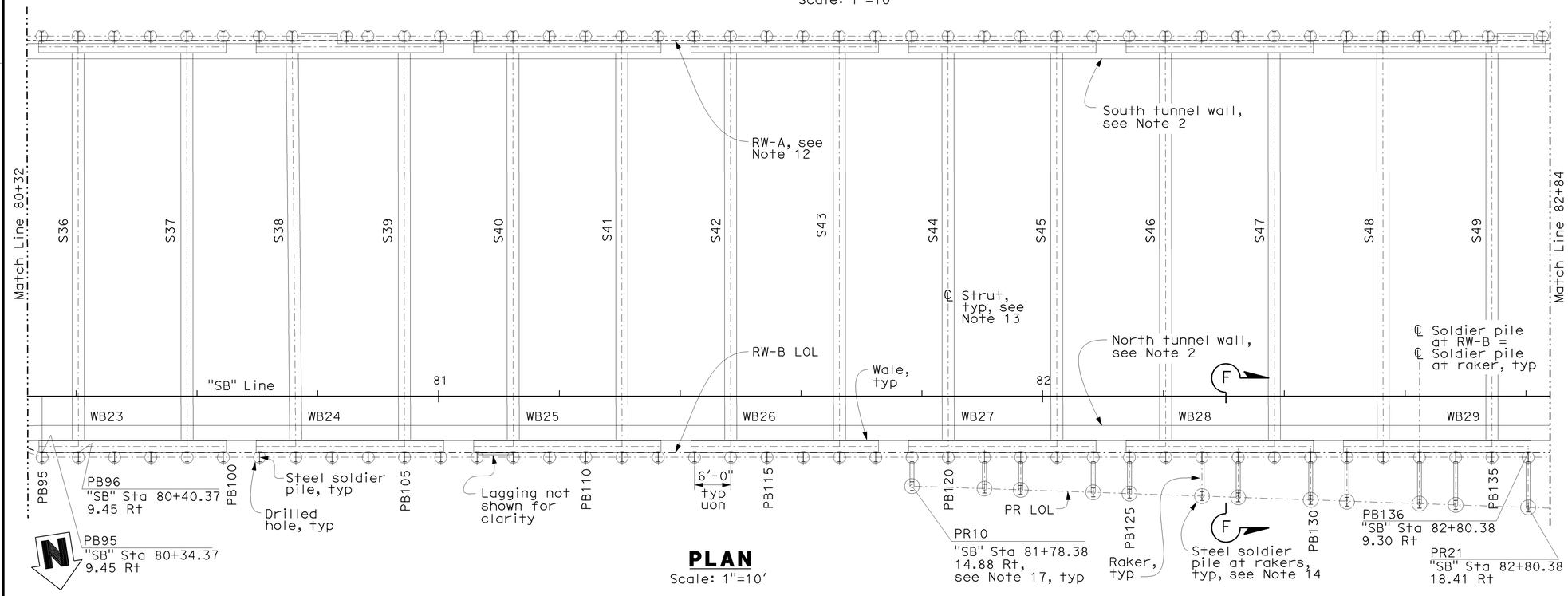

PLAN

Scale: 1"=10'

Notes:

1. For General Notes, see sheet "RWAB-ST4".
2. For "SB Battery Tunnel", see "Southbound Battery Tunnel" plans.
3. For "Part. Section at RW-B" between piles PB95-PB119, inclusive, see sheet "RWAB-ST19"
4. For "Typical Section at Retaining Walls" between piles PB120-PB135, inclusive, see sheet "RWAB-ST20"
5. For "Typical Section at Steel Soldier Pile With Shotcrete Lagging", see sheet "RWAB-ST26".
6. For "Soldier Pile Schedule" and "Lagging Panel Schedule", see sheets "RWAB-ST30" thru "RWAB-ST35"
7. Soldier pile stations are located at the center of flange nearest tunnel wall. See "Section L-L" on sheet "RWAB-ST25".
8. For approx profile of Franciscan bedrock along SB Battery Tunnel, see "Doyle Drive Replacement Project Southbound Battery Tunnel Foundation Report".
9. For strut schedule, see sheet "RWAB-ST6".
10. For wale schedule, see sheet "RWAB-ST11".
11. For "Section F-F", see sheet "RWAB-ST23".
12. For Retaining Wall A, see sheet "RWAB-ST8".
13. Strut ℄ work points are located at soldier pile stations, uon.
14. For Soldier Pile at Raker Schedule, see sheet RWAB-ST35".
15. For details of geocomposite drain, see sheet "RWAB-ST26".
16. Raker pile stations are located at the center of steel pile and PR LOL.

RWAB-ST13

DESIGN	BY K. CLINCH	CHECKED M. YUCEKUL	PREPARED FOR THE STATE OF CALIFORNIA DEPARTMENT OF TRANSPORTATION	QIYU LIU PROJECT ENGINEER	BRIDGE NO. 34-0161RL
DETAILS	BY P. A. TONKIN	CHECKED M. YUCEKUL			POST MILES 9.0/9.2
QUANTITIES	BY N. VIVAR	CHECKED J. YANG			

RETAINING WALL A & B
STRUCTURE PLAN NO.8

DESIGN DETAIL SHEET (ENGLISH) (REV. 06-01-09)

ORIGINAL SCALE IN INCHES FOR REDUCED PLANS 0 1 2 3

CU 04
EA 163741

DISREGARD PRINTS BEARING EARLIER REVISION DATES

REVISION DATES (PRELIMINARY STAGE ONLY) 06/01/09 07/15/09 08/07/09 08/26/09

SHEET 13 OF 37

FILE => 34-0161rl-ab-st013.dgn

USERNAME => $USER$ DATE PLOTTED => $DATE$ TIME PLOTTED => $TIME$

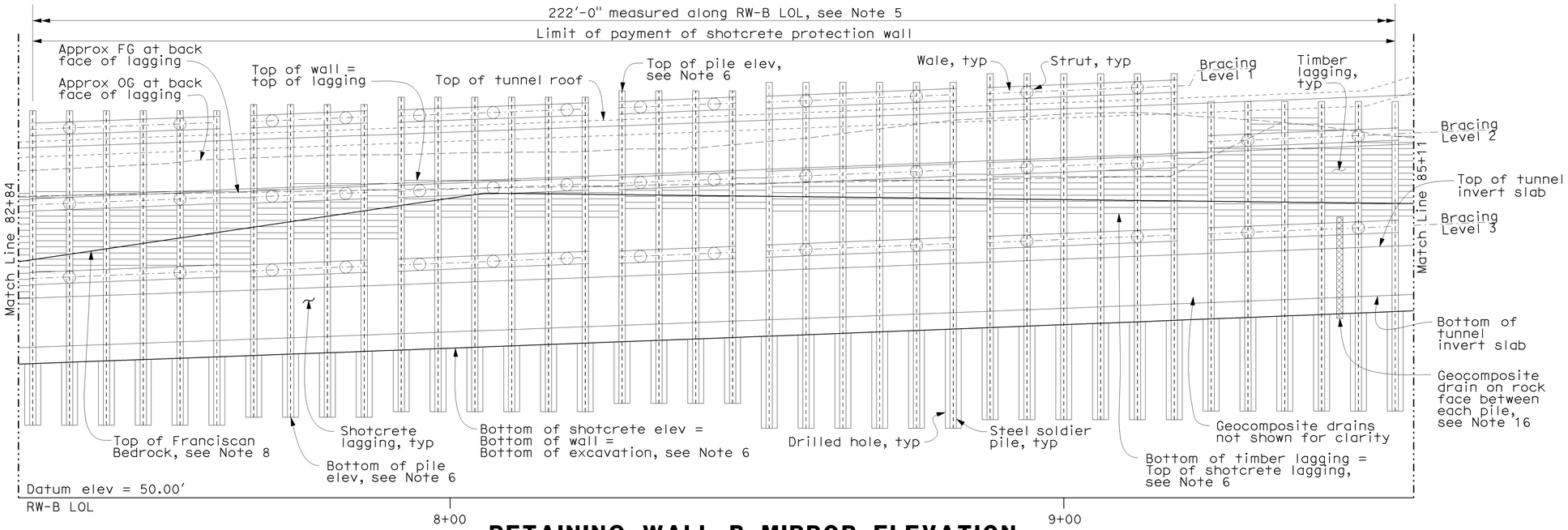

RETAINING WALL B MIRROR ELEVATION

Scale: 1"=10'

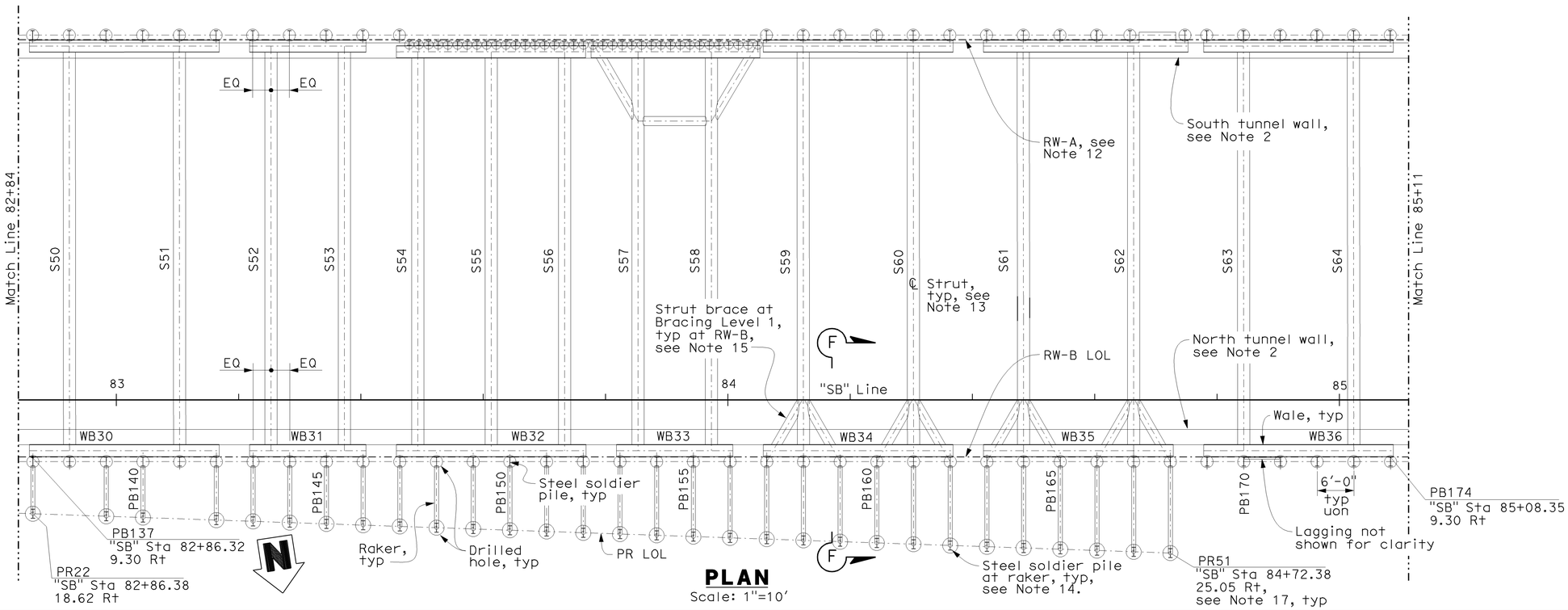

PLAN

Scale: 1"=10'

Notes:

1. For General Notes, see sheet "RWAB-ST4".
2. For "SB Battery Tunnel", see "Southbound Battery Tunnel" plans.
3. For "Typical Section at Retaining Walls" between piles PB136-PB167, inclusive, see sheet "RWAB-ST20"
4. For "Typical Section at Retaining Walls" between piles PB168-PB173, inclusive, see sheet "RWAB-ST21"
5. For "Typical Section at Steel Soldier Pile With Shotcrete Lagging", see sheet "RWAB-ST26".
6. For "Soldier Pile Schedule" and "Lagging Panel Schedule", see sheets "RWAB-ST30" thru "RWAB-ST35"
7. Soldier pile stations are located at the center of flange nearest tunnel wall. See "Section L-L" on sheet "RWAB-ST25".
8. For approx profile of Franciscan bedrock along SB Battery Tunnel, see "Doyle Drive Replacement Project Southbound Battery Tunnel Foundation Report".
9. For strut schedule, see sheet "RWAB-ST6".
10. For wale schedule, see sheet "RWAB-ST11".
11. For "Section F-F", see sheet "RWAB-ST23".
12. For Retaining Wall A, see sheet "RWAB-ST9".
13. Strut ℄ work points are located at soldier pile stations, uon.
14. For Soldier Pile at Rakers Schedule" see sheet "RWAB-ST35".
15. For strut brace details, see sheet "RWAB-ST24".
16. For details of geocomposite drain, see sheet "RWAB-ST26".
17. Raker pile stations are located at the center of steel pile and PR LOL.

DIST	COUNTY	ROUTE	POST MILES TOTAL PROJECT	SHEET No	TOTAL SHEETS
04	SF	101	8.2/9.2	522	654

REGISTERED CIVIL ENGINEER — 8/28/09 DATE

12-14-09
PLANS APPROVAL DATE

REGISTERED PROFESSIONAL ENGINEER — KEVIN BARRY CLINCH — No. C-48926 — Exp. 9/30/10 — CIVIL — STATE OF CALIFORNIA

The State of California or its officers or agents shall not be responsible for the accuracy or completeness of scanned copies of this plan sheet.

Arup PB Joint Venture
560 Mission Street, Suite 700
San Francisco, CA 94105

DESIGN	BY K. CLINCH	CHECKED M. YUCEKUL	PREPARED FOR THE STATE OF CALIFORNIA DEPARTMENT OF TRANSPORTATION
DETAILS	BY P. A. TONKIN	CHECKED M. YUCEKUL	
QUANTITIES	BY N. VIVAR	CHECKED J. YANG	

QIYU LIU
PROJECT ENGINEER

CU 04
EA 163741

BRIDGE NO.	RETAINING WALL A & B
34-0161RL	
POST MILES	STRUCTURE PLAN NO.9
9.0/9.2	

DESIGN DETAIL SHEET (ENGLISH) (REV. 06-01-09)

ORIGINAL SCALE IN INCHES FOR REDUCED PLANS 0 1 2 3

DISREGARD PRINTS BEARING EARLIER REVISION DATES →

REVISION DATES (PRELIMINARY STAGE ONLY): 06/05/09 07/31/09 08/05/09 08/26/09

SHEET 14 OF 37

RWAB-ST14

FILE => 34-0161rl-ab-st014.dgn

USERNAME => trmoyse DATE PLOTTED => 11-DEC-2009 TIME PLOTTED => 12:14

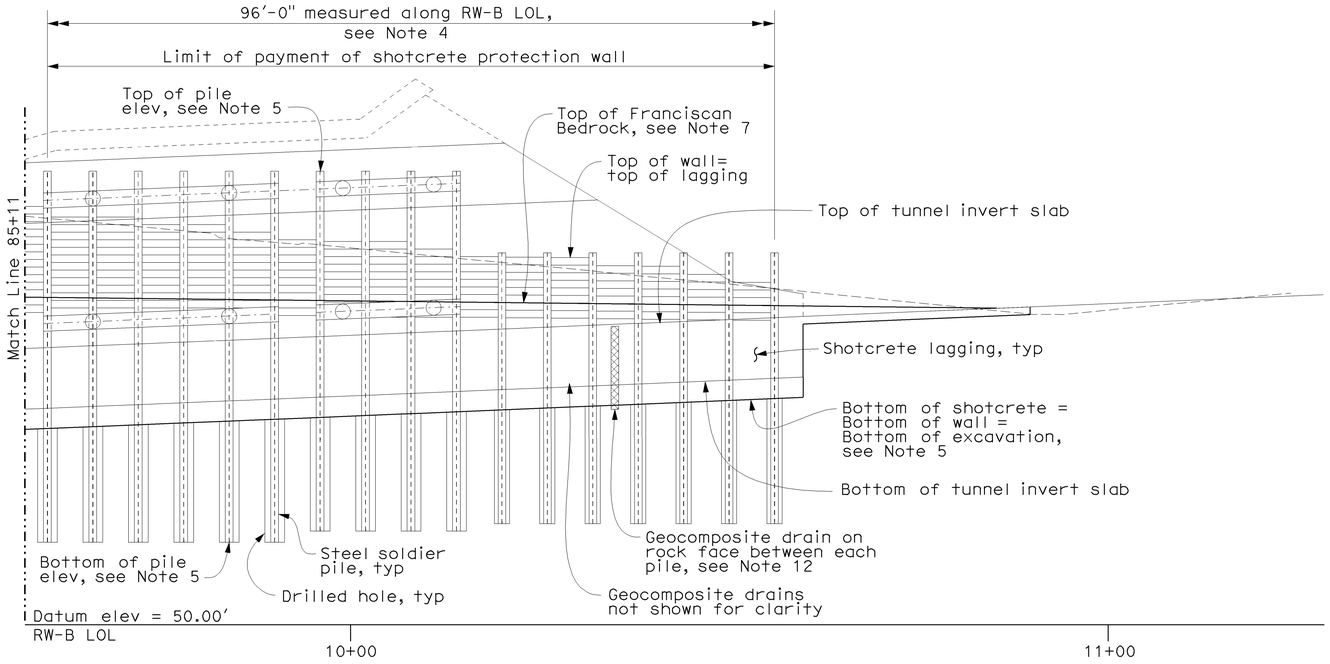

RETAINING WALL B MIRROR ELEVATION

Scale: 1"=10'

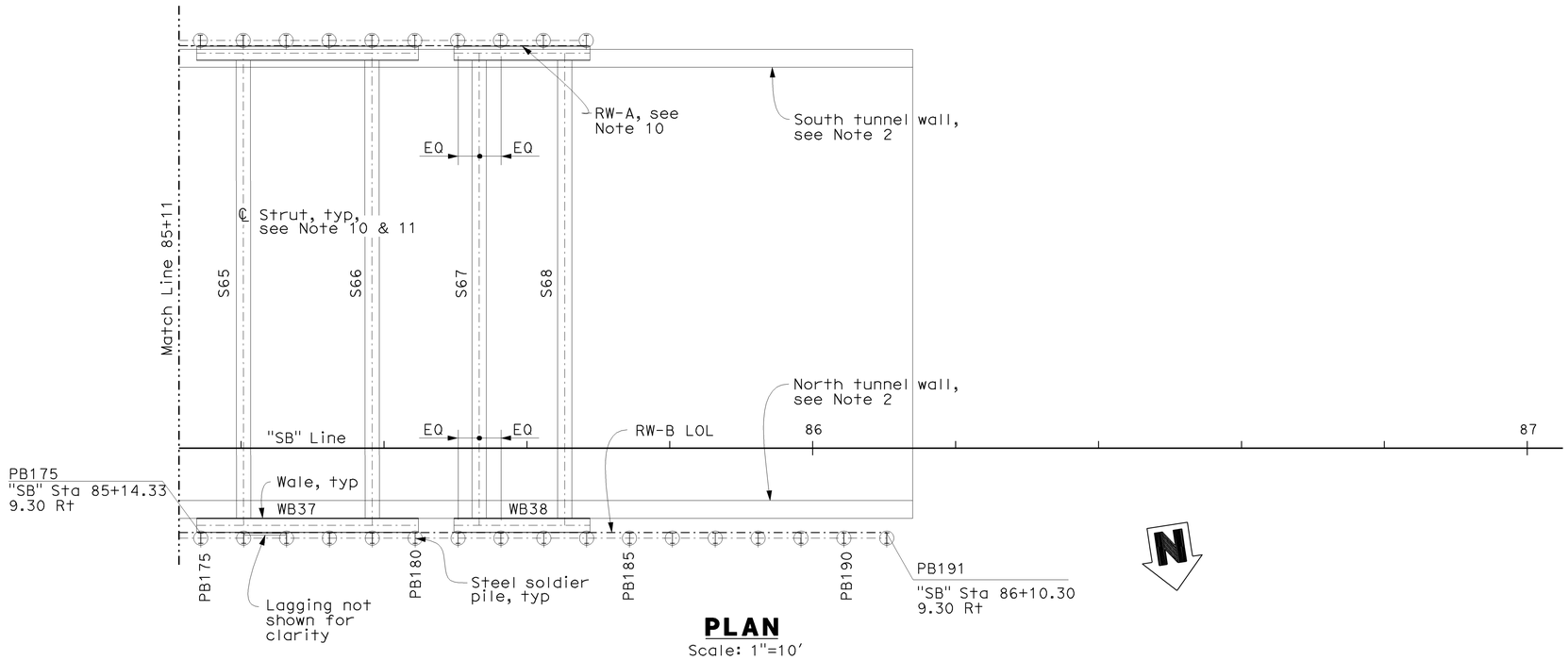

PLAN

Scale: 1"=10'

DIST	COUNTY	ROUTE	POST MILES TOTAL PROJECT	SHEET No	TOTAL SHEETS
04	SF	101	8.2/9.2	523	654

REGISTERED CIVIL ENGINEER — DATE 8/28/09

REGISTERED PROFESSIONAL ENGINEER — KEVIN BARRY CLINCH — No. C-48926 — Exp. 9/30/10 — CIVIL — STATE OF CALIFORNIA

12-14-09
PLANS APPROVAL DATE

The State of California or its officers or agents shall not be responsible for the accuracy or completeness of scanned copies of this plan sheet.

Arup PB Joint Venture
560 Mission Street, Suite 700
San Francisco, CA 94105

Notes:

1. For General Notes, see sheet "RWAB-ST4".
2. For "SB Battery Tunnel", see "Southbound Battery Tunnel" plans.
3. For "Typical Section at Retaining Walls" between piles PB174-PB183, see sheet "RWAB-ST21".
4. For "Typical Section at Steel Soldier Pile With Shotcrerte Lagging", see sheet "RWAB-ST26".
5. For "Soldier Pile Schedule" and "Lagging Panel Schedule", see sheets "RWAB-ST30" through "RWAB-ST35".
6. Soldier pile stations are located at the center of flange nearest tunnel wall. See "Section L-L" on sheet "RWAB-ST25".
7. For approx profile of Franciscan bedrock along SB Battery Tunnel, see "Doyle Drive Replacement Project Southbound Battery Tunnel Foundation Report".
8. For strut schedule, see sheet RWAB-ST6".
9. For wale schedule, see sheet RWAB-ST11".
10. For Retaining Wall A, see sheet "RWAB-ST10".
11. Strut ℄ work points are located at soldier piles stations, uon.
12. For detail of geocomposite drain, see sheet "RWAB-ST26".

RWAB-ST15

DESIGN	BY K. CLINCH	CHECKED M. YUCEKUL	PREPARED FOR THE STATE OF CALIFORNIA DEPARTMENT OF TRANSPORTATION	QIYU LIU, PROJECT ENGINEER	BRIDGE NO. 34-0161RL; POST MILES 9.0/9.2
DETAILS	BY P. A. TONKIN	CHECKED M. YUCEKUL			
QUANTITIES	BY N. VIVAR	CHECKED J. YANG			

RETAINING WALL A & B
STRUCTURE PLAN NO.10

DESIGN DETAIL SHEET (ENGLISH) (REV. 06-01-09)

ORIGINAL SCALE IN INCHES FOR REDUCED PLANS 0 1 2 3

CU 04
EA 163741

DISREGARD PRINTS BEARING EARLIER REVISION DATES →

REVISION DATES (PRELIMINARY STAGE ONLY): 06/01/09 | 07/01/09 | 08/01/09 | 08/26/09

SHEET 15 OF 37

FILE => 34-0161r1-ab-st015.dgn

USERNAME => trmoyse DATE PLOTTED => 11-DEC-2009 TIME PLOTTED => 12:14

DIST	COUNTY	ROUTE	POST MILES TOTAL PROJECT	SHEET No	TOTAL SHEETS
04	SF	101	8.2/9.2	524	654

REGISTERED CIVIL ENGINEER — 9/11/09 DATE

12-14-09
PLANS APPROVAL DATE

REGISTERED PROFESSIONAL ENGINEER — KEVIN BARRY CLINCH — No. C-48926 — Exp. 9/30/10 — CIVIL — STATE OF CALIFORNIA

The State of California or its officers or agents shall not be responsible for the accuracy or completeness of scanned copies of this plan sheet.

Arup PB Joint Venture
560 Mission Street, Suite 700
San Francisco, CA 94105

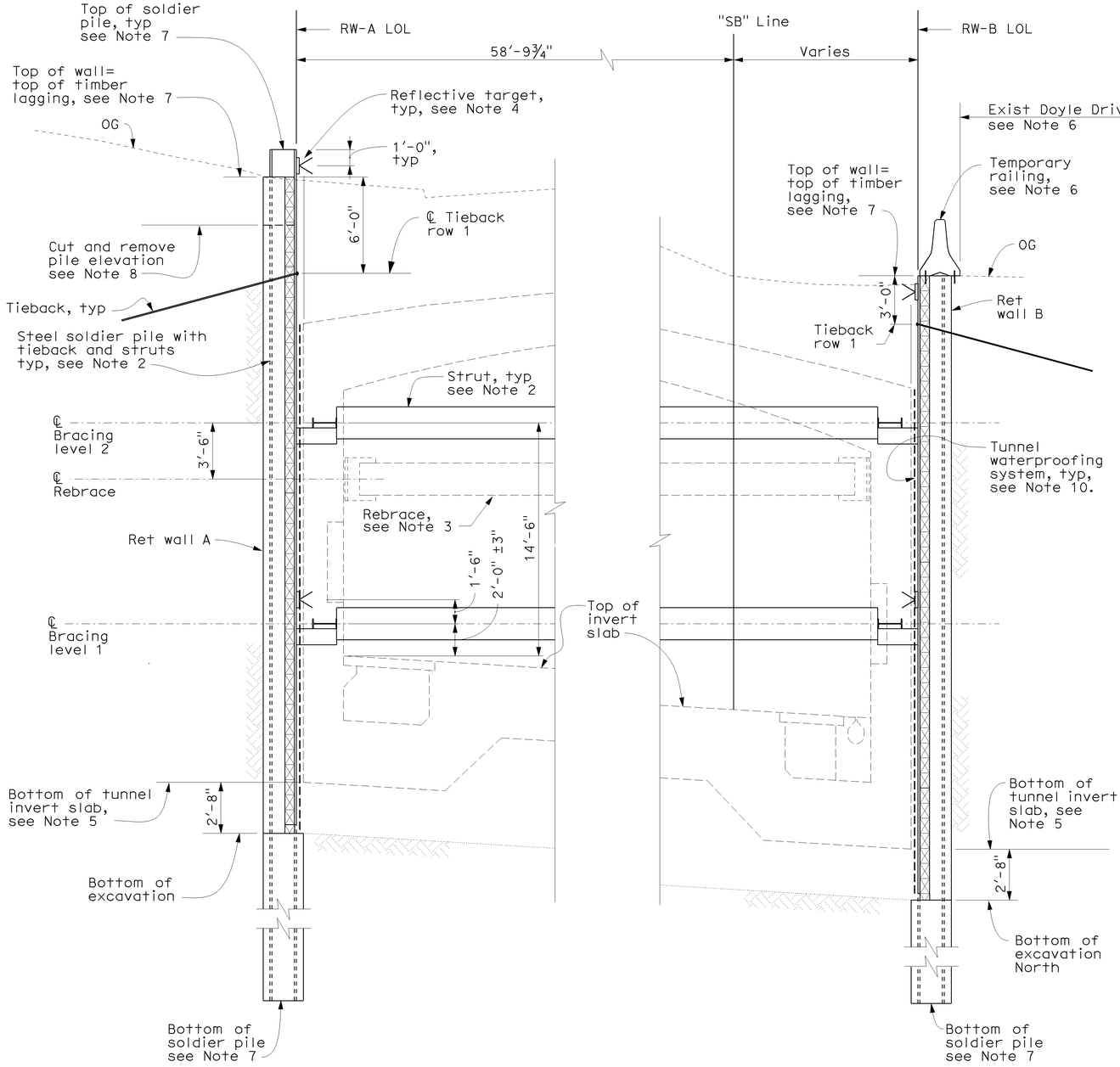

TYPICAL SECTION AT RETAINING WALLS

"SB" 76+31.73 to 76+60.50

Scale: 1/4"=1'-0"

PART. TYPICAL SECTION AT RW-B

"SB" 75+71.25 to 76+25.90

Scale: 1/4"=1'-0"

Notes:

1. For construction sequence, see "Southbound Battery Tunnel" plans.
2. For soldier pile with tieback and strut details, see sheet "RWAB-ST28".
3. For rebrace details, see sheet "RWAB-ST24".
4. Reflective targets shall be placed at 24'-0" o.c. maximum along the length of the wall at the locations shown.
5. For bottom of invert slab, see "Southbound Battery Tunnel" plans.
6. For details at temporary railing, see "Roadway" plans.
7. For pile and lagging data, see "Soldier Pile Schedule" and "Lagging Panel Schedule" on sheets "RWAB-ST30" through "RWAB-ST35".
8. Cut pile and remove upper portion and lagging during tunnel backfilling work. See "Soldier Pile Schedule" on sheets "RWAB-ST30" through "RWAB-ST35" for elevation.
9. For "Detail 8", see sheet "RWAB-ST29".
10. For tunnel waterproofing system, see "Southbound Battery Tunnel" plans.

RWAB-ST16

DESIGN	BY K. CLINCH	CHECKED M. YUCEKUL	PREPARED FOR THE STATE OF CALIFORNIA DEPARTMENT OF TRANSPORTATION	QIYU LIU PROJECT ENGINEER	BRIDGE NO. 34-0161RL
DETAILS	BY T.MARTARELLA	CHECKED M. YUCEKUL			POST MILES 9.0/9.2
QUANTITIES	BY N. VIVAR	CHECKED J. YANG			

RETAINING WALL A & B
TYPICAL SECTION NO.1

DESIGN DETAIL SHEET (ENGLISH) (REV. 06-01-09)

ORIGINAL SCALE IN INCHES FOR REDUCED PLANS 0 1 2 3

CU 04
EA 163741

DISREGARD PRINTS BEARING EARLIER REVISION DATES →

REVISION DATES (PRELIMINARY STAGE ONLY): 06/01/09 | 07/15/09 | 08/07/09 | 08/21/09 | 09/11/09

SHEET 16 OF 37

FILE => 34-0161rl-ab-st016.dgn

USERNAME => trmnguye DATE PLOTTED => 11-DEC-2009 TIME PLOTTED => 12:14

DIST	COUNTY	ROUTE	POST MILES TOTAL PROJECT	SHEET No	TOTAL SHEETS
04	SF	101	8.2/9.2	525	654

REGISTERED CIVIL ENGINEER — 9/11/09 DATE

12-14-09
PLANS APPROVAL DATE

REGISTERED PROFESSIONAL ENGINEER — KEVIN BARRY CLINCH — No. C-48926 — Exp. 9/30/10 — CIVIL — STATE OF CALIFORNIA

The State of California or its officers or agents shall not be responsible for the accuracy or completeness of scanned copies of this plan sheet.

Arup PB Joint Venture
560 Mission Street, Suite 700
San Francisco, CA 94105

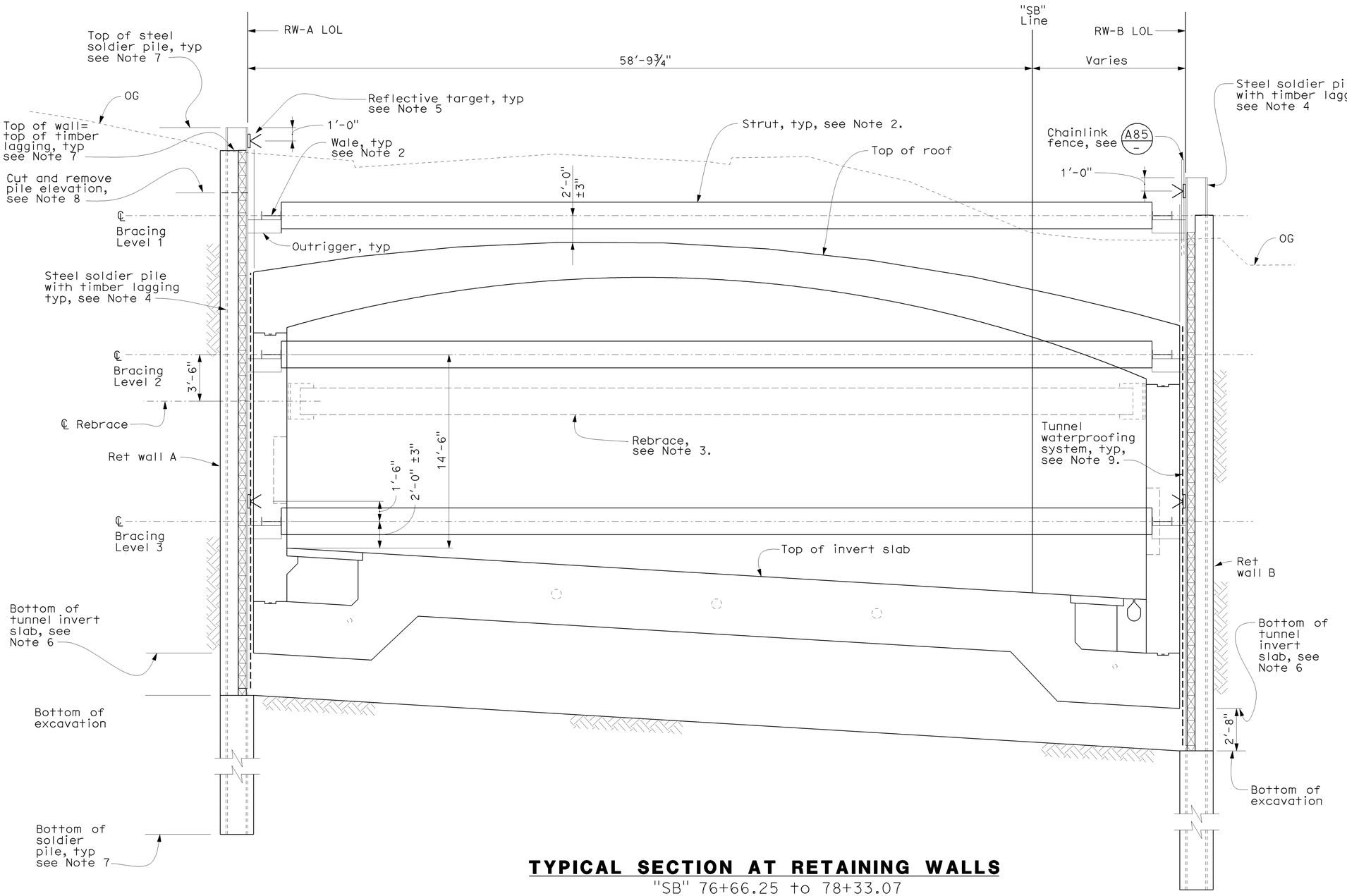

TYPICAL SECTION AT RETAINING WALLS

"SB" 76+66.25 to 78+33.07
Scale: ¼" = 1'-0"

Notes:

1. For construction sequence, see "Southbound Battery Tunnel" plans.
2. For strut and wale details, see sheet "RWAB-ST22".
3. For rebrace details, see sheet "RWAB-ST24".
4. For soldier pile and lagging details, see sheet "RWAB-ST25".
5. Reflective targets shall be placed at 24'-0" o.c. maximum along the length of the wall at the locations shown.
6. For bottom of invert slab, see "Southbound Battery Tunnel" plans.
7. For pile and lagging data, see "Soldier Pile and Lagging Schedule" on sheets "RWAB-ST30" through "RWAB-ST35".
8. Cut pile and remove upper portion and lagging during tunnel backfilling work, see "Soldier Pile Schedule" on sheets "RWAB-ST30" through "RWAB-ST35" for elevation.
9. For tunnel waterproofing system, see "Southbound Battery Tunnel" plans.

RWAB-ST17

	BY	CHECKED
DESIGN		M. YUCEKUL
DETAILS		M. YUCEKUL
QUANTITIES		J. YANG

PREPARED FOR THE STATE OF CALIFORNIA DEPARTMENT OF TRANSPORTATION

PROJECT ENGINEER

BRIDGE NO. 34-0161RL
POST MILES

RETAINING WALL A & B
TYPICAL SECTION NO. 2

DESIGN DETAIL SHEET (ENGLISH) (REV. 06-01-09)

ORIGINAL SCALE IN INCHES FOR REDUCED PLANS 0 1 2 3

CU 04
EA 163741

DISREGARD PRINTS BEARING EARLIER REVISION DATES →

REVISION DATES (PRELIMINARY STAGE ONLY): 06/05/09 | 07/15/09 | 08/07/09 | 08/28/09 | 09/11/09

SHEET 17 OF 37

FILE => 34-0161rl-ab-st017.dgn

DATE PLOTTED => 12-DEC-2009 TIME PLOTTED => 07:32
USERNAME => frrene

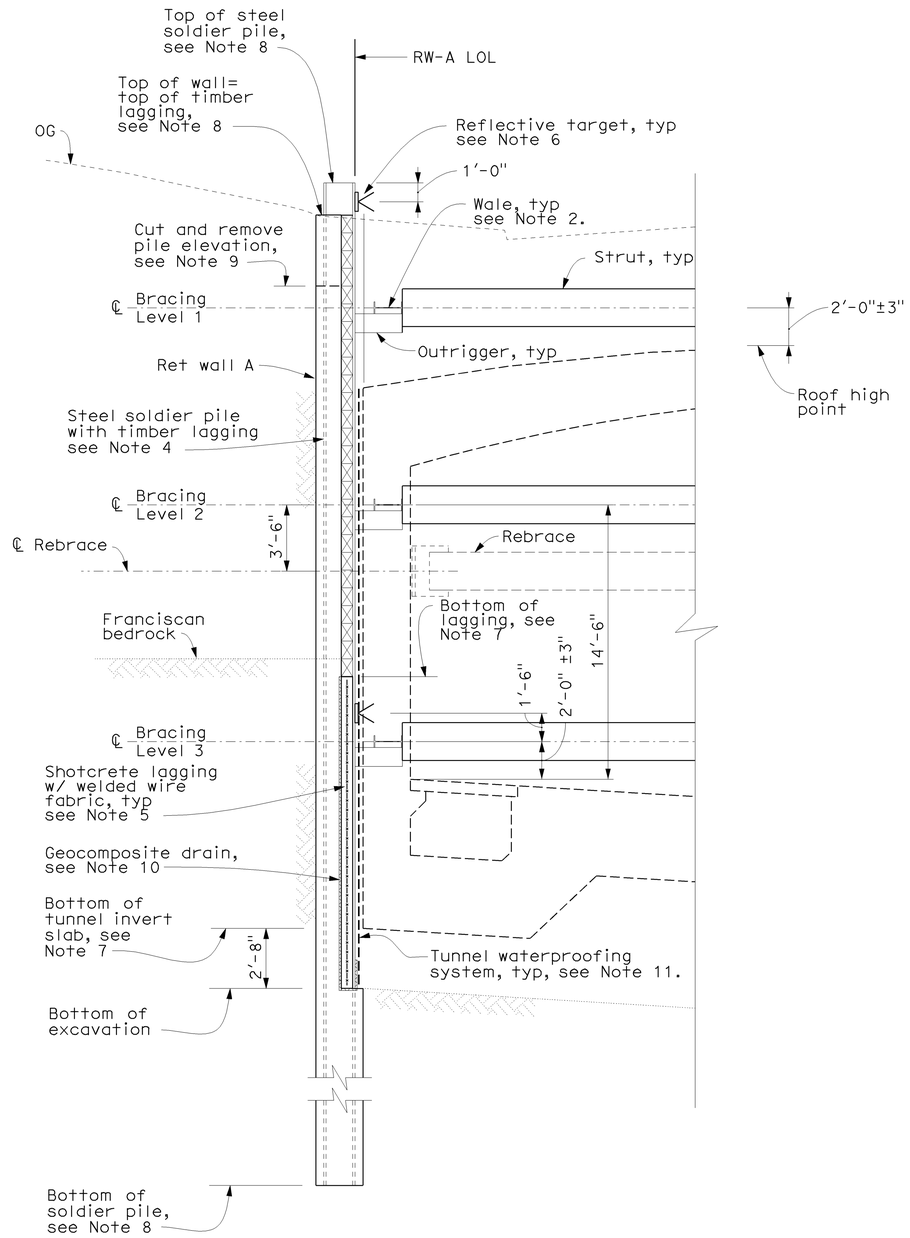

PART. TYPICAL SECTION AT RW-A

"SB" 78+98.72 to 79+94.10

Scale: 1/4" = 1'-0"

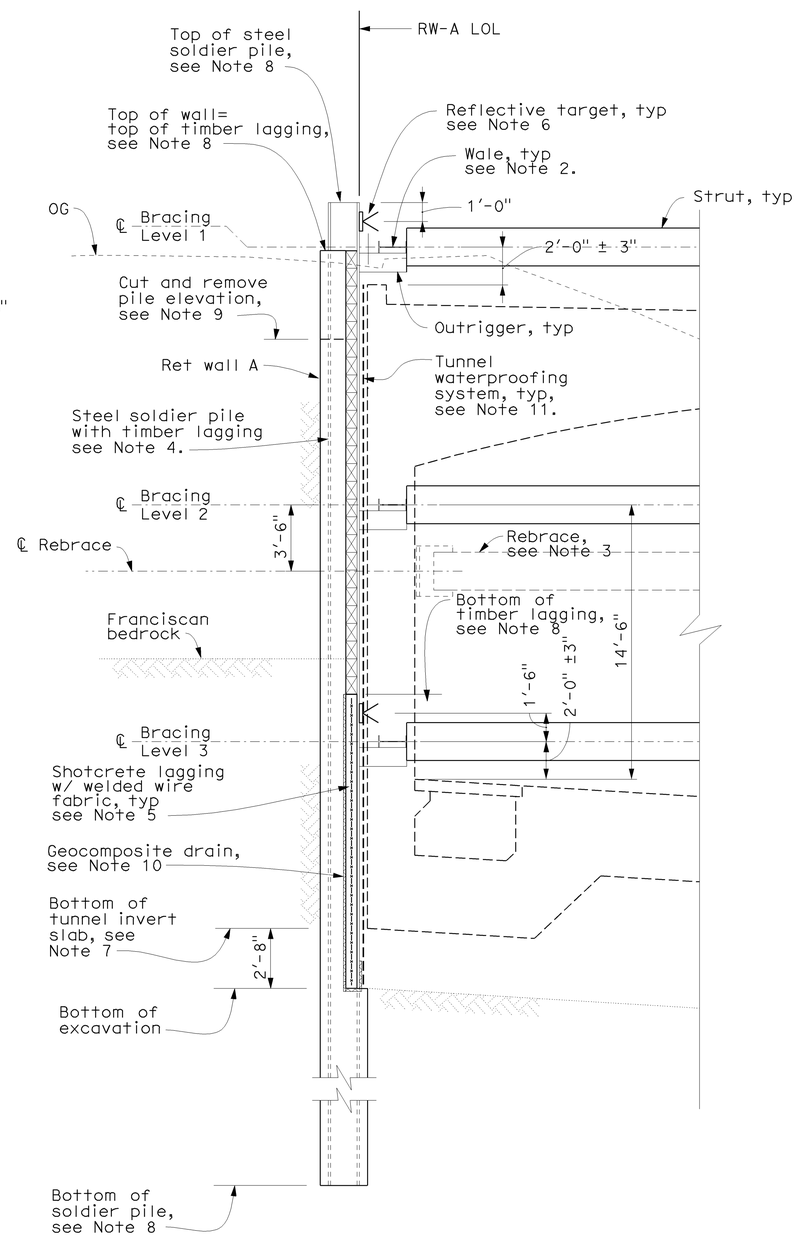

PART. TYPICAL SECTION AT RW-A

"SB" 79+99.85 to 80+64.32

Scale: 1/4" = 1'-0"

DIST	COUNTY	ROUTE	POST MILES TOTAL PROJECT	SHEET No	TOTAL SHEETS
04	SF	101	8.2/9.2	526	654

REGISTERED CIVIL ENGINEER — DATE 10/30/09

KEVIN BARRY CLINCH No. C-48926 Exp. 9/30/10 CIVIL — REGISTERED PROFESSIONAL ENGINEER — STATE OF CALIFORNIA

12-14-09
PLANS APPROVAL DATE

The State of California or its officers or agents shall not be responsible for the accuracy or completeness of scanned copies of this plan sheet.

Arup PB Joint Venture
560 Mission Street, Suite 700
San Francisco, CA 94105

Notes:

1. For construction sequence, see "Southbound Battery Tunnel" plans.
2. For strut and wale details, see sheet "RWAB-ST22".
3. For rebrace details, see sheet "RWAB-ST24".
4. For soldier pile and lagging details, see sheet "RWAB-ST25".
5. For shotcrete lagging details, see sheet "RWAB-ST26".
6. Reflective targets shall be placed at 24'-0" o.c. maximum along the length of the wall at the locations shown.
7. For bottom of invert slab, see "Southbound Battery Tunnel" plans.
8. For pile and lagging data, see "Soldier Pile Schedule and Lagging Panel Schedule" on sheets "RWAB-ST30" thru "RWAB-ST35".
9. Cut pile and remove upper portion and lagging during tunnel backfilling work. See "Soldier Pile Schedule" on sheets "RWAB-ST30" thru "RWAB-ST35" for elevations.
10. For details of geocomposite drain, see sheet "RWAB-ST26".
11. For tunnel waterproofing system, see "Southbound Battery Tunnel" plans.

RWAB-ST18

DESIGN	BY K. CLINCH	CHECKED M. YUCEKUL	PREPARED FOR THE STATE OF CALIFORNIA DEPARTMENT OF TRANSPORTATION	QIYU LIU, PROJECT ENGINEER	BRIDGE NO. 34-0161L; POST MILES 9.0/9.2
DETAILS	BY E. SUDHAUSEN	CHECKED M. YUCEKUL			
QUANTITIES	BY N. VIVAR	CHECKED J. YANG			

RETAINING WALL A & B

TYPICAL SECTION NO.3

DESIGN DETAIL SHEET (ENGLISH) (REV. 06-01-09)

ORIGINAL SCALE IN INCHES FOR REDUCED PLANS 0 1 2 3

CU 04
EA 163741

DISREGARD PRINTS BEARING EARLIER REVISION DATES →

REVISION DATES (PRELIMINARY STAGE ONLY): 06/05/09 | 07/31/09 | 08/05/09 | 08/06/09 | 09/01/09 | 10/30/09

SHEET 18 OF 37

FILE => 34-0161r1-ab-st018.dgn

USERNAME => trmguye DATE PLOTTED => 11-DEC-2009 TIME PLOTTED => 12:14

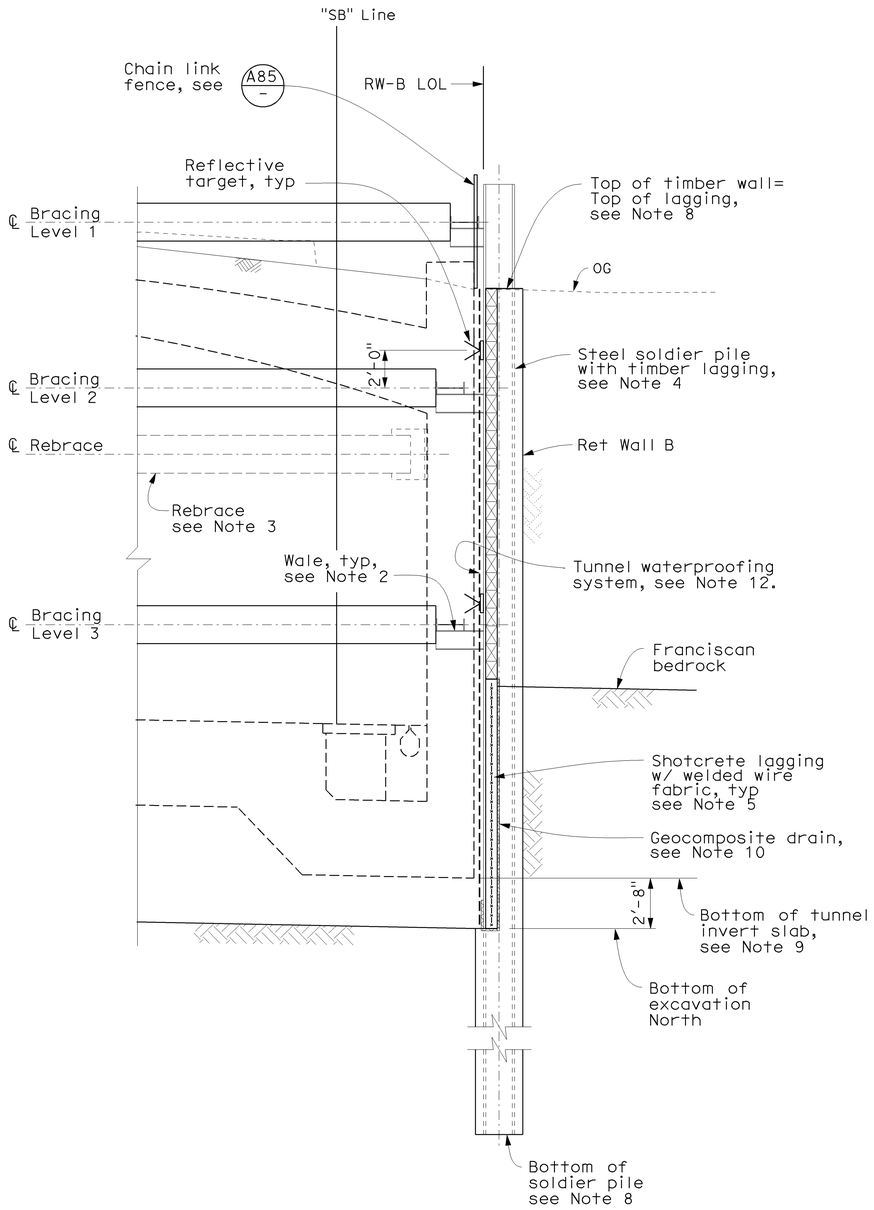

PART. TYPICAL SECTION AT RW-B

"SB" 78+27.32 to 80+30.30

Scale: 1/4" = 1'-0"

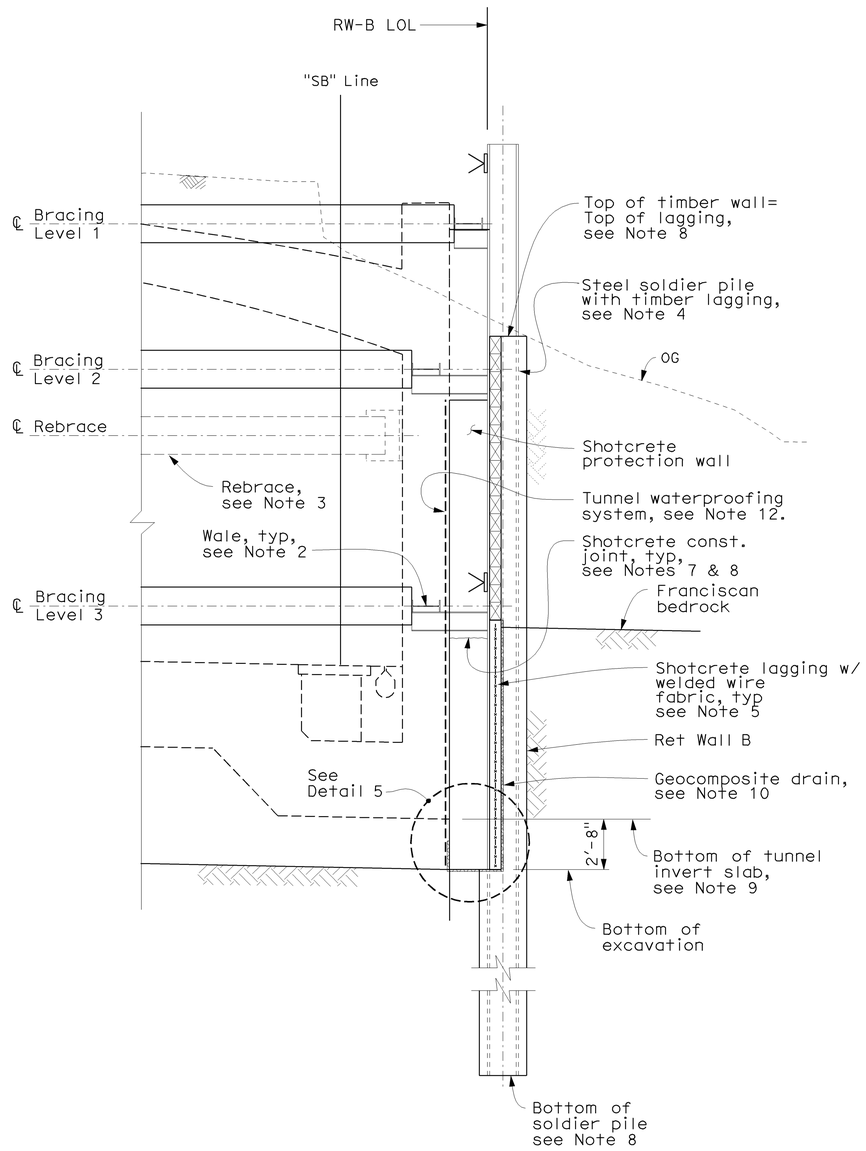

PART. TYPICAL SECTION AT RW-B

"SB" 80+34.36 to 81+78.38

Scale: 1/4" = 1'-0"

DIST	COUNTY	ROUTE	POST MILES TOTAL PROJECT	SHEET No	TOTAL SHEETS
04	SF	101	8.2/9.2	527	654

REGISTERED CIVIL ENGINEER — DATE 9/11/09

12-14-09
PLANS APPROVAL DATE

REGISTERED PROFESSIONAL ENGINEER — KEVIN BARRY CLINCH — No. C-48926 — Exp. 9/30/10 — CIVIL — STATE OF CALIFORNIA

The State of California or its officers or agents shall not be responsible for the accuracy or completeness of scanned copies of this plan sheet.

Arup PB Joint Venture
560 Mission Street, Suite 700
San Francisco, CA 94105

Notes:

1. For construction sequence, see "Southbound Battery Tunnel" plans.
2. For strut and wale details, see sheet "RWAB-ST22".
3. For rebrace details, see sheet "RWAB-ST24".
4. For soldier pile and lagging details, see sheet "RWAB-ST25".
5. For shotcrete lagging details, see sheet "RWAB-ST26".
6. Reflective targets shall be placed at 24'-0" o.c. maximum along the length of the wall at the locations shown.
7. Shotcrete shall be placed in lifts that correspond to strut removal sequence.
8. For pile lagging data, see "Soldier Pile Schedule" and "Lagging Panel Schedule" on sheets "RWAB-ST30" thru "RWAB-ST35".
9. For bottom of invert slab, see "Southbound Battery Tunnel" plans.
10. For details of geocomposite drain, see sheet "RWAB-ST26".
11. For "Detail 5" see sheet "RWAB-ST26".
12. For tunnel waterproofing system, see "Southbound Battery Tunnel" plans.

RWAB-ST19

DESIGN	BY K. CLINCH	CHECKED M. YUCEKUL	PREPARED FOR THE STATE OF CALIFORNIA DEPARTMENT OF TRANSPORTATION	QIYU LIU PROJECT ENGINEER	BRIDGE NO. 34-0161RL	RETAINING WALL A & B	
DETAILS	BY E. SUDHAUSEN	CHECKED M. YUCEKUL			POST MILES 9.0/9.2	TYPICAL SECTION NO.4	
QUANTITIES	BY N. VIVAR	CHECKED J. YANG					

DESIGN DETAIL SHEET (ENGLISH) (REV. 06-01-09)

ORIGINAL SCALE IN INCHES FOR REDUCED PLANS 0 1 2 3

CU 04
EA 163741

DISREGARD PRINTS BEARING EARLIER REVISION DATES →

REVISION DATES (PRELIMINARY STAGE ONLY): 06/26/09 | 07/17/09 | 08/07/09 | 08/28/09 | 09/11/09

SHEET 19 OF 37

FILE => 34-0161rl-ab-st019.dgn

USERNAME => trmnguye DATE PLOTTED => 11-DEC-2009 TIME PLOTTED => 12:14

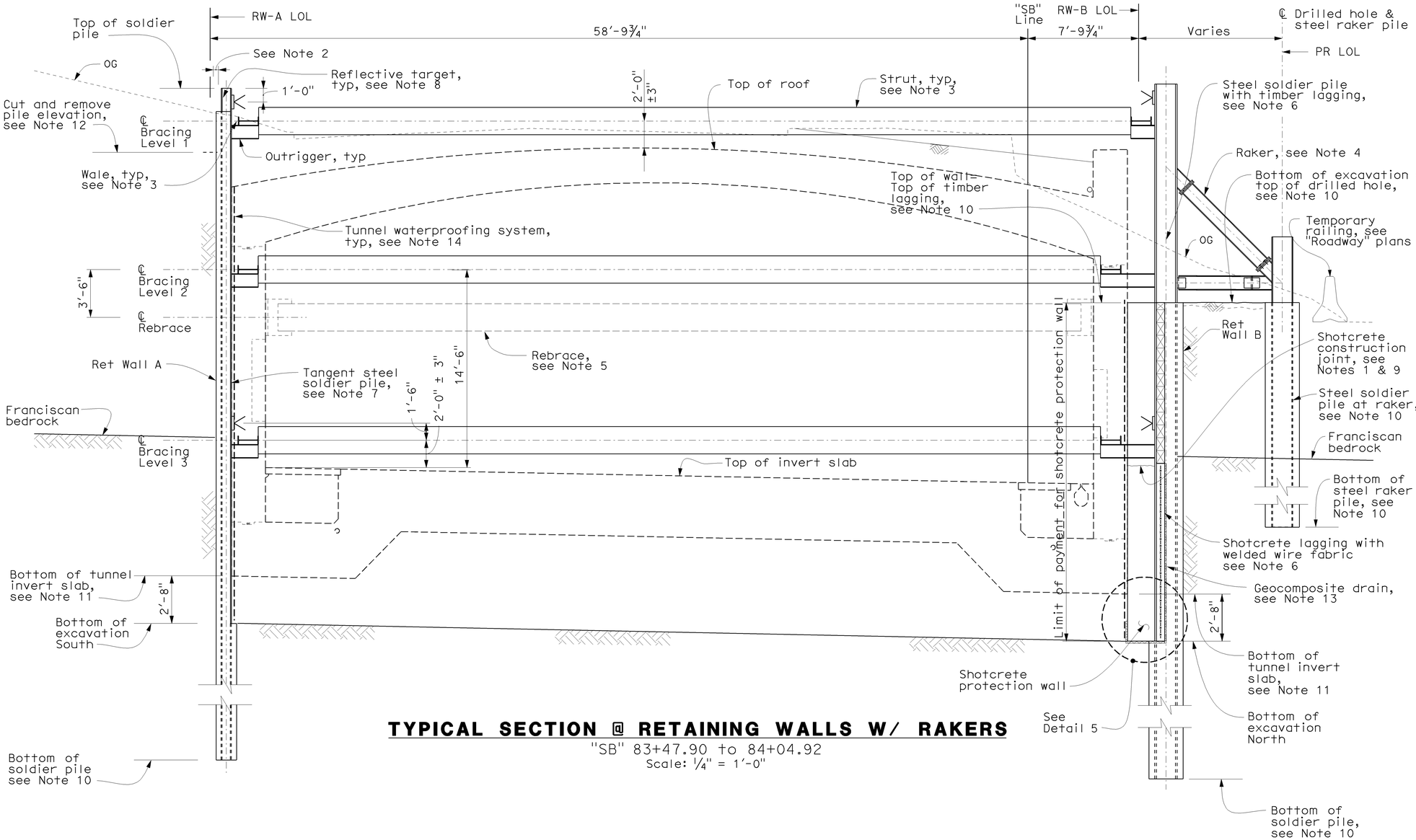

TYPICAL SECTION @ RETAINING WALLS W/ RAKERS

"SB" 83+47.90 to 84+04.92

Scale: ¼" = 1'-0"

DIST	COUNTY	ROUTE	POST MILES TOTAL PROJECT	SHEET No	TOTAL SHEETS
04	SF	101	8.2/9.2	528	654

REGISTERED CIVIL ENGINEER — DATE 9/11/09

12-14-09
PLANS APPROVAL DATE

REGISTERED PROFESSIONAL ENGINEER — KEVIN BARRY CLINCH — No. C-48926 — Exp. 9/30/10 — CIVIL — STATE OF CALIFORNIA

The State of California or its officers or agents shall not be responsible for the accuracy or completeness of scanned copies of this plan sheet.

Arup PB Joint Venture
560 Mission Street, Suite 700
San Francisco, CA 94105

Notes:

1. For construction sequence, see "Southbound Battery Tunnel" plans.
2. For drilled hole tolerances at tangent steel soldier piles, see sheet "RWAB-ST27".
3. For strut and wale details, see sheet "RWAB-ST22".
4. For raker details, see sheet "RWAB-ST23".
5. For rebrace details, see sheet "RWAB-ST24".
6. For shotcrete lagging details, see sheet "RWAB-ST26".
7. For tangent steel soldier pile details, see sheet "RWAB-ST27".
8. Reflective targets shall be placed at 24'-0" o.c. maximum along the length of the wall at the locations shown.
9. Shotcrete shall be placed in lifts that correspond to strut removal sequence.
10. For pile and lagging data, see "Soldier Pile Schedule", "Soldier Pile at Raker Schedule" and "Lagging Panel Schedule" on sheets RWAB-ST30" thru "RWAB-ST35".
11. For bottom of tunnel invert slab, see "Southbound Battery Tunnel" plans.
12. Cut pile and remove upper portion of pile and lagging during tunnel backfilling work. See "Soldier Pile Schedule" on sheets "RWAB-ST30" thru "RWAB-ST35" for elevations.
13. For details of geocomposite drain, see sheet "RWAB-ST26".
14. For tunnel waterproofing system, see "Southbound Battery Tunnel" plans.
15. For "Detail 5" see sheet "RWAB-ST26".

RWAB-ST20

DESIGN	K. CLINCH	M. YUCEKUL	PREPARED FOR THE STATE OF CALIFORNIA DEPARTMENT OF TRANSPORTATION	QIYU LIU, PROJECT ENGINEER	BRIDGE NO. 34-0161RL
DETAILS	E. SUDHAUSEN	M. YUCEKUL			POST MILES 9.0/9.2
QUANTITIES	N. VIVAR	J. YANG		CU 04 EA 163741	

RETAINING WALL A & B
TYPICAL SECTION NO.5

DESIGN DETAIL SHEET (ENGLISH) (REV. 06-01-09)

ORIGINAL SCALE IN INCHES FOR REDUCED PLANS 0 1 2 3

DISREGARD PRINTS BEARING EARLIER REVISION DATES →

REVISION DATES (PRELIMINARY STAGE ONLY): 06/01/09 | 07/01/09 | 08/01/09 | 08/28/09 | 09/11/09

SHEET 20 OF 37

USERNAME => trmguye DATE PLOTTED => 11-DEC-2009 TIME PLOTTED => 12:14

FILE => 34-0161rl-ab-st020.dgn

DIST	COUNTY	ROUTE	POST MILES TOTAL PROJECT	SHEET No	TOTAL SHEETS
04	SF	101	8.2/9.2	529	654

REGISTERED CIVIL ENGINEER — 10/30/09 DATE

12-14-09
PLANS APPROVAL DATE

REGISTERED PROFESSIONAL ENGINEER — KEVIN BARRY CLINCH — No. C-48926 — Exp. 9/30/10 — CIVIL — STATE OF CALIFORNIA

The State of California or its officers or agents shall not be responsible for the accuracy or completeness of scanned copies of this plan sheet.

Arup PB Joint Venture
560 Mission Street, Suite 700
San Francisco, CA 94105

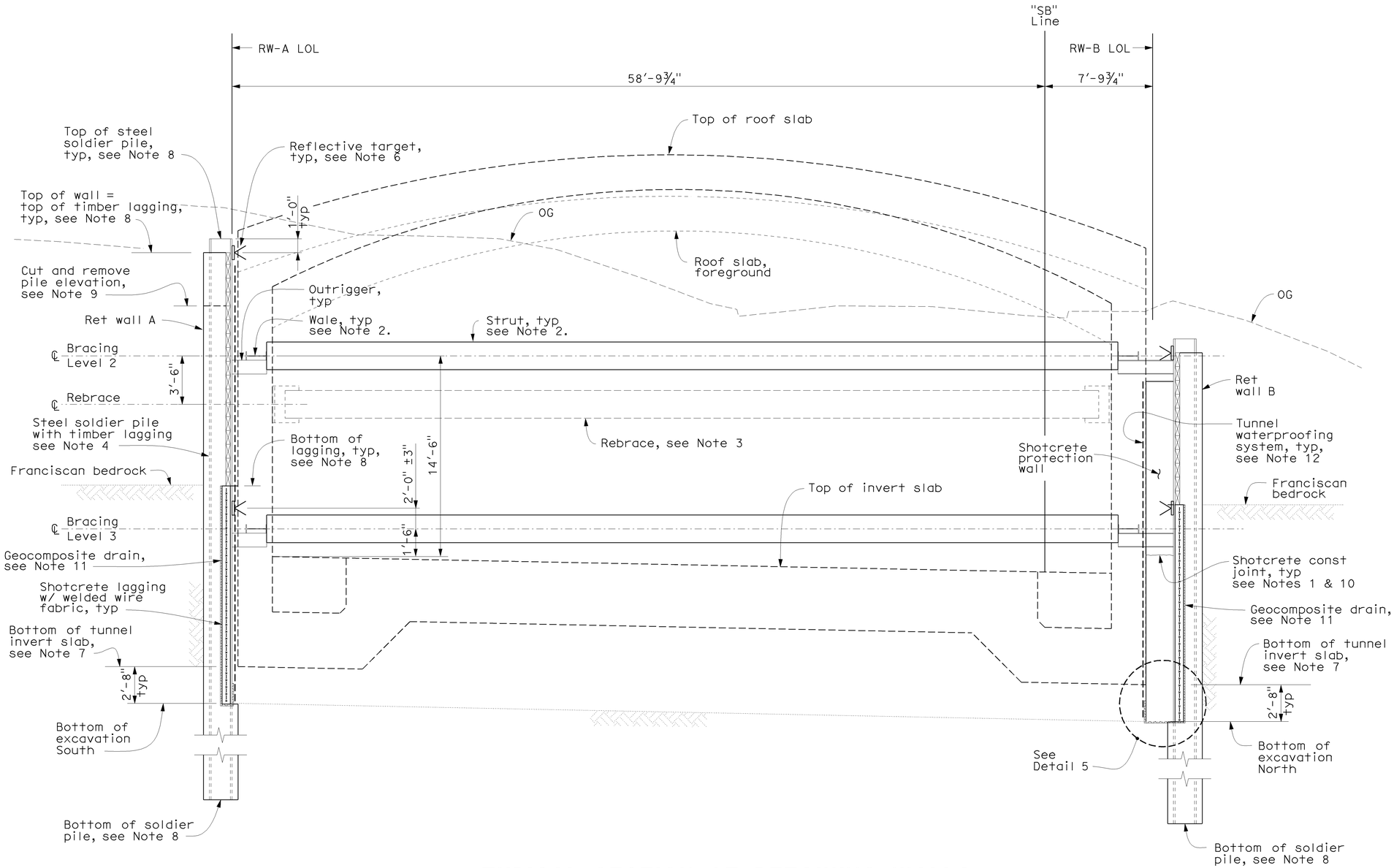

TYPICAL SECTION AT RETAINING WALLS

"SB" 84+78.32 to 85+68.32
Scale: ¼" = 1'-0"

Notes:

1. For construction sequence, see "Southbound Battery Tunnel" plans.
2. For strut and wale details, see sheet "RWAB-ST22".
3. For rebrace details, see sheet "RWAB-ST24".
4. For soldier pile and lagging details, see sheet "RWAB-ST25".
5. For shotcrete lagging details, see sheet "RWAB-ST26".
6. Reflective targets shall be placed at 24'-0" o.c. maximum along the length of the wall at the locations shown.
7. For bottom of invert slab, see "Southbound Battery Tunnel" plans.
8. For pile and lagging data, see "Soldier Pile Schedule" and "Lagging Panel Schedule" on sheets "RWAB-ST30" thru "RWAB-ST35".
9. Cut pile and remove upper portion and lagging during tunnel backfilling work. See "Soldier Pile Schedule" on sheets "RWAB-ST30" thru "RWAB-ST35" for elevations.
10. Shotcrete shall be placed in lifts that correspond to strut removal sequence.
11. For details of geocomposite drain, see sheet "RWAB-ST26".
12. For tunnel waterproofing system, see "Southbound Battery Tunnel" plans.
13. For "Detail 5", see sheet "RWAB-ST26".

RWAB-ST21

DESIGN	BY K. CLINCH	CHECKED M. YUCEKUL	PREPARED FOR THE STATE OF CALIFORNIA DEPARTMENT OF TRANSPORTATION	QIYU LIU, PROJECT ENGINEER	BRIDGE NO. 34-0161L; POST MILES 9.0/9.2
DETAILS	BY E. SUDHAUSEN	CHECKED M. YUCEKUL			
QUANTITIES	BY N. VIVAR	CHECKED J. YANG			

RETAINING WALL A & B
TYPICAL SECTION NO.6

DESIGN DETAIL SHEET (ENGLISH) (REV. 06-01-09)
ORIGINAL SCALE IN INCHES FOR REDUCED PLANS 0 1 2 3
CU 04 EA 163741
DISREGARD PRINTS BEARING EARLIER REVISION DATES
REVISION DATES (PRELIMINARY STAGE ONLY): 06/01/09 | 07/01/09 | 08/01/09 | 08/31/09 | 09/01/09 | 10/30/09
SHEET 21 OF 37

FILE => 34-0161r1-ab-st021.dgn
USERNAME = trmnguye DATE PLOTTED => 11-DEC-2009 TIME PLOTTED => 12:14

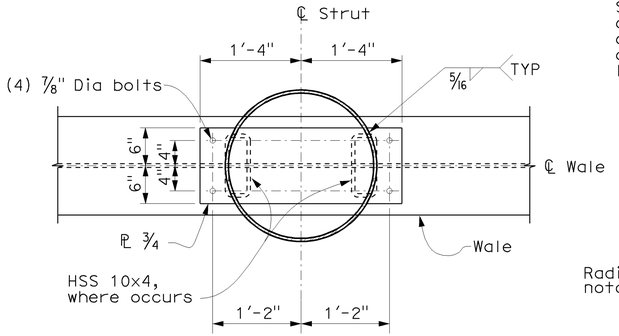

SECTION A-A

Scale: 1" = 1'-0"

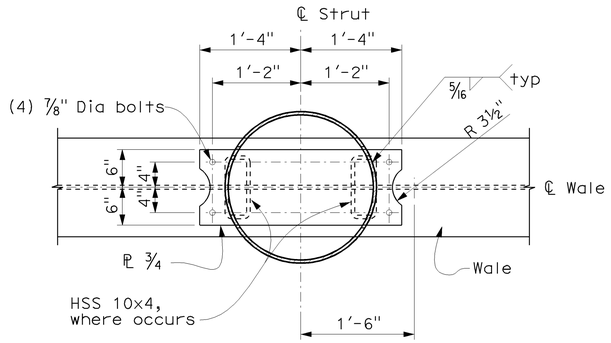

SECTION B-B

Scale: 1" = 1'-0"

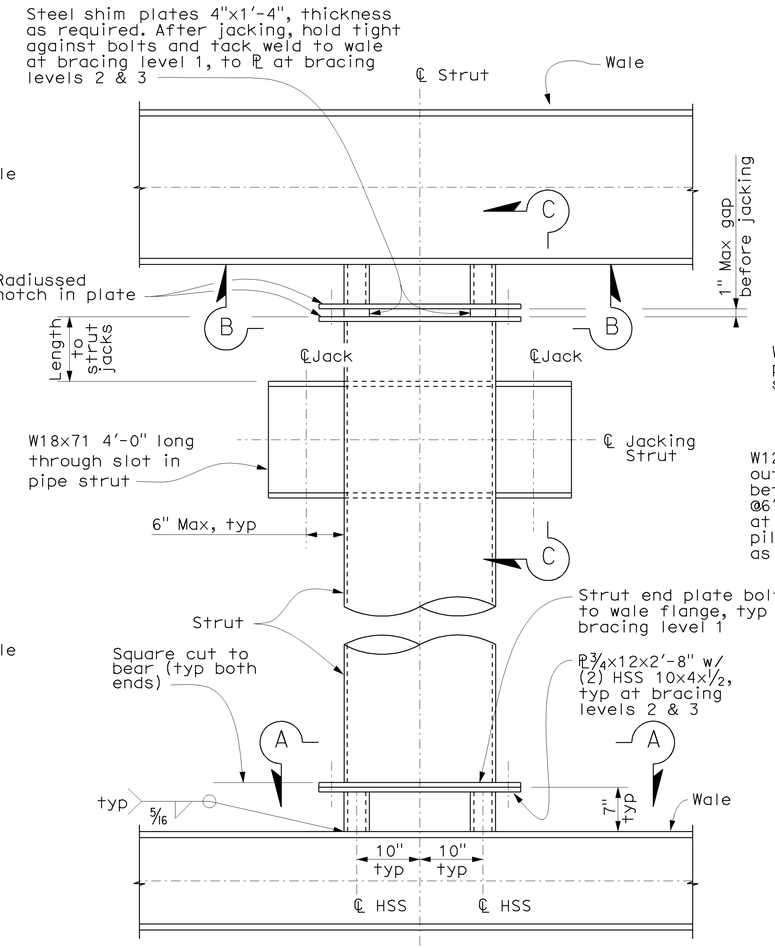

TYPICAL STRUT TO WALE CONNECTION

Scale: 1" = 1'-0"

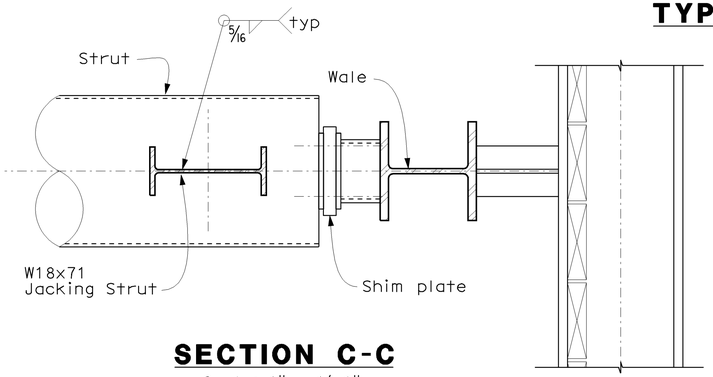

SECTION C-C

Scale: 1" = 1'-0"

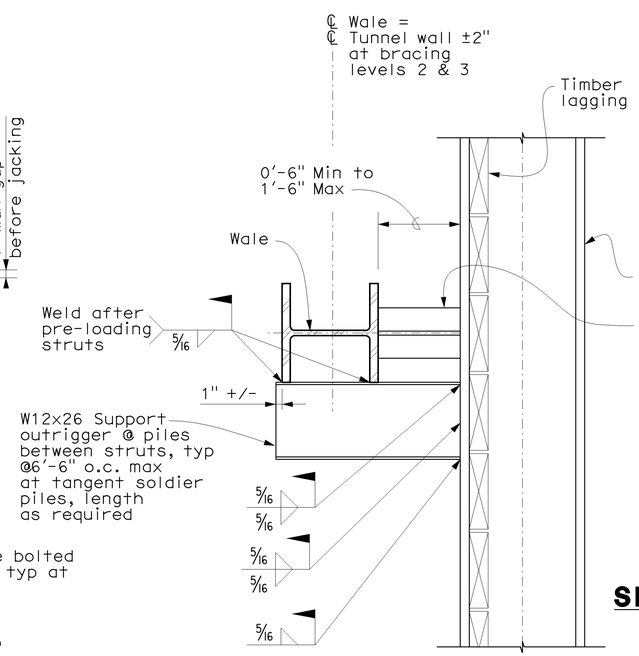

WALE SUPPORT DETAIL

Scale: 1" = 1'-0"

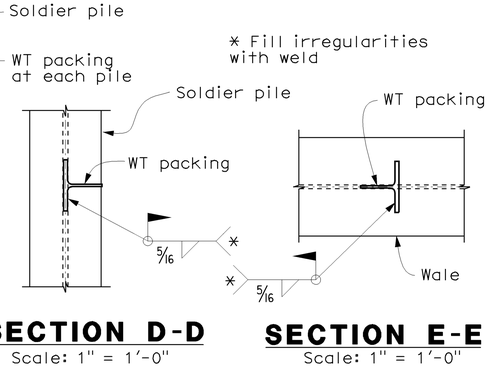

SECTION D-D

Scale: 1" = 1'-0"

SECTION E-E

Scale: 1" = 1'-0"

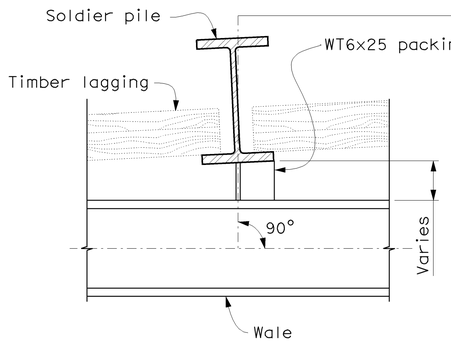

CURVED CONDITION

Scale: 1" = 1'-0"

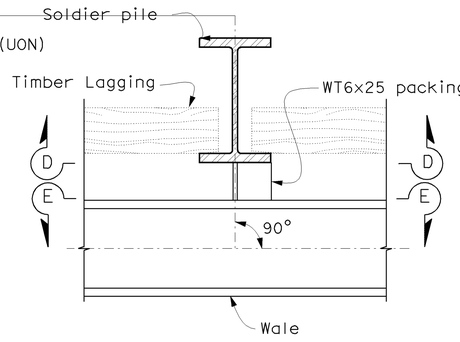

STRAIGHT CONDITION

Scale: 1" = 1'-0"

NOTES ON PACKING

1. WT to be cut for full bearing at pile and wale
2. Align WT flange with web of soldier pile
3. Align WT stem with web of wale
4. Prior to placing waterproofing system at tunnel wall, remove WT and grind smooth

NOTES ON WALE SUPPORT

1. Prior to placing waterproofing system at tunnel wall, remove outrigger and grind smooth.
2. End of wale to be 6" minimum past ℄ of outrigger.

DIST	COUNTY	ROUTE	POST MILES TOTAL PROJECT	SHEET No	TOTAL SHEETS
04	SF	101	8.2/9.2	530	654

REGISTERED CIVIL ENGINEER — 8/28/09 DATE

12-14-09
PLANS APPROVAL DATE

REGISTERED PROFESSIONAL ENGINEER — KEVIN BARRY CLINCH — No. C-48926 — Exp. 9/30/10 — CIVIL — STATE OF CALIFORNIA

The State of California or its officers or agents shall not be responsible for the accuracy or completeness of scanned copies of this plan sheet.

Arup PB Joint Venture
560 Mission Street, Suite 700
San Francisco, CA 94105

RWAB-ST22

DESIGN	BY K. CLINCH	CHECKED M. YUCEKUL	PREPARED FOR THE STATE OF CALIFORNIA DEPARTMENT OF TRANSPORTATION	QIYU LIU, PROJECT ENGINEER	BRIDGE NO. 34-0161RL; POST MILES 9.0/9.2
DETAILS	BY P. A. TONKIN	CHECKED M. YUCEKUL			
QUANTITIES	BY N. VIVAR	CHECKED J. YANG			

RETAINING WALL A & B
WALL DETAILS NO.1

DESIGN DETAIL SHEET (ENGLISH) (REV. 06-01-09)

ORIGINAL SCALE IN INCHES FOR REDUCED PLANS 0 1 2 3

CU 04
EA 163741

DISREGARD PRINTS BEARING EARLIER REVISION DATES →

REVISION DATES (PRELIMINARY STAGE ONLY): 06/05/09 | 07/10/09 | 08/05/09 | 08/26/09

SHEET 22 OF 37

FILE => 34-0161rl-ab-st022.dgn

USERNAME => trmgoye DATE PLOTTED => 11-DEC-2009 TIME PLOTTED => 12:14

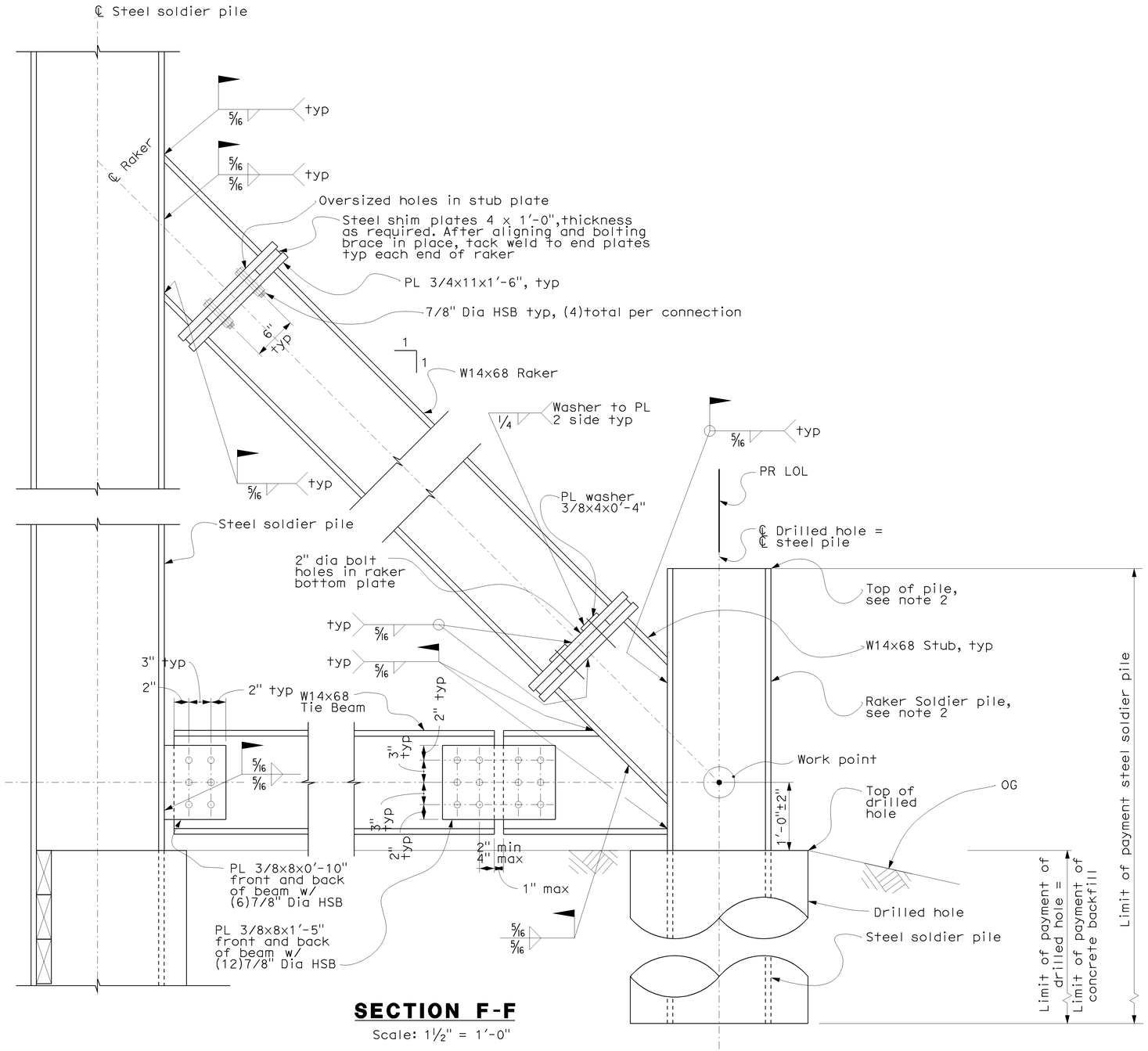

SECTION F-F

Scale: 1½" = 1'-0"

DIST	COUNTY	ROUTE	POST MILES TOTAL PROJECT	SHEET No	TOTAL SHEETS
04	SF	101	8.2/9.2	531	654

REGISTERED CIVIL ENGINEER — DATE 8/28/09

12-14-09
PLANS APPROVAL DATE

REGISTERED PROFESSIONAL ENGINEER — KEVIN BARRY CLINCH — No. C-48926 — Exp. 9/30/10 — CIVIL — STATE OF CALIFORNIA

The State of California or its officers or agents shall not be responsible for the accuracy or completeness of scanned copies of this plan sheet.

Arup PB Joint Venture
560 Mission Street, Suite 700
San Francisco, CA 94105

Notes:

1. For strut and wale details, see sheet "RWAB-ST22".
2. For "Raker Pile Schedule", see sheet "RWAB-ST35".
3. For locations of "Section F-F", see sheets "RWAB-ST13" and "RWAB-ST14".

Construction Sequence:

1. Pre-load strut to 50% of the force shown on sheet "RWAB-ST6" or until the strut moves ½" horizontally, whichever comes first.
2. Install shims at jacking end of strut to hold position.
3. Install raker.
4. Pre-load strut to 100% of the force shown on sheet "RWAB-ST6".

RWAB-ST23

DESIGN	BY K. CLINCH	CHECKED M. YUCEKUL	PREPARED FOR THE STATE OF CALIFORNIA DEPARTMENT OF TRANSPORTATION	QIYU LIU, PROJECT ENGINEER	BRIDGE NO. 34-0161RL; POST MILES 9.0/9.2
DETAILS	BY E. SUDHAUSEN	CHECKED M. YUCEKUL			
QUANTITIES	BY N. VIVAR	CHECKED J. YANG			

RETAINING WALL A & B

WALL DETAILS NO.2

DESIGN DETAIL SHEET (ENGLISH) (REV. 06-01-09)

ORIGINAL SCALE IN INCHES FOR REDUCED PLANS 0 1 2 3

CU 04
EA 163741

DISREGARD PRINTS BEARING EARLIER REVISION DATES →

REVISION DATES (PRELIMINARY STAGE ONLY): 06/26/09 | 07/17/09 | 08/07/09 | 08/26/09

SHEET 23 OF 37

FILE => 34-0161r1-ab-st023.dgn

USERNAME => trmorlok DATE PLOTTED => 11-DEC-2009 TIME PLOTTED => 12:59

DIST	COUNTY	ROUTE	POST MILES TOTAL PROJECT	SHEET No	TOTAL SHEETS
04	SF	101	8.2/9.2	532	654

REGISTERED CIVIL ENGINEER — 8/28/09 DATE

12-14-09
PLANS APPROVAL DATE

REGISTERED PROFESSIONAL ENGINEER — KEVIN BARRY CLINCH — No. C-48926 — Exp. 9/30/10 — CIVIL — STATE OF CALIFORNIA

The State of California or its officers or agents shall not be responsible for the accuracy or completeness of scanned copies of this plan sheet.

Arup PB Joint Venture
560 Mission Street, Suite 700
San Francisco, CA 94105

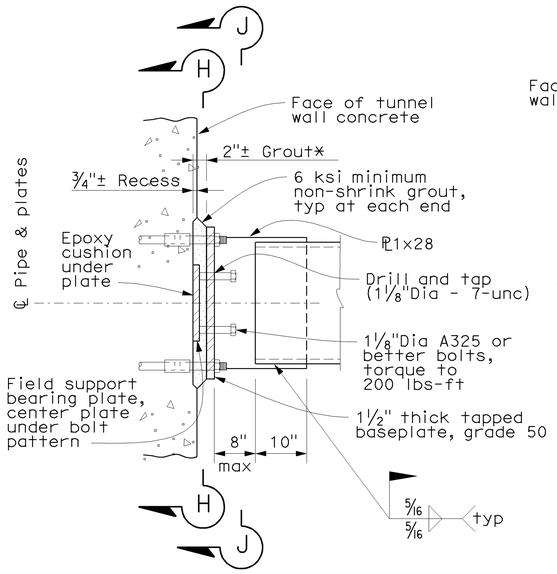

JACKED END

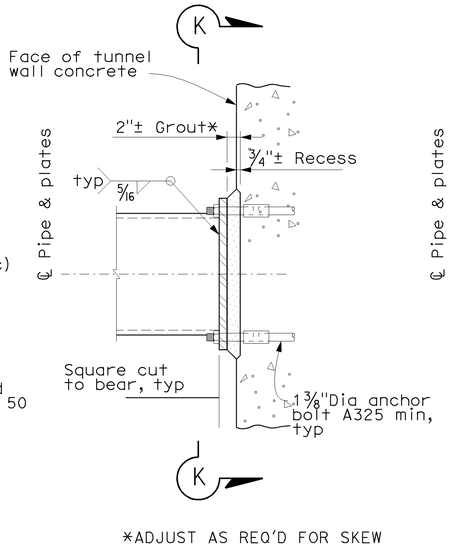

WELDED END

*ADJUST AS REQ'D FOR SKEW

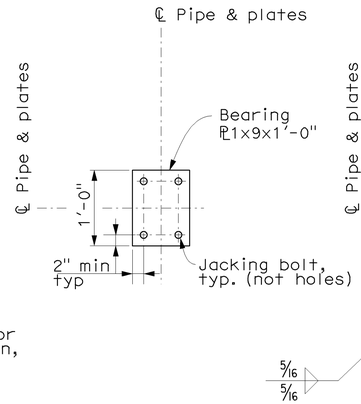

SECTION H-H
Scale: 1" = 1'-0"

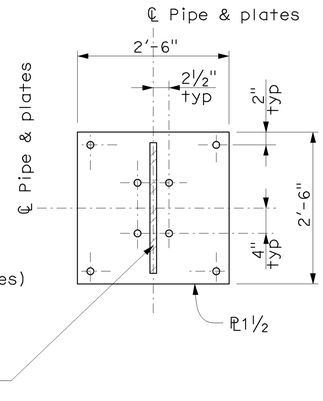

SECTION J-J
Scale: 1" = 1'-0"

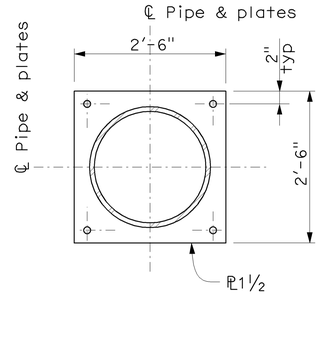

SECTION K-K
Scale: 1" = 1'-0"

INSTALLATION PROCEDURE:

1. Install strut and secure with anchor bolts at welded end.
2. Place grout pad at welded end.
3. After wall concrete and grout pad have reached 3000 psi minimum compressive strength, install bearing plate and preload strut with jacking bolts. Apply torque incrementally to ensure uniform preload. Preload both struts on same centerline simultaneously.
4. Place grout pad and secure anchor bolts at jacked end.
5. After removal of rebrace, remove bolts and patch holes with concrete.

TYPICAL REBRACE DETAIL
Scale: 1" = 1'-0"

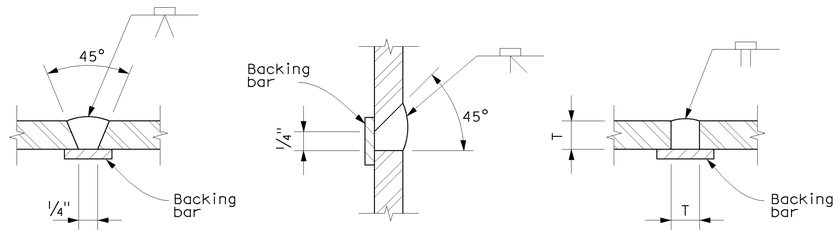

SINGLE VEE-GROOVE — SINGLE BEVEL-GROOVE — SQUARE GROOVE

PILE WELDING TYPICAL DETAIL - BUTT JOINTS

Notes:

1. Single Vee-Groove permitted for all positions.
2. Single Bevel-Groove permitted for horizontal joints only.

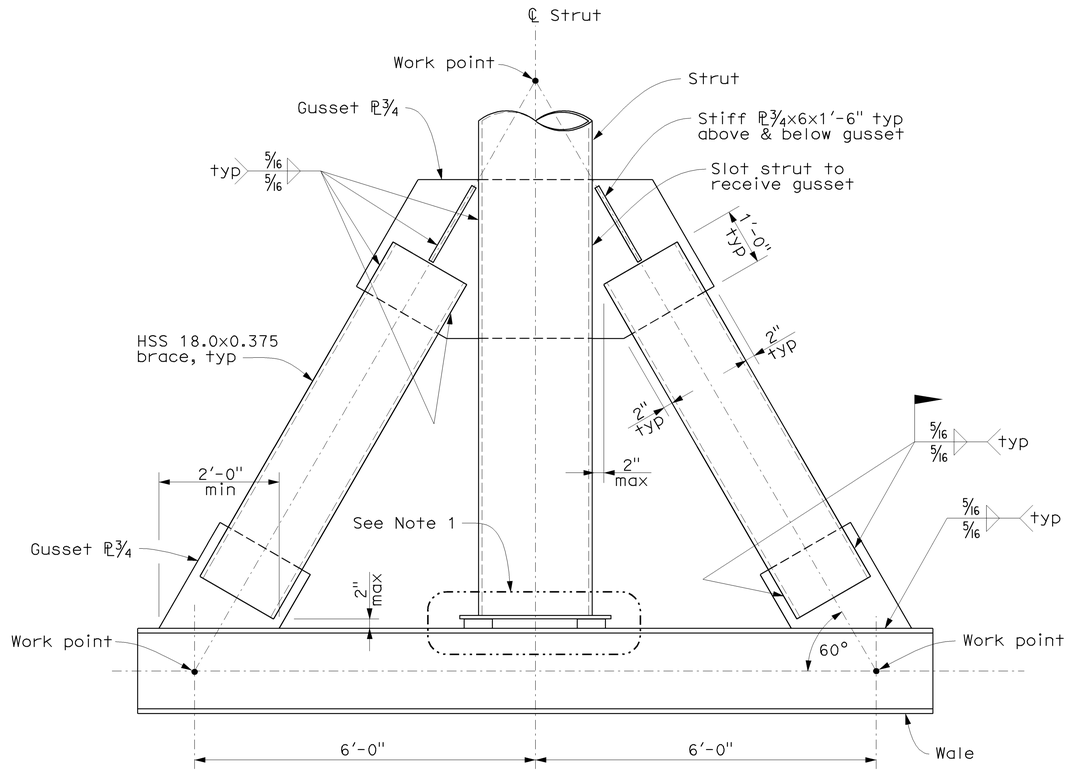

DETAIL 1
Scale: ¾" = 1'-0"

Notes:

1. For typical strut to wale connection, see sheet "RWAB-ST22".

RWAB-ST24

DESIGN	BY K. CLINCH	CHECKED M. YUCEKUL	PREPARED FOR THE STATE OF CALIFORNIA DEPARTMENT OF TRANSPORTATION	QIYU LIU, PROJECT ENGINEER	BRIDGE NO. 34-0161RL; POST MILES 9.0/9.2
DETAILS	BY T. MARTARELLA	CHECKED M. YUCEKUL			
QUANTITIES	BY N. VIVAR	CHECKED J. YANG			

RETAINING WALL A & B
WALL DETAILS NO.3

DESIGN DETAIL SHEET (ENGLISH) (REV. 06-01-09)

ORIGINAL SCALE IN INCHES FOR REDUCED PLANS 0 1 2 3

CU 04
EA 163741

DISREGARD PRINTS BEARING EARLIER REVISION DATES →

REVISION DATES (PRELIMINARY STAGE ONLY): 06/01/09 | 07/31/09 | 08/07/09 | 08/26/09

SHEET 24 OF 37

FILE => 34-0161rl-ab-st024.dgn

USERNAME = tmorlok DATE PLOTTED => 11-DEC-2009 TIME PLOTTED => 12:59

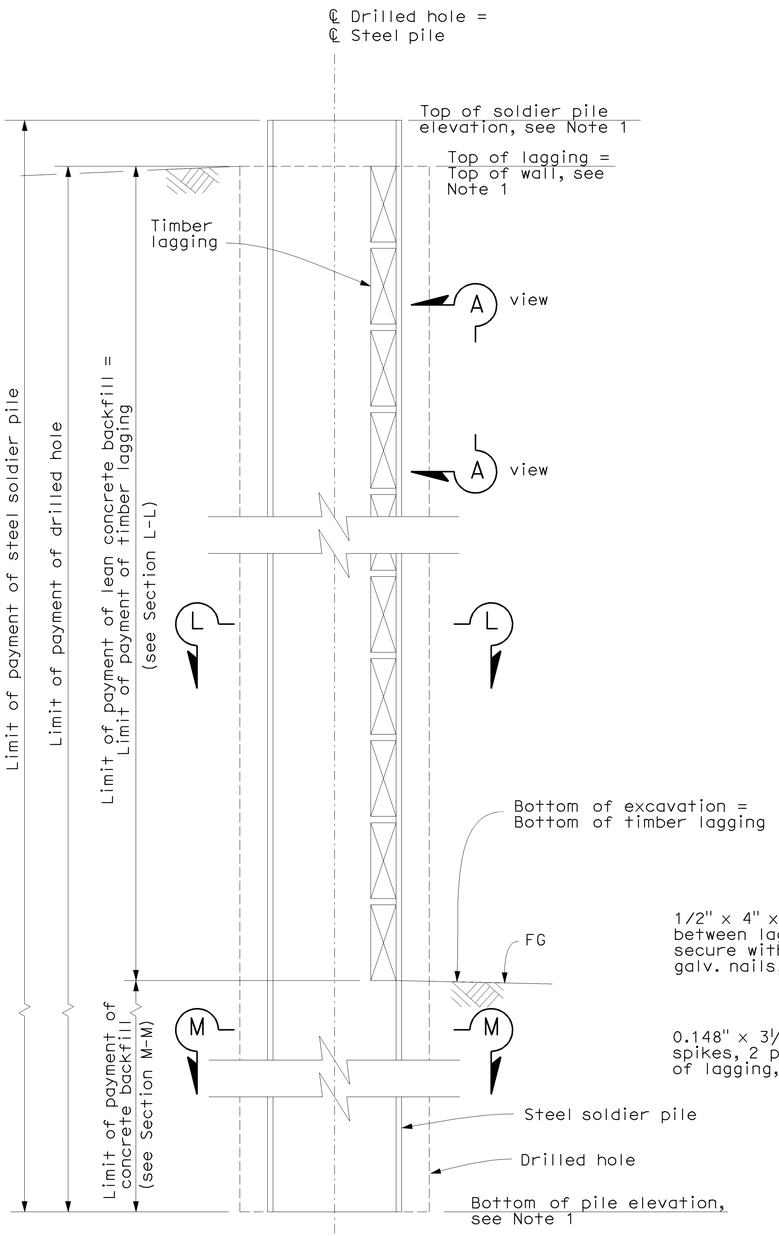

TYPICAL SECTION AT STEEL SOLDIER PILE WITH LAGGING

Scale: 1" = 1'-0"

Note:

1. For pile and lagging data, see "Soldier Pile Schedule" and "Lagging Panel Schedule" on sheets "RWAB-ST30" thru "RWAB-ST35".

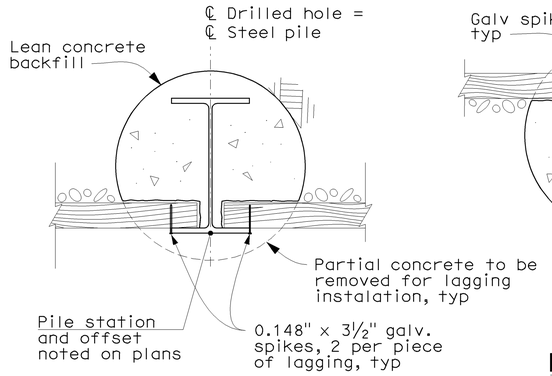

SECTION L-L

Scale: 1" = 1'-0"

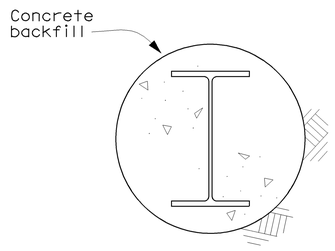

SECTION M-M

Scale: 1" = 1'-0"

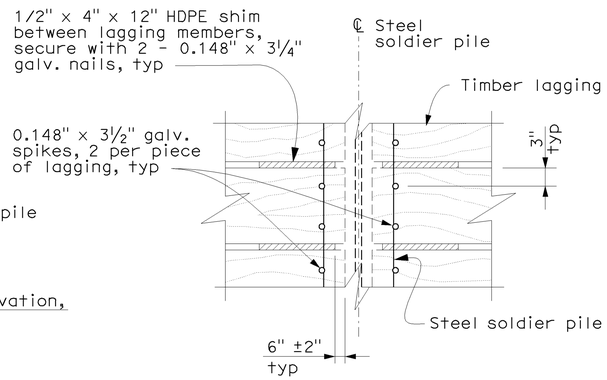

VIEW A-A

No scale

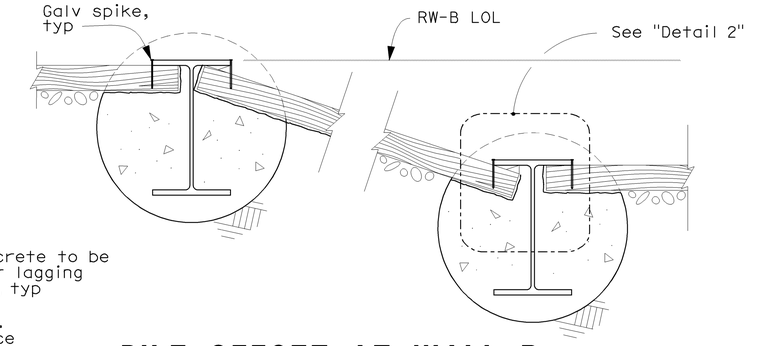

PILE OFFSET AT WALL B

Scale: 1" = 1'-0"

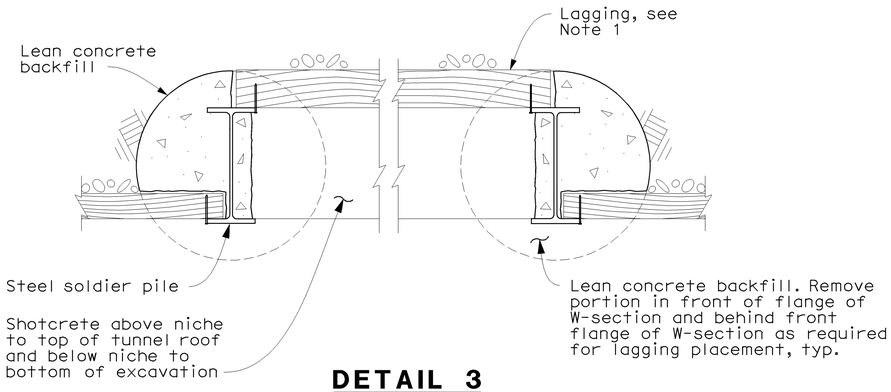

DETAIL 3

Scale: 1" = 1'-0"

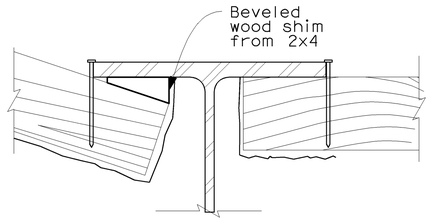

DETAIL 2

No scale

Notes:

a. No clipping of corners allowed.

b. Place lagging members parallel to the top of wall.

c. Spikes shall not be bent.

LAGGING DETAILS

No Scale

DIST	COUNTY	ROUTE	POST MILES TOTAL PROJECT	SHEET No	TOTAL SHEETS
04	SF	101	8.2/9.2	533	654

REGISTERED CIVIL ENGINEER — 8/28/09 DATE

12-14-09
PLANS APPROVAL DATE

REGISTERED PROFESSIONAL ENGINEER — KEVIN BARRY CLINCH — No. C-48926 — Exp. 9/30/10 — CIVIL — STATE OF CALIFORNIA

The State of California or its officers or agents shall not be responsible for the accuracy or completeness of scanned copies of this plan sheet.

Arup PB Joint Venture
560 Mission Street, Suite 700
San Francisco, CA 94105

RWAB-ST25

DESIGN	BY K. CLINCH	CHECKED M. YUCEKUL	PREPARED FOR THE STATE OF CALIFORNIA DEPARTMENT OF TRANSPORTATION	QIYU LIU PROJECT ENGINEER	BRIDGE NO. 34-0161RL
DETAILS	BY T. MARTARELLA	CHECKED M. YUCEKUL			POST MILES 9.0/9.2
QUANTITIES	BY N. VIVAR	CHECKED J. YANG		CU 04 EA 163741	

RETAINING WALL A & B
WALL DETAILS NO.4

DESIGN DETAIL SHEET (ENGLISH) (REV. 06-01-09)

ORIGINAL SCALE IN INCHES FOR REDUCED PLANS 0 1 2 3

DISREGARD PRINTS BEARING EARLIER REVISION DATES

REVISION DATES (PRELIMINARY STAGE ONLY): 06/05/09 | 07/17/09 | 08/05/09 | 08/26/09

SHEET 25 OF 37

FILE => 34-0161rl-ab-st025.dgn

USERNAME => >tmorton DATE PLOTTED => 11-DEC-2009 TIME PLOTTED => 12:59

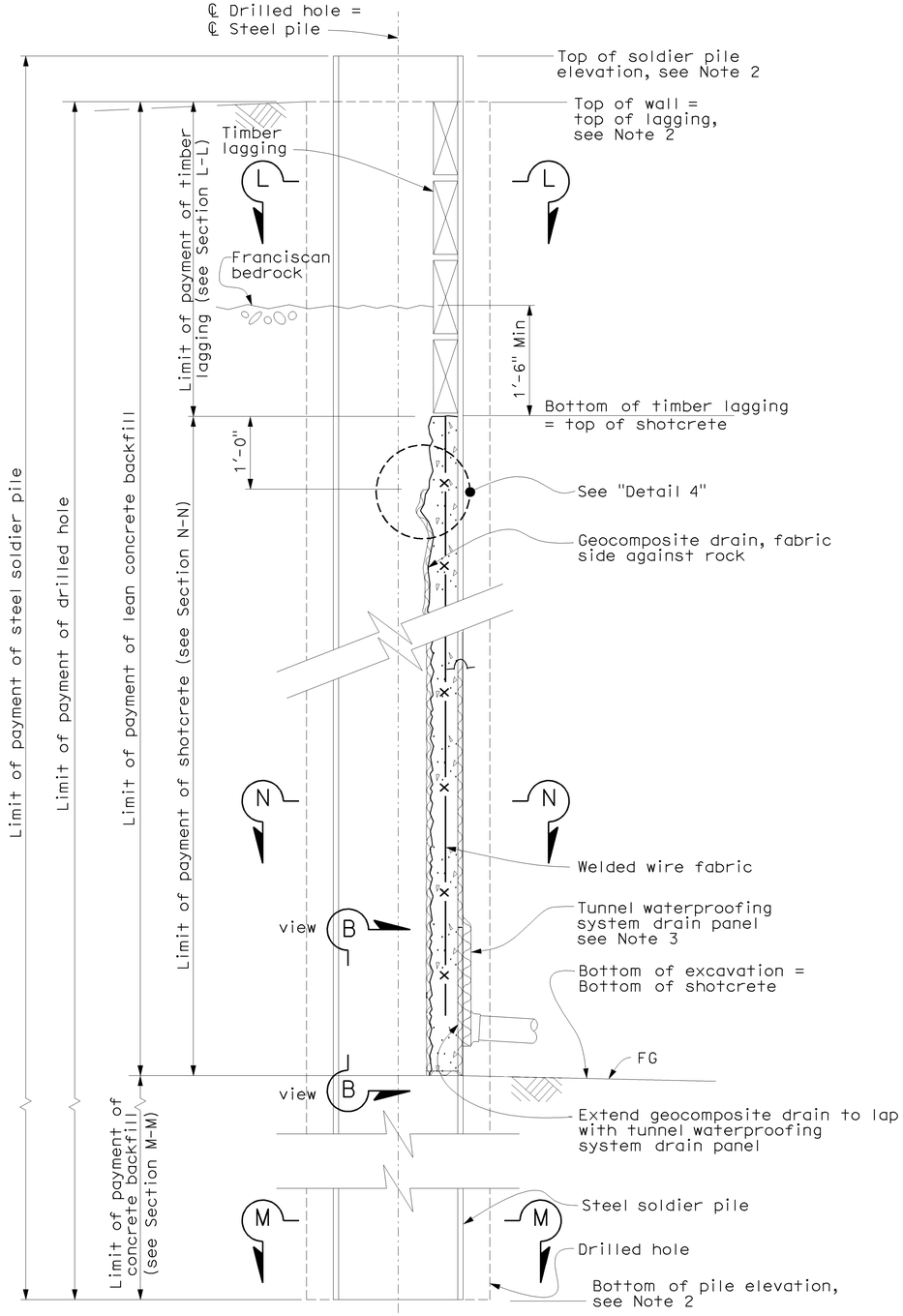

TYPICAL SECTION AT STEEL SOLDIER PILE W/ SHOTCRETE LAGGING

Scale: 1" = 1'-0"

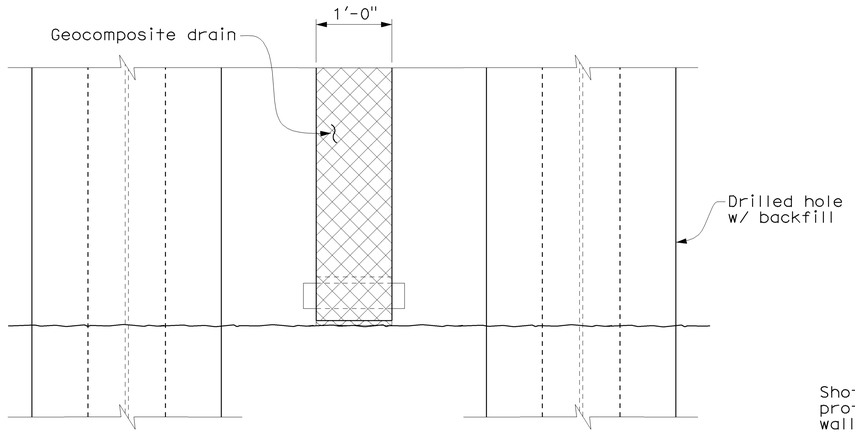

VIEW B-B

Scale: 1" = 1'-0"

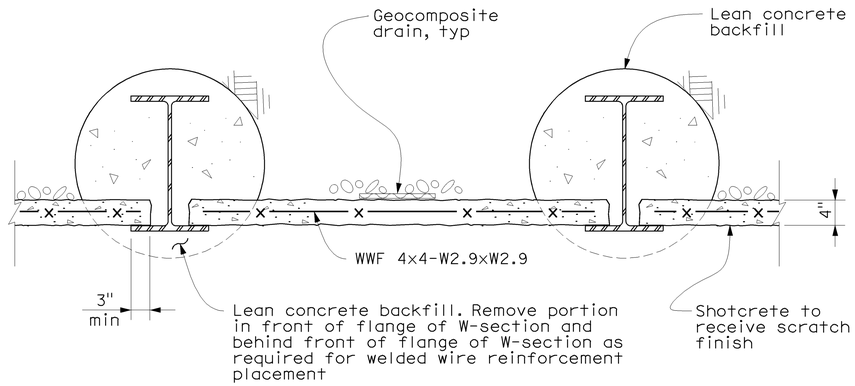

SECTION N-N

Scale: 1" = 1'-0"

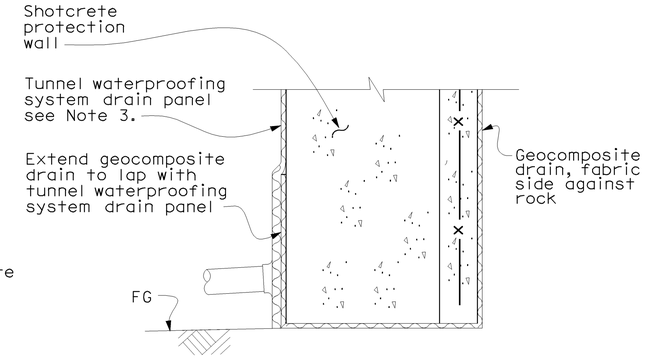

DETAIL 5

No Scale

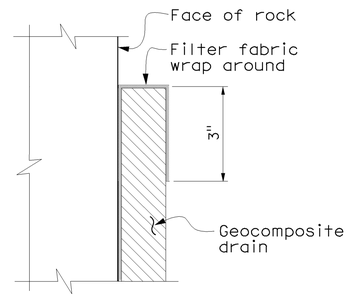

DETAIL 4

No Scale

Notes:

1. For "Section L-L" and "Section M-M", see sheet "RWAB-ST25".
2. See "Soldier Pile Schedule" on sheets "RWAB-ST30" thru "RWAB-ST35".
3. For tunnel waterproofing system, see "Southbound Battery Tunnel" plans.
4. For "Section M-M", see sheet "RWAB-ST25".
5. For location of Detail 5, see sheets "RWAB-ST19", "RWAB-ST20", and "RWAB-ST21".

DIST	COUNTY	ROUTE	POST MILES TOTAL PROJECT	SHEET No	TOTAL SHEETS
04	SF	101	8.2/9.2	534	654

REGISTERED CIVIL ENGINEER — 9/11/09 DATE

12-14-09
PLANS APPROVAL DATE

REGISTERED PROFESSIONAL ENGINEER — KEVIN BARRY CLINCH — No. C-48926 — Exp. 9/30/10 — CIVIL — STATE OF CALIFORNIA

The State of California or its officers or agents shall not be responsible for the accuracy or completeness of scanned copies of this plan sheet.

Arup PB Joint Venture
560 Mission Street, Suite 700
San Francisco, CA 94105

DESIGN	BY	CHECKED	M. YUCEKUL	PREPARED FOR THE STATE OF CALIFORNIA DEPARTMENT OF TRANSPORTATION	PROJECT ENGINEER
DETAILS	BY	CHECKED	M. YUCEKUL		
QUANTITIES	BY	CHECKED	J. YANG		

BRIDGE NO. 34-0161RL
POST MILES

DESIGN DETAIL SHEET (ENGLISH) (REV. 06-01-09)

ORIGINAL SCALE IN INCHES FOR REDUCED PLANS 0 1 2 3

CU 04
EA 163741

DISREGARD PRINTS BEARING EARLIER REVISION DATES

REVISION DATES (PRELIMINARY STAGE ONLY): 06/01/09 | 07/15/09 | 08/03/09 | 08/28/09 | 09/11/09

SHEET 26 OF 37

FILE => 34-0161rl-ab-st026.dgn

USERNAME => ttmorlok DATE PLOTTED => 11-DEC-2009 TIME PLOTTED => 12:59

DIST	COUNTY	ROUTE	POST MILES TOTAL PROJECT	SHEET No	TOTAL SHEETS
04	SF	101	8.2/9.2	535	654

REGISTERED CIVIL ENGINEER 10/30/09 DATE

12-14-09
PLANS APPROVAL DATE

REGISTERED PROFESSIONAL ENGINEER KEVIN BARRY CLINCH No. C-48926 Exp. 9/30/10 CIVIL STATE OF CALIFORNIA

The State of California or its officers or agents shall not be responsible for the accuracy or completeness of scanned copies of this plan sheet.

Arup PB Joint Venture
560 Mission Street, Suite 700
San Francisco, CA 94105

Notes:

1. See "Soldier Pile Schedule" on sheets "RWAB-ST30" through "RWAB-ST35".
2. For locations of "Section R-R" see sheet "RWAB-ST9".
3. For typical strut to wale connection, see sheet "RWAB-ST22".
4. For location of "Detail 6", see sheet "RWAB-ST9".

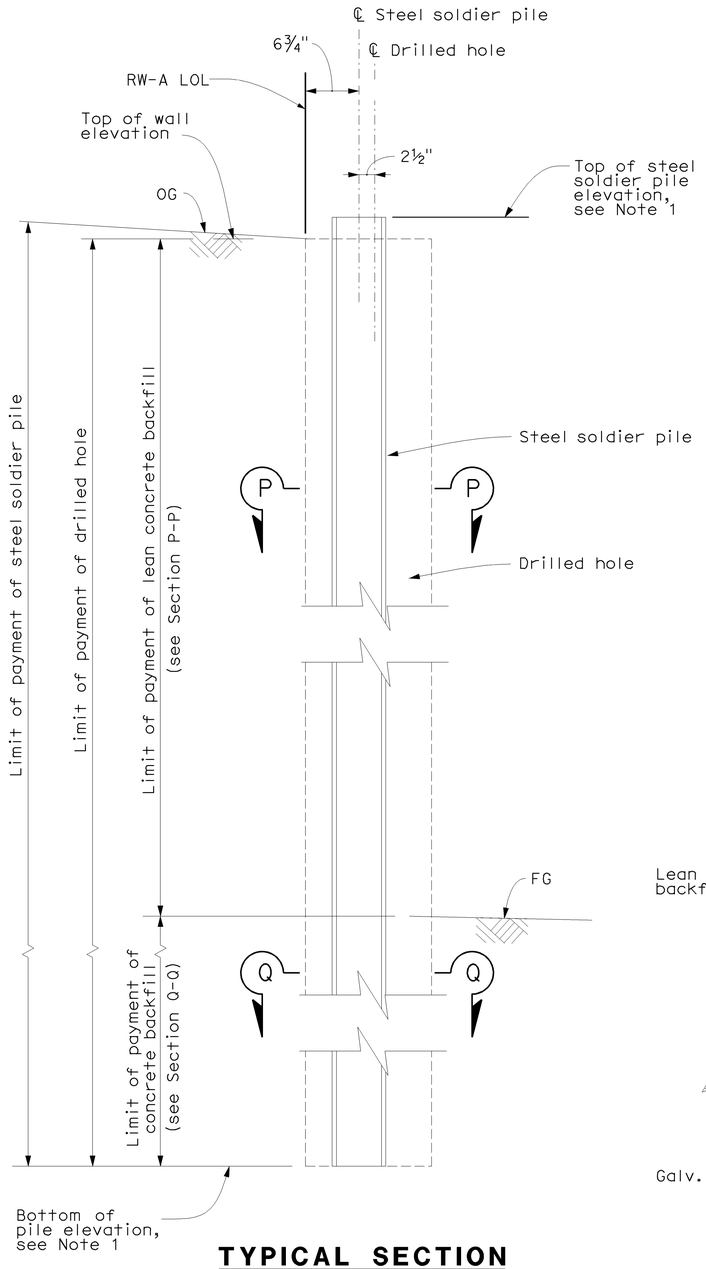

TYPICAL SECTION AT TANGENT STEEL SOLDIER PILE

Scale: 1" = 1'-0"

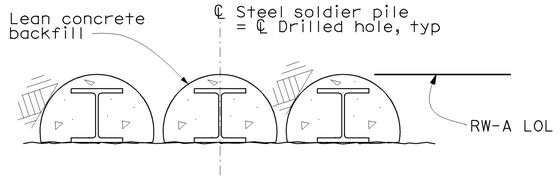

SECTION P-P

Scale: 1" = 1'-0"

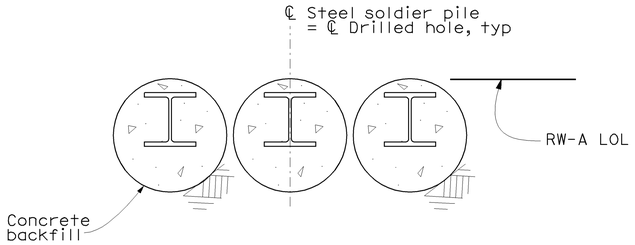

SECTION Q-Q

Scale: 1" = 1'-0"

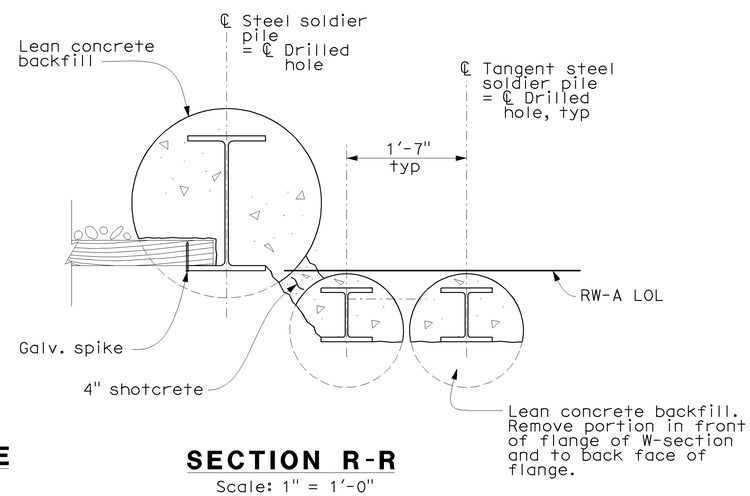

SECTION R-R

Scale: 1" = 1'-0"

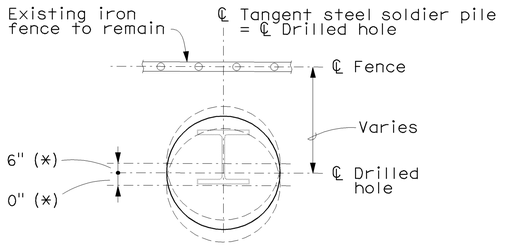

DRILLED HOLE TOLERANCE FOR TANGENT STEEL SOLDIER PILES

Scale: 1" = 1'-0"

(*) Deviation from plumb over entire height of drilled hole plus horizontal offset shall not exceed dimensions shown.

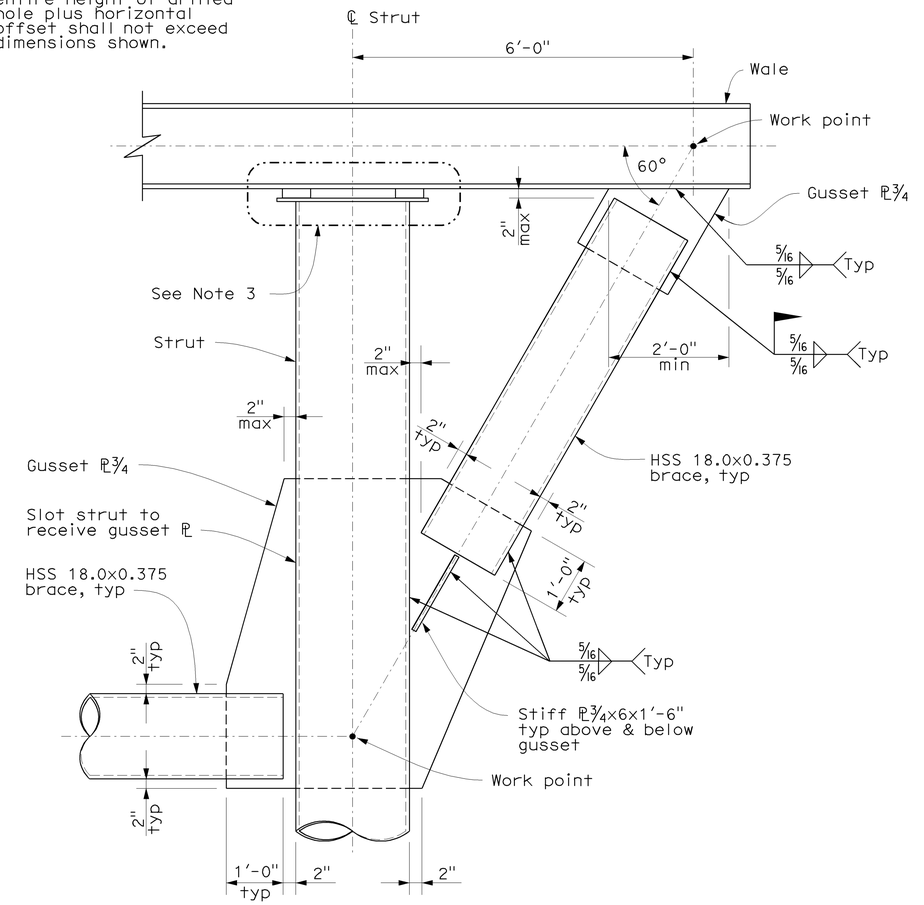

DETAIL 6

Scale: ¾" = 1'-0"

RWAB-ST27

DESIGN	BY K. CLINCH	CHECKED M. YUCEKUL	PREPARED FOR THE STATE OF CALIFORNIA DEPARTMENT OF TRANSPORTATION	QIYU LIU PROJECT ENGINEER	BRIDGE NO. 34-0161L
DETAILS	BY T. MARTARELLA	CHECKED M. YUCEKUL			POST MILES 9.0/9.2
QUANTITIES	BY N. VIVAR	CHECKED J. YANG			

RETAINING WALL A & B
WALL DETAILS NO.6

DESIGN DETAIL SHEET (ENGLISH) (REV. 06-01-09)

ORIGINAL SCALE IN INCHES FOR REDUCED PLANS 0 1 2 3

CU 04
EA 163741

DISREGARD PRINTS BEARING EARLIER REVISION DATES

REVISION DATES (PRELIMINARY STAGE ONLY) 06/01/09 07/15/09 08/07/09 08/26/09 09/11/09 10/30/09

SHEET 27 OF 37

FILE => 34-0161rl-ab-st027.dgn

USERNAME => trmariak DATE PLOTTED => 11-DEC-2009 TIME PLOTTED => 13:38

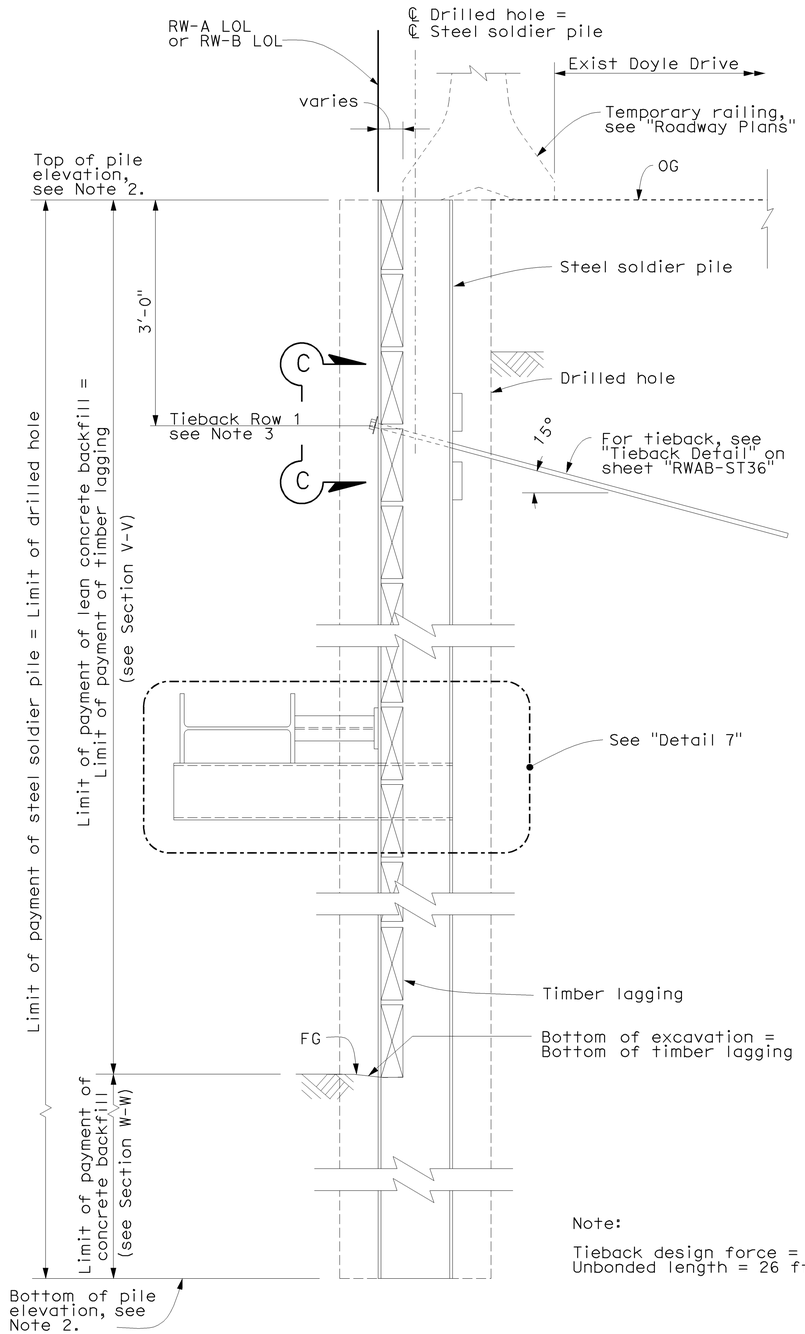

Note:

Tieback design force = 32 kip
Unbonded length = 26 ft

TYPICAL SECTION AT SOLDIER PILE w/ TIEBACK & STRUTS

Scale: 1" = 1'-0"

Notes:

1. For "Section U-U", "Section V-V" and "Section W-W", see sheet "RWAB-ST29".
2. For "Soldier Pile Schedule" and "Lagging Panel Schedule", see sheets "RWAB-ST30" thru "RWAB-ST35".
3. For tieback schedule, see sheet "RWAB-ST29".
4. For "View C-C", see sheet "RWAB-ST29".

DIST	COUNTY	ROUTE	POST MILES TOTAL PROJECT	SHEET No	TOTAL SHEETS
04	SF	101	8.2/9.2	536	654

REGISTERED CIVIL ENGINEER — DATE 8/28/09

12-14-09
PLANS APPROVAL DATE

REGISTERED PROFESSIONAL ENGINEER — KEVIN BARRY CLINCH — No. C-48926 — Exp. 9/30/10 — CIVIL — STATE OF CALIFORNIA

The State of California or its officers or agents shall not be responsible for the accuracy or completeness of scanned copies of this plan sheet.

Arup PB Joint Venture
560 Mission Street, Suite 700
San Francisco, CA 94105

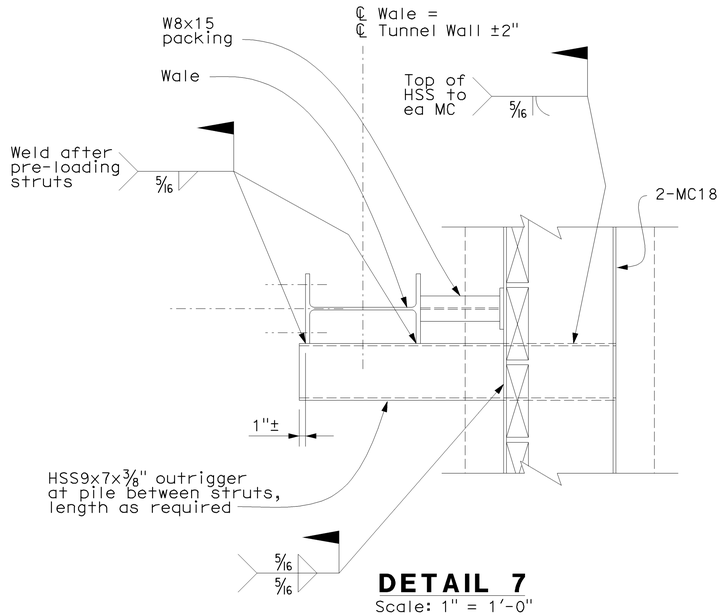

DETAIL 7

Scale: 1" = 1'-0"

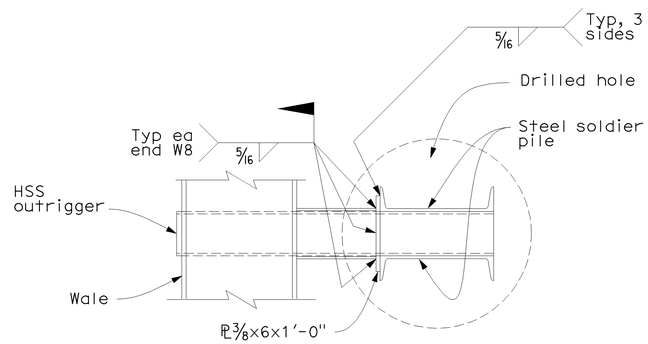

Note: Strut and lagging not shown for clarity

SECTION T-T

Scale: 1" = 1'-0"

RWAB-ST28

DESIGN	BY K. CLINCH	CHECKED M. YUCEKUL	PREPARED FOR THE STATE OF CALIFORNIA DEPARTMENT OF TRANSPORTATION	QIYU LIU PROJECT ENGINEER	BRIDGE NO. 34-0161RL	RETAINING WALL A & B	
DETAILS	BY T. MARTARELLA	CHECKED M. YUCEKUL			POST MILES 9.0/9.2	WALL DETAILS NO.7	
QUANTITIES	BY N. VIVAR	CHECKED J. YANG					

DESIGN DETAIL SHEET (ENGLISH) (REV. 06-01-09)

ORIGINAL SCALE IN INCHES FOR REDUCED PLANS 0 1 2 3

CU 04
EA 163741

DISREGARD PRINTS BEARING EARLIER REVISION DATES →

REVISION DATES (PRELIMINARY STAGE ONLY): 06/07/09 | 07/13/09 | 08/07/09 | 08/26/09

SHEET 28 OF 37

FILE => 34-0161rl-ab-st028.dgn

USERNAME = tmorlok DATE PLOTTED => 11-DEC-2009 TIME PLOTTED => 13:00

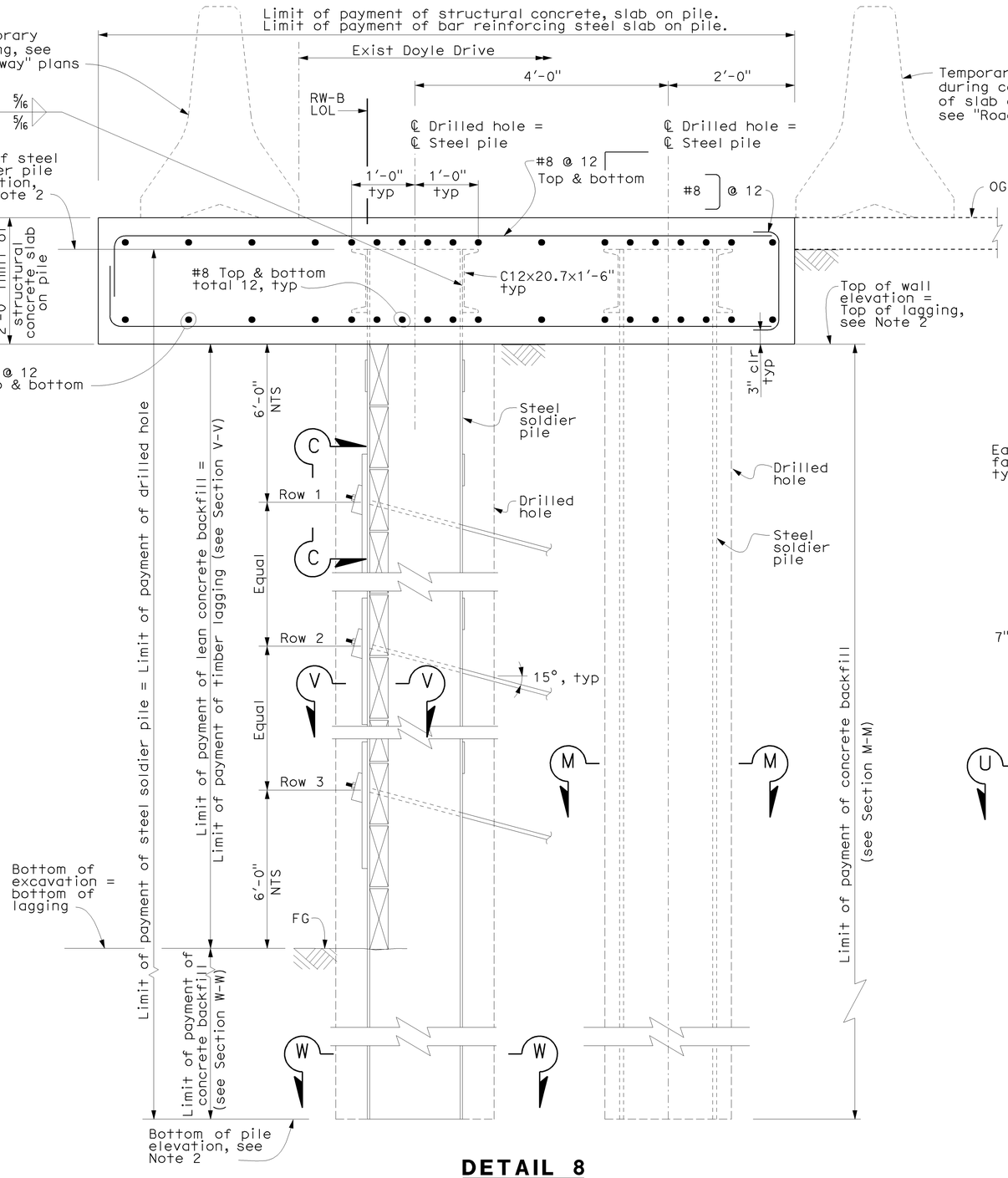

DETAIL 8
Scale: 1" = 1'-0"

Notes:

1. See "Soldier Pile Schedule" and "Lagging Panel Schedule" on sheets "RWAB-ST30" thru "RWAB-ST35".
2. For location of "Detail 8", see sheet "RWAB-ST16".
3. For "Section M-M", see sheet "RWAB-ST25".

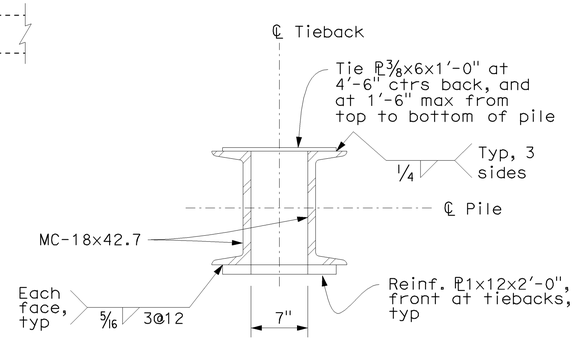

SECTION U-U
Scale: 1½" = 1'-0"

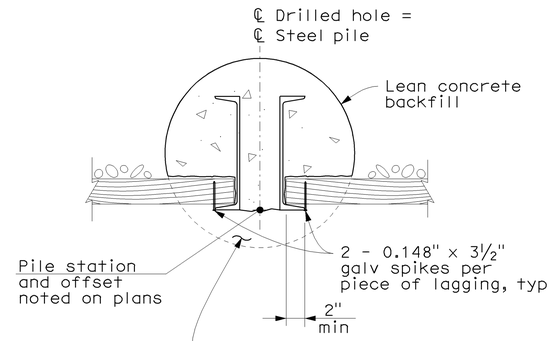

SECTION V-V
Scale: 1" = 1'-0"

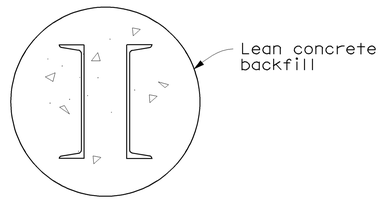

SECTION W-W
Scale: 1" = 1'-0"

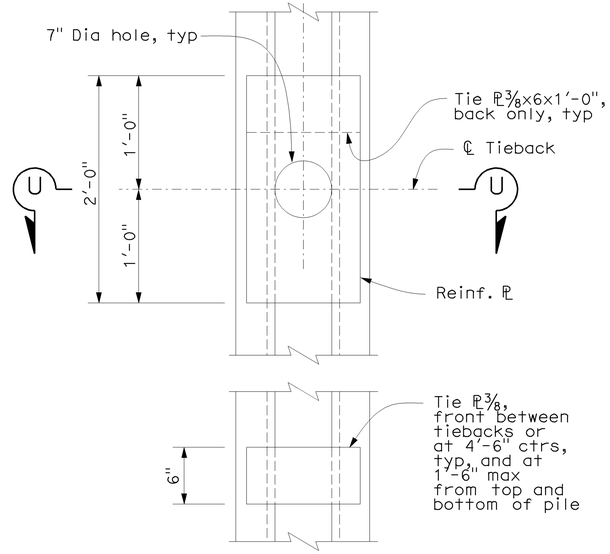

VIEW C-C
Scale: 1½" = 1'-0"

Tieback Schedule		
Row	Unbonded length (ft)	Design force T (Kip)
1	26	110
2	22	110
3	18	95

DIST	COUNTY	ROUTE	POST MILES TOTAL PROJECT	SHEET No	TOTAL SHEETS
04	SF	101	8.2/9.2	537	654

REGISTERED CIVIL ENGINEER — DATE 10/30/09

12-14-09
PLANS APPROVAL DATE

REGISTERED PROFESSIONAL ENGINEER — KEVIN BARRY CLINCH — No. C-48926 — Exp. 9/30/10 — CIVIL — STATE OF CALIFORNIA

The State of California or its officers or agents shall not be responsible for the accuracy or completeness of scanned copies of this plan sheet.

Arup PB Joint Venture
560 Mission Street, Suite 700
San Francisco, CA 94105

RWAB-ST29

DESIGN	BY K. CLINCH	CHECKED M. YUCEKUL	PREPARED FOR THE STATE OF CALIFORNIA DEPARTMENT OF TRANSPORTATION	QIYU LIU PROJECT ENGINEER	BRIDGE NO. 34-0161L	RETAINING WALL A & B	
DETAILS	BY T. MARTARELLA	CHECKED M. YUCEKUL			POST MILES 9.0/9.2	WALL DETAILS NO.8	
QUANTITIES	BY N. VIVAR	CHECKED J. YANG					

DESIGN DETAIL SHEET (ENGLISH) (REV. 06-01-09)

ORIGINAL SCALE IN INCHES FOR REDUCED PLANS 0 1 2 3

CU 04
EA 163741

DISREGARD PRINTS BEARING EARLIER REVISION DATES →

REVISION DATES (PRELIMINARY STAGE ONLY): 06/01/09 | 07/15/09 | 08/07/09 | 08/21/09 | 10/30/09

SHEET 29 OF 37

FILE => 34-0161r1-ab-st029.dgn

USERNAME => ttmorlok DATE PLOTTED => 11-DEC-2009 TIME PLOTTED => 13:38

DIST	COUNTY	ROUTE	POST MILES TOTAL PROJECT	SHEET No	TOTAL SHEETS
04	SF	101	8.2/9.2	538	654

REGISTERED CIVIL ENGINEER — 8/28/09 DATE

12-14-09
PLANS APPROVAL DATE

REGISTERED PROFESSIONAL ENGINEER — KEVIN BARRY CLINCH — No. C-48926 — Exp. 9/30/10 — CIVIL — STATE OF CALIFORNIA

The State of California or its officers or agents shall not be responsible for the accuracy or completeness of scanned copies of this plan sheet.

Arup PB Joint Venture
560 Mission Street, Suite 700
San Francisco, CA 94105

SOLDIER PILE SCHEDULE

Piles	Size	Top of Pile Elev	Bottom of Pile Elev	Cut & Remove Elev	Drilled Hole Dia.
PA1-PA23	Not Used				
PA24	W18x65	92.00	37.52	86.20	30
PA25	2-MC18x42.7	92.00	37.52	86.20	30
PA26	2-MC18x42.7	92.00	37.52	86.34	30
PA27	2-MC18x42.7	92.00	37.52	86.49	30
PA28	2-MC18x42.7	92.00	37.52	86.63	30
PA29	2-MC18x42.7	92.00	37.52	86.78	30
PA30	2-MC18x42.7	92.00	37.52	86.92	30
PA31	W18x65	92.00	37.52	87.07	30
PA32	W18x65	92.00	37.52	87.21	30
PA33	W18x65	93.00	37.52	87.36	30
PA34	W18x65	93.00	37.52	87.61	30
PA35	W18x65	93.50	39.31	87.87	30
PA36	W18x65	93.50	39.31	87.91	30
PA37	W18x65	93.50	39.31	87.95	30
PA38	W18x65	93.50	39.31	87.99	30
PA39	W18x65	93.50	39.31	88.03	30
PA40	W18x65	93.50	39.31	88.07	30
PA41	W18x65	93.00	40.43	88.11	30
PA42	W18x65	93.00	40.43	88.05	30
PA43	W18x65	93.00	40.43	87.99	30
PA44	W18x65	93.00	40.43	87.92	30
PA45	W18x65	93.00	40.43	87.86	30
PA46	W18x65	93.00	40.43	87.80	30
PA47	W18x65	93.50	41.46	87.73	30
PA48	W18x65	93.50	41.46	87.89	30
PA49	W18x65	93.50	41.46	88.04	30
PA50	W18x65	93.50	41.46	88.19	30
PA51	W18x65	93.50	41.46	88.35	30
PA52	W18x65	93.50	41.46	88.50	30
PA53	W18x65	94.50	42.54	90.65	24
PA54	W18x65	94.50	42.54	90.75	24
PA55	W18x65	94.50	42.54	90.85	24
PA56	W18x65	94.50	42.54	90.96	24
PA57	W18x65	94.50	42.54	91.06	24
PA58	W18x65	94.50	42.54	91.16	24
PA59	W18x65	94.90	43.61	89.26	30
PA60	W18x65	94.90	43.61	89.28	30
PA61	W18x65	94.90	43.61	89.31	30
PA62	W18x65	94.90	43.61	89.33	30
PA63	W18x65	94.90	43.61	89.36	30
PA64	W18x65	94.90	43.61	89.38	30
PA65	W18x65	95.80	44.68	89.41	30
PA66	W18x65	95.80	44.68	89.67	30
PA67	W18x65	95.80	44.68	89.94	30
PA68	W18x65	95.80	44.68	90.20	30
PA69	W18x65	95.80	44.68	90.47	30

LAGGING PANEL SCHEDULE

Between Piles		Top of Wall Elev	Bottom of Timber Lagging Elev	Bottom of Shotcrete Elev	Lagging Size
PA1	PA23	Not Used			
PA23	PA24	90.52	47.52	NA	4x12
PA25	PA26	90.52	47.52	NA	4x12
PA26	PA27	90.70	47.70	NA	4x12
PA27	PA28	90.88	47.88	NA	4x12
PA28	PA29	91.06	48.06	NA	4x12
PA29	PA30	91.24	48.24	NA	4x12
PA30	PA31	91.42	48.42	NA	4x12
PA31	PA32	91.60	48.60	NA	4x12
PA32	PA33	91.78	48.78	NA	4x12
PA33	PA34	91.96	48.96	NA	4x12
PA34	PA35	92.14	49.14	NA	4x12
PA35	PA36	92.31	49.31	NA	4x12
PA36	PA37	92.50	49.50	NA	4x12
PA37	PA38	92.69	49.69	NA	4x12
PA38	PA39	92.87	49.87	NA	4x12
PA39	PA40	93.06	50.06	NA	4x12
PA40	PA41	93.25	50.25	NA	6x12
PA41	PA42	92.43	50.43	NA	4x12
PA42	PA43	92.60	50.60	NA	4x12
PA43	PA44	92.78	50.78	NA	4x12
PA44	PA45	92.95	50.95	NA	4x12
PA45	PA46	92.12	51.12	NA	4x12
PA46	PA47	92.29	51.29	NA	4x12
PA47	PA48	92.46	51.46	NA	4x12
PA48	PA49	92.64	51.64	NA	4x12
PA49	PA50	92.82	51.82	NA	4x12
PA50	PA51	93.00	52.00	NA	4x12
PA51	PA52	93.18	52.18	NA	4x12
PA52	PA53	93.36	52.36	NA	4x12
PA53	PA54	93.54	52.54	NA	4x12
PA54	PA55	93.72	52.72	NA	4x12
PA55	PA56	93.89	52.89	NA	4x12
PA56	PA57	94.07	53.07	NA	4x12
PA57	PA58	94.25	53.25	NA	4x12
PA58	PA59	93.43	53.43	NA	4x12
PA59	PA60	93.61	53.61	NA	4x12
PA60	PA61	93.79	53.79	NA	4x12
PA61	PA62	93.97	53.97	NA	4x12
PA62	PA63	94.15	54.15	NA	4x12
PA63	PA64	94.56	54.32	NA	4x12
PA64	PA65	94.29	54.50	NA	4x12
PA65	PA66	94.02	54.68	NA	4x12
PA66	PA67	94.75	54.86	NA	4x12
PA67	PA68	94.49	55.03	NA	4x12
PA68	PA69	95.22	55.21	NA	4x12
PA69	PA70	94.95	55.38	NA	4x12

SOLDIER PILE SCHEDULE

Piles	Size	Top of Pile Elev	Bottom of Pile Elev	Cut & Remove Elev	Drilled Hole Dia.
PA70	W18x65	95.80	44.68	90.73	30
PA71	W18x65	96.60	45.73	90.99	30
PA72	W18x65	96.60	45.73	91.25	30
PA73	W18x65	96.60	45.73	91.51	30
PA74	W18x65	96.60	45.73	91.77	30
PA75	W18x65	96.60	45.73	92.03	30
PA76	W18x65	96.60	45.73	92.29	30
PA77	W18x65	96.80	51.51	92.55	30
PA78	W18x65	96.80	51.51	92.39	30
PA79	W18x65	96.80	51.51	92.23	30
PA80	W18x65	96.80	51.51	92.08	30
PA81	W18x65	96.80	51.51	91.92	30
PA82	W18x65	96.80	51.51	91.76	30
PA83	W18x65	96.60	52.33	91.60	30
PA84	W18x65	96.60	52.33	91.74	30
PA85	W18x65	96.60	52.33	91.88	30
PA86	W18x65	96.60	52.33	92.02	30
PA87	W18x65	96.60	52.33	NA	30
PA88	W18x65	96.60	52.33	NA	30
PA89	W18x65	102.00	53.23	96.45	30
PA90	W18x65	102.00	53.23	96.56	30
PA91	W18x65	102.00	53.23	96.67	30
PA92	W18x65	102.00	53.23	96.78	30
PA93	W18x65	102.00	53.23	96.89	30
PA94	W18x65	102.00	53.23	97.00	30
PA95	W18x65	103.00	53.99	97.11	30
PA96	W18x65	103.00	53.99	97.20	30
PA97	W18x65	103.00	53.99	97.29	30
PA98	W18x65	103.00	53.99	97.38	30
PA99	W18x65	103.00	53.99	97.47	30
PA100	W18x65	103.00	53.99	97.56	30
PA101	W18x65	97.80	54.88	NA	30
PA102	W18x65	97.80	54.88	NA	30
PA103	W18x65	97.80	54.88	NA	30
PA104	W18x65	97.80	54.88	NA	30
PA105	W18x65	97.80	54.88	93.89	30
PA106	W18x65	97.80	54.88	93.95	30

LAGGING PANEL SCHEDULE

Between Piles		Top of Wall Elev	Bottom of Timber Lagging Elev	Bottom of Shotcrete Elev	Lagging Size
PA70	PA71	95.68	55.56	NA	6x12
PA71	PA72	96.30	60.30	55.73	4x12
PA72	PA73	96.30	60.30	55.86	4x12
PA73	PA74	96.30	60.30	55.99	4x12
PA74	PA75	96.30	60.30	56.12	4x12
PA75	PA76	96.30	60.30	56.25	4x12
PA76	PA77	96.30	60.30	56.38	4x12
PA77	PA78	96.50	64.50	56.51	4x12
PA78	PA79	96.50	64.50	56.64	4x12
PA79	PA80	96.50	64.50	56.78	4x12
PA80	PA81	96.50	64.50	56.92	4x12
PA81	PA82	96.50	64.50	57.05	4x12
PA82	PA83	96.50	64.50	57.19	4x12
PA83	PA84	96.30	68.30	57.33	4x12
PA84	PA85	96.30	68.30	57.48	4x12
PA85	PA86	96.30	68.30	57.63	4x12
PA86	PA87	96.30	68.30	57.78	4x12
PA87	PA88	96.30	68.30	57.93	4x12
PA88	PA89	96.30	68.30	58.08	4x12
PA89	PA90	97.00	73.00	58.23	4x12
PA90	PA91	97.00	73.00	58.36	4x12
PA91	PA92	97.00	73.00	58.49	4x12
PA92	PA93	97.00	73.00	58.61	4x12
PA93	PA94	97.00	73.00	58.74	4x12
PA94	PA95	97.00	73.00	58.86	4x12
PA95	PA96	97.50	77.50	58.99	4x12
PA96	PA97	97.50	77.50	59.14	4x12
PA97	PA98	97.50	77.50	59.28	4x12
PA98	PA99	97.50	77.50	59.43	4x12
PA99	PA100	97.50	77.50	59.58	4x12
PA100	PA101	97.50	77.50	59.73	4x12
PA101	PA102	97.50	74.50	59.88	4x12
PA102	PA103	97.50	74.50	60.03	6x12
PA103	PA104	97.50	74.50	60.18	4x12
PA104	PA105	97.50	74.50	60.33	4x12
PA105	PA106	97.50	74.50	60.48	4x12
PA106	PA107	97.50	74.50	60.63	4x12

RWAB-ST30

DESIGN	BY K. CLINCH	CHECKED M. YUCEKUL	PREPARED FOR THE STATE OF CALIFORNIA DEPARTMENT OF TRANSPORTATION
DETAILS	BY P. A. TONKIN	CHECKED M. YUCEKUL	
QUANTITIES	BY N. VIVAR	CHECKED J. YANG	

QIYU LIU
PROJECT ENGINEER

BRIDGE NO. 34-0161RL
POST MILES 9.0/9.2

RETAINING WALL A & B
SCHEDULE SHEET NO.1

DESIGN DETAIL SHEET (ENGLISH) (REV. 06-01-09)

ORIGINAL SCALE IN INCHES FOR REDUCED PLANS 0 1 2 3

CU 04
EA 163741

DISREGARD PRINTS BEARING EARLIER REVISION DATES →

REVISION DATES (PRELIMINARY STAGE ONLY): 06/05/09 | 07/15/09 | 08/14/09 | 08/26/09

SHEET 30 OF 37

FILE => 34-0161rl-ab-st030.dgn

USERNAME = tmorlok DATE PLOTTED => 11-DEC-2009 TIME PLOTTED => 13:00

DIST	COUNTY	ROUTE	POST MILES TOTAL PROJECT	SHEET No	TOTAL SHEETS
04	SF	101	8.2/9.2	539	654

REGISTERED CIVIL ENGINEER — 8/28/09 DATE

12-14-09
PLANS APPROVAL DATE

REGISTERED PROFESSIONAL ENGINEER — KEVIN BARRY CLINCH — No. C-48926 — Exp. 9/30/10 — CIVIL — STATE OF CALIFORNIA

The State of California or its officers or agents shall not be responsible for the accuracy or completeness of scanned copies of this plan sheet.

Arup PB Joint Venture
560 Mission Street, Suite 700
San Francisco, CA 94105

SOLDIER PILE SCHEDULE

Piles	Size	Top of Pile Elev	Bottom of Pile Elev	Cut & Remove Elev	Drilled Hole Dia.
PA107	W18x65	99.30	55.79	94.02	30
PA108	W18x65	99.30	55.79	94.23	30
PA109	W18x65	99.30	55.79	94.45	30
PA110	W18x65	99.30	55.79	94.67	30
PA111	W18x65	99.30	55.79	94.89	30
PA112	W18x65	99.30	55.79	94.93	30
PA113	W18x65	100.30	56.72	95.11	30
PA114	W18x65	100.30	56.72	95.25	30
PA115	W18x65	100.30	56.72	95.38	30
PA116	W18x65	100.30	56.72	95.52	30
PA117	W18x65	100.30	56.72	95.66	30
PA118	W18x65	100.30	56.72	95.80	30
PA119	W18x65	101.40	57.69	95.93	30
PA120	W18x65	101.40	57.69	96.26	30
PA121	W18x65	101.40	57.69	96.26	30
PA122	W18x65	101.40	57.69	96.43	30
PA123	W18x65	101.40	57.69	96.60	30
PA124	W18x65	101.40	57.69	96.76	30
PA125	W18x65	103.30	58.89	96.93	30
PA126	W18x65	103.30	58.89	97.09	30
PA127	W18x65	103.30	58.89	97.25	30
PA128	W18x65	103.30	58.89	97.41	30
PA129	W18x65	103.30	58.89	97.57	30
PA130	W18x65	103.30	58.89	97.73	30
PA131	W18x65	104.90	61.15	97.89	30
PA132	W18x65	104.90	61.15	98.00	30
PA133	W18x65	104.90	61.15	98.11	30
PA134	W18x65	104.90	61.15	98.22	30
PA135	W18x65	104.90	61.15	98.33	30
PA136	W18x65	104.90	61.15	98.44	30
PA137	W18x65	106.00	62.44	98.55	30
PA138	W18x65	106.00	62.44	98.76	30
PA139	W18x65	106.00	62.44	98.98	30
PA140	W18x65	106.00	62.44	99.20	30
PA141	W18x65	106.00	62.44	99.42	30
PA142	W18x65	106.00	62.44	99.64	30
PA143	W18x65	106.80	63.76	99.85	30
PA144	W18x65	106.80	63.76	100.11	30
PA145	W18x65	106.80	63.76	100.36	30
PA146	W18x65	106.80	63.76	100.62	30
PA147	W18x65	106.80	64.64	102.87	30
PA148	W8x48	106.80	64.64	102.89	18
PA149	W8x48	106.80	64.64	102.91	18
PA150	W8x48	106.80	64.64	102.94	18
PA151	W8x48	106.80	64.64	102.96	18
PA152	W8x48	106.80	64.64	102.98	18
PA153	W8x48	106.80	64.64	103.00	18

LAGGING PANEL SCHEDULE

Between Piles		Top of Wall Elev	Bottom of Timber Lagging Elev	Bottom of Shotcrete Elev	Lagging Size
PA107	PA108	99.00	71.00	60.79	4x12
PA108	PA109	99.00	71.00	60.97	4x12
PA109	PA110	99.00	71.00	61.16	4x12
PA110	PA111	99.00	71.00	61.35	4x12
PA111	PA112	99.00	71.00	61.54	4x12
PA112	PA113	99.00	71.00	61.72	4x12
PA113	PA114	100.00	66.00	61.88	4x12
PA114	PA115	100.00	66.00	62.05	4x12
PA115	PA116	100.00	66.00	62.21	4x12
PA116	PA117	100.00	66.00	62.37	4x12
PA117	PA118	100.00	66.00	62.53	4x12
PA118	PA119	100.00	66.00	62.69	4x12
PA119	PA120	100.50	67.50	62.89	4x12
PA120	PA121	100.50	67.50	63.09	4x12
PA121	PA122	100.50	67.50	63.29	4x12
PA122	PA123	100.50	67.50	63.49	4x12
PA123	PA124	100.50	67.50	63.69	4x12
PA124	PA125	100.50	67.50	63.89	4x12
PA125	PA126	102.70	72.70	64.10	4x12
PA126	PA127	102.70	72.70	64.31	4x12
PA127	PA128	102.70	72.70	64.52	4x12
PA128	PA129	102.70	72.70	64.73	4x12
PA129	PA130	102.70	72.70	64.94	4x12
PA130	PA131	102.70	72.70	65.15	4x12
PA131	PA132	102.50	78.50	65.37	4x12
PA132	PA133	102.50	78.50	65.58	4x12
PA133	PA134	102.50	78.50	65.79	4x12
PA134	PA135	102.50	78.50	66.01	4x12
PA135	PA136	102.50	78.50	66.22	4x12
PA136	PA137	102.50	78.50	66.43	6x12
PA137	PA138	103.60	66.66	NA	4x12
PA138	PA139	103.60	66.88	NA	4x12
PA139	PA140	103.60	67.10	NA	4x12
PA140	PA141	103.60	67.32	NA	4x12
PA141	PA142	103.60	67.54	NA	4x12
PA142	PA143	103.60	67.76	NA	4x12
PA143	PA144	104.60	67.98	NA	4x12
PA144	PA145	104.60	68.20	NA	4x12
PA145	PA146	104.60	68.42	NA	4x12
PA146	PA147	104.60	68.64	NA	4x12
PA147	PA148	NA	NA	NA	NA
PA148	PA149	NA	NA	NA	NA
PA149	PA150	NA	NA	NA	NA
PA150	PA151	NA	NA	NA	NA
PA151	PA152	NA	NA	NA	NA
PA152	PA153	NA	NA	NA	NA
PA153	PA154	NA	NA	NA	NA

SOLDIER PILE SCHEDULE

Piles	Size	Top of Pile Elev	Bottom of Pile Elev	Cut & Remove Elev	Drilled Hole Dia.
PA154	W8x48	106.80	64.64	103.02	18
PA155	W8x48	106.80	64.64	103.04	18
PA156	W8x48	106.80	64.64	103.07	18
PA157	W8x48	106.80	64.64	103.09	18
PA158	W8x48	106.80	64.64	103.11	18
PA159	W8x48	106.80	64.64	103.13	18
PA160	W8x48	106.80	64.64	103.15	18
PA161	W8x48	106.80	64.64	103.17	18
PA162	W8x48	106.80	64.64	103.20	18
PA163	W8x48	106.80	64.64	103.22	18
PA164	W8x48	106.80	64.64	103.24	18
PA165	W8x48	106.80	64.64	103.26	18
PA166	W8x48	106.80	64.64	103.28	18
PA167	W8x48	107.80	64.64	103.31	18
PA168	W8x48	107.80	64.64	103.33	18
PA169	W8x48	107.80	64.64	103.35	18
PA170	W8x48	107.80	64.64	103.37	18
PA171	W8x48	107.80	64.64	103.39	18
PA172	W8x48	107.80	64.64	103.41	18
PA173	W8x48	107.80	64.64	103.44	18
PA174	W8x48	107.80	64.64	103.46	18
PA175	W8x48	107.80	64.64	103.48	18
PA176	W8x48	107.80	64.64	103.50	18
PA177	W8x48	107.80	64.64	103.52	18
PA178	W8x48	107.80	64.64	103.55	18
PA179	W8x48	107.80	64.64	103.57	18
PA180	W8x48	107.80	64.64	103.59	18
PA181	W8x48	107.80	64.64	103.61	18
PA182	W8x48	107.80	64.64	103.63	18
PA183	W8x48	107.80	64.64	103.65	18
PA184	W8x48	107.80	64.64	103.68	18
PA185	W18x65	109.30	66.91	104.13	30
PA186	W18x65	109.30	66.91	104.36	30
PA187	W18x65	109.30	66.91	104.60	30
PA188	W18x65	109.30	66.91	104.82	30
PA189	W18x65	109.30	66.91	105.04	30
PA190	W18x65	109.30	68.30	105.27	30

LAGGING PANEL SCHEDULE

Between Piles		Top of Wall Elev	Bottom of Lagging Elev	Bottom of Shotcrete Elev	Lagging Size
PA154	PA155	NA	NA	NA	NA
PA155	PA156	NA	NA	NA	NA
PA156	PA157	NA	NA	NA	NA
PA157	PA158	NA	NA	NA	NA
PA158	PA159	NA	NA	NA	NA
PA159	PA160	NA	NA	NA	NA
PA160	PA161	NA	NA	NA	NA
PA161	PA162	NA	NA	NA	NA
PA162	PA163	NA	NA	NA	NA
PA163	PA164	NA	NA	NA	NA
PA164	PA165	NA	NA	NA	NA
PA165	PA166	NA	NA	NA	NA
PA166	PA167	NA	NA	NA	NA
PA167	PA168	NA	NA	NA	NA
PA168	PA169	NA	NA	NA	NA
PA169	PA170	NA	NA	NA	NA
PA170	PA171	NA	NA	NA	NA
PA171	PA172	NA	NA	NA	NA
PA172	PA173	NA	NA	NA	NA
PA173	PA174	NA	NA	NA	NA
PA174	PA175	NA	NA	NA	NA
PA175	PA176	NA	NA	NA	NA
PA176	PA177	NA	NA	NA	NA
PA177	PA178	NA	NA	NA	NA
PA178	PA179	NA	NA	NA	NA
PA179	PA180	NA	NA	NA	NA
PA180	PA181	NA	NA	NA	NA
PA181	PA182	NA	NA	NA	NA
PA182	PA183	NA	NA	NA	NA
PA183	PA184	NA	NA	NA	NA
PA184	PA185	NA	NA	NA	NA
PA185	PA186	106.80	90.80	70.91	4x12
PA186	PA187	106.80	90.80	71.14	4x12
PA187	PA188	106.80	90.80	71.37	4x12
PA188	PA189	106.80	90.80	71.60	4x12
PA189	PA190	106.80	90.80	71.84	4x12
PA190	PA191	107.60	90.80	72.07	4x12

RWAB-ST31

DESIGN	BY K. CLINCH	CHECKED M. YUCEKUL	PREPARED FOR THE STATE OF CALIFORNIA DEPARTMENT OF TRANSPORTATION
DETAILS	BY P. A. TONKIN	CHECKED M. YUCEKUL	
QUANTITIES	BY N. VIVAR	CHECKED J. YANG	

QIYU LIU
PROJECT ENGINEER

BRIDGE NO. 34-0161RL
POST MILES 9.0/9.2

RETAINING WALL A & B
SCHEDULE SHEET NO.2

DESIGN DETAIL SHEET (ENGLISH) (REV. 06-01-09)

ORIGINAL SCALE IN INCHES FOR REDUCED PLANS 0 1 2 3

CU 04
EA 163741

DISREGARD PRINTS BEARING EARLIER REVISION DATES →

REVISION DATES (PRELIMINARY STAGE ONLY): 06/26/09 | 07/10/09 | 08/05/09 | 08/26/09

SHEET 31 OF 37

FILE => 34-0161rl-ab-st031.dgn

USERNAME => trmorfok DATE PLOTTED => 11-DEC-2009 TIME PLOTTED => 13:00

SOLDIER PILE SCHEDULE

Piles	Size	Top of Pile Elev	Bottom of Pile Elev	Cut & Remove Elev	Drilled Hole Dia.
PA191	W18x65	110.70	68.30	105.49	30
PA192	W18x65	110.70	68.30	105.71	30
PA193	W18x65	110.70	68.30	105.93	30
PA194	W18x65	110.70	68.30	106.16	30
PA195	W18x65	110.70	68.30	106.38	30
PA196	W18x65	110.70	69.72	106.60	30
PA197	W18x86	108.30	69.72	106.85	30
PA198	W18x86	108.30	69.72	107.10	30
PA199	W18x86	108.30	69.72	107.35	30
PA200	W18x86	108.30	69.72	107.60	30
PA201	W18x86	108.30	69.72	107.85	30
PA202	W18x86	108.30	69.16	NA	30
PA203	W18x65	108.00	69.16	NA	30
PA204	W18x65	108.00	69.16	NA	30
PA205	W18x65	108.00	69.16	NA	30
PA206	W18x65	108.00	69.16	NA	30
PA207	W18x65	108.00	69.16	NA	30
PA208	W18x65	108.00	69.16	NA	30
PA209	W18x65	104.00	69.16	NA	30
PA210	W18x65	104.00	69.16	NA	30
PA211	W18x65	104.00	69.16	NA	30
PA212	W18x65	104.00	69.16	NA	

LAGGING PANEL SCHEDULE

Between Piles		Top of Wall Elev	Bottom of Timber Lagging Elev	Bottom of Shotcrete Elev	Lagging Size
PA191	PA192	107.60	89.60	72.30	4x12
PA192	PA193	107.60	89.60	72.54	4x12
PA193	PA194	107.60	89.60	72.77	4x12
PA194	PA195	107.60	89.60	73.01	4x12
PA195	PA196	107.60	89.60	73.25	6x12
PA196	PA197	108.00	89.60	73.48	4x12
PA197	PA198	108.00	89.70	73.72	4x12
PA198	PA199	108.00	90.00	73.96	4x12
PA199	PA200	108.00	90.00	74.20	4x12
PA200	PA201	108.00	90.00	74.44	4x12
PA201	PA202	108.00	90.00	74.68	4x12
PA202	PA203	108.00	90.00	74.92	4x12
PA203	PA204	108.00	90.00	75.16	4x12
PA204	PA205	107.30	89.30	75.41	4x12
PA205	PA206	106.40	89.40	75.65	4x12
PA206	PA207	105.60	89.60	75.89	4x12
PA207	PA208	104.80	88.80	76.14	4x12
PA208	PA209	104.00	89.00	76.38	4x12
PA209	PA210	103.20	89.20	76.63	4x12
PA210	PA211	102.40	89.40	76.88	4x12
PA211	PA212	101.60	89.60	77.03	4x12

DIST	COUNTY	ROUTE	POST MILES TOTAL PROJECT	SHEET No	TOTAL SHEETS
04	SF	101	8.2/9.2	540	654

REGISTERED CIVIL ENGINEER — 8/28/09 DATE

12-14-09
PLANS APPROVAL DATE

REGISTERED PROFESSIONAL ENGINEER
KEVIN BARRY CLINCH
No. C-48926
Exp. 9/30/10
CIVIL
STATE OF CALIFORNIA

The State of California or its officers or agents shall not be responsible for the accuracy or completeness of scanned copies of this plan sheet.

Arup PB Joint Venture
560 Mission Street, Suite 700
San Francisco, CA 94105

RWAB-ST32

DESIGN	BY K. CLINCH	CHECKED M. YUCEKUL	PREPARED FOR THE STATE OF CALIFORNIA DEPARTMENT OF TRANSPORTATION	QIYU LIU PROJECT ENGINEER	BRIDGE NO. 34-0161RL	RETAINING WALL A & B	
DETAILS	BY P. A. TONKIN	CHECKED M. YUCEKUL			POST MILES 9.0/9.2	SCHEDULE SHEET NO.3	
QUANTITIES	BY N. VIVAR	CHECKED J. YANG					

DESIGN DETAIL SHEET (ENGLISH) (REV. 06-01-09)

ORIGINAL SCALE IN INCHES FOR REDUCED PLANS 0 1 2 3

CU 04
EA 163741

DISREGARD PRINTS BEARING EARLIER REVISION DATES →

REVISION DATES (PRELIMINARY STAGE ONLY): 06/01/09 | 07/15/09 | 08/07/09 | 08/26/09

SHEET 32 OF 37

USERNAME => ttmorton DATE PLOTTED => 11-DEC-2009 TIME PLOTTED => 13:00

FILE => 34-0161rl-ab-st032.dgn

SOLDIER PILE SCHEDULE

Piles	Size	Top of Pile Elev	Bottom of Pile Elev	Cut & Remove Elev	Drilled Hole Dia.
PB1-PB9	Not Used				
PB10	W18x65	77.58	32.28	NA	30
PB11	W18x65	77.94	32.28	NA	30
PB12	W18x65	78.29	32.28	NA	30
PB13	W18x65	78.65	32.28	NA	30
PB14	W18x65	79.01	32.28	NA	30
PB15	2-MC18x42.7	77.58	32.28	NA	30
PB16	2-MC18x42.7	77.95	32.28	NA	30
PB17	2-MC18x42.7	78.32	32.28	NA	30
PB18	2-MC18x42.7	78.69	32.28	NA	30
PB19	2-MC18x42.7	79.06	32.28	NA	30
PB20	2-MC18x42.7	77.58	32.28	NA	30
PB21	2-MC18x42.7	77.77	32.28	NA	30
PB22	2-MC18x42.7	77.95	32.28	NA	30
PB23	2-MC18x42.7	78.14	32.28	NA	30
PB24	2-MC18x42.7	78.82	33.67	NA	30
PB25	2-MC18x42.7	79.01	33.67	NA	30
PB26	2-MC18x42.7	79.19	33.67	NA	30
PB27	2-MC18x42.7	79.38	33.67	NA	30
PB28	2-MC18x42.7	79.56	33.67	NA	30
PB29	2-MC18x42.7	79.75	33.67	NA	30
PB30	2-MC18x42.7	79.93	33.67	NA	30
PB31	W14x99	85.20	33.67	NA	30
PB32	W14x99	85.20	33.67	NA	30
PB33	W18x65	85.20	36.06	NA	30
PB34	W18x65	85.20	36.23	NA	30
PB35	W18x65	88.36	35.61	NA	30
PB36	W18x65	88.36	35.61	NA	30
PB37	W18x65	88.36	35.61	NA	30
PB38	W18x65	88.36	35.61	NA	30
PB39	W18x65	88.36	35.61	NA	30
PB40	W18x65	88.36	35.61	NA	30
PB41	W18x65	89.34	36.71	NA	30
PB42	W18x65	89.34	36.71	NA	30
PB43	W18x65	89.34	36.71	NA	30
PB44	W18x65	89.34	36.71	NA	30
PB45	W18x65	89.34	36.71	NA	30
PB46	W18x65	89.34	36.71	NA	30
PB47	W18x65	90.32	37.81	NA	30
PB48	W18x65	90.32	37.81	NA	30
PB49	W18x65	90.32	37.81	NA	30
PB50	W18x65	90.32	37.81	NA	30
PB51	W18x65	90.32	37.81	NA	30
PB52	W18x65	90.32	37.81	NA	30
PB53	W18x65	91.25	38.91	NA	30
PB54	W18x65	91.25	38.91	NA	30
PB55	W18x65	91.25	38.91	NA	30

LAGGING PANEL SCHEDULE

Between Piles		Top of Wall Elev	Bottom of Timber Lagging Elev	Bottom of Shotcrete Elev	Lagging Size
PB1	PB9	Not Used			
PB10	PB11	NA	NA	NA	NA
PB11	PB12	NA	NA	NA	NA
PB12	PB13	NA	NA	NA	NA
PB13	PB14	NA	NA	NA	NA
PB14	PB15	NA	NA	NA	NA
PB15	PB16	76.08	41.89	NA	4x12
PB16	PB17	76.45	42.08	NA	4x12
PB17	PB18	76.82	42.27	NA	4x12
PB18	PB19	77.19	42.45	NA	4x12
PB19	PB20	77.56	42.64	NA	4x12
PB20	PB21	76.08	42.82	NA	4x12
PB21	PB22	76.27	43.01	NA	4x12
PB22	PB23	76.45	43.20	NA	4x12
PB23	PB24	76.64	43.38	NA	4x12
PB24	PB25	78.82	43.57	NA	4x12
PB25	PB26	79.01	43.75	NA	4x12
PB26	PB27	79.19	43.94	NA	4x12
PB27	PB28	79.38	44.13	NA	4x12
PB28	PB29	79.56	44.31	NA	4x12
PB29	PB30	79.75	44.50	NA	4x12
PB30	PB31	79.93	44.68	NA	4x12
PB31	PB32	83.80	44.87	NA	4x12
PB32	PB33	83.80	45.06	NA	4x12
PB33	PB34	83.80	45.24	NA	4x12
PB34	PB35	83.80	45.43	NA	4x12
PB35	PB36	83.61	45.61	NA	4x12
PB36	PB37	83.80	45.80	NA	4x12
PB37	PB38	83.98	45.98	NA	4x12
PB38	PB39	84.16	46.16	NA	4x12
PB39	PB40	84.35	46.35	NA	4x12
PB40	PB41	84.53	46.53	NA	4x12
PB41	PB42	84.71	46.71	NA	4x12
PB42	PB43	84.90	46.90	NA	4x12
PB43	PB44	85.08	47.08	NA	4x12
PB44	PB45	85.26	47.26	NA	4x12
PB45	PB46	85.44	47.44	NA	4x12
PB46	PB47	85.63	47.63	NA	4x12
PB47	PB48	85.81	47.81	NA	4x12
PB48	PB49	85.99	47.99	NA	4x12
PB49	PB50	86.18	48.18	NA	4x12
PB50	PB51	86.36	48.36	NA	4x12
PB51	PB52	86.54	48.54	NA	4x12
PB52	PB53	86.73	48.73	NA	4x12
PB53	PB54	86.91	48.91	NA	4x12
PB54	PB55	87.09	49.09	NA	4x12
PB55	PB56	87.27	49.27	NA	4x12

DIST	COUNTY	ROUTE	POST MILES TOTAL PROJECT	SHEET No	TOTAL SHEETS
04	SF	101	8.2/9.2	541	654

8/28/09
REGISTERED CIVIL ENGINEER DATE

REGISTERED PROFESSIONAL ENGINEER
KEVIN BARRY CLINCH
No. C-48926
Exp. 9/30/10
CIVIL
STATE OF CALIFORNIA

12-14-09
PLANS APPROVAL DATE

The State of California or its officers or agents shall not be responsible for the accuracy or completeness of scanned copies of this plan sheet.

Arup PB Joint Venture
560 Mission Street, Suite 700
San Francisco, CA 94105

SOLDIER PILE SCHEDULE

Piles	Size	Top of Pile Elev	Bottom of Pile Elev	Cut & Remove Elev	Drilled Hole Dia.
PB56	W18x65	91.25	38.91	NA	30
PB57	W18x65	91.25	38.91	NA	30
PB58	W18x65	91.25	38.91	NA	30
PB59	W18x65	92.23	40.00	NA	30
PB60	W18x65	92.23	40.00	NA	30
PB61	W18x65	92.23	40.00	NA	30
PB62	W18x65	92.23	40.00	NA	30
PB63	W18x65	92.23	40.00	NA	30
PB64	W18x65	92.23	40.00	NA	30
PB65	W18x65	93.17	41.11	NA	30
PB66	W18x65	93.17	41.11	NA	30
PB67	W18x65	93.17	41.11	NA	30
PB68	W18x65	93.17	41.11	NA	30
PB69	W18x65	93.17	41.11	NA	30
PB70	W18x65	93.17	41.11	NA	30
PB71	W18x65	94.16	42.21	NA	30
PB72	W18x65	94.16	42.21	NA	30
PB73	W18x65	94.16	42.21	NA	30
PB74	W18x65	94.16	42.21	NA	30
PB75	W18x65	94.16	42.21	NA	30
PB76	W18x65	94.16	42.21	NA	30
PB77	W18x65	95.49	48.33	NA	30
PB78	W18x65	95.49	48.33	NA	30
PB79	W18x65	95.49	48.33	NA	30
PB80	W18x65	95.49	48.33	NA	30
PB81	W18x65	95.49	48.33	NA	30
PB82	W18x65	95.49	48.33	NA	30
PB83	W18x65	96.08	49.44	NA	30
PB84	W18x65	96.08	49.44	NA	30
PB85	W18x65	96.08	49.44	NA	30
PB86	W18x65	96.08	49.44	NA	30
PB87	W18x65	96.08	49.44	NA	30
PB88	W18x65	96.08	49.44	NA	30
PB89	W18x65	101.10	50.55	NA	30
PB90	W18x65	101.10	50.55	NA	30
PB91	W18x65	101.10	50.55	NA	30
PB92	W18x65	101.10	50.55	NA	30

LAGGING PANEL SCHEDULE

Between Piles		Top of Wall Elev	Bottom of Timber Lagging Elev	Bottom of Shotcrete Elev	Lagging Size
PB56	PB57	87.46	49.46	NA	4x12
PB57	PB58	87.64	49.64	NA	4x12
PB58	PB59	87.82	49.82	NA	4x12
PB59	PB60	88.00	50.00	NA	4x12
PB60	PB61	88.00	56.00	50.18	4x12
PB61	PB62	88.00	56.00	50.37	4x12
PB62	PB63	88.00	56.00	50.55	4x12
PB63	PB64	88.00	56.00	50.74	4x12
PB64	PB65	88.00	56.00	50.92	4x12
PB65	PB66	88.00	56.00	51.11	4x12
PB66	PB67	88.80	58.80	51.29	4x12
PB67	PB68	88.80	58.80	51.48	4x12
PB68	PB69	88.80	58.80	51.66	4x12
PB69	PB70	88.80	58.80	51.85	4x12
PB70	PB71	88.80	58.80	52.03	4x12
PB71	PB72	88.80	58.80	52.21	4x12
PB72	PB73	89.50	62.50	52.40	4x12
PB73	PB74	89.50	62.50	52.59	4x12
PB74	PB75	89.50	62.50	52.77	4x12
PB75	PB76	89.50	62.50	52.96	4x12
PB76	PB77	89.50	62.50	53.14	4x12
PB77	PB78	89.50	62.50	53.33	4x12
PB78	PB79	90.30	66.30	53.51	4x12
PB79	PB80	90.30	66.30	53.70	4x12
PB80	PB81	90.30	66.30	53.89	4x12
PB81	PB82	90.30	66.30	54.07	4x12
PB82	PB83	90.30	66.30	54.26	4x12
PB83	PB84	90.30	66.30	54.44	4x12
PB84	PB85	90.30	69.30	54.63	4x12
PB85	PB86	90.30	69.30	54.81	4x12
PB86	PB87	90.30	69.30	54.99	4x12
PB87	PB88	90.30	69.30	55.18	4x12
PB88	PB89	90.30	69.30	55.36	4x12
PB89	PB90	90.30	69.30	55.55	4x12
PB90	PB91	90.30	73.30	55.73	4x12
PB91	PB92	90.30	73.30	55.92	4x12
PB92	PB93	90.30	73.30	56.10	4x12

RWAB-ST33

	BY	CHECKED
DESIGN	K. CLINCH	M. YUCEKUL
DETAILS	P. A. TONKIN	M. YUCEKUL
QUANTITIES	N. VIVR	J. YANG

PREPARED FOR THE
STATE OF CALIFORNIA
DEPARTMENT OF TRANSPORTATION

QIYU LIU
PROJECT ENGINEER

BRIDGE NO. 34-0161RL
POST MILES 9.0/9.2

RETAINING WALL A & B
SCHEDULE SHEET NO.4

DESIGN DETAIL SHEET (ENGLISH) (REV. 06-01-09)

ORIGINAL SCALE IN INCHES FOR REDUCED PLANS 0 1 2 3

CU 04
EA 163741

DISREGARD PRINTS BEARING EARLIER REVISION DATES →

REVISION DATES (PRELIMINARY STAGE ONLY): 06/01/09 | 07/31/09 | 08/05/09 | 08/26/09

SHEET 33 OF 37

FILE => 34-0161rl-ab-st033.dgn

USERNAME => tmorrlok DATE PLOTTED => 11-DEC-2009 TIME PLOTTED => 13:00

DIST	COUNTY	ROUTE	POST MILES TOTAL PROJECT	SHEET No	TOTAL SHEETS
04	SF	101	8.2/9.2	542	654

REGISTERED CIVIL ENGINEER — 8/28/09 DATE

12-14-09
PLANS APPROVAL DATE

REGISTERED PROFESSIONAL ENGINEER — KEVIN BARRY CLINCH — No. C-48926 — Exp. 9/30/10 — CIVIL — STATE OF CALIFORNIA

The State of California or its officers or agents shall not be responsible for the accuracy or completeness of scanned copies of this plan sheet.

Arup PB Joint Venture
560 Mission Street, Suite 700
San Francisco, CA 94105

SOLDIER PILE SCHEDULE

Piles	Size	Top of Pile Elev	Bottom of Pile Elev	Cut & Remove Elev	Drilled Hole Dia.
PB93	W18x65	101.10	50.55	NA	30
PB94	W18x65	101.10	50.55	NA	30
PB95	W18x119	102.15	51.66	NA	30
PB96	W18x119	102.15	51.66	NA	30
PB97	W18x119	102.15	51.66	NA	30
PB98	W18x119	102.15	51.66	NA	30
PB99	W18x119	102.15	51.66	NA	30
PB100	W18x119	102.15	51.66	NA	30
PB101	W18x119	102.91	52.85	NA	30
PB102	W18x119	99.07	52.85	NA	30
PB103	W18x119	99.07	52.85	NA	30
PB104	W18x119	99.07	52.85	NA	30
PB105	W18x119	99.07	52.85	NA	30
PB106	W18x119	99.07	52.85	NA	30
PB107	W18x119	100.00	54.03	NA	30
PB108	W18x119	100.00	54.03	NA	30
PB109	W18x119	100.00	54.03	NA	30
PB110	W18x119	100.00	54.03	NA	30
PB111	W18x119	100.00	54.03	NA	30
PB112	W18x119	100.00	54.03	NA	30
PB113	W18x119	101.07	55.23	NA	30
PB114	W18x119	101.07	55.23	NA	30
PB115	W18x119	101.07	55.23	NA	30
PB116	W18x119	101.07	55.23	NA	30
PB117	W18x119	101.07	55.23	NA	30
PB118	W18x119	101.07	55.23	NA	30
PB119	W18x65	102.08	46.46	NA	30
PB120	W18x65	102.08	46.46	NA	30
PB121	W18x65	102.08	46.46	NA	30
PB122	W18x65	102.08	46.46	NA	30
PB123	W18x65	102.08	46.46	NA	30
PB124	W18x65	102.08	46.46	NA	30
PB125	W18x65	103.91	47.71	NA	30
PB126	W18x65	103.91	47.71	NA	30
PB127	W18x65	103.91	47.71	NA	30
PB128	W18x65	103.91	47.71	NA	30
PB129	W18x65	103.91	47.71	NA	30
PB130	W18x65	103.91	47.71	NA	30
PB131	W18x65	104.80	49.97	NA	30
PB132	W18x65	104.80	49.97	NA	30
PB133	W18x65	104.80	49.97	NA	30
PB134	W18x65	104.80	49.97	NA	30
PB135	W18x65	104.80	49.97	NA	30
PB136	W18x65	104.80	49.97	NA	30
PB137	W18x65	106.46	51.26	NA	30
PB138	W18x65	106.46	51.26	NA	30
PB139	W18x65	106.46	51.26	NA	30

LAGGING PANEL SCHEDULE

Between Piles		Top of Wall Elev	Bottom of Timber Lagging Elev	Bottom of Shotcrete Elev	Lagging Size
PB93	PB94	90.30	73.30	56.29	4x12
PB94	PB95	90.30	73.30	56.47	4x12
PB95	PB96	90.50	73.50	56.66	4x12
PB96	PB97	90.50	77.50	56.86	4x12
PB97	PB98	90.50	77.50	57.05	4x12
PB98	PB99	90.50	77.50	57.25	4x12
PB99	PB100	90.50	77.50	57.45	4x12
PB100	PB101	90.50	77.50	57.65	4x12
PB101	PB102	90.50	77.50	57.85	4x12
PB102	PB103	90.90	76.90	58.05	4x12
PB103	PB104	90.90	76.90	58.24	4x12
PB104	PB105	90.90	76.90	58.44	4x12
PB105	PB106	90.90	76.90	58.63	4x12
PB106	PB107	90.90	76.90	58.83	4x12
PB107	PB108	91.40	74.40	59.03	4x12
PB108	PB109	91.40	74.40	59.27	4x12
PB109	PB110	91.40	74.40	59.51	4x12
PB110	PB111	91.40	74.40	59.75	4x12
PB111	PB112	91.40	74.40	59.99	4x12
PB112	PB113	91.40	74.40	60.23	4x12
PB113	PB114	91.90	69.90	60.43	4x12
PB114	PB115	91.90	69.90	60.64	4x12
PB115	PB116	91.90	69.90	60.85	4x12
PB116	PB117	91.90	69.90	61.05	4x12
PB117	PB118	91.90	69.90	61.26	4x12
PB118	PB119	91.90	69.90	61.46	4x12
PB119	PB120	92.30	67.30	61.67	4x12
PB120	PB121	92.30	67.30	61.88	4x12
PB121	PB122	92.30	67.30	62.09	4x12
PB122	PB123	92.30	67.30	62.29	4x12
PB123	PB124	92.30	67.30	62.50	4x12
PB124	PB125	92.30	67.30	62.71	4x12
PB125	PB126	92.50	70.50	62.92	4x12
PB126	PB127	92.50	70.50	63.13	4x12
PB127	PB128	92.50	70.50	63.34	4x12
PB128	PB129	92.50	70.50	63.55	4x12
PB129	PB130	92.50	70.50	63.76	4x12
PB130	PB131	92.50	70.50	63.97	4x12
PB131	PB132	92.70	75.70	64.19	4x12
PB132	PB133	92.70	75.70	64.40	4x12
PB133	PB134	92.70	75.70	64.62	4x12
PB134	PB135	92.70	75.70	64.83	4x12
PB135	PB136	92.70	75.70	65.05	4x12
PB136	PB137	92.70	75.70	65.26	4x12
PB137	PB138	92.70	81.70	65.48	4x12
PB138	PB139	92.70	81.70	65.70	4x12
PB139	PB140	92.70	81.70	65.92	4x12

SOLDIER PILE SCHEDULE

Piles	Size	Top of Pile Elev	Bottom of Pile Elev	Cut & Remove Elev	Drilled Hole Dia.
PB140	W18x65	106.46	51.26	NA	30
PB141	W18x65	106.46	51.26	NA	30
PB142	W18x65	106.46	51.26	NA	30
PB143	W18x65	107.45	52.57	NA	30
PB144	W18x65	107.45	52.57	NA	30
PB145	W18x65	107.45	52.57	NA	30
PB146	W18x65	107.45	52.57	NA	30
PB147	W18x65	108.66	53.46	NA	30
PB148	W18x65	108.66	53.46	NA	30
PB149	W18x65	108.66	53.46	NA	30
PB150	W18x65	108.66	53.46	NA	30
PB151	W18x65	108.66	53.46	NA	30
PB152	W18x65	108.66	53.46	NA	30
PB153	W18x65	109.69	53.81	NA	30
PB154	W18x65	109.69	53.81	NA	30
PB155	W18x65	109.69	53.81	NA	30
PB156	W18x65	109.69	53.81	NA	30
PB157	W18x65	111.08	54.73	NA	30
PB158	W18x65	111.08	54.73	NA	30
PB159	W18x65	111.08	54.73	NA	30
PB160	W18x65	111.08	54.73	NA	30
PB161	W18x65	111.08	54.73	NA	30
PB162	W18x65	111.08	54.73	NA	30
PB163	W18x65	112.48	56.12	NA	30
PB164	W18x65	112.48	56.12	NA	30
PB165	W18x65	112.48	56.12	NA	30
PB166	W18x65	112.48	56.12	NA	30
PB167	W18x65	112.48	56.12	NA	30
PB168	W18x65	112.48	56.12	NA	30
PB169	W18x65	116.94	57.54	NA	30
PB170	W18x65	116.94	57.54	NA	30
PB171	W18x65	116.94	57.54	NA	30
PB172	W18x65	116.94	57.54	NA	30
PB173	W18x65	116.94	57.54	NA	30
PB174	W18x65	116.94	57.54	NA	30
PB175	W18x65	118.38	58.97	NA	30
PB176	W18x65	118.38	58.97	NA	30

LAGGING PANEL SCHEDULE

Between Piles		Top of Wall Elev	Bottom of Timber Lagging Elev	Bottom of Shotcrete Elev	Lagging Size
PB140	PB141	92.70	81.70	66.14	4x12
PB141	PB142	92.70	81.70	66.35	4x12
PB142	PB143	92.70	81.70	66.57	4x12
PB143	PB144	93.20	86.20	66.80	4x12
PB144	PB145	93.20	86.20	67.02	4x12
PB145	PB146	93.20	86.20	67.24	4x12
PB146	PB147	93.20	86.20	67.46	4x12
PB147	PB148	94.00	90.00	67.69	4x12
PB148	PB149	94.00	90.00	67.91	4x12
PB149	PB150	94.00	90.00	68.14	4x12
PB150	PB151	94.00	90.00	68.36	4x12
PB151	PB152	94.00	90.00	68.59	4x12
PB152	PB153	94.00	90.00	68.81	4x12
PB153	PB154	94.00	91.00	69.04	4x12
PB154	PB155	94.00	91.00	69.27	4x12
PB155	PB156	94.00	91.00	69.50	4x12
PB156	PB157	94.00	91.00	69.73	4x12
PB157	PB158	94.60	91.60	69.96	4x12
PB158	PB159	94.60	91.60	70.19	4x12
PB159	PB160	94.60	91.60	70.42	4x12
PB160	PB161	94.60	91.60	70.66	4x12
PB161	PB162	94.60	91.60	70.89	4x12
PB162	PB163	94.60	91.60	71.12	4x12
PB163	PB164	95.30	91.30	71.36	4x12
PB164	PB165	95.30	91.30	71.59	4x12
PB165	PB166	95.30	91.30	71.83	4x12
PB166	PB167	95.30	91.30	72.06	4x12
PB167	PB168	95.30	91.30	72.30	4x12
PB168	PB169	105.30	91.30	72.54	4x12
PB169	PB170	105.30	90.30	72.78	4x12
PB170	PB171	105.30	90.30	73.02	4x12
PB171	PB172	105.30	90.30	73.26	4x12
PB172	PB173	105.30	90.30	73.49	4x12
PB173	PB174	105.30	90.30	73.73	4x12
PB174	PB175	105.30	90.30	73.97	4x12
PB175	PB176	101.70	89.70	74.22	4x12
PB176	PB177	101.70	89.70	74.46	4x12

RWAB-ST34

DESIGN	BY K. CLINCH	CHECKED M. YUCEKUL
DETAILS	BY P. A. TONKIN	CHECKED M. YUCEKUL
QUANTITIES	BY N. VIVAR	CHECKED J. YANG

PREPARED FOR THE STATE OF CALIFORNIA DEPARTMENT OF TRANSPORTATION

QIYU LIU
PROJECT ENGINEER

BRIDGE NO. 34-0161RL
POST MILES 9.0/9.2

RETAINING WALL A & B
SCHEDULE SHEET NO.5

DESIGN DETAIL SHEET (ENGLISH) (REV. 06-01-09)

ORIGINAL SCALE IN INCHES FOR REDUCED PLANS 0 1 2 3

CU 04
EA 163741

DISREGARD PRINTS BEARING EARLIER REVISION DATES →

REVISION DATES (PRELIMINARY STAGE ONLY): 06/01/09 | 07/31/09 | 08/05/09 | 08/26/09

SHEET 34 OF 37

FILE => 34-0161rl-ab-st034.dgn

USERNAME => trmorlok DATE PLOTTED => 11-DEC-2009 TIME PLOTTED => 13:00

DIST	COUNTY	ROUTE	POST MILES TOTAL PROJECT	SHEET No	TOTAL SHEETS
04	SF	101	8.2/9.2	543	654

REGISTERED CIVIL ENGINEER — 8/28/09 DATE

12-14-09
PLANS APPROVAL DATE

REGISTERED PROFESSIONAL ENGINEER — KEVIN BARRY CLINCH — No. C-48926 — Exp. 9/30/10 — CIVIL — STATE OF CALIFORNIA

The State of California or its officers or agents shall not be responsible for the accuracy or completeness of scanned copies of this plan sheet.

Arup PB Joint Venture
560 Mission Street, Suite 700
San Francisco, CA 94105

SOLDIER PILE SCHEDULE

Piles	Size	Top of Pile Elev	Bottom of Pile Elev	Cut & Remove Elev	Drilled Hole Dia.
PB177	W18x65	118.38	58.97	NA	30
PB178	W18x65	118.38	58.97	NA	30
PB179	W18x65	118.38	58.97	NA	30
PB180	W18x65	118.38	58.97	NA	30
PB181	W18x65	124.33	60.44	NA	30
PB182	W18x65	124.33	60.44	NA	30
PB183	W18x65	124.33	60.44	NA	30
PB184	W18x65	124.33	61.18	NA	30
PB185	W18x119	124.33	61.18	NA	30
PB186	W18x119	124.33	61.18	NA	30
PB187	W18x119	124.33	61.18	NA	30
PB188	W18x119	97.30	61.50	NA	30
PB189	W18x119	97.30	61.50	NA	30
PB190	W18x119	96.30	61.50	NA	30
PB191	W18x119	95.30	61.50	NA	30

LAGGING PANEL SCHEDULE

Between Piles		Top of Wall Elev	Bottom of Timber Lagging Elev	Bottom of Shotcrete Elev	Lagging Size
PB177	PB178	101.70	89.70	74.71	4x12
PB178	PB179	101.70	89.70	74.95	4x12
PB179	PB180	101.70	89.70	75.19	4x12
PB180	PB181	101.70	89.70	75.44	4x12
PB181	PB182	98.20	89.20	75.68	4x12
PB182	PB183	98.20	89.20	75.93	4x12
PB183	PB184	98.00	89.00	76.18	4x12
PB184	PB185	98.00	89.00	76.18	4x12
PB185	PB186	98.00	89.00	76.18	4x12
PB186	PB187	98.00	89.00	76.18	4x12
PB187	PB188	98.00	89.00	77.20	4x12
PB188	PB189	97.00	88.00	77.40	4x12
PB189	PB190	96.00	88.00	77.60	4x12
PB190	PB191	95.00	86.00	77.80	4x12

SOLDIER PILE AT RAKER SCHEDULE

Piles	Size	Top of Drilled Hole Elev	Bottom of Pile Elev	Top of Pile Elev	Drilled Hole Dia.
PR1-PR9	Not Used				
PR10	W14x99	90.20	93.20	61.28	30
PR11	W14x99	91.40	94.40	62.99	30
PR12	W14x99	91.50	94.50	63.84	30
PR13	W14x99	91.69	94.69	65.56	30
PR14	W14x99	91.78	94.78	66.41	30
PR15	W14x99	91.96	94.96	68.12	30
PR16	W14x99	92.05	95.05	68.98	30
PR17	W14x99	92.23	95.23	70.69	30
PR18	W14x99	92.30	95.30	71.55	30
PR19	W14x99	92.34	95.34	73.26	30
PR20	W14x99	92.36	95.36	74.12	30
PR21	W14x99	92.40	95.40	75.83	30
PR22	W14x99	92.42	95.42	76.68	30
PR23	W14x99	92.46	95.46	78.40	30
PR24	W14x99	92.50	95.50	79.25	30
PR25	W14x99	92.62	95.62	80.62	30
PR26	W14x99	92.68	95.68	80.68	30
PR27	W14x99	92.74	95.74	80.74	30
PR28	W14x99	92.80	95.80	80.80	30
PR29	W14x99	92.86	95.86	80.86	30
PR30	W14x99	92.92	95.92	80.92	30
PR31	W14x99	93.00	96.00	81.00	30
PR32	W14x99	93.05	96.05	81.05	30
PR33	W14x99	93.10	96.10	81.10	30
PR34	W14x99	93.15	96.15	81.15	30
PR35	W14x99	93.20	96.20	81.20	30
PR36	W14x99	93.25	96.25	81.25	30
PR37	W14x99	93.30	96.30	81.30	30
PR38	W14x99	93.35	96.35	81.35	30
PR39	W14x99	93.40	96.40	81.40	30
PR40	W14x99	93.52	96.52	81.52	30
PR41	W14x99	93.64	96.64	81.64	30
PR42	W14x99	93.76	96.76	81.76	30
PR43	W14x99	93.88	96.88	81.88	30
PR44	W14x99	94.00	97.00	82.00	30
PR45	W14x99	94.12	97.12	82.12	30
PR46	W14x99	94.24	97.24	82.24	30
PR47	W14x99	94.30	97.30	82.30	30
PR48	W14x99	94.42	97.42	82.42	30
PR49	W14x99	94.54	97.54	82.54	30
PR50	W14x99	94.66	97.66	82.66	30
PR51	W14x99	94.78	97.78	82.78	30

RWAB-ST35

DESIGN	BY K.CLINCH	CHECKED M. YUCEKUL	PREPARED FOR THE STATE OF CALIFORNIA DEPARTMENT OF TRANSPORTATION	QIYU LIU PROJECT ENGINEER	BRIDGE NO. 34-0161RL
DETAILS	BY P.A.TONKIN	CHECKED M. YUCEKUL			POST MILES 8.0/9.6
QUANTITIES	BY N.VIVAR	CHECKED J. YANG			

RETAINING WALL A & B
SCHEDULE SHEET NO.6

DESIGN DETAIL SHEET (ENGLISH) (REV. 06-01-09)

ORIGINAL SCALE IN INCHES FOR REDUCED PLANS 0 1 2 3

CU 04
EA 163741

DISREGARD PRINTS BEARING EARLIER REVISION DATES →

REVISION DATES (PRELIMINARY STAGE ONLY): 06/01/09 | 07/10/09 | 08/07/09 | 08/26/09

SHEET 35 OF 37

FILE => 34-0161rl-ab-st035.dgn

USERNAME => rtrmorton DATE PLOTTED => 11-DEC-2009 TIME PLOTTED => 13:00

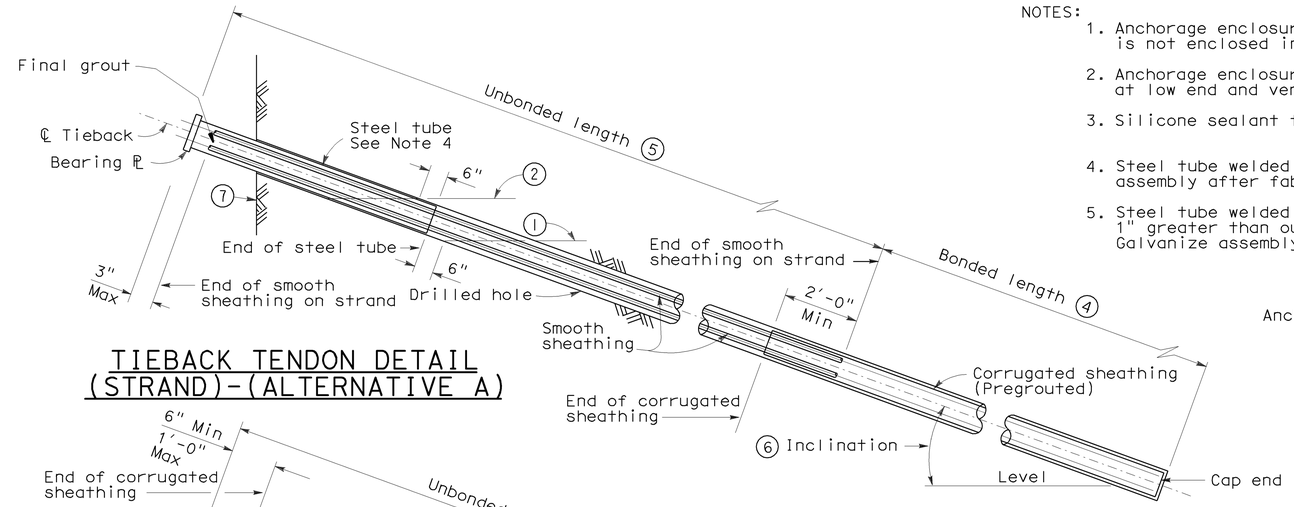

TIEBACK TENDON DETAIL (STRAND)-(ALTERNATIVE A)

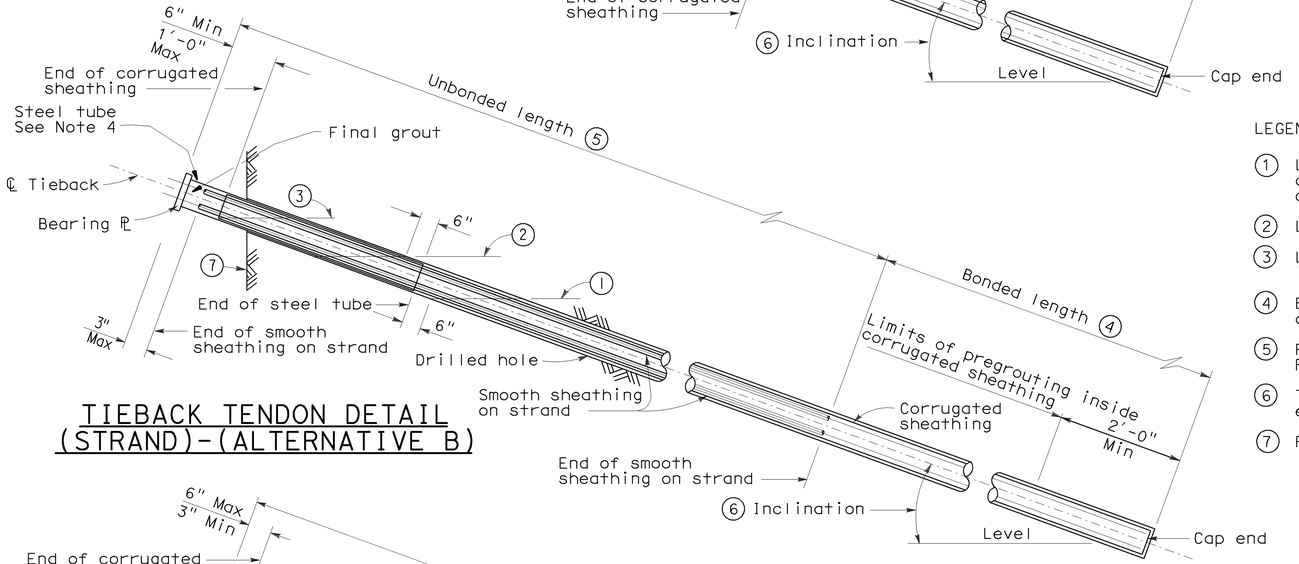

TIEBACK TENDON DETAIL (STRAND)-(ALTERNATIVE B)

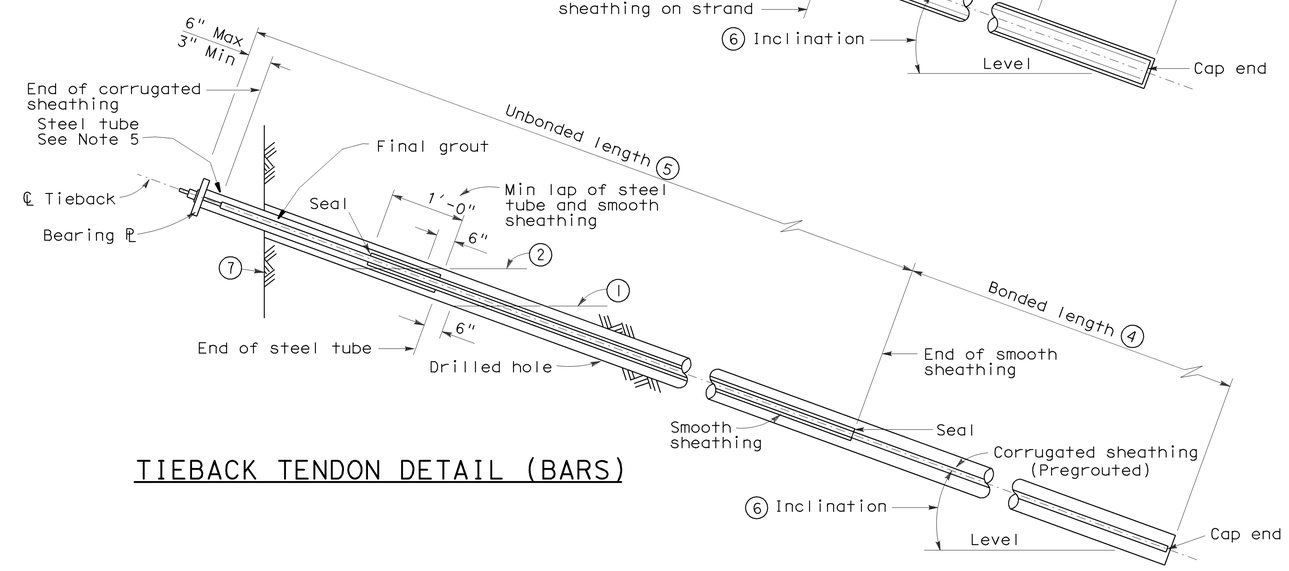

TIEBACK TENDON DETAIL (BARS)

NOTES:

1. Anchorage enclosure shall only be used when anchor head assembly is not enclosed in concrete.
2. Anchorage enclosure shall have provisions to allow injecting grout at low end and venting at high end. Galvanize after fabrication.
3. Silicone sealant to cover full width of flange.
4. Steel tube welded to bearing plate (Min thickness = 1/4"). Galvanize assembly after fabrication
5. Steel tube welded to bearing plate inside diameter of steel tube to be 1" greater than outside diameter of smooth sheathing (Min thickness = 1/4") Galvanize assembly after fabrication.

LEGEND:

① Level of initial grouting for drill hole 6" in diameter or smaller

② Level of secondary grouting

③ Level of initial grouting inside corrugated sheathing

④ Bonded length shall be determined by the Contractor

⑤ For unbonded length, see RWAB-ST29

⑥ Tieback inclination shown elsewhere

⑦ Face of Wall Excavation

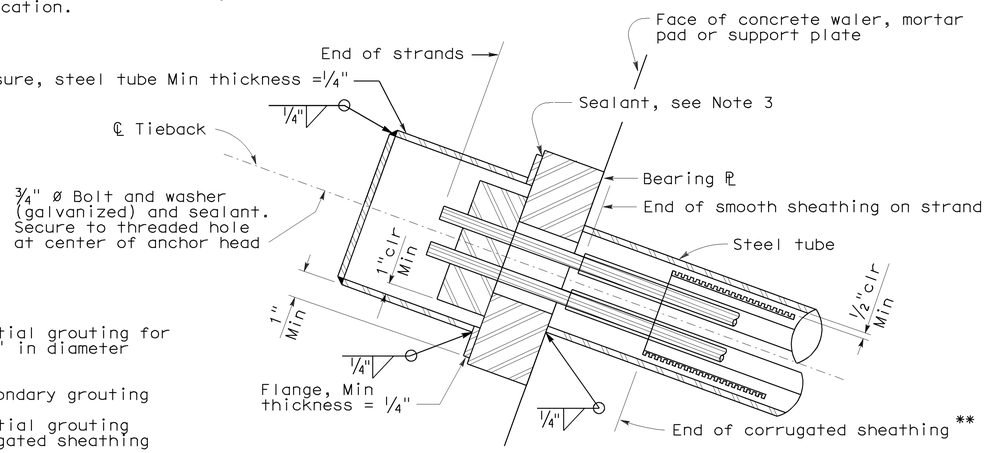

ALTERNATIVE X

** Alternative B tendon only

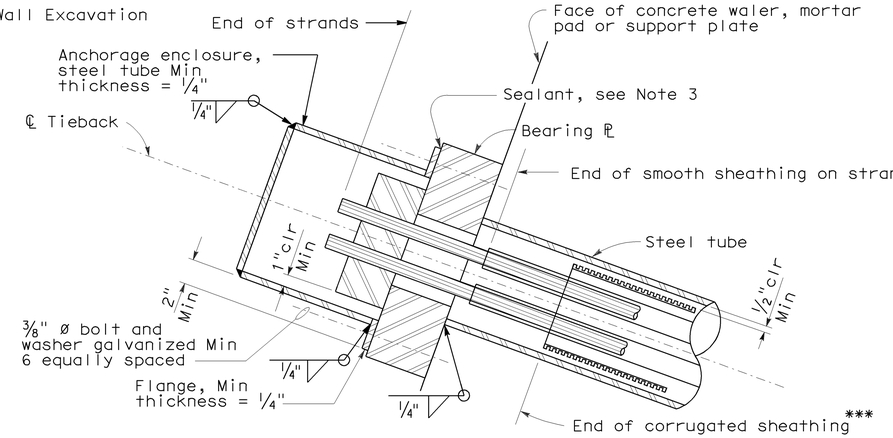

ALTERNATIVE Y

*** Alternative B tendon only

ANCHORAGE ENCLOSURE DETAILS

DIST.	COUNTY	ROUTE	POST MILES TOTAL PROJECT	SHEET NO.	TOTAL SHEETS
04	SF	101	8.2/9.2	544	654

REGISTERED ENGINEER - CIVIL

12-14-09
PLANS APPROVAL DATE

REGISTERED PROFESSIONAL ENGINEER
KEVIN BARRY CLINCH
No. C-48926
Exp.9/30/10
CIVIL
STATE OF CALIFORNIA

The State of California or its officers or agents shall not be responsible for the accuracy or completeness of electronic copies of this plan sheet.

RWAB-ST36

STANDARD DRAWING			
FILE NO. xs12-040e	APPROVED BY G. WANG (RESPONSIBLE TECHNICAL SPECIALIST)	RELEASED BY ROBERTO LACALLE (RESPONSIBLE OFFICE CHIEF)	
	APPROVAL DATE 2-27-09	RELEASE DATE 2-27-09	

STATE OF CALIFORNIA
DEPARTMENT OF TRANSPORTATION

DIVISION OF ENGINEERING SERVICES

BRIDGE NO.	RETAINING WALL A&B
34-0161RL	
POST MILE 9.0/9.2	TIEBACK DETAILS

CU 04242
EA 163741

DISREGARD PRINTS BEARING EARLIER REVISION DATES →

REVISION DATES (PRELIMINARY STAGE ONLY): 6/1/09 7/15/09 8/27/09 8/26/09

SHEET 36 OF 37

DS OSD 2147A (ENGLISH STANDARD DRAWING "XS" BORDER REV. 01/11/08)

ORIGINAL SCALE IN INCHES FOR REDUCED PLANS 0 1 2 3

FILE => 34-0161rl-ab-st036.dgn

USERNAME => $USER$ DATE PLOTTED => $DATE$ TIME PLOTTED => $TIME$

DIST	COUNTY	ROUTE	POST MILES TOTAL PROJECT	SHEET No	TOTAL SHEETS
04	SF	101	8.2/9.2	545	654

REGISTERED CIVIL ENGINEER — 8/28/09 DATE

12-14-09
PLANS APPROVAL DATE

REGISTERED PROFESSIONAL ENGINEER
KEVIN BARRY CLINCH
No. C-48926
Exp. 9/30/10
CIVIL
STATE OF CALIFORNIA

The State of California or its officers or agents shall not be responsible for the accuracy or completeness of scanned copies of this plan sheet.

Arup PB Joint Venture
560 Mission Street, Suite 700
San Francisco, CA 94105

INCLINOMETER LOCATIONS TABLE

INCLINOMETER No.	'SB' STATION	OFFSET FROM 'SB' LINE	DEPTH
IM1	76+20	65' Lt	64'
IM2	77+40	65' Lt	56'
IM3	77+85	65' Lt	52'
IM4	78+40	65' Lt	48'
IM5*	83+80	In wall 60' Lt	46'
IM6	84+20	65' Lt	46'

* Inclinometer casing shall be mounted to steel soldier pile.

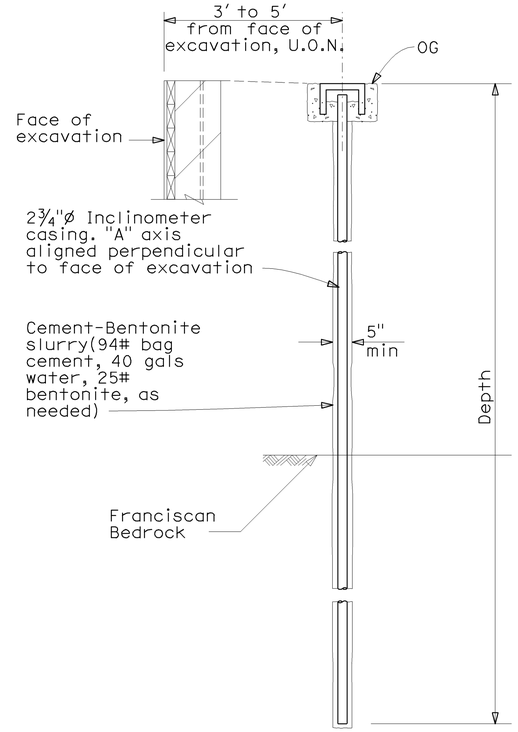

INCLINOMETER DETAIL
NTS

RWAB-ST37

DESIGN	BY K. CLINCH	CHECKED M. YUCEKUL	PREPARED FOR THE STATE OF CALIFORNIA DEPARTMENT OF TRANSPORTATION	QIYU LIU PROJECT ENGINEER	BRIDGE NO. 34-0161RL	RETAINING WALL A & B	
DETAILS	BY T. MARTARELLA	CHECKED M. YUCEKUL			POST MILES 9.0/9.2	EXCAVATION MONITORING	
QUANTITIES	BY N. VIVAR	CHECKED J. YANG					

DESIGN DETAIL SHEET (ENGLISH) (REV. 06-01-09)

ORIGINAL SCALE IN INCHES FOR REDUCED PLANS 0 1 2 3

CU 04
EA 163741

DISREGARD PRINTS BEARING EARLIER REVISION DATES →

REVISION DATES (PRELIMINARY STAGE ONLY): 06/01/09 | 07/15/09 | 08/07/09 | 08/26/09

SHEET 37 OF 37

FILE => 34-0161r1-ab-st037.dgn

USERNAME => tmorlok DATE PLOTTED => 11-DEC-2009 TIME PLOTTED => 13:01

INDEX TO PLANS

REF. NO.	TITLE
SBBTS0-1	INDEX TO PLANS
DT0-1	DRAINAGE ABBREVIATION AND LEGEND
DT1-1	ROADWAY DRAINAGE PLAN NO. 1
DT1-2	ROADWAY DRAINAGE PLAN NO. 2
DT2-1	ROADWAY DRAINAGE SCHEMATIC
DT3-1	DRAINAGE DETAILS NO. 1
DT3-1.1	INTENTIONALLY LEFT BLANK
DT3-2	DRAINAGE DETAILS NO. 2
DT3-3	DRAINAGE DETAILS NO. 3
MT0-1	MECHANICAL ABBREVIATIONs AND LEGEND
MT4-1	GENERAL PLAN - FIRE PROTECTION
MT5-1	FIRE PROTECTION PLAN NO. 1
MT5-2	FIRE PROTECTION PLAN NO. 2
MT6-1	FIRE PROTECTION SECTIONS NO. 1
MT6-2	FIRE PROTECTION SECTIONS NO. 2
MT7-1	DETAILS NO. 1
MT7-2	DETAILS NO. 2
MT7-3	DETAILS NO. 3
MT7-4	DETAILS NO. 4
MT7-5	DETAILS NO. 5
MT7-6	DETAILS NO. 6
MT8-1	FIRE PROTECTION - STANDPIPE SCHEMATIC
MT9-1	FIRE PROTECTION - DELUGE FIXED FIRE SUPPRESSION SYSTEM SCHEMATIC

SCOPE

TUNNEL FIRE SUPPRESION SYSTEMS, TUNNEL DRAINAGE SYSTEMS AND SUBSTATION HVAC SYSTEMS FOR THE DOYLE DRIVE SOUTHBOUND BATTERY TUNNEL PROJECT.

DESCRIPTION

A. TUNNEL

1. DELUGE SPRINKLER SYSTEM
2. FIRE STANDPIPE SYSTEM
3. ROADWAY DRAINAGE SYSTEM
4. UTILITY DUCTBANK DRAINAGE SYSTEM

B. SUBSTATION

1. SUBSTATION EQUIPMENT ROOM COOLING VENTILATION
2. TUNNEL CONTROL ROOM AIR CONDITIONING

CALIFORNIA STATE FIRE MARSHAL APPROVED

Approval of this plan does not authorize or approve any omission or deviation from applicable regulations. Final approval is subject to field inspection. One set of approved plans shall be available on the project site at all times.

Reviewed by: STEPHEN GUARINO

Approval date: 12-14-09

DIST	COUNTY	ROUTE	POST MILES TOTAL PROJECT	SHEET No	TOTAL SHEETS
04	SF	101	8.2/9.2	546	654

Bobby J. Melvin 12/08/09
REGISTERED MECH. ENGINEER DATE

12-14-09
PLANS APPROVAL DATE

REGISTERED PROFESSIONAL ENGINEER — Bobby J. Melvin — No. 28685 — Exp. 06/30/2011 Mechanical — STATE OF CALIFORNIA

The State of California or its officers or agents shall not be responsible for the accuracy or completeness of electronic copies of this plan sheet.

Arup PB Joint Venture
3840 Rosin Court, Suite 200
Sacramento, CA 95834

CODE ANALYSIS:

1. CALIFORNIA BLDG CODE (2007)
2. CALIFORNIA FIRE CODE (2007)
3. CALIFORNIA ELECTRICAL CODE (2007)
4. CALIFORNIA MECHANICAL CODE (2007)
5. NFPA 10 (2007)
6. NFPA 13 (2007)
7. NFPA 14 (2007)
8. NFPA 24 (2007)
9. NFPA 25 (2007)
10. NFPA 70 (2008)
11. NFPA 72 (2007)
12. NFPA 502 (2008)

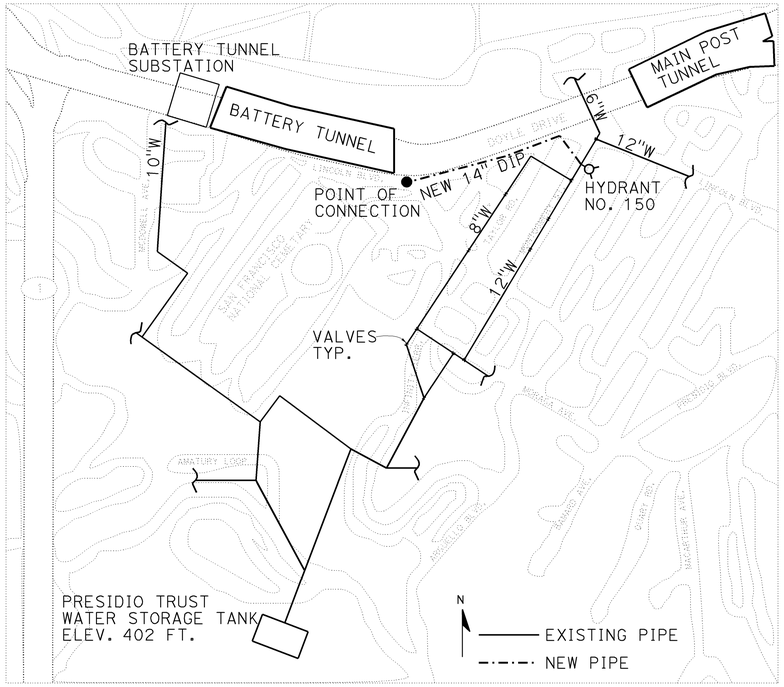

DOYLE DRIVE TUNNEL PROJECT SITE MAP

QUANTITIES

TUNNEL FIRE PROTECTION SYSTEM	LUMP SUM
ROADWAY DRAINAGE SYSTEM	LUMP SUM

SBBTS0-1

DESIGN	BY V. YELTON	CHECKED B. MELVIN	PREPARED FOR THE STATE OF CALIFORNIA DEPARTMENT OF TRANSPORTATION	C. J. HAWKINS PROJECT ENGINEER	BRIDGE NO. 34-0161L / POST MILE 8.81
DETAILS	BY V. YELTON	CHECKED B. MELVIN			
QUANTITIES	BY V. YELTON	CHECKED B. MELVIN			

SOUTHBOUND BATTERY TUNNEL SYSTEMS
INDEX TO PLANS AND PROJECT DATA

DESIGN DETAIL SHEET (ENGLISH) (REV. 2/25/05)

ORIGINAL SCALE IN INCHES FOR REDUCED PLANS 0 1 2 3

CU 04
EA 163741

DISREGARD PRINTS BEARING EARLIER REVISION DATES →

REVISION DATES (PRELIMINARY STAGE ONLY): 06/09/09 07/01/09 08/07/09 08/28/09 12/08/09

SHEET 1 OF 23

FILE => 34-0161l-a-itp.dgn

USERNAME => trlenard DATE PLOTTED => 14-DEC-2009 TIME PLOTTED => 17:05

ABBREVIATIONS

ARCH	ARCHITECTURAL
BMP	BEST MANAGEMENT PRACTICE
BS	BATTERY TUNNEL SOUTHBOUND
CIP	CAST IRON PIPE
℄	CENTER LINE
DIP	DUCTILE IRON PIPE
EA	EACH
FD	FLOOR DRAIN
FFS	FIXED FIRE SUPPRESSION
MFR	MANUFACTURE
MTD	MOUNTED
NA	NOT APPLICABLE
NC	NORMALLY CLOSED
NIC	NOT IN CONTRACT
NO	NORMALLY OPEN
NO.	NUMBER
OC	ON CENTER
PH	PHASE
ℙ	PLATE
POC	POINT OF CONNECTION
REF	REFERENCE
SB	SOUTHBOUND
SFPUC	SAN FRANCISCO PUBLIC UTILITIES COMMISSION
STA.	STATION
TYP.	TYPICAL
VB	VALVE BOX
WSP	WET STANDPIPE

LEGEND

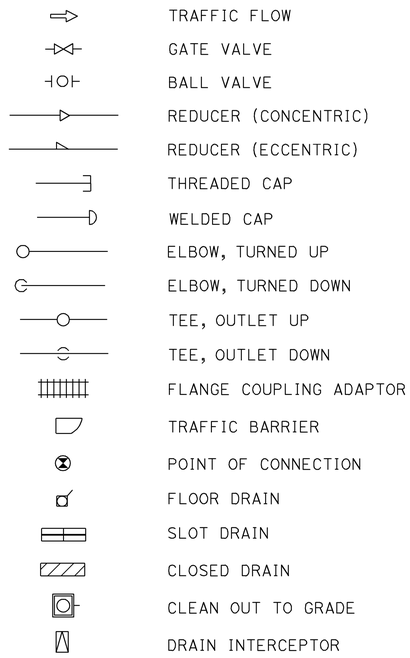

CALIFORNIA STATE FIRE MARSHAL APPROVED

Approval of this plan does not authorize or approve any omission or deviation from applicable regulations. Final approval is subject to field inspection. One set of approved plans shall be available on the project site at all times.

Reviewed by: STEPHEN GUARINO

Approval date: 12-14-09

DIST	COUNTY	ROUTE	POST MILES TOTAL PROJECT	SHEET No	TOTAL SHEETS
04	SF	101	8.2/9.2	547	654

Bobby J. Melvin 12/08/09
REGISTERED MECH. ENGINEER DATE

12-14-09
PLANS APPROVAL DATE

REGISTERED PROFESSIONAL ENGINEER — Bobby J. Melvin — No. 28685 — Exp. 06/30/2011 — Mechanical — STATE OF CALIFORNIA

The State of California or its officers or agents shall not be responsible for the accuracy or completeness of electronic copies of this plan sheet.

Arup PB Joint Venture
3840 Rosin Court, Suite 200
Sacramento, CA 95834

DTO-1

DESIGN	BY C. A. HAWKINS	CHECKED B. MELVIN	
DETAILS	BY C. A. HAWKINS	CHECKED B. MELVIN	
QUANTITIES	BY C. A. HAWKINS	CHECKED B. MELVIN	

PREPARED FOR THE STATE OF CALIFORNIA DEPARTMENT OF TRANSPORTATION

C. J. HAWKINS
PROJECT ENGINEER

BRIDGE NO. 34-0161L
POST MILE 8.81

SOUTHBOUND BATTERY TUNNEL SYSTEMS
DRAINAGE ABBREVIATIONS AND LEGEND

DESIGN DETAIL SHEET (ENGLISH) (REV. 2/25/05)

ORIGINAL SCALE IN INCHES FOR REDUCED PLANS 0 1 2 3

CU 04
EA 163741

DISREGARD PRINTS BEARING EARLIER REVISION DATES →

REVISION DATES (PRELIMINARY STAGE ONLY): 06/01/09 | 07/01/09 | 08/01/09 | 08/31/09 | 12/08/09

SHEET 2 OF 23

FILE => 34-0161l-u-09mdt01.dgn

USERNAME => trrichard DATE PLOTTED => 14-DEC-2009 TIME PLOTTED => 17:05

NOTE:

1. INSTALL SLOT DRAINS SO THAT THE SLOT OPENING IS FLUSH WITH THE FINISHED GRADE OF THE ROADWAY. SEE SOUTHBOUND BATTERY TUNNEL PLANS SHEET NO. SBBT-ST25 FOR DETAILS.

CALIFORNIA STATE FIRE MARSHAL APPROVED

Approval of this plan does not authorize or approve any omission or deviation from applicable regulations. Final approval is subject to field inspection. One set of approved plans shall be available on the project site at all times.

Reviewed by: STEPHEN GUARINO

Approval date: 12-14-09

DIST	COUNTY	ROUTE	POST MILES TOTAL PROJECT	SHEET No	TOTAL SHEETS
04	SF	101	8.2/9.2	548	654

Bobby J. Melvin 12/08/09
REGISTERED MECH. ENGINEER DATE

12-14-09
PLANS APPROVAL DATE

REGISTERED PROFESSIONAL ENGINEER
Bobby J. Melvin
No. 28685
Exp. 06/30/2011
Mechanical
STATE OF CALIFORNIA

The State of California or its officers or agents shall not be responsible for the accuracy or completeness of electronic copies of this plan sheet.

Arup PB Joint Venture
3840 Rosin Court, Suite 200
Sacramento, CA 95834

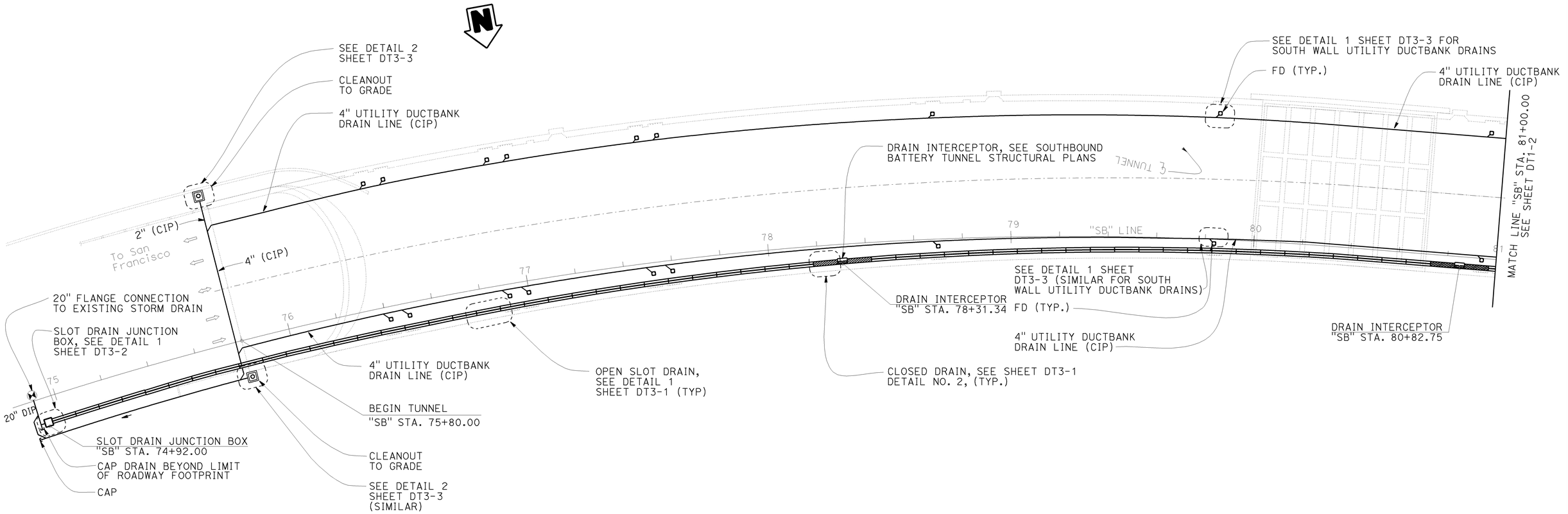

PLAN
1"=20'

DT1-1

DESIGN	BY C. A. HAWKINS	CHECKED B. MELVIN	PREPARED FOR THE STATE OF CALIFORNIA DEPARTMENT OF TRANSPORTATION	C. J. HAWKINS PROJECT ENGINEER	BRIDGE NO. 34-0161L	SOUTHBOUND BATTERY TUNNEL SYSTEMS
DETAILS	BY C. A. HAWKINS	CHECKED B. MELVIN			POST MILE 8.81	ROADWAY DRAINAGE PLAN NO. 1
QUANTITIES	BY C. A. HAWKINS	CHECKED B. MELVIN				

DESIGN DETAIL SHEET (ENGLISH) (REV. 2/25/05)

ORIGINAL SCALE IN INCHES FOR REDUCED PLANS 0 1 2 3

CU 04
EA 163741

DISREGARD PRINTS BEARING EARLIER REVISION DATES

REVISION DATES (PRELIMINARY STAGE ONLY) 06/01/09 07/15/09 08/07/09 08/26/09 12/08/09

SHEET 3 OF 23

FILE => 34-0161l-u-09mdt02.dgn

USERNAME => trlenard DATE PLOTTED => 14-DEC-2009 TIME PLOTTED => 17:05

DIST	COUNTY	ROUTE	POST MILES TOTAL PROJECT	SHEET No	TOTAL SHEETS
04	SF	101	8.2/9.2	549	654

Bobby J. Melvin Aug 25, 2009
REGISTERED MECH. ENGINEER DATE

12-14-09
PLANS APPROVAL DATE

REGISTERED PROFESSIONAL ENGINEER
Bobby J. Melvin
No. 28685
Exp. 06/30/2011
Mechanical
STATE OF CALIFORNIA

The State of California or its officers or agents shall not be responsible for the accuracy or completeness of electronic copies of this plan sheet.

Arup PB Joint Venture
3840 Rosin Court, Suite 200
Sacramento, CA 95834

CALIFORNIA STATE FIRE MARSHAL APPROVED

Approval of this plan does not authorize or approve any omission or deviation from applicable regulations. Final approval is subject to field inspection. One set of approved plans shall be available on the project site at all times.

Reviewed by: STEPHEN GUARINO

Approval date: 12-14-09

NOTE:

1. INSTALL SLOT DRAINS SUCH THAT THE SLOT OPENING IS FLUSH WITH THE FINISHED GRADE OF THE ROADWAY. SEE SOUTHBOUND BATTERY TUNNEL PLANS SHEET NO SBBT-ST25 FOR DETAILS.

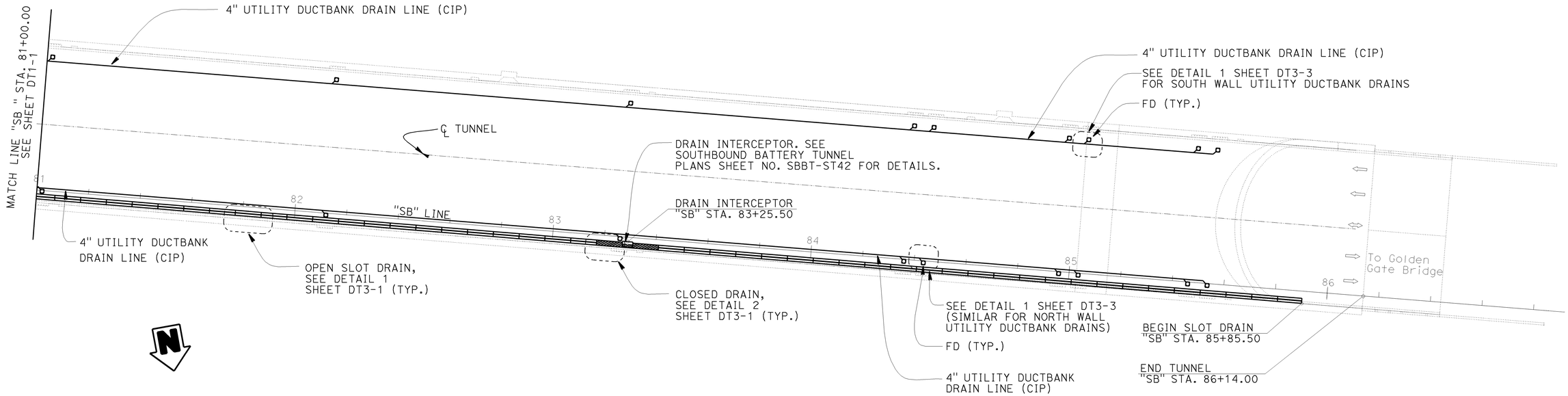

PLAN
1"=20'

DT1-2

DESIGN	BY C. HAWKINS	CHECKED B. MELVIN	PREPARED FOR THE STATE OF CALIFORNIA DEPARTMENT OF TRANSPORTATION	C. J. HAWKINS PROJECT ENGINEER	BRIDGE NO. 34-0161L	SOUTHBOUND BATTERY TUNNEL SYSTEMS	
DETAILS	BY C. HAWKINS	CHECKED B. MELVIN			POST MILE 8.81	ROADWAY DRAINAGE PLAN NO. 2	
QUANTITIES	BY C. HAWKINS	CHECKED B. MELVIN		CU 04 EA 163741	DISREGARD PRINTS BEARING EARLIER REVISION DATES →	REVISION DATES (PRELIMINARY STAGE ONLY) 08/07/09 07/31/09 08/07/09 08/26/09	SHEET 4 OF 23

DESIGN DETAIL SHEET (ENGLISH) (REV. 2/25/05)

ORIGINAL SCALE IN INCHES FOR REDUCED PLANS 0 1 2 3

FILE => 34-0161l-u-09mdt03.dgn

USERNAME => trtenord DATE PLOTTED => 14-DEC-2009 TIME PLOTTED => 17:05

CALIFORNIA STATE FIRE MARSHAL APPROVED

Approval of this plan does not authorize or approve any omission or deviation from applicable regulations. Final approval is subject to field inspection. One set of approved plans shall be available on the project site at all times.

Reviewed by: STEPHEN GUARINO

Approval date: 12-14-09

DIST	COUNTY	ROUTE	POST MILES TOTAL PROJECT	SHEET No	TOTAL SHEETS
04	SF	101	8.2/9.2	550	654

Bobby J. Melvin Aug 25, 2009
REGISTERED MECH. ENGINEER DATE

12-14-09
PLANS APPROVAL DATE

REGISTERED PROFESSIONAL ENGINEER — Bobby J. Melvin — No. 28685 — Exp. 06/30/2011 — Mechanical — STATE OF CALIFORNIA

The State of California or its officers or agents shall not be responsible for the accuracy or completeness of electronic copies of this plan sheet.

Arup PB Joint Venture
3840 Rosin Court, Suite 200
Sacramento, CA 95834

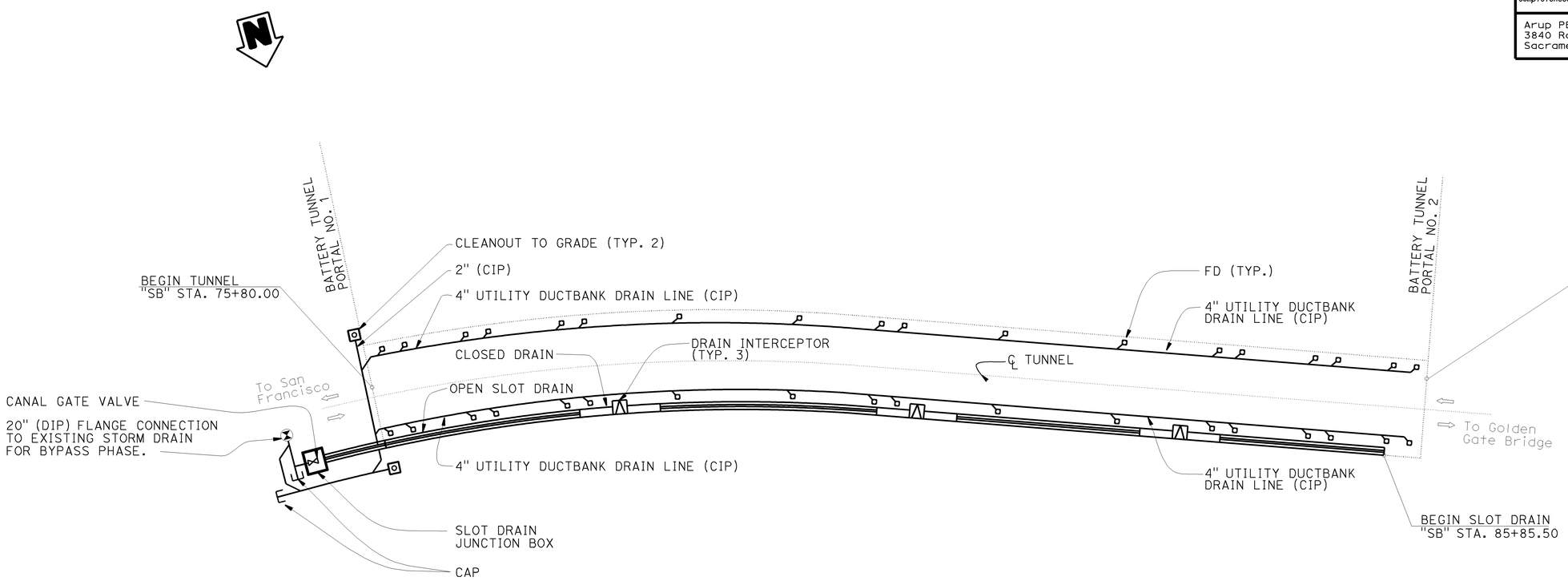

ROADWAY DRAINAGE SCHEMATIC

NOT TO SCALE

DT2-1

DESIGN	BY C. HAWKINS	CHECKED B. MELVIN	PREPARED FOR THE STATE OF CALIFORNIA DEPARTMENT OF TRANSPORTATION	C. J. HAWKINS PROJECT ENGINEER	BRIDGE NO. 34-0161L; POST MILE 8.81
DETAILS	BY C. HAWKINS	CHECKED B. MELVIN			
QUANTITIES	BY C. HAWKINS	CHECKED B. MELVIN			

SOUTHBOUND BATTERY TUNNEL SYSTEMS
ROADWAY DRAINAGE SCHEMATIC

DESIGN DETAIL SHEET (ENGLISH) (REV. 2/25/05)

ORIGINAL SCALE IN INCHES FOR REDUCED PLANS 0 1 2 3

CU 04
EA 163741

DISREGARD PRINTS BEARING EARLIER REVISION DATES →

REVISION DATES (PRELIMINARY STAGE ONLY): 06/05/09 | 07/10/09 | 08/07/09 | 08/26/09

SHEET 5 OF 23

FILE => 34-0161l-u-09mdt04.dgn

USERNAME = frlenard DATE PLOTTED => 14-DEC-2009 TIME PLOTTED => 17:05

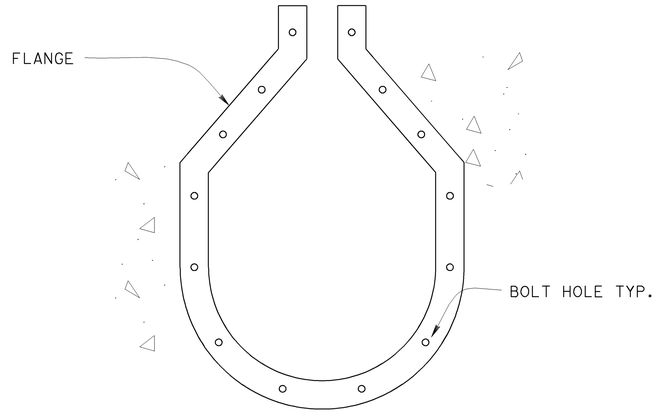

SECTION A-A
(DRAIN FLANGE CONNECTION)
NOT TO SCALE

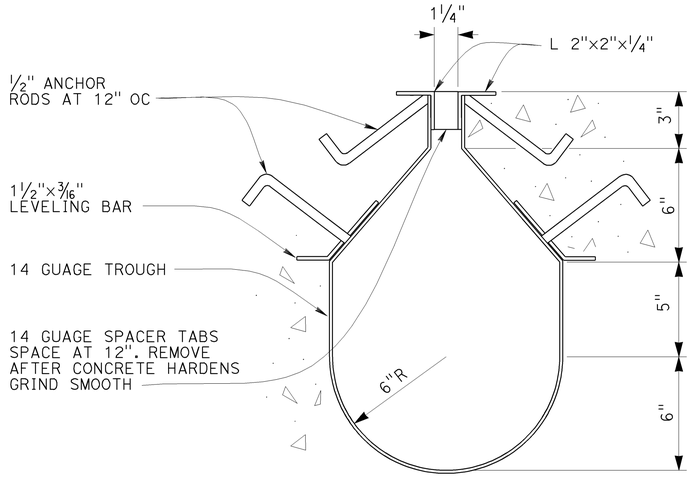

SECTION B-B
(OPEN SLOT DRAIN)
NOT TO SCALE

CALIFORNIA STATE FIRE MARSHAL APPROVED
Approval of this plan does not authorize or approve any omission or deviation from applicable regulations. Final approval is subject to field inspection. One set of approved plans shall be available on the project site at all times.
Reviewed by: STEPHEN GUARINO
Approval date: 12-14-09

DIST	COUNTY	ROUTE	POST MILES TOTAL PROJECT	SHEET No	TOTAL SHEETS
04	SF	101	8.2/9.2	551	654

Bobby J. Melvin 12/08/09
REGISTERED MECH. ENGINEER DATE

12-14-09
PLANS APPROVAL DATE

REGISTERED PROFESSIONAL ENGINEER — Bobby J. Melvin, No. 28685, Exp. 06/30/2011, Mechanical, STATE OF CALIFORNIA

The State of California or its officers or agents shall not be responsible for the accuracy or completeness of electronic copies of this plan sheet.

Arup PB Joint Venture
3840 Rosin Court, Suite 200
Sacramento, CA 95834

NOTES:

1. SLOT DRAIN CONFIGURATION SHOWN IS INTENDED TO SHOW BASIC GEOMETRY AND MINIMUM MATERIAL REQUIREMENTS. CONTRACTOR TO PROVIDE A SLOT DRAIN MEETING THESE GENERAL REQUIREMENTS AND AS SPECIFIED IN THE SPECIAL PROVISIONS.
2. ALL SLOT DRAIN AND CLOSED DRAIN MATERIALS, COMPONENTS ETC. SHALL BE STAINLESS STEEL. UON

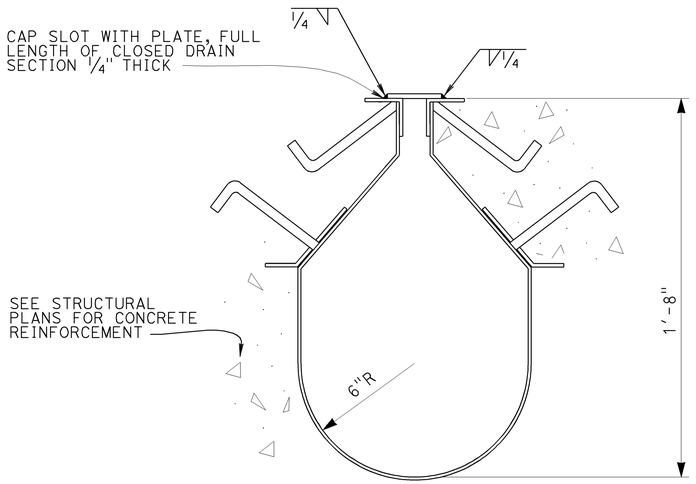

DETAIL 2
(CLOSED DRAIN SECTION)
NOT TO SCALE

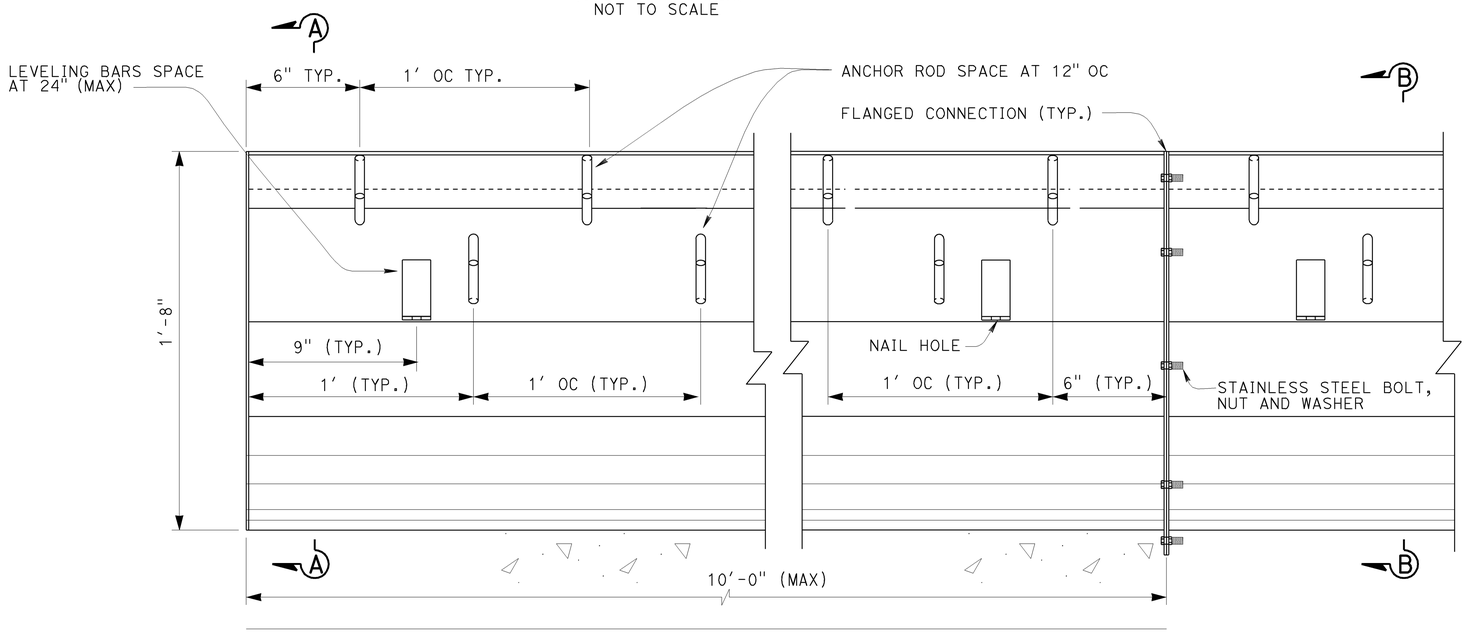

DETAIL 1
(OPEN SLOT DRAIN AND CLOSED DRAIN SECTION VIEW)
NOT TO SCALE

DT3-1

DESIGN	BY C. A. HAWKINS	CHECKED B. MELVIN	PREPARED FOR THE STATE OF CALIFORNIA DEPARTMENT OF TRANSPORTATION	C. J. HAWKINS, PROJECT ENGINEER	BRIDGE NO. 34-0161L; POST MILE 8.81
DETAILS	BY C. A. HAWKINS	CHECKED B. MELVIN			
QUANTITIES	BY C. A. HAWKINS	CHECKED B. MELVIN			

SOUTHBOUND BATTERY TUNNEL SYSTEMS
DRAINAGE DETAILS NO.1

DESIGN DETAIL SHEET (ENGLISH) (REV. 2/25/05)
ORIGINAL SCALE IN INCHES FOR REDUCED PLANS 0 1 2 3
CU 04 EA 163741
DISREGARD PRINTS BEARING EARLIER REVISION DATES
REVISION DATES (PRELIMINARY STAGE ONLY): 06/01/09 07/15/09 08/01/09 08/15/09 12/08/09
SHEET 6 OF 23

FILE => 34-0161l-u-09mdt05.dgn
USERNAME => frlenord DATE PLOTTED => 14-DEC-2009 TIME PLOTTED => 17:05

DIST	COUNTY	ROUTE	KILOMETER POST TOTAL PROJECT	SHEET No	TOTAL SHEETS
04	SF	101	8.2/9.2	552	654

REGISTERED CIVIL ENGINEER

12-14-09
PLANS APPROVAL DATE

REGISTERED PROFESSIONAL ENGINEER
No.
Exp.
CIVIL
STATE OF CALIFORNIA

The State of California or its officers or agents shall not be responsible for the accuracy or completeness of electronic copies of this plan sheet.

LEFT INTENTIONALLY BLANK

DT3-1.1

DESIGN	BY	CHECKED	PREPARED FOR THE STATE OF CALIFORNIA DEPARTMENT OF TRANSPORTATION	PROJECT ENGINEER	BRIDGE NO. 34-0161L
DETAILS	BY	CHECKED			POST MILE 8.81
QUANTITIES	BY	CHECKED			

SOUTHBOUND BATTERY TUNNEL SYSTEM

DESIGN DETAIL SHEET (ENGLISH) (REV. 2/25/05)

ORIGINAL SCALE IN INCHES FOR REDUCED PLANS 0 1 2 3

CU 04
EA 163741

DISREGARD PRINTS BEARING EARLIER REVISION DATES →

REVISION DATES (PRELIMINARY STAGE ONLY)

SHEET 7 OF 23

FOR REDUCED PLANS ORIGINAL SCALE IS IN INCHES 0 1 2 3

USERNAME => trienard
DGN FILE => 34-0161l-u-09mdt05a.dgn

LAST REVISION 00-00-00
DATE PLOTTED => 14-DEC-2009
TIME PLOTTED => 17:05

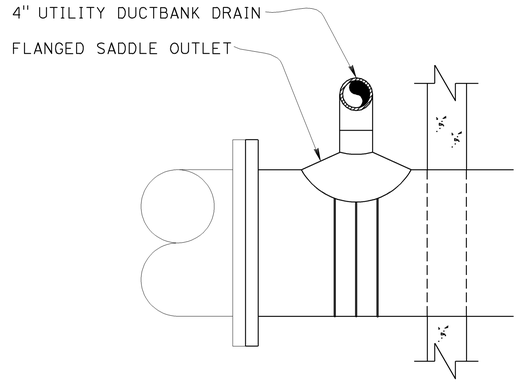

SECTION D-D
NOT TO SCALE

CALIFORNIA STATE FIRE MARSHAL APPROVED
Approval of this plan does not authorize or approve any omission or deviation from applicable regulations. Final approval is subject to field inspection. One set of approved plans shall be available on the project site at all times.
Reviewed by: STEPHEN GUARINO
Approval date: 12-14-09

DIST	COUNTY	ROUTE	POST MILES TOTAL PROJECT	SHEET No	TOTAL SHEETS
04	SF	101	8.2/9.2	553	654

Bobby J. Melvin 12/08/09
REGISTERED MECH. ENGINEER DATE

12-14-09
PLANS APPROVAL DATE

REGISTERED PROFESSIONAL ENGINEER — Bobby J. Melvin No. 28685 Exp 06/30/2011 Mechanical — STATE OF CALIFORNIA

The State of California or its officers or agents shall not be responsible for the accuracy or completeness of electronic copies of this plan sheet.

Arup PB Joint Venture
3840 Rosin Court, Suite 200
Sacramento, CA 95834

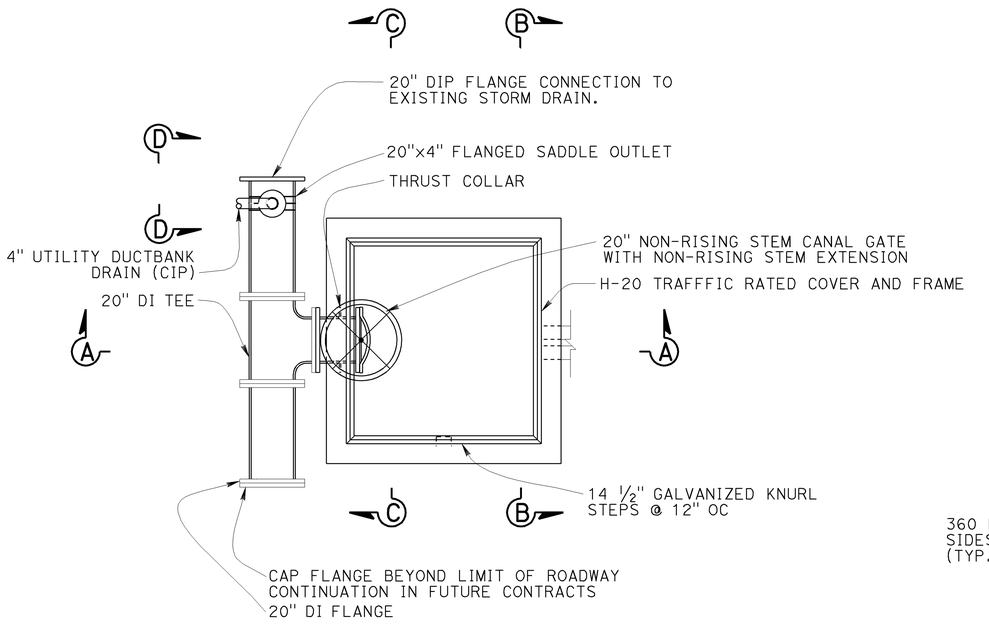

PLAN VIEW
NOT TO SCALE

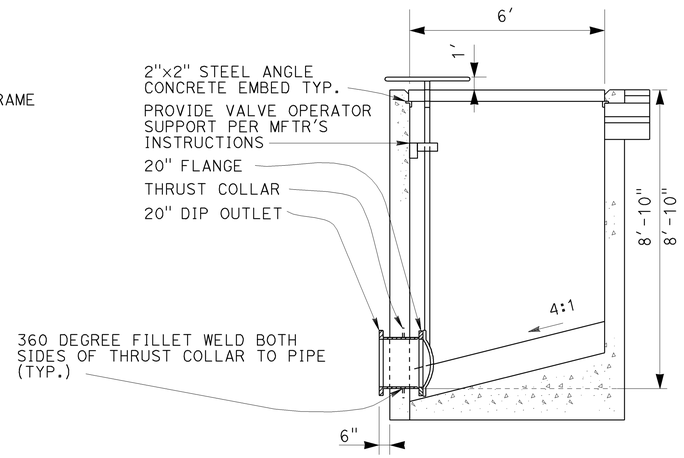

SECTION A-A
NOT TO SCALE

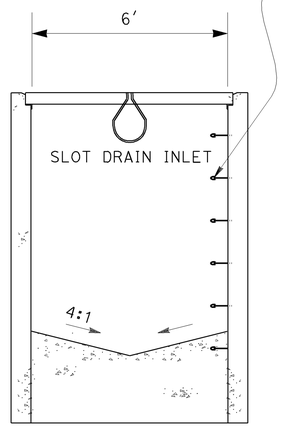

SECTION B-B
NOT TO SCALE

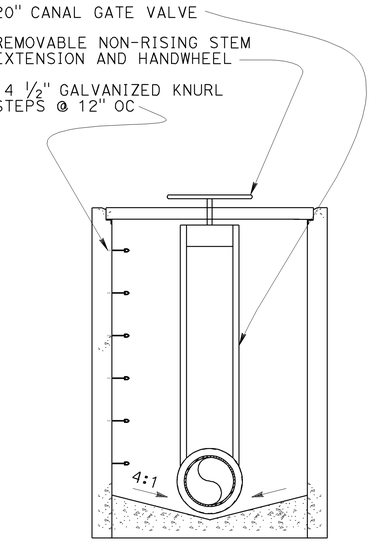

SECTION C-C
NOT TO SCALE

DETAIL 1
SLOT DRAIN JUNCTION BOX
DRAINAGE INLET TYPE OL

DT3-2

DESIGN	BY C. A. HAWKINS	CHECKED B. MELVIN	PREPARED FOR THE STATE OF CALIFORNIA DEPARTMENT OF TRANSPORTATION
DETAILS	BY C. A. HAWKINS	CHECKED B. MELVIN	
QUANTITIES	BY C. A. HAWKINS	CHECKED B. MELVIN	

C. J. HAWKINS
PROJECT ENGINEER

CU 04
EA 163741

BRIDGE NO. 34-0161L
POST MILE 8.81

SOUTHBOUND BATTERY TUNNEL SYSTEMS
DRAINAGE DETAILS NO.2

DESIGN DETAIL SHEET (ENGLISH) (REV. 2/25/05)

ORIGINAL SCALE IN INCHES FOR REDUCED PLANS 0 1 2 3

DISREGARD PRINTS BEARING EARLIER REVISION DATES

REVISION DATES (PRELIMINARY STAGE ONLY): 06/01/09 | 07/01/09 | 08/01/09 | 08/31/09 | 12/08/09

SHEET 8 OF 23

FILE => 34-0161l-u-09mdt06.dgn

USERNAME => ttrhenard DATE PLOTTED => 14-DEC-2009 TIME PLOTTED => 17:05

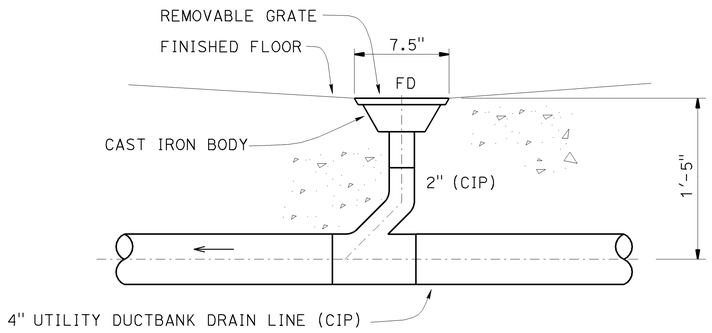

SECTION A-A
(FLOOR DRAIN)

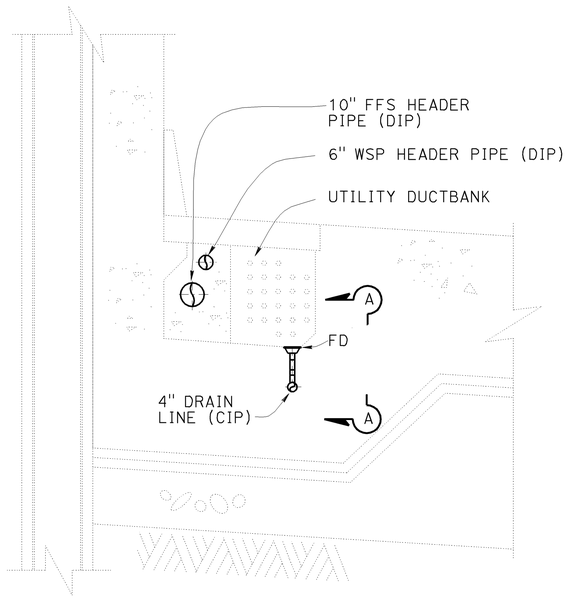

DETAIL 1
(UTILITY DUCTBANK DRAINAGE)
NOT TO SCALE

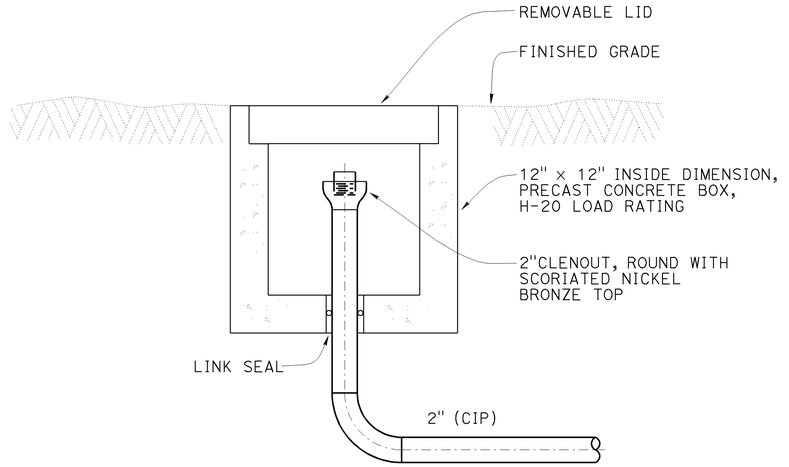

DETAIL 2
(CLEANOUT TO GRADE)
NOT TO SCALE

CALIFORNIA STATE FIRE MARSHAL APPROVED
Approval of this plan does not authorize or approve any omission or deviation from applicable regulations. Final approval is subject to field inspection. One set of approved plans shall be available on the project site at all times.
Reviewed by: STEPHEN GUARINO
Approval date: 12-14-09

DIST	COUNTY	ROUTE	POST MILES TOTAL PROJECT	SHEET No	TOTAL SHEETS
04	SF	101	8.2/9.2	554	654

Bobby J. Melvin 12/08/09
REGISTERED MECH. ENGINEER DATE

12-14-09
PLANS APPROVAL DATE

REGISTERED PROFESSIONAL ENGINEER — Bobby J. Melvin, No. 28685, Exp. 06/30/2011, Mechanical, STATE OF CALIFORNIA

The State of California or its officers or agents shall not be responsible for the accuracy or completeness of electronic copies of this plan sheet.

Arup PB Joint Venture
3840 Rosin Court, Suite 200
Sacramento, CA 95834

DT3-3

	BY	CHECKED
DESIGN	V. YELTON	B. MELVIN
DETAILS	V. YELTON	B. MELVIN
QUANTITIES	V. YELTON	B. MELVIN

PREPARED FOR THE STATE OF CALIFORNIA
DEPARTMENT OF TRANSPORTATION

C. J. HAWKINS
PROJECT ENGINEER

BRIDGE NO. 34-0161L
POST MILE 8.81

SOUTHBOUND BATTERY TUNNEL SYSTEMS
DRAINAGE DETAILS NO. 3

DESIGN DETAIL SHEET (ENGLISH) (REV. 2/25/05)

ORIGINAL SCALE IN INCHES FOR REDUCED PLANS 0 1 2 3

CU 04
EA 163741

DISREGARD PRINTS BEARING EARLIER REVISION DATES

REVISION DATES (PRELIMINARY STAGE ONLY): 06/05/09, 07/10/09, 08/07/09, 08/28/09, 12/08/09

SHEET 9 OF 23

USERNAME = trrichard DATE PLOTTED => 14-DEC-2009 TIME PLOTTED => 17:05
FILE => 34-0161l-u-09mdt07.dgn

ABBREVIATIONS

ARCH	ARCHITECTURAL
BFP	BACKFLOW PREVENTER
BMP	BEST MANAGEMENT PRACTICE
BS	BATTERY TUNNEL SOUTHBOUND
CIP	CAST IRON PIPE
DIP	DUCTILE IRON PIPE
DVC	DELUGE VALVE CABINET
EA	EACH
FDC	FIRE DEPARTMENT CONNECTION
FFS	FIXED FIRE SUPPRESSION
FH	FIRE HYDRANT
FHV	FIRE HOSE VALVE
FHVC	FIRE HOSE VALVE CABINET
FPM	FEET PER MINUTE
FS	FIRE SERVICE
GAL	GALLON
HZ	HERTZ
ID	IDENTIFICATION
KW	KILOWATT
LB	POUNDS
LBF	POUNDS FORCE
MFR	MANUFACTURER
MTD	MOUNTED
NA	NOT APPLICABLE
NC	NORMALLY CLOSED
NIC	NOT IN CONTRACT
NO	NORMALLY OPEN
NO.	NUMBER
PH	PHASE
POC	POINT OF CONNECTION
PS	PIPE SUPPORT
REF	REFERENCE
RPM	REVOLUTION PER MINUTE
SA	SOUND ATTENUATOR
SB	SOUTHBOUND
SFPUC	SAN FRANCISCO PUBLIC UTILITIES COMMISSION
VB	VALVE BOX
WT-LB	WEIGHT-POUNDS
WSP	WET STANDPIPE
Z	ZONE

LEGEND

- FIRE HOSE CONNECTION
- FIRE HOSE VALVE
- FIRE DEPARTMENT CONNECTION (FDC)
- TRAFFIC FLOW
- FIXED FIRE SUPPRESSION ZONE
- BACKFLOW PREVENTER WITH GATE VALVES
- GATE VALVE
- BALL VALVE
- BUTTERFLY VALVE
- CHECK VALVE
- DELUGE VALVE
- AUTOMATIC AIR RELEASE VALVE
- REDUCER (CONCENTRIC)
- REDUCER (ECCENTRIC)
- THREADED CAP
- WELDED CAP
- ELBOW, TURNED UP
- ELBOW, TURNED DOWN
- TEE, OUTLET UP
- TEE, OUTLET DOWN
- UNION
- EXPANSION JOINT
- FLANGE COUPLING ADAPTOR
- FIRE HYDRANT
- FIRE EXTINGUISHER
- FIRE HOSE VALVE & EXTINGUISHER CABINET FHVC
- PENDANT SPRINKLER HEAD
- SIDEWALL SPRINKLER HEAD
- PIPE ANCHOR
- PIPE GUIDE
- VERTICAL SUPPORT
- LONGITUDINAL BRACE
- FLEX COUPLING
- TRAFFIC BARRIER
- POINT OF CONNECTION
- THERMOSTAT
- FLOW SWITCH

CALIFORNIA STATE FIRE MARSHAL APPROVED

Approval of this plan does not authorize or approve any omission or deviation from applicable regulations. Final approval is subject to field inspection. One set of approved plans shall be available on the project site at all times.

Reviewed by: STEPHEN GUARINO

Approval date: 12-14-09

DIST	COUNTY	ROUTE	POST MILES TOTAL PROJECT	SHEET No	TOTAL SHEETS
04	SF	101	8.2/9.2	555	654

Bobby J. Melvin 12/08/09
REGISTERED MECH. ENGINEER DATE

12-14-09
PLANS APPROVAL DATE

REGISTERED PROFESSIONAL ENGINEER — Bobby J. Melvin — No. 28685 — Exp. 06/30/2011 — Mechanical — STATE OF CALIFORNIA

The State of California or its officers or agents shall not be responsible for the accuracy or completeness of electronic copies of this plan sheet.

Arup PB Joint Venture
3840 Rosin Court, Suite 200
Sacramento, CA 95834

GENERAL NOTES:

1. ALL STEEL PIPING SHALL BE PAINTED PER REQUIREMENTS OF SPECIAL PROVISIONS.
2. ALL PIPING DOWNSTREAM OF DELUGE VALVES SHALL SLOPE TO DRAIN POINTS.
3. PROVIDE DRAINS FROM WET STANDPIPE AND DELUGE VALVE CABINETS.
4. PIPE ALONG TUNNEL CEILING SHALL BE ROLL BENT TO MATCH CEILING RADIUS.
5. PIPE AND IN-LINE COMPONENTS IN PIPING SYSTEMS SHALL BE PROVIDED WITH SUPPORT ELEMENTS TO PREVENT ROTATION AT COUPLINGS.
6. DELUGE SYTEM SPRAY NOZZLES SHALL BE LISTED AS FOLLOWS.
   A. PENDENT NOZZLES: ORDINARY HAZARD GROUP II, 0.2 GPM/FT^2, LISTED FOR BOTH 16′ X 16′ AND 18′X18′ COVERAGE AREA.
   B. SIDEWALL NOZZLES: ORDINARY HAZARD GROUP II, 0.2 GPM/FT^2, 16′ X16′ COVERAGE AREA.
7. ATTACHMENT OF SUPPORT ELEMENTS TO TUNNEL CEILINGS AND WALLS SHALL BE MADE WITH CONCRETE INSERTS CAST INTO STRUCTURE.
8. WHERE APPLICATION OF CONCRETE INSERTS IS NOT PRACTICAL AND ON A CASE BY CASE BASIS, DRILLED UNDERCUT ANCHORS MAY BE USED. SEE UNDERCUT ANCHORS IN STRUCTURAL SPECIFICATIONS.
9. AT VARIOUS STAGES AND UPON COMPLETION, THE SYSTEM SHALL BE TESTED IN THE PRESENCE OF THE STATE FIRE MARSHAL.
10. A CABINET WITH A STOCK OF SPARE SPRINKLERS AND SPECIAL SPRINKLER WRENCH SHALL BE PROVIDED. LOCATION OF THE CABINET, NUMBER AND TYPE OF SPRINKLERS SHALL CONFORM TO (2002) NFPA 13, SECTION 6.2.9.

MTO-1

	BY	CHECKED
DESIGN	V. YELTON	B. MELVIN
DETAILS	V. YELTON	B. MELVIN
QUANTITIES	V. YELTON	B. MELVIN

PREPARED FOR THE STATE OF CALIFORNIA DEPARTMENT OF TRANSPORTATION

C. J. HAWKINS
PROJECT ENGINEER

BRIDGE NO. 34-0161L
POST MILE 8.81

SOUTHBOUND BATTERY TUNNEL SYSTEMS
MECHANICAL ABBREVIATIONS AND LEGEND

DESIGN DETAIL SHEET (ENGLISH) (REV. 2/25/05)

ORIGINAL SCALE IN INCHES FOR REDUCED PLANS 0 1 2 3

CU 04
EA 163741

DISREGARD PRINTS BEARING EARLIER REVISION DATES →

REVISION DATES (PRELIMINARY STAGE ONLY): 06/01/09 | 07/31/09 | 08/07/09 | 08/21/09 | 12/08/09

SHEET 10 OF 23

FILE => 34-0161l-u-10mdt01.dgn

USERNAME => trlenord DATE PLOTTED => 14-DEC-2009 TIME PLOTTED => 17:05

CALIFORNIA STATE FIRE MARSHAL APPROVED

Approval of this plan does not authorize or approve any omission or deviation from applicable regulations. Final approval is subject to field inspection. One set of approved plans shall be available on the project site at all times.

Reviewed by: STEPHEN GUARINO

Approval date: 12-14-09

DIST	COUNTY	ROUTE	POST MILES TOTAL PROJECT	SHEET No	TOTAL SHEETS
04	SF	101	8.2/9.2	556	654

Bobby J. Melvin 11/13/09
REGISTERED MECH. ENGINEER DATE

12-14-09
PLANS APPROVAL DATE

REGISTERED PROFESSIONAL ENGINEER — Bobby J. Melvin — No. 28685 — Exp. 06/30/2011 — Mechanical — STATE OF CALIFORNIA

The State of California or its officers or agents shall not be responsible for the accuracy or completeness of electronic copies of this plan sheet.

Arup PB Joint Venture
3840 Rosin Court, Suite 200
Sacramento, CA 95834

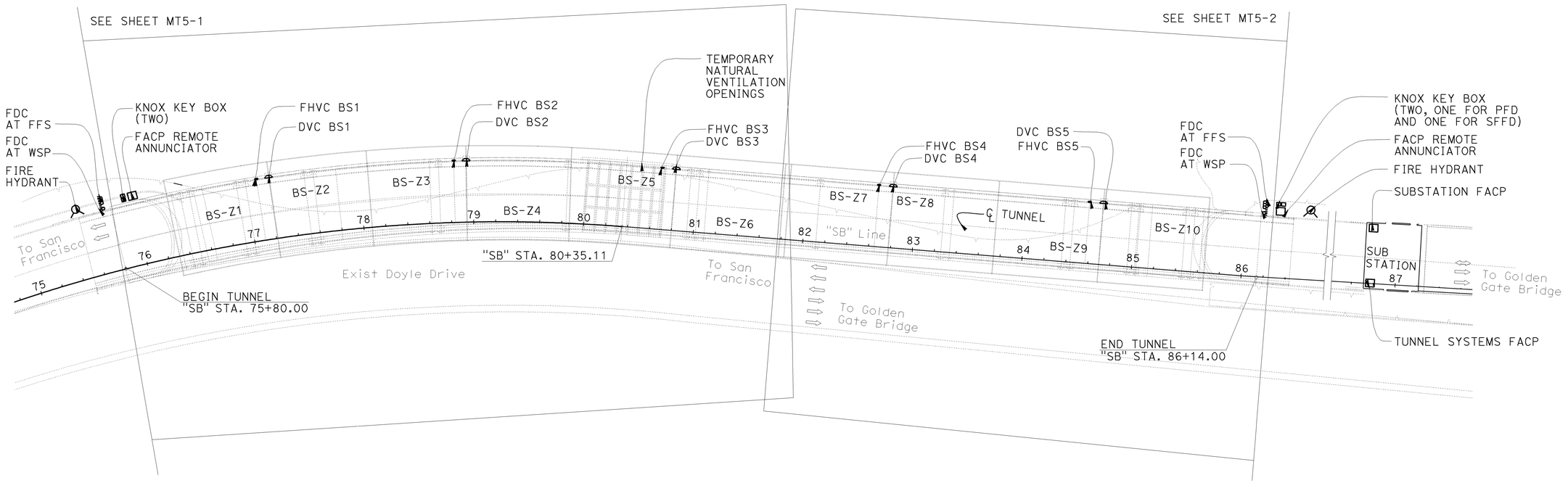

PLAN
1"= 50'

ABBREVIATIONS

BS	BATTERY TUNNEL SOUTHBOUND
DVC	DELUGE VALVE CABINET
FACP	FIRE ALARM CONTROL PANEL
FDC	FIRE DEPARTMENT CONNECTION
FFS	FIXED FIRE SUPPRESSION
FHVC	FIRE HOSE VALVE CABINET
PFD	PRESIDIO FIRE DEPARTMENT
SB	SOUTHBOUND
SFFD	SAN FRANCISCO FIRE DEPARTMENT
WSP	WET STANDPIPE
Z	ZONE

MT4-1

	BY	CHECKED
DESIGN	V. YELTON	B. MELVIN
DETAILS	V. YELTON	B. MELVIN
QUANTITIES	V. YELTON	B. MELVIN

PREPARED FOR THE STATE OF CALIFORNIA DEPARTMENT OF TRANSPORTATION

C. J. HAWKINS
PROJECT ENGINEER

CU 04
EA 163741

BRIDGE NO.	SOUTHBOUND BATTERY TUNNEL SYSTEMS
34-0161L	
POST MILE	GENERAL PLAN-FIRE PROTECTION
8.81	

DESIGN DETAIL SHEET (ENGLISH) (REV. 2/25/05)

ORIGINAL SCALE IN INCHES FOR REDUCED PLANS 0 1 2 3

DISREGARD PRINTS BEARING EARLIER REVISION DATES

REVISION DATES (PRELIMINARY STAGE ONLY): 06/01/09 | 07/01/09 | 08/01/09 | 08/26/09

SHEET 11 OF 23

FILE => 34-0161l-u-10mdt02.dgn

USERNAME => ttrenord DATE PLOTTED => 14-DEC-2009 TIME PLOTTED => 17:05

NOTES:

1. SEE SHEET MT7-4, DETAIL NO. 2 FOR FDC INFORMATION.
2. SEE SHEET MT6-1 FOR SECTION A-A,
3. SEE SHEET MT6-2 FOR SECTION B-B.
4. SEE SHEET MT7-3 FFS BRANCH LAYOUT DETAILS.

CALIFORNIA STATE FIRE MARSHAL APPROVED

Approval of this plan does not authorize or approve any omission or deviation from applicable regulations. Final approval is subject to field inspection. One set of approved plans shall be available on the project site at all times.

Reviewed by: STEPHEN GUARINO

Approval date: 12-14-09

DIST	COUNTY	ROUTE	POST MILES TOTAL PROJECT	SHEET No	TOTAL SHEETS
04	SF	101	8.2/9.2	557	654

Bobby J. Melvin 11/13/09
REGISTERED MECH. ENGINEER DATE

12-14-09
PLANS APPROVAL DATE

REGISTERED PROFESSIONAL ENGINEER — Bobby J. Melvin — No. 28685 — Exp. 06/30/2011 — Mechanical — STATE OF CALIFORNIA

The State of California or its officers or agents shall not be responsible for the accuracy or completeness of electronic copies of this plan sheet.

Arup PB Joint Venture
3840 Rosin Court, Suite 200
Sacramento, CA 95834

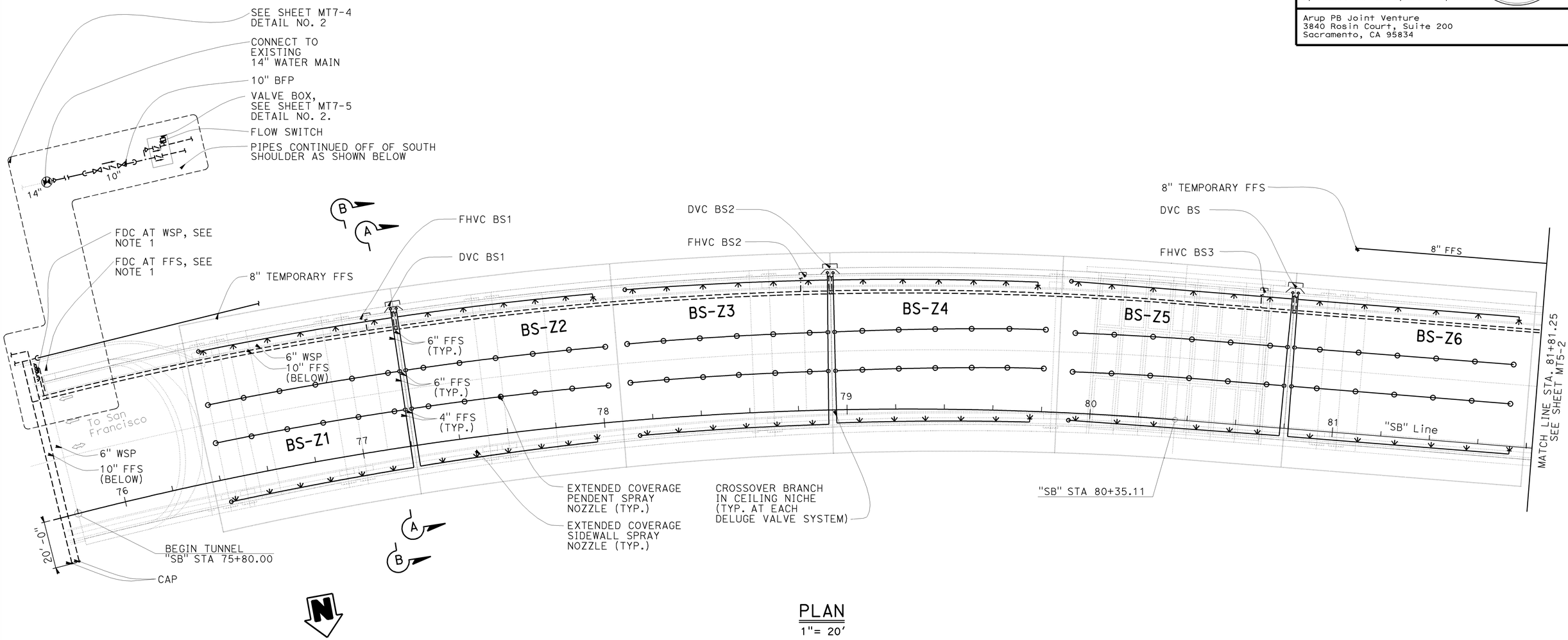

PLAN
1"= 20'

MT5-1

		DESIGN	BY V. YELTON	CHECKED B. MELVIN	PREPARED FOR THE STATE OF CALIFORNIA DEPARTMENT OF TRANSPORTATION	C. J. HAWKINS PROJECT ENGINEER	BRIDGE NO. 34-0161L / POST MILE 8.81
		DETAILS	BY V. YELTON	CHECKED B. MELVIN			
		QUANTITIES	BY V. YELTON	CHECKED B. MELVIN			

SOUTHBOUND BATTERY TUNNEL SYSTEMS
FIRE PROTECTION PLAN NO. 1

DESIGN DETAIL SHEET (ENGLISH) (REV. 2/25/05)

ORIGINAL SCALE IN INCHES FOR REDUCED PLANS 0 1 2 3

CU 04
EA 163741

DISREGARD PRINTS BEARING EARLIER REVISION DATES

REVISION DATES (PRELIMINARY STAGE ONLY): 06/01/09 | 07/01/09 | 08/01/09 | 08/26/09

SHEET 12 OF 23

FILE => 34-0161l-u-10mdt03.dgn

USERNAME => ttrenard DATE PLOTTED => 14-DEC-2009 TIME PLOTTED => 17:05

DIST	COUNTY	ROUTE	POST MILES TOTAL PROJECT	SHEET No	TOTAL SHEETS
04	SF	101	8.2/9.2	558	654

CALIFORNIA STATE FIRE MARSHAL APPROVED

Approval of this plan does not authorize or approve any omission or deviation from applicable regulations. Final approval is subject to field inspection. One set of approved plans shall be available on the project site at all times.

Reviewed by: STEPHEN GUARINO

Approval date: 12-14-09

Bobby J Melvin 11/13/09

REGISTERED MECH. ENGINEER DATE

12-14-09

PLANS APPROVAL DATE

REGISTERED PROFESSIONAL ENGINEER Bobby J. Melvin No. 28685 Exp. 06/30/2011 Mechanical STATE OF CALIFORNIA

The State of California or its officers or agents shall not be responsible for the accuracy or completeness of electronic copies of this plan sheet.

Arup PB Joint Venture
3840 Rosin Court, Suite 200
Sacramento, CA 95834

NOTES:

1. ALL FDC'S AT BEGINING OF RETAINING WALL. SEE SHEET MT7-4 DETAIL NO. 1.
2. SEE SHEET MT7-3 FOR FFS BRANCH DETAILS.

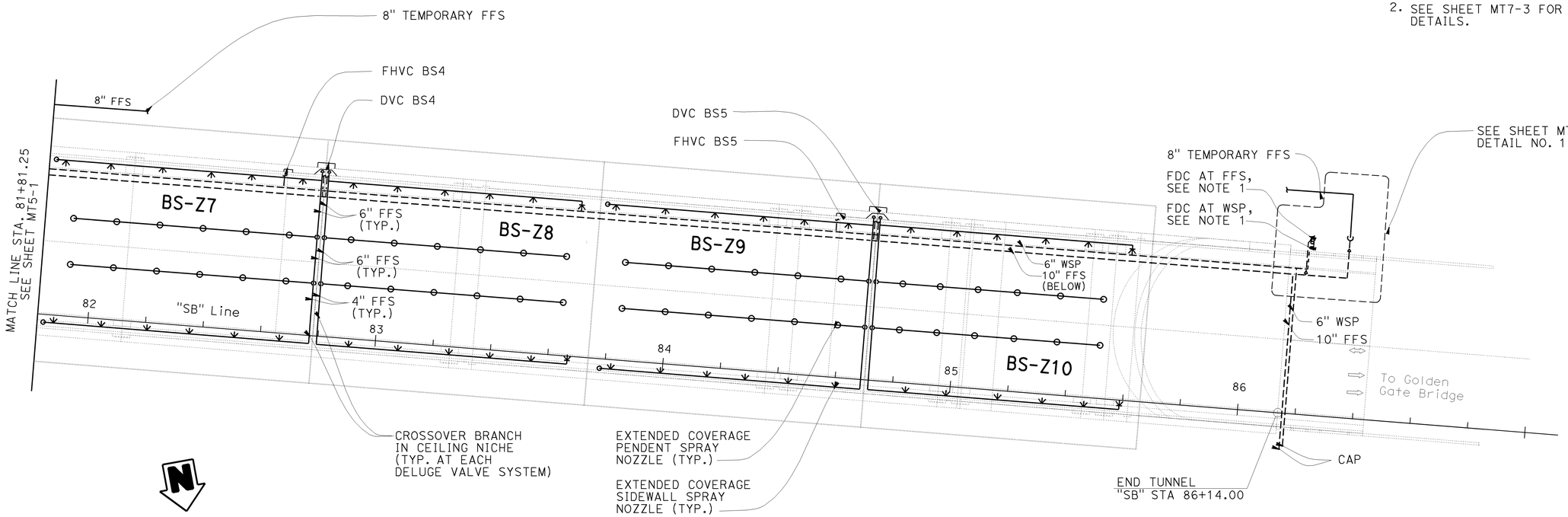

PLAN
1"= 20'

MT5-2

DESIGN	BY V. YELTON	CHECKED B. MELVIN	PREPARED FOR THE STATE OF CALIFORNIA DEPARTMENT OF TRANSPORTATION	C. J. HAWKINS PROJECT ENGINEER	BRIDGE NO. 34-0161L	SOUTHBOUND BATTERY TUNNEL SYSTEMS
DETAILS	BY V. YELTON	CHECKED B. MELVIN			POST MILE 8.81	FIRE PROTECTION PLAN NO. 2
QUANTITIES	BY V. YELTON	CHECKED B. MELVIN				

DESIGN DETAIL SHEET (ENGLISH) (REV. 2/25/05)

ORIGINAL SCALE IN INCHES FOR REDUCED PLANS 0 1 2 3

CU 04
EA 163741

DISREGARD PRINTS BEARING EARLIER REVISION DATES

REVISION DATES (PRELIMINARY STAGE ONLY) 06/01/09 07/15/09 08/07/09 08/26/09

SHEET 13 OF 23

FILE => 34-0161l-u-10mdt04.dgn

USERNAME => trlenard DATE PLOTTED => 14-DEC-2009 TIME PLOTTED => 17:06

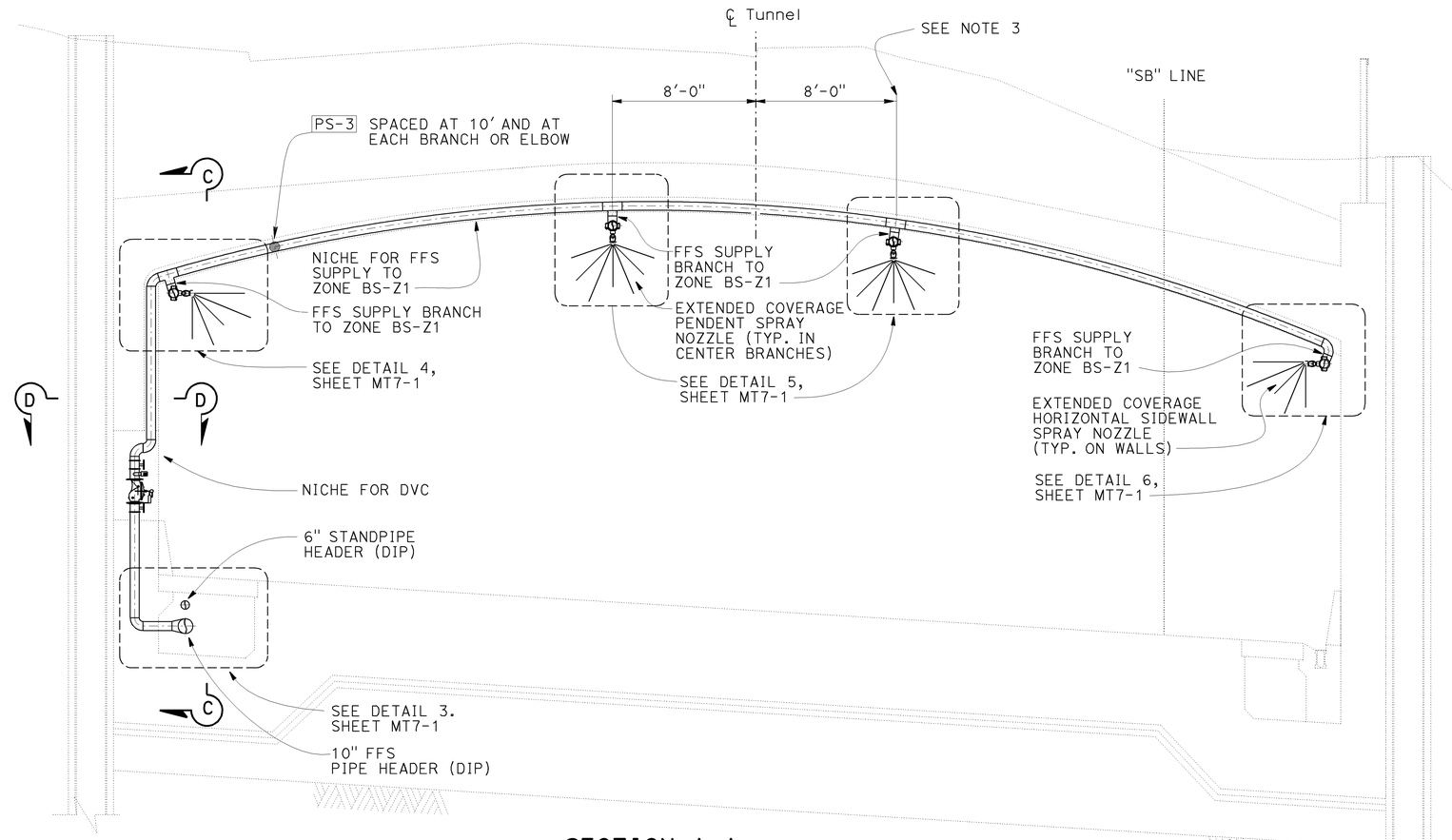

SECTION A-A
(AT FFS CROSS-MAIN)
1/4" = 1'-0"

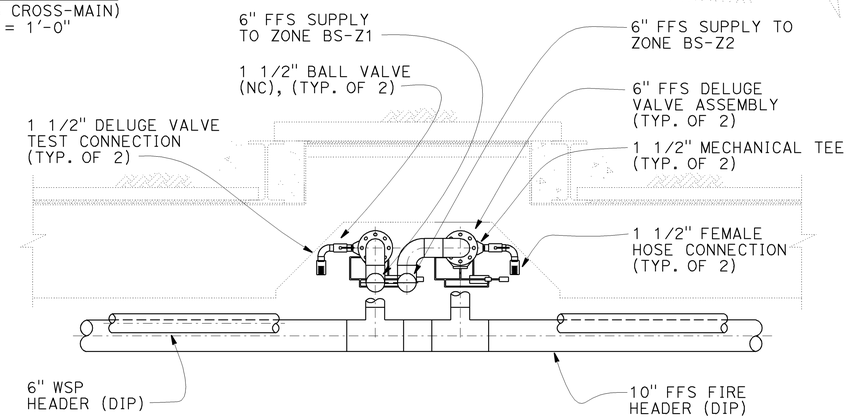

SECTION D-D
(FFS DELUGE VALVE STATION)
1/2" = 1'-0"

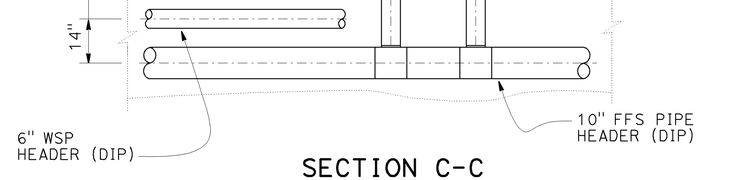

SECTION C-C
(FFS DELUGE VALVE STATION)
1/2" = 1'-0"

CALIFORNIA STATE FIRE MARSHAL APPROVED

Approval of this plan does not authorize or approve any omission or deviation from applicable regulations. Final approval is subject to field inspection. One set of approved plans shall be available on the project site at all times.

Reviewed by: STEPHEN GUARINO

Approval date: 12-14-09

DIST	COUNTY	ROUTE	POST MILES TOTAL PROJECT	SHEET No	TOTAL SHEETS
04	SF	101	8.2/9.2	559	654

Bobby J. Melv 11/13/09
REGISTERED MECH. ENGINEER DATE

12-14-09
PLANS APPROVAL DATE

REGISTERED PROFESSIONAL ENGINEER — Bobby J. Melvin — No. 28685 — Exp. 06/30/2011 Mechanical — STATE OF CALIFORNIA

The State of California or its officers or agents shall not be responsible for the accuracy or completeness of electronic copies of this plan sheet.

Arup PB Joint Venture
3840 Rosin Court, Suite 200
Sacramento, CA 95834

NOTES:

1. SEE SHEET MT5-1 FOR SECTION A-A.
2. SEE SHEET MT7-2 FOR PIPE SUPPORT DETAILS.
3. SPACE CENTER BRANCHES 9'-0" OFF ℄ TUNNEL IN ZONE BS-Z1, SPACE ALL OTHERS AS SHOWN.

MT6-1

DESIGN	BY V. YELTON	CHECKED B. MELVIN	PREPARED FOR THE STATE OF CALIFORNIA DEPARTMENT OF TRANSPORTATION	C. J. HAWKINS PROJECT ENGINEER	BRIDGE NO. 34-0161L	SOUTHBOUND BATTERY TUNNEL SYSTEMS
DETAILS	BY V. YELTON	CHECKED B. MELVIN			POST MILE 8.81	FIRE PROTECTION SECTIONS NO. 1
QUANTITIES	BY V. YELTON	CHECKED B. MELVIN				

DESIGN DETAIL SHEET (ENGLISH) (REV. 2/25/05)

ORIGINAL SCALE IN INCHES FOR REDUCED PLANS 0 1 2 3

CU 04
EA 163741

DISREGARD PRINTS BEARING EARLIER REVISION DATES →

REVISION DATES (PRELIMINARY STAGE ONLY): 06/01/09 | 07/01/09 | 08/01/09 | 08/26/09

SHEET 14 OF 23

FILE => 34-0161l-u-10mdt05.dgn

USERNAME => trhenord DATE PLOTTED => 14-DEC-2009 TIME PLOTTED => 17:06

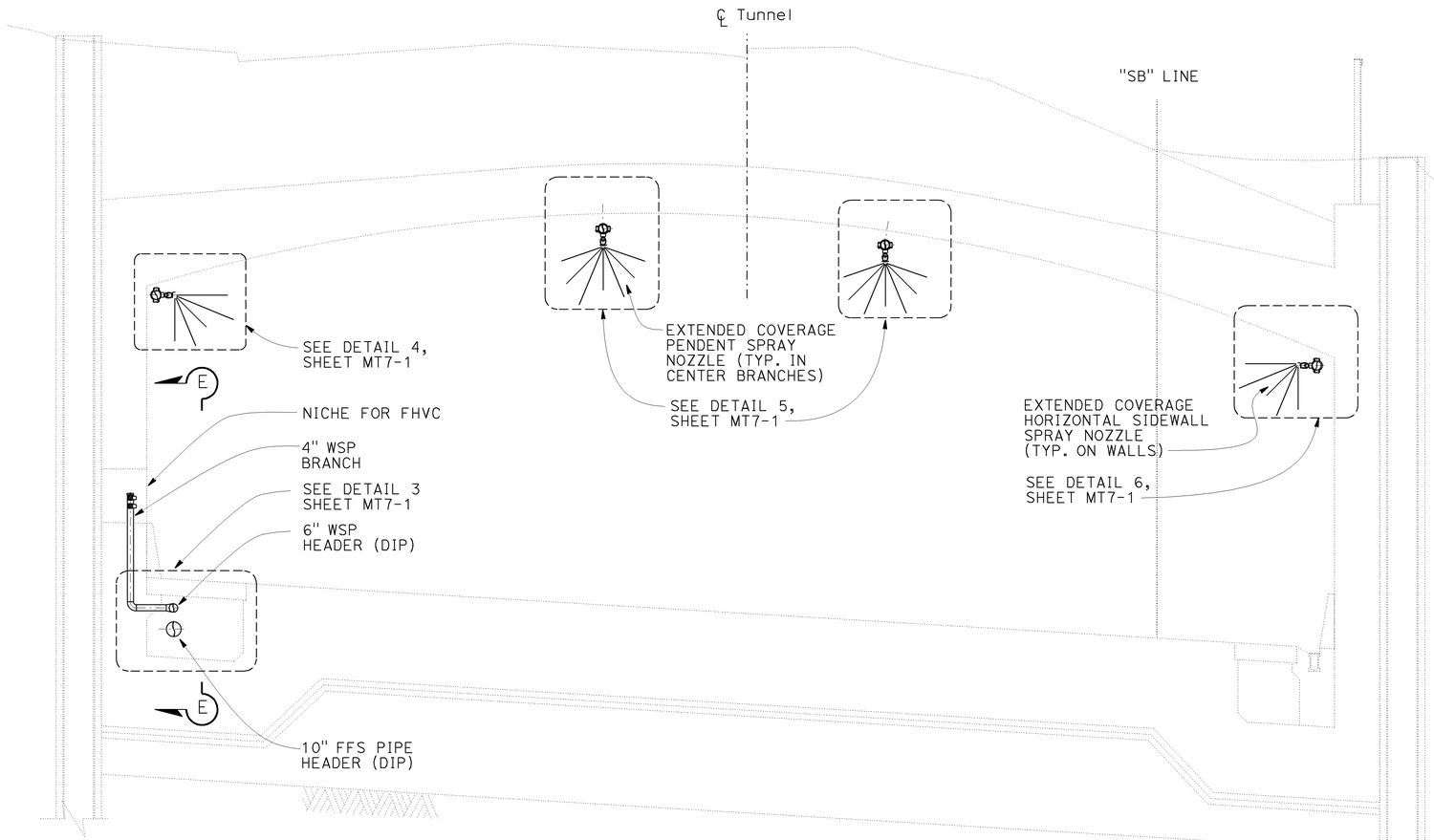

SECTION B-B

1/4" = 1'-0"

CALIFORNIA STATE FIRE MARSHAL APPROVED

Approval of this plan does not authorize or approve any omission or deviation from applicable regulations. Final approval is subject to field inspection. One set of approved plans shall be available on the project site at all times.

Reviewed by: STEPHEN GUARINO

Approval date: 12-14-09

DIST	COUNTY	ROUTE	POST MILES TOTAL PROJECT	SHEET No	TOTAL SHEETS
04	SF	101	8.2/9.2	560	654

Bobby J. Melvin 12/08/09
REGISTERED MECH. ENGINEER DATE

12-14-09
PLANS APPROVAL DATE

REGISTERED PROFESSIONAL ENGINEER — Bobby J. Melvin — No. 28685 — Exp. 06/30/2011 — Mechanical — STATE OF CALIFORNIA

The State of California or its officers or agents shall not be responsible for the accuracy or completeness of electronic copies of this plan sheet.

Arup PB Joint Venture
3840 Rosin Court, Suite 200
Sacramento, CA 95834

NOTES:

1. SEE SHEET MT5-1 FOR SECTION B-B.
2. RISER MANIFOLD TO BE HOT-DIPPED GALVANIZED AFTER FABRICATION.
3. SEE SHEET MT7-2 FOR PIPE SUPPORT DETAILS.
4. PROVIDE 3" HOSE ADAPTER COMPATIBLE WITH SAN FRANCISCO FIRE DEPARTMENT HOSE SPECIFICATION, TWO IN EACH FHVC WITH MOUNTING BRACKETS

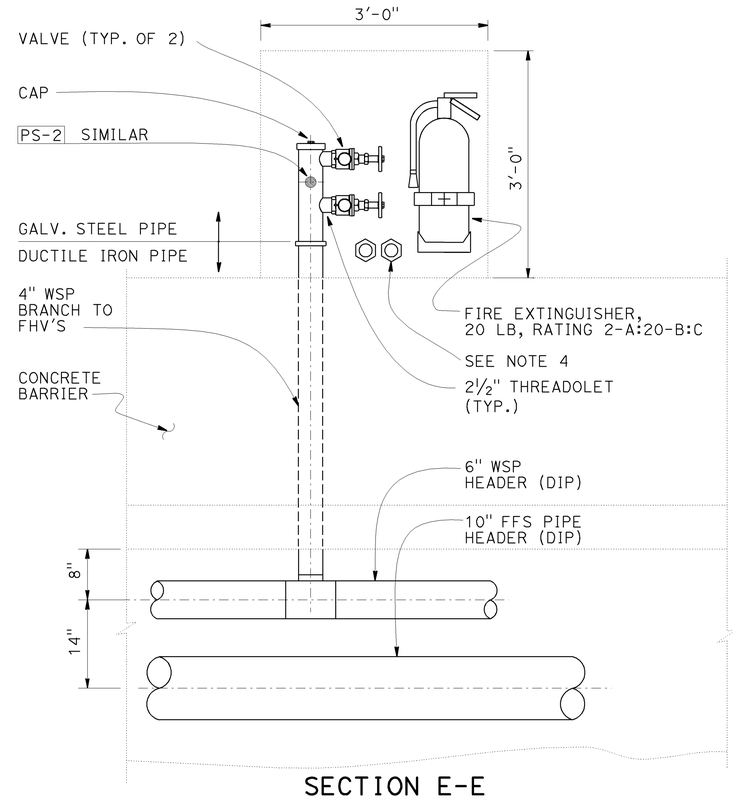

SECTION E-E

(STANDPIPE HOSE VALVE CABINET)
NOT TO SCALE

MT6-2

DESIGN	BY V. YELTON	CHECKED B. MELVIN	PREPARED FOR THE STATE OF CALIFORNIA DEPARTMENT OF TRANSPORTATION	C. J. HAWKINS PROJECT ENGINEER	BRIDGE NO. 34-0161L; POST MILE 8.81
DETAILS	BY V. YELTON	CHECKED B. MELVIN			
QUANTITIES	BY V. YELTON	CHECKED B. MELVIN			

SOUTHBOUND BATTERY TUNNEL SYSTEMS
FIRE PROTECTION SECTIONS NO. 2

DESIGN DETAIL SHEET (ENGLISH) (REV. 2/25/05)

ORIGINAL SCALE IN INCHES FOR REDUCED PLANS 0 1 2 3

CU 04
EA 163741

DISREGARD PRINTS BEARING EARLIER REVISION DATES →

REVISION DATES (PRELIMINARY STAGE ONLY): 06/01/09 | 07/01/09 | 08/01/09 | 09/01/09 | 12/08/09

SHEET 15 OF 23

FILE => 34-0161l-u-10mdt06.dgn

USERNAME => ttrenord DATE PLOTTED => 14-DEC-2009 TIME PLOTTED => 17:06

DIST	COUNTY	ROUTE	POST MILES TOTAL PROJECT	SHEET No	TOTAL SHEETS
04	SF	101	8.2/9.2	561	654

Bobby J Mel 11/13/09
REGISTERED MECH. ENGINEER DATE

12-14-09
PLANS APPROVAL DATE

REGISTERED PROFESSIONAL ENGINEER
Bobby J. Melvin
No. 28685
Exp. 06/30/2011
Mechanical
STATE OF CALIFORNIA

The State of California or its officers or agents shall not be responsible for the accuracy or completeness of electronic copies of this plan sheet.

Arup PB Joint Venture
3840 Rosin Court, Suite 200
Sacramento, CA 95834

CALIFORNIA STATE FIRE MARSHAL APPROVED
Approval of this plan does not authorize or approve any omission or deviation from applicable regulations. Final approval is subject to field inspection. One set of approved plans shall be available on the project site at all times.
Reviewed by: Stephen Guarino
STEPHEN GUARINO
Approval date: 12-14-09

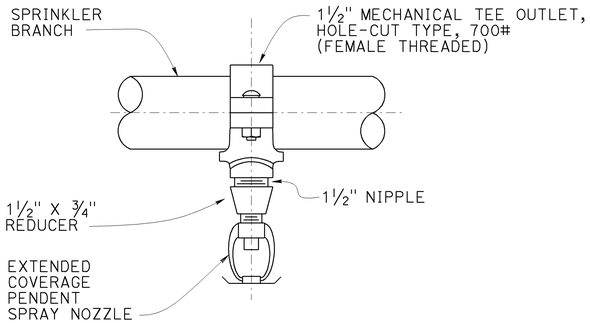

DETAIL 1
(SPRAY NOZZLE IN CENTER BRANCHES)
NOT TO SCALE

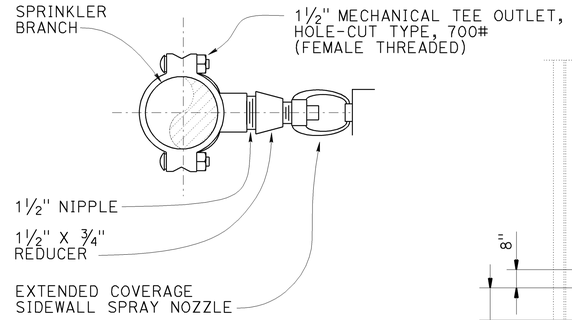

DETAIL 2
(SPRAY NOZZLE IN WALL BRANCHES)
NOT TO SCALE

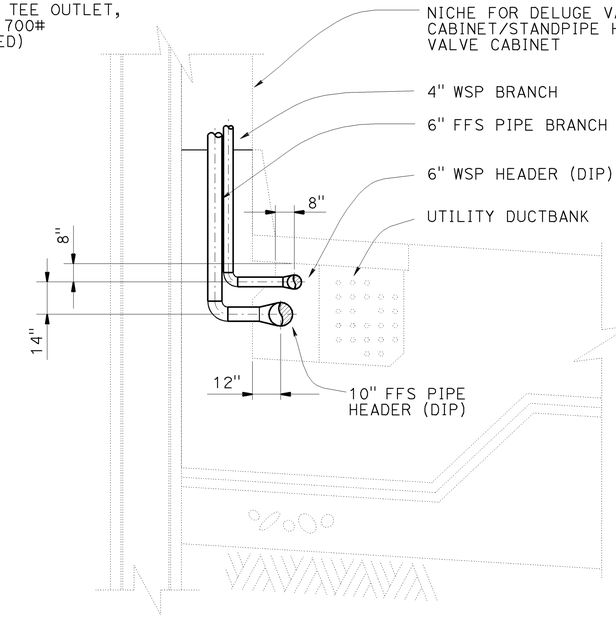

DETAIL 3
(UTILITY DUCTBANK)
NOT TO SCALE

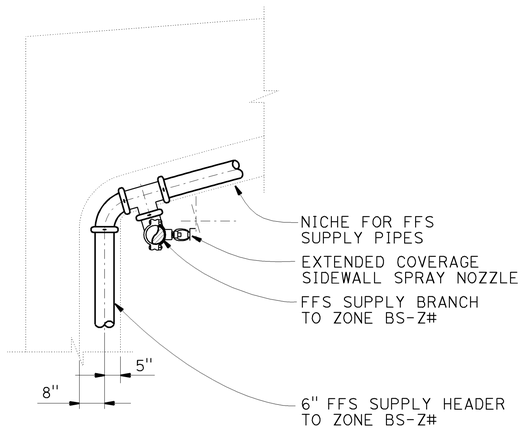

DETAIL 4
NOT TO SCALE

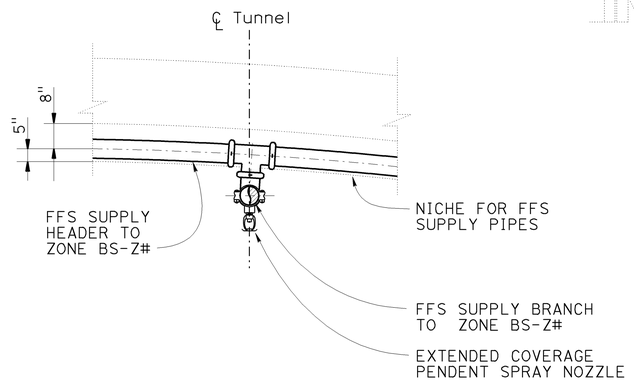

DETAIL 5
NOT TO SCALE

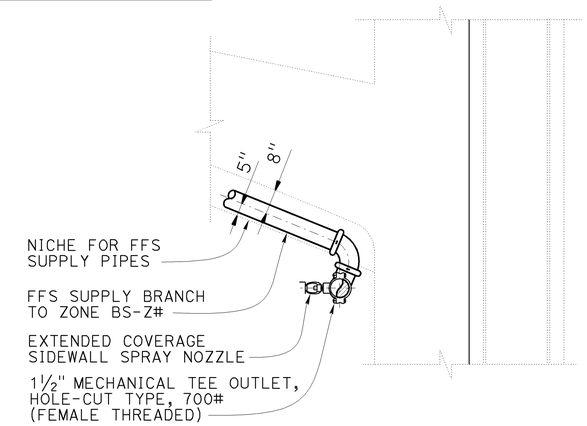

DETAIL 6
NOT TO SCALE

MT7-1

DESIGN	BY V. YELTON	CHECKED B. MELVIN	PREPARED FOR THE STATE OF CALIFORNIA DEPARTMENT OF TRANSPORTATION	C. J. HAWKINS PROJECT ENGINEER	BRIDGE NO. 34-0161L
DETAILS	BY V. YELTON	CHECKED B. MELVIN			POST MILE 8.81
QUANTITIES	BY V. YELTON	CHECKED B. MELVIN			

SOUTHBOUND BATTERY TUNNEL SYSTEMS
DETAILS NO. 1

DESIGN DETAIL SHEET (ENGLISH) (REV. 2/25/05)
ORIGINAL SCALE IN INCHES FOR REDUCED PLANS 0 1 2 3
CU 04
EA 163741
DISREGARD PRINTS BEARING EARLIER REVISION DATES
REVISION DATES (PRELIMINARY STAGE ONLY) 06/01/09 07/15/09 08/07/09 08/26/09
SHEET 16 OF 23

FILE => 34-0161l-u-10mdt07.dgn
USERNAME => trlenard DATE PLOTTED => 14-DEC-2009 TIME PLOTTED => 17:06

DIST	COUNTY	ROUTE	POST MILES TOTAL PROJECT	SHEET No	TOTAL SHEETS
04	SF	101	8.2/9.2	562	654

Bobby J Mel Aug 25, 2009
REGISTERED MECH. ENGINEER DATE

12-14-09
PLANS APPROVAL DATE

REGISTERED PROFESSIONAL ENGINEER
Bobby J. Melvin
No. 28685
Exp. 06/30/2011
Mechanical
STATE OF CALIFORNIA

The State of California or its officers or agents shall not be responsible for the accuracy or completeness of electronic copies of this plan sheet.

Arup PB Joint Venture
3840 Rosin Court, Suite 200
Sacramento, CA 95834

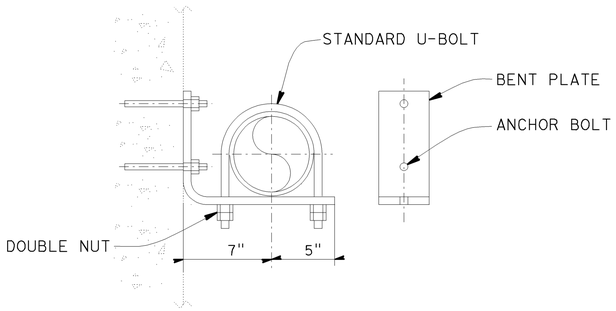

DETAIL 1
(PS-1 PIPE SUPPORT DETAIL)
NOT TO SCALE

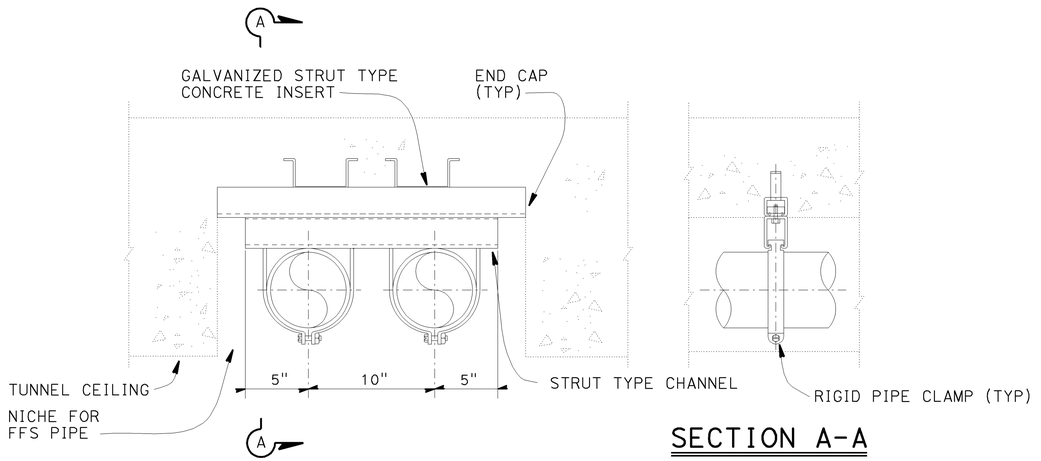

SECTION A-A

DETAIL 3
(PS-3 PIPE SUPPORT DETAIL)
NOT TO SCALE

NOTE:

1. PIPE SUPPORTS SHOWN ARE OF THE GENERAL TYPE AND CONFIGURATION INTENDED. CONTRACTOR TO PROVIDE PIPE SUPPORT SYSTEM AS SPECIFIED IN SPECIAL PROVISIONS, INCLUDING SUPPORT LOAD ANALYSIS & DETAILED DESIGN OF SUPPORT ELEMENTS.

CALIFORNIA STATE FIRE MARSHAL APPROVED
Approval of this plan does not authorize or approve any omission or deviation from applicable regulations. Final approval is subject to field inspection. One set of approved plans shall be available on the project site at all times.
Reviewed by: STEPHEN GUARINO
Approval date: 12-14-09

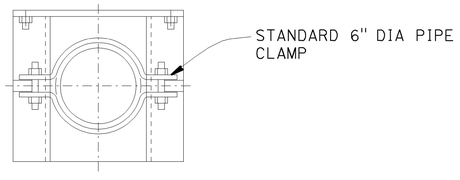

SECTION B-B

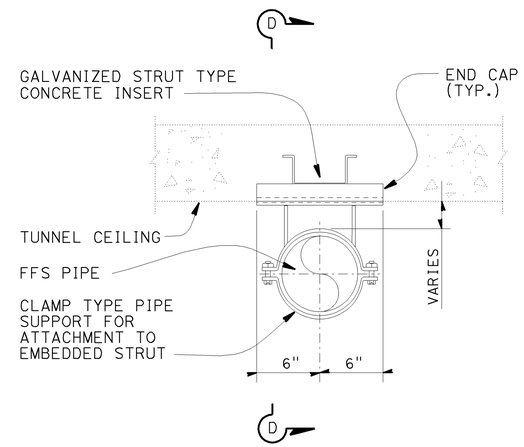

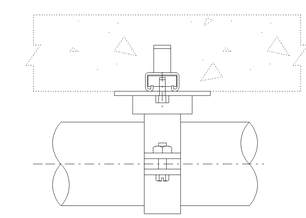

SECTION D-D

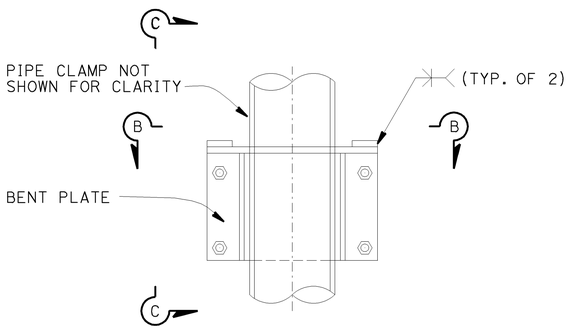

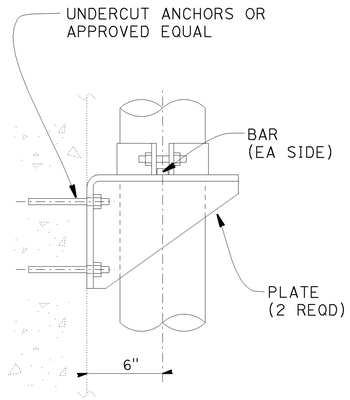

SECTION C-C

DETAIL 2
(PS-2 PIPE SUPPORT DETAIL)
NOT TO SCALE

DETAIL 4
(PS-4 PIPE SUPPORT DETAIL)
NOT TO SCALE

MT7-2

DESIGN	BY V. YELTON	CHECKED B. MELVIN	PREPARED FOR THE STATE OF CALIFORNIA DEPARTMENT OF TRANSPORTATION	C. J. HAWKINS PROJECT ENGINEER	BRIDGE NO. 34-0161L	SOUTHBOUND BATTERY TUNNEL SYSTEMS
DETAILS	BY V. YELTON	CHECKED B. MELVIN			POST MILE 8.81	DETAILS NO. 2
QUANTITIES	BY V. YELTON	CHECKED B. MELVIN				

DESIGN DETAIL SHEET (ENGLISH) (REV. 2/25/05)

ORIGINAL SCALE IN INCHES FOR REDUCED PLANS 0 1 2 3

CU 04
EA 163741

DISREGARD PRINTS BEARING EARLIER REVISION DATES

REVISION DATES (PRELIMINARY STAGE ONLY) 06/01/09 07/15/09 08/07/09 08/26/09

SHEET 17 OF 23

FILE => 34-0161l-u-10mdt08.dgn

USERNAME => trlenard DATE PLOTTED => 14-DEC-2009 TIME PLOTTED => 17:06

DIST	COUNTY	ROUTE	POST MILES TOTAL PROJECT	SHEET No	TOTAL SHEETS
04	SF	101	8.2/9.2	563	654

Bobby J. Melvin 12/08/09
REGISTERED MECH. ENGINEER DATE

12-14-09
PLANS APPROVAL DATE

REGISTERED PROFESSIONAL ENGINEER — Bobby J. Melvin — No. 28685 — Exp. 06/30/2011 — Mechanical — STATE OF CALIFORNIA

The State of California or its officers or agents shall not be responsible for the accuracy or completeness of electronic copies of this plan sheet.

Arup PB Joint Venture
3840 Rosin Court, Suite 200
Sacramento, CA 95834

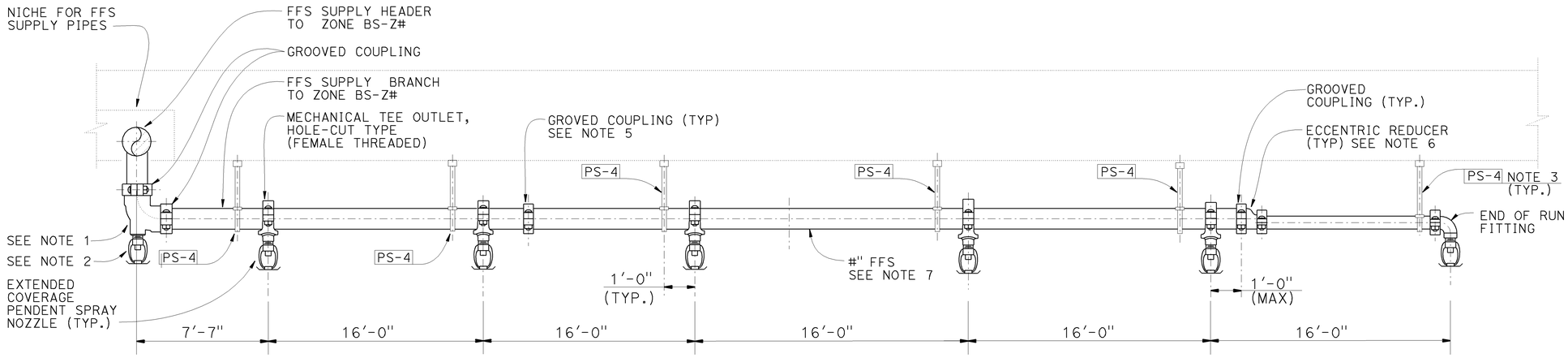

DETAIL 1
(CENTER BRANCHES LAYOUT)
NOT TO SCALE

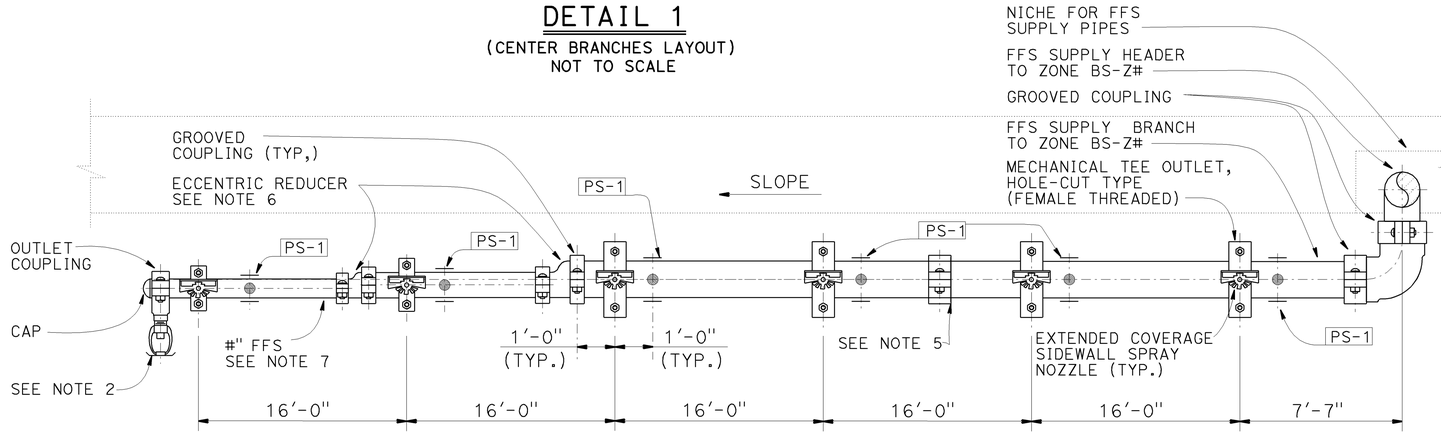

DETAIL 2
(WALL BRANCHES LAYOUT, ZONES BS-Z1, 3, 5, 7 & 9)
NOT TO SCALE

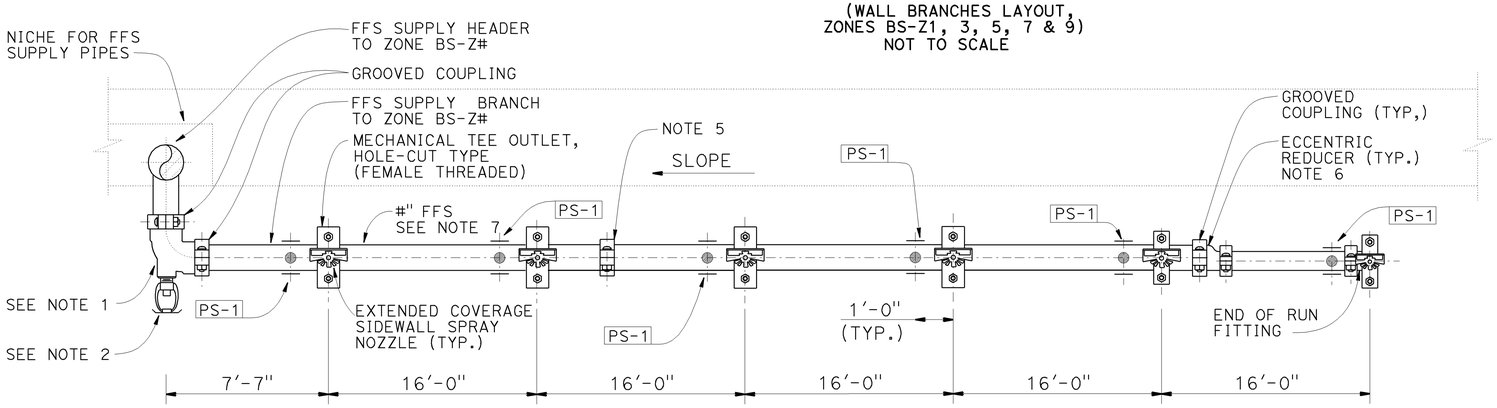

DETAIL 3
(WALL BRANCHES LAYOUT, ZONES BS-Z2, 4, 6, 8 & 10)
NOT TO SCALE

NOTES:

1. ON BRANCH LINES WITH SLOPE TOWARDS ELBOW, USE GROOVED DRAIN ELBOW W/1" TAP.
2. PROVIDE SPRAY NOZZLE WITH K-VALUE = 1.2 FOR DRAINAGE, LOW POINT IN BRANCH ONLY
3. PROVIDE PIPE SUPPORT AT EACH BRANCH AND INTERMEDIATE SUPPORT SUCH THAT SPACING DOES NOT EXCEED 10 FT, SEE SHEET MT7-2 FOR PIPE SUPPORT DETAILS.
4. GROOVED COUPLINGS SHALL BE "FLEXIBLE" TYPE UON.
5. PIPE THERMAL EXPANSION SHALL BE TAKEN-UP IN GROOVED FITTINGS. ASSUME MAXIMUM FITTING SPACING IS 10 FT FOR THIS PURPOSE IN PIPE STRESS AND SUPPORT LOAD CALCULATIONS. PROVIDE COUPLING DATA AND INSTALLATION PLAN SHOWING HOW EXPANSION WILL BE COMPENSATED FOR.
6. PROVIDE REDUCERS AS NEEDED TO MATCH PIPE SIZES SHOWN IN DRAWING MT7-6
7. SEE SHEET MT7-6 FOR BRANCH PIPE SIZES

CALIFORNIA STATE FIRE MARSHAL APPROVED
Approval of this plan does not authorize or approve any omission or deviation from applicable regulations. Final approval is subject to field inspection. One set of approved plans shall be available on the project site at all times.
Reviewed by: STEPHEN GUARINO
Approval date: 12-14-09

MT7-3

	BY	CHECKED
DESIGN	V. YELTON	B. MELVIN
DETAILS	V. YELTON	B. MELVIN
QUANTITIES	V. YELTON	B. MELVIN

PREPARED FOR THE STATE OF CALIFORNIA DEPARTMENT OF TRANSPORTATION

C. J. HAWKINS
PROJECT ENGINEER

CU 04
EA 163741

BRIDGE NO. 34-0161L
POST MILE 8.81

SOUTHBOUND BATTERY TUNNEL SYSTEMS
DETAILS NO. 3

DESIGN DETAIL SHEET (ENGLISH) (REV. 2/25/05)

ORIGINAL SCALE IN INCHES FOR REDUCED PLANS 0 1 2 3

DISREGARD PRINTS BEARING EARLIER REVISION DATES

REVISION DATES (PRELIMINARY STAGE ONLY): 06/01/09 | 07/01/09 | 08/03/09 | 09/02/09 | 12/08/09

SHEET 18 OF 23

FILE => 34-0161l-u-10mdt09.dgn

USERNAME => ttriebord DATE PLOTTED => 14-DEC-2009 TIME PLOTTED => 17:06

DIST	COUNTY	ROUTE	POST MILES TOTAL PROJECT	SHEET No	TOTAL SHEETS
04	SF	101	8.2/9.2	564	654

Bobby J. Melvin 12/08/09
REGISTERED MECH. ENGINEER DATE

12-14-09
PLANS APPROVAL DATE

REGISTERED PROFESSIONAL ENGINEER — Bobby J. Melvin — No. 28685 — Exp. 06/30/2011 — Mechanical — STATE OF CALIFORNIA

The State of California or its officers or agents shall not be responsible for the accuracy or completeness of electronic copies of this plan sheet.

Arup PB Joint Venture
3840 Rosin Court, Suite 200
Sacramento, CA 95834

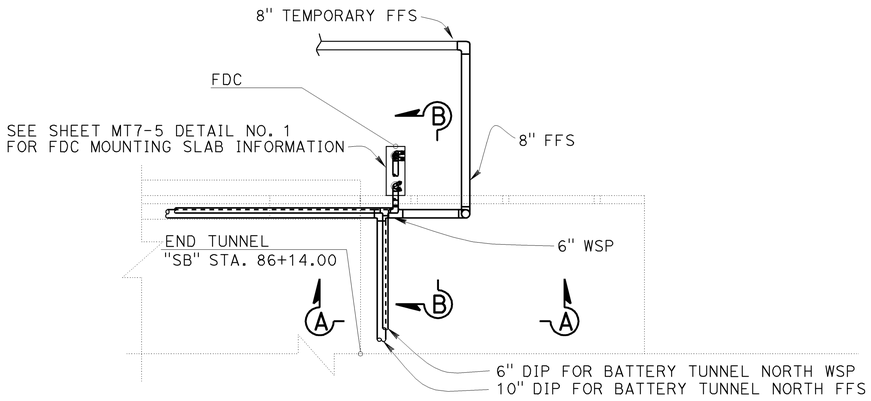

DETAIL NO. 1
NOT TO SCALE

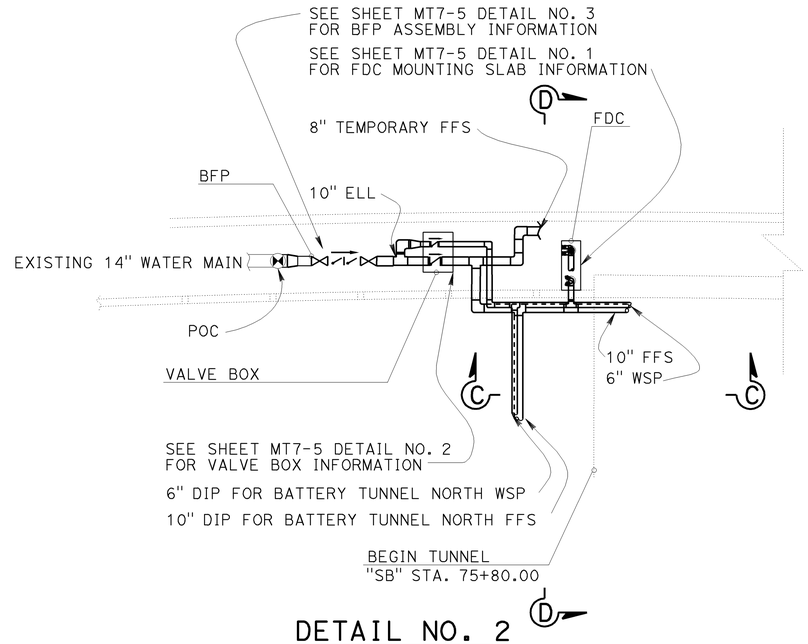

DETAIL NO. 2
NOT TO SCALE

NOTE:

1. LOCATIONS OF EQUIPMENT SHOWN ON THIS SHEET APPROXIMATE. CONTRACTOR TO DETERMINE FINAL LOCATIONS BASED ON FIELD CONDITIONS AND IN COORDINATION WITH OTHER DISCIPLINES.

CALIFORNIA STATE FIRE MARSHAL APPROVED
Approval of this plan does not authorize or approve any omission or deviation from applicable regulations. Final approval is subject to field inspection. One set of approved plans shall be available on the project site at all times.
Reviewed by: STEPHEN GUARINO
Approval date: 12-14-09

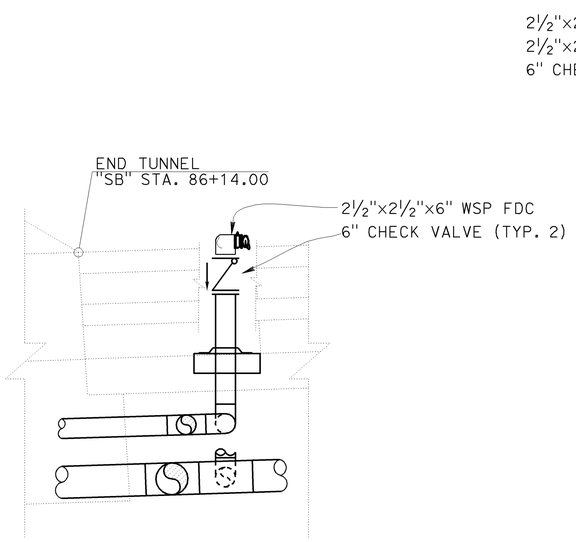

SECTION A-A
NOT TO SCALE

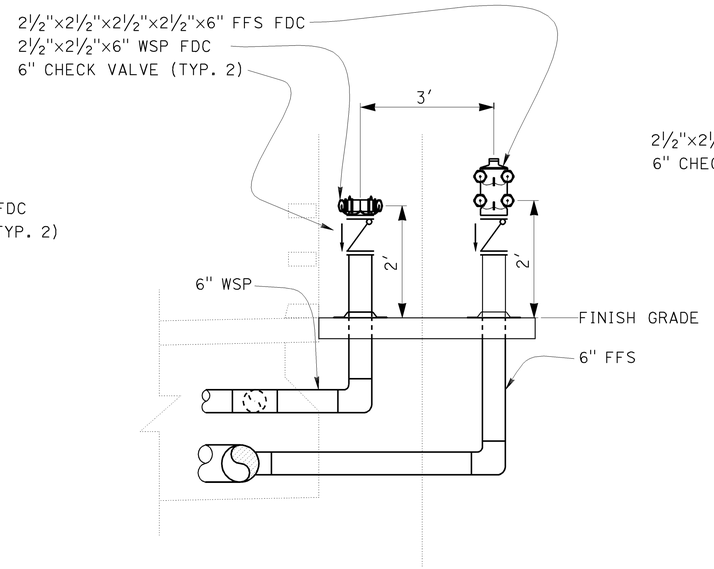

SECTION B-B
NOT TO SCALE

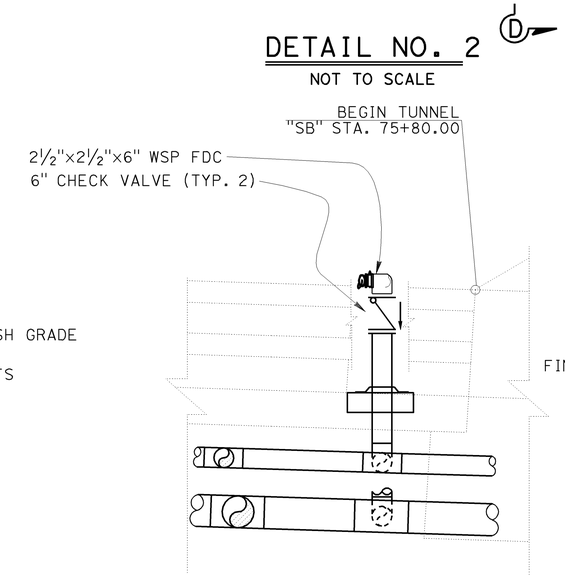

SECTION C-C
NOT TO SCALE

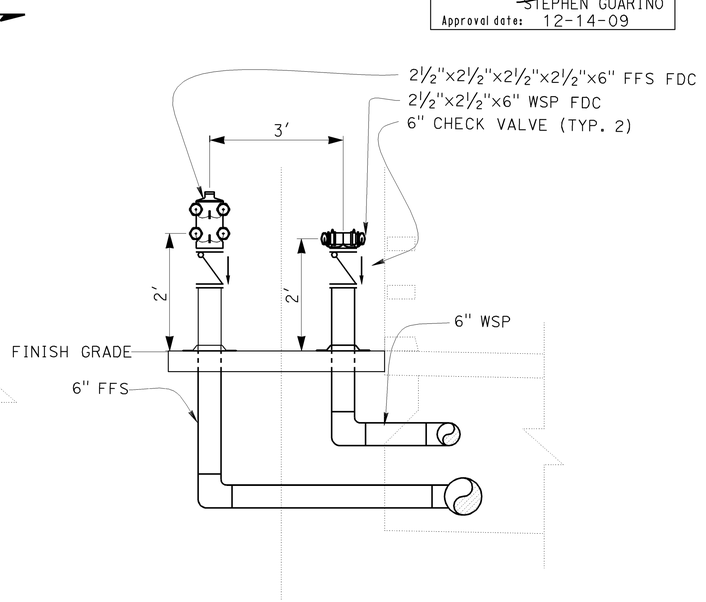

SECTION D-D
NOT TO SCALE

MT7-4

DESIGN	BY C. A. HAWKINS	CHECKED B. MELVIN	PREPARED FOR THE STATE OF CALIFORNIA DEPARTMENT OF TRANSPORTATION	C. J. HAWKINS PROJECT ENGINEER	BRIDGE NO. 34-0161L	SOUTHBOUND BATTERY TUNNEL SYSTEMS	
DETAILS	BY C. A. HAWKINS	CHECKED B. MELVIN			POST MILE 8.81	DETAILS NO. 4	
QUANTITIES	BY C. A. HAWKINS	CHECKED B. MELVIN					

DESIGN DETAIL SHEET (ENGLISH) (REV. 2/25/05)

ORIGINAL SCALE IN INCHES FOR REDUCED PLANS 0 1 2 3

CU 04
EA 163741

DISREGARD PRINTS BEARING EARLIER REVISION DATES →

REVISION DATES (PRELIMINARY STAGE ONLY): 06/01/09 | 07/31/09 | 08/07/09 | 08/21/09 | 12/08/09

SHEET 19 OF 23

FILE => 34-0161l-u-10mdt10.dgn

USERNAME => trlenord DATE PLOTTED => 14-DEC-2009 TIME PLOTTED => 17:06

DIST	COUNTY	ROUTE	POST MILES TOTAL PROJECT	SHEET No	TOTAL SHEETS
04	SF	101	8.2/9.2	565	654

CALIFORNIA STATE FIRE MARSHAL APPROVED

Approval of this plan does not authorize or approve any omission or deviation from applicable regulations. Final approval is subject to field inspection. One set of approved plans shall be available on the project site at all times.

Reviewed by: STEPHEN GUARINO

Approval date: 12-14-09

Bobby J. Melvin 12/08/09
REGISTERED MECH. ENGINEER DATE

12-14-09
PLANS APPROVAL DATE

REGISTERED PROFESSIONAL ENGINEER
Bobby J. Melvin
No. 28685
Exp. 06/30/2011
Mechanical
STATE OF CALIFORNIA

The State of California or its officers or agents shall not be responsible for the accuracy or completeness of electronic copies of this plan sheet.

Arup PB Joint Venture
3840 Rosin Court, Suite 200
Sacramento, CA 95834

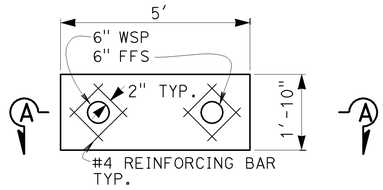

DETAIL NO. 1

NOT TO SCALE

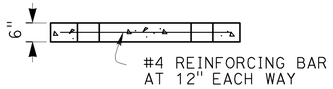

SECTION A-A

NOT TO SCALE

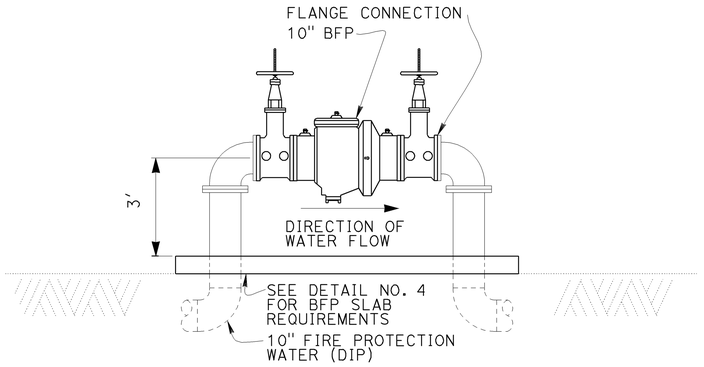

DETAIL NO. 3

NOT TO SCALE

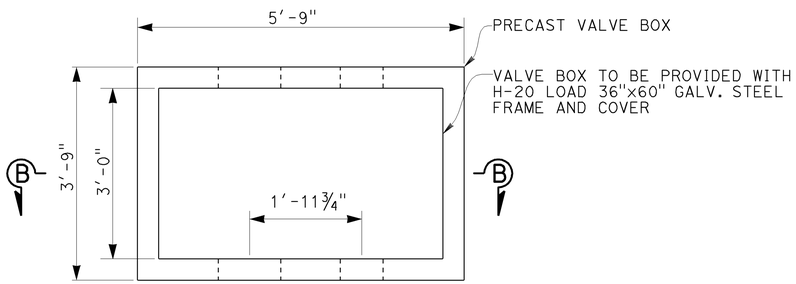

DETAIL NO. 2

NOT TO SCALE

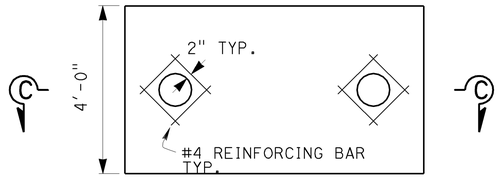

DETAIL NO. 4

NOT TO SCALE

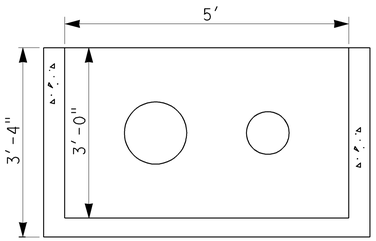

SECTION B-B

NOT TO SCALE

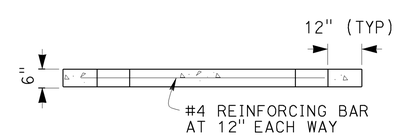

SECTION C-C

NOT TO SCALE

MT7-5

DESIGN	BY C. A. HAWKINS	CHECKED B. MELVIN	PREPARED FOR THE STATE OF CALIFORNIA DEPARTMENT OF TRANSPORTATION	C. J. HAWKINS PROJECT ENGINEER	BRIDGE NO. 34-0161L	SOUTHBOUND BATTERY TUNNEL SYSTEMS
DETAILS	BY C. A. HAWKINS	CHECKED B. MELVIN			POST MILE 8.81	DETAILS NO. 5
QUANTITIES	BY C. A. HAWKINS	CHECKED B. MELVIN				

DESIGN DETAIL SHEET (ENGLISH) (REV. 2/25/05)

ORIGINAL SCALE IN INCHES FOR REDUCED PLANS 0 1 2 3

CU 04
EA 163741

DISREGARD PRINTS BEARING EARLIER REVISION DATES

REVISION DATES (PRELIMINARY STAGE ONLY) 06/01/09 07/15/09 08/07/09 08/26/09 12/08/09

SHEET 20 OF 23

FILE => 34-0161l-u-10mdt11.dgn

USERNAME => trlenard DATE PLOTTED => 14-DEC-2009 TIME PLOTTED => 17:06

CALIFORNIA STATE FIRE MARSHAL APPROVED
Approval of this plan does not authorize or approve any omission or deviation from applicable regulations. Final approval is subject to field inspection. One set of approved plans shall be available on the project site at all times.
Reviewed by: STEPHEN GUARINO
Approval date: 12-14-09

DIST	COUNTY	ROUTE	POST MILES TOTAL PROJECT	SHEET No	TOTAL SHEETS
04	SF	101	8.2/9.2	566	654

Bobby J. Melvin 12/08/09
REGISTERED MECH. ENGINEER DATE

12-14-09
PLANS APPROVAL DATE

REGISTERED PROFESSIONAL ENGINEER — Bobby J. Melvin — No. 28685 — Exp. 06/30/2011 — Mechanical — STATE OF CALIFORNIA

The State of California or its officers or agents shall not be responsible for the accuracy or completeness of electronic copies of this plan sheet.

Arup PB Joint Venture
3840 Rosin Court, Suite 200
Sacramento, CA 95834

NOTE:
1. DRAIN FITTINGS NOT SHOWN FOR CLARITY

FIXED FIRE SUPPRESSION BRANCH PIPE DIA. (in.)																								
PIPE NO. / ZONE NO.	SOUTH WALL BRANCH						CENTER SOUTH BRANCH						CENTER NORTH BRANCH						NORTH WALL BRANCH					
	A	B	C	D	E	F	A	B	C	D	E	F	A	B	C	D	E	F	A	B	C	D	E	F
BS-Z2	3	3	2.5	2.5	2	2	4	3	3	3	2.5	2	4	3	3	3	3	2	3	3	2.5	2.5	2.5	2
BS-Z4	3	3	2.5	2.5	2	2	3	2.5	2.5	2.5	2.5	2	3	2.5	2.5	2.5	2.5	2	3	3	2.5	2.5	2.5	2
BS-Z6	3	3	2.5	2.5	2.5	2	3	2.5	2.5	2.5	2.5	2	3	2.5	2.5	2.5	2.5	2	3	3	3	2.5	2	2
BS-Z8	4	3	3	3	2	2	3	3	2.5	2.5	2.5	2	3	3	2.5	2.5	2.5	2	4	3	3	3	3	2
BS-Z10	4	3	3	3	2.5	2	3	3	3	2.5	2.5	2	3	3	3	2.5	2.5	2	4	4	3	3	3	2
BS-Z1	3	2.5	2.5	2.5	2	2	3	3	3	3	2.5	2	3	3	3	3	3	2	3	2.5	2.5	2.5	2.5	2
BS-Z3	3	3	2.5	2.5	2.5	2	4	3	3	3	2.5	2	4	4	3	3	2.5	2	3	3	2.5	2.5	2.5	2.5
BS-Z5	3	2.5	2.5	2.5	2.5	2	3	2.5	2.5	2	2	2	3	2.5	2.5	2.5	2	2	3	3	2.5	2.5	2.5	2
BS-Z7	3	3	3	2.5	2.5	2	3	3	2.5	2.5	2	2	3	3	2.5	2.5	2	2	3	3	3	3	3	2
BS-Z9	3	3	3	3	2.5	2.5	3	2.5	2.5	2.5	2.5	2	3	2.5	2.5	2.5	2.5	2	3	3	3	3	3	2.5

BRANCH PIPE SIZE SCHEDULE

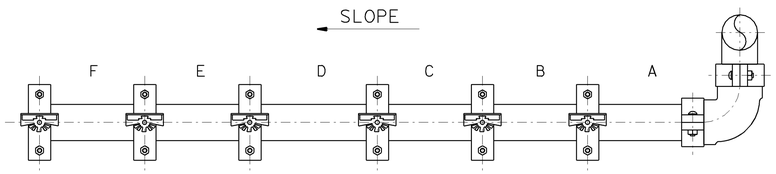

DETAIL 1
(WALL BRANCHES LAYOUT)
NOT TO SCALE

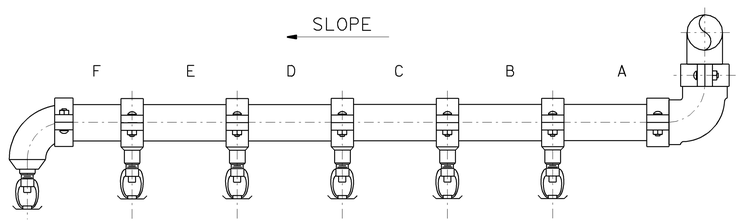

DETAIL 2
(CENTER BRANCHES LAYOUT)
NOT TO SCALE

MT7-6

		DESIGN	BY V. YELTON	CHECKED B. MELVIN	PREPARED FOR THE STATE OF CALIFORNIA DEPARTMENT OF TRANSPORTATION	C. J. HAWKINS PROJECT ENGINEER	BRIDGE NO. 34-0161L	SOUTHBOUND BATTERY TUNNEL SYSTEMS
		DETAILS	BY V. YELTON	CHECKED B. MELVIN			POST MILE 8.81	DETAILS NO. 6
		QUANTITIES	BY V. YELTON	CHECKED B. MELVIN				

DESIGN DETAIL SHEET (ENGLISH) (REV. 2/25/05)
ORIGINAL SCALE IN INCHES FOR REDUCED PLANS 0 1 2 3
CU 04
EA 163741
DISREGARD PRINTS BEARING EARLIER REVISION DATES
REVISION DATES (PRELIMINARY STAGE ONLY): 11/09/09 12/08/09
SHEET 21 OF 23

FILE => 34-0161l-u-10mdt12.dgn

USERNAME => trhenard DATE PLOTTED => 14-DEC-2009 TIME PLOTTED => 17:06

DIST	COUNTY	ROUTE	POST MILES TOTAL PROJECT	SHEET No	TOTAL SHEETS
04	SF	101	8.2/9.2	567	654

CALIFORNIA STATE FIRE MARSHAL APPROVED

Approval of this plan does not authorize or approve any omission or deviation from applicable regulations. Final approval is subject to field inspection. One set of approved plans shall be available on the project site at all times.

Reviewed by: STEPHEN GUARINO

Approval date: 12-14-09

Bobby J. Melvin 11/13/09
REGISTERED MECH. ENGINEER DATE

12-14-09
PLANS APPROVAL DATE

REGISTERED PROFESSIONAL ENGINEER
Bobby J. Melvin
No. 28685
Exp. 06/30/2011
Mechanical
STATE OF CALIFORNIA

The State of California or its officers or agents shall not be responsible for the accuracy or completeness of electronic copies of this plan sheet.

Arup PB Joint Venture
3840 Rosin Court, Suite 200
Sacramento, CA 95834

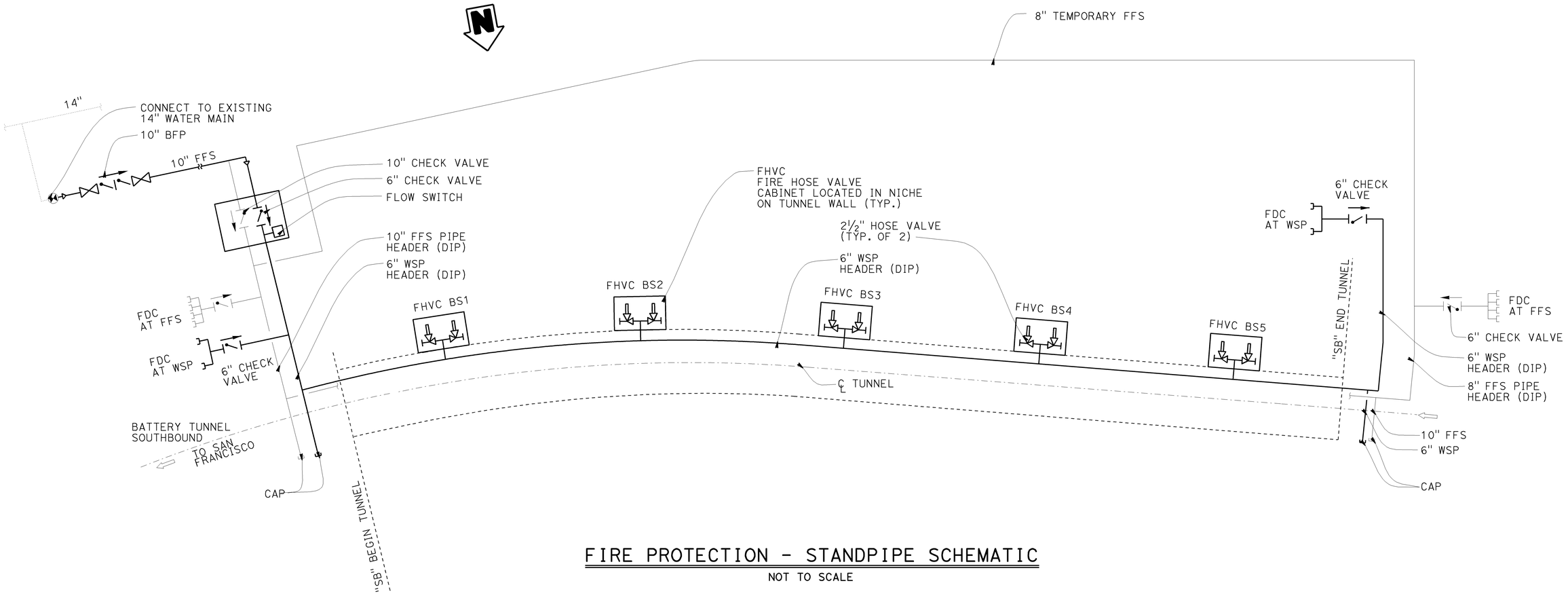

FIRE PROTECTION - STANDPIPE SCHEMATIC

NOT TO SCALE

MT8-1

DESIGN	BY V. YELTON	CHECKED B. MELVIN	
DETAILS	BY V. YELTON	CHECKED B. MELVIN	
QUANTITIES	BY V. YELTON	CHECKED B. MELVIN	

PREPARED FOR THE STATE OF CALIFORNIA DEPARTMENT OF TRANSPORTATION

C. J. HAWKINS
PROJECT ENGINEER

BRIDGE NO. 34-0161L
POST MILE 8.81

SOUTHBOUND BATTERY TUNNEL SYSTEMS
FIRE PROT. - STANDPIPE SCHEMATIC

DESIGN DETAIL SHEET (ENGLISH) (REV. 2/25/05)

ORIGINAL SCALE IN INCHES FOR REDUCED PLANS 0 1 2 3

CU 04
EA 163741

DISREGARD PRINTS BEARING EARLIER REVISION DATES

REVISION DATES (PRELIMINARY STAGE ONLY) 06/01/09 07/15/09 08/07/09 08/26/09

SHEET 22 OF 23

FILE => 34-0161l-u-10mdt13.dgn

USERNAME => trlenard DATE PLOTTED => 14-DEC-2009 TIME PLOTTED => 17:06

NOTES:

1. INSTALLING CONTRACTOR SHALL PROVIDE THE OWNER WITH ALL NECESSARY TRAINING TO PERFORM INSPECTION, TESTING AND MAINTENANCE OF WATER-BASED FIRE PROTECTION SYSTEMS IN ACCORDANCE WITH NFPA 25, AS AMENDED BY SFM.
   THE INSTALLING CONTRACTOR SHALL IDENTIFY A HYDRAULICALLY DESIGNED
2. SPRINKLER SYSTEM WITH A PERMANENTLY MARKED, WATERPROOF METAL OR RIGID PLASTIC SIGN, SECURED WITH CORROSION-RESISTANT WIRE, CHAIN, OR OTHER APPROVED MEANS. SUCH SIGNS SHALL BE PLACED AT THE DELUGE VALVE SUPPLYING THE CORRESPONDING HYDRAULICALLY DESIGNED AREA. THE AREA SHALL INCLUDE THE FOLLOWING INFORMATION:
   (a) LOCATION OF THE DESIGN AREA OR AREAS.
   (b) DISCHARGE DENSITIES OVER THE DESIGN AREA OR AREAS.
   (c) REQUIRED FLOW AND RESIDUAL PRESSURE DEMAND AT THE BASE OF THE RISER.
   (d) HOSE SYSTEM DEMAND INCLUDED IN ADDITION TO THE SPRINKLER DEMAND.
3. HYDROSTATIC TESTING OF THE SPRINKLER DELUGE SYSTEM FOR THIS PROJECT SHALL BE WITNESSED BY THE OFFICE OF THE STATE FIRE MARSHAL. A MINIMUM 3 WEEKS INSPECTION NOTICE WILL BE REQUIRED.
4. INSTALLATION OF THE SPRINKLER DELUGE SYSTEM SHALL NOT BE STARTED UNTIL COMPLETE PLANS AND SPECIFICATIONS (INCLUDING WATER SUPPLY INFORMATION) PREPARED AND SUBMITTED BY THE CONTRACTOR HAVE BEEN APPROVED BY THE CALIFORNIA STATE FIRE MARSHAL.
5. AT VARIOUS STAGES AND UPON COMPLETION, THE SYSTEM SHALL BE TESTED IN THE PRESENCE OF THE STATE FIRE MARSHAL.

CALIFORNIA STATE FIRE MARSHAL APPROVED
Approval of this plan does not authorize or approve any omission or deviation from applicable regulations. Final approval is subject to field inspection. One set of approved plans shall be available on the project site at all times.
Reviewed by: STEPHEN GUARINO
Approval date: 12-14-09

DIST	COUNTY	ROUTE	POST MILES TOTAL PROJECT	SHEET No	TOTAL SHEETS
04	SF	101	8.2/9.2	568	654

Bobby J. Melvin 12/08/09
REGISTERED MECH. ENGINEER DATE

12-14-09
PLANS APPROVAL DATE

REGISTERED PROFESSIONAL ENGINEER — Bobby J. Melvin — No. 28685 — Exp. 06/30/2011 Mechanical — STATE OF CALIFORNIA

The State of California or its officers or agents shall not be responsible for the accuracy or completeness of electronic copies of this plan sheet.

Arup PB Joint Venture
3840 Rosin Court, Suite 200
Sacramento, CA 95834

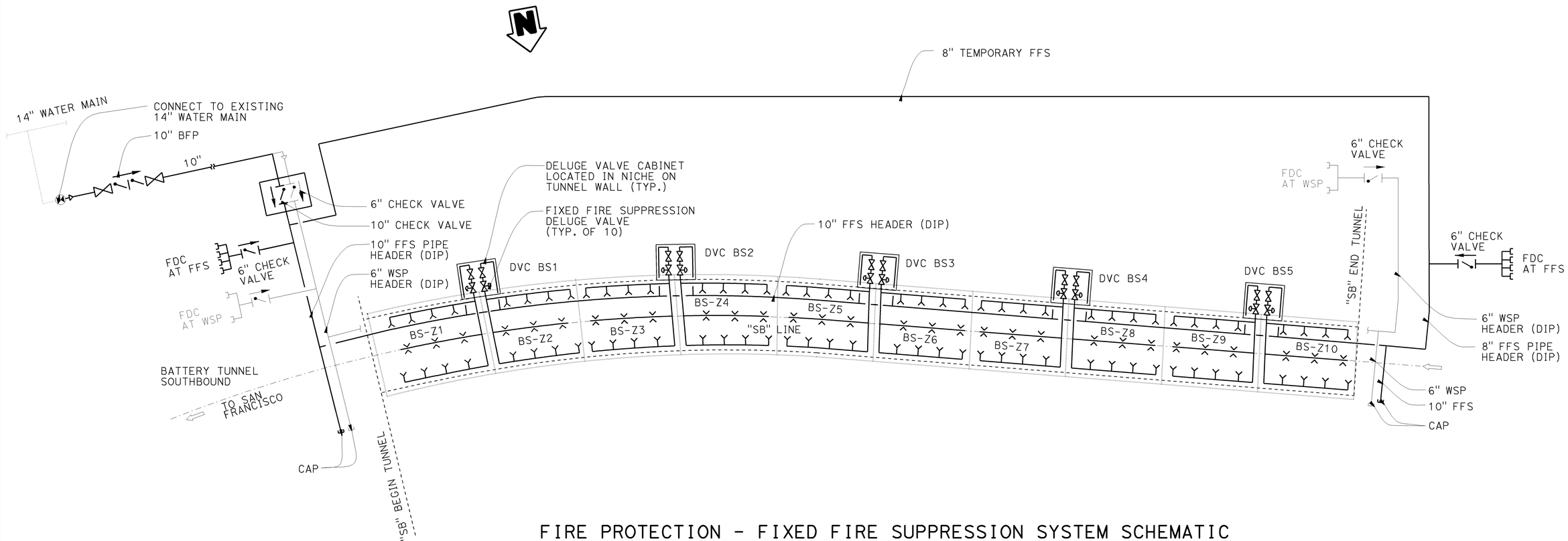

FIRE PROTECTION - FIXED FIRE SUPPRESSION SYSTEM SCHEMATIC

NOT TO SCALE

MT9-1

	BY	CHECKED
DESIGN	V. YELTON	B. MELVIN
DETAILS	V. YELTON	B. MELVIN
QUANTITIES	V. YELTON	B. MELVIN

PREPARED FOR THE STATE OF CALIFORNIA DEPARTMENT OF TRANSPORTATION

C. J. HAWKINS
PROJECT ENGINEER

BRIDGE NO. 34-0161L
POST MILE 8.81

SOUTHBOUND BATTERY TUNNEL SYSTEMS
FIRE PROTECTION - FIXED FIRE SUPPRESSION SYSTEM SCHEMATIC

DESIGN DETAIL SHEET (ENGLISH) (REV. 2/25/05)

ORIGINAL SCALE IN INCHES FOR REDUCED PLANS 0 1 2 3

CU 04
EA 163741

DISREGARD PRINTS BEARING EARLIER REVISION DATES →

REVISION DATES (PRELIMINARY STAGE ONLY): 06/05/09 | 07/15/09 | 08/07/09 | 08/28/09 | 12/08/09

SHEET 23 OF 23

FILE => 34-0161l-u-10mdt14.dgn

USERNAME => frlenard DATE PLOTTED => 14-DEC-2009 TIME PLOTTED => 17:06

DIST	COUNTY	ROUTE	POST MILES TOTAL PROJECT	SHEET No	TOTAL SHEETS
04	SF	101	8.2/9.2	569	654

REGISTERED CIVIL ENGINEER — 10/30/09 DATE

12-14-09
PLANS APPROVAL DATE

REGISTERED PROFESSIONAL ENGINEER — LAWRENCE M. JOHNSON — No. C 44006 — Exp. 6-30-11 — CIVIL — STATE OF CALIFORNIA

The State of California or its officers or agents shall not be responsible for the accuracy or completeness of electronic copies of this plan sheet.

Arup PB Joint Venture
303 Second Street, Suite 700N
San Francisco, CA 94107

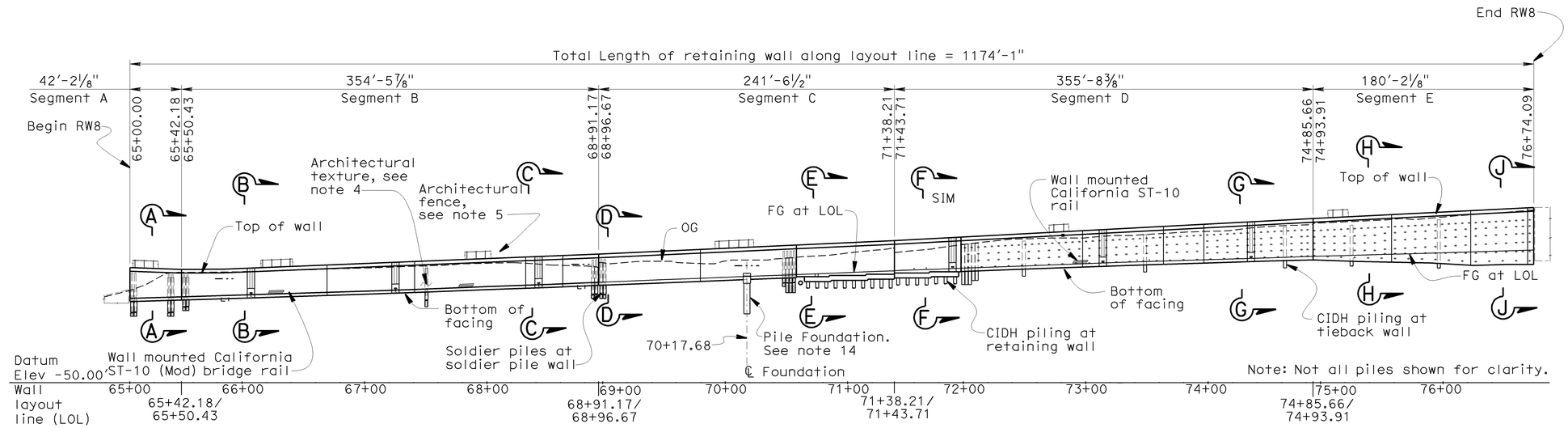

ELEVATION
1:50

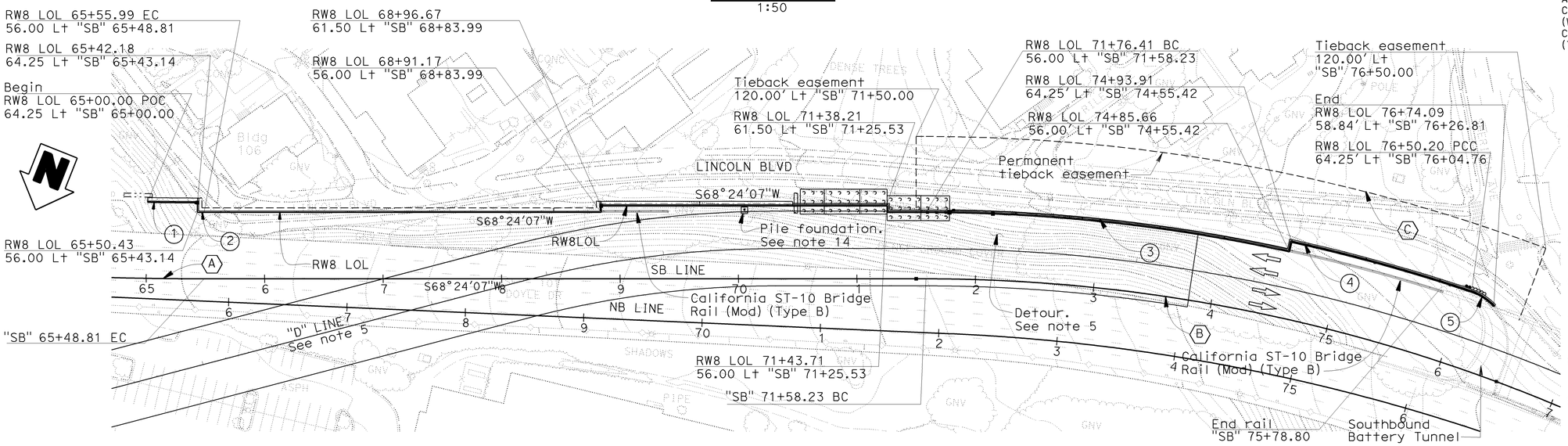

PLAN
1:50

LEGEND:

⇦ Direction of traffic

The contractor shall verify all controlling field dimensions before ordering or fabricating any material.

① RW8 CURVE DATA	② RW8 CURVE DATA	③ RW8 CURVE DATA	④ RW8 CURVE DATA	⑤ RW8 CURVE DATA
R = 2,819.75′	R = 2,828.00′	R = 1,436.00′	R = 1,444.25′	R = 50.00′
△ = 0°51′25"	△ = 0°6′46"	△ = 12°20′20"	△ = 6°12′01"	△ = 27°22′33"
T = 21.09′	T = 2.78′	T = 155.23′	T = 78.22′	T = 12.18′
L = 42.18′	L = 5.56′	L = 309.25′	L = 156.29′	L = 23.89′

Ⓐ "SB" LINE CURVE DATA	Ⓑ "SB" Line CURVE DATA	Ⓒ Tieback Easement Curve Data
R = 2,884.00′	R = 1,380.00′	R = 1,392.00′
△ = 20°51′30"	△ = 36°24′25"	△ = 20°45′34"
T = 530.83′	T = 453.81′	T = 254.97′
L = 1,049.91	L = 876.88′	L = 504.35′

1. All horizontal dimensions are measured along the wall (LOL).
2. For roadway finished grade elevations, see "Roadway Plans".
3. For detour layout and details, see "Roadway Plans".
4. For architectural texture at wall, see sheets RW8-AT1 through RW8-AT6.
5. For architectural fence details, see sheets RW8-AT1 through RW8-AT6.
6. For Sections A-A thru D-D, see sheet RW8-2.
7. For Section E-E and Section F-F, see sheet RW8-3.
8. For Sections G-G thru J-J, see sheet RW8-4.
9. For Segment A Structure Plan, see sheet RW8-8.
10. For Segment B Structure Plans, see sheets RW8-12 and RW8-13.
11. For Segment C Structure Plan, see sheet RW8-21.
12. For Segment D Structure Plans, see sheets RW8-28 and RW8-29.
13. For Segment E Structure Plan, see sheets RW8-40.
14. For square pedestal pile foundation, see sheet RW8-21.

RW8-1

QUANTITIES

STRUCTURE EXCAVATION (RETAINING WALL)	3,050	CY
STRUCTURE EXCAVATION (SOLDIER PILE WALL)	1,100	CY
STRUCTURE EXCAVATION (TIEBACK WALL)	2,180	CY
STRUCTURE BACKFILL (RETAINING WALL)	2,160	CY
STRUCTURE BACKFILL (TIEBACK WALL)	580	CY
STRUCTURE BACKFILL (SOLDIER PILE WALL)	150	CY
CONCRETE BACKFILL	1,840	CY
30" DRILLED HOLE	10,300	LF
STEEL SOLDIER PILE (W 21 X 201)	10,900	LF
30" CAST-IN-DRILLED-HOLE CONCRETE PILING	8,900	LF
TIEBACK ANCHOR	298	EA
STRUCTURAL CONCRETE, RETAINING WALL	2,600	CY
ANTI-GRAFFITI COATING	34,000	SQFT
ARCHITECTURAL TEXTURE (FLUTED FIN)	25,000	SQFT
DRILL AND BOND DOWEL	800	LF
BAR REINFORCING STEEL (RETAINING WALL)	659,000	LB
SHOTCRETE	700	CY
ASPHALT MEMBRANE WATERPROOFING	7,800	SQFT
60" CAST-IN-DRILLED-HOLE CONCRETE PILE (SIGN FOUNDATION)	33	LF
GEOCOMPOSITE DRAIN	4,100	SQFT
MINOR CONCRETE (GUTTER)	777	LF
ARCHITECTURAL FENCE	1,174	LF
CALIFORNIA ST-10 BRIDGE RAIL (WALL MOUNTED)(MODIFIED)	684	LF
CALIFORNIA ST-10 BRIDGE RAIL (MODIFIED) (TYPE B)	371	LF

DESIGN	BY L. JOHNSON	CHECKED S. SINGH	LOAD & RESISTANCE FACTOR DESIGN	LIVE LOADING: HL 93 W/ "LOW-BOY"; PERMIT DESIGN VEHICLE			
DETAILS	BY L. REYES	CHECKED S. SINGH	LAYOUT	BY L. JOHNSON	CHECKED S. SINGH		
QUANTITIES	BY L. JOHNSON	CHECKED S. SINGH	SPECIFICATIONS	BY K. CHEN	PLANS AND SPECS COMPARED L. JOHNSON		

PREPARED FOR THE STATE OF CALIFORNIA
DEPARTMENT OF TRANSPORTATION

R. DONIKIAN
PROJECT ENGINEER

BRIDGE NO.	POST MILES
34E0014	8.8

RETAINING WALL NO. 8
GENERAL PLAN NO. 1

DESIGN GENERAL PLAN SHEET (ENGLISH) (REV. 2/25/05)

ORIGINAL SCALE IN INCHES FOR REDUCED PLANS 0 1 2 3

CU 04
EA 163741

DISREGARD PRINTS BEARING EARLIER REVISION DATES →

REVISION DATES (PRELIMINARY STAGE ONLY): 6-01-09 | 07-15-09 | 08-07-09 | 08-26-09 | 09-17-09 | 09-18-09 | 09-25-09 | 09-30-09 | 10-30-09

SHEET 1 OF 65

FILE => 34E0014-a-gp01.dgn

USERNAME => rtripierce DATE PLOTTED => 12-DEC-2009 TIME PLOTTED => 09:51

DIST	COUNTY	ROUTE	POST MILES TOTAL PROJECT	SHEET No	TOTAL SHEETS
04	SF	101	8.2/9.2	570	654

REGISTERED CIVIL ENGINEER — 10/30/09 DATE

12-14-09
PLANS APPROVAL DATE

REGISTERED PROFESSIONAL ENGINEER — LAWRENCE M. JOHNSON — No. C 44006 — Exp. 6-30-11 — CIVIL — STATE OF CALIFORNIA

The State of California or its officers or agents shall not be responsible for the accuracy or completeness of electronic copies of this plan sheet.

Arup PB Joint Venture
303 Second Street, Suite 700N
San Francisco, CA 94107

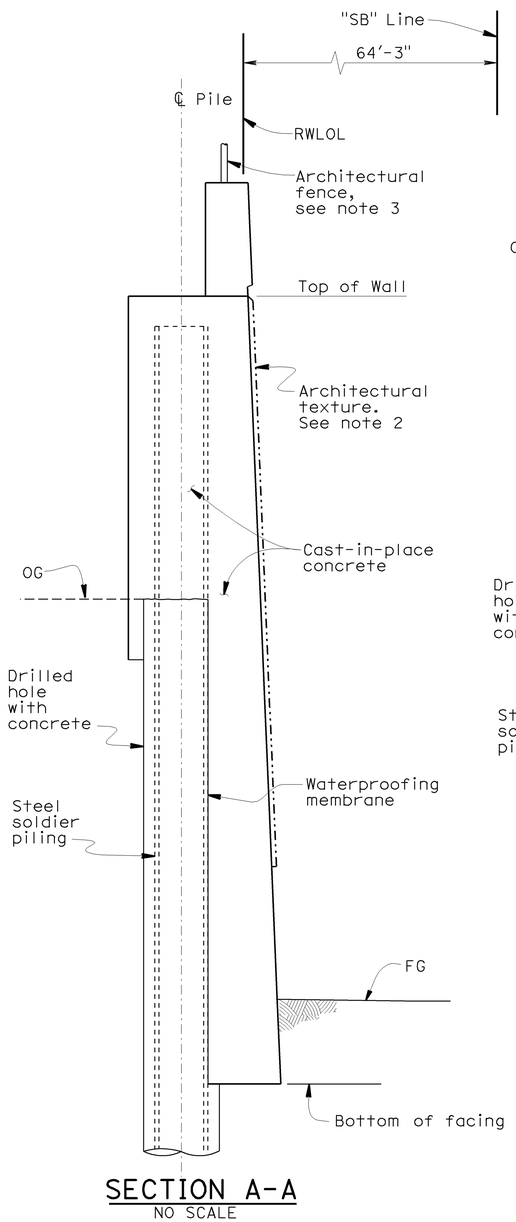

SECTION A-A
NO SCALE

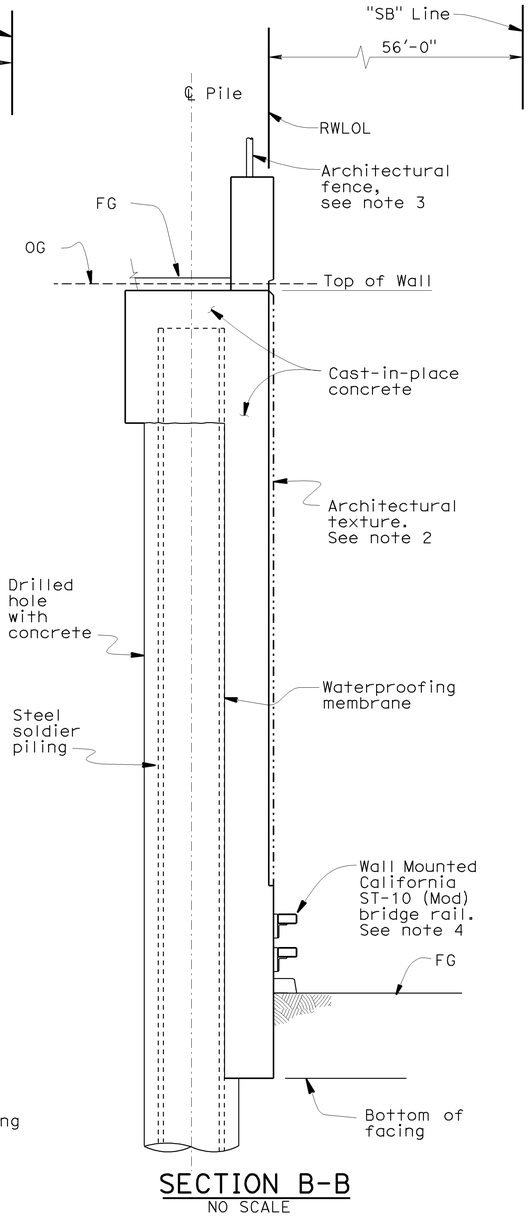

SECTION B-B
NO SCALE

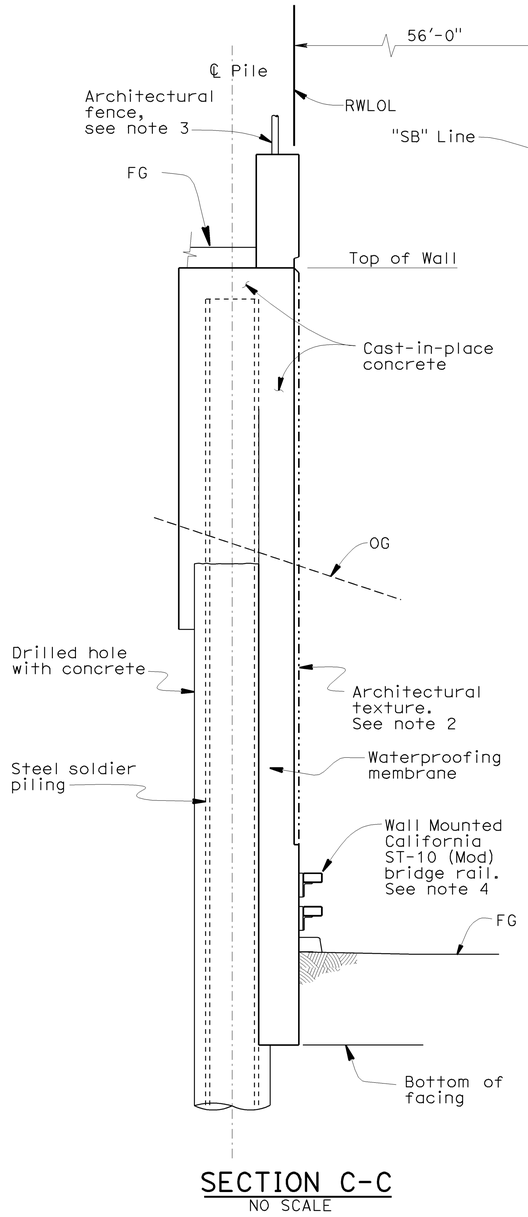

SECTION C-C
NO SCALE

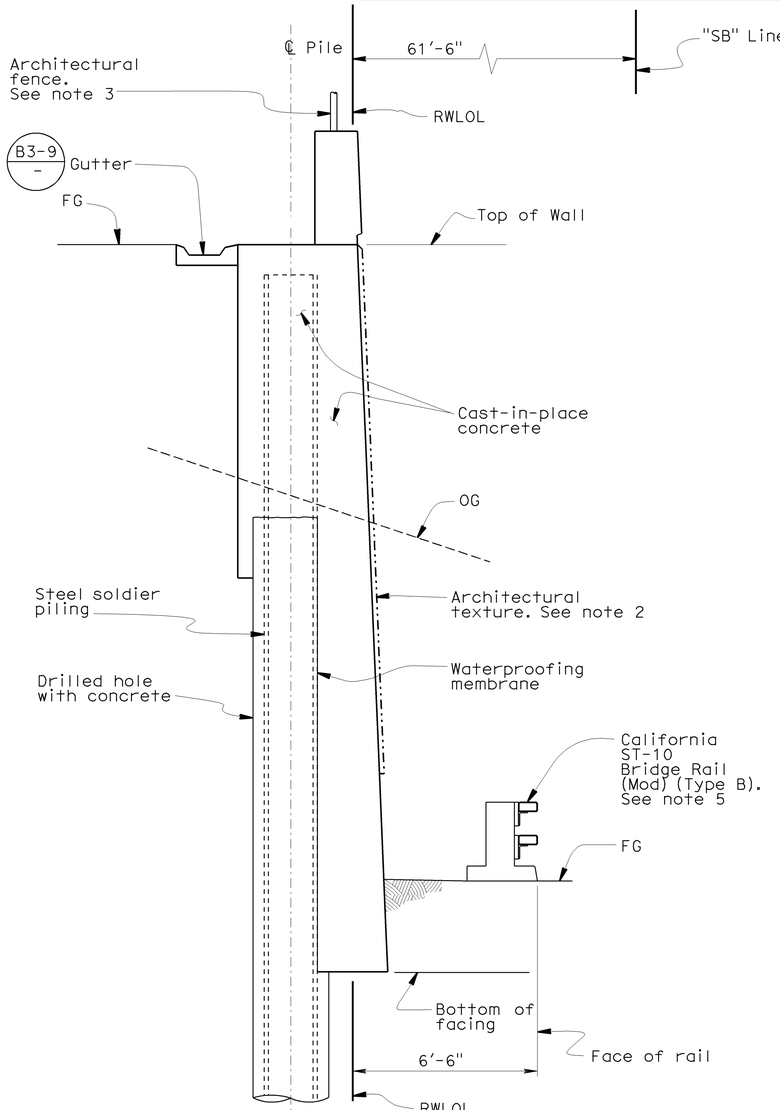

SECTION D-D
NO SCALE

NOTES:

1. For roadway finished grade elevations, see "Roadway Plans".
2. For architectural texture at wall, see sheets RW8-AT1 through RW8-AT6.
3. For architectural fence details, see sheets RW8-AT1 through RW8-AT6.
4. For the Wall Mounted California ST-10 (Mod), see sheet RW8-48.
5. For the California ST-10 Bridge Rail (Mod) (Type B), see sheets RW8-49 and RW8-50.

The contractor shall verify all controlling field dimensions before ordering or fabricating any material.

RW8-2

	BY	CHECKED			
DESIGN	L. JOHNSON	S. SINGH	LOAD & RESISTANCE FACTOR DESIGN	LIVE LOADING: HL 93 W/ "LOW-BOY"; PERMIT DESIGN VEHICLE	
DETAILS	L. REYES	S. SINGH	LAYOUT	L. JOHNSON	S. SINGH
QUANTITIES	L. JOHNSON	S. SINGH	SPECIFICATIONS	K. CHEN	PLANS AND SPECS COMPARED L. JOHNSON

PREPARED FOR THE STATE OF CALIFORNIA DEPARTMENT OF TRANSPORTATION

R. DONIKIAN
PROJECT ENGINEER

BRIDGE NO.	34E0014
POST MILES	8.8

RETAINING WALL NO. 8
GENERAL PLAN NO. 2

DESIGN GENERAL PLAN SHEET (ENGLISH) (REV. 2/25/05)

ORIGINAL SCALE IN INCHES FOR REDUCED PLANS 0 1 2 3

CU 04
EA 163741

DISREGARD PRINTS BEARING EARLIER REVISION DATES →

REVISION DATES (PRELIMINARY STAGE ONLY): 6-04-09 | 07-15-09 | 08-07-09 | 08-26-09 | 09-11-09 | 09-18-09 | 09-25-09 | 09-30-09 | 10-30-09

SHEET 2 OF 65

FILE => 34E0014-a-gp02.dgn

USERNAME => tripierce DATE PLOTTED => 12-DEC-2009 TIME PLOTTED => 10:07

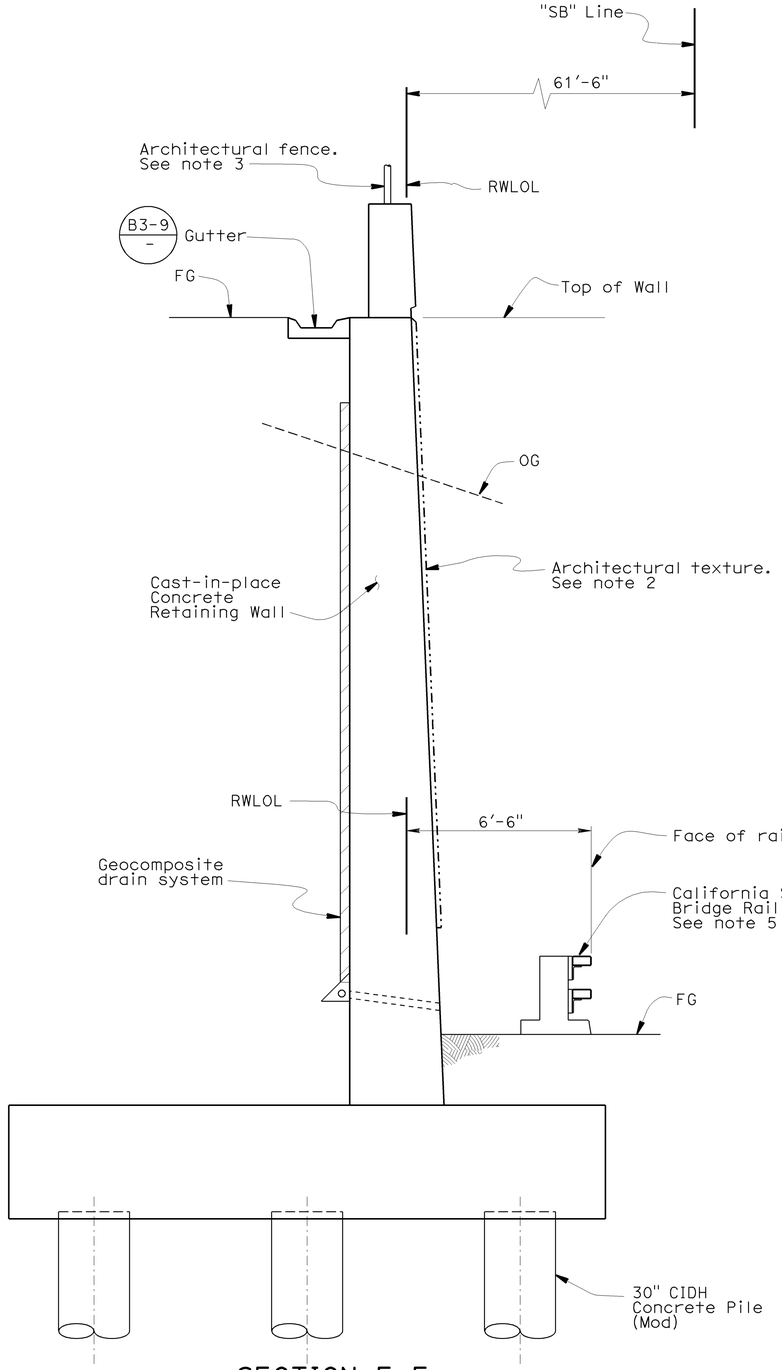

SECTION E-E
NO SCALE

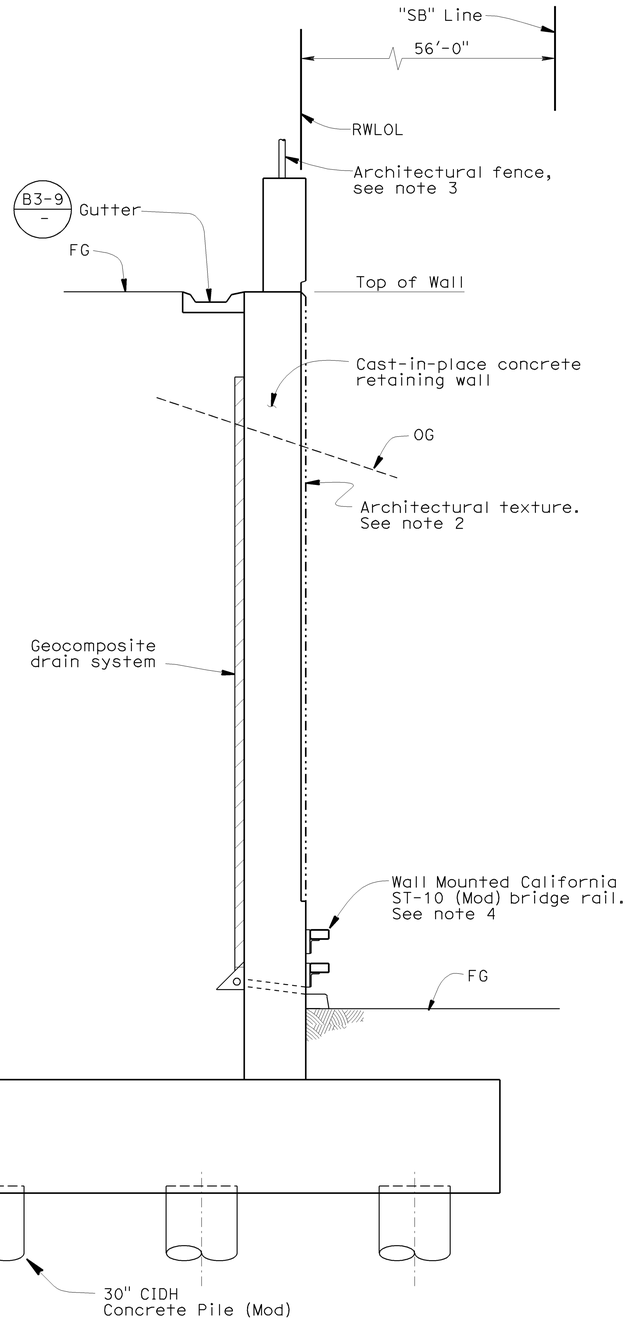

SECTION F-F
NO SCALE

NOTES:

1. For roadway finished grade elevations, see "Roadway Plans".
2. For architectural texture at wall, see sheets RW8-AT1 through RW8-AT6.
3. For architectural fence details, see sheets RW8-AT1 through RW8-AT6.
4. For the Wall Mounted California ST-10 (Mod), see sheet RW8-48.
5. For the California ST-10 Bridge Rail (Mod) (Type B), see sheets RW8-49 and RW8-50.

The contractor shall verify all controlling field dimensions before ordering or fabricating any material.

RW8-3

DIST	COUNTY	ROUTE	POST MILES TOTAL PROJECT	SHEET No	TOTAL SHEETS
04	SF	101	8.2/9.2	571	654

REGISTERED CIVIL ENGINEER — 10/30/09 DATE

12-14-09
PLANS APPROVAL DATE

REGISTERED PROFESSIONAL ENGINEER — LAWRENCE M. JOHNSON — No. C 44006 — Exp. 6-30-11 — CIVIL — STATE OF CALIFORNIA

The State of California or its officers or agents shall not be responsible for the accuracy or completeness of electronic copies of this plan sheet.

Arup PB Joint Venture
303 Second Street, Suite 700N
San Francisco, CA 94107

	BY	CHECKED			
DESIGN	L. JOHNSON	S. SINGH	LOAD & RESISTANCE FACTOR DESIGN	LIVE LOADING: HL 93 W/ "LOW-BOY"; PERMIT DESIGN VEHICLE	
DETAILS	L. REYES	S. SINGH	LAYOUT	L. JOHNSON	S. SINGH
QUANTITIES	L. JOHNSON	S. SINGH	SPECIFICATIONS	K. CHEN	PLANS AND SPECS COMPARED L. JOHNSON

PREPARED FOR THE STATE OF CALIFORNIA DEPARTMENT OF TRANSPORTATION

R. DONIKIAN
PROJECT ENGINEER

BRIDGE NO.	34E0014
POST MILES	8.8

RETAINING WALL NO. 8
GENERAL PLAN NO. 3

DESIGN GENERAL PLAN SHEET (ENGLISH) (REV. 2/25/05)

ORIGINAL SCALE IN INCHES FOR REDUCED PLANS 0 1 2 3

CU 04
EA 163741

DISREGARD PRINTS BEARING EARLIER REVISION DATES →

REVISION DATES (PRELIMINARY STAGE ONLY): 6-01-09 | 07-15-09 | 08-07-09 | 08-26-09 | 09-11-09 | 09-18-09 | 09-25-09 | 09-30-09 | 10-30-09

SHEET 3 OF 65

FILE => 34E0014-a-gp03.dgn

USERNAME => trpierce DATE PLOTTED => 12-DEC-2009 TIME PLOTTED => 09:46

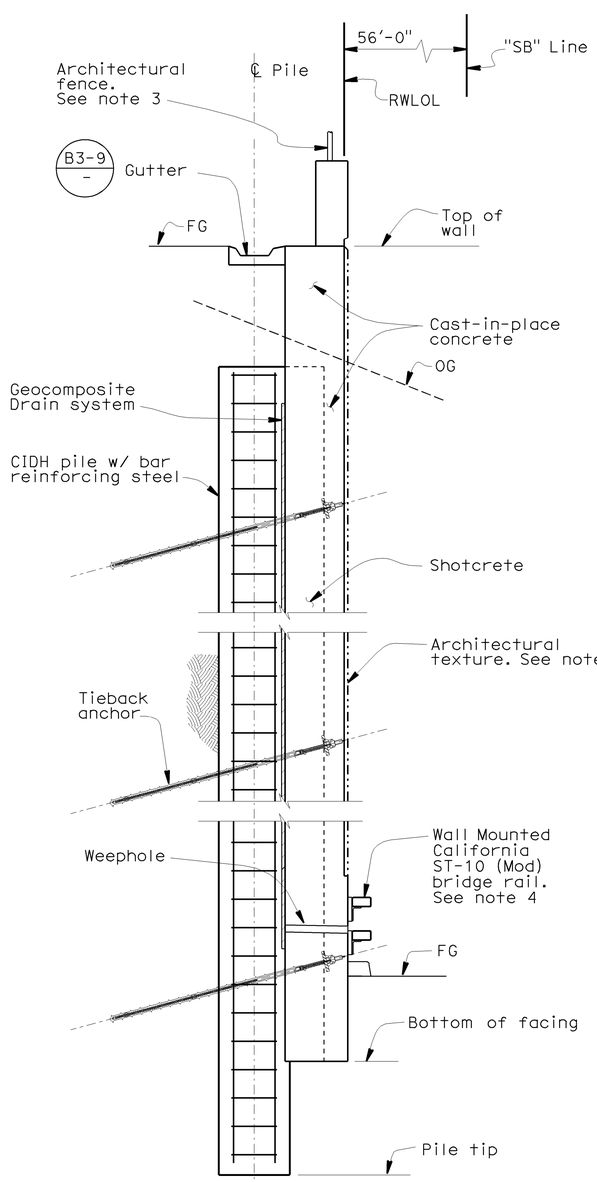

SECTION G-G
NO SCALE

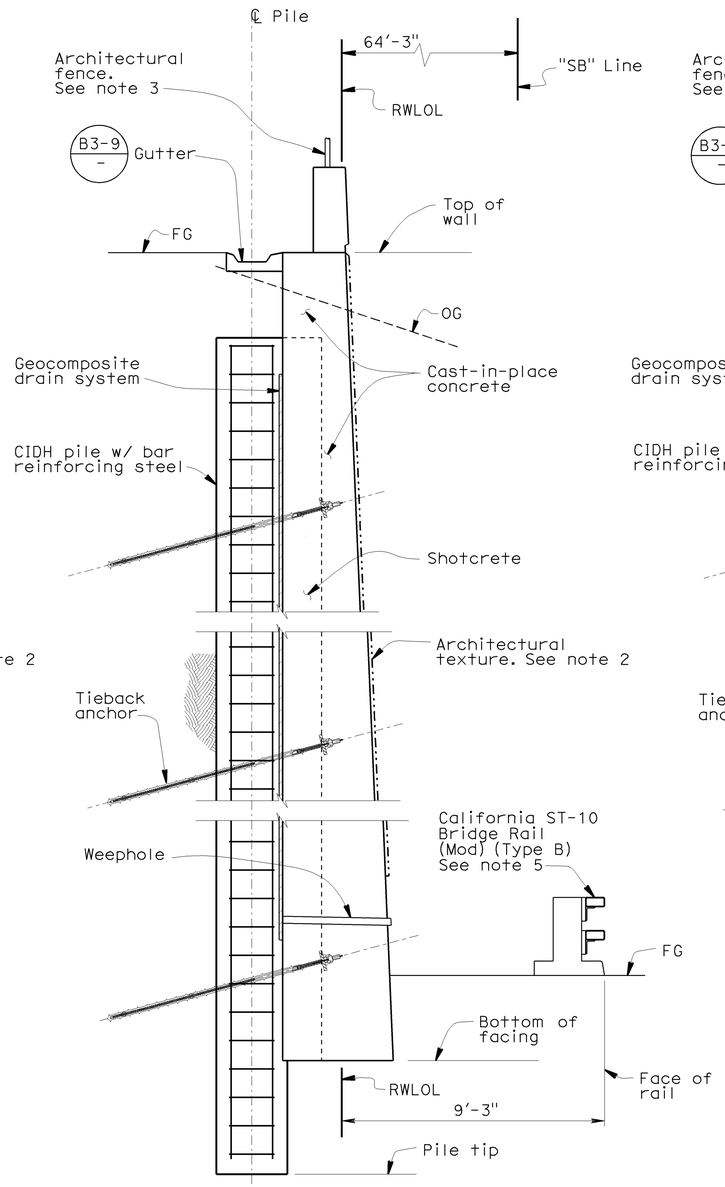

SECTION H-H
NO SCALE

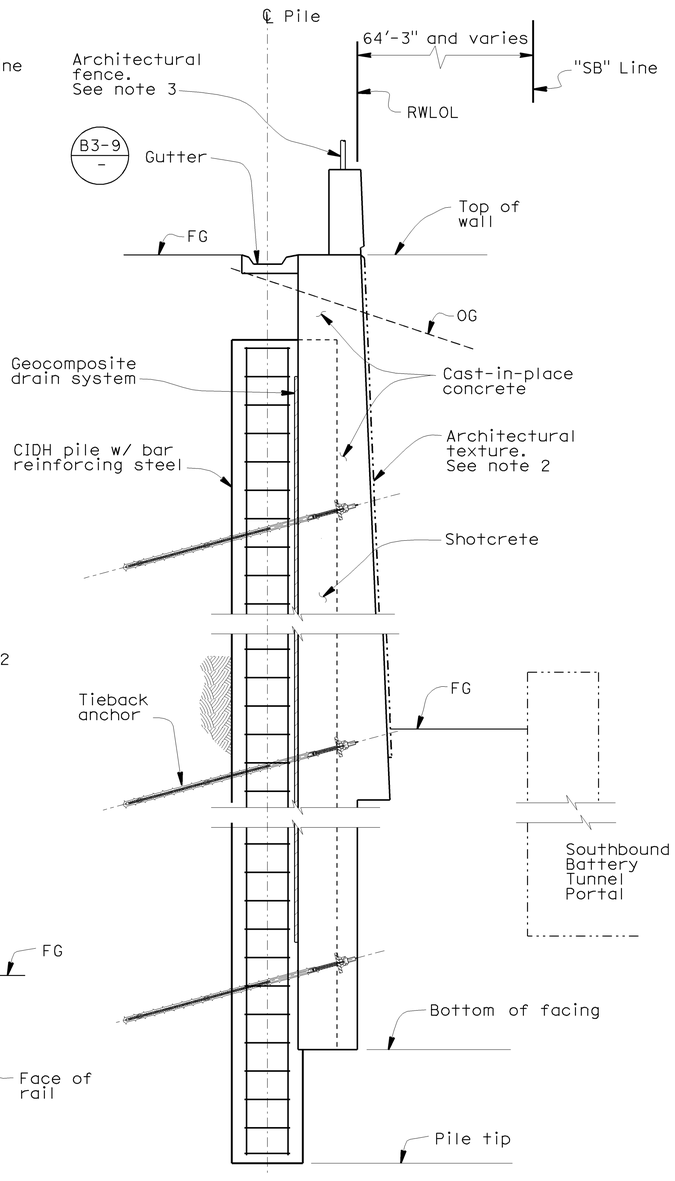

SECTION J-J
NO SCALE

NOTES:

1. For roadway finished grade elevations, see "Roadway Plans".
2. For architectural texture at wall, see sheets RW8-AT1 through RW8-AT6.
3. For architectural fence details, see sheets RW8-AT1 through RW8-AT6.
4. For the Wall Mounted California ST-10 (Mod), see sheet RW8-48.
5. For the California ST-10 Bridge Rail (Mod), (Type B). See sheets RW8-49 and RW8-50.

DIST	COUNTY	ROUTE	POST MILES TOTAL PROJECT	SHEET No	TOTAL SHEETS
04	SF	101	8.2/9.2	572	654

REGISTERED CIVIL ENGINEER — 10/30/09 DATE

12-14-09
PLANS APPROVAL DATE

REGISTERED PROFESSIONAL ENGINEER — LAWRENCE M. JOHNSON — No. C 44006 — Exp. 6-30-11 — CIVIL — STATE OF CALIFORNIA

The State of California or its officers or agents shall not be responsible for the accuracy or completeness of electronic copies of this plan sheet.

Arup PB Joint Venture
303 Second Street, Suite 700N
San Francisco, CA 94107

The contractor shall verify all controlling field dimensions before ordering or fabricating any material.

RW8-4

	BY	CHECKED
DESIGN	L. JOHNSON	S. SINGH
DETAILS	L. REYES	S. SINGH
QUANTITIES	L. JOHNSON	S. SINGH

LOAD & RESISTANCE FACTOR DESIGN — LIVE LOADING: HL 93 W/ "LOW-BOY"; PERMIT DESIGN VEHICLE

	BY	CHECKED
LAYOUT	L. JOHNSON	S. SINGH
SPECIFICATIONS	K. CHEN	PLANS AND SPECS COMPARED L. JOHNSON

PREPARED FOR THE STATE OF CALIFORNIA DEPARTMENT OF TRANSPORTATION

R. DONIKIAN
PROJECT ENGINEER

CU 04
EA 163741

BRIDGE NO. 34E0014
POST MILES 8.8

RETAINING WALL NO. 8
GENERAL PLAN NO. 4

DESIGN GENERAL PLAN SHEET (ENGLISH) (REV. 2/25/05)

ORIGINAL SCALE IN INCHES FOR REDUCED PLANS 0 1 2 3

DISREGARD PRINTS BEARING EARLIER REVISION DATES →

REVISION DATES (PRELIMINARY STAGE ONLY): 6-01-09 | 07-15-09 | 08-07-09 | 08-26-09 | 09-11-09 | 09-18-09 | 09-25-09 | 09-30-09 | 10-30-09

SHEET 4 OF 65

FILE => 34E0014-a-gp04.dgn

USERNAME = trpierce DATE PLOTTED => 12-DEC-2009 TIME PLOTTED => 09:46

INDEX TO PLANS

REF. NO.	TITLE
RW8-1	GENERAL PLAN NO. 1
RW8-2	GENERAL PLAN NO. 2
RW8-3	GENERAL PLAN NO. 3
RW8-4	GENERAL PLAN NO. 4
RW8-5	INDEX TO PLANS
RW8-6	GENERAL NOTES
RW8-7	EARTHWORK PAY LIMITS NO. 1
RW8-8	EARTHWORK PAY LIMITS NO. 2
RW8-9	SEGMENT A - STRUCTURE PLAN AND DETAILS
RW8-10	SEGMENT A - DETAILS NO. 1
RW8-11	SEGMENT A - DETAILS NO. 2
RW8-12	SEGMENT B - STRUCTURE PLAN NO. 1
RW8-13	SEGMENT B - STRUCTURE PLAN NO. 2
RW8-14	SEGMENT B - DETAILS NO. 1
RW8-15	SEGMENT B - DETAILS NO. 2
RW8-16	SEGMENT B - DETAILS NO. 3
RW8-17	SEGMENT B - DETAILS NO. 4
RW8-18	SEGMENT B - DETAILS NO. 5
RW8-19	SEGMENT B - DETAILS NO. 6
RW8-20	SEGMENT B - DETAILS NO. 7
RW8-21	SEGMENT C - STRUCTURE PLAN
RW8-22	SEGMENT C - DETAILS NO. 1
RW8-23	SEGMENT C - DETAILS NO. 2
RW8-24	SEGMENT C - DETAILS NO. 3
RW8-25	SEGMENT C - DETAILS NO. 4
RW8-26	SEGMENT C - DETAILS NO. 5
RW8-27	SEGMENT C - DETAILS NO. 6
RW8-28	SEGMENT D - STRUCTURE PLAN NO. 1
RW8-29	SEGMENT D - STRUCTURE PLAN NO. 2
RW8-30	SEGMENT D - DETAILS NO. 1
RW8-31	SEGMENT D - DETAILS NO. 2
RW8-32	SEGMENT D - DETAILS NO. 3
RW8-33	SEGMENT D - DETAILS NO. 4
RW8-34	SEGMENT D - DETAILS NO. 5
RW8-35	SEGMENT D - DETAILS NO. 6
RW8-36	SEGMENT D - DETAILS NO. 7
RW8-37	SEGMENT D - DETAILS NO. 8
RW8-38	SEGMENT D - DETAILS NO. 9
RW8-39	SEGMENT D - DETAILS NO. 10
RW8-40	SEGMENT E - STRUCTURE PLAN
RW8-41	SEGMENT E - DETAILS NO. 1

INDEX TO PLANS (CONT.)

REF. NO.	TITLE
RW8-42	SEGMENT E - DETAILS NO. 2
RW8-43	SEGMENT E - DETAILS NO. 3
RW8-44	SEGMENT E - DETAILS NO. 4
RW8-45	WALL CONSTRUCTION DETAILS
RW8-46	TIEBACK DETAILS
RW8-47	GEOCOMPOSITE DRAIN SYSTEM DETAILS
RW8-48	WALL MOUNTED CALIFORNIA ST-10 (MOD)
RW8-49	CALIFORNIA ST-10 BRIDGE RAIL (MOD) (TYPE B) 1 OF 2
RW8-50	CALIFORNIA ST-10 BRIDGE RAIL (MOD) (TYPE B) 2 OF 2
RW8-AT1	ARCHITECTURAL ELEVATIONS NO. 1
RW8-AT2	ARCHITECTURAL ELEVATIONS NO. 2
RW8-AT3	ARCHITECTURAL ELEVATIONS NO. 3
RW8-AT4	ARCHITECTURAL DETAILS NO. 1
RW8-AT5	ARCHITECTURAL DETAILS NO. 2
RW8-AT6	ARCHITECTURAL DETAILS NO. 3
RW8-LTB1	LOG OF TEST BORINGS 1 OF 9
RW8-LTB2	LOG OF TEST BORINGS 2 OF 9
RW8-LTB3	LOG OF TEST BORINGS 3 OF 9
RW8-LTB4	LOG OF TEST BORINGS 4 OF 9
RW8-LTB5	LOG OF TEST BORINGS 5 OF 9
RW8-LTB6	LOG OF TEST BORINGS 6 OF 9
RW8-LTB7	LOG OF TEST BORINGS 7 OF 9
RW8-LTB8	LOG OF TEST BORINGS 8 OF 9
RW8-LTB9	LOG OF TEST BORINGS 9 OF 9

DIST	COUNTY	ROUTE	POST MILES TOTAL PROJECT	SHEET No	TOTAL SHEETS
04	SF	101	8.2/9.2	573	654

10/30/09
REGISTERED CIVIL ENGINEER DATE

12-14-09
PLANS APPROVAL DATE

REGISTERED PROFESSIONAL ENGINEER
LAWRENCE M. JOHNSON
No. C 44006
Exp. 6-30-11
CIVIL
STATE OF CALIFORNIA

The State of California or its officers or agents shall not be responsible for the accuracy or completeness of electronic copies of this plan sheet.

Arup PB Joint Venture
303 Second Street, Suite 700N
San Francisco, CA 94107

RW8-5

DESIGN	BY L. JOHNSON	CHECKED S. SINGH	PREPARED FOR THE STATE OF CALIFORNIA DEPARTMENT OF TRANSPORTATION
DETAILS	BY J. FUSCO	CHECKED S. SINGH	
QUANTITIES	BY L. JOHNSON	CHECKED S. SINGH	

R. DONIKIAN
PROJECT ENGINEER

BRIDGE NO. 34E0014
POST MILE 8.8

RETAINING WALL NO. 8
INDEX TO PLANS

DESIGN DETAIL SHEET (ENGLISH) (REV. 2/25/05)

ORIGINAL SCALE IN INCHES FOR REDUCED PLANS 0 1 2 3

CU 04
EA 163741

DISREGARD PRINTS BEARING EARLIER REVISION DATES →

REVISION DATES (PRELIMINARY STAGE ONLY): 6-01-09 | 07-15-09 | 08-07-09 | 08-26-09 | 09-18-09 | 09-25-09 | 09-30-09 | 10-30-09

SHEET 5 OF 65

FILE => 34E0014-a-itp.dgn

USERNAME => tripierce DATE PLOTTED => 12-DEC-2009 TIME PLOTTED => 09:46

DIST	COUNTY	ROUTE	POST MILES TOTAL PROJECT	SHEET No	TOTAL SHEETS
04	SF	101	8.2/9.2	574	654

REGISTERED CIVIL ENGINEER — 10/30/09 DATE

12-14-09
PLANS APPROVAL DATE

REGISTERED PROFESSIONAL ENGINEER — LAWRENCE M. JOHNSON — No. C 44006 — Exp. 6-30-11 — CIVIL — STATE OF CALIFORNIA

The State of California or its officers or agents shall not be responsible for the accuracy or completeness of electronic copies of this plan sheet.

Arup PB Joint Venture
303 Second Street, Suite 700N
San Francisco, CA 94107

GENERAL NOTES

Design:

LRFD Bridge Design Specifications, 4th Edition (2007) published by the American Association of State Highway and Transportation Officials with California Amendment (V3.06.01)

Soil Parameters:

(For determination of design lateral earth pressure on wall)
(Depth D from top of wall)

Station 65+00 LOL to 68+00 LOL

D = 0 ft - 7 ft	ø= 28°	ɣ = 110 psf
D = 7 ft - 24 ft	ø= 35°	ɣ = 130 psf
D = 24 ft - 32 ft	ø= 32°	ɣ = 125 psf
D = Below 32 ft	ø= 40°	ɣ = 135 psf

Station 68+00 LOL to 71+70 LOL

D = 0 ft - 10 ft	ø= 30°	ɣ = 120 psf
D = 10 ft - 20 ft	ø= 32°	ɣ = 125 psf
D = Below 20 ft	ø= 35°	ɣ = 130 psf

Station 71+70 LOL to 76+15 LOL

D = 0 ft - 11 ft	ø= 28°	ɣ = 110 psf	C = 0 psf
D = 11 ft - 17 ft	ø= 0°	ɣ = 110 psf	C = 300 psf
D = 17 ft - 23 ft	ø= 0°	ɣ = 130 psf	C = 1500 psf
D = Below 23 ft	ø= 35°	ɣ = 130 psf	C = 0 psf

Seismic Loading and Design:

Three-component (Fault-Normal, Fault-Parallel, and Vertical with respect to the San Andreas seismic fault system) acceleration response spectra (ARS) for Safety Evaluation Earthquake (SEE) and Functionality Evaluation Earthquake (FEE), generated from probabilistic seismic hazard assessment (PSHA) based on Next Generation Attenuation (NGA) model rock motion spectra for V_{S30} =3,000 ft/sec and 5% spectral damping.

SEE is based on larger of median ground motion from Maximum Credible Earthquake or ground motion with a 1,000-year return period. FEE is based on ground motion with a 108-year return period. The Construction Evaluation Earthquake (CEE) is also based on ground motion with 108-year return period.

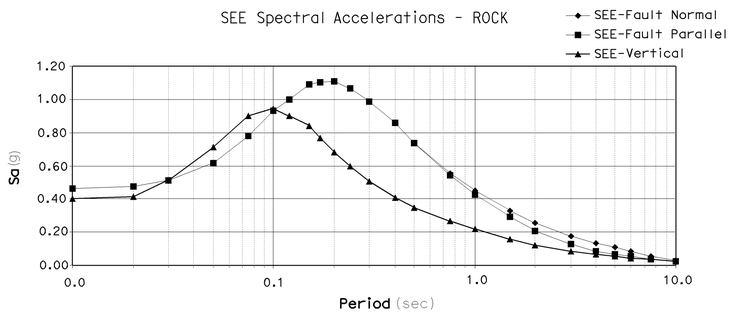

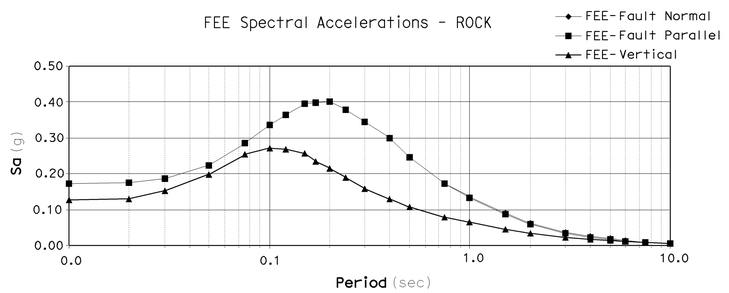

Mononobe-Okabe pseudo-static design approach
kh = 1.10 kv = 0.15 Typical UNO
kh = 0.55 kv = 0.15 at Cantilever Retaining Wall

Reinforced Concrete:
f'c = 4000 psi (Concrete Compression Strength at 28 days)
fy = 60000 psi (Yield Strength of Reinforcement)

Shotcrete:
f'ci = 3300 psi (Minimum Concrete Compression Strength at Anchor Stressing)
f'c = 4000 psi (Concrete Compression Strength at 28 days)

Structural Steel:
Plates, Shapes - ASTM A709/A709M, fy = 50 ksi
Tubes - ASTM A500 - GR. B, fy = 42 ksi

TIEBACK DESIGN NOTES

Strands - ASTM Designation = A416

T = Design Force per Tieback = See "Structure Plan" sheets

fpu = Minimum Tensile Strength of prestressing steel (ksi)

As (min) = Minimum Cross Sectional area of prestressing steel in Tieback measured in square inches

$$As\ (min) = \frac{1.5T}{0.75\ fpu}$$

SUPPPLEMENTAL ABBREVIATIONS

Addl	Additional
BOW	Bottom of Wall
Embed	Embedment
OH	Opposite Hand
Sp	Space(s)
Telecom	Telecommunication
TOF	Top of footing
TOW	Top of Wall
UNO	Unless Noted Otherwise

STANDARD PLANS DATED MAY, 2006

A10A	Acronyms and Abbreviations (Sheet 1 of 2)
A10B	Acronyms and Abbreviations (Sheet 2 of 2)
A10C	Symbols (Sheet 1 of 2)
A10D	Symbols (Sheet 2 of 2)
A62B	Limits of Payment for Excavation and Backfill - Bridge Surcharge and Wall
BO-3	Bridge Details
B3-8	Retaining Wall Details No. 1
B3-9	Retaining Wall Details No. 2
ES-6A	Electrical Systems (Lighting Standard, Types 15 and 21)
ES-6B	Electrical Systems (Lighting Standard, Types 15 and 21, Barrier Rail Mounted Details)
ES-7M	Electrical Systems (Signal and Lighting Standards - Details No. 1)
S36	Overhead Signs - Tubular Single Post and Two Post Type - Square Pedestal Pile Foundation

STANDARD PLAN SHEET NO.

DETAIL NO.

RW8-6

DESIGN	BY L. JOHNSON	CHECKED S. SINGH	PREPARED FOR THE STATE OF CALIFORNIA DEPARTMENT OF TRANSPORTATION	R. DONIKIAN PROJECT ENGINEER	BRIDGE NO. 34E0014
DETAILS	BY J. FUSCO	CHECKED S. SINGH			POST MILE 8.8
QUANTITIES	BY L. JOHNSON	CHECKED S. SINGH			

RETAINING WALL NO. 8
GENERAL NOTES

DESIGN DETAIL SHEET (ENGLISH) (REV. 2/25/05)

ORIGINAL SCALE IN INCHES FOR REDUCED PLANS 0 1 2 3

CU 04
EA 163741

DISREGARD PRINTS BEARING EARLIER REVISION DATES →

REVISION DATES (PRELIMINARY STAGE ONLY): 6-01-09 | 07-15-09 | 08-07-09 | 08-26-09 | 09-11-09 | 09-18-09 | 09-25-09 | 09-30-09 | 10-30-09

SHEET 6 OF 65

FILE => 34E0014-b-gnote.dgn

USERNAME => trpierce DATE PLOTTED => 12-DEC-2009 TIME PLOTTED => 09:46

DIST	COUNTY	ROUTE	POST MILES TOTAL PROJECT	SHEET No	TOTAL SHEETS
04	SF	101	8.2/9.2	575	654

09/30/09
REGISTERED CIVIL ENGINEER DATE

12-14-09
PLANS APPROVAL DATE

REGISTERED PROFESSIONAL ENGINEER
LAWRENCE M. JOHNSON
No. C 44006
Exp. 6-30-11
CIVIL
STATE OF CALIFORNIA

The State of California or its officers or agents shall not be responsible for the accuracy or completeness of electronic copies of this plan sheet.

Arup PB Joint Venture
303 Second Street, Suite 700N
San Francisco, CA 94107

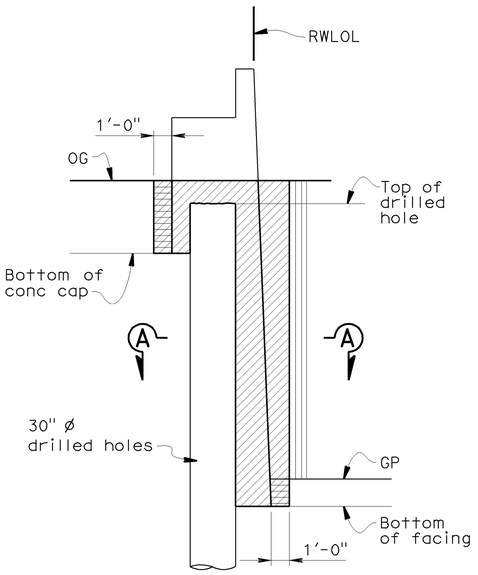

SOLDIER PILE WALL

65+00 LOL - 65+23.64 LOL

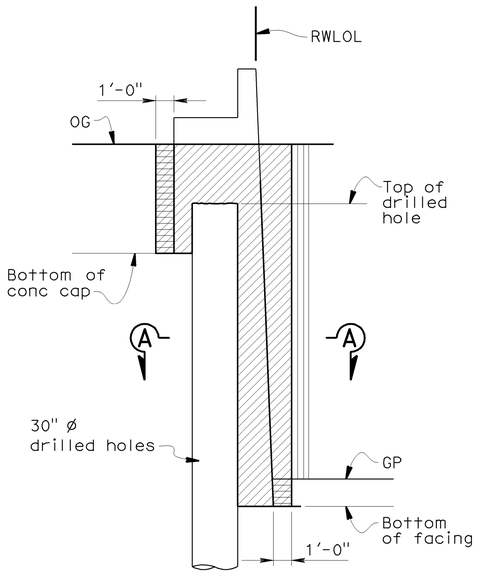

SOLDIER PILE WALL

65+23.64 LOL - 65+42.18 LOL

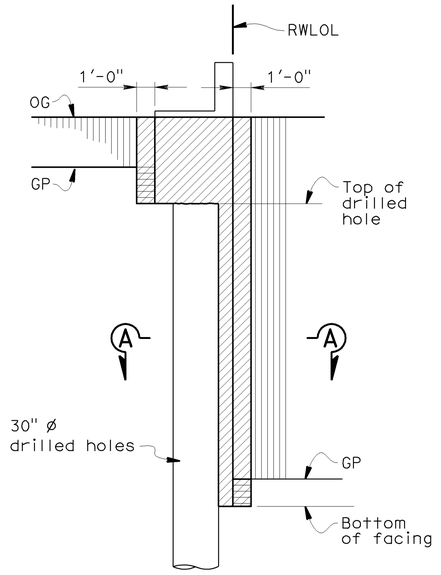

SOLDIER PILE WALL

65+42.18 LOL - 66+31.65 LOL

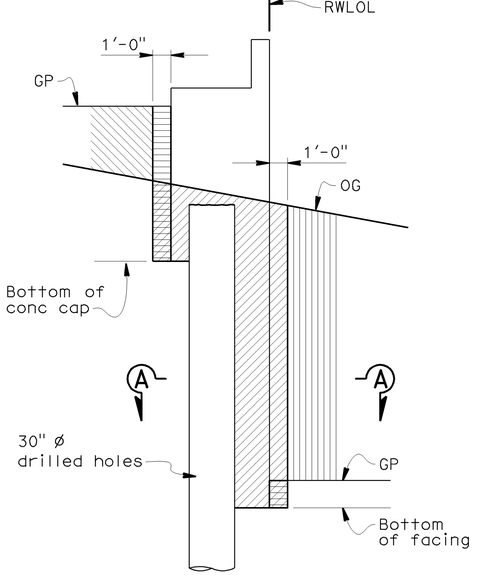

SOLDIER PILE WALL

68+31.65 LOL - 68+96.67 LOL

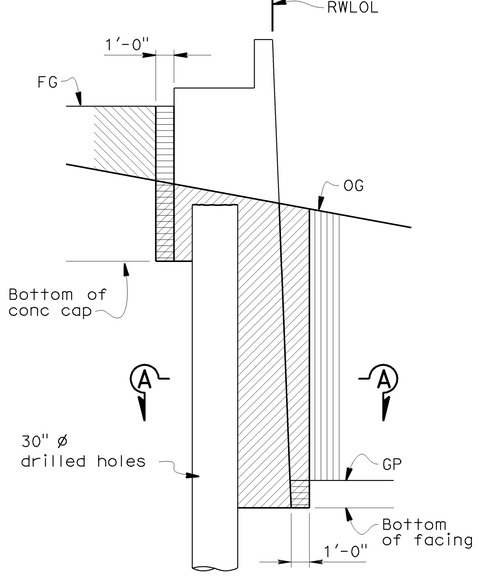

SOLDIER PILE WALL

68+96.67 LOL - 70+58.21 LOL

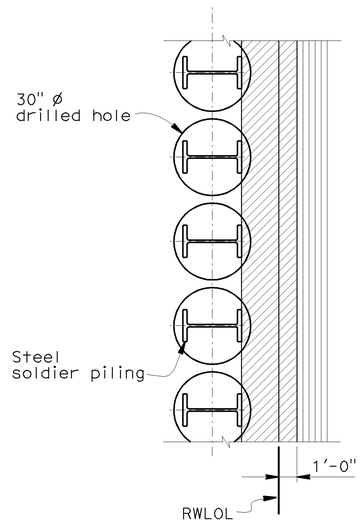

SECTION A-A
NO SCALE

LEGEND:

- Structure excavation (Retaining Wall or Soldier Pile Wall)
- Roadway excavation (See "Road Plans")
- Structure backfill (Retaining Wall or Soldier Pile Wall)
- Embankment (See "Roadway Plans")

RW8-7

DESIGN	BY L. JOHNSON	CHECKED S. SINGH	PREPARED FOR THE STATE OF CALIFORNIA DEPARTMENT OF TRANSPORTATION	R. DONIKIAN PROJECT ENGINEER	BRIDGE NO. 34E0014
DETAILS	BY E. LLORICO	CHECKED S. SINGH			POST MILE 8.8
QUANTITIES	BY L. JOHNSON	CHECKED S. SINGH			

RETAINING WALL NO. 8
EARTHWORK PAY LIMITS NO. 1

DESIGN DETAIL SHEET (ENGLISH) (REV. 2/25/05)

ORIGINAL SCALE IN INCHES FOR REDUCED PLANS 0 1 2 3

CU 04
EA 163741

DISREGARD PRINTS BEARING EARLIER REVISION DATES

REVISION DATES (PRELIMINARY STAGE ONLY): 6-01-09 | 07-15-09 | 08-07-09 | 08-26-09 | 09-18-09 | 09-25-09 | 09-30-09

SHEET 7 OF 65

FILE => 34E0014-c-paylimits01.dgn

USERNAME => ttpierce DATE PLOTTED => 12-DEC-2009 TIME PLOTTED => 09:46

DIST	COUNTY	ROUTE	POST MILES TOTAL PROJECT	SHEET No	TOTAL SHEETS
04	SF	101	8.2/9.2	576	654

REGISTERED CIVIL ENGINEER — 09/30/09 DATE

12-14-09
PLANS APPROVAL DATE

REGISTERED PROFESSIONAL ENGINEER — LAWRENCE M. JOHNSON — No. C 44006 — Exp. 6-30-11 — CIVIL — STATE OF CALIFORNIA

The State of California or its officers or agents shall not be responsible for the accuracy or completeness of electronic copies of this plan sheet.

Arup PB Joint Venture
303 Second Street, Suite 700N
San Francisco, CA 94107

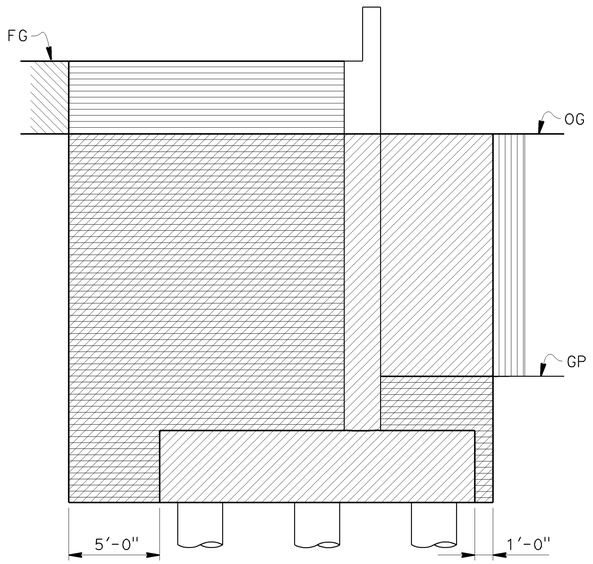

RETAINING WALL

70+64.71 LOL - 71+96.21 LOL

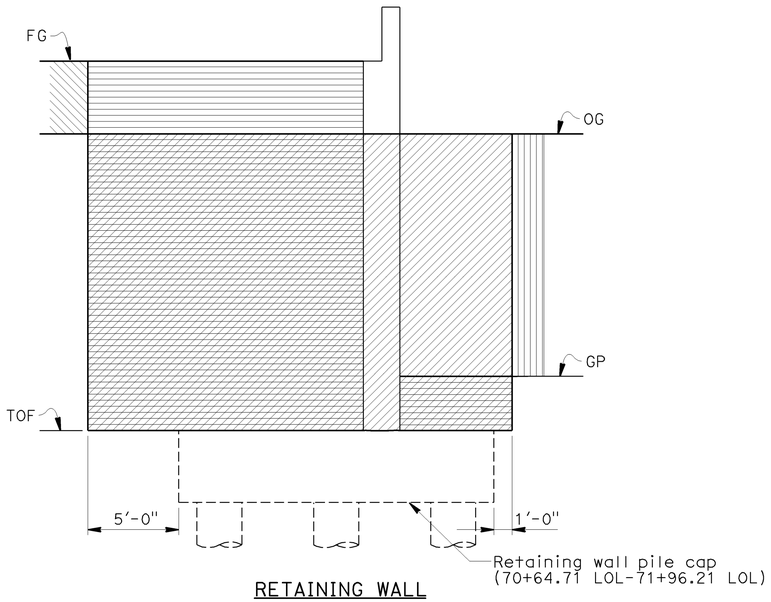

RETAINING WALL

70+58.21 LOL - 70+64.71 LOL
71+96.21 LOL - 71+98.09 LOL

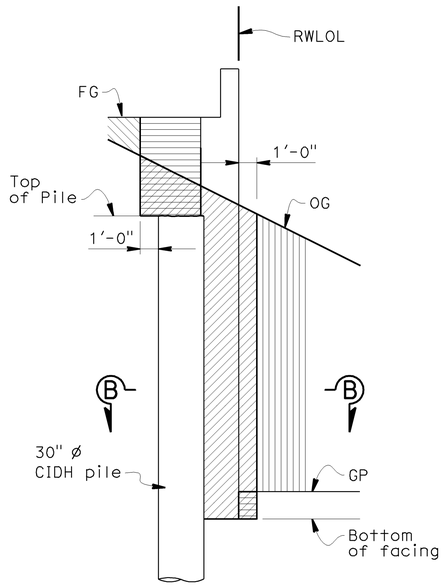

TIEBACK WALL

71+98.09 LOL - 74+93.91 LOL

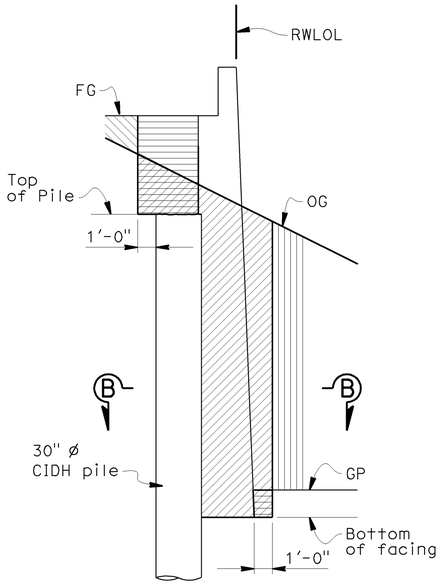

TIEBACK WALL

74+93.91 LOL - 75+75.00 LOL

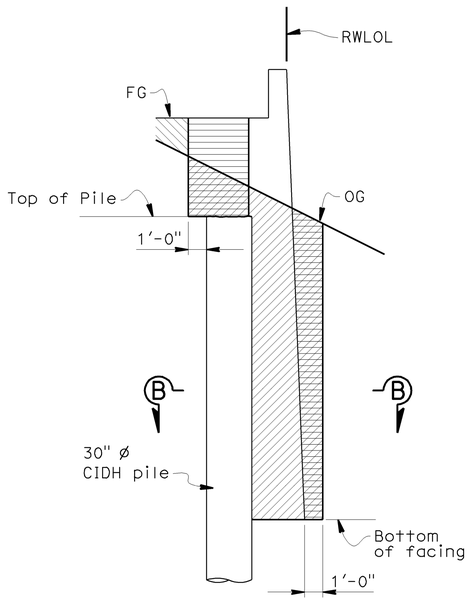

TIEBACK WALL

75+75.00 LOL - 76+74.09 LOL

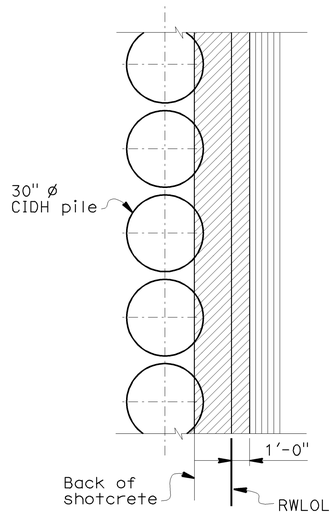

SECTION B-B
NO SCALE

LEGEND:

- Structure excavation (Retaining Wall or Tieback Wall)
- Roadway excavation (See "Road Plans")
- Structure backfill (Retaining Wall or Tieback Wall)
- Embankment (See "Roadway Plans")

RW8-8

DESIGN	BY L. JOHNSON	CHECKED S. SINGH	PREPARED FOR THE STATE OF CALIFORNIA DEPARTMENT OF TRANSPORTATION	R. DONIKIAN PROJECT ENGINEER	BRIDGE NO. 34E0014	RETAINING WALL NO. 8	
DETAILS	BY E. LLORICO	CHECKED S. SINGH			POST MILE 8.8	EARTHWORK PAY LIMITS No. 2	
QUANTITIES	BY L. JOHNSON	CHECKED S. SINGH					

DESIGN DETAIL SHEET (ENGLISH) (REV. 2/25/05)

ORIGINAL SCALE IN INCHES FOR REDUCED PLANS 0 1 2 3

CU 04
EA 163741

DISREGARD PRINTS BEARING EARLIER REVISION DATES →

REVISION DATES (PRELIMINARY STAGE ONLY): 6-01-09 | 07-15-09 | 08-07-09 | 08-26-09 | 09-18-09 | 09-25-09 | 09-30-09

SHEET 8 OF 65

FILE => 34E0014-c-paylimits02.dgn

USERNAME => ttpierce DATE PLOTTED => 12-DEC-2009 TIME PLOTTED => 09:46

DIST	COUNTY	ROUTE	POST MILES TOTAL PROJECT	SHEET No	TOTAL SHEETS
04	SF	101	8.2/9.2	577	654

09/30/09
REGISTERED CIVIL ENGINEER DATE

12-14-09
PLANS APPROVAL DATE

REGISTERED PROFESSIONAL ENGINEER — LAWRENCE M. JOHNSON — No. C 44006 — Exp. 6-30-11 — CIVIL — STATE OF CALIFORNIA

The State of California or its officers or agents shall not be responsible for the accuracy or completeness of electronic copies of this plan sheet.

Arup PB Joint Venture
303 Second Street, Suite 700N
San Francisco, CA 94107

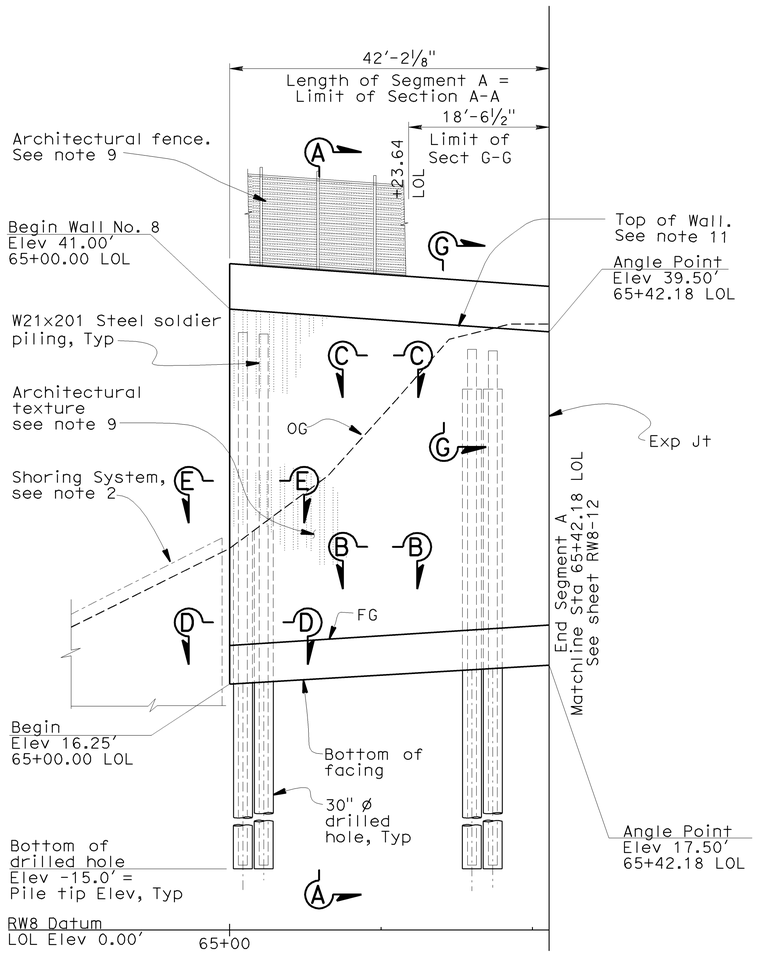

ELEVATION

SCALE: 1:10 HORIZ
1:5 VERT

Note: Not all soldier piles shown for clarity.

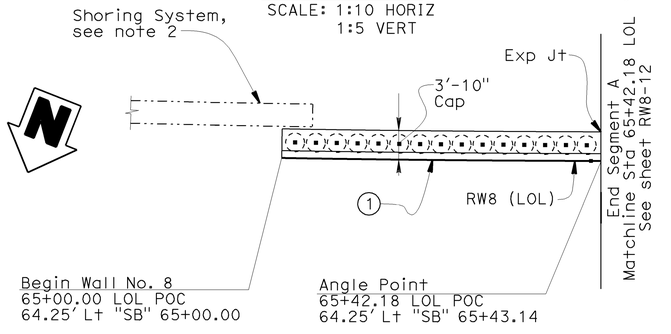

PLAN

1:10

(1) RW8 CURVE DATA
R = 2,819.75'
Δ = 0°51'25"
T = 21.087'
L = 42.179'

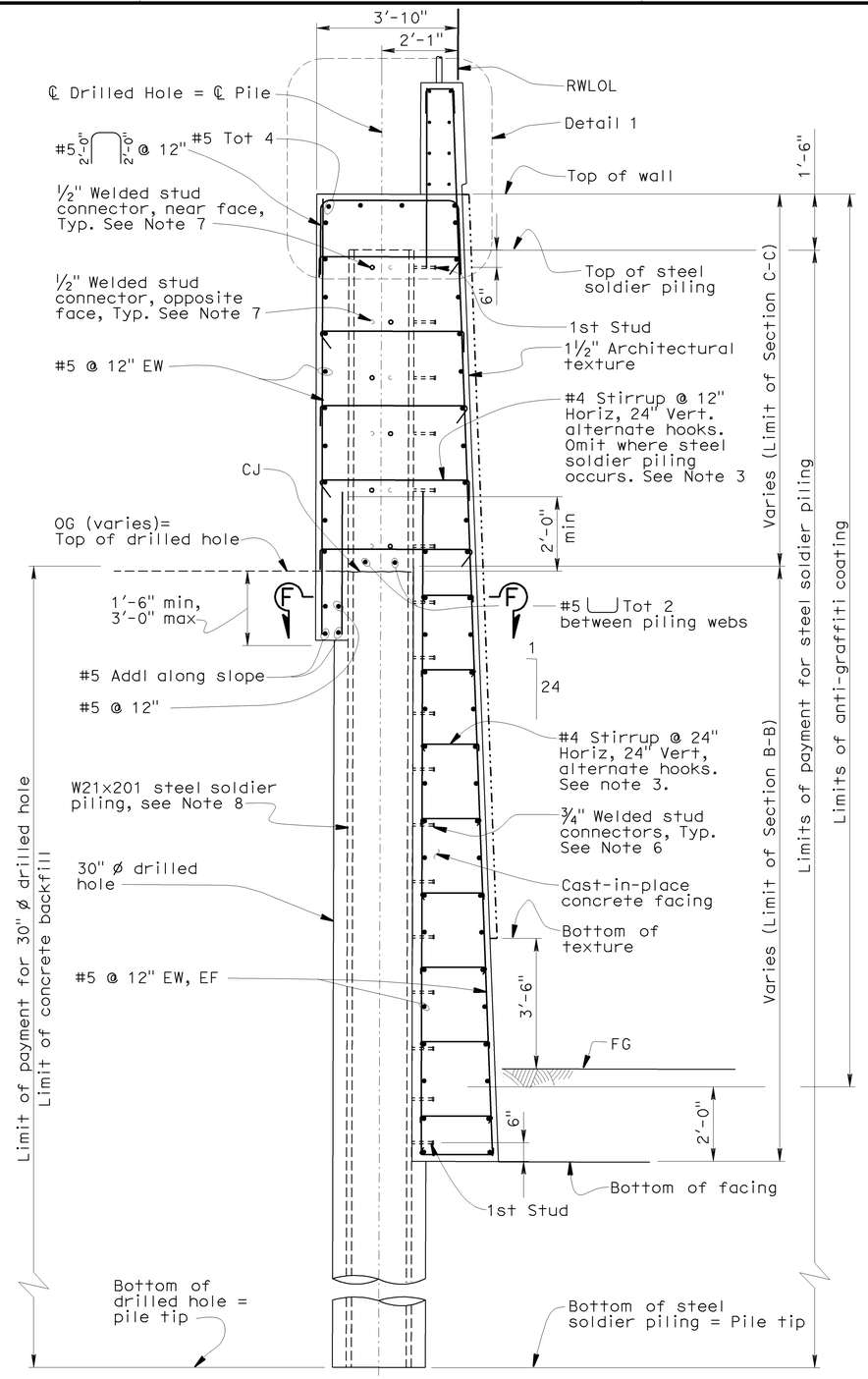

SECTION A-A

SCALE: ½" = 1'-0"

NOTES:

1. For General Notes, see sheet RW8-6.
2. The Contractor is to design and construct a shoring system to maintain the existing ground slope, subject to the Engineer's approval. The shoring system is to remain in place and be removed by others in a future construction contract. The shoring shall not impact the construction and performance of the adjacent soldier pile wall. A drainage system shall be designed into the shoring system to positively drain water from behind the shoring. Lateral deflection from soil pressure plus live load surcharge loading shall be limited to 1" maximum.
3. Hook stirrups around intersection of #5 @ 12" Horiz & Vert reinforcing. Field verify required length of stirrups prior to fabrication.
4. For Sections B-B thru F-F, see sheet RW8-10.
5. For Section G-G and Detail 3, see sheet RW8-11.
6. For ¾" Welded Stud Connector detail, see sheet RW8-11.
7. For ½" Welded Stud Connector detail, see sheet RW8-11.
8. For Pile Welding Detail - Butt Joints detail, see sheet RW8-11.
9. For Architectural Texture, see sheets RW8-AT1 thru RW8-AT6.
10. For architectural fence details, see sheets RW8-AT1 thru RW8-AT6.
11. Top of wall elevation is straight grade from 65+00.00 LOL to 65+42.18 LOL.

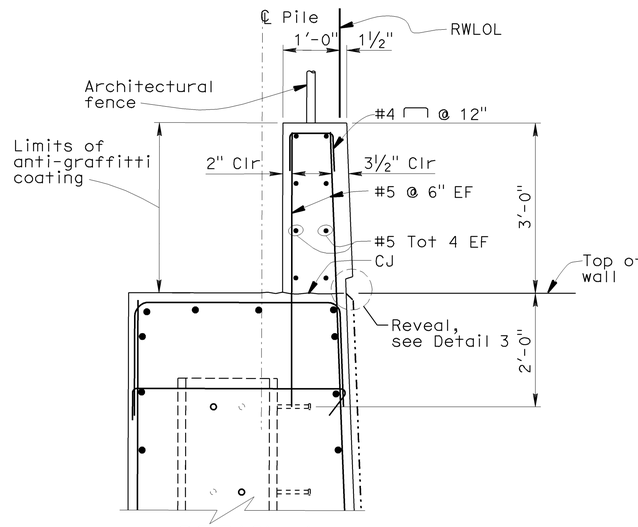

DETAIL 1

SCALE: ¾" = 1'-0"

RW8-9

DESIGN	BY L. JOHNSON	CHECKED S. SINGH	PREPARED FOR THE STATE OF CALIFORNIA DEPARTMENT OF TRANSPORTATION	R. DONIKIAN PROJECT ENGINEER	BRIDGE NO. 34E0014	RETAINING WALL NO. 8
DETAILS	BY L. REYES	CHECKED S. SINGH			POST MILE 8.8	SEGMENT A - STRUCTURE PLAN AND DETAILS
QUANTITIES	BY L. JOHNSON	CHECKED S. SINGH				

DESIGN DETAIL SHEET (ENGLISH) (REV. 2/25/05)

ORIGINAL SCALE IN INCHES FOR REDUCED PLANS 0 1 2 3

CU 04
EA 163741

DISREGARD PRINTS BEARING EARLIER REVISION DATES

REVISION DATES (PRELIMINARY STAGE ONLY): 6-01-09 | 07-15-09 | 08-07-09 | 08-26-09 | 09-11-09 | 09-18-09 | 09-25-09 | 09-30-09

SHEET 9 OF 65

FILE => 34E0014-sega-c-sp01.dgn

USERNAME => ttpierce DATE PLOTTED => 12-DEC-2009 TIME PLOTTED => 09:46

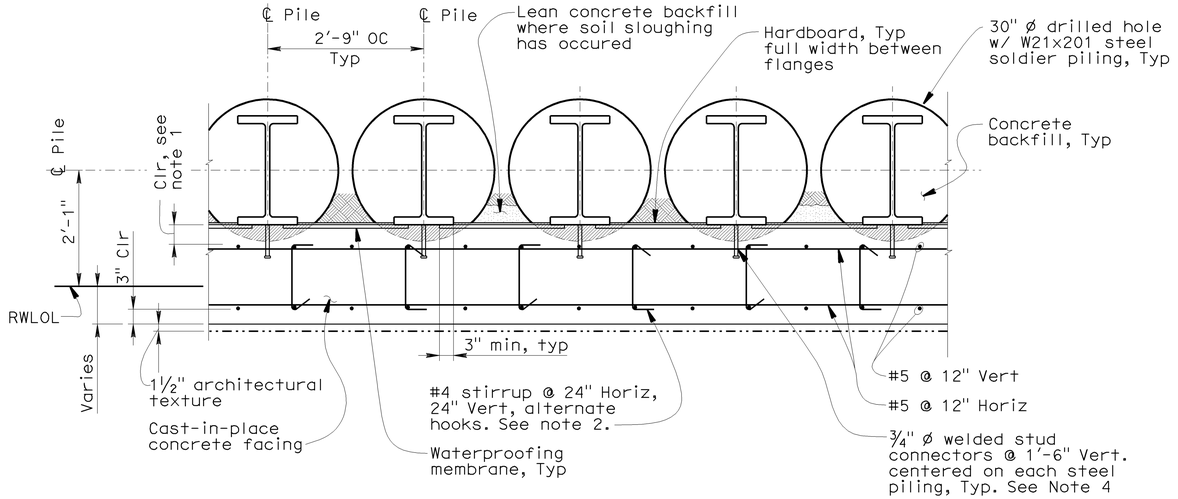

SECTION B-B
SCALE: ¾" = 1'-0"

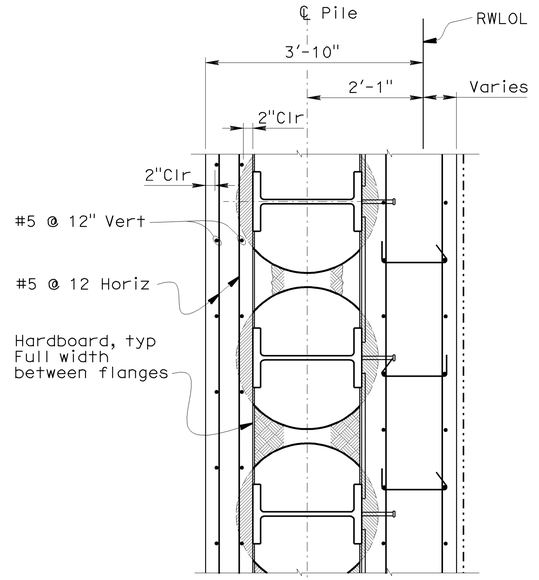

NOTE:
For detail not noted or shown, see Section B-B.

SECTION F-F
SCALE: ¾" = 1'-0"

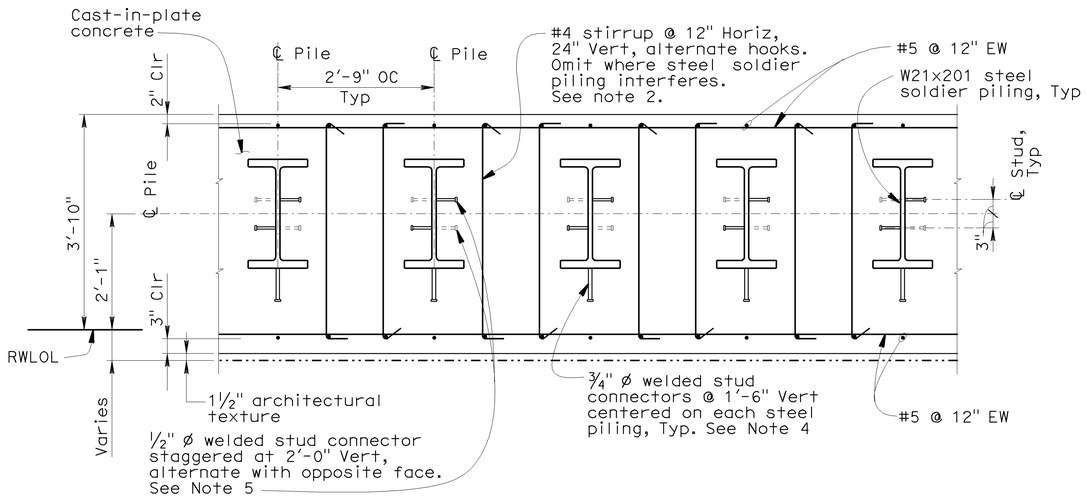

SECTION C-C
SCALE: ¾" = 1'-0"

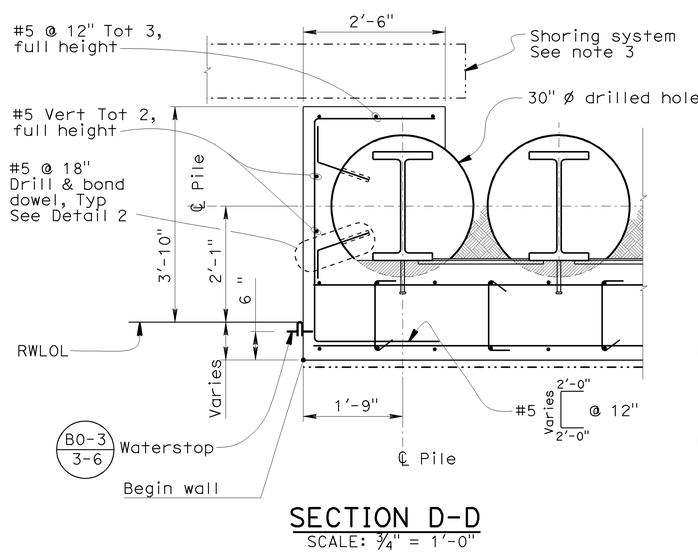

SECTION D-D
SCALE: ¾" = 1'-0"

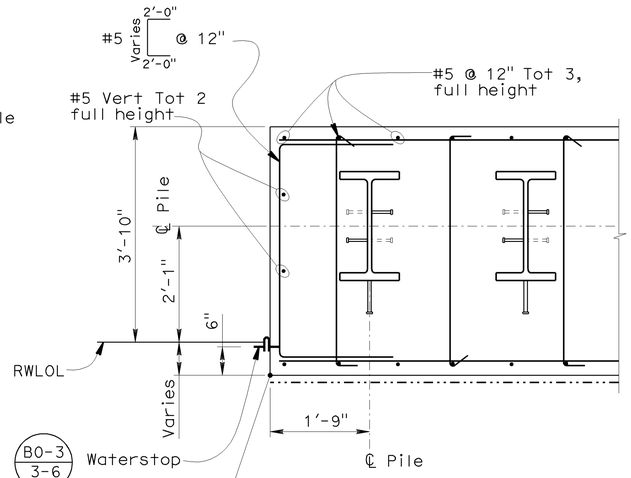

SECTION E-E
SCALE: ¾" = 1'-0"

DIST	COUNTY	ROUTE	POST MILES TOTAL PROJECT	SHEET No	TOTAL SHEETS
04	SF	101	8.2/9.2	578	654

09/30/09
REGISTERED CIVIL ENGINEER DATE

12-14-09
PLANS APPROVAL DATE

REGISTERED PROFESSIONAL ENGINEER — LAWRENCE M. JOHNSON No. C 44006 Exp. 6-30-11 CIVIL — STATE OF CALIFORNIA

The State of California or its officers or agents shall not be responsible for the accuracy or completeness of electronic copies of this plan sheet.

Arup PB Joint Venture
303 Second Street, Suite 700N
San Francisco, CA 94107

NOTES:

1. Clearance varies, 2-inch minimum, 5-inch maximum.
2. Hook stirrups around intersection of #5 @ 12" Horiz & Vert reinforcing. Field verify required length of stirrups prior to fabrication.
3. Contractor to design a shoring system to maintain the existing original ground slope, subject to engineer's approval. Shoring to remain in place for future construction.
4. For ¾" Welded Stud Connector detail, see Sheet RW8-11.
5. For ½" Welded Stud Connector detail, see Sheet RW8-11.
6. For Pile Welding Detail - Butt Joints detail, see sheet RW8-11.
7. For Detail 2, see Sheet RW8-11.

LEGEND:

Remove portion of concrete at drilled hole

RW8-10

DESIGN	BY L. JOHNSON	CHECKED S. SINGH	PREPARED FOR THE STATE OF CALIFORNIA DEPARTMENT OF TRANSPORTATION	R. DONIKIAN PROJECT ENGINEER	BRIDGE NO. 34E0014
DETAILS	BY L. REYES	CHECKED S. SINGH			POST MILE 8.8
QUANTITIES	BY L. JOHNSON	CHECKED S. SINGH			

RETAINING WALL NO. 8
SEGMENT A - DETAILS NO.1

DESIGN DETAIL SHEET (ENGLISH) (REV. 2/25/05)

ORIGINAL SCALE IN INCHES FOR REDUCED PLANS 0 1 2 3

CU 04
EA 163741

DISREGARD PRINTS BEARING EARLIER REVISION DATES →

REVISION DATES (PRELIMINARY STAGE ONLY): 6-04-09 | 07-15-09 | 08-07-09 | 08-26-09 | 09-11-09 | 09-18-09 | 09-25-09 | 09-30-09

SHEET 10 OF 65

FILE => 34E0014-sega-rwdt01.dgn

USERNAME => trpierce DATE PLOTTED => 12-DEC-2009 TIME PLOTTED => 09:46

DIST	COUNTY	ROUTE	POST MILES TOTAL PROJECT	SHEET No	TOTAL SHEETS
04	SF	101	8.2/9.2	579	654

REGISTERED CIVIL ENGINEER — 09/30/09 DATE

12-14-09
PLANS APPROVAL DATE

REGISTERED PROFESSIONAL ENGINEER — LAWRENCE M. JOHNSON — No. C 44006 — Exp. 6-30-11 — CIVIL — STATE OF CALIFORNIA

The State of California or its officers or agents shall not be responsible for the accuracy or completeness of electronic copies of this plan sheet.

Arup PB Joint Venture
303 Second Street, Suite 700N
San Francisco, CA 94107

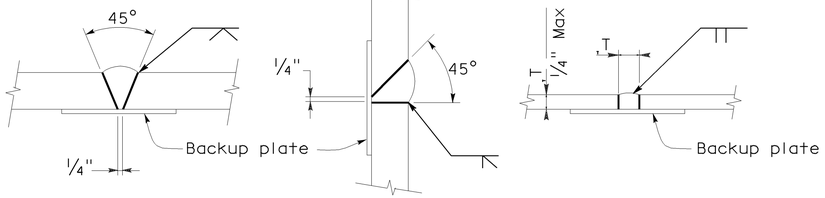

SINGLE VEE-GROOVE SINGLE BEVEL-GROOVE SQUARE GROOVE

PILE WELDING DETAIL - BUTT JOINTS

NO SCALE

NOTES:
1. Single Vee-Groove permitted for all positions.
2. Single Bevel-Groove permitted for horizontal joints only.

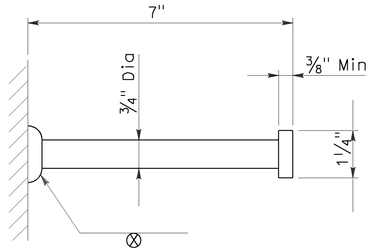

3/4" WELDED STUD CONNECTOR

NO SCALE

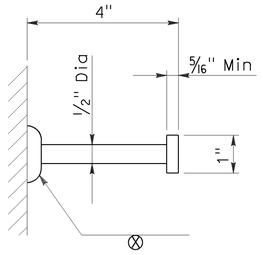

1/2" WELDED STUD CONNECTOR

NO SCALE

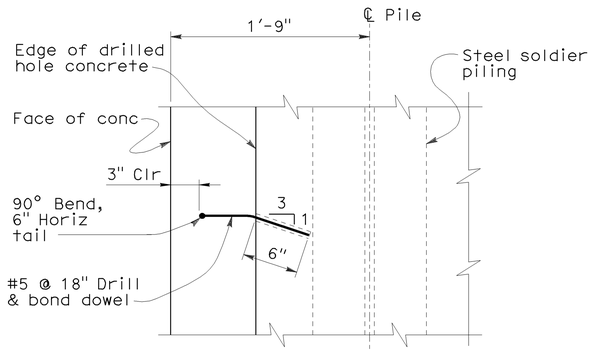

DETAIL 2

NO SCALE

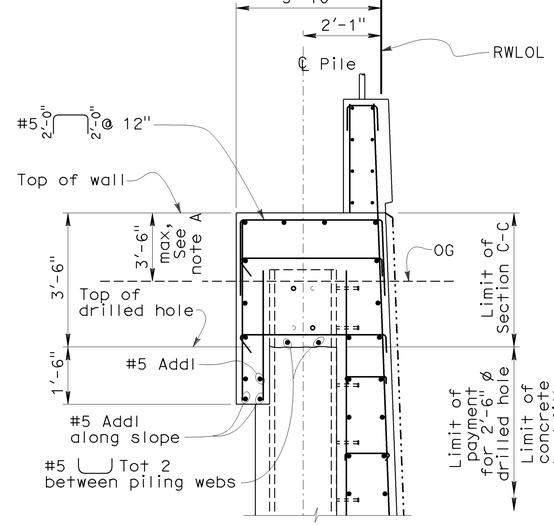

NOTES:
A. Section applies to Sta 65+23.64 LOL thru Sta 65+42.18 LOL where the distance from top of wall to original grade is 3'-6" or less.

B. For detail not noted or shown, see Section A-A on sheet RW8-9, and Section C-C on RW8-10.

SECTION G-G

SCALE: 1/2" = 1'-0"

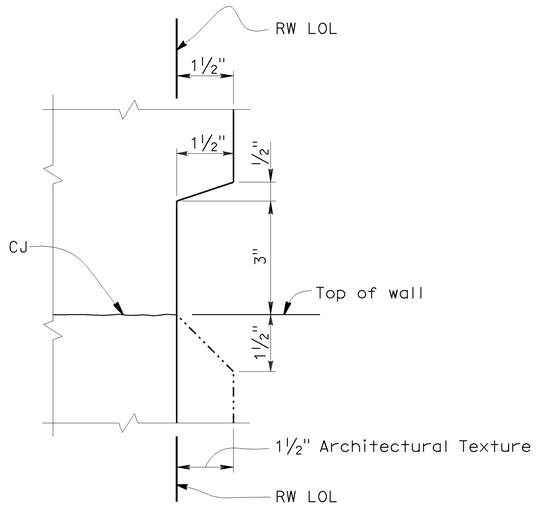

REVEAL

DETAIL 3

NO SCALE

RW8-11

DESIGN	BY L. JOHNSON	CHECKED S. SINGH	PREPARED FOR THE STATE OF CALIFORNIA DEPARTMENT OF TRANSPORTATION	R. DONIKIAN PROJECT ENGINEER	BRIDGE NO. 34E0014	RETAINING WALL NO. 8	
DETAILS	BY E. CANTILLER	CHECKED S. SINGH			POST MILE 8.8	SEGMENT A - DETAILS NO. 2	
QUANTITIES	BY L. JOHNSON	CHECKED S. SINGH					

DESIGN DETAIL SHEET (ENGLISH) (REV. 2/25/05)

ORIGINAL SCALE IN INCHES FOR REDUCED PLANS 0 1 2 3

CU 04
EA 163741

DISREGARD PRINTS BEARING EARLIER REVISION DATES →

REVISION DATES (PRELIMINARY STAGE ONLY): 6-04-09 | 07-15-09 | 08-07-09 | 08-26-09 | 09-14-09 | 09-16-09 | 09-25-09 | 09-30-09

SHEET 11 OF 65

FILE => 34E0014-sega-rwdt02.dgn

USERNAME => tripierce DATE PLOTTED => 12-DEC-2009 TIME PLOTTED => 08:47

DIST	COUNTY	ROUTE	POST MILES TOTAL PROJECT	SHEET No	TOTAL SHEETS
04	SF	101	8.2/9.2	580	654

10/30/09
REGISTERED CIVIL ENGINEER DATE

12-14-09
PLANS APPROVAL DATE

REGISTERED PROFESSIONAL ENGINEER
LAWRENCE M. JOHNSON
No. C 44006
Exp. 6-30-11
CIVIL
STATE OF CALIFORNIA

The State of California or its officers or agents shall not be responsible for the accuracy or completeness of electronic copies of this plan sheet.

Arup PB Joint Venture
303 Second Street, Suite 700N
San Francisco, CA 94107

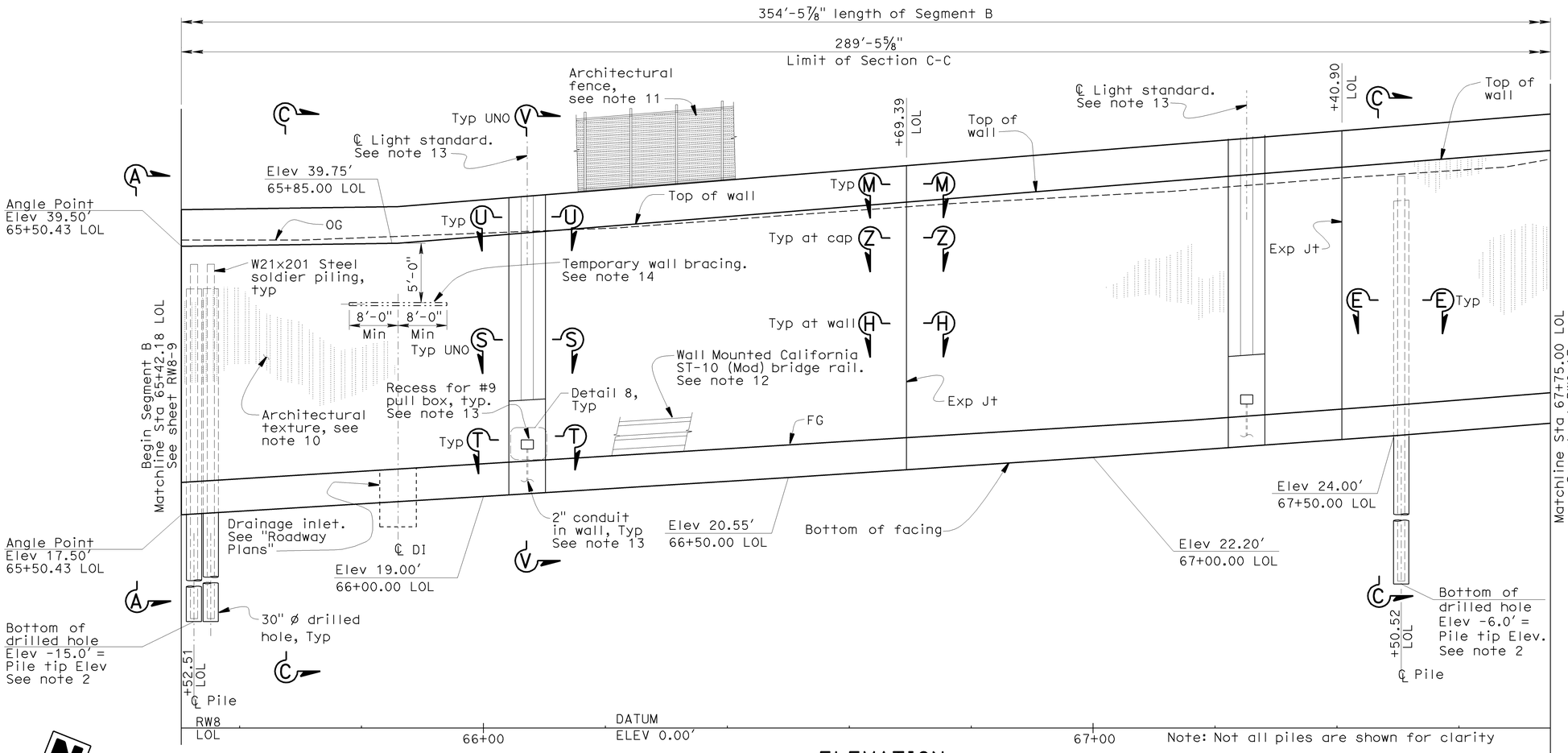

ELEVATION
SCALE: 1:10 HORIZ
1:5 VERT

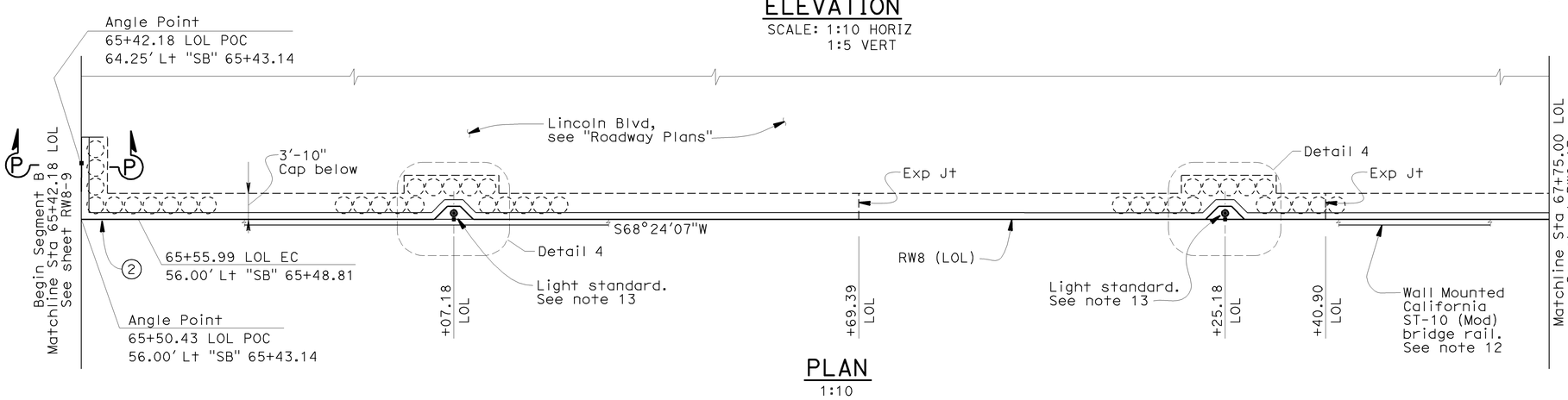

PLAN
1:10

NOTES:

1. For General Notes, see sheet RW8-6.
2. Bottom of drilled hole elevations (= tip elevations) are straight grade between elevations shown.
3. For Section A-A, see sheet RW8-13.
4. For Section C-C, see sheet RW8-14.
5. For Section E-E, see sheet RW8-15.
6. For Section M-M, and Section P-P see sheet RW8-16.
7. For Detail 4, and Sections S-S through U-U see sheet RW8-18.
8. For Section V-V, see sheet RW8-19.
9. For Section Z-Z, and Detail 8, see sheet RW8-20.
10. For Architectural Texture, see sheets RW8-AT1 through RW8-AT6.
11. For architectural fence details, see sheets RW8-AT1 through RW8-AT6.
12. For Wall Mounted California ST-10 (Mod) bridge rail, see sheet RW8-48.
13. For light standards, conduits and pull boxes, see "Roadway Plans".
14. During construction of the drainage inlet, the wall shall be temporarily braced where indicated. The Contractor shall design and construct the temporary wall bracing system, subject to the Engineer's approval. The temporary wall bracing system shall be designed for a service load of 6.0 kips per foot.

② RW8 CURVE DATA
R = 2,828.00'
Δ = 0°6'46"
T = 2.783'
L = 5.560'

RW8-12

	BY	CHECKED
DESIGN	L. JOHNSON	S. SINGH
DETAILS	L. REYES	S. SINGH
QUANTITIES	L. JOHNSON	S. SINGH

PREPARED FOR THE STATE OF CALIFORNIA
DEPARTMENT OF TRANSPORTATION

R. DONIKIAN
PROJECT ENGINEER

BRIDGE NO. 34E0014
POST MILE 8.8

RETAINING WALL NO. 8
SEGMENT B - STRUCTURE PLAN NO. 1

DESIGN DETAIL SHEET (ENGLISH) (REV. 2/25/05)

ORIGINAL SCALE IN INCHES FOR REDUCED PLANS 0 1 2 3

CU 04
EA 163741

DISREGARD PRINTS BEARING EARLIER REVISION DATES →

REVISION DATES (PRELIMINARY STAGE ONLY): 6-04-09 | 07-15-09 | 08-07-09 | 08-26-09 | 09-11-09 | 09-18-09 | 09-25-09 | 09-30-09

SHEET 12 OF 65

FILE => 34E0014-segb-c-sp01.dgn

USERNAME => trpierce DATE PLOTTED => 12-DEC-2009 TIME PLOTTED => 09:47

DIST	COUNTY	ROUTE	POST MILES TOTAL PROJECT	SHEET No	TOTAL SHEETS
04	SF	101	8.2/9.2	581	654

REGISTERED CIVIL ENGINEER — 10/30/09 DATE

12-14-09
PLANS APPROVAL DATE

LAWRENCE M. JOHNSON No. C 44006 Exp. 6-30-11 CIVIL — REGISTERED PROFESSIONAL ENGINEER — STATE OF CALIFORNIA

The State of California or its officers or agents shall not be responsible for the accuracy or completeness of electronic copies of this plan sheet.

Arup PB Joint Venture
303 Second Street, Suite 700N
San Francisco, CA 94107

NOTES:

1. For General Notes, see sheet RW8-6.
2. Bottom of drilled hole elevations (= tip elevations) are straight grade between elevations shown.
3. For Section C-C and Section D-D, see sheet RW8-14.
4. For Section E-E, Section F-F, Section H-H, and Section J-J see sheet RW8-15.
5. For Section K-K thru P-P, see sheet RW8-16.
6. For Section Q-Q and Section R-R, see sheet RW8-17.
7. For Detail 4, see sheet RW8-18.
8. For Section W-W, see sheet RW8-19.
9. For Section Y-Y, Section AA-AA and Detail 8, see sheet RW8-20.
10. For Architectural Texture, see sheets RW8-AT1 through RW8-AT6.
11. For architectural fence details, see sheets RW8-AT1 through RW8-AT6.
12. For Wall Mounted California ST-10 (Mod) bridge rail, see sheet RW8-48.
13. For light standards, conduit, and pull box, see "Roadway Plans".
14. For California ST-10 Bridge Rail (Mod) (Type B), see sheets RW8-49 and RW8-50.
15. During construction of the drainage inlet, the wall shall be temporarily braced where indicated. The contractor shall design and construct the temporary wall bracing system, subject to the Engineer's approval. The temporary wall bracing system shall be designed for a service load of 6.0 kips per foot.

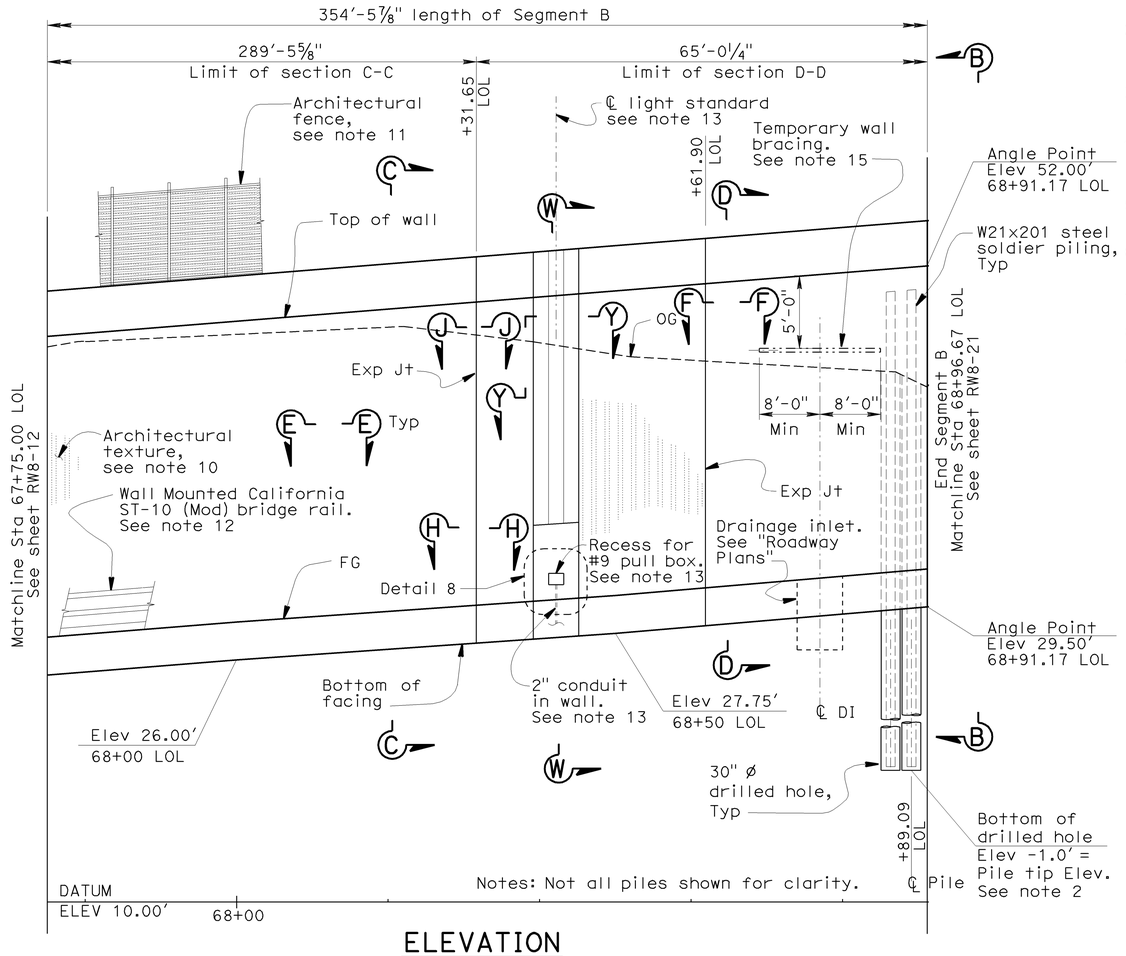

ELEVATION

SCALE: 1:10 HORIZ
1:5 VERT

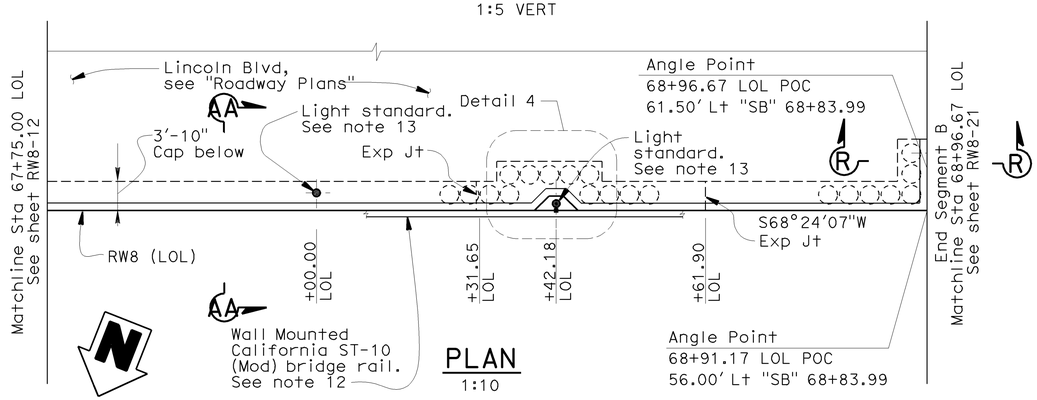

PLAN

1:10

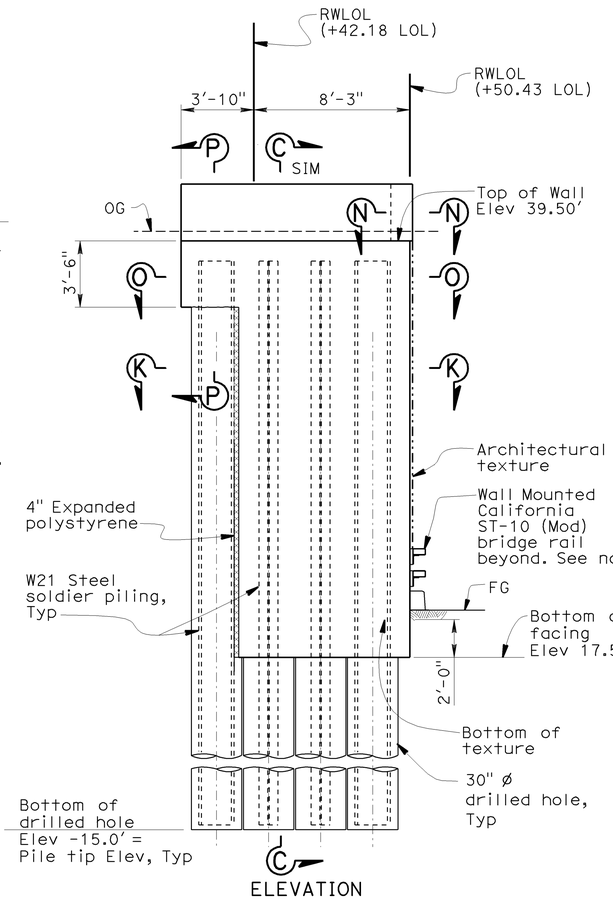

ELEVATION

SECTION A-A

SCALE: ¼" = 1'-0"

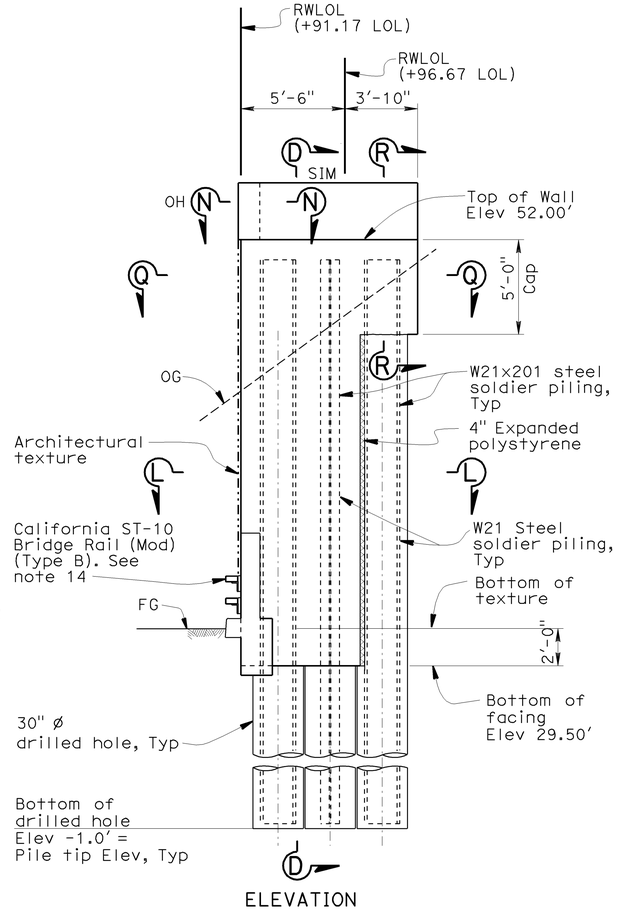

ELEVATION

SECTION B-B

SCALE: ¼" = 1'-0"

RW8-13

DESIGN	BY L. JOHNSON	CHECKED S. SINGH	PREPARED FOR THE STATE OF CALIFORNIA DEPARTMENT OF TRANSPORTATION	R. DONIKIAN PROJECT ENGINEER	BRIDGE NO. 34E0014
DETAILS	BY L. REYES	CHECKED S. SINGH			POST MILE 8.8
QUANTITIES	BY L. JOHNSON	CHECKED S. SINGH			

RETAINING WALL NO. 8
SEGMENT B - STRUCTURE PLAN NO. 2

DESIGN DETAIL SHEET (ENGLISH) (REV. 2/25/05)

ORIGINAL SCALE IN INCHES FOR REDUCED PLANS 0 1 2 3

CU 04
EA 163741

DISREGARD PRINTS BEARING EARLIER REVISION DATES →

REVISION DATES (PRELIMINARY STAGE ONLY): 6-04-09 | 07-15-09 | 08-07-09 | 08-26-09 | 09-11-09 | 09-18-09 | 09-25-09 | 09-30-09 | 10-30-09

SHEET 13 OF 65

FILE => 34E0014-segb-c-sp02.dgn

USERNAME = trpierce DATE PLOTTED => 12-DEC-2009 TIME PLOTTED => 09:47

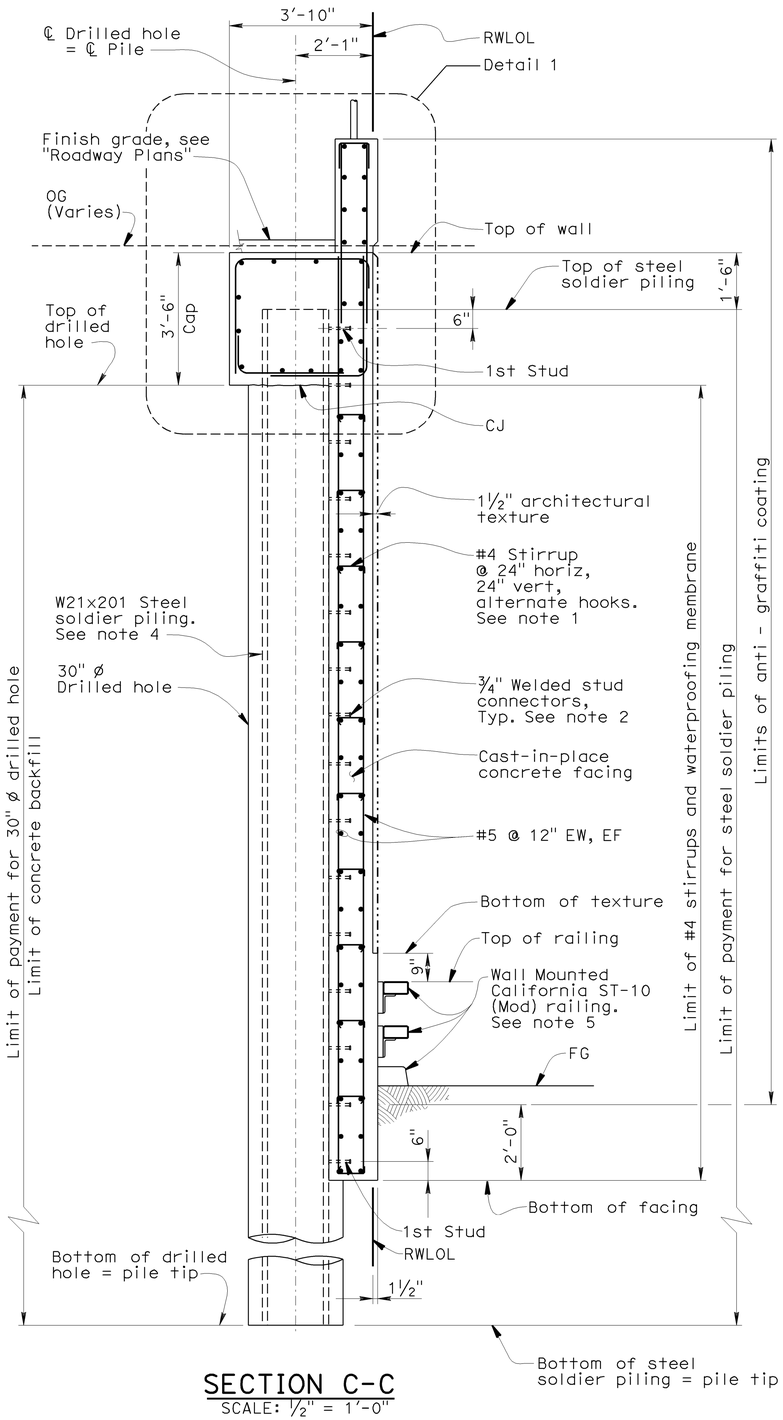

SECTION C-C
SCALE: ½" = 1'-0"

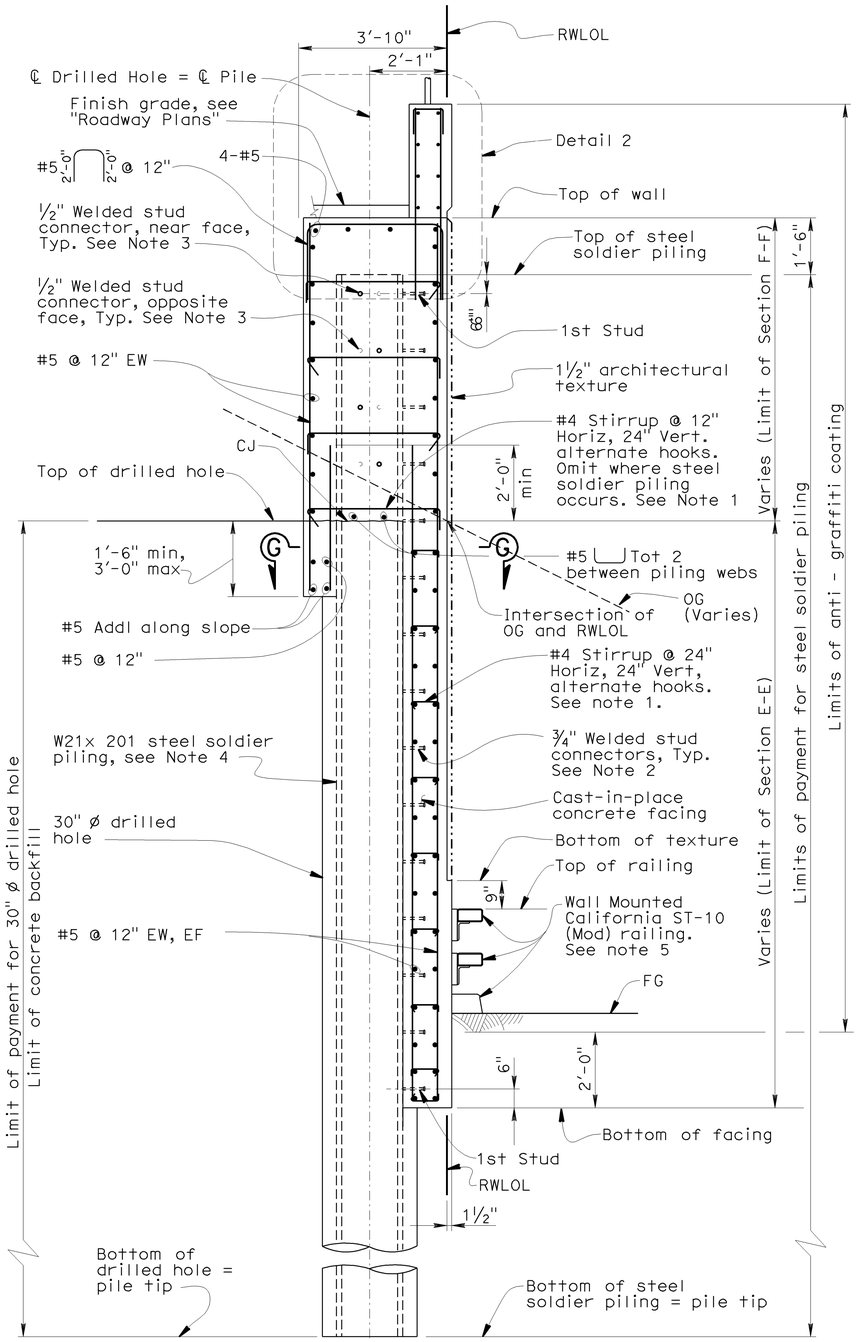

SECTION D-D
SCALE: ½" = 1'-0"

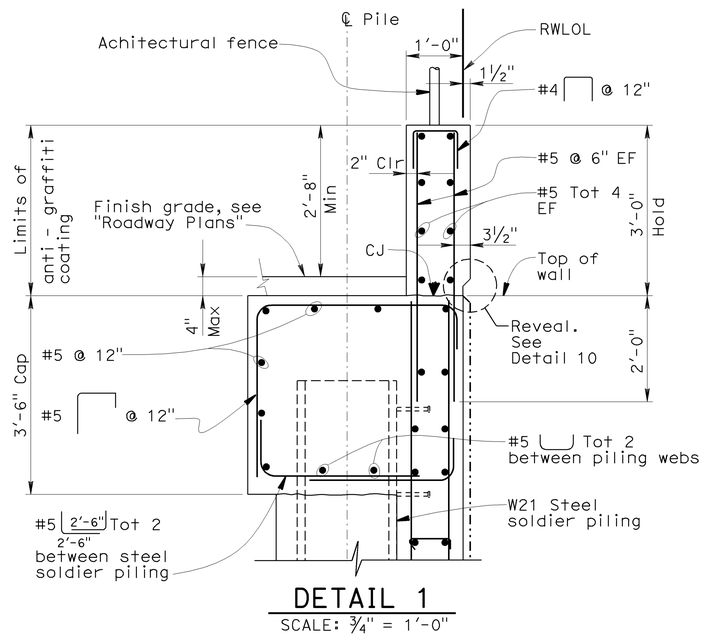

DETAIL 1
SCALE: ¾" = 1'-0"

DIST	COUNTY	ROUTE	POST MILES TOTAL PROJECT	SHEET No	TOTAL SHEETS
04	SF	101	8.2/9.2	582	654

10/30/09
REGISTERED CIVIL ENGINEER DATE

LAWRENCE M. JOHNSON No. C 44006 Exp. 6-30-11 CIVIL — REGISTERED PROFESSIONAL ENGINEER — STATE OF CALIFORNIA

12-14-09
PLANS APPROVAL DATE

The State of California or its officers or agents shall not be responsible for the accuracy or completeness of electronic copies of this plan sheet.

Arup PB Joint Venture
303 Second Street, Suite 700N
San Francisco, CA 94107

NOTES:

1. Hook stirrups around intersection of #5 @ 12" Horiz & Vert reinforcing. Field verify required length of stirrups prior to fabrication.
2. For ¾" Welded Stud Connector detail, see sheet RW8-17.
3. For ½" Welded Stud Connector detail, see sheet RW8-17
4. For Pile Welding Detail - Butt Joints detail, see sheet RW8-17.
5. For Wall Mounted California ST-10 (Mod), see sheet RW8-48.
6. For Sections E-E through G-G, and Detail 2, see sheet RW8-15.
7. For Detail 10, see sheet RW8-20.

RW8-14

	BY	CHECKED
DESIGN	L. JOHNSON	S. SINGH
DETAILS	L. REYES	S. SINGH
QUANTITIES	L. JOHNSON	S. SINGH

PREPARED FOR THE STATE OF CALIFORNIA DEPARTMENT OF TRANSPORTATION

R. DONIKIAN
PROJECT ENGINEER

BRIDGE NO. 34E0014
POST MILE 8.8

RETAINING WALL NO. 8
SEGMENT B - DETAILS NO. 1

DESIGN DETAIL SHEET (ENGLISH) (REV. 2/25/05)

ORIGINAL SCALE IN INCHES FOR REDUCED PLANS 0 1 2 3

CU 04
EA 163741

DISREGARD PRINTS BEARING EARLIER REVISION DATES →

REVISION DATES (PRELIMINARY STAGE ONLY): 6-01-09 | 07-15-09 | 08-07-09 | 08-26-09 | 09-11-09 | 09-18-09 | 09-25-09 | 09-30-09 | 10-30-09

SHEET 14 OF 65

FILE => 34E0014-segb-rwdt01.dgn

USERNAME => ttpierce DATE PLOTTED => 12-DEC-2009 TIME PLOTTED => 09:47

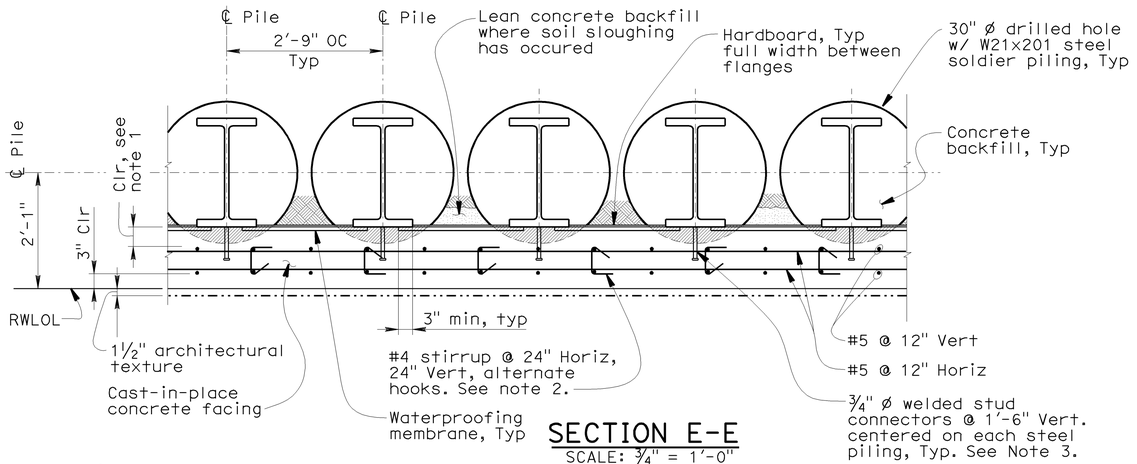

SECTION E-E
SCALE: ¾" = 1'-0"

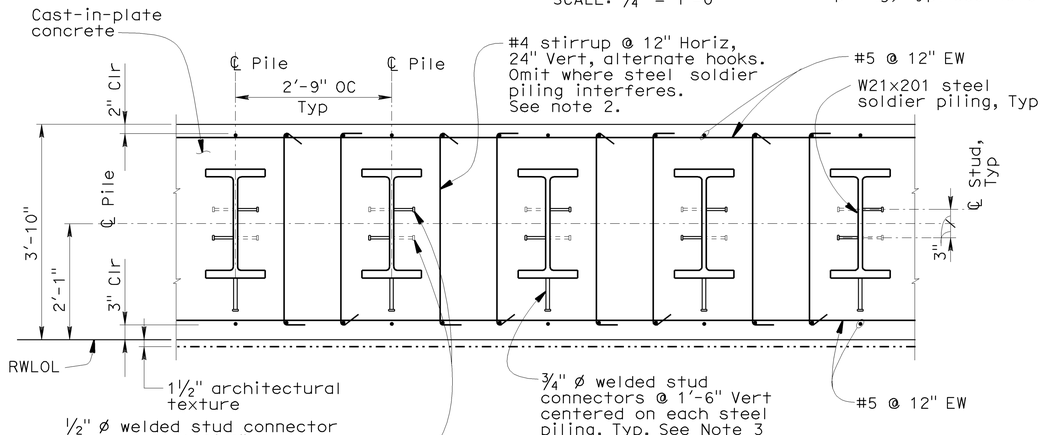

SECTION F-F
SCALE: ¾" = 1'-0"

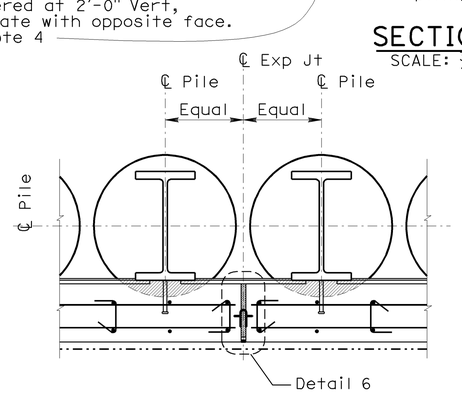

NOTE:
For detail not noted or shown, see Section E-E.

SECTION H-H
SCALE: ¾" = 1'-0"

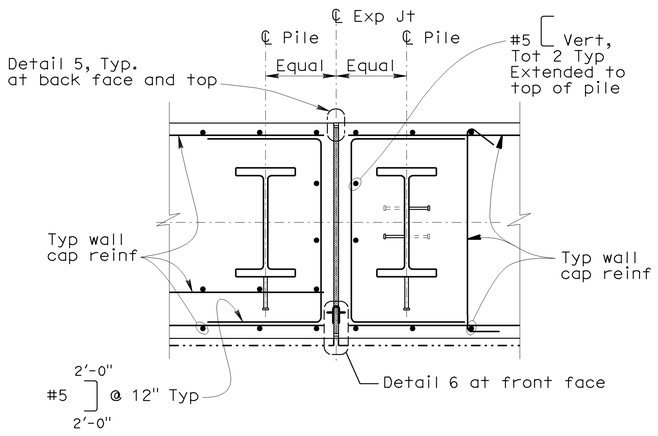

SECTION J-J
SCALE: ¾" = 1'-0"

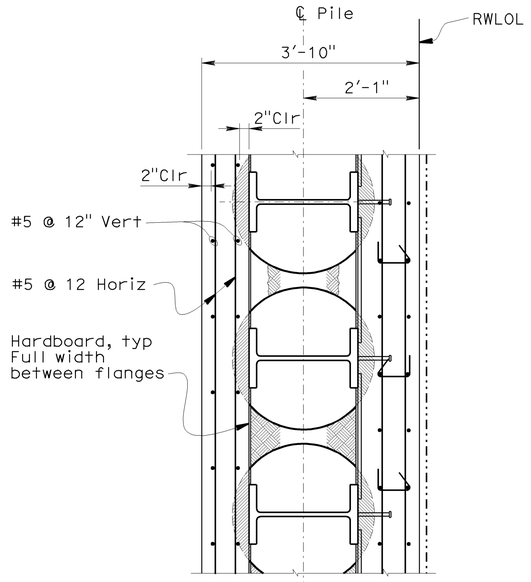

NOTE:
For detail not noted or shown, see Section E-E.

SECTION G-G
SCALE: ¾" = 1'-0"

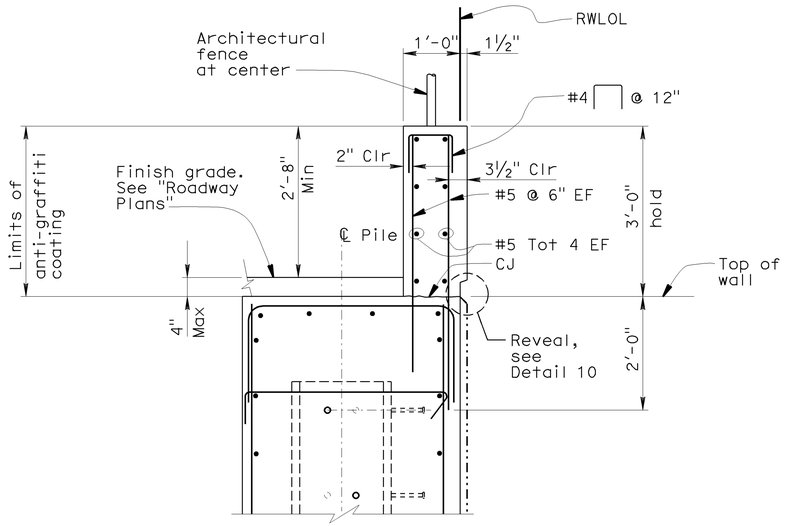

DETAIL 2
SCALE: ¾" = 1'-0"

DIST	COUNTY	ROUTE	POST MILES TOTAL PROJECT	SHEET No	TOTAL SHEETS
04	SF	101	8.2/9.2	583	654

REGISTERED CIVIL ENGINEER — 10/30/09 DATE

12-14-09
PLANS APPROVAL DATE

REGISTERED PROFESSIONAL ENGINEER — LAWRENCE M. JOHNSON — No. C 44006 — Exp. 6-30-11 — CIVIL — STATE OF CALIFORNIA

The State of California or its officers or agents shall not be responsible for the accuracy or completeness of electronic copies of this plan sheet.

Arup PB Joint Venture
303 Second Street, Suite 700N
San Francisco, CA 94107

NOTES:

1. Clearance varies, 2-inch minimum, 5-inch maximum.
2. Hook stirrups around intersection of #5 @ 12" Horiz & Vert reinforcing. Field verify required length of stirrups prior to fabrication.
3. For ¾" Welded Stud Connector detail, see Sheet RW8-17.
4. For ½" Welded Stud Connector detail, see Sheet RW8-17.
5. For Pile Welding Detail - Butt Joints detail, see sheet RW8-17.
6. For Detail 5, and Detail 6 see Sheet RW8-19.
7. For Detail 10, see sheet RW8-20.

LEGEND:

Remove portion of concrete at drilled hole

RW8-15

DESIGN	BY L. JOHNSON	CHECKED S. SINGH	PREPARED FOR THE STATE OF CALIFORNIA DEPARTMENT OF TRANSPORTATION	R. DONIKIAN PROJECT ENGINEER	BRIDGE NO. 34E0014
DETAILS	BY L. REYES	CHECKED S. SINGH			POST MILE 8.8
QUANTITIES	BY L. JOHNSON	CHECKED S. SINGH			

RETAINING WALL NO. 8
SEGMENT B - DETAILS NO. 2

DESIGN DETAIL SHEET (ENGLISH) (REV. 2/25/05)

ORIGINAL SCALE IN INCHES FOR REDUCED PLANS 0 1 2 3

CU 04
EA 163741

DISREGARD PRINTS BEARING EARLIER REVISION DATES →

REVISION DATES (PRELIMINARY STAGE ONLY): 6-01-09 | 07-15-09 | 08-07-09 | 08-26-09 | 09-18-09 | 09-25-09 | 09-30-09 | 10-30-09

SHEET 15 OF 65

FILE => 34E0014-segb-rwdt02.dgn

USERNAME => tripierce DATE PLOTTED => 12-DEC-2009 TIME PLOTTED => 09:47

DIST	COUNTY	ROUTE	POST MILES TOTAL PROJECT	SHEET No	TOTAL SHEETS
04	SF	101	8.2/9.2	584	654

REGISTERED CIVIL ENGINEER — 10/30/09 DATE

12-14-09
PLANS APPROVAL DATE

LAWRENCE M. JOHNSON No. C 44006 Exp. 6-30-11 CIVIL — REGISTERED PROFESSIONAL ENGINEER — STATE OF CALIFORNIA

The State of California or its officers or agents shall not be responsible for the accuracy or completeness of electronic copies of this plan sheet.

Arup PB Joint Venture
303 Second Street, Suite 700N
San Francisco, CA 94107

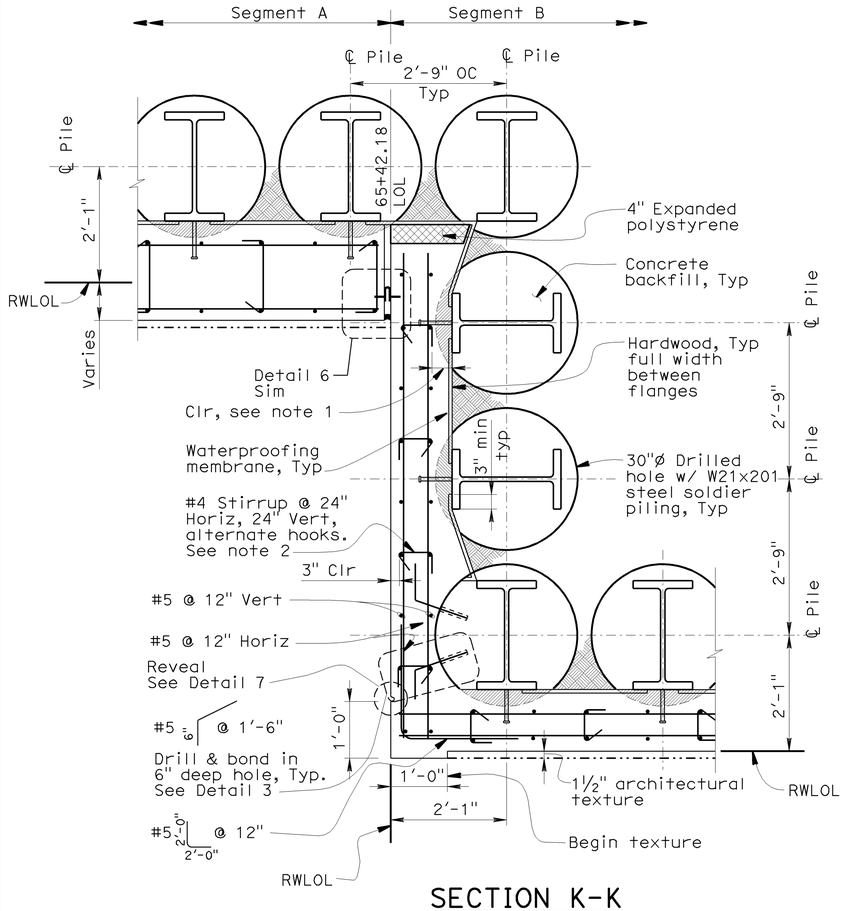

SECTION K-K
SCALE: ¾" = 1'-0"

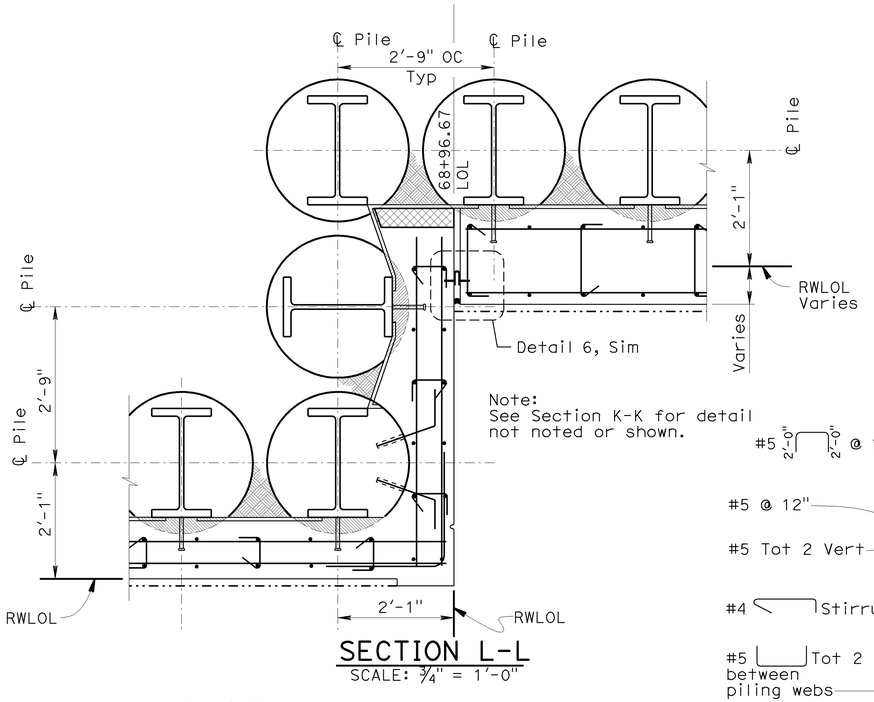

SECTION L-L
SCALE: ¾" = 1'-0"

Note:
See Section K-K for detail not noted or shown.

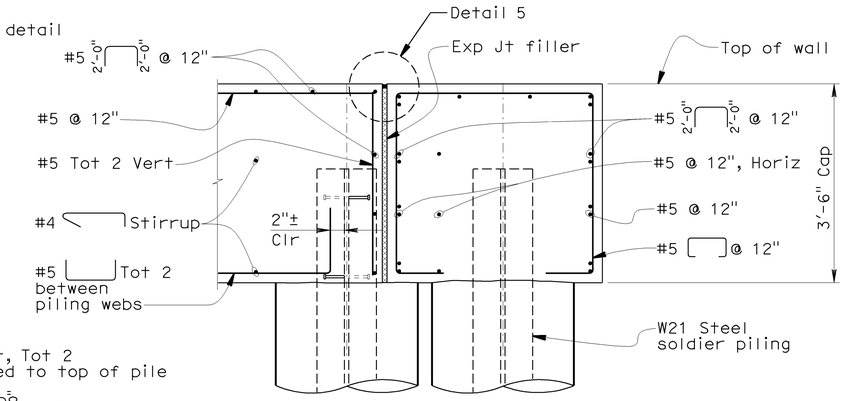

SECTION P-P
SCALE: ¾" = 1'-0"

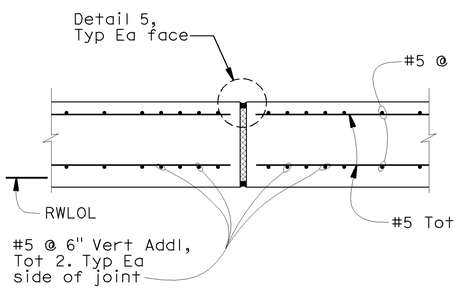

SECTION M-M
SCALE: 1" = 1'-0"

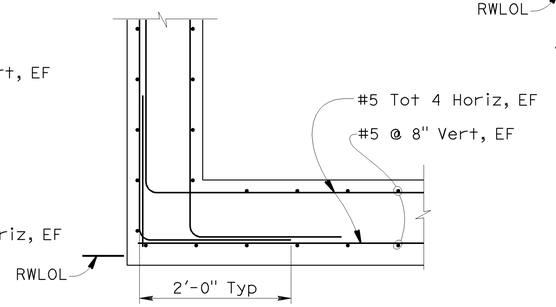

SECTION N-N
SCALE: 1" = 1'-0"

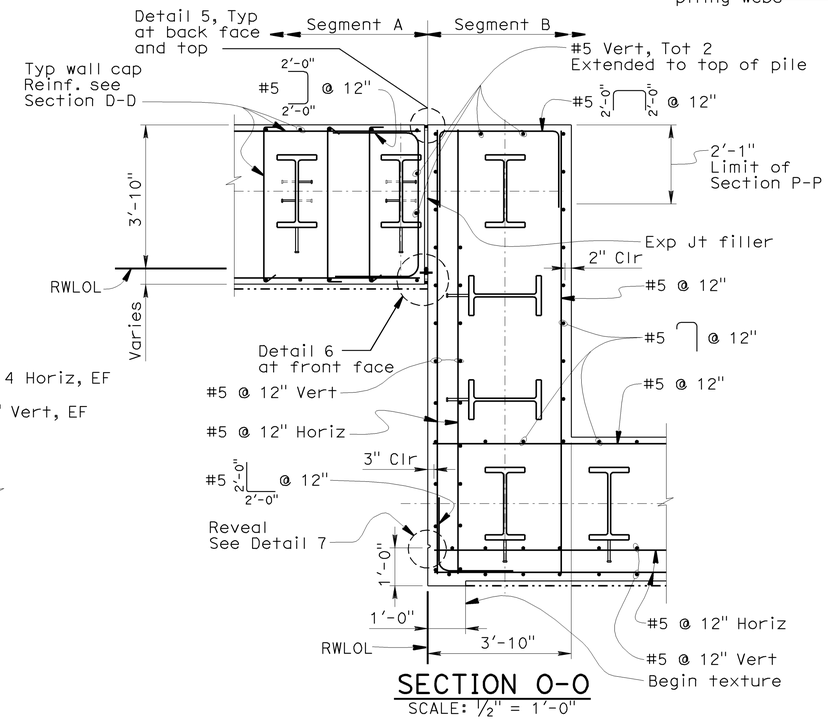

SECTION O-O
SCALE: ½" = 1'-0"

NOTES:

1. Clearance varies, 2-inch minimum, 5-inch maximum.
2. Hook stirrups around intersection of #5 @ 12" Horiz & Vert reinforcing. Field verify required length of stirrups prior to fabrication.
3. For Detail 3, see sheet RW8-17.
4. For Detail 5 thru Detail 7, see sheet RW8-19.
5. For Section D-D, see sheet RW8-14.

LEGEND:

Remove portion of concrete at drilled holes

RW8-16

DESIGN	BY L. JOHNSON	CHECKED S. SINGH	PREPARED FOR THE STATE OF CALIFORNIA DEPARTMENT OF TRANSPORTATION	R. DONIKIAN PROJECT ENGINEER	BRIDGE NO. 34E0014
DETAILS	BY L. REYES	CHECKED S. SINGH			POST MILE 8.8
QUANTITIES	BY L. JOHNSON	CHECKED S. SINGH			

RETAINING WALL NO. 8
SEGMENT B - DETAILS NO. 3

DESIGN DETAIL SHEET (ENGLISH) (REV. 2/25/05)

ORIGINAL SCALE IN INCHES FOR REDUCED PLANS 0 1 2 3

CU 04
EA 163741

DISREGARD PRINTS BEARING EARLIER REVISION DATES

REVISION DATES (PRELIMINARY STAGE ONLY): 6-04-09 | 07-15-09 | 08-07-09 | 08-26-09 | 09-18-09 | 09-25-09 | 09-30-09 | 10-30-09

SHEET 16 OF 65

FILE => 34E0014-segb-rwdt03.dgn

USERNAME => prbierce DATE PLOTTED => 12-DEC-2009 TIME PLOTTED => 09:47

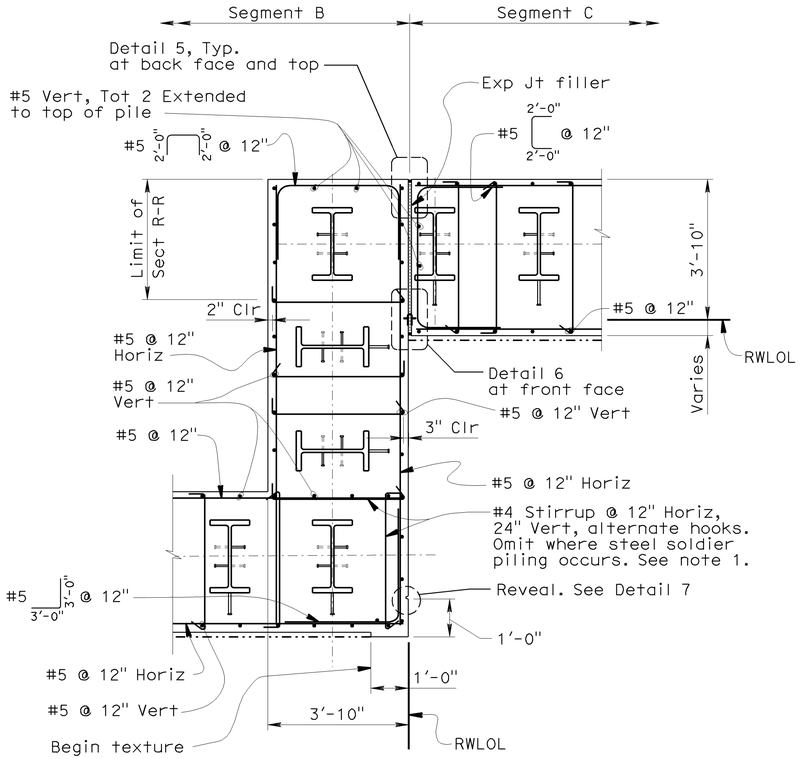

SECTION Q-Q
SCALE: 1/2" = 1'-0"

SINGLE VEE-GROOVE SINGLE BEVEL-GROOVE SQUARE GROOVE

PILE WELDING DETAIL - BUTT JOINTS
NO SCALE

NOTES:
1. Single Vee-Groove permitted for all positions.
2. Single Bevel-Groove permitted for horizontal joints only.

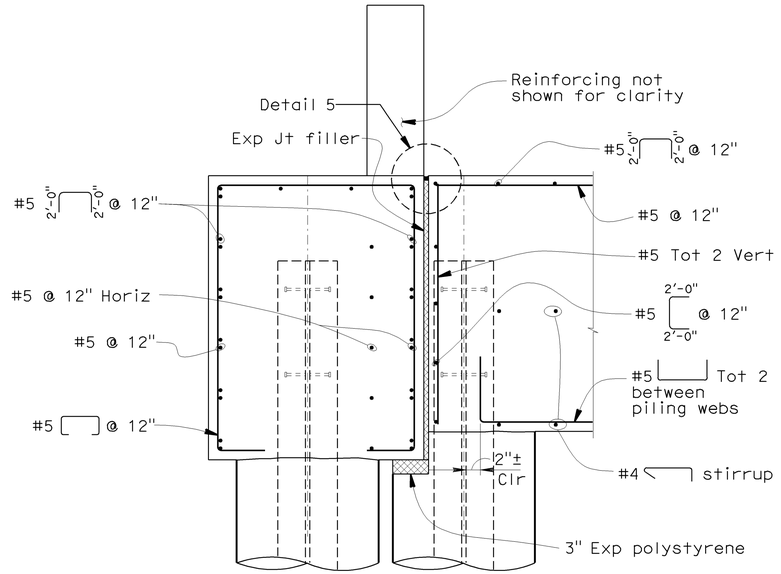

SECTION R-R
SCALE: 3/4" = 1'-0"

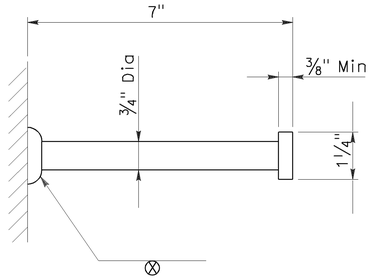

3/4" WELDED STUD CONNECTOR
NO SCALE

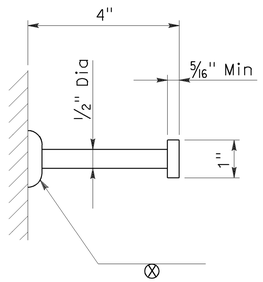

1/2" WELDED STUD CONNECTOR
NO SCALE

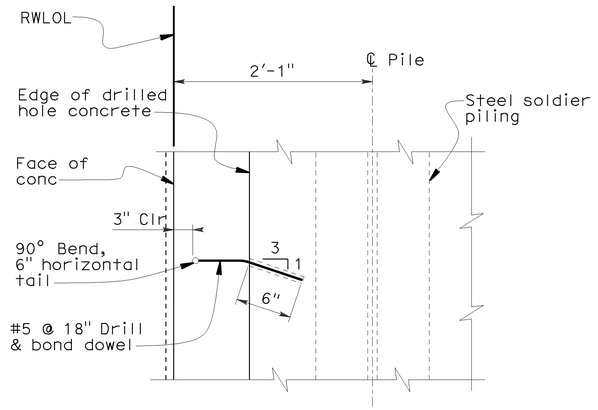

DETAIL 3
NO SCALE

Notes:

1. Hook stirrup Around intersection of #5 @ 12" horizontal and vertical reinforcing.
2. For Detail 5 thru Detail 7 see sheet RW8-19.

DIST	COUNTY	ROUTE	POST MILES TOTAL PROJECT	SHEET No	TOTAL SHEETS
04	SF	101	8.2/9.2	585	654

REGISTERED CIVIL ENGINEER — 10/30/09 DATE

12-14-09
PLANS APPROVAL DATE

REGISTERED PROFESSIONAL ENGINEER — LAWRENCE M. JOHNSON No. C 44006 Exp. 6-30-11 CIVIL — STATE OF CALIFORNIA

The State of California or its officers or agents shall not be responsible for the accuracy or completeness of electronic copies of this plan sheet.

Arup PB Joint Venture
303 Second Street, Suite 700N
San Francisco, CA 94107

RW8-17

DESIGN	BY L. JOHNSON	CHECKED S. SINGH	PREPARED FOR THE STATE OF CALIFORNIA DEPARTMENT OF TRANSPORTATION	R. DONIKIAN PROJECT ENGINEER	BRIDGE NO. 34E0014
DETAILS	BY L. REYES	CHECKED S. SINGH			POST MILE 8.8
QUANTITIES	BY L. JOHNSON	CHECKED S. SINGH			

RETAINING WALL NO. 8

SEGMENT B - DETAILS NO. 4

DESIGN DETAIL SHEET (ENGLISH) (REV. 2/25/05)

ORIGINAL SCALE IN INCHES FOR REDUCED PLANS 0 1 2 3

CU 04
EA 163741

DISREGARD PRINTS BEARING EARLIER REVISION DATES →

REVISION DATES (PRELIMINARY STAGE ONLY): 6-04-09 | 07-15-09 | 08-07-09 | 08-26-09 | 09-18-09 | 09-25-09 | 09-30-09 | 10-30-09

SHEET 17 OF 65

FILE => 34E0014-segb-rwdt04.dgn

USERNAME = trpierce DATE PLOTTED => 12-DEC-2009 TIME PLOTTED => 09:47

DIST	COUNTY	ROUTE	POST MILES TOTAL PROJECT	SHEET No	TOTAL SHEETS
04	SF	101	8.2/9.2	586	654

09/30/09
REGISTERED CIVIL ENGINEER DATE

12-14-09
PLANS APPROVAL DATE

REGISTERED PROFESSIONAL ENGINEER
LAWRENCE M. JOHNSON
No. C 44006
Exp. 6-30-11
CIVIL
STATE OF CALIFORNIA

The State of California or its officers or agents shall not be responsible for the accuracy or completeness of electronic copies of this plan sheet.

Arup PB Joint Venture
303 Second Street, Suite 700N
San Francisco, CA 94107

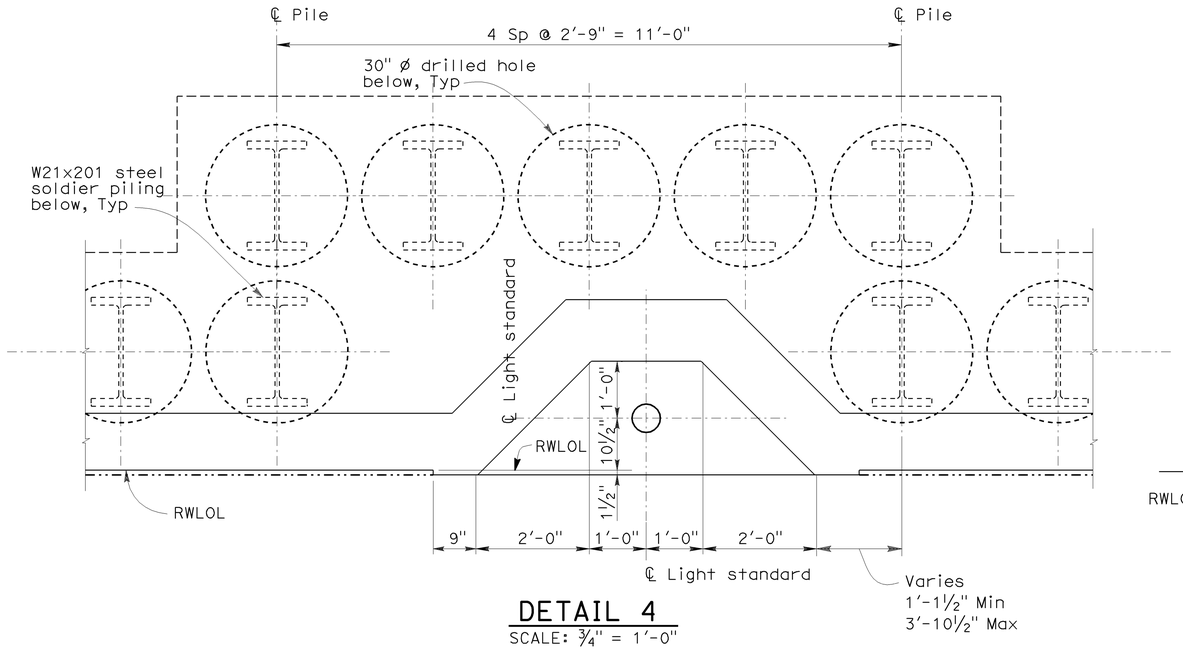

DETAIL 4
SCALE: ¾" = 1'-0"

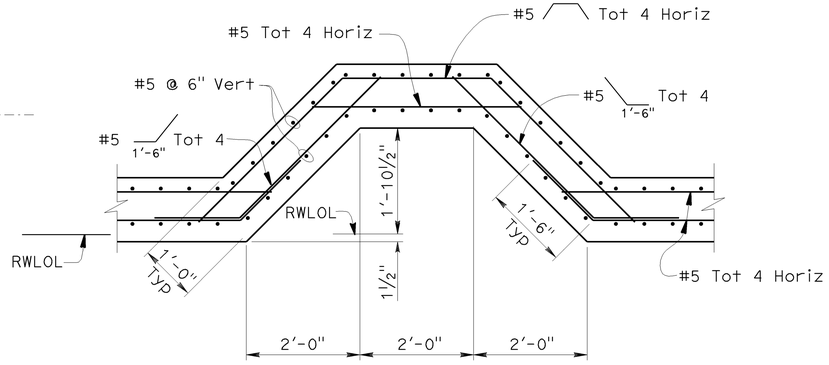

SECTION U-U
SCALE: ¾" = 1'-0"

NOTES:

1. For Section X-X, see sheet RW8-19.
2. Hook stirrups around intersection of #5 @ 12" Horiz & Vert reinforcing. Field verify required length of stirrups prior to fabrication.

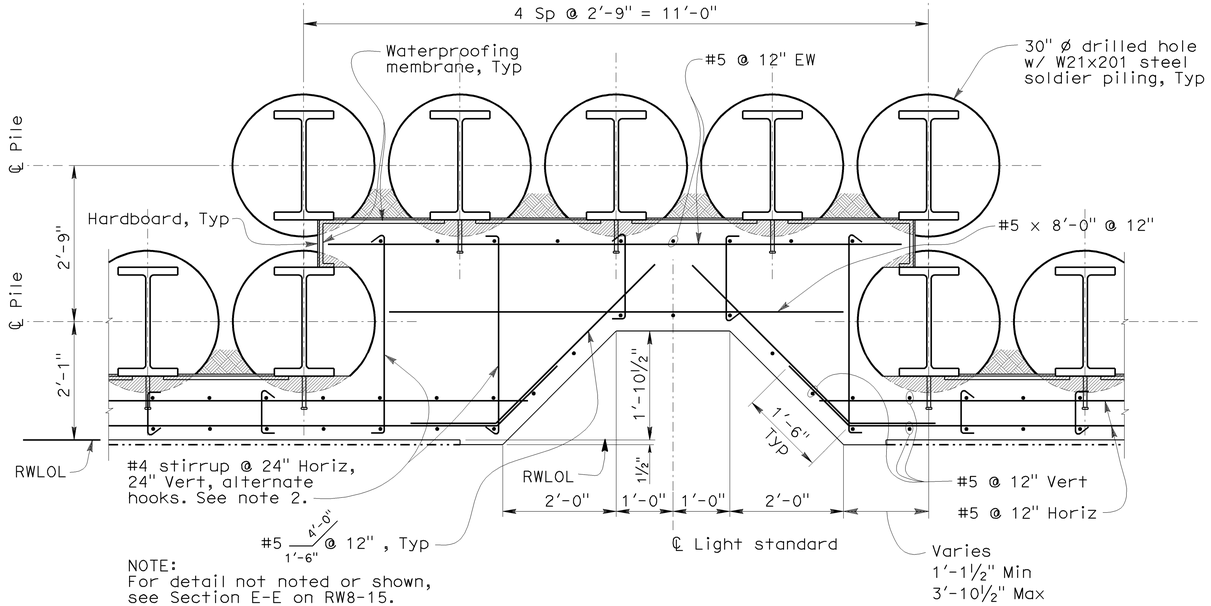

NOTE:
For detail not noted or shown, see Section E-E on RW8-15.

SECTION S-S
SCALE: ¾" = 1'-0"

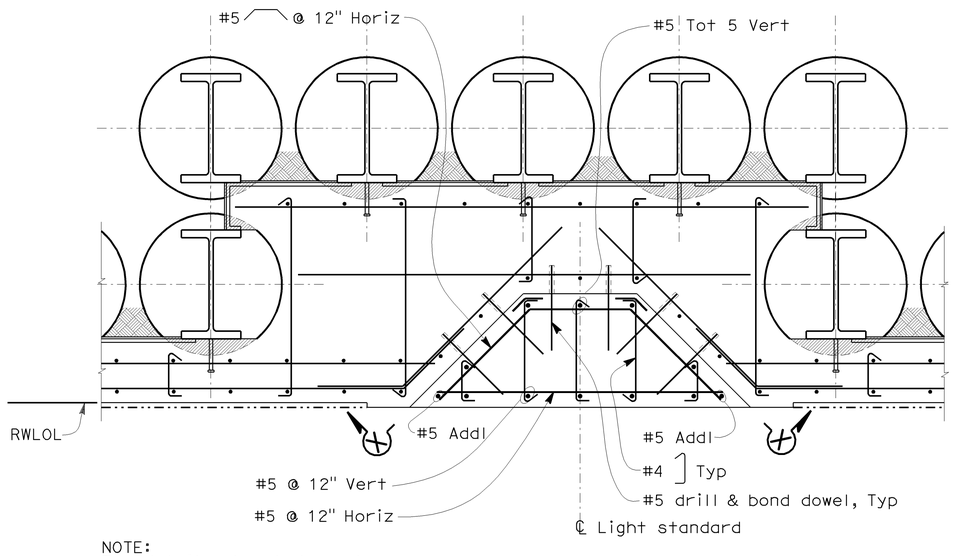

NOTE:
For detail not noted or shown, see Section S-S.

SECTION T-T
SCALE: ¾" = 1'-0"

RW8-18

DESIGN	BY L. JOHNSON	CHECKED S. SINGH	PREPARED FOR THE STATE OF CALIFORNIA DEPARTMENT OF TRANSPORTATION	R. DONIKIAN PROJECT ENGINEER	BRIDGE NO. 34E0014	RETAINING WALL NO. 8	
DETAILS	BY E. CANTILLER	CHECKED S. SINGH			POST MILE 8.8	SEGMENT B - DETAILS NO. 5	
QUANTITIES	BY L. JOHNSON	CHECKED S. SINGH					

DESIGN DETAIL SHEET (ENGLISH) (REV. 2/25/05)

ORIGINAL SCALE IN INCHES FOR REDUCED PLANS 0 1 2 3

CU 04
EA 163741

DISREGARD PRINTS BEARING EARLIER REVISION DATES →

REVISION DATES (PRELIMINARY STAGE ONLY): 6-04-09 | 07-15-09 | 08-07-09 | 08-26-09 | 09-18-09 | 09-25-09 | 09-30-09

SHEET 18 OF 65

FILE => 34E0014-segb-rwdt05.dgn

USERNAME = trpierce DATE PLOTTED => 12-DEC-2009 TIME PLOTTED => 09:47

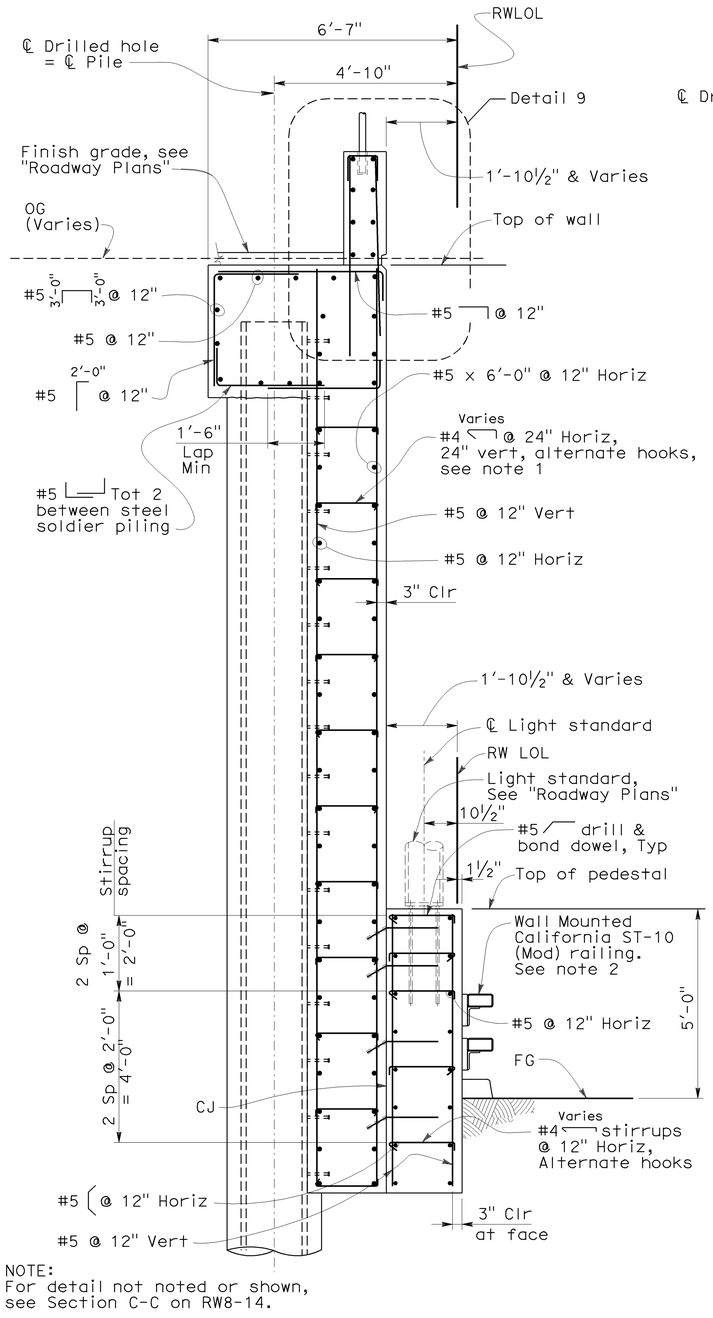

NOTE:
For detail not noted or shown,
see Section C-C on RW8-14.

SECTION V-V
SCALE: ½" = 1'-0"

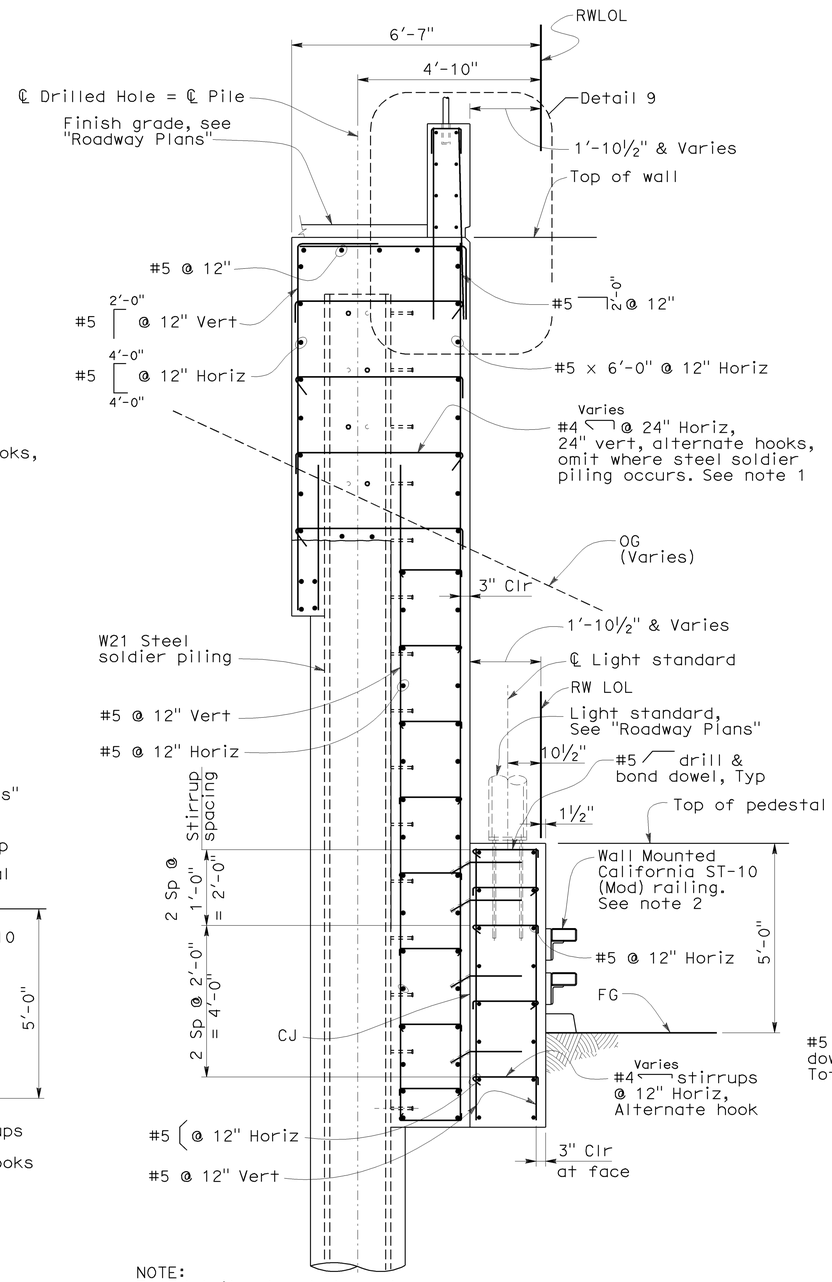

NOTE:
For detail not noted or shown,
see Section D-D on RW8-14.

SECTION W-W
SCALE: ½" = 1'-0"

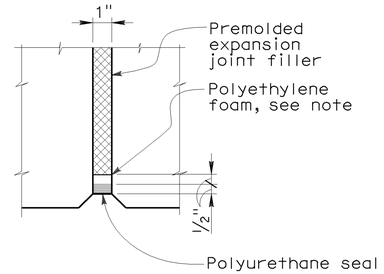

NOTE:
Top of polyethylene foam to
have glazed surface and crown.
Uncompressed width to be ⅛"
greater than actual joint width.

DETAIL 5
NO SCALE

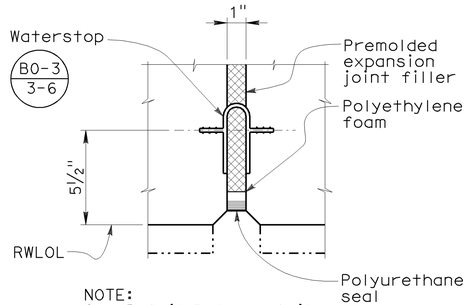

NOTE:
See Detail 5 for detail
not noted or shown.

DETAIL 6
NO SCALE

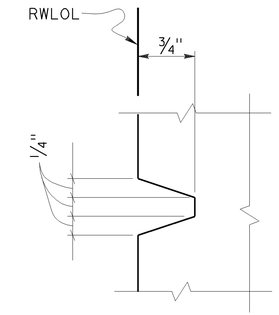

REVEAL

DETAIL 7
NO SCALE

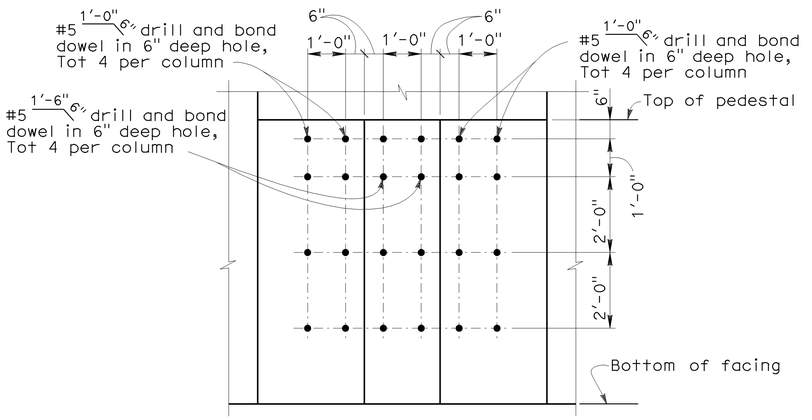

SECTION X-X
NO SCALE

NOTES:

1. Hook stirrups around intersection of #5 @ 12" Horiz & Vert reinforcing. Field verify required length of stirrups prior to fabrication.
2. For Wall Mounted California ST-10 (Mod), see sheet RW8-48.
3. For Detail 9, see sheet RW8-20.

DIST	COUNTY	ROUTE	POST MILES TOTAL PROJECT	SHEET No	TOTAL SHEETS
04	SF	101	8.2/9.2	587	654

REGISTERED CIVIL ENGINEER — 10/30/09 DATE

12-14-09
PLANS APPROVAL DATE

REGISTERED PROFESSIONAL ENGINEER — LAWRENCE M. JOHNSON — No. C 44006 — Exp. 6-30-11 — CIVIL — STATE OF CALIFORNIA

The State of California or its officers or agents shall not be responsible for the accuracy or completeness of electronic copies of this plan sheet.

Arup PB Joint Venture
303 Second Street, Suite 700N
San Francisco, CA 94107

RW8-19

DESIGN	BY L. JOHNSON	CHECKED S. SINGH	PREPARED FOR THE STATE OF CALIFORNIA DEPARTMENT OF TRANSPORTATION	R. DONIKIAN PROJECT ENGINEER	BRIDGE NO. 34E0014
DETAILS	BY E. CANTILLER	CHECKED S. SINGH			POST MILE 8.8
QUANTITIES	BY L. JOHNSON	CHECKED S. SINGH			

RETAINING WALL NO. 8

SEGMENT B - DETAILS NO. 6

DESIGN DETAIL SHEET (ENGLISH) (REV. 2/25/05)

ORIGINAL SCALE IN INCHES FOR REDUCED PLANS 0 1 2 3

CU 04
EA 163741

DISREGARD PRINTS BEARING EARLIER REVISION DATES →

REVISION DATES (PRELIMINARY STAGE ONLY): 6-01-09 | 07-15-09 | 08-07-09 | 08-26-09 | 09-14-09 | 09-25-09 | 09-30-09 | 10-30-09

SHEET 19 OF 65

FILE => 34E0014-segb-rwdt06.dgn

USERNAME = trpierce DATE PLOTTED => 12-DEC-2009 TIME PLOTTED => 08:47

DIST	COUNTY	ROUTE	POST MILES TOTAL PROJECT	SHEET No	TOTAL SHEETS
04	SF	101	8.2/9.2	588	654

REGISTERED CIVIL ENGINEER — 10/30/09 DATE

12-14-09
PLANS APPROVAL DATE

LAWRENCE M. JOHNSON No. C 44006 Exp. 6-30-11 CIVIL — REGISTERED PROFESSIONAL ENGINEER — STATE OF CALIFORNIA

The State of California or its officers or agents shall not be responsible for the accuracy or completeness of electronic copies of this plan sheet.

Arup PB Joint Venture
303 Second Street, Suite 700N
San Francisco, CA 94107

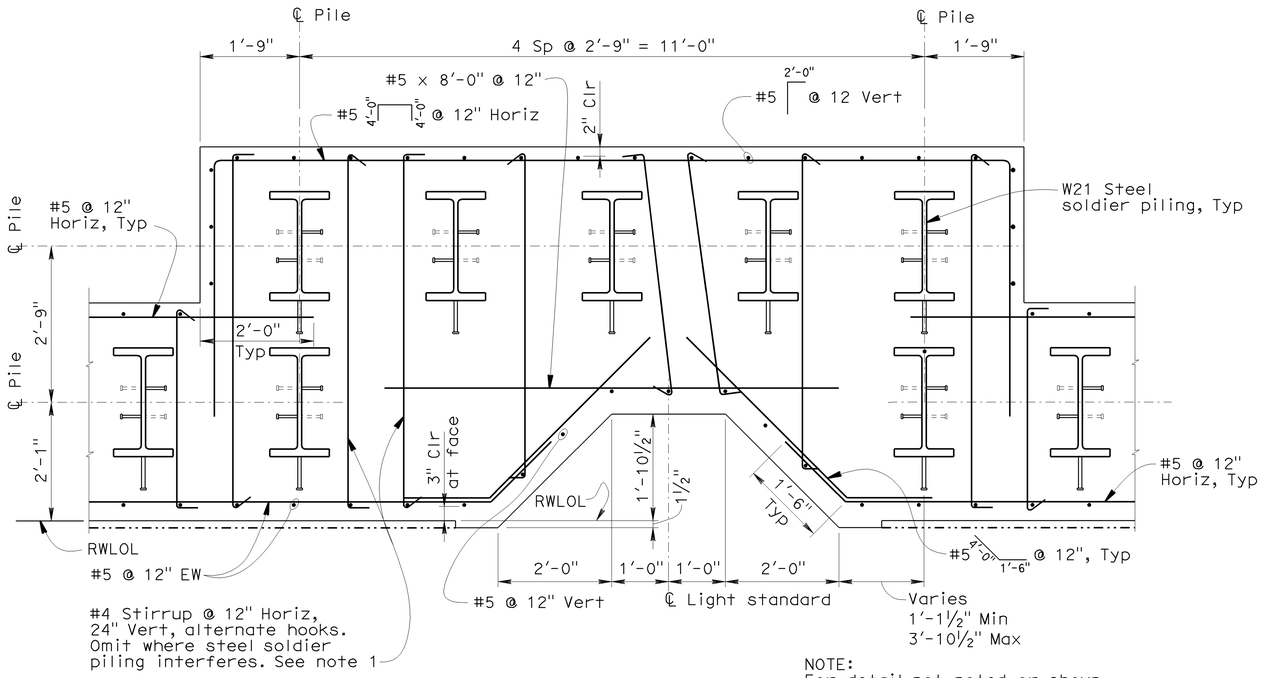

SECTION Y-Y
SCALE: ¾" = 1'-0"

NOTE:
For detail not noted or shown, see Section F-F on RW8-15.

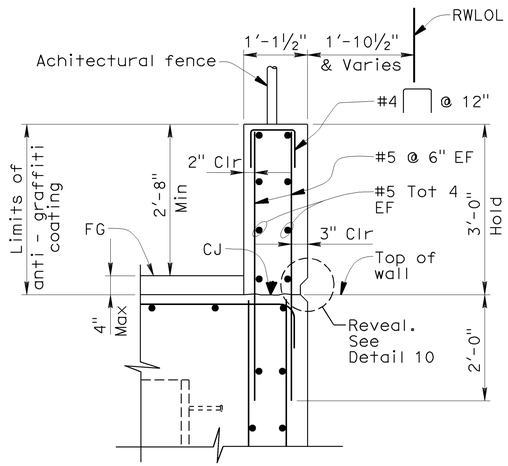

DETAIL 9
SCALE: ¾" = 1'-0"

NOTES:

1. Hook stirrups around intersection of #5 @ 12" Horiz & Vert reinforcing. Field verify required length of stirrups prior to fabrication.
2. For Detail 5 and Detail 6, see sheet RW8-19.

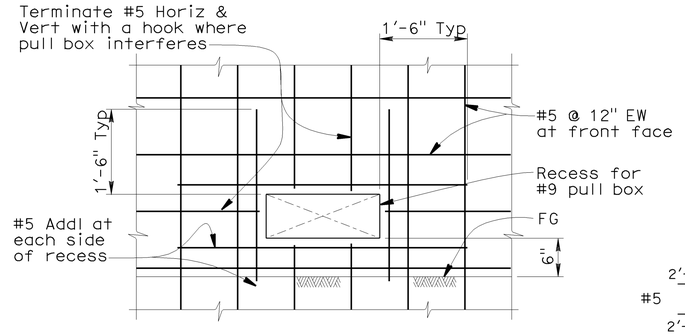

REINFORCING AT #9 PULL BOX

DETAIL 8
NO SCALE

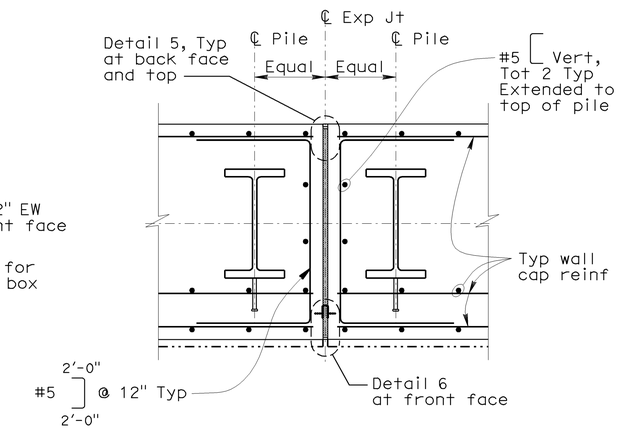

SECTION Z-Z
SCALE: ¾" = 1'-0"

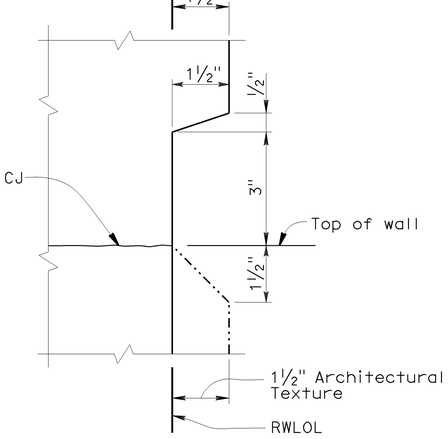

REVEAL

DETAIL 10
NO SCALE

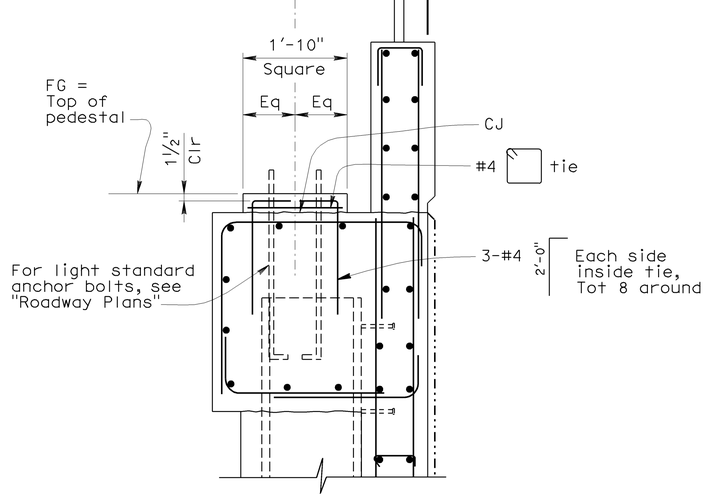

SECTION AA-AA
SCALE: ¾" = 1'-0"

RW8-20

DESIGN	BY L. JOHNSON	CHECKED S. SINGH	PREPARED FOR THE STATE OF CALIFORNIA DEPARTMENT OF TRANSPORTATION	R. DONIKIAN PROJECT ENGINEER	BRIDGE NO. 34E0014	RETAINING WALL NO. 8	
DETAILS	BY J. FUSCO	CHECKED S. SINGH			POST MILE 8.8	SEGMENT B - DETAILS NO. 7	
QUANTITIES	BY L. JOHNSON	CHECKED S. SINGH					

DESIGN DETAIL SHEET (ENGLISH) (REV. 2/25/05)

ORIGINAL SCALE IN INCHES FOR REDUCED PLANS 0 1 2 3

CU 04
EA 163741

DISREGARD PRINTS BEARING EARLIER REVISION DATES

REVISION DATES (PRELIMINARY STAGE ONLY): 6-04-09 | 07-15-09 | 08-07-09 | 08-26-09 | 09-11-09 | 09-18-09 | 09-25-09 | 09-30-09 | 10-30-09

SHEET 20 OF 65

FILE => 34E0014-segb-rwdt07.dgn

USERNAME = trpierce DATE PLOTTED => 12-DEC-2009 TIME PLOTTED => 09:47

DIST	COUNTY	ROUTE	POST MILES TOTAL PROJECT	SHEET No	TOTAL SHEETS
04	SF	101	8.2/9.2	589	654

REGISTERED CIVIL ENGINEER — 10/30/09 DATE

12-14-09
PLANS APPROVAL DATE

The State of California or its officers or agents shall not be responsible for the accuracy or completeness of electronic copies of this plan sheet.

REGISTERED PROFESSIONAL ENGINEER — LAWRENCE M. JOHNSON — No. C 44006 — Exp. 6-30-11 — CIVIL — STATE OF CALIFORNIA

Arup PB Joint Venture
303 Second Street, Suite 700N
San Francisco, CA 94107

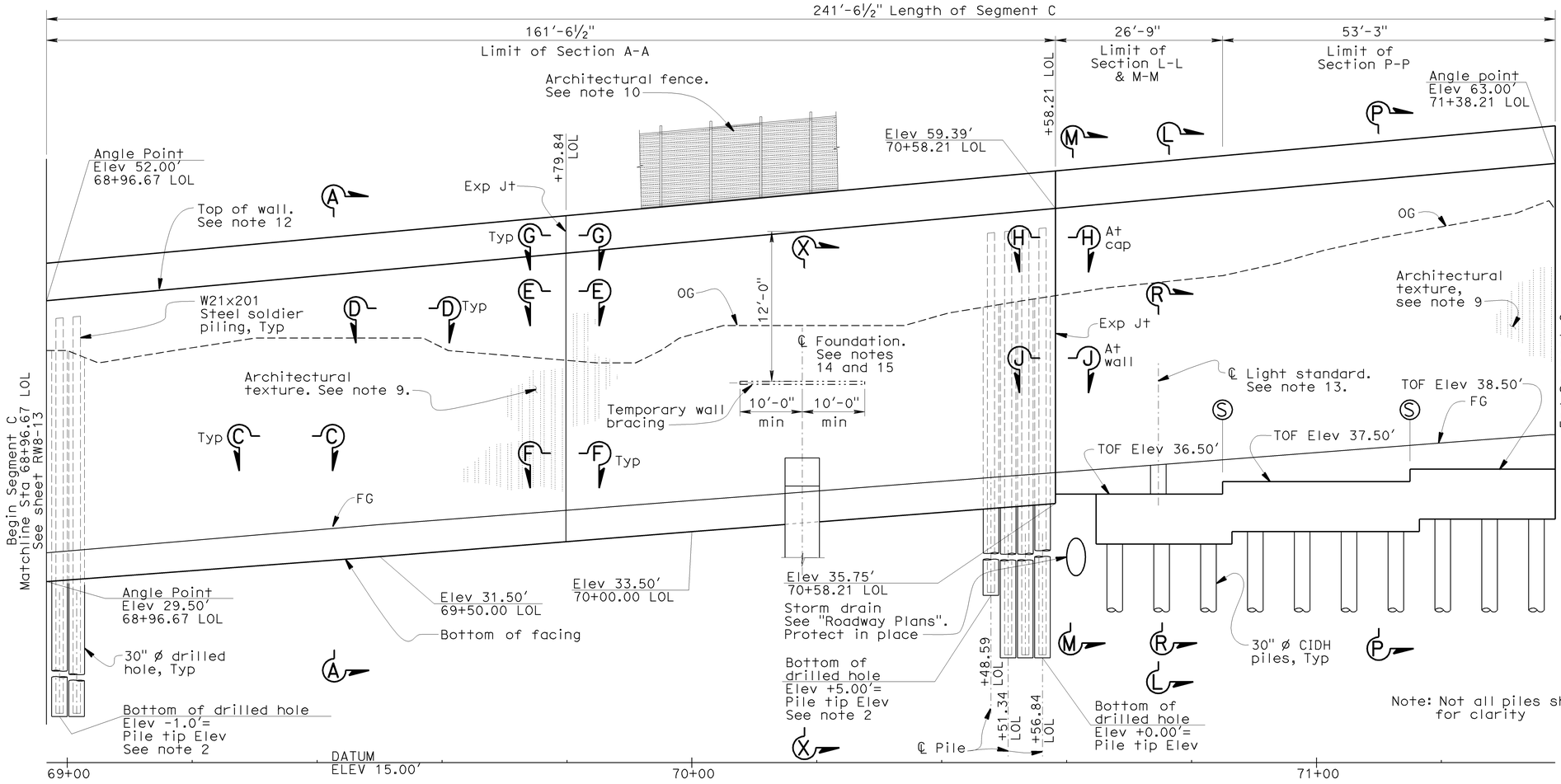

ELEVATION
SCALE: 1:10 HORIZ
1:5 VERT

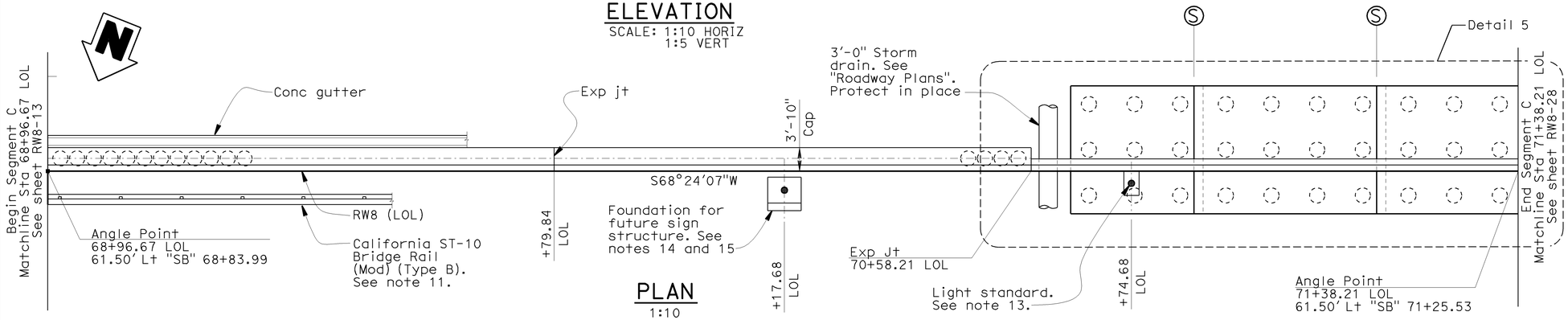

PLAN
1:10

NOTES:

1. For General Notes, see sheet RW8-6.
2. Bottom of drilled hole elevations (= tip elevations) are straight grade between elevations shown.
3. For Section A-A and Section X-X, see sheet RW8-22.
4. For Sections C-C thru G-G, see sheet RW8-23.
5. For Sections H-H thru J-J, see sheet RW8-24.
6. For Detail 5, see sheet RW8-25.
7. For Section L-L and Section M-M, see sheet RW8-26.
8. For Section P-P and Section R-R, see sheet RW8-27.
9. For Architectural Texture, see sheets RW8-AT1 through RW8-AT6.
10. For architectural fence details, see sheets RW8-AT1 through RW8-AT6.
11. For California ST-10 Bridge rail (Mod) (Type B), see sheets RW8-49 and RW8-50.
12. Top of wall elevation is straight grade from 68+96.67 LOL to 71+38.21 LOL.
13. For light standards, conduit and pull boxes, see "Roadway Plans".
14. The square pedestal pile foundation and anchor bolts for a future sign structure (sign structure not in contract) shall be installed at the indicated location. For conduit and pull boxes required for the future sign structure, see "Roadway Plans."
15. The square pedestal pile foundation shall be constructed prior to construction of the soldier pile wall cast-in-place concrete facing and the cast-in-place concrete cap. The CIDH pile for the foundation shall be constructed using a permanent steel casing with a minimum wall thickness of ½". The casing shall extend the full length of pile. The steel casing shall be advanced during drilling for the CIDH pile.

LEGEND:

Ⓢ Step at footing

RW8-21

	BY	CHECKED
DESIGN	L. JOHNSON	S. SINGH
DETAILS	L. REYES	S. SINGH
QUANTITIES	L. JOHNSON	S. SINGH

PREPARED FOR THE STATE OF CALIFORNIA
DEPARTMENT OF TRANSPORTATION

R. DONIKIAN
PROJECT ENGINEER

CU 04
EA 163741

BRIDGE NO.	34E0014
POST MILE	8.8

RETAINING WALL NO. 8
SEGMENT C - STRUCTURE PLAN

DESIGN DETAIL SHEET (ENGLISH) (REV. 2/25/05)

ORIGINAL SCALE IN INCHES FOR REDUCED PLANS 0 1 2 3

DISREGARD PRINTS BEARING EARLIER REVISION DATES →

REVISION DATES (PRELIMINARY STAGE ONLY): 6-01-09 | 07-15-09 | 08-07-09 | 08-26-09 | 09-11-09 | 09-18-09 | 09-25-09 | 09-30-09 | 10-16-09 | 10-30-09

SHEET 21 OF 65

FILE => 34E0014-segc-c-sp01.dgn

USERNAME => tripierce DATE PLOTTED => 12-DEC-2009 TIME PLOTTED => 09:47

DIST	COUNTY	ROUTE	POST MILES TOTAL PROJECT	SHEET No	TOTAL SHEETS
04	SF	101	8.2/9.2	590	654

REGISTERED CIVIL ENGINEER — 10/30/09 DATE

12-14-09
PLANS APPROVAL DATE

REGISTERED PROFESSIONAL ENGINEER — LAWRENCE M. JOHNSON — No. C 44006 — Exp. 6-30-11 — CIVIL — STATE OF CALIFORNIA

The State of California or its officers or agents shall not be responsible for the accuracy or completeness of electronic copies of this plan sheet.

Arup PB Joint Venture
303 Second Street, Suite 700N
San Francisco, CA 94107

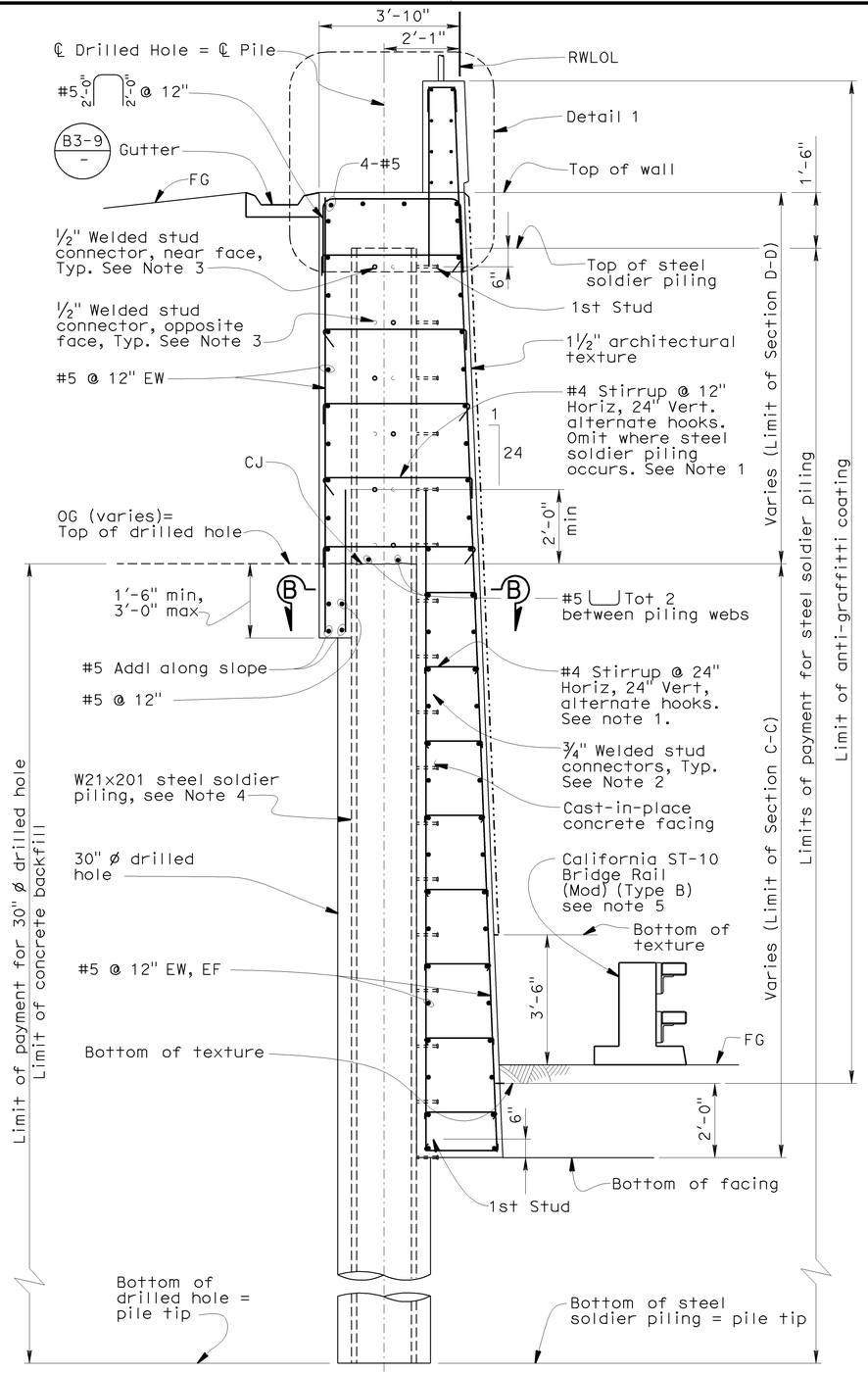

SECTION A-A
SCALE: ½" = 1'-0"

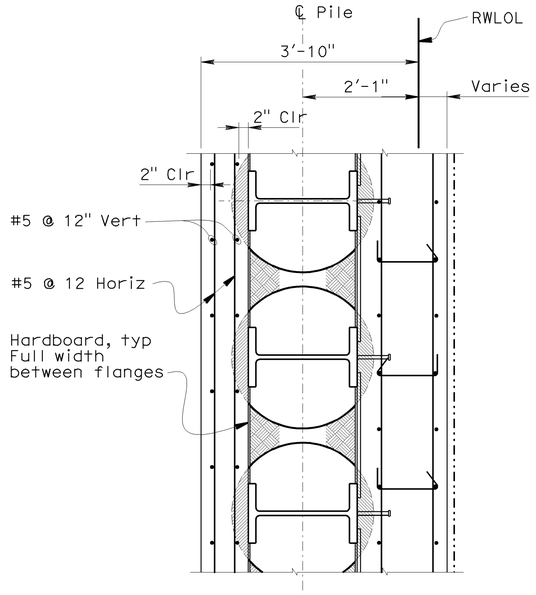

SECTION B-B
SCALE: ¾" = 1'-0"

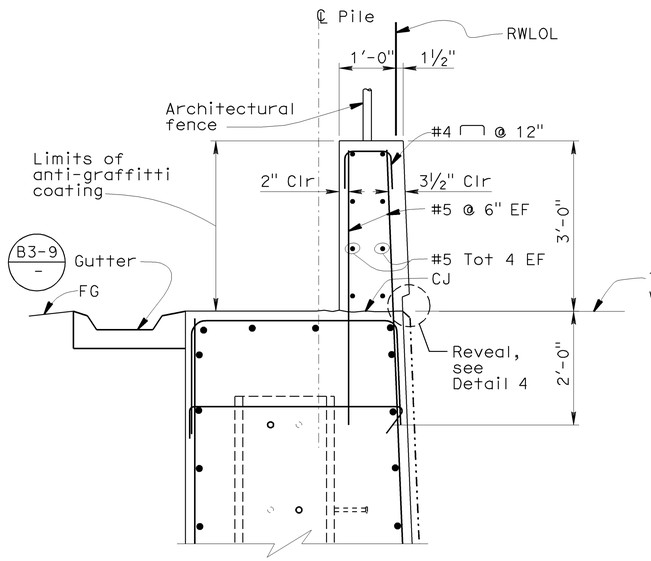

DETAIL 1
SCALE: ¾" = 1'-0"

NOTES:

1. Hook stirrups around intersection of #5 @ 12" Horiz & Vert reinforcing. Field verify required length of stirrups prior to fabrication.
2. For ¾" Welded Stud Connector detail, see Sheet RW8-24.
3. For ½" Welded Stud Connector detail, see Sheet RW8-24.
4. For Pile Welding Detail - Butt Joints detail, see sheet RW8-24.
5. For California ST-10 Bridge rail (Mod) (Type B), see sheets RW8-49 and RW8-50.
6. For Section Y-Y, see sheet RW8-23.
7. For Detail 4, see sheet RW8-24.

LEGEND:

Remove portion of concrete at drilled hole

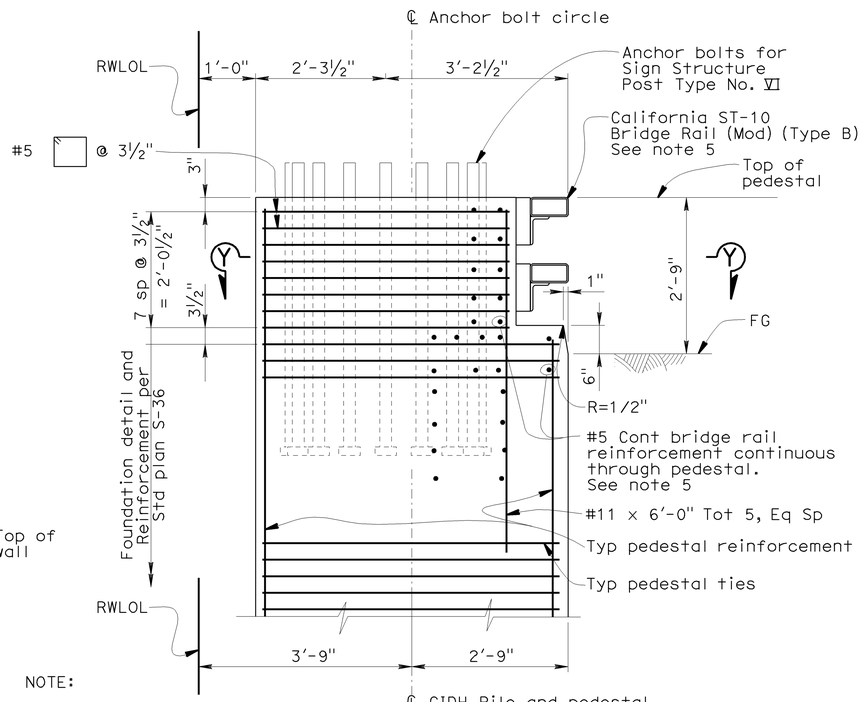

NOTE:

1. For detail not noted or shown, see Std Plan S-36, Post Type No. VI.
2. Soldier pile wall not shown for clarity

SQUARE PEDESTAL PILE FOUNDATION

SECTION X-X
SCALE: ¾" = 1'-0"

RW8-22

DESIGN	BY L. JOHNSON	CHECKED S. SINGH	PREPARED FOR THE STATE OF CALIFORNIA DEPARTMENT OF TRANSPORTATION	R. DONIKIAN PROJECT ENGINEER	BRIDGE NO. 34E0014 POST MILE 8.8	RETAINING WALL NO. 8
DETAILS	BY L. REYES	CHECKED S. SINGH				SEGMENT C - DETAILS NO.1
QUANTITIES	BY L. JOHNSON	CHECKED S. SINGH				

DESIGN DETAIL SHEET (ENGLISH) (REV. 2/25/05)

ORIGINAL SCALE IN INCHES FOR REDUCED PLANS 0 1 2 3

CU 04
EA 163741

DISREGARD PRINTS BEARING EARLIER REVISION DATES →

REVISION DATES (PRELIMINARY STAGE ONLY): 6-01-09 | 07-15-09 | 08-07-09 | 08-26-09 | 09-11-09 | 09-18-09 | 09-25-09 | 09-30-09 | 10-19-09

SHEET 22 OF 65

FILE => 34E0014-segc-rwdt01.dgn

USERNAME => ttpierce DATE PLOTTED => 12-DEC-2009 TIME PLOTTED => 09:48

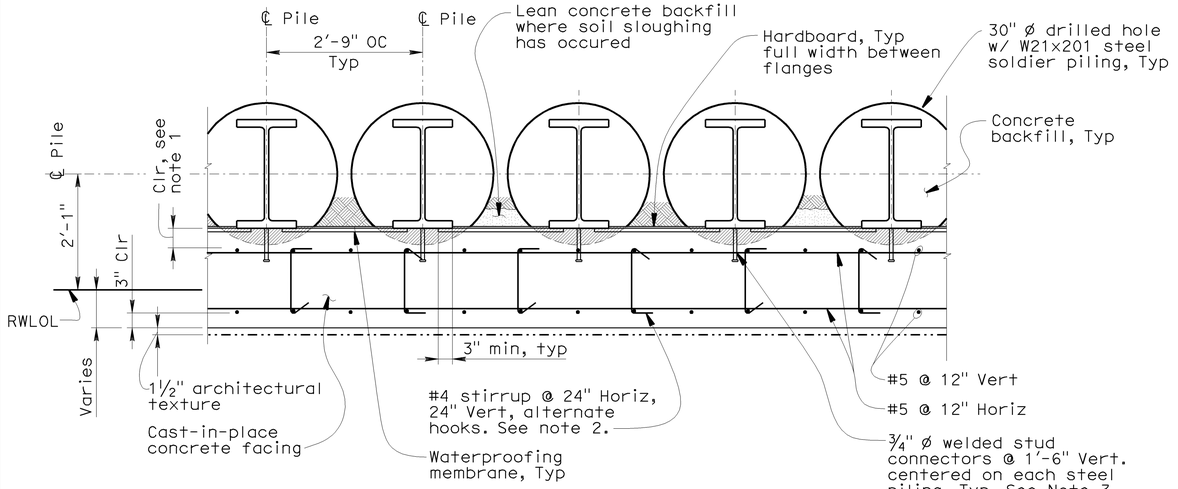

SECTION C-C
SCALE: ¾" = 1'-0"

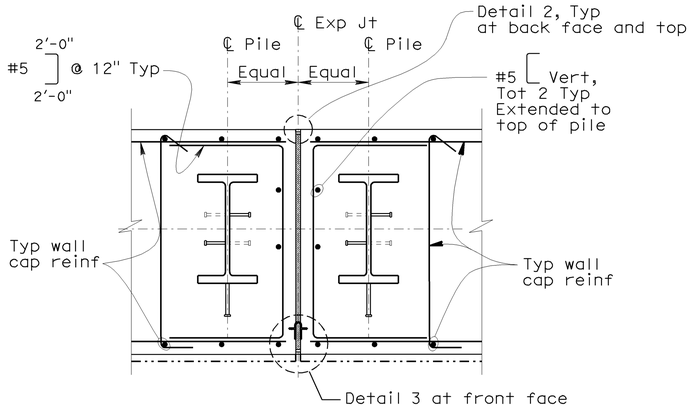

SECTION E-E
SCALE: ¾" = 1'-0"

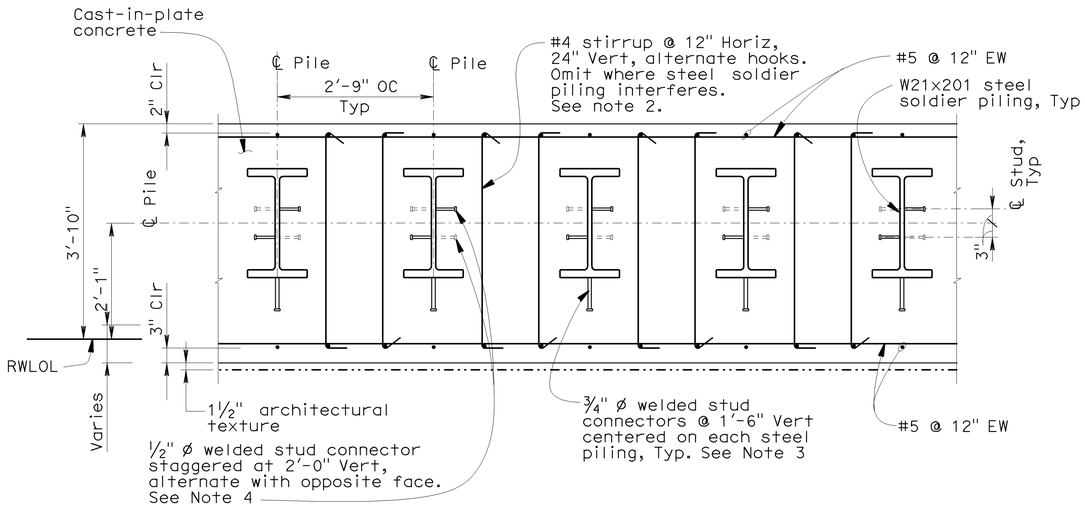

SECTION D-D
SCALE: ¾" = 1'-0"

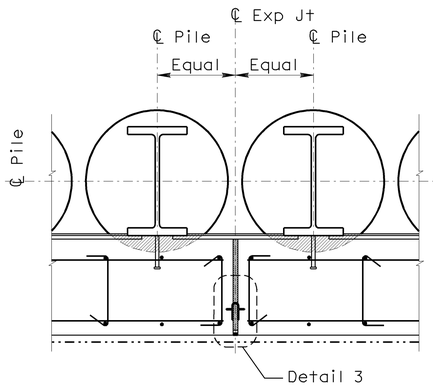

SECTION F-F
SCALE: ¾" = 1'-0"

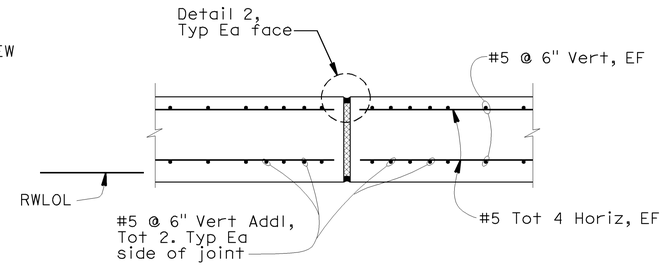

SECTION G-G
SCALE: 1" = 1'-0"

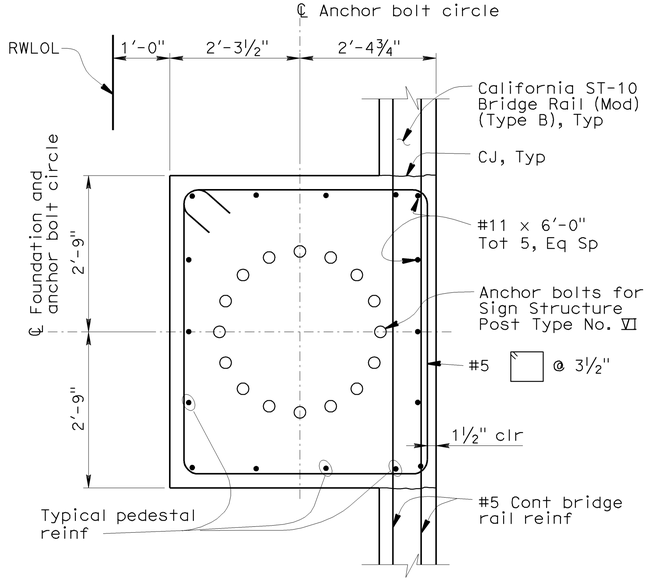

SECTION Y-Y
SCALE: ¾" = 1'-0"

DIST	COUNTY	ROUTE	POST MILES TOTAL PROJECT	SHEET No	TOTAL SHEETS
04	SF	101	8.2/9.2	591	654

REGISTERED CIVIL ENGINEER — 10/30/09 DATE

12-14-09
PLANS APPROVAL DATE

REGISTERED PROFESSIONAL ENGINEER — LAWRENCE M. JOHNSON — No. C 44006 — Exp. 6-30-11 — CIVIL — STATE OF CALIFORNIA

The State of California or its officers or agents shall not be responsible for the accuracy or completeness of electronic copies of this plan sheet.

Arup PB Joint Venture
303 Second Street, Suite 700N
San Francisco, CA 94107

NOTES:

1. Clearance varies, 2-inch minimum, 5-inch maximum.
2. Hook stirrups around intersection of #5 @ 12" Horiz & Vert reinforcing. Field verify required length of stirrups prior to fabrication.
3. For ¾" Welded Stud Connector detail, see Sheet RW8-24.
4. For ½" Welded Stud Connector detail, see Sheet RW8-24.
5. For Pile Welding Detail - Butt Joints detail, see sheet RW8-24.
6. For Detail 2 and Detail 3, see sheet RW8-24.

LEGEND:

Remove portion of concrete at drilled hole

℄ Anchor bolt circle

RW8-23

DESIGN	BY L. JOHNSON	CHECKED S. SINGH	PREPARED FOR THE STATE OF CALIFORNIA DEPARTMENT OF TRANSPORTATION	R. DONIKIAN PROJECT ENGINEER	BRIDGE NO. 34E0014	RETAINING WALL NO. 8	
DETAILS	BY L. REYES	CHECKED S. SINGH			POST MILE 8.8	SEGMENT C - DETAILS NO. 2	
QUANTITIES	BY L. JOHNSON	CHECKED S. SINGH					

DESIGN DETAIL SHEET (ENGLISH) (REV. 2/25/05)

ORIGINAL SCALE IN INCHES FOR REDUCED PLANS 0 1 2 3

CU 04
EA 163741

DISREGARD PRINTS BEARING EARLIER REVISION DATES →

REVISION DATES (PRELIMINARY STAGE ONLY): 6-01-09 | 07-15-09 | 08-07-09 | 08-26-09 | 09-18-09 | 09-25-09 | 09-30-09

SHEET 23 OF 65

FILE => 34E0014-segc-rwdt02.dgn

USERNAME => trpierce DATE PLOTTED => 12-DEC-2009 TIME PLOTTED => 09:48

DIST	COUNTY	ROUTE	POST MILES TOTAL PROJECT	SHEET No	TOTAL SHEETS
04	SF	101	8.2/9.2	592	654

REGISTERED CIVIL ENGINEER — 10/30/09 DATE

12-14-09
PLANS APPROVAL DATE

REGISTERED PROFESSIONAL ENGINEER — LAWRENCE M. JOHNSON — No. C 44006 — Exp. 6-30-11 — CIVIL — STATE OF CALIFORNIA

The State of California or its officers or agents shall not be responsible for the accuracy or completeness of electronic copies of this plan sheet.

Arup PB Joint Venture
303 Second Street, Suite 700N
San Francisco, CA 94107

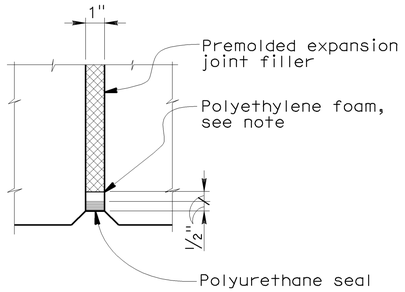

NOTE:
Top of polyethylene foam to have glazed surface and crown. Uncompressed width to be 1/8" greater than actual joint width.

DETAIL 2
NO SCALE

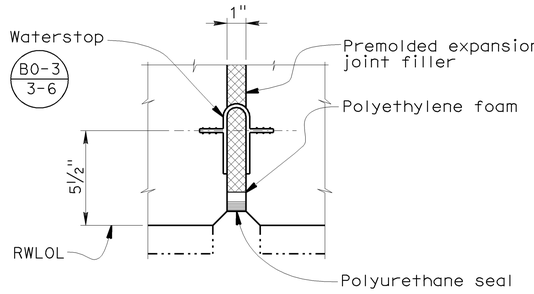

NOTE:
See Detail 2 for detail not noted or shown.

DETAIL 3
NO SCALE

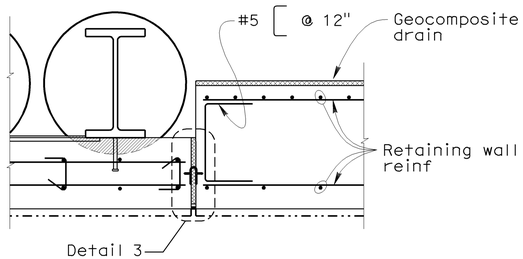

SECTION H-H
SCALE: 3/4" = 1'-0"

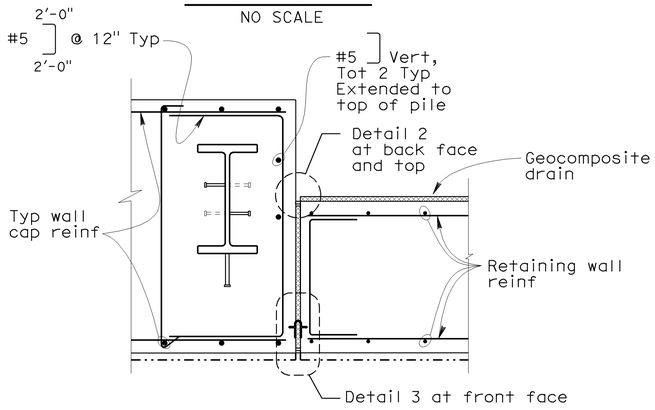

SECTION J-J
SCALE: 3/4" = 1'-0"

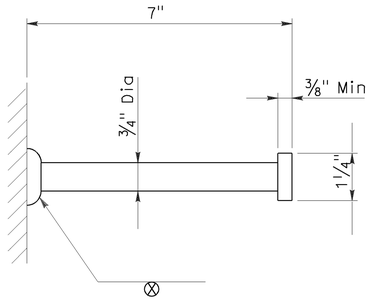

3/4" WELDED STUD CONNECTOR
NO SCALE

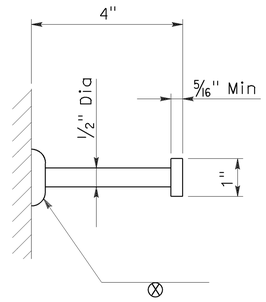

1/2" WELDED STUD CONNECTOR
NO SCALE

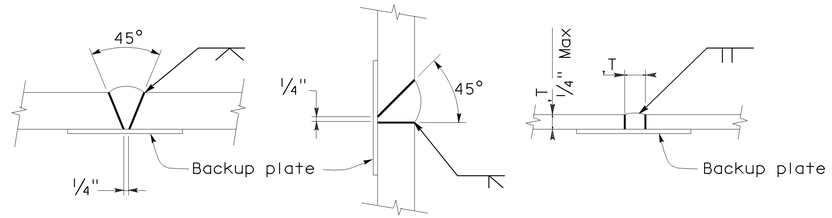

SINGLE VEE-GROOVE SINGLE BEVEL-GROOVE SQUARE GROOVE

PILE WELDING DETAIL - BUTT JOINTS
NO SCALE

NOTES:
1. Single Vee-Groove permitted for all positions.
2. Single Bevel-Groove permitted for horizontal joints only.

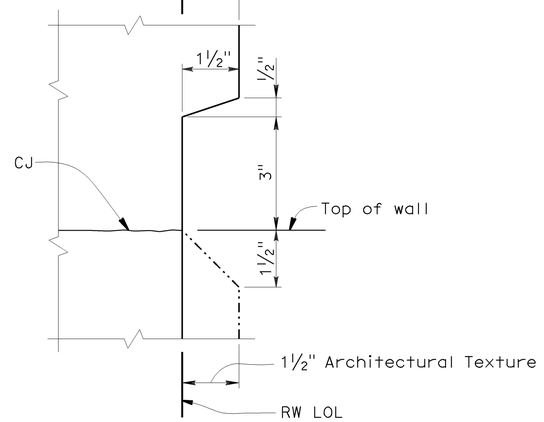

REVEAL

DETAIL 4
NO SCALE

RW8-24

		DESIGN	BY L. JOHNSON	CHECKED S. SINGH	PREPARED FOR THE STATE OF CALIFORNIA DEPARTMENT OF TRANSPORTATION	R. DONIKIAN PROJECT ENGINEER	BRIDGE NO. 34E0014
		DETAILS	BY L. REYES	CHECKED S. SINGH			POST MILE 8.8
		QUANTITIES	BY L. JOHNSON	CHECKED S. SINGH			

RETAINING WALL NO. 8
SEGMENT C - DETAILS NO. 3

DESIGN DETAIL SHEET (ENGLISH) (REV. 2/25/05)

ORIGINAL SCALE IN INCHES FOR REDUCED PLANS 0 1 2 3

CU 04
EA 163741

DISREGARD PRINTS BEARING EARLIER REVISION DATES

REVISION DATES (PRELIMINARY STAGE ONLY): 6-01-09 | 07-15-09 | 08-07-09 | 08-26-09 | 09-18-09 | 09-25-09 | 09-30-09 | 10-19-09

SHEET 24 OF 65

FILE => 34E0014-segc-rwdt03.dgn

USERNAME => ttpierce DATE PLOTTED => 12-DEC-2009 TIME PLOTTED => 09:48

PILE DATA TABLE - SEGMENT C CANTILEVER RETAINING WALL

Location	Pile Type	Nominal Resistance (kips)		Design Tip Elevations (ft)	Specified Tip Elevation (ft)	Nominal Driving Resistance (kips)
		Compression	Tension			
Section 1	30 inch CIDH Conc	400	0	-2.5 (a) N/A (b) +12.0 (c) +2.5 (d)	-2.5	N/A
Section 2	30 inch CIDH Conc	400	0	-1.5 (a) N/A (b) +13.0 (c) +3.5 (d)	-1.5	N/A
Section 3	30 inch CIDH Conc	400	0	-0.5 (a) N/A (b) +14.0 (c) +4.5 (d)	-0.5	N/A

NOTES:
1. Design tip elevations are controlled by the following demands: (a) Compression; (b)Tension; (c) Settlement; (d) Lateral Loads.
2. The specified tip elevation shall not be raised above the design tip elevation for tension load, lateral load and tolerable settlement.

PILE NOTES:

A. Reinforced Concrete: f'c = 4,000 psi
fy = 60,000 psi

B. Lapped splices in spiral pile reinforcement shall be lapped 80 bar diameters mininum. Spiral pile reinforcement at splices and at ends shall be terminated by 135° hook with a 6" tail hooked around a longitudinal bar.

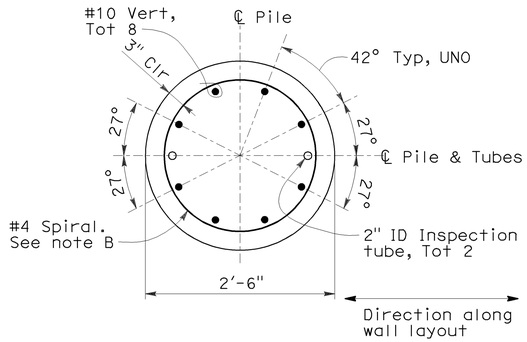

SECTION K-K
SCALE: 1" = 1'-0"

NOTE:

1. For Section Q-Q and Section S-S, see sheet RW8-27.

LEGEND:

Ⓢ Step at footing

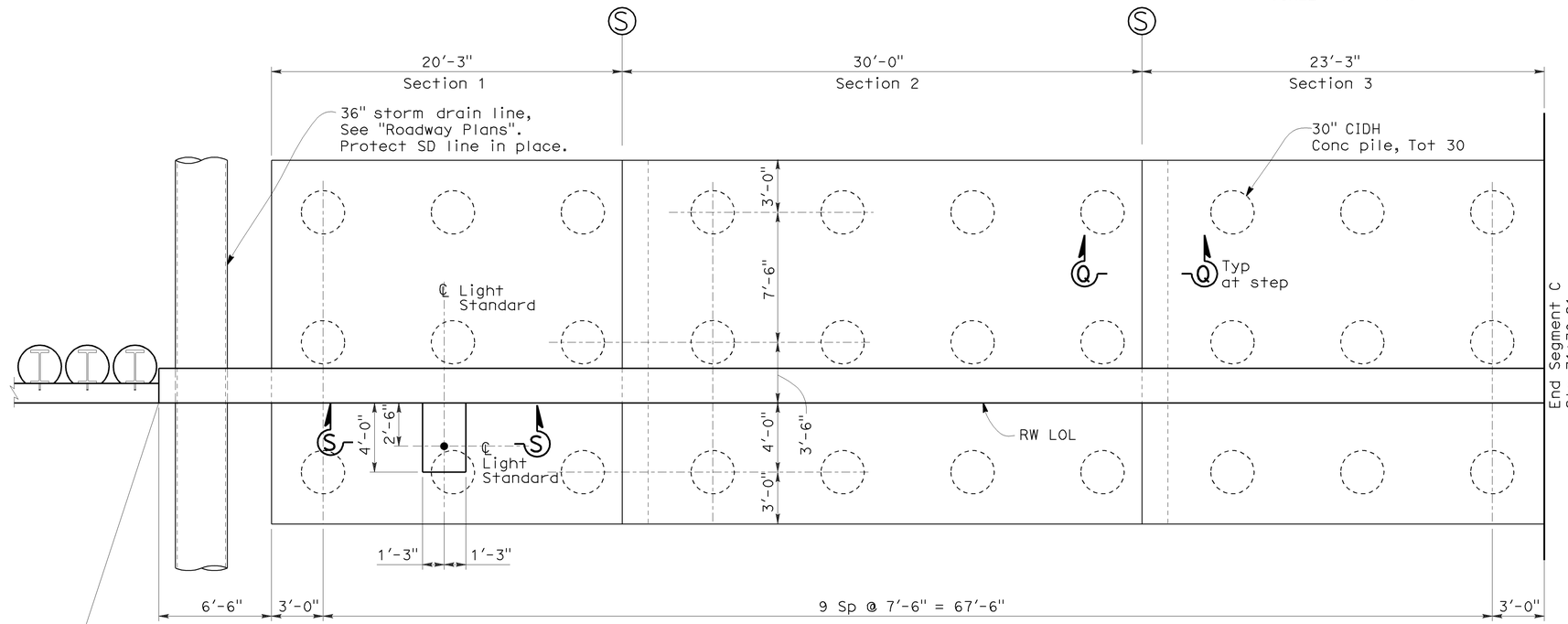

PLAN AT SEGMENT C CANTILEVER RETAINING WALL

DETAIL 5
SCALE: 1/4" = 1'-0"

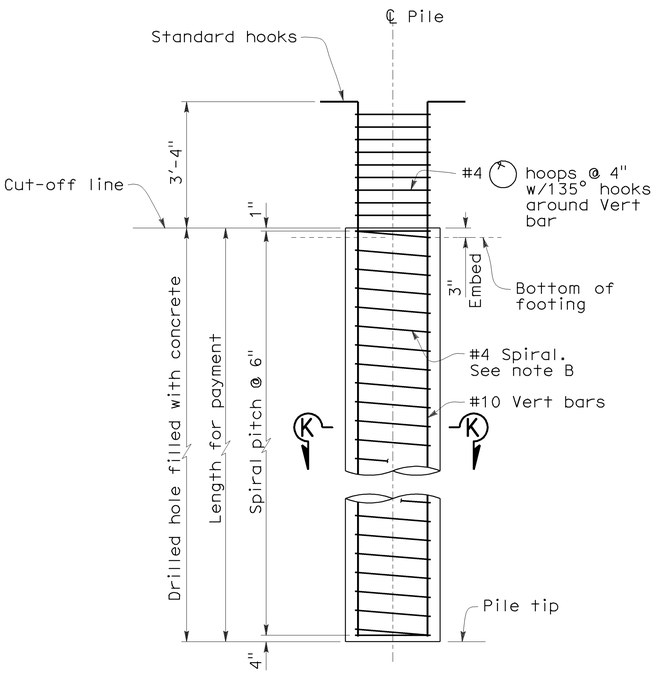

30" CIDH CONCRETE PILE
SCALE: 1/2" = 1'-0"

RW8-25

DIST	COUNTY	ROUTE	POST MILES TOTAL PROJECT	SHEET No	TOTAL SHEETS
04	SF	101	8.2/9.2	593	654

REGISTERED CIVIL ENGINEER — 10/30/09 DATE

12-14-09
PLANS APPROVAL DATE

REGISTERED PROFESSIONAL ENGINEER — LAWRENCE M. JOHNSON No. C 44006 Exp. 6-30-11 CIVIL — STATE OF CALIFORNIA

The State of California or its officers or agents shall not be responsible for the accuracy or completeness of electronic copies of this plan sheet.

Arup PB Joint Venture
303 Second Street, Suite 700N
San Francisco, CA 94107

DESIGN	BY L. JOHNSON	CHECKED S. SINGH	PREPARED FOR THE STATE OF CALIFORNIA DEPARTMENT OF TRANSPORTATION
DETAILS	BY E. CANTILLER	CHECKED S. SINGH	
QUANTITIES	BY L. JOHNSON	CHECKED S. SINGH	

R. DONIKIAN
PROJECT ENGINEER

BRIDGE NO. 34E0014
POST MILE 8.8

RETAINING WALL NO. 8
SEGMENT C - DETAILS NO. 4

DESIGN DETAIL SHEET (ENGLISH) (REV. 2/25/05)

ORIGINAL SCALE IN INCHES FOR REDUCED PLANS 0 1 2 3

CU 04
EA 163741

DISREGARD PRINTS BEARING EARLIER REVISION DATES →

REVISION DATES (PRELIMINARY STAGE ONLY): 6-04-09 | 07-15-09 | 08-07-09 | 08-26-09 | 09-16-09 | 09-25-09 | 09-30-09 | 10-19-09

SHEET 25 OF 65

FILE => 34E0014-segc-rwdt04.dgn

USERNAME => trpierce DATE PLOTTED => 12-DEC-2009 TIME PLOTTED => 09:48

DIST	COUNTY	ROUTE	POST MILES TOTAL PROJECT	SHEET No	TOTAL SHEETS
04	SF	101	8.2/9.2	594	654

REGISTERED CIVIL ENGINEER — 10/30/09 DATE

12-14-09
PLANS APPROVAL DATE

REGISTERED PROFESSIONAL ENGINEER — LAWRENCE M. JOHNSON — No. C 44006 — Exp. 6-30-11 — CIVIL — STATE OF CALIFORNIA

The State of California or its officers or agents shall not be responsible for the accuracy or completeness of electronic copies of this plan sheet.

Arup PB Joint Venture
303 Second Street, Suite 700N
San Francisco, CA 94107

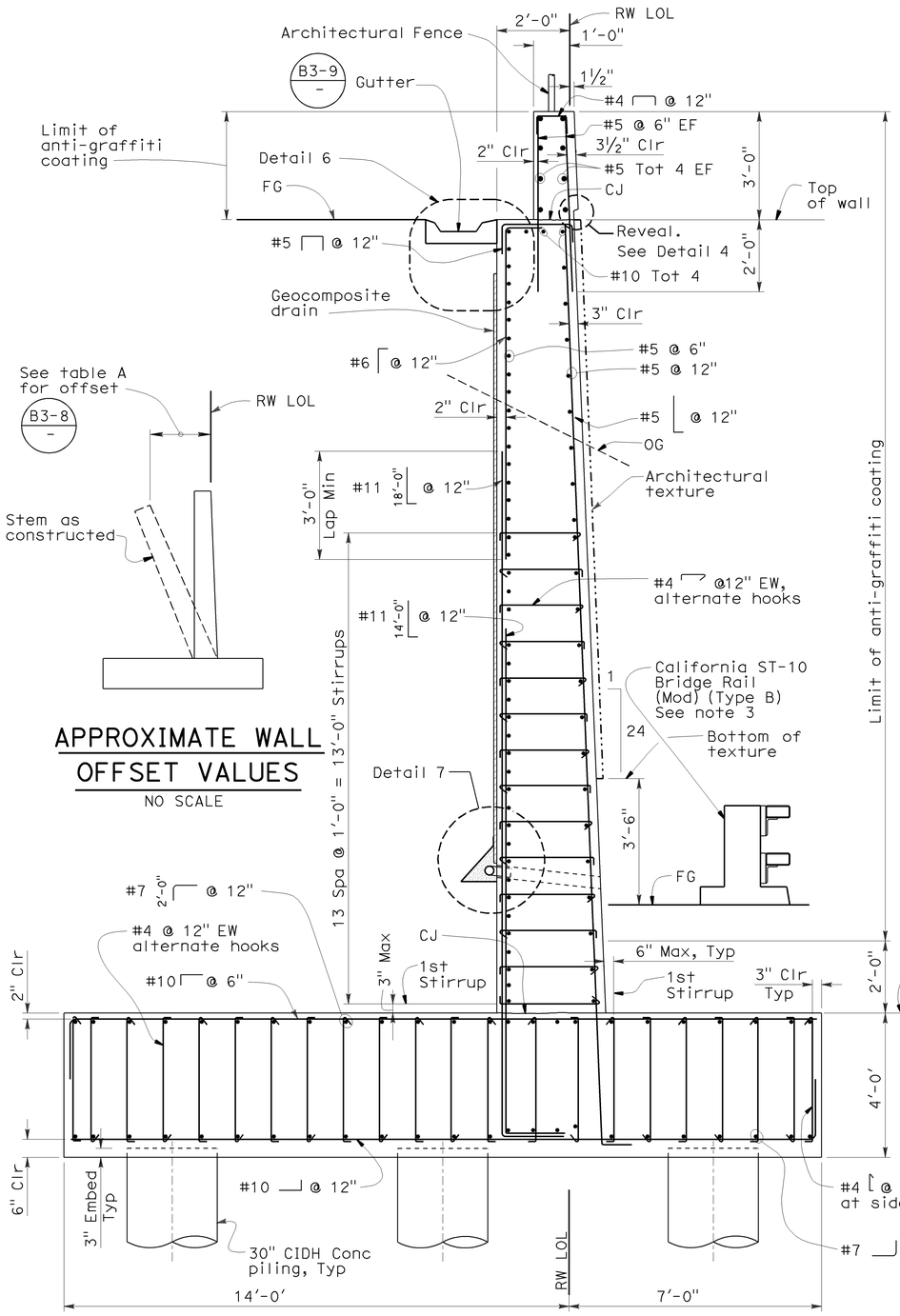

APPROXIMATE WALL OFFSET VALUES

NO SCALE

SECTION L-L

SCALE: ½" = 1'-0"

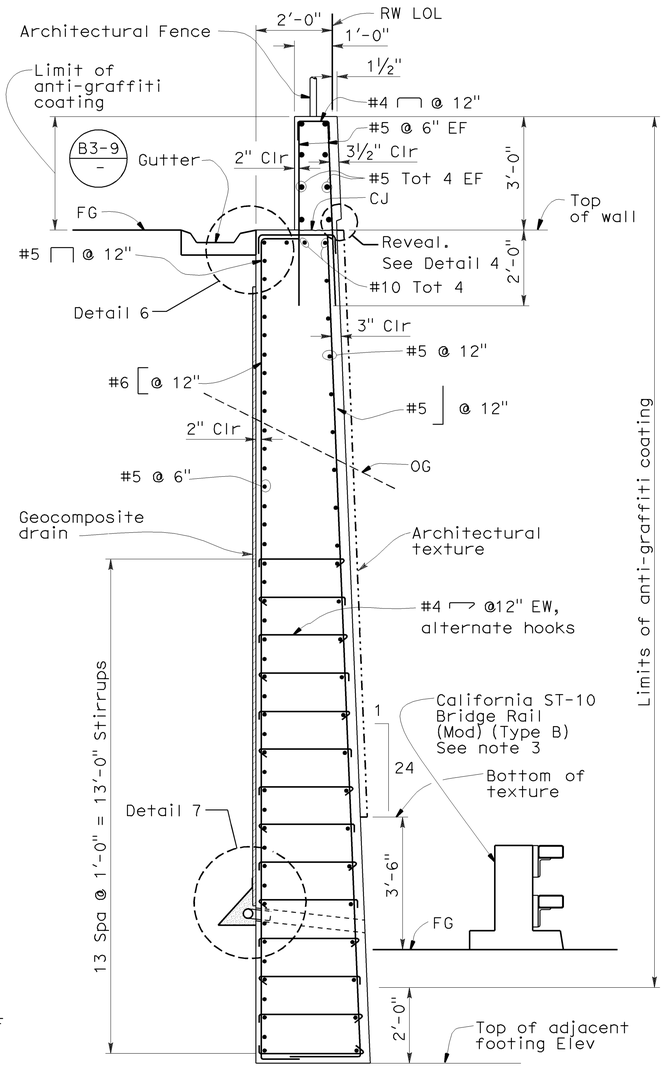

SECTION M-M

SCALE: ½" = 1'-0"

NOTES:

1. Place 4" Dia weepholes at 10'-0" max C-C and 5'-0" max from begin and end of wall. The exposed weepholes shall be located at 6"± above top of curb.
2. Geocomposite drain, cement treated base, and 3" Dia slotted plastic pipe continuous behind retaining wall. Cap ends of pipe. Provide "Tee" connection at 4" Dia weephole.
3. For California ST-10 Bridge Rail (Mod) (Type B), see sheets RW8-49 and RW8-50.
4. For Detail 4, see sheet RW8-24.

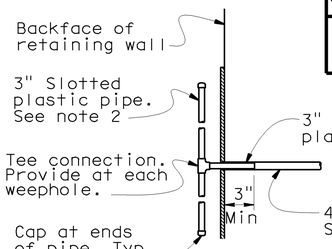

GEOCOMPOSITE DRAIN SYSTEM

SECTION N-N

NO SCALE

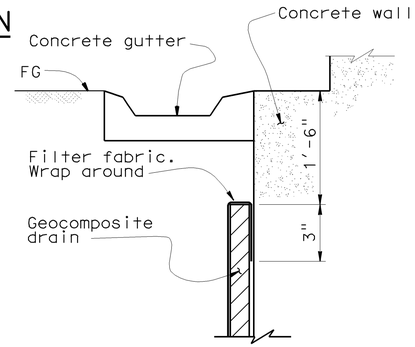

GEOCOMPOSITE DRAIN SYSTEM

DETAIL 6

NO SCALE

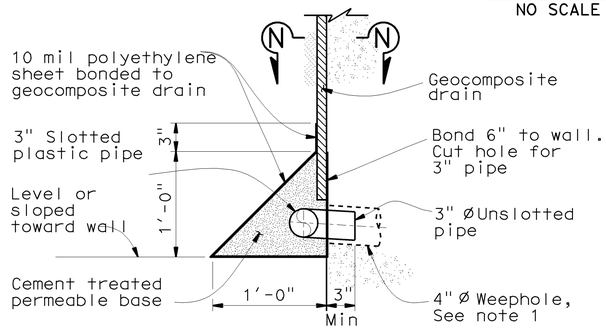

GEOCOMPOSITE DRAIN SYSTEM

DETAIL 7

NO SCALE

RW8-26

DESIGN	BY L. JOHNSON	CHECKED S. SINGH	PREPARED FOR THE STATE OF CALIFORNIA DEPARTMENT OF TRANSPORTATION	R. DONIKIAN PROJECT ENGINEER	BRIDGE NO. 34E0014	RETAINING WALL NO. 8	
DETAILS	BY E. CANTILLER	CHECKED S. SINGH			POST MILE 8.8	SEGMENT C - DETAILS NO. 5	
QUANTITIES	BY L. JOHNSON	CHECKED S. SINGH					

DESIGN DETAIL SHEET (ENGLISH) (REV. 2/25/05)

ORIGINAL SCALE IN INCHES FOR REDUCED PLANS 0 1 2 3

CU 04
EA 163741

DISREGARD PRINTS BEARING EARLIER REVISION DATES →

REVISION DATES (PRELIMINARY STAGE ONLY): 6-01-09 | 07-15-09 | 08-07-09 | 08-26-09 | 09-18-09 | 09-25-09 | 09-30-09 | 10-19-09

SHEET 26 OF 65

FILE => 34E0014-segc-rwdt05.dgn

USERNAME => ttpierce DATE PLOTTED => 12-DEC-2009 TIME PLOTTED => 09:48

DIST	COUNTY	ROUTE	POST MILES TOTAL PROJECT	SHEET No	TOTAL SHEETS
04	SF	101	8.2/9.2	595	654

REGISTERED CIVIL ENGINEER — 10/30/09 DATE

12-14-09
PLANS APPROVAL DATE

REGISTERED PROFESSIONAL ENGINEER — LAWRENCE M. JOHNSON — No. C 44006 — Exp. 6-30-11 — CIVIL — STATE OF CALIFORNIA

The State of California or its officers or agents shall not be responsible for the accuracy or completeness of electronic copies of this plan sheet.

Arup PB Joint Venture
303 Second Street, Suite 700N
San Francisco, CA 94107

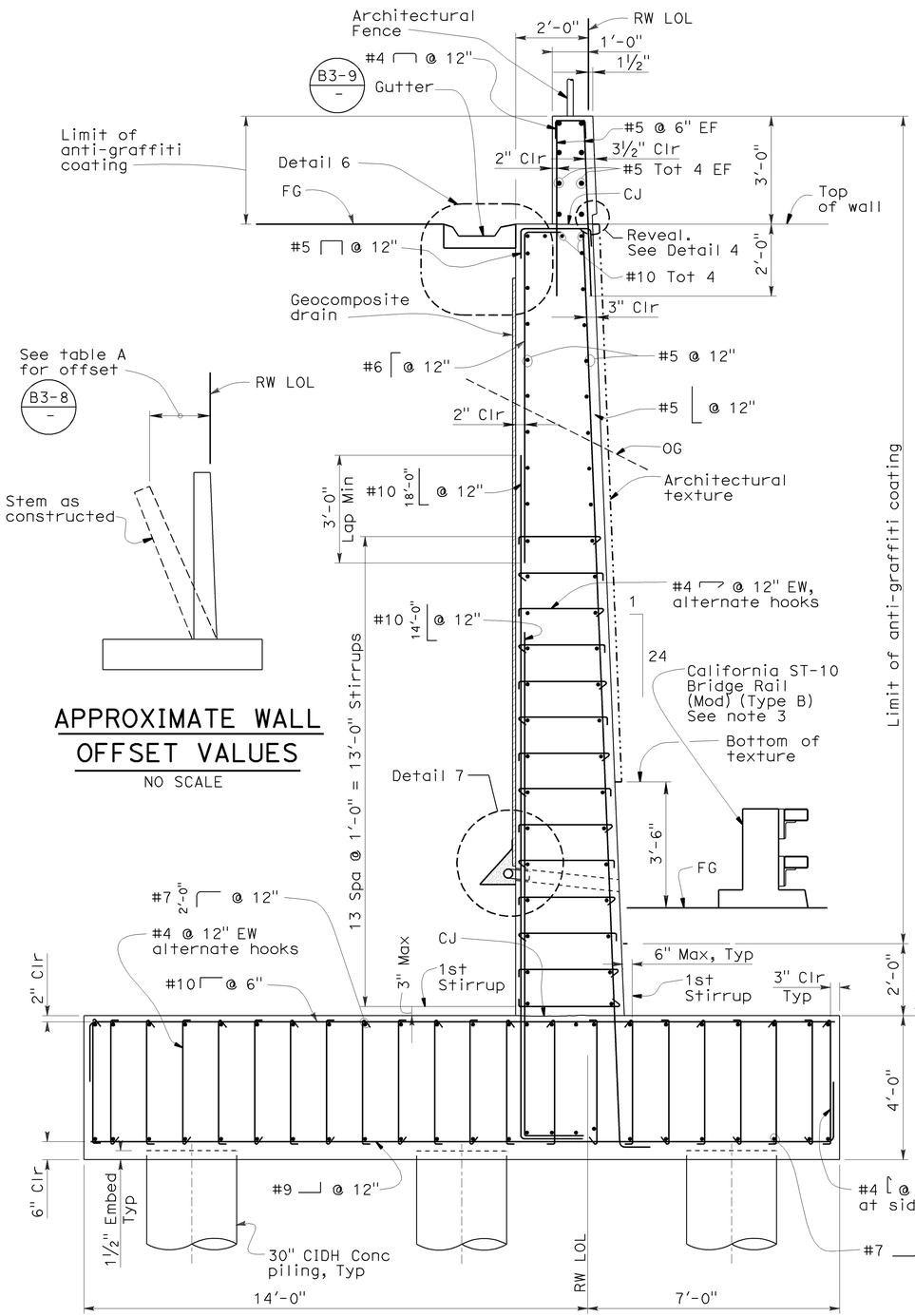

APPROXIMATE WALL OFFSET VALUES

NO SCALE

SECTION P-P

SCALE: ½" = 1'-0"

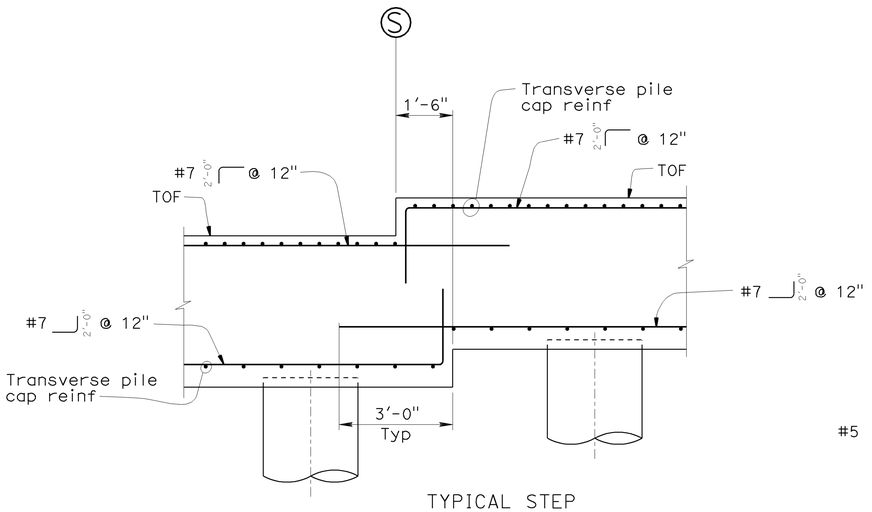

TYPICAL STEP

SECTION Q-Q

SCALE: ½= 1'-0"

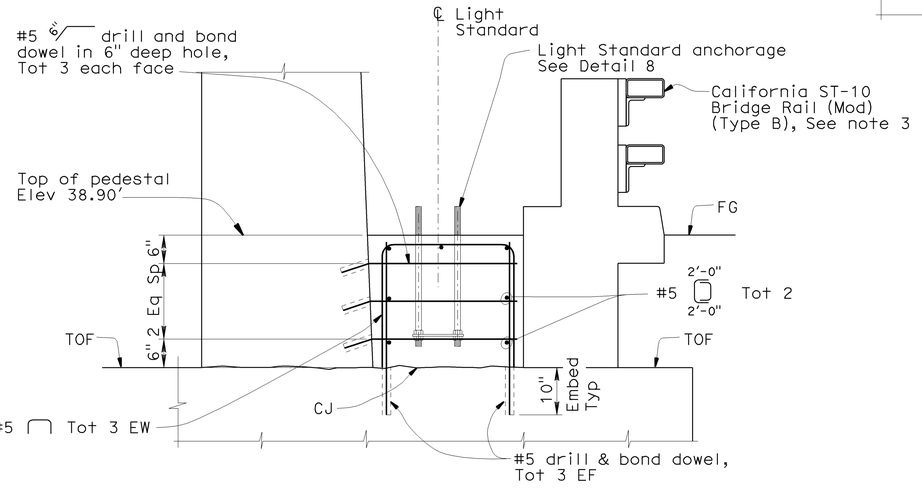

SECTION R-R

SCALE: ¾= 1'-0"

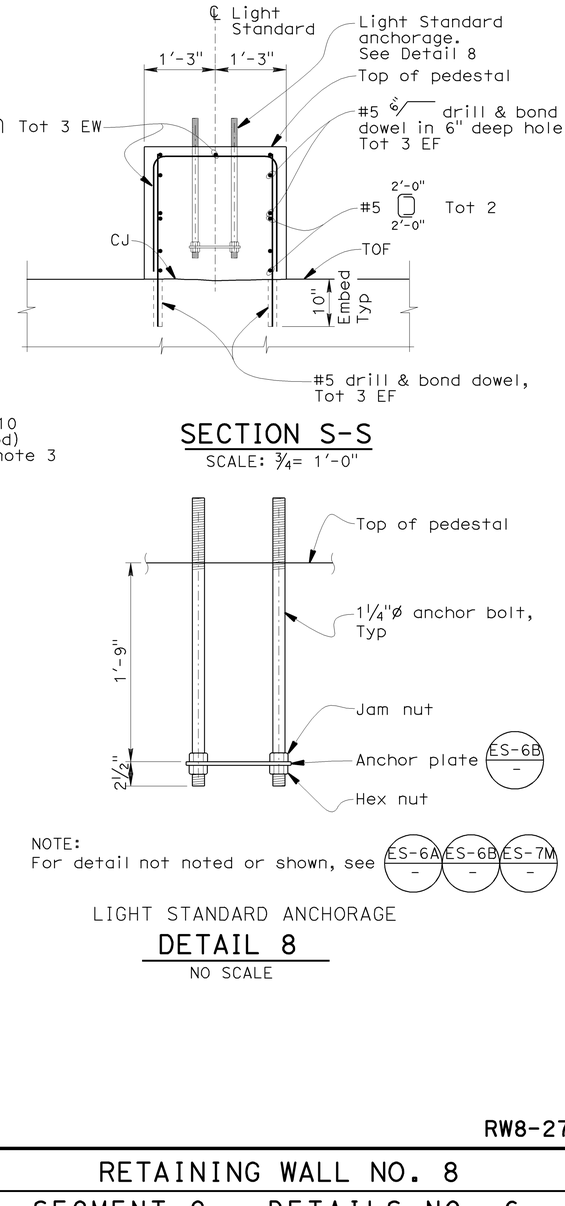

SECTION S-S

SCALE: ¾= 1'-0"

NOTE:
For detail not noted or shown, see ES-6A ES-6B ES-7M

LIGHT STANDARD ANCHORAGE

DETAIL 8

NO SCALE

NOTES:

1. For Detail 6 and Detail 7, see sheet RW8-26.
2. For Detail 4, see sheet RW8-24.
3. For California ST-10 Bridge Rail (Mod) (Type B), see sheets RW8-49 and RW8-50.

RW8-27

	BY	CHECKED
DESIGN	L. JOHNSON	S. SINGH
DETAILS	J. FUSCO	S. SINGH
QUANTITIES	L. JOHNSON	S. SINGH

PREPARED FOR THE STATE OF CALIFORNIA DEPARTMENT OF TRANSPORTATION

R. DONIKIAN
PROJECT ENGINEER

CU 04
EA 163741

BRIDGE NO.	34E0014
POST MILE	8.8

RETAINING WALL NO. 8
SEGMENT C - DETAILS NO. 6

DESIGN DETAIL SHEET (ENGLISH) (REV. 2/25/05)

ORIGINAL SCALE IN INCHES FOR REDUCED PLANS 0 1 2 3

DISREGARD PRINTS BEARING EARLIER REVISION DATES →

REVISION DATES (PRELIMINARY STAGE ONLY): 6-01-09 | 07-15-09 | 08-07-09 | 08-26-09 | 09-11-09 | 09-18-09 | 09-25-09 | 09-30-09 | 10-19-09

SHEET 27 OF 65

FILE => 34E0014-segc-rwdt06.dgn

USERNAME => ttpierce DATE PLOTTED => 12-DEC-2009 TIME PLOTTED => 09:48

DIST	COUNTY	ROUTE	POST MILES TOTAL PROJECT	SHEET No	TOTAL SHEETS
04	SF	101	8.2/9.2	596	654

09/30/09
REGISTERED CIVIL ENGINEER DATE

12-14-09
PLANS APPROVAL DATE

The State of California or its officers or agents shall not be responsible for the accuracy or completeness of electronic copies of this plan sheet.

REGISTERED PROFESSIONAL ENGINEER — LAWRENCE M. JOHNSON — No. C 44006 — Exp. 6-30-11 — CIVIL — STATE OF CALIFORNIA

Arup PB Joint Venture
303 Second Street, Suite 700N
San Francisco, CA 94107

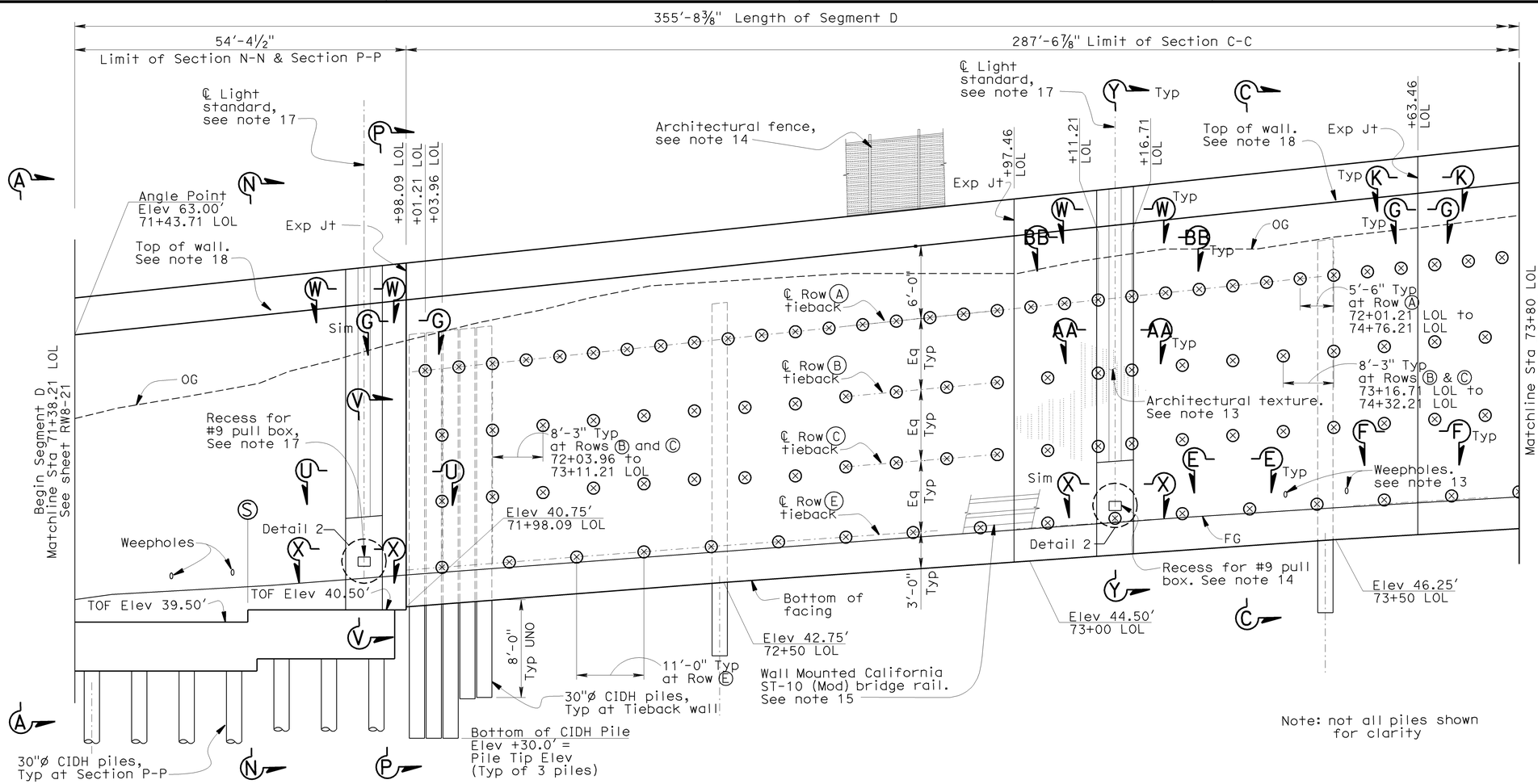

Note: not all piles shown for clarity

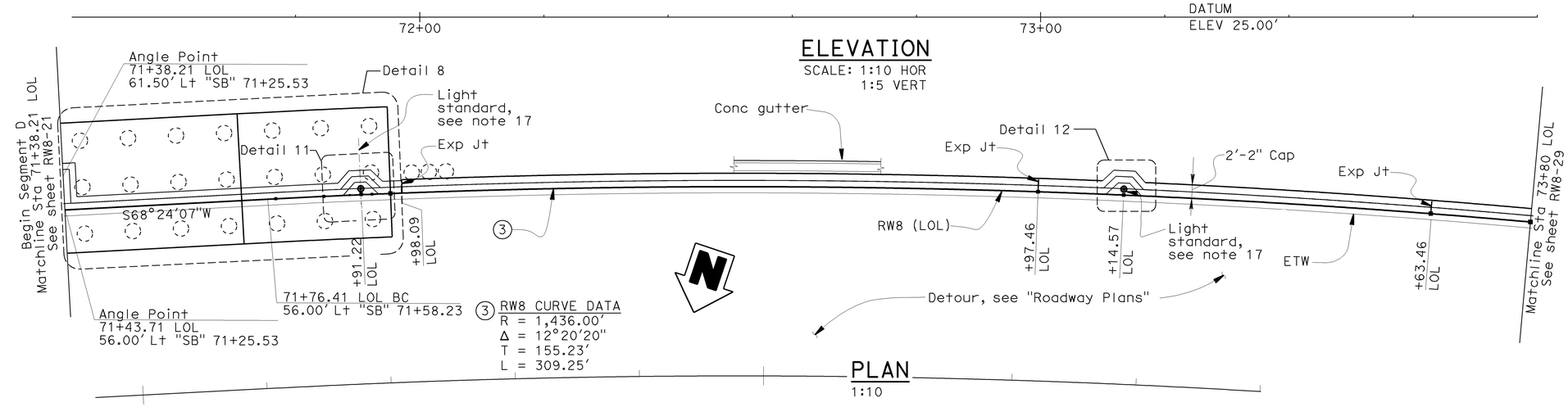

NOTES:

1. For General Notes, see sheet RW8-6.
2. For tieback anchor details, see sheet RW8-46. For tieback design forces, see Tables on sheet RW8-32. For Permanent Tieback Easement, see sheet RW8-1.
3. For Section A-A, see sheet RW8-29.
4. For Section C-C, see sheet RW8-30.
5. For Section E-E thru G-G, see sheet RW8-31.
6. For Section K-K and Detail 2, see sheet RW8-32.
7. For Detail 8, see sheet RW8-34.
8. For Section N-N and Section P-P, see sheet RW8-35.
9. For Detail 11, see sheet RW8-36.
10. For Sections U-U thru X-X, and Detail 12, see sheet RW8-37.
11. For Section Y-Y and Section AA-AA, see sheet RW8-38.
12. For Section BB-BB, see sheet RW8-39.
13. For Architectural Texture see sheets RW8-AT1 thru RW8-AT6.
14. For architectural fence details see sheets RW8-AT1 thru RW8-AT6.
15. For Wall Mounted California ST-10 (Mod), see sheet RW8-48.
16. For geocomposite drain system details, see sheet RW8-47.
17. For light standards, conduit, and pull boxes, see "Roadway Plans".
18. Top of wall elevation is straight grade from 71+43.71 LOL TO 74+85.66 LOL.

LEGEND:

⊗ Indicates one tieback

RW8-28

DESIGN	BY L. JOHNSON	CHECKED S. SINGH	PREPARED FOR THE STATE OF CALIFORNIA DEPARTMENT OF TRANSPORTATION	R. DONIKIAN PROJECT ENGINEER	BRIDGE NO. 34E0014
DETAILS	BY L. REYES	CHECKED S. SINGH			POST MILE 8.8
QUANTITIES	BY L. JOHNSON	CHECKED S. SINGH			

RETAINING WALL NO. 8

SEGMENT D - STRUCTURE PLAN NO. 1

DESIGN DETAIL SHEET (ENGLISH) (REV. 2/25/05)

ORIGINAL SCALE IN INCHES FOR REDUCED PLANS 0 1 2 3

CU 04
EA 163741

DISREGARD PRINTS BEARING EARLIER REVISION DATES →

REVISION DATES (PRELIMINARY STAGE ONLY): 6-04-09 | 07-15-09 | 08-07-09 | 08-26-09 | 09-11-09 | 09-18-09 | 09-25-09 | 09-30-09

SHEET 28 OF 65

FILE => 34E0014-segd-c-sp01.dgn

USERNAME => trpierce DATE PLOTTED => 12-DEC-2009 TIME PLOTTED => 09:48

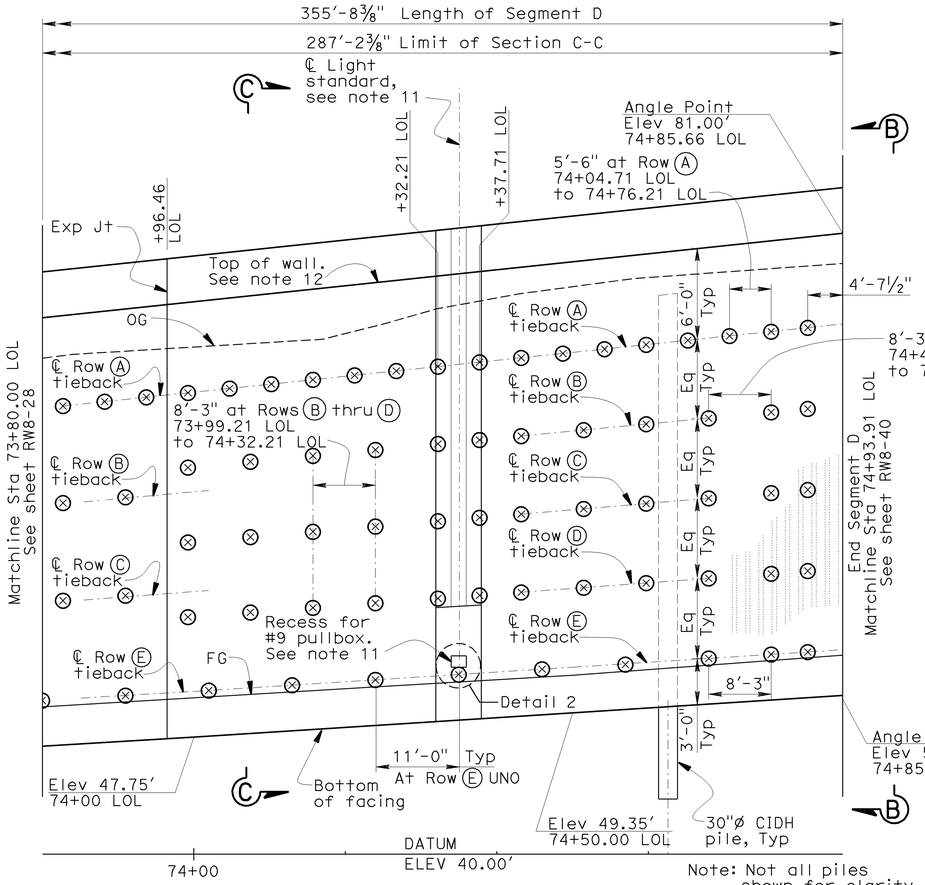

ELEVATION

SCALE: 1:10 HOR
1:5 VERT

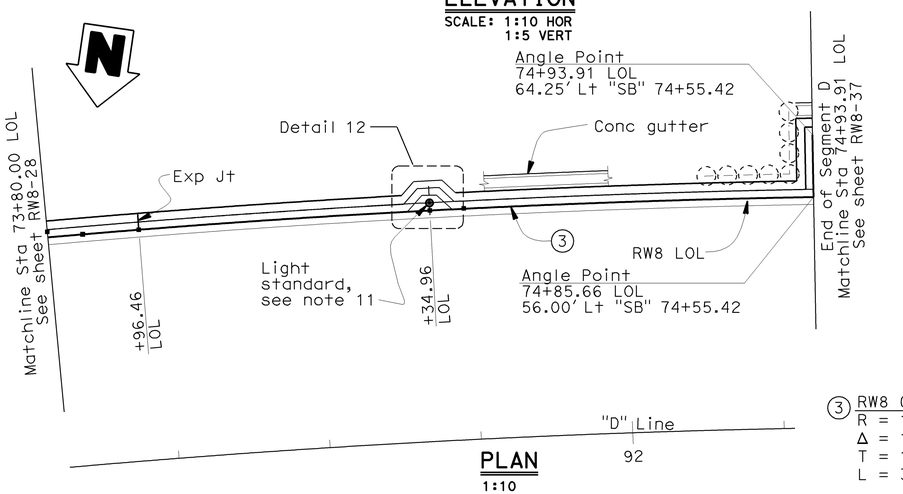

PLAN

1:10

3 RW8 CURVE DATA
R = 1,436.00'
Δ = 12°20'20"
T = 155.225'
L = 309.250'

NOTES:

1. For General Notes, see sheet RW8-6.
2. For tieback anchor details, see sheet RW8-46. For tieback design forces, see RW8-32. For permanent tieback easement, see sheet RW8-1.
3. For Section C-C and Section D-D, see sheet RW8-30.
4. For Section H-H, see sheet RW8-31.
5. For Section J-J and Section L-L, and Detail 2, see sheet RW8-32.
6. For Section R-R and Section S-S, see sheet RW8-36.
7. For Detail 12, see sheet RW8-37.
8. For Architectural Texture sheets RW8-AT1 thru RW8-AT6.
9. For architectural fence details see sheets RW8-AT1 thru RW8-AT6.
10. For Wall Mounted California ST-10 (Mod), see sheet RW8-48.
11. For light standards, conduit, and pull boxes, see "Roadway Plans."
12. Top of wall elevation is straight grade from 71+43.71 LOL to 74+85.66 LOL.
13. For California ST-10 Bridge Rail (Mod) (Type B). See sheets RW8-49 and RW8-50.

LEGEND:

⊗ Indicates one tieback

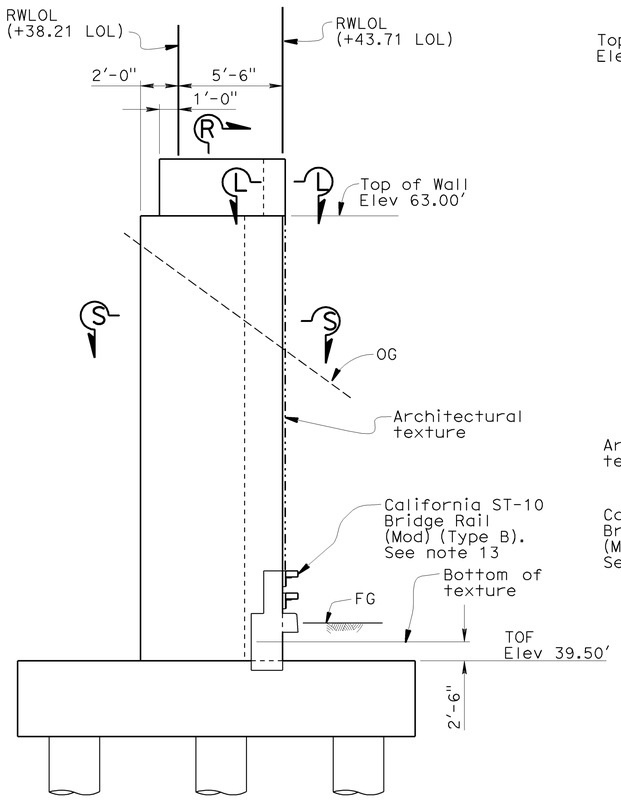

R ELEVATION

SECTION A-A

SCALE: 1/4" = 1'-0"

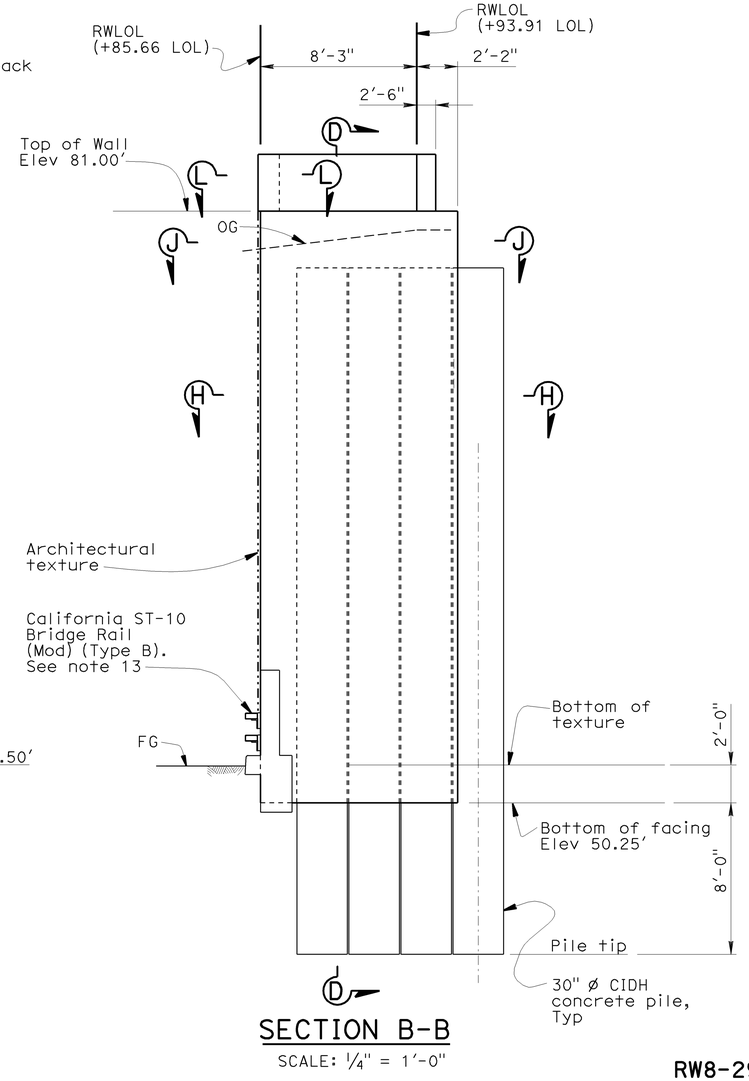

D

SECTION B-B

SCALE: 1/4" = 1'-0"

RW8-29

DIST	COUNTY	ROUTE	POST MILES TOTAL PROJECT	SHEET No	TOTAL SHEETS
04	SF	101	8.2/9.2	597	654

09/30/09
REGISTERED CIVIL ENGINEER DATE

12-14-09
PLANS APPROVAL DATE

REGISTERED PROFESSIONAL ENGINEER — LAWRENCE M. JOHNSON — No. C 44006 — Exp. 6-30-11 — CIVIL — STATE OF CALIFORNIA

The State of California or its officers or agents shall not be responsible for the accuracy or completeness of electronic copies of this plan sheet.

Arup PB Joint Venture
303 Second Street, Suite 700N
San Francisco, CA 94107

DESIGN	BY L. JOHNSON	CHECKED S. SINGH	PREPARED FOR THE STATE OF CALIFORNIA DEPARTMENT OF TRANSPORTATION	R. DONIKIAN PROJECT ENGINEER	BRIDGE NO. 34E0014
DETAILS	BY L. REYES	CHECKED S. SINGH			POST MILE 8.8
QUANTITIES	BY L. JOHNSON	CHECKED S. SINGH			

RETAINING WALL NO. 8

SEGMENT D - STRUCTURE PLAN NO. 2

DESIGN DETAIL SHEET (ENGLISH) (REV. 2/25/05)

ORIGINAL SCALE IN INCHES FOR REDUCED PLANS 0 1 2 3

CU 04
EA 163741

DISREGARD PRINTS BEARING EARLIER REVISION DATES

REVISION DATES (PRELIMINARY STAGE ONLY): 6-01-09 | 07-15-09 | 08-07-09 | 08-26-09 | 09-11-09 | 09-18-09 | 09-25-09 | 09-30-09

SHEET 29 OF 65

FILE => 34E0014-segd-c-sp02.dgn

USERNAME => ttpierce DATE PLOTTED => 12-DEC-2009 TIME PLOTTED => 09:48

DIST	COUNTY	ROUTE	POST MILES TOTAL PROJECT	SHEET No	TOTAL SHEETS
04	SF	101	8.2/9.2	598	654

REGISTERED CIVIL ENGINEER — 10/30/09 DATE

12-14-09
PLANS APPROVAL DATE

REGISTERED PROFESSIONAL ENGINEER — LAWRENCE M. JOHNSON — No. C 44006 — Exp. 6-30-11 — CIVIL — STATE OF CALIFORNIA

The State of California or its officers or agents shall not be responsible for the accuracy or completeness of electronic copies of this plan sheet.

Arup PB Joint Venture
303 Second Street, Suite 700N
San Francisco, CA 94107

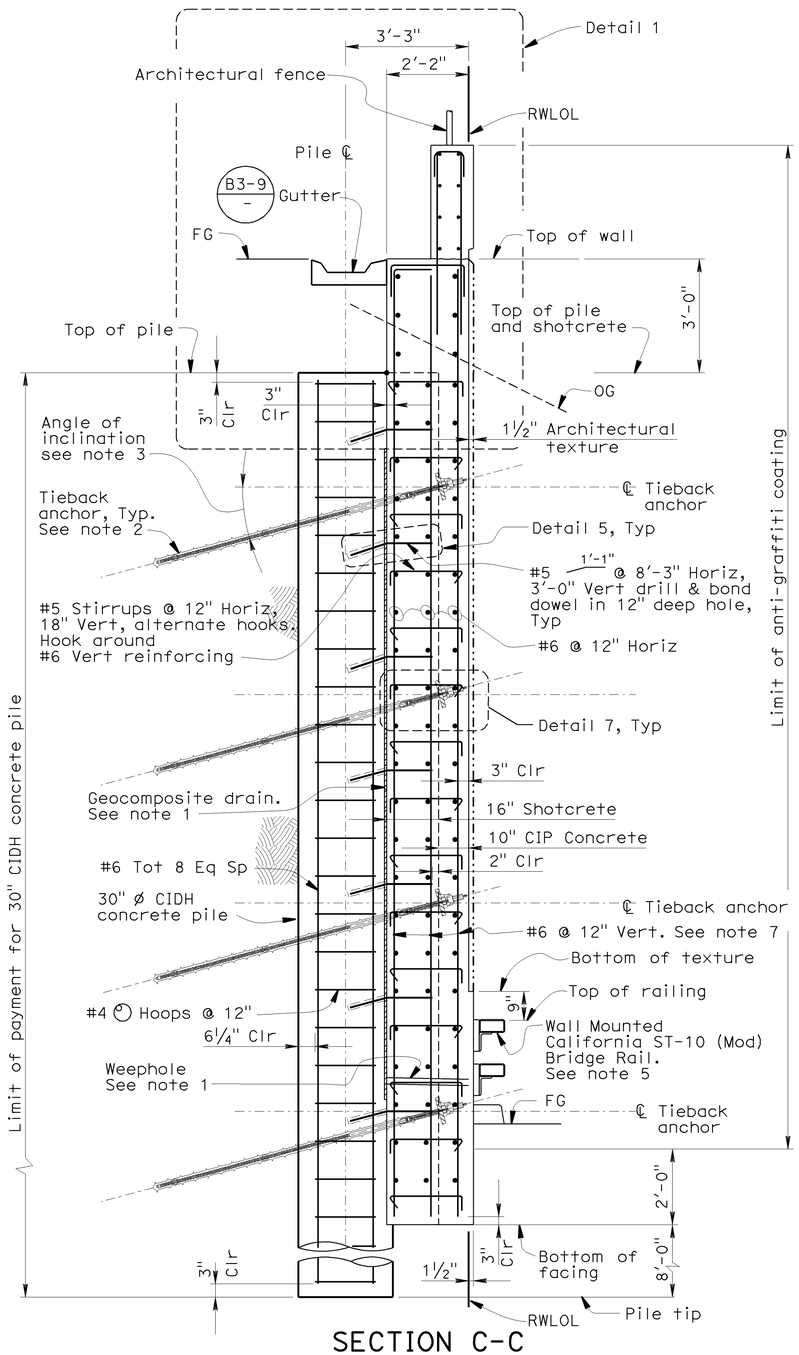

SECTION C-C
SCALE: ½" = 1'-0"

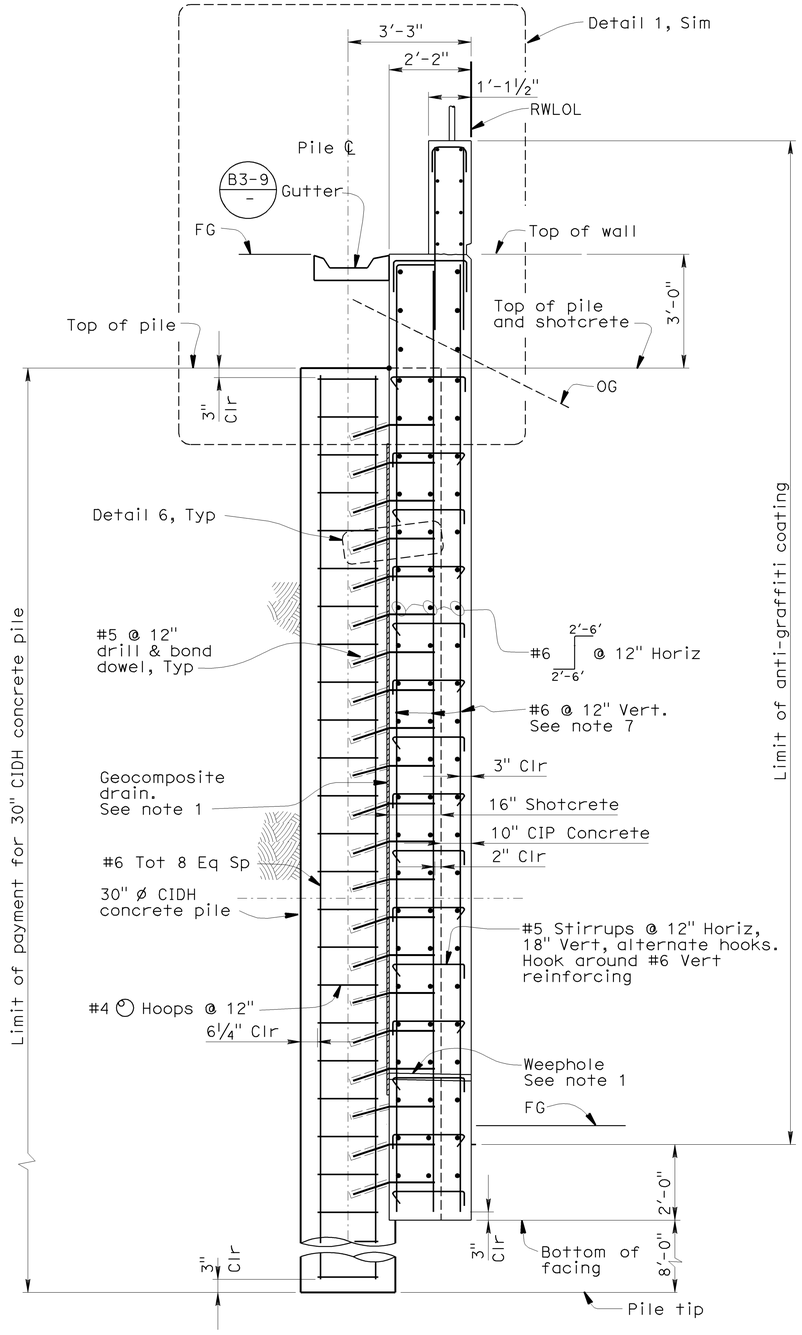

SECTION D-D
SCALE: ½" = 1'-0"

NOTES:

1. For Geocomposite drain system details, see sheet RW8-47.
2. For Tieback anchor details, see sheet RW8-46.
3. For tieback angle of inclination, see tables on sheet RW8-32.
4. For Details 5 thru 7, see sheet RW8-33.
5. For Wall Mounted California ST-10 (Mod), see sheet RW8-48.
6. For Detail 14, see sheet RW8-39.
7. #6 @ 12" Vert reinforcing at shotcrete shall be spliced using a "Service" level coupler or a 3'-0" Min lap splice.

DETAIL 1
SCALE: ¾" = 1'-0"

RW8-30

DESIGN	BY L. JOHNSON	CHECKED S. SINGH	PREPARED FOR THE STATE OF CALIFORNIA DEPARTMENT OF TRANSPORTATION	R. DONIKIAN PROJECT ENGINEER	BRIDGE NO. 34E0014
DETAILS	BY O. KURNOVSKAYA	CHECKED S. SINGH			POST MILE 8.8
QUANTITIES	BY L. JOHNSON	CHECKED S. SINGH			

RETAINING WALL NO. 8
SEGMENT D - DETAILS NO. 1

DESIGN DETAIL SHEET (ENGLISH) (REV. 2/25/05)

ORIGINAL SCALE IN INCHES FOR REDUCED PLANS 0 1 2 3

CU 04
EA 163741

DISREGARD PRINTS BEARING EARLIER REVISION DATES →

REVISION DATES (PRELIMINARY STAGE ONLY): 6-01-09 | 07-15-09 | 08-07-09 | 08-26-09 | 09-11-09 | 09-18-09 | 09-25-09 | 09-30-09 | 10-30-09

SHEET 30 OF 65

FILE => 34E0014-segd-rwdt01.dgn

USERNAME => ttiplerce DATE PLOTTED => 12-DEC-2009 TIME PLOTTED => 09:48

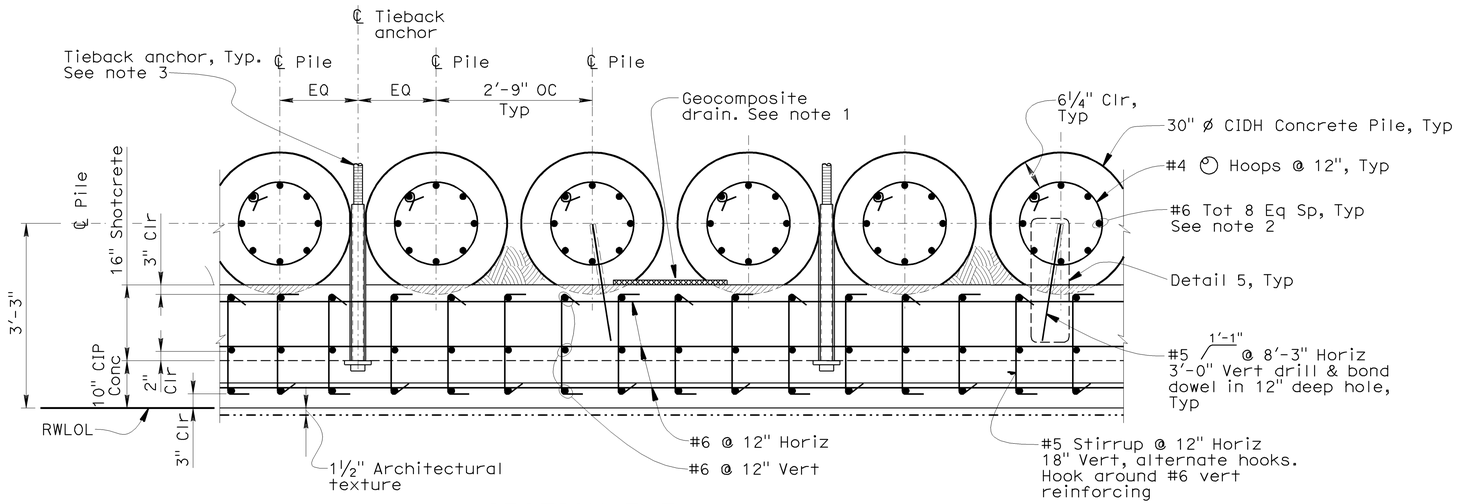

SECTION E-E
SCALE: ¾" = 1'-0"

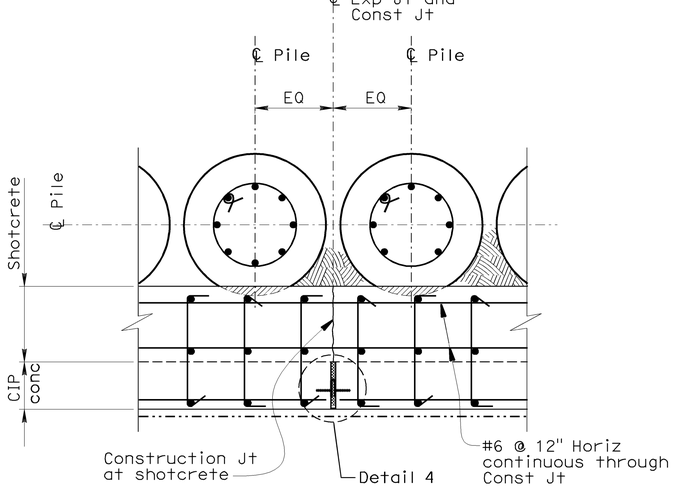

NOTE:
For detail not noted or shown, see Section E-E.

SECTION F-F
SCALE: ¾" = 1'-0"

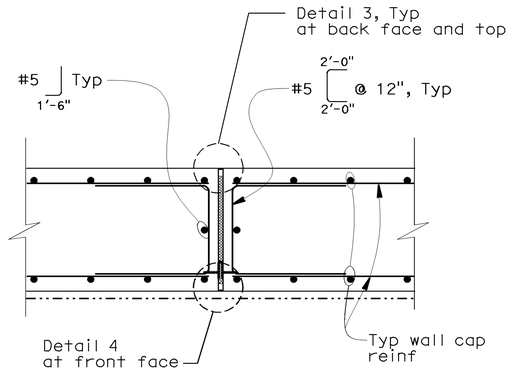

SECTION G-G
SCALE: ¾" = 1'-0"

NOTES:

1. For geocomposite drain system details, see sheet RW8-47.
2. The #6 Vert CIDH pile reinforcing may be lap spliced at the Contractor's option. The minimum lap length shall be 3'-6".
3. For tieback anchor details, see sheet RW8-46.
4. For Details 3 thru 6, see sheet RW8-33.
5. For Detail 15, see sheet RW8-39.

LEGEND:

Remove portion of concrete at CIDH piles.

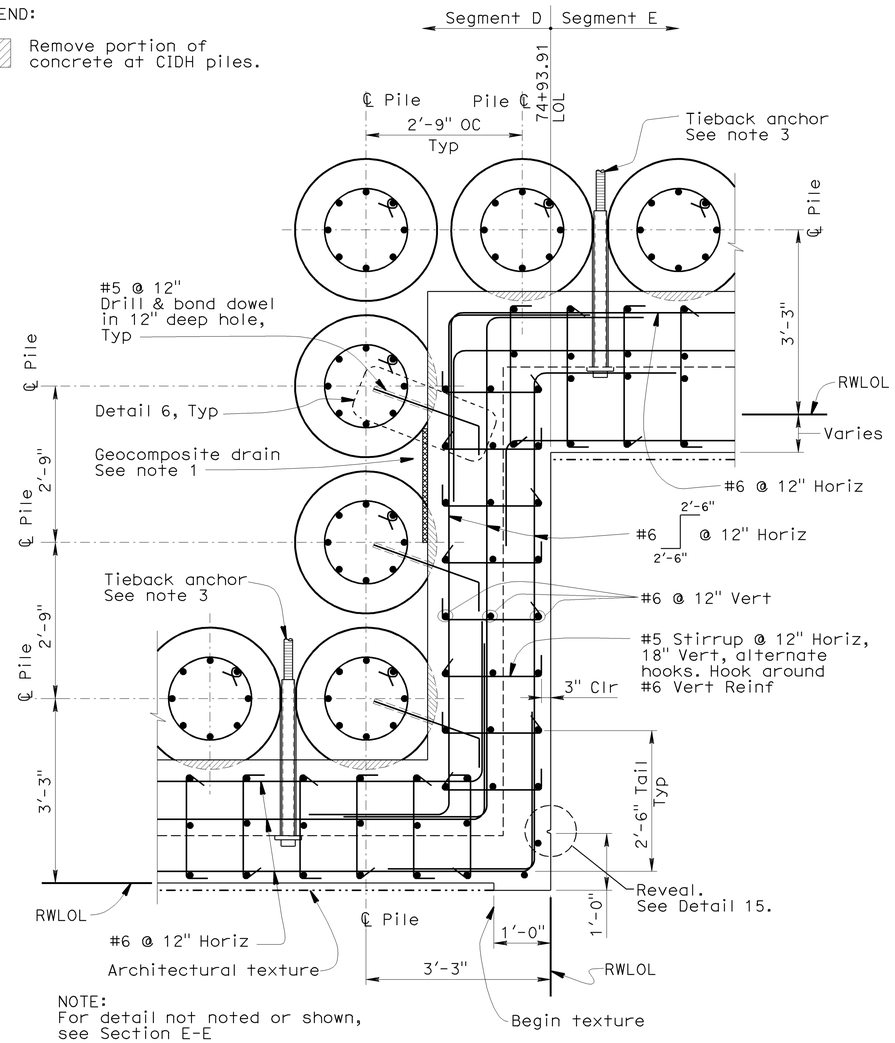

NOTE:
For detail not noted or shown, see Section E-E

SECTION H-H
SCALE: ¾" = 1'-0"

DIST	COUNTY	ROUTE	POST MILES TOTAL PROJECT	SHEET No	TOTAL SHEETS
04	SF	101	8.2/9.2	599	654

09/30/09
REGISTERED CIVIL ENGINEER DATE

12-14-09
PLANS APPROVAL DATE

REGISTERED PROFESSIONAL ENGINEER — LAWRENCE M. JOHNSON No. C 44006 Exp. 6-30-11 CIVIL — STATE OF CALIFORNIA

The State of California or its officers or agents shall not be responsible for the accuracy or completeness of electronic copies of this plan sheet.

Arup PB Joint Venture
303 Second Street, Suite 700N
San Francisco, CA 94107

RW8-31

DESIGN	BY L. JOHNSON	CHECKED S. SINGH	PREPARED FOR THE STATE OF CALIFORNIA DEPARTMENT OF TRANSPORTATION	R. DONIKIAN PROJECT ENGINEER	BRIDGE NO. 34E0014
DETAILS	BY L. REYES	CHECKED S. SINGH			POST MILE 8.8
QUANTITIES	BY L. JOHNSON	CHECKED S. SINGH		CU 04 EA 163741	

RETAINING WALL NO. 8
SEGMENT D - DETAILS NO. 2

DESIGN DETAIL SHEET (ENGLISH) (REV. 2/25/05)

ORIGINAL SCALE IN INCHES FOR REDUCED PLANS 0 1 2 3

DISREGARD PRINTS BEARING EARLIER REVISION DATES →

REVISION DATES (PRELIMINARY STAGE ONLY): 6-01-09 | 07-15-09 | 08-07-09 | 08-26-09 | 09-11-09 | 09-18-09 | 09-25-09 | 09-30-09

SHEET 31 OF 65

FILE => 34E0014-segd-rwdt02.dgn

USERNAME = rrpierce DATE PLOTTED => 12-DEC-2009 TIME PLOTTED => 09:48

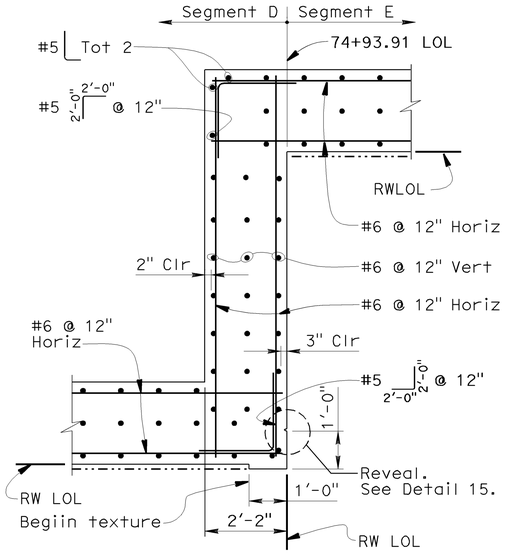

SECTION J-J
SCALE: ½" = 1'-0"

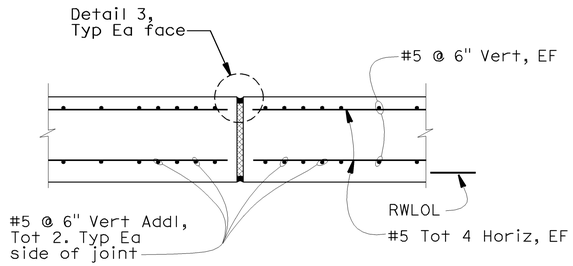

SECTION K-K
SCALE: 1" = 1'-0"

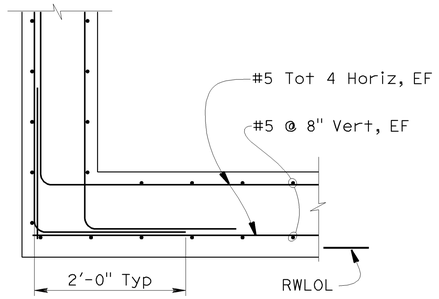

SECTION L-L
SCALE: 1" = 1'-0"

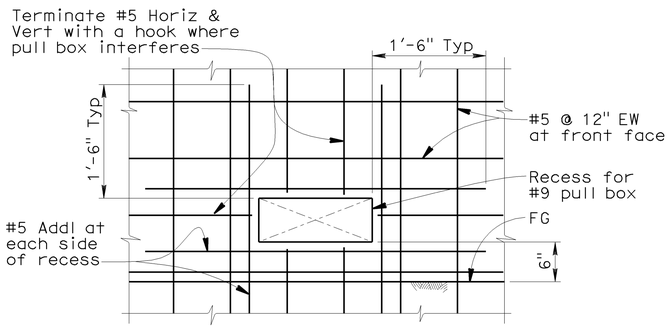

REINFORCING AT #9 PULL BOX

DETAIL 2
NO SCALE

DIST	COUNTY	ROUTE	POST MILES TOTAL PROJECT	SHEET No	TOTAL SHEETS
04	SF	101	8.2/9.2	600	654

09/30/09
REGISTERED CIVIL ENGINEER DATE

12-14-09
PLANS APPROVAL DATE

REGISTERED PROFESSIONAL ENGINEER
LAWRENCE M. JOHNSON
No. C 44006
Exp. 6-30-11
CIVIL
STATE OF CALIFORNIA

The State of California or its officers or agents shall not be responsible for the accuracy or completeness of electronic copies of this plan sheet.

Arup PB Joint Venture
303 Second Street, Suite 700N
San Francisco, CA 94107

NOTES:

1. For Detail 3, see sheet RW8-33.

2. For Detail 15, see sheet RW8-39.

Segment D Tieback Forces and Inclination			
Sta 72+03.96 LOL to Sta 73+35.96 LOL			
Row	Design Force (T)	Unbonded Length	Angle of Inclination
A	105 kips	26'-0"	25°
B	100 kips	20'-0"	20°
C	100 kips	20'-0"	20°
E	115 kips	20'-0"	20°

Segment D Tieback Forces and Inclination			
Sta 73+44.21 LOL to Sta 73+99.21 LOL			
Row	Design Force (T)	Unbonded Length	Angle of Inclination
A	100 kips	31'-0"	25°
B	110 kips	20'-0"	20°
C	110 kips	20'-0"	20°
E	120 kips	20'-0"	20°

Segment D Tieback Forces and Inclination			
Sta 74+01.96 LOL to End of Segment D			
Row	Design Force (T)	Unbonded Length	Angle of Inclination
A	90 kips	37'-0"	25°
B	90 kips	30'-0"	20°
C	90 kips	20'-0"	20°
D	90 kips	20'-0"	20°
E	110 kips	20'-0"	20°

	BY	CHECKED
DESIGN	L. JOHNSON	S. SINGH
DETAILS	L. REYES	S. SINGH
QUANTITIES	L. JOHNSON	S. SINGH

PREPARED FOR THE
STATE OF CALIFORNIA
DEPARTMENT OF TRANSPORTATION

R. DONIKIAN
PROJECT ENGINEER

CU 04
EA 163741

BRIDGE NO. 34E0014
POST MILE 8.8

RETAINING WALL NO. 8
SEGMENT D - DETAILS NO. 3

DESIGN DETAIL SHEET (ENGLISH) (REV. 2/25/05)

ORIGINAL SCALE IN INCHES FOR REDUCED PLANS 0 1 2 3

DISREGARD PRINTS BEARING EARLIER REVISION DATES

REVISION DATES (PRELIMINARY STAGE ONLY): 6-01-09 | 07-15-09 | 08-07-09 | 08-26-09 | 09-18-09 | 09-25-09 | 09-30-09

SHEET 32 OF 65

FILE => 34E0014-segd-rwdt03.dgn

USERNAME => ttpierce DATE PLOTTED => 12-DEC-2009 TIME PLOTTED => 09:49

DIST	COUNTY	ROUTE	POST MILES TOTAL PROJECT	SHEET No	TOTAL SHEETS
04	SF	101	8.2/9.2	601	654

09/30/09
REGISTERED CIVIL ENGINEER DATE

12-14-09
PLANS APPROVAL DATE

REGISTERED PROFESSIONAL ENGINEER
LAWRENCE M. JOHNSON
No. C 44006
Exp. 6-30-11
CIVIL
STATE OF CALIFORNIA

The State of California or its officers or agents shall not be responsible for the accuracy or completeness of electronic copies of this plan sheet.

Arup PB Joint Venture
303 Second Street, Suite 700N
San Francisco, CA 94107

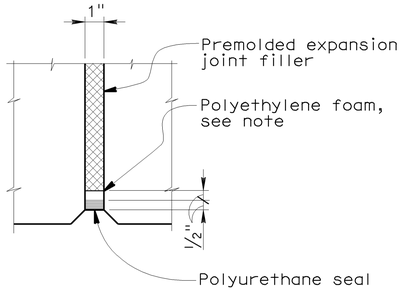

NOTE:
Top of polyethylene foam to have glazed surface and crown. Uncompressed width to be 1/8" greater than actual joint width.

DETAIL 3
NO SCALE

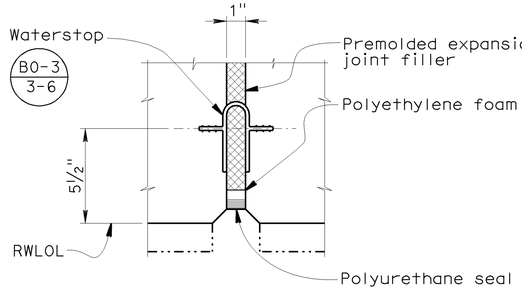

NOTE:
See Detail 3 for detail not noted or shown.

DETAIL 4
NO SCALE

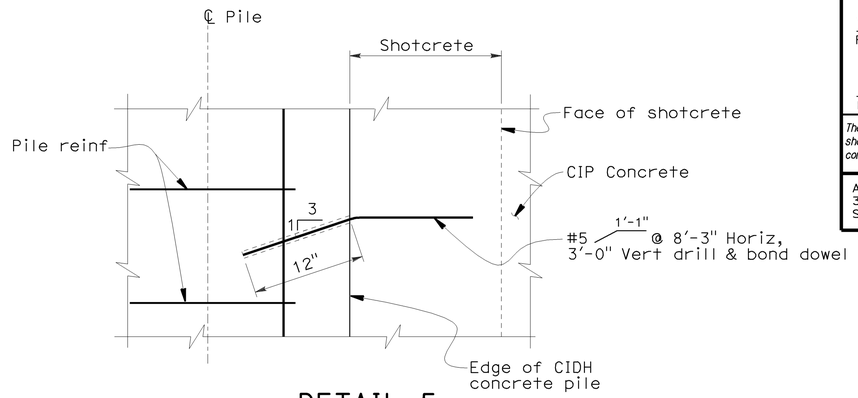

DETAIL 5
NO SCALE

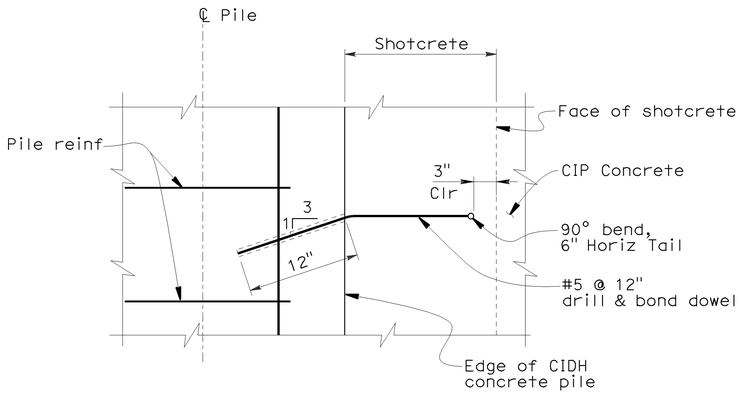

DETAIL 6
NO SCALE

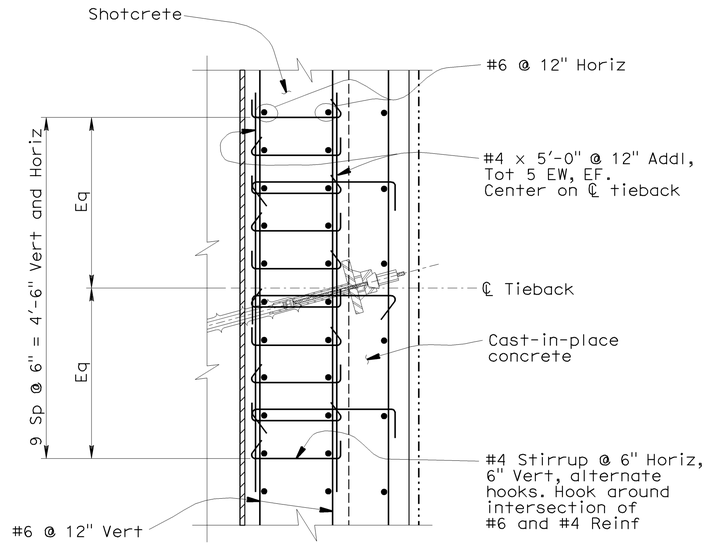

ADDITIONAL REINFORCING AT TIEBACK ANCHORAGE (TYPICAL)

DETAIL 7
NO SCALE

RW8-33

DESIGN	BY L. JOHNSON	CHECKED S. SINGH	PREPARED FOR THE STATE OF CALIFORNIA DEPARTMENT OF TRANSPORTATION	R. DONIKIAN PROJECT ENGINEER	BRIDGE NO. 34E0014	RETAINING WALL NO. 8	
DETAILS	BY J. FUSCO	CHECKED S. SINGH			POST MILE 8.8	SEGMENT D - DETAILS NO. 4	
QUANTITIES	BY L. JOHNSON	CHECKED S. SINGH					

DESIGN DETAIL SHEET (ENGLISH) (REV. 2/25/05)

ORIGINAL SCALE IN INCHES FOR REDUCED PLANS 0 1 2 3

CU 04
EA 163741

DISREGARD PRINTS BEARING EARLIER REVISION DATES →

REVISION DATES (PRELIMINARY STAGE ONLY): 6-01-09 | 07-15-09 | 08-07-09 | 08-26-09 | 09-11-09 | 09-18-09 | 09-25-09 | 09-30-09

SHEET 33 OF 65

FILE => 34E0014-segd-rwdt04.dgn

USERNAME => ttpierce DATE PLOTTED => 12-DEC-2009 TIME PLOTTED => 09:49

DIST	COUNTY	ROUTE	POST MILES TOTAL PROJECT	SHEET No	TOTAL SHEETS
04	SF	101	8.2/9.2	602	654

REGISTERED CIVIL ENGINEER — 09/30/09 DATE

12-14-09
PLANS APPROVAL DATE

REGISTERED PROFESSIONAL ENGINEER — LAWRENCE M. JOHNSON — No. C 44006 — Exp. 6-30-11 — CIVIL — STATE OF CALIFORNIA

The State of California or its officers or agents shall not be responsible for the accuracy or completeness of electronic copies of this plan sheet.

Arup PB Joint Venture
303 Second Street, Suite 700N
San Francisco, CA 94107

PILE DATA TABLE - SEGMENT D CANTILEVER RETAINING WALL

Location	Pile Type	Nominal Resistance (kips) Compression	Nominal Resistance (kips) Tension	Design Tip Elevations (ft)	Specified Tip Elevation (ft)	Nominal Driving Resistance (kips)
Section 1	30 inch CIDH Conc	385	0	+0.5 (a) N/A (b) +15.0 (c) +8.5 (d)	+0.5	N/A
Section 2	30 inch CIDH Conc	385	0	+1.5 (a) N/A (b) +16.0 (c) +9.5 (d)	+1.5	N/A

NOTES:
1. Design tip elevations are controlled by the following demands: (a) Compression; (b)Tension; (c) Settlement; (d) Lateral Loads.
2. The specified tip elevation shall not be raised above the design tip elevation for tension load, lateral load and tolerable settlement.

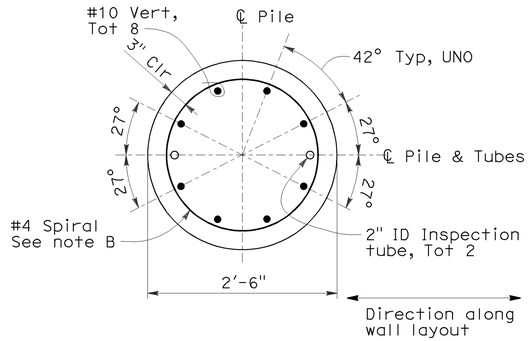

SECTION M-M
SCALE: 1" = 1'-0"

NOTES:
1. For Section T-T, see sheet RW8-36.
2. For Detail 11, see sheet RW8-36.

PILE NOTES:

A. Reinforced Concrete: f'c = 4,000 psi
fy = 60,000 psi

B. Lapped splices in spiral pile reinforcement shall be lapped 80 bar diameters mininum. Spiral pile reinforcement at splices and at ends shall be terminated by 135° hook with a 6" tail hooked around a longitudinal bar.

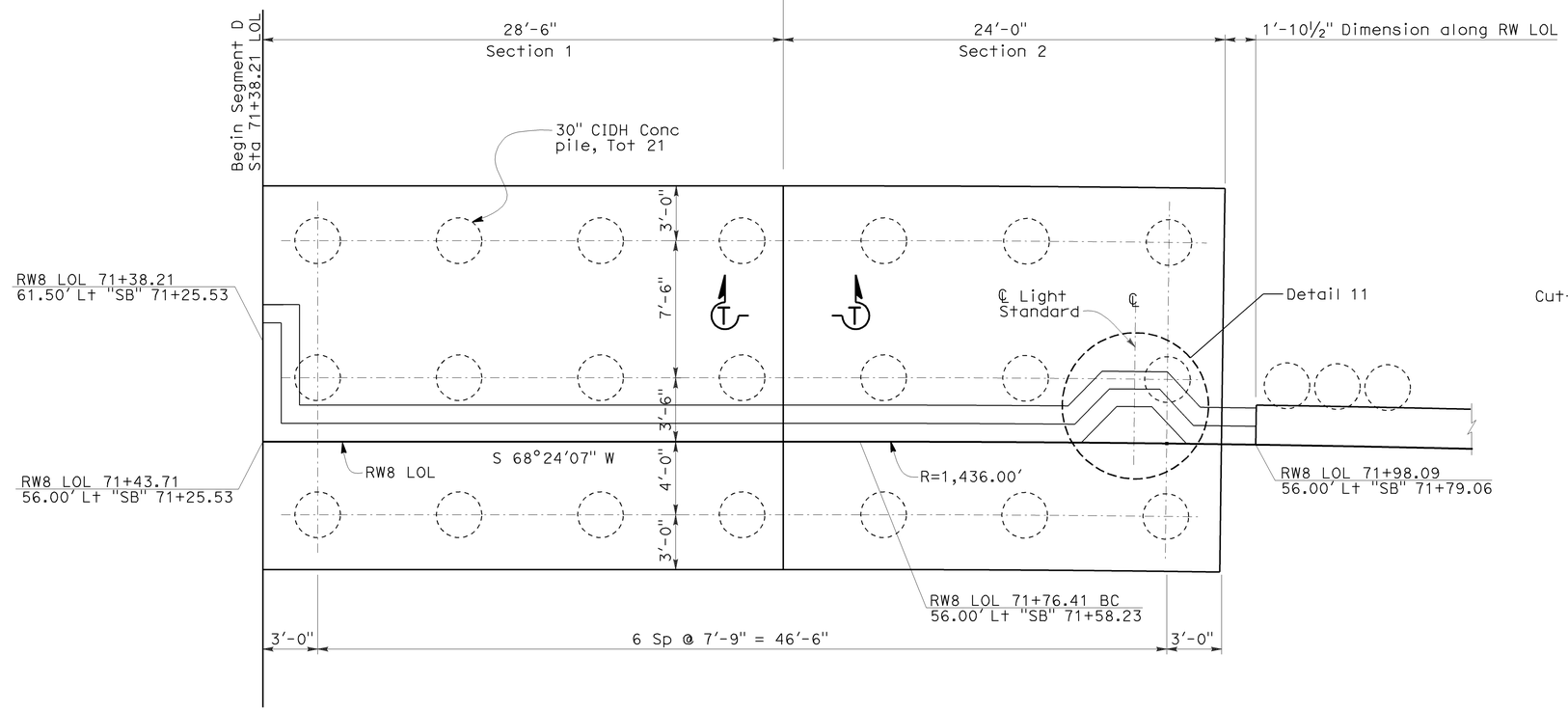

PLAN AT SEGMENT D CANTILEVER RETAINING WALL

DETAIL 8
SCALE: ¼" = 1'-0"

30" CIDH CONCRETE PILE
SCALE: ½" = 1'-0"

RW8-34

DESIGN	BY	CHECKED
	L. JOHNSON	S. SINGH
DETAILS	BY	CHECKED
	E. CANTILLER	S. SINGH
QUANTITIES	BY	CHECKED
	L. JOHNSON	S. SINGH

PREPARED FOR THE STATE OF CALIFORNIA
DEPARTMENT OF TRANSPORTATION

R. DONIKIAN
PROJECT ENGINEER

BRIDGE NO.	RETAINING WALL NO. 8
34E0014	SEGMENT D - DETAILS NO. 5
POST MILE 8.8	

DESIGN DETAIL SHEET (ENGLISH) (REV. 2/25/05)

ORIGINAL SCALE IN INCHES FOR REDUCED PLANS 0 1 2 3

CU 04
EA 163741

DISREGARD PRINTS BEARING EARLIER REVISION DATES →

REVISION DATES (PRELIMINARY STAGE ONLY): 6-01-09 | 07-15-09 | 08-07-09 | 08-26-09 | 09-18-09 | 09-25-09 | 09-30-09

SHEET 34 OF 65

FILE => 34E0014-segd-rwdt05.dgn

USERNAME => prpierce DATE PLOTTED => 12-DEC-2009 TIME PLOTTED => 09:49

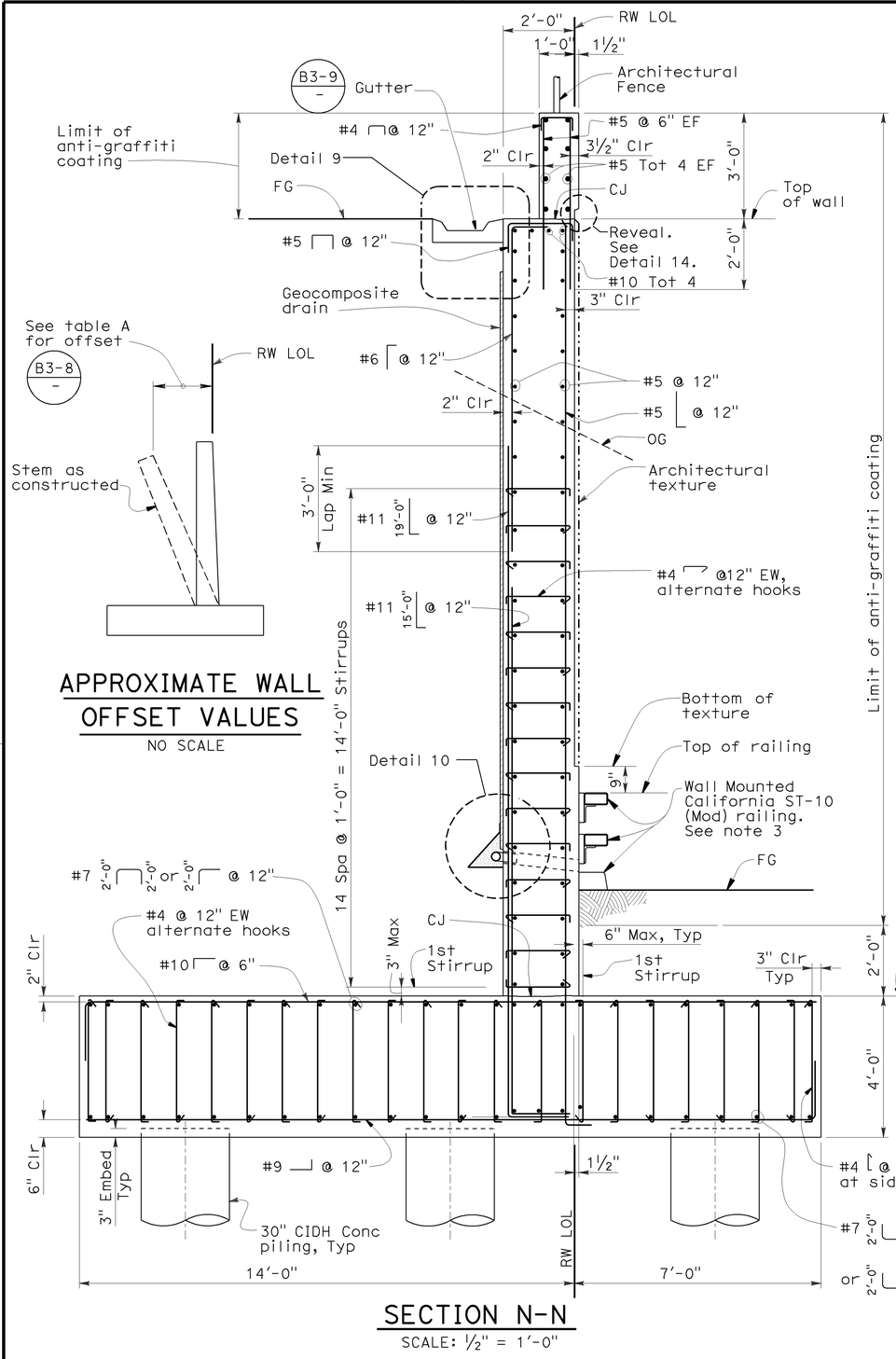

APPROXIMATE WALL OFFSET VALUES

NO SCALE

SECTION N-N

SCALE: ½" = 1'-0"

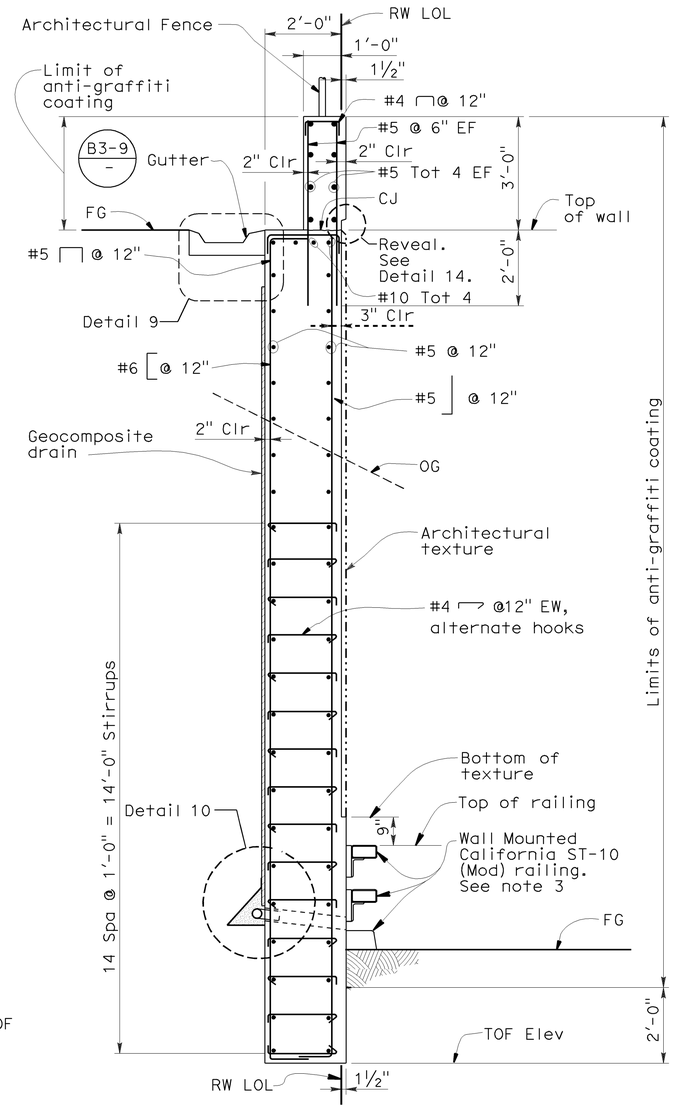

SECTION P-P

SCALE: ½" = 1'-0"

NOTES:

1. Place 4" Dia weepholes at 10'-0" max C-C and 5'-0" max from begin and end of wall. The exposed weepholes shall be located at 6"± above top of curb.
2. Geocomposite drain, cement treated base, and 3" Dia slotted plastic pipe continuous behind retaining wall. Cap ends of pipe. Provide "Tee" connection at 4" Dia weephole.
3. For Wall Mounted California ST-10 (Mod), see sheet RW8-48.
4. For Detail 14, see sheet RW8-39.

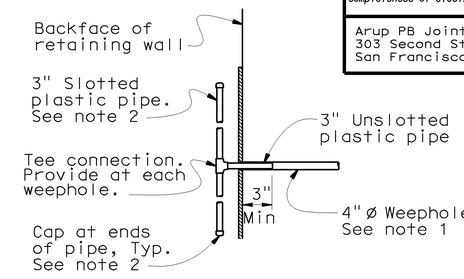

GEOCOMPOSITE DRAIN SYSTEM

SECTION Q-Q

NO SCALE

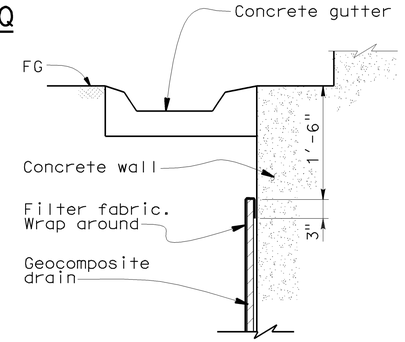

GEOCOMPOSITE DRAIN SYSTEM

DETAIL 9

NO SCALE

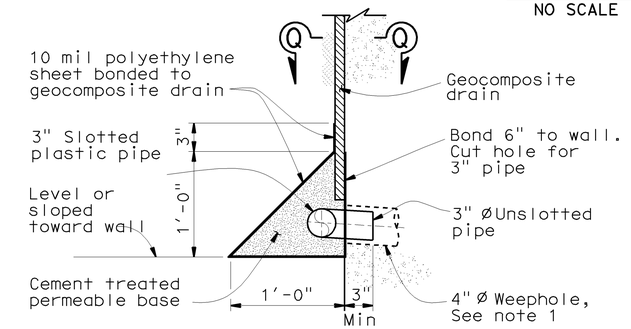

GEOCOMPOSITE DRAIN SYSTEM

DETAIL 10

NO SCALE

RW8-35

DIST	COUNTY	ROUTE	POST MILES TOTAL PROJECT	SHEET No	TOTAL SHEETS
04	SF	101	8.2/9.2	603	654

REGISTERED CIVIL ENGINEER — 09/30/09 DATE

12-14-09
PLANS APPROVAL DATE

REGISTERED PROFESSIONAL ENGINEER — LAWRENCE M. JOHNSON No. C 44006 Exp. 6-30-11 CIVIL — STATE OF CALIFORNIA

The State of California or its officers or agents shall not be responsible for the accuracy or completeness of electronic copies of this plan sheet.

Arup PB Joint Venture
303 Second Street, Suite 700N
San Francisco, CA 94107

DESIGN	BY L. JOHNSON	CHECKED S. SINGH	PREPARED FOR THE STATE OF CALIFORNIA DEPARTMENT OF TRANSPORTATION
DETAILS	BY E. CANTILLER	CHECKED S. SINGH	
QUANTITIES	BY L. JOHNSON	CHECKED S. SINGH	

R. DONIKIAN
PROJECT ENGINEER

BRIDGE NO. 34E0014
POST MILE 8.8

RETAINING WALL NO. 8
SEGMENT D - DETAILS NO. 6

DESIGN DETAIL SHEET (ENGLISH) (REV. 2/25/05)

ORIGINAL SCALE IN INCHES FOR REDUCED PLANS 0 1 2 3

CU 04
EA 163741

DISREGARD PRINTS BEARING EARLIER REVISION DATES →

REVISION DATES (PRELIMINARY STAGE ONLY): 6-01-09 | 07-15-09 | 08-07-09 | 08-26-09 | 09-16-09 | 09-25-09 | 09-30-09

SHEET 35 OF 65

FILE => 34E0014-segd-rwdt06.dgn

USERNAME => tripierce DATE PLOTTED => 12-DEC-2009 TIME PLOTTED => 09:49

DIST	COUNTY	ROUTE	POST MILES TOTAL PROJECT	SHEET No	TOTAL SHEETS
04	SF	101	8.2/9.2	604	654

09/30/09
REGISTERED CIVIL ENGINEER DATE

12-14-09
PLANS APPROVAL DATE

REGISTERED PROFESSIONAL ENGINEER
LAWRENCE M. JOHNSON
No. C 44006
Exp. 6-30-11
CIVIL
STATE OF CALIFORNIA

The State of California or its officers or agents shall not be responsible for the accuracy or completeness of electronic copies of this plan sheet.

Arup PB Joint Venture
303 Second Street, Suite 700N
San Francisco, CA 94107

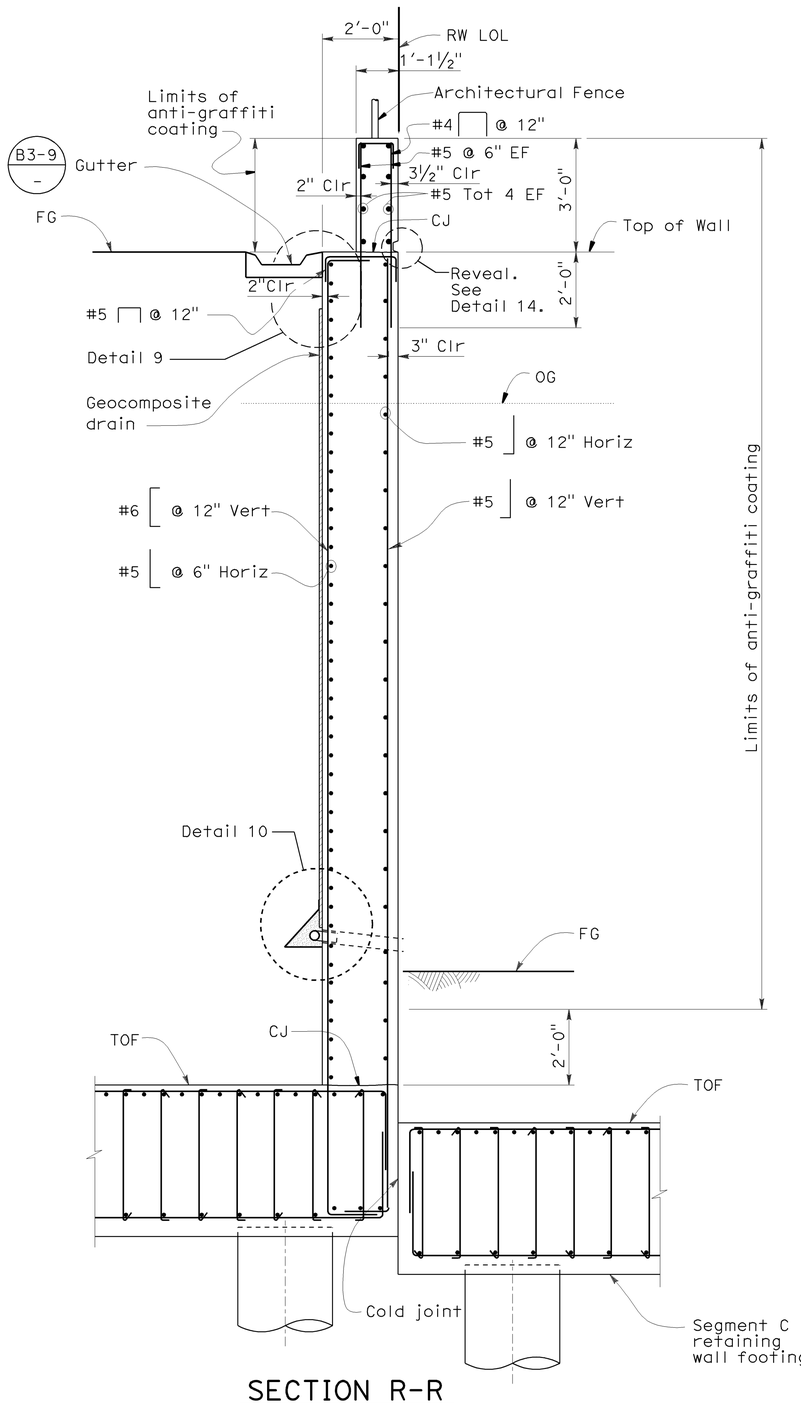

SECTION R-R
SCALE: ½" = 1'-0"

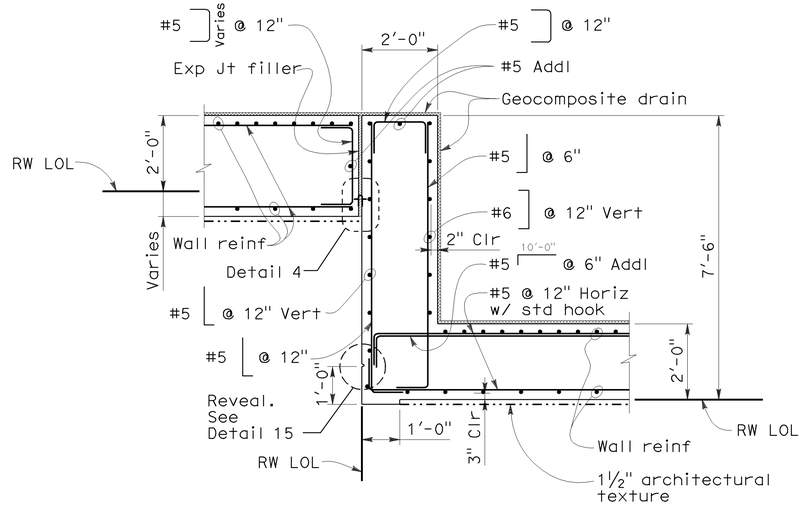

SECTION S-S
SCALE: ½" = 1'-0"

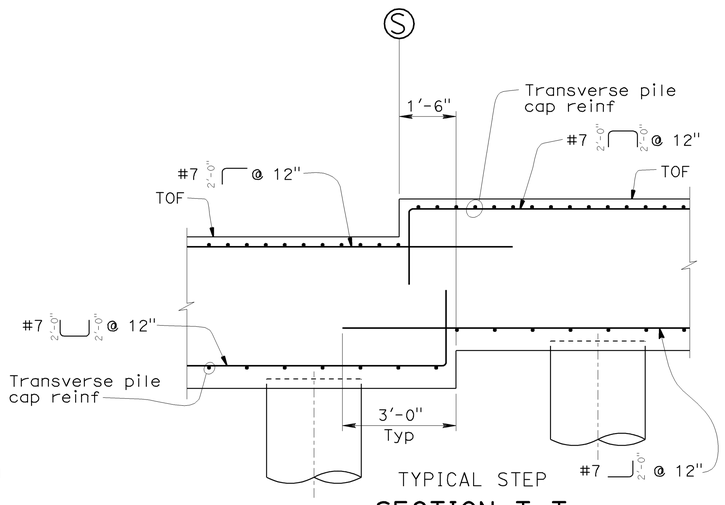

SECTION T-T
SCALE: ½= 1'-0"

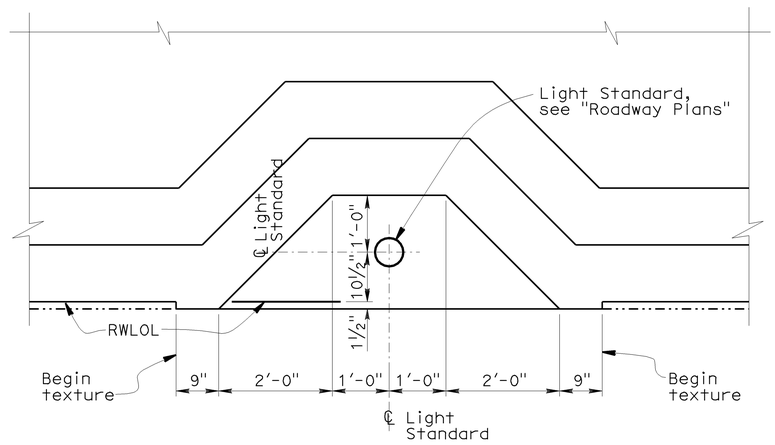

DETAIL 11
SCALE: ¾" = 1'-0"

NOTES:

1. For Detail 4, see sheet RW8-33.
2. For Detail 9 and Detail 10, see sheet RW8-35.
3. For Detail 14 and Detail 15, see sheet RW8-39.

RW8-36

DESIGN	BY L. JOHNSON	CHECKED S. SINGH	PREPARED FOR THE STATE OF CALIFORNIA DEPARTMENT OF TRANSPORTATION	R. DONIKIAN PROJECT ENGINEER	BRIDGE NO. 34E0014	RETAINING WALL NO. 8	
DETAILS	BY E. CANTILLER	CHECKED S. SINGH			POST MILE 8.8	SEGMENT D - DETAILS NO. 7	
QUANTITIES	BY L. JOHNSON	CHECKED S. SINGH					

DESIGN DETAIL SHEET (ENGLISH) (REV. 2/25/05)

ORIGINAL SCALE IN INCHES FOR REDUCED PLANS 0 1 2 3

CU 04
EA 163741

DISREGARD PRINTS BEARING EARLIER REVISION DATES →

REVISION DATES (PRELIMINARY STAGE ONLY): 6-01-09 | 07-15-09 | 08-07-09 | 08-26-09 | 09-14-09 | 09-25-09 | 09-30-09

SHEET 36 OF 65

FILE => 34E0014-segd-rwdt07.dgn

USERNAME => trpierce DATE PLOTTED => 12-DEC-2009 TIME PLOTTED => 09:49

DIST	COUNTY	ROUTE	POST MILES TOTAL PROJECT	SHEET No	TOTAL SHEETS
04	SF	101	8.2/9.2	605	654

09/30/09
REGISTERED CIVIL ENGINEER DATE

12-14-09
PLANS APPROVAL DATE

LAWRENCE M. JOHNSON
No. C 44006
Exp. 6-30-11
CIVIL
REGISTERED PROFESSIONAL ENGINEER
STATE OF CALIFORNIA

The State of California or its officers or agents shall not be responsible for the accuracy or completeness of electronic copies of this plan sheet.

Arup PB Joint Venture
303 Second Street, Suite 700N
San Francisco, CA 94107

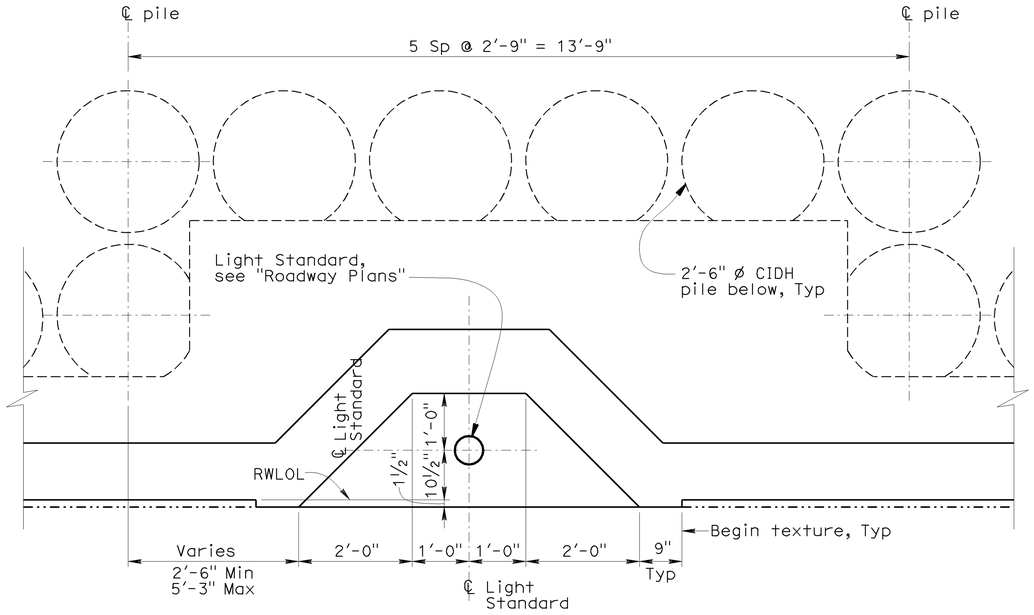

DETAIL 12
SCALE: ¾" = 1'-0"

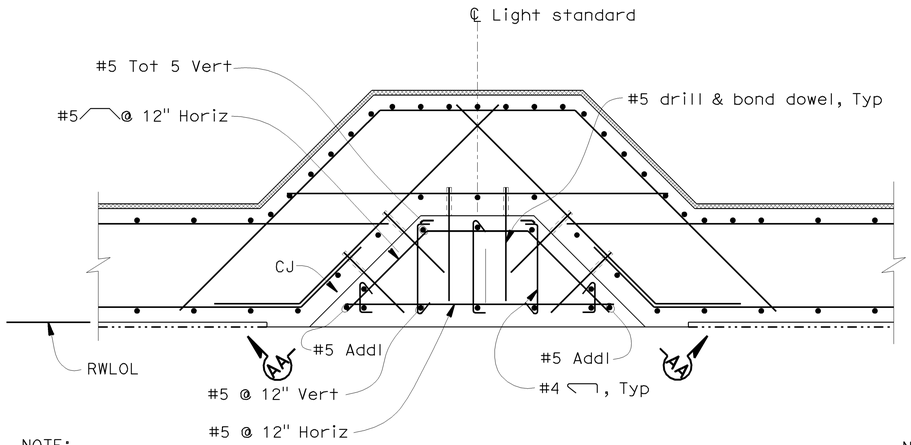

NOTE:
For detail not noted or shown.
See Section U-U and Section V-V.

SECTION X-X
SCALE: ¾" = 1'-0"

NOTES:

1. For Wall Mounted California ST-10 (Mod), see sheet RW8-48.
2. For Detail 4, see sheet RW8-33.
3. For Section AA-AA, see sheet RW8-38.

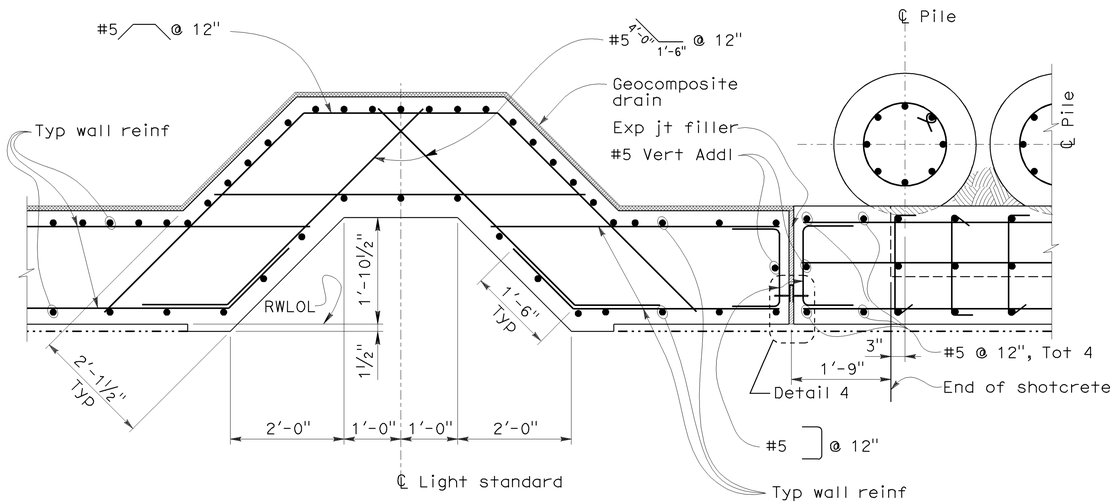

SECTION U-U
SCALE: ¾" = 1'-0"

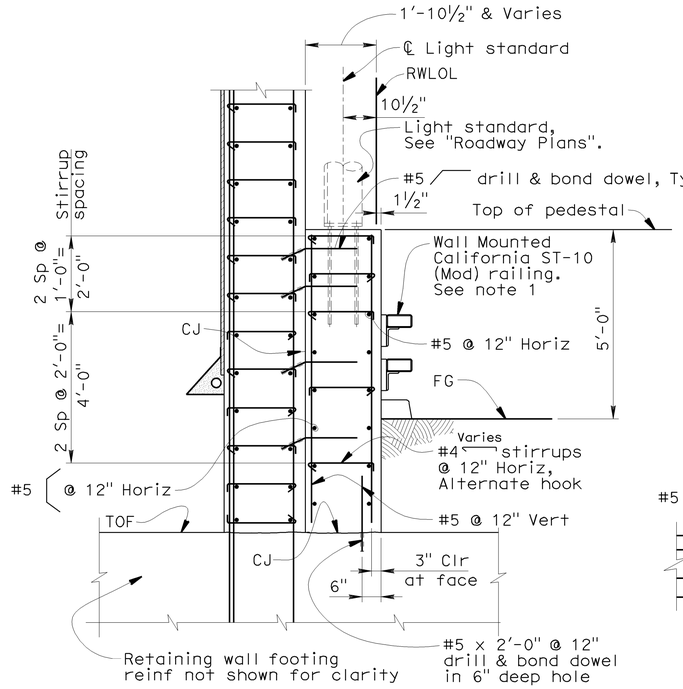

SECTION V-V
SCALE: ½" = 1'-0"

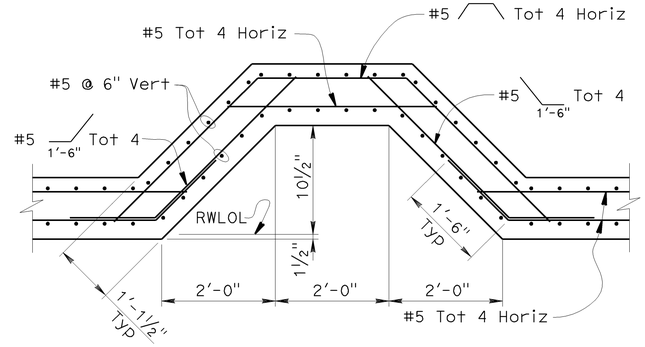

SECTION W-W
SCALE: ¾" = 1'-0"

RW8-37

DESIGN	BY L. JOHNSON	CHECKED S. SINGH	PREPARED FOR THE STATE OF CALIFORNIA DEPARTMENT OF TRANSPORTATION	R. DONIKIAN PROJECT ENGINEER	BRIDGE NO. 34E0014	RETAINING WALL NO. 8	
DETAILS	BY E. CANTILLER	CHECKED S. SINGH			POST MILE 8.8	SEGMENT D - DETAILS NO. 8	
QUANTITIES	BY L. JOHNSON	CHECKED S. SINGH					

DESIGN DETAIL SHEET (ENGLISH) (REV. 2/25/05)

ORIGINAL SCALE IN INCHES FOR REDUCED PLANS 0 1 2 3

CU 04
EA 163741

DISREGARD PRINTS BEARING EARLIER REVISION DATES →

REVISION DATES (PRELIMINARY STAGE ONLY): 09-16-09 | 09-25-09 | 09-30-09

SHEET 37 OF 65

FILE => 34E0014-segd-rwdt08.dgn

USERNAME => tyatk DATE PLOTTED => 12-DEC-2009 TIME PLOTTED => 09:20

DIST	COUNTY	ROUTE	POST MILES TOTAL PROJECT	SHEET No	TOTAL SHEETS
04	SF	101	8.2/9.2	606	654

REGISTERED CIVIL ENGINEER — 09/30/09 DATE

12-14-09
PLANS APPROVAL DATE

REGISTERED PROFESSIONAL ENGINEER — LAWRENCE M. JOHNSON — No. C 44006 — Exp. 6-30-11 — CIVIL — STATE OF CALIFORNIA

The State of California or its officers or agents shall not be responsible for the accuracy or completeness of electronic copies of this plan sheet.

Arup PB Joint Venture
303 Second Street, Suite 700N
San Francisco, CA 94107

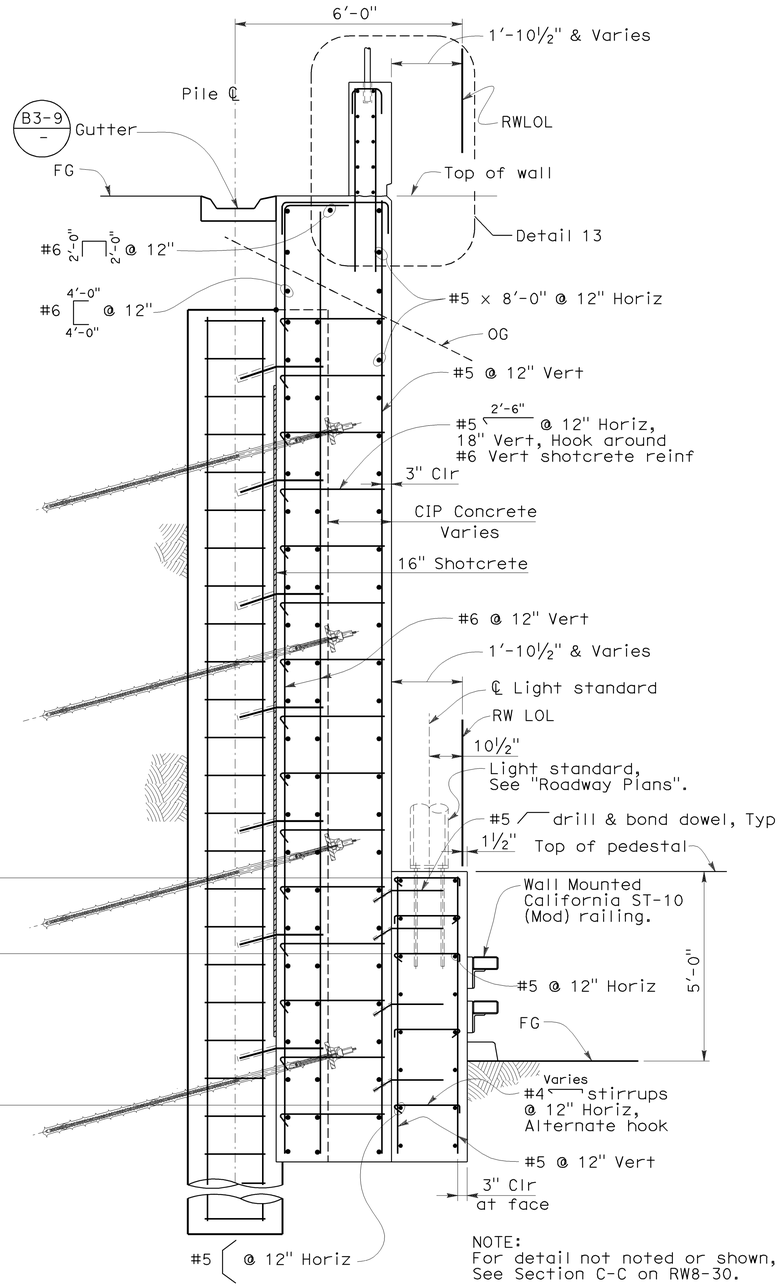

NOTE:
For detail not noted or shown, See Section C-C on RW8-30.

SECTION Y-Y
SCALE: ½" = 1'-0"

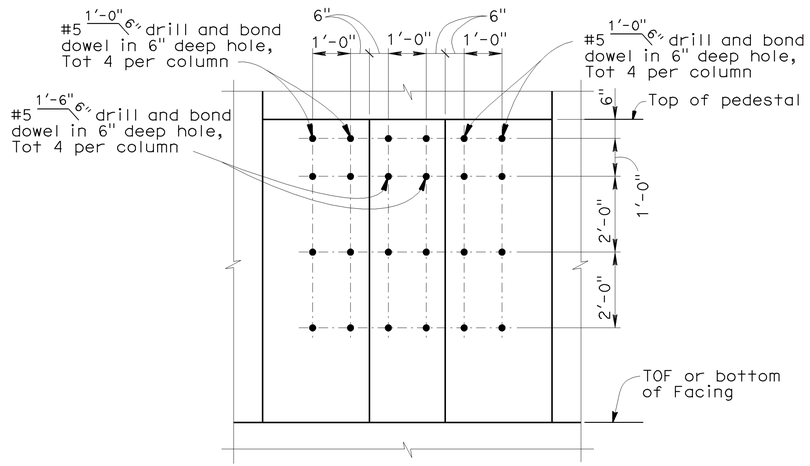

SECTION Z-Z
NO SCALE

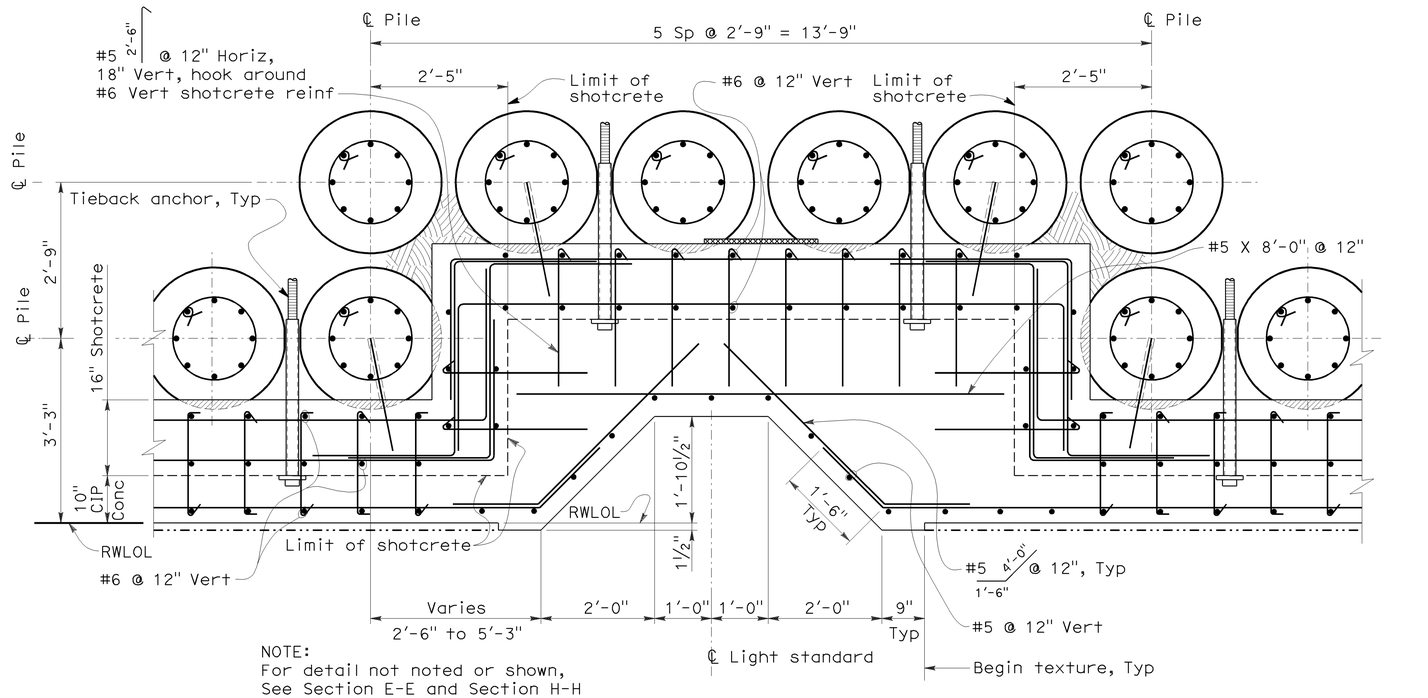

NOTE:
For detail not noted or shown, See Section E-E and Section H-H on Sheet RW8-31.

SECTION AA-AA
SCALE: ¾" = 1'-0"

NOTES:

1. For Detail 13, see sheet RW8-39.

RW8-38

DESIGN	BY L. JOHNSON	CHECKED S. SINGH	PREPARED FOR THE STATE OF CALIFORNIA DEPARTMENT OF TRANSPORTATION	R. DONIKIAN PROJECT ENGINEER	BRIDGE NO. 34E0014
DETAILS	BY E. CANTILLER	CHECKED S. SINGH			POST MILE 8.8
QUANTITIES	BY L. JOHNSON	CHECKED S. SINGH			

RETAINING WALL NO. 8
SEGMENT D - DETAILS NO. 9

DESIGN DETAIL SHEET (ENGLISH) (REV. 2/25/05)

ORIGINAL SCALE IN INCHES FOR REDUCED PLANS 0 1 2 3

CU 04
EA 163741

DISREGARD PRINTS BEARING EARLIER REVISION DATES →

REVISION DATES (PRELIMINARY STAGE ONLY): 09-16-09 | 09-25-09 | 09-30-09

SHEET 38 OF 65

FILE => 34E0014-segd-rwdt09.dgn

USERNAME => rtrstrk DATE PLOTTED => 12-DEC-2009 TIME PLOTTED => 09:21

DIST	COUNTY	ROUTE	POST MILES TOTAL PROJECT	SHEET No	TOTAL SHEETS
04	SF	101	8.2/9.2	607	654

09/30/09
REGISTERED CIVIL ENGINEER DATE

12-14-09
PLANS APPROVAL DATE

REGISTERED PROFESSIONAL ENGINEER
LAWRENCE M. JOHNSON
No. C 44006
Exp. 6-30-11
CIVIL
STATE OF CALIFORNIA

The State of California or its officers or agents shall not be responsible for the accuracy or completeness of electronic copies of this plan sheet.

Arup PB Joint Venture
303 Second Street, Suite 700N
San Francisco, CA 94107

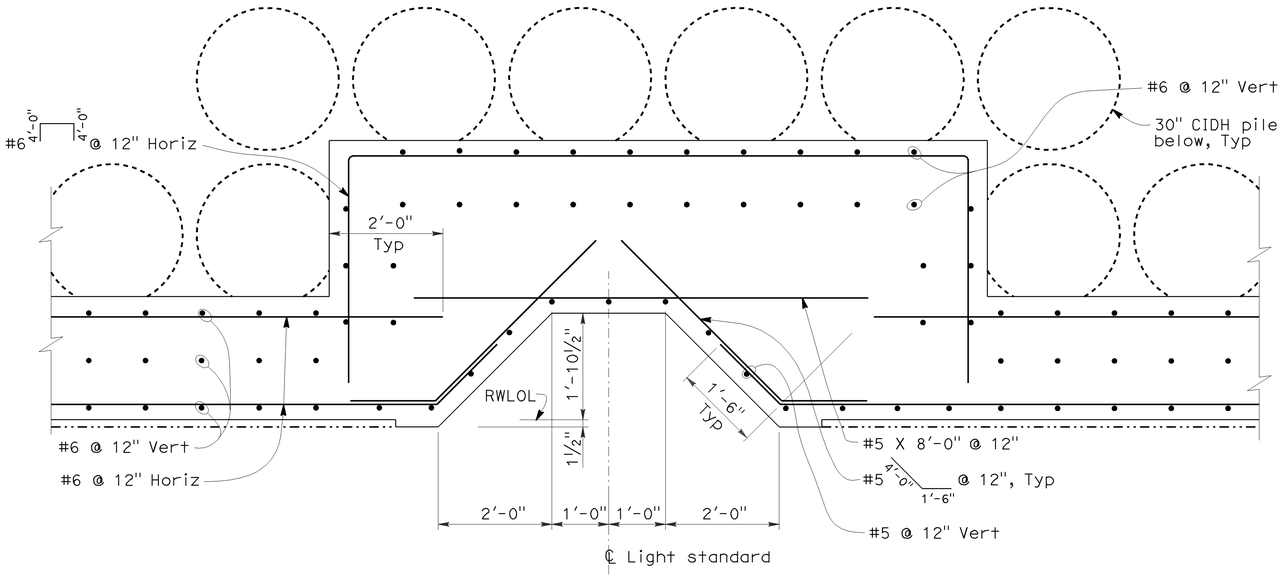

SECTION BB-BB
SCALE: ¾" = 1'-0"

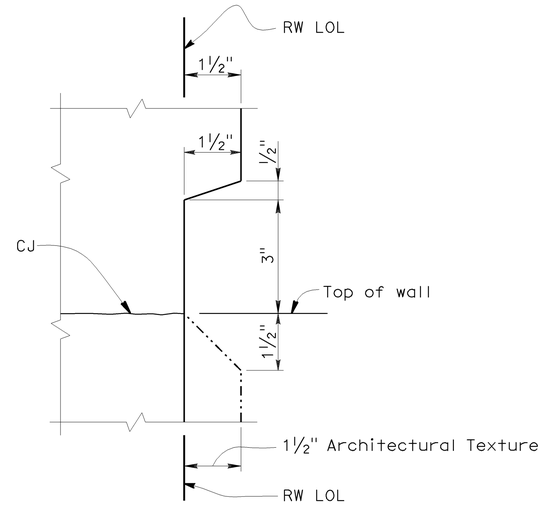

REVEAL

DETAIL 14
NO SCALE

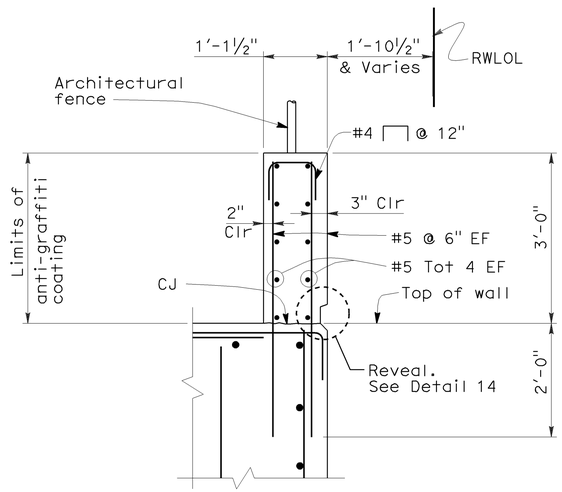

DETAIL 13
¾"=1'-0"

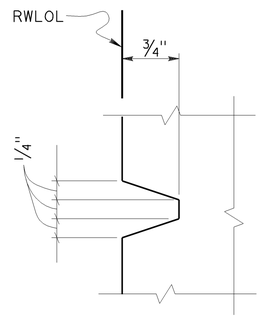

REVEAL

DETAIL 15
NO SCALE

RW8-39

		DESIGN	BY L. JOHNSON	CHECKED S. SINGH	PREPARED FOR THE STATE OF CALIFORNIA DEPARTMENT OF TRANSPORTATION	R. DONIKIAN PROJECT ENGINEER	BRIDGE NO. 34E0014
		DETAILS	BY E. CANTILLER	CHECKED S. SINGH			POST MILE 8.8
		QUANTITIES	BY L. JOHNSON	CHECKED S. SINGH			

RETAINING WALL NO. 8
SEGMENT D - DETAILS NO. 10

DESIGN DETAIL SHEET (ENGLISH) (REV. 2/25/05)

ORIGINAL SCALE IN INCHES FOR REDUCED PLANS 0 1 2 3

CU 04
EA 163741

DISREGARD PRINTS BEARING EARLIER REVISION DATES

REVISION DATES (PRELIMINARY STAGE ONLY): 09-18-09 | 09-25-09 | 09-30-09

SHEET 39 OF 65

FILE => 34E0014-segd-rwdt10.dgn

USERNAME => ttrstrk DATE PLOTTED => 12-DEC-2009 TIME PLOTTED => 09:21

DIST	COUNTY	ROUTE	POST MILES TOTAL PROJECT	SHEET No	TOTAL SHEETS
04	SF	101	8.2/9.2	608	654

REGISTERED CIVIL ENGINEER — 10/30/09 DATE

12-14-09
PLANS APPROVAL DATE

REGISTERED PROFESSIONAL ENGINEER — LAWRENCE M. JOHNSON — No. C 44006 — Exp. 6-30-11 — CIVIL — STATE OF CALIFORNIA

The State of California or its officers or agents shall not be responsible for the accuracy or completeness of electronic copies of this plan sheet.

Arup PB Joint Venture
303 Second Street, Suite 700N
San Francisco, CA 94107

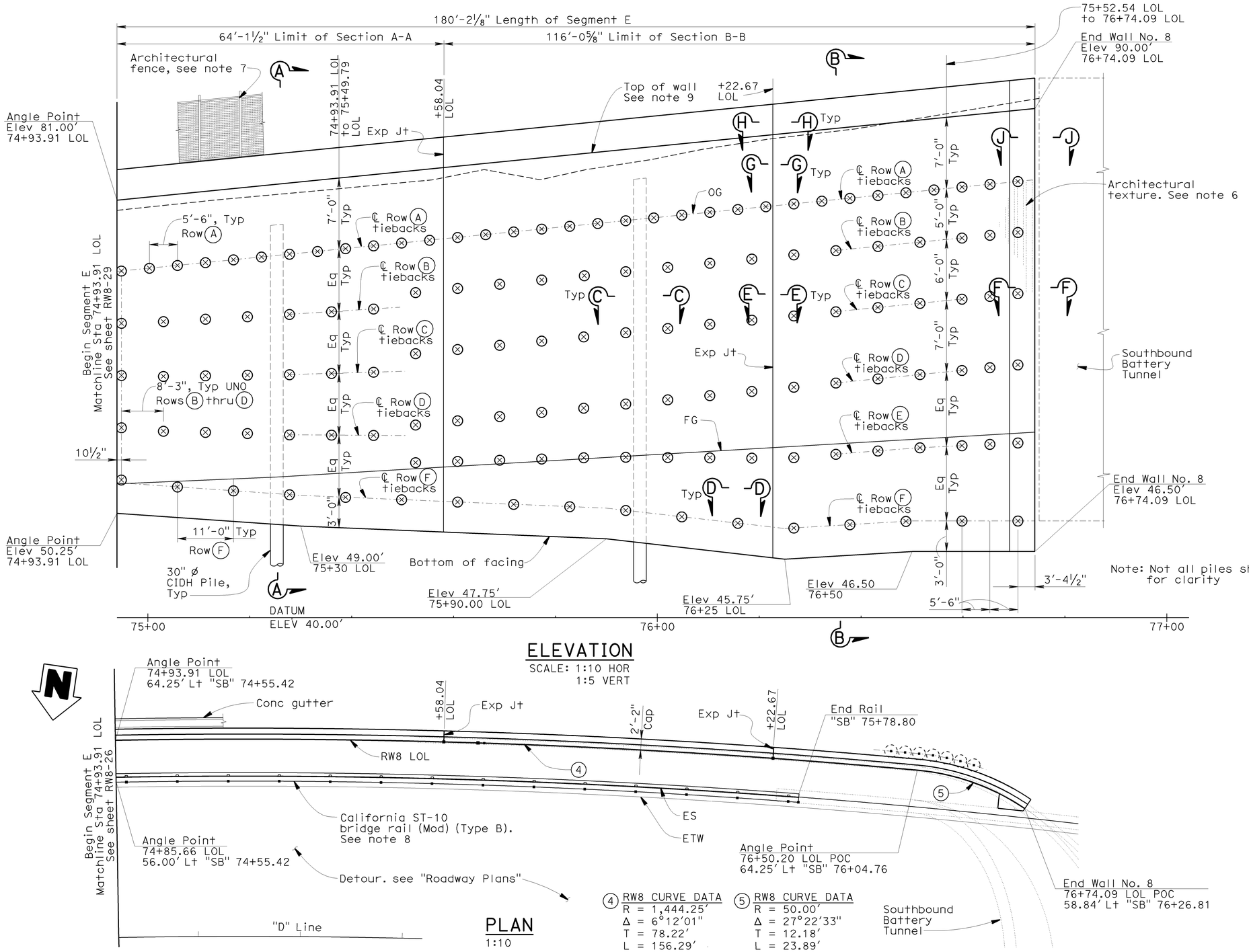

NOTES:

1. For General Notes, see sheet RW8-6.
2. For tieback anchor details, see sheet RW8-46. For tieback design forces, see Tables on sheet RW8-44. For Permanent Tieback Easement, see sheet RW8-1.
3. For Section A-A and Section B-B see sheet RW8-41.
4. For Section C-C thru G-G, see sheet RW8-42.
5. For Section H-H and Section J-J, see sheet RW8-43.
6. For Architectural Texture see sheets RW8-AT1 thru RW8-AT6.
7. For Architectural fence details, see sheets RW8-AT1 thru RW8-AT6.
8. For California ST-10 Bridge Rail (Mod) (Type B), see sheets RW8-49 and RW8-50.
9. Top of wall elevation is straight grade from 74+93.91 LOL to 76+74.14 LOL.

LEGEND:

⊗ Indicates one tieback

ELEVATION

SCALE: 1:10 HOR
1:5 VERT

PLAN

1:10

④ RW8 CURVE DATA
R = 1,444.25'
Δ = 6°12'01"
T = 78.22'
L = 156.29'

⑤ RW8 CURVE DATA
R = 50.00'
Δ = 27°22'33"
T = 12.18'
L = 23.89'

RW8-40

DESIGN	BY L. JOHNSON	CHECKED S. SINGH	PREPARED FOR THE STATE OF CALIFORNIA DEPARTMENT OF TRANSPORTATION	R. DONIKIAN PROJECT ENGINEER	BRIDGE NO. 34E0014
DETAILS	BY L. REYES	CHECKED S. SINGH			POST MILE 8.8
QUANTITIES	BY L. JOHNSON	CHECKED S. SINGH			

RETAINING WALL NO. 8
SEGMENT E - STRUCTURE PLAN

DESIGN DETAIL SHEET (ENGLISH) (REV. 2/25/05)

ORIGINAL SCALE IN INCHES FOR REDUCED PLANS 0 1 2 3

CU 04
EA 163741

DISREGARD PRINTS BEARING EARLIER REVISION DATES →

REVISION DATES (PRELIMINARY STAGE ONLY): 6-04-09 | 07-15-09 | 08-07-09 | 08-26-09 | 09-11-09 | 09-18-09 | 09-25-09 | 09-30-09 | 10-30-09

SHEET 40 OF 65

FILE => 34E0014-sege-c-sp01.dgn

USERNAME => trpierce DATE PLOTTED => 11-DEC-2009 TIME PLOTTED => 14:48

DIST	COUNTY	ROUTE	POST MILES TOTAL PROJECT	SHEET No	TOTAL SHEETS
04	SF	101	8.2/9.2	609	654

REGISTERED CIVIL ENGINEER — 10/30/09 DATE

12-14-09
PLANS APPROVAL DATE

The State of California or its officers or agents shall not be responsible for the accuracy or completeness of electronic copies of this plan sheet.

REGISTERED PROFESSIONAL ENGINEER — LAWRENCE M. JOHNSON — No. C 44006 — Exp. 6-30-11 — CIVIL — STATE OF CALIFORNIA

Arup PB Joint Venture
303 Second Street, Suite 700N
San Francisco, CA 94107

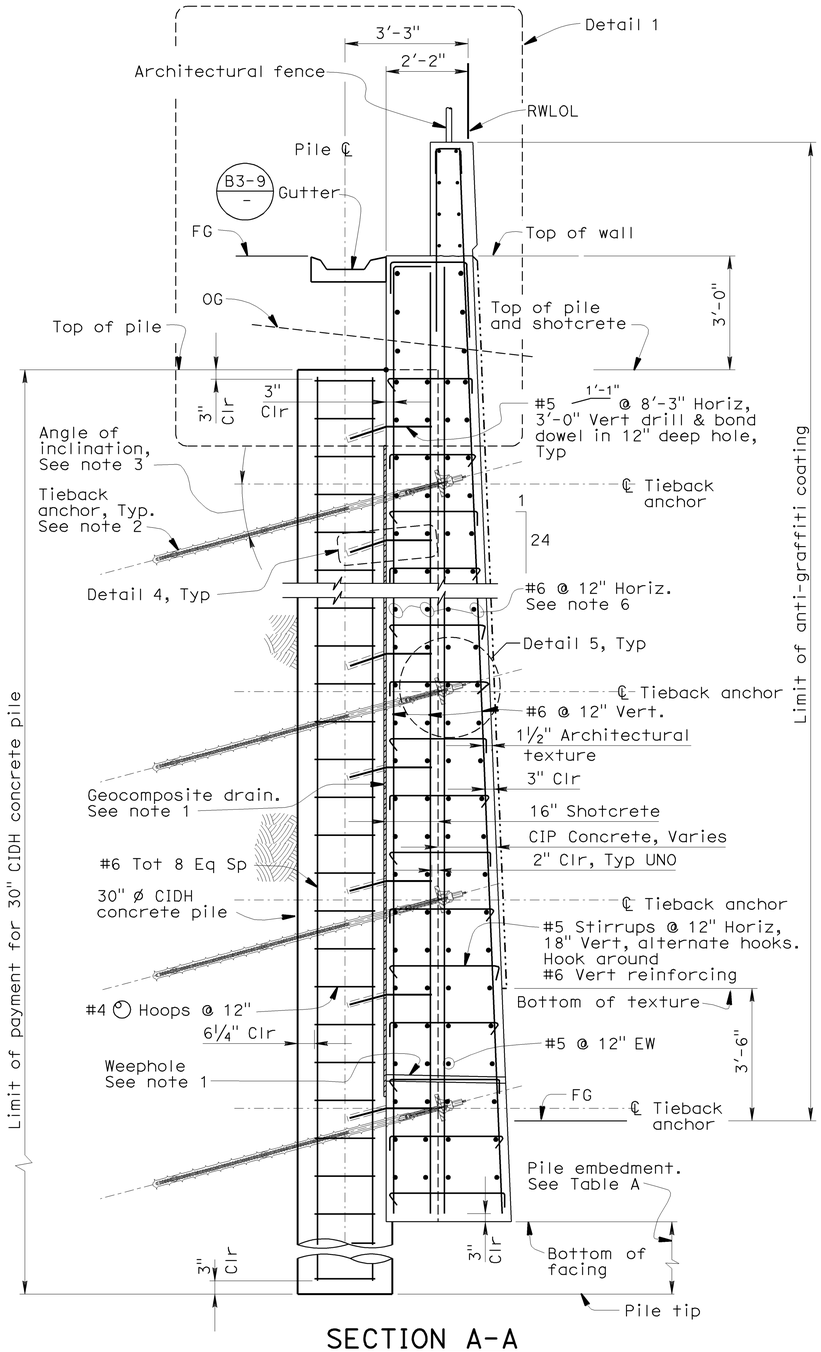

SECTION A-A
SCALE: ½" = 1'-0"

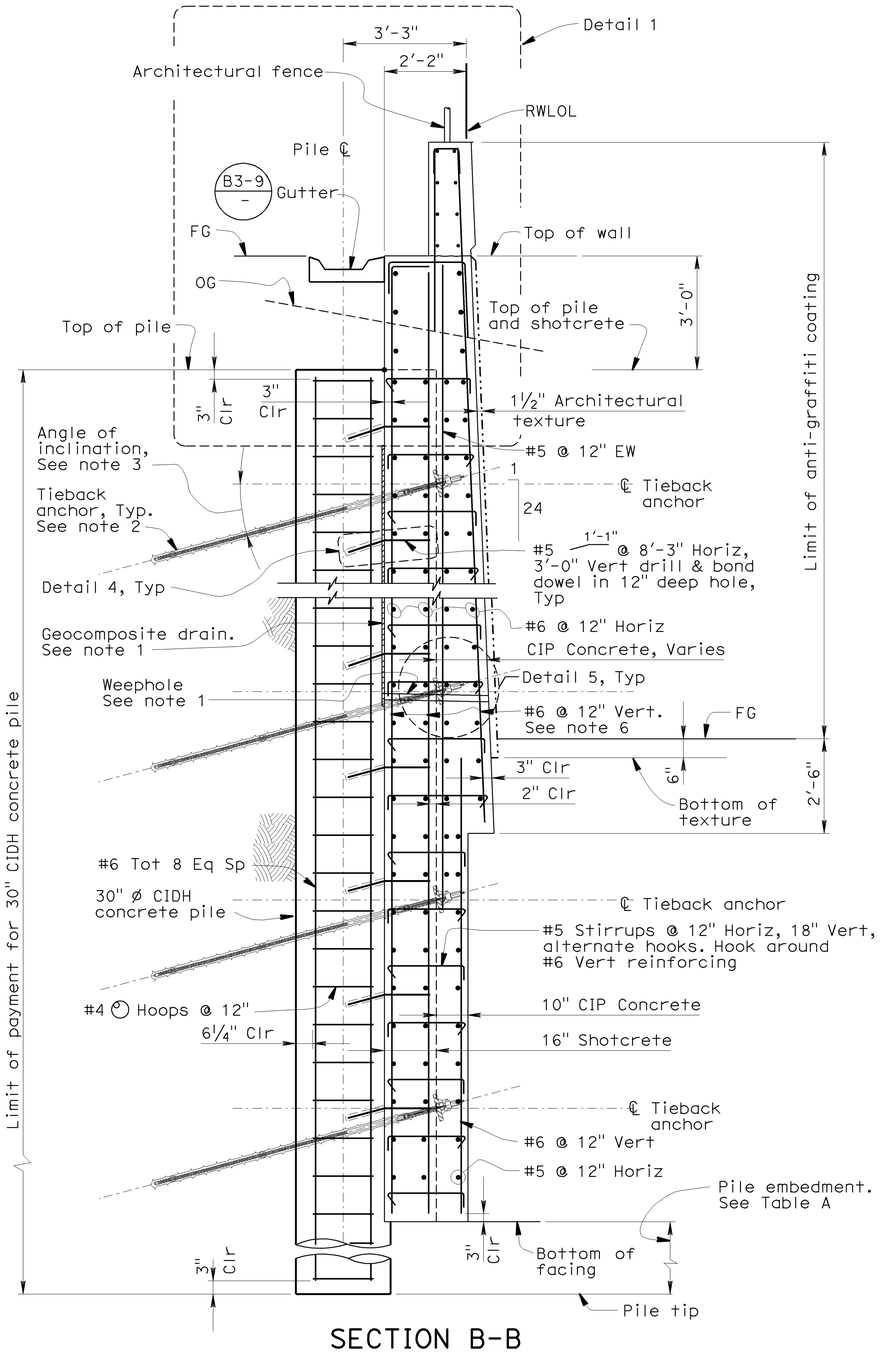

SECTION B-B
SCALE: ½" = 1'-0"

NOTES:

1. For Geocomposite drain system details, see sheet RW8-47.
2. For Tieback anchor details, see sheet RW8-46.
3. For tieback angle of inclination, see tables on sheet RW8-44.
4. For Detail 4 and Detail 5, see sheet RW8-43.
5. For Detail 6, see sheet RW8-44.
6. #6 @ 12" Vert reinforcing at shotcrete shall be spliced using a "Service" level coupler or a 3'-0" Min lap splice.

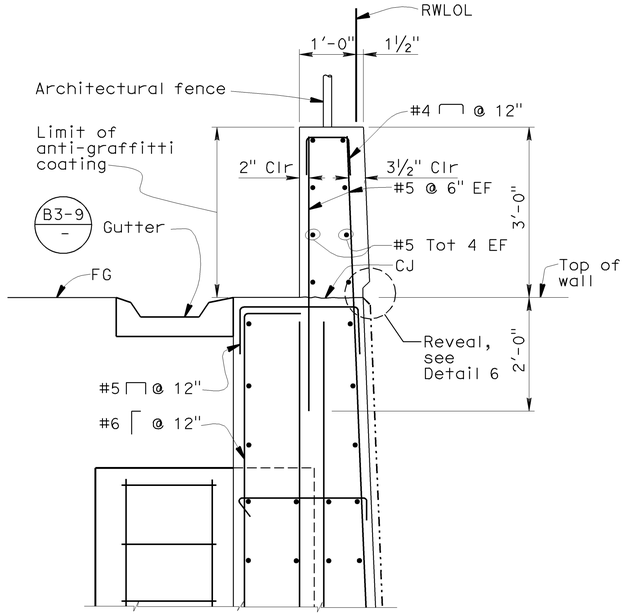

DETAIL 1
SCALE: ¾" = 1'-0"

Table A	
Station (LOL)	Pile Embedment
74+93.61 to 75+45.00	9'-0"
75+45.00 to 75+75.00	12'-0"
75+75.00 to 76+74.09	16'-0"

RW8-41

DESIGN	BY L. JOHNSON	CHECKED S. SINGH	PREPARED FOR THE STATE OF CALIFORNIA DEPARTMENT OF TRANSPORTATION	R. DONIKIAN PROJECT ENGINEER	BRIDGE NO. 34E0014
DETAILS	BY O. KURNOVSKAYA	CHECKED S. SINGH			POST MILE 8.8
QUANTITIES	BY L. JOHNSON	CHECKED S. SINGH			

RETAINING WALL NO. 8
SEGMENT E - DETAILS NO. 1

DESIGN DETAIL SHEET (ENGLISH) (REV. 2/25/05)

ORIGINAL SCALE IN INCHES FOR REDUCED PLANS 0 1 2 3

CU 04
EA 163741

DISREGARD PRINTS BEARING EARLIER REVISION DATES →

REVISION DATES (PRELIMINARY STAGE ONLY): 6-04-09 | 07-15-09 | 08-07-09 | 08-26-09 | 09-18-09 | 09-25-09 | 09-30-09 | 10-30-09

SHEET 41 OF 65

FILE => 34E0014-sege-rwdt01.dgn

USERNAME => trpierce DATE PLOTTED => 11-DEC-2009 TIME PLOTTED => 14:48

DIST	COUNTY	ROUTE	POST MILES TOTAL PROJECT	SHEET No	TOTAL SHEETS
04	SF	101	8.2/9.2	610	654

09/30/09
REGISTERED CIVIL ENGINEER DATE

12-14-09
PLANS APPROVAL DATE

The State of California or its officers or agents shall not be responsible for the accuracy or completeness of electronic copies of this plan sheet.

REGISTERED PROFESSIONAL ENGINEER — LAWRENCE M. JOHNSON — No. C 44006 — Exp. 6-30-11 — CIVIL — STATE OF CALIFORNIA

Arup PB Joint Venture
303 Second Street, Suite 700N
San Francisco, CA 94107

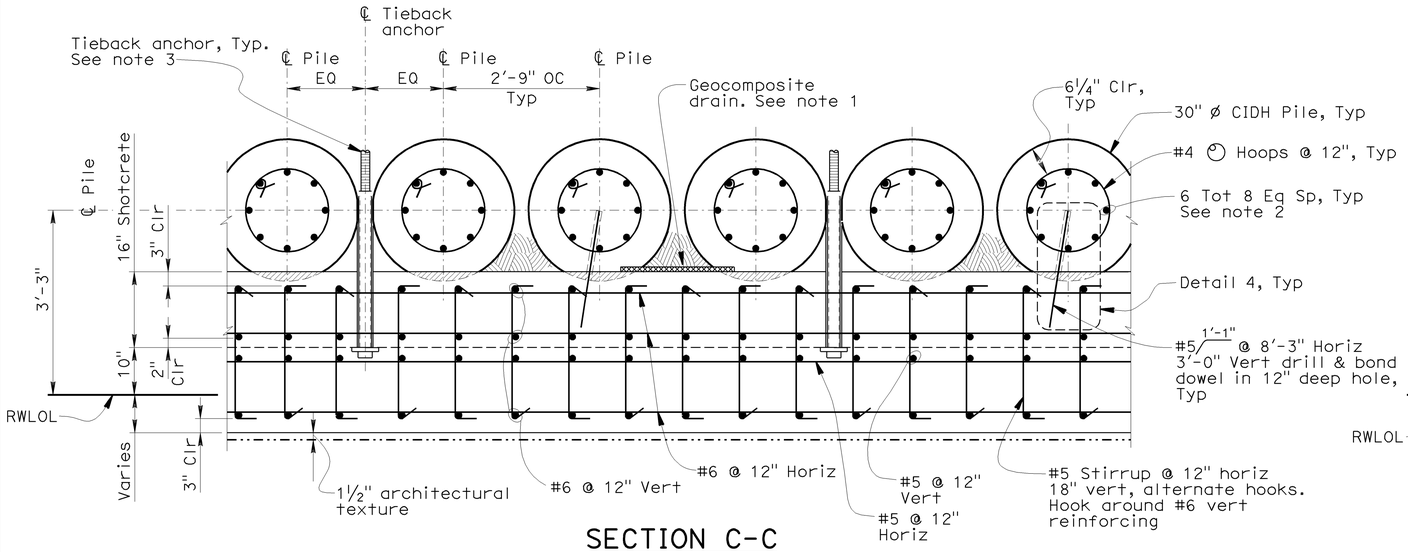

SECTION C-C
SCALE: ¾" = 1'-0"

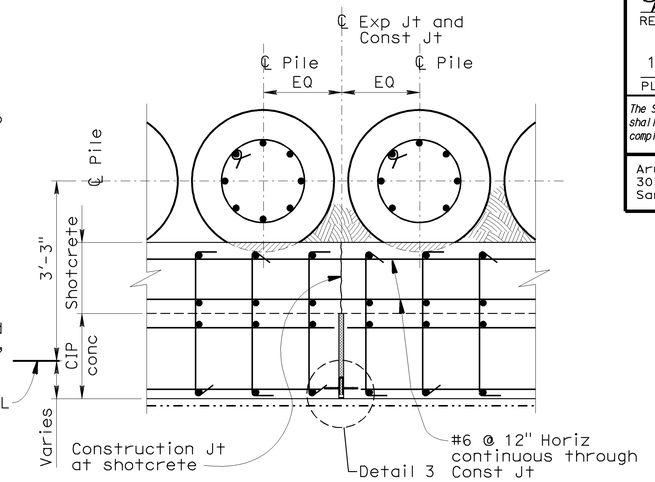

SECTION E-E
SCALE: ¾" = 1'-0"

NOTES:

1. For geocomposite drain system details, see sheet RW8-47.
2. The #6 Vert CIDH pile reinforcing may be lap spliced at the Contractor's option. The minimum lap length shall be 3'-6".
3. For tieback anchor details, see sheet RW8-46.
4. For Details 2 thru 4, see sheet RW8-43.

LEGEND:

Remove portion of concrete at CIDH piles.

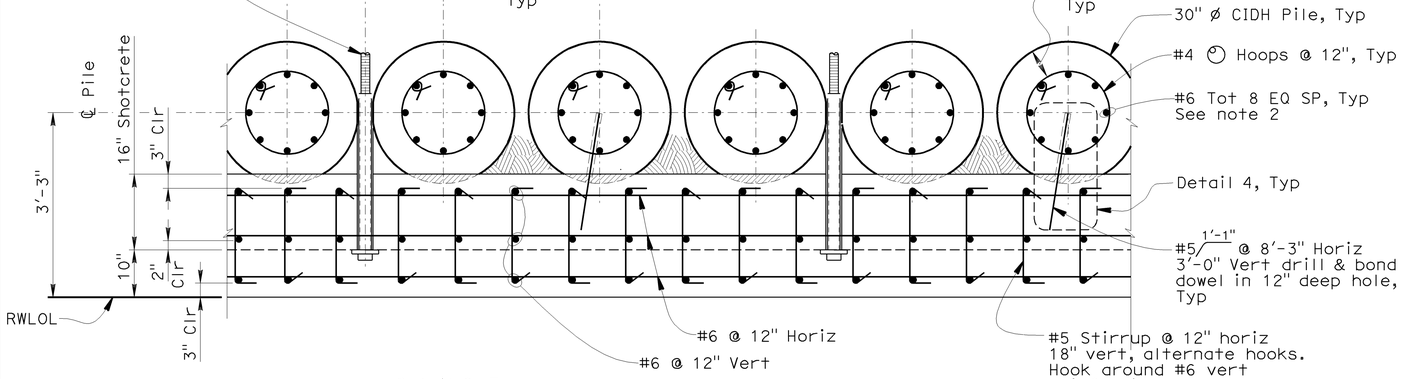

SECTION D-D
SCALE: ¾" = 1'-0"

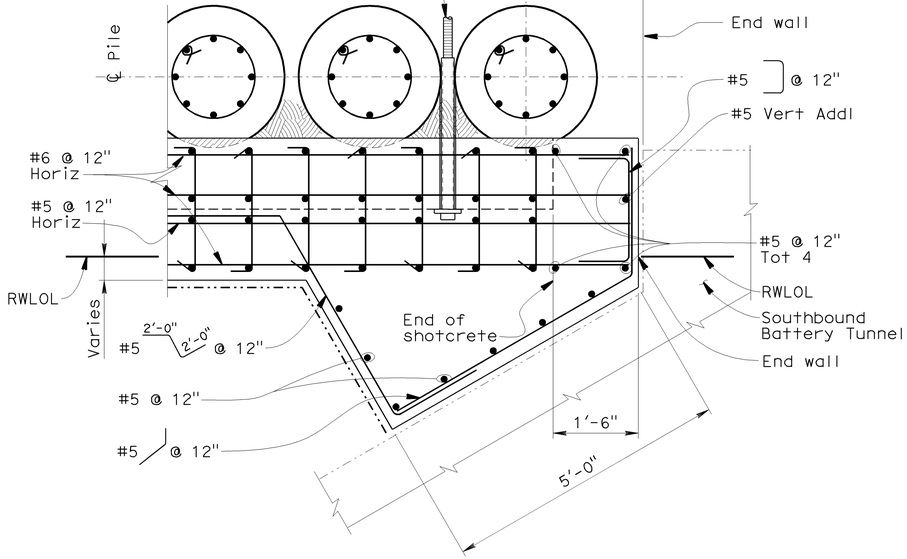

SECTION F-F
SCALE: ¾" = 1'-0"

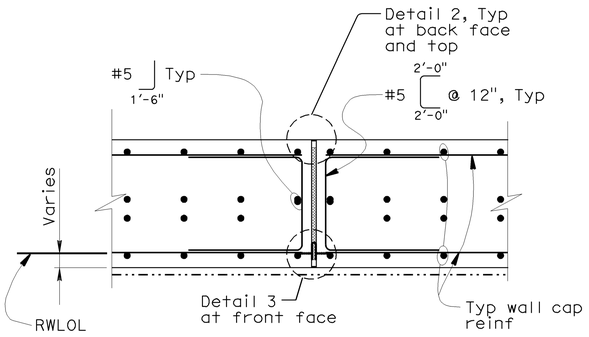

SECTION G-G
SCALE: ¾" = 1'-0"

RW8-42

DESIGN	BY L. JOHNSON	CHECKED S. SINGH	PREPARED FOR THE STATE OF CALIFORNIA DEPARTMENT OF TRANSPORTATION	R. DONIKIAN PROJECT ENGINEER	BRIDGE NO. 34E0014
DETAILS	BY L. REYES	CHECKED S. SINGH			POST MILE 8.8
QUANTITIES	BY L. JOHNSON	CHECKED S. SINGH			

RETAINING WALL NO. 8
SEGMENT E - DETAILS NO. 2

DESIGN DETAIL SHEET (ENGLISH) (REV. 2/25/05)

ORIGINAL SCALE IN INCHES FOR REDUCED PLANS 0 1 2 3

CU 04
EA 163741

DISREGARD PRINTS BEARING EARLIER REVISION DATES →

REVISION DATES (PRELIMINARY STAGE ONLY): 6-04-09 | 07-15-09 | 08-07-09 | 08-26-09 | 09-11-09 | 09-18-09 | 09-25-09 | 09-30-09

SHEET 42 OF 65

FILE => 34E0014-sege-rwdt02.dgn

USERNAME => trsitk DATE PLOTTED => 12-DEC-2009 TIME PLOTTED => 09:49

DIST	COUNTY	ROUTE	POST MILES TOTAL PROJECT	SHEET No	TOTAL SHEETS
04	SF	101	8.2/9.2	611	654

09/30/09
REGISTERED CIVIL ENGINEER DATE

12-14-09
PLANS APPROVAL DATE

REGISTERED PROFESSIONAL ENGINEER
LAWRENCE M. JOHNSON
No. C 44006
Exp. 6-30-11
CIVIL
STATE OF CALIFORNIA

The State of California or its officers or agents shall not be responsible for the accuracy or completeness of electronic copies of this plan sheet.

Arup PB Joint Venture
303 Second Street, Suite 700N
San Francisco, CA 94107

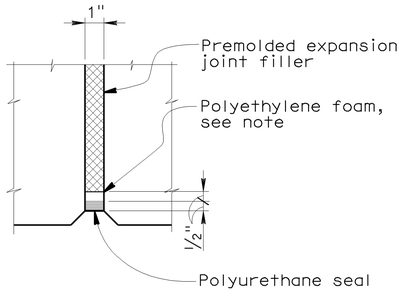

NOTE:
Top of polyethylene foam to have glazed surface and crown. Uncompressed width to be 1/8" greater than actual joint width.

DETAIL 2
NO SCALE

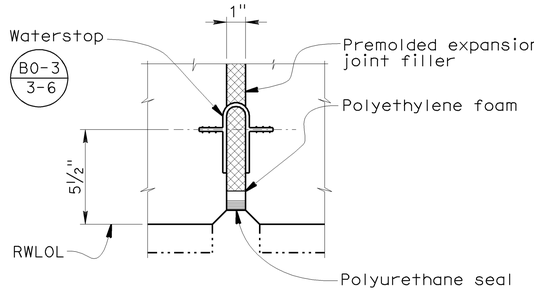

NOTE:
See Detail 2 for detail not noted or shown.

DETAIL 3
NO SCALE

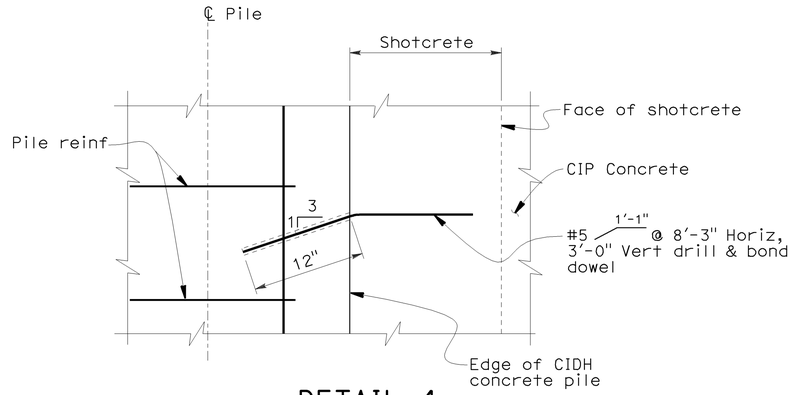

DETAIL 4
NO SCALE

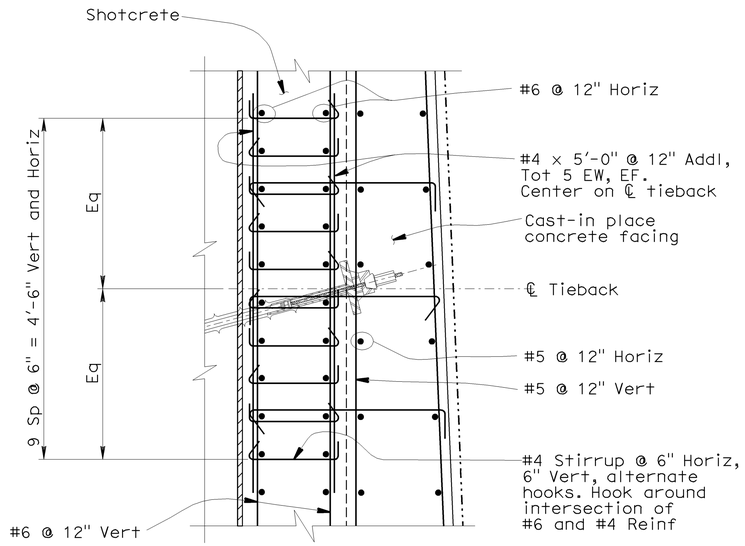

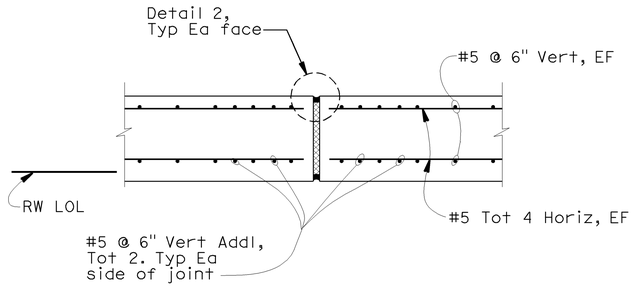

SECTION H-H
SCALE: 1" = 1'-0"

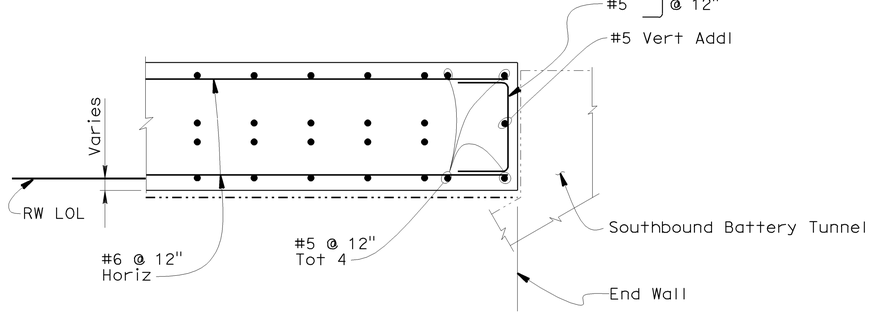

SECTION J-J
SCALE: 3/4" = 1'-0"

ADDITIONAL REINFORCING AT TIEBACK ANCHORAGE (TYPICAL)

DETAIL 5
NO SCALE

RW8-43

DESIGN	BY L. JOHNSON	CHECKED S. SINGH	PREPARED FOR THE STATE OF CALIFORNIA DEPARTMENT OF TRANSPORTATION	R. DONIKIAN PROJECT ENGINEER	BRIDGE NO. 34E0014	RETAINING WALL NO. 8	
DETAILS	BY J. FUSCO	CHECKED S. SINGH			POST MILE 8.8	SEGMENT E - DETAILS NO. 3	
QUANTITIES	BY L. JOHNSON	CHECKED S. SINGH					

DESIGN DETAIL SHEET (ENGLISH) (REV. 2/25/05)

ORIGINAL SCALE IN INCHES FOR REDUCED PLANS 0 1 2 3

CU 04
EA 163741

DISREGARD PRINTS BEARING EARLIER REVISION DATES →

REVISION DATES (PRELIMINARY STAGE ONLY): 6-01-09 | 07-15-09 | 08-07-09 | 08-26-09 | 09-16-09 | 09-25-09 | 09-30-09

SHEET 43 OF 65

FILE => 34E0014-sege-rwdt03.dgn

USERNAME => ttstrk DATE PLOTTED => 12-DEC-2009 TIME PLOTTED => 09:49

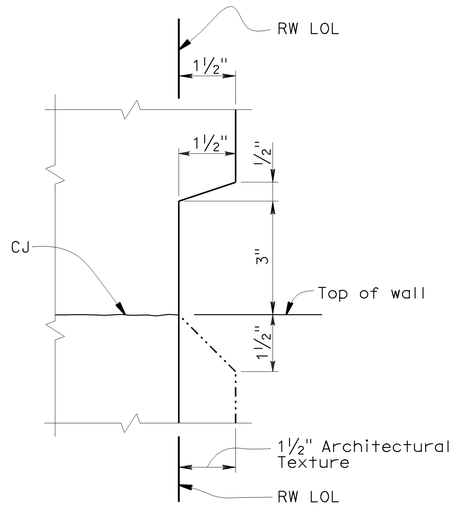

REVEAL

DETAIL 6

NO SCALE

DIST	COUNTY	ROUTE	POST MILES TOTAL PROJECT	SHEET No	TOTAL SHEETS
04	SF	101	8.2/9.2	612	654

10/30/09
REGISTERED CIVIL ENGINEER DATE

REGISTERED PROFESSIONAL ENGINEER
LAWRENCE M. JOHNSON
No. C 44006
Exp. 6-30-11
CIVIL
STATE OF CALIFORNIA

12-14-09
PLANS APPROVAL DATE

The State of California or its officers or agents shall not be responsible for the accuracy or completeness of electronic copies of this plan sheet.

Arup PB Joint Venture
303 Second Street, Suite 700N
San Francisco, CA 94107

Segment E Tieback Forces and Inclination Begin Segment E to Sta 75+49.79 LOL			
Row	Design Force (T)	Unbonded Length	Angle of Inclination
A	110 kips	30'-0"	30°
B	105 kips	24'-0"	25°
C	105 kips	20'-0"	25°
D	105 kips	20'-0"	25°
F	115 kips	20'-0"	20°

Segment E Tieback Forces and Inclination Sta 75+49.79 LOL to End of Segment E			
Row	Design Force (T)	Unbonded Length	Angle of Inclination
A	100 kips	32'-0"	30°
B	95 kips	22'-0"	30°
C	105 kips	20'-0"	25°
D	120 kips	20'-0"	25°
E	120 kips	20'-0"	25°
F	125 kips	20'-0"	20°

RW8-44

DESIGN	BY L. JOHNSON	CHECKED S. SINGH	PREPARED FOR THE STATE OF CALIFORNIA DEPARTMENT OF TRANSPORTATION	R. DONIKIAN PROJECT ENGINEER	BRIDGE NO. 34E0014
DETAILS	BY O. KURNOVSKAYA	CHECKED S. SINGH			POST MILE 8.8
QUANTITIES	BY L. JOHNSON	CHECKED S. SINGH			

RETAINING WALL NO. 8
SEGMENT E - DETAILS NO. 4

DESIGN DETAIL SHEET (ENGLISH) (REV. 2/25/05)

ORIGINAL SCALE IN INCHES FOR REDUCED PLANS 0 1 2 3

CU 04
EA 163741

DISREGARD PRINTS BEARING EARLIER REVISION DATES →

REVISION DATES (PRELIMINARY STAGE ONLY): 6-01-09 | 07-15-09 | 08-07-09 | 08-26-09 | 09-11-09 | 09-18-09 | 09-25-09 | 09-30-09 | 10-30-09

SHEET 44 OF 65

FILE => 34E0014-sege-rwdt04.dgn

USERNAME => rriplerce DATE PLOTTED => 11-DEC-2009 TIME PLOTTED => 14:48

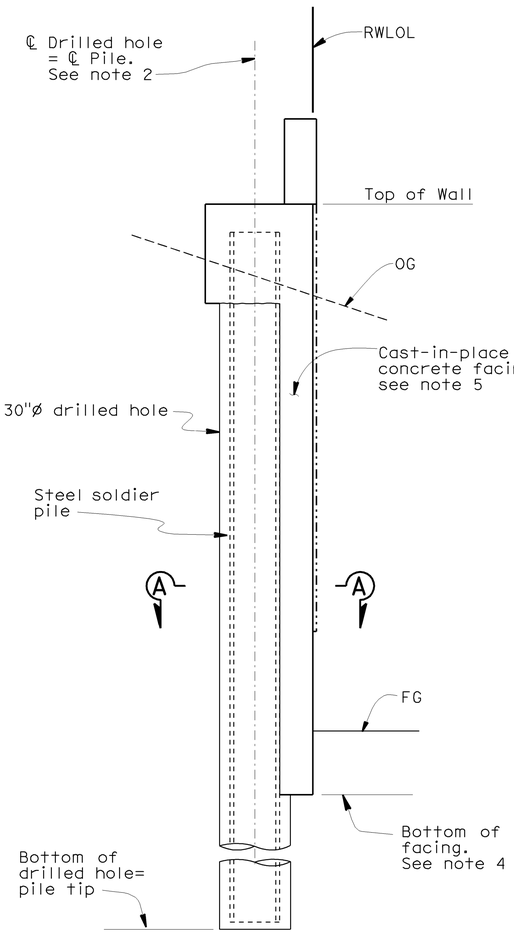

TYPICAL SOLDIER PILE WALL
NO SCALE

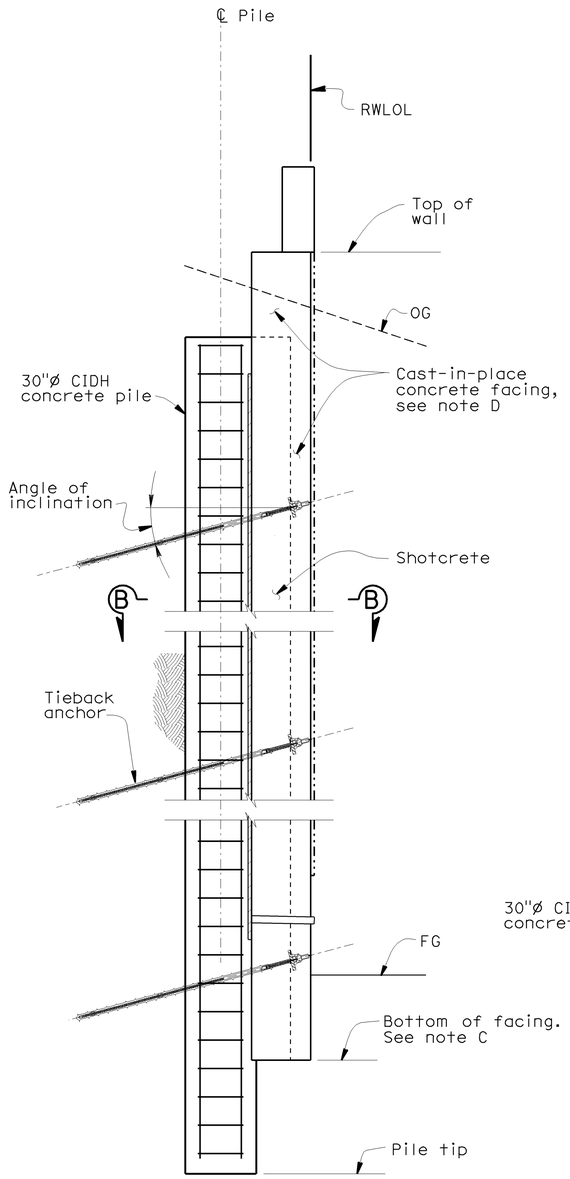

TYPICAL TIEBACK WALL
NO SCALE

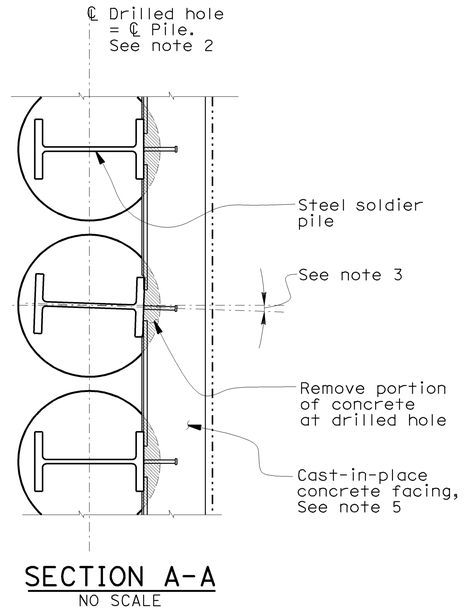

SECTION A-A
NO SCALE

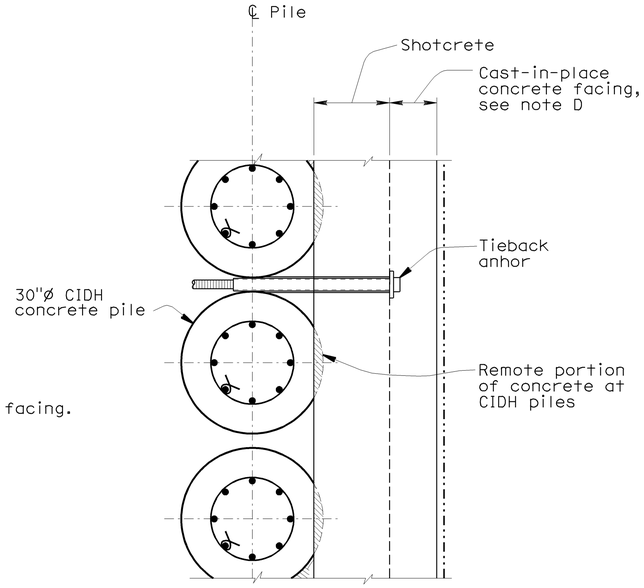

SECTION B-B
NO SCALE

SOLDER PILE WALL CONSTRUCTION NOTES:

1. Construct drilled holes and steel soldier piles from the original ground to the pile tip elevation as shown on the project plans.
2. Drilled holes shall be accurately located and shall be straight and true. The centerline of the steel soldier pile shall be located at the centerline of the pile.
3. The maximum tolerance for the horizontal rotation of the steel soldier pile shall be 3 degrees.
4. Excavate at the face of wall from the original ground to the bottom of facing. The bottom of excavation shall not extend below the bottom of facing.
5. The cast-in-place facing shall be adjusted accordingly to maintain a uniform face at the retaining wall. Final adjustments shall be subject to the approval of the Engineer.

TIEBACK WALL CONSTRUCTION NOTES:

A. Construct CIDH piles from the original ground to the pile tip elevation as shown on the project plans.

B. Excavation shall proceed on lifts from the top down Excavation in front of the CIDH piles shall not extend more than 4 feet below any level of tiebacks that has not been tested, tensioned against the shotcrete, and locked off. In addition, the maximum excavation at the top row of tiebacks shall not exceed 9 feet from the original ground.

C. The bottom of excavation shall not extend below the bottom of facing.

D. The cast-in-place facing shall be adjusted accordingly to maintain a uniform face at the retaining wall. Final adjustments shall be subject to the approval of the Engineer.

DIST	COUNTY	ROUTE	POST MILES TOTAL PROJECT	SHEET No	TOTAL SHEETS
04	SF	101	8.2/9.2	613	654

09/30/09
REGISTERED CIVIL ENGINEER DATE

12-14-09
PLANS APPROVAL DATE

REGISTERED PROFESSIONAL ENGINEER — LAWRENCE M. JOHNSON No. C 44006 Exp. 6-30-11 CIVIL — STATE OF CALIFORNIA

The State of California or its officers or agents shall not be responsible for the accuracy or completeness of electronic copies of this plan sheet.

Arup PB Joint Venture
303 Second Street, Suite 700N
San Francisco, CA 94107

RW8-45

	BY	CHECKED
DESIGN	L. JOHNSON	S. SINGH
DETAILS	L. REYES	S. SINGH
QUANTITIES	L. JOHNSON	S. SINGH

PREPARED FOR THE
STATE OF CALIFORNIA
DEPARTMENT OF TRANSPORTATION

R. DONIKIAN
PROJECT ENGINEER

BRIDGE NO. 34E0014
POST MILE 8.8

RETAINING WALL NO. 8
WALL CONSTRUCTION DETAILS

DESIGN DETAIL SHEET (ENGLISH) (REV. 2/25/05)

ORIGINAL SCALE IN INCHES FOR REDUCED PLANS 0 1 2 3

CU 04
EA 163741

DISREGARD PRINTS BEARING EARLIER REVISION DATES →

REVISION DATES (PRELIMINARY STAGE ONLY): 6-01-09 | 07-15-09 | 08-07-09 | 08-26-09 | 09-16-09 | 09-25-09 | 09-30-09

SHEET 45 OF 65

FILE => 34E0014-u-miscdt01.dgn

USERNAME => trsmth DATE PLOTTED => 12-DEC-2009 TIME PLOTTED => 03:49

DIST.	COUNTY	ROUTE	POST MILES TOTAL PROJECT	SHEET NO.	TOTAL SHEETS
04	SF	101	8.2/9.2	614	654

10/30/09
REGISTERED ENGINEER - CIVIL

12-14-09
PLANS APPROVAL DATE

REGISTERED PROFESSIONAL ENGINEER
LAWRENCE JOHNSON
No. C 44006
Exp. 6-30-11
CIVIL
STATE OF CALIFORNIA

The State of California or its officers or agents shall not be responsible for the accuracy or completeness of electronic copies of this plan sheet.

NOTES:

1. Anchorage enclosure shall only be used when anchor head assembly is not enclosed in concrete.
2. Anchorage enclosure shall have provisions to allow injecting grout at low end and venting at high end. Galvanize after fabrication.
3. Silicone sealant to cover full width of flange.
4. Steel tube welded to bearing plate (Min thickness = 1/4"). Galvanize assembly after fabrication
5. Steel tube welded to bearing plate inside diameter of steel tube to be 1" greater than outside diameter of smooth sheathing (Min thickness = 1/4") Galvanize assembly after fabrication.
6. For Design Force values at tieback, see sheets RW8-32 and RW8-44.

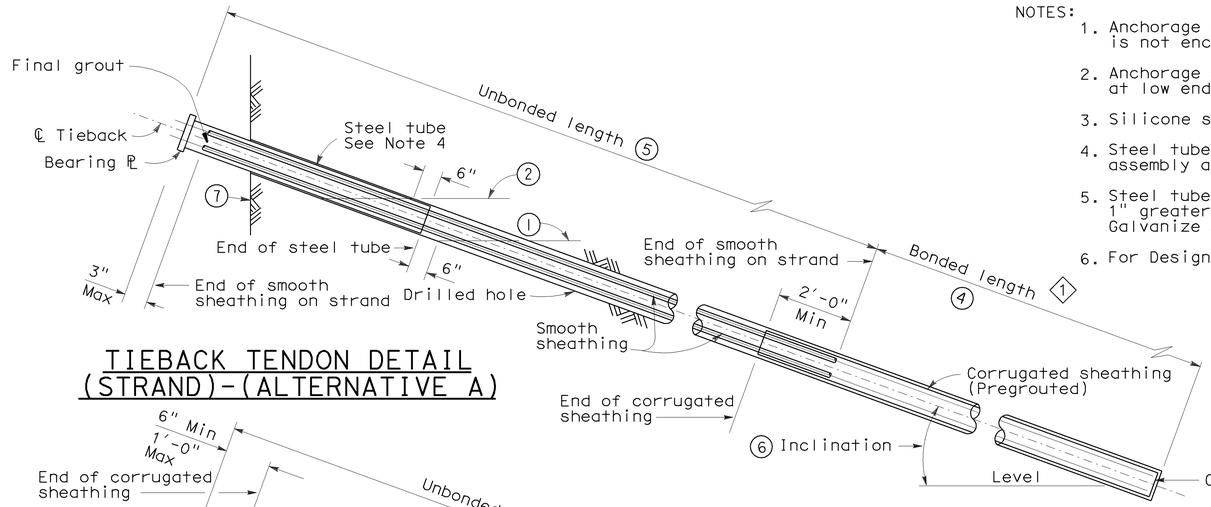

TIEBACK TENDON DETAIL (STRAND)-(ALTERNATIVE A)

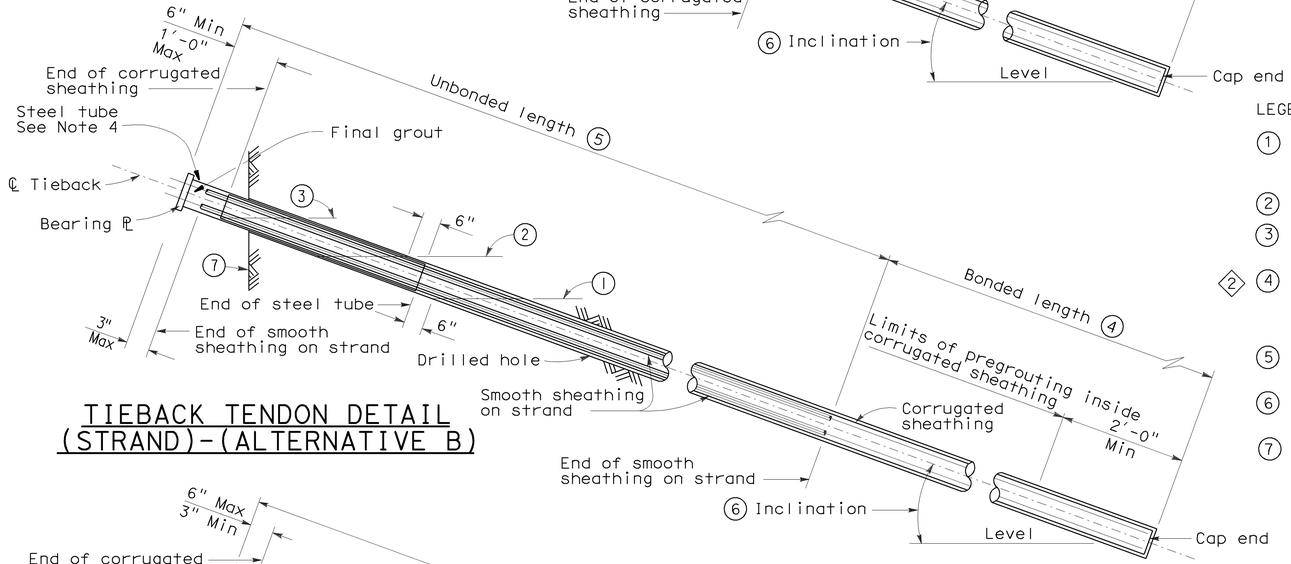

TIEBACK TENDON DETAIL (STRAND)-(ALTERNATIVE B)

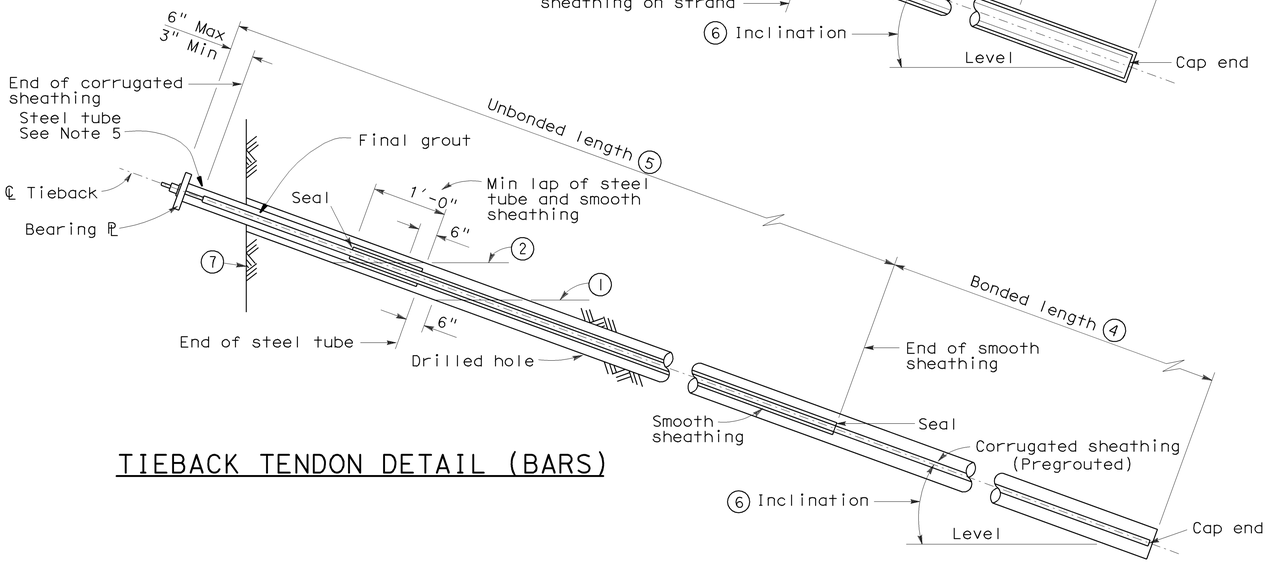

TIEBACK TENDON DETAIL (BARS)

LEGEND:

① Level of initial grouting for drill hole 6" in diameter or smaller

② Level of secondary grouting

③ Level of initial grouting inside corrugated sheathing

◇2 ④ Bonded length shall be determined by the Contractor. The tieback shall not extend beyond the permanent tieback easement.

⑤ For unbonded length, see sheets RW8-32 and RW8-44.

⑥ For inclination, see sheets RW8-32 and RW8-44.

⑦ Face of Wall Excavation

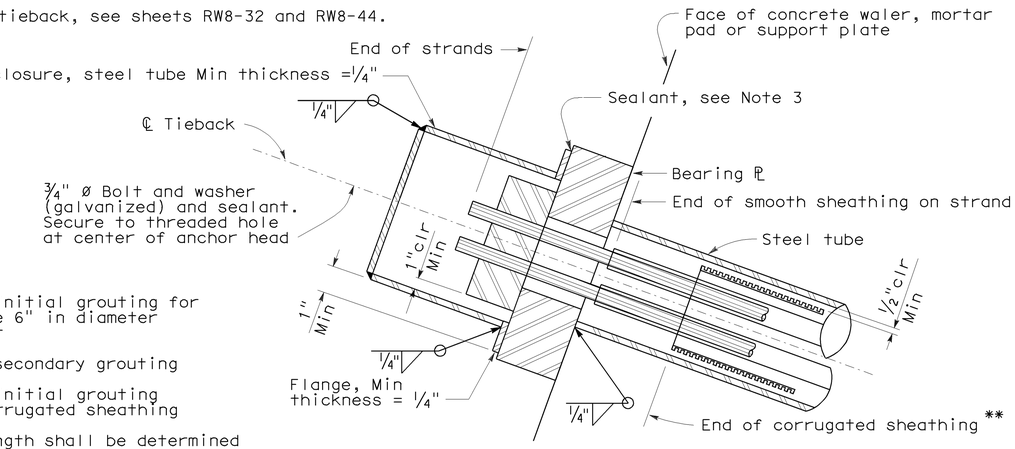

ALTERNATIVE X

** Alternative B tendon only

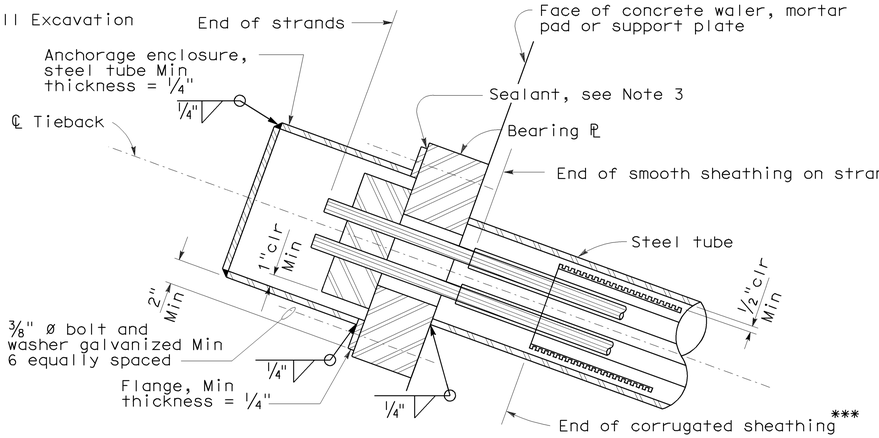

ALTERNATIVE Y

*** Alternative B tendon only

ANCHORAGE ENCLOSURE DETAILS

RW8-46

STANDARD DRAWING			
FILE NO. xs12-040e	APPROVED BY G. WANG (RESPONSIBLE TECHNICAL SPECIALIST)	RELEASED BY ROBERTO LACALLE (RESPONSIBLE OFFICE CHIEF)	① Added note
	APPROVAL DATE 2-27-09	RELEASE DATE 2-27-09	② Changed note

STATE OF CALIFORNIA
DEPARTMENT OF TRANSPORTATION

DIVISION OF ENGINEERING SERVICES

CU 04
EA 163741

BRIDGE NO.	RETAINING WALL NO. 8
34E0014	
POST MILE	TIEBACK DETAILS
8.8	

DISREGARD PRINTS BEARING EARLIER REVISION DATES →

REVISION DATES (PRELIMINARY STAGE ONLY): 6-04-09 | 07-15-09 | 08-07-09 | 08-26-09 | 09-14-09 | 09-25-09 | 09-30-09 | 10-30-09

SHEET 46 OF 65

DS OSD 2147A (ENGLISH STANDARD DRAWING "XS" BORDER REV. 01/11/08)

ORIGINAL SCALE IN INCHES FOR REDUCED PLANS 0 1 2 3

FILE => 34E0014-u-miscdt02.dgn

USERNAME => trsmth DATE PLOTTED => 12-DEC-2009 TIME PLOTTED => 09:49

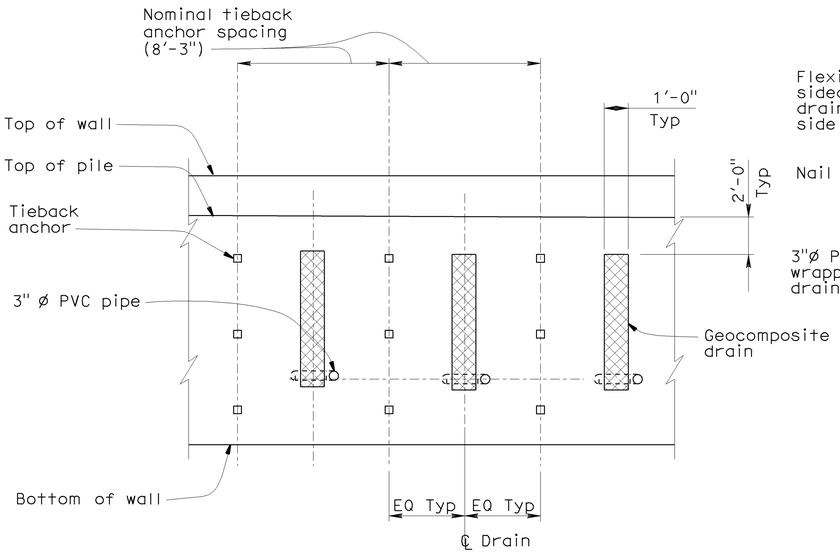

TIEBACK WALL PARTIAL ELEVATION - GEOCOMPOSITE DRAIN

No Scale

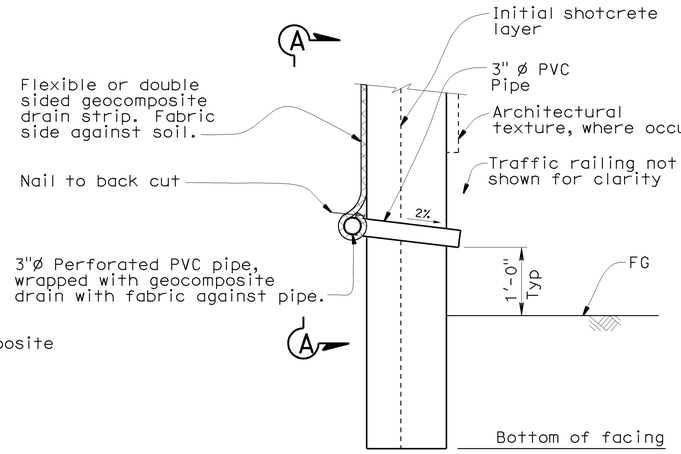

WALL DRAIN DETAIL AT WEEPHOLE OPTION A

No scale

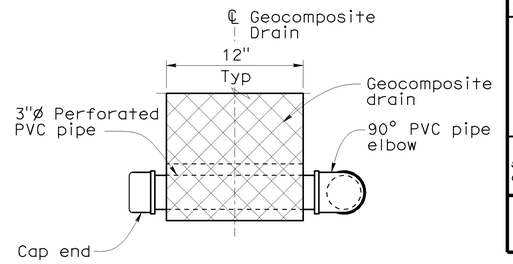

VIEW A-A

No scale

NOTES:

1. Elevation of drains and weepholes as shown elsewhere on plans.
2. For weephole spacing and detail, see sheet RW8-49.
3. 3" Dia unslotted plastic pipe continuos behind rail and Southbound Battery Tunnel Portal wingwall. Cap ends of pipe. Provide "Tee" connection at 4" Dia weepholes and 3" Dia unslotted pipe from tieback wall.

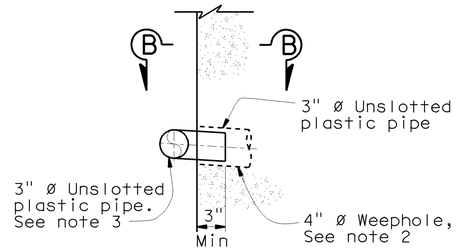

DETAIL 1

NO SCALE

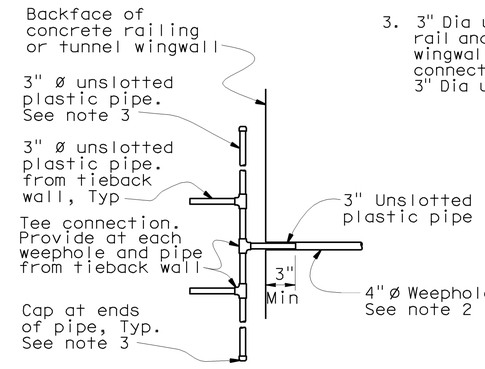

VIEW B-B

NO SCALE

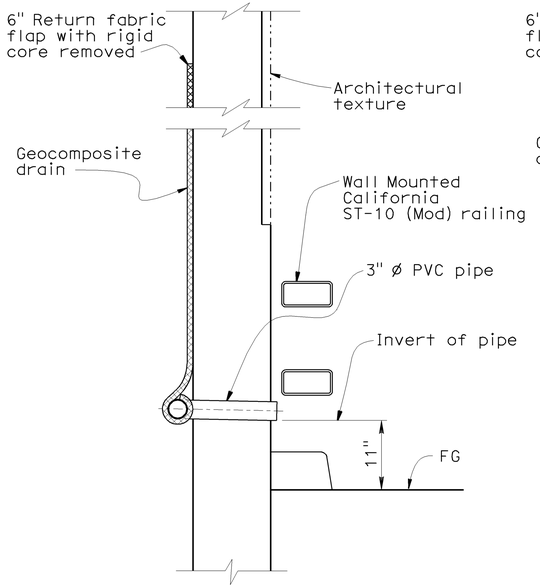

PART TYPICAL SECTION AT TIEBACK WALL WEEPHOLE

(AT WALL MOUNTED RAILING)
No Scale

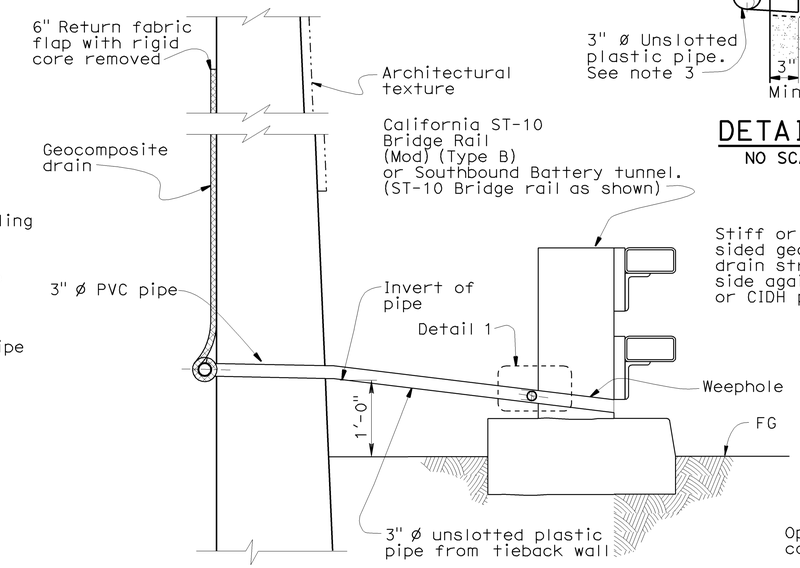

PART TYPICAL SECTION AT TIEBACK WALL WEEPHOLE

(AT WALL SETBACK)
No Scale

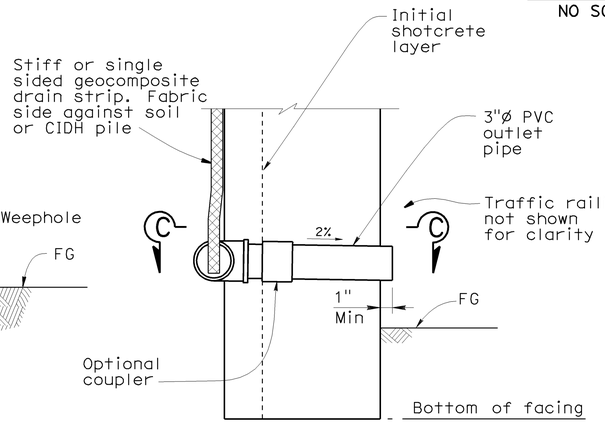

WALL DRAIN DETAIL AT WEEPHOLE OPTION B

No scale

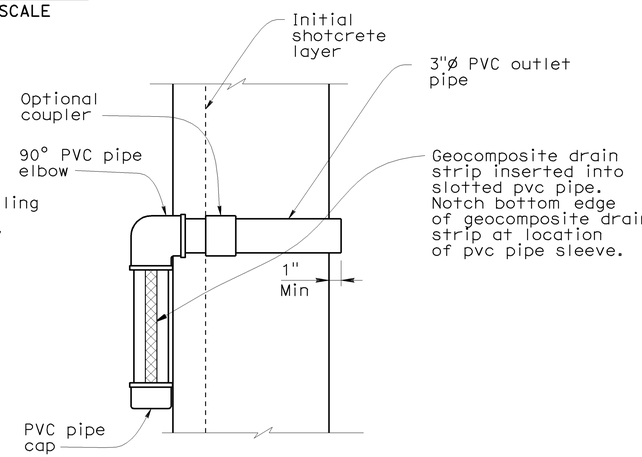

VIEW C-C

No Scale

RW8-47

DIST	COUNTY	ROUTE	POST MILES TOTAL PROJECT	SHEET No	TOTAL SHEETS
04	SF	101	8.2/9.2	615	654

09/30/09
REGISTERED CIVIL ENGINEER DATE

12-14-09
PLANS APPROVAL DATE

REGISTERED PROFESSIONAL ENGINEER — LAWRENCE M. JOHNSON — No. C 44006 — Exp. 6-30-11 — CIVIL — STATE OF CALIFORNIA

The State of California or its officers or agents shall not be responsible for the accuracy or completeness of electronic copies of this plan sheet.

Arup PB Joint Venture
303 Second Street, Suite 700N
San Francisco, CA 94107

	BY	CHECKED
DESIGN	L. JOHNSON	S. SINGH
DETAILS	E. CANTILLER	S. SINGH
QUANTITIES	L. JOHNSON	S. SINGH

PREPARED FOR THE STATE OF CALIFORNIA DEPARTMENT OF TRANSPORTATION

R. DONIKIAN
PROJECT ENGINEER

BRIDGE NO.	34E0014
POST MILE	8.8

RETAINING WALL NO. 8

GEOCOMPOSITE DRAIN SYSTEM DETAILS

DESIGN DETAIL SHEET (ENGLISH) (REV. 2/25/05)

ORIGINAL SCALE IN INCHES FOR REDUCED PLANS 0 1 2 3

CU 04
EA 163741

DISREGARD PRINTS BEARING EARLIER REVISION DATES

REVISION DATES (PRELIMINARY STAGE ONLY): 6-04-09 | 07-15-09 | 08-07-09 | 08-26-09 | 09-18-09 | 09-25-09 | 09-30-09

SHEET 47 OF 65

FILE => 34E0014-u-miscdt03.dgn

USERNAME => trstrk DATE PLOTTED => 12-DEC-2009 TIME PLOTTED => 09:43

DIST	COUNTY	ROUTE	POST MILES TOTAL PROJECT	SHEET No	TOTAL SHEETS
04	SF	101	8.2/9.2	616	654

Genaro M. Doria
REGISTERED CIVIL ENGINEER DATE

12-14-09
PLANS APPROVAL DATE

REGISTERED PROFESSIONAL ENGINEER
GENARO M. DORIA
No. C63583
Exp. 9/30/10
CIVIL
STATE OF CALIFORNIA

The State of California or its officers or agents shall not be responsible for the accuracy or completeness of electronic copies of this plan sheet.

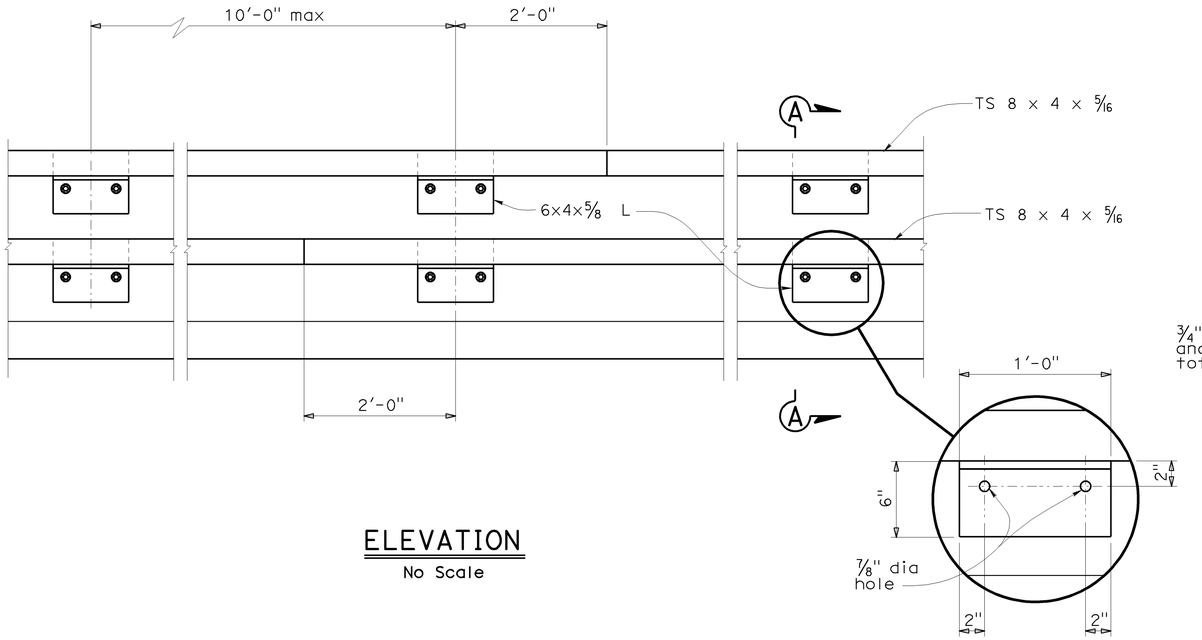

ELEVATION
No Scale

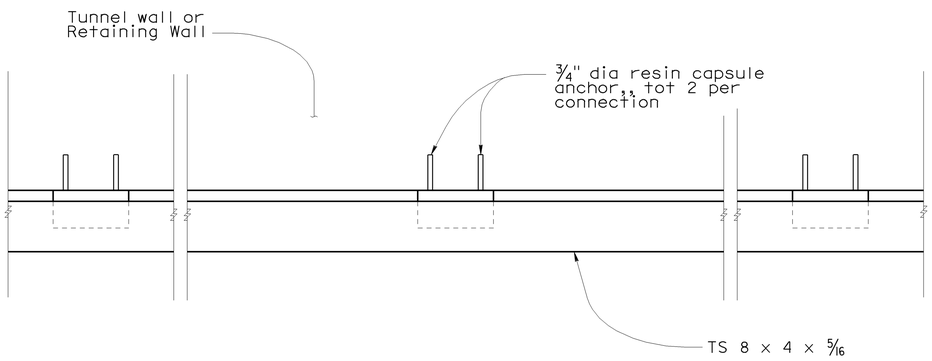

PLAN
No Scale

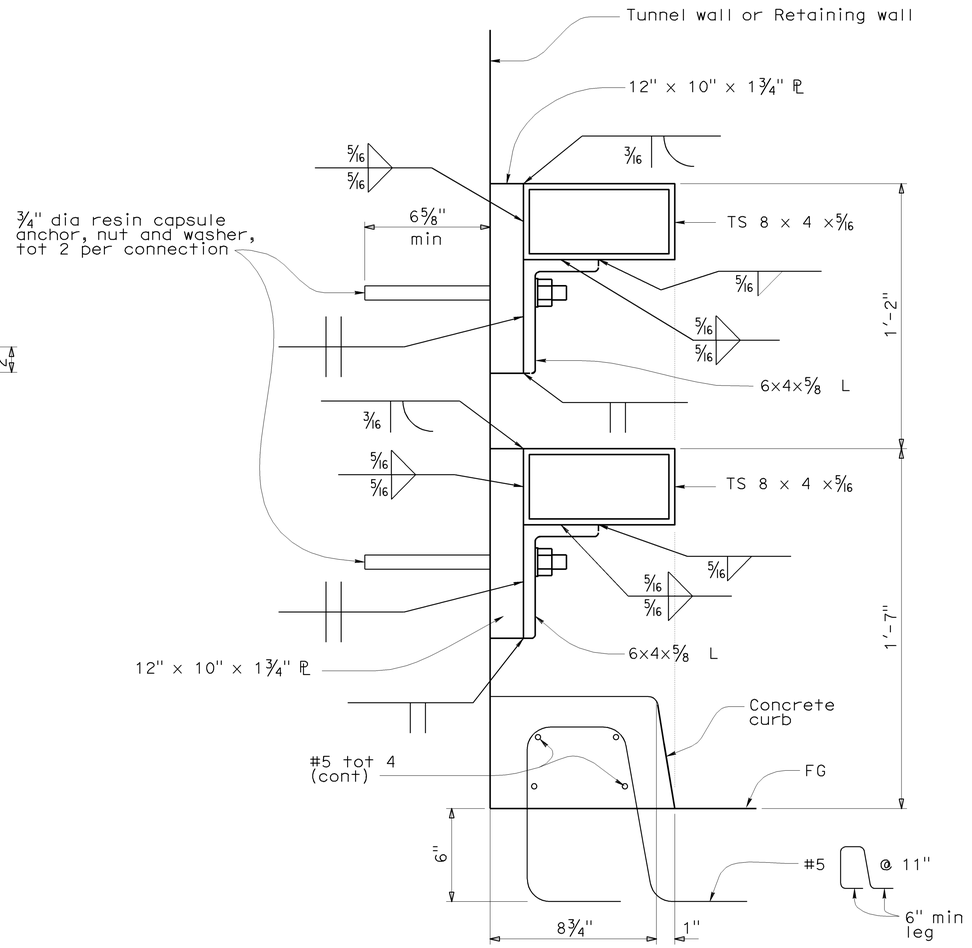

SECTION A-A
No Scale

Notes:

1) For Transition of other barrier rails, see "ROAD PLANS".
2) See "STANDARD PLANS" B11-70, for details not shown.
3) All steel shall be galvanized after fabrication.
4) For alignment, see "ROAD PLANS".

RW8-48

DESIGN	BY G. Doria	CHECKED J Magana	STATE OF CALIFORNIA DEPARTMENT OF TRANSPORTATION	DIVISION OF ENGINEERING SERVICES STRUCTURE DESIGN SPECIAL DESIGNS BRANCH	BRIDGE NO. N/A
DETAILS	BY P C Wells	CHECKED G Doria			POST MILE VARIES
QUANTITIES	BY L Johnson	CHECKED S Singh			

RETAINING WALL NO. 8
WALL MOUNTED CALIFORNIA ST-10 (MOD)

STRUCTURES DESIGN SPECIAL DESIGN SHEET (ENGLISH) (REV. 10-25-05)

ORIGINAL SCALE IN INCHES FOR REDUCED PLANS 0 1 2 3

CU 04
EA 163741

DISREGARD PRINTS BEARING EARLIER REVISION DATES

REVISION DATES: 6/11/09

SHEET 48 OF 65

FILE => 34E0014-u-miscdt04.dgn

USERNAME => ttstrk DATE PLOTTED => 12-DEC-2009 TIME PLOTTED => 09:49

DIST	COUNTY	ROUTE	POST MILES TOTAL PROJECT	SHEET No	TOTAL SHEETS
04	SF	101	8.2/9.2	617	654

09/30/09
REGISTERED CIVIL ENGINEER DATE

12-14-09
PLANS APPROVAL DATE

REGISTERED PROFESSIONAL ENGINEER
LAWRENCE M. JOHNSON
No. C 44006
Exp. 6-30-11
CIVIL
STATE OF CALIFORNIA

The State of California or its officers or agents shall not be responsible for the accuracy or completeness of electronic copies of this plan sheet.

Arup PB Joint Venture
303 Second Street, Suite 700N
San Francisco, CA 94107

NOTES:

1. For Detail 1, see sheet RW8-47.
2. For Detail X and Detail Y, see sheet RW8-50.
3. Place 4" Dia weepholes at 10'-0" Max C-C and 5'-0" Max from begin and end of railing.
4. All reinforcing bar shall be epoxy coated.

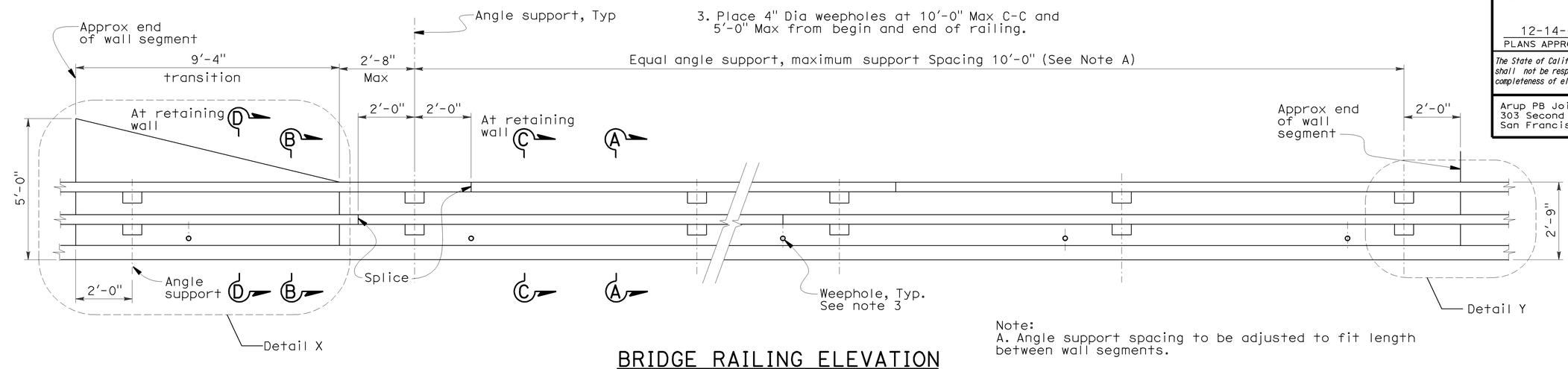

Note:
A. Angle support spacing to be adjusted to fit length between wall segments.

BRIDGE RAILING ELEVATION

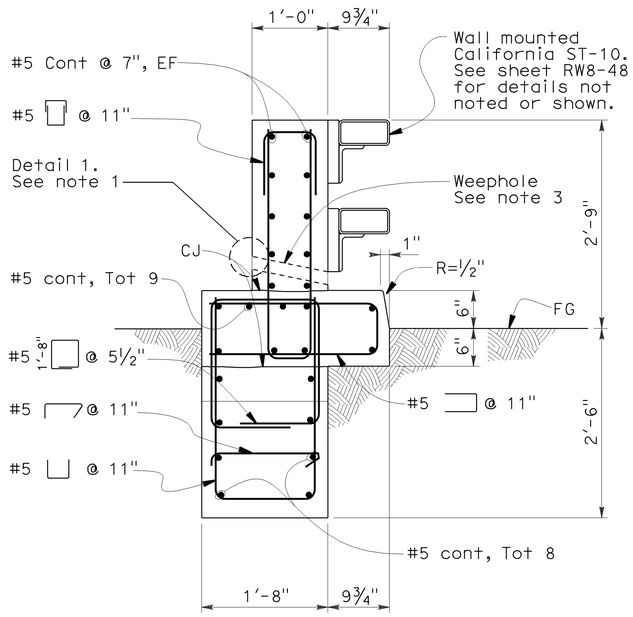

SECTION A-A
NO SCALE

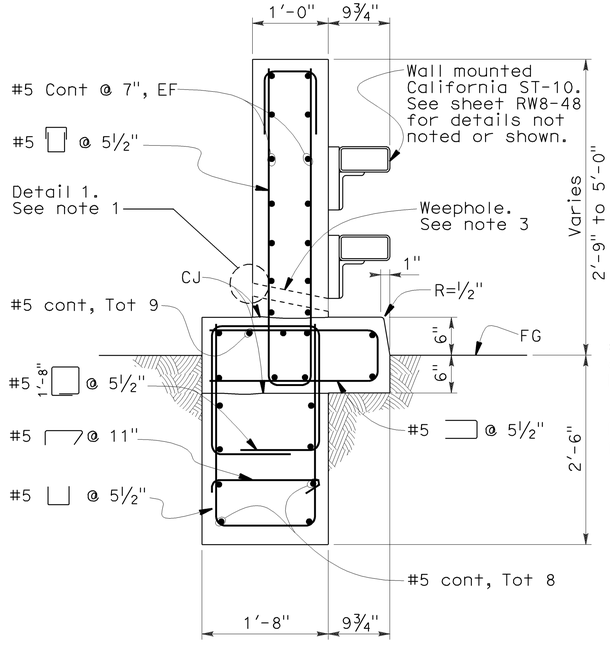

TRANSITION
SECTION B-B
NO SCALE

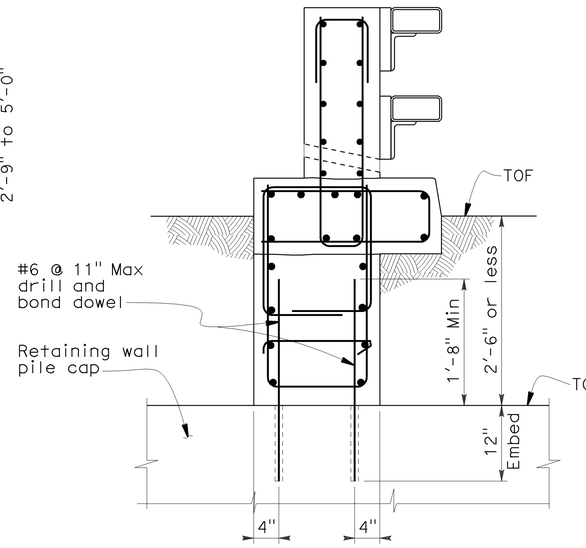

Note:
For detail not noted or shown, see Section A-A.

AT RETAINING WALL
SECTION C-C
NO SCALE

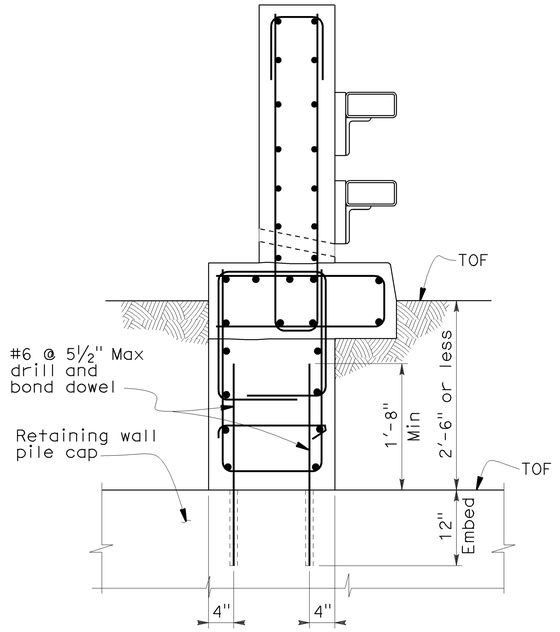

Note:
For detail not noted or shown, see Section B-B.

TRANSITION AT RETAINING WALL
SECTION D-D
NO SCALE

RW8-49

DESIGN	BY L. JOHNSON	CHECKED S. SINGH	PREPARED FOR THE STATE OF CALIFORNIA DEPARTMENT OF TRANSPORTATION	R. DONIKIAN PROJECT ENGINEER	BRIDGE NO. 34E0014	RETAINING WALL NO. 8	
DETAILS	BY L. REYES	CHECKED S. SINGH			POST MILE 8.8	CALIFORNIA ST-10 BRIDGE RAIL (MOD) (TYPE B) 1 OF 2	
QUANTITIES	BY L. JOHNSON	CHECKED S. SINGH					

DESIGN DETAIL SHEET (ENGLISH) (REV. 2/25/05)

ORIGINAL SCALE IN INCHES FOR REDUCED PLANS 0 1 2 3

CU 04
EA 163741

DISREGARD PRINTS BEARING EARLIER REVISION DATES →

REVISION DATES (PRELIMINARY STAGE ONLY): 6-04-09 | 07-15-09 | 08-07-09 | 08-26-09 | 09-16-09 | 09-25-09 | 09-30-09

SHEET 49 OF 65

FILE => 34E0014-u-miscdt05.dgn

USERNAME => trsitk DATE PLOTTED => 12-DEC-2009 TIME PLOTTED => 10:01

DIST	COUNTY	ROUTE	POST MILES TOTAL PROJECT	SHEET No	TOTAL SHEETS
04	SF	101	8.2/9.2	618	654

09/30/09
REGISTERED CIVIL ENGINEER DATE

12-14-09
PLANS APPROVAL DATE

REGISTERED PROFESSIONAL ENGINEER
LAWRENCE M. JOHNSON
No. C 44006
Exp. 6-30-11
CIVIL
STATE OF CALIFORNIA

The State of California or its officers or agents shall not be responsible for the accuracy or completeness of electronic copies of this plan sheet.

Arup PB Joint Venture
303 Second Street, Suite 700N
San Francisco, CA 94107

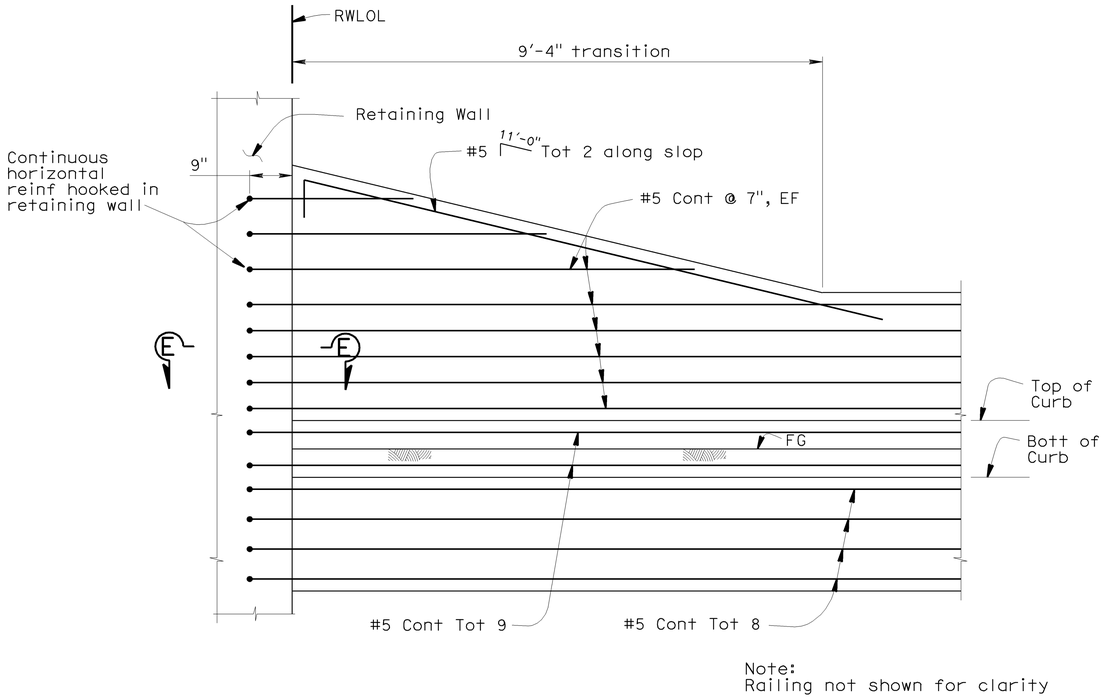

Note:
Railing not shown for clarity

DETAIL X
NO SCALE

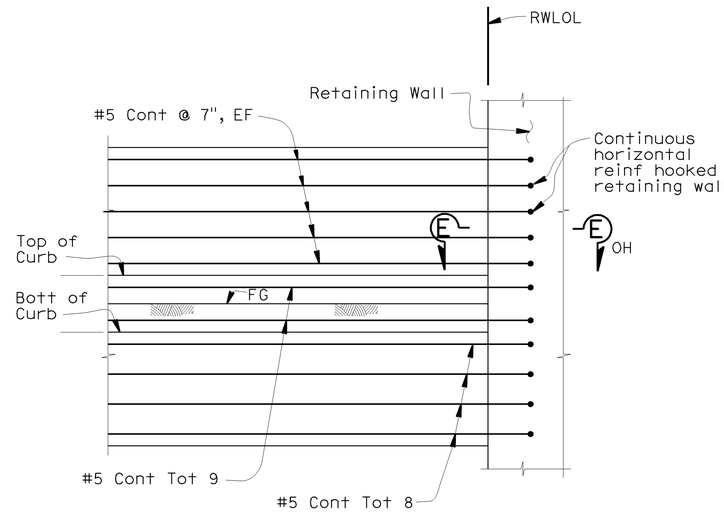

Note:
Railing not shown for clarity

DETAIL Y
NO SCALE

NOTE:

1. All reinforcing bar shall be epoxy coated.

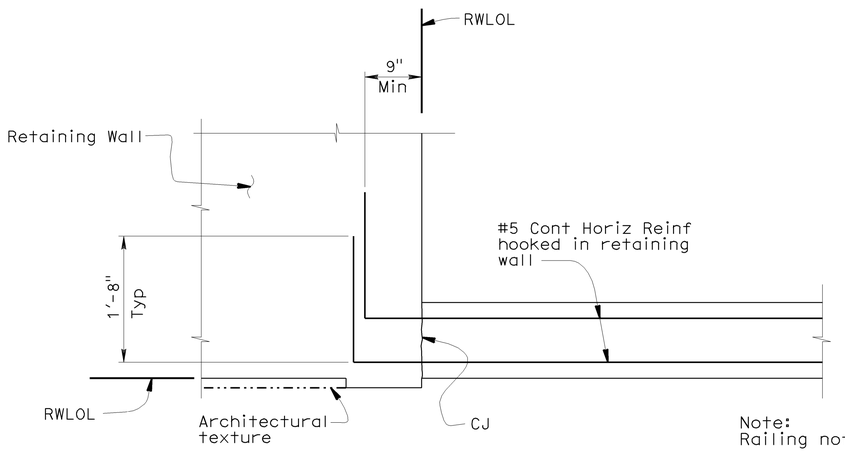

Note:
Railing not shown for clarity

SECTION E-E
NO SCALE

RW8-5Q

DESIGN	BY L. JOHNSON	CHECKED S. SINGH	PREPARED FOR THE STATE OF CALIFORNIA DEPARTMENT OF TRANSPORTATION	R. DONIKIAN PROJECT ENGINEER	BRIDGE NO. 34E0014	RETAINING WALL NO. 8	
DETAILS	BY O. KURNOVSKAYA	CHECKED S. SINGH			POST MILE 8.8	CALIFORNIA ST-10 BRIDGE RAIL (MOD) (TYPE B) 2 OF 2	
QUANTITIES	BY L. JOHNSON	CHECKED S. SINGH					

DESIGN DETAIL SHEET (ENGLISH) (REV. 2/25/05)

ORIGINAL SCALE IN INCHES FOR REDUCED PLANS 0 1 2 3

CU 04
EA 163741

DISREGARD PRINTS BEARING EARLIER REVISION DATES →

REVISION DATES (PRELIMINARY STAGE ONLY): 6-01-09 | 07-15-09 | 08-07-09 | 08-26-09 | 09-18-09 | 09-25-09 | 09-30-09

SHEET 50 OF 65

FILE => 34E0014-u-miscdt06.dgn

USERNAME = trsitk DATE PLOTTED => 12-DEC-2009 TIME PLOTTED => 09:50

DIST	COUNTY	ROUTE	POST MILES TOTAL PROJECT	SHEET No	TOTAL SHEETS
04	SF	101	8.2/9.2	619	654

Scott L. Danielson 10/30/09
REGISTERED ARCHITECT DATE

12-14-09
PLANS APPROVAL DATE

STATE OF CALIFORNIA ☆ SCOTT L. DANIELSON ☆ 6/30/2011 CERTIFICATE NO. C 6118 REGISTERED ARCHITECT

The State of California or its officers or agents shall not be responsible for the accuracy or completeness of electronic copies of this plan sheet.

Arup PB Joint Venture
303 Second Street, Suite 700N
San Francisco, CA 94107

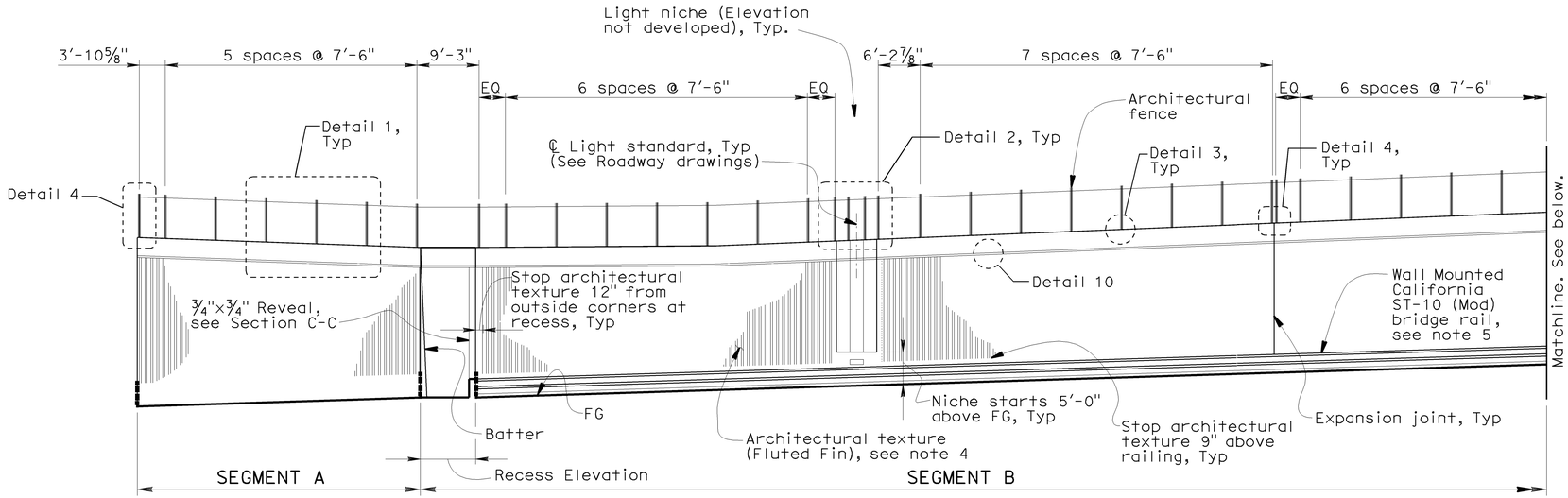

DEVELOPED ELEVATION

SCALE: 3/32" = 1′-0"

NOTES:

1. For Details 1, 2 3, and 4 see sheet RW8-AT4.
2. For Detail 5 see sheet RW8-AT5.
3. For Details 10 and 11, and Section C-C see sheet RW8-AT6.
4. For "Architectural Texture (Fluted Fin)" detail, see sheet RW8-AT6.
5. For Wall Mounted California ST-10 (Mod) bridge rail, see sheet RW8-48.
6. For California ST-10 Bridge Rail (Mod) (Type B) see sheets RW8-49 and RW8-50.

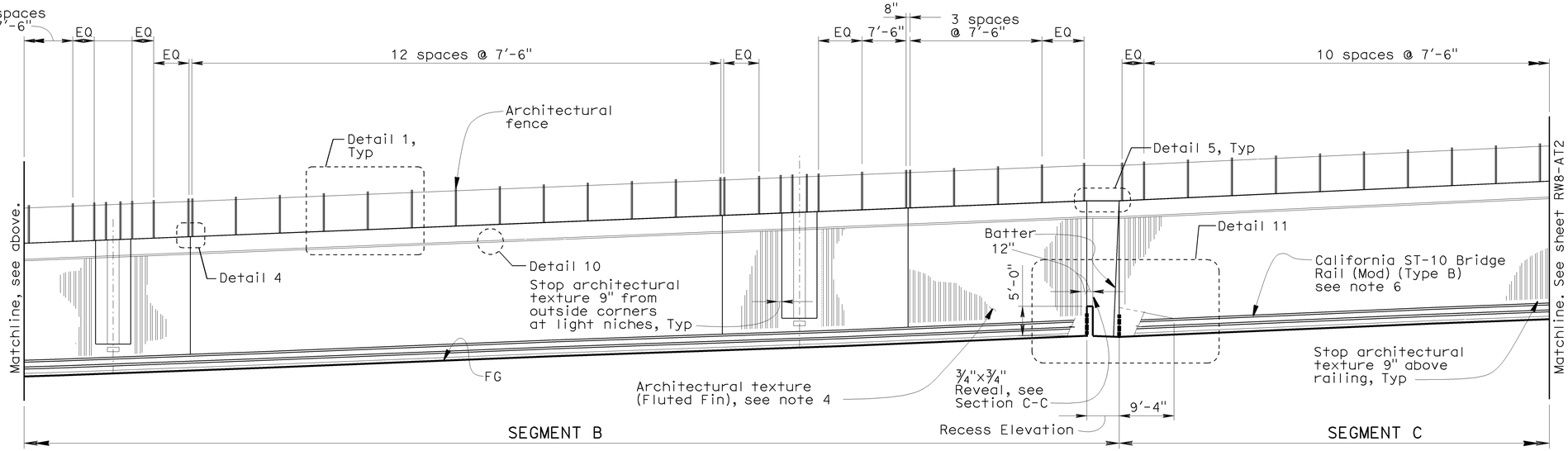

DEVELOPED ELEVATION

SCALE: 3/32" = 1′-0"

RW8-AT1

DESIGN	BY S. DANIELSON	CHECKED R. DONIKIAN	PREPARED FOR THE STATE OF CALIFORNIA DEPARTMENT OF TRANSPORTATION	R. DONIKIAN PROJECT ENGINEER	BRIDGE NO. 34E0014	RETAINING WALL NO. 8	
DETAILS	BY L. REYES	CHECKED S. DANIELSON			POST MILE 8.8	ARCHITECTURAL ELEVATIONS NO. 1	
QUANTITIES	BY L. JOHNSON	CHECKED S. SINGH					

DESIGN DETAIL SHEET (ENGLISH) (REV. 2/25/05)

ORIGINAL SCALE IN INCHES FOR REDUCED PLANS 0 1 2 3

CU 04
EA 163741

DISREGARD PRINTS BEARING EARLIER REVISION DATES →

REVISION DATES (PRELIMINARY STAGE ONLY): 9-30-09 | 10-13-09 | 10-30-09

SHEET 51 OF 65

FILE => 34E0014-x-at01.dgn

DATE PLOTTED => 12-DEC-2009 TIME PLOTTED => 03:50
USERNAME => trsmth

DIST	COUNTY	ROUTE	POST MILES TOTAL PROJECT	SHEET No	TOTAL SHEETS
04	SF	101	8.2/9.2	620	654

Scott L. Danielson 10/30/09
REGISTERED ARCHITECT DATE

12-14-09
PLANS APPROVAL DATE

The State of California or its officers or agents shall not be responsible for the accuracy or completeness of electronic copies of this plan sheet.

STATE OF CALIFORNIA ☆ SCOTT L. DANIELSON ☆ 6/30/2011 CERTIFICATE NO. C 6118 REGISTERED ARCHITECT

Arup PB Joint Venture
303 Second Street, Suite 700N
San Francisco, CA 94107

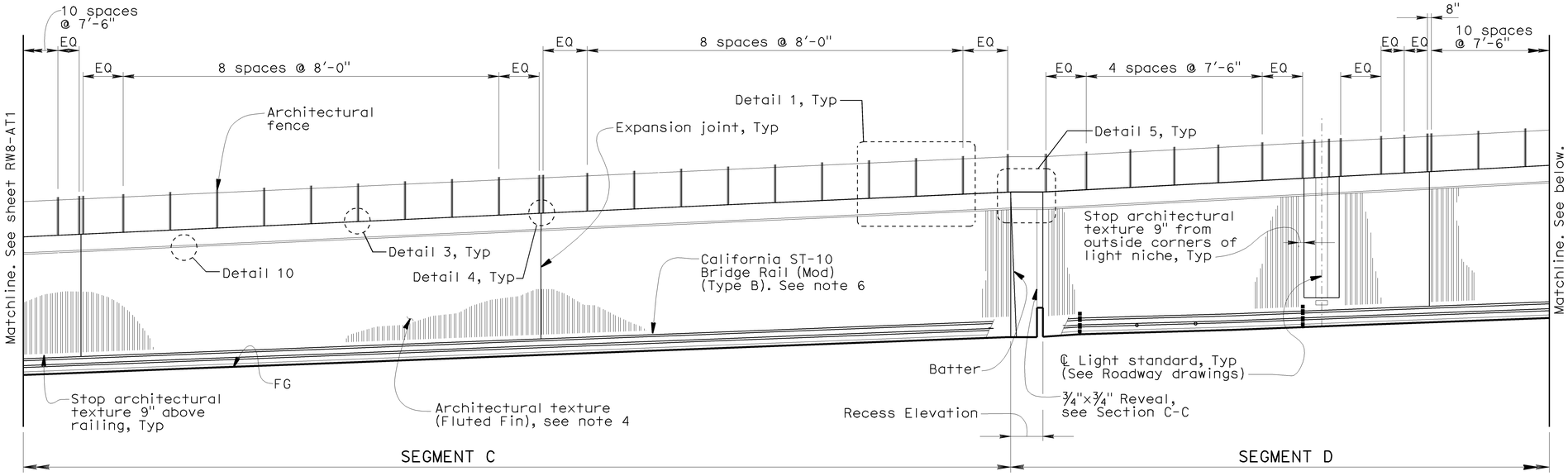

DEVELOPED ELEVATION

SCALE: 3/32" = 1'-0"

NOTES:

1. For Details 1, 2 3, and 4 see sheet RW8-AT4.
2. For Detail 5 see sheet RW8-AT5.
3. For Detail 10 and Section C-C, see sheet RW8-AT6.
4. For "Architectural Texture (Fluted Fin)" detail, see sheet RW8-AT6.
5. For Wall Mounted California ST-10 (Mod) bridge rail, see sheet RW8-48.
6. For California ST-10 Bridge Rail (Mod) (Type B) see sheets RW8-49 and RW8-50.

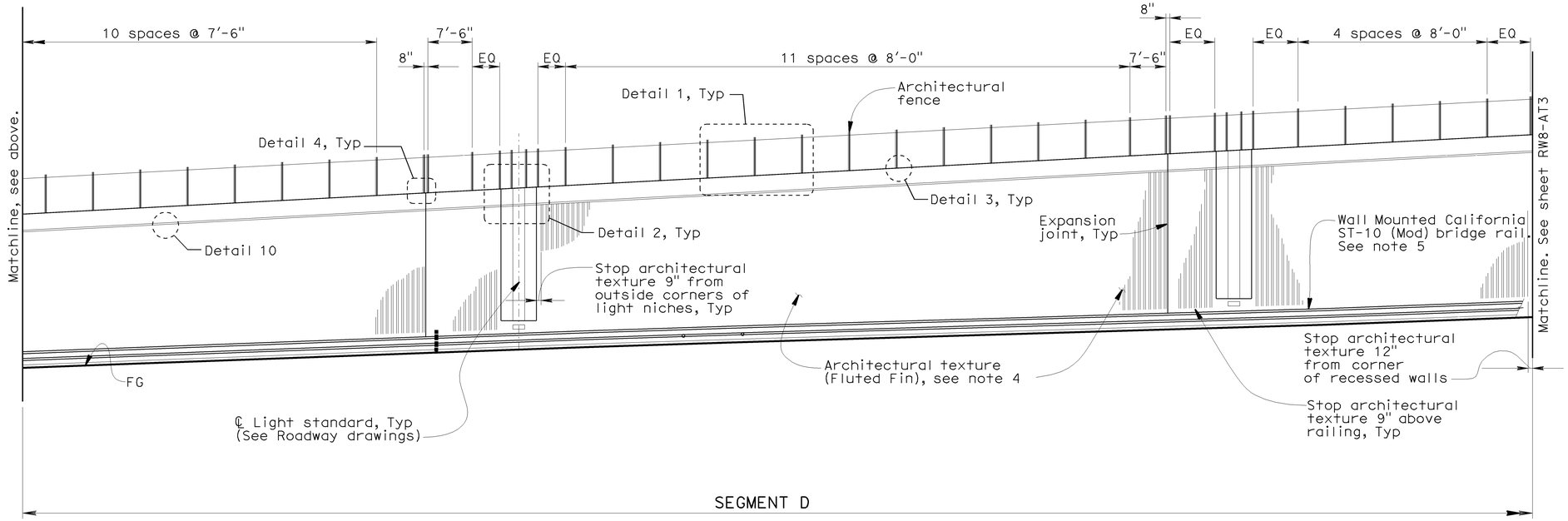

DEVELOPED ELEVATION

SCALE: 3/32" = 1'-0"

RW8-AT2

		DESIGN	BY S. DANIELSON	CHECKED R. DONIKIAN	PREPARED FOR THE STATE OF CALIFORNIA DEPARTMENT OF TRANSPORTATION	R. DONIKIAN PROJECT ENGINEER	BRIDGE NO. 34E0014
		DETAILS	BY L. REYES	CHECKED S. DANIELSON			POST MILE 8.8
		QUANTITIES	BY L. JOHNSON	CHECKED S. SINGH		CU 04 EA 163741	

RETAINING WALL NO. 8

ARCHITECTURAL ELEVATIONS NO. 2

DESIGN DETAIL SHEET (ENGLISH) (REV. 2/25/05)

ORIGINAL SCALE IN INCHES FOR REDUCED PLANS 0 1 2 3

DISREGARD PRINTS BEARING EARLIER REVISION DATES →

REVISION DATES (PRELIMINARY STAGE ONLY): 9-30-09 10-13-09 10-30-09

SHEET 52 OF 65

FILE => 34E0014-x-at02.dgn

USERNAME => rrstrk DATE PLOTTED => 12-DEC-2009 TIME PLOTTED => 09:50

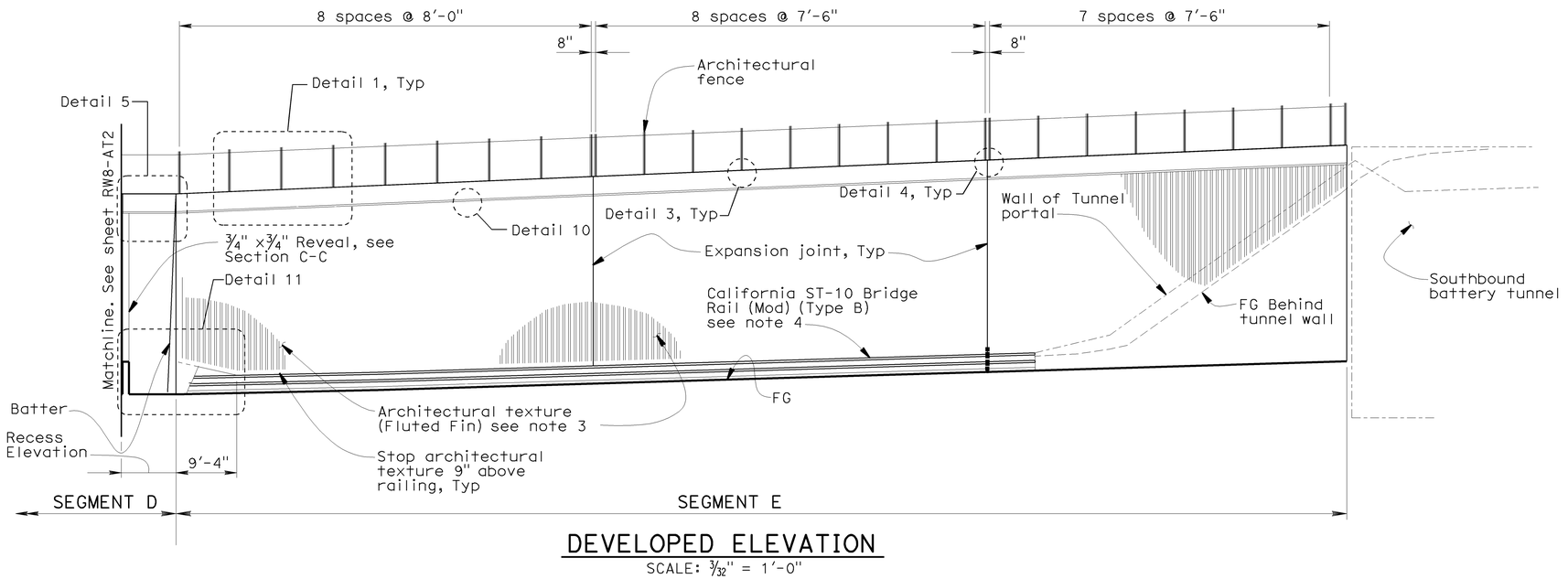

DEVELOPED ELEVATION

SCALE: 3/32" = 1'-0"

DIST	COUNTY	ROUTE	POST MILES TOTAL PROJECT	SHEET No	TOTAL SHEETS
04	SF	101	8.2/9.2	621	654

Scott L. Danielson 10/30/09
REGISTERED ARCHITECT DATE

12-14-09
PLANS APPROVAL DATE

STATE OF CALIFORNIA ☆ SCOTT L. DANIELSON ☆ 6/30/2011 CERTIFICATE NO. C 6118 REGISTERED ARCHITECT

The State of California or its officers or agents shall not be responsible for the accuracy or completeness of electronic copies of this plan sheet.

Arup PB Joint Venture
303 Second Street, Suite 700N
San Francisco, CA 94107

NOTES:

1. For Details 1, 3, and 4 see sheet RW8-AT4.
2. For Detail 10 and 11, and Section C-C, see sheet RW8-AT6.
3. For "Architectural Texture (Fluted Fin)" detail, see sheet RW8-AT6.
4. For California ST-10 Bridge Rail (Mod) (Type B) see sheets RW8-49 and RW8-50.

RW8-AT3

DESIGN	BY S. DANIELSON	CHECKED R. DONIKIAN	PREPARED FOR THE STATE OF CALIFORNIA DEPARTMENT OF TRANSPORTATION
DETAILS	BY L. REYES	CHECKED S. DANIELSON	
QUANTITIES	BY L. JOHNSON	CHECKED S. SINGH	

R. DONIKIAN
PROJECT ENGINEER

BRIDGE NO. 34E0014
POST MILE 8.8

RETAINING WALL NO. 8
ARCHITECTURAL ELEVATIONS NO. 3

DESIGN DETAIL SHEET (ENGLISH) (REV. 2/25/05)

ORIGINAL SCALE IN INCHES FOR REDUCED PLANS 0 1 2 3

CU 04
EA 163741

DISREGARD PRINTS BEARING EARLIER REVISION DATES →

REVISION DATES (PRELIMINARY STAGE ONLY): ~~9-30-09~~ ~~10-13-09~~ 10-30-09

SHEET 53 OF 65

FILE => 34E0014-x-at03.dgn

USERNAME => trishk DATE PLOTTED => 12-DEC-2009 TIME PLOTTED => 09:50

DIST	COUNTY	ROUTE	POST MILES TOTAL PROJECT	SHEET No	TOTAL SHEETS
04	SF	101	8.2/9.2	622	654

Scott L. Danielson 10/30/09
REGISTERED ARCHITECT DATE

12-14-09
PLANS APPROVAL DATE

STATE OF CALIFORNIA ★ SCOTT L. DANIELSON ★ 6/30/2011 CERTIFICATE NO. C 6118 REGISTERED ARCHITECT

The State of California or its officers or agents shall not be responsible for the accuracy or completeness of electronic copies of this plan sheet.

Arup PB Joint Venture
303 Second Street, Suite 700N
San Francisco, CA 94107

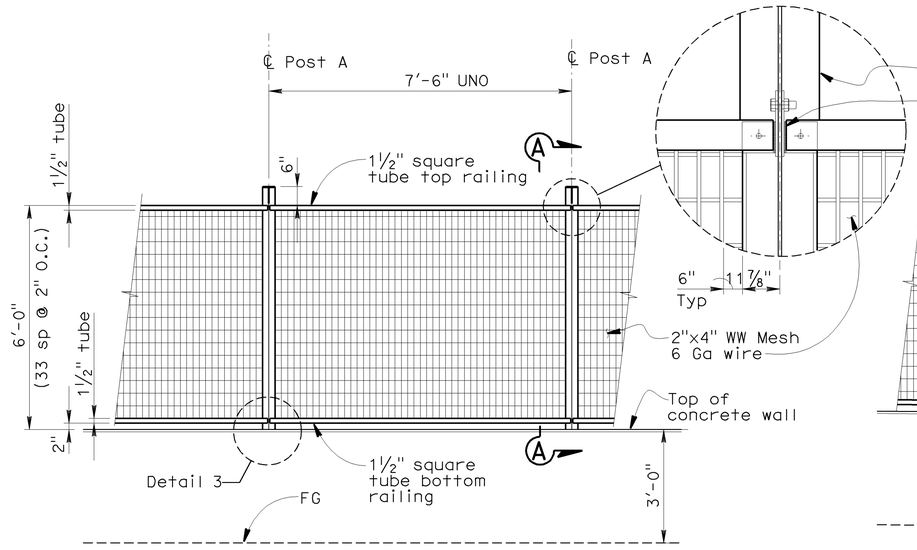

(TYPICAL ARCHITECTURAL FENCE)

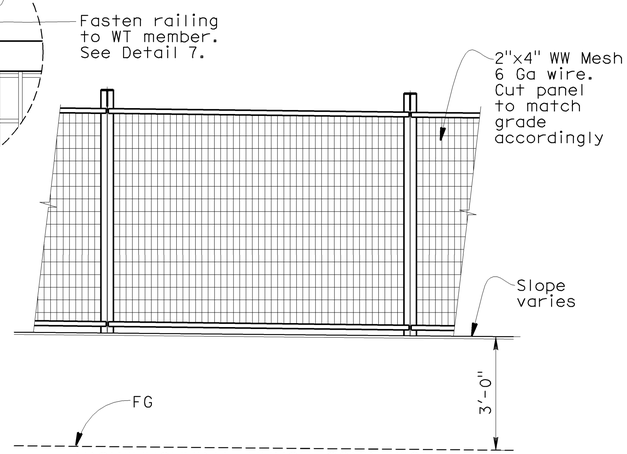

ARCHITECTURAL FENCE CONDITION WHERE GRADE SLOPES

DETAIL 1

SCALE: ½" = 1'-0"

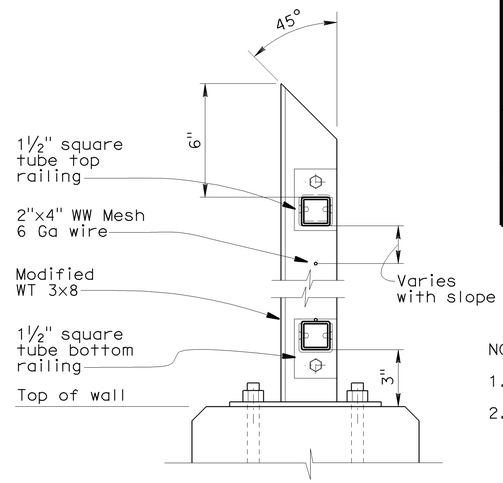

POST A

SECTION A-A

SCALE: 3" = 1'-0"

NOTES:

1. For Detail 6 see sheet RW8-AT5.
2. For Detail 7 see sheet RW8-AT5.

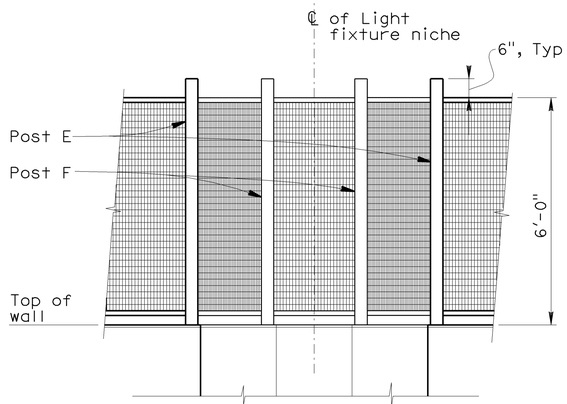

ELEVATION

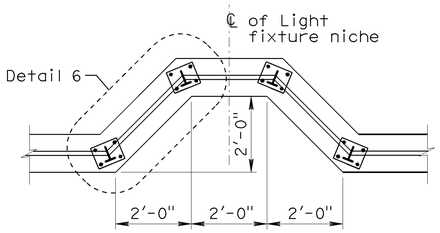

PLAN
(TYPICAL PLAN ARCHITECTURAL FENCE CONDITION AT LIGHT NICHES)

DETAIL 2

SCALE: ½" = 1'-0"

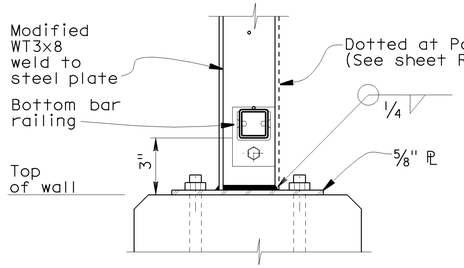

SECTION

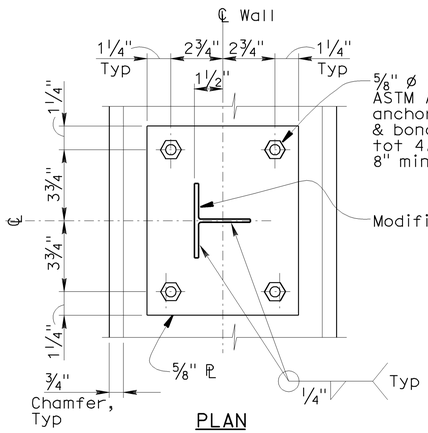

PLAN

DETAIL 3

SCALE: 3" = 1'-0"

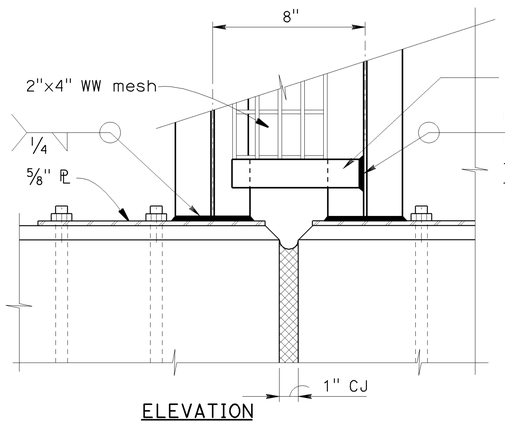

ELEVATION
POST B

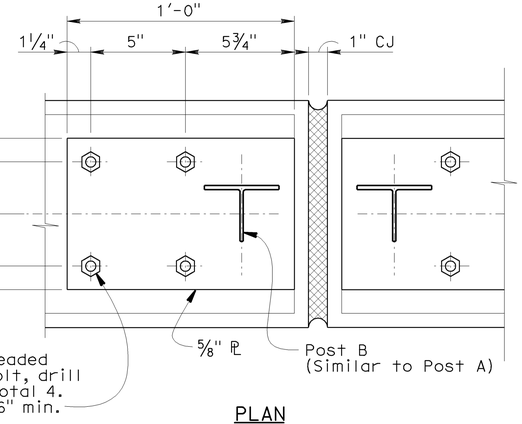

PLAN

DETAIL 4

SCALE: 3" = 1'-0"

RW8-AT4

DESIGN	BY S. DANIELSON	CHECKED R. DONIKIAN	PREPARED FOR THE STATE OF CALIFORNIA DEPARTMENT OF TRANSPORTATION	R. DONIKIAN PROJECT ENGINEER	BRIDGE NO. 34E0014	RETAINING WALL NO. 8	
DETAILS	BY L. REYES	CHECKED S. DANIELSON			POST MILE 8.8	ARCHITECTURAL DETAILS NO. 1	
QUANTITIES	BY L. JOHNSON	CHECKED S. SINGH					

DESIGN DETAIL SHEET (ENGLISH) (REV. 2/25/05)

ORIGINAL SCALE IN INCHES FOR REDUCED PLANS 0 1 2 3

CU 04
EA 163741

DISREGARD PRINTS BEARING EARLIER REVISION DATES →

REVISION DATES (PRELIMINARY STAGE ONLY): 9-30-09 | 10-15-09 | 10-30-09

SHEET 54 OF 65

FILE => 34E0014-x-at04.dgn

USERNAME => trsmth DATE PLOTTED => 12-DEC-2009 TIME PLOTTED => 09:50

DIST	COUNTY	ROUTE	POST MILES TOTAL PROJECT	SHEET No	TOTAL SHEETS
04	SF	101	8.2/9.2	623	654

REGISTERED ARCHITECT 9/30/09 DATE

12-14-09
PLANS APPROVAL DATE

STATE OF CALIFORNIA — SCOTT L. DANIELSON — 6/30/2011 — CERTIFICATE NO. C 6918 — REGISTERED ARCHITECT

The State of California or its officers or agents shall not be responsible for the accuracy or completeness of electronic copies of this plan sheet.

Arup PB Joint Venture
303 Second Street, Suite 700N
San Francisco, CA 94107

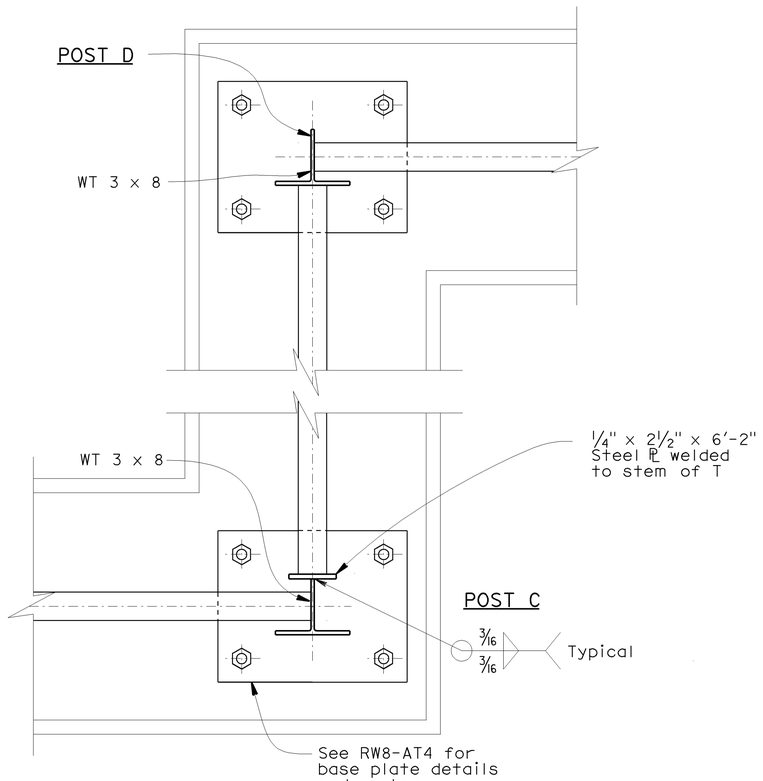

PLAN

(AT RECESSES)

DETAIL 5

SCALE: 3" = 1'-0"

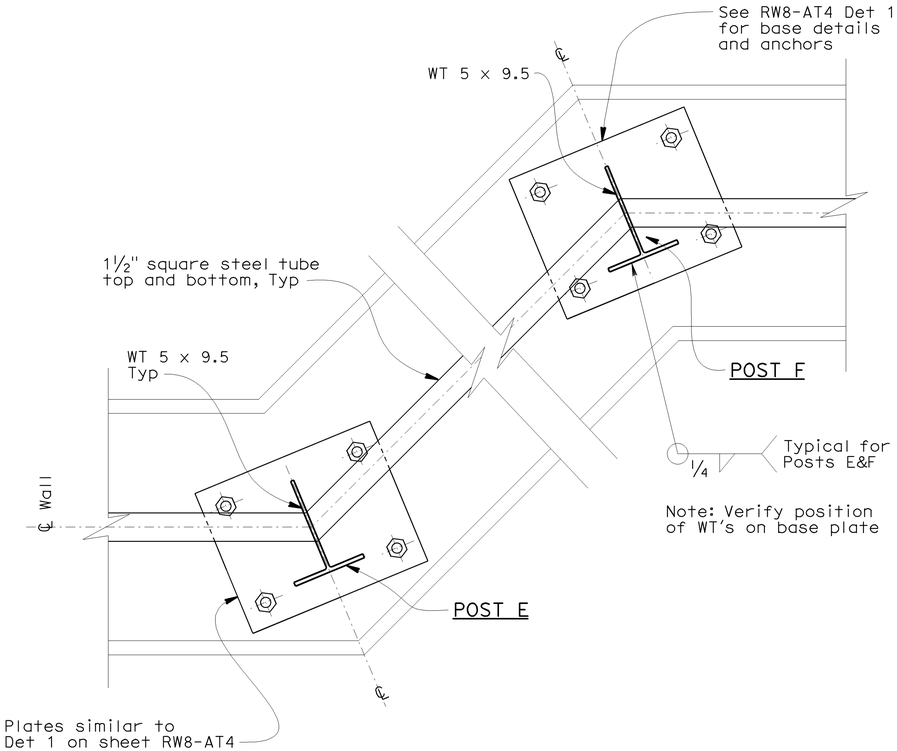

PLAN

(AT LIGHT NICHES)

DETAIL 6

SCALE: 3" = 1'-0"

RW8-AT5

DESIGN	BY S. DANIELSON	CHECKED R. DONIKIAN	PREPARED FOR THE STATE OF CALIFORNIA DEPARTMENT OF TRANSPORTATION	R. DONIKIAN PROJECT ENGINEER	BRIDGE NO. 34E0014	RETAINING WALL NO. 8	
DETAILS	BY L. REYES	CHECKED S. DANIELSON			POST MILE 8.8	ARCHITECTURAL DETAILS NO. 2	
QUANTITIES	BY L. JOHNSON	CHECKED S. SINGH					

DESIGN DETAIL SHEET (ENGLISH) (REV. 2/25/05)

ORIGINAL SCALE IN INCHES FOR REDUCED PLANS 0 1 2 3

CU 04
EA 163741

DISREGARD PRINTS BEARING EARLIER REVISION DATES →

REVISION DATES (PRELIMINARY STAGE ONLY): 9-30-09

SHEET 55 OF 65

USERNAME => ttstrk DATE PLOTTED => 12-DEC-2009 TIME PLOTTED => 09:50

FILE => 34E0014-x-at05.dgn

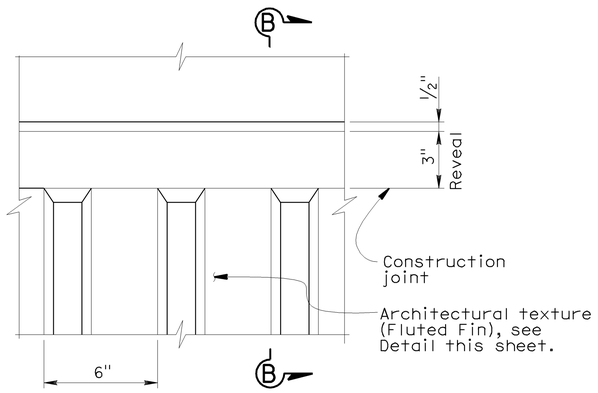

DETAIL 10
SCALE: 3" = 1'-0"

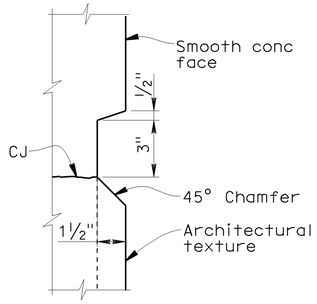

SECTION B-B
SCALE: 3" = 1'-0"

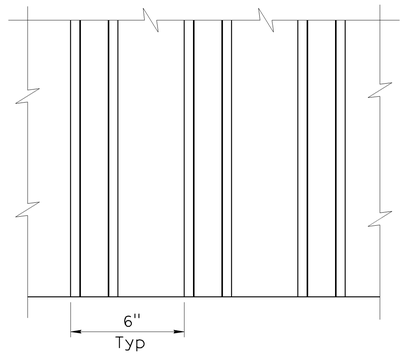

ELEVATION

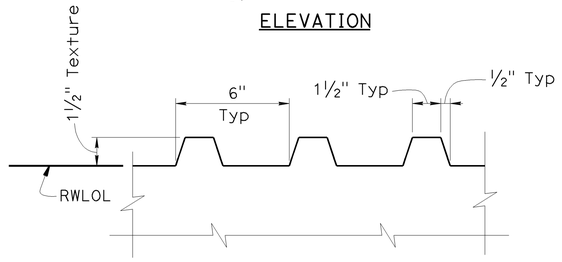

SECTION

ARCHITECTURAL TEXTURE (FLUTED FIN)
NO SCALE

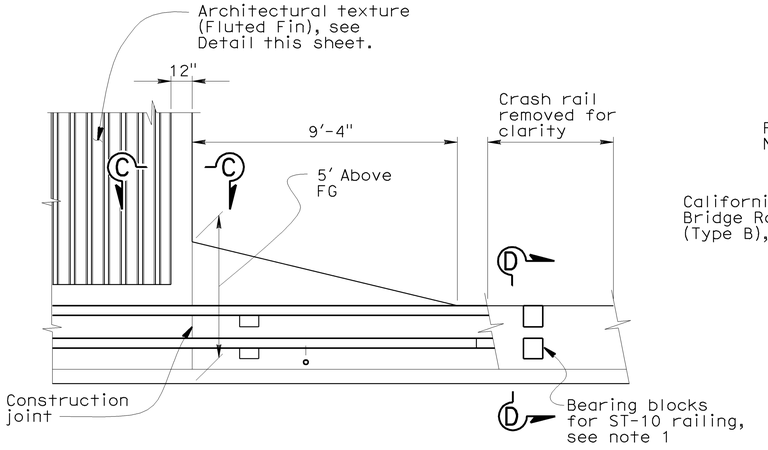

DETAIL 11
SCALE: 3/8" = 1'-0"

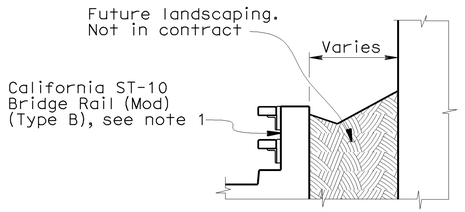

SECTION D-D
SCALE: 3/8" = 1'-0"

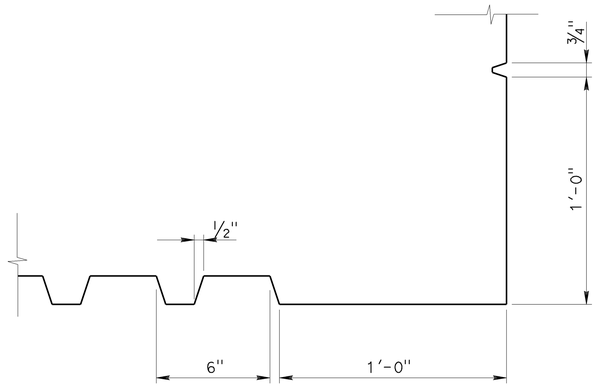

SECTION C-C
SCALE: 3 " = 1'-0"

DIST	COUNTY	ROUTE	POST MILES TOTAL PROJECT	SHEET No	TOTAL SHEETS
04	SF	101	8.2/9.2	624	654

Scott L. Danielson 9/30/09
REGISTERED ARCHITECT DATE

12-14-09
PLANS APPROVAL DATE

STATE OF CALIFORNIA · SCOTT L. DANIELSON · 6/30/2011 · CERTIFICATE NO. C 6118 · REGISTERED ARCHITECT

The State of California or its officers or agents shall not be responsible for the accuracy or completeness of electronic copies of this plan sheet.

Arup PB Joint Venture
303 Second Street, Suite 700N
San Francisco, CA 94107

NOTES:

1. For California ST-10 Bridge Rail (Mod) (Type B), see sheets RW8-49 and RW8-50.

RW8-AT6

DESIGN	BY S. DANIELSON	CHECKED R. DONIKIAN	PREPARED FOR THE STATE OF CALIFORNIA DEPARTMENT OF TRANSPORTATION	R. DONIKIAN PROJECT ENGINEER	BRIDGE NO. 34E0014	RETAINING WALL NO. 8	
DETAILS	BY L. REYES	CHECKED S. DANIELSON			POST MILE 8.8	ARCHITECTURAL DETAILS NO. 3	
QUANTITIES	BY L. JOHNSON	CHECKED S. SINGH					

DESIGN DETAIL SHEET (ENGLISH) (REV. 2/25/05)

ORIGINAL SCALE IN INCHES FOR REDUCED PLANS 0 1 2 3

CU 04
EA 163741

DISREGARD PRINTS BEARING EARLIER REVISION DATES →

REVISION DATES (PRELIMINARY STAGE ONLY): 9-30-09

SHEET 56 OF 65

FILE => 34E0014-x-at06.dgn

USERNAME => tristrk DATE PLOTTED => 12-DEC-2009 TIME PLOTTED => 08:50

NOTE:
The information presented on this drawing was developed and performed by Arup PB JV for the California Department of Transportation (CALTRANS).

DIST	COUNTY	ROUTE	POST MILES TOTAL PROJECT	SHEET No	TOTAL SHEETS
04	SF	101	8.2/9.2	625	654

Terrence M Carroll 8-20-09
REGISTERED CIVIL ENGINEER

12-14-09
PLANS APPROVAL DATE

REGISTERED PROFESSIONAL ENGINEER — Terrence Carroll — No. C68869 — Exp. 9-30-11 — CIVIL — STATE OF CALIFORNIA

The State of California or its officers or agents shall not be responsible for the accuracy or completeness of electronic copies of this plan sheet.

This LOTB sheet was prepared in accordance with the Caltrans Soil & Rock Logging, Classification, & Presentation Manual (June 2007), with the exception of section 2.3.

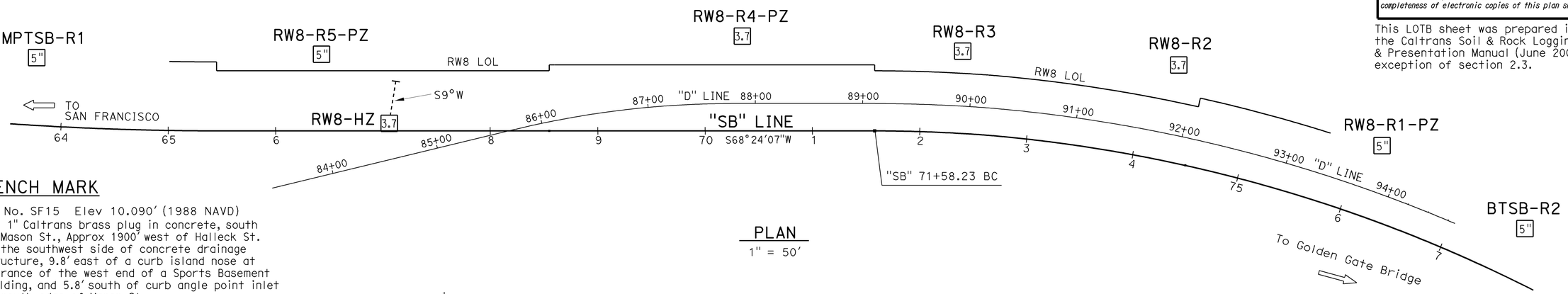

BENCH MARK

BM No. SF15 Elev 10.090′ (1988 NAVD)
Set 1" Caltrans brass plug in concrete, south of Mason St., Approx 1900′ west of Halleck St. on the southwest side of concrete drainage structure, 9.8′ east of a curb island nose at entrance of the west end of a Sports Basement building, and 5.8′ south of curb angle point inlet at south edge of Mason St.
N 2120923.973
E 5995469.423

PLAN
1" = 50′

NOTE: Boring RW8-HZ is a horizontal boring with an inclination of 8° down from horizontal, and bearing of S9°W.

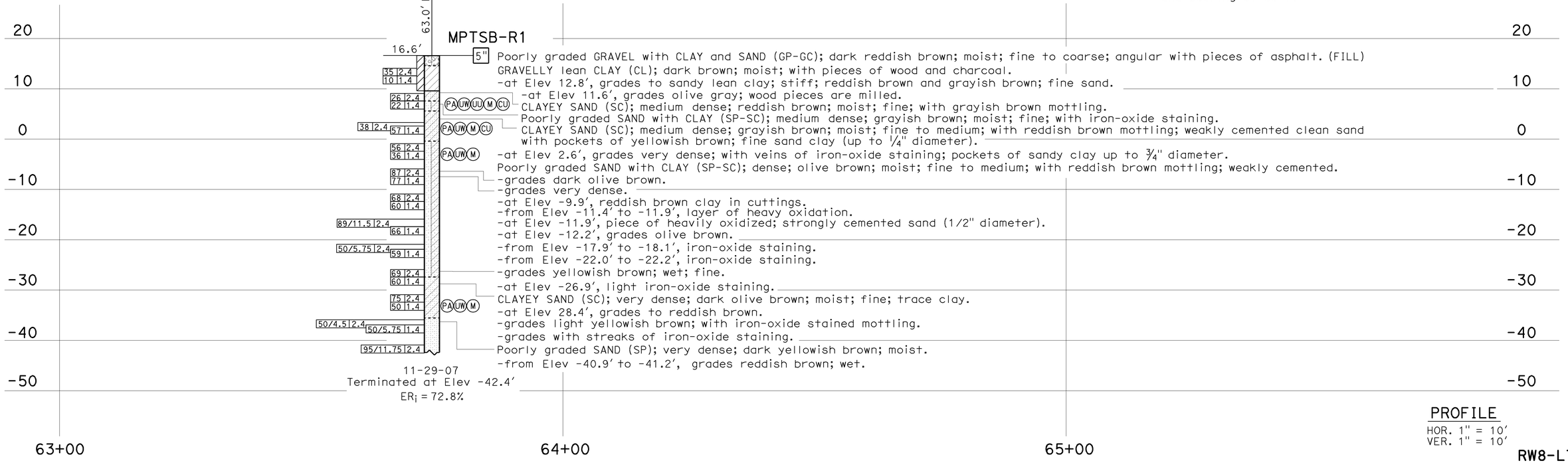

Poorly graded GRAVEL with CLAY and SAND (GP-GC); dark reddish brown; moist; fine to coarse; angular with pieces of asphalt. (FILL)
GRAVELLY lean CLAY (CL); dark brown; moist; with pieces of wood and charcoal.
-at Elev 12.8′, grades to sandy lean clay; stiff; reddish brown and grayish brown; fine sand.
-at Elev 11.6′, grades olive gray; wood pieces are milled.
CLAYEY SAND (SC); medium dense; reddish brown; moist; fine; with grayish brown mottling.
Poorly graded SAND with CLAY (SP-SC); medium dense; grayish brown; moist; fine; with iron-oxide staining.
CLAYEY SAND (SC); medium dense; grayish brown; moist; fine to medium; with reddish brown mottling; weakly cemented clean sand with pockets of yellowish brown; fine sand clay (up to 1/4" diameter).
-at Elev 2.6′, grades very dense; with veins of iron-oxide staining; pockets of sandy clay up to 3/4" diameter.
Poorly graded SAND with CLAY (SP-SC); dense; olive brown; moist; fine to medium; with reddish brown mottling; weakly cemented.
-grades dark olive brown.
-grades very dense.
-at Elev -9.9′, reddish brown clay in cuttings.
-from Elev -11.4′ to -11.9′, layer of heavy oxidation.
-at Elev -11.9′, piece of heavily oxidized; strongly cemented sand (1/2" diameter).
-at Elev -12.2′, grades olive brown.
-from Elev -17.9′ to -18.1′, iron-oxide staining.
-from Elev -22.0′ to -22.2′, iron-oxide staining.
-grades yellowish brown; wet; fine.
-at Elev -26.9′, light iron-oxide staining.
CLAYEY SAND (SC); very dense; dark olive brown; moist; fine; trace clay.
-at Elev 28.4′, grades to reddish brown.
-grades light yellowish brown; with iron-oxide stained mottling.
-grades with streaks of iron-oxide staining.
Poorly graded SAND (SP); very dense; dark yellowish brown; moist.
-from Elev -40.9′ to -41.2′, grades reddish brown; wet.

PROFILE
HOR. 1" = 10′
VER. 1" = 10′

RW8-LTB1

ENGINEERING SERVICES	GEOTECHNICAL SERVICES		STATE OF CALIFORNIA DEPARTMENT OF TRANSPORTATION	DIVISION OF ENGINEERING SERVICES STRUCTURE DESIGN	BRIDGE NO. 34-E0014	RETAINING WALL NO. 8
FUNCTIONAL SUPERVISOR NAME: F. Greguras (Arup PB JV)	DRAWN BY: C. Christian, I.G-Remmen, 6/09	FIELD INVESTIGATION BY: T. Carroll (Arup PB JV)		DESIGN BRANCH	POST MILES 8.8	LOG OF TEST BORINGS 1 OF 9
	CHECKED BY: R. Price					

OGS CIVIL LOG OF TEST BORINGS SHEET

ORIGINAL SCALE IN INCHES FOR REDUCED PLANS 0 1 2 3

CU 04
EA 163741

DISREGARD PRINTS BEARING EARLIER REVISION DATES →

REVISION DATES: 07-20-09 | 07-27-09 | 08-18-09 | 09-28-09 | 10-30-09

SHEET 57 OF 65

FILE => rw8-1of9.dgn

USERNAME => ttrstrk DATE PLOTTED => 12-DEC-2009 TIME PLOTTED => 09:50

DIST	COUNTY	ROUTE	POST MILES TOTAL PROJECT	SHEET No	TOTAL SHEETS
04	SF	101	8.2/9.2	626	654

Terrence M Carroll 8-20-09
REGISTERED CIVIL ENGINEER

12-14-09
PLANS APPROVAL DATE

Terrence Carroll No. C68869 Exp. 9-30-11 CIVIL — REGISTERED PROFESSIONAL ENGINEER — STATE OF CALIFORNIA

The State of California or its officers or agents shall not be responsible for the accuracy or completeness of electronic copies of this plan sheet.

This LOTB sheet was prepared in accordance with the Caltrans Soil & Rock Logging, Classification, & Presentation Manual (June 2007), with the exception of section 2.3.

FOR PLAN VIEW, SEE
"LOG OF TEST BORINGS 1 OF 9"

PROFILE
HOR. 1" = 10'
VER. 1" = 10'

RW8-LTB2

ENGINEERING SERVICES	GEOTECHNICAL SERVICES	STATE OF CALIFORNIA DEPARTMENT OF TRANSPORTATION	DIVISION OF ENGINEERING SERVICES STRUCTURE DESIGN	BRIDGE NO. 34-E0014	RETAINING WALL NO. 8
FUNCTIONAL SUPERVISOR	DRAWN BY: C. Christian, I.G-Remmen, 6/09		DESIGN BRANCH	POST MILES 8.8	LOG OF TEST BORINGS 2 OF 9
NAME:	CHECKED BY: R. Price	FIELD INVESTIGATION BY:			

OGS CIVIL LOG OF TEST BORINGS SHEET

ORIGINAL SCALE IN INCHES FOR REDUCED PLANS 0 1 2 3

CU 04
EA 163741

DISREGARD PRINTS BEARING EARLIER REVISION DATES →

REVISION DATES: 07-20-09 | 07-27-09 | 08-24-09 | 09-18-09 | 09-25-09 | 10-30-09

SHEET 58 OF 66

FILE => rw8-2of9.dgn

USERNAME => ttrstrk DATE PLOTTED => 12-DEC-2009 TIME PLOTTED => 09:50

DIST	COUNTY	ROUTE	KILOMETER POST TOTAL PROJECT	SHEET No	TOTAL SHEETS
04	SF	101	8.2/9.2	627	654

CERTIFIED ENGINEERING GEOLOGIST 8-20-09

12-14-09
PLANS APPROVAL DATE

PROFESSIONAL GEOLOGIST
Grant Wilcox
No. 2300
Exp. 4-30-10
CERTIFIED ENGINEERING GEOLOGIST
STATE OF CALIFORNIA

The State of California or its officers or agents shall not be responsible for the accuracy or completeness of electronic copies of this plan sheet.

This LOTB sheet was prepared in accordance with the Caltrans Soil & Rock Logging, Classification, & Presentation Manual (June 2007), with the exception of section 2.3.

FOR PLAN VIEW, SEE
"LOG OF TEST BORINGS 1 OF 9"

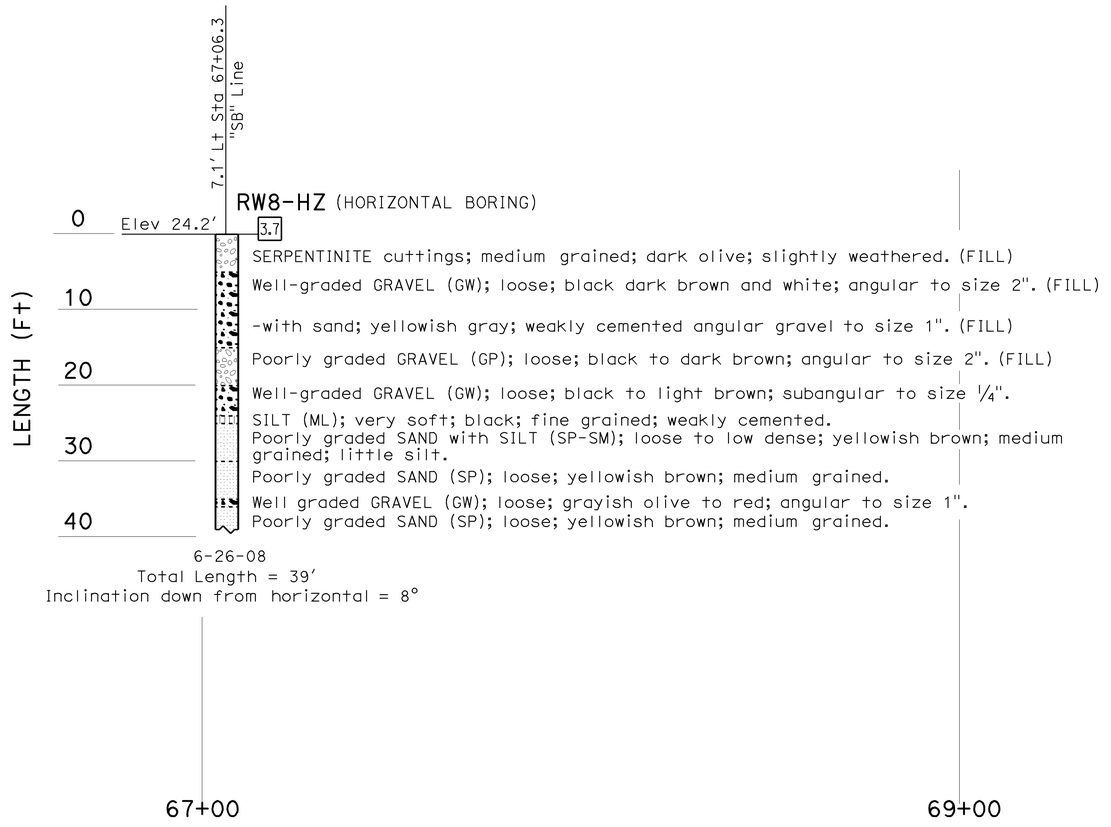

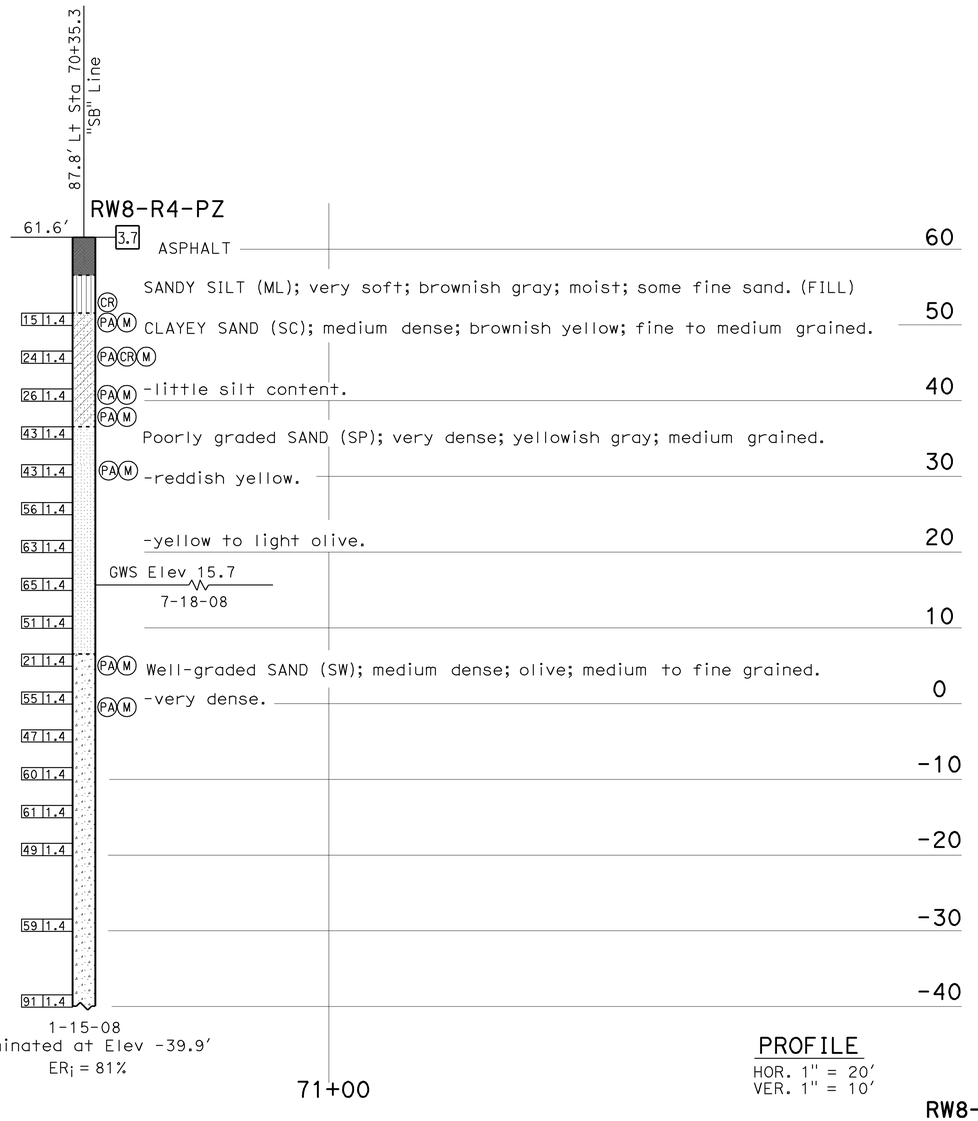

RW8-LTB3

ENGINEERING SERVICES	GEOTECHNICAL SERVICES		STATE OF CALIFORNIA DEPARTMENT OF TRANSPORTATION	DIVISION OF ENGINEERING SERVICES STRUCTURE DESIGN	BRIDGE NO. 34-E0014	RETAINING WALL NO. 8
FUNCTIONAL SUPERVISOR	DRAWN BY: C. Christian, I.G-Remmen, 6/09	FIELD INVESTIGATION BY:		DESIGN BRANCH	POST MILES 8.8	LOG OF TEST BORINGS 3 OF 9
NAME: T. Pokrywka	CHECKED BY: R. Price	R. Nashed				

OGS CIVIL LOG OF TEST BORINGS SHEET

ORIGINAL SCALE IN INCHES FOR REDUCED PLANS 0 1 2 3

CU 04
EA 163741

DISREGARD PRINTS BEARING EARLIER REVISION DATES →

REVISION DATES: 07-20-09 | 07-27-09 | 08-24-09 | 09-14-09 | 09-28-09 | 10-30-09

SHEET 59 OF 65

FILE => rw8-3of9.dgn

USERNAME => rtrstrk DATE PLOTTED => 12-DEC-2009 TIME PLOTTED => 09:51

DIST	COUNTY	ROUTE	KILOMETER POST TOTAL PROJECT	SHEET No	TOTAL SHEETS
04	SF	101	8.2/9.2	628	654

CERTIFIED ENGINEERING GEOLOGIST 8-20-09

12-14-09
PLANS APPROVAL DATE

PROFESSIONAL GEOLOGIST
Grant Wilcox
No. 2300
Exp. 4-30-10
CERTIFIED ENGINEERING GEOLOGIST
STATE OF CALIFORNIA

The State of California or its officers or agents shall not be responsible for the accuracy or completeness of electronic copies of this plan sheet.

This LOTB sheet was prepared in accordance with the Caltrans Soil & Rock Logging, Classification, & Presentation Manual (June 2007), with the exception of section 2.3.

FOR PLAN VIEW, SEE
"LOG OF TEST BORINGS 1 OF 9"

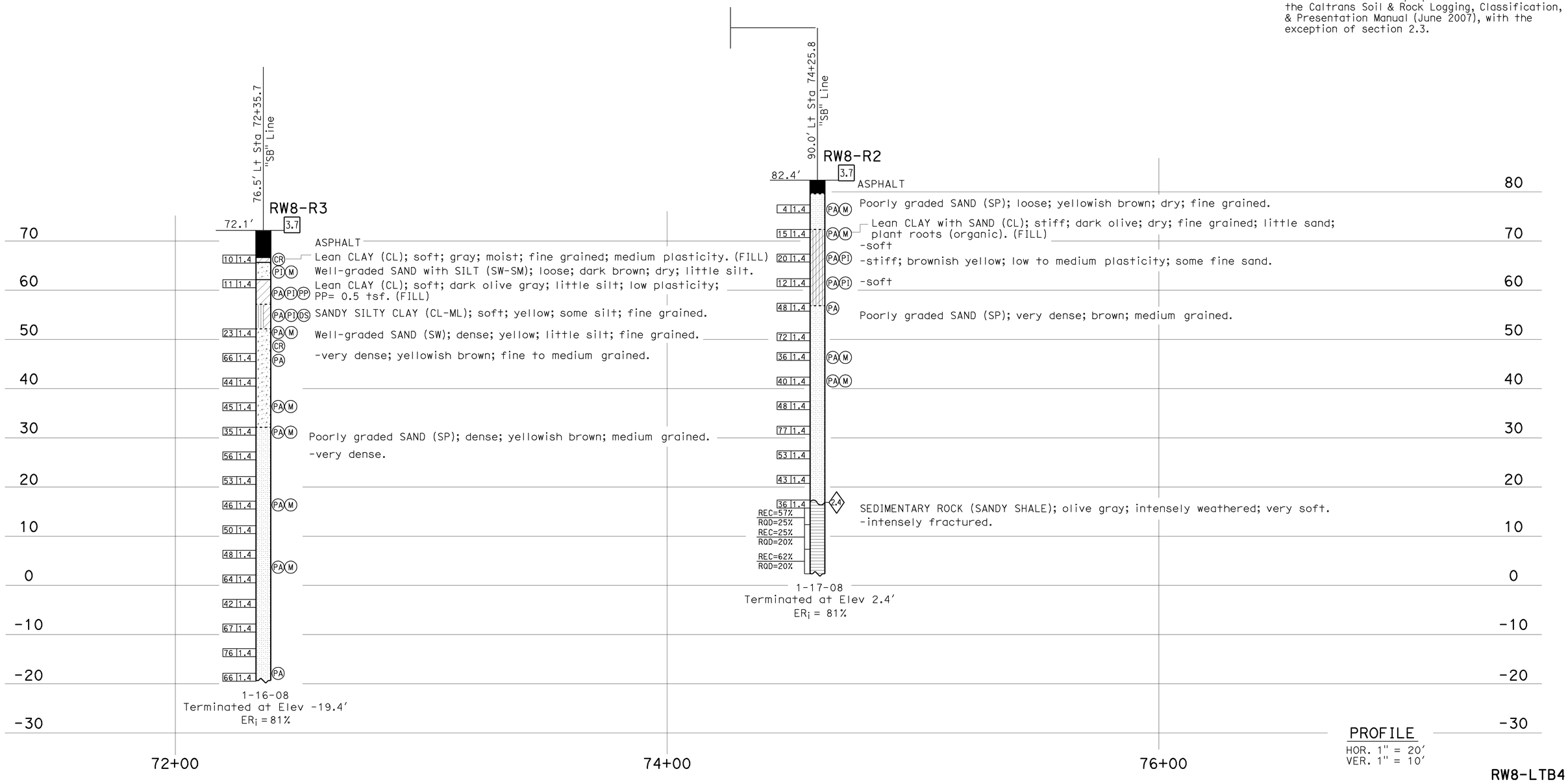

PROFILE
HOR. 1" = 20'
VER. 1" = 10'

RW8-LTB4

ENGINEERING SERVICES		GEOTECHNICAL SERVICES	STATE OF CALIFORNIA DEPARTMENT OF TRANSPORTATION	DIVISION OF ENGINEERING SERVICES STRUCTURE DESIGN	BRIDGE NO. 34-E0014	RETAINING WALL NO. 8
FUNCTIONAL SUPERVISOR NAME: T. Pokrywka	DRAWN BY: C. Christian, I.G-Remmen, 6/09	FIELD INVESTIGATION BY: R. Nashed		DESIGN BRANCH	POST MILES 8.8	LOG OF TEST BORINGS 4 OF 9
	CHECKED BY: R. Price					

OGS CIVIL LOG OF TEST BORINGS SHEET

ORIGINAL SCALE IN INCHES FOR REDUCED PLANS 0 1 2 3

CU 04
EA 163741

DISREGARD PRINTS BEARING EARLIER REVISION DATES →

REVISION DATES										SHEET	OF
07-20-09	07-21-09	08-24-09	09-18-09	09-28-09	10-30-09					60	65

FILE => rw8-4of9.dgn

USERNAME => tfrstrk DATE PLOTTED => 12-DEC-2009 TIME PLOTTED => 09:51

NOTE:
The information presented on this drawing was developed and performed by Arup PB JV for the California Department of Transportation (CALTRANS).

DIST	COUNTY	ROUTE	POST MILES TOTAL PROJECT	SHEET No	TOTAL SHEETS
04	SF	101	8.2/9.2	629	654

Terrence M Carroll 8-20-09
REGISTERED CIVIL ENGINEER

12-14-09
PLANS APPROVAL DATE

REGISTERED PROFESSIONAL ENGINEER — Terrence Carroll — No. C68869 — Exp. 9-30-11 — CIVIL — STATE OF CALIFORNIA

The State of California or its officers or agents shall not be responsible for the accuracy or completeness of electronic copies of this plan sheet.

This LOTB sheet was prepared in accordance with the Caltrans Soil & Rock Logging, Classification, & Presentation Manual (June 2007), with the exception of section 2.3.

FOR PLAN VIEW, SEE
"LOG OF TEST BORINGS 1 OF 9"

PROFILE
HOR. 1" = 10'
VER. 1" = 10'

RW8-LTB5

ENGINEERING SERVICES	GEOTECHNICAL SERVICES		STATE OF CALIFORNIA DEPARTMENT OF TRANSPORTATION	DIVISION OF ENGINEERING SERVICES STRUCTURE DESIGN	BRIDGE NO. 34-E0014	RETAINING WALL NO. 8
FUNCTIONAL SUPERVISOR	DRAWN BY: C. Christian, I.G-Remmen, 7/09	FIELD INVESTIGATION BY:		DESIGN BRANCH	POST MILES 8.8	LOG OF TEST BORINGS 5 OF 9
NAME: F. Greguras (Arup PB JV)	CHECKED BY: R. Price	T. Carroll (Arup PB JV)				

OGS CIVIL LOG OF TEST BORINGS SHEET

ORIGINAL SCALE IN INCHES FOR REDUCED PLANS 0 1 2 3

CU 04
EA 163741

DISREGARD PRINTS BEARING EARLIER REVISION DATES →

REVISION DATES: 07-20-09 | 07-27-09 | 08-24-09 | 09-18-09 | 09-28-09 | 10-30-09

SHEET 61 OF 65

FILE => rw8-5of9.dgn

USERNAME => ttstrk DATE PLOTTED => 12-DEC-2009 TIME PLOTTED => 09:51

DIST	COUNTY	ROUTE	POST MILES TOTAL PROJECT	SHEET No	TOTAL SHEETS
04	SF	101	8.2/9.2	630	654

NOTE:
The information presented on this drawing was developed and performed by Arup PB JV for the California Department of Transportation (CALTRANS).

Terrence M Carroll 8-20-09
REGISTERED CIVIL ENGINEER

12-14-09
PLANS APPROVAL DATE

REGISTERED PROFESSIONAL ENGINEER
Terrence Carroll
No. C68869
Exp. 9-30-11
CIVIL
STATE OF CALIFORNIA

The State of California or its officers or agents shall not be responsible for the accuracy or completeness of electronic copies of this plan sheet.

This LOTB sheet was prepared in accordance with the Caltrans Soil & Rock Logging, Classification, & Presentation Manual (June 2007), with the exception of section 2.3.

FOR PLAN VIEW, SEE
"LOG OF TEST BORINGS 1 OF 9"

6" Asphalt Concrete. 10" Unreinforced Concrete.
GRAVELLY Fat CLAY (CH); dark brown; moist; angular gravel; with sand; poorly compacted; (FILL).
Poorly graded SAND (SP), loose, dark yellowish brown, dry to moist, fine, trace fines.
-grades dark brown.
Lean CLAY (CL), medium stiff, dark brown, moist, trace fine sand.
-medium stiff to stiff, yellowish brown, dark brown oxidized nodules (up to 1/2" diameter).
SILTY SAND (SM), medium dense, yellowish brown, moist to wet, fine, with root hairs (up to 1/16" diameter), with black oxidized nodules (up to 1/16" diameter).
Poorly graded SAND with SILT (SP-SM), medium dense, yellowish brown, moist to wet, fine to medium.
Poorly graded SAND (SP), dense, yellowish brown, moist, fine, trace fines.
-grades medium dense, yellowish brown.
-at Elev 58.3', grades weakly cemented.
-at Elev 57.1', occasional fine gravel (up to 1/2" diameter), subrounded, reddish brown (chert fragment).
-grades with pockets of sandy clay (up to 1/8" diameter).
Lean CLAY (CL), very stiff, yellowish brown and reddish brown, moist, trace fine sand, with black specks.
Fat CLAY (CH), stiff, yellowish brown and grayish brown, dry to moist, trace sand, with black specks, mottled.
Lean CLAY (CL), hard, yellowish brown and light gray, trace fine sand, mottled, with iron-oxide staining, with black specks
SEDIMENTARY ROCK (Sandstone), fine to coarse grained, light yellowish brown, decomposed, very soft, very intensely fractured. (CLAYEY SAND (SC), very dense, light yellowish brown, dry, fine to coarse, faint dark reddish brown predefined fracture planes, slight rock structure, with frequent manganese-oxide staining.)
SEDIMENTARY ROCK (Siltstone), dark brown, intensely weathered, moderately hard, very intensely fractured.
METAMORPHIC ROCK (Serpentinite), greenish gray and yellowish brown, very intensely weathered, moderately soft, very intensely fractured.
METAMORPHIC ROCK (Granulite), medium to coarse SAND and fine GRAVEL-sized, yellowish brown and light greenishgray, intensely weathered, soft, very intensely fractured(crushed), intensely mylonized, localized sheared surfaces on more competent 0.1' to 0.2' thick blocks.
METAMORPHIC ROCK (Serpentinite), greenish gray and dark gray, intensely weathered, variably very soft to moderately hard, very intensely fractured, sharp changes in rock texture (non-grading), more intensely weathered intervals exhibit texture of SILT with SAND (ML), soft, moist, fine sand.
-at Elev 23.7', white secondary mineralization forming a banding effect.
-at Elev 23.1', dark olive gray and very dark gray, moderately weathered, moderately hard to locally soft, intensely fractured, fractures dipping 15° to 25°, common secondary mineralization along closely spaced fractured/sheared surfaces throughout interval, commonly breaks 0.1' to 0.2' fragments (hard).
-at Elev 16.3', greenish gray and dark gray, intensely weathered, variably very soft to moderately hard, very intensely fractured.
-bluish gray and very dark gray.
-from Elev -4.2' to -4.7', sand-like texture.

PROFILE
HOR. 1" = 10'
VER. 1" = 10'

RW8-LTB6

ENGINEERING SERVICES	GEOTECHNICAL SERVICES	STATE OF CALIFORNIA DEPARTMENT OF TRANSPORTATION	DIVISION OF ENGINEERING SERVICES STRUCTURE DESIGN DESIGN BRANCH	BRIDGE NO. 34-E0014 POST MILES 8.8	RETAINING WALL NO. 8 LOG OF TEST BORINGS 6 OF 9
FUNCTIONAL SUPERVISOR NAME: F. Greguras (Arup PB JV)	DRAWN BY: I.G-Remmen, 7/09 CHECKED BY: R. Price	FIELD INVESTIGATION BY: T. Carroll (Arup PB JV)			
OGS CIVIL LOG OF TEST BORINGS SHEET	ORIGINAL SCALE IN INCHES FOR REDUCED PLANS 0 1 2 3	CU 04 EA 163741	DISREGARD PRINTS BEARING EARLIER REVISION DATES	REVISION DATES 07-20-09 07-27-09 08-24-09 09-18-09 09-25-09 10-30-09	SHEET 62 OF 65

FILE => rw8-6of9.dgn

USERNAME => trstrk DATE PLOTTED => 12-DEC-2009 TIME PLOTTED => 09:51

REFERENCE: CALTRANS SOIL & ROCK LOGGING, CLASSIFICATION, AND PRESENTATION MANUAL (JUNE 2007)

DIST	COUNTY	ROUTE	KILOMETER POST TOTAL PROJECT	SHEET No	TOTAL SHEETS
04	SF	101	8.2/9.2	631	654

CERTIFIED ENGINEERING GEOLOGIST 8-20-09

12-14-09
PLANS APPROVAL DATE

PROFESSIONAL GEOLOGIST — Grant Wilcox — No. 2300 — Exp. 4-30-10 — CERTIFIED ENGINEERING GEOLOGIST — STATE OF CALIFORNIA

The State of California or its officers or agents shall not be responsible for the accuracy or completeness of electronic copies of this plan sheet.

CEMENTATION

Description	Criteria
Weak	Crumbles or breaks with handling or little finger pressure.
Moderate	Crumbles or breaks with considerable finger pressure.
Strong	Will not crumble or break with finger pressure.

BOREHOLE IDENTIFICATION

Symbol	Hole Type	Description
Size	A	Auger Boring
Size	R P	Rotary drilled boring Rotary percussion boring (air)
Size	R	Rotary drilled diamond core
Size	HD HA	Hand driven (1-inch soil tube) Hand Auger
●	D	Dynamic Cone Penetration Boring
▲	CPT	Cone Penetration Test (ASTM D 5778-95)
⬚	O	Other

Note: Size in inches.

CONSISTENCY OF COHESIVE SOILS

Description	Unconfined Compressive Strength (tsf)	Pocket Penetrometer Measurement (tsf)	Torvane Measurement (tsf)	Field Approximation
Very Soft	< 0.25	< 0.25	< 0.12	Easily penetrated several inches by fist
Soft	0.25 to 0.50	0.25 to 0.50	0.12 to 0.25	Easily penetrated several inches by thumb
Medium Stiff	0.50 to 1.0	0.50 to 1.0	0.25 to 0.50	Penetrated several inches by thumb with moderate effort
Stiff	1 to 2	1 to 2	0.50 to 1.0	Readily indented by thumb but penetrated only with great effort
Very Stiff	2 to 4	2 to 4	1.0 to 2.0	Readily indented by thumbnail
Hard	> 4.0	> 4.0	> 2.0	Indented by thumbnail with difficulty

PLASTICITY OF FINE-GRAINED SOILS

Description	Criteria
Nonplastic	A 1/8-inch thread cannot be rolled at any water content.
Low	The thread can barely be rolled and the lump cannot be formed when drier than the plastic limit.
Medium	The thread is easy to roll and not much time is required to reach the plastic limit. The thread cannot be rerolled after reaching the plastic limit. The lump crumbles when drier than the plastic limit.
High	It takes considerable time rolling and kneading to reach the plastic limit. The thread can be rerolled several times after reaching the plastic limit. The lump can be formed without crumbling when drier than the plastic limit.

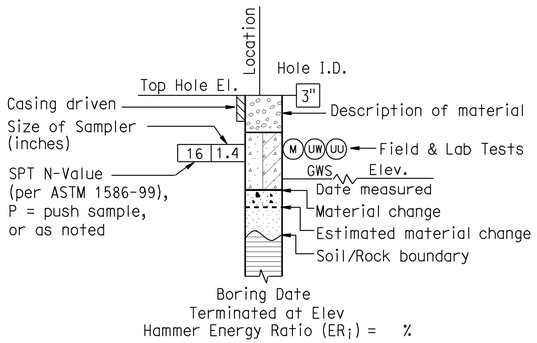

ROTARY BORING

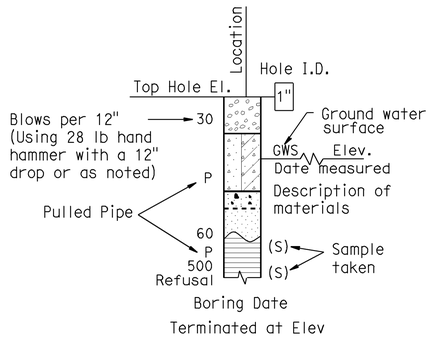

HAND BORING

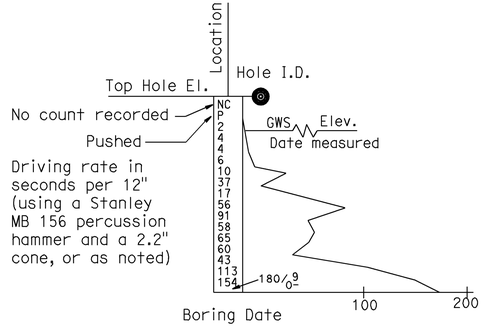

DYNAMIC CONE PENETRATION BORING

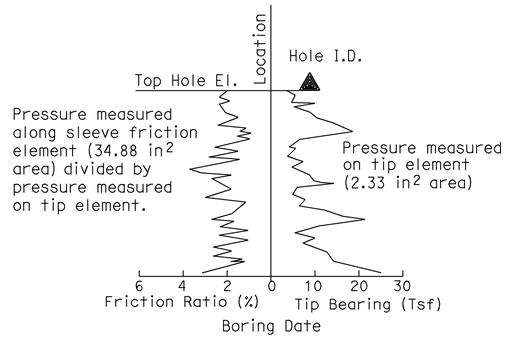

CONE PENETRATION TEST (CPT) SOUNDING

RW8-LTB7

ENGINEERING SERVICES	GEOTECHNICAL SERVICES	STATE OF CALIFORNIA DEPARTMENT OF TRANSPORTATION	DIVISION OF ENGINEERING SERVICES STRUCTURE DESIGN	BRIDGE NO. 34-E0014	RETAINING WALL NO. 8
	PREPARED BY: I.G-Remmen, 7/09		DESIGN BRANCH	POST MILE 8.8	LOG OF TEST BORINGS 7 OF 9

GS LOTB SOIL LEGEND

ORIGINAL SCALE IN INCHES FOR REDUCED PLANS 0 1 2 3

CU 04
EA 163741

DISREGARD PRINTS BEARING EARLIER REVISION DATES →

REVISION DATES: 8-24-09 (09-18-09) (09-25-09) 10-30-09

SHEET 63 OF 65

FILE => rw8-7of9.dgn

USERNAME => ttrstrk DATE PLOTTED => 12-DEC-2009 TIME PLOTTED => 09:51

REFERENCE: CALTRANS SOIL & ROCK LOGGING, CLASSIFICATION, AND PRESENTATION MANUAL (JUNE 2007)

GROUP SYMBOLS AND NAMES

Graphic/Symbol	Group Names	Graphic/Symbol	Group Names
GW	Well-graded GRAVEL Well-graded GRAVEL with SAND	CL	Lean CLAY Lean CLAY with SAND Lean CLAY with GRAVEL SANDY lean CLAY SANDY lean CLAY with GRAVEL GRAVELLY lean CLAY GRAVELLY lean CLAY with SAND
GP	Poorly graded GRAVEL Poorly graded GRAVEL with SAND		
GW-GM	Well-graded GRAVEL with SILT Well-graded GRAVEL with SILT and SAND	CL-ML	SILTY CLAY SILTY CLAY with SAND SILTY CLAY with GRAVEL SANDY SILTY CLAY SANDY SILTY CLAY with GRAVEL GRAVELLY SILTY CLAY GRAVELLY SILTY CLAY with SAND
GW-GC	Well-graded GRAVEL with CLAY (or SILTY CLAY) Well-graded GRAVEL with CLAY and SAND (or SILTY CLAY and SAND)		
GP-GM	Poorly graded GRAVEL with SILT Poorly graded GRAVEL with SILT and SAND	ML	SILT SILT with SAND SILT with GRAVEL SANDY SILT SANDY SILT with GRAVEL GRAVELLY SILT GRAVELLY SILT with SAND
GP-GC	Poorly graded GRAVEL with CLAY (or SILTY CLAY) Poorly graded GRAVEL with CLAY and SAND (or SILTY CLAY and SAND)		
GM	SILTY GRAVEL SILTY GRAVEL with SAND	OL	ORGANIC lean CLAY ORGANIC lean CLAY with SAND ORGANIC lean CLAY with GRAVEL SANDY ORGANIC lean CLAY SANDY ORGANIC lean CLAY with GRAVEL GRAVELLY ORGANIC lean CLAY GRAVELLY ORGANIC lean CLAY with SAND
GC	CLAYEY GRAVEL CLAYEY GRAVEL with SAND		
GC-GM	SILTY, CLAYEY GRAVEL SILTY, CLAYEY GRAVEL with SAND	OL	ORGANIC SILT ORGANIC SILT with SAND ORGANIC SILT with GRAVEL SANDY ORGANIC SILT SANDY ORGANIC SILT with GRAVEL GRAVELLY ORGANIC SILT GRAVELLY ORGANIC SILT with SAND
SW	Well-graded SAND Well-graded SAND with GRAVEL		
SP	Poorly graded SAND Poorly graded SAND with GRAVEL	CH	Fat CLAY Fat CLAY with SAND Fat CLAY with GRAVEL SANDY fat CLAY SANDY fat CLAY with GRAVEL GRAVELLY fat CLAY GRAVELLY fat CLAY with SAND
SW-SM	Well-graded SAND with SILT Well-graded SAND with SILT and GRAVEL		
SW-SC	Well-graded SAND with CLAY (or SILTY CLAY) Well-graded SAND with CLAY and GRAVEL (or SILTY CLAY and GRAVEL)	MH	Elastic SILT Elastic SILT with SAND Elastic SILT with GRAVEL SANDY elastic SILT SANDY elastic SILT with GRAVEL GRAVELLY elastic SILT GRAVELLY elastic SILT with SAND
SP-SM	Poorly graded SAND with SILT Poorly graded SAND with SILT and GRAVEL		
SP-SC	Poorly graded SAND with CLAY (or SILTY CLAY) Poorly graded SAND with CLAY and GRAVEL (or SILTY CLAY and GRAVEL)	OH	ORGANIC fat CLAY ORGANIC fat CLAY with SAND ORGANIC fat CLAY with GRAVEL SANDY ORGANIC fat CLAY SANDY ORGANIC fat CLAY with GRAVEL GRAVELLY ORGANIC fat CLAY GRAVELLY ORGANIC fat CLAY with SAND
SM	SILTY SAND SILTY SAND with GRAVEL		
SC	CLAYEY SAND CLAYEY SAND with GRAVEL	OH	ORGANIC elastic SILT ORGANIC elastic SILT with SAND ORGANIC elastic SILT with GRAVEL SANDY ORGANIC elastic SILT SANDY ORGANIC elastic SILT with GRAVEL GRAVELLY ORGANIC elastic SILT GRAVELLY ORGANIC elastic SILT with SAND
SC-SM	SILTY, CLAYEY SAND SILTY, CLAYEY SAND with GRAVEL		
PT	PEAT	OL/OH	ORGANIC SOIL ORGANIC SOIL with SAND ORGANIC SOIL with GRAVEL SANDY ORGANIC SOIL SANDY ORGANIC SOIL with GRAVEL GRAVELLY ORGANIC SOIL GRAVELLY ORGANIC SOIL with SAND
	COBBLES COBBLES and BOULDERS BOULDERS		

FIELD AND LABORATORY TESTING

- (C) Consolidation (ASTM D 2435)
- (CL) Collapse Potential (ASTM D 5333)
- (CP) Compaction Curve (CTM 216)
- (CR) Corrosivity Testing (CTM 643, CTM 422, CTM 417)
- (CU) Consolidated Undrained Triaxial (ASTM D 4767)
- (DS) Direct Shear (ASTM D 3080)
- (EI) Expansion Index (ASTM D 4829)
- (M) Moisture Content (ASTM D 2216)
- (OC) Organic Content-% (ASTM D 2974)
- (P) Permeability (CTM 220)
- (PA) Particle Size Analysis (ASTM D 422)
- (PI) Plasticity Index (AASHTO T 90) Liquid Limit (AASHTO T 89)
- (PL) Point Load Index (ASTM D 5731)
- (PM) Pressure Meter
- (PP) Pocket Penetrometer
- (R) R-Value (CTM 301)
- (SE) Sand Equivalent (CTM 217)
- (SG) Specific Gravity (AASHTO T 100)
- (SL) Shrinkage Limit (ASTM D 427)
- (SW) Swell Potential (ASTM D 4546)
- (TV) Pocket Torvane
- (UC) Unconfined Compression-Soil (ASTM D 2166) Unconfined Compression-Rock (ASTM D 2938)
- (UU) Unconsolidated Undrained Triaxial (ASTM D 2850)
- (UW) Unit Weight (ASTM D 4767)
- (VS) Vane Shear (AASHTO T 223)

DIST	COUNTY	ROUTE	KILOMETER POST TOTAL PROJECT	SHEET No	TOTAL SHEETS
04	SF	101	8.2/9.2	632	654

CERTIFIED ENGINEERING GEOLOGIST 8-20-09

12-14-09
PLANS APPROVAL DATE

PROFESSIONAL GEOLOGIST — Grant Wilcox — No. 2300 — Exp. 4-30-10 — CERTIFIED ENGINEERING GEOLOGIST — STATE OF CALIFORNIA

The State of California or its officers or agents shall not be responsible for the accuracy or completeness of electronic copies of this plan sheet.

APPARENT DENSITY OF COHESIONLESS SOILS

Description	SPT N_{60} (Blows / 12 inches)
Very loose	0 - 4
Loose	5 - 10
Medium Dense	11 - 30
Dense	31 - 50
Very Dense	> 50

MOISTURE

Description	Criteria
Dry	Absence of moisture, dusty, dry to the touch
Moist	Damp but no visible water
Wet	Visible free water, usually soil is below water table

PERCENT OR PROPORTION OF SOILS

Description	Criteria
Trace	Particles are present but estimated to be less than 5%
Few	5 to 10%
Little	15 to 25%
Some	30 to 45%
Mostly	50 to 100%

PARTICLE SIZE

Description		Size
Boulder		> 12"
Cobble		3" to 12"
Gravel	Coarse	3/4" to 3"
	Fine	No. 4 to 3/4"
Sand	Coarse	No. 10 to No. 4
	Medium	No. 40 to No. 10
	Fine	No. 200 to No. 40

RW8-LTB8

ENGINEERING SERVICES	GEOTECHNICAL SERVICES	STATE OF CALIFORNIA DEPARTMENT OF TRANSPORTATION	DIVISION OF ENGINEERING SERVICES STRUCTURE DESIGN	BRIDGE NO.	RETAINING WALL NO. 8
	PREPARED BY: I.G-Remmen, 7/09		DESIGN BRANCH	34-E0014 POST MILE 8.8	LOG OF TEST BORINGS 8 OF 9

GS LOTB SOIL LEGEND

ORIGINAL SCALE IN INCHES FOR REDUCED PLANS 0 1 2 3

CU 04 EA 163741

DISREGARD PRINTS BEARING EARLIER REVISION DATES →

REVISION DATES: 8-24-09 | 09-18-09 | 09-25-09 | 10-30-09

SHEET 64 OF 65

FILE => rw8-8of9.dgn

USERNAME => trsmtk DATE PLOTTED => 12-DEC-2009 TIME PLOTTED => 09:51

REFERENCE: CALTRANS SOIL & ROCK LOGGING, CLASSIFICATION, AND PRESENTATION MANUAL (JUNE 2007)

DIST	COUNTY	ROUTE	KILOMETER POST TOTAL PROJECT	SHEET No	TOTAL SHEETS
04	SF	101	8.2/9.2	633	654

CERTIFIED ENGINEERING GEOLOGIST 8-20-09

12-14-09
PLANS APPROVAL DATE

PROFESSIONAL GEOLOGIST
Grant Wilcox
No. 2300
Exp. 4-30-10
CERTIFIED ENGINEERING GEOLOGIST
STATE OF CALIFORNIA

The State of California or its officers or agents shall not be responsible for the accuracy or completeness of electronic copies of this plan sheet.

PERCENT CORE RECOVERY (REC) & ROCK QUALITY DESIGNATION (RQD)

$$REC = \frac{\sum \text{Length of the recovered core pieces (inches)}}{\text{Total length of core run (inches)}} \times 100\%$$

$$RQD = \frac{\sum \text{Length of intact core pieces} \geq 4\text{"}}{\text{Total length of core run (inches)}} \times 100\%$$

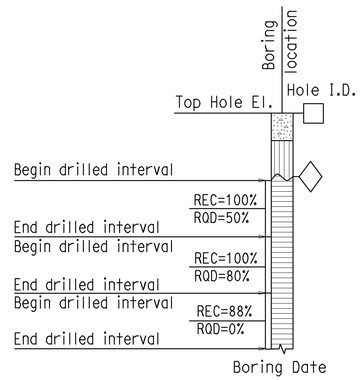

RELATIVE STRENGTH OF INTACT ROCK

Term	Uniaxial Compressive Strength (PSI)
Extremely Strong	> 30,000
Very Strong	14,500 - 30,000
Strong	7,000 - 14,500
Medium Strong	3,500 - 7,000
Weak	700 - 3,500
Very Weak	150 - 700
Extremely Weak	< 150

BEDDING SPACING

Description	Thickness / Spacing
Massive	Greater than 10 ft
Very thickly bedded	3 to 10 ft
Thickly bedded	1 to 3 ft
Moderately bedded	3-5/8" to 1 ft
Thinly bedded	1-1/4" to 3-5/8"
Very thinly bedded	3/8" to 1-1/4"
Laminated	Less than 3/8"

LEGEND OF ROCK MATERIALS

- IGNEOUS ROCK
- SEDIMENTARY ROCK
- METAMORPHIC ROCK

ROCK HARDNESS

Description	Criteria
Extremely Hard	Specimen cannot be scratched with a pocket knife or sharp pick; can only be chipped with repeated heavy hammer blows.
Very Hard	Specimen cannot be scratched with a pocket knife or sharp pick. Breaks with repeated heavy hammer blows.
Hard	Specimen can be scratched with a pocket knife or sharp pick with difficulty (heavy pressure). Heavy hammer blows required to break specimen.
Moderately Hard	Specimen can be scratched with pocket knife or sharp pick with light or moderate pressure. Core breaks with moderate hammer blows.
Moderately Soft	Specimen can be grooved 1/6" deep with a pocket knife or sharp pick with moderate or heavy pressure. Breaks with light hammer blow or heavy manual pressure.
Soft	Specimen can be grooved or gouged easily by a pocket knife or sharp pick with light pressure, can be scratched with fingernail. Breaks with light to moderate manual pressure.
Very Soft	Specimen can be readily indented, grooved or gouged with fingernail, or carved with a pocket knife. Breaks with light manual pressure.

FRACTURE DENSITY

Description	Observed Fracture Density
Unfractured	No fractures.
Very slightly fractured	Lengths greater than 3 feet.
Slightly fractured	Lengths from 1 to 3 feet with few lengths less than 1 foot or greater than 3 feet.
Moderately fractured	Lengths mostly in 4" to 1 foot range with most lengths about 8"
Intensely fractured	Lengths average from 1 to 4" with scattered fragmented intervals with lengths less than 4"
Very intensely fractured	Mostly chips and fragments with a few scattered short core lengths.

Combination descriptors (such as "Very intensely to intensely fractured") are used where equal distribution of both fracture density characteristics is present over a significant interval or exposure, or where characteristics are "in between" the descriptor definitions. Only two adjacent descriptors may be combined.

WEATHERING DESCRIPTORS FOR INTACT ROCK

Description	Diagnostic features: Chemical Weathering-Discoloration and/or oxidation: Body of Rock	Diagnostic features: Chemical Weathering-Discoloration and/or oxidation: Fracture Surfaces	Diagnostic features: Mechanical Weathering-Grain boundary conditions (disaggregation) primarily for granitics and some coarse-grained sediments	Diagnostic features: Texture and Solutioning: Texture	Diagnostic features: Texture and Solutioning: Solutioning	General Characteristics
Fresh	No discoloration, not oxidized.	No discoloration or oxidation.	No separation, intact (tight).	No change.	No solutioning.	Hammer rings when crystalline rocks are struck.
Slightly Weathered	Discoloration or oxidation is limited to surface of, or short distance from, fractures; some feldspar crystals are dull.	Minor to complete discoloration or oxidation of most surfaces.	No visible separation, intact (tight).	Preserved.	Minor leaching of some soluble minerals may be noted.	Hammer rings when crystalline rocks are struck. Body of rock not weakened.
Moderately Weathered	Discoloration or oxidation extends from fractures usually throughout; Fe-Mg minerals are "rusty," feldspar crystals are "cloudy."	All fracture surfaces are discolored or oxidized.	Partial separation of boundaries visible.	Generally preserved.	Soluble minerals may be mostly leached.	Hammer does not ring when rock is struck. Body of rock is slightly weakened.
Intensely Weathered	Discoloration or oxidation throughout; all feldspars and Fe-Mg minerals are altered to clay to some extent; or chemical alteration produces in-situ disaggregation, see grain boundary conditions.	All fracture surfaces are discolored or oxidized, surfaces friable.	Partial separation, rock is friable; in semiarid conditions granitics are disaggregated.	Texture altered by chemical disintegration (hydration, argillation).	Leaching of soluble minerals may be complete.	Dull sound when struck with hammer, usually can be broken with moderate to heavy manual pressure or by light hammer blow without reference to planes of weakness such as incipient or hairline fractures, or veinlets. Rock is significantly weakened.
Decomposed	Discolored or oxidized throughout, but resistant minerals such as quartz may be unaltered; all feldspars and Fe-Mg minerals are completely altered to clay.		Complete separation of grain boundaries (disaggregated).	Resembles a soil, partial or complete remnant rock structure may be preserved; leaching of soluble minerals usually complete.		Can be granulated by hand. Resistant minerals such as quartz may be present as "stringers" or "dikes."

Combination descriptors (such as "slightly weathered to fresh") are permissible where equal distribution of both weathering characteristics is present over significant intervals or where characteristics present are "in between" the diagnostic feature. However, combination descriptors should not be used where significant, identifiable zones can be delineated. Only two adjacent descriptors may be combined. "Very intensely weathered" is the combination descriptor for "intensely weathered to decomposed."

RW8-LTB9

ENGINEERING SERVICES	GEOTECHNICAL SERVICES	STATE OF CALIFORNIA DEPARTMENT OF TRANSPORTATION	DIVISION OF ENGINEERING SERVICES STRUCTURE DESIGN	BRIDGE NO. 34-E0014	RETAINING WALL NO. 8
	PREPARED BY: I.G-Remmen, 7/09		DESIGN BRANCH	POST MILE 8.8	LOG OF TEST BORINGS 9 OF 9

GS LOTB ROCK LEGEND

ORIGINAL SCALE IN INCHES FOR REDUCED PLANS 0 1 2 3

CU 04
EA 163741

DISREGARD PRINTS BEARING EARLIER REVISION DATES →

REVISION DATES: 5-24-09 | 09-18-09 | 09-25-09 | 10-30-09

SHEET 65 OF 65

FILE => rw8-9of9.dgn

USERNAME => trstrk DATE PLOTTED => 12-DEC-2009 TIME PLOTTED => 09:51

CALIFORNIA STATE FIRE MARSHAL APPROVED

Approval of this plan does not authorize or approve any omission or deviation from applicable regulations. Final approval is subject to field inspection. One set of approved plans shall be available on the project site at all times.

Reviewed by: STEPHEN GUARINO

Approval date: 12-14-09

DIST.	COUNTY	ROUTE	POST MILES TOTAL PROJECT	SHEET NO.	TOTAL SHEETS
04	SF	101	8.2/9.2	634	654

Donald E. Alsey 08-28-2009
LICENSED ARCHITECT — DATE

LICENSED ARCHITECT — DONALD E. ALSEY — No. C-26676 — Exp. 07-31-11 — STATE OF CALIFORNIA

12-14-09
PLANS APPROVAL DATE

The State of California or its officers or agents shall not be responsible for the accuracy or completeness of electronic copies of this plan sheet.

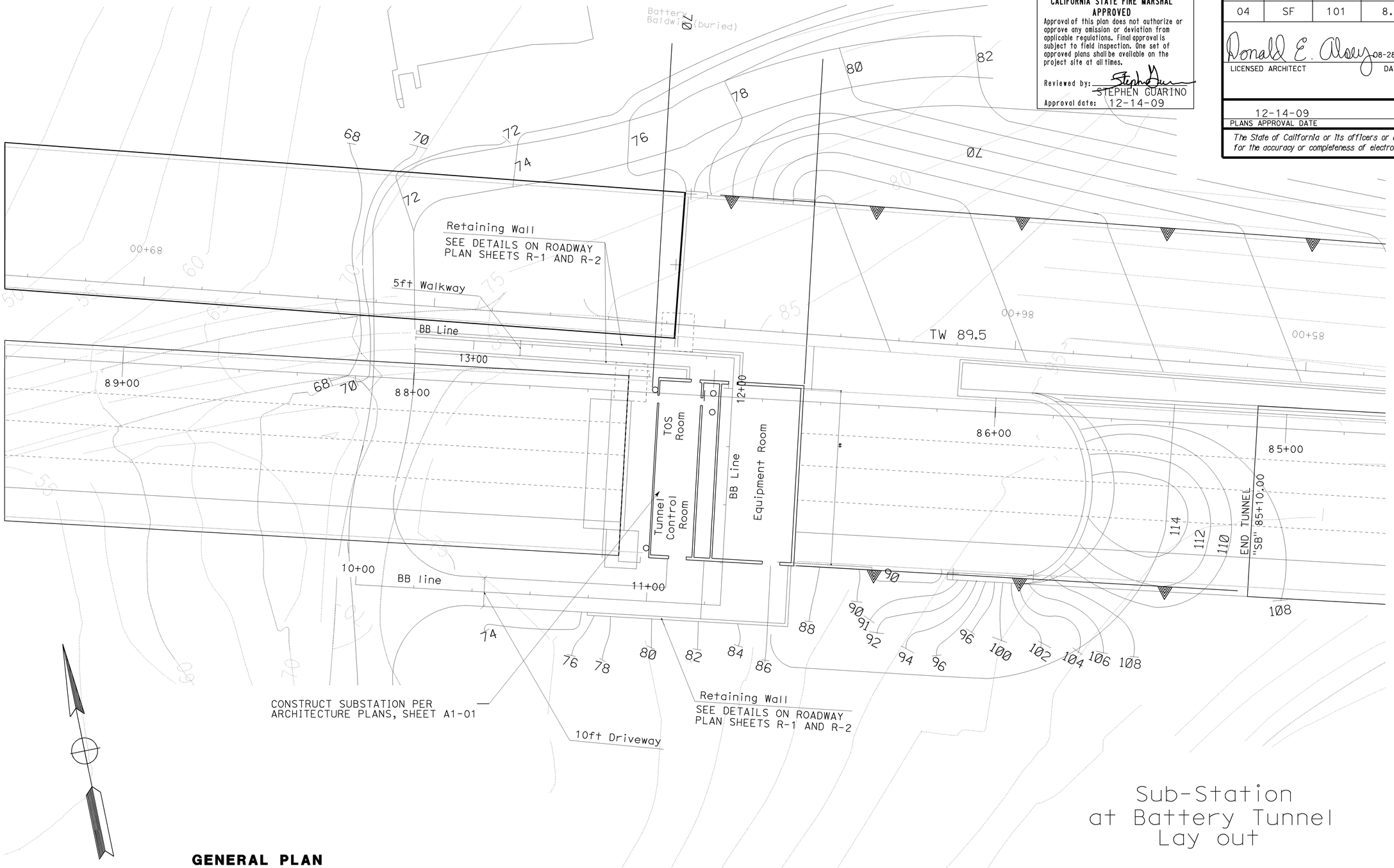

GENERAL PLAN

SCALE: 1" = 200'

R E Travis DESIGN SUPERVISOR Donald E Alsey DESIGN ARCHITECT	DESIGNER: ANTHONY MANANSALA DRAWN BY: ANTHONY MANANSALA	CHECKED BY: DON ALSEY STRUCTURAL REVIEW:	SHEET LEGEND A-I ARCHITECTURAL ST-I STRUCTURAL M-I MECHANICAL EE-I ELECTRICAL W-I WATER SUPPLY SS-I SANITARY	STATE OF CALIFORNIA DEPARTMENT OF TRANSPORTATION	DIVISION OF ENGINEERING SERVICES ARCHITECTURAL AND STRUCTURAL DESIGN	BRIDGE NO. 34-0157W POST MILE X	BATTERY SUBSTATION GENERAL PLAN GENERAL PLAN	SHEET GP
A_GP.dgn DS OSD Imperial Rev. 10/07 14-DEC-2009 15:43			ORIGINAL SCALE IN INCHES FOR REDUCED PLANS 0 1 2 3		CU 04108 EA 163741	DISREGARD PRINTS BEARING EARLIER REVISION DATES →	REVISION DATES (PRELIMINARY STAGE ONLY): MM-DD-YY 07-23-09 08-19-09 08-30-09	SHEET 1	OF 21

14-DEC-2009 15:43
A_GP.dgn

DIST.	COUNTY	ROUTE	POST MILES TOTAL PROJECT	SHEET NO.	TOTAL SHEETS
04	SF	101	8.2/9.2	635	654

Donald E. Alsey 08/28/09
LICENSED ARCHITECT — DATE

LICENSED ARCHITECT
DON ALSEY
No. C-26676
Exp. 07-31-11
STATE OF CALIFORNIA

12-14-09
PLANS APPROVAL DATE

The State of California or its officers or agents shall not be responsible for the accuracy or completeness of electronic copies of this plan sheet.

CALIFORNIA STATE FIRE MARSHAL APPROVED
Approval of this plan does not authorize or approve any omission or deviation from applicable regulations. Final approval is subject to field inspection. One set of approved plans shall be available on the project site at all times.
Reviewed by: Stephen Guarino
STEPHEN GUARINO
Approval date: 12-14-09

CERTIFICATE OF COMPLIANCE — PART 1 OF 2 — ENV-1

PROJECT NAME	DATE
BATTERY TUNNEL SUBSTATION	II-24-09
PROJECT ADDRESS: BATTERY TUNNEL SUBSTATION DOYLE DRIVE PARKWAY	Building Permit *
PRINCIPAL DESIGNER - ENVELOPE: ANTHONY MANANSALA — TELEPHONE: (916) 227-8289	
DOCUMENTATION AUTHOR: SEVERIANO GUTIERREZ — TELEPHONE: (916) 227-8323	Checked by/Date Enforcement Agency Use

GENERAL INFORMATION

DATE OF PLANS	BUILDING CONDITIONED FLOOR AREA	CLIMATE ZONE
08/28/09	900 SQFT	3

BUILDING TYPE	[X] NONRESIDENTIAL	[ ] HIGH RISE RESIDENTIAL	[ ] HOTEL/MOTEL GUEST ROOM	
PHASE OF CONSTRUCTION	[X] NEW CONSTRUCTION	[ ] ADDITION	[ ] ALTERATION	[ ] UNCONDITIONED (File Affidavit)
METHOD OF MECHANICAL COMPLIANCE	[ ] COMPONENT	[ ] OVERALL ENVELOPE	[ ] PERFORMANCE	

STATEMENT OF COMPLIANCE

This Certificate of Compliance lists the building features and performance specifications needed to comply with Title 24, Parts 1 and 6 of the California Code of Regulations. This certificate applies only to building envelope requirements.

The Principal Envelope Designer hereby certifies that the proposed building design represented in this set of construction documents is consistant with the other compliance forms and worksheets, with the specifications, and with any other calculations submitted with this permit application. The proposed building has been designed to meet the envelope requirements contained in sections 110, 116 through 118, and 143 or 149 of Title 24, Part 6, Chapter 1.

Please check one:

[X] *I hereby affirm that I am eligible under the provisions of Division 3 of the Business and Professions Code to sign this document as the person responsible for its preparation; and that I am a civil engineer, or architect.*

[ ] *I affirm that I am eligible under the exemption to Division 3 of the Business and Professions Code by Section 5537.2 of the Business and Professions Code to sign this document as the person responsible for its preparation; and that I am a licensed contractor preparing documents for the work I have contracted to perform.*

[ ] *I affirm that I am eligible under the exemption to Division 3 of the Business and Professions Code by Section _____ of the _____ Code to sign this document as the person responsible for its preparation; and for the following reason: _____*

PRINCIPAL ENVELOPE DESIGNER - NAME	SIGNATURE	LIC.NO.	DATE
DON E. ALSEY	Donald E. Alsey	C-26676	07-31-11

ENVELOPE MANDATORY MEASURES

Indicate location on plans of Note Block for Mandatory Measures: SEE ATTACHED

INSTRUCTIONS TO APPLICANT

For detailed instructions on the use of this and all Energy Efficiency Standards compliance forms, please refer to the Nonresidential Manual published by the California Energy Commission.
ENV-1: Required on plans for all submittals. Part 2 may be incorporated in schedules on plans.
ENV-2: Used for all submittals; choose appropriate version depending on method of envelope compliance.
ENV-3: Optional. Use if default U-values are not used. Choose appropriate version for assembly U-value to be calculated.

Nonresidential Compliance Form — *December 1991*

CERTIFICATE OF COMPLIANCE — PART 1 OF 3 — MECH-1

PROJECT NAME	DATE
BATTERY TUNNEL SUBSTATION	II-24-09
PROJECT ADDRESS: BATTERY TUNNEL SUBSTATION DOYLE DRIVE PARKWAY	Building Permit *
PRINCIPAL DESIGNER - MECHANICAL: HAO PHAN — TELEPHONE: (916) 227-8343	
DOCUMENTATION AUTHOR: SEVERIANO GUTIERREZ — TELEPHONE: (916) 227-8332	Checked by/Date Enforcement Agency Use

GENERAL INFORMATION

DATE OF PLANS	BUILDING CONDITIONED FLOOR AREA
08/28/09	900 SQFT

BUILDING TYPE	[X] NONRESIDENTIAL	[ ] HIGH RISE RESIDENTIAL	[ ] HOTEL/MOTEL GUEST ROOM	
PHASE OF CONSTRUCTION	[X] NEW CONSTRUCTION	[ ] ADDITION	[ ] ALTERATION	
METHOD OF MECHANICAL COMPLIANCE	[X] PRESCRIPTIVE	[ ] PERFORMANCE		
PROOF OF ENVELOPE COMPLIANCE	[ ] PREVIOUS ENVELOPE PERMIT	[X] ENVELOPE COMPLIANCE ATTACHED		

STATEMENT OF COMPLIANCE

This Certificate of Compliance lists the building features and performance specifications needed to comply with Title 24, Parts 1 and 6 of the California Code of Regulations. This certificate applies only to building mechanical requirements.

The Principal Mechanical Designer hereby certifies that the proposed building design represented in this set of construction documents is consistant with the other compliance forms and worksheets, with the specifications, and with any other calculations submitted with this permit application. The proposed building has been designed to meet the mechanical requirements contained in sections 110 through 115, 120 through 124, 140 through 142, 144 and 145.

Please check one:

[X] *I hereby affirm that I am eligible under the provisions of Division 3 of the Business and Professions Code to sign this document as the person responsible for its preparation; and that I am a civil engineer, mechanical engineer or architect.*

[ ] *I affirm that I am eligible under the exemption to Division 3 of the Business and Professions Code by Section 5537.2 of the Business and Professions Code to sign this document as the person responsible for its preparation; and that I am a licensed contractor preparing documents for the work I have contracted to perform.*

[ ] *I affirm that I am eligible under the exemption to Division 3 of the Business and Professions Code by Section _____ of the _____ Code to sign this document as the person responsible for its preparation; and for the following reason: _____*

PRINCIPAL MECHANICAL DESIGNER - NAME	SIGNATURE	LIC.NO.	DATE
HAO PHAN	Hao T. Phan	M-32912	9-30-10

MECHANICAL MANDATORY MEASURES

Indicate location on plans of Note Block for Mandatory Measures: SEE ATTACHED

INSTRUCTIONS TO APPLICANT

For detailed instructions on the use of this and all Energy Efficiency Standards compliance forms, please refer to the Nonresidential Manual published by the California Energy Commission.
MECH-1: Required on plans for all submittals. Parts 2 & 3 may be incorporated in schedules on plans.
MECH-2: Required for all submittals; choose appropriate version depending on method of mechanical compliance.
MECH-3 and MECH-4: Required on all submittals.

Nonresidential Compliance Form — *December 1991*

	BY	CHECKED
DESIGN	SEVERIANO GUTIERREZ	HAO PHAN
DETAILS	SEVERIANO GUTIERREZ	HAO PHAN
QUANTITIES	SEVERIANO GUTIERREZ	HAO PHAN

STATE OF CALIFORNIA
DEPARTMENT OF TRANSPORTATION

DIVISION OF ENGINEERING SERVICES
ARCHITECTURAL AND STRUCTURAL DESIGN

CU 04108
EA 163701

BRIDGE NO. 34-0157W
POST MILE 9

BATTERY TUNNEL SUBSTATION
TITLE 24 ENERGY COMPLIANCE I

SHEET A0-001

MECH title24.dgn
DS OSD Imperial Rev. 10/07 14-DEC-2009 15:43

ORIGINAL SCALE IN INCHES FOR REDUCED PLANS 0 1 2 3

DISREGARD PRINTS BEARING EARLIER REVISION DATES →
REVISION DATES (PRELIMINARY STAGE ONLY): 11-24-09

SHEET 2 OF 21

14-DEC-2009 15:43
MECH title24.dgn

DIST.	COUNTY	ROUTE	POST MILES TOTAL PROJECT	SHEET NO.	TOTAL SHEETS
04	SF	101	8.2/9.2	636	654

Donald E. Alsey
LICENSED ARCHITECT — DATE

LICENSED ARCHITECT — DON ALSEY — No. C-26676 — Exp. 07-31-11 — STATE OF CALIFORNIA

12-14-09
PLANS APPROVAL DATE

The State of California or its officers or agents shall not be responsible for the accuracy or completeness of electronic copies of this plan sheet.

CALIFORNIA STATE FIRE MARSHAL APPROVED
Approval of this plan does not authorize or approve any omission or deviation from applicable regulations. Final approval is subject to field inspection. One set of approved plans shall be available on the project site at all times.
Reviewed by: STEPHEN GUARINO
Approval date: 12-14-09

CERTIFICATE OF COMPLIANCE (Part 1 of 4) LTG-1-C

PROJECT NAME: BATTERY TUNNEL SUBSTATION			DATE: 11-24-09
PROJECT ADDRESS: BATTERY TUNNEL SUBSTATION DOYLE DRIVE PARKWAY			Building Permit #
PRINCIPAL DESIGNER-LIGHTING: BEATRICE BINDU		TELEPHONE: 916-227-8764	
DOCUMENTATION AUTHOR: BEATRICE BINDU		TELEPHONE: 916-227-8764	Checked by/Date Enforcement Agency Use

GENERAL INFORMATION

DATE OF PLANS: 8/28/09	BUILDING CONDITIONED FLOOR AREA: 900		CLIMATE ZONE: 3
BUILDING TYPE	☑ NONRESIDENTIAL ☐ HIGH RISE RESIDENTIAL		☐ HOTEL/MOTEL GUEST
☑ CONDITIONED SPACES	☑ UNCONDITIONED SPACES	☐ INDOOR / OUTDOOR SIGNS	
PHASE OF CONSTRUCTION	☑ NEW CONSTRUCTION	☐ ADDITION	☐ ALTERATION

METHOD OF COMPLIANCE

☐ PERFORMANCE ☐ COMPLETE BUILDING ☑ AREA CATEGORY ☐ TAILORED ☐ COMMON LIGHTING

STATEMENT OF COMPLIANCE

This Certificate of Compliance lists the building features and performance specifications needed to comply with Title 24, Parts 1 and 6 of the California Code of Regulations. This certificate applies only to building lighting requirements.

The documentation preparer hereby certifies that the documentation is accurate and complete.

DOCUMENTATION AUTHOR	SIGNATURE	DATE
BEATRICE BINDU	Beatrice Bindu	11/24/09

The Principal Lighting Designer hereby certifies that the proposed building design represented in this set of construction documents is consistent with the other compliance forms and worksheets, with the specifications, and with any other calculations submitted with this permit application. The proposed building has been designed to meet the lighting requirements contained in the applicable parts of Sections 110, 119, 130 through 132, 146, 148, and 149 of Title 24, Part 6.

☐ The plans & specifications meet the requirements of Part 6 (Sections 10-103a). ☐ The installation certificates meet the requirements of Part 6 (10-103a3).

☐ The operation & maintenance information meets the requirements of Part 6 (10-103c).
Please check one: (These sections of the Business and Professions Code are printed in full in the Nonresidential Manual.)

☑ I hereby affirm that I am eligible under the provisions of Division 3 of the Business and Professions Code to sign this document as the person responsible for its preparation; and that I am licensed in the State of California as a civil engineer or electrical engineer, or I am a licensed architect.

☐ I affirm that I am eligible under the provisions of Division 3 of the Business and Professions Code by section 5537.2 or 6737.3 to sign this document as the person responsible for its preparation; and that I am a licensed contractor performing this work.

☐ I affirm that I am eligible under Division 3 of the Business and Professions Code to sign this document because it pertains to a structure or type of work described as exempt pursuant to Business and Professions Code Sections 5537, 5538 and 6737.1.

PRINCIPAL LIGHTING DESIGNER-NAME	SIGNATURE	DATE	LIC.#
BEATRICE BINDU	Beatrice Bindu	06/30/10	E 17240

LIGHTING MANDATORY MEASURES

✓ ☐ Indicate location on plans of Note Block for Mandatory Measures _____

LIGHTING COMPLIANCE FORMS & WORKSHEETS (Check box if worksheet is included)

☑	LTG-1-C, Parts 1 of 4 and 2 of 4	Certificate of Compliance. Part 1 of 4 and 2 of 4 are required for all submittals.
☐	LTG-1-C, Part 3 of 4	Certificate of Compliance. Part 3 of 4 submittal is required only if Control Credits are claimed.
☐	LTG-1-C, Part 4 of 4	Certificate of Compliance. Part 4 of 4 submittal is required when lighting controls are installed.
☐	LTG-2-C	Indoor Lighting Schedule
☐	LTG-3-C	Portable Lighting Worksheet
☐	LTG-4-C	Lighting Controls Credit Worksheet
☐	LTG-5-C	Indoor Lighting Power Allowance
☐	LTG-6-C	Tailored Method Worksheet
☐	LTG-7-C	Room Cavity Ratio Worksheet
☐	LTG-8-C	Common Lighting Systems Method Worksheet
☐	LTG-9-C	Line Voltage Track Lighting Worksheet
☐	OLTG-4-C	Signs (See OLTG-4-C Sign Worksheet in Chapter 6, Outdoor Lighting and Signs Chapter)

2005 Nonresidential Compliance Forms ***January 2006***

CERTIFICATE OF COMPLIANCE (Part 1 of 2) OLTG-1-C

PROJECT NAME: BATTERY TUNNEL SUBSTATION			DATE: 11-24-09
PROJECT ADDRESS: BATTERY TUNNEL SUBSTATION DOYLE DRIVE PARKWAY			Building Permit #
PRINCIPAL DESIGNER-LIGHTING: BEATRICE BINDU		TELEPHONE: 916-227-8764	
DOCUMENTATION AUTHOR: BEATRICE BINDU		TELEPHONE: 916-227-8764	Checked by/Date Enforcement Agency Use

GENERAL INFORMATION

DATE OF PLANS: 8/28/09 — OUTDOOR LIGHTING ZONE (✓ One) ☐ LZ1 ☑ LZ2 ☐ LZ3 ☐ LZ4

FUNCTION TYPE ☑ OUTDOOR LIGHTING ☐ OUTDOOR SIGNS ☐ INDOOR SIGNS

PHASE OF CONSTRUCTION ☑ NEW CONSTRUCTION ☐ ADDITIONS ☐ ALTERATIONS

STATEMENT OF COMPLIANCE

This Certificate of Compliance lists outdoor lighting system specifications needed to comply with Title 24, Parts 1 and 6 of the California Code of Regulations. This certificate applies only to building lighting requirements.

The documentation preparer hereby certifies that the documentation is accurate and complete.

DOCUMENTATION AUTHOR	SIGNATURE	DATE
BEATRICE BINDU	Beatrice Bindu	11/24/09

The Principal Lighting Designer hereby certifies that the proposed outdoor lighting and signs design represented in this set of construction documents is consistent with the other compliance forms and worksheets, with the specifications, and with any other calculations submitted with this permit application. The proposed building has been designed to meet the lighting requirements contained in the applicable parts of Sections 110, 119, 130 through 132, 146, and 149 of Title 24, Part 6.

☑ I hereby affirm that I am eligible under the provisions of Division 3 of the Business and Professions Code to sign this document as the person responsible for its preparation; and that I am licensed in the State of California as a civil engineer or electrical engineer, or I am a licensed architect.

☐ I affirm that I am eligible under the provisions of Division 3 of the Business and Professions Code by section 5537.2 or 6737.3 to sign this document as the person responsible for its preparation; and that I am a licensed contractor performing this work.

☐ I affirm that I am eligible under Division 3 of the Business and Professions Code to sign this document because it pertains to a structure or type of work described as exempt pursuant to Business and Professions Code Sections 5537, 5538 and 6737.1.

(These sections of the Business and Professions Code are printed in full in the Nonresidential Manual.)

PRINCIPAL LIGHTING DESIGNER-NAME	SIGNATURE	DATE	LIC.#
BEATRICE BINDU	Beatrice Bindu	06/30/10	E 17240

INSTRUCTIONS TO APPLICANT OUTDOOR LIGHTING COMPLIANCE & WORKSHEETS (Check box if worksheet is included)

For detailed instructions on the use of this and all Energy Efficiency Standards compliance forms, please refer to the Nonresidential Manual published by the California Energy Commission.

☑	OLTG-1-C	Certificate of Compliance. Required on plans for all submittals for outdoor lighting. Part 2 of 2 may be incorporated in schedules on the plans.
		Either LTG-1-C or OLTG-1-C may be used for signs as follows: 1. Use LTG-1-C if the project consists solely of indoor signs. 2. Use LTG-1-C if the project consists of indoor lighting, and outdoor or indoor signs, but no other outdoor lighting. 3. Use OLTG-1-C if the project consists solely of outdoor signs. 4. Use OLTG-1-C if the project consists of outdoor lighting, and indoor or outdoor signs, but no other indoor lighting.
☐	OLTG-2-C	LIGHTING COMPLIANCE SUMMARY. Applicable Parts required for ALL outdoor lighting allowances (Except for Signs).
☐	OLTG-3-C	AREA CALCULATIONS WORKSHEETS. Applicable parts required for all outdoor area calculations.
☐	OLTG-4-C	SIGN LIGHTING COMPLIANCE. Required for all internally and externally illuminated signs, for both indoor and outdoor signs.

2005 Nonresidential Compliance Forms ***January 2006***

DESIGN	BY SEVERIANO GUTIERREZ	CHECKED HAO PHAN	STATE OF CALIFORNIA DEPARTMENT OF TRANSPORTATION	DIVISION OF ENGINEERING SERVICES ARCHITECTURAL AND STRUCTURAL DESIGN	BRIDGE NO. 34-0157W	BATTERY TUNNEL SUBSTATION	SHEET AO-002
DETAILS	BY SEVERIANO GUTIERREZ	CHECKED HAO PHAN			POST MILE 9	TITLE 24 ENERGY COMPLIANCE 2	
QUANTITIES	BY SEVERIANO GUTIERREZ	CHECKED HAO PHAN					

ELECtitle24.dgn
DS OSD Imperial Rev. 10/07 14-DEC-2009 15:43

ORIGINAL SCALE IN INCHES FOR REDUCED PLANS 0 1 2 3

CU 04108
EA 163701

DISREGARD PRINTS BEARING EARLIER REVISION DATES →

REVISION DATES (PRELIMINARY STAGE ONLY)	SHEET	OF
11/24/09	3	21

14-DEC-2009 15:43
ELECtitle24.dgn

DIST.	COUNTY	ROUTE	POST MILES TOTAL PROJECT	SHEET NO.	TOTAL SHEETS
04	SF	101	8.2/9.2	637	654

Donald E. Alsey 08-28-2009
LICENSED ARCHITECT DATE

LICENSED ARCHITECT DONALD E. ALSEY No. C-26676 Exp. 07-31-11 STATE OF CALIFORNIA

12-14-09
PLANS APPROVAL DATE

The State of California or its officers or agents shall not be responsible for the accuracy or completeness of electronic copies of this plan sheet.

SHEET INDEX

ARCHITECTURE

GP GENERAL PLAN

A0-001 TITLE 24 ENERGY COMPLIANCE 1
A0-002 TITLE 24 ENERGY COMPLIANCE 2
A0-01 SHEET INDEX AND BUILDING DATA
A0-02 ARCHITECTURAL ABBREVIATIONS, SYMBOLS, NOTES

A1-01 FLOOR PLAN
A1-02 REFLECTED CEILING PLAN
A1-03 SECTIONS
A1-04 SECTIONS
A1-05 SECTIONS
A1-06 DOOR AND LOUVER SCHEDULE
A1-07 FINISH SCHEDULE
A1-08 DETAILS
A1-09 DETAILS

STRUCTURAL

ST-1 LEGEND
ST-2 CONCRETE STANDARD

ST1-1 FOUNDATION PLAN
ST1-2 FOUNDATION DETAILS
ST1-3 FOUNDATION DETAILS

MECHANICAL

MT10-1 HVAC PLAN
MT10-2 HVAC SCHEDULES AND SHEMATIC

BUILDING DATA

BUILDING DATA DESIGNED PER THE 2007 C.B.C

OCCUPANCY CLASSIFICATION AND USE:	**S2, SUBSTATION** [1]
BUILDING CONSTRUCTION TYPE:	**TYPE 2-B** [2]
NUMBER OF STORIES:	**1-STORY (ACTUAL) (4-STORIES ALLOWED)** [3]
ACTUAL BUILDING HEIGHT:	**18'-0''**
BUILDING AREA (SQ. FT.):	**3365 SQ. FT. (ACTUAL)**
AREA OF PROJECT (SQ. FT.)	**3365 SQ. FT.**
ALLOWABLE AREA PER C.B.C.:	**26,000 SQ. FT. (ALLOWED)** [3]
AREA AND /OR HEIGHT INCREASES:	**NONE**
FIRE SPRINKLERED / TYPE:	**NO / NOT APPLICABLE**
FIRE ALARMS / TYPE:	**YES / AUTOMATIC**
OTHER FIRE PROTECTION SYSTEMS (IF ANY)	**NONE**
SMOKE CONTROL SYSTEM:	**YES / BACK DRAFT DAMPERS**
OCCUPANT LOAD:	**11 PERSONS** [4]

1 2007 C.B.C. 3113.3

2 2007 C.B.C. 3113.3

3 2007 C.B.C. 503, TABLE 503

4 2007 C.B.C. 1004, TABLE 1004.1.1
3365 SQ. FT. / 300 GROSS SQ. FT. = 11.21 PERSON OCCUPANT LOAD, USE 11 PERSONS

CALIFORNIA STATE FIRE MARSHAL APPROVED
Approval of this plan does not authorize or approve any omission or deviation from applicable regulations. Final approval is subject to field inspection. One set of approved plans shall be available on the project site at all times.
Reviewed by: STEPHEN GUARINO
Approval date: 12-14-09

DESIGN	BY ANTHONY MANANSALA	CHECKED DON ALSEY	
DETAILS	BY ANTHONY MANANSALA	CHECKED DON ALSEY	
QUANTITIES	BY	CHECKED	

STATE OF CALIFORNIA DEPARTMENT OF TRANSPORTATION

DIVISION OF ENGINEERING SERVICES ARCHITECTURAL AND STRUCTURAL DESIGN

BRIDGE NO. 34-0157W
POST MILE 9

BATTERY SUBSTATION
SHEET INDEX AND BUILDING DATA

SHEET **A0-01**

A0-01.dgn
DS OSD Imperial Rev. 10/07 14-DEC-2009 15:43

ORIGINAL SCALE IN INCHES FOR REDUCED PLANS 0 1 2 3

CU 04108
EA 163741

DISREGARD PRINTS BEARING EARLIER REVISION DATES → REVISION DATES (PRELIMINARY STAGE ONLY) ~~MM-DD-YY~~ ~~07-23-09~~ ~~08-19-09~~ 08-30-09

SHEET 4 OF 21

14-DEC-2009 15:43
A0-01.dgn

ARCHITECTURAL ABBREVIATIONS

&	AND
∠	ANGLE
℄	CENTER LINE
∅	DIAMETER OR ROUND
□	SQUARE
d	PENNY
°	DEGREE
A/C	AIR CONDITIONING
AC	ASPHALT CONCRETE
AB	ANCHOR BOLT
ABV	ABOVE
ACOUS	ACOUSTICAL
ADJ	ADJUSTABLE
AHU	AIR HANDLING UNIT
ALT	ALTERNATE
ALUM	ALUMINUM
APA	AMERICAN PLYWOOD ASSOCIATION
ARCH	ARCHITECTURAL, ARCHITECT
ASPH	ASPHALT
BD	BOARD
BIT	BITUMINOUS
BLDG	BUILDING
BLK	BLOCK
BLKG	BLOCKING
BLW	BELOW
BM	BEAM
BN	BOUNDARY NAILING
BOT	BOTTOM
BR	BRIDGE
BTM	BOTTOM
BTWN	BETWEEN
BUR	BUILT-UP-ROOFING
CJ	CONTROL JOINT
CL	CHAIN LINK
CAB	CABINET
CB	CATCH BASIN
CEM	CEMENT
CER	CERAMIC
CH	CLOTHES HOOK
CIDH	CAST IN DRILLED HOLE
CIP	CAST IN PLACE
CKBD	CHALKBOARD
CLG	CEILING
CMU	CONCRETE MASONRY UNIT
CLO	CLOSET
CLR	CLEAR
COL	COLUMN
CONC	CONCRETE
CONN	CONNECTION
CONST	CONSTRUCTION
CONT	CONTINUOUS
CORR	CORRIDOR
CPT	CARPET
CT	CERAMIC TILE
CTR	CENTER
CTSK	COUNTERSUNK
CY	CUBIC YARD
DBL	DOUBLE
DEPT	DEPARTMENT
DET	DETAIL
DF	DOUGLAS FIR
DIA	DIAMETER
DIM	DIMENSION
DN	DOWN
DP	DEEP
DR	DOOR
DS	DOWNSPOUT
DWG	DRAWING
DWR	DRAWER
(E)	EXISTING
E	EAST
EA	EACH
EF	EXHAUST FAN
EHD	ELECTRIC HAND DRYER
EJ	EXPANSION JOINT
EL	ELEVATION (HEIGHT)
ELEC	ELECTRICAL
ELEV	ELEVATION (VIEW)
ELVR	ELEVATOR
EMER	EMERGENCY
ENCL	ENCLOSURE
EP	EDGE OF PAVEMENT
EQ	EQUAL
EPB	ELECTRICAL PANELBOARD
EQUIP	EQUIPMENT
ESCL	ESCALATOR
ETW	EDGE OF TRAVEL WAY
EWC	ELECTRIC WATER COOLER
EXP	EXPANSION
EXPO	EXPOSED, EXPOSURE
EXT	EXTERIOR
FD	FLOOR DRAIN
FDN	FOUNDATION
FE	FIRE EXTINGUISHER
FEC	FIRE EXTINGUISHER CABINET
FF	FINISH FLOOR
FG	FINISH GRADE
FH	FIRE HYDRANT
FHC	FIRE HOSE CABINET
FHMS	FLATHEAD METAL SCREW
FHWS	FLATHEAD WOOD SCREW
FIN	FINISH
FJ	FLOOR JOIST
FLASH	FLASHING
FLR	FLOOR
FLUOR	FLUORESCENT
FOC	FACE OF CONCRETE
FOF	FACE OF FINISH
FOM	FACE OF MASONRY
FOS	FACE OF STUD
FRMG	FRAMING
FRPP	FIBERGLASS REINFORCED PLASTIC PANEL
FT	FEET, FOOT
FTG	FOOTING
FURR	FURRING
FWY	FREEWAY
GA	GAUGE
GAL	GALLON
GALV	GALVANIZED
GB	GRAB BAR
GI	GALVANIZED IRON
GL	GLASS
GLM	GLUE LAMINATED MEMBER
GLZ	GLAZING
GR	GRADE
GSM	GALVANIZED SHEET METAL
GYP	GYPSUM
HB	HOSE BIB
HC	HOLLOW CORE
HD	HEAD, HOLD DOWN
HDR	HEADER
HDWD	HARDWOOD
HDWR	HARDWARE
HEX	HEXAGONAL
HF	HEMLOCK-FIR
HGR	HANGER
HM	HOLLOW METAL
HORIZ	HORIZONTAL
HP	HIGH POINT
HR	HOUR
HSB	HIGH STRENGTH BOLT
HT	HEIGHT
HVAC	HEATING, VENTILATING, AIR CONDITIONING
HWY	HIGHWAY
ID	INSIDE DIAMETER
IN	INCH
INFO	INFORMATION
INSUL	INSULATION
INT	INTERIOR
ISA	INTERNATIONAL SYMBOL OF ACCESSIBILITY
JAN	JANITOR
JB	JUNCTION BOX
JH	JOIST HANGER
JST	JOIST
JT	JOINT
KIT	KITCHEN
LAB	LABORATORY
LAV	LAVATORY
LBF	POUND-FORCE
LBS	POUNDS
LF	LINEAR FEET
LKR	LOCKER
LLV	LONG LEG VERTICAL
LOL	LAYOUT LINE
LPG	LIQUIFIED PETROLEUM GAS
LS	LAG SCREW
M	METER
MAT	MATERIAL
MAX	MAXIMUM
MB	MACHINE BOLT
MBR	MEMBER
MECH	MECHANICAL
MEMB	MEMBRANE
MET	METAL
MFR	MANUFACTURER
MH	MAN HOLE
MIN	MINIMUM
MIR	MIRROR
MISC	MISCELLANEOUS
MIW	MALLEABLE IRON WASHER
mm	MILLIMETER
MO	MASONRY OPENING
MTD	MOUNTED
MUL	MULLION
N	NORTH
ND	NAPKIN DISPOSAL
NIC	NOT IN CONTRACT
NO	NUMBER
NOM	NOMINAL
NTS	NOT TO SCALE
OBSC	OBSCURE
OC	ON CENTER
OD	OUTSIDE DIAMETER
OFF	OFFICE
OFD	OVERFLOW DRAIN
OG	ORIGINAL GROUND
OH	OPPOSITE HAND
OHD	OVERHEAD
OHWS	OVALHEAD WOOD SCREW
OP	OPERATIONS
OPNG	OPENING
OPP	OPPOSITE
OPT	OPTION, OPTIONAL
P	PITCH
PB	POST BASE
PC	POST CAP
PCC	PORTLAND CEMENT CONCRETE
PDF	POWDER DRIVEN FASTENERS
PH	PHILLIPS HEAD
PL	PLATE
PLAM	PLASTIC LAMINATE
PLAS	PLASTER
PLYWD	PLYWOOD
PMF	PRESSED METAL FRAME
PR	PAIR
PRTN	PARTITION
PT	POINT
PTD	PAPER TOWEL DISPENSER
PTD/R	PAPER TOWEL DISPENSER /RECEPTACLE
PVC	POLYVINYL CHLORIDE
PWB	PREFABRICATED WOOD I BEAM
QT	QUARRY TILE
(R)	RELOCATED
R	RADIUS, RISER
R/W	RIGHT OF WAY
RD	ROOF DRAIN
RDWD	REDWOOD
REF	REFERENCE
REFG	REFRIGERATOR
REINF	REINFORCED(ING)
REQ	REQUIRED
RFG	ROOFING
RFSWN	ROUGHSAWN
RH	ROUND HEAD
RHWS	ROUND HEAD WOOD SCREWS
RJ	ROOF JOIST
RM	ROOM
RO	ROUGH OPENING
RSWN	RESAWN
RTE	ROUTE
RW	RETAINING WALL
RWL	RAINWATER LEADER
S	SOUTH
SC	SOLID CORE
SCHED	SCHEDULE
SD	SOAP DISPENSER
SDST	SELF DRILLING SELF TAPPING
SF	SQUARE FEET
SH	SHELF
SHWR	SHOWER
SHT	SHEET
SHTG	SHEATHING
SIM	SIMILAR
SL	SCORE LINE
SMS	SHEET METAL SCREW
SOHD	SECTIONAL OVERHEAD DOOR
SPEC	SPECIFICATION
SPS	STRUCTURAL PLYWOOD SHEATHING
SQ	SQUARE
SRRA	SAFETY ROADSIDE REST AREA
SS	SERVICE SINK
SST	STAINLESS STEEL
STA	STATION
STAG	STAGGER
STD	STANDARD
STL	STEEL
STOR	STORAGE
STRUC	STRUCTURAL
SUSP	SUSPENDED
T	TREAD
T&G	TONGUE & GROOVE
TB	TOLL BOOTH
TEL	TELEPHONE
TEMP	TEMPERED
TER	TERRAZZO
THK	THICK
THLD	THRESHOLD
TJ	TOOLED JOINT
TKBD	TACKBOARD
TN	TOE NAIL
TNVM	TAMPON/NAPKIN VENDING MACHINE
TOC	TOP OF CURB OR CONCRETE
TOP	TOP OF PAVEMENT
TOS	TOE OF SLOPE
TOT	TOTAL
TOW	TOP OF WALL
TS	TUBE STEEL
TSCD	TOILET SEAT COVER DISPENSER
TTD	TOILET TISSUE DISPENSER
TTY	TELETYPEWRITER
TYP	TYPICAL
UNF	UNFINISHED
UON	UNLESS OTHERWISE NOTED
UR	URINAL
VAR	VARIES
VCT	VINYL COMPOSITION TILE
VERT	VERTICAL
VEST	VESTIBULE
VR	VENT RISER
VTR	VENT THRU ROOF
W	WEST
W/	WITH
W/O	WITHOUT
WC	WATER CLOSET
WD	WOOD
WDW	WINDOW
WH	WATER HEATER
WP	WORKING POINT
WR	WATER RESISTANT
WSCT	WAINSCOT
WT	WEIGHT
WTPR	WATERPROOFING
WWF	WELDED WIRE FABRIC
YD	YARD

CALIFORNIA STATE FIRE MARSHAL APPROVED

Approval of this plan does not authorize or approve any omission or deviation from applicable regulations. Final approval is subject to field inspection. One set of approved plans shall be available on the project site at all times.

Reviewed by: STEPHEN GUARINO

Approval date: 12-14-09

DIST.	COUNTY	ROUTE	POST MILES TOTAL PROJECT	SHEET NO.	TOTAL SHEETS
04	SF	101	8.2/9.2	638	654

Donald E. Alsey 08-28-2009

LICENSED ARCHITECT — DATE

LICENSED ARCHITECT — DONALD E. ALSEY — No. C-26676 — Exp. 07-31-11 — STATE OF CALIFORNIA

12-14-09

PLANS APPROVAL DATE

The State of California or its officers or agents shall not be responsible for the accuracy or completeness of electronic copies of this plan sheet.

GENERAL NOTES

1. THE CONTRACTOR SHALL VERIFY ALL CONTROLLING DIMENSIONS AND FIELD CONDITIONS BEFORE ORDERING OR FABRICATING ANY MATERIALS OR ASSEMBLIES.
2. THE CONTRACTOR SHALL NOTIFY THE ENGINEER IN WRITING OF ANY DISCREPENCIES BETWEEN THESE PLANS AND ACTUAL MEASUREMENTS OR FIELD CONDITIONS.

DESIGN CRITERIA

THE BUILDING WORK ON THIS PROJECT HAS BEEN DESIGNED TO CONFORM TO THE FOLLOWING REGULATORY CODES:

CALIFORNIA BUILDING CODE - 2007
CALIFORNIA PLUMBING CODE - 2007
CALIFORNIA MECHANICAL CODE - 2007
CALIFORNIA ELECTRICAL CODE - 2007
CALIFORNIA ENERGY CODE - 2007
CALIFORNIA FIRE CODE - 2007
AMERICANS WITH DISABILITIES ACT, CURRENT EDITION

SYMBOLS

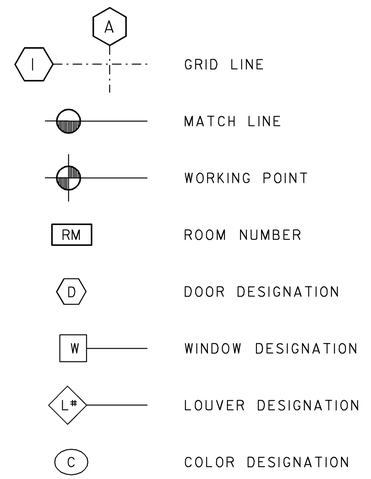

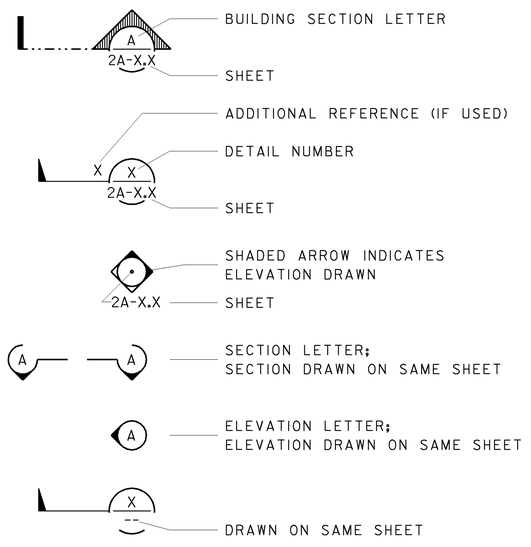

DESIGN SUPERVISOR	DESIGNER	CHECKED BY: DON ALSEY	SHEET LEGEND
DESIGN ARCHITECT	DRAWN BY: ANTHONY MANANSALA	STRUCTURAL REVIEW	A-I ARCHITECTURAL; ST-I STRUCTURAL; M-I MECHANICAL; EE-I ELECTRICAL; W-I WATER SUPPLY; SS-I SANITARY

STATE OF CALIFORNIA
DEPARTMENT OF TRANSPORTATION

DIVISION OF ENGINEERING SERVICES
ARCHITECTURAL AND STRUCTURAL DESIGN

BRIDGE NO.	BATTERY SUBSTATION	SHEET
34-0157W	ABBREVIATIONS SYMBOLS — ARCHITECTURAL ABBREVIATIONS, SYMBOLS, NOTES	A0-02
POST MILE 9		

A0-02.dgn
DS OSD Imperial Rev. 10/07 14-DEC-2009 15:43

ORIGINAL SCALE IN INCHES FOR REDUCED PLANS 0 1 2 3

CU 04108
EA 163741

DISREGARD PRINTS BEARING EARLIER REVISION DATES →

REVISION DATES (PRELIMINARY STAGE ONLY): MM-DD-YY | 07-23-09 | 08-19-09 | 08-30-09

SHEET	OF
5	21

14-DEC-2009 15:43

A0-02.dgn

DIST.	COUNTY	ROUTE	POST MILES TOTAL PROJECT	SHEET NO.	TOTAL SHEETS
04	SF	101	8.2/9.2	639	654

Donald E. Alsey 08-28-2009
LICENSED ARCHITECT — DATE

LICENSED ARCHITECT — DONALD E. ALSEY — No. C-26676 — Exp. 07-31-11 — STATE OF CALIFORNIA

12-14-09
PLANS APPROVAL DATE

The State of California or its officers or agents shall not be responsible for the accuracy or completeness of electronic copies of this plan sheet.

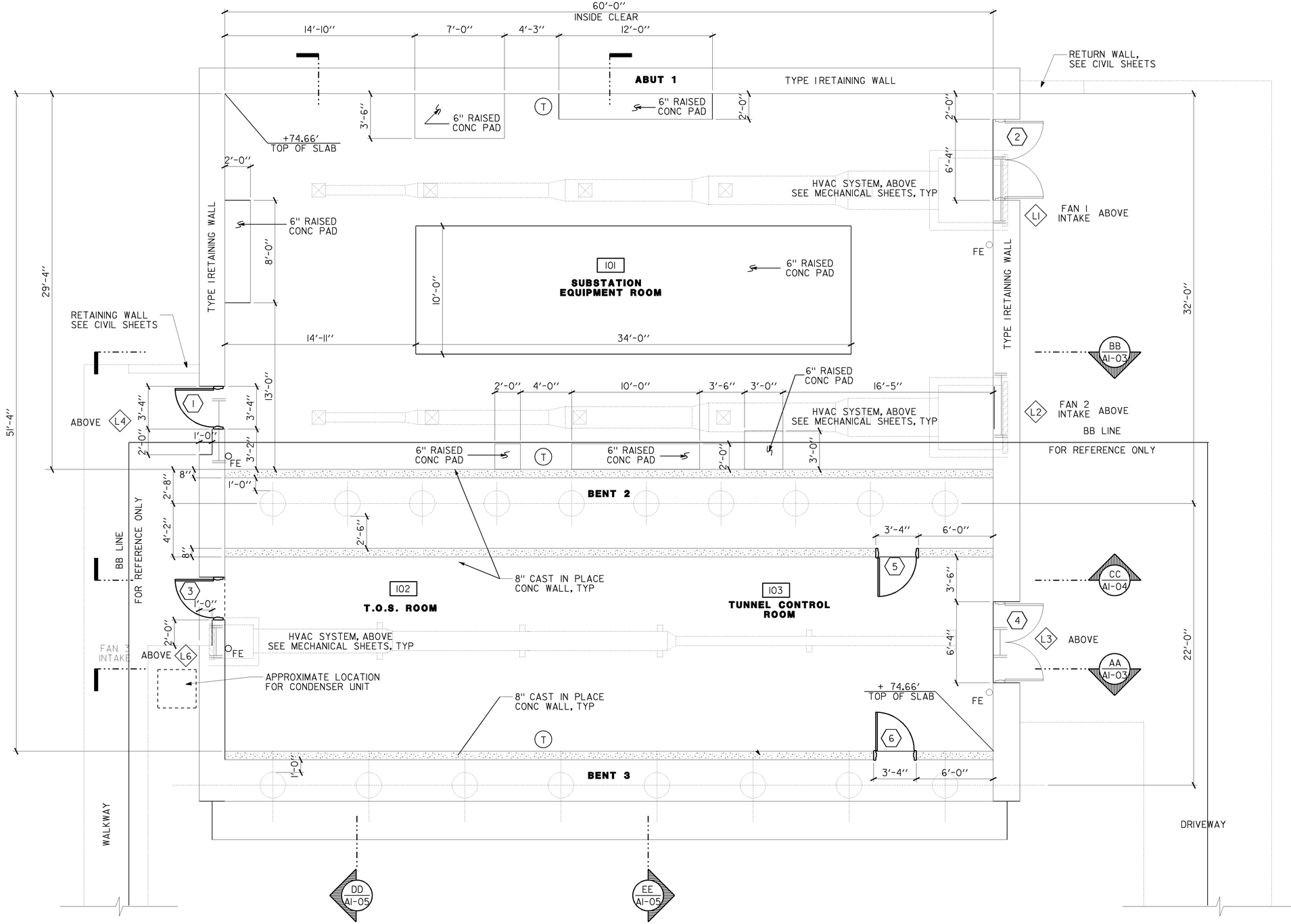

PLAN NORTH

PLAN

SCALE 1/4" = 1'-0"

NOTES

1. RAISED 6" CONC PAD QUANTITY, DIMENSION AND PLACEMENT IS APPROXIMATE; CONTRACTOR SHALL COORDINATE PAD PLACEMENT
2. SEE ELECTRICAL SHEETS FOR EQUIPMENT PLACEMENT
3. SEE BRIDGE SHEETS FOR ABUT 1, BENT 2 AND BENT 3 INFORMATION.
4. SEE BRIDGE SHEETS FOR TYPE I RETAINING WALL INFORMATION.
5. CONTRACTOR SHALL COORDINATE ELECTRICAL CONDUIT SLAB PENETRATIONS WTIH DISTRICT ELECTRICAL SHEETS AND STRUCTURAL REBAR LAYOUT AS WELL AS GROUND BAR LOCATIONS CAN CONNECTIONS.

LEGEND

T — THERMOSTAT

CAST IN PLACE CONCRETE WALL

CALIFORNIA STATE FIRE MARSHAL APPROVED

Approval of this plan does not authorize or approve any omission or deviation from applicable regulations. Final approval is subject to field inspection. One set of approved plans shall be available on the project site at all times.

Reviewed by: STEPHEN GUARINO

Approval date: 12-14-09

NOTE:
CONTRACTOR SHALL VERIFY ALL CONTROLLING FIELD DIMENSIONS BEFORE ORDERING OR FABRICATING ANY MATERIAL.

CONTRACTOR SHALL COORDIANTE ALL SUBSTATION DRAWINGS AND SPECIAL PROVISIONS INCLUDING BUT NOT LIMITED TO BRIDGE STRUCTURES SHEETS, CIVIL DESIGN SHEETS, LANDSCAPE ARCHITECTURE SHEETS, MECHANICAL SHEETS AND ELECTRICAL SHEETS.

	BY	CHECKED
DESIGN	ANTHONY MANANSALA	DON ALSEY
DETAILS	ANTHONY MANANSALA	DON ALSEY
QUANTITIES		

STATE OF CALIFORNIA
DEPARTMENT OF TRANSPORTATION

DIVISION OF ENGINEERING SERVICES
ARCHITECTURAL AND STRUCTURAL DESIGN

CU 04108
EA 163741

BRIDGE NO. 34-0157W
POST MILE 9

BATTERY SUBSTATION

FLOOR PLAN

SHEET A1-01

a1-01.dgn
DS OSD Imperial Rev. 10/07 15-DEC-2009 10:05

ORIGINAL SCALE IN INCHES FOR REDUCED PLANS 0 1 2 3

DISREGARD PRINTS BEARING EARLIER REVISION DATES →

REVISION DATES (PRELIMINARY STAGE ONLY): MM-DD-YY 07-23-09 08-19-09 08-30-09

SHEET 6 OF 21

15-DEC-2009 10:05
a1-01.dgn

CALIFORNIA STATE FIRE MARSHAL APPROVED

Approval of this plan does not authorize or approve any omission or deviation from applicable regulations. Final approval is subject to field inspection. One set of approved plans shall be available on the project site at all times.

Reviewed by: STEPHEN GUARINO

Approval date: 12-14-09

DIST.	COUNTY	ROUTE	POST MILES TOTAL PROJECT	SHEET NO.	TOTAL SHEETS
04	SF	101	8.2/9.2	640	654

Donald E. Alsey 08-28-2009
LICENSED ARCHITECT — DATE

LICENSED ARCHITECT — DONALD E. ALSEY — No. C-26676 — Exp. 07-31-11 — STATE OF CALIFORNIA

12-14-09
PLANS APPROVAL DATE

The State of California or its officers or agents shall not be responsible for the accuracy or completeness of electronic copies of this plan sheet.

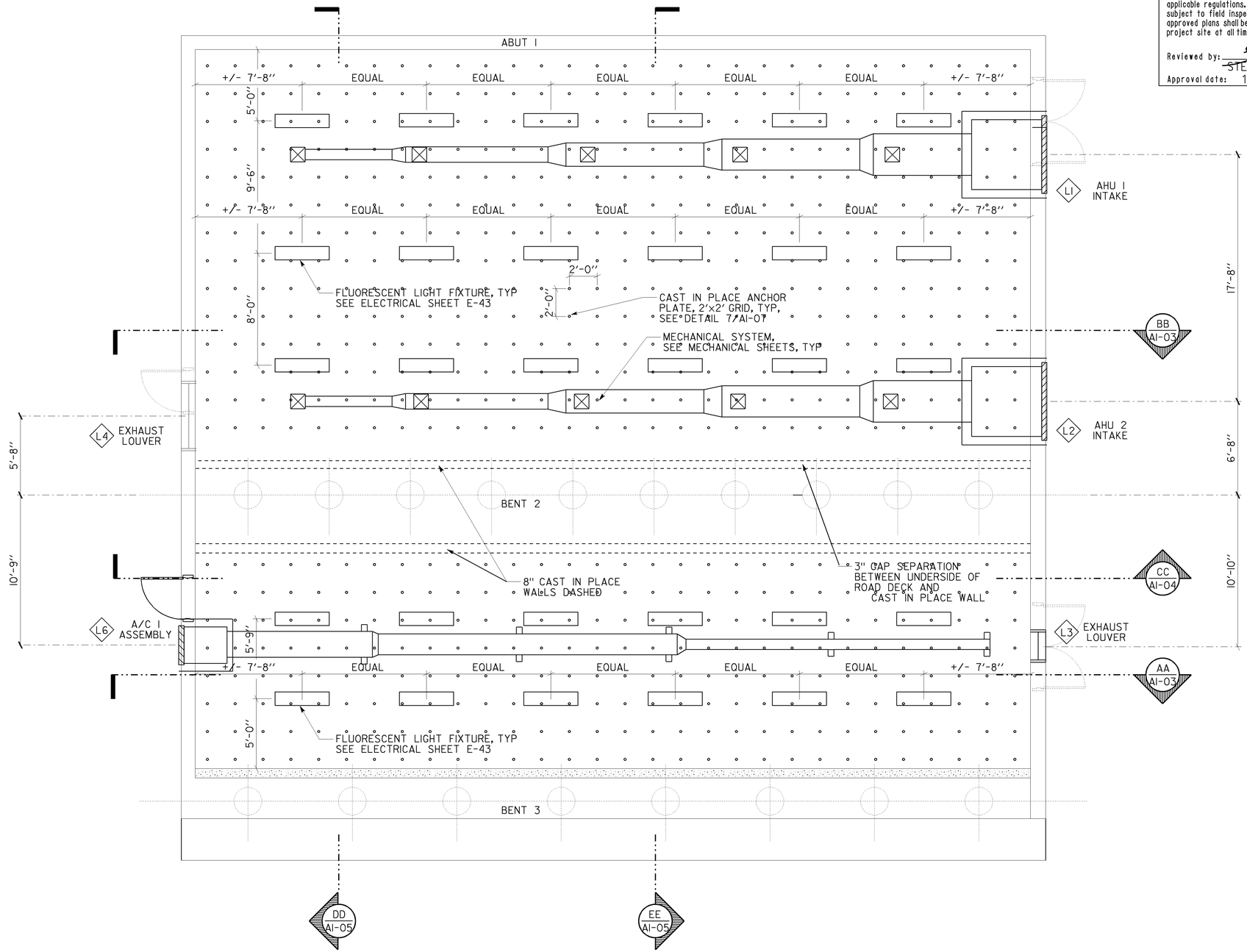

PLAN NORTH

REFLECTED CEILING PLAN

SCALE 1/4" = 1'-0"

NOTE:
CONTRACTOR SHALL VERIFY ALL CONTROLLING FIELD DIMENSIONS BEFORE ORDERING OR FABRICATING ANY MATERIAL.

CONTRACTOR SHALL COORDIANTE ALL SUBSTATION DRAWINGS AND SPECIAL PROVISIONS INCLUDING BUT NOT LIMITED TO BRIDGE STRUCTURES SHEETS, CIVIL DESIGN SHEETS, LANDSCAPE ARCHITECTURE SHEETS, MECHANICAL SHEETS AND ELECTRICAL SHEETS.

	BY	CHECKED
DESIGN		
DETAILS	ANTHONY MANANSALA	
QUANTITIES		

STATE OF CALIFORNIA
DEPARTMENT OF TRANSPORTATION

DIVISION OF ENGINEERING SERVICES
ARCHITECTURAL AND STRUCTURAL DESIGN

CU 04108
EA 163741

BRIDGE NO. 34-0157W
POST MILE X

BATTERY SUBSTATION

X — REFLECTED CEILING PLAN

SHEET **A1-02**

A1-02.dgn
DS OSD Imperial Rev. 10/07 14-DEC-2009 15:43

ORIGINAL SCALE IN INCHES FOR REDUCED PLANS 0 1 2 3

DISREGARD PRINTS BEARING EARLIER REVISION DATES →

REVISION DATES (PRELIMINARY STAGE ONLY): 07 12/01/09

SHEET 7 OF 21

14-DEC-2009 15:43
A1-02.dgn

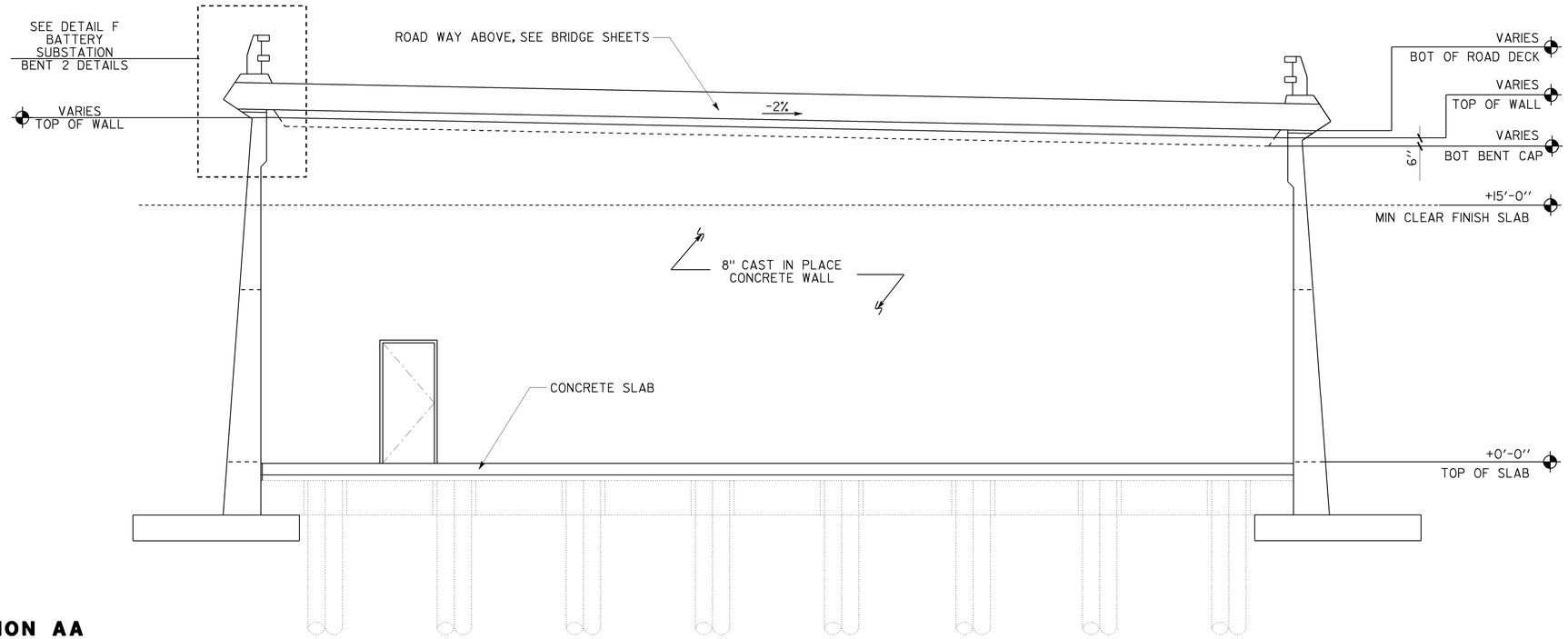

SECTION AA

SCALE 1/4" = 1'-0"

LIGHTING AND MECHANICAL SYSTEMS NOT SHOWN FOR CLARITY

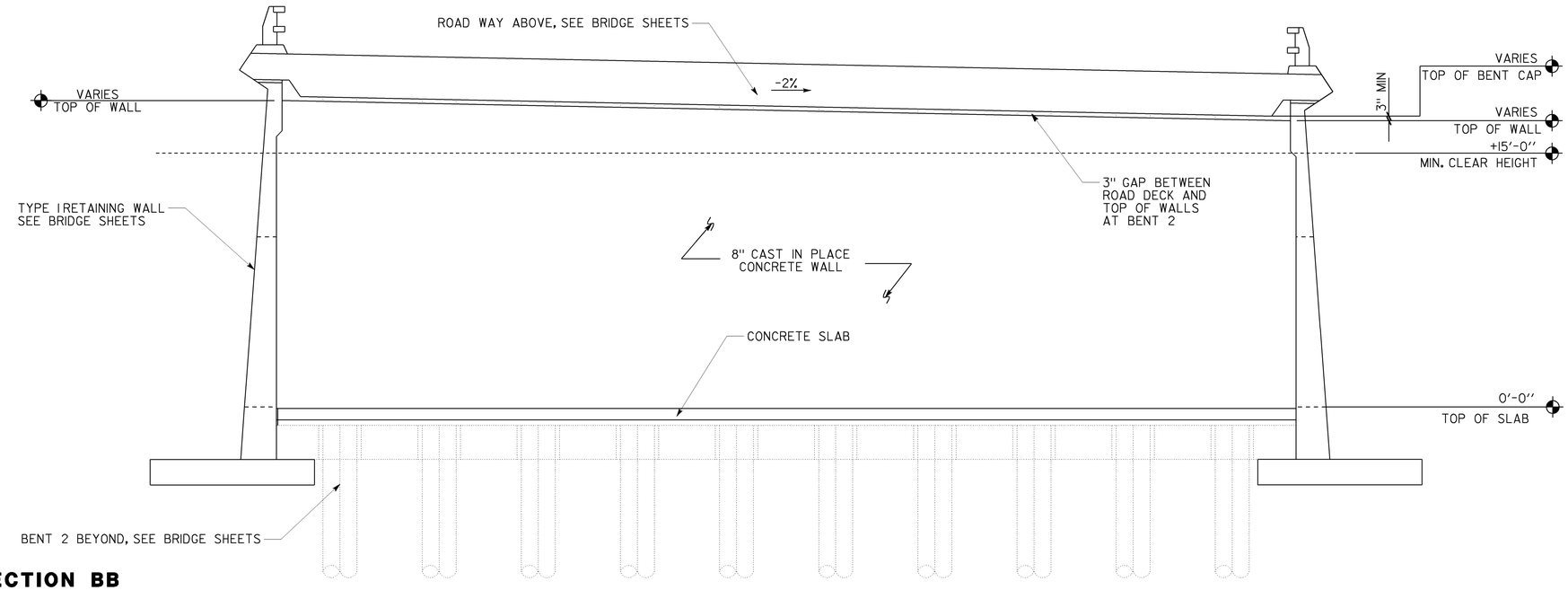

SECTION BB

SCALE 1/4" = 1'-0"

LIGHTING AND MECHANICAL SYSTEMS NOT SHOWN FOR CLARITY

NOTE:
CONTRACTOR SHALL VERIFY
ALL CONTROLLING FIELD DIMENSIONS
BEFORE ORDERING OR FABRICATING
ANY MATERIAL.

CONTRACTOR SHALL COORDIANTE
ALL SUBSTATION DRAWINGS AND
SPECIAL PROVISIONS INCLUDING
BUT NOT LIMITED TO BRIDGE STRUCTURES
SHEETS, CIVIL DESIGN SHEETS,
LANDSCAPE ARCHITECTURE SHEETS,
MECHANICAL SHEETS AND ELECTRICAL
SHEETS.

DIST.	COUNTY	ROUTE	POST MILES TOTAL PROJECT	SHEET NO.	TOTAL SHEETS
04	SF	101	8.2/9.2	641	654

Donald E. Alsey 08-28-2009
LICENSED ARCHITECT — DATE

LICENSED ARCHITECT
DONALD E. ALSEY
No. C-26676
Exp. 07-31-11
STATE OF CALIFORNIA

12-14-09
PLANS APPROVAL DATE

The State of California or its officers or agents shall not be responsible for the accuracy or completeness of electronic copies of this plan sheet.

CALIFORNIA STATE FIRE MARSHAL APPROVED

Approval of this plan does not authorize or approve any omission or deviation from applicable regulations. Final approval is subject to field inspection. One set of approved plans shall be available on the project site at all times.

Reviewed by: STEPHEN GUARINO
Approval date: 12-14-09

	BY		CHECKED	
DESIGN	BY	ANTHONY MANANSALA	CHECKED	DON ALSEY
DETAILS	BY	ANTHONY MANANSALA	CHECKED	DON ALSEY
QUANTITIES	BY		CHECKED	

STATE OF CALIFORNIA
DEPARTMENT OF TRANSPORTATION

DIVISION OF ENGINEERING SERVICES
ARCHITECTURAL AND STRUCTURAL DESIGN

BRIDGE NO. 34-0157W
POST MILE 9

BATTERY SUBSTATION

SECTIONS

SHEET **A1-03**

A1-03.dgn
DS OSD Imperial Rev. 10/07 14-DEC-2009 15:43

ORIGINAL SCALE IN INCHES FOR REDUCED PLANS 0 1 2 3

CU 04108
EA 163741

DISREGARD PRINTS BEARING EARLIER REVISION DATES →

REVISION DATES (PRELIMINARY STAGE ONLY): MM-DD-YY 07-23-09 08-18-09 08-30-09

SHEET 8 OF 21

14-DEC-2009 15:43
A1-03.dgn

DIST.	COUNTY	ROUTE	POST MILES TOTAL PROJECT	SHEET NO.	TOTAL SHEETS
04	SF	101	8.2/9.2	642	654

CALIFORNIA STATE FIRE MARSHAL APPROVED
Approval of this plan does not authorize or approve any omission or deviation from applicable regulations. Final approval is subject to field inspection. One set of approved plans shall be available on the project site at all times.
Reviewed by: STEPHEN GUARINO
Approval date: 12-14-09

Donald E. Alsey 08-28-2009
LICENSED ARCHITECT — DATE

LICENSED ARCHITECT — DONALD E. ALSEY — No. C-26676 — Exp. 07-31-11 — STATE OF CALIFORNIA

12-14-09
PLANS APPROVAL DATE

The State of California or its officers or agents shall not be responsible for the accuracy or completeness of electronic copies of this plan sheet.

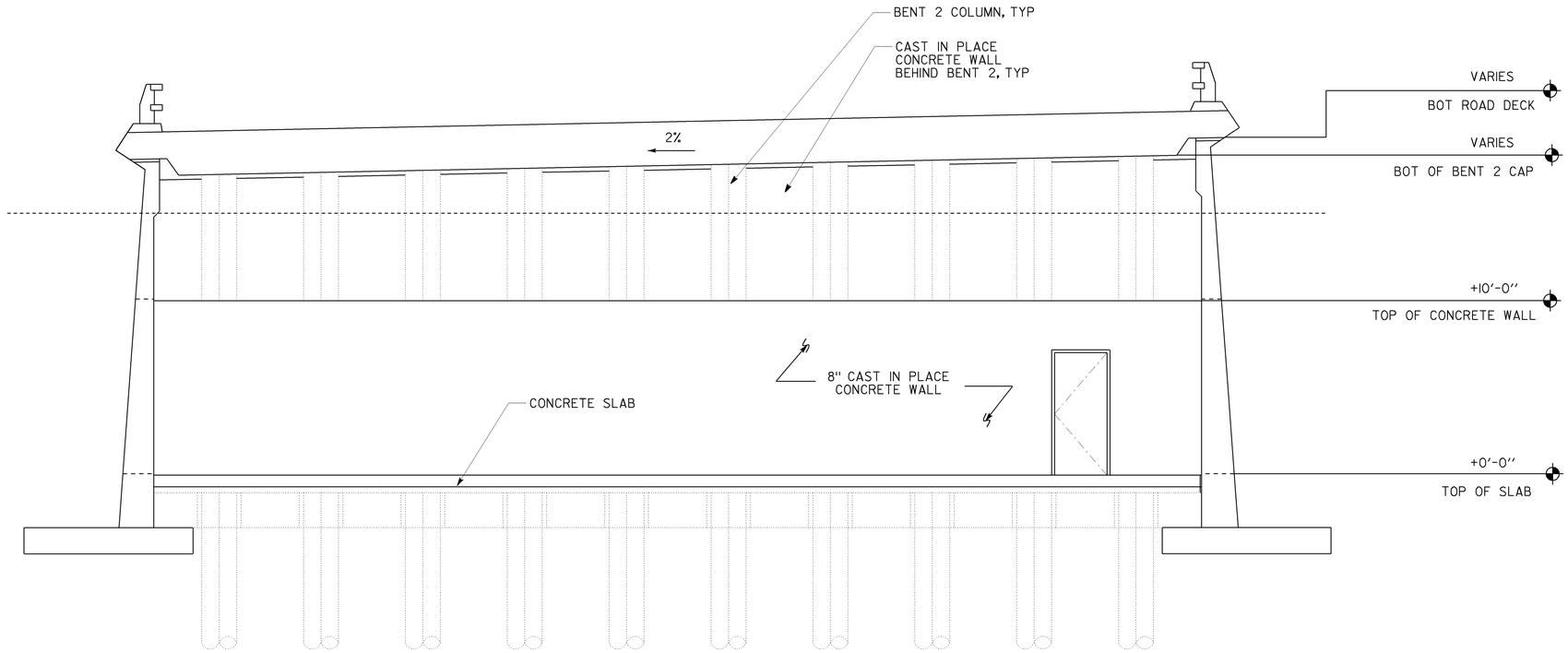

SECTION CC

SCALE 1/4" = 1'-0"

LIGHTING AND MECHANICAL SYSTEMS NOT SHOWN FOR CLARITY

NOTE:
CONTRACTOR SHALL VERIFY ALL CONTROLLING FIELD DIMENSIONS BEFORE ORDERING OR FABRICATING ANY MATERIAL.

CONTRACTOR SHALL COORDIANTE ALL SUBSTATION DRAWINGS AND SPECIAL PROVISIONS INCLUDING BUT NOT LIMITED TO BRIDGE STRUCTURES SHEETS, CIVIL DESIGN SHEETS, LANDSCAPE ARCHITECTURE SHEETS, MECHANICAL SHEETS AND ELECTRICAL SHEETS.

DESIGN	BY ANTHONY MANANSALA	CHECKED DON ALSEY	
DETAILS	BY ANTHONY MANANSALA	CHECKED DON ALSEY	
QUANTITIES	BY	CHECKED	

STATE OF CALIFORNIA
DEPARTMENT OF TRANSPORTATION

DIVISION OF ENGINEERING SERVICES
ARCHITECTURAL AND STRUCTURAL DESIGN

BRIDGE NO. 34-0157W
POST MILE 9

BATTERY SUBSTATION
SECTIONS

SHEET **A1-04**

A1-04.dgn
DS OSD Imperial Rev. 10/07 14-DEC-2009 15:43

ORIGINAL SCALE IN INCHES FOR REDUCED PLANS 0 1 2 3

CU 04108
EA 163741

DISREGARD PRINTS BEARING EARLIER REVISION DATES →
REVISION DATES (PRELIMINARY STAGE ONLY): M-09-11 | 07-23-09 | 08-19-09 | 08-30-09

SHEET 9 OF 21

14-DEC-2009 15:43
A1-04.dgn

DIST.	COUNTY	ROUTE	POST MILES TOTAL PROJECT	SHEET NO.	TOTAL SHEETS
04	SF	101	8.2/9.2	643	654

Donald E. Alsey 08-28-2009
LICENSED ARCHITECT — DATE

LICENSED ARCHITECT
DONALD E. ALSEY
No. C-26676
Exp. 07-31-11
STATE OF CALIFORNIA

12-14-09
PLANS APPROVAL DATE

The State of California or its officers or agents shall not be responsible for the accuracy or completeness of electronic copies of this plan sheet.

CALIFORNIA STATE FIRE MARSHAL APPROVED

Approval of this plan does not authorize or approve any omission or deviation from applicable regulations. Final approval is subject to field inspection. One set of approved plans shall be available on the project site at all times.

Reviewed by: STEPHEN GUARINO
Approval date: 12-14-09

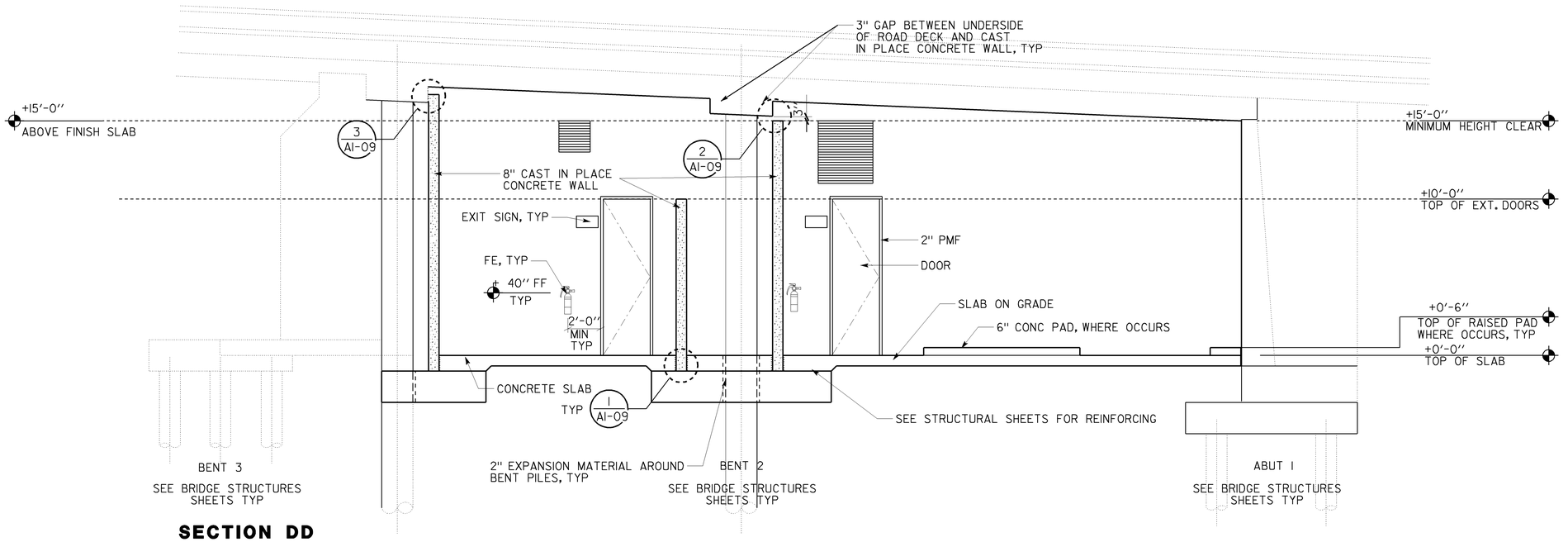

SECTION DD

SCALE 1/4" = 1'-0"

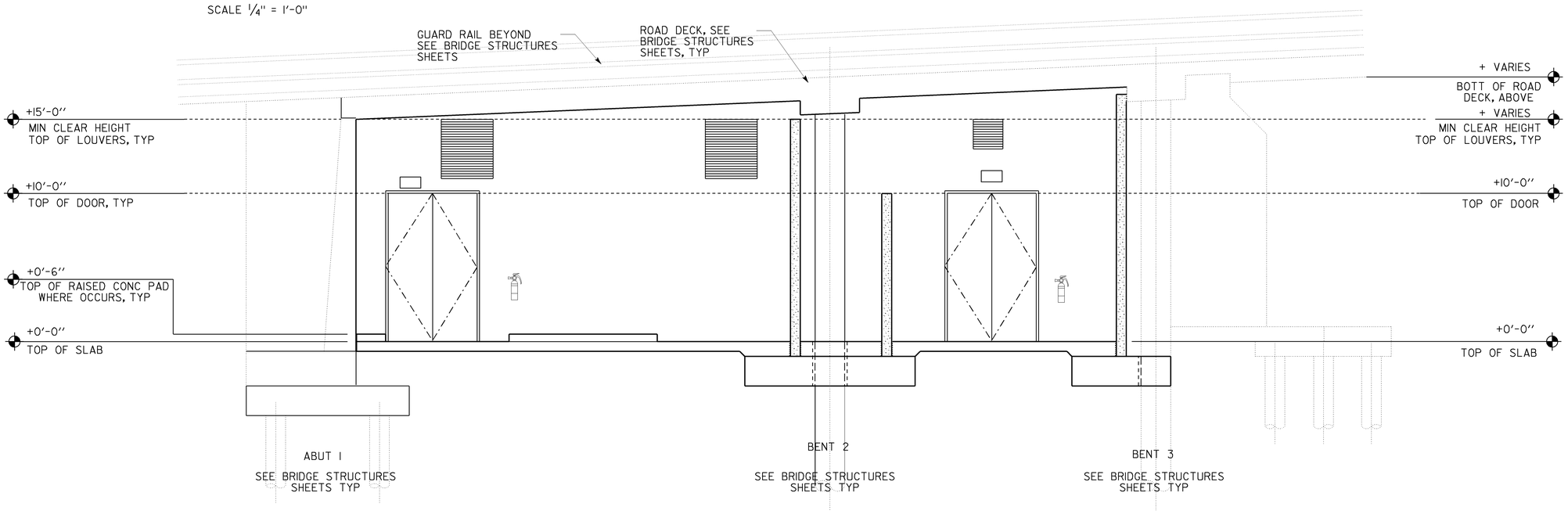

SECTION EE

SCALE 1/4" = 1'-0"

NOTE:
CONTRACTOR SHALL VERIFY ALL CONTROLLING FIELD DIMENSIONS BEFORE ORDERING OR FABRICATING ANY MATERIAL.

CONTRACTOR SHALL COORDIANTE ALL SUBSTATION DRAWINGS AND SPECIAL PROVISIONS INCLUDING BUT NOT LIMITED TO BRIDGE STRUCTURES SHEETS, CIVIL DESIGN SHEETS, LANDSCAPE ARCHITECTURE SHEETS, MECHANICAL SHEETS AND ELECTRICAL SHEETS.

DESIGN	BY ANTHONY MANANSALA	CHECKED DON ALSEY	
DETAILS	BY ANTHONY MANANSALA	CHECKED DON ALSEY	
QUANTITIES	BY	CHECKED	

STATE OF CALIFORNIA
DEPARTMENT OF TRANSPORTATION

DIVISION OF ENGINEERING SERVICES
ARCHITECTURAL AND STRUCTURAL DESIGN

BRIDGE NO.	BATTERY SUBSTATION	SHEET
34-0157W	SECTIONS	A1-05
POST MILE 9		

A1-05.dgn
DS OSD Imperial Rev. 10/07 14-DEC-2009 15:44

ORIGINAL SCALE IN INCHES FOR REDUCED PLANS 0 1 2 3

CU 04108
EA 16374I

DISREGARD PRINTS BEARING EARLIER REVISION DATES →

REVISION DATES (PRELIMINARY STAGE ONLY)							SHEET	OF
MM-DD-YY	07-23-09	08-19-09	08-30-09				10	21

14-DEC-2009 15:44
A1-05.dgn

LOUVER SCHEDULE

LOUVER NO.	OPENING SIZE WIDTH X HEIGHT X DEPTH	FRAME MAT	FRAME FINISH	DETAILS HEAD	DETAILS JAMB	DETAILS SILL	REMARKS
L1	42" x 48" x 4"	METAL	PAINT	4 / A1-08	5 / A1-08	6 / A1-08	BACK DRAFT DAMPER, INSECT SCREEN
L2	42" x 48" x 4"	METAL	PAINT	4 / A1-08	5 / A1-08	6 / A1-08	BACK DRAFT DAMPER, INSECT SCREEN
L3	24" x 24" x 4"	METAL	PAINT	4 / A1-08	5 / A1-08	6 / A1-08	BACK DRAFT DAMPER, INSECT SCREEN
L4	42" x 48" x 4"	METAL	PAINT	4 / A1-08	5 / A1-08	6 / A1-08	BACK DRAFT DAMPER, INSECT SCREEN
L5	NOT USED						
L6	24" x 24" x 4"	METAL	PAINT	4 / A1-08	5 / A1-08	6 / A1-08	BACK DRAFT DAMPER, INSECT SCREEN

CALIFORNIA STATE FIRE MARSHAL APPROVED

Approval of this plan does not authorize or approve any omission or deviation from applicable regulations. Final approval is subject to field inspection. One set of approved plans shall be available on the project site at all times.

Reviewed by: STEPHEN GUARINO

Approval date: 12-14-09

NOTE:
CONTRACTOR SHALL VERIFY ALL CONTROLLING FIELD DIMENSIONS BEFORE ORDERING OR FABRICATING ANY MATERIAL.

CONTRACTOR SHALL COORDIANTE ALL SUBSTATION DRAWINGS AND SPECIAL PROVISIONS INCLUDING BUT NOT LIMITED TO BRIDGE STRUCTURES SHEETS, CIVIL DESIGN SHEETS, LANDSCAPE ARCHITECTURE SHEETS, MECHANICAL SHEETS AND ELECTRICAL SHEETS.

DIST.	COUNTY	ROUTE	POST MILES TOTAL PROJECT	SHEET NO.	TOTAL SHEETS
04	SF	101	8.2/9.2	644	654

Donald E. Alsey 08-28-2009
LICENSED ARCHITECT — DATE

LICENSED ARCHITECT — DONALD E. ALSEY — No. C-26676 — Exp. 07-31-11 — STATE OF CALIFORNIA

12-14-09
PLANS APPROVAL DATE

The State of California or its officers or agents shall not be responsible for the accuracy or completeness of electronic copies of this plan sheet.

DOOR SCHEDULE

DOOR NO (D)	DOOR TYPE	DOOR ANCHOR	OPENING SIZE WIDTH X HGT	DOOR THICK.	DOOR MAT	DOOR FIN	FRAME MAT	FRAME TYPE	FRAME FIN	FRAME WIDTH	LABEL ASSY	HDWR GROUP	GLAZING	LOUVER	SIGN DETAIL NO	DETAIL 1- ROOM IDENTIFICATION SIGN TEXT	DETAILS HEAD	DETAILS JAMB	DETAILS THLD	REMARKS
1	A	A	3'-0" x 10'-0"	1-3/4"	METAL	PAINT	METAL	PMF	PAINT	6-3/4"	2-HR.	1	NONE	NONE	1, 2 / --	EQUIPMENT ROOM	1 / A1-08	2 / A1-08	3 / A1-08	PANIC AND FIRE EXIT HARDWARE
2	B	B	6'-0" x 10'-0"	1-3/4"	METAL	PAINT	METAL	PMF	PAINT	6-3/4"	2-HR.	2	NONE	NONE	1, 2 / --	EQUIPMENT ROOM	1 / A1-08	2 / A1-08	3 / A1-08	PANIC AND FIRE EXIT HARDWARE
3	A	A	3'-0" x 10'-0"	1-3/4"	METAL	PAINT	METAL	PMF	PAINT	6-3/4"	2-HR.	1	NONE	NONE	1, 2 / --	T. O. S. ROOM	1 / A1-08	2 / A1-08	3 / A1-08	PANIC AND FIRE EXIT HARDWARE
4	B	B	6'-0" x 10'-0"	1-3/4"	METAL	PAINT	METAL	PMF	PAINT	6-3/4"	2-HR.	2	NONE	NONE	1, 2 / --	TUNNEL CONTROL ROOM	1 / A1-08	2 / A1-08	3 / A1-08	PANIC AND FIRE EXIT HARDWARE
5	C	C	3'-0" x 7'-0"	1-3/4"	METAL	PAINT	METAL	PMF	PAINT	6-3/4"	NONE	3	NONE	NONE	NONE		4 / A1-09	5 / A1-09	6 / A1-09	NON-RATED DOOR
6	C	C	3'-0" x 7'-0"	1-3/4"	METAL	PAINT	METAL	PMF	PAINT	6-3/4"	NONE	3	NONE	NONE	NONE		4 / A1-09	5 / A1-09	6 / A1-09	NON-RATED DOOR

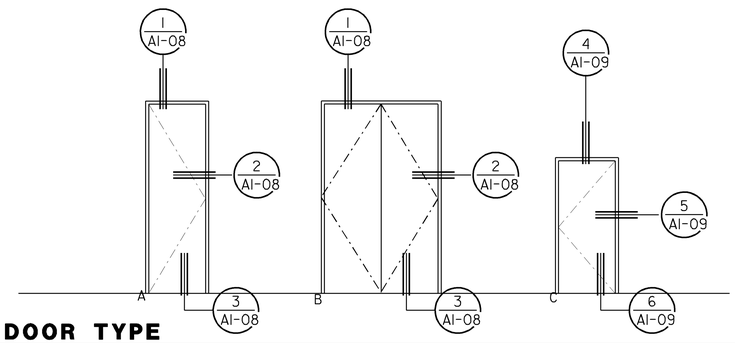

DOOR TYPE

SCALE 1/4" = 1'-0"

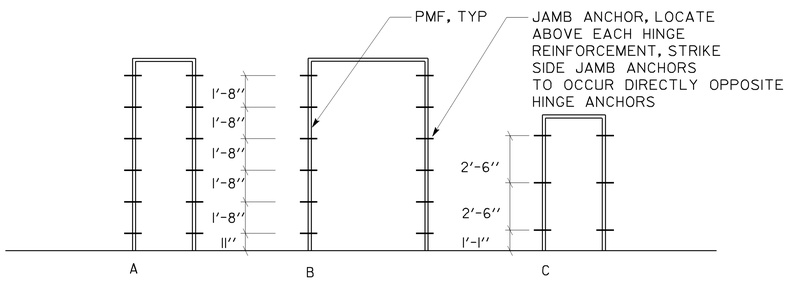

DOOR ANCHOR LOCATIONS

SIGNAGE NOTES:

1. LOCATE ROOM IDENTIFICATION SIGNS, EXIT SIGNS, AND RESTROOM SIGNS ON WALL ADJACENT TO DOOR ON LATCH SIDE. IF WALL SPACE IS NOT AVAILABLE ON LATCH SIDE, LOCATE ON NEAREST ADJACENT WALL.
2. REFER TO SPECIFICATIONS FOR SIGN MATERIAL AND COLOR SELECTION. COLORS MAY VARY FROM DETAILS.
3. SEE DOOR SCHEDULE FOR TEXT AND SIGN LOCATIONS, UON.
4. GRADE 2 BRAILLE: DOTS SHALL BE 1/10" OC IN EACH CELL WITH 2/10" SPACE BETWEEN CELLS MEASURED FROM THE SECOND COLUMN OF DOTS IN THE FIRST CELL TO THE FIRST COLUMN OF DOTS IN THE SECOND CELL. DOTS SHALL BE RAISED A MINIMUM OF 1/40" ABOVE THE BACKGROUND.
5. TACTILE CHARACTERS SHALL BE UPPERCASE SANS SERIF RAISED 1/32" MIN WITH A WIDTH TO HEIGHT RATIO BETWEEN 3:5 AND 1:1 AND A STROKE WIDTH TO HEIGHT RATIO BETWEEN 1:5 AND 1:10.
6. PROVIDE 18"x18" MIN CLEAR FLOOR SPACE IN FRONT OF AND CENTERED ON THE SIGN.

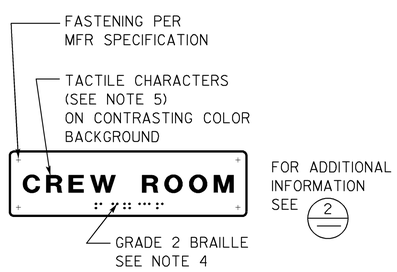

1 ROOM IDENTIFICATION SIGN
INSTALL PER DETAIL 3
TEXT VARIES, SEE DOOR SCHEDULE

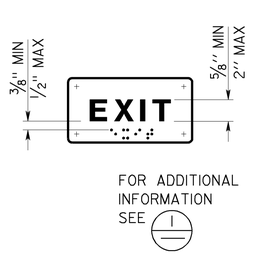

2 EXIT SIGN
INSTALL PER DETAIL 3
TEXT MAY VARY
SEE PLANS, OR DOOR SCHEDULE FOR LOCATIONS AND TEXT

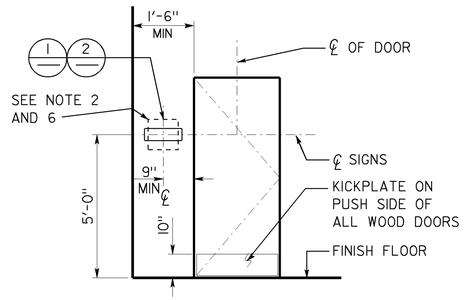

3 SIGN LOCATIONS
REFER TO SIGNAGE NOTES FOR ADDITIONAL INFORMATION

DESIGN	BY	CHECKED	STATE OF CALIFORNIA DEPARTMENT OF TRANSPORTATION	DIVISION OF ENGINEERING SERVICES ARCHITECTURAL AND STRUCTURAL DESIGN	BRIDGE NO. 34-0157W
DETAILS	BY ANTHONY MANANSALA	CHECKED			POST MILE X
QUANTITIES	BY	CHECKED			

BATTERY SUBSTATION
DOOR AND LOUVER SCHEDULE

SHEET A1-06

A1-06.dgn
DS OSD Imperial Rev. 10/07 14-DEC-2009 15:44

ORIGINAL SCALE IN INCHES FOR REDUCED PLANS 0 1 2 3

CU 04108
EA 163741

DISREGARD PRINTS BEARING EARLIER REVISION DATES →

REVISION DATES (PRELIMINARY STAGE ONLY) - 07 XX-XX-XX

SHEET 11 OF 21

14-DEC-2009 15:44
A1-06.dgn

DIST.	COUNTY	ROUTE	POST MILES TOTAL PROJECT	SHEET NO.	TOTAL SHEETS
04	SF	101	8.2/9.2	645	654

CALIFORNIA STATE FIRE MARSHAL APPROVED

Approval of this plan does not authorize or approve any omission or deviation from applicable regulations. Final approval is subject to field inspection. One set of approved plans shall be available on the project site at all times.

Reviewed by: STEPHEN GUARINO

Approval date: 12-14-09

Donald E. Alsey 08-28-2009
LICENSED ARCHITECT DATE

LICENSED ARCHITECT — DONALD E. ALSEY — No. C-26676 — Exp. 07-31-11 — STATE OF CALIFORNIA

12-14-09
PLANS APPROVAL DATE

The State of California or its officers or agents shall not be responsible for the accuracy or completeness of electronic copies of this plan sheet.

COLOR SCHEDULE

SURFACE	COLOR	FINISH
CONCRETE WALLS	--	SEALANT
CONCRETE FLOOR	--	SEALANT
CONCRETE CEILING (ROAD DECK ABOVE)	--	BITUMINOUS SEALANT
DOOR PMF	KELLY MOORE, KM3352-5 WOODLAND PARK	PAINT, SEMI-GLOSS
DOORS	KELLY MOORE, KM3352-5 WOODLAND PARK	PAINT, SEMI-GLOSS
LOUVERS	KELLY MOORE, KM3352-5 WOODLAND PARK	PAINT, SEMI-GLOSS
MECHANICAL DUCT	--	NO FINISH
ELECTRICAL CONDUIT	--	NO FINISH

MANUFACTURER'S DESIGNATIONS ARE LISTED TO INDICATE COLOR AND FINISH ONLY AND ARE NOT INTENDED TO SHOW PREFERENCE TO ANY PARTICULAR BRAND

ROOM FINISH SCHEDULE

ROOM NUMBER	ROOM NAME	FLOOR				WALL BASE				WALL												MISCELLANEOUS				CEILING				REMARKS
										NORTH				EAST				SOUTH				WEST										
		CONCRETE / SEALANT	---	---	---	---	---	---	---	CONCRETE / SEALANT	---	---	---	CONCRETE / SEALANT	---	---	---	CONCRETE / SEALANT	---	---	---	CONCRETE / SEALANT	---	---	---	DOORS / PAINT	LOUVERS / PAINT	---	---	BITUMINOUS WATERPROOFING	---	---	---	
101	EQUIPMENT ROOM	●								●				●				●				●				●	●			●				15'-0" CEILING MIN.
102	T.O.S. ROOM	●								●				●				●				●				●	●			●				15'-0" CEILING MIN.
103	TUNNEL CONTROL ROOM	●								●				●				●				●				●	●			●				15'-0" CEILING MIN.

NOTE:
CONTRACTOR SHALL VERIFY ALL CONTROLLING FIELD DIMENSIONS BEFORE ORDERING OR FABRICATING ANY MATERIAL.

CONTRACTOR SHALL COORDIANTE ALL SUBSTATION DRAWINGS AND SPECIAL PROVISIONS INCLUDING BUT NOT LIMITED TO BRIDGE STRUCTURES SHEETS, CIVIL DESIGN SHEETS, LANDSCAPE ARCHITECTURE SHEETS, MECHANICAL SHEETS AND ELECTRICAL SHEETS.

	BY	CHECKED
DESIGN	ANTHONY MANANSALA	DON ALSEY
DETAILS	ANTHONY MANANSALA	DON ALSEY
QUANTITIES		

STATE OF CALIFORNIA
DEPARTMENT OF TRANSPORTATION

DIVISION OF ENGINEERING SERVICES
ARCHITECTURAL AND STRUCTURAL DESIGN

BRIDGE NO. 34-0157W
POST MILE 9

BATTERY SUBSTATION
FINISH SCHEDULE

SHEET **A1-07**

A1-07.dgn
DS OSD Imperial Rev. 10/07 14-DEC-2009 15:44

ORIGINAL SCALE IN INCHES FOR REDUCED PLANS 0 1 2 3

CU 04108
EA 16374I

DISREGARD PRINTS BEARING EARLIER REVISION DATES →

REVISION DATES (PRELIMINARY STAGE ONLY): MM-DD-YY 07-23-09 | 08-19-09 | 08-30-09

SHEET 12 OF 21

A1-07.dgn

14-DEC-2009 15:44

DIST.	COUNTY	ROUTE	POST MILES TOTAL PROJECT	SHEET NO.	TOTAL SHEETS
04	SF	101	8.2/9.2	646	654

Donald E. Alsey 08-28-2009
LICENSED ARCHITECT — DATE

LICENSED ARCHITECT DONALD E. ALSEY No. C-26676 Exp. 07-31-11 STATE OF CALIFORNIA

12-14-09
PLANS APPROVAL DATE

The State of California or its officers or agents shall not be responsible for the accuracy or completeness of electronic copies of this plan sheet.

CALIFORNIA STATE FIRE MARSHAL APPROVED

Approval of this plan does not authorize or approve any omission or deviation from applicable regulations. Final approval is subject to field inspection. One set of approved plans shall be available on the project site at all times.

Reviewed by: STEPHEN GUARINO
Approval date: 12-14-09

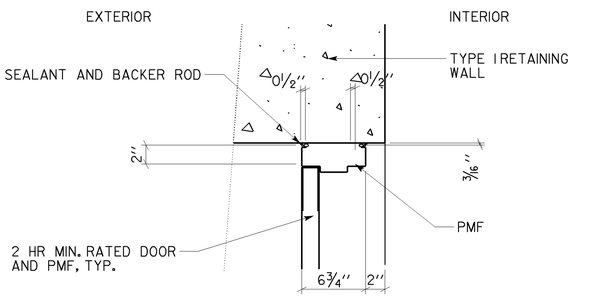

1 DOOR HEAD

SCALE 1-1/2" = 1'-0"

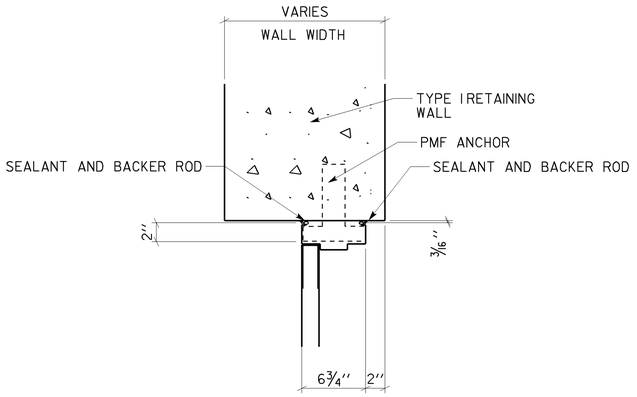

2 DOOR JAMB

SCALE 1-1/2" = 1'-0"

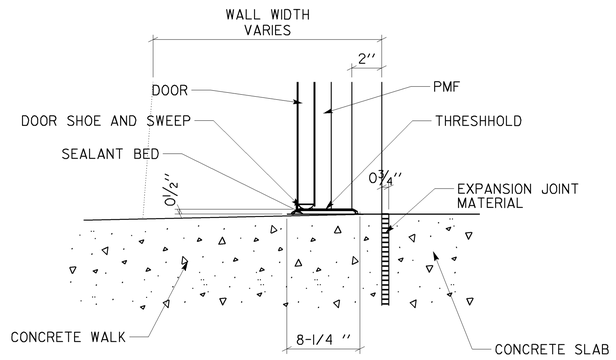

3 DOOR THRESHOLD

SCALE 1-1/2" = 1'-0"

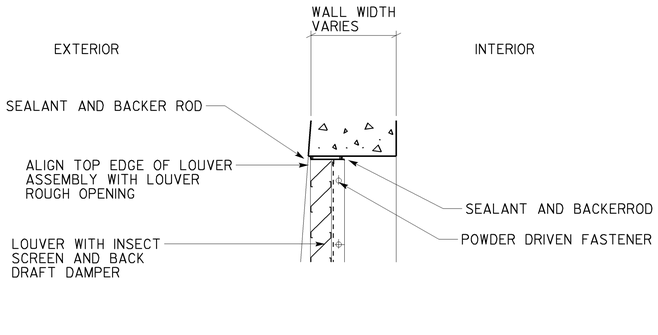

4 LOUVER HEAD

SCALE 1-1/2" = 1'-0"

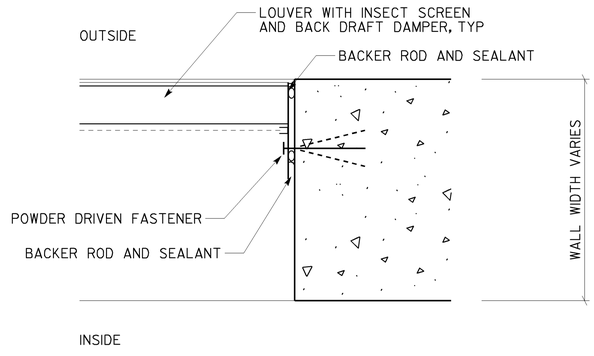

5 LOUVER JAMB

SCALE 1-1/2" = 1'-0"

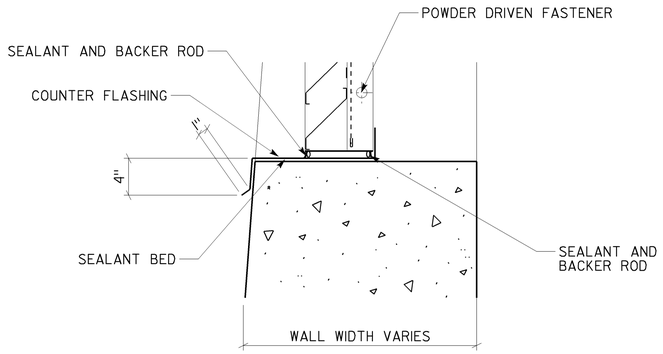

6 LOUVER SILL

SCALE 1-1/2" = 1'-0"

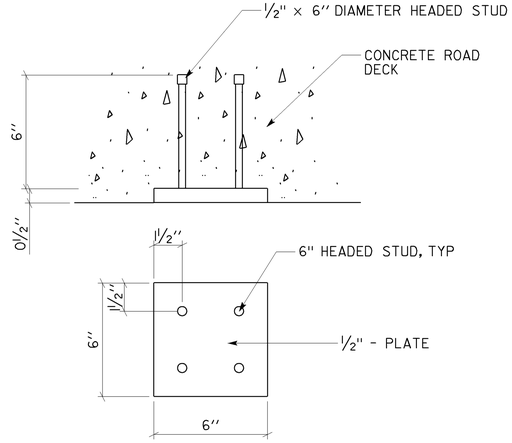

7 CAST IN PLACE ANCHOR

SCALE 3" = 1'-0"

NOTES:

1. ENSURE MINIMUM 1" CLEARANCE BETWEEN EMBED STUDS AND STRUCTURAL TENDONS

2. CONTRACTOR TO DETAIL LOCATION OF ALL EMBED MATERIALS ON STRUCTURAL SHOP DRAWINGS AND SUBMIT TO ENGINEER.

3. HEADED STUDS SHALL BE MANUFACTURED FROM MATERIAL CONFORMING TO ASTM A-108 AND SHALL BE WELDED IN CONFORMANCE WITH AWS REQUIREMENTS, USING SUITABLE STUD WELDING EQUIPMENT.

4. EMBED PLATES SHALL BE HOT DIP GALVANIZED AFTER FABRICATION. TOP OF PLATE SHALL HAVE GALVANIZING REMOVED PRIOR TO WELDING.

NOTE:
CONTRACTOR SHALL VERIFY ALL CONTROLLING FIELD DIMENSIONS BEFORE ORDERING OR FABRICATING ANY MATERIAL.

CONTRACTOR SHALL COORDIANTE ALL SUBSTATION DRAWINGS AND SPECIAL PROVISIONS INCLUDING BUT NOT LIMITED TO BRIDGE STRUCTURES SHEETS, CIVIL DESIGN SHEETS, LANDSCAPE ARCHITECTURE SHEETS, MECHANICAL SHEETS AND ELECTRICAL SHEETS.

DESIGN	BY ANTHONY MANANSALA	CHECKED DON ALSEY	STATE OF CALIFORNIA DEPARTMENT OF TRANSPORTATION	DIVISION OF ENGINEERING SERVICES ARCHITECTURAL AND STRUCTURAL DESIGN
DETAILS	BY ANTHONY MANANSALA	CHECKED DON ALSEY		
QUANTITIES	BY	CHECKED		

BRIDGE NO.	BATTERY SUBSTATION	SHEET
34-0157W	DETAILS	A1-08
POST MILE 9		

A1-08.dgn
DS OSD Imperial Rev. 10/07 14-DEC-2009 15:44

ORIGINAL SCALE IN INCHES FOR REDUCED PLANS 0 1 2 3

CU 04108
EA 163741

DISREGARD PRINTS BEARING EARLIER REVISION DATES →

REVISION DATES (PRELIMINARY STAGE ONLY)							SHEET	OF
MM-DD-YY 07-23-09	08-19-09	08-30-09					13	21

14-DEC-2009 15:44
A1-08.dgn

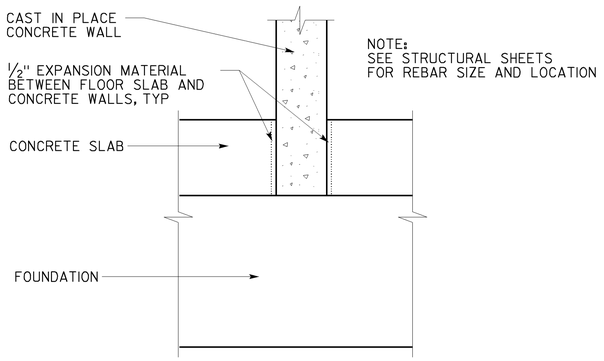

1 EXPANSION MATERIAL AT WALL AND SLAB, TYP

SCALE 1-1/2" = 1'-0"

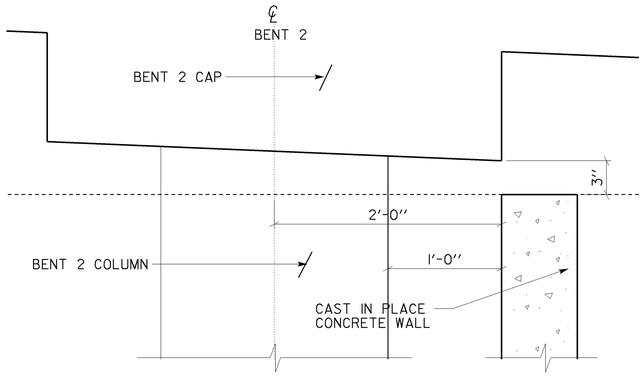

2 TOP OF CONCRETE WALL AT BENT 2

SCALE 1-1/2" = 1'-0"

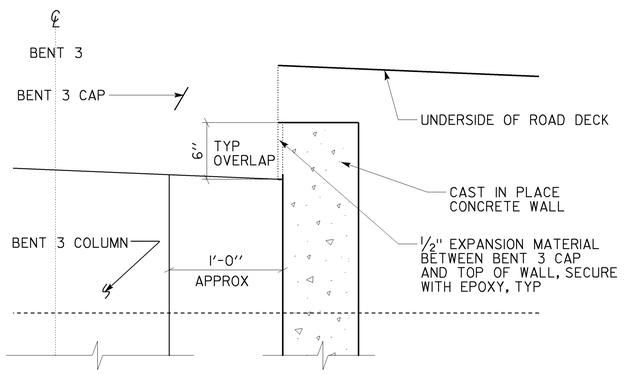

3 TOP OF CONCRETE WALL AT BENT 3

SCALE 1-1/2" = 1'-0"

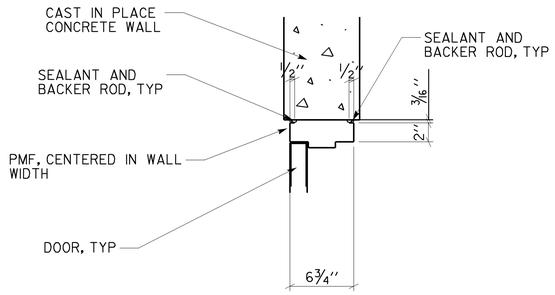

4 INTERIOR DOOR HEAD

SCALE 1-1/2" = 1'-0"

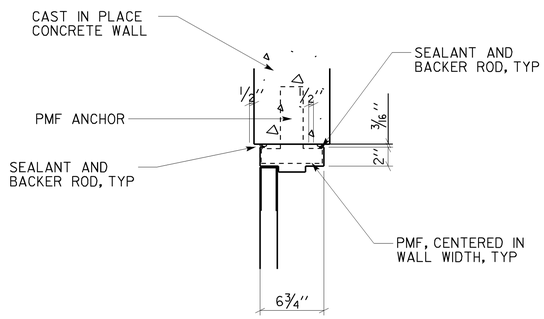

5 INTERIOR DOOR JAMB

SCALE 1-1/2" = 1'-0"

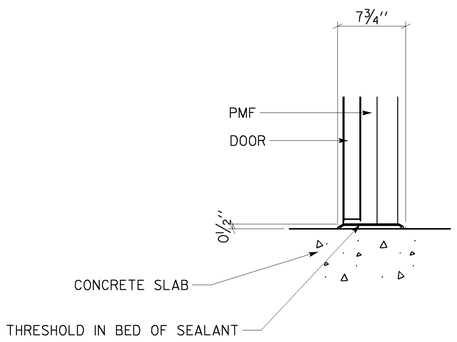

6 INTERIOR DOOR THRESHOLD

SCALE 1-1/2" = 1'-0"

CALIFORNIA STATE FIRE MARSHAL APPROVED

Approval of this plan does not authorize or approve any omission or deviation from applicable regulations. Final approval is subject to field inspection. One set of approved plans shall be available on the project site at all times.

Reviewed by: STEPHEN GUARINO

Approval date: 12-14-09

DIST.	COUNTY	ROUTE	POST MILES TOTAL PROJECT	SHEET NO.	TOTAL SHEETS
04	SF	101	8.2/9.2	647	654

Donald E. Alsey 08-28-2009
LICENSED ARCHITECT — DATE

LICENSED ARCHITECT — DONALD E. ALSEY — No. C-26676 — Exp. 07-31-11 — STATE OF CALIFORNIA

12-14-09
PLANS APPROVAL DATE

The State of California or its officers or agents shall not be responsible for the accuracy or completeness of electronic copies of this plan sheet.

DESIGN	BY ANTHONY MANANSALA	CHECKED DON ALSEY	STATE OF CALIFORNIA DEPARTMENT OF TRANSPORTATION	DIVISION OF ENGINEERING SERVICES ARCHITECTURAL AND STRUCTURAL DESIGN	BRIDGE NO. 34-0157W
DETAILS	BY ANTHONY MANANSALA	CHECKED DON ALSEY			POST MILE 9
QUANTITIES	BY	CHECKED			

BATTERY SUBSTATION

DETAILS

SHEET **A1-09**

A1-09.dgn
DS OSD Imperial Rev. 10/07 14-DEC-2009 15:44

ORIGINAL SCALE IN INCHES FOR REDUCED PLANS 0 1 2 3

CU 04108
EA 16374I

DISREGARD PRINTS BEARING EARLIER REVISION DATES →

REVISION DATES (PRELIMINARY STAGE ONLY): MM-DD-YY | 07-23-09 | 08-19-09 | 08-30-09

SHEET 14 OF 21

14-DEC-2009 15:44
A1-09.dgn

DIST.	COUNTY	ROUTE	POST MILES TOTAL PROJECT	SHEET NO.	TOTAL SHEETS
04	SF	101	8.2/9.2	648	654

N Bapat — 08-19-09
REGISTERED CIVIL ENGINEER — DATE

REGISTERED PROFESSIONAL ENGINEER
C. N. Bapat
No. 46493
Exp. 6-30-11
CIVIL
STATE OF CALIFORNIA

12-14-09
PLANS APPROVAL DATE

The State of California or its officers or agents shall not be responsible for the accuracy or completeness of electronic copies of this plan sheet.

CALIFORNIA STATE FIRE MARSHAL APPROVED
Approval of this plan does not authorize or approve any omission or deviation from applicable regulations. Final approval is subject to field inspection. One set of approved plans shall be available on the project site at all times.
Reviewed by: STEPHEN GUARINO
Approval date: 12-14-09

ABBREVIATIONS

AAD	Adhesive Anchorage Device
AB	Anchor Bolt
AC	Asphalt Concrete
Alt	Alternate
APA	American Plywood Association
APC	Alternative Pipe Culvert
Bldg	Building
Blkg	Blocking
BN	Boundary Nailing
Btm	Bottom
CB	Carriage Bolt
CIDH	Cast In Drilled Hole
CJ	Control Joint
Clr	Clear
CMU	Concrete Masonry Unit
Conc	Concrete
Const	Construction
Cont	Continuous
CP	Complete Penetration Weld
Dbl	Double
DF	Douglas Fir
Dia	Diameter
DIP	Ductile Iron Pipe
DN	Diameter Nominal
do	Ditto
(E)	Existing
Ea	Each
EL	Elevation
Elec	Electrical
Embed	Embedment
EN	Edge Nail
Eq	Equal
Exp	Expansion
FDGM	Free Draining Granular Material
FG	Finish Grade
FL	Flow Line
Flr	Floor
FN	Face (Field) Nail
FOC	Face of Concrete
FOM	Face of Masonry
FOS	Face of Stud
Ftg	Footing
Ga	Gage
Galv	Galvanized
GLM	Glue Laminated Member
Gyp Bd	Gypsum Board
HD	Holdown
Hex	Hexagon
Horiz	Horizontal
HSB	High Strength Bolt
HSS	Hollow Structural Section
Jt	Joint
LOL	Layout Line
LVL	Laminated Veneer Lumber
m	Meter
Max	Maximum
MEA	Mechanical Expansion Anchor
Mech	Mechanical
Mfr	Manufacturer
mm	Millimeter
Min	Minimum
MIW	Malleable Iron Washer
OC	On Center
OG	Original Grade
OH	Opposite Hand
Opt	Optional
P	Pitch
PDF	Powder Driven Fastener
Plwd	Plywood
PT	Pressure Treated
PW	Puddle Weld
PWB	Prefabricated Wood I Beam
RCP	Reinforced Concrete Pipe
Reinf	Reinforced, Reinforcing
Req'd	Required
SDSTS	Self Drill, Self Tap Screw
Sim	Similar
SPS	Structural Plywood Sheathing
Sq	Square
Stagg	Staggered
Std	Standard
SW	Stud Weld
Sym	Symmetrical
T&G	Tongue-and-Groove
TN	Toe Nail
TS	Tube Steel
Typ	Typical
UON	Unless Otherwise Noted
Vert	Vertical

SYMBOLS

- Blocking In Section or Elevation
- Continuous Member In Section
- End of Member
- Bearing Wall
- Shear Wall
- Length / X XXXX Shearwall Schedule Symbol / Reference
- Glue Laminated Member Section
- North Arrow
- X / ST1-X Partial Section Cut
- X / ST1-X Full Section Cut
- X Revision Callout
- A Grid Line Indicator
- ℄ Center Line
- Station Line
- PL Steel Plate
- Ø Diameter
- Square
- CMU Wall on Plan Views
- Dropped Slab on Plan Views
- Reinforced Concrete
- Sand
- Structural Backfill
- Structural Excavation
- Original Ground
- Limits of Structural Backfill (shown on plan view)
- Free Draining Granular Material
- X Bottom of Footing
- Elevation or Working Point
- Existing Features
- Holdown, Typ: Simpson / USP / Equal (Manufacturers are those noted in the order shown.)
- Frame Connector: Simpson / USP / Equal (Manufacturers are those noted in the order shown.)
- 3 / 5b / ST-1 Detail Number or Note Number / Additional Reference (If required) / Sheet Number

NOTE: SPECIFIC DETAILS OR NOTES ON OTHER SHEETS SHALL PREVAIL OVER STANDARD DETAILS AND NOTES ON THIS SHEET

STANDARD DRAWING
FILE NO. XS-25-0 | DRAWING DATE 1-04
DESIGN BY Jean Sanal CHECKED Steve Colantuono
DETAILS BY George E. Rowe CHECKED
SUBMITTED BY Jean Sanal, DESIGN ENGINEER
APPROVED R.E. Travis, DESIGN SUPERVISOR

DOES SD Imperial Rev. 9/02

ORIGINAL SCALE IN INCHES FOR REDUCED PLANS 0 1 2 3

STATE OF CALIFORNIA
DEPARTMENT OF TRANSPORTATION

DIVISION OF ENGINEERING SERVICES
ARCHITECTURAL AND STRUCTURAL DESIGN

CU 04242
EA 163741

BRIDGE NO. 34-0157W
POST MILE 9.0

BATTERY SUBSTATION
LEGEND

SHEET ST-1

DISREGARD PRINTS BEARING EARLIER REVISION DATES →
REVISION DATES (PRELIMINARY STAGE ONLY): 1-16-04

SHEET	OF
15	21

14-DEC-2009 15:44
st_01.dgn

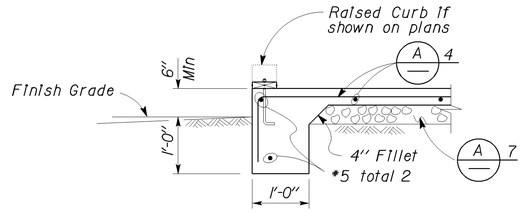

1 EXTERIOR FOOTING
No Scale

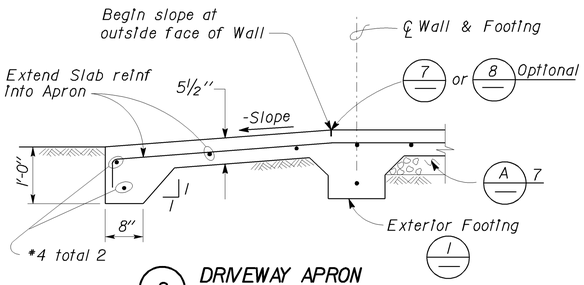

2 DRIVEWAY APRON
No Scale

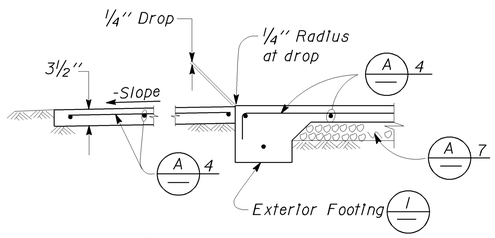

3 WALKWAY APRON
No Scale

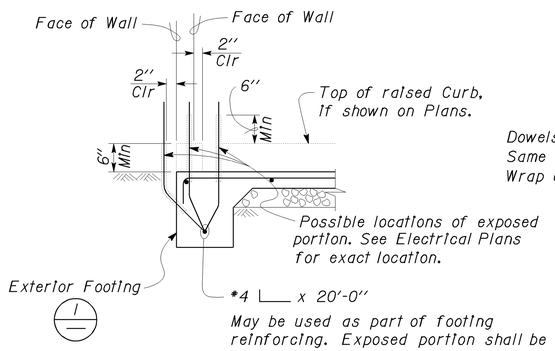

4 GROUND BAR DETAIL
No Scale

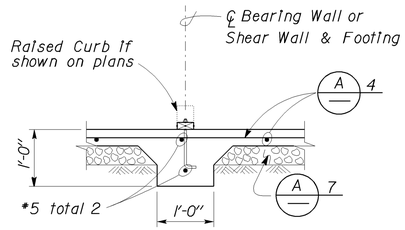

5 INTERIOR FOOTING
No Scale

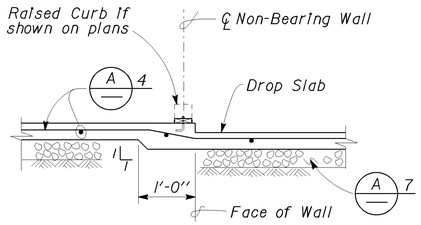

6 DROP SLAB AT NON-BEARING WALL
No Scale

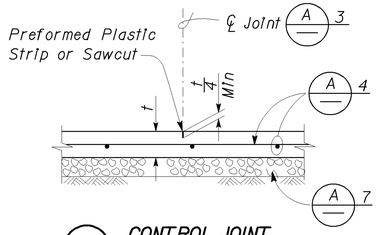

7 CONTROL JOINT
No Scale

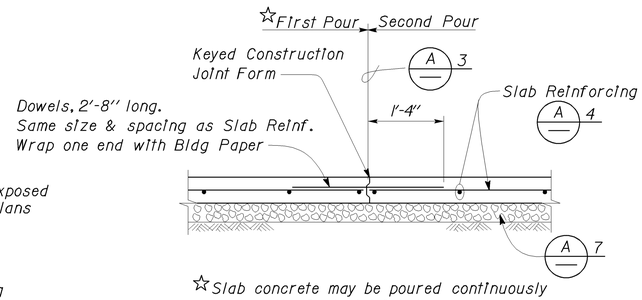

☆Slab concrete may be poured continuously across the Control Joint, to cover as large an area as practical.

8 CONTRACTION JOINT
No Scale

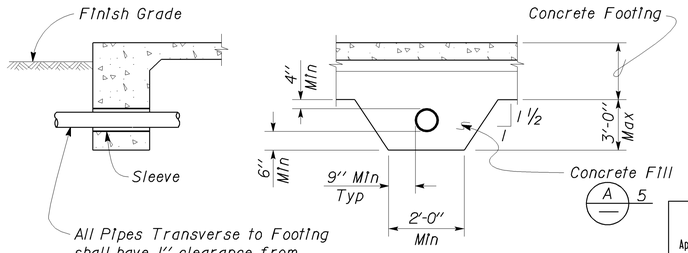

NOTE
No pipes permitted beneath Interior or Exterior Isolated Footings

9 PIPE DETAILS THROUGH FOOTING
No Scale

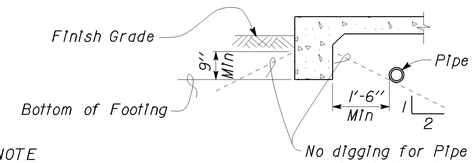

NOTE
For Pipe Cover, see Specifications: Earthwork for Building Work

10 PIPE DETAILS PARALLEL TO FOOTING
No Scale

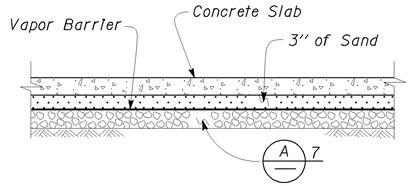

11 MOISTURE BARRIER
No Scale

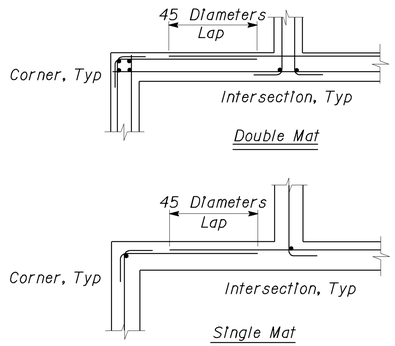

12 CORNER/INTERSECTION REINF SPLICE, TYPICAL
No Scale

DIST.	COUNTY	ROUTE	POST MILES TOTAL PROJECT	SHEET NO.	TOTAL SHEETS
04	SF	101	8.2/9.2	649	654

N Bafal 08-19-09
REGISTERED CIVIL ENGINEER — DATE

REGISTERED PROFESSIONAL ENGINEER — C. N. Bapat — No. 46493 — Exp. 6-30-11 — CIVIL — STATE OF CALIFORNIA

12-14-09
PLANS APPROVAL DATE

The State of California or its officers or agents shall not be responsible for the accuracy or completeness of electronic copies of this plan sheet.

CALIFORNIA STATE FIRE MARSHAL APPROVED
Approval of this plan does not authorize or approve any omission or deviation from applicable regulations. Final approval is subject to field inspection. One set of approved plans shall be available on the project site at all times.
Reviewed by: STEPHEN GUARINO
Approval date: 12-14-09

A CONCRETE NOTES

1. The following minimum concrete cover shall be provided for reinforcement.

	Minimum Cover
a. Concrete cast against and permanently exposed to earth	3"
b. Concrete exposed to earth or weather but cast in forms :	
*6 thru *18 bars	2"
*5 bar and smaller, W31 or D31 Wire, and smaller	1½"
c. Concrete not exposed to weather or in contact with ground : Slabs, Walls and Joists :	
*14 and *18 Bar	1½"
*11 Bar and smaller	¾"
Beams and Columns : Primary Reinforcement, Ties, Stirrups and Spirals	1½"

2. Splices in continuous reinforcement as in Walls, Wall Footings, etc. *8 or smaller shall have a lap of 45 diameters and the splices in adjacent bars shall not be less than 5'-0" apart.

   Continuous Bars in spandrels, Wall Beams, etc. shall lap Top Bars at center of span and Bottom Bars at supports.

3. Contraction Joints and Control Joints shall divide slab into areas not exceeding 25 square yards without reentrant corners and with length to width ratios not exceeding 1.5 to 1. Joint spacing shall not exceed 15'-0".

4.

Slab Thickness (t)	Reinforcement	
3½"	*3 @ 18	Each way, place in center of Slab
5½"	*4 @ 18	Each way, place in center of Slab

5. Concrete fill is to be placed before Footing is poured. Make the same width as the Footing and the full width of the Pipe trench. Concrete fill not required for pipes less than 2" diameter for pipes more than 3'-0" below bottom of footing.
6. See Mechanical and Architectural Plans for size and locations of pipe, vents, ducts and other similar openings. See Electrical Plans for conduits and outlet boxes in floors, walls, etc.
7. Place 4" of free draining granular material under slabs.

NOTE: SPECIFIC DETAILS OR NOTES ON OTHER SHEETS SHALL PREVAIL OVER STANDARD DETAILS AND NOTES ON THIS SHEET

STANDARD DRAWING
FILE NO. XS-25-1 | DESIGN BY Jean Sounal | CHECKED Lee Edmonston | APPROVED R.E. Travis
DRAWING DATE 1-04 | DETAILS BY Peter F. von Saurma, II | CHECKED Lee Edmonston | DESIGN SUPERVISOR
SUBMITTED BY Jean Sounal , DESIGN ENGINEER

DOES SD Imperial Rev. 9/02

ORIGINAL SCALE IN INCHES FOR REDUCED PLANS 0 1 2 3

STATE OF CALIFORNIA DEPARTMENT OF TRANSPORTATION
DIVISION OF ENGINEERING SERVICES ARCHITECTURAL AND STRUCTURAL DESIGN
CU 04242 EA 163741

BRIDGE NO. 34-0157W | POST MILE 9.0

BATTERY SUBSTATION
CONCRETE STANDARD

SHEET ST-2

DISREGARD PRINTS BEARING EARLIER REVISION DATES → REVISION DATES (PRELIMINARY STAGE ONLY): 1-16-04 | 11-14-05
SHEET 16 OF 21

14-DEC-2009 15:44
st_02.dgn

DIST.	COUNTY	ROUTE	POST MILES TOTAL PROJECT	SHEET NO.	TOTAL SHEETS
04	SF	101	8.2/9.2	650	654

N Bapat — 08-19-09
REGISTERED CIVIL ENGINEER — DATE

REGISTERED PROFESSIONAL ENGINEER
C. N. Bapat
No. 46493
Exp. 6-30-11
CIVIL
STATE OF CALIFORNIA

12-14-09
PLANS APPROVAL DATE

The State of California or its officers or agents shall not be responsible for the accuracy or completeness of electronic copies of this plan sheet.

CALIFORNIA STATE FIRE MARSHAL APPROVED

Approval of this plan does not authorize or approve any omission or deviation from applicable regulations. Final approval is subject to field inspection. One set of approved plans shall be available on the project site at all times.

Reviewed by: ~~STEPHEN GUARINO~~

Approval date: 12-14-09

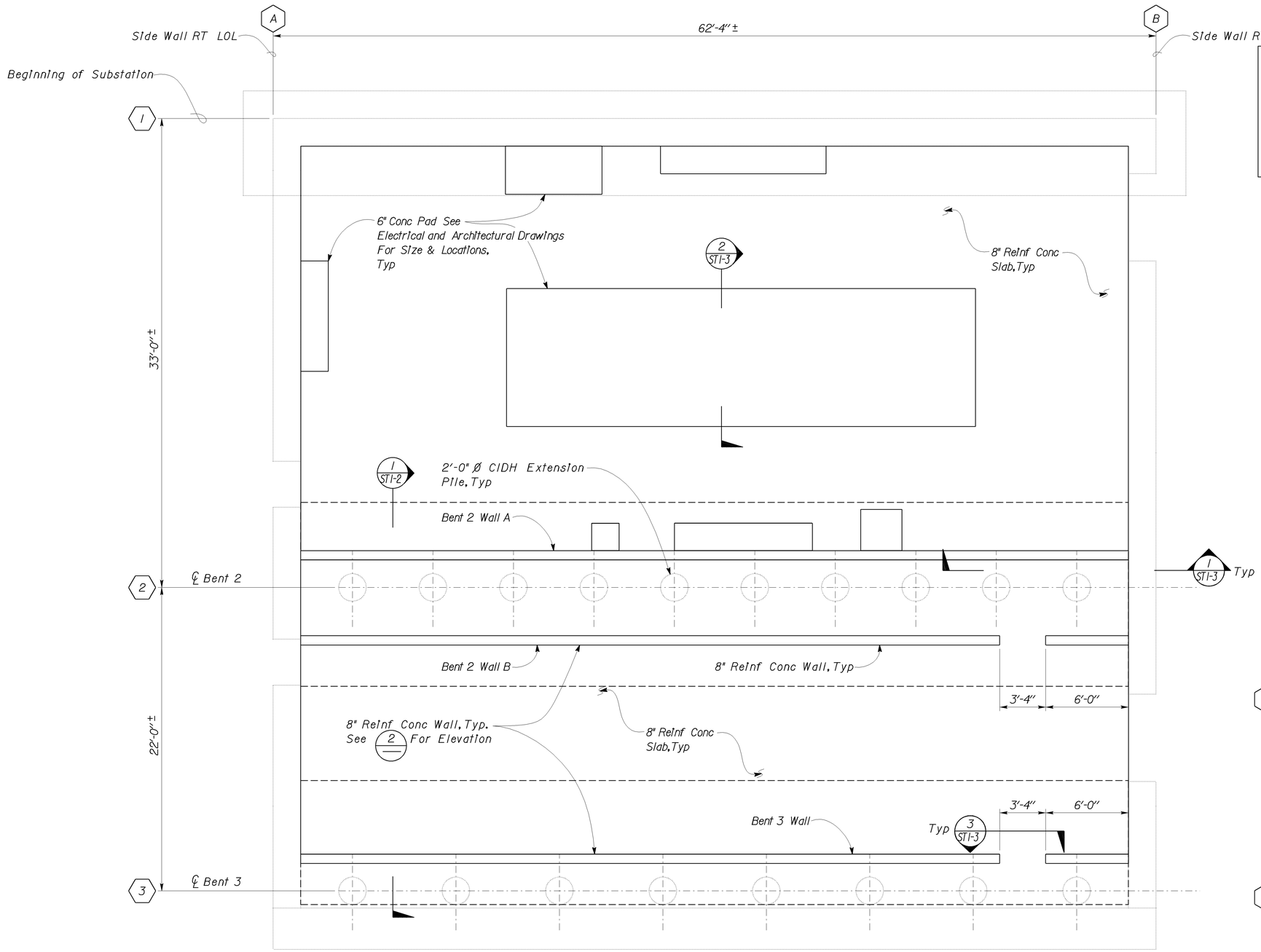

1 **FOUNDATION PLAN**
Scale 1/4" = 1'-0"

Elevation 74.66' = Datum 0'-0"

PROJECT DESIGN CRITERIA

The building work on this project has been designed to conform to the 2007 California Building Code (2006 IBC).

LOADS

SEISMIC:

Occupancy Category = 1

Importance Factor I = 1.0

Site Soil Class = C

S_S = 1.5 S_{DS} = 1.0

S_1 = 0.66 S_{D1} = 0.66

Seismic Design Category = D

Seismic Force-Resisting System:

Cantilevered Wall System

North - South

R = 1.0 C_S = 1.0

Cantilevered Wall System

East - West

R = 1.0 C_S = 1.0

NOTES

1. All Electrical Items (I.E. Ground Bar Locations, Stub Outs, etc...) Refer to Electrical Sheets.

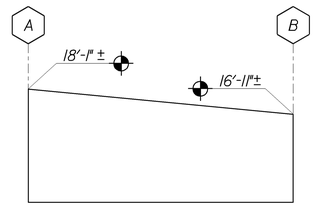

Bent 2 Wall A

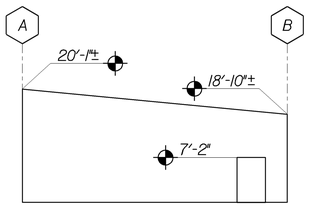

Bent 3 Wall

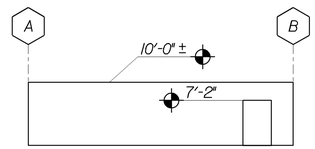

Bent 2 Wall B

2 **WALL ELEVATIONS**
No Scale

Note

The Contractor shall verify all controlling field dimensions before ordering or fabricating any material.

R E Travis — DESIGN SUPERVISOR
DESIGN ENGINEER

	BY	CHECKED
DESIGN	Chandra Bapat	Thomas Tong
DETAILS	Daniel Harakh	Chandra Bapat
QUANTITIES		

STATE OF CALIFORNIA
DEPARTMENT OF TRANSPORTATION

DIVISION OF ENGINEERING SERVICES
ARCHITECTURAL AND STRUCTURAL DESIGN

CU 04242
EA 163741

BRIDGE NO. 34-0157W
POST MILE 9.0

BATTERY SUBSTATION

FOUNDATION PLAN

SHEET ST1-1

DOES SD Imperial Rev. 9/02

ORIGINAL SCALE IN INCHES FOR REDUCED PLANS 0 1 2 3

DISREGARD PRINTS BEARING EARLIER REVISION DATES → REVISION DATES (PRELIMINARY STAGE ONLY) 08-19-09 08-21-09 08-25-09 09-01-09

SHEET 17 OF 21

14-DEC-2009 15:44

C:\Documents and Settings\s136566\Desktop\New Folder\Expedite 2009-09-01\st1_01.dgn

DIST.	COUNTY	ROUTE	POST MILES TOTAL PROJECT	SHEET NO.	TOTAL SHEETS
04	SF	101	8.2/9.2	651	654

CALIFORNIA STATE FIRE MARSHAL APPROVED

Approval of this plan does not authorize or approve any omission or deviation from applicable regulations. Final approval is subject to field inspection. One set of approved plans shall be available on the project site at all times.

Reviewed by: STEPHEN GUARINO

Approval date: 12-14-09

C. N. Bapat
No. 46493
Exp. 6-30-11
CIVIL
STATE OF CALIFORNIA

REGISTERED CIVIL ENGINEER — 08-19-09 DATE

12-14-09
PLANS APPROVAL DATE

The State of California or its officers or agents shall not be responsible for the accuracy or completeness of electronic copies of this plan sheet.

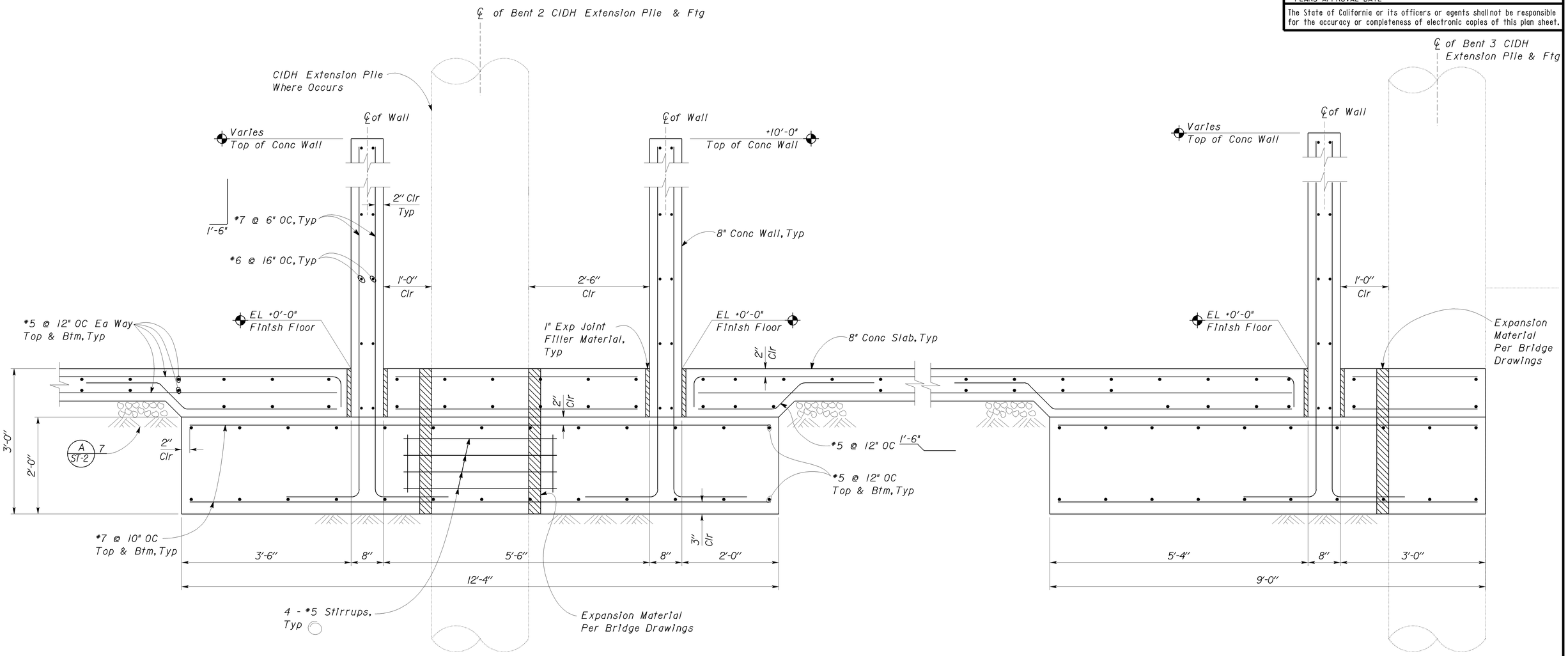

1 FOUNDATION DETAIL
Scale 1" = 1' - 0"

DESIGN	BY Chandra Bapat	CHECKED Thomas Tong	STATE OF CALIFORNIA DEPARTMENT OF TRANSPORTATION	DIVISION OF ENGINEERING SERVICES ARCHITECTURAL AND STRUCTURAL DESIGN	BRIDGE NO. 34-0157W	BATTERY SUBSTATION	SHEET ST1-2
DETAILS	BY Daniel Harakh	CHECKED Chandra Bapat			POST MILE 9.0	FOUNDATION DETAILS	
QUANTITIES	BY	CHECKED		CU 04242 EA 163741			

DOES SD Imperial Rev. 9/02

ORIGINAL SCALE IN INCHES FOR REDUCED PLANS 0 1 2 3

DISREGARD PRINTS BEARING EARLIER REVISION DATES → REVISION DATES (PRELIMINARY STAGE ONLY) 08-10-09 08-19-09 08-21-09 08-26-09 09-01-09

SHEET 18 OF 21

14-DEC-2009 15:44

C:\Documents and Settings\s136566\Desktop\New Folder\Expedite 2009-09-01\st1_02.dgn

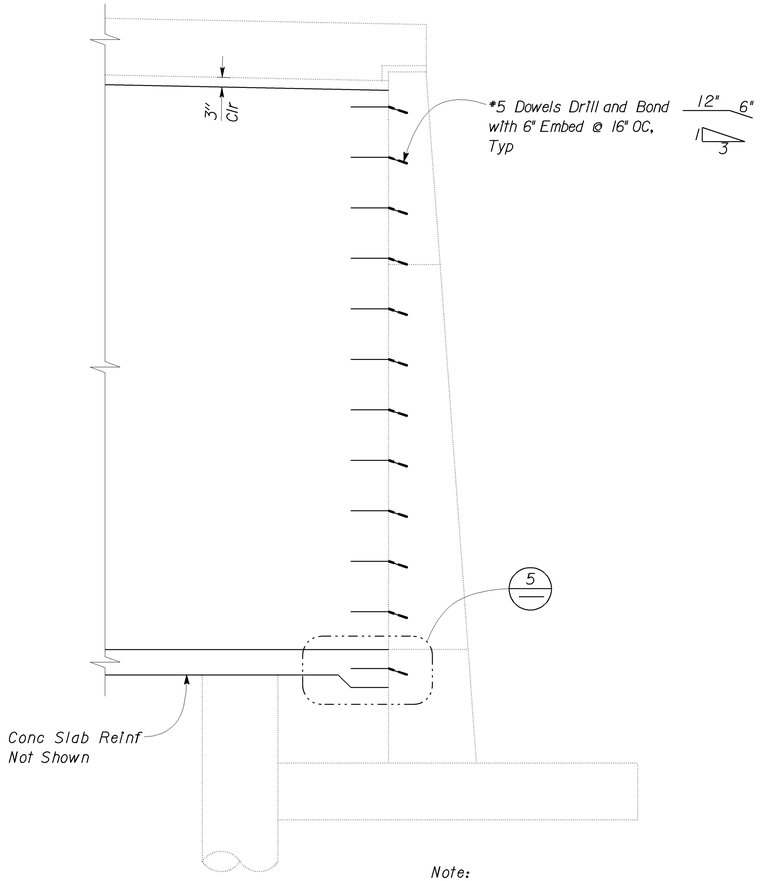

Note:
For Items Not Shown or Noted See Detail 1/ST1-2

1 WALL CONNECTION
Scale 1/2"= 1'-0"

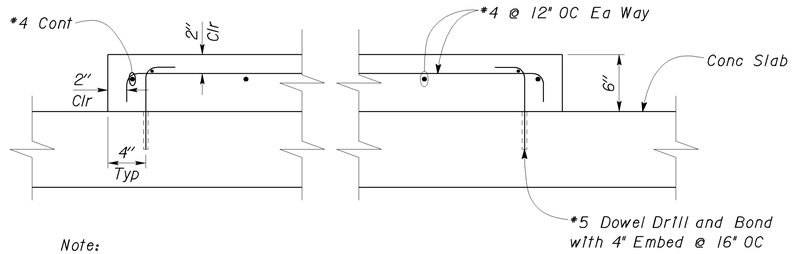

Note:
Slab Reinf Not Shown

2 TYPICAL CONCRETE PAD
Scale 1 1/2"= 1'-0"

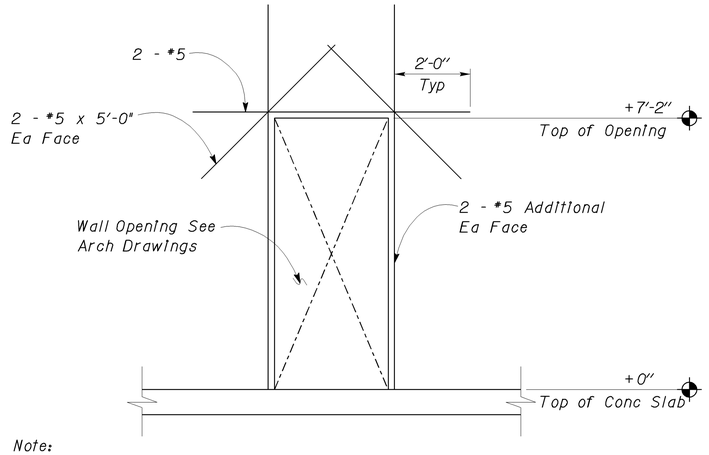

Note:
Slab Reinf Not Shown

3 TYPICAL WALL OPENING REINFORCING
Scale 1/2"= 1'-0"

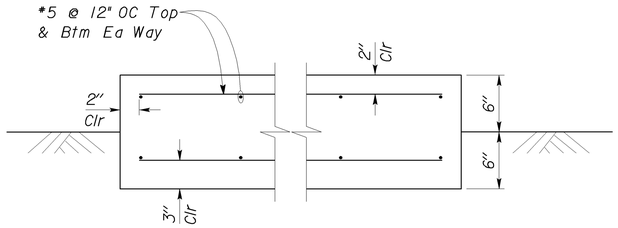

Note:
For Pad Size & Location
See Electrical Drawings

4 TYPICAL VAULT PAD
Scale 1 1/2"= 1'-0"

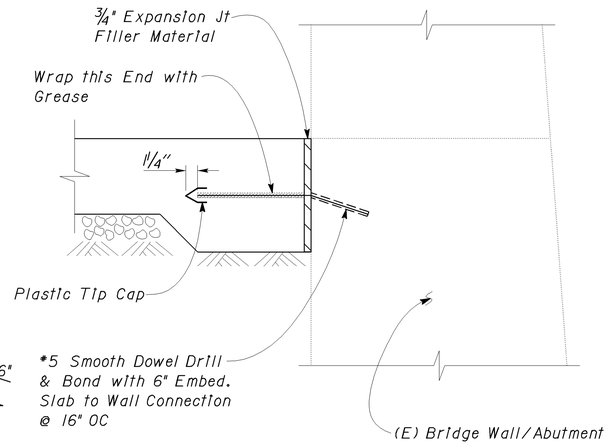

Note:
Slab Reinf Not Shown

5 TYPICAL SLAB TO (E) BRIDGE WALL/ABUTMENT
Scale 1 1/2"= 1'-0"

CALIFORNIA STATE FIRE MARSHAL APPROVED
Approval of this plan does not authorize or approve any omission or deviation from applicable regulations. Final approval is subject to field inspection. One set of approved plans shall be available on the project site at all times.
Reviewed by: STEPHEN GUARINO
Approval date: 12-14-09

DIST.	COUNTY	ROUTE	POST MILES TOTAL PROJECT	SHEET NO.	TOTAL SHEETS
04	SF	101	8.2/9.2	652	654

N Bapat 08-19-09
REGISTERED CIVIL ENGINEER DATE

REGISTERED PROFESSIONAL ENGINEER
C. N. Bapat
No. 46493
Exp. 6-30-11
CIVIL
STATE OF CALIFORNIA

12-14-09
PLANS APPROVAL DATE

The State of California or its officers or agents shall not be responsible for the accuracy or completeness of electronic copies of this plan sheet.

	BY	CHECKED
DESIGN	Chandra Bapat	Thomas Tong
DETAILS	Daniel Harakh	Chandra Bapat
QUANTITIES		

STATE OF CALIFORNIA
DEPARTMENT OF TRANSPORTATION

DIVISION OF ENGINEERING SERVICES
ARCHITECTURAL AND STRUCTURAL DESIGN

BRIDGE NO. 34-0157W
POST MILE 9.0

BATTERY SUBSTATION
FOUNDATION DETAILS

SHEET ST1-3

DOES SD Imperial Rev. 9/02

ORIGINAL SCALE IN INCHES FOR REDUCED PLANS 0 1 2 3

CU 04242
EA 163741

DISREGARD PRINTS BEARING EARLIER REVISION DATES →
REVISION DATES (PRELIMINARY STAGE ONLY): 08-21-09 08-25-09 09-01-09

SHEET 19 OF 21

14-DEC-2009 15:44

C:\Documents and Settings\s136566\Desktop\New Folder\Expedite 2009-09-01\st1_03.dgn

DIST	COUNTY	ROUTE	POST MILES TOTAL PROJECT	SHEET No	TOTAL SHEETS
04	SF	101	8.2/9.2	653	654

CALIFORNIA STATE FIRE MARSHAL APPROVED
Approval of this plan does not authorize or approve any omission or deviation from applicable regulations. Final approval is subject to field inspection. One set of approved plans shall be available on the project site at all times.
Reviewed by: STEPHEN GUARINO
Approval date: 12-14-09

REGISTERED MECH. ENGINEER 12/08/09 DATE

12-14-09
PLANS APPROVAL DATE

The State of California or its officers or agents shall not be responsible for the accuracy or completeness of electronic copies of this plan sheet.

REGISTERED PROFESSIONAL ENGINEER
Ruben Sidranski
No. 34573
Exp. 09/30/2011
Mechanical
STATE OF CALIFORNIA

Arup PB Joint Venture
3840 Rosin Court, Suite 200
Sacramento, CA 95834

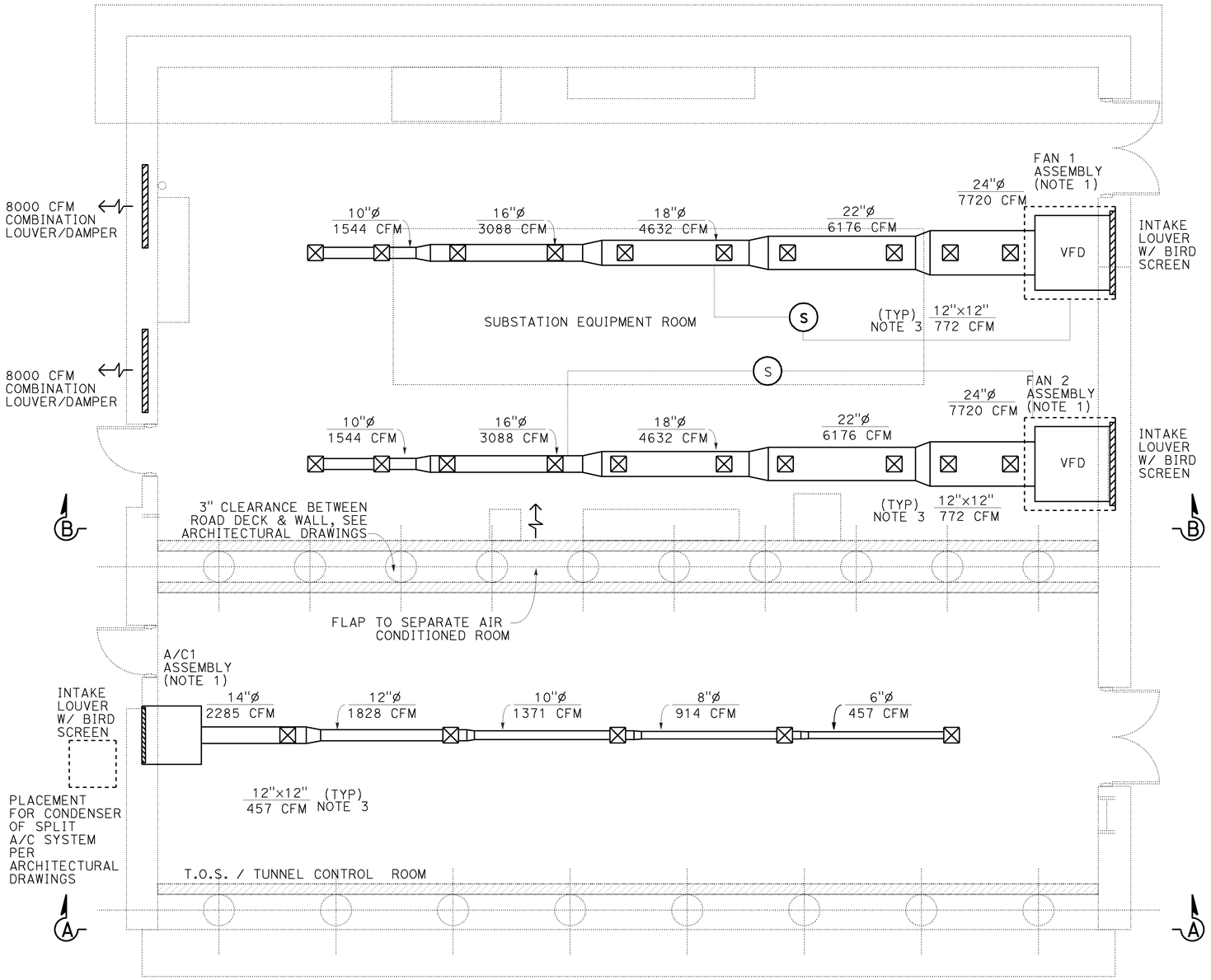

SUBSTATION AND CONTROL ROOM HVAC PLAN

NOTES:

1. FAN 1 & 2 MOTORS INTERLOCKED WITH JET FANS, IF JET FAN ARE ON FANS @ 100% FLOW.
2. COORDINATE W/ ELECTRICAL FOR FAN/AHU AREA LIGHT FIXTURE LOCATION.
3. 4 WAY DIFFUSERS.
4. FAN 1 & 2 MOTORS SHALL BE INTERLOCKED WITH HYDROGEN GAS DETECTOR.
5. CONTRACTOR SHALL VERIFY ALL CONTROLLING FIELD DIMENSIONS BEFORE ORDERING OR FABRICATING ANY MATERIAL.
6. CONTRACTOR SHALL COORDINATE ALL SUBSTATION DRAWINGS AND SPECIAL PROVISIONS INCLUDING, BUT NOT LIMITED TO BRIDGE STRUCTURES SHEETS, CIVIL DESIGN SHEETS, LANDSCAPE ARCHITECTURE SHEETS AND ELECTRICAL SHEETS.
7. VERIFY SIZE OF HVAC SYSTEM IN CFM RATING TO DETERMINE REQUIREMENT FOR DUCT MOUNTED SMOKE DETECTORS. CONTRACTORS SHALL BE CAPABLE OF PERFORMING AIR PRESSURE DIFFERENTIAL TESTING AT SMOKE DETECTOR TO VERIFY PROPER PLACEMENT OF THE DEVICE.

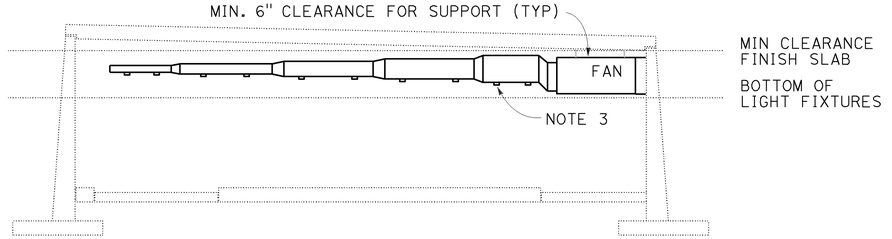

SECTION B-B

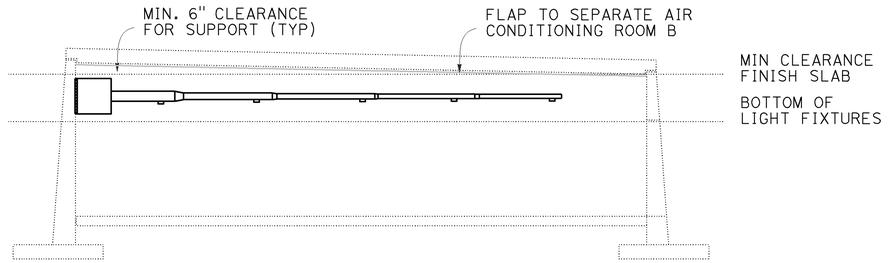

SECTION A-A

MT10-1

DESIGN	BY R. SIDRANSKI	CHECKED B. MELVIN	PREPARED FOR THE STATE OF CALIFORNIA DEPARTMENT OF TRANSPORTATION	C. J. HAWKINS PROJECT ENGINEER	BRIDGE NO. 34-0161L
DETAILS	BY R. SIDRANSKI	CHECKED B. MELVIN			POST MILE 8.81
QUANTITIES	BY R. SIDRANSKI	CHECKED B. MELVIN			

BATTERY SUBSTATION
HVAC PLAN

DESIGN DETAIL SHEET (ENGLISH) (REV. 2/25/05)

ORIGINAL SCALE IN INCHES FOR REDUCED PLANS 0 1 2 3

CU 04
EA 163741

DISREGARD PRINTS BEARING EARLIER REVISION DATES

REVISION DATES (PRELIMINARY STAGE ONLY) 06/01/09 07/15/09 08/07/09 08/28/09 12/08/09

SHEET 20 OF 21

FILE => 34-0161l-u-10mdt16.dgn

USERNAME => trlenard DATE PLOTTED => 14-DEC-2009 TIME PLOTTED => 17:09

DIST	COUNTY	ROUTE	POST MILES TOTAL PROJECT	SHEET No	TOTAL SHEETS
04	SF	101	8.2/9.2	654	654

REGISTERED MECH. ENGINEER — DATE 12/08/09

PLANS APPROVAL DATE 12-14-09

Ruben Sidranski, No. 34573, Exp 09/30/2011 Mechanical, REGISTERED PROFESSIONAL ENGINEER, STATE OF CALIFORNIA

The State of California or its officers or agents shall not be responsible for the accuracy or completeness of electronic copies of this plan sheet.

Arup PB Joint Venture
3840 Rosin Court, Suite 200
Sacramento, CA 95834

CALIFORNIA STATE FIRE MARSHAL APPROVED

Approval of this plan does not authorize or approve any omission or deviation from applicable regulations. Final approval is subject to field inspection. One set of approved plans shall be available on the project site at all times.

Reviewed by: STEPHEN GUARINO

Approval date: 12-14-09

NOTES:

1. PROVIDE PLEETED DISPOSIBLE FILTER RATED AT MERV 18 OR BETTER
2. COORDINATE W/ELECTRICAL FOR FAN/AHU AREA LIGHT FIXTURE LOCATION.
3. ALL VALUES ARE BASED AT 35°F

FAN SCHEDULE (NOTE 3)

LOCATION	NAME	QUANTITY	TYPE	DRIVE	FAN TYPE	MAX DIMENSIONS WxHxD (INCHES)	CAPACITY (CFM)	SP (IN. WG)	Power (HP)	Power V/PH/HZ	MAX INLET VELOCITY (FPM)	REMARKS
SUBSTATION EQUPMENT ROOM	FAN-1 FAN-2	2	INLINE SUPPLY FAN	BELT	CENT.	100"x46"x80"	7720	1.4	3	208/3/60	2600	W/ AIR FILTER INSERT & BACKDRAFT DAMPER * SEE NOTE 2
TUNNEL CONTROL ROOM	A/C 1	1	3 TON AC	DIRECT	CENT.	TBD	2285	1.9	1.5	208/3/60	-	400 SERIES REFRIGERANT NON CORRECTED MOTOR HP

AIR FILTER SCHEDULE (NOTE 3)

LOCATION	NAME	QUANTITY	ELEMENT TYPE	MIN. CAPACITY (CFM)	FILTER EFFICIENCY RATING (MERV)	FILTER SIZE (INCHES)	INITIAL PRESSURE DROP (IN.WG)	MINIMUM PRESSURE RATING (PSI)	RATING
SUBSTATION EQUIPMENT ROOM	FAN-1 FAN-2	2	PLEATED	8000	8	PER FAN MANUFACTURER RECOMMANDATION	.19	1.5	SEE NOTE 1

LOUVER SCHEDULE/COMB LOUVER (NOTE 3)

LOCATION	NAME	QUANTITY	TYPE	AIR VOLUME (CFM)	AIR VELOCITY (FPM)	SIZE WxHxD (INCHES)	INITIAL PRESSURE DROP (IN.WG)	BLADE TYPE	REMARKS
SUBSTATION EQUIPMENT ROOM	INTAKE LOUVER	2	EXTRUDED ALUMINUM LOUVER	8000	1077	60"x60"x4"	.07	35° DRAINABLE	W/ BIRD SCREEN
SUBSTATION EQUIPMENT ROOM	COMBINATION LOUVER/DAMPER	2	EXTRUDED ALUMINUM LOUVER	8000	1077	60"x60"x4"	.07 +.05	35° DRAINABLE	W/ BIRD SCREEN

DIFFUSER SCHEDULE (NOTE 3)

LOCATION	NAME	QUANTITY	TYPE	MINIMUM AIR VOLUME (CFM)	SIZE WxH (INCHES)	INITIAL PRESSURE DROP (IN.WG)	MINIMUM THROW (FT.)	REMARKS
SUBSTATION EQUIPMENT ROOM	-	20	4-WAY THERMO ACTIVATED	PER PLAN	12X12	.34	13	PROVIDE PER PROVISIONS AND SPECIFICATIONS SET AT 74°F
TUNNEL CONTROL ROOM	-	5	4-WAY THERMO ACTIVATED	PER PLAN	12X12	.12	9	PROVIDE PER PROVISIONS AND SPECIFICATIONS SET AT 74°F

EQUIPMENT SCHEDULES

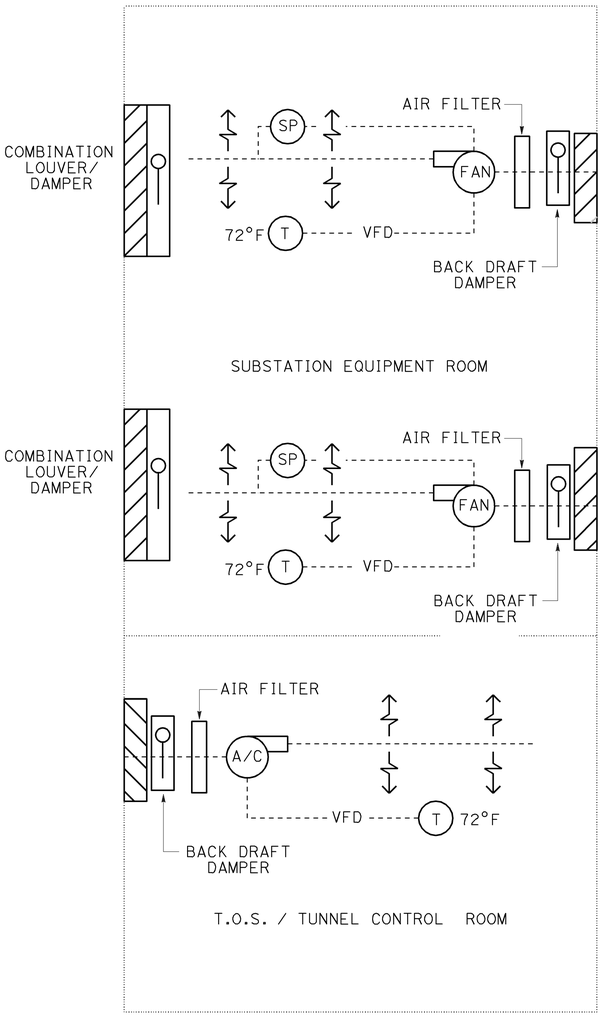

SCHEMATIC

LEGEND

- DAMPER
- LOUVER
- T — THERMOSTAT
- FAN — SUPPLY FAN
- AIR FLOW STREAM DIRECTION
- SP — STATIC PRESSURE (SP)
- 4-WAY VARIABLE AIR VOLUME DIFFUSER

ABBREVIATIONS

A/C	AIR CONDITIONER
CFM	CUBIC FEET PER MINUTE
FPM	FEET PER MINUTE
HP	HORSE POWER
HZ	HERTZ
IN. WG	INCHES OF WATER GAUGE
MERV	MINIMUM EFFICIENCY REPORTING VALUE
PH	PHASE
PSI	POUNDS PER SQUARE INCH
V	VOLTS
VFD	VARIABLE FREQUENCY DRIVE

MT10-2

	BY	CHECKED
DESIGN	R. SIDRANSKI	B. MELVIN
DETAILS	R. SIDRANSKI	B. MELVIN
QUANTITIES	R. SIDRANSKI	B. MELVIN

PREPARED FOR THE STATE OF CALIFORNIA DEPARTMENT OF TRANSPORTATION

C. J. HAWKINS, PROJECT ENGINEER

CU 04
EA 163741

BRIDGE NO. 34-0161L
POST MILE 8.81

BATTERY SUBSTATION
HVAC SCHEDULES & SCHEMATIC

DESIGN DETAIL SHEET (ENGLISH) (REV. 2/25/05)

ORIGINAL SCALE IN INCHES FOR REDUCED PLANS 0 1 2 3

DISREGARD PRINTS BEARING EARLIER REVISION DATES →

REVISION DATES (PRELIMINARY STAGE ONLY): 06/01/09 | 07/01/09 | 08/01/09 | 08/28/09 | 12/08/09

SHEET 21 OF 21

FILE => 34-0161l-u-10mdt17.dgn

USERNAME => rriverord DATE PLOTTED => 14-DEC-2009 TIME PLOTTED => 17:09