DIST	COUNTY	ROUTE	POST MILES TOTAL PROJECT	SHEET No	TOTAL SHEETS
04	SF	1,101			

INCOMPLETE PLAN FOR DESIGN STUDY PRINTED
DATE:24-NOV-2008
Office of Structure Design
STATE OF CALIFORNIA

REGISTERED CIVIL ENGINEER X DATE
PLANS APPROVAL DATE

REGISTERED PROFESSIONAL ENGINEER P. E. LUTZ No. C55839 Exp. 12-31-10 CIVIL STATE OF CALIFORNIA

The State of California or its officers or agents shall not be responsible for the accuracy or completeness of electronic copies of this plan sheet.

To get to the Caltrans web site, go to: http://www.dot.ca.gov

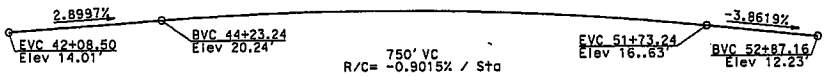

PROFILE GRADE
No Scale

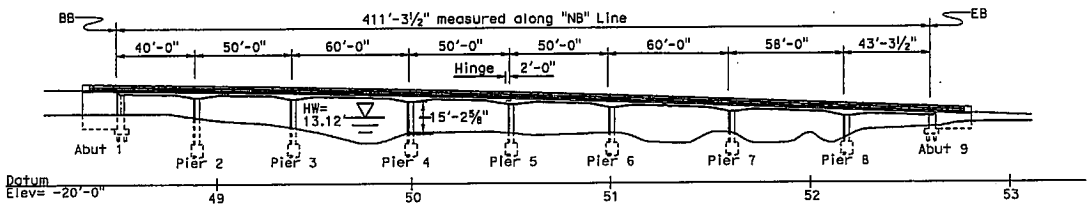

ELEVATION
1" = 30'

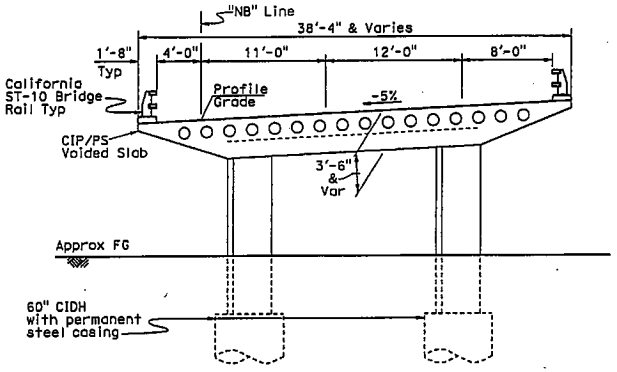

SECTION AT PIER 2
⅜" = 1'

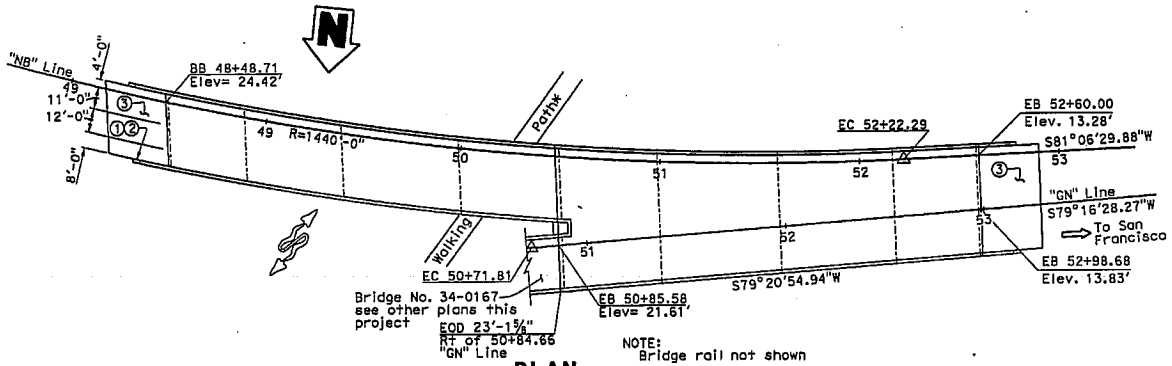

PLAN
1" = 30'

NOTE:
Bridge rail not shown

* Proposed path

NOTES:

1. Architectural treatment, size and shape of overhang/columns to be determined
2. For Hydrologic Summary see "Foundation Plan" sheet

① Paint "BR NO 34-0164L"

② Paint "TENNESSEE HOLLOW NB"

③ Structure Approach Type N(30D)

SKEW ANGLE DATA

Location	L
Abut 1	14°24'53.46"
Pier 2	12°52'28.77"
Pier 3	10°53'06.80"
Pier 4	8°29'52.44"
Pier 5	6°30'30.46"

SKEW ANGLE DATA

Location	L
Pier 6	4°31'08.49"
Pier 7	2°07'54.12"
Pier 8	0°10'33.76"
Abut 9	0°23'53.13"

CURVE DATA

Line	R	Δ	T	L
"NB"	1440.00'	20°45'49.86"	263.82'	521.85'
"GN"	790.00'	33°25'15.20"	237.17'	460.81'

ALTERNATIVE 1

SOUTH ACCESS TO THE GOLDEN GATE BRIDGE

TENNESSEE HOLLOW NB

GENERAL PLAN

DESIGN	BY P. Lutz	CHECKED X	LOAD & RESISTANCE FACTOR DESIGN	LIVE LOADING: HL93 W/"LOW-BOY"; PERMIT DESIGN VEHICLE	
DETAILS	BY P. Lutz/Tim Fairall	CHECKED X	LAYOUT	BY P. Lutz/Tim Fairall	CHECKED X
QUANTITIES	BY X	CHECKED X	SPECIFICATIONS	BY X	PLANS AND SPECS COMPARED X

X
DESIGN ENGINEER

STATE OF CALIFORNIA
DEPARTMENT OF TRANSPORTATION

DIVISION OF ENGINEERING SERVICES STRUCTURE DESIGN
DESIGN BRANCH 9

CU 04
EA 163700

BRIDGE NO. 34-0164R
POST MILE X

DISREGARD PRINTS BEARING EARLIER REVISION DATES

REVISION DATES: 07-24-06, 10-23-06

SHEET 1 OF X

ORIGINAL SCALE IN INCHES FOR REDUCED PLANS 0 1 2 3

FILE => 34-0164r-a-gp.dgn

STRUCTURES DESIGN GENERAL PLAN SHEET (ENGLISH) (REV. 10/25/05)

STRUCTURES DESIGN GENERAL PLAN SHEET (ENGLISH) (REV. 07-24-06)

USERNAME => tfairfall DATE PLOTTED => 24-NOV-2008 TIME PLOTTED => 15:21

DIST	COUNTY	ROUTE	POST MILES TOTAL PROJECT	SHEET No	TOTAL SHEETS
04	SF	1,101			

REGISTERED CIVIL ENGINEER X DATE

PLANS APPROVAL DATE

The State of California or its officers or agents shall not be responsible for the accuracy or completeness of electronic copies of this plan sheet.

REGISTERED PROFESSIONAL ENGINEER P. E. LUTZ No. C55839 Exp. 12-31-10 CIVIL STATE OF CALIFORNIA

To get to the Caltrans web site, go to: http://www.dot.ca.gov

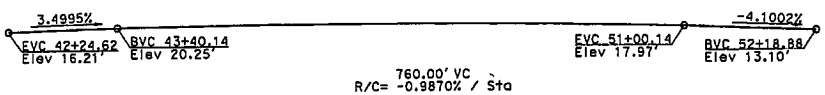

PROFILE GRADE
No Scale

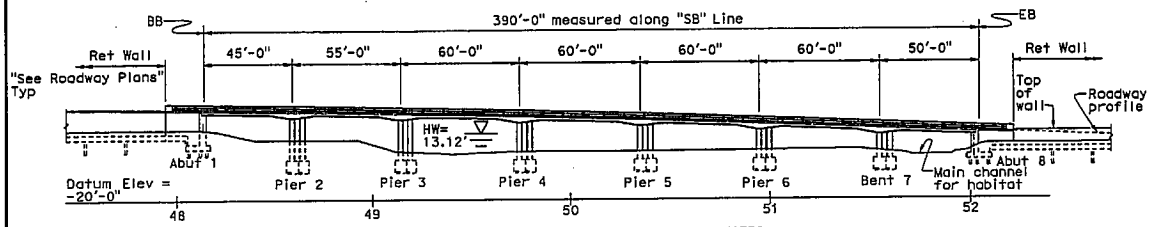

ELEVATION
1" = 30'

NOTES:
Not all piles shown

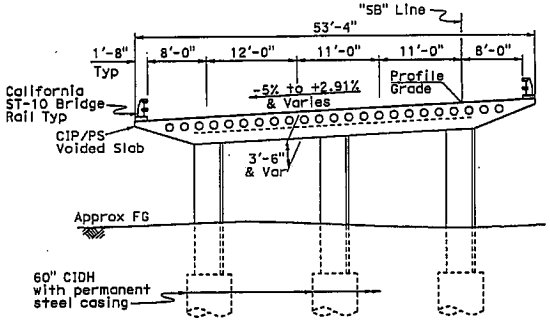

TYPICAL SECTION
1/8" = 1'

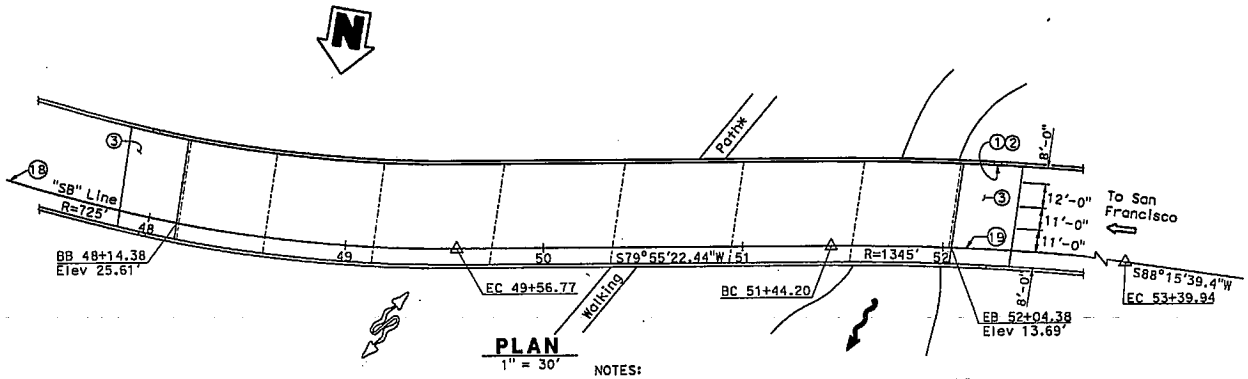

PLAN
1" = 30'

NOTES:
Bridge Rail not shown
* Proposed path

NOTES:
1. Architectural treatment, size and shape of overhang/columns to be determined
2. For Hydrologic Summary see "Foundation Plan" sheet

① Point "BR NO 34-0164L"
② Point "TENNESSEE HOLLOW SB"
③ Structure Approach Type N(30D)

Reserved Quantities

SKEW ANGLE DATA

Location	∠
Abut 1	2°19'56.62"
Pier 2	1°7'30.08"
Pier 3	5°28'17.76"
Piers 4 thru 6	8°49'17.85"
Pier 7	8°23'16.68"
Abut 8	6°18'41.70"

CURVE DATA

Curve	R	Δ	T	L
18	725.00'	62°25'24.65"	439.28'	789.88'
19	1345.00'	8°20'16.99"	98.04'	195.73'

ALTERNATIVE 1

SOUTH ACCESS TO THE GOLDEN GATE BRIDGE

TENNESSEE HOLLOW SB

GENERAL PLAN

DESIGN	BY P. Lutz	CHECKED X	LOAD & RESISTANCE FACTOR DESIGN	LIVE LOADING: HL93 W/"LOW-BOY"; PERMIT DESIGN VEHICLE	
DETAILS	BY P. Lutz/T. Foriall	CHECKED X	LAYOUT	BY P. Lutz	CHECKED X
QUANTITIES	BY X	CHECKED X	SPECIFICATIONS	BY X	PLANS AND SPECS COMPARED X

DESIGN ENGINEER

STATE OF CALIFORNIA
DEPARTMENT OF TRANSPORTATION

DIVISION OF ENGINEERING SERVICES
STRUCTURE DESIGN
DESIGN BRANCH 9

BRIDGE NO. 34-0164L
POST MILE X

CU 04
EA 163700

DISREGARD PRINTS BEARING EARLIER REVISION DATES

REVISION DATES 04-08-08 5-15-08 09-19-08 9-15-08 11-06-08

SHEET 1 OF X

STRUCTURES DESIGN GENERAL PLAN SHEET (ENGLISH) (REV. 10/25/05)

ORIGINAL SCALE IN INCHES FOR REDUCED PLANS 0 1 2 3

FILE => 34-01641-a-gp.dgn

STRUCTURES DESIGN GENERAL PLAN SHEET (ENGLISH) (REV.07-24-06)

USERNAME => tfoirall DATE PLOTTED => 18-DEC-2008 TIME PLOTTED => 08:13

DIST	COUNTY	ROUTE	POST MILES TOTAL PROJECT	SHEET NO	TOTAL SHEETS
04	SF	1,101			

INCOMPLETE PLAN FOR DESIGN STUDY PRINTED
DATE: 04-22-08
Office of Structure Design
STATE OF CALIFORNIA

REGISTERED CIVIL ENGINEER X DATE
PLANS APPROVAL DATE

REGISTERED PROFESSIONAL ENGINEER P. E. LUTZ No. C55839 Exp. 12-31-10 CIVIL STATE OF CALIFORNIA

The State of California or its officers or agents shall not be responsible for the accuracy or completeness of electronic copies of this plan sheet.

To get to the Caltrans web site, go to: http://www.dot.ca.gov

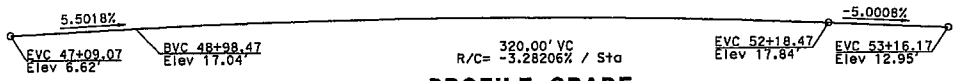

PROFILE GRADE
No Scale

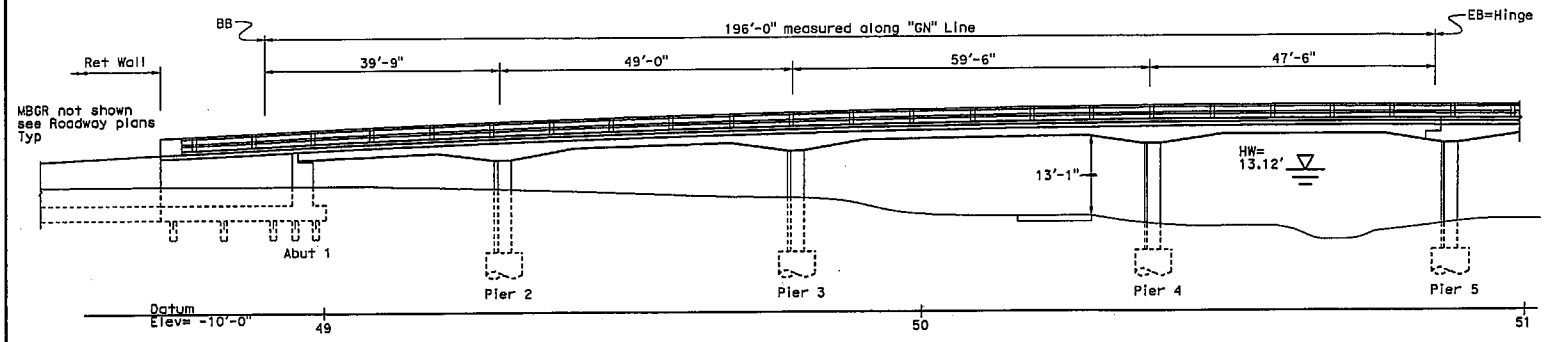

ELEVATION
1" = 10'

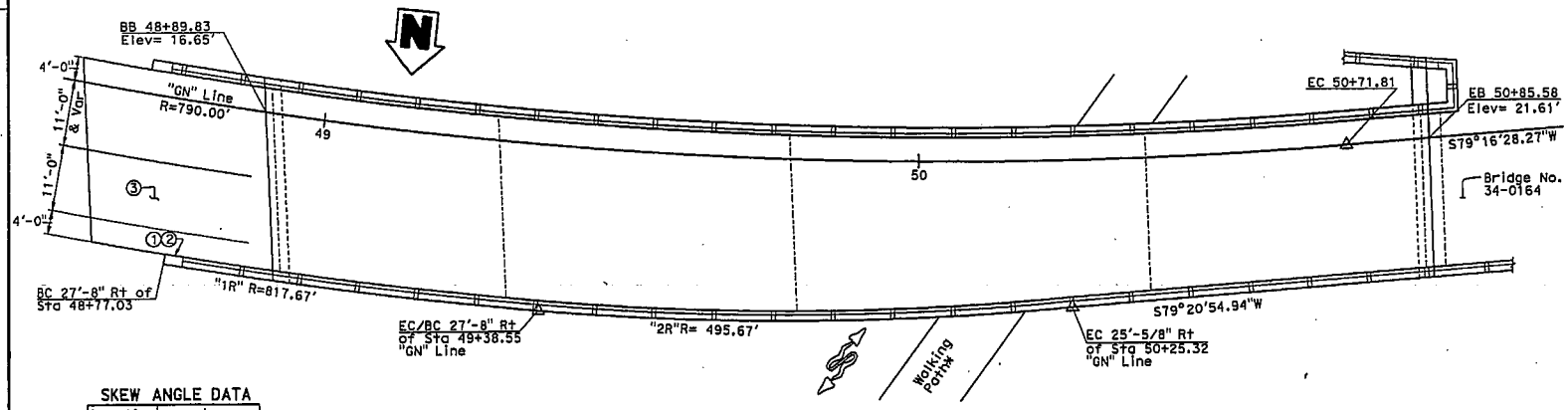

PLAN
1" = 10'

NOTE:
* Proposed path

NOTES:
1. Architectural treatment, size and shape of overhang/columns to be determined
2. For Hydrologic Summary see "Foundation Plan" sheet
3. For "Typical Section" and Quantities see "General Plan No. 2" sheet

① Paint "BR NO 34-0164L"
② Paint "GIRARD NB RAMP"
③ Structure Approach Type N(30D)

SKEW ANGLE DATA

Location	∠
Abut 1	10°52'27.03"
Pier 2	8°05'0.92"
Pier 3	4°31'47.28"
Pier 4	0°12'52.14"
℄ Hinge	2°13'54.73"

CURVE DATA

Line	R	Δ	T	L
"GN"	790.00'	33°25'15"	237.17'	460.81'
"1R"	817.67'	4°27'42"	31.94'	63.84'
"2R"	495.67'	10°22'21"	45.04'	89.84'

ALTERNATIVE 1
SOUTH ACCESS TO THE GOLDEN GATE BRIDGE

DESIGN	BY Phil Lutz	CHECKED X	LOAD & RESISTANCE FACTOR DESIGN	LIVE LOADING: HL93 W/"LOW-BOY"; PERMIT DESIGN VEHICLE	
DETAILS	BY Tim Foirall	CHECKED X	LAYOUT	BY X	CHECKED X
QUANTITIES	BY X	CHECKED X	SPECIFICATIONS	BY X	PLANS AND SPECS COMPARED X

X
DESIGN ENGINEER

STATE OF CALIFORNIA
DEPARTMENT OF TRANSPORTATION

DIVISION OF ENGINEERING SERVICES
STRUCTURE DESIGN
DESIGN BRANCH 9

CU 04
EA 163700

BRIDGE NO. 34-0167
POST MILE X

GIRARD NORTHBOUND-RAMP
GENERAL PLAN No. 1

DISREGARD PRINTS BEARING EARLIER REVISION DATES
REVISION DATES 04-24-06 07-25-06 10-12-06 10-23-06 11-13-06
SHEET 1 OF X

ORIGINAL SCALE IN INCHES FOR REDUCED PLANS 0 1 2 3

FILE => 34-0167-a-gp01.dgn

STRUCTURES DESIGN GENERAL PLAN SHEET (ENGLISH) (REV. 10/25/06)

STRUCTURES DESIGN GENERAL PLAN SHEET (ENGLISH) (REV.07-24-06)

USERNAME => tfairoll DATE PLOTTED => 24-NOV-2008 TIME PLOTTED => 15:22

DIST	COUNTY	ROUTE	POST MILES TOTAL PROJECT	SHEET No	TOTAL SHEETS
04	SF	1,101			

INCOMPLETE PLAN FOR DESIGN STUDY PRINTED
DATE: 04-22-08
Office of Structure Design
STATE OF CALIFORNIA

REGISTERED CIVIL ENGINEER X DATE

PLANS APPROVAL DATE

REGISTERED PROFESSIONAL ENGINEER P. E. LUTZ No. C55839 Exp. 12-31-10 CIVIL STATE OF CALIFORNIA

The State of California or its officers or agents shall not be responsible for the accuracy or completeness of electronic copies of this plan sheet.

To get to the Caltrans web site, go to: http://www.dot.ca.gov

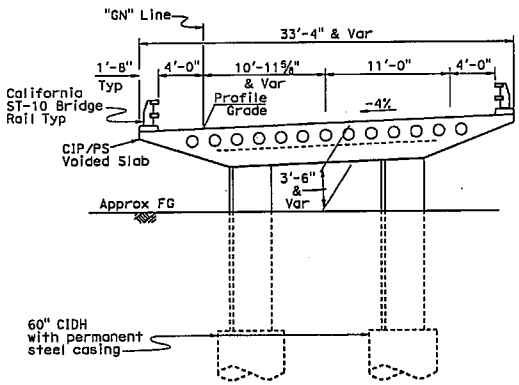

SECTION AT PIER 2
3/16" = 1'

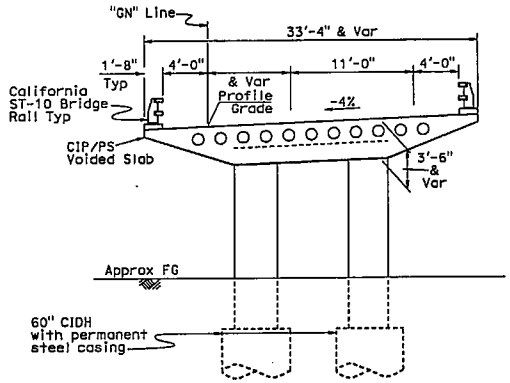

SECTION AT PIER 4
3/16" = 1'

Reserved Quantities

Architectural treatment, size and shape of overhang/columns to be determined

ALTERNATIVE 1

SOUTH ACCESS TO THE GOLDEN GATE BRIDGE

GIRARD NORTHBOUND-RAMP

GENERAL PLAN No. 2

DESIGN	BY Phil Lutz	CHECKED X	LOAD & RESISTANCE FACTOR DESIGN	LIVE LOADING: HL93 W/"LOW-BOY"; PERMIT DESIGN VEHICLE	
DETAILS	BY Tim Falrall	CHECKED X	LAYOUT	BY X	CHECKED X
QUANTITIES	BY X	CHECKED X	SPECIFICATIONS	BY X	PLANS AND SPECS COMPARED X

X
DESIGN ENGINEER

STATE OF CALIFORNIA DEPARTMENT OF TRANSPORTATION

DIVISION OF ENGINEERING SERVICES STRUCTURE DESIGN
DESIGN BRANCH 9

BRIDGE No. 34-0167
POST MILE X

CU 04
EA 163700

ORIGINAL SCALE IN INCHES FOR REDUCED PLANS 0 1 2 3

DISREGARD PRINTS BEARING EARLIER REVISION DATES

REVISION DATES 07-24-08 07-24-08 10-24-08 11-13-08

SHEET 2 OF X

STRUCTURES DESIGN GENERAL PLAN SHEET (ENGLISH) (REV. 10/25/05)

STRUCTURES DESIGN GENERAL PLAN SHEET (ENGLISH) (REV.07-24-08)

FILE => 34-0167-a-gp02.dgn

USERNAME => tfalrall DATE PLOTTED => 18-DEC-2008 TIME PLOTTED => 10:06

DIST	COUNTY	ROUTE	POST MILES TOTAL PROJECT	SHEET No	TOTAL SHEETS
04	SF	1,101			

REGISTERED CIVIL ENGINEER X DATE

PLANS APPROVAL DATE

The State of California or its officers or agents shall not be responsible for the accuracy or completeness of electronic copies of this plan sheet.

REGISTERED PROFESSIONAL ENGINEER A. M. TOURZANI No. C50511 Exp. 6-30-09 CIVIL STATE OF CALIFORNIA

To get to the Caltrans web site, go to: http://www.dot.ca.gov

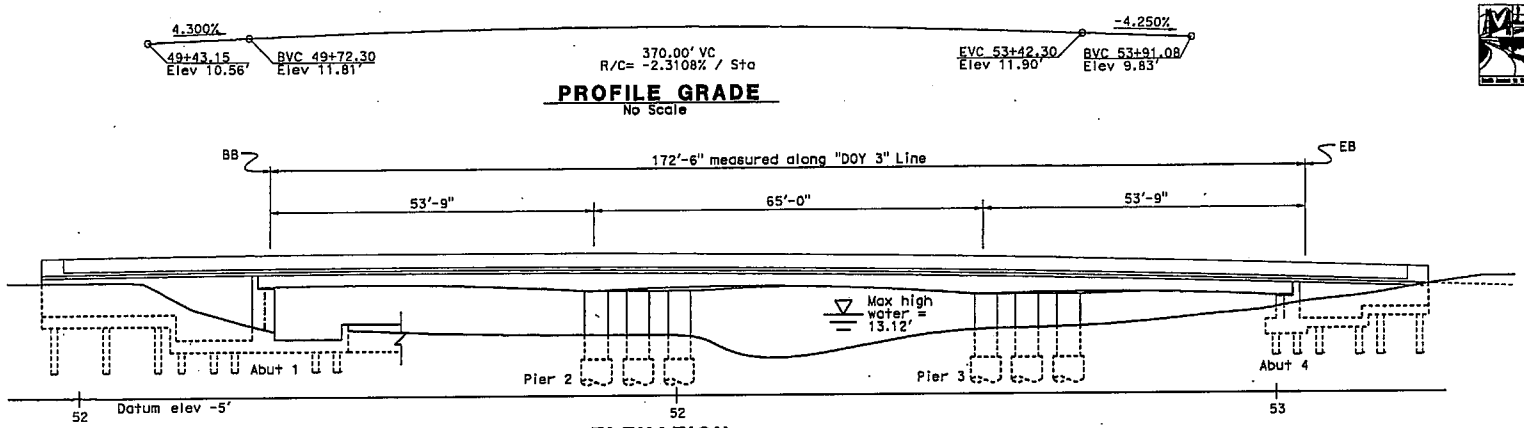

PROFILE GRADE
No Scale

ELEVATION
1" = 10'

CURVE DATA

No.	R	Δ	T	L
28	1274.75	0°52'29.55"	9.73	19.46
29	502.24	3°34'33.41"	15.68	31.35
30	510.05	6°6'52.16"	27.24	54.43

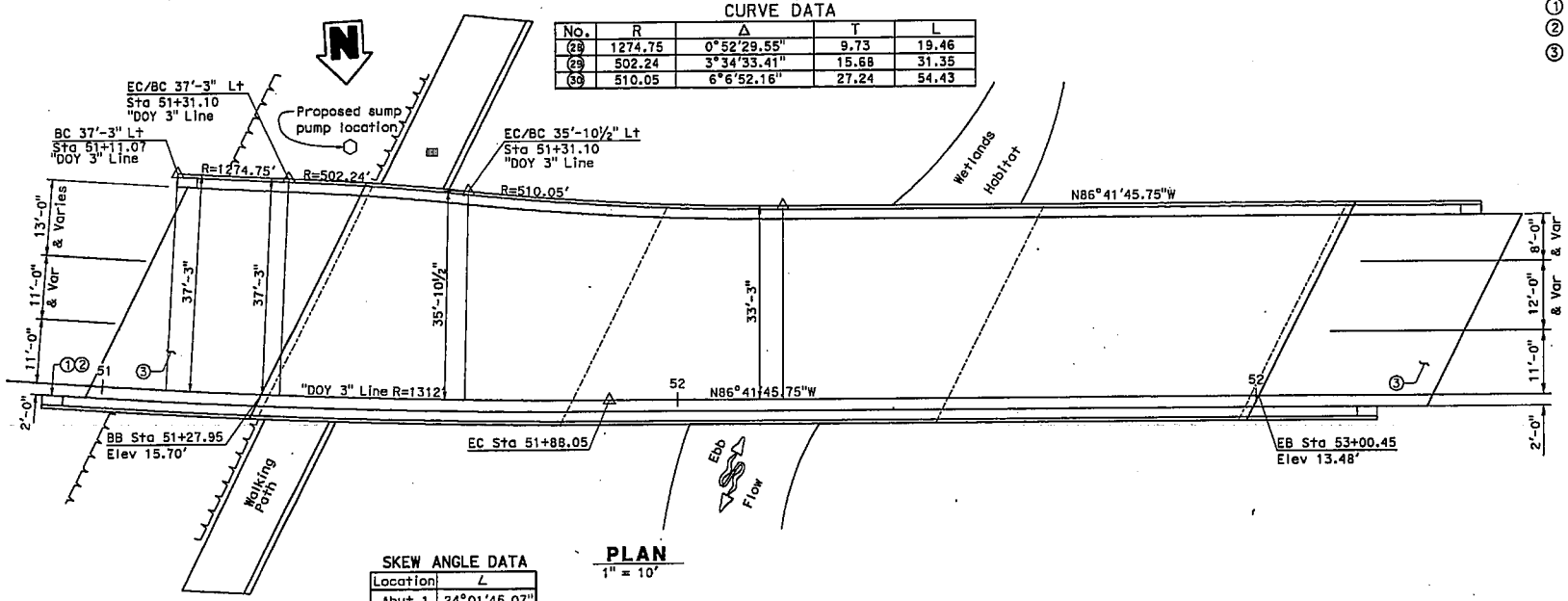

PLAN
1" = 10'

NOTES:

1. Architectural treatment, size and shape of overhang/columns to be determined
2. For "Typical Section" see "General Plan No. 2" sheet
3. For Hydrologic Summary see "Foundation Plan" sheet

① Paint "BR NO 34-0168"
② Paint "GORGAS RAMP"
③ Structure Approach Type N(30D)

SKEW ANGLE DATA

Location	∠
Abut 1	24°01'45.07"
Pier 2	26°19'00.21"
Pier 3	26°35'40.44"
Abut 4	26°35'40.44"

CURVE DATA

Line	R	Δ	T	L
"Doy 3"	1312'	14°14'14"	163.85'	326.01'

INCOMPLETE PLAN FOR DESIGN STUDY PRINTED
DATE: 31-OCT-2008
Office of Structure Design
STATE OF CALIFORNIA

SOUTH ACCESS TO THE GOLDEN GATE BRIDGE

GORGAS RAMP
GENERAL PLAN No. 1

DESIGN	BY Phil Lutz	CHECKED X	LOAD & RESISTANCE FACTOR DESIGN	LIVE LOADING: HL93 W/"LOW-BOY"; PERMIT DESIGN VEHICLE
DETAILS	BY Tim Fairall	CHECKED X	LAYOUT BY X	CHECKED X
QUANTITIES	BY X	CHECKED X	SPECIFICATIONS BY X	PLANS AND SPECS COMPARED X

X
DESIGN ENGINEER

STRUCTURES DESIGN GENERAL PLAN SHEET (ENGLISH) (REV. 10/25/05)

ORIGINAL SCALE IN INCHES FOR REDUCED PLANS 0 1 2 3

STATE OF CALIFORNIA
DEPARTMENT OF TRANSPORTATION

DIVISION OF ENGINEERING SERVICES
STRUCTURE DESIGN
DESIGN BRANCH 9

BRIDGE NO. 34-0168
POST MILE X

CU 04
EA 163700

DISREGARD PRINTS BEARING EARLIER REVISION DATES

REVISION DATES 04-14-08 10-31-08

SHEET 1 OF X

FILE => 34-0168-g-gp01.dgn

STRUCTURES DESIGN GENERAL PLAN SHEET (ENGLISH) (REV.07-24-06)

USERNAME => icasarin DATE PLOTTED => 31-OCT-2008 TIME PLOTTED => 07:20

DIST	COUNTY	ROUTE	POST MILES TOTAL PROJECT	SHEET No	TOTAL SHEETS
04	SF	1,101			

REGISTERED CIVIL ENGINEER X DATE

PLANS APPROVAL DATE

REGISTERED PROFESSIONAL ENGINEER P. F. LUTZ No. C55839 Exp. 12-31-10 CIVIL STATE OF CALIFORNIA

The State of California or its officers or agents shall not be responsible for the accuracy or completeness of electronic copies of this plan sheet.

To get to the Caltrans web site, go to: http://www.dot.ca.gov

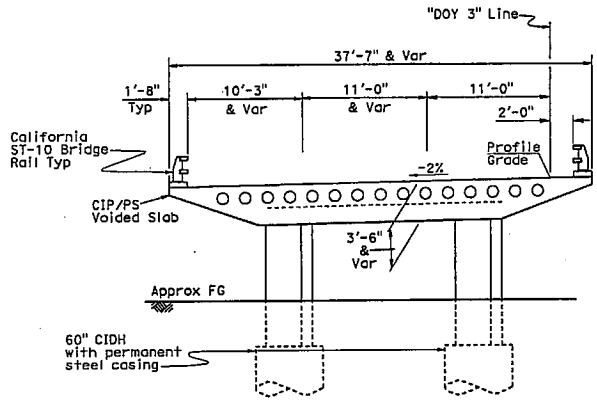

SECTION AT PIER 2

3/16" = 1'

Reserved Quantities

NOTES:

1. Architectural treatment, size and shape of overhang/columns to be determined

INCOMPLETE PLAN FOR DESIGN STUDY PRINTED
DATE: 18-DEC-2008
Office of Structure Design
STATE OF CALIFORNIA

ALTERNATIVE 1

SOUTH ACCESS TO THE GOLDEN GATE BRIDGE

GORGAS RAMP

GENERAL PLAN No.2

DESIGN	BY Phil Lutz	CHECKED X	
DETAILS	BY Tim Fairall	CHECKED X	
QUANTITIES	BY X	CHECKED X	

X
DESIGN ENGINEER

LOAD & RESISTANCE FACTOR DESIGN — LIVE LOADING: HL93 W/"LOW-BOY"; PERMIT DESIGN VEHICLE

LAYOUT BY X — CHECKED X

SPECIFICATIONS BY X — PLANS AND SPECS COMPARED X

STATE OF CALIFORNIA
DEPARTMENT OF TRANSPORTATION

DIVISION OF ENGINEERING SERVICES
STRUCTURE DESIGN
DESIGN BRANCH 9

CU 04
EA 163700

BRIDGE NO. 34-0168
POST MILE X

DISREGARD PRINTS BEARING EARLIER REVISION DATES

REVISION DATES: 10-14-08 | 11-7-08 | 12-18-08 | 11-14-08

SHEET 2 OF X

ORIGINAL SCALE IN INCHES FOR REDUCED PLANS 0 1 2 3

FILE => 34-0168-a-gp02.dgn

STRUCTURES DESIGN GENERAL PLAN SHEET (ENGLISH) (REV. 10/25/05)

STRUCTURES DESIGN GENERAL PLAN SHEET (ENGLISH) (REV.07-24-06)

USERNAME => tfairall DATE PLOTTED => 18-DEC-2008 TIME PLOTTED => 10:09

DIST	COUNTY	ROUTE	POST MILES TOTAL PROJECT	SHEET NO	TOTAL SHEETS
04	SF	1 & 101			

REGISTERED CIVIL ENGINEER DATE

PLANS APPROVAL DATE

The State of California or its officers or agents shall not be responsible for the accuracy or completeness of electronic copies of this plan sheet.

REGISTERED PROFESSIONAL ENGINEER P. E. LUTZ No. C55839 Exp. 12-31-10 CIVIL STATE OF CALIFORNIA

To get to the Caltrans web site, go to: http://www.dot.ca.gov

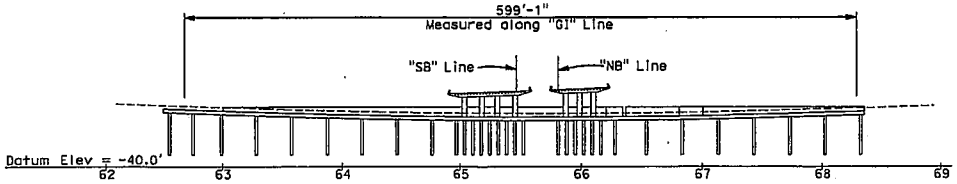

NORTH WALL SECTION-ELEVATION VIEW

1"=50'

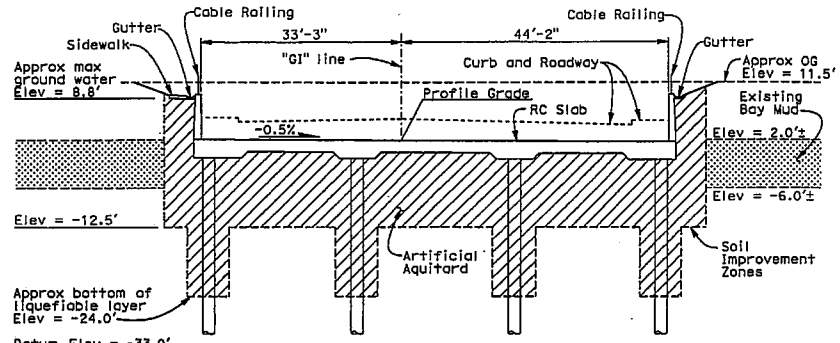

TYPICAL SECTION

1" = 10'

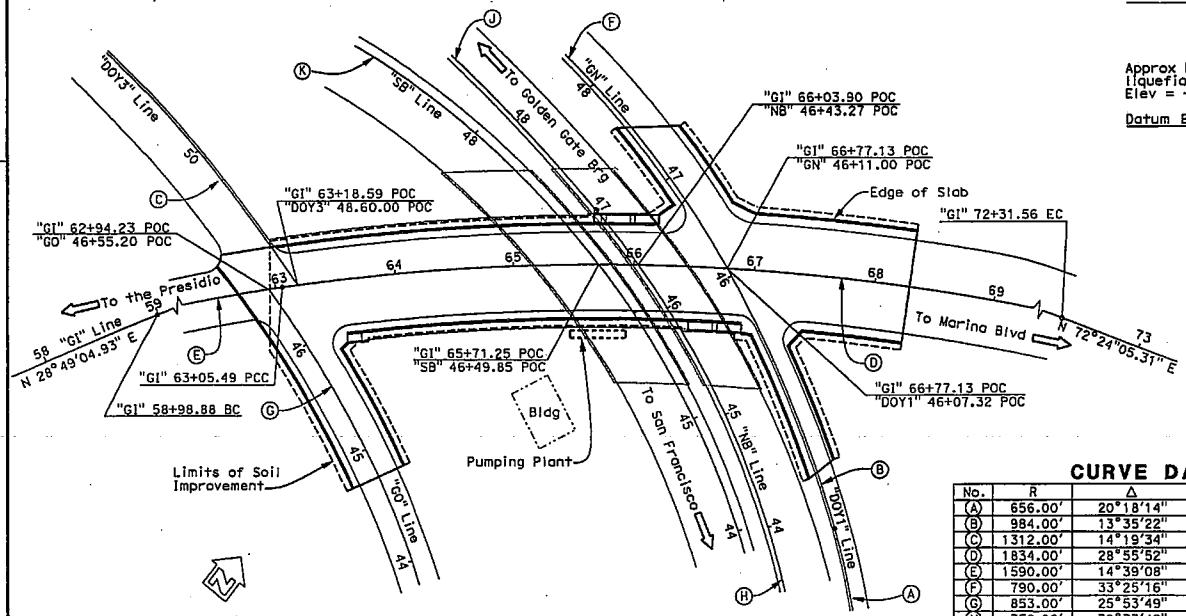

PLAN

1"=50'

NOTES:
For Index to Plans, General Notes, Standard Plans List and Foundation Data, see "Index to Plans" sheet

CURVE DATA

No.	R	Δ	T	L
(A)	656.00'	20°18'14"	117.46'	232.47'
(B)	984.00'	13°35'22"	117.24'	233.38'
(C)	1312.00'	14°19'34"	164.85'	327.98'
(D)	1834.00'	28°55'52"	473.13'	926.07'
(E)	1590.00'	14°39'08"	204.42'	406.61'
(F)	790.00'	33°25'16"	237.17'	460.81'
(G)	853.00'	25°53'49"	196.12'	385.55'
(H)	759.00'	39°33'49"	272.98'	524.10'
(J)	1440.00'	20°45'50"	263.84'	521.85'
(K)	725.00'	62°25'24"	439.28'	789.88'

DESIGN	BY P. Lutz 11-08	CHECKED	
DETAILS	BY A. Onodera 11-08	CHECKED	
QUANTITIES	BY	CHECKED	

DESIGN ENGINEER

LOAD & RESISTANCE FACTOR DESIGN | LIVE LOADING: HL93 W/"LOW-BOY"; PERMIT DESIGN VEHICLE

LAYOUT BY P. Lutz 11-08 CHECKED

SPECIFICATIONS BY PLANS AND SPECS COMPARED

STATE OF CALIFORNIA DEPARTMENT OF TRANSPORTATION

DIVISION OF ENGINEERING SERVICES STRUCTURE DESIGN DESIGN BRANCH 9

CU 04
EA 163700

FILE => 34-0166-study.dgn

STRUCTURES DESIGN GENERAL PLAN SHEET (ENGLISH) (REV. 10/25/05)

ORIGINAL SCALE IN INCHES FOR REDUCED PLANS 0 1 2 3

SOUTH ACCESS TO THE GOLDEN GATE BRIDGE

BRIDGE NO. 34-0166

POST MILE

GIRARD ROAD DEPRESSED - RW

GENERAL PLAN

DISREGARD PRINTS BEARING EARLIER REVISION DATES 11-19-08 11-21-08

REVISION DATES

SHEET 1 OF

STRUCTURES DESIGN GENERAL PLAN SHEET (ENGLISH) (REV.07-24-06)

USERNAME => dwilliott DATE PLOTTED => 05-DEC-2008 TIME PLOTTED => 15:21

DIST	COUNTY	ROUTE	POST MILES TOTAL PROJECT	SHEET No	TOTAL SHEETS
04	SF	1,101			

REGISTERED CIVIL ENGINEER X DATE

PLANS APPROVAL DATE

The State of California or its officers or agents shall not be responsible for the accuracy or completeness of electronic copies of this plan sheet.

REGISTERED PROFESSIONAL ENGINEER P. E. LUTZ No. C55839 Exp. 12-31-08 CIVIL STATE OF CALIFORNIA

To get to the Caltrans web site, go to: http://www.dot.ca.gov

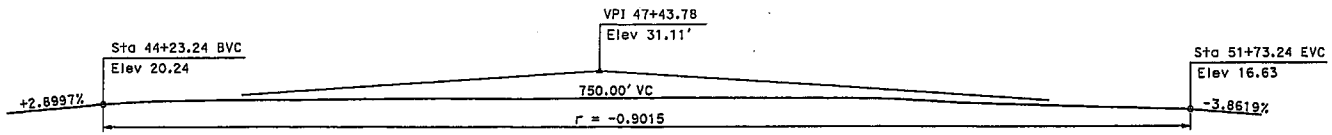

PROFILE GRADE
No Scale

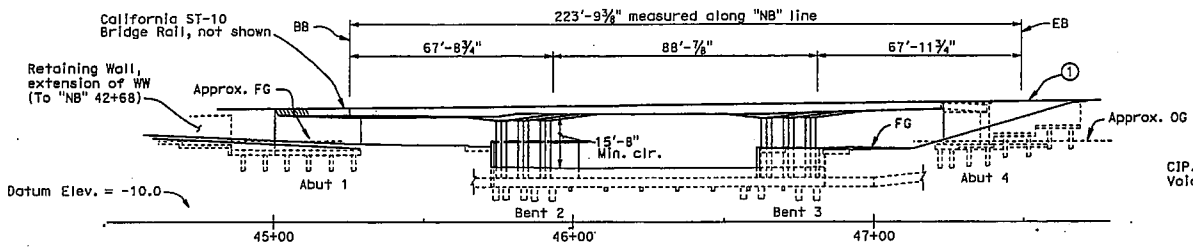

ELEVATION
1" = 20'

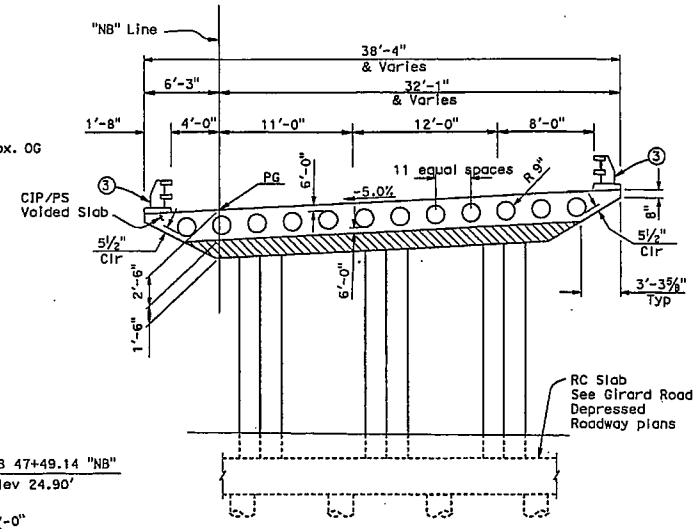

TYPICAL SECTION
1" = 4'

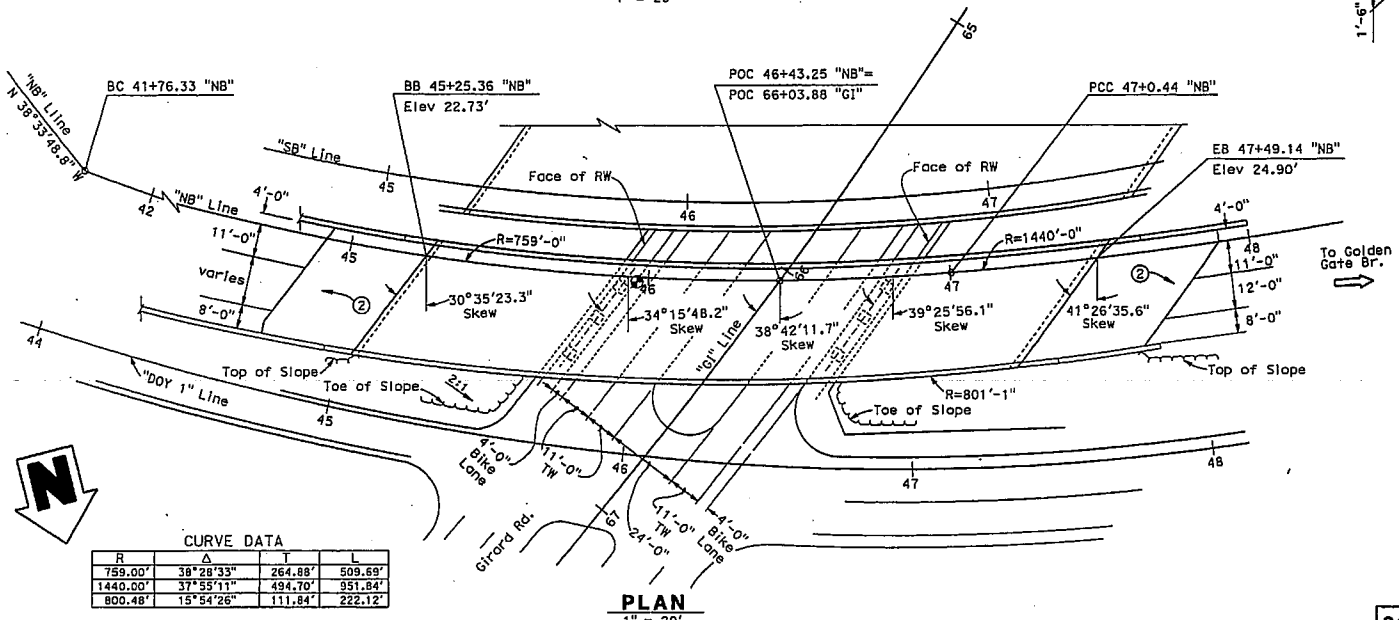

CURVE DATA

R	Δ	T	L
759.00'	38°28'33"	264.88'	509.69'
1440.00'	37°55'11"	494.70'	951.84'
800.48'	15°54'26"	111.84'	222.12'

PLAN
1" = 20'

NOTES:

For Index to Plans, General Notes, Standard Plans List and Foundation Data, see "Index to Plans" sheet

1. Paint "BRIDGE NO. 34-0165R"
2. Structure Approach Type N(30S)
3. California ST-10 Bridge Railing
4. Denotes point of minimum vertical clearance

SOUTH ACCESS TO THE GOLDEN GATE BRIDGE

GIRARD ROAD UC - NB ALT No.2

GENERAL PLAN

BRIDGE NO. 34-0165R

POST MILE X

X DESIGN ENGINEER

DESIGN	BY Phil Lutz	CHECKED X	
DETAILS	BY Wei Zhong	CHECKED Glenn Matthews	
QUANTITIES	BY X	CHECKED X	

LOAD & RESISTANCE FACTOR DESIGN — LIVE LOADING: HL93 W/"LOW-BOY"; PERMIT DESIGN VEHICLE

LAYOUT BY Phil Lutz CHECKED X

SPECIFICATIONS BY X PLANS AND SPECS COMPARED X

STATE OF CALIFORNIA DEPARTMENT OF TRANSPORTATION

DIVISION OF ENGINEERING SERVICES STRUCTURE DESIGN DESIGN BRANCH 9

CU 04 EA 163701

DISREGARD PRINTS BEARING EARLIER REVISION DATES

REVISION DATES 11-21-08 11-25-08 12-5-08

SHEET 1 OF X

STRUCTURES DESIGN GENERAL PLAN SHEET (ENGLISH) (REV. 10/25/05)

ORIGINAL SCALE IN INCHES FOR REDUCED PLANS 0 1 2 3

FILE => Br No. 34-0165R-No.2.dgn

DISFRAME => matthew DATE PLOTTED => 06-DEC-2008 TIME PLOTTED => 16:11

DIST	COUNTY	ROUTE	POST MILES TOTAL PROJECT	SHEET No	TOTAL SHEETS
04	SF	1,101			

REGISTERED CIVIL ENGINEER X DATE

PLANS APPROVAL DATE

The State of California or its officers or agents shall not be responsible for the accuracy or completeness of electronic copies of this plan sheet.

To get to the Caltrans web site, go to: http://www.dot.ca.gov

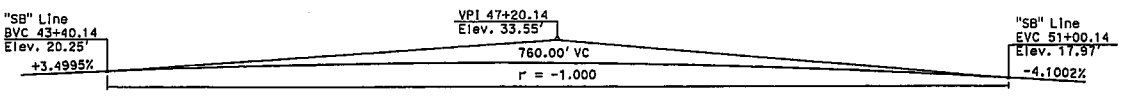

PROFILE GRADE
No Scale

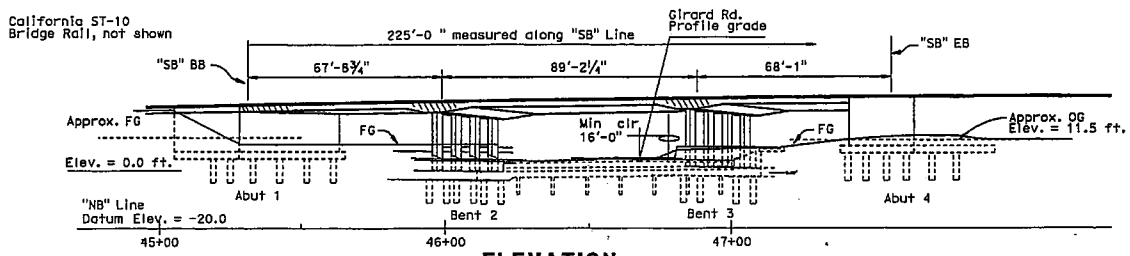

ELEVATION
1" = 20'

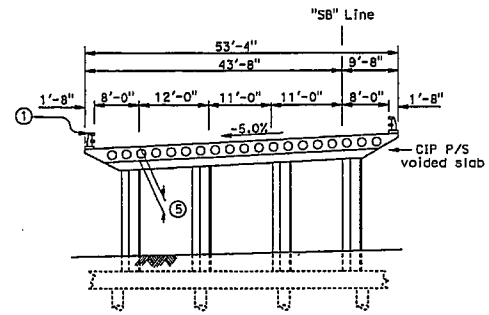

TYPICAL SECTION
1"=10'-0"

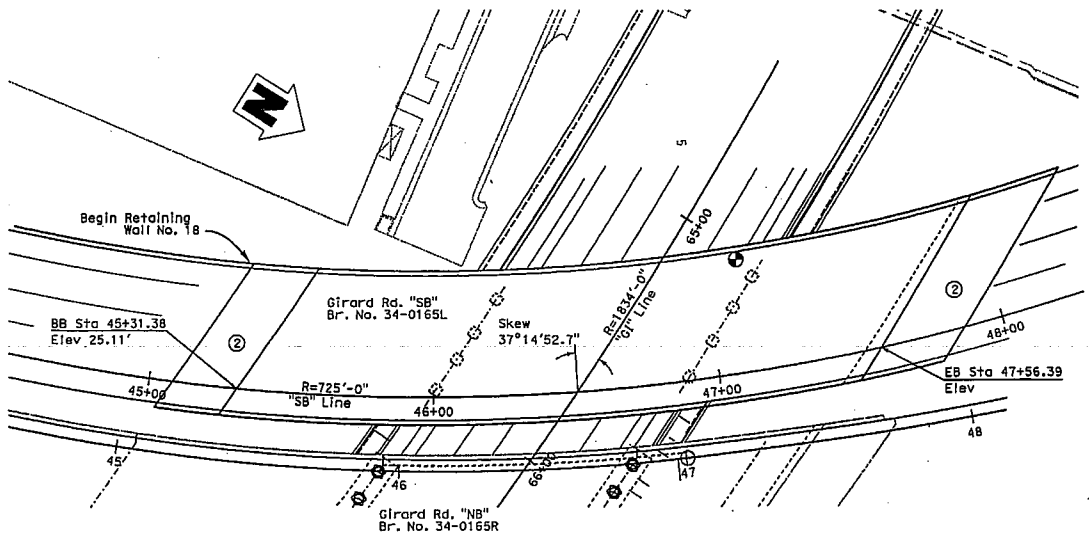

PLAN
1" = 20'

NOTES:

For Index to Plans, General Notes, Standard Plans List and Foundation Data, see "Index to Plans" sheet

For Construction Staging and construction of Abutment Footings, see plans for the "Girard Road Depressed Section", Bridge No. "34-0166"

1. California ST-10 Bridge Railing
2. Structure Approach Type N(30S)
3. Paint "GIRARD ROAD UNDERCROSSING"
4. Paint "BRIDGE NO. 34-0165L"
5. Structure depth 2'-6" midspan to 4'-0" at bents

Denotes point of minimum vertical clearance

SOUTH ACCESS TO THE GOLDEN GATE BRIDGE

GIRARD ROAD UC - SB ALT No.2

GENERAL PLAN

DESIGN	BY X	CHECKED X	LOAD & RESISTANCE FACTOR DESIGN	LIVE LOADING: HL93 W/"LOW-BOY" PERMIT DESIGN VEHICLE	
DETAILS	BY JFCasarino	CHECKED X	LAYOUT	BY X	CHECKED X
QUANTITIES	BY X	CHECKED X	SPECIFICATIONS	BY X	CLAIM AND SPECS COMPARED X

X DESIGN ENGINEER

STATE OF CALIFORNIA DEPARTMENT OF TRANSPORTATION

DIVISION OF ENGINEERING SERVICES STRUCTURE DESIGN DESIGN BRANCH X

BRIDGE NO. 34-0165L POST MILE X

CU 04 EA 163701

FILE => 34-0165l_agp_gm.dgn

DISREGARD PRINTS BEARING EARLIER REVISION DATES 12-5-06

REVISION DATES

SHEET 1 OF X

STRUCTURES DESIGN GENERAL PLAN SHEET (ENGLISH) (REV. 10/25/06)

ORIGINAL SCALE IN INCHES FOR REDUCED PLANS 0 1 2 3

STRUCTURES DESIGN GENERAL PLAN SHEET (ENGLISH) (REV.07-24-06)

USERNAME => gmattinew DATE PLOTTED => 06-DEC-2008 TIME PLOTTED => 16:19