Dist	COUNTY	ROUTE	POST MILES TOTAL PROJECT	SHEET No.	TOTAL SHEETS
04	Ala	580	R8.3	1	37

INDEX OF PLANS

SHEET No.	DESCRIPTION
1	TITLE SHEET AND LOCATION MAP
2 - 5	LAYOUT
6	CONSTRUCTION AREA SIGNS
7	SUMMARY OF QUANTITIES
8 - 11	EROSION CONTROL PLAN
12 - 20	PLANT LIST, PLANTING AND IRRIGATION PLAN
21 - 23	LANDSCAPE DETAILS AND QUANTITIES
24 - 37	REVISED & NEW STANDARD PLANS

THE STANDARD PLANS LIST APPLICABLE TO THIS CONTRACT IS INCLUDED IN THE NOTICE TO BIDDERS AND SPECIAL PROVISIONS BOOK.

STATE OF CALIFORNIA

DEPARTMENT OF TRANSPORTATION

PROJECT PLANS FOR CONSTRUCTION ON

STATE HIGHWAY

IN ALAMEDA COUNTY
NEAR LIVERMORE
EAST OF CROSS ROAD
2.2 MILES SOUTHEAST OF ROUTE 580/
GREENVILLE ROAD UNDERCROSSING

TO BE SUPPLEMENTED BY STANDARD PLANS DATED MAY 2006

LOCATION MAP

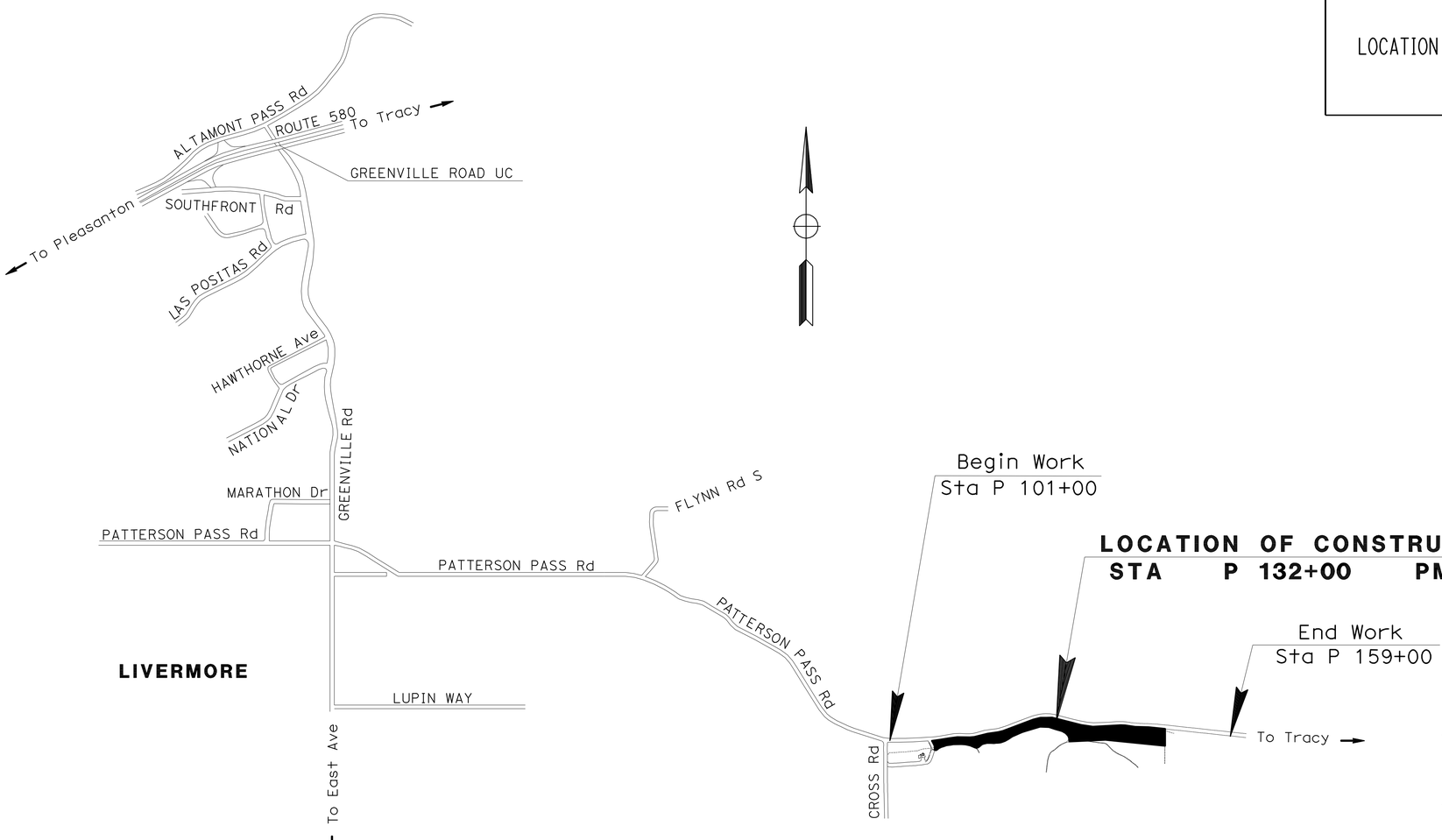

NO SCALE

Nicholas Grgich 2-18-11
PROJECT ENGINEER DATE
REGISTERED CIVIL ENGINEER

March 7, 2011
PLANS APPROVAL DATE

REGISTERED PROFESSIONAL ENGINEER
Nicholas J. Grgich
No. 49123
Exp. 9-30-12
CIVIL
STATE OF CALIFORNIA

THE STATE OF CALIFORNIA OR ITS OFFICERS OR AGENTS SHALL NOT BE RESPONSIBLE FOR THE ACCURACY OR COMPLETENESS OF SCANNED COPIES OF THIS PLAN SHEET.

THE CONTRACTOR SHALL POSSESS THE CLASS (OR CLASSES) OF LICENSE AS SPECIFIED IN THE "NOTICE TO BIDDERS."

PROJECT MANAGER: RON KIAAINA
DESIGN ENGINEER: NICHOLAS J. GRGICH

LAST REVISION 03-07-11
DATE PLOTTED => 08-MAR-2011
TIME PLOTTED => 15:09

CONTRACT No.	04-172434
PROJECT ID	0400020534

Dist	COUNTY	ROUTE	POST MILES TOTAL PROJECT	SHEET No.	TOTAL SHEETS
04	Ala	580	R8.3	2	37

Nicholas Grgich 1-13-11
REGISTERED CIVIL ENGINEER DATE

3-7-11
PLANS APPROVAL DATE

REGISTERED PROFESSIONAL ENGINEER Nicholas J. Grgich No. 49123 Exp. 9-30-12 CIVIL STATE OF CALIFORNIA

THE STATE OF CALIFORNIA OR ITS OFFICERS OR AGENTS SHALL NOT BE RESPONSIBLE FOR THE ACCURACY OR COMPLETENESS OF SCANNED COPIES OF THIS PLAN SHEET.

RIGHT OF WAY LIMITS ARE INDETERMINATE, AND ARE NOT SHOWN. THE CONTRACTOR MUST CONTACT RIGHT OF WAY ENGINEERING AT THE DISTRICT OFFICE FOR CONDITIONS OF USE PRIOR TO COMMENCING WORK.

LEGEND

6' WIRE MESH GATE

—xx—TFESA— TEMPORARY FENCE (TYPE ESA)

(No.) CURVE DATA NUMBER

CURVE DATA

No.	R	Δ	T	L	N-COORDINATE	E-COORDINATE
1	810′	10° 56′ 29″	77.58′	154.68′	2075099.54	6226174.46
2	10000′	00° 42′ 35″	61.93′	123.86′	2084289.96	6226202.83
3	1000′	02° 10′ 30″	18.98′	37.96′	2075295.82	6226592.79
4	2000′	01° 04′ 07″	18.65′	37.30′	2076296.34	6226573.13
5	2000′	01° 22′ 14″	23.92′	47.84′	2072310.41	6226909.98
6	1000′	08° 05′ 27″	70.72′	141.21′	2075314.01	6226901.08
7	800′	11° 30′ 41″	80.64′	160.73′	2073582.59	6227426.61
25	10000′	00° 38′ 38″	56.19′	112.38′	2073869.40	6236084.44
26	2000′	01° 42′ 52″	29.92′	59.85′	2074140.85	6228083.50

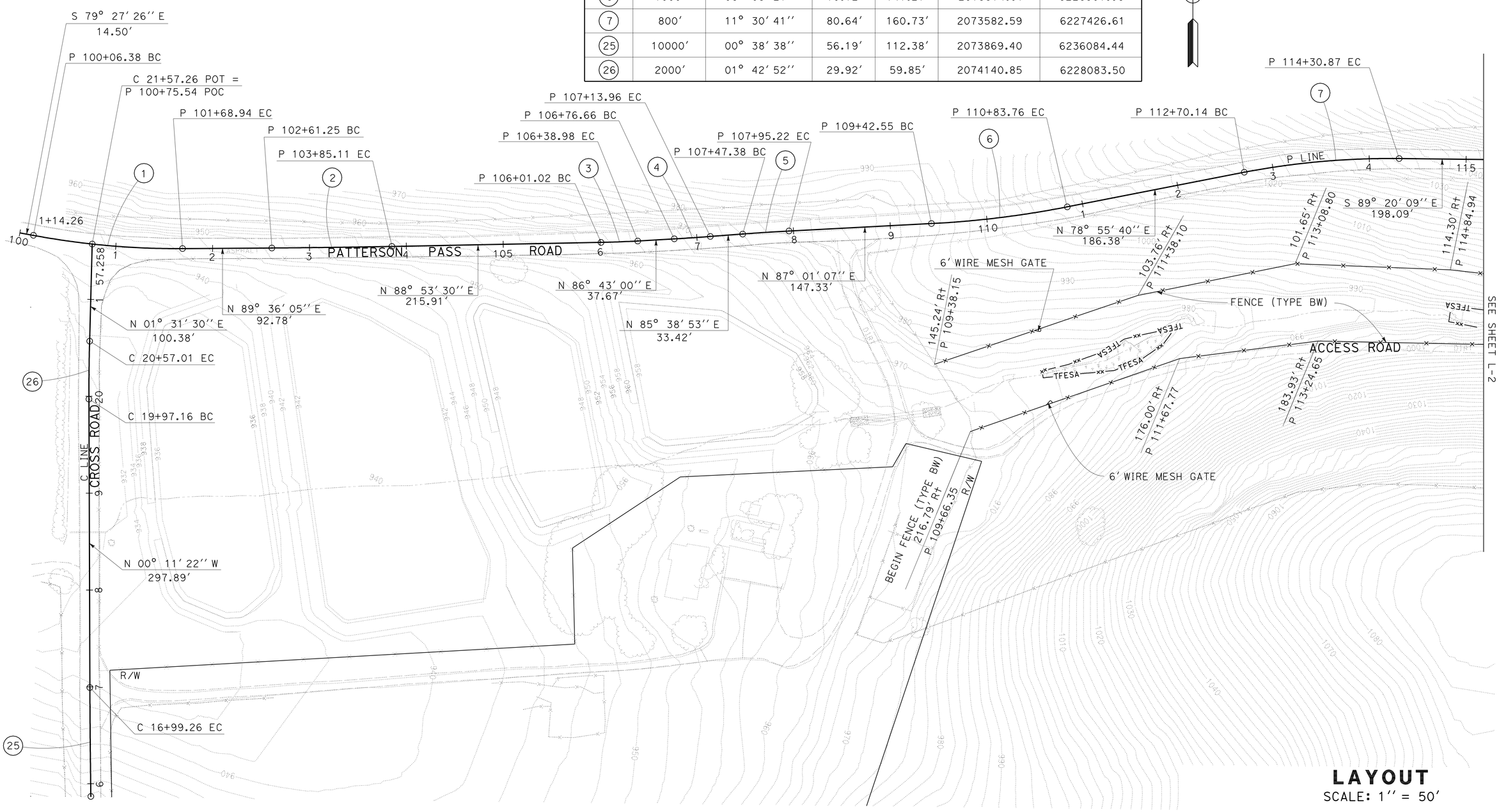

LAYOUT
SCALE: 1″ = 50′

L-1

STATE OF CALIFORNIA - DEPARTMENT OF TRANSPORTATION
DESIGN
FUNCTIONAL SUPERVISOR: NESTOR PEREZ
CALCULATED-DESIGNED BY: NICHOLAS J. GRGICH
CHECKED BY: JENNIFER EGAWA
REVISED BY: NG
DATE REVISED: 1/12/11

LAST REVISION 03-07-11
DATE PLOTTED => 08-MAR-2011
TIME PLOTTED => 15:10

Dist	COUNTY	ROUTE	POST MILES TOTAL PROJECT	SHEET No.	TOTAL SHEETS
04	Ala	580	R8.3	3	37

Nicholas Grgich 1-13-11
REGISTERED CIVIL ENGINEER DATE

3-7-11
PLANS APPROVAL DATE

REGISTERED PROFESSIONAL ENGINEER Nicholas J. Grgich No. 49123 Exp. 9-30-12 CIVIL STATE OF CALIFORNIA

THE STATE OF CALIFORNIA OR ITS OFFICERS OR AGENTS SHALL NOT BE RESPONSIBLE FOR THE ACCURACY OR COMPLETENESS OF SCANNED COPIES OF THIS PLAN SHEET.

CURVE DATA

No.	R	Δ	T	L	N-COORDINATE	E-COORDINATE
8	500′	18° 11′ 06″	80.02′	158.69′	2074880.20	6227639.76
9	500′	10° 02′ 49″	43.95′	87.68′	2073951.56	6228019.88
10	700′	13° 45′ 09″	84.41′	168.02′	2075164.27	6228038.41
11	3000′	00° 59′ 01″	25.75′	51.50′	2071797.43	6229589.50

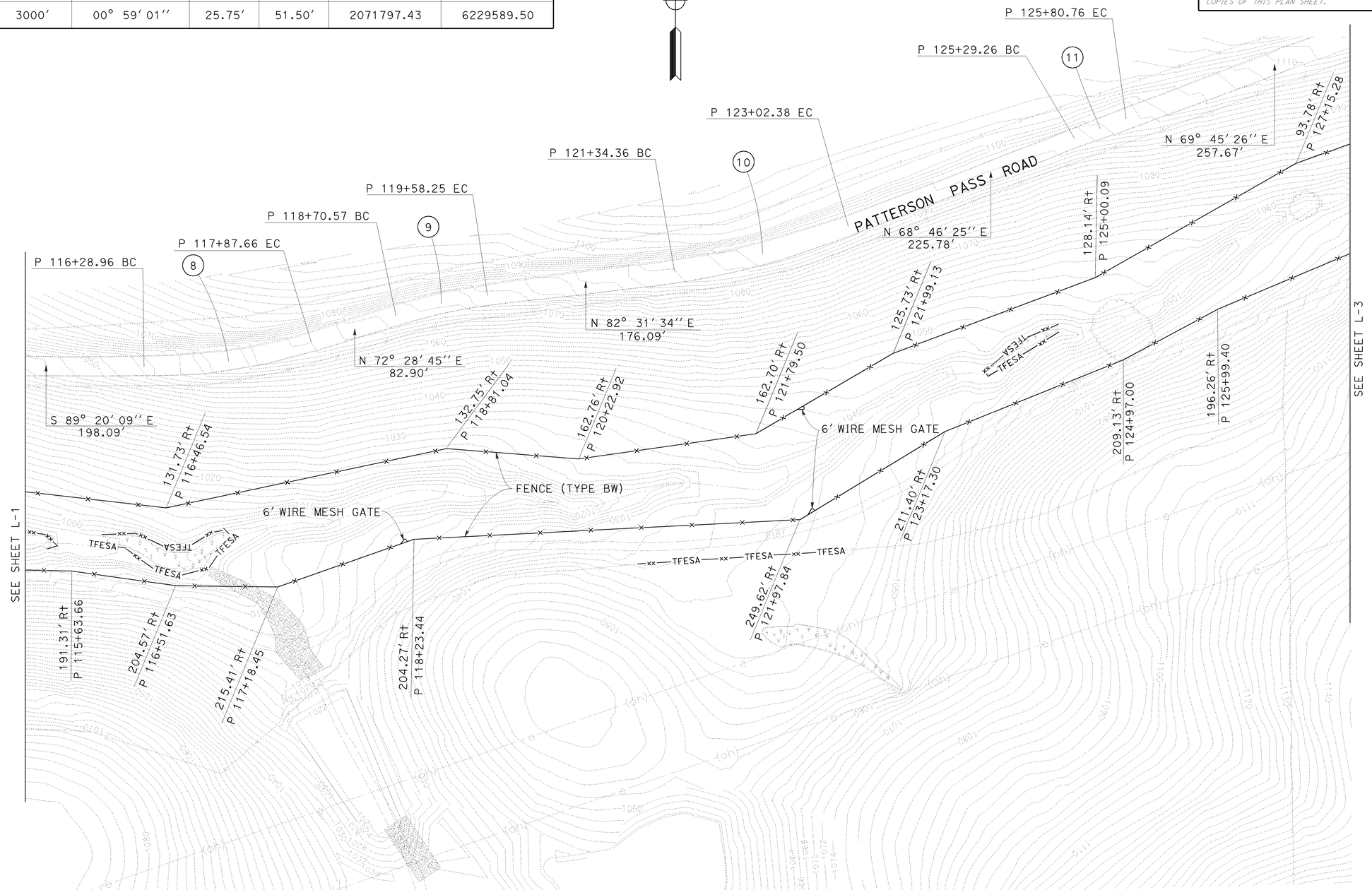

FOR NOTES, ABBREVIATIONS AND LEGEND, SEE SHEET L-1

LAYOUT

SCALE: 1″ = 50′

L-2

STATE OF CALIFORNIA - DEPARTMENT OF TRANSPORTATION
Caltrans
DESIGN

FUNCTIONAL SUPERVISOR: NESTOR PEREZ
CALCULATED-DESIGNED BY: NICHOLAS J. GRGICH
CHECKED BY: JENNIFER EGAWA
REVISED BY: NG
DATE REVISED: 1/12/11

LAST REVISION 03-07-11
DATE PLOTTED => 08-MAR-2011
TIME PLOTTED => 14:59

Dist	COUNTY	ROUTE	POST MILES TOTAL PROJECT	SHEET No.	TOTAL SHEETS
04	Ala	580	R8.3	4	37

Nicholas Grgich 1-13-11
REGISTERED CIVIL ENGINEER DATE

3-7-11
PLANS APPROVAL DATE

REGISTERED PROFESSIONAL ENGINEER Nicholas J. Grgich No. 49123 Exp. 9-30-12 CIVIL STATE OF CALIFORNIA

THE STATE OF CALIFORNIA OR ITS OFFICERS OR AGENTS SHALL NOT BE RESPONSIBLE FOR THE ACCURACY OR COMPLETENESS OF SCANNED COPIES OF THIS PLAN SHEET.

CURVE DATA

No.	R	Δ	T	L	N-COORDINATE	E-COORDINATE
12	600′	04° 03′ 51″	21.29′	42.56′	2074138.35	6229000.85
13	700′	28° 31′ 24″	177.93′	348.48′	2074059.39	6229087.60
14	3000′	05° 19′ 24″	139.46′	278.73′	2071800.74	6228649.93
15	1600′	22° 05′ 09″	312.25′	616.75′	2076183.76	6230046.03

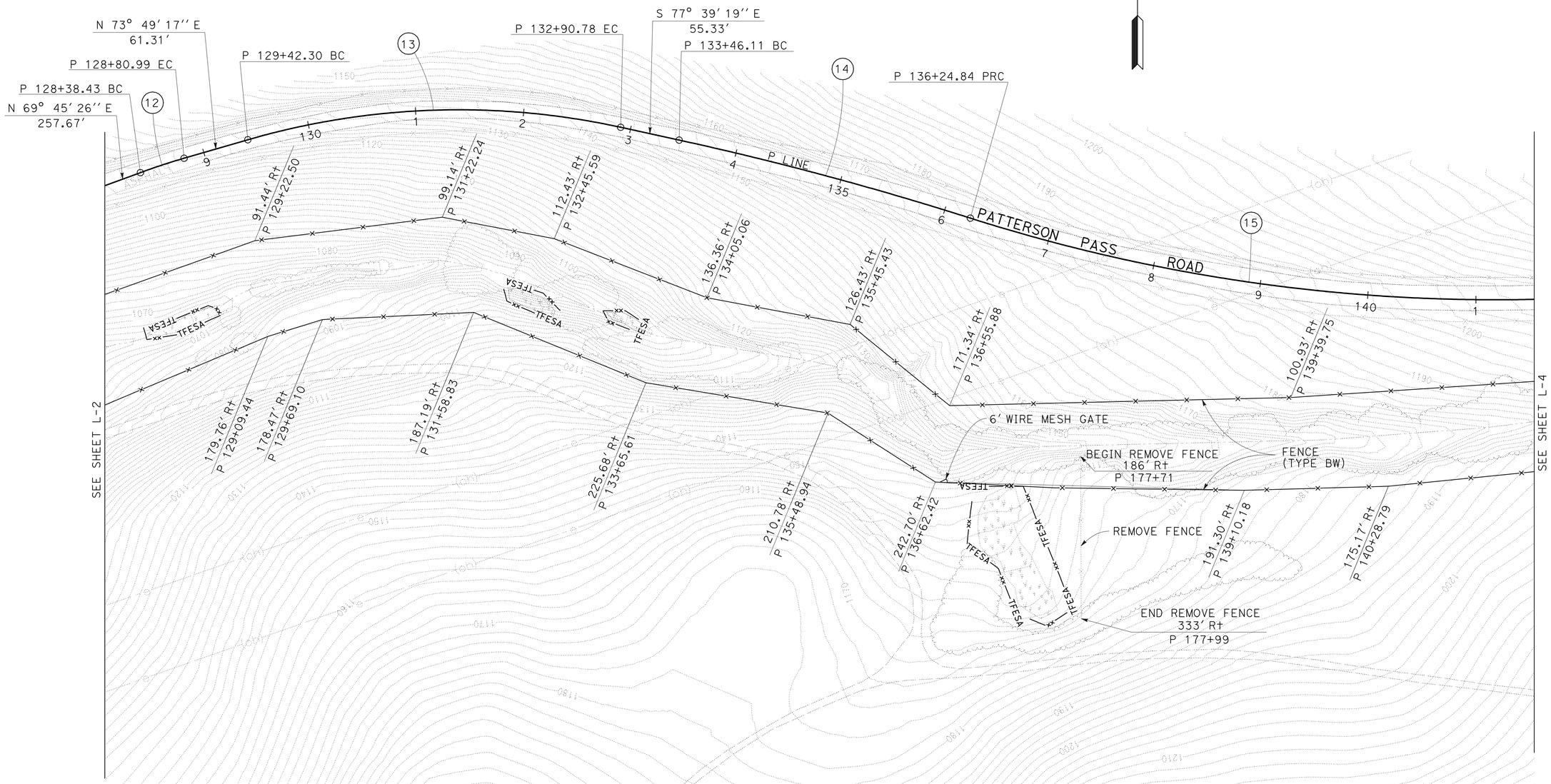

FOR NOTES, ABBREVIATIONS AND LEGEND, SEE SHEET L-1

LAYOUT
SCALE: 1″ = 50′

L-3

STATE OF CALIFORNIA - DEPARTMENT OF TRANSPORTATION
Caltrans
DESIGN

FUNCTIONAL SUPERVISOR: NESTOR PEREZ
CALCULATED-DESIGNED BY: NICHOLAS J. GRGICH
CHECKED BY: JENNIFER EGAWA
REVISED BY: NG
DATE REVISED: 1/12/11

LAST REVISION DATE PLOTTED => 08-MAR-2011
TIME PLOTTED => 15:10
03-07-11

Dist	COUNTY	ROUTE	POST MILES TOTAL PROJECT	SHEET No.	TOTAL SHEETS
04	Ala	580	R8.3	5	37

Nicholas Grgich 1-13-11
REGISTERED CIVIL ENGINEER DATE

3-7-11
PLANS APPROVAL DATE

REGISTERED PROFESSIONAL ENGINEER Nicholas J. Grgich No. 49123 Exp. 9-30-12 CIVIL STATE OF CALIFORNIA

THE STATE OF CALIFORNIA OR ITS OFFICERS OR AGENTS SHALL NOT BE RESPONSIBLE FOR THE ACCURACY OR COMPLETENESS OF SCANNED COPIES OF THIS PLAN SHEET.

CURVE DATA

No.	R	Δ	T	L	N-COORDINATE	E-COORDINATE
15	1600′	22° 05′ 09″	312.25′	616.75′	2076183.76	6230046.03
16	800′	05° 50′ 46″	40.85′	81.63′	2073808.56	6230459.26
17	800′	07° 10′ 02″	50.10′	100.07′	2073807.84	6230492.53
18	2000′	05° 52′ 44″	102.70′	205.21′	2076573.03	6230933.85
19	2000′	00° 52′ 30″	15.27′	30.54′	2076571.24	6230974.22
20	2000′	02° 31′ 58″	44.21′	88.41′	2072571.32	6230913.73
21	2000′	01° 55′ 26″	33.58′	67.16′	2072563.36	6231022.33

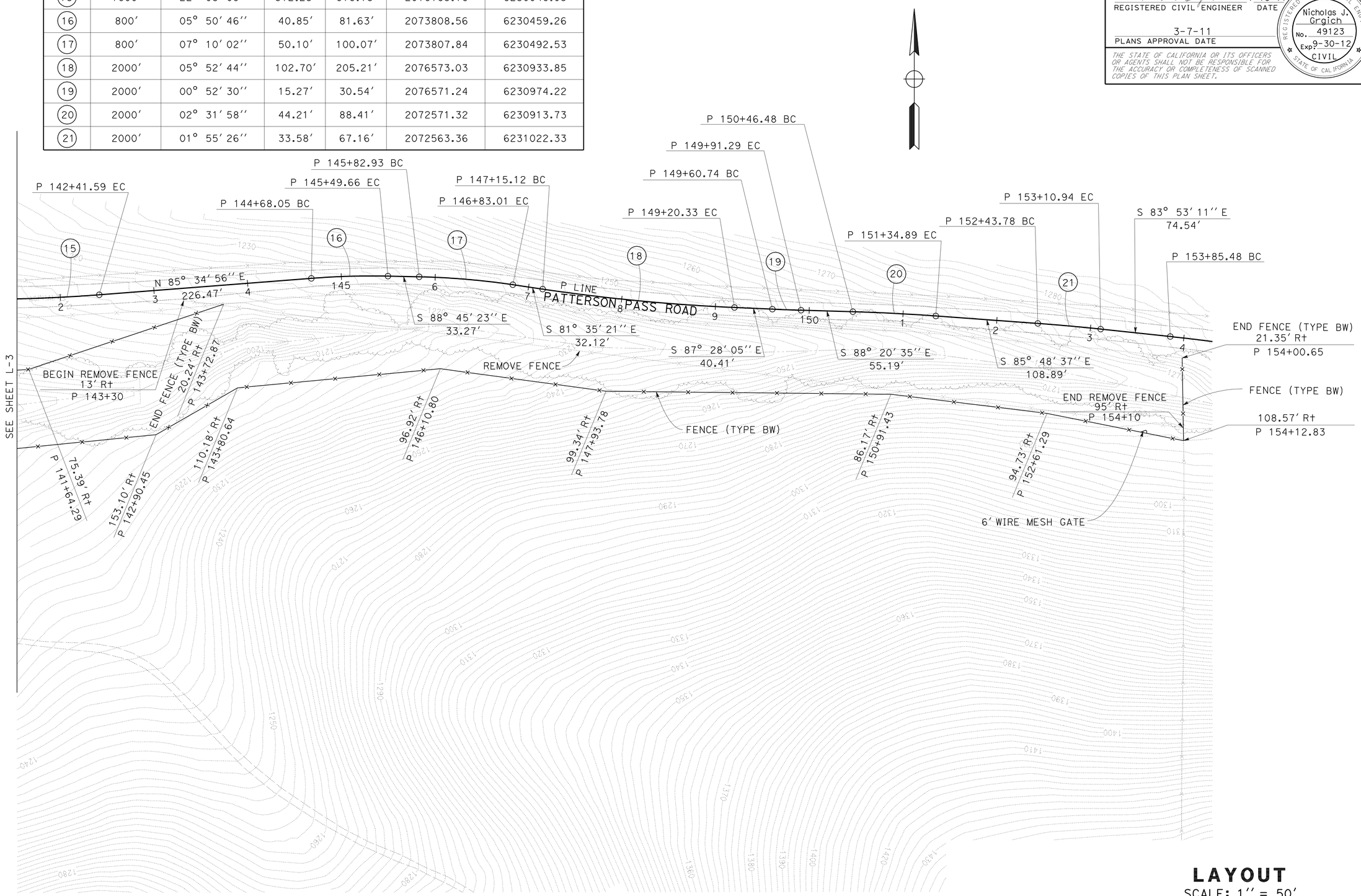

FOR NOTES, ABBREVIATIONS AND LEGEND, SEE SHEET L-1

LAYOUT

SCALE: 1″ = 50′

L-4

STATE OF CALIFORNIA - DEPARTMENT OF TRANSPORTATION
Caltrans
DESIGN

CALCULATED-DESIGNED BY	NICHOLAS J. GRGICH
CHECKED BY	JENNIFER EGAWA
FUNCTIONAL SUPERVISOR	NESTOR PEREZ
REVISED BY	NG
DATE REVISED	1/12/11

LAST REVISION 03-07-11
DATE PLOTTED => 08-MAR-2011
TIME PLOTTED => 15:10

Dist	COUNTY	ROUTE	POST MILES TOTAL PROJECT	SHEET No.	TOTAL SHEETS
04	Ala	580	R8.3	6	37

Lourdes David 3-03-11
REGISTERED CIVIL ENGINEER DATE

3-7-11
PLANS APPROVAL DATE

REGISTERED PROFESSIONAL ENGINEER
Lourdes David
No. 51428
Exp. 6-30-12
CIVIL
STATE OF CALIFORNIA

THE STATE OF CALIFORNIA OR ITS OFFICERS OR AGENTS SHALL NOT BE RESPONSIBLE FOR THE ACCURACY OR COMPLETENESS OF SCANNED COPIES OF THIS PLAN SHEET.

LEGEND:

[ ] CONSTRUCTION AREA SIGN LETTER

NOTE:

1. LOCATION OF CONSTRUCTION AREA SIGNS SHOWN ARE APPROXIMATE, EXACT LOCATION TO BE DETERMINED BY THE ENGINEER.

STATIONARY MOUNTED CONSTRUCTION AREA SIGNS

SIGN [ ]	SIGN CODE	SIGN MESSAGE	PANEL SIZE (INCHES)	NUMBER OF POSTS AND SIZES (EA - INCHES)	No. OF SIGNS EA	REMARKS
A	W20-1	ROAD WORK AHEAD	48 x 48	1 - 4 x 6	2	
B	G20-2	END ROAD WORK	36 x 18	1 - 4 x 4	2	
C	C44 (CA)	TRUCKS ENTERING EXITING	48 x 48	1 - 4 x 6	2	

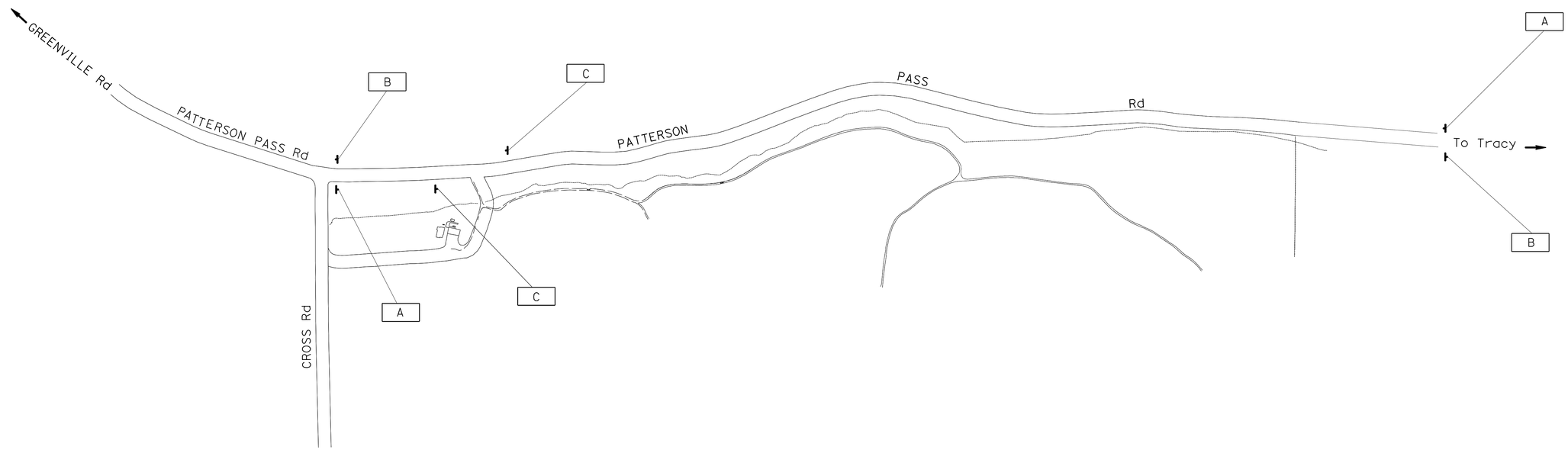

CONSTRUCTION AREA SIGNS

NO SCALE

THIS PLAN ACCURATE FOR CONSTRUCTION AREA SIGN WORK ONLY

CS-1

STATE OF CALIFORNIA - DEPARTMENT OF TRANSPORTATION
Caltrans
TRAFFIC

FUNCTIONAL SUPERVISOR: ROLAND AU-YEUNG
CALCULATED-DESIGNED BY: LOURDES DAVID
CHECKED BY: FLORANTE P. PEREZ
REVISED BY: LD
DATE REVISED: 03/03/11

LAST REVISION 03-07-11
DATE PLOTTED => 08-MAR-2011
TIME PLOTTED => 15:11

Dist	COUNTY	ROUTE	POST MILES TOTAL PROJECT	SHEET No.	TOTAL SHEETS
04	Ala	580	R8.3	7	37

Nicholas Grgich 1-13-11
REGISTERED CIVIL ENGINEER DATE

3-7-11
PLANS APPROVAL DATE

REGISTERED PROFESSIONAL ENGINEER
Nicholas J. Grgich
No. 49123
Exp. 9-30-12
CIVIL
STATE OF CALIFORNIA

THE STATE OF CALIFORNIA OR ITS OFFICERS OR AGENTS SHALL NOT BE RESPONSIBLE FOR THE ACCURACY OR COMPLETENESS OF SCANNED COPIES OF THIS PLAN SHEET.

TEMPORARY FENCE (TYPE ESA)

SHEET No.	TEMPORARY FENCE (TYPE ESA)
	LF
L-1	398
L-2	743
L-3	767
TOTAL	1908

FENCE AND GATE SUMMARY

SHEET No.	FENCE (TYPE BW)	6' WIRE MESH GATE	REMOVE FENCE
	LF	EA	LF
L-1	1126	2	
L-2	2617	3	
L-3	2746	1	150
L-4	1579	1	1150
TOTAL	8068	7	1300

EROSION CONTROL QUANTITIES

SHEET No.	EROSION CONTROL (HYDROSEED)	FIBER ROLLS	ROLLED EROSION CONTROL PRODUCT (NETTING)	EROSION CONTROL (COMPOST BLANKET)	COMPOST (INCORPORATE)
	ACRE	LF	SQFT	CY	SQYD
EC-1	0.71	1940			3463
EC-2	1.27	3248	22444		6132
EC-3	0.57	1462	24337	50	1073
EC-4	0.31	1237	13464	41	
TOTAL	2.86	7887	60245	91	10668

WATER POLLUTION QUANTITIES

SHEET No.	TEMPORARY CONSTRUCTION ENTRANCE	TEMPORARY SILT FENCE	TEMPORARY COVER	TEMPORARY CHECK DAM	TEMPORARY FIBER ROLL
	EA	LF	SQYD	LF	
L-1	2	400	150		500
L-2		800	300	150	350
L-3			350		200
L-4			200		150
TOTAL	2	1200	1000	150	1200

SUMMARY OF QUANTITIES

Q-1

REVISED BY	NG
DATE REVISED	1/12/11
NICHOLAS J. GRGICH	
JENNIFER EGAWA	
CALCULATED-DESIGNED BY	
CHECKED BY	
FUNCTIONAL SUPERVISOR	NESTOR PEREZ

STATE OF CALIFORNIA - DEPARTMENT OF TRANSPORTATION
Caltrans
DESIGN

LAST REVISION 03-07-11
DATE PLOTTED => 08-MAR-2011
TIME PLOTTED => 15:11

Dist	COUNTY	ROUTE	POST MILES TOTAL PROJECT	SHEET No.	TOTAL SHEETS
04	Ala	580	R8.3	8	37

LICENSED LANDSCAPE ARCHITECT

3-7-11
PLANS APPROVAL DATE

LICENSED LANDSCAPE ARCHITECT
JENNIFER EGAWA No. 5088
Signature
7-31-12
Renewal Date
9-1-10
Date
STATE OF CALIFORNIA

THE STATE OF CALIFORNIA OR ITS OFFICERS OR AGENTS SHALL NOT BE RESPONSIBLE FOR THE ACCURACY OR COMPLETENESS OF SCANNED COPIES OF THIS PLAN SHEET.

RIGHT OF WAY LIMITS ARE INDETERMINATE, AND ARE NOT SHOWN. THE CONTRACTOR MUST CONTACT RIGHT OF WAY ENGINEERING AT THE DISTRICT OFFICE FOR CONDITIONS OF USE PRIOR TO COMMENCING WORK.

LEGEND

- EROSION CONTROL (TYPE 1)
- EROSION CONTROL (TYPE 2)
- EROSION CONTROL (TYPE 3)
- EROSION CONTROL (TYPE 4)
- EROSION CONTROL (TYPE 5)
- EROSION CONTROL (TYPE 6)
- EXISTING WETLANDS (ESA)
- FIBER ROLLS
- —xx—TFESA— TEMPORARY FENCE (TYPE ESA)

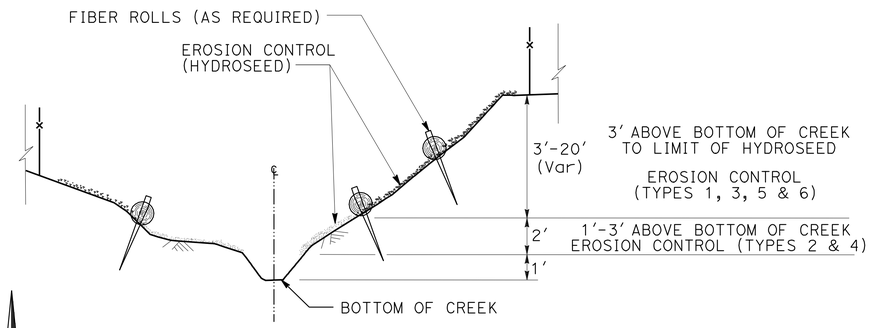

TYPICAL CROSS SECTION
NO SCALE

THIS PLAN ACCURATE FOR EROSION CONTROL WORK ONLY.

EROSION CONTROL PLAN

SCALE: 1''=50'

EC-1

REVISED BY	JE
DATE REVISED	8/30/10
CALCULATED-DESIGNED BY	JENNIFER EGAWA
CHECKED BY	ALEX McDONALD
SENIOR LANDSCAPE ARCHITECT	DAVID W. YAM

STATE OF CALIFORNIA - DEPARTMENT OF TRANSPORTATION
Caltrans®
WATER QUALITY

LAST REVISION 03-07-11
DATE PLOTTED => 08-MAR-2011
TIME PLOTTED => 15:11

Dist	COUNTY	ROUTE	POST MILES TOTAL PROJECT	SHEET No.	TOTAL SHEETS
04	Ala	580	R8.3	9	37

LICENSED LANDSCAPE ARCHITECT

3-7-11
PLANS APPROVAL DATE

LICENSED LANDSCAPE ARCHITECT
JENNIFER EGAWA No. 5056
Signature
7-31-12
Renewal Date
9-1-10
Date
STATE OF CALIFORNIA

THE STATE OF CALIFORNIA OR ITS OFFICERS OR AGENTS SHALL NOT BE RESPONSIBLE FOR THE ACCURACY OR COMPLETENESS OF SCANNED COPIES OF THIS PLAN SHEET.

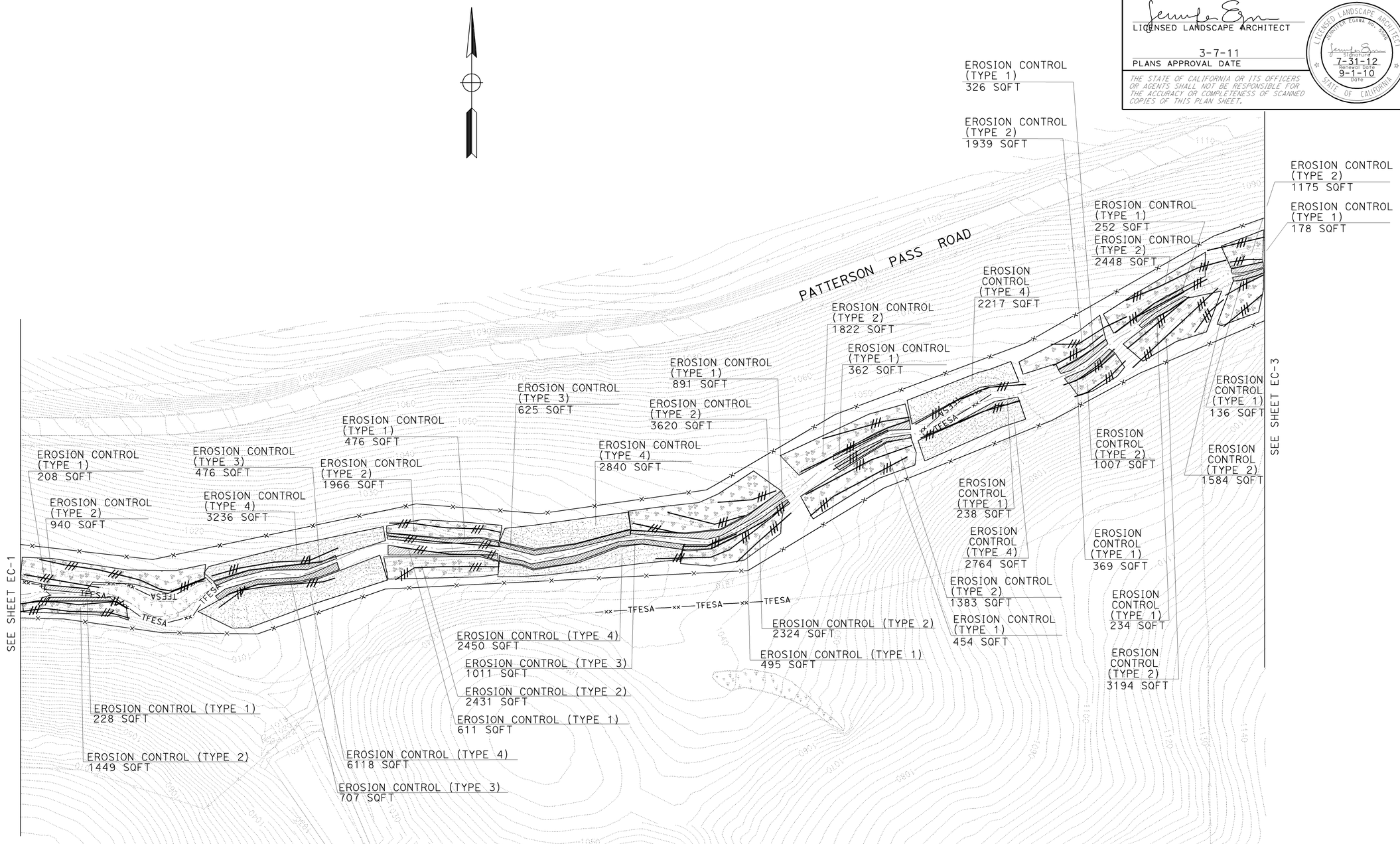

THIS PLAN ACCURATE FOR EROSION CONTROL WORK ONLY.

EROSION CONTROL PLAN

SCALE: 1''=50'

EC-2

STATE OF CALIFORNIA - DEPARTMENT OF TRANSPORTATION
Caltrans® WATER QUALITY

SENIOR LANDSCAPE ARCHITECT: DAVID W. YAM
CALCULATED-DESIGNED BY: JENNIFER EGAWA
CHECKED BY: ALEX McDONALD
REVISED BY: JE
DATE REVISED: 8/30/10

LAST REVISION 03-07-11
DATE PLOTTED => 08-MAR-2011
TIME PLOTTED => 15:00

Dist	COUNTY	ROUTE	POST MILES TOTAL PROJECT	SHEET No.	TOTAL SHEETS
04	Ala	580	R8.3	10	37

LICENSED LANDSCAPE ARCHITECT

3-7-11
PLANS APPROVAL DATE

LICENSED LANDSCAPE ARCHITECT
JENNIFER EGAWA No. 5055
Signature
7-31-12
Renewal Date
9-1-10
Date
STATE OF CALIFORNIA

THE STATE OF CALIFORNIA OR ITS OFFICERS OR AGENTS SHALL NOT BE RESPONSIBLE FOR THE ACCURACY OR COMPLETENESS OF SCANNED COPIES OF THIS PLAN SHEET.

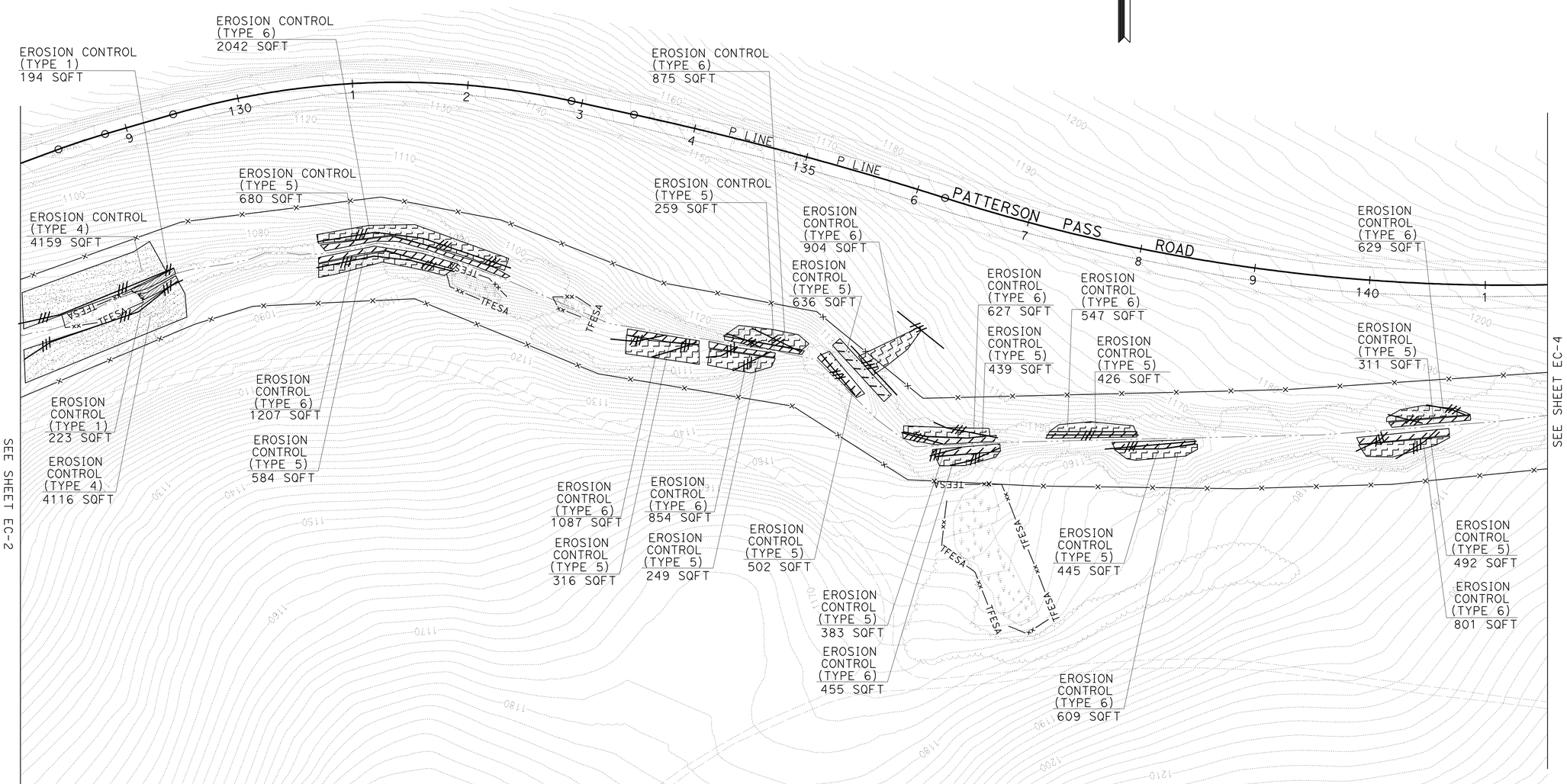

EROSION CONTROL PLAN

SCALE: 1''=50'

EC-3

THIS PLAN ACCURATE FOR EROSION CONTROL WORK ONLY.

REVISED BY	DATE REVISED
JE	8/30/10

JENNIFER EGAWA
ALEX McDONALD
CALCULATED-DESIGNED BY
CHECKED BY
SENIOR LANDSCAPE ARCHITECT
DAVID W. YAM

STATE OF CALIFORNIA - DEPARTMENT OF TRANSPORTATION
Caltrans®
WATER QUALITY

LAST REVISION 03-07-11
DATE PLOTTED => 08-MAR-2011
TIME PLOTTED => 15:12

Dist	COUNTY	ROUTE	POST MILES TOTAL PROJECT	SHEET No.	TOTAL SHEETS
04	Ala	580	R8.3	11	37

LICENSED LANDSCAPE ARCHITECT

3-7-11
PLANS APPROVAL DATE

LICENSED LANDSCAPE ARCHITECT
JENNIFER EGAWA No. 5068
Signature
7-31-12
Renewal Date
9-1-10
Date
STATE OF CALIFORNIA

THE STATE OF CALIFORNIA OR ITS OFFICERS OR AGENTS SHALL NOT BE RESPONSIBLE FOR THE ACCURACY OR COMPLETENESS OF SCANNED COPIES OF THIS PLAN SHEET.

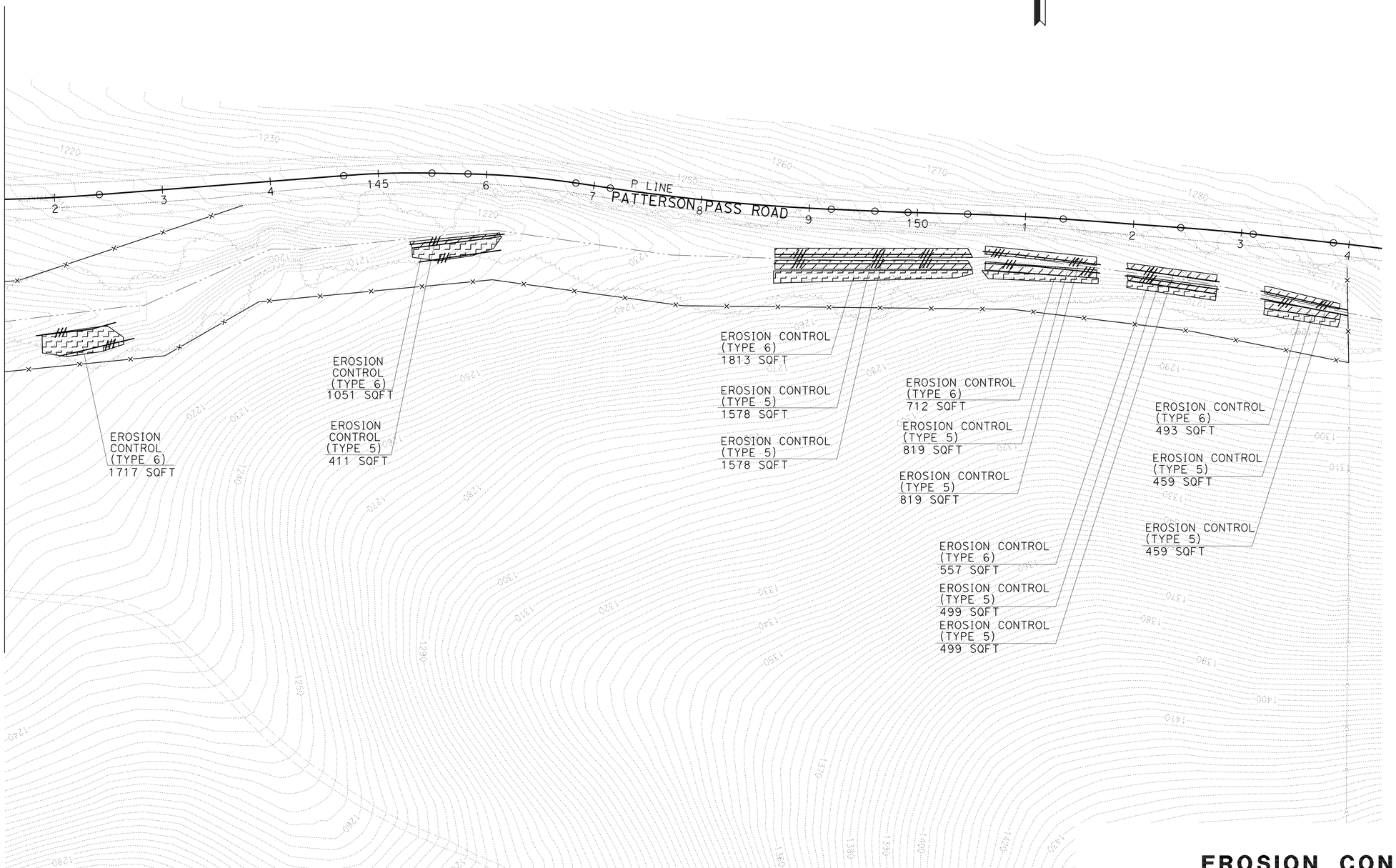

EROSION CONTROL PLAN

SCALE: 1''=50'

EC-4

THIS PLAN ACCURATE FOR EROSION CONTROL WORK ONLY.

REVISED BY	JE
DATE REVISED	8/30/10
CALCULATED-DESIGNED BY	JENNIFER EGAWA
CHECKED BY	ALEX McDONALD
SENIOR LANDSCAPE ARCHITECT	DAVID W. YAM

STATE OF CALIFORNIA - DEPARTMENT OF TRANSPORTATION
Caltrans®
WATER QUALITY

LAST REVISION 03-07-11
DATE PLOTTED => 08-MAR-2011
TIME PLOTTED => 15:12

Dist	COUNTY	ROUTE	POST MILES TOTAL PROJECT	SHEET No.	TOTAL SHEETS
04	Ala	580	R8.3	12	37

LICENSED LANDSCAPE ARCHITECT

3-7-11
PLANS APPROVAL DATE

LICENSED LANDSCAPE ARCHITECT
JENNIFER EGAWA No. 5055
Signature
7-31-12
Renewal Date
9-1-10
Date
STATE OF CALIFORNIA

THE STATE OF CALIFORNIA OR ITS OFFICERS OR AGENTS SHALL NOT BE RESPONSIBLE FOR THE ACCURACY OR COMPLETENESS OF SCANNED COPIES OF THIS PLAN SHEET.

PLANT LIST AND PLANTING SPECIFICATIONS

PLANT GROUP	PLANT No.	SYMBOL	BOTANICAL NAME	COMMON NAME	SIZE	QUANTITY EACH	HOLE SIZE (INCH) Dia	HOLE SIZE (INCH) DEPTH	BASIN TYPE	IRON SULFATE (1)	SOIL AMEND (1)	COMMERCIAL FERTILIZER (1) PLANTING	COMMERCIAL FERTILIZER (1) PLT ESTB	BASIN MULCH (CY)	STAKING	PLANTING LIMITS MINIMUM DISTANCE (Ft) FROM ETW	Pvmt	FENCE	WALL	PAVED DITCH	EARTH DITCH	ON CENTER (Ft)	REMARKS
I ✳	1		AESCULUS CALIFORNICA	CALIFORNIA BUCKEYE	POT (13)	76	24	24	I	--	0.07 CY	1 PKT	--	0.04	--	--	--	10	--	--	10	(4)	TREE (16)
	2		PLATANUS RACEMOSA	CALIFORNIA SYCAMORE	POT (13)	19	24	24	I	--	0.07 CY	1 PKT	--	0.04	--	--	--	10	--	--	10	(4)	TREE (15) (16)
	3		SAMBUCUS MEXICANA	BLUE ELDERBERRY	POT (13)	174	24	24	I	--	0.07 CY	1 PKT	--	0.04	--	--	--	10	--	--	10	(4)	TREE (15) (16)
M ✳	4		ARTEMESIA CALIFORNICA	CALIFORNIA SAGEBRUSH	LINER (5)	401	24	24	I	--	0.07 CY	1 PKT	--	0.04	--	--	--	10	--	--	--	(4)	SHRUB (16)
	5		ARTEMESIA DOUGLASIANA	MUGWORT	LINER (5)	455	(3)		I	--	0.07 CY	1 PKT	--	--	--	--	--	--	--	--	--	(4)	SHRUB (14) (17)
	6		BACCHARIS PILULARIS	COYOTE BRUSH	LINER (5)	323	24	24	I	--	0.07 CY	1 PKT	--	0.04	--	--	--	10	--	--	--	(4)	SHRUB (16)
	7		BACCHARIS SALICIFOLIA	MULEFAT	LINER (5)	340	24	24	I	--	0.07 CY	1 PKT	--	0.04	--	--	--	10	--	--	--	(4)	SHRUB (16)
	8		GRINDELIA CAMPORUM	GIANT GUMPLANT	LINER (5)	43	24	24	I	--	0.07 CY	1 PKT	--	0.04	--	--	--	10	--	--	--	(4)	SHRUB (15) (16)
	9		HETEROMELES ARBUTIFOLIA	TOYON	LINER (5)	128	24	24	I	--	0.07 CY	1 PKT	--	0.04	--	--	--	10	--	--	--	(4)	SHRUB (15) (16)
	10		JUNCUS BALTICUS	BALTIC RUSH	LINER (5)	585	(3)		I	--	0.07 CY	1 PKT	--	--	--	--	--	--	--	--	--	(4)	RUSH (14)
	11		JUNCUS PATENS	COMMON RUSH	LINER (5)	585	(3)		I	--	0.07 CY	1 PKT	--	--	--	--	--	--	--	--	--	(4)	RUSH (14)
	12		JUNCUS XIPHIOIDES	IRISH LEAVED RUSH	LINER (5)	585	(3)		I	--	0.07 CY	1 PKT	--	--	--	--	--	--	--	--	--	(4)	RUSH (14)
	13		ROSA CALIFORNICA	CALIFORNIA ROSE	LINER (5)	543	24	24	I	--	0.07 CY	1 PKT	--	0.04	--	--	--	10	--	--	--	(4)	SHRUB (15) (16)
	14		RUBUS URSIINUS	CALIFORNIA BLACKBERRY	LINER (5)	305	24	24	I	--	0.07 CY	1 PKT	--	0.04	--	--	--	10	--	--	--	(4)	SHRUB (15) (16)
	15		SYMPHORICARPUS ALBUS	SNOWBERRY	LINER (5)	425	24	24	I	--	0.07 CY	1 PKT	--	0.04	--	--	--	10	--	--	--	(4)	SHRUB (14) (15)
W	16		SALIX LAEVIGATA	RED WILLOW	CUTTING (5)	32	(5)		I	--	0.07 CY	1 PKT	--	--	--	--	--	10	--	--	--	(4)	WILLOW (14)
	17		SALIX LASIOLEPIS	ARROYO WILLOW	CUTTING (5)	39	(5)		I	--	0.07 CY	1 PKT	--	--	--	--	--	10	--	--	--	(4)	WILLOW (14)

✳ PLANT SYMBOLS AS SHOWN ON DETAIL FOR PLANTING ZONES (1, 2 & 3)

APPLICABLE WHEN CIRCLED:

(1) - QUANTITIES SHOWN ARE "PER PLANT" UNLESS SHOWN AS SQFT OR SQYD APPLICATION RATES
2 - BASIN MULCH IS INCLUDED WITH MULCH QUANTITIES SHOWN ON PLANTING PLAN
(3) - SUFFICIENT TO RECEIVE ROOT BALL AND COMMERCIAL FERTILIZER AS REQUIRED
(4) - SEE DETAIL
(5) - SEE SPECIAL PROVISIONS
6 - SEE STANDARD SPECIFICATIONS
7 - AS SHOWN ON PLANS
8 - UNLESS OTHERWISE SHOWN ON PLANS
9 - FOLIAGE PROTECTOR REQUIRED
10 - ROOT PROTECTOR REQUIRED
11 - ROOT BARRIER REQUIRED
12 - STATE-FURNISHED
(13) - POT SIZE = 4" X 4" X 14" Deep
(14) - LOWER CREEK ZONE
(15) - MIDDLE CREEK ZONE
(16) - UPPER CREEK ZONE
(17) - PLANT IN AREAS THAT RECEIVE PART SUN TO FULL SUN EXPOSURE

NOTE:
UNDERLINED PORTIONS OF BOTANICAL NAME INDICATE ABBREVIATIONS USED ON PLANTING PLANS.

PLANT LIST
PL-1

REVISED BY	DATE REVISED
JE	8/30/10

JENNIFER EGAWA — ALEX McDONALD
CALCULATED-DESIGNED BY — CHECKED BY
SENIOR LANDSCAPE ARCHITECT — DAVID W. YAM

STATE OF CALIFORNIA - DEPARTMENT OF TRANSPORTATION
Caltrans® WATER QUALITY

LAST REVISION 03-07-11 | DATE PLOTTED => 08-MAR-2011 | TIME PLOTTED => 15:12

Dist	COUNTY	ROUTE	POST MILES TOTAL PROJECT	SHEET No.	TOTAL SHEETS
04	Ala	580	R8.3	13	37

LICENSED LANDSCAPE ARCHITECT

3-7-11
PLANS APPROVAL DATE

LICENSED LANDSCAPE ARCHITECT
JENNIFER EGAWA No. 5068
Signature
7-31-12
Renewal Date
9-1-10
Date
STATE OF CALIFORNIA

THE STATE OF CALIFORNIA OR ITS OFFICERS OR AGENTS SHALL NOT BE RESPONSIBLE FOR THE ACCURACY OR COMPLETENESS OF SCANNED COPIES OF THIS PLAN SHEET.

RIGHT OF WAY LIMITS ARE INDETERMINATE, AND ARE NOT SHOWN. THE CONTRACTOR MUST CONTACT RIGHT OF WAY ENGINEERING AT THE DISTRICT OFFICE FOR CONDITIONS OF USE PRIOR TO COMMENCING WORK.

REMOVE TREE (ROADSIDE CLEARING)

STA	REMOVE TREE (N)	SPECIES	DBH
	EA		
117+68.87	1	NICOTIANA GLAUCA	10''
120+96.09	1	NICOTIANA GLAUCA	8''
121+03.96	1	NICOTIANA GLAUCA	8''
TOTAL	3		

(N) - NOT A SEPARATE PAY ITEM

LEGEND

- PLANTING ZONE 1 (SEE DETAIL 'A', LD-1)
- PLANTING ZONE 2 (SEE DETAIL 'B', LD-1)
- PLANTING ZONE 3 (SEE DETAIL 'C', LD-1)
- ROADSIDE CLEARING LIMITS
- EXISTING WETLANDS (ESA)
- —xx—TFESA— TEMPORARY FENCE (TYPE ESA)
- REMOVE TREE (ROADSIDE CLEARING)

ABBREVIATIONS

DBH DIAMETER AT BREAST HEIGHT

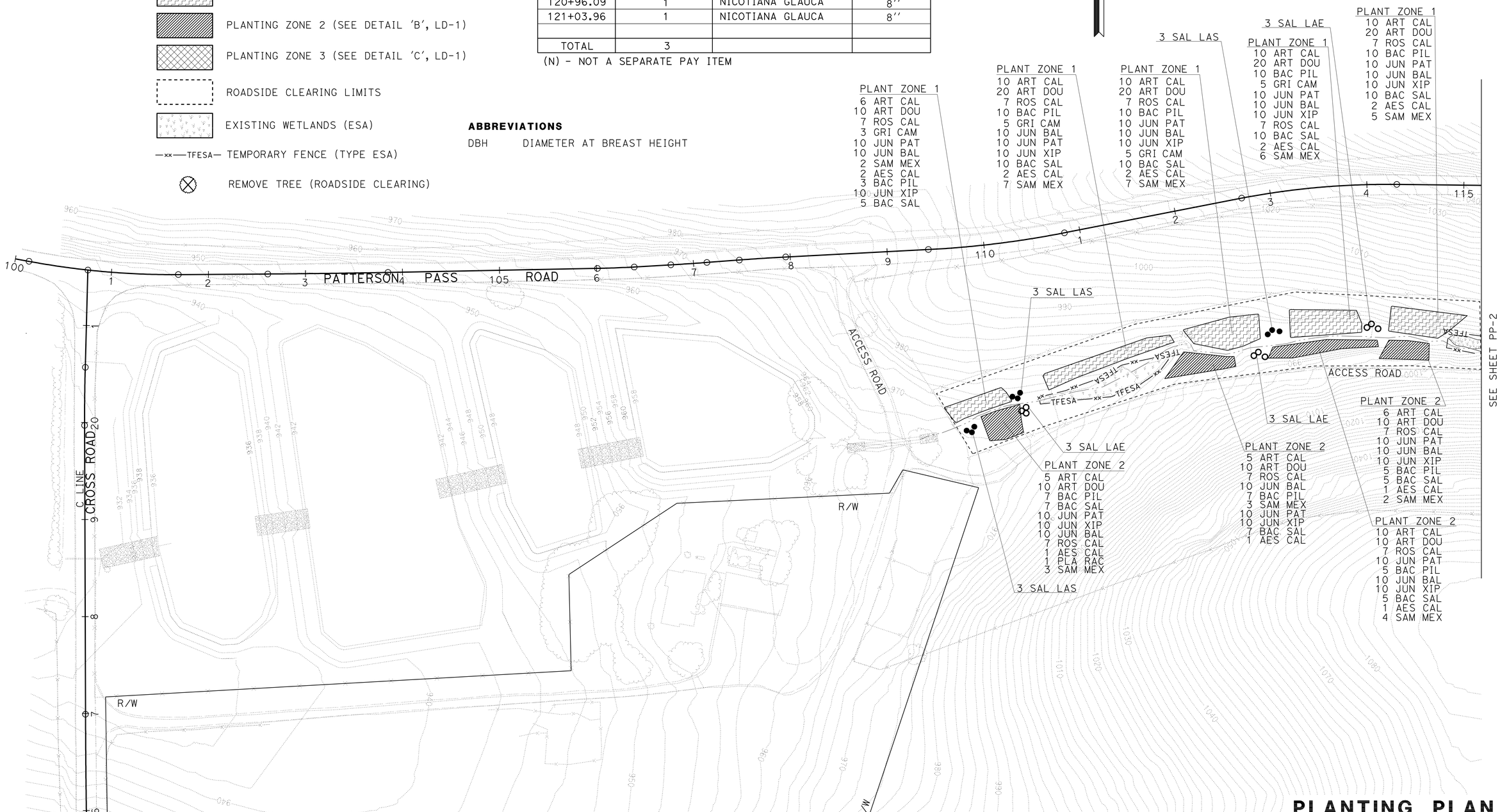

THIS PLAN ACCURATE FOR HIGHWAY PLANTING WORK ONLY.

PLANTING PLAN

SCALE: 1"=50'

PP-1

REVISED BY	DATE REVISED
JE	2/21/11

JENNIFER EGAWA — ALEX McDONALD — CALCULATED-DESIGNED BY — CHECKED BY

SENIOR LANDSCAPE ARCHITECT — DAVID W. YAM

STATE OF CALIFORNIA - DEPARTMENT OF TRANSPORTATION — Caltrans — WATER QUALITY

LAST REVISION 03-07-11 — DATE PLOTTED => 08-MAR-2011 — TIME PLOTTED => 15:12

Dist	COUNTY	ROUTE	POST MILES TOTAL PROJECT	SHEET No.	TOTAL SHEETS
04	Ala	580	R8.3	14	37

LICENSED LANDSCAPE ARCHITECT

3-7-11
PLANS APPROVAL DATE

LICENSED LANDSCAPE ARCHITECT
JENNIFER EGAWA No. 5055
Signature
7-31-12
Renewal Date
9-1-10
Date
STATE OF CALIFORNIA

THE STATE OF CALIFORNIA OR ITS OFFICERS OR AGENTS SHALL NOT BE RESPONSIBLE FOR THE ACCURACY OR COMPLETENESS OF SCANNED COPIES OF THIS PLAN SHEET.

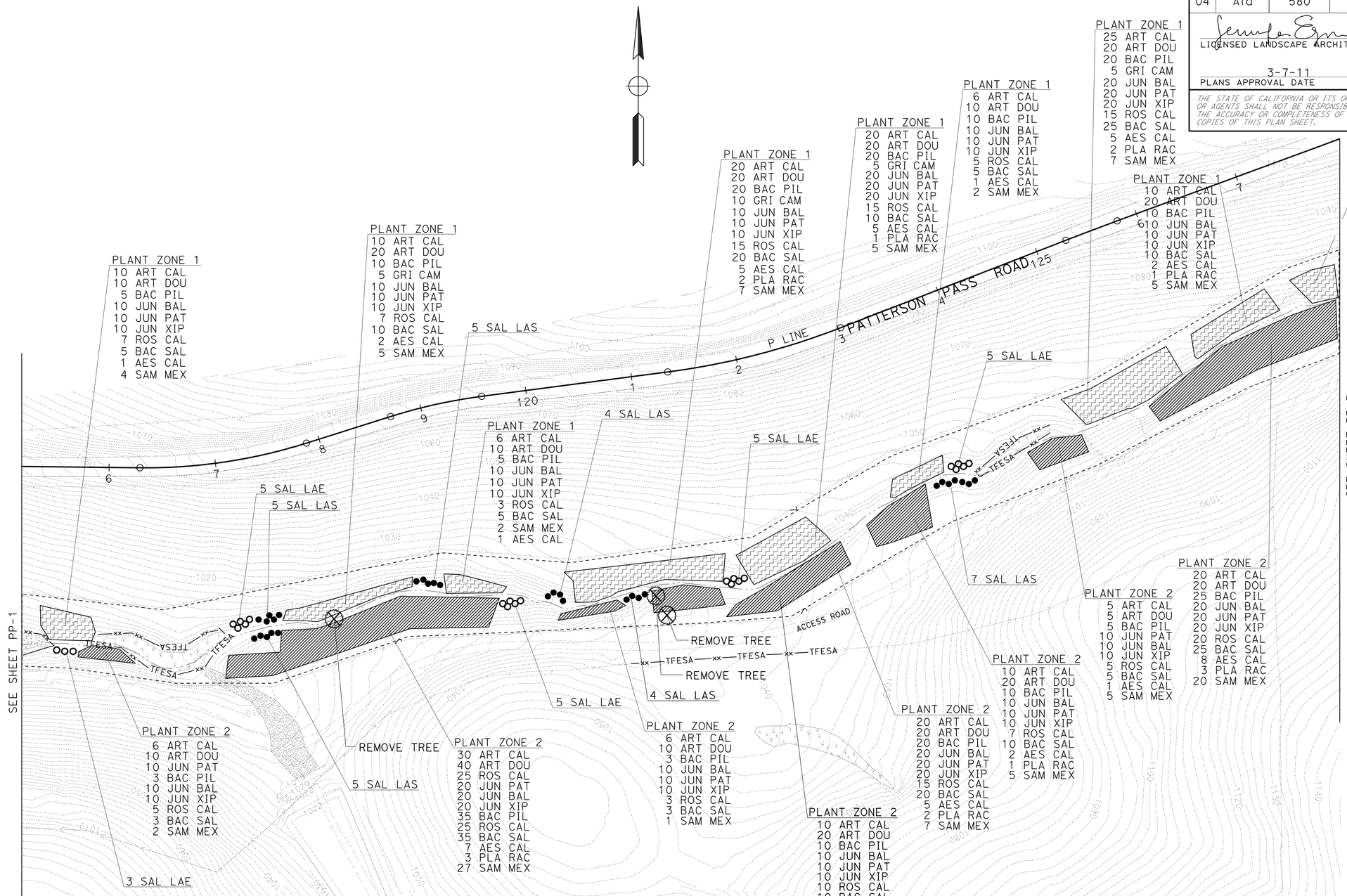

THIS PLAN ACCURATE FOR HIGHWAY PLANTING WORK ONLY.

PLANTING PLAN

SCALE: 1"=50'

PP-2

REVISED BY	JE
DATE REVISED	8/30/10
CALCULATED-DESIGNED BY	JENNIFER EGAWA
CHECKED BY	ALEX McDONALD
SENIOR LANDSCAPE ARCHITECT	DAVID W. YAM

STATE OF CALIFORNIA - DEPARTMENT OF TRANSPORTATION
Caltrans®
WATER QUALITY

LAST REVISION 03-07-11
DATE PLOTTED => 08-MAR-2011
TIME PLOTTED => 15:13

Dist	COUNTY	ROUTE	POST MILES TOTAL PROJECT	SHEET No.	TOTAL SHEETS
04	Ala	580	R8.3	15	37

LICENSED LANDSCAPE ARCHITECT

3-7-11
PLANS APPROVAL DATE

LICENSED LANDSCAPE ARCHITECT
JENNIFER EGAWA No. 5055
Signature
7-31-12
Renewal Date
9-1-10
Date
STATE OF CALIFORNIA

THE STATE OF CALIFORNIA OR ITS OFFICERS OR AGENTS SHALL NOT BE RESPONSIBLE FOR THE ACCURACY OR COMPLETENESS OF SCANNED COPIES OF THIS PLAN SHEET.

THIS PLAN ACCURATE FOR HIGHWAY PLANTING WORK ONLY.

PLANTING PLAN

SCALE: 1"=50'

PP-3

REVISED BY	DATE REVISED
JE	8/30/10

JENNIFER EGAWA
ALEX McDONALD

CALCULATED-DESIGNED BY
CHECKED BY

SENIOR LANDSCAPE ARCHITECT
DAVID W. YAM

STATE OF CALIFORNIA - DEPARTMENT OF TRANSPORTATION
Caltrans®
WATER QUALITY

LAST REVISION 03-07-11
DATE PLOTTED => 08-MAR-2011
TIME PLOTTED => 15:13

Dist	COUNTY	ROUTE	POST MILES TOTAL PROJECT	SHEET No.	TOTAL SHEETS
04	Ala	580	R8.3	16	37

LICENSED LANDSCAPE ARCHITECT

3-7-11
PLANS APPROVAL DATE

LICENSED LANDSCAPE ARCHITECT
JENNIFER EGAWA No. 5068
Signature
7-31-12
Renewal Date
9-1-10
Date
STATE OF CALIFORNIA

THE STATE OF CALIFORNIA OR ITS OFFICERS OR AGENTS SHALL NOT BE RESPONSIBLE FOR THE ACCURACY OR COMPLETENESS OF SCANNED COPIES OF THIS PLAN SHEET.

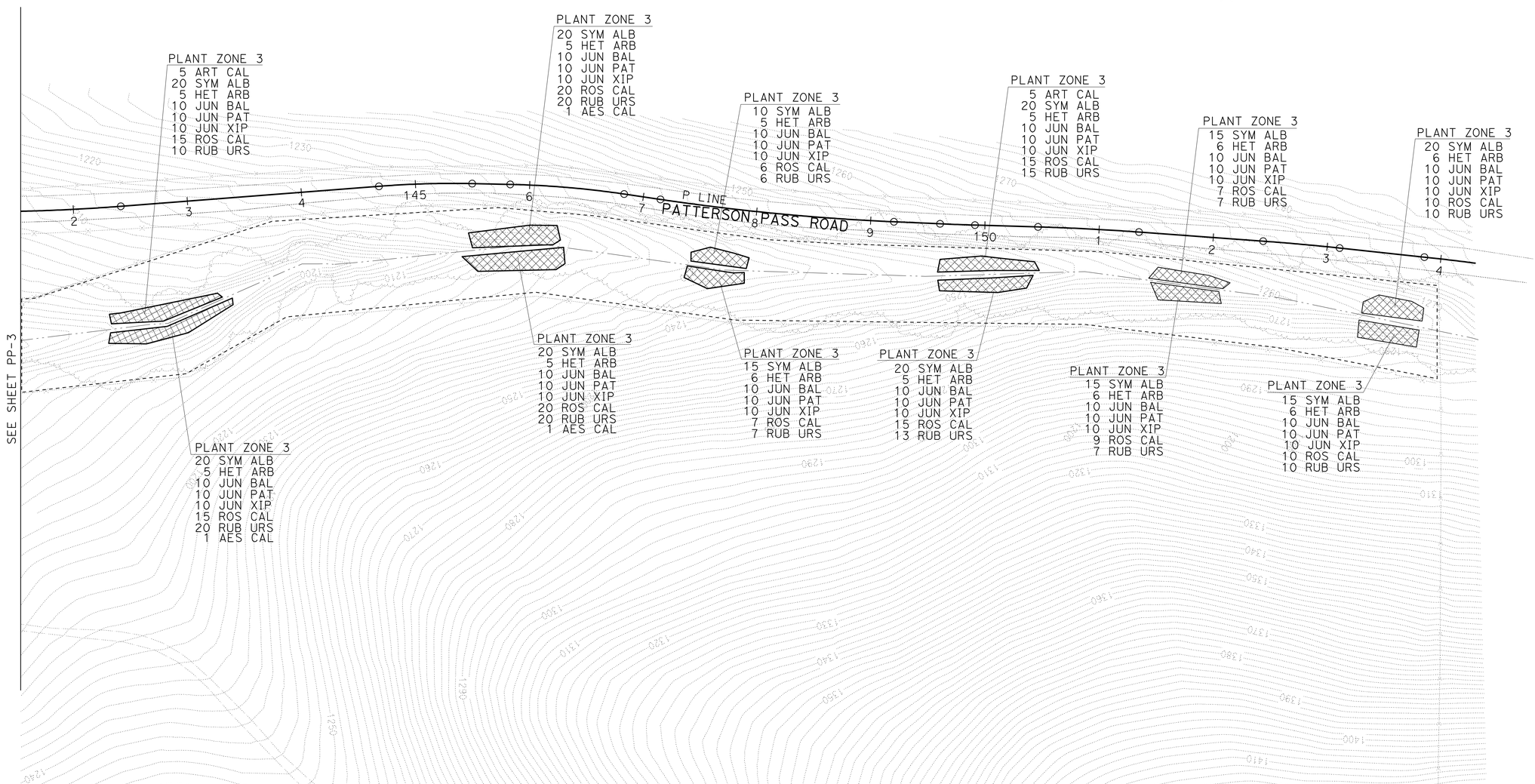

THIS PLAN ACCURATE FOR HIGHWAY PLANTING WORK ONLY.

PLANTING PLAN

SCALE: 1"=50'

PP-4

REVISED BY	JE
DATE REVISED	8/30/10
CALCULATED-DESIGNED BY	JENNIFER EGAWA
CHECKED BY	ALEX McDONALD
SENIOR LANDSCAPE ARCHITECT	DAVID W. YAM

STATE OF CALIFORNIA - DEPARTMENT OF TRANSPORTATION
Caltrans®
WATER QUALITY

LAST REVISION 03-07-11
DATE PLOTTED => 08-MAR-2011
TIME PLOTTED => 15:14

Dist	COUNTY	ROUTE	POST MILES TOTAL PROJECT	SHEET No.	TOTAL SHEETS
04	Ala	580	R8.3	17	37

LICENSED LANDSCAPE ARCHITECT

3-7-11
PLANS APPROVAL DATE

LICENSED LANDSCAPE ARCHITECT
JENNIFER EGAWA No. 5055
Signature
7-31-12
Renewal Date
9-1-10
Date
STATE OF CALIFORNIA

THE STATE OF CALIFORNIA OR ITS OFFICERS OR AGENTS SHALL NOT BE RESPONSIBLE FOR THE ACCURACY OR COMPLETENESS OF SCANNED COPIES OF THIS PLAN SHEET.

RIGHT OF WAY LIMITS ARE INDETERMINATE, AND ARE NOT SHOWN. THE CONTRACTOR MUST CONTACT RIGHT OF WAY ENGINEERING AT THE DISTRICT OFFICE FOR CONDITIONS OF USE PRIOR TO COMMENCING WORK.

LEGEND:

2" ULTRAVIOLET RESISTANT (UVR) PLASTIC PIPE (SCH 40) (SUPPLY LINE)

TIME RELEASE WATER ASSEMBLY ZONE

ABBREVIATION:

TRWA TIME RELEASE WATER ASSEMBLY ZONE

NOTES:

1. WATER IS NOT AVAILABLE FOR THE IRRIGATION SYSTEM. THE CONTRACTOR SHALL MAKE ALL ARRANGEMENTS FOR FURNISHING AND APPLYING WATER IN CONFORMANCE WITH SECTION 20-4.06 "WATERING" OF THE STANDARD SPECIFICATIONS.
2. QUICK COUPLING VALVES (QCV) SHALL BE INSTALLED ON A SWING JOINT (TYPE I), WITH A GSP RISER (TYPE II) AND A RISER SUPPORT.
3. IRRIGATION FACILITIES AND PIPE SHALL BE REMOVED AT THE CONTRACT ACCEPTANCE, IN CONFORMANCE WITH "PLANT ESTABLISHMENT WORK" OF THE SPECIAL PROVISIONS.
4. PLASTIC PIPE SUPPLY LINE DOWNSTREAM FROM CAM COUPLER ASSEMBLIES MUST BE ULTRAVIOLET-RESISTANT PLASTIC PIPE INSTALLED ON GRADE.

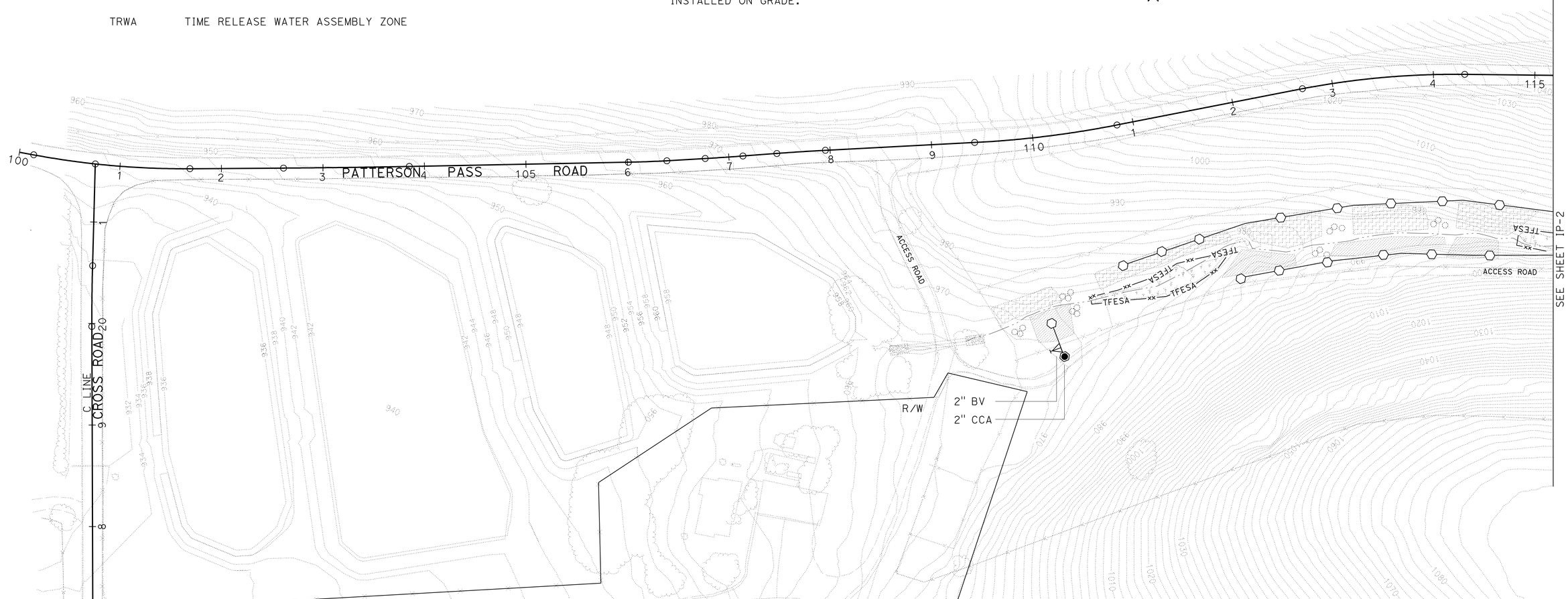

THIS PLAN ACCURATE FOR IRRIGATION WORK ONLY.

IRRIGATION PLAN

SCALE: 1"=50'

IP-1

STATE OF CALIFORNIA - DEPARTMENT OF TRANSPORTATION
Caltrans® WATER QUALITY

SENIOR LANDSCAPE ARCHITECT: DAVID W. YAM

CALCULATED-DESIGNED BY: JENNIFER EGAWA
CHECKED BY: ALEX McDONALD

REVISED BY: JE
DATE REVISED: 2/04/11

LAST REVISION: 03-07-11
DATE PLOTTED => 08-MAR-2011
TIME PLOTTED => 15:14

Dist	COUNTY	ROUTE	POST MILES TOTAL PROJECT	SHEET No.	TOTAL SHEETS
04	Ala	580	R8.3	18	37

LICENSED LANDSCAPE ARCHITECT

3-7-11
PLANS APPROVAL DATE

LICENSED LANDSCAPE ARCHITECT
JENNIFER EGAWA No. 5055
Signature
7-31-12
Renewal Date
9-1-10
Date
STATE OF CALIFORNIA

THE STATE OF CALIFORNIA OR ITS OFFICERS OR AGENTS SHALL NOT BE RESPONSIBLE FOR THE ACCURACY OR COMPLETENESS OF SCANNED COPIES OF THIS PLAN SHEET.

THIS PLAN ACCURATE FOR IRRIGATION WORK ONLY.

IRRIGATION PLAN

SCALE: 1"=50'

IP-2

CALCULATED-DESIGNED BY	JENNIFER EGAWA
CHECKED BY	ALEX McDONALD
REVISED BY	JE
DATE REVISED	8/30/10
SENIOR LANDSCAPE ARCHITECT	DAVID W. YAM

STATE OF CALIFORNIA - DEPARTMENT OF TRANSPORTATION
Caltrans®
WATER QUALITY

LAST REVISION 03-07-11
DATE PLOTTED => 08-MAR-2011
TIME PLOTTED => 15:14

Dist	COUNTY	ROUTE	POST MILES TOTAL PROJECT	SHEET No.	TOTAL SHEETS
04	Ala	580	R8.3	19	37

LICENSED LANDSCAPE ARCHITECT

3-7-11
PLANS APPROVAL DATE

LICENSED LANDSCAPE ARCHITECT
JENNIFER EGAWA No. 5055
Signature
7-31-12
Renewal Date
9-1-10
Date
STATE OF CALIFORNIA

THE STATE OF CALIFORNIA OR ITS OFFICERS OR AGENTS SHALL NOT BE RESPONSIBLE FOR THE ACCURACY OR COMPLETENESS OF SCANNED COPIES OF THIS PLAN SHEET.

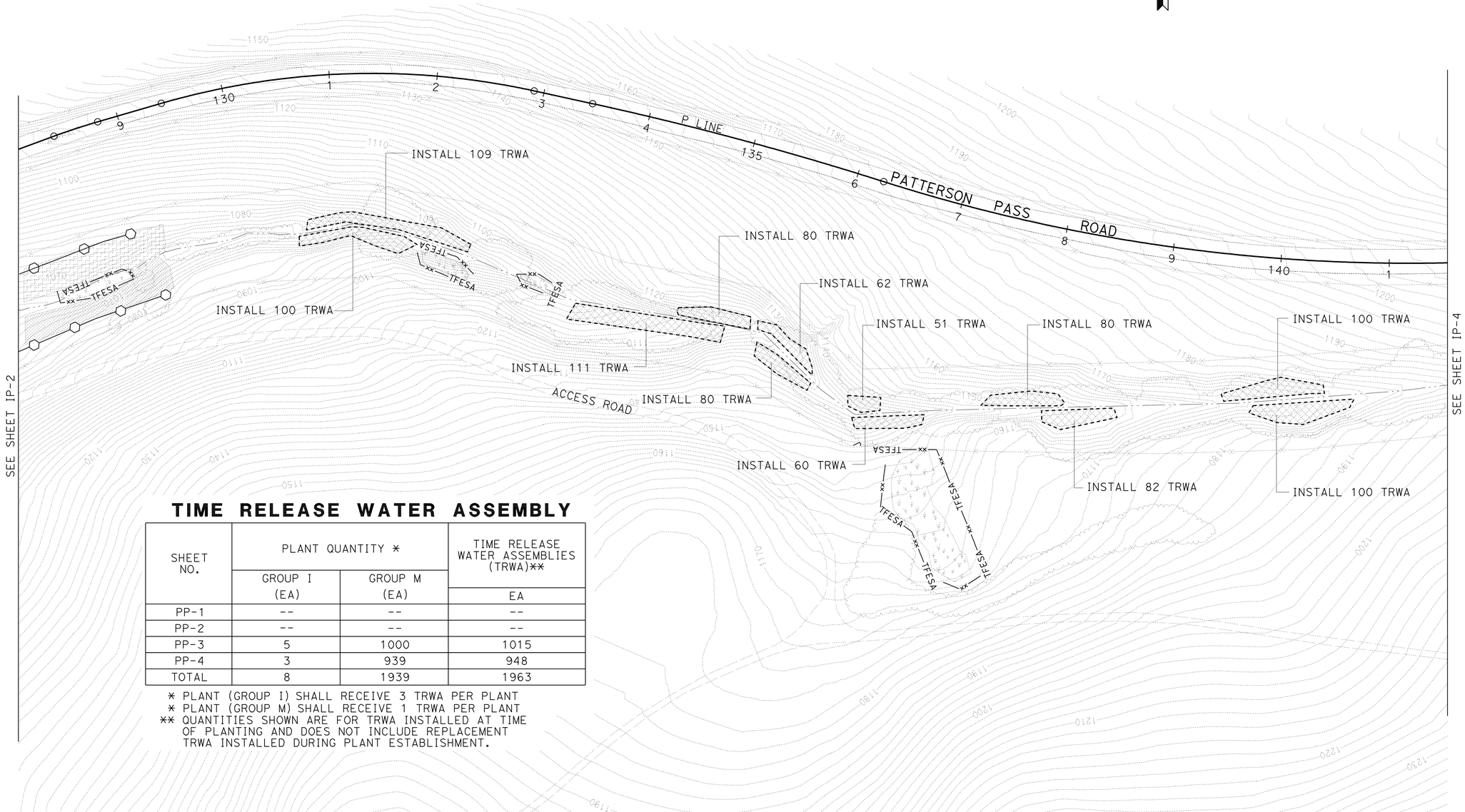

TIME RELEASE WATER ASSEMBLY

SHEET NO.	PLANT QUANTITY *		TIME RELEASE WATER ASSEMBLIES (TRWA)**
	GROUP I (EA)	GROUP M (EA)	EA
PP-1	--	--	--
PP-2	--	--	--
PP-3	5	1000	1015
PP-4	3	939	948
TOTAL	8	1939	1963

* PLANT (GROUP I) SHALL RECEIVE 3 TRWA PER PLANT
* PLANT (GROUP M) SHALL RECEIVE 1 TRWA PER PLANT
** QUANTITIES SHOWN ARE FOR TRWA INSTALLED AT TIME OF PLANTING AND DOES NOT INCLUDE REPLACEMENT TRWA INSTALLED DURING PLANT ESTABLISHMENT.

THIS PLAN ACCURATE FOR IRRIGATION WORK ONLY.

IRRIGATION PLAN

SCALE: 1"=50'

IP-3

REVISED BY	JE
DATE REVISED	8/30/10
CALCULATED-DESIGNED BY	JENNIFER EGAWA
CHECKED BY	ALEX McDONALD
SENIOR LANDSCAPE ARCHITECT	DAVID W. YAM

STATE OF CALIFORNIA - DEPARTMENT OF TRANSPORTATION
Caltrans®
WATER QUALITY

LAST REVISION 03-07-11
DATE PLOTTED => 08-MAR-2011
TIME PLOTTED => 15:15

Dist	COUNTY	ROUTE	POST MILES TOTAL PROJECT	SHEET No.	TOTAL SHEETS
04	Ala	580	R8.3	20	37

LICENSED LANDSCAPE ARCHITECT

3-7-11
PLANS APPROVAL DATE

LICENSED LANDSCAPE ARCHITECT
JENNIFER EGAWA No. 5055
Signature
7-31-12
Renewal Date
9-1-10
Date
STATE OF CALIFORNIA

THE STATE OF CALIFORNIA OR ITS OFFICERS OR AGENTS SHALL NOT BE RESPONSIBLE FOR THE ACCURACY OR COMPLETENESS OF SCANNED COPIES OF THIS PLAN SHEET.

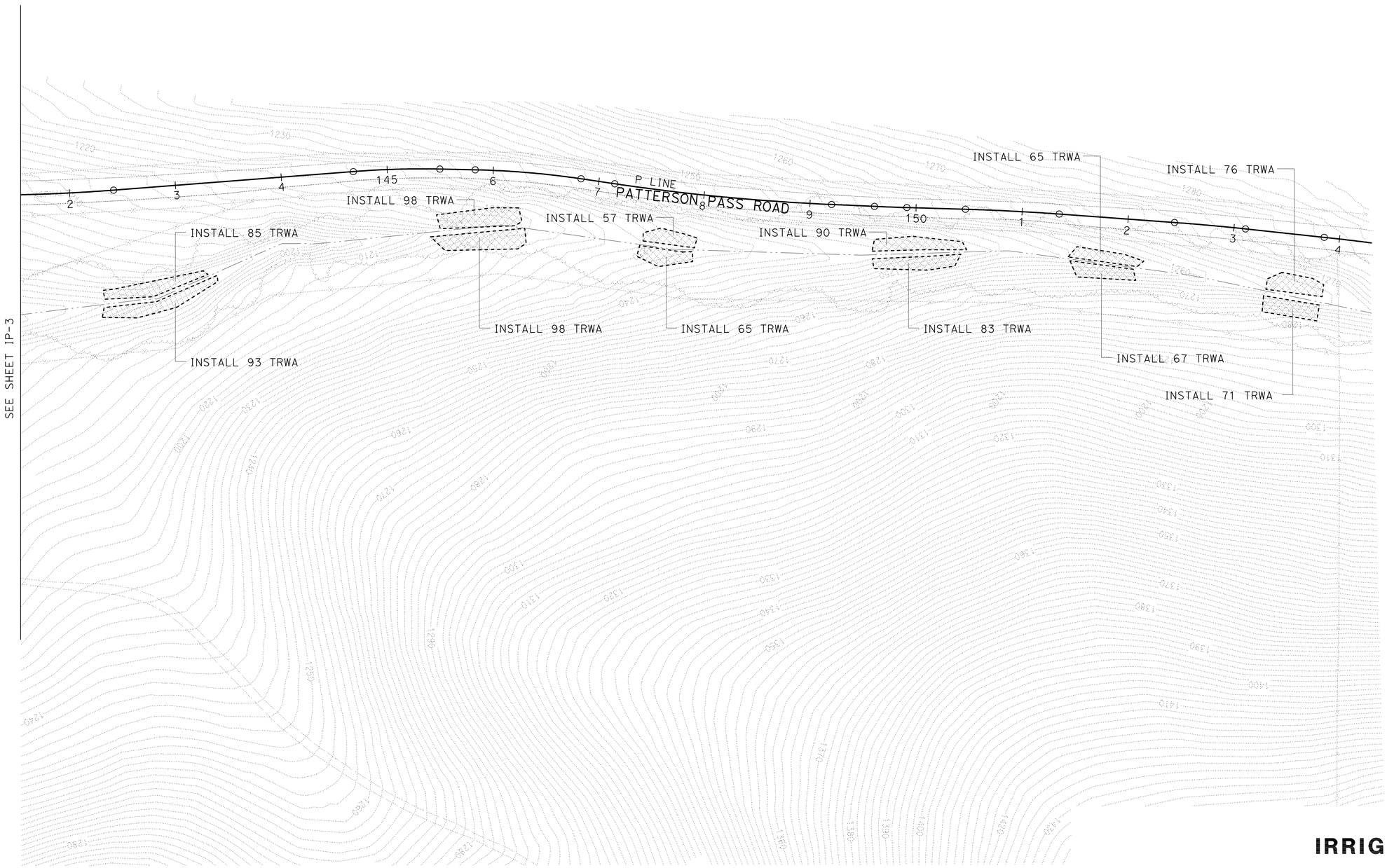

THIS PLAN ACCURATE FOR IRRIGATION WORK ONLY.

IRRIGATION PLAN

SCALE: 1"=50'

IP-4

STATE OF CALIFORNIA - DEPARTMENT OF TRANSPORTATION
Caltrans®
WATER QUALITY

SENIOR LANDSCAPE ARCHITECT: DAVID W. YAM

CALCULATED-DESIGNED BY: JENNIFER EGAWA
CHECKED BY: ALEX McDONALD

REVISED BY: JE
DATE REVISED: 8/30/10

LAST REVISION 03-07-11
DATE PLOTTED => 08-MAR-2011
TIME PLOTTED => 15:15

Dist	COUNTY	ROUTE	POST MILES TOTAL PROJECT	SHEET No.	TOTAL SHEETS
04	Ala	580	R8.3	21	37

LICENSED LANDSCAPE ARCHITECT

3-7-11
PLANS APPROVAL DATE

LICENSED LANDSCAPE ARCHITECT
JENNIFER EGAWA No. 5068
Signature
7-31-12
Renewal Date
9-1-10
Date
STATE OF CALIFORNIA

THE STATE OF CALIFORNIA OR ITS OFFICERS OR AGENTS SHALL NOT BE RESPONSIBLE FOR THE ACCURACY OR COMPLETENESS OF SCANNED COPIES OF THIS PLAN SHEET.

NOTE:
PLANT ZONES SHOWN FOR RELATIVE MINIMUM SPACING AND PLACEMENT ALONG CREEK BANK. PLANT QUANTITIES FOR EACH ZONE ARE SHOWN ON PLANS.

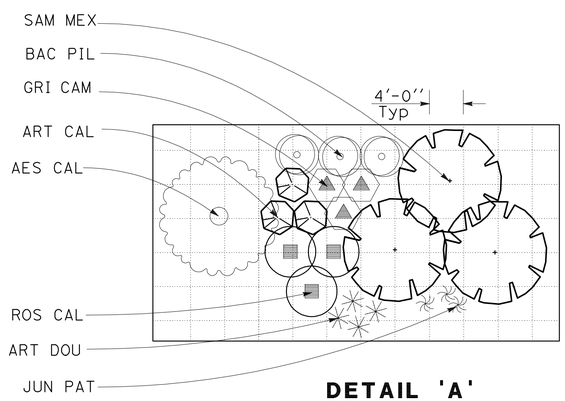

DETAIL 'A'
(PLANTING ZONE 1)

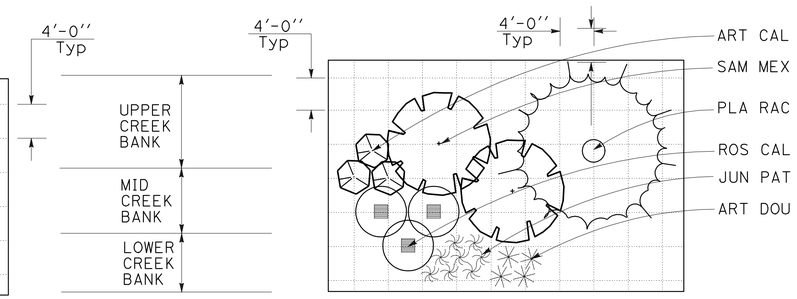

DETAIL 'B'
(PLANTING ZONE 2)

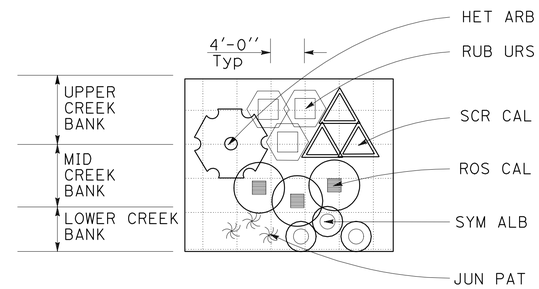

DETAIL 'C'
(PLANTING ZONE 3)

TYPICAL PLANT LAYOUT AND SPACING

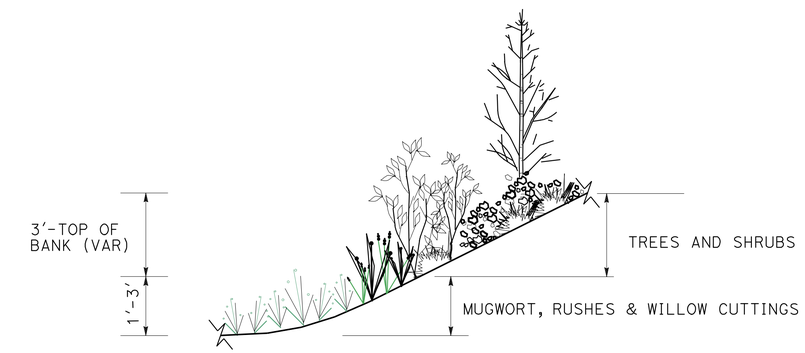

TYPICAL SECTION

TYPICAL PLANTING ZONE

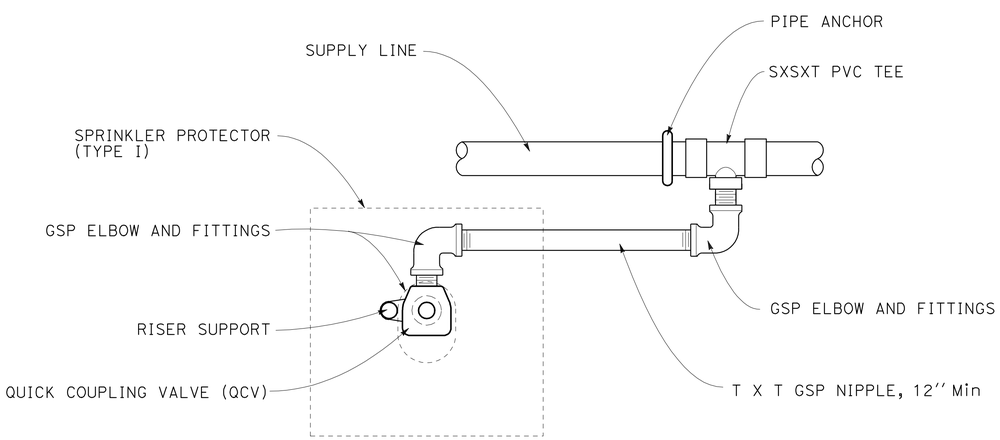

PLAN

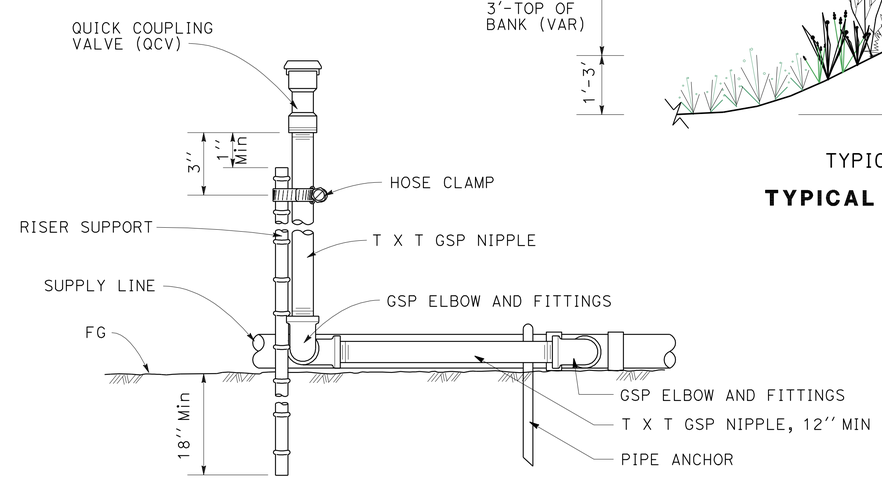

ELEVATION

QUICK COUPLING VALVE ON GRADE

LANDSCAPE DETAILS

NO SCALE

LD-1

STATE OF CALIFORNIA - DEPARTMENT OF TRANSPORTATION
Caltrans® **WATER QUALITY**

SENIOR LANDSCAPE ARCHITECT: DAVID W. YAM
CALCULATED-DESIGNED BY: JENNIFER EGAWA
CHECKED BY: ALEX McDONALD
REVISED BY: JE
DATE REVISED: 8/30/10

LAST REVISION 03-07-11
DATE PLOTTED => 08-MAR-2011
TIME PLOTTED => 15:15

Dist	COUNTY	ROUTE	POST MILES TOTAL PROJECT	SHEET No.	TOTAL SHEETS
04	Ala	580	R8.3	22	37

LICENSED LANDSCAPE ARCHITECT

3-7-11
PLANS APPROVAL DATE

LICENSED LANDSCAPE ARCHITECT
JENNIFER EGAWA No. 5068
Signature
7-31-12
Renewal Date
9-1-10
Date
STATE OF CALIFORNIA

THE STATE OF CALIFORNIA OR ITS OFFICERS OR AGENTS SHALL NOT BE RESPONSIBLE FOR THE ACCURACY OR COMPLETENESS OF SCANNED COPIES OF THIS PLAN SHEET.

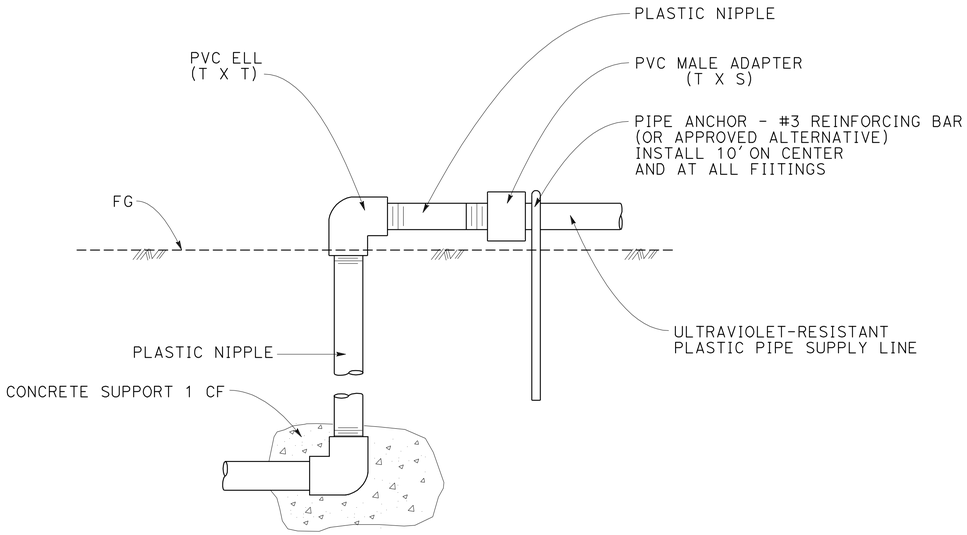

ELEVATION

PIPE ON GRADE TRANSITION

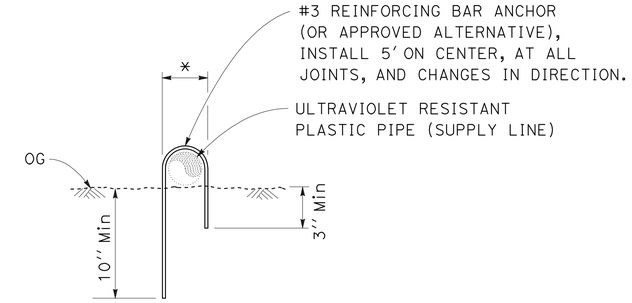

SECTION

PIPE ANCHOR FOR ULTRAVIOLET RESISTANT PLASTIC PIPE

* 1'' GREATER THAN OUTSIDE PIPE DIAMETER

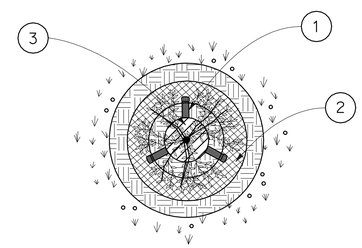

PLAN

1. EVENLY SPACED TIME RELEASE WATER ASSEMBLY, TYPICAL
2. MULCH LAYER IN BASIN W/ WATER WELL
3. ROOT BALL

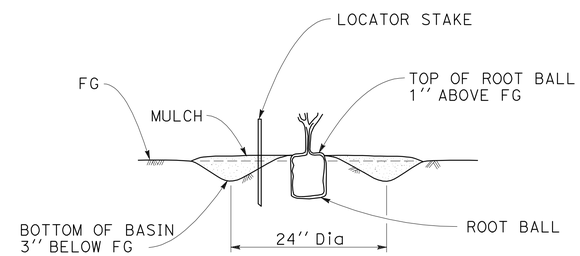

SECTION

(FLAT AREA)

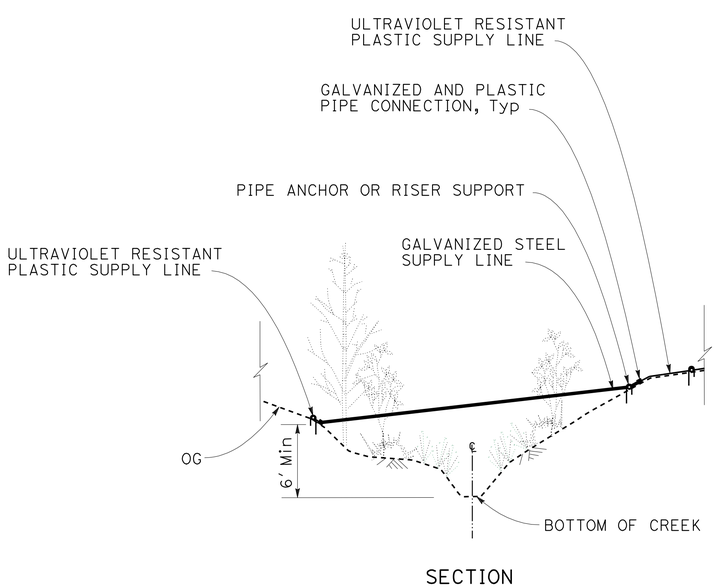

SECTION

IRRIGATION SUPPLY LINE CROSSING CREEK

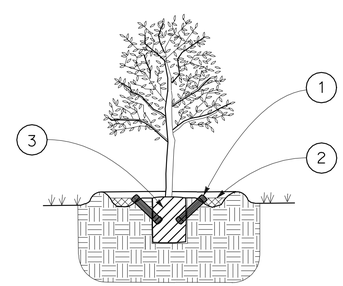

SECTION

TIME RELEASE WATER ASSEMBLY

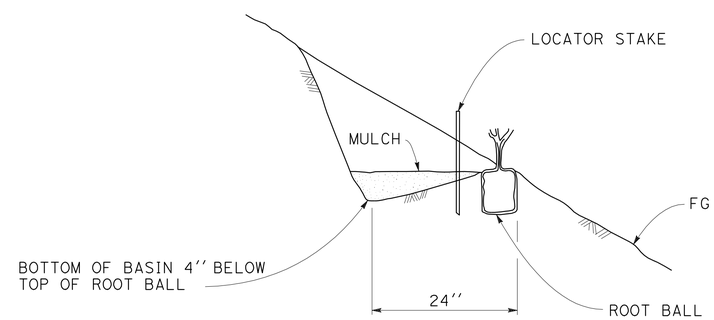

SECTION

(SLOPE AREA)

BASIN TYPE 1

LANDSCAPE DETAILS

NO SCALE

LD-2

REVISED BY	JE
DATE REVISED	8/30/10
CALCULATED-DESIGNED BY	JENNIFER EGAWA
CHECKED BY	ALEX McDONALD
SENIOR LANDSCAPE ARCHITECT	DAVID W. YAM

STATE OF CALIFORNIA - DEPARTMENT OF TRANSPORTATION
Caltrans® WATER QUALITY

LAST REVISION 03-07-11 | DATE PLOTTED => 08-MAR-2011 | TIME PLOTTED => 15:15

Dist	COUNTY	ROUTE	POST MILES TOTAL PROJECT	SHEET No.	TOTAL SHEETS
04	Ala	580	R8.3	23	37

LICENSED LANDSCAPE ARCHITECT

3-7-11
PLANS APPROVAL DATE

LICENSED LANDSCAPE ARCHITECT
JENNIFER EGAWA No. 5088
Signature
7-31-12
Renewal Date
9-1-10
Date
STATE OF CALIFORNIA

THE STATE OF CALIFORNIA OR ITS OFFICERS OR AGENTS SHALL NOT BE RESPONSIBLE FOR THE ACCURACY OR COMPLETENESS OF SCANNED COPIES OF THIS PLAN SHEET.

SUBTOTALS PER PLAN SHEET ON MAIN SUPPLY SIDE OF CONTROL VALVE

DESCRIPTION			UNIT	SHEET NUMBER IP-1	IP-2	IP-3	IP-4	SUBTOTALS
CCA		2''	EA	1	2	-	-	3
CCA		ENCLOSURE						
BOOSTER PUMP								
IRRIGATION CONTROLLER		STATION						
IRRIGATION CONTROLLER		STATION						
IRRIGATION CONTROLLER		STATION						
IRRIGATION CONTROLLER	CEC	SINGLE						
IRRIGATION CONTROLLER	CEC	DOUBLE						
VALVES AND ASSEMBLIES	BV	2''	EA	1	4	-	-	5
VALVES AND ASSEMBLIES	RCV							
VALVES AND ASSEMBLIES	GV							
VALVES AND ASSEMBLIES	QCV	1''	EA	15	43	7	-	65
VALVES AND ASSEMBLIES	FV							
VALVES AND ASSEMBLIES	FAU							
CONDUIT	CSP							
CONDUIT	WSP							
UVR PLASTIC PIPE SUPPLY LINE	SCH 40	2''	LF	770	2508	250	--	3528
UVR PLASTIC PIPE SUPPLY LINE	PR 315							
GSP		2''	LF	--	72	--	--	
DIP								

TOTAL QUANTITIES

TOTALS	UNIT	DESCRIPTION	
3	EA	2''	CCA
		ENCLOSURE	CCA
		BOOSTER PUMP	
		STATION	IRRIGATION CONTROLLER
		STATION	IRRIGATION CONTROLLER
		STATION	IRRIGATION CONTROLLER
		SINGLE	CEC IRRIGATION CONTROLLER
		DOUBLE	CEC IRRIGATION CONTROLLER
5	EA	2''	BV VALVES AND ASSEMBLIES
			RCV VALVES AND ASSEMBLIES
			GV VALVES AND ASSEMBLIES
65	EA	1''	QCV VALVES AND ASSEMBLIES
			FV VALVES AND ASSEMBLIES
			FAU VALVES AND ASSEMBLIES
			CSP CONDUIT
			WSP CONDUIT
3528	LF	2''	SCH 40 UVR PLASTIC PIPE SUPPLY LINE
			PR 315 UVR PLASTIC PIPE SUPPLY LINE
72	LF	2''	GSP
			DIP
			SPRINKLER TYPE

IRRIGATION QUANTITIES

IQ-1

STATE OF CALIFORNIA - DEPARTMENT OF TRANSPORTATION
Caltrans® WATER QUALITY

SENIOR LANDSCAPE ARCHITECT: DAVID W. YAM
CALCULATED-DESIGNED BY: JENNIFER EGAWA
CHECKED BY: ALEX McDONALD
REVISED BY: JE
DATE REVISED: 8/30/10

LAST REVISION 03-07-11
DATE PLOTTED => 08-MAR-2011
TIME PLOTTED => 15:16

DIST	COUNTY	ROUTE	POST MILES TOTAL PROJECT	SHEET NO.	TOTAL SHEETS
04	Ala	580	R8.3	24	37

LICENSED LANDSCAPE ARCHITECT

June 5, 2009
PLANS APPROVAL DATE

LICENSED LANDSCAPE ARCHITECT
Gregory A. Balzer 2576
10-31-09 Expiration Date
2-28-11 Renewal Date
5-14-09 Date
STATE OF CALIFORNIA

The State of California or its officers or agents shall not be responsible for the accuracy or completeness of electronic copies of this plan sheet.

To accompany plans dated 3-7-11

A

AB	aggregate base
ABS	acrylonitrile-butadiene-styrene
AC	asphalt concrete
Adj	adjacent/adjustable
AIC	auxiliary irrigation controller
Alt	alternative
AMEND	amendment
ARV	air release valve
AUTO	automatic
AUX	auxiliary
AVB	atmospheric vacuum breaker

B

B&B	balled and burlapped
B/B	brass/bronze
B/B/PL	brass/bronze/plastic
B/PL	brass/plastic
BFM	bonded fiber matrix
Bit Ctd	bituminous coated
BP	booster pump
BPA	backflow preventer assembly
BPAE	backflow preventer assembly in enclosure
BPE	backflow preventer enclosure
BV	ball valve

C

CAP	corrugated aluminum pipe
CARV	combination air release valve
CCA	cam coupler assembly
CEC	controller enclosure cabinet
CHDPE	corrugated high density polyethylene
CL	chain link
CNC	control and neutral conductors
Conc	concrete
Cond	conduit
CSP	corrugated steel pipe
CST	center strip
CV	check valve

D

Dia	diameter
DIP	ductile iron pipe
DN	diameter nominal

E

EA	each
Elect	electric/electrical
Elev	elevation
ENCL	enclosure
EP	edge of pavement
ES	edge of shoulder
EST	end strip
ESTB	establishment
ETW	edge of traveled way

F

F	full circle
F/P	full/part circle
FAU	filter assembly unit
FCV	flow control valve
FERT	fertilizer
FG	finished grade
FIPT	female iron pipe thread
FIS	fertilizer injector system
FL	flow line
FM	flow monitor
FS	flow sensor
Ft	foot/feet
FV	flush valve

G

GAL	Gallon(s)
Galv	galvanized
GARV	garden valve
GPH	gallons per hour
GPM	gallons per minute
GSP	galvanized steel pipe
GV	gate valve

H

H	half circle
HB	hose bib
HDPE	high density polyethylene
HP	horsepower/hinge point
HPL	high pressure line
Hwy	highway

I

IC	irrigation controller
ICC	irrigation controller(s) in controller enclosure cabinet
ID	inside diameter
In	inches
IFS	irrigation filtration system
IPS	iron pipe size
IPT	iron pipe thread
Irr	irrigation

L

L	length
LF	linear foot

M

Max	maximum
MBGR	metal beam guard railing
MCV	manual control valve
MIC	master irrigation controller
Min	minimum
MIPT	male iron pipe thread
Misc	miscellaneous
Mtl	material
MVP	maintenance vehicle pullout

N

NCN	no common name
NL	nozzle line
No.	number
NPT	national pipe thread

O

O/C	on center
OD	outside diameter
Oz	ounce

P

P	part circle
PB	pull box
PCC	portland cement concrete
PE	polyethylene
Pkt	packet
PL	plastic
PLT	plant/planting
PLT ESTB	plant establishment
PM	post mile
PR	pressure rated
PRLV	pressure relief valve
PSFM	polymer stabilized fiber matrix
PSI	pounds per square inch
PRV	pressure reducing valve
PVC	polyvinyl chloride
Pvmt	pavement

Q

Q	quarter circle
QCV	quick coupling valve

R

R	radius
RCP	reinforced concrete pipe
RCV	remote control valve
RCVM	remote control valve (master)
RCVMF	remote control valve (master) w/ flow meter
RCW	recycled/reclaimed water
RECP	rolled erosion control product
REQ	required
R/W	right of way

S

S	slip
SCC	sprinkler control conduit
SCH	schedule
SF	state-furnished
Shld	shoulder
SQFT	square foot/feet
SQYD	square yard(s)
SST	side strip
Sta	station
Std	standard
SW	sidewalk/sound wall

T

T	third circle/thread
TLS	truck loading standpipe
TQ	three quarter circle
TRM	turf reinforcement mat
TRVD	traveled
TT	two third circle
Typ	typical

U

UG	underground

V

VAU	valve assembly unit

W

W	width
W/	with
WM	water meter
WS	wye strainer
WSP	welded steel pipe
WWM	welded wire mesh

NOTE:

FOR ADDITIONAL ABBREVIATIONS, SEE STANDARD PLANS A10A AND A10B.

STATE OF CALIFORNIA
DEPARTMENT OF TRANSPORTATION

PLANTING AND IRRIGATION ABBREVIATIONS

NO SCALE

RSP H1 DATED JUNE 5, 2009 SUPERSEDES STANDARD PLAN H1
DATED MAY 1, 2006 - PAGE 201 OF THE STANDARD PLANS BOOK DATED MAY 2006.

REVISED STANDARD PLAN RSP H1

2006 REVISED STANDARD PLAN RSP H1

5-28-09

DIST	COUNTY	ROUTE	POST MILES TOTAL PROJECT	SHEET NO.	TOTAL SHEETS
04	Ala	580	R8.3	25	37

Gregory A. Balzer
LICENSED LANDSCAPE ARCHITECT

June 5, 2009
PLANS APPROVAL DATE

LICENSED LANDSCAPE ARCHITECT
Gregory A. Balzer 2576
Expiration Date 2-28-11
Renewal Date 5-14-09
Date
STATE OF CALIFORNIA

The State of California or its officers or agents shall not be responsible for the accuracy or completeness of electronic copies of this plan sheet.

To accompany plans dated 3-7-11

EXISTING	PROPOSED	ITEM DESCRIPTION
		WATER METER (WM)
		BACKFLOW PREVENTER ASSEMBLY (BPA)
		BACKFLOW PREVENTER ASSEMBLY IN ENCLOSURE (BPAE)
		BACKFLOW PREVENTER ENCLOSURE (BPE)
		BOOSTER PUMP (BP)
		TRUCK LOADING STANDPIPE (TLS)
	FS	FLOW SENSOR (FS)
X	X	MASTER IRRIGATION CONTROLLER (MIC)
		AUXILIARY IRRIGATION CONTROLLER (AIC)
		IRRIGATION CONTROLLER (IC)/ IRRIGATION CONTROLLER (IC) (BATTERY) IRRIGATION CONTROLLER (IC) (SOLAR)
		IRRIGATION CONTROLLER(S) IN CONTROLLER ENCLOSURE CABINET (ICC)
		CONTROL AND NEUTRAL CONDUCTORS (CNC)
SCC	SCC	SPRINKLER CONTROL CONDUIT (SCC)
		IRRIGATION CROSSOVER
		EXTEND IRRIGATION CROSSOVER
		IRRIGATION SLEEVE
dip	DIP	DUCTILE IRON PIPE (SUPPLY LINE) (MAIN) (DIP)
		GALVANIZED STEEL PIPE (SUPPLY LINE) (MAIN) (GSP)
		GALVANIZED STEEL PIPE (SUPPLY LINE) (LATERAL) (GSP)
		PLASTIC PIPE (PR 200) (SUPPLY LINE) (MAIN)
		PLASTIC PIPE (PR 200) (SUPPLY LINE) (LATERAL)
		PLASTIC PIPE (IRRIGATION LINE)
		REMOTE CONTROL VALVE (RCV) REMOTE CONTROL VALVE (MASTER) (RCVM) REMOTE CONTROL VALVE (MASTER) W/FLOW METER (RCVMF)
		MANUAL CONTROL VALVE (MCV)
		VALVE ASSEMBLY UNIT (VAU)
		WYE STRAINER (WS)
		FILTER ASSEMBLY UNIT (FAU)
		GATE VALVE (GV)
		BALL VALVE (BV)

EXISTING	PROPOSED	ITEM DESCRIPTION
		QUICK COUPLING VALVE (QCV)
		CAM COUPLER ASSEMBLY (CCA)
		PRESSURE REDUCING VALVE (PRV)
		PRESSURE RELIEF VALVE (PRLV)
		FLOW CONTROL VALVE (FCV)
		COMBINATION AIR RELEASE VALVE (CARV)
		CHECK VALVE (CV)
		FLUSH VALVE (FV)
		NOZZLE LINE W/TURNING UNION
		IRRIGATION SYSTEM
		IRRIGATION SYSTEM TO BE REMOVED
		CHAIN LINK GATE
		QUICK COUPLING VALVE W/SPRINKLER PROTECTOR
3	3	SPRINKLER W/SPRINKLER PROTECTOR
	C	CONNECT TO EXISTING SYSTEM
		CAP
		CAP EXISTING

VALVE CODE

RCV SIZE
IRRIGATION CONTROLLER
CONTROLLER STATION
VALVE IN PARALLEL (IF APPLICABLE)
GPM
QUANTITY OF SPRINKLERS (WHEN SHOWN)

* 2½"-A-2b-40 -60

MCV SIZE
VALVE NUMBER
GPM
QUANTITY OF TYPE SPRINKLERS (WHEN SHOWN)

* 2"-3-30 -50

* VALVE CODES FOR EXISTING VALVES ARE SHOWN IN A DASHED ENCLOSURE.

STATE OF CALIFORNIA
DEPARTMENT OF TRANSPORTATION

PLANTING AND IRRIGATION SYMBOLS

NO SCALE

RSP H2 DATED JUNE 5, 2009 SUPERSEDES RSP H2 DATED MARCH 7, 2008 AND STANDARD PLAN H2 DATED MAY 1, 2006 - PAGE 202 OF THE STANDARD PLANS BOOK DATED MAY 2006.

REVISED STANDARD PLAN RSP H2

2006 REVISED STANDARD PLAN RSP H2

5-11-09

DIST	COUNTY	ROUTE	POST MILES TOTAL PROJECT	SHEET NO.	TOTAL SHEETS
04	Ala	580	R8.3	26	37

LICENSED LANDSCAPE ARCHITECT

June 5, 2009
PLANS APPROVAL DATE

LICENSED LANDSCAPE ARCHITECT
Gregory A. Balzer 2576
10-01-09 Expiration Date
2-28-11 Renewal Date
5-14-09 Date
STATE OF CALIFORNIA

The State of California or its officers or agents shall not be responsible for the accuracy or completeness of electronic copies of this plan sheet.

To accompany plans dated 3-7-11

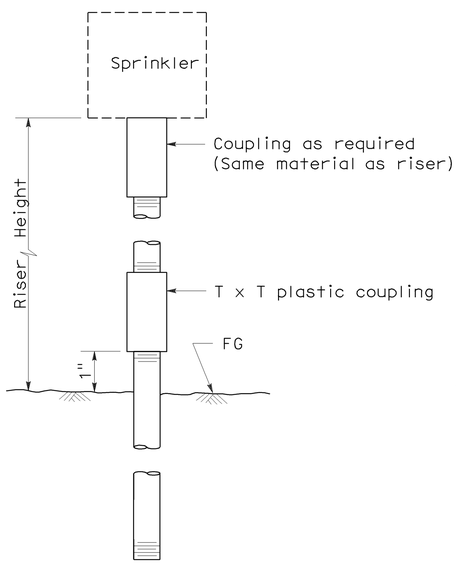

ELEVATION
RISER TYPE I

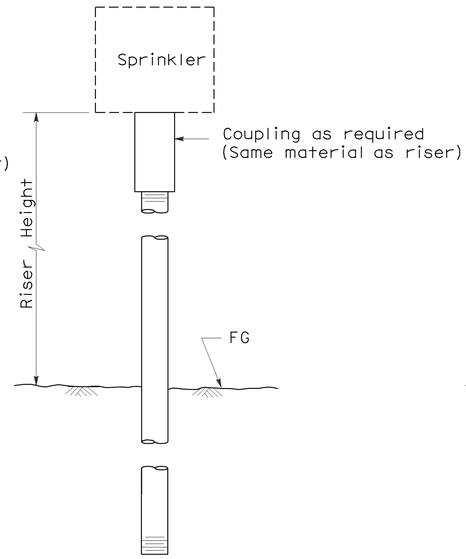

ELEVATION
RISER TYPE II

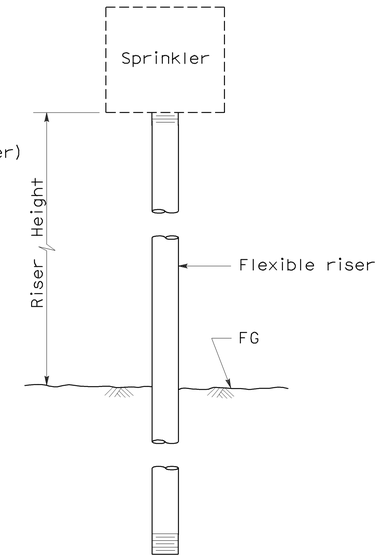

ELEVATION
RISER TYPE III

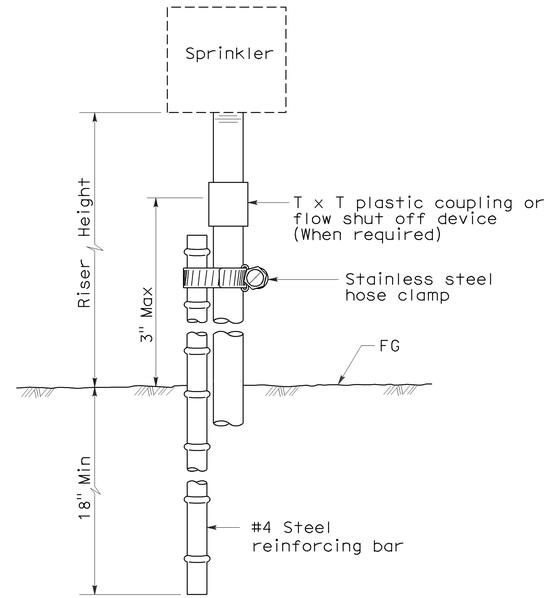

ELEVATION
RISER TYPE IV

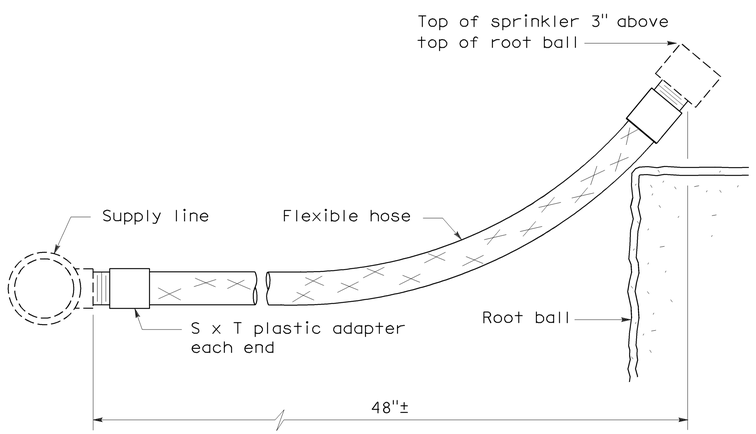

ELEVATION
RISER TYPE V

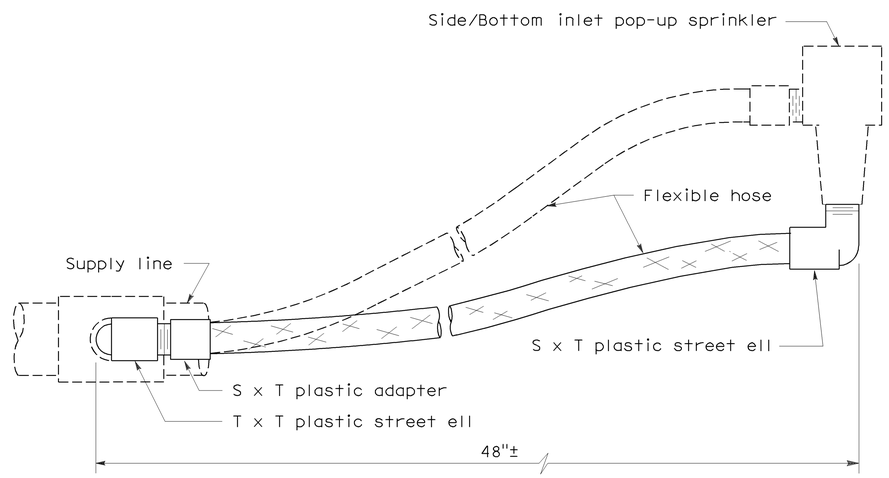

ELEVATION
RISER TYPE VI

STATE OF CALIFORNIA
DEPARTMENT OF TRANSPORTATION

PLANTING AND IRRIGATION DETAILS

NO SCALE

RSP H5 DATED JUNE 5, 2009 SUPERSEDES STANDARD PLAN H5
DATED MAY 1, 2006 - PAGE 205 OF THE STANDARD PLANS BOOK DATED MAY 2006.

REVISED STANDARD PLAN RSP H5

2006 REVISED STANDARD PLAN RSP H5

5-28-09

DIST	COUNTY	ROUTE	POST MILES TOTAL PROJECT	SHEET NO.	TOTAL SHEETS
04	Ala	580	R8.3	27	37

LICENSED LANDSCAPE ARCHITECT

June 5, 2009
PLANS APPROVAL DATE

The State of California or its officers or agents shall not be responsible for the accuracy or completeness of electronic copies of this plan sheet.

LICENSED LANDSCAPE ARCHITECT — Gregory A. Balzer — 2576 — Expiration Date 2-28-11 — Renewal Date — 5-14-09 — Date — STATE OF CALIFORNIA

To accompany plans dated 3-7-11

2006 REVISED STANDARD PLAN RSP H7

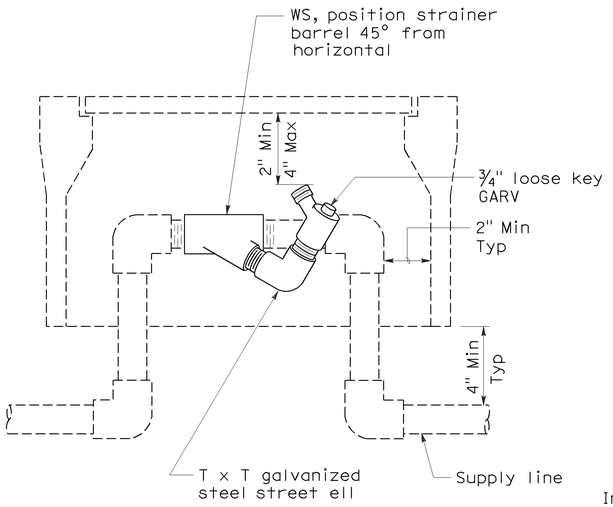

ELEVATION
WYE STRAINER

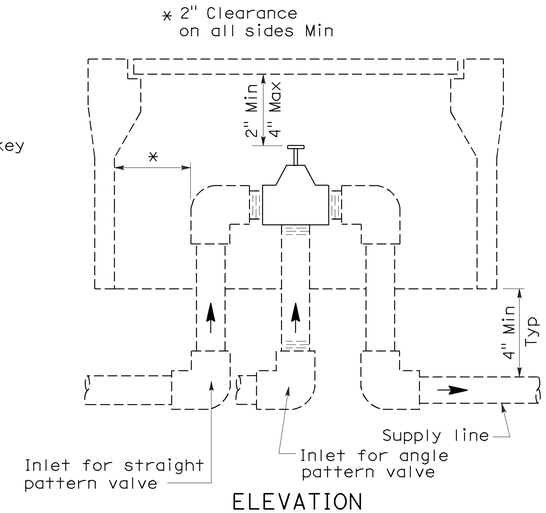

ELEVATION
VALVE

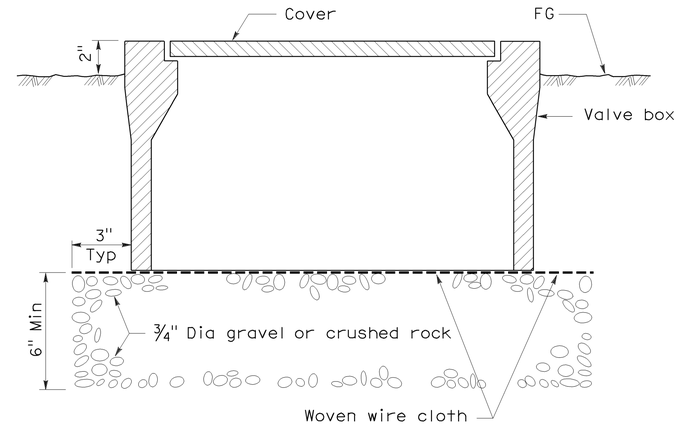

SECTION
VALVE BOX

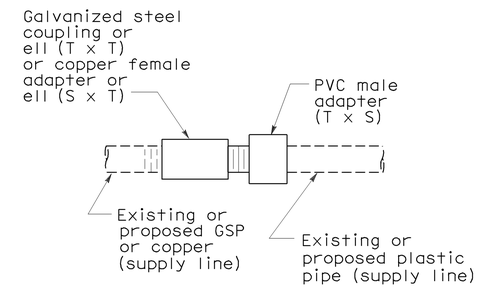

PLAN
GALVANIZED OR COPPER PIPE CONNECTION TO PLASTIC PIPE

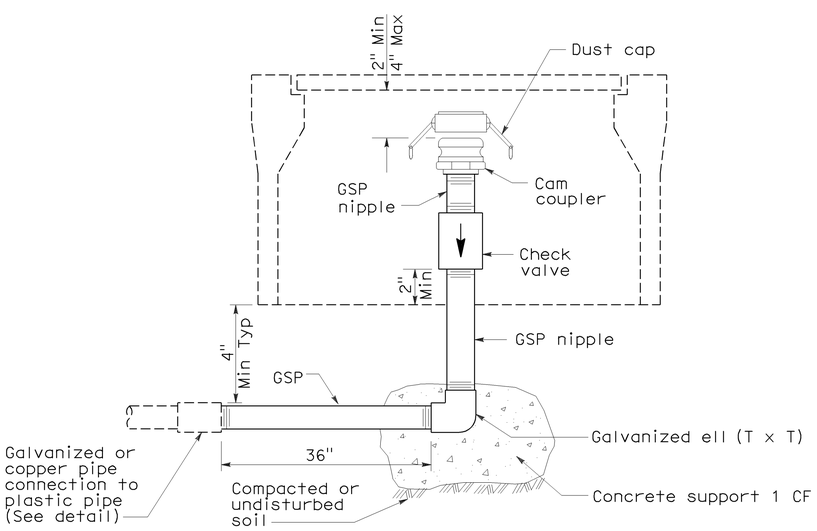

ELEVATION
CAM COUPLER ASSEMBLY

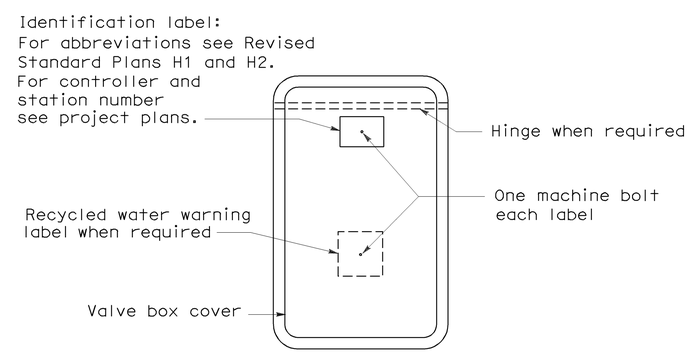

PLAN

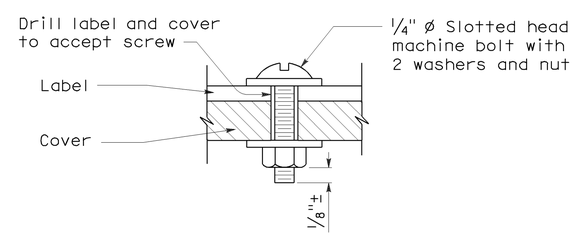

SECTION
VALVE BOX IDENTIFICATION

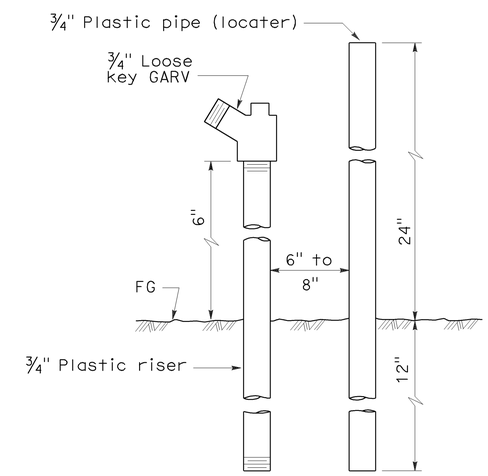

ELEVATION
FLUSH VALVE

STATE OF CALIFORNIA
DEPARTMENT OF TRANSPORTATION

PLANTING AND IRRIGATION DETAILS

NO SCALE

RSP H7 DATED JUNE 5, 2009 SUPERSEDES STANDARD PLAN H7
DATED MAY 1, 2006 - PAGE 207 OF THE STANDARD PLANS BOOK DATED MAY 2006.

REVISED STANDARD PLAN RSP H7

5-28-09

DIST	COUNTY	ROUTE	POST MILES TOTAL PROJECT	SHEET NO.	TOTAL SHEETS
04	Ala	580	R8.3	28	37

Randell D. Hiatt
REGISTERED CIVIL ENGINEER

June 6, 2008
PLANS APPROVAL DATE

REGISTERED PROFESSIONAL ENGINEER
Randell D. Hiatt
No. C50200
Exp. 6-30-09
CIVIL
STATE OF CALIFORNIA

The State of California or its officers or agents shall not be responsible for the accuracy or completeness of electronic copies of this plan sheet.

To accompany plans dated 3-7-11

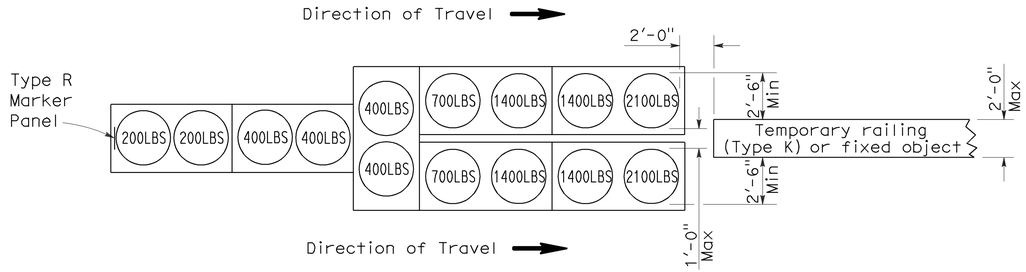

ARRAY 'TU14'

Approach speed 45 mph or more

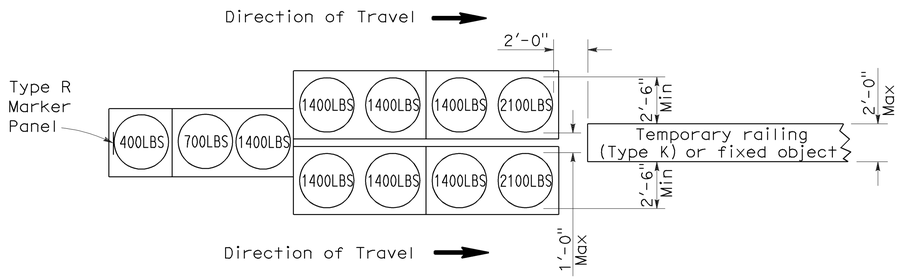

ARRAY 'TU11'

Approach speed less than 45 mph

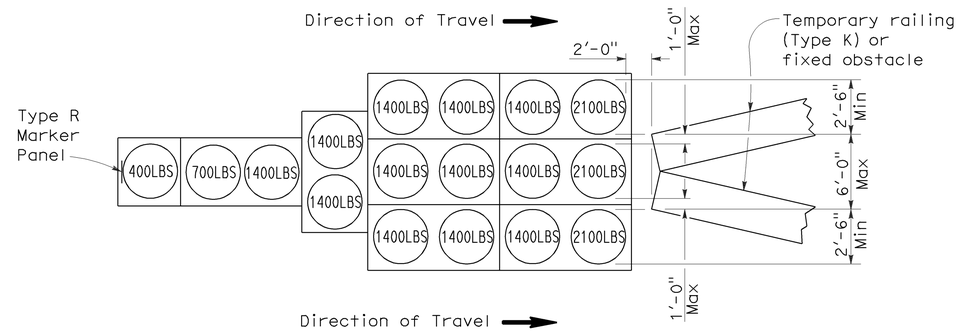

ARRAY 'TU17'

Approach speed less than 45 mph

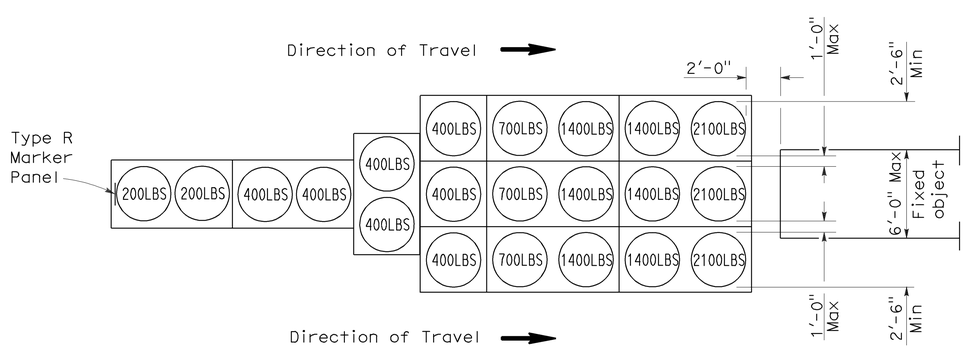

ARRAY 'TU21'

Approach speed 45 mph or more

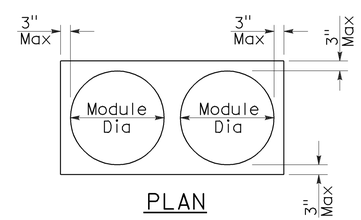

PLAN

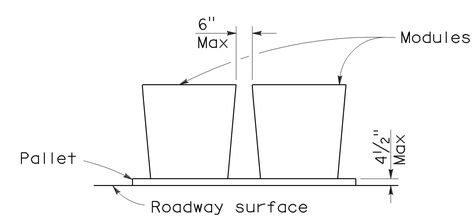

ELEVATION

CRASH CUSHION PALLET DETAIL

See Note 7

NOTES:

1. (XXX) Indicates sand filled module location and weight of sand in pounds for each module. Module spacing is based on the greater diameter of the module.
2. All sand weights are nominal.
3. Temporary crash cushion arrays shall not encroach on the traveled way.
4. Place the top of Type R marker panel 1" below the module lid.
5. Refer to Standard Plan A73B for marker details.
6. Approach speeds indicated conform to NCHRP 350 Report criteria.
7. Use of pallets is optional.

STATE OF CALIFORNIA
DEPARTMENT OF TRANSPORTATION

TEMPORARY CRASH CUSHION, SAND FILLED (UNIDIRECTIONAL)

NO SCALE

RSP T1A DATED JUNE 6, 2008 SUPERSEDES STANDARD PLAN T1A
DATED MAY 1, 2006 - PAGE 211 OF THE STANDARD PLANS BOOK DATED MAY 2006.

REVISED STANDARD PLAN RSP T1A

2006 REVISED STANDARD PLAN RSP T1A

DIST	COUNTY	ROUTE	POST MILES TOTAL PROJECT	SHEET NO.	TOTAL SHEETS
04	Ala	580	R8.3	29	37

Randell D. Hiatt
REGISTERED CIVIL ENGINEER

June 6, 2008
PLANS APPROVAL DATE

REGISTERED PROFESSIONAL ENGINEER
Randell D. Hiatt
No. C50200
Exp. 6-30-09
CIVIL
STATE OF CALIFORNIA

The State of California or its officers or agents shall not be responsible for the accuracy or completeness of electronic copies of this plan sheet.

To accompany plans dated 3-7-11

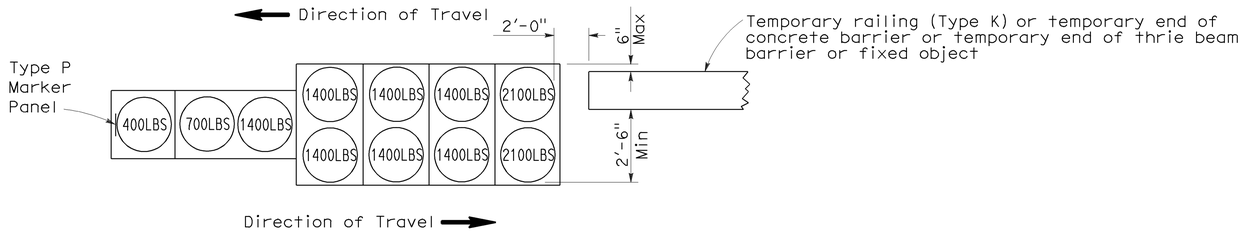

ARRAY 'TB11'

Approach speed less than 45 mph

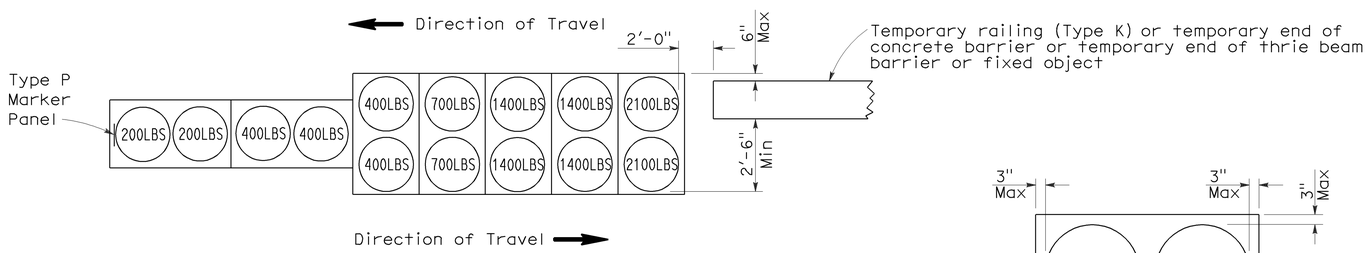

ARRAY 'TB14'

Approach speed 45 mph or more

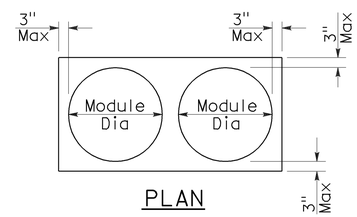

PLAN

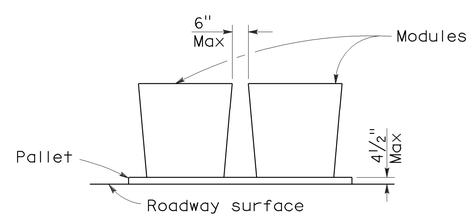

ELEVATION

CRASH CUSHION PALLET DETAIL

See Note 7

NOTES:

1. (XXX) Indicates sand filled module location and weight of sand in pounds for each module. Module spacing is based on the greater diameter of the module.
2. All sand weights are nominal.
3. Temporary crash cushion arrays shall not encroach on the traveled way.
4. Place the Type P marker panel so that the bottom of the panel rests upon the pallet.
5. Refer to Standard Plan A73B for marker details.
6. Approach speeds indicated conform to NCHRP 350 Report criteria.
7. Use of pallets is optional.

STATE OF CALIFORNIA
DEPARTMENT OF TRANSPORTATION

TEMPORARY CRASH CUSHION, SAND FILLED (BIDIRECTIONAL)

NO SCALE

RSP T1B DATED JUNE 6, 2008 SUPERSEDES STANDARD PLAN T1B
DATED MAY 1, 2006 - PAGE 212 OF THE STANDARD PLANS BOOK DATED MAY 2006.

REVISED STANDARD PLAN RSP T1B

2006 REVISED STANDARD PLAN RSP T1B

5-15-08

DIST	COUNTY	ROUTE	POST MILES TOTAL PROJECT	SHEET NO.	TOTAL SHEETS
04	Ala	580	R8.3	30	37

Randell D. Hiatt
REGISTERED CIVIL ENGINEER

June 6, 2008
PLANS APPROVAL DATE

REGISTERED PROFESSIONAL ENGINEER
Randell D. Hiatt
No. C50200
Exp. 6-30-09
CIVIL
STATE OF CALIFORNIA

The State of California or its officers or agents shall not be responsible for the accuracy or completeness of electronic copies of this plan sheet.

To accompany plans dated 3-7-11

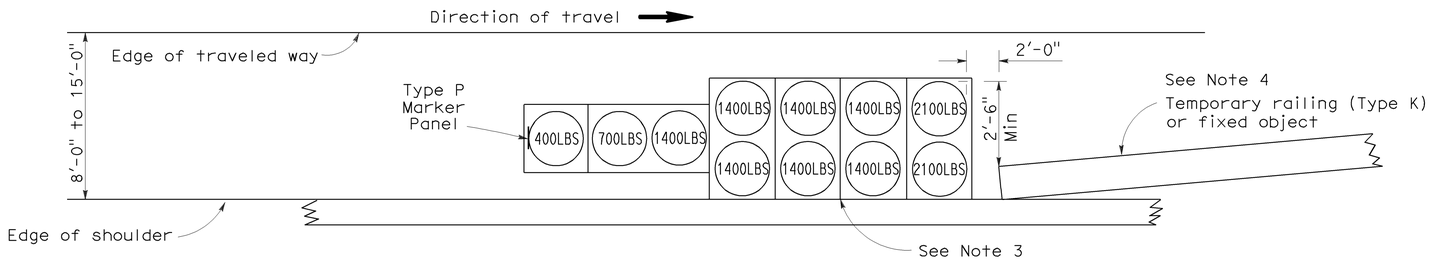

ARRAY 'TS11'

Approach speed less than 45 mph
See Note 9

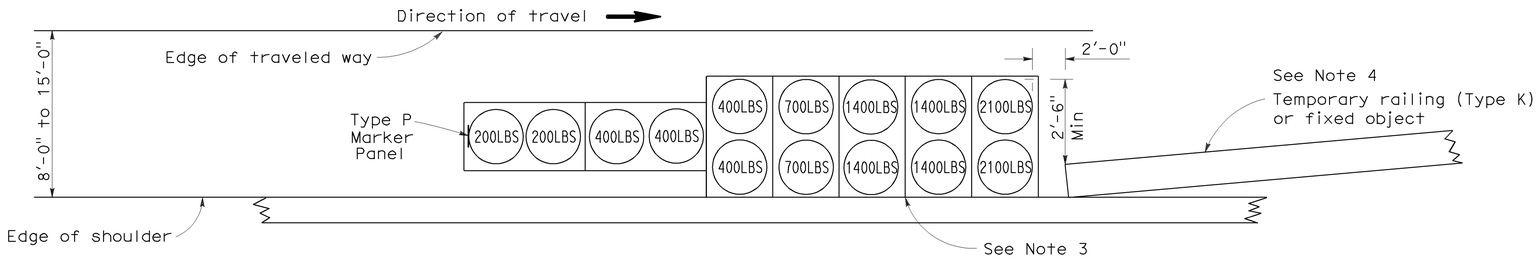

ARRAY 'TS14'

Approach speed 45 mph or more
See Note 9

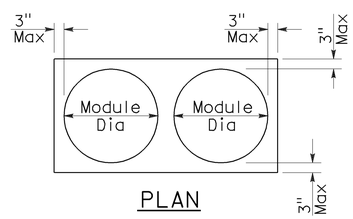

PLAN

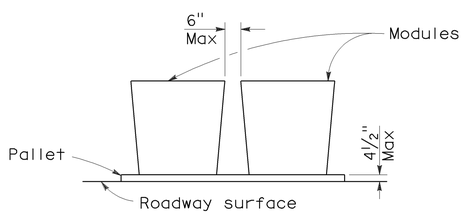

ELEVATION

CRASH CUSHION PALLET DETAIL

See Note 11

NOTES:

1. (XXX) Indicates sand filled module location and weight of sand in pounds for each module. Module spacing is based on the greater diameter of the module.
2. All sand weights are nominal.
3. The temporary crash cushion arrays shown on this plan shall be used only in locations where there will be traffic on one side of the temporary crash cushion array.
4. If the fixed object or approach end of the temporary railing is less than 15'-0" from the edge of traveled way, a temporary crash cushion is required in a construction or work zone.
5. Temporary crash cushion arrays shall not encroach on the traveled way.
6. Arrays for median shoulders shall conform to details shown on this plan for outside shoulders.
7. Place the Type P marker panel so that the bottom of the panel rests upon the pallet and faces traffic.
8. Refer to Standard Plan A73B for marker details.
9. For shoulder widths less than 8'-0", appropriate approved crash cushion protection, other than sand filled modules, shall be provided at fixed objects and at approach ends of temporary railing. The specific type of crash cushion shall be as shown on the project plans or as specified in the Special Provisions, or if not shown on the project plans or specified in the Special Provisions, shall be as approved by the Engineer.
10. Approach speeds indicated conform to NCHRP 350 Report criteria.
11. Use of pallets is optional.

STATE OF CALIFORNIA
DEPARTMENT OF TRANSPORTATION

TEMPORARY CRASH CUSHION, SAND FILLED (SHOULDER INSTALLATIONS)

NO SCALE

RSP T2 DATED JUNE 6, 2008 SUPERSEDES STANDARD PLAN T2
DATED MAY 1, 2006 - PAGE 213 OF THE STANDARD PLANS BOOK DATED MAY 2006.

REVISED STANDARD PLAN RSP T2

2006 REVISED STANDARD PLAN RSP T2

5-15-08

DIST	COUNTY	ROUTE	POST MILES TOTAL PROJECT	SHEET NO.	TOTAL SHEETS
04	Ala	580	R8.3	31	37

LICENSED LANDSCAPE ARCHITECT

April 3, 2009
PLANS APPROVAL DATE

The State of California or its officers or agents shall not be responsible for the accuracy or completeness of electronic copies of this plan sheet.

LICENSED LANDSCAPE ARCHITECT — Robert B. Schott 3695 — Renewal Date 11-30-10 — 2-25-09 Date — STATE OF CALIFORNIA

To accompany plans dated 3-7-11

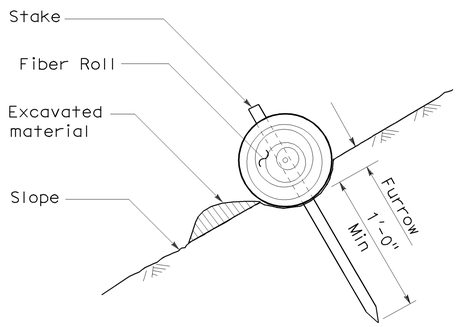

SECTION

TEMPORARY FIBER ROLL (TYPE 1)

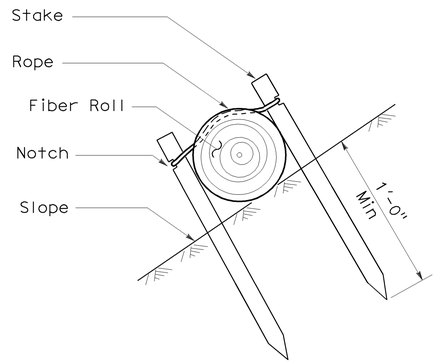

SECTION

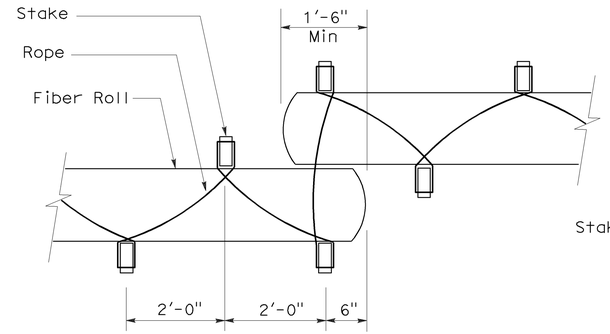

PLAN

TEMPORARY FIBER ROLL (TYPE 2)

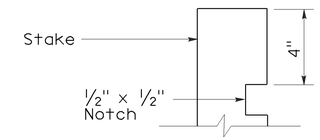

ELEVATION

STAKE NOTCH DETAIL

NOTES:

1. Temporary fiber roll spacing varies depending upon slope inclination.
2. Installations shown in the perspectives are for slope inclination of 10:1 and steeper.

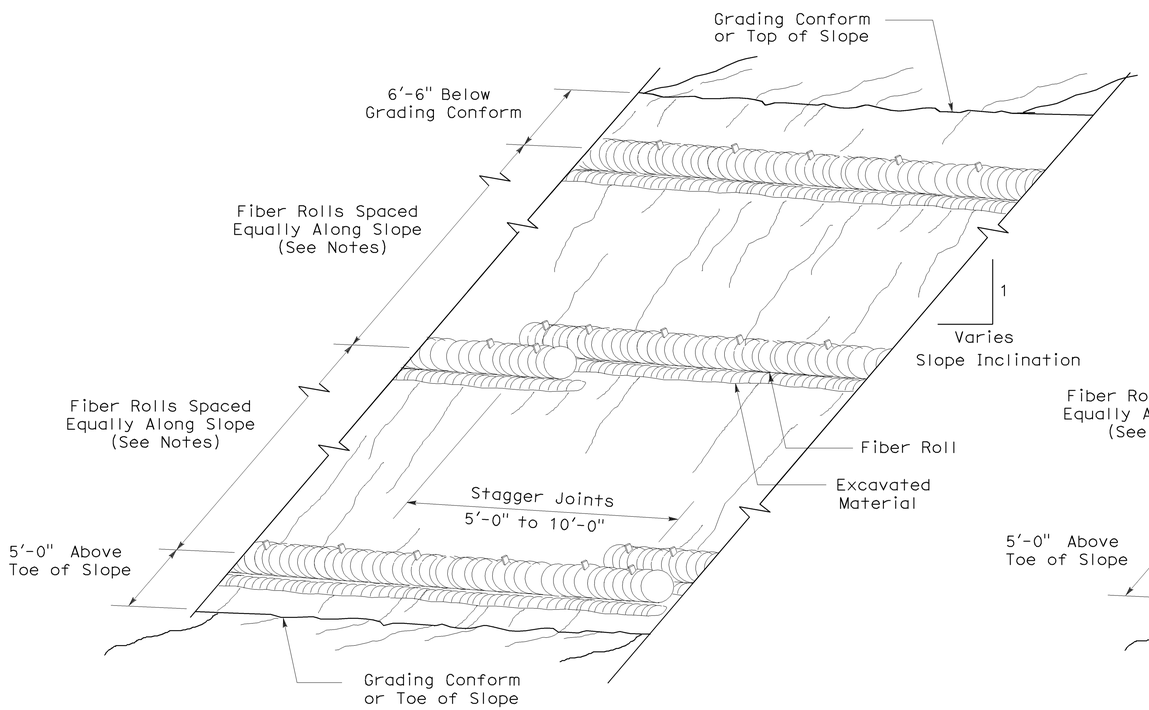

PERSPECTIVE

TEMPORARY FIBER ROLL (TYPE 1)

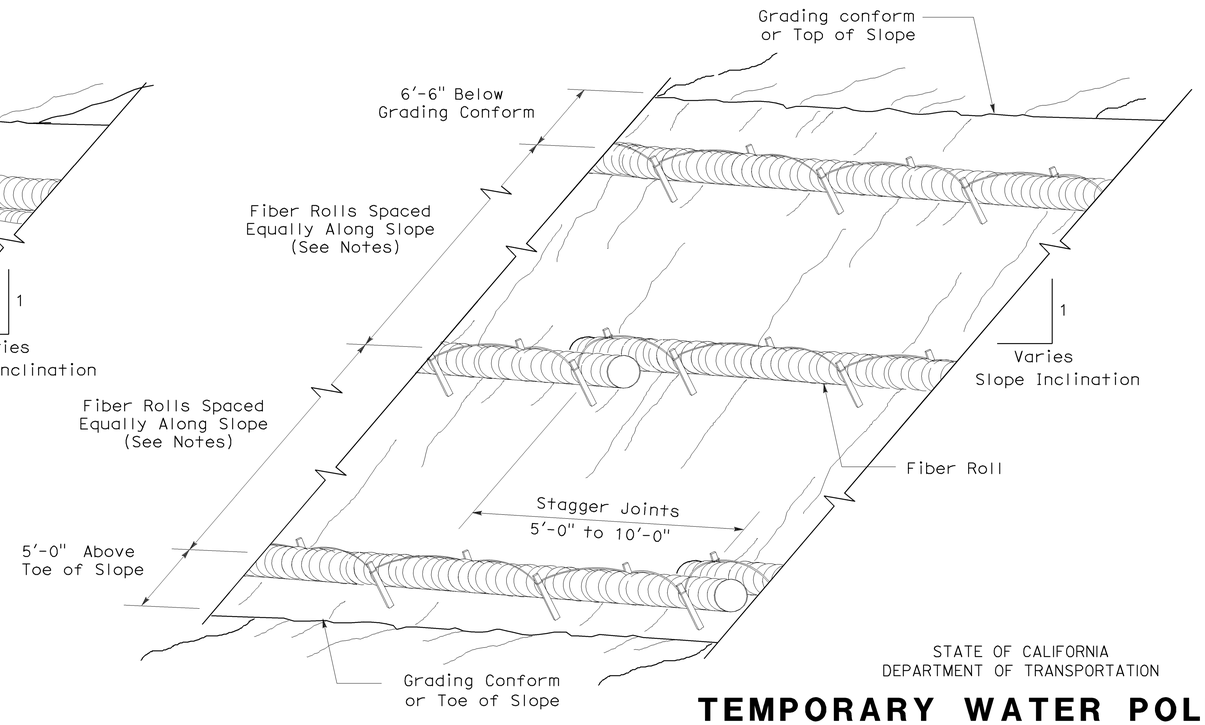

PERSPECTIVE

TEMPORARY FIBER ROLL (TYPE 2)

STATE OF CALIFORNIA
DEPARTMENT OF TRANSPORTATION

TEMPORARY WATER POLLUTION CONTROL DETAILS (TEMPORARY FIBER ROLL)

NO SCALE

RSP T56 DATED APRIL 3, 2009 SUPERSEDES STANDARD PLAN T56
DATED MAY 1, 2006 - PAGE 232 OF THE STANDARD PLANS BOOK DATED MAY 2006.

REVISED STANDARD PLAN RSP T56

2006 REVISED STANDARD PLAN RSP T56

2-23-09

DIST	COUNTY	ROUTE	POST MILES TOTAL PROJECT	SHEET NO.	TOTAL SHEETS
04	Ala	580	R8.3	32	37

Glenn DeCou
REGISTERED CIVIL ENGINEER

June 5, 2009
PLANS APPROVAL DATE

REGISTERED PROFESSIONAL ENGINEER
Glenn DeCou
No. C34547
Exp. 9-30-09
CIVIL
STATE OF CALIFORNIA

The State of California or its officers or agents shall not be responsible for the accuracy or completeness of electronic copies of this plan sheet.

To accompany plans dated 3-7-11

NOTES:

1. Offset to be 2'-0" at monument locations, measured at right angles to R/W lines. Taper to achieve offset to be at least 20'-0" long.
2. Line post spacing for wood post equals 12'-0" maximum. Line post spacing for metal post equals 10'-0" maximum.
3. See Standard Plan A86 for Barbed Wire and Wire Mesh dimensions and for steel post and wood post dimensions and weight.
4. Use wood posts when specified in the Special Provisions or shown on the Project Plans.

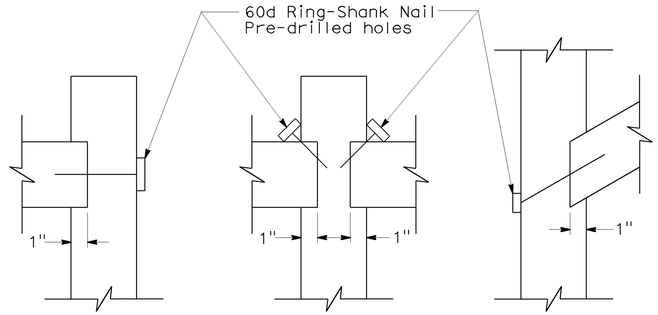

WOOD MORTISE DETAIL

See Note 4

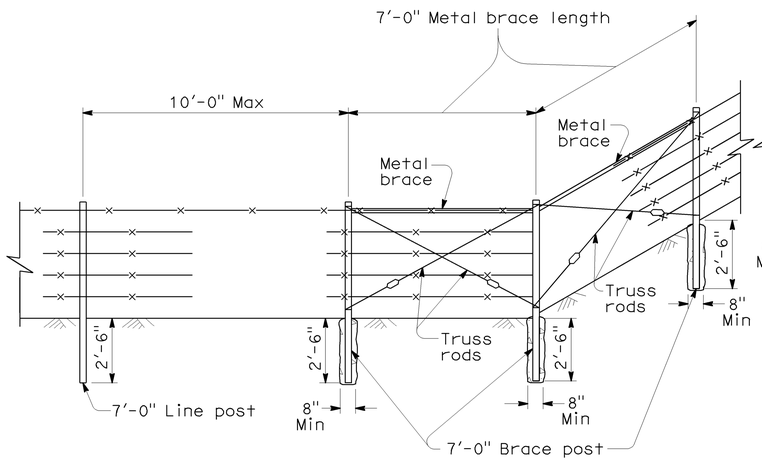

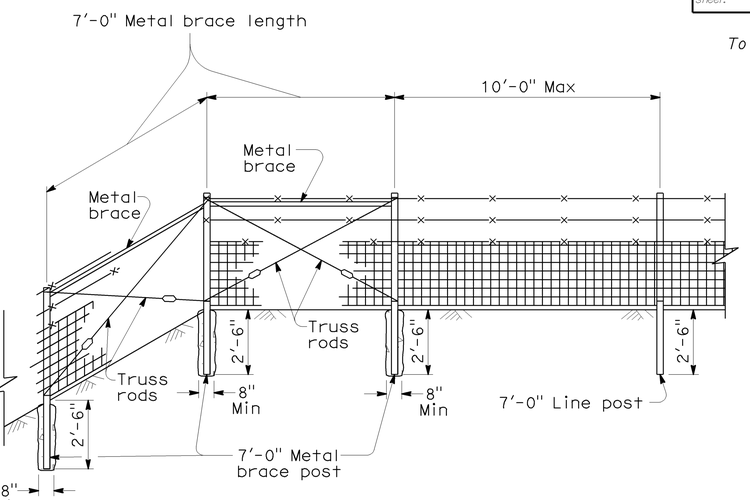

METAL POST

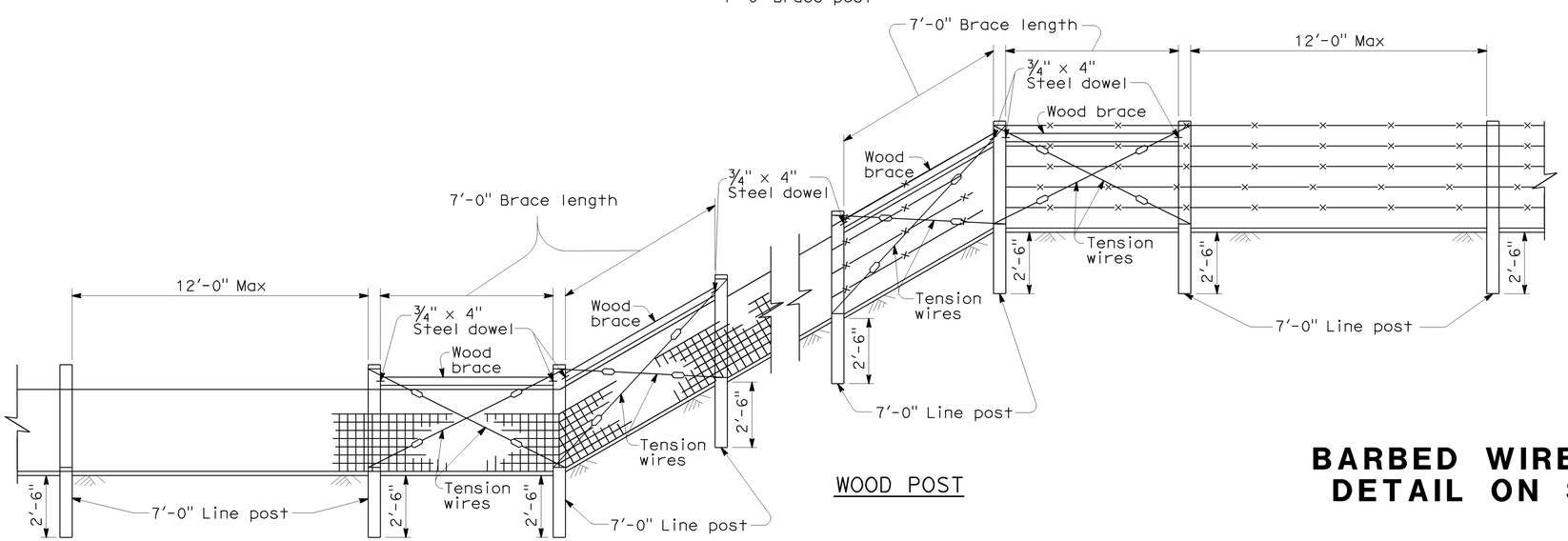

WOOD POST

FENCE ON SHARP BREAK IN GRADE

LEGEND

Wire Mesh fencing

Barbed Wire fencing

STATE OF CALIFORNIA
DEPARTMENT OF TRANSPORTATION

BARBED WIRE AND WIRE MESH FENCE DETAIL ON SHARP BREAK IN GRADE

NO SCALE

NSP A86A DATED JUNE 5, 2009 SUPPLEMENTS THE STANDARD PLANS BOOK DATED MAY 2006.

NEW STANDARD PLAN NSP A86A

2006 NEW STANDARD PLAN NSP A86A

5-12-09

DIST	COUNTY	ROUTE	POST MILES TOTAL PROJECT	SHEET NO.	TOTAL SHEETS
04	Ala	580	R8.3	33	37

REGISTERED CIVIL ENGINEER

June 5, 2009
PLANS APPROVAL DATE

REGISTERED PROFESSIONAL ENGINEER Glenn DeCou No. C34547 Exp. 9-30-09 CIVIL STATE OF CALIFORNIA

The State of California or its officers or agents shall not be responsible for the accuracy or completeness of electronic copies of this plan sheet.

To accompany plans dated 3-7-11

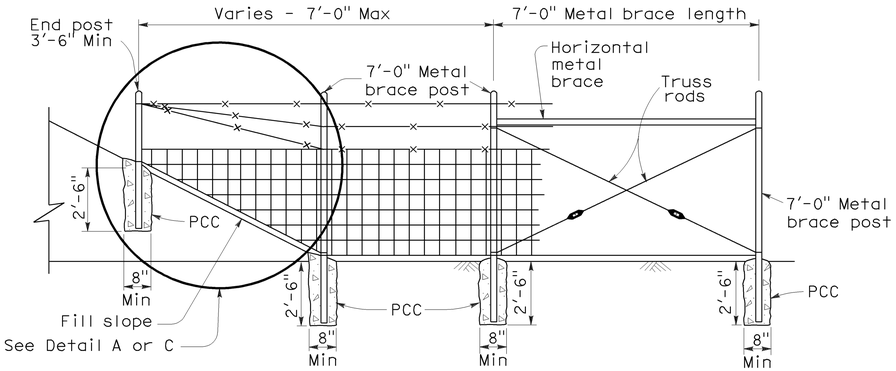

METAL POST

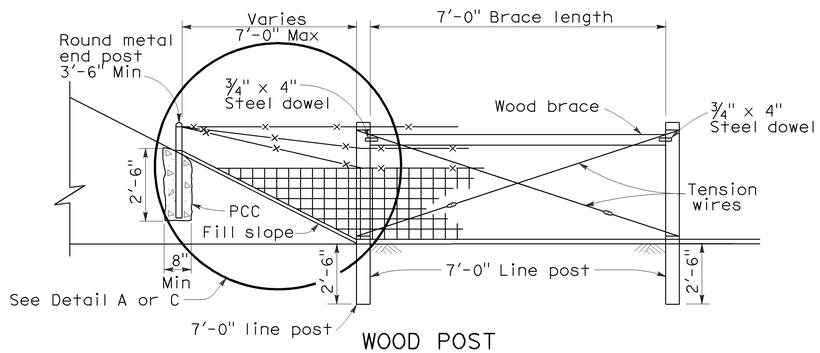

WOOD POST

METHOD OF ERECTING FENCE FOR FILL SLOPE

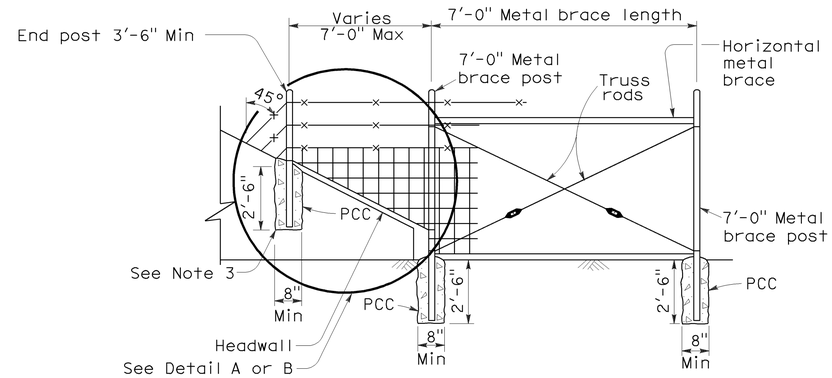

METAL POST

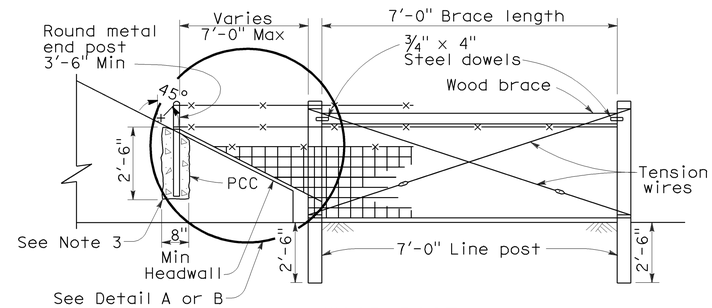

WOOD POST

METHOD OF TYING FENCE TO HEADWALL

NOTES:

1. Wire Mesh fencing shown, can also use Barbed Wire fencing.
2. See Standard Plan A86 for Wire Mesh and Barbed Wire fence dimensions.
3. See Standard Plan B11-7 Alternative Anchorage Detail for connection at headwall. Round metal post to be used for all fence types.

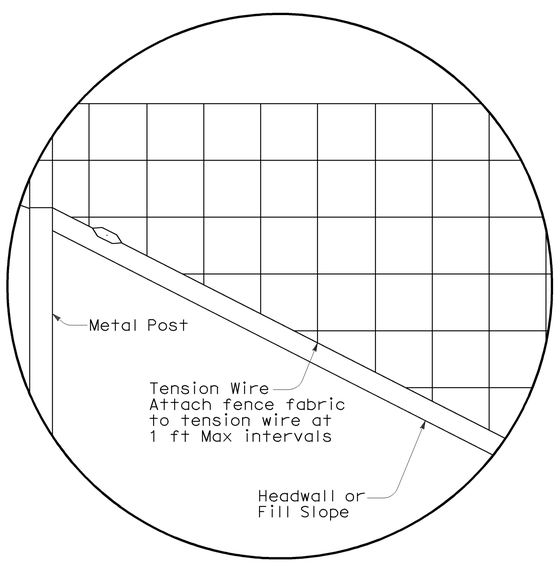

DETAIL A

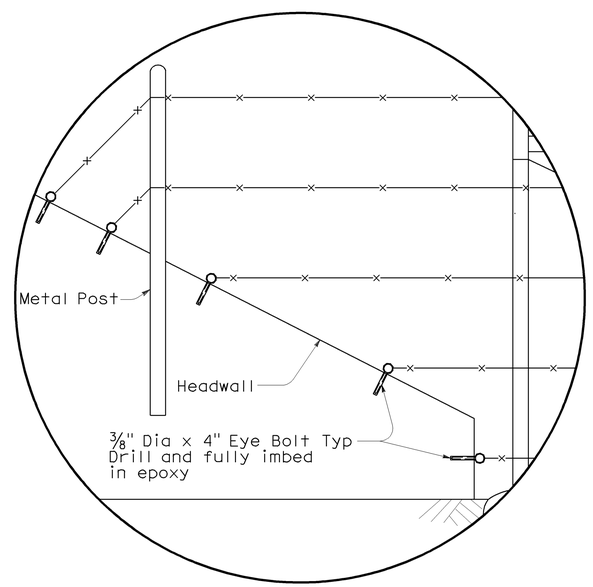

DETAIL B

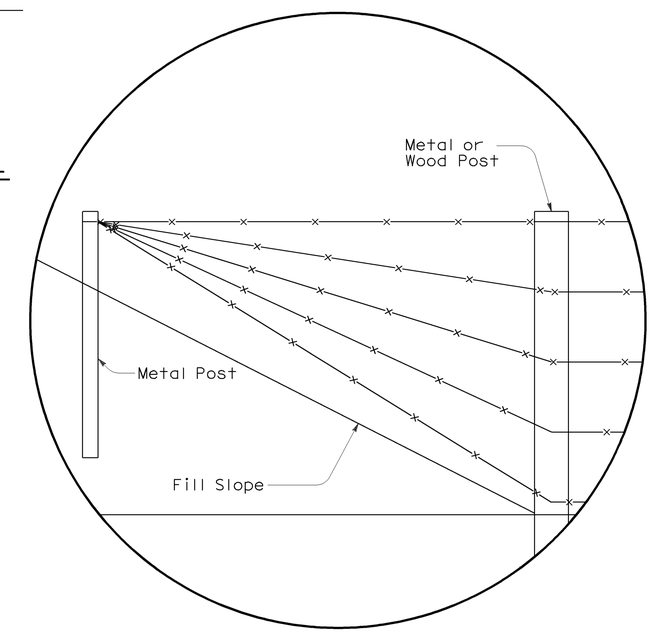

DETAIL C

STATE OF CALIFORNIA
DEPARTMENT OF TRANSPORTATION

BARBED WIRE AND WIRE MESH FENCE DETAILS

NSP A86B DATED JUNE 5, 2009 SUPPLEMENTS THE STANDARD PLANS BOOK DATED MAY 2006.

NEW STANDARD PLAN NSP A86B

2006 NEW STANDARD PLAN NSP A86B

5-12-09

DIST	COUNTY	ROUTE	POST MILES TOTAL PROJECT	SHEET NO.	TOTAL SHEETS
04	Ala	580	R8.3	34	37

REGISTERED CIVIL ENGINEER

June 5, 2009
PLANS APPROVAL DATE

REGISTERED PROFESSIONAL ENGINEER
Glenn DeCou
No. C34547
Exp. 9-30-09
CIVIL
STATE OF CALIFORNIA

The State of California or its officers or agents shall not be responsible for the accuracy or completeness of electronic copies of this plan sheet.

To accompany plans dated 3-7-11

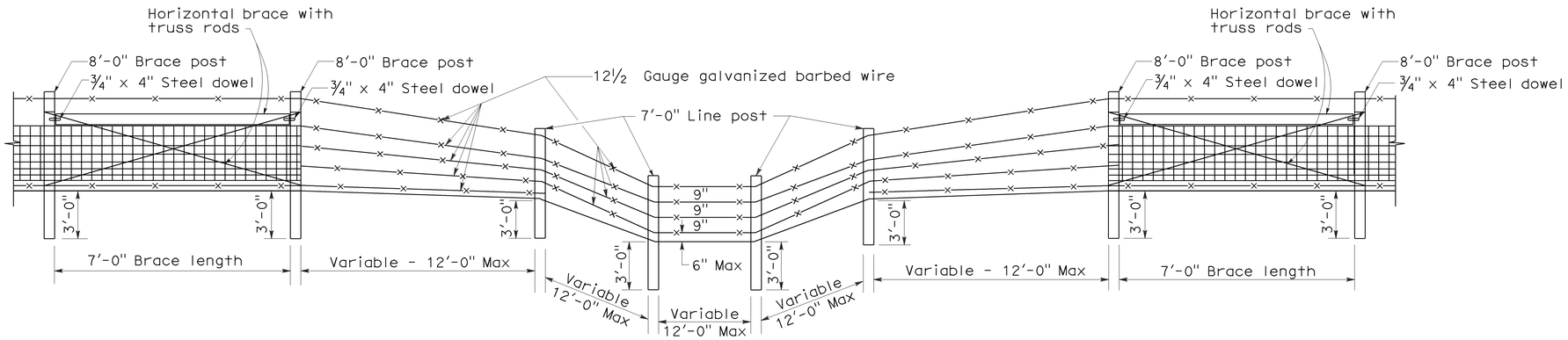

TYPE I

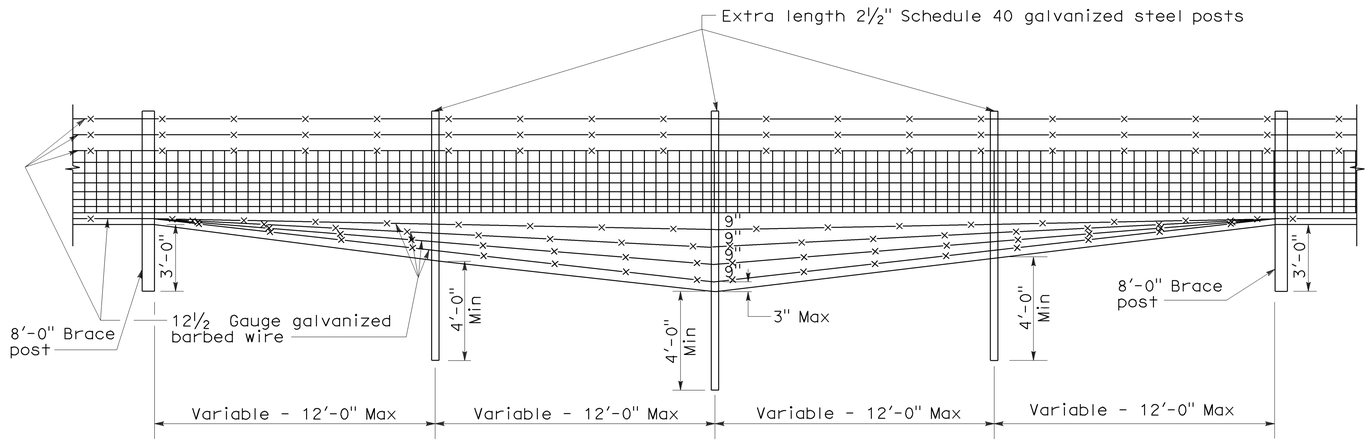

TYPE II

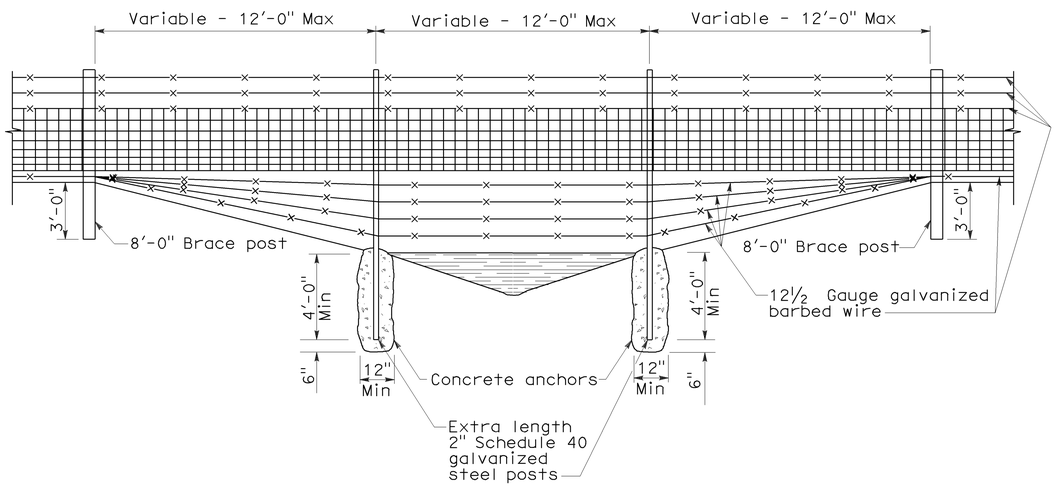

TYPE III

DITCH CROSSINGS

NOTES:

1. Type I Ditch Crossing shows wood posts. Steel posts may be used in place of wood.
2. Ditch crossing show Wire Mesh fencing. Barbed Wire fencing may be used in place of Wire Mesh.
3. See Standard Plan A86 for Wire Mesh and Barbed Wire fence dimensions.
4. See Standard Plan A86 for steel post installation.

STATE OF CALIFORNIA
DEPARTMENT OF TRANSPORTATION

BARBED WIRE AND WIRE MESH FENCE DETAILS AT DITCH CROSSING

NO SCALE

NSP A86C DATED JUNE 5, 2009 SUPPLEMENTS THE STANDARD PLANS BOOK DATED MAY 2006.

NEW STANDARD PLAN NSP A86C

2006 NEW STANDARD PLAN NSP A86C

5-12-09

DIST	COUNTY	ROUTE	POST MILES TOTAL PROJECT	SHEET NO.	TOTAL SHEETS
04	Ala	580	R8.3	35	37

LICENSED LANDSCAPE ARCHITECT

June 5, 2009
PLANS APPROVAL DATE

The State of California or its officers or agents shall not be responsible for the accuracy or completeness of electronic copies of this plan sheet.

LICENSED LANDSCAPE ARCHITECT
Gregory A. Balzer 2576
Gregory A. Balzer
Date
2-28-11
Renewal Date
5-14-09
Date
STATE OF CALIFORNIA

To accompany plans dated 3-7-11

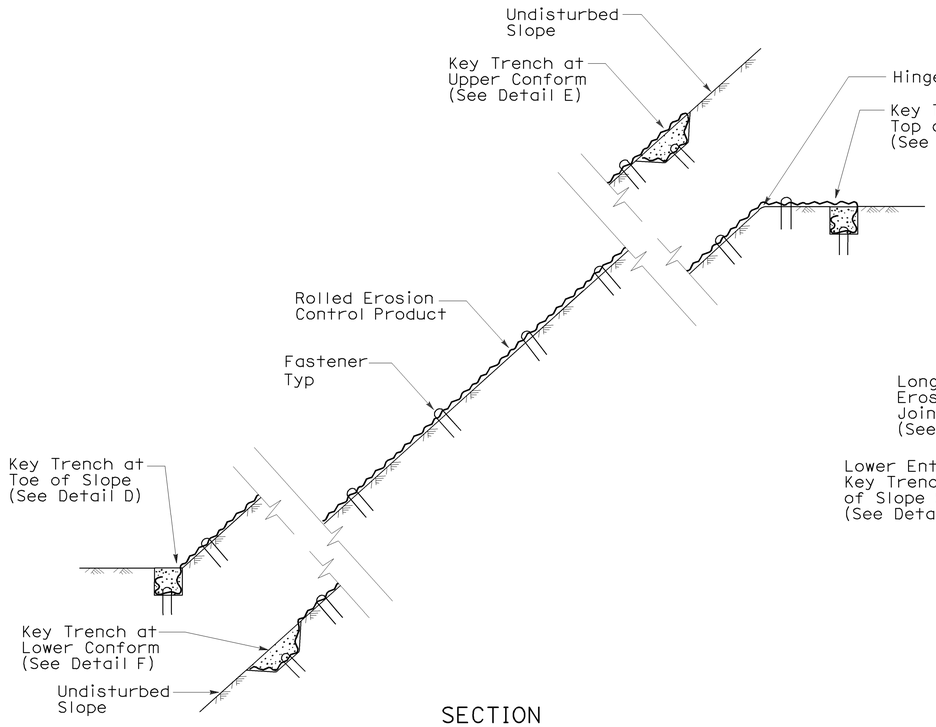

SECTION

ROLLED EROSION CONTROL PRODUCT ON SLOPE WITH VARIOUS KEY ENTRENCHMENTS

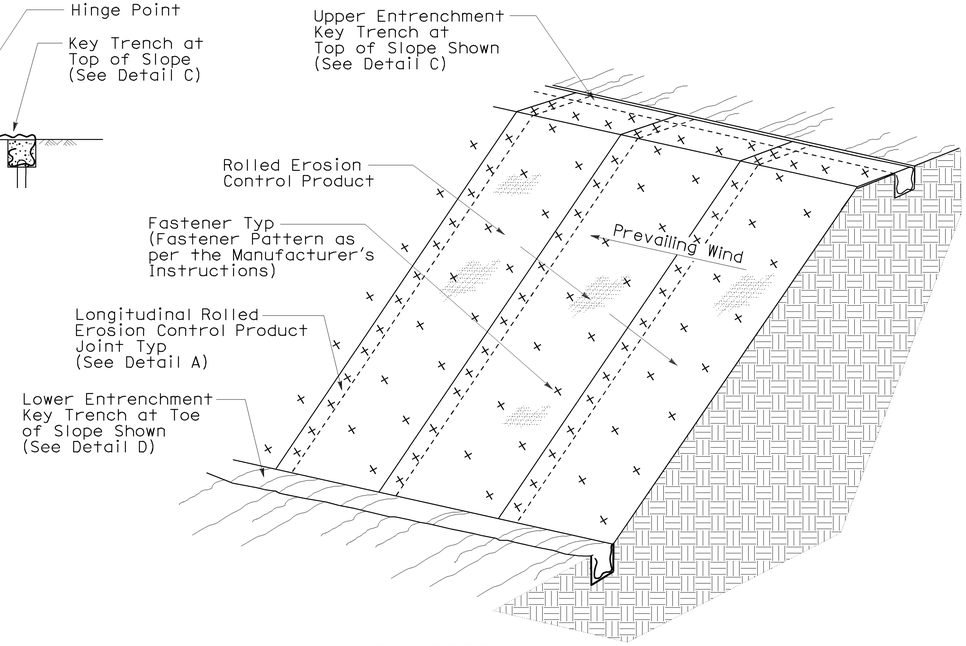

ISOMETRIC

ROLLED EROSION CONTROL PRODUCT ON SLOPE

NOTE:

1. Fiber Roll/Compost Sock shown for reference purposes only.
2. If transverse rolled erosion control product joints are required on slopes, see Detail B.

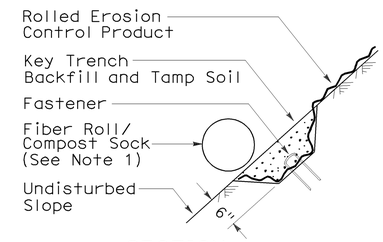

SECTION

DETAIL F
KEY TRENCH AT LOWER CONFORM

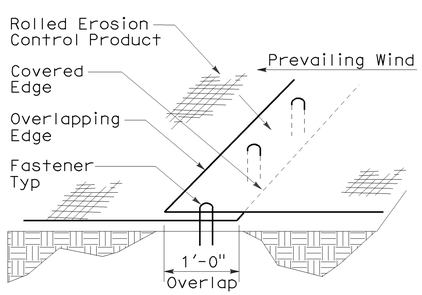

PERSPECTIVE

DETAIL A
LONGITUDINAL ROLLED EROSION CONTROL PRODUCT JOINT

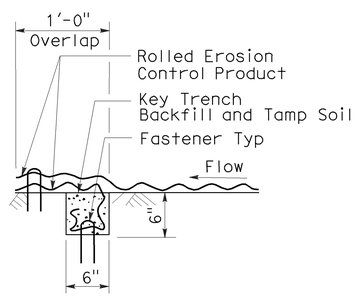

SECTION

DETAIL B
TRANSVERSE ROLLED EROSION CONTROL PRODUCT JOINT

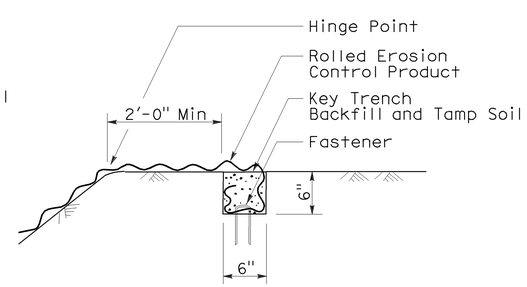

SECTION

DETAIL C
KEY TRENCH AT TOP OF SLOPE

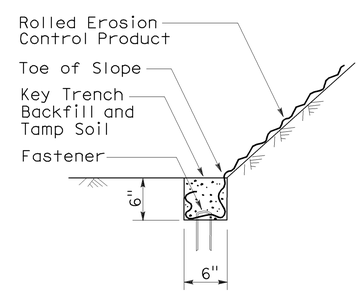

SECTION

DETAIL D
KEY TRENCH AT TOE OF SLOPE

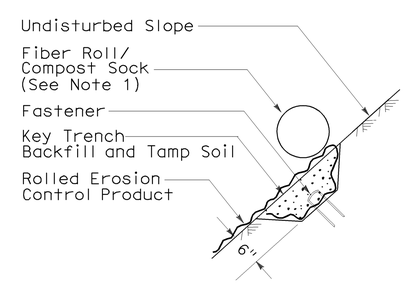

SECTION

DETAIL E
KEY TRENCH AT UPPER CONFORM

STATE OF CALIFORNIA
DEPARTMENT OF TRANSPORTATION

ROLLED EROSION CONTROL PRODUCT

NO SCALE

NSP H53 DATED JUNE 5, 2009 SUPPLEMENTS THE STANDARD PLANS BOOK DATED MAY 2006.

NEW STANDARD PLAN NSP H53

2006 NEW STANDARD PLAN NSP H53

3-4-09

DIST	COUNTY	ROUTE	POST MILES TOTAL PROJECT	SHEET NO.	TOTAL SHEETS
04	Ala	580	R8.3	36	37

LICENSED LANDSCAPE ARCHITECT

April 3, 2009
PLANS APPROVAL DATE

LICENSED LANDSCAPE ARCHITECT
Robert B. Schott 3695
Signature
11-30-10
Renewal Date
2-25-09
Date
STATE OF CALIFORNIA

The State of California or its officers or agents shall not be responsible for the accuracy or completeness of electronic copies of this plan sheet.

To accompany plans dated 3-7-11

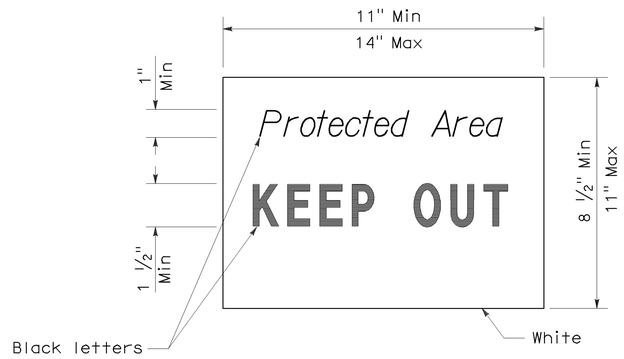

SIGN DETAIL

NOTE:

1. Temporary silt fence and temporary straw bale barrier shown for reference purposes only.

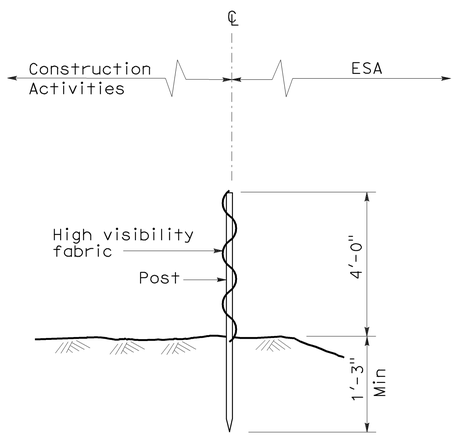

SECTION
TEMPORARY FENCE (TYPE ESA)

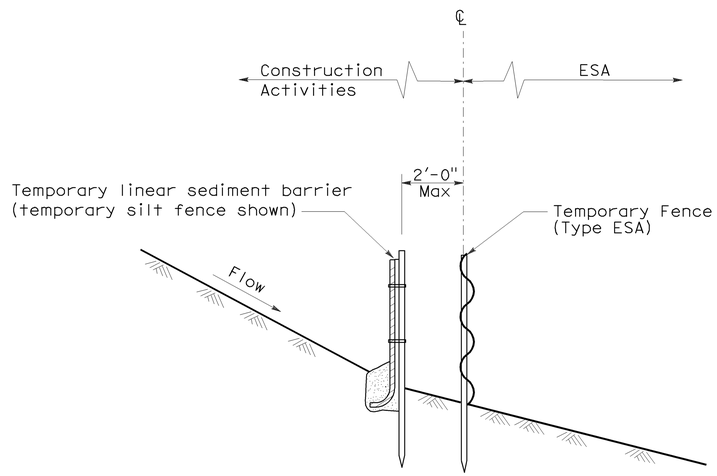

SECTION
PLACEMENT DETAIL
FOR TEMPORARY LINEAR SEDIMENT BARRIER
USED WITH TEMPORARY
FENCE (TYPE ESA)
(See Note 1)

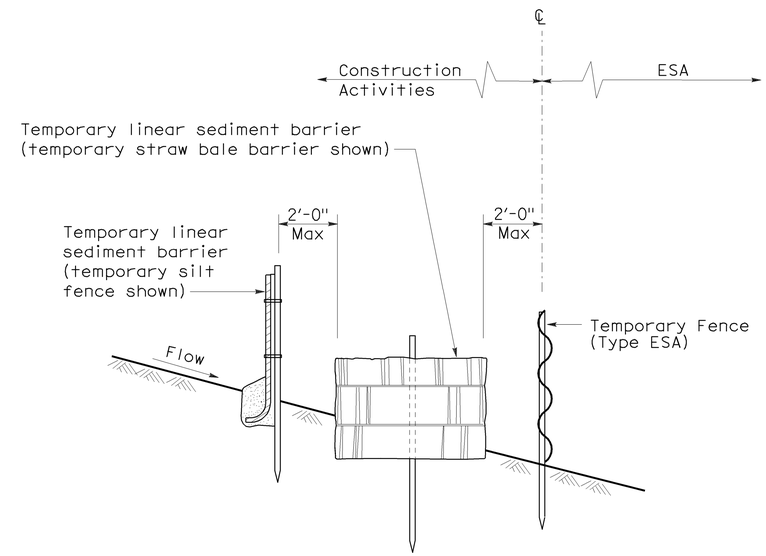

SECTION
PLACEMENT DETAIL
FOR TEMPORARY SILT FENCE
AND TEMPORARY STRAW BALE BARRIER
USED WITH TEMPORARY FENCE (TYPE ESA)
(See Note 1)

STATE OF CALIFORNIA
DEPARTMENT OF TRANSPORTATION

TEMPORARY WATER POLLUTION CONTROL DETAILS [TEMPORARY FENCE (TYPE ESA)]

NO SCALE

NSP T65 DATED APRIL 3, 2009 SUPPLEMENTS
THE STANDARD PLANS BOOK DATED MAY 2006.

NEW STANDARD PLAN NSP T65

2006 NEW STANDARD PLAN NSP T65

DIST	COUNTY	ROUTE	POST MILES TOTAL PROJECT	SHEET NO.	TOTAL SHEETS
04	Ala	580	R8.3	37	37

LICENSED LANDSCAPE ARCHITECT

April 3, 2009
PLANS APPROVAL DATE

The State of California or its officers or agents shall not be responsible for the accuracy or completeness of electronic copies of this plan sheet.

LICENSED LANDSCAPE ARCHITECT
Gregory A. Balzer 2576
02-28-11
Renewal Date
03-04-09
Date
STATE OF CALIFORNIA

To accompany plans dated 3-7-11

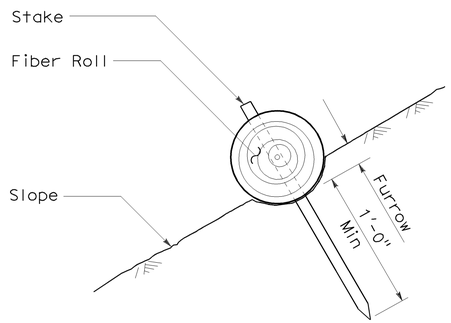

SECTION

FIBER ROLL
(TYPE 1)

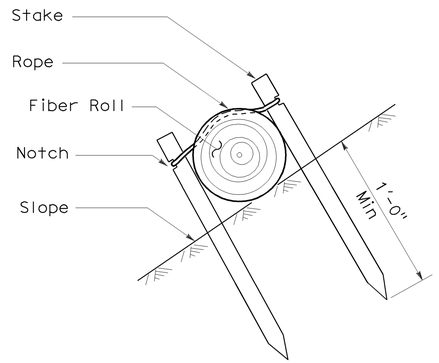

SECTION

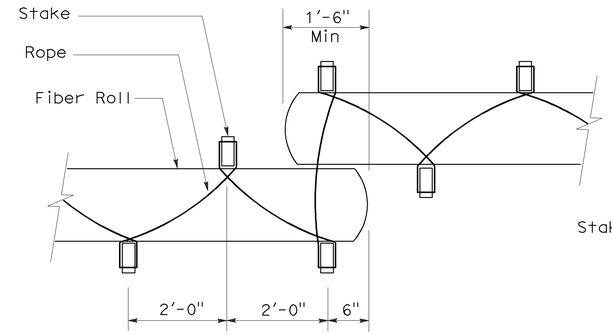

PLAN

FIBER ROLL
(TYPE 2)

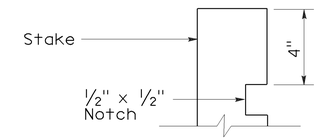

ELEVATION

STAKE NOTCH DETAIL

NOTES:

1. Fiber roll spacing varies depending upon slope inclination.
2. Installations shown in the perspectives are for slope inclination of 10:1 and steeper.

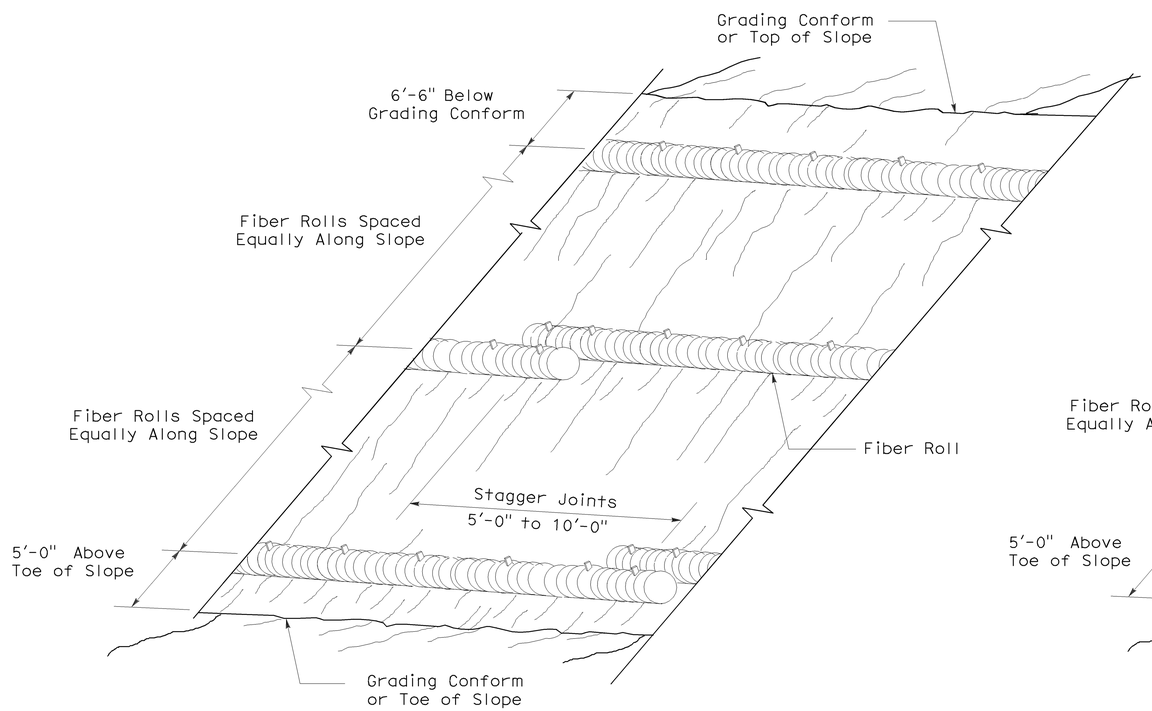

PERSPECTIVE

FIBER ROLL (TYPE 1)

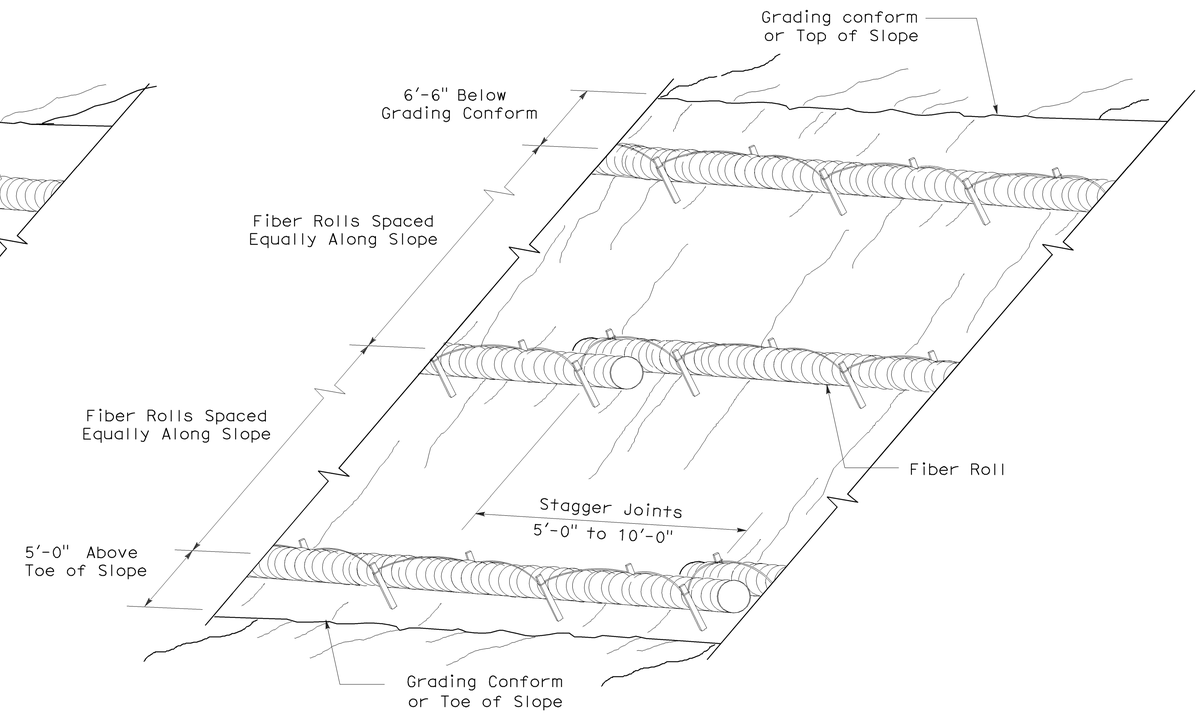

PERSPECTIVE

FIBER ROLL (TYPE 2)

STATE OF CALIFORNIA
DEPARTMENT OF TRANSPORTATION

EROSION CONTROL DETAILS (FIBER ROLL)

NO SCALE

RNSP H51 DATED APRIL 3, 2009 SUPERSEDES NSP H51 DATED DECEMBER 1, 2006 THAT SUPPLEMENTS THE STANDARD PLANS BOOK DATED MAY 2006.

REVISED NEW STANDARD PLAN RNSP H51

2006 REVISED NEW STANDARD PLAN RNSP H51

3-4-09