Dist	COUNTY	ROUTE	POST MILES TOTAL PROJECT	SHEET No.	TOTAL SHEETS
04	SCI	17,35, 85,101	Var	1	29

STATE OF CALIFORNIA

DEPARTMENT OF TRANSPORTATION

PROJECT PLANS FOR CONSTRUCTION ON

STATE HIGHWAY

IN SANTA CLARA COUNTY AT VARIOUS LOCATIONS

INDEX OF PLANS

SHEET No.	DESCRIPTION
1	TITLE SHEET
2	LOCATIONS OF CONSTRUCTION
3 - 8	CONSTRUCTION AREA SIGNS
9	PAVEMENT DELINEATION DETAILS AND QUANTITIES
10 - 14	REVISED STANDARD PLANS

STRUCTURE PLANS

15 - 23	GENERAL PLANS
24 - 28	JOINT SEAL DETAILS
29	JOINT SEAL ASSEMBLY

THE STANDARD PLANS LIST APPLICABLE TO THIS CONTRACT IS INCLUDED IN THE NOTICE TO BIDDERS AND SPECIAL PROVISIONS BOOK.

TO BE SUPPLEMENTED BY STANDARD PLANS DATED MAY 2006

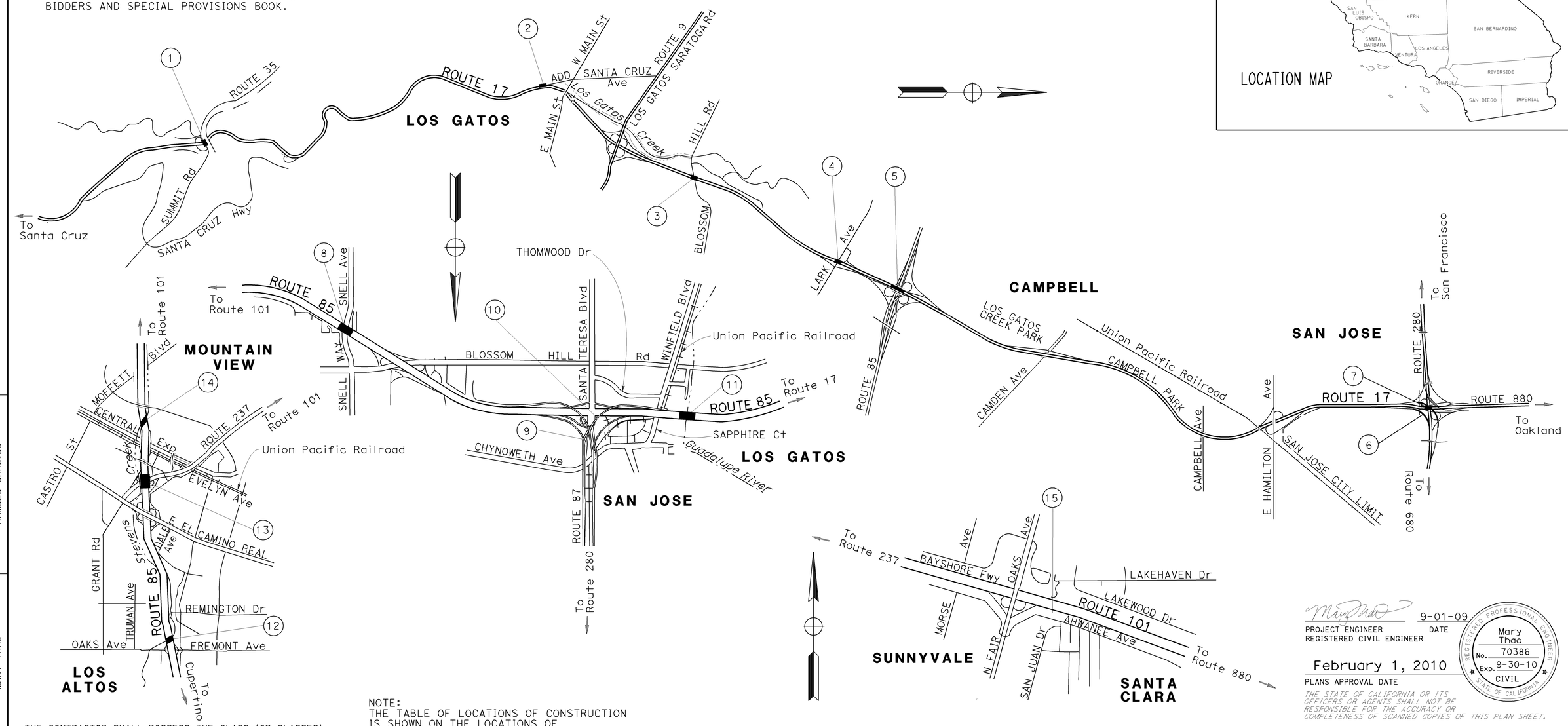

LOCATION MAP

NOTE:
THE TABLE OF LOCATIONS OF CONSTRUCTION IS SHOWN ON THE LOCATIONS OF CONSTRUCTION SHEET.

NO SCALE

THE CONTRACTOR SHALL POSSESS THE CLASS (OR CLASSES) OF LICENSE AS SPECIFIED IN THE "NOTICE TO BIDDERS."

PROJECT MANAGER: RAMSES SARGISS

DESIGN ENGINEER: MARY THAO

Mary Thao 9-01-09
PROJECT ENGINEER DATE
REGISTERED CIVIL ENGINEER

February 1, 2010
PLANS APPROVAL DATE

REGISTERED PROFESSIONAL ENGINEER Mary Thao No. 70386 Exp. 9-30-10 CIVIL STATE OF CALIFORNIA

THE STATE OF CALIFORNIA OR ITS OFFICERS OR AGENTS SHALL NOT BE RESPONSIBLE FOR THE ACCURACY OR COMPLETENESS OF SCANNED COPIES OF THIS PLAN SHEET.

CONTRACT No. 04-1E4904

LAST REVISION 01-28-10

DATE PLOTTED => 29-JAN-2010
TIME PLOTTED => 12:46

Dist	COUNTY	ROUTE	POST MILES TOTAL PROJECT	SHEET No.	TOTAL SHEETS
04	SCI	17,35, 85,101	Var	2	29

REGISTERED CIVIL ENGINEER 9-01-09 DATE

2-1-10
PLANS APPROVAL DATE

REGISTERED PROFESSIONAL ENGINEER Mary Thao No. 70386 Exp. 9-30-10 CIVIL STATE OF CALIFORNIA

THE STATE OF CALIFORNIA OR ITS OFFICERS OR AGENTS SHALL NOT BE RESPONSIBLE FOR THE ACCURACY OR COMPLETENESS OF SCANNED COPIES OF THIS PLAN SHEET.

LOCATIONS OF CONSTRUCTION

LOCATION	COUNTY	ROUTE	PM	BRIDGE No.	BRIDGE NAME
1	SCI	35	R0.03	37-0343	SUMMIT ROAD SEPARATION (35/17)
2	SCI	17	6.16	37-0124L	SANTA CRUZ AVENUE UC
3	SCI	17	7.67	37-0148	BLOSSOM HILL ROAD OC
4	SCI	17	8.89	37-0151	LARK AVENUE OC
5	SCI	17	9.32	37-0493	ROUTE 17/85 SEPARATION
6	SCI	17	13.85	37-0139G	N17-S280 CONNECTOR OC
7	SCI	17	13.93	37-0131	ROUTE 17/280 SEPARATION
8	SCI	85	3.48	37-0442	SNELL AVENUE OC
9	SCI	85	4.7	37-0414G	N85-N87 CONNECTOR OC
10	SCI	85	5.2	37-0633F	S85-N87/87 CONNECTOR SEPARATION
11	SCI	85	5.59	37-0467R	GUADALUPE RIVER
12	SCI	85	R20.02	37-0185	STEVENS CREEK
13	SCI	85	R22.13	37-0198	ROUTE 85/237 SEPARATION
14	SCI	85	R22.95	37-0197	STEVENS CREEK
15	SCI	101	44.64	37-0395	AHWANEE AVENUE POC

LOCATIONS OF CONSTRUCTION

LC-1

REVISED BY MT
DATE REVISED 9/02/09

CALCULATED-DESIGNED BY MARY THAO
CHECKED BY NGOC TRAN

FUNCTIONAL SUPERVISOR NGOC TRAN

STATE OF CALIFORNIA - DEPARTMENT OF TRANSPORTATION
Caltrans
DESIGN

LAST REVISION 01-28-10
DATE PLOTTED => 29-JAN-2010
TIME PLOTTED => 12:49

Dist	COUNTY	ROUTE	POST MILES TOTAL PROJECT	SHEET No.	TOTAL SHEETS
04	SCI	17,35, 85,101	Var	3	29

REGISTERED CIVIL ENGINEER 11-03-09 DATE

2-1-10
PLANS APPROVAL DATE

REGISTERED PROFESSIONAL ENGINEER Jerilyn L. Struven No. 49964 Exp. 12-31-10 CIVIL STATE OF CALIFORNIA

THE STATE OF CALIFORNIA OR ITS OFFICERS OR AGENTS SHALL NOT BE RESPONSIBLE FOR THE ACCURACY OR COMPLETENESS OF SCANNED COPIES OF THIS PLAN SHEET.

LEGEND:

No.	CONSTRUCTION AREA SIGN NUMBER
→	TRAFFIC DIRECTION
X	RAMP CLOSED

NOTE:

1. LOCATION OF CONSTRUCTION AREA SIGNS SHOWN ARE APPROXIMATE, EXACT LOCATION TO BE DETERMINED BY THE ENGINEER.

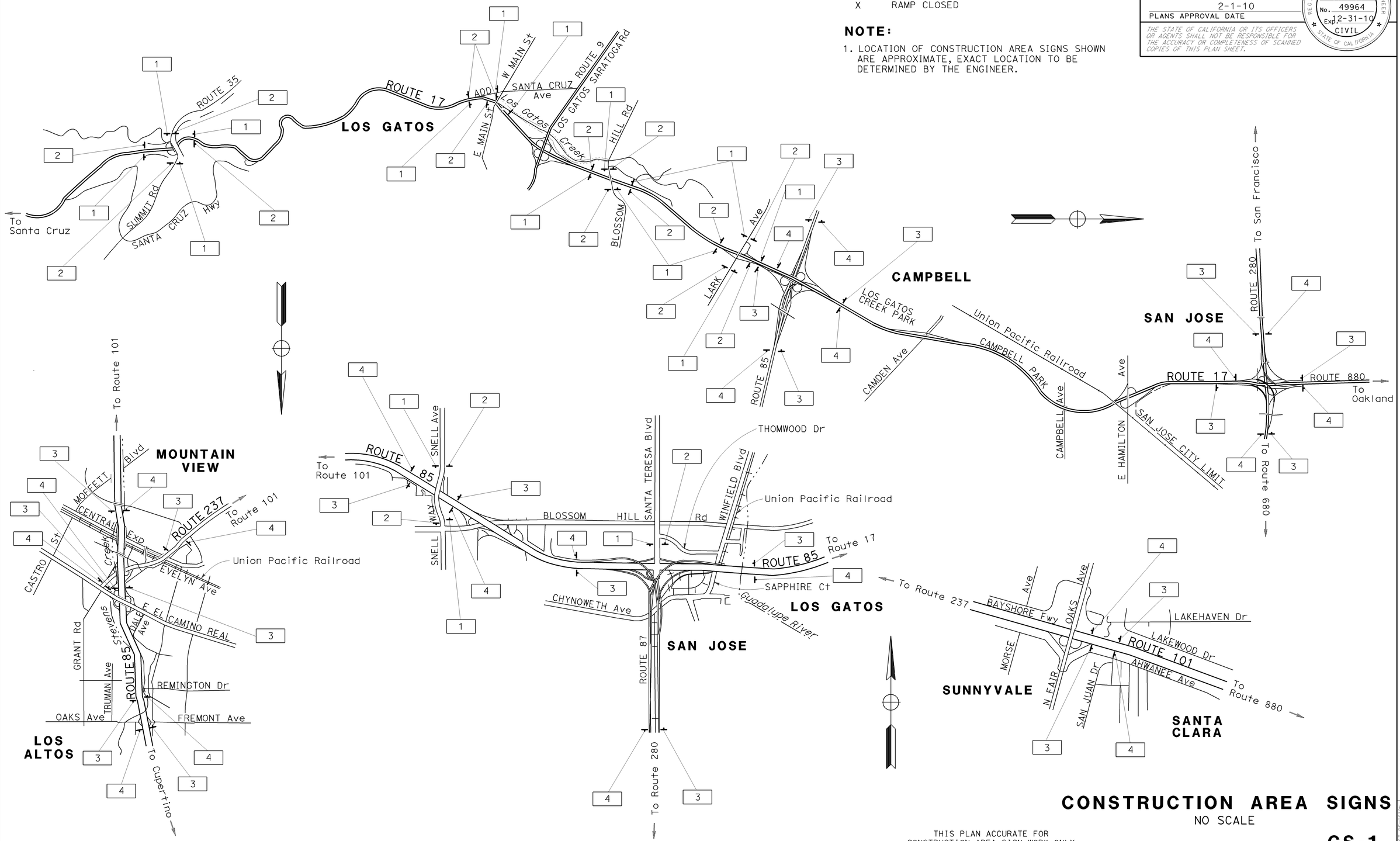

CONSTRUCTION AREA SIGNS

NO SCALE

THIS PLAN ACCURATE FOR CONSTRUCTION AREA SIGN WORK ONLY

CS-1

REVISED BY	RY
DATE REVISED	9/02/09
CALCULATED-DESIGNED BY	ROY K YUAN
CHECKED BY	JERILYN L. STRUVEN
FUNCTIONAL SUPERVISOR	ROLAND AU-YEUNG

STATE OF CALIFORNIA - DEPARTMENT OF TRANSPORTATION

Caltrans® TRAFFIC

LAST REVISION 01-28-10 | DATE PLOTTED => 29-JAN-2010 | TIME PLOTTED => 12:58

Dist	COUNTY	ROUTE	POST MILES TOTAL PROJECT	SHEET No.	TOTAL SHEETS
04	SCI	17,35, 85,101	Var	4	29

REGISTERED CIVIL ENGINEER 11-03-09 DATE

2-1-10
PLANS APPROVAL DATE

REGISTERED PROFESSIONAL ENGINEER Jerilyn L. Struven No. 49964 Exp. 12-31-10 CIVIL STATE OF CALIFORNIA

THE STATE OF CALIFORNIA OR ITS OFFICERS OR AGENTS SHALL NOT BE RESPONSIBLE FOR THE ACCURACY OR COMPLETENESS OF SCANNED COPIES OF THIS PLAN SHEET.

DETOUR-VIA

NB ROUTE 85 CONNECTOR TO NB ROUTE 17; NB ROUTE 17; OFF-RAMP TO WHITE OAKS Rd/ CAMDEN Ave; WB CAMDEN Ave TO SB ROUTE 17 ON-RAMP

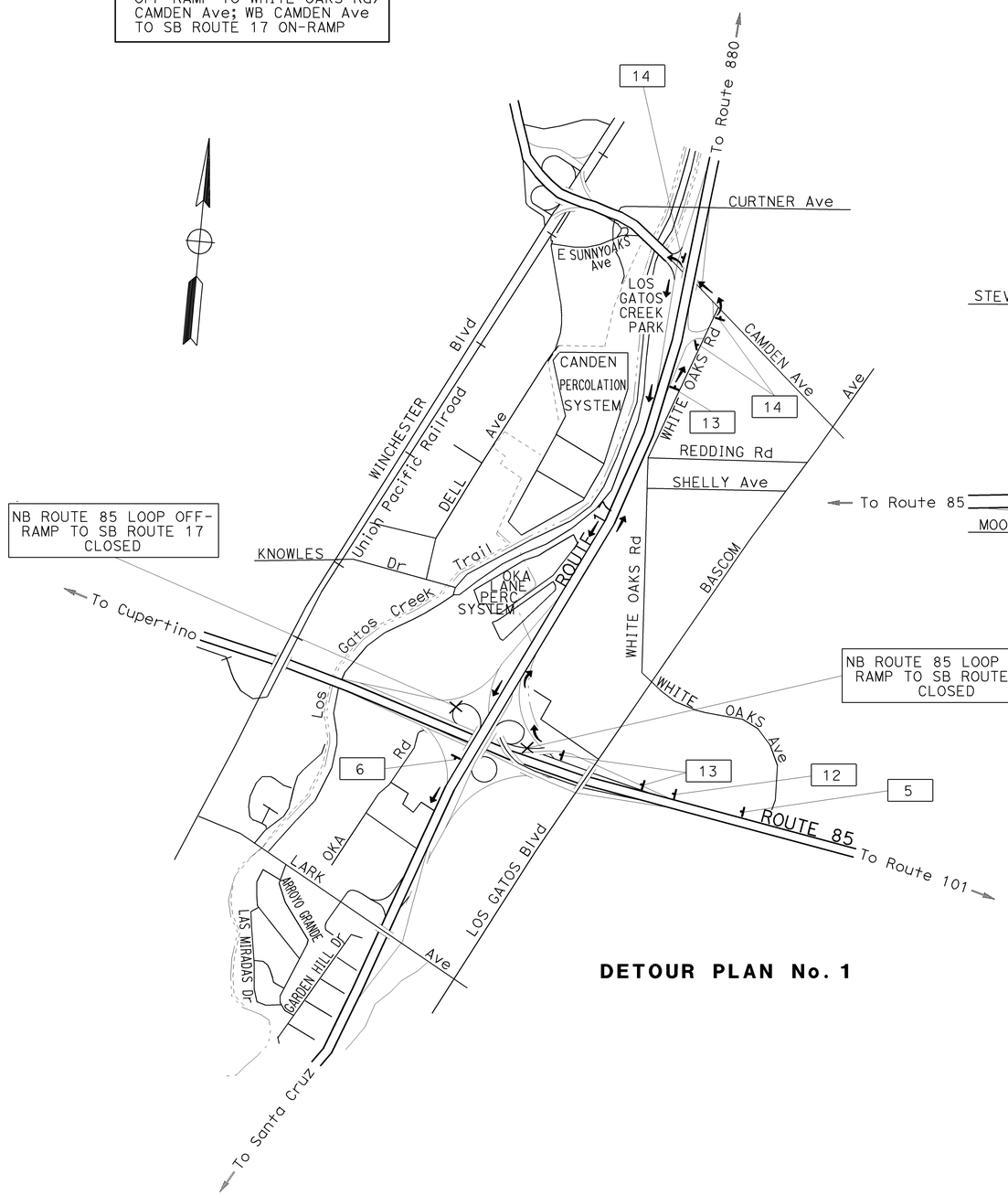

DETOUR PLAN No. 1

DETOUR-VIA

NB ROUTE 17 OFF-RAMP TO EB STEVENS CREEK Blvd; EB STEVENS CREEK Blvd TO SB S BASCOM Ave; SB S BASCOM Ave TO EB MOORPARK Ave; EB MOORPARK Ave TO ON-RAMP TO SB ROUTE 280

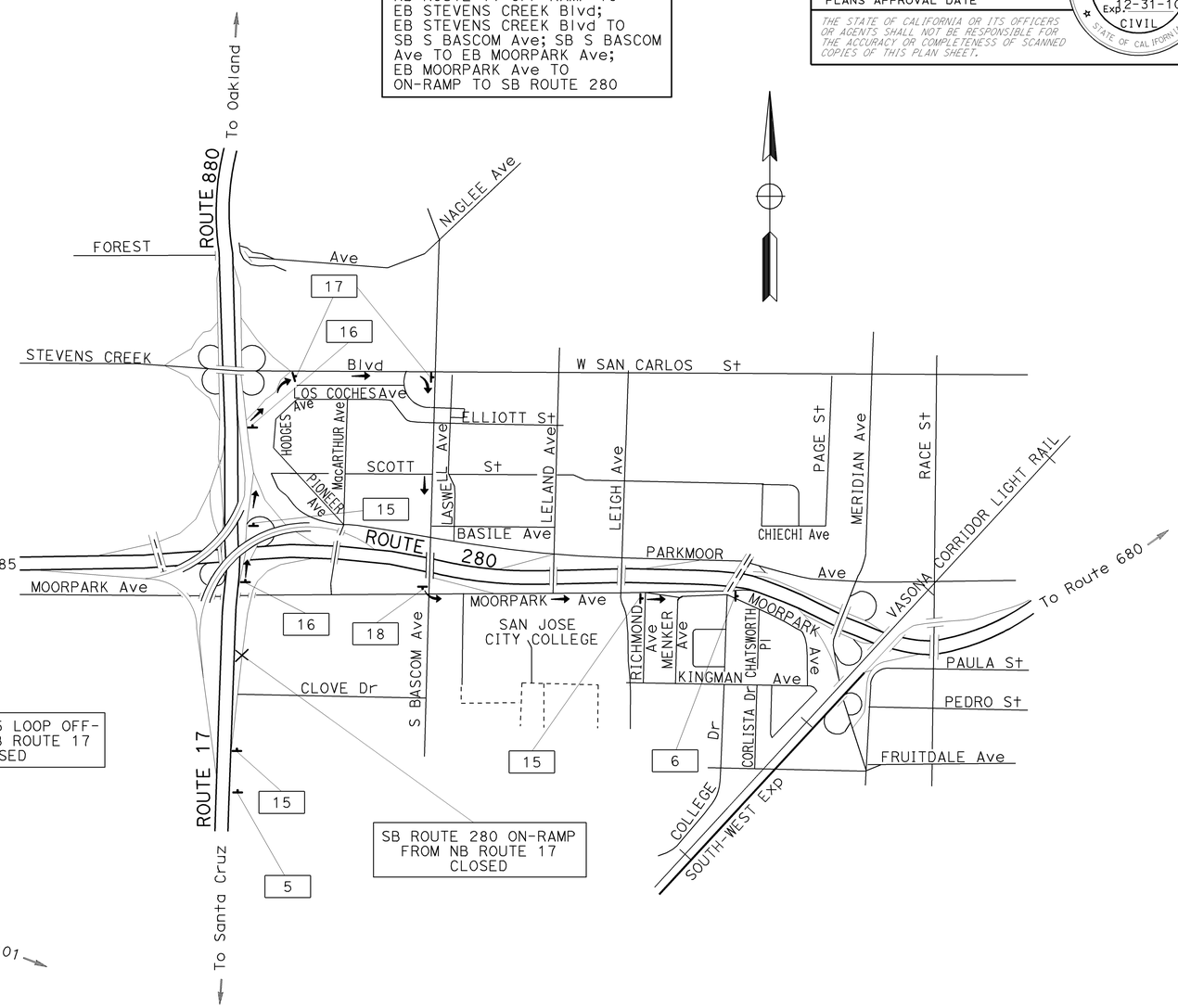

DETOUR PLAN No. 2

FOR NOTES, ABBREVIATIONS AND LEGEND, SEE SHEET CS-1

THIS PLAN ACCURATE FOR CONSTRUCTION AREA SIGN WORK ONLY

CONSTRUCTION AREA SIGNS

NO SCALE

CS-2

CALCULATED-DESIGNED BY	ROY K YUAN
CHECKED BY	JERILYN L. STRUVEN
REVISED BY	RY
DATE REVISED	9/02/09
FUNCTIONAL SUPERVISOR	ROLAND AU-YEUNG

STATE OF CALIFORNIA - DEPARTMENT OF TRANSPORTATION

Caltrans

TRAFFIC

LAST REVISION 01-28-10 | DATE PLOTTED => 29-JAN-2010 | TIME PLOTTED => 12:58

Dist	COUNTY	ROUTE	POST MILES TOTAL PROJECT	SHEET No.	TOTAL SHEETS
04	SCI	17,35, 85,101	Var	5	29

REGISTERED CIVIL ENGINEER 11-03-09 DATE

2-1-10
PLANS APPROVAL DATE

REGISTERED PROFESSIONAL ENGINEER Jerilyn L. Struven No. 49964 Exp. 12-31-10 CIVIL STATE OF CALIFORNIA

THE STATE OF CALIFORNIA OR ITS OFFICERS OR AGENTS SHALL NOT BE RESPONSIBLE FOR THE ACCURACY OR COMPLETENESS OF SCANNED COPIES OF THIS PLAN SHEET.

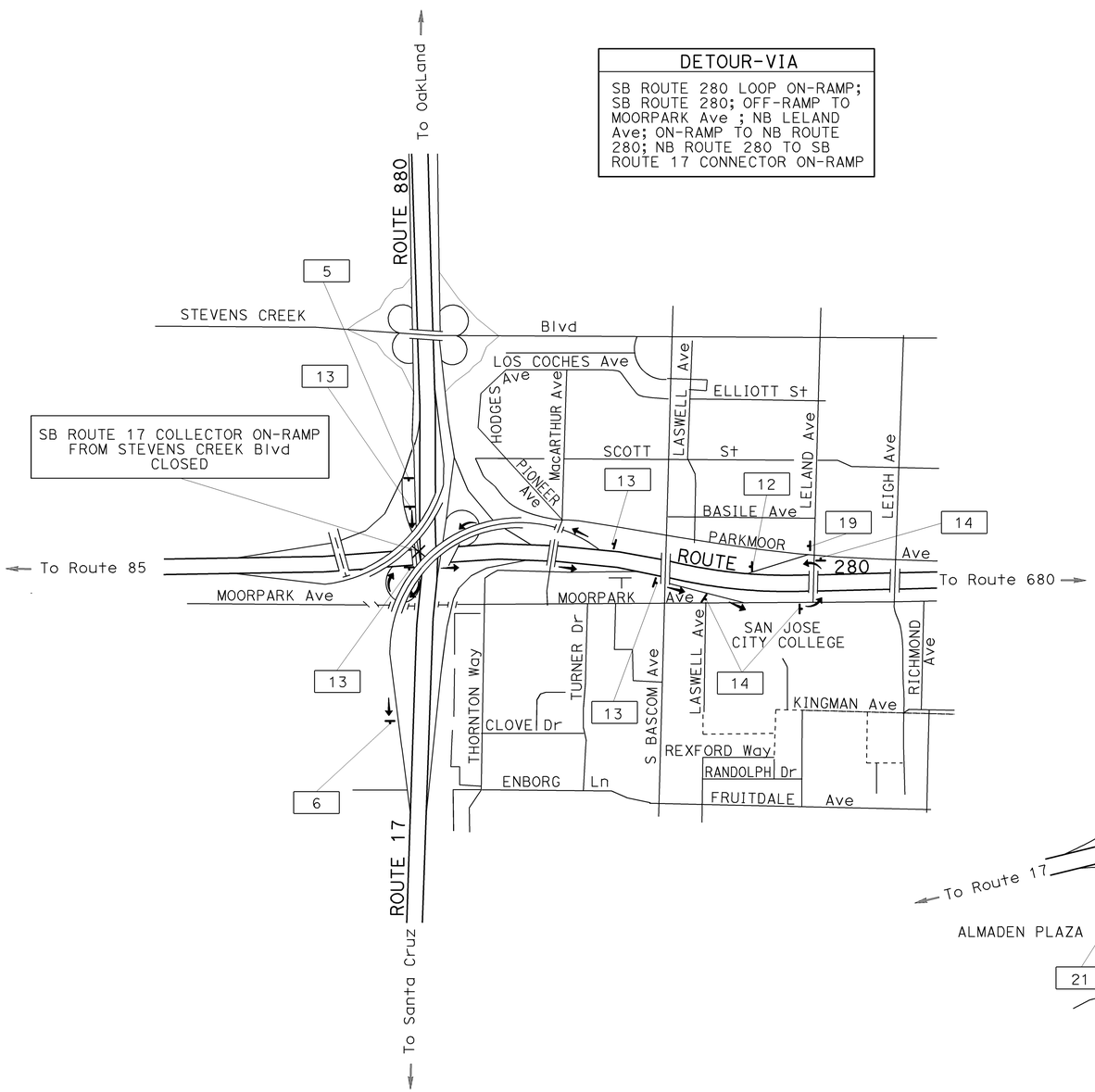

DETOUR PLAN No. 3

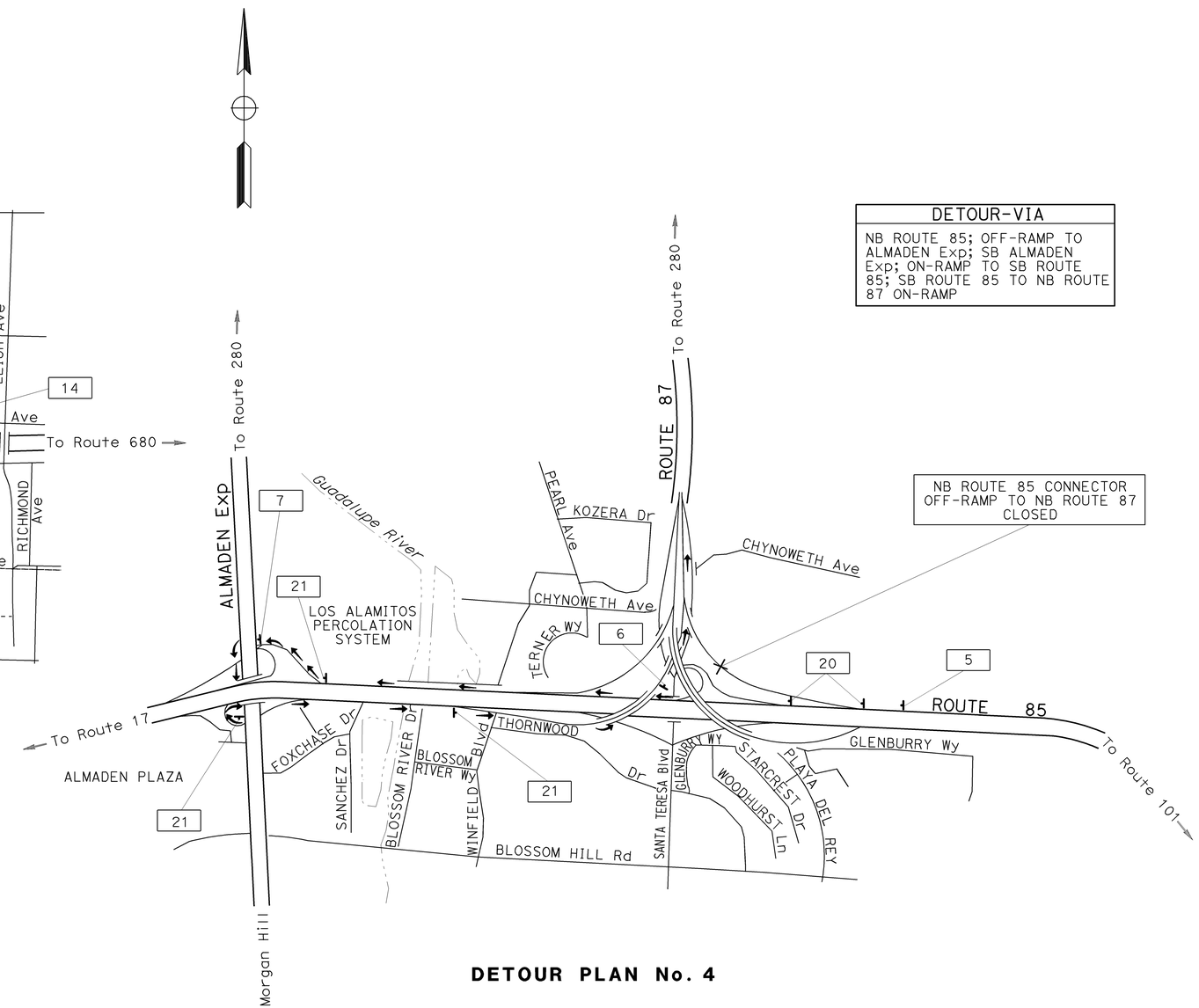

DETOUR PLAN No. 4

CONSTRUCTION AREA SIGNS

NO SCALE

CS-3

FOR NOTES, ABBREVIATIONS AND LEGEND, SEE SHEET CS-1

THIS PLAN ACCURATE FOR CONSTRUCTION AREA SIGN WORK ONLY

STATE OF CALIFORNIA - DEPARTMENT OF TRANSPORTATION
Caltrans
TRAFFIC

FUNCTIONAL SUPERVISOR: ROLAND AU-YEUNG
CALCULATED-DESIGNED BY: ROY K YUAN
CHECKED BY: JERILYN L. STRUVEN
REVISED BY: RY
DATE REVISED: 9/02/09

LAST REVISION 01-28-10 | DATE PLOTTED => 29-JAN-2010 | TIME PLOTTED => 12:59

Dist	COUNTY	ROUTE	POST MILES TOTAL PROJECT	SHEET No.	TOTAL SHEETS
04	SCI	17,35, 85,101	Var	6	29

REGISTERED CIVIL ENGINEER 11-03-09 DATE

2-1-10
PLANS APPROVAL DATE

REGISTERED PROFESSIONAL ENGINEER Jerilyn L. Struven No. 49964 Exp. 12-31-10 CIVIL STATE OF CALIFORNIA

THE STATE OF CALIFORNIA OR ITS OFFICERS OR AGENTS SHALL NOT BE RESPONSIBLE FOR THE ACCURACY OR COMPLETENESS OF SCANNED COPIES OF THIS PLAN SHEET.

DETOUR-VIA

SB ROUTE 85; OFF-RAMP TO SANTA TERESA Blvd; NB SANTA TERESA Blvd TO NB ROUTE 87 ON-RAMP

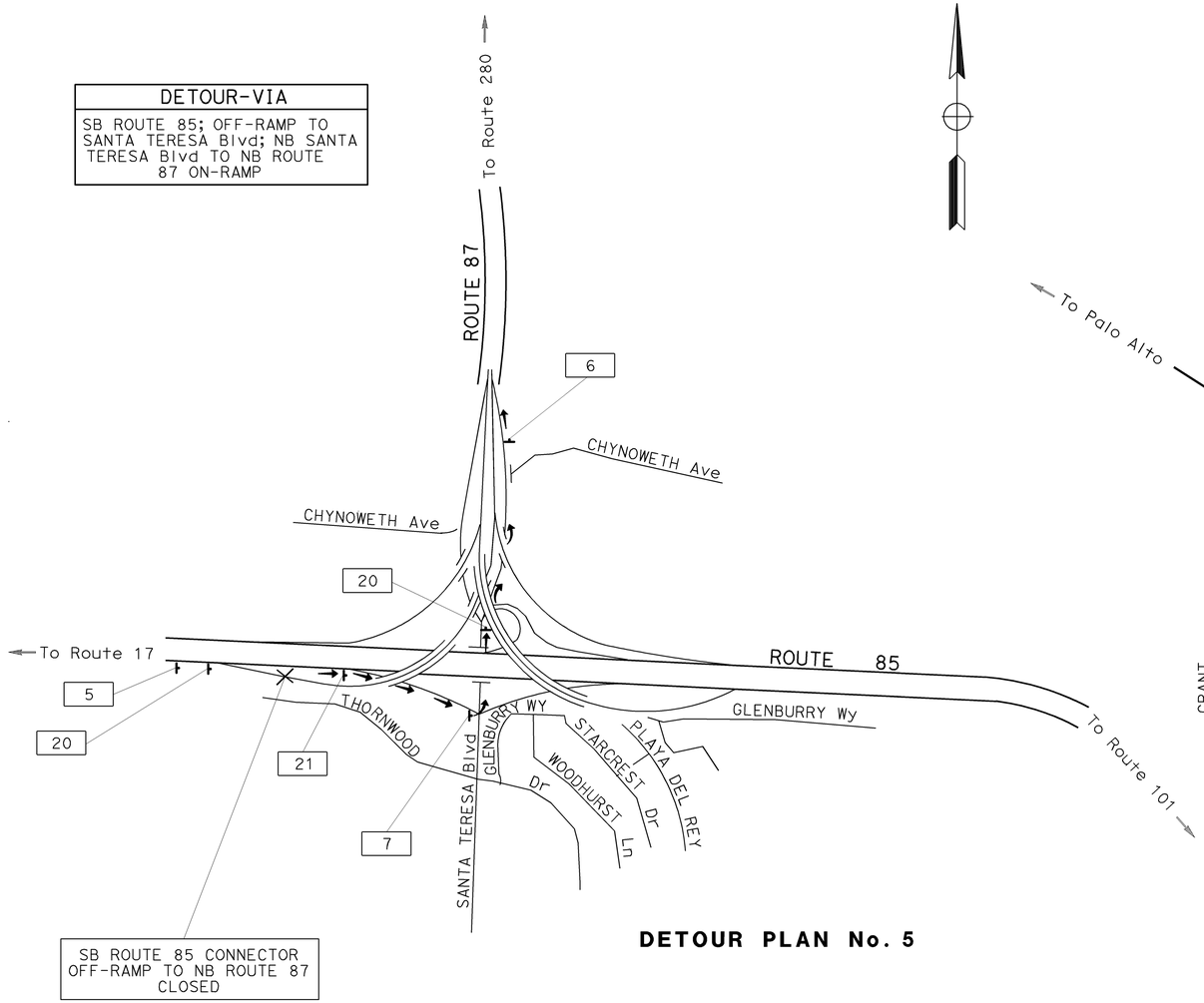

DETOUR PLAN No. 5

DETOUR-VIA

➔ VIA EB ROUTE 237; OFF-RAMP TO MOORPARK Way; NB MOORPARK Way; SB SYLVAN Ave; NB ROUTE 82 TO NB ROUTE 85 VIA CONNECTOR

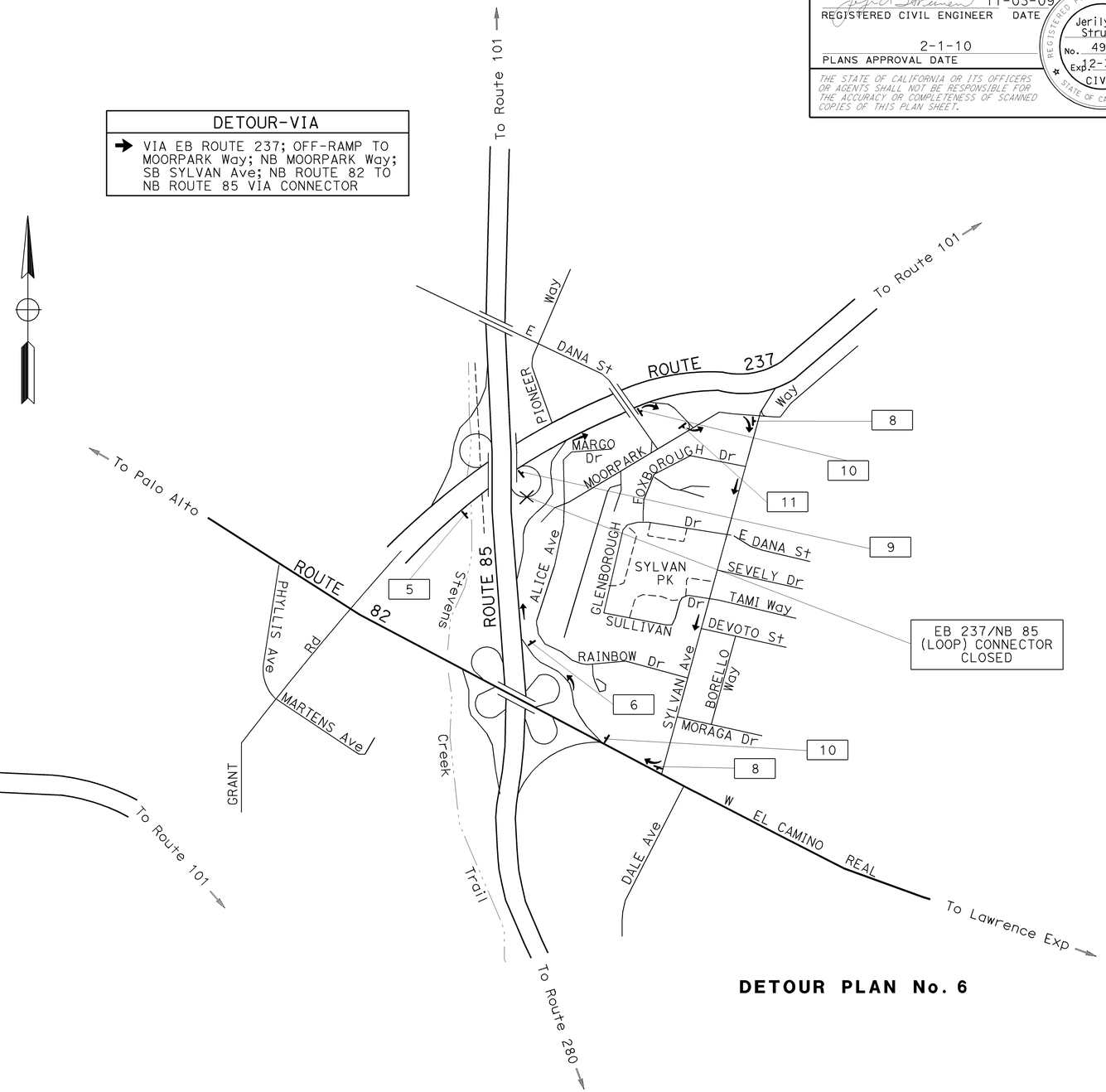

DETOUR PLAN No. 6

FOR NOTES, ABBREVIATIONS AND LEGEND, SEE SHEET CS-1

THIS PLAN ACCURATE FOR CONSTRUCTION AREA SIGN WORK ONLY

CONSTRUCTION AREA SIGNS

NO SCALE

CS-4

CALCULATED-DESIGNED BY	ROY K YUAN
CHECKED BY	JERILYN L. STRUVEN
REVISED BY	RY
DATE REVISED	9/02/09
FUNCTIONAL SUPERVISOR	ROLAND AU-YEUNG

STATE OF CALIFORNIA - DEPARTMENT OF TRANSPORTATION

Caltrans

TRAFFIC

LAST REVISION 01-28-10 | DATE PLOTTED => 29-JAN-2010 | TIME PLOTTED => 13:00

Dist	COUNTY	ROUTE	POST MILES TOTAL PROJECT	SHEET No.	TOTAL SHEETS
04	SCI	17,35, 85,101	Var	7	29

REGISTERED CIVIL ENGINEER 11-03-09 DATE

2-1-10
PLANS APPROVAL DATE

REGISTERED PROFESSIONAL ENGINEER Jerilyn L. Struven No. 49964 Exp. 12-31-10 CIVIL STATE OF CALIFORNIA

THE STATE OF CALIFORNIA OR ITS OFFICERS OR AGENTS SHALL NOT BE RESPONSIBLE FOR THE ACCURACY OR COMPLETENESS OF SCANNED COPIES OF THIS PLAN SHEET.

DETOUR-VIA

➔ VIA WB ROUTE 237; SB ROUTE 82 TO SB ROUTE 85 VIA CONNECTOR

WB ROUTE 237/SB ROUTE 85 (LOOP) CONNECTOR CLOSED

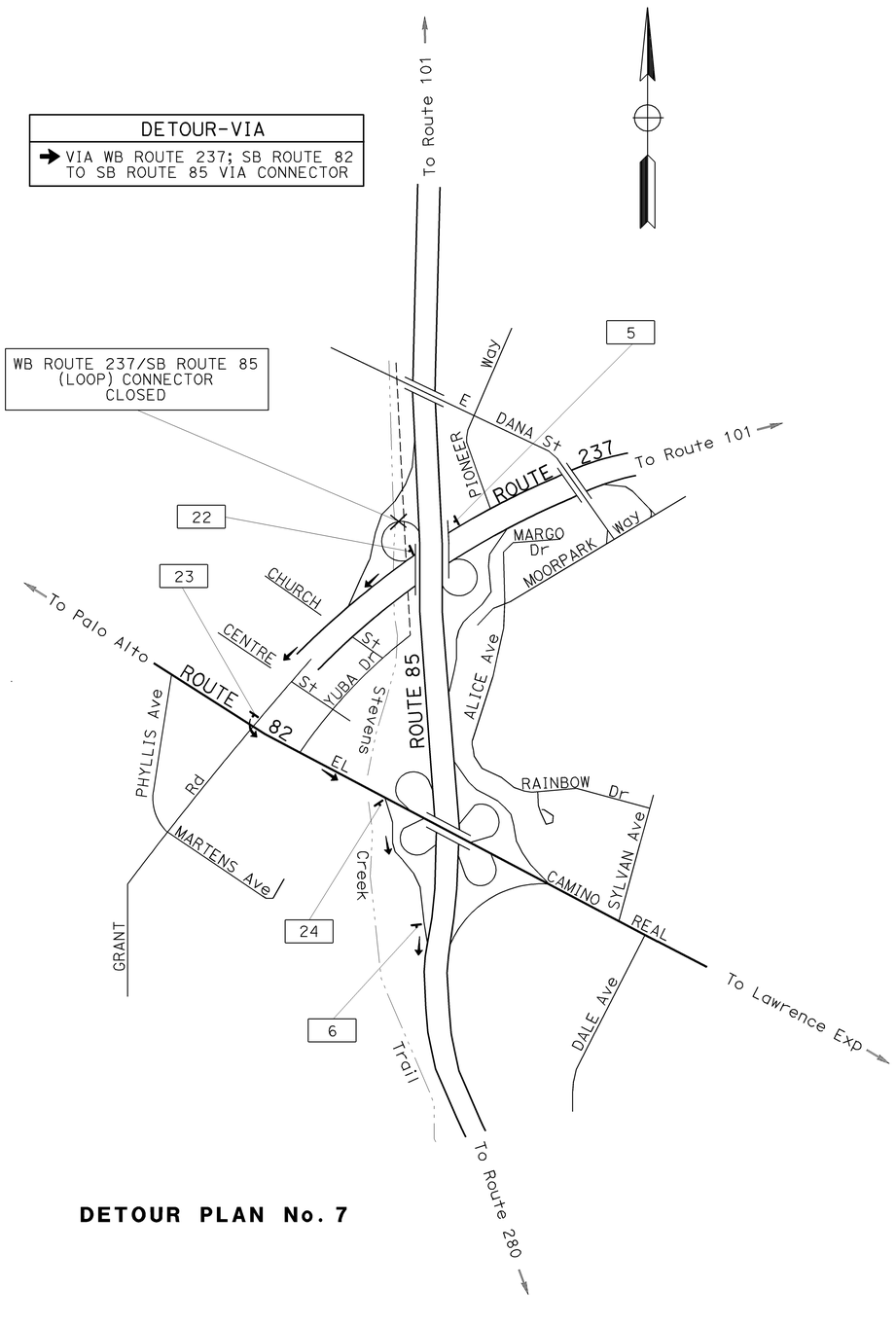

DETOUR PLAN No. 7

DETOUR-VIA

NB EASY St; WB E MIDDLEFIELD Rd; NB MOFFETT Blvd TO ROUTE 101 ON-RAMPS

NB ROUTE 85 ON-RAMP FROM CENTRAL Exp/EASY St CLOSED

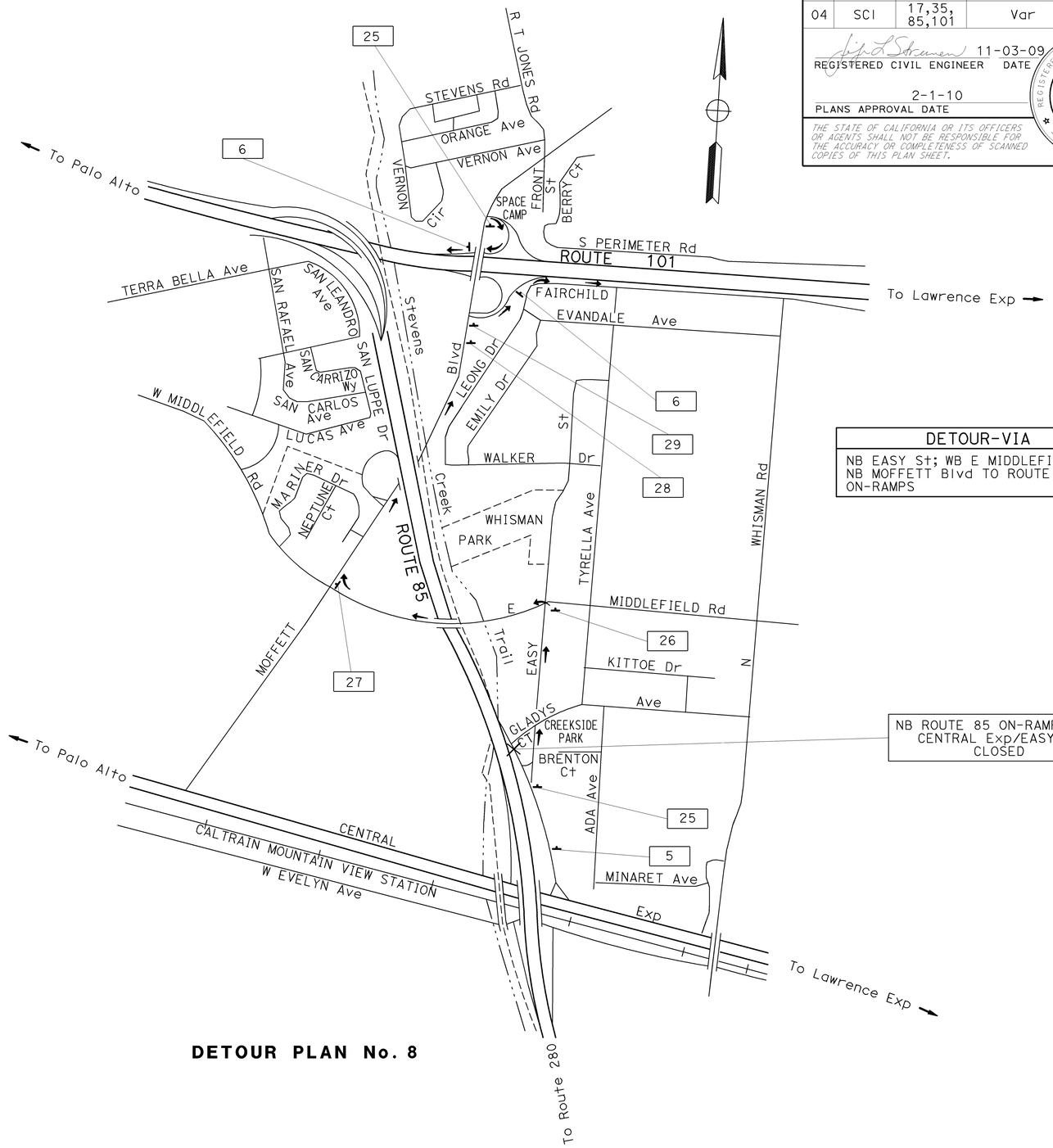

DETOUR PLAN No. 8

FOR NOTES, ABBREVIATIONS AND LEGEND, SEE SHEET CS-1

THIS PLAN ACCURATE FOR CONSTRUCTION AREA SIGN WORK ONLY

CONSTRUCTION AREA SIGNS

NO SCALE

CS-5

CALCULATED-DESIGNED BY	ROY K YUAN
CHECKED BY	JERILYN L. STRUVEN
REVISED BY	RY
DATE REVISED	9/02/09
FUNCTIONAL SUPERVISOR	ROLAND AU-YEUNG

STATE OF CALIFORNIA - DEPARTMENT OF TRANSPORTATION

Caltrans®

TRAFFIC

LAST REVISION 01-28-10 DATE PLOTTED => 29-JAN-2010 TIME PLOTTED => 13:00

Dist	COUNTY	ROUTE	POST MILES TOTAL PROJECT	SHEET No.	TOTAL SHEETS
04	SCI	17,35, 85,101	Var	8	29

REGISTERED CIVIL ENGINEER 11-03-09 DATE

2-1-10
PLANS APPROVAL DATE

REGISTERED PROFESSIONAL ENGINEER Jerilyn L. Struven No. 49964 Exp. 12-31-10 CIVIL STATE OF CALIFORNIA

THE STATE OF CALIFORNIA OR ITS OFFICERS OR AGENTS SHALL NOT BE RESPONSIBLE FOR THE ACCURACY OR COMPLETENESS OF SCANNED COPIES OF THIS PLAN SHEET.

STATIONARY MOUNTED CONSTRUCTION AREA SIGNS

SIGN No.	SIGN CODE	SIGN MESSAGE	PANEL SIZE (INCHES)	NUMBER OF POSTS AND SIZES (EA - INCHES)	QUANTITY EA
1	W20-1	ROAD WORK AHEAD	36 x 36	1 - 4 x 6	18
2	G20-2	END ROAD WORK	36 x 18	1 - 4 x 4	18
3	W20-1	ROAD WORK AHEAD	48 x 48	1 - 4 x 6	21
4	G20-2	END ROAD WORK	48 x 24	1 - 4 x 4	21
5	W20-2	DETOUR AHEAD	48 x 48	1 - 4 x 6	8
6	M4-8a	END DETOUR	24 x 18	1 - 4 x 4	9
7	M4-10(L†)	DETOUR (LEFT)	48 x 18	1 - 4 x 6	2
	M3-1	NORTH	21 x 9		
	G28-2(87)(CA)	ROUTE SHIELD	24 x 25		
8	M4-10(R†)	DETOUR (RIGHT)	48 x 18	1 - 4 x 6	2
	M3-1	NORTH	21 x 9		
	G28-2(85)(CA)	ROUTE SHIELD	24 x 25		
9	SC-3(↑)(CA)	DETOUR (STRAIGHT AHEAD ARROW)	48 x 18	1 - 4 x 6	1
	M3-1	NORTH	21 x 9		
	G28-2(85)(CA)	ROUTE SHIELD	24 x 25		
10	M4-8	DETOUR	21 x 9	1 - 4 x 6	2
	M3-1	NORTH	21 x 9		
	G28-2(85)(CA)	ROUTE SHIELD	24 x 25		
	M6-2(↗)	DETOUR (DIAGONAL ARROW)	21 x 15		
11	M4-10(L†)	DETOUR (LEFT)	48 x 18	1 - 4 x 6	1
	M3-1	NORTH	21 x 9		
	G28-2(85)(CA)	ROUTE SHIELD	24 x 25		
12	SC-3(↑)(CA)	DETOUR (STRAIGHT AHEAD ARROW)	48 x 18	1 - 4 x 6	2
	M3-3	SOUTH	21 x 9		
	G28-2(17)(CA)	ROUTE SHIELD	24 x 25		
13	M4-8	DETOUR	21 x 9	1 - 4 x 6	7
	M3-3	SOUTH	21 x 9		
	G28-2(17)(CA)	ROUTE SHIELD	24 x 25		
	M6-2(↗)	DETOUR (DIAGONAL ARROW)	21 x 15		
14	M4-10(L†)	DETOUR (LEFT)	48 x 18	1 - 4 x 6	6
	M3-3	SOUTH	21 x 9		
	G28-2(17)(CA)	ROUTE SHIELD	24 x 25		
15	SC-3(↑)(CA)	DETOUR (STRAIGHT AHEAD ARROW)	48 x 18	1 - 4 x 6	3
	M3-3	SOUTH	21 x 9		
	G27-2(280)(CA)	ROUTE SHIELD	30 x 25		
16	M4-8	DETOUR	21 x 9	1 - 4 x 6	2
	M3-3	SOUTH	21 x 9		
	G27-2(280)(CA)	ROUTE SHIELD	30 x 25		
	M6-2(↗)	DETOUR (DIAGONAL ARROW)	21 x 15		
17	M4-10(R†)	DETOUR (RIGHT)	48 x 18	1 - 4 x 6	2
	M3-3	SOUTH	21 x 9		
	G27-2(280)(CA)	ROUTE SHIELD	30 x 25		
18	M4-10(L†)	DETOUR (LEFT)	48 x 18	1 - 4 x 6	1
	M3-3	SOUTH	21 x 9		
	G27-2(280)(CA)	ROUTE SHIELD	30 x 25		
19	M4-8	DETOUR	21 x 9	1 - 4 x 6	1
	M3-3	SOUTH	21 x 9		
	G28-2(17)(CA)	ROUTE SHIELD	24 x 25		
	M6-2(↖)	DETOUR (DIAGONAL ARROW)	21 x 15		
20	SC-3(↑)(CA)	DETOUR (STRAIGHT AHEAD ARROW)	48 x 18	1 - 4 x 6	4
	M3-1	NORTH	21 x 9		
	G28-2(87)(CA)	ROUTE SHIELD	24 x 25		
21	M4-8	DETOUR	21 x 9	1 - 4 x 6	4
	M3-1	NORTH	21 x 9		
	G28-2(87)(CA)	ROUTE SHIELD	24 x 25		
	M6-2(↗)	DETOUR (DIAGONAL ARROW)	21 x 15		

STATIONARY MOUNTED CONSTRUCTION AREA SIGNS

SIGN No.	SIGN CODE	SIGN MESSAGE	PANEL SIZE (INCHES)	NUMBER OF POSTS AND SIZES (EA - INCHES)	QUANTITY EA
22	SC-3(↑)(CA)	DETOUR (STRAIGHT AHEAD ARROW)	48 x 18	1 - 4 x 6	1
	M3-3	SOUTH	21 x 9		
	G28-2(85)(CA)	ROUTE SHIELD	24 x 25		
23	M4-10(L†)	DETOUR (LEFT)	48 x 18	1 - 4 x 6	1
	M3-3	SOUTH	21 x 9		
	G28-2(85)(CA)	ROUTE SHIELD	24 x 25		
24	M4-8	DETOUR	21 x 9	1 - 4 x 6	1
	M3-3	SOUTH	21 x 9		
	G28-2(85)(CA)	ROUTE SHIELD	24 x 25		
	M6-2(↗)	DETOUR (DIAGONAL ARROW)	21 x 15		
25	M4-8	DETOUR	21 x 9	1 - 4 x 6	2
	M3-1	NORTH	21 x 9		
	G26-2(101)(CA)	ROUTE SHIELD	28 x 24		
	M6-2(↗)	DETOUR (DIAGONAL ARROW)	21 x 15		
26	M4-10(L†)	DETOUR (LEFT)	48 x 18	1 - 4 x 6	1
	M3-1	NORTH	21 x 9		
	G26-2(101)(CA)	ROUTE SHIELD	28 x 24		
27	M4-10(R†)	DETOUR (RIGHT)	48 x 18	1 - 4 x 6	1
	M3-1	NORTH	21 x 9		
	G26-2(101)(CA)	ROUTE SHIELD	28 x 24		
28	SC-3(↑)(CA)	DETOUR (STRAIGHT AHEAD ARROW)	48 x 18	1 - 4 x 6	1
	M3-1	NORTH	21 x 9		
	G26-2(101)(CA)	ROUTE SHIELD	28 x 24		
29	M4-8	DETOUR	21 x 9	1 - 4 x 6	1
	M3-3	SOUTH	21 x 9		
	G26-2(101)(CA)	ROUTE SHIELD	28 x 24		
	M6-2(↗)	DETOUR (DIAGONAL ARROW)	21 x 15		

FOR NOTES, ABBREVIATIONS AND LEGEND, SEE SHEET CS-1

THIS PLAN ACCURATE FOR CONSTRUCTION AREA SIGN WORK ONLY

CONSTRUCTION AREA SIGNS

NO SCALE

CS-6

REVISED BY	DATE REVISED
RY	9/02/09

CALCULATED-DESIGNED BY: ROY K YUAN
CHECKED BY: JERILYN L. STRUVEN
FUNCTIONAL SUPERVISOR: ROLAND AU-YEUNG

STATE OF CALIFORNIA - DEPARTMENT OF TRANSPORTATION
Caltrans
TRAFFIC

LAST REVISION 01-28-10 | DATE PLOTTED => 29-JAN-2010 | TIME PLOTTED => 13:01

Dist	COUNTY	ROUTE	POST MILES TOTAL PROJECT	SHEET No.	TOTAL SHEETS
04	SCI	17,35, 85,101	Var	9	29

REGISTERED CIVIL ENGINEER 9-02-09 DATE

2-1-10
PLANS APPROVAL DATE

REGISTERED PROFESSIONAL ENGINEER Mary Thao No. 70386 Exp 9-30-10 CIVIL STATE OF CALIFORNIA

THE STATE OF CALIFORNIA OR ITS OFFICERS OR AGENTS SHALL NOT BE RESPONSIBLE FOR THE ACCURACY OR COMPLETENESS OF SCANNED COPIES OF THIS PLAN SHEET.

LEGEND:

- ○ TYPE A WHITE NON-REFLECTIVE MARKER
- ◨ TYPE G ONE-WAY CLEAR RETROREFLECTIVE MARKER
- ▭ 4" WHITE
- → DIRECTION OF TRAVEL

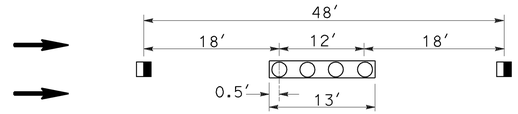

DETAIL 13M

PAVEMENT DELINEATION DETAIL

NO SCALE

NOTE:

INSTALL 4" WHITE LINE AFTER INSTALLING PAVEMENT MARKERS

LOCATION	BRIDGE NAME	BRIDGE No.	DETAIL No.	THERMOPLASTIC TRAFFIC STRIPE						PAVEMENT MARKER				THERMOPLASTIC PAVEMENT MARKING	REMOVE			
				4 INCH WHITE	4 INCH YELLOW	8 INCH WHITE	4 INCH WHITE (BROKEN 35-13)	4 INCH WHITE (BROKEN 36-12)	4 INCH WHITE (BROKEN 17-7)	NON-REFLECTIVE TYPE A	RETROREFLECTIVE TYPE D	RETROREFLECTIVE TYPE G	RETROREFLECTIVE TYPE H		PAVEMENT MARKER	THERMOPLASTIC TRAFFIC STRIPE (WHITE)	THERMOPLASTIC TRAFFIC STRIPE (YELLOW)	THERMPOPLASTIC PAVEMENT MARKING
				LF						EA				SQFT	EA	LF		SQFT
3	BLOSSOM HILL ROAD	37-0148	22		420						18				18		420	
			27B	420												420		
4	LARK AVENUE OC	37-0151	9						510			12			12	149		
			25A		510								22		22		510	
			38			510						22			22	1020		
			LIMIT LINE 12′											55				55
			TYPE III (L) ARROW											168				168
5	ROUTE 17/85 SEPARATION	37-0493	13M				940			78		20			98	235		
			25		940								20		20		940	
			27B	940												940		
			36A	250		200			200				8		8	708		
			CROSS HATCH 12′											260				260
6	N17-S280 CONNECTOR OC	37-0139G	13M				80			7		4			11	20		
			25A		80								3		3		80	
			27B	80												80		
7	ROUTE 17/280 SEPARATION	37-0131	13M				800			67		17			83	200		
			25		400								8		8		400	
			27B	400												400		
			36A	100		50			100			2			2	129		
8	SNELL AVENUE OC	37-0442	12					2000				42			42	500		
			25		2000								42		42		2000	
10	S85-N87/87 CONNECTOR SEPARATION	37-0633F	25A		1800								75		75		1800	
			27B	1800												1800		
			38			1800										3600		
			DIAMOND SYMBOL											44				44
12	STEVENS CREEK	37-0185	13M				280			23		6			29	70		
			25		140								3		3		140	
			25A		140								6		6		140	
			27B	280												280		
13	ROUTE 85/237 SEPARATION	37-0198	13M				1280			107		27			133	320		
			25A		640								13		13		640	
			27B	640												640		
			36	310		460			180			19			19	1272		
			DIAMOND SYMBOL											22				22
14	STEVENS CREEK	37-0197	13M				520			43		11			54	130		
			25		260								5		5		260	
			25A		130								5		5		130	
			27B	390												390		
SUBTOTAL				5610	7460	3020	3900	2000	990	325	18	182	210	549	733	13303	7460	549
TOTAL				13070		3020	3900	2000	990	325		410		549	733	13303	7460	549

NOTE:

ALL EXISTING PAVEMENT DELINEATIONS SHALL BE REMOVED AND REPLACED IN KIND OR AS DIRECTED BY THE ENGINEER

PAVEMENT DELINEATION DETAILS AND QUANTITIES

PDD-1

REVISED BY	DATE REVISED
MT	9/02/09

MARY THAO — NGOC TRAN — CALCULATED-DESIGNED BY — CHECKED BY — NGOC TRAN — FUNCTIONAL SUPERVISOR

STATE OF CALIFORNIA - DEPARTMENT OF TRANSPORTATION — Caltrans — DESIGN

LAST REVISION 01-28-10 — DATE PLOTTED => 29-JAN-2010 — TIME PLOTTED => 13:02

DIST	COUNTY	ROUTE	POST MILES TOTAL PROJECT	SHEET NO.	TOTAL SHEETS
04	SCI	17, 35, 85, 101	Var	10	29

REGISTERED CIVIL ENGINEER

June 6, 2008
PLANS APPROVAL DATE

REGISTERED PROFESSIONAL ENGINEER Donald E. Howe No. C46402 Exp. 3-31-09 CIVIL STATE OF CALIFORNIA

The State of California or its officers or agents shall not be responsible for the accuracy or completeness of electronic copies of this plan sheet.

To accompany plans dated 2-1-10

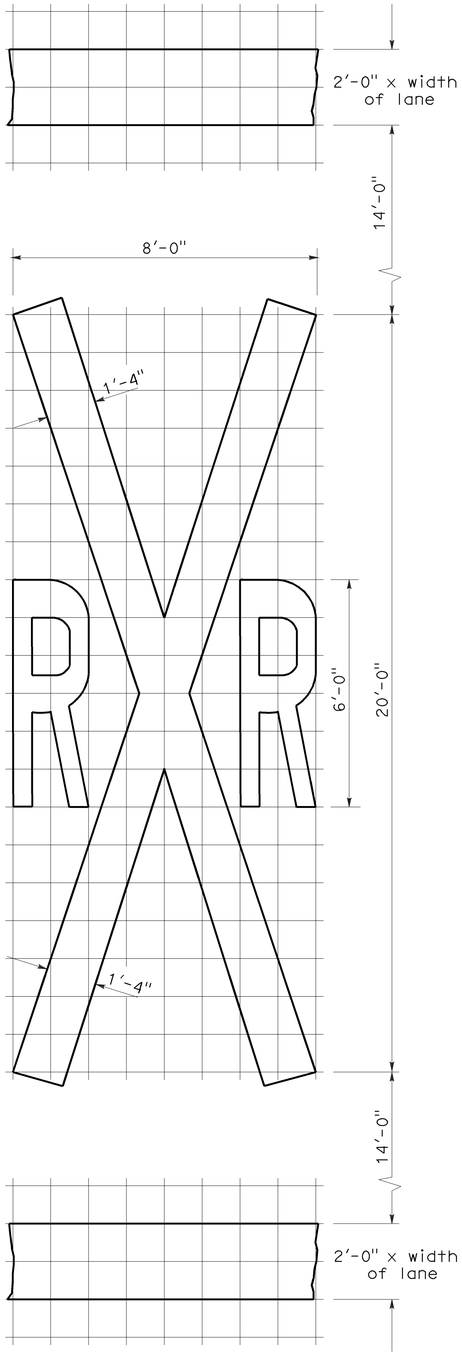

1'-0" GRID
A=70 sq ft ✳

RAILROAD CROSSING SYMBOL

✳70 sq ft DOES NOT INCLUDE THE 2'-0" x VARIABLE WIDTH TRANSVERSE LINES.

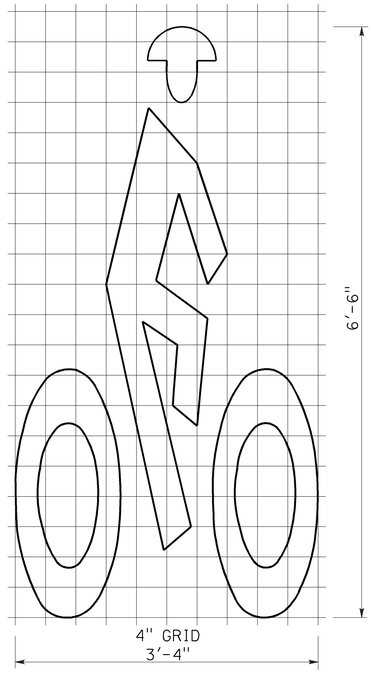

A=7 sq ft

BIKE LANE SYMBOL

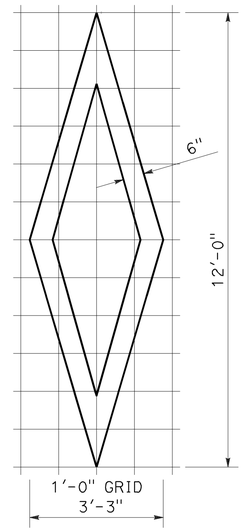

A=11 sq ft

DIAMOND SYMBOL

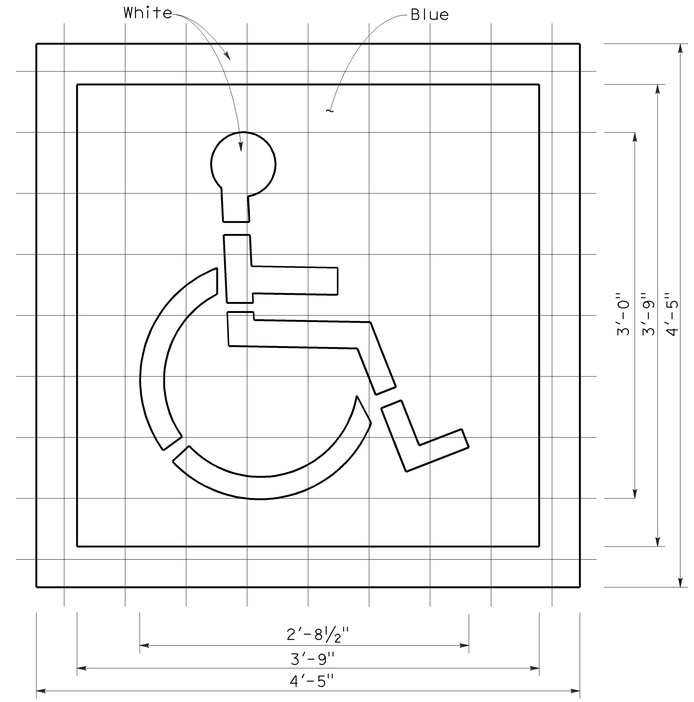

6" GRID
A (White) =9 sq ft
A (Blue) =14 sq ft

INTERNATIONAL SYMBOL OF ACCESSIBILITY MARKING

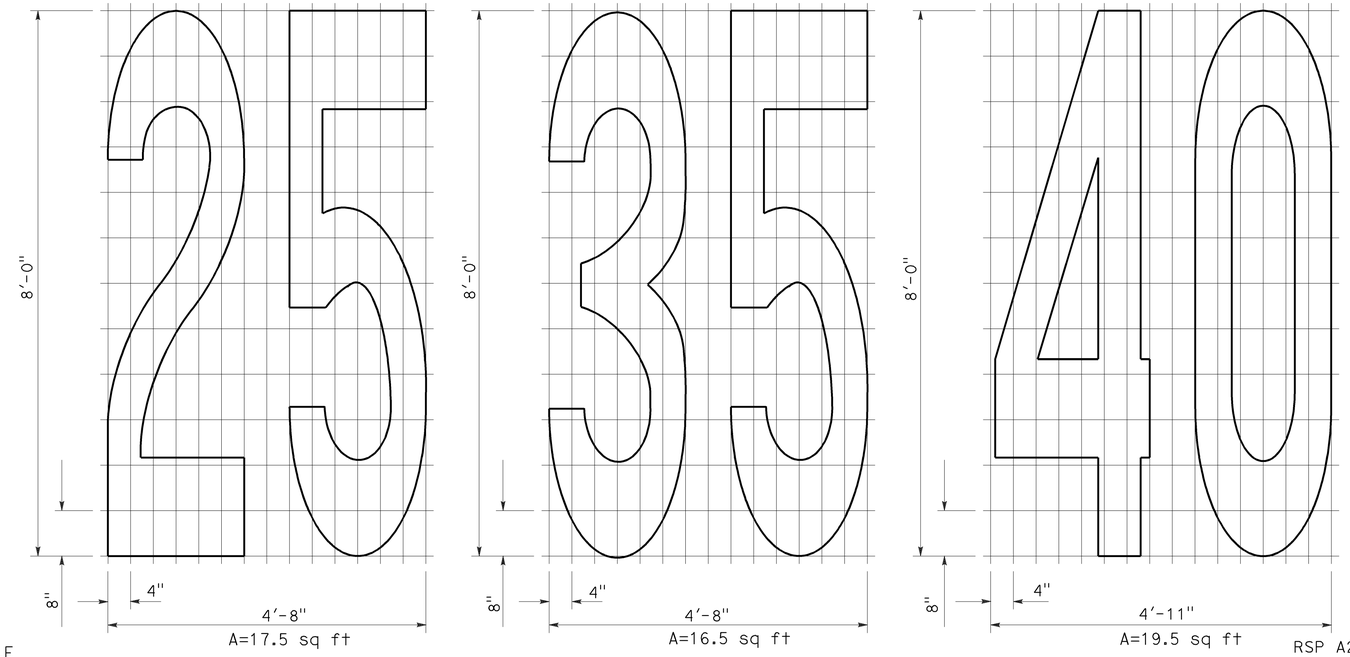

A=17.5 sq ft
A=16.5 sq ft
A=19.5 sq ft

NUMERALS

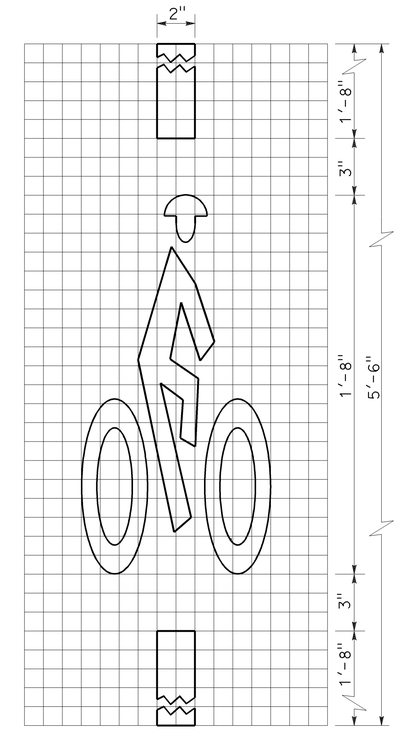

1" GRID
10"
A=2 sq ft

BICYCLE LOOP DETECTOR SYMBOL

NOTE:

1. Minor variations in dimensions may be accepted by the Engineer.

STATE OF CALIFORNIA
DEPARTMENT OF TRANSPORTATION

PAVEMENT MARKINGS SYMBOLS AND NUMERALS

NO SCALE

RSP A24C DATED JUNE 6, 2008 SUPERSEDES STANDARD PLAN A24C DATED MAY 1, 2006 - PAGE 11 OF THE STANDARD PLANS BOOK DATED MAY 2006.

REVISED STANDARD PLAN RSP A24C

2006 REVISED STANDARD PLAN RSP A24C

5-27-08

DIST	COUNTY	ROUTE	POST MILES TOTAL PROJECT	SHEET NO.	TOTAL SHEETS
04	SCI	17, 35, 85, 101	Var	11	29

REGISTERED CIVIL ENGINEER

October 5, 2007
PLANS APPROVAL DATE

REGISTERED PROFESSIONAL ENGINEER
Efthymios Delis
No. C51434
Exp. 6-30-08
CIVIL
STATE OF CALIFORNIA

The State of California or its officers or agents shall not be responsible for the accuracy or completeness of electronic copies of this plan sheet.

To accompany plans dated 2-1-10

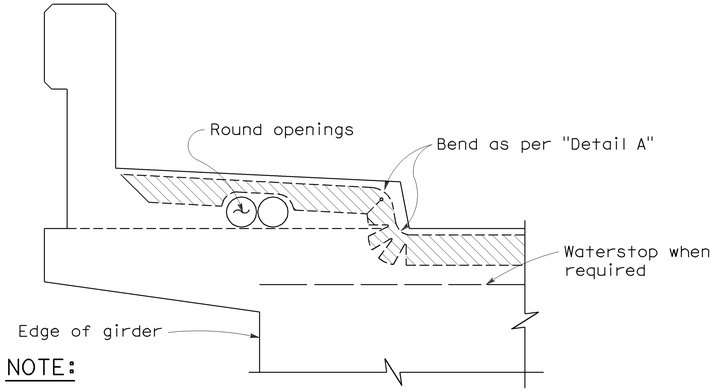

NOTE:

Type "B" seal shown. Type "A" seals to comform to the general path of seal shown, cuts for bending not required. Bend Type "A" seals 3" up into curb or barrier rail on only the low end of the seal.

CONCRETE BARRIER AND SIDEWALK

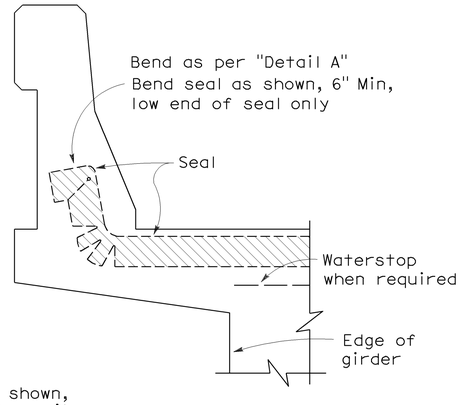

CONCRETE BARRIER

JOINT SEALS DETAILS

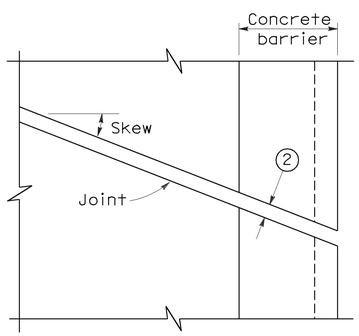

PLAN OF JOINT (SKEW ≤ 20°)

Min ℄ radius to be 4 times uncompressed width of seal or as recommended by the manufacturer, whichever is greater

In lieu of saw cutting, this area may be blocked out and reconstructed to match saw cutting on both sides.

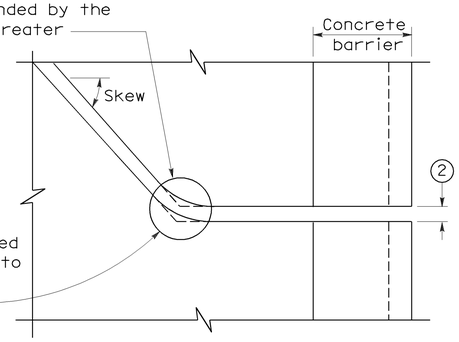

PLAN OF JOINT (SKEW > 20°)

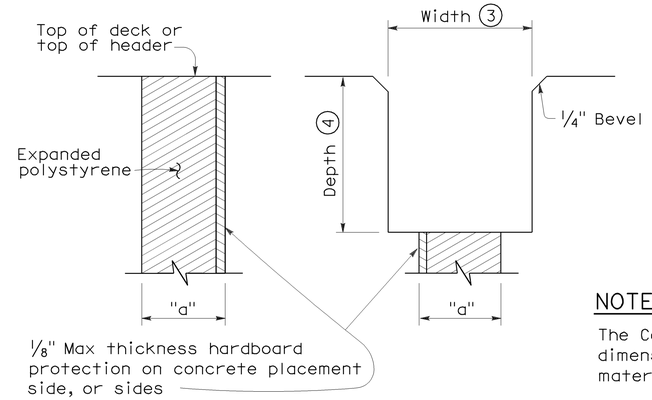

FORMING DETAIL SAWCUT DETAIL

NOTE:

The Contractor shall verify all controlling field dimensions before ordering or fabricatiing any material.

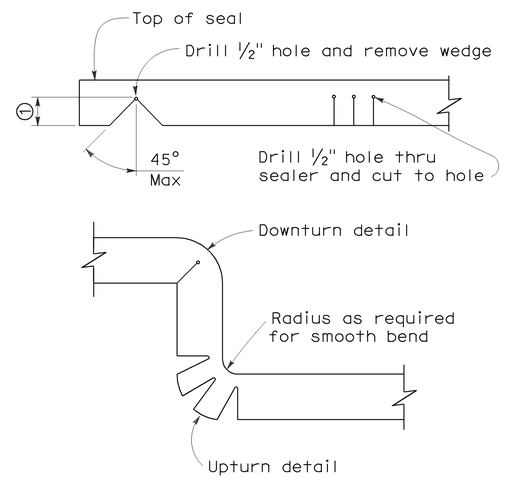

DETAIL A

NOTES:

1. Make smooth cuts from the bottom of seal to 1½" clear of top leaving at least one complete cell between the top of the cut and top of the seal. When necessary cut back of seal to clear conduit and round openings.
2. Opening in barrier to match width of sawn deck joint.
3. Sawcut groove widths shall be as ordered by the Engineer.
4. Depth of sawcut: Type A - Depth to be 2" minimum.
   Type B - Depth to be equal to or greater than the depth of seal measured along the contact surface, when compressed to minimum width position (W_2) plus dimensions shown.
5. MR (movement rating) as shown on other plan sheets.
6. Other depths must be approved by the Engineer.

DIMENSIONS "a" OF JOINT REQUIRED

Movement Rating (MR) 5	Bridge Type	"a" Dimension Deck Concrete Placed		
		Winter	Fall-Spring	Summer
2"	All except CIP/PS	1½"	1¼"	¾"
	CIP/PS	1¼"	1"	½"
1½"	All except CIP/PS	1¼"	1"	½"
	CIP/PS	1"	¾"	½"
1"	All except CIP/PS	1"	¾"	½"
	CIP/PS	¾"	½"	½"
½"	All except CIP/PS	¾"	¾"	½"
	CIP/PS	½"	½"	½"

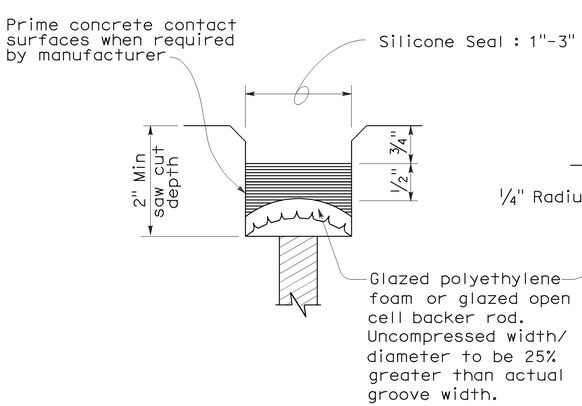

TYPE A SEAL

Movement rating : Silicone = 1" Max

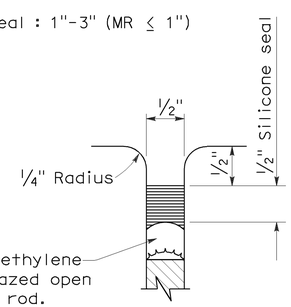

TYPE AL SEAL

Longitudinal joints only

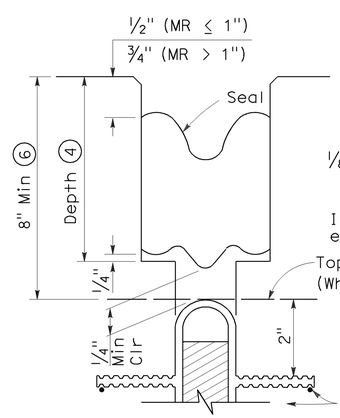

TYPE B JOINT SEAL
IN MINIMUM WIDTH POSITION (W_2)

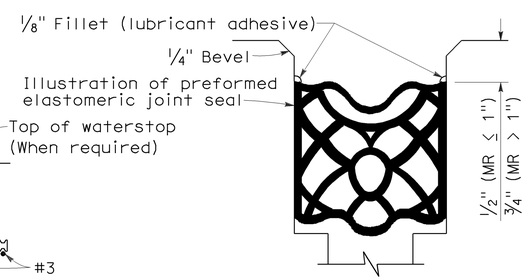

TYPE B SEAL

Movement Rating ≤ 2"

STATE OF CALIFORNIA
DEPARTMENT OF TRANSPORTATION

JOINT SEALS (MAXIMUM MOVEMENT RATING = 2")

NO SCALE

RSP B6-21 DATED OCTOBER 5, 2007 SUPERSEDES STANDARD PLAN B6-21 DATED MAY 1, 2006 - PAGE 258 OF THE STANDARD PLANS BOOK DATED MAY 2006.

REVISED STANDARD PLAN RSP B6-21

2006 REVISED STANDARD PLAN RSP B6-21

5-8-07

DIST	COUNTY	ROUTE	POST MILES TOTAL PROJECT	SHEET NO.	TOTAL SHEETS
04	SCI	17, 35, 85, 101	Var	12	29

Randell D. Hiatt
REGISTERED CIVIL ENGINEER

June 6, 2008
PLANS APPROVAL DATE

REGISTERED PROFESSIONAL ENGINEER
Randell D. Hiatt
No. C50200
Exp. 6-30-09
CIVIL
STATE OF CALIFORNIA

The State of California or its officers or agents shall not be responsible for the accuracy or completeness of electronic copies of this plan sheet.

To accompany plans dated 2-1-10

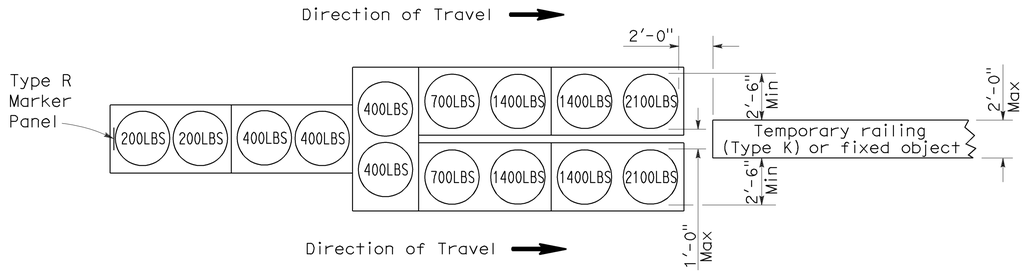

ARRAY 'TU14'

Approach speed 45 mph or more

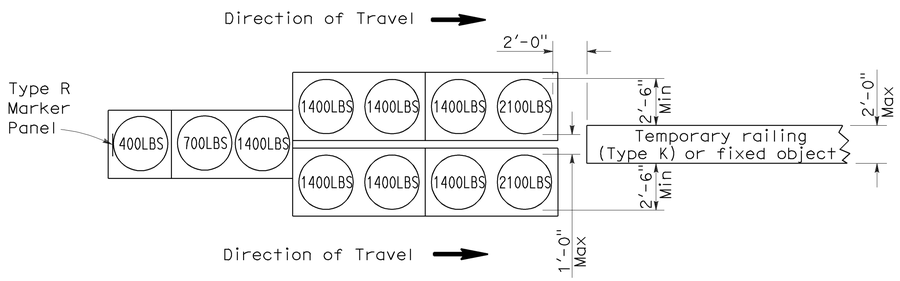

ARRAY 'TU11'

Approach speed less than 45 mph

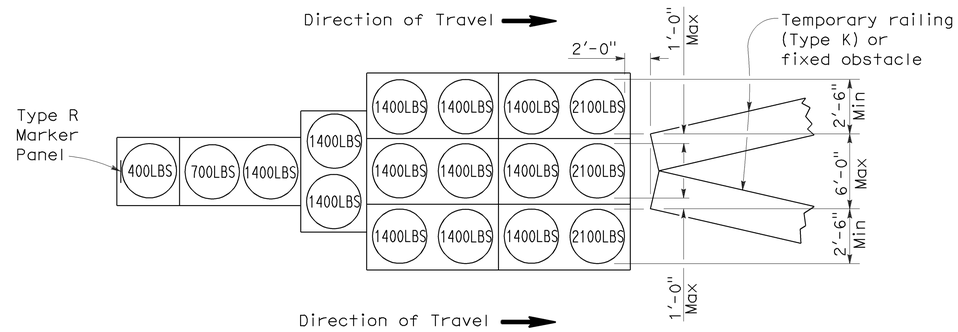

ARRAY 'TU17'

Approach speed less than 45 mph

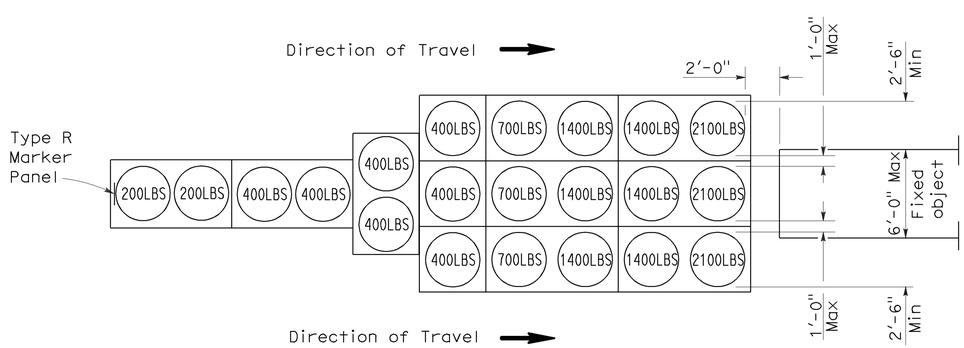

ARRAY 'TU21'

Approach speed 45 mph or more

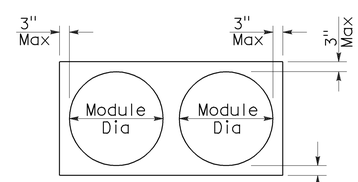

PLAN

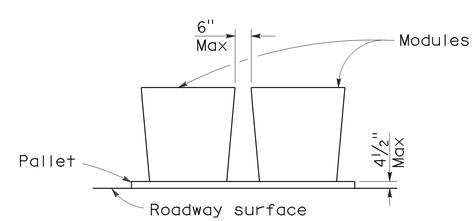

ELEVATION

CRASH CUSHION PALLET DETAIL

See Note 7

NOTES:

1. (XXX) Indicates sand filled module location and weight of sand in pounds for each module. Module spacing is based on the greater diameter of the module.
2. All sand weights are nominal.
3. Temporary crash cushion arrays shall not encroach on the traveled way.
4. Place the top of Type R marker panel 1" below the module lid.
5. Refer to Standard Plan A73B for marker details.
6. Approach speeds indicated conform to NCHRP 350 Report criteria.
7. Use of pallets is optional.

STATE OF CALIFORNIA
DEPARTMENT OF TRANSPORTATION

TEMPORARY CRASH CUSHION, SAND FILLED (UNIDIRECTIONAL)

NO SCALE

RSP T1A DATED JUNE 6, 2008 SUPERSEDES STANDARD PLAN T1A
DATED MAY 1, 2006 - PAGE 211 OF THE STANDARD PLANS BOOK DATED MAY 2006.

REVISED STANDARD PLAN RSP T1A

2006 REVISED STANDARD PLAN RSP T1A

DIST	COUNTY	ROUTE	POST MILES TOTAL PROJECT	SHEET NO.	TOTAL SHEETS
04	SCI	17,35, 85,101	Var	13	29

Randell D. Hiatt
REGISTERED CIVIL ENGINEER

June 6, 2008
PLANS APPROVAL DATE

REGISTERED PROFESSIONAL ENGINEER
Randell D. Hiatt
No. C50200
Exp. 6-30-09
CIVIL
STATE OF CALIFORNIA

The State of California or its officers or agents shall not be responsible for the accuracy or completeness of electronic copies of this plan sheet.

To accompany plans dated 2-1-10

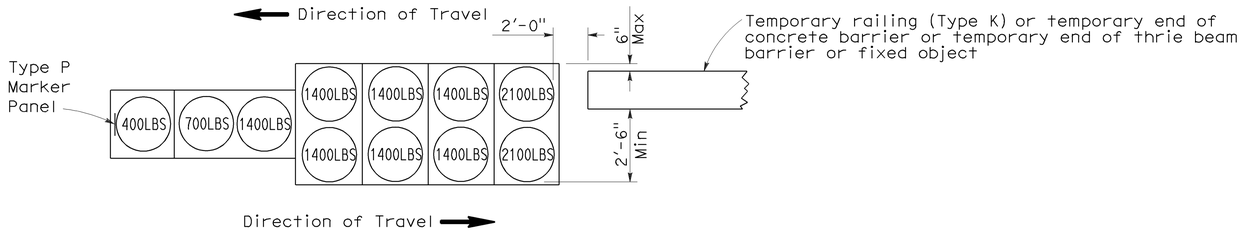

ARRAY 'TB11'

Approach speed less than 45 mph

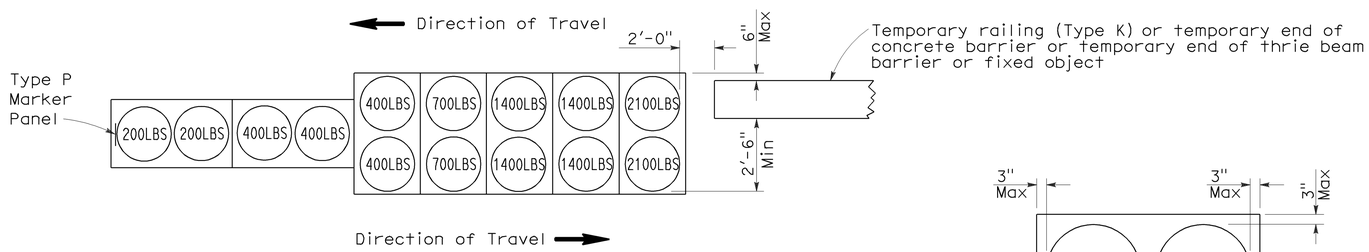

ARRAY 'TB14'

Approach speed 45 mph or more

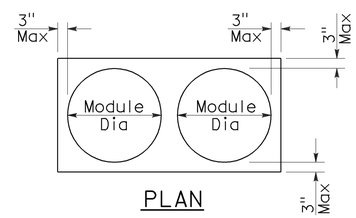

PLAN

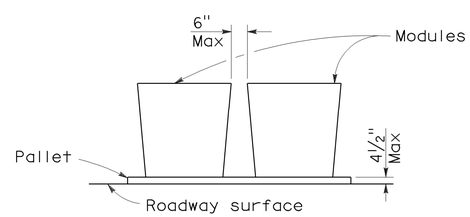

ELEVATION

CRASH CUSHION PALLET DETAIL

See Note 7

NOTES:

1. (XXX) Indicates sand filled module location and weight of sand in pounds for each module. Module spacing is based on the greater diameter of the module.
2. All sand weights are nominal.
3. Temporary crash cushion arrays shall not encroach on the traveled way.
4. Place the Type P marker panel so that the bottom of the panel rests upon the pallet.
5. Refer to Standard Plan A73B for marker details.
6. Approach speeds indicated conform to NCHRP 350 Report criteria.
7. Use of pallets is optional.

STATE OF CALIFORNIA
DEPARTMENT OF TRANSPORTATION

TEMPORARY CRASH CUSHION, SAND FILLED (BIDIRECTIONAL)

NO SCALE

RSP T1B DATED JUNE 6, 2008 SUPERSEDES STANDARD PLAN T1B
DATED MAY 1, 2006 - PAGE 212 OF THE STANDARD PLANS BOOK DATED MAY 2006.

REVISED STANDARD PLAN RSP T1B

2006 REVISED STANDARD PLAN RSP T1B

5-15-08

DIST	COUNTY	ROUTE	POST MILES TOTAL PROJECT	SHEET NO.	TOTAL SHEETS
04	SCI	17,35, 85,101	Var	14	29

Randell D. Hiatt
REGISTERED CIVIL ENGINEER

June 6, 2008
PLANS APPROVAL DATE

REGISTERED PROFESSIONAL ENGINEER
Randell D. Hiatt
No. C50200
Exp. 6-30-09
CIVIL
STATE OF CALIFORNIA

The State of California or its officers or agents shall not be responsible for the accuracy or completeness of electronic copies of this plan sheet.

To accompany plans dated 2-1-10

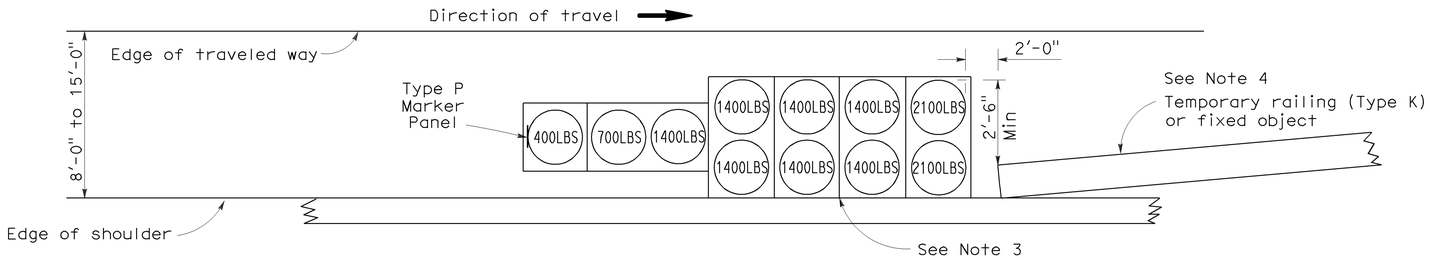

ARRAY 'TS11'

Approach speed less than 45 mph
See Note 9

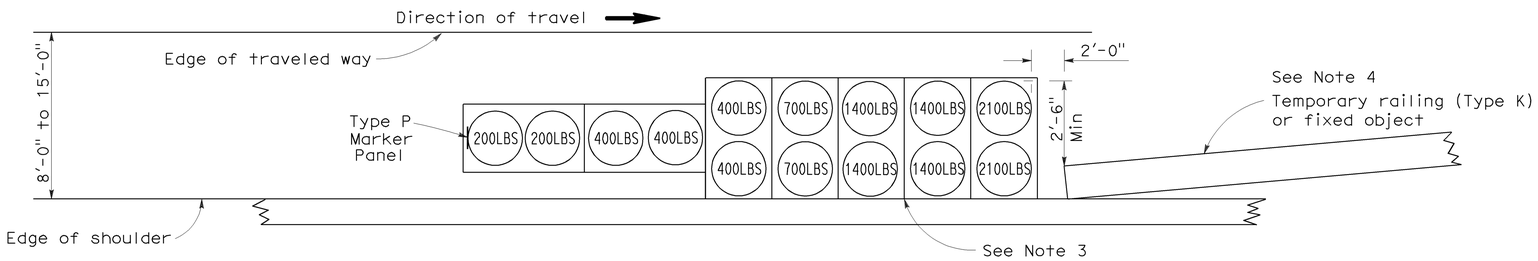

ARRAY 'TS14'

Approach speed 45 mph or more
See Note 9

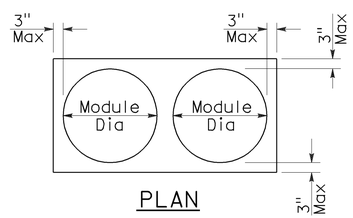

PLAN

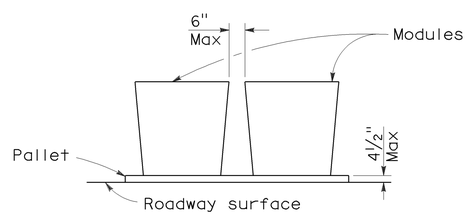

ELEVATION

CRASH CUSHION PALLET DETAIL

See Note 11

NOTES:

1. (XXX) Indicates sand filled module location and weight of sand in pounds for each module. Module spacing is based on the greater diameter of the module.
2. All sand weights are nominal.
3. The temporary crash cushion arrays shown on this plan shall be used only in locations where there will be traffic on one side of the temporary crash cushion array.
4. If the fixed object or approach end of the temporary railing is less than 15'-0" from the edge of traveled way, a temporary crash cushion is required in a construction or work zone.
5. Temporary crash cushion arrays shall not encroach on the traveled way.
6. Arrays for median shoulders shall conform to details shown on this plan for outside shoulders.
7. Place the Type P marker panel so that the bottom of the panel rests upon the pallet and faces traffic.
8. Refer to Standard Plan A73B for marker details.
9. For shoulder widths less than 8'-0", appropriate approved crash cushion protection, other than sand filled modules, shall be provided at fixed objects and at approach ends of temporary railing. The specific type of crash cushion shall be as shown on the project plans or as specified in the Special Provisions, or if not shown on the project plans or specified in the Special Provisions, shall be as approved by the Engineer.
10. Approach speeds indicated conform to NCHRP 350 Report criteria.
11. Use of pallets is optional.

STATE OF CALIFORNIA
DEPARTMENT OF TRANSPORTATION

TEMPORARY CRASH CUSHION, SAND FILLED (SHOULDER INSTALLATIONS)

NO SCALE

RSP T2 DATED JUNE 6, 2008 SUPERSEDES STANDARD PLAN T2
DATED MAY 1, 2006 - PAGE 213 OF THE STANDARD PLANS BOOK DATED MAY 2006.

REVISED STANDARD PLAN RSP T2

2006 REVISED STANDARD PLAN RSP T2

5-15-08

NOTE: (APPLY TO ALL SHEETS)
····-··- Indicates existing.

DIST	COUNTY	ROUTE	POST MILES TOTAL PROJECT	SHEET No	TOTAL SHEETS
04	SCI	17, 35, 85, 101	Var	15	29

10-28-09
REGISTERED CIVIL ENGINEER DATE

2-1-10
PLANS APPROVAL DATE

REGISTERED PROFESSIONAL ENGINEER
DIOSDADO ACOBA
No. 52003
Exp. 12-31-10
CIVIL
STATE OF CALIFORNIA

The State of California or its officers or agents shall not be responsible for the accuracy or completeness of electronic copies of this plan sheet.

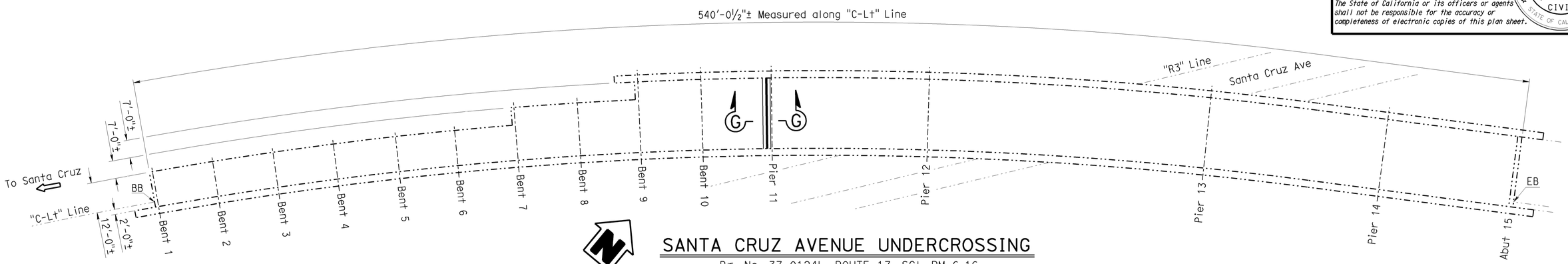

SANTA CRUZ AVENUE UNDERCROSSING

Br. No. 37-0124L, ROUTE 17, SCI, PM 6.16
1"=20'

SANTA CRUZ AVENUE UNDERCROSSING QUANTITIES	BR NO 37-0124L
CLEAN EXPANSION JOINT	33 LF
POLYESTER CONCRETE EXPANSION DAM	11 CF
JOINT SEAL (MR 1 1/2")	33 LF
PUBLIC SAFETY PLAN	LUMP SUM

NOTES: (APPLY TO THIS SHEET ONLY)

Indicates location of existing joint seal removal and placement of new joint seal. Prior to placement of new joint seal repair joint spalls.

Indicates limits of clean and treat bridge deck with high molecular weight methacrylate. Prior to bridge deck treatment, remove unsound concrete and patch with rapid setting concrete.

- For "Section G-G", see "JOINT SEAL DETAILS NO. 5" sheet.

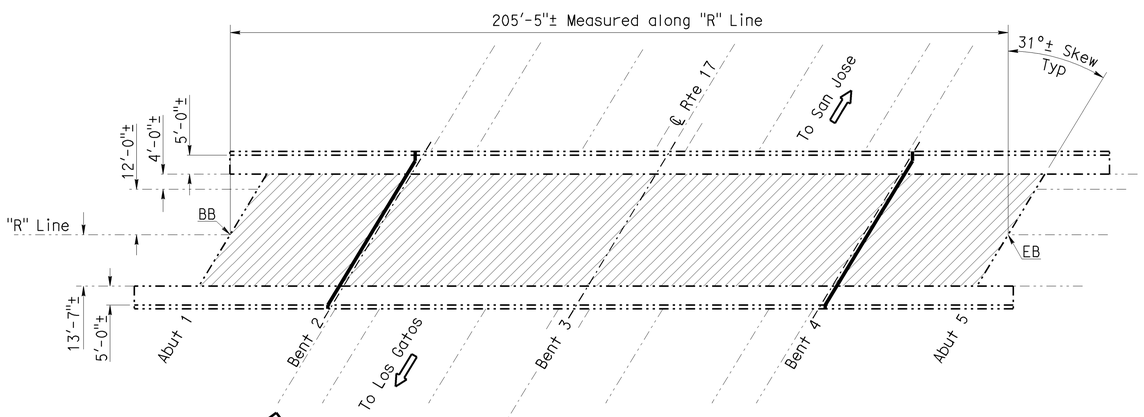

BLOSSOM HILL ROAD OVERCROSSING

Br. No. 37-0148, ROUTE 17, SCI, PM 7.67
1"=20'

BLOSSOM HILL ROAD OVERCROSSING QUANTITIES	BR NO 37-0148
REMOVE UNSOUND CONCRETE	152 CF
CLEAN BRIDGE DECK	6,080 SQFT
CLEAN EXPANSION JOINT	96 LF
RAPID SETTING CONCRETE (PATCH)	152 CF
JOINT SEAL (MR 1")	96 LF
TREAT BRIDGE DECK	6,080 SQFT
FURNISH BRIDGE DECK TREATMENT MATERIAL	82 GAL
PUBLIC SAFETY PLAN	LUMP SUM

INDEX TO PLANS

SHEET NO.	TITLE
1	GENERAL PLAN NO. 1
2	GENERAL PLAN NO. 2
3	GENERAL PLAN NO. 3
4	GENERAL PLAN NO. 4
5	GENERAL PLAN NO. 5
6	GENERAL PLAN NO. 6
7	GENERAL PLAN NO. 7
8	GENERAL PLAN NO. 8
9	GENERAL PLAN NO. 9
10	JOINT SEAL DETAILS NO. 1
11	JOINT SEAL DETAILS NO. 2
12	JOINT SEAL DETAILS NO. 3
13	JOINT SEAL DETAILS NO. 4
14	JOINT SEAL DETAILS NO. 5
15	JOINT SEAL ASSEMBLY (MAXIMUM MOVEMENT RATING = 4")

STANDARD PLANS DATED MAY 2006

SHEET NO.	TITLE
A10A	ACRONYMS ABBREVIATIONS (SHEET 1 OF 2)
A10B	ACRONYMS ABBREVIATIONS (SHEET 2 OF 2)
RSP B6-21	JOINT SEALS (MAXIMUM MOVEMENT RATING = 2")

STANDARD PLAN SHEET NO.
DETAIL NO.

NOTE:
THE CONTRACTOR SHALL VERIFY ALL CONTROLLING FIELD DIMENSIONS BEFORE ORDERING OR FABRICATING ANY MATERIAL.

10-28-09
DESIGN ENGINEER

	BY	CHECKED		BY	CHECKED
DESIGN	Don Acoba	Scott Davis	LAYOUT	Dale Kubochi	Don Acoba
DETAILS	Dale Kubochi	Scott Davis	SPECIFICATIONS	Xiahong Li	PLANS AND SPECS COMPARED Xiahong Li
QUANTITIES	Don Acoba	Scott Davis			

STATE OF CALIFORNIA
DEPARTMENT OF TRANSPORTATION

DIVISION OF MAINTENANCE
STRUCTURE MAINTENANCE DESIGN

CU 04609
EA 1E4901

BRIDGE NO. VARIOUS
POST MILE VARIES

ROUTES 17, 35, 85 & 101 BRIDGES
GENERAL PLAN NO. 1

STRUCTURES MAINTENANCE GENERAL PLAN SHEET (ENGLISH) (REV. 10/25/05)

ORIGINAL SCALE IN INCHES FOR REDUCED PLANS 0 1 2 3

DISREGARD PRINTS BEARING EARLIER REVISION DATES
REVISION DATES: 1-15-09 1-16-09 4-3-09 4-13-09 10-6-09

SHEET 1 OF 15

FILE => 04-1e4901-a-gp01.dgn

USERNAME => s1244228 DATE PLOTTED => 30-OCT-2009 TIME PLOTTED => 09:04

DIST	COUNTY	ROUTE	POST MILES TOTAL PROJECT	SHEET No	TOTAL SHEETS
04	SCI	17,35, 85,101	Var	16	29

REGISTERED CIVIL ENGINEER 10-28-09 DATE

2-1-10
PLANS APPROVAL DATE

The State of California or its officers or agents shall not be responsible for the accuracy or completeness of electronic copies of this plan sheet.

REGISTERED PROFESSIONAL ENGINEER DIOSDADO ACOBA No. 52003 Exp. 12-31-10 CIVIL STATE OF CALIFORNIA

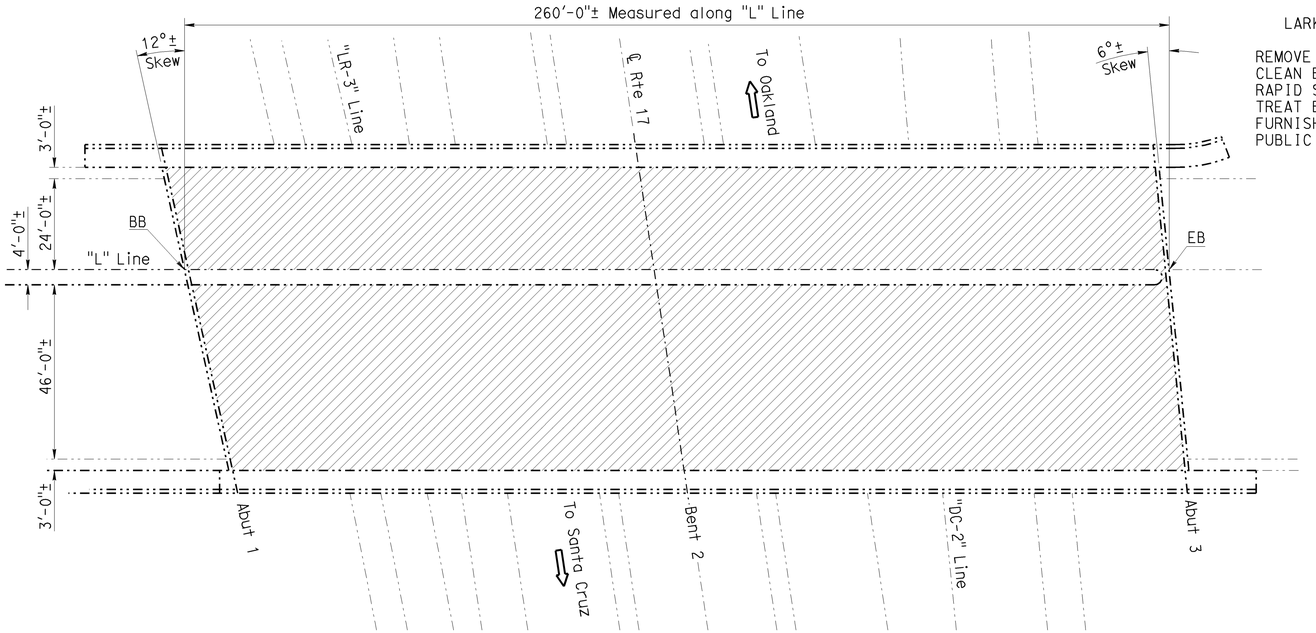

LARK AVENUE OVERCROSSING BR NO 37-0151

QUANTITIES

REMOVE UNSOUND CONCRETE	50	CF
CLEAN BRIDGE DECK	20,000	SQFT
RAPID SETTING CONCRETE (PATCH)	50	CF
TREAT BRIDGE DECK	20,000	SQFT
FURNISH BRIDGE DECK TREATMENT MATERIAL	220	GAL
PUBLIC SAFETY PLAN	LUMP	SUM

NOTE: (APPLY TO THIS SHEET ONLY)

Indicates limits of clean and treat bridge deck with high molecular weight methacrylate. Prior to bridge deck treatment, remove unsound concrete and patch with rapid setting concrete.

LARK AVENUE OVERCROSSING

Br. No. 37-0151, ROUTE 17, SCI, PM 8.89
1"=20'

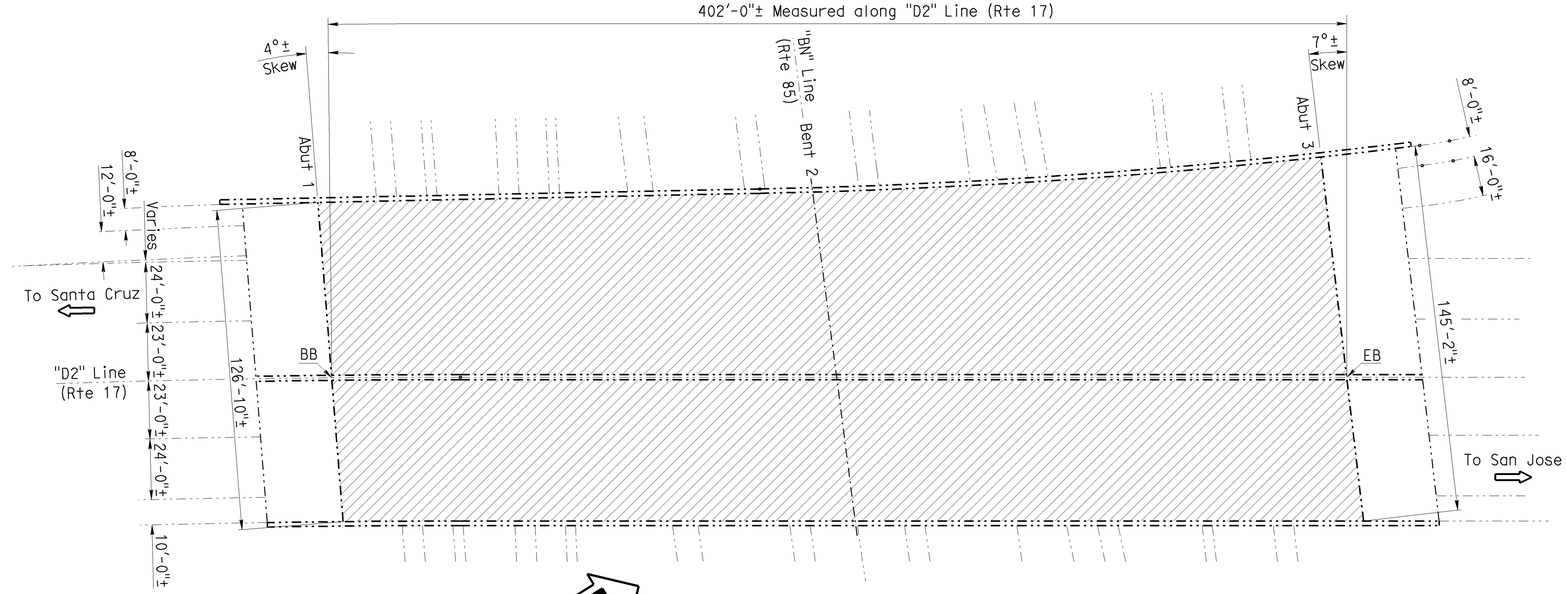

ROUTE 17/85 SEPARATION BR NO 37-0493

QUANTITIES

REMOVE UNSOUND CONCRETE	135	CF
CLEAN BRIDGE DECK	54,500	SQFT
RAPID SETTING CONCRETE (PATCH)	135	CF
TREAT BRIDGE DECK	54,500	SQFT
FURNISH BRIDGE DECK TREATMENT MATERIAL	610	GAL
PUBLIC SAFETY PLAN	LUMP	SUM

ROUTE 17/85 SEPARATION

Br. No. 37-0493, ROUTE 17, SCI, PM 9.32
1"=30'

NOTE:
THE CONTRACTOR SHALL VERIFY ALL CONTROLLING FIELD DIMENSIONS BEFORE ORDERING OR FABRICATING ANY MATERIAL.

10-28-09 DESIGN ENGINEER	DESIGN	BY Don Acoba	CHECKED Scott Davis	LAYOUT	BY Dale Kubochi	CHECKED Don Acoba	STATE OF CALIFORNIA DEPARTMENT OF TRANSPORTATION	DIVISION OF MAINTENANCE STRUCTURE MAINTENANCE DESIGN	BRIDGE NO. VARIOUS / POST MILE VARIES
	DETAILS	BY Dale Kubochi	CHECKED Scott Davis	SPECIFICATIONS	BY Xiahong Li	PLANS AND SPECS COMPARED Xiahong Li			
	QUANTITIES	BY Don Acoba	CHECKED Scott Davis						

ROUTES 17, 35, 85 & 101 BRIDGES
GENERAL PLAN NO. 2

STRUCTURES MAINTENANCE GENERAL PLAN SHEET (ENGLISH) (REV. 10/25/05)

ORIGINAL SCALE IN INCHES FOR REDUCED PLANS 0 1 2 3

CU 04609
EA 1E4901

DISREGARD PRINTS BEARING EARLIER REVISION DATES

REVISION DATES 2-1-09 3-16-09 4-13-09 10-6-09

SHEET 2 OF 15

FILE => 04-1e4901-a-gp02.dgn

USERNAME => s124428 DATE PLOTTED => 30-OCT-2009 TIME PLOTTED => 09:04

DIST	COUNTY	ROUTE	POST MILES TOTAL PROJECT	SHEET No	TOTAL SHEETS
04	SCI	17,35, 85,101	Var	17	29

REGISTERED CIVIL ENGINEER 10-28-09 DATE

2-1-10
PLANS APPROVAL DATE

The State of California or its officers or agents shall not be responsible for the accuracy or completeness of electronic copies of this plan sheet.

REGISTERED PROFESSIONAL ENGINEER DIOSDADO ACOBA No. 52003 Exp. 12-31-10 CIVIL STATE OF CALIFORNIA

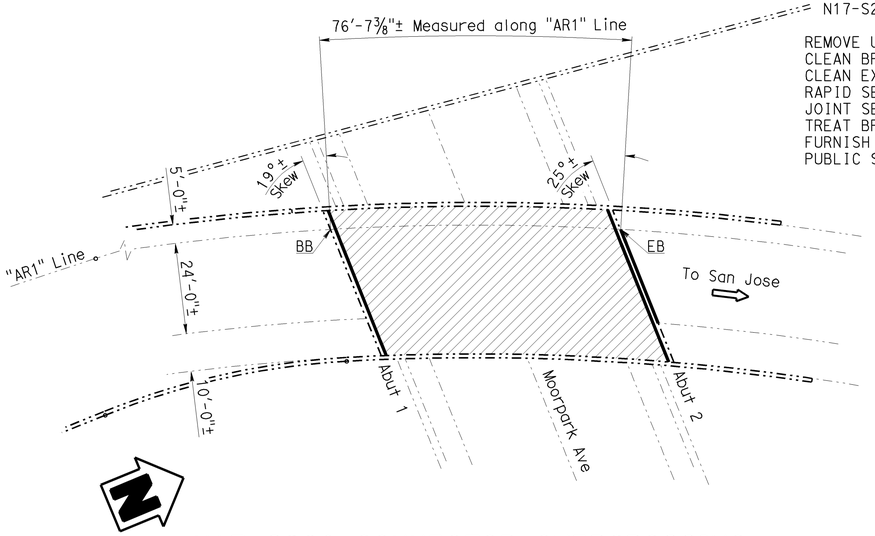

N17-S280 CONNECTOR OVERCROSSING

Br. No. 37-0139G, ROUTE 17, SCI, PM 13.85
1"=20'

N17-S280 CONNECTOR OVERCROSSING QUANTITIES	BR NO 37-0139G
REMOVE UNSOUND CONCRETE	7 CF
CLEAN BRIDGE DECK	3,000 SQFT
CLEAN EXPANSION JOINT	113 LF
RAPID SETTING CONCRETE (PATCH)	7 CF
JOINT SEAL (MR 1/2")	113 LF
TREAT BRIDGE DECK	3,000 SQFT
FURNISH BRIDGE DECK TREATMENT MATERIAL	33 GAL
PUBLIC SAFETY PLAN	LUMP SUM

NOTES: (APPLY TO THIS SHEET ONLY)

Indicates location of existing joint seal removal and placement of new joint seal. Prior to placement of new joint seal repair joint spalls.

Indicates limits of clean and treat bridge deck with high molecular weight methacrylate. Prior to bridge deck treatment, remove unsound concrete and patch with rapid setting concrete.

Indicates limits of remove slurry seal contrast treatment.

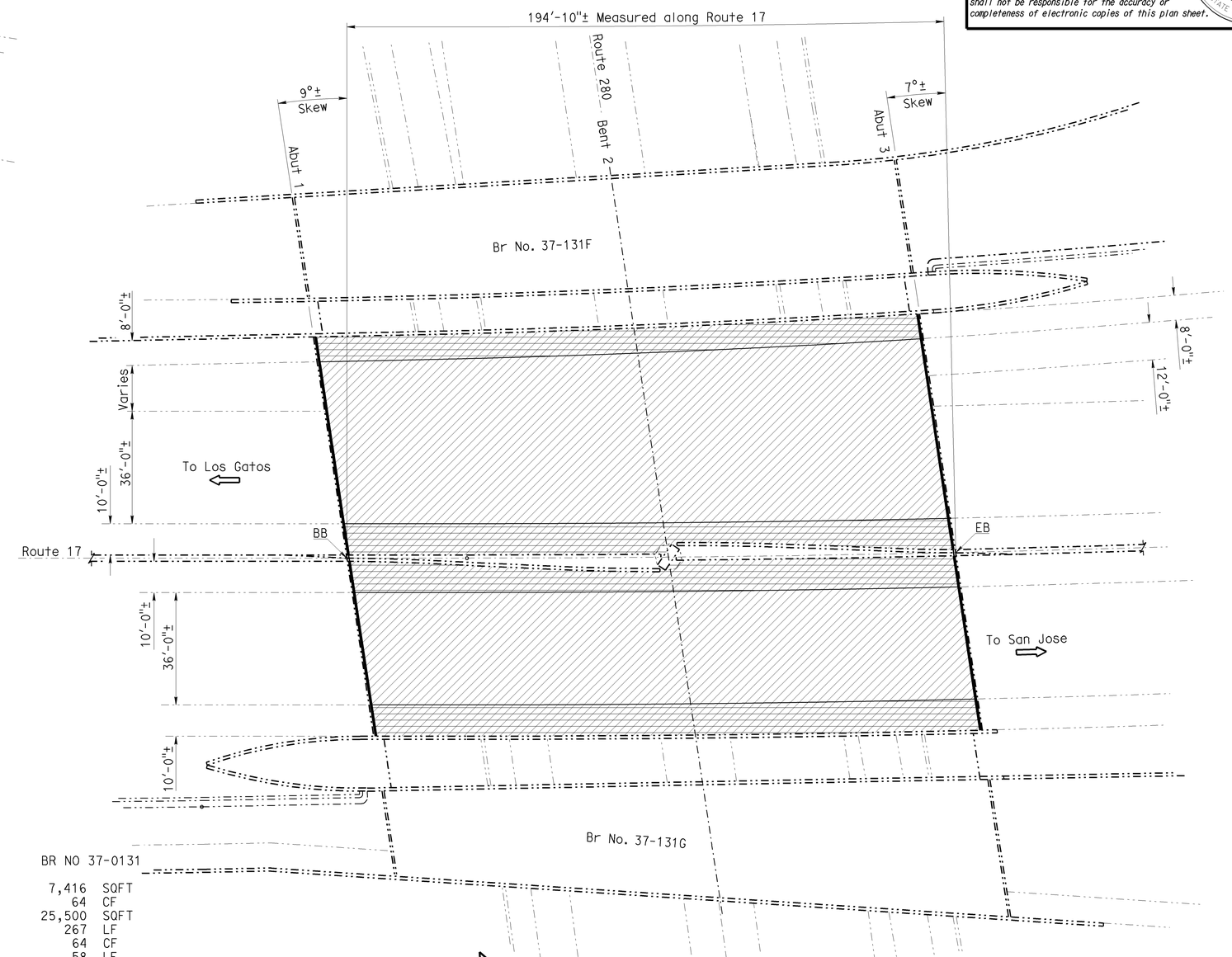

ROUTE 17/280 SEPARATION

Br. No. 37-0131, ROUTE 17, SCI, PM 13.93
1"=20'

ROUTE 17/280 SEPARATION QUANTITIES	BR NO 37-0131
REMOVE CONTRAST TREATMENT	7,416 SQFT
REMOVE UNSOUND CONCRETE	64 CF
CLEAN BRIDGE DECK	25,500 SQFT
CLEAN EXPANSION JOINT	267 LF
RAPID SETTING CONCRETE (PATCH)	64 CF
JOINT SEAL (MR 1")	58 LF
JOINT SEAL (MR 1 1/2")	58 LF
JOINT SEAL (MR 2")	151 LF
TREAT BRIDGE DECK	25,500 SQFT
FURNISH BRIDGE DECK TREATMENT MATERIAL	280 GAL
PUBLIC SAFETY PLAN	LUMP SUM

NOTE:
THE CONTRACTOR SHALL VERIFY ALL CONTROLLING FIELD DIMENSIONS BEFORE ORDERING OR FABRICATING ANY MATERIAL.

10-28-09 DESIGN ENGINEER	DESIGN	BY Don Acoba	CHECKED Scott Davis	LAYOUT	BY Dale Kubochi	CHECKED Don Acoba	STATE OF CALIFORNIA DEPARTMENT OF TRANSPORTATION
	DETAILS	BY Dale Kubochi	CHECKED Scott Davis	SPECIFICATIONS	BY Xiahong Li	PLANS AND SPECS COMPARED Xiahong Li	
	QUANTITIES	BY Don Acoba	CHECKED Scott Davis				

DIVISION OF MAINTENANCE
STRUCTURE MAINTENANCE DESIGN

BRIDGE NO. VARIOUS
POST MILE VARIES

ROUTES 17, 35, 85 & 101 BRIDGES
GENERAL PLAN NO. 3

STRUCTURES MAINTENANCE GENERAL PLAN SHEET (ENGLISH) (REV. 10/25/05)

ORIGINAL SCALE IN INCHES FOR REDUCED PLANS 0 1 2 3

CU 04609
EA 1E4901

DISREGARD PRINTS BEARING EARLIER REVISION DATES

REVISION DATES 2-5-09 3-16-09 4-13-09 10-6-09

SHEET 3 OF 15

FILE => 04-1e4901-a-gp03.dgn

USERNAME => s124428 DATE PLOTTED => 30-OCT-2009 TIME PLOTTED => 09:05

DIST	COUNTY	ROUTE	POST MILES TOTAL PROJECT	SHEET No	TOTAL SHEETS
04	SCI	17,35, 85,101	Var	18	29

REGISTERED CIVIL ENGINEER 10-28-09 DATE

2-1-10
PLANS APPROVAL DATE

The State of California or its officers or agents shall not be responsible for the accuracy or completeness of electronic copies of this plan sheet.

REGISTERED PROFESSIONAL ENGINEER DIOSDADO ACOBA No. 52003 Exp. 12-31-10 CIVIL STATE OF CALIFORNIA

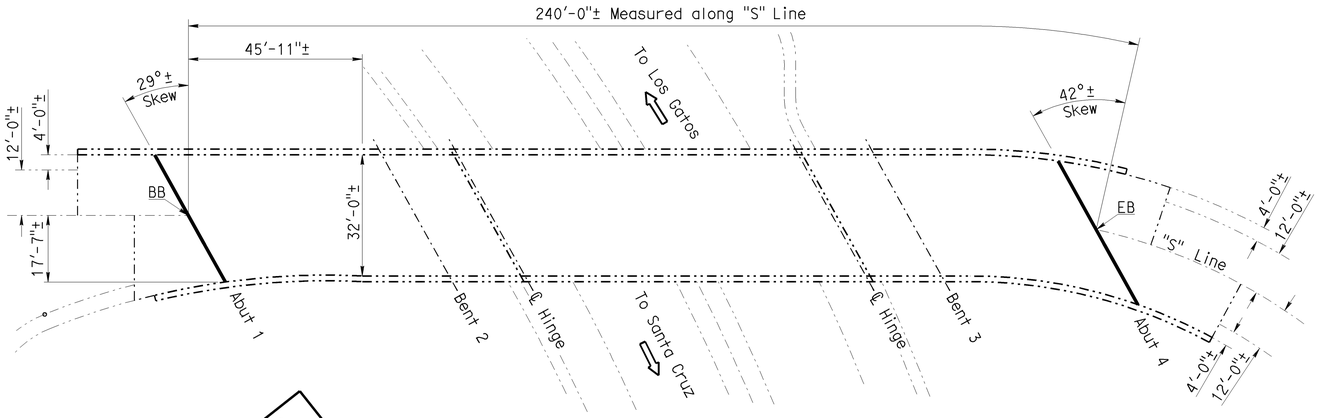

SUMMIT ROAD SEPARATION (35/17)

Br. No. 37-0343, ROUTE 35, SCI, PM R0.03
1"=20'

SUMMIT ROAD SEPARATION (35/17) QUANTITIES	BR NO 37-0343
CLEAN EXPANSION JOINT	83 LF
JOINT SEAL (MR 1 1/2")	44 LF
JOINT SEAL (MR 2")	39 LF

NOTES: (APPLY TO THIS SHEET ONLY)

Indicates limits of clean and treat bridge deck with high molecular weight methacrylate. Prior to bridge deck treatment, remove unsound concrete and patch with rapid setting concrete.

Indicates location of existing joint seal removal and placement of new joint seal. Prior to placement of new joint seal repair joint spalls.

(1) Existing transit station platform.

SCVTA Santa Clara Valley Transportation Authority.

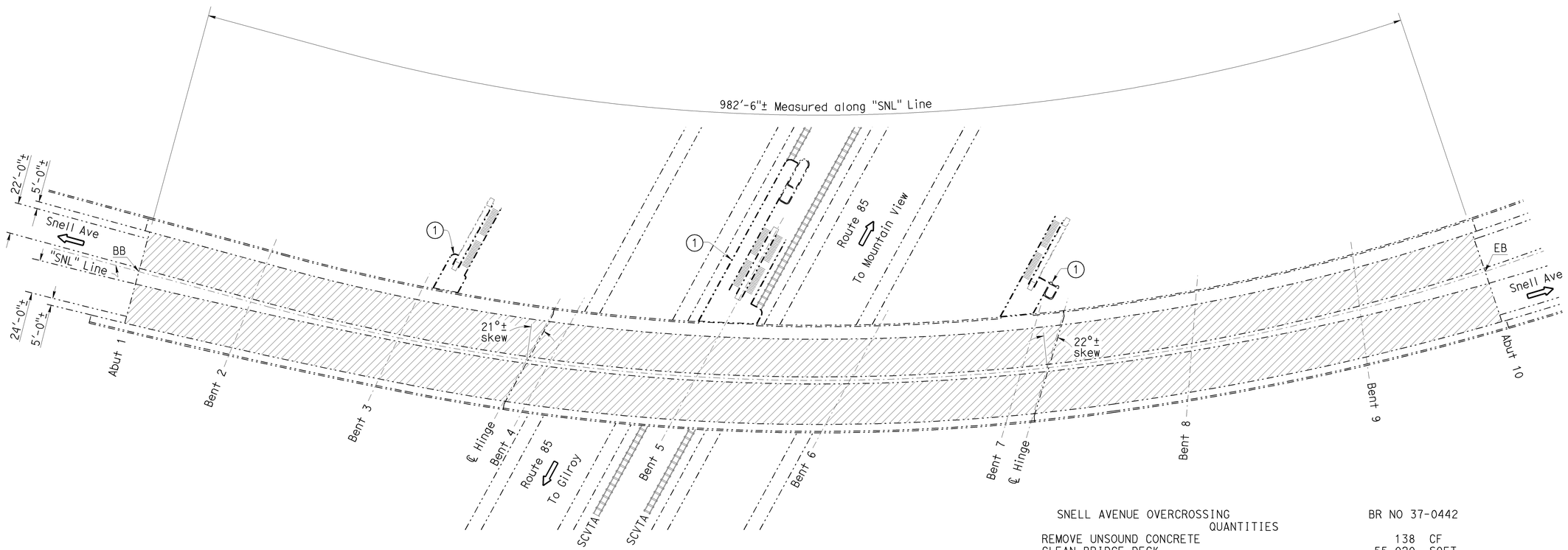

SNELL AVENUE OVERCROSSING

Br. No. 37-0442, ROUTE 85, SCI, PM 3.48
1"=40'

SNELL AVENUE OVERCROSSING QUANTITIES	BR NO 37-0442
REMOVE UNSOUND CONCRETE	138 CF
CLEAN BRIDGE DECK	55,020 SQFT
RAPID SETTING CONCRETE (PATCH)	138 CF
TREAT BRIDGE DECK	55,020 SQFT
FURNISH BRIDGE DECK TREATMENT MATERIAL	614 GAL
PUBLIC SAFETY PLAN	LUMP SUM

NOTE:
THE CONTRACTOR SHALL VERIFY ALL CONTROLLING FIELD DIMENSIONS BEFORE ORDERING OR FABRICATING ANY MATERIAL.

10-28-09 DESIGN ENGINEER	DESIGN	BY Don Acoba	CHECKED Scott Davis	LAYOUT	BY Dale Kubochi	CHECKED Don Acoba	STATE OF CALIFORNIA DEPARTMENT OF TRANSPORTATION	DIVISION OF MAINTENANCE STRUCTURE MAINTENANCE DESIGN	BRIDGE NO. VARIOUS
	DETAILS	BY Dale Kubochi	CHECKED Scott Davis	SPECIFICATIONS	BY Xiahong Li	PLANS AND SPECS COMPARED Xiahong Li			POST MILE VARIES
	QUANTITIES	BY Don Acoba	CHECKED Scott Davis						

ROUTES 17, 35, 85 & 101 BRIDGES
GENERAL PLAN NO. 4

STRUCTURES MAINTENANCE GENERAL PLAN SHEET (ENGLISH) (REV. 10/25/05)

ORIGINAL SCALE IN INCHES FOR REDUCED PLANS 0 1 2 3

CU 04609
EA 1E4901

DISREGARD PRINTS BEARING EARLIER REVISION DATES

REVISION DATES 2-5-09 3-16-09 4-13-09 10-6-09

SHEET 4 OF 15

FILE => 04-1e4901-a-gp04.dgn

USERNAME => s124428 DATE PLOTTED => 30-OCT-2009 TIME PLOTTED => 09:05

DIST	COUNTY	ROUTE	POST MILES TOTAL PROJECT	SHEET No	TOTAL SHEETS
04	SCI	17,35, 85,101	Var	19	29

REGISTERED CIVIL ENGINEER 10-28-09 DATE

2-1-10
PLANS APPROVAL DATE

The State of California or its officers or agents shall not be responsible for the accuracy or completeness of electronic copies of this plan sheet.

REGISTERED PROFESSIONAL ENGINEER DIOSDADO ACOBA No. 52003 Exp. 12-31-10 CIVIL STATE OF CALIFORNIA

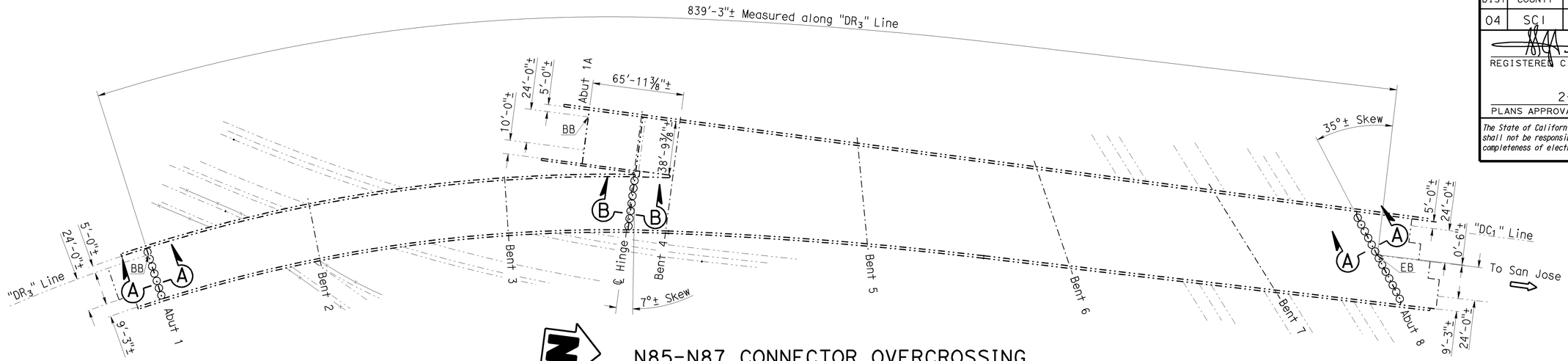

N85-N87 CONNECTOR OVERCROSSING

Br. No. 37-0414G, ROUTE 85, SCI, PM 4.70
1"=40'

N85-N87 CONNECTOR OVERCROSSING QUANTITIES	BR NO 37-0414G
BRIDGE REMOVAL (PORTION), LOCATION B	LUMP SUM
STRUCTURAL CONCRETE, BRIDGE	9 CY
CLEAN EXPANSION JOINT	155 LF
JOINT SEAL ASSEMBLY (MR 2 1/2")	155 LF
BAR REINFORCING STEEL (BRIDGE)	1,120 LB

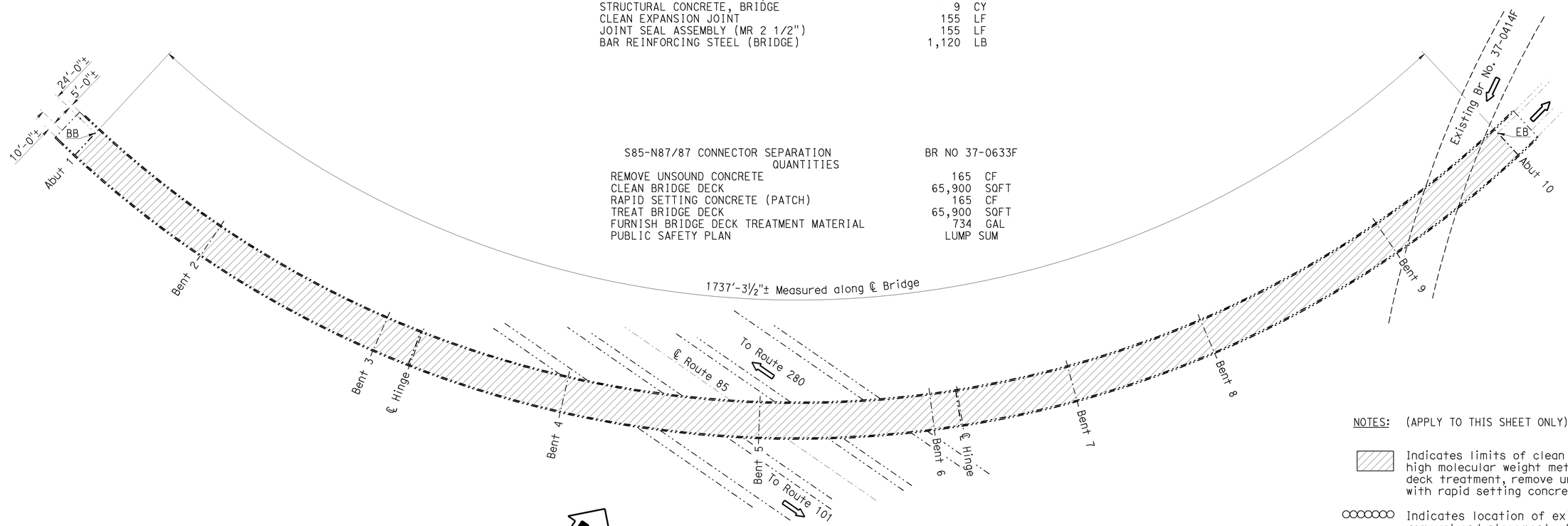

S85-N87/87 CONNECTOR SEPARATION QUANTITIES	BR NO 37-0633F
REMOVE UNSOUND CONCRETE	165 CF
CLEAN BRIDGE DECK	65,900 SQFT
RAPID SETTING CONCRETE (PATCH)	165 CF
TREAT BRIDGE DECK	65,900 SQFT
FURNISH BRIDGE DECK TREATMENT MATERIAL	734 GAL
PUBLIC SAFETY PLAN	LUMP SUM

NOTES: (APPLY TO THIS SHEET ONLY)

Indicates limits of clean and treat bridge deck with high molecular weight methacrylate. Prior to bridge deck treatment, remove unsound concrete and patch with rapid setting concrete.

Indicates location of existing joint seal assembly removal and placement of new joint seal assembly. For "Section A-A" and "Section B-B", see "JOINT SEAL DETAILS NO. 2" sheet.

NOTE:
THE CONTRACTOR SHALL VERIFY ALL CONTROLLING FIELD DIMENSIONS BEFORE ORDERING OR FABRICATING ANY MATERIAL.

S85-N87/87 CONNECTOR SEPARATION

Br. No. 37-0633F, ROUTE 85, SCI, PM 5.20
1"=60'

10-28-09 DESIGN ENGINEER	DESIGN	BY Don Acoba	CHECKED Scott Davis	LAYOUT	BY Dale Kubochi	CHECKED Don Acoba	STATE OF CALIFORNIA DEPARTMENT OF TRANSPORTATION	DIVISION OF MAINTENANCE STRUCTURE MAINTENANCE DESIGN	BRIDGE NO. VARIOUS
	DETAILS	BY Dale Kubochi	CHECKED Scott Davis	SPECIFICATIONS	BY Xiahong Li	PLANS AND SPECS COMPARED Xiahong Li			POST MILE VARIES
	QUANTITIES	BY Don Acoba	CHECKED Scott Davis						

ROUTES 17, 35, 85 & 101 BRIDGES
GENERAL PLAN NO. 5

STRUCTURES MAINTENANCE GENERAL PLAN SHEET (ENGLISH) (REV. 10/25/05)

ORIGINAL SCALE IN INCHES FOR REDUCED PLANS 0 1 2 3

CU 04609
EA 1E4901

DISREGARD PRINTS BEARING EARLIER REVISION DATES

REVISION DATES 2-5-09 3-11-09 4-13-09 10-6-09

SHEET 5 OF 15

FILE => 04-1e4901-a-gp05.dgn

USERNAME => s124428 DATE PLOTTED => 30-OCT-2009 TIME PLOTTED => 09:05

DIST	COUNTY	ROUTE	POST MILES TOTAL PROJECT	SHEET No	TOTAL SHEETS
04	SCI	17, 35, 85, 101	Var	20	29

REGISTERED CIVIL ENGINEER 10-28-09 DATE

2-1-10
PLANS APPROVAL DATE

REGISTERED PROFESSIONAL ENGINEER
DIOSDADO ACOBA
No. 52003
Exp. 12-31-10
CIVIL
STATE OF CALIFORNIA

The State of California or its officers or agents shall not be responsible for the accuracy or completeness of electronic copies of this plan sheet.

NOTE: (APPLY TO THIS SHEET ONLY)

Indicates location of existing joint seal removal and placement of new joint seal. Prior to placement of new joint seal repair joint spalls.

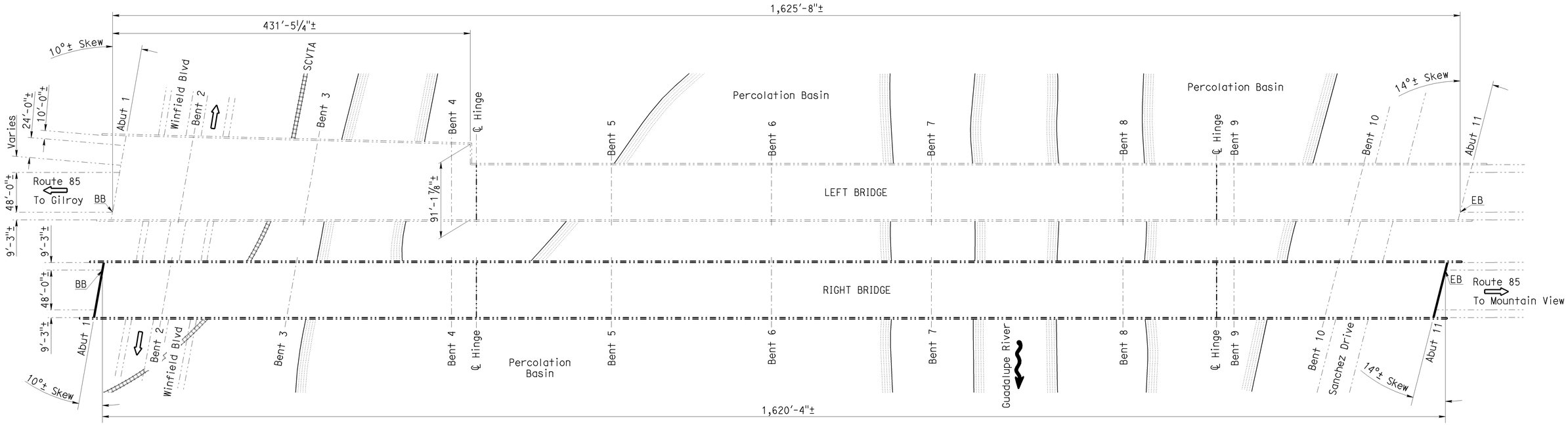

GUADALUPE RIVER

Br. No. 37-0467R, ROUTE 85, SCI, PM 5.59
1"=60'

GUADALUPE RIVER — BR NO 37-0467R

QUANTITIES

CLEAN EXPANSION JOINT	137	LF
JOINT SEAL (MR 1 1/2")	137	LF

NOTE:
THE CONTRACTOR SHALL VERIFY ALL CONTROLLING FIELD DIMENSIONS BEFORE ORDERING OR FABRICATING ANY MATERIAL.

DESIGN ENGINEER 10-28-09

	BY	CHECKED
DESIGN	Don Acoba	Scott Davis
DETAILS	Dale Kubochi	Scott Davis
QUANTITIES	Don Acoba	Scott Davis
LAYOUT	Dale Kubochi	Don Acoba
SPECIFICATIONS	Xiahong Li	PLANS AND SPECS COMPARED Xiahong Li

STATE OF CALIFORNIA
DEPARTMENT OF TRANSPORTATION

DIVISION OF MAINTENANCE
STRUCTURE MAINTENANCE DESIGN

CU 04609
EA 1E4901

BRIDGE NO. VARIOUS
POST MILE VARIES

ROUTES 17, 35, 85 & 101 BRIDGES
GENERAL PLAN NO. 6

STRUCTURES MAINTENANCE GENERAL PLAN SHEET (ENGLISH) (REV. 10/25/05)

ORIGINAL SCALE IN INCHES FOR REDUCED PLANS 0 1 2 3

DISREGARD PRINTS BEARING EARLIER REVISION DATES

REVISION DATES: 2-2-09 3-17-09 10-6-09

SHEET 6 OF 15

FILE => 04-1e4901-a-gp06.dgn

USERNAME => s124428 DATE PLOTTED => 30-OCT-2009 TIME PLOTTED => 09:05

DIST	COUNTY	ROUTE	POST MILES TOTAL PROJECT	SHEET No	TOTAL SHEETS
04	SCI	17,35, 85,101	Var	21	29

REGISTERED CIVIL ENGINEER 10-28-09 DATE

2-1-10
PLANS APPROVAL DATE

The State of California or its officers or agents shall not be responsible for the accuracy or completeness of electronic copies of this plan sheet.

REGISTERED PROFESSIONAL ENGINEER DIOSDADO ACOBA No. 52003 Exp. 12-31-10 CIVIL STATE OF CALIFORNIA

NOTES: (APPLY TO THIS SHEET ONLY)

Indicates limits of clean and treat bridge deck with high molecular weight methacrylate. Prior to bridge deck treatment, remove unsound concrete and patch with rapid setting concrete.

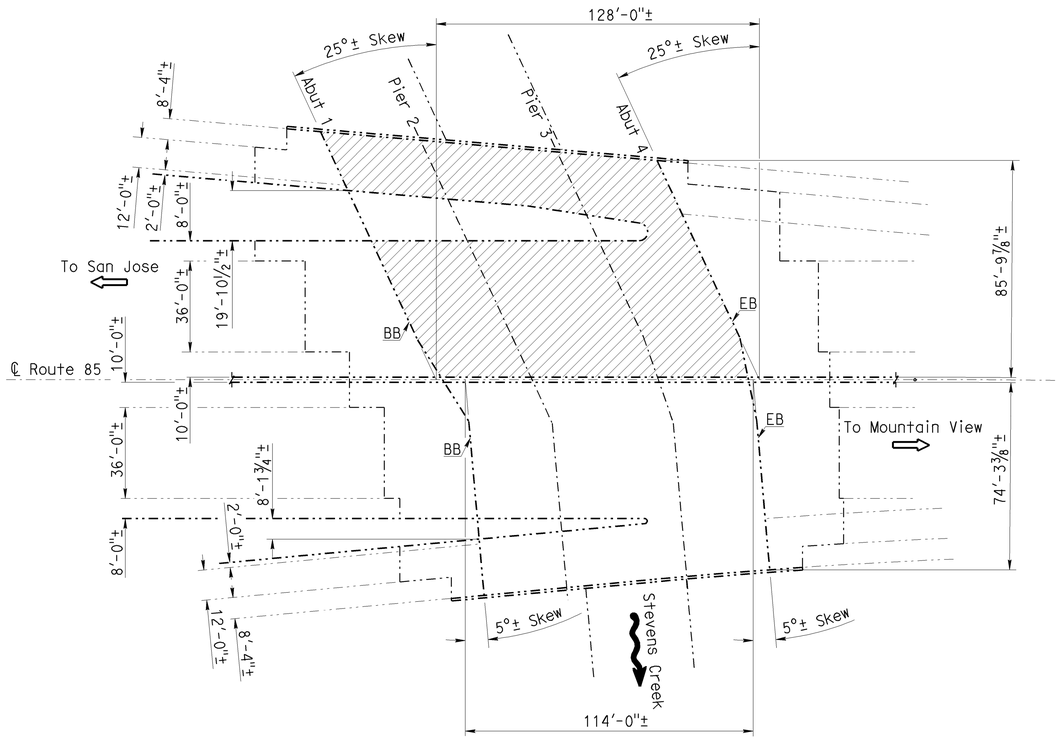

STEVENS CREEK

Br. No. 37-0185, ROUTE 85, SCI, PM R20.02
1"=30'

STEVENS CREEK	BR NO 37-0185
QUANTITIES	
REMOVE UNSOUND CONCRETE	255 CF
CLEAN BRIDGE DECK	10,000 SQFT
RAPID SETTING CONCRETE (PATCH)	255 CF
TREAT BRIDGE DECK	10,000 SQFT
FURNISH BRIDGE DECK TREATMENT MATERIAL	136 GAL
PUBLIC SAFETY PLAN	LUMP SUM

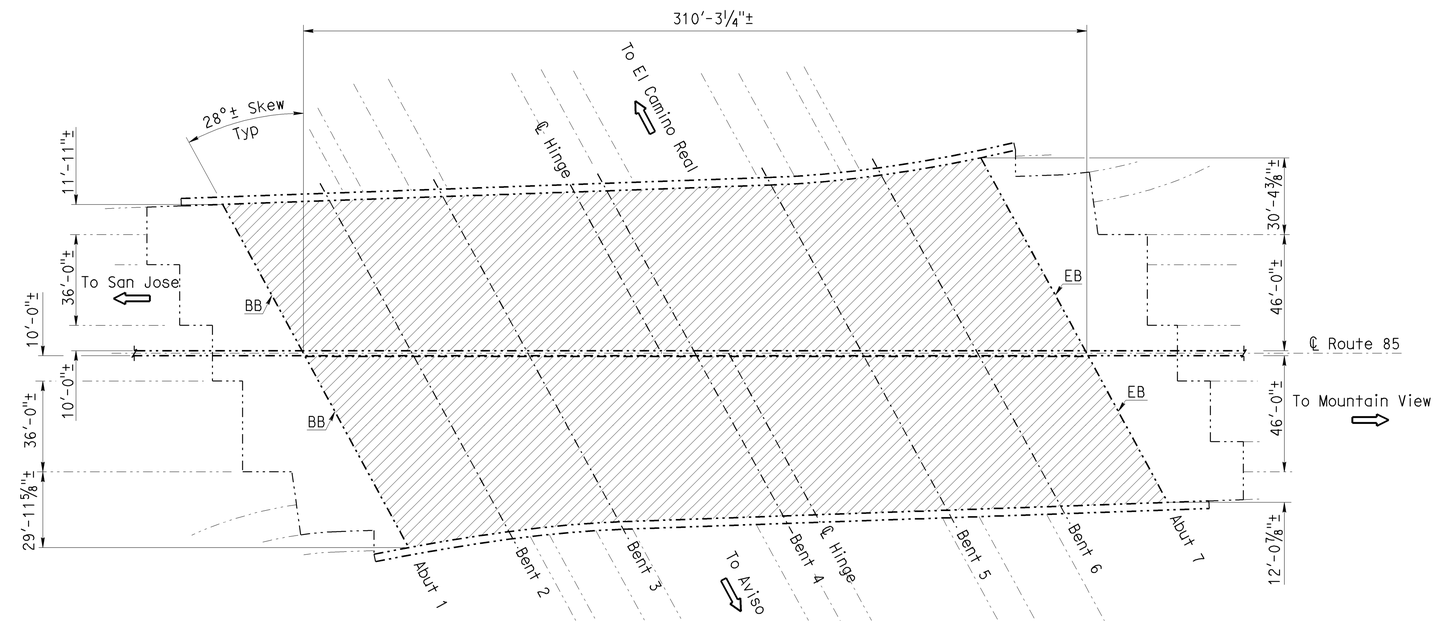

ROUTE 85/237 SEPARATION

Br. No. 37-0198, ROUTE 85, SCI, PM R22.13
1"=30'

ROUTE 85/237 SEPARATION	BR NO 37-0198
QUANTITIES	
REMOVE UNSOUND CONCRETE	104 CF
CLEAN BRIDGE DECK	41,500 SQFT
RAPID SETTING CONCRETE (PATCH)	104 CF
TREAT BRIDGE DECK	41,500 SQFT
FURNISH BRIDGE DECK TREATMENT MATERIAL	460 GAL
PUBLIC SAFETY PLAN	LUMP SUM

NOTE:
THE CONTRACTOR SHALL VERIFY ALL CONTROLLING FIELD DIMENSIONS BEFORE ORDERING OR FABRICATING ANY MATERIAL.

10-28-09 DESIGN ENGINEER	DESIGN	BY Don Acoba	CHECKED Scott Davis	LAYOUT	BY Dale Kubochi	CHECKED Don Acoba	STATE OF CALIFORNIA DEPARTMENT OF TRANSPORTATION
	DETAILS	BY Dale Kubochi	CHECKED Scott Davis	SPECIFICATIONS	BY Xiahong Li	PLANS AND SPECS COMPARED Xiahong Li	
	QUANTITIES	BY Don Acoba	CHECKED Scott Davis				

DIVISION OF MAINTENANCE
STRUCTURE MAINTENANCE DESIGN

BRIDGE NO. VARIOUS
POST MILE VARIES

ROUTES 17, 35, 85 & 101 BRIDGES
GENERAL PLAN NO. 7

STRUCTURES MAINTENANCE GENERAL PLAN SHEET (ENGLISH) (REV. 10/25/05)

ORIGINAL SCALE IN INCHES FOR REDUCED PLANS 0 1 2 3

CU 04609
EA 1E4901

DISREGARD PRINTS BEARING EARLIER REVISION DATES

REVISION DATES 2-1-09 3-11-09 4-11-09 10-6-09

SHEET 7 OF 15

FILE => 04-1e4901-a-gp07.dgn

USERNAME => s124428 DATE PLOTTED => 30-OCT-2009 TIME PLOTTED => 09:05

DIST	COUNTY	ROUTE	POST MILES TOTAL PROJECT	SHEET No	TOTAL SHEETS
04	SCl	17,35, 85,101	Var	22	29

REGISTERED CIVIL ENGINEER 10-28-09 DATE

2-1-10
PLANS APPROVAL DATE

The State of California or its officers or agents shall not be responsible for the accuracy or completeness of electronic copies of this plan sheet.

REGISTERED PROFESSIONAL ENGINEER DIOSDADO ACOBA No. 52003 Exp. 12-31-10 CIVIL STATE OF CALIFORNIA

NOTES: (APPLY TO THIS SHEET ONLY)

Indicates limits of clean and treat bridge deck with high molecular weight methacrylate. Prior to bridge deck treatment, remove unsound concrete and patch with rapid setting concrete.

Indicates location of existing joint seal removal and placement of new joint seal. Prior to placement of new joint seal repair joint spalls.

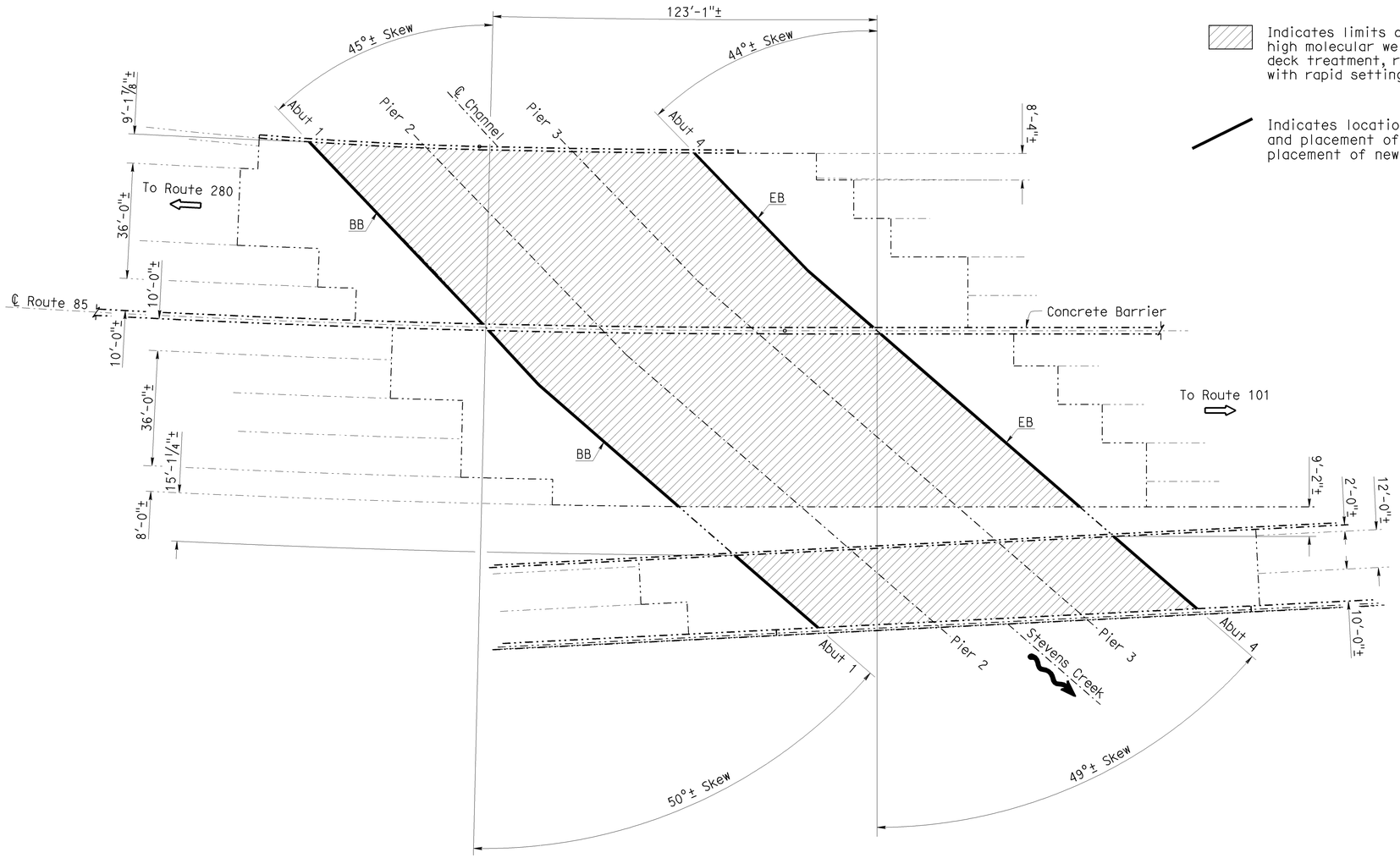

STEVENS CREEK

Br. No. 37-0197, ROUTE 85, SCl, PM R22.95
1"=20'

STEVENS CREEK	BR NO 37-0197
QUANTITIES	
REMOVE UNSOUND CONCRETE	41 CF
CLEAN BRIDGE DECK	16,500 SQFT
CLEAN EXPANSION JOINT	398 LF
RAPID SETTING CONCRETE (PATCH)	41 CF
JOINT SEAL (MR 1/2")	398 LF
TREAT BRIDGE DECK	16,500 SQFT
FURNISH BRIDGE DECK TREATMENT MATERIAL	184 GAL
PUBLIC SAFETY PLAN	LUMP SUM

NOTE:
THE CONTRACTOR SHALL VERIFY ALL CONTROLLING FIELD DIMENSIONS BEFORE ORDERING OR FABRICATING ANY MATERIAL.

10-28-09 DESIGN ENGINEER	DESIGN	BY Don Acoba	CHECKED Scott Davis	LAYOUT	BY Dale Kubochi	CHECKED Don Acoba	STATE OF CALIFORNIA DEPARTMENT OF TRANSPORTATION	DIVISION OF MAINTENANCE STRUCTURE MAINTENANCE DESIGN	BRIDGE NO. VARIOUS
	DETAILS	BY Dale Kubochi	CHECKED Scott Davis						POST MILE VARIES
	QUANTITIES	BY Don Acoba	CHECKED Scott Davis	SPECIFICATIONS	BY Xiahong Li	PLANS AND SPECS COMPARED Xiahong Li			

ROUTES 17, 35, 85 & 101 BRIDGES
GENERAL PLAN NO. 8

STRUCTURES MAINTENANCE GENERAL PLAN SHEET (ENGLISH) (REV. 10/25/05)

ORIGINAL SCALE IN INCHES FOR REDUCED PLANS 0 1 2 3

CU 04609
EA 1E4901

DISREGARD PRINTS BEARING EARLIER REVISION DATES

REVISION DATES: 2-4-09 3-11-09 4-13-09 10-6-09

SHEET 8 OF 15

FILE => 04-1e4901-a-gp08.dgn

USERNAME => s124428 DATE PLOTTED => 30-OCT-2009 TIME PLOTTED => 09:05

DIST	COUNTY	ROUTE	POST MILES TOTAL PROJECT	SHEET No	TOTAL SHEETS
04	SCI	17, 35, 85, 101	Var	23	29

REGISTERED CIVIL ENGINEER 10-28-09 DATE

2-1-10
PLANS APPROVAL DATE

REGISTERED PROFESSIONAL ENGINEER DIOSDADO ACOBA No. 52003 Exp. 12-31-10 CIVIL STATE OF CALIFORNIA

The State of California or its officers or agents shall not be responsible for the accuracy or completeness of electronic copies of this plan sheet.

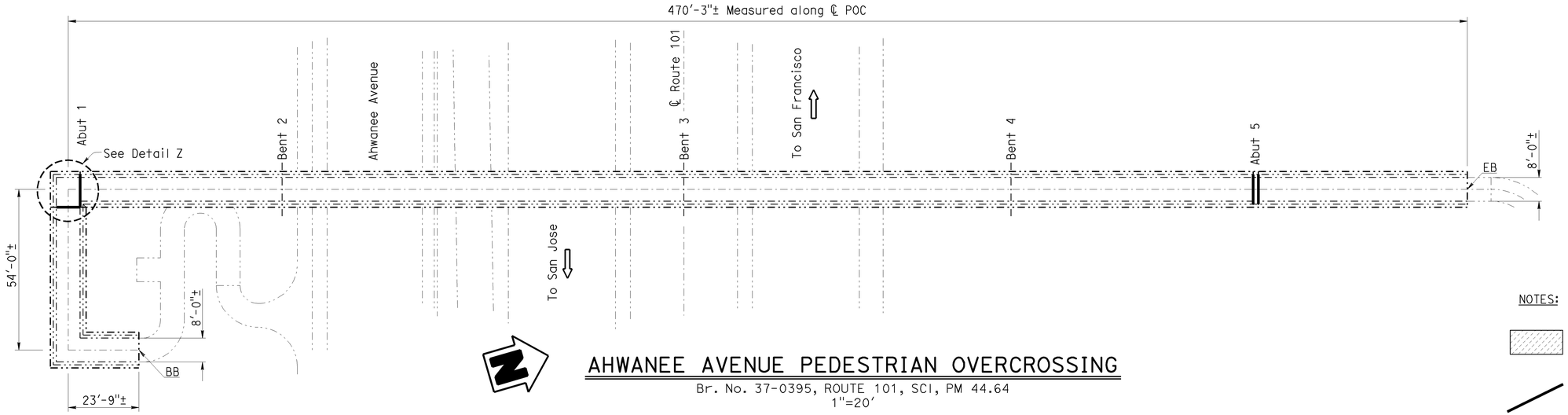

AHWANEE AVENUE PEDESTRIAN OVERCROSSING

Br. No. 37-0395, ROUTE 101, SCI, PM 44.64
1"=20'

NOTES: (APPLY TO THIS SHEET ONLY)

Indicates limits of existing concrete removal and placement of new concrete.

Indicates location of existing joint seal removal and placement of new joint seal. Prior to placement of new joint seal repair joint spalls.

AHWANEE AVENUE PEDESTRIAN OVERCROSSING — BR NO 37-0395

QUANTITIES

BRIDGE REMOVAL (PORTION), LOCATION A	LUMP	SUM
STRUCTURAL CONCRETE, BRIDGE	1	CY
CLEAN EXPANSION JOINT	44	LF
JOINT SEAL (MR 1/2")	22	LF
JOINT SEAL (MR 1 1/2")	11	LF
JOINT SEAL (MR 2 1/2")	11	LF
BAR REINFORCING STEEL (BRIDGE)	20	LB

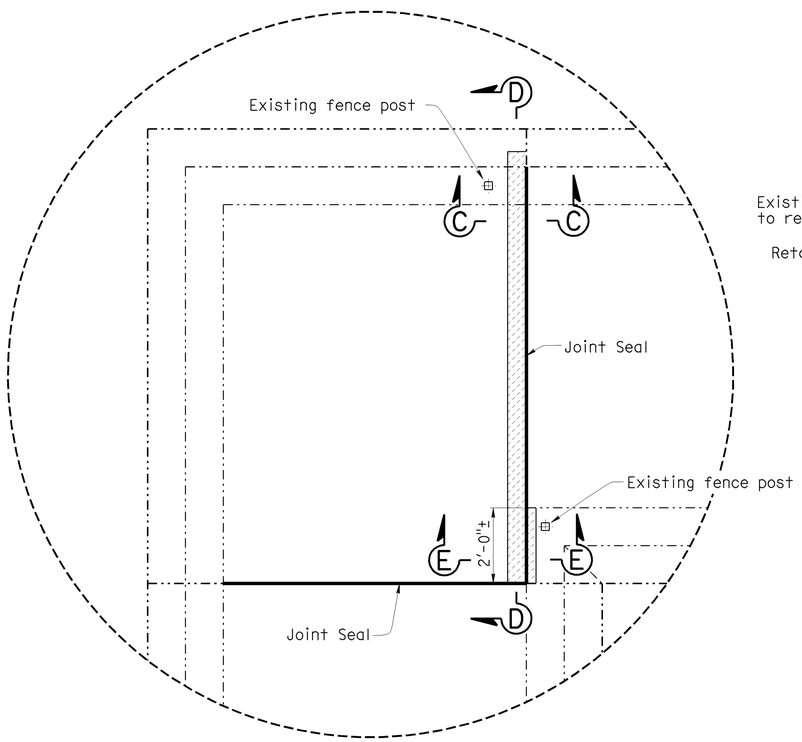

DETAIL Z

½" = 1'-0"

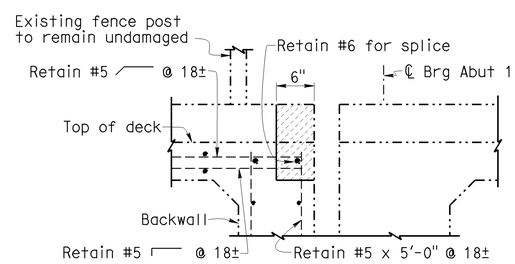

EXISTING

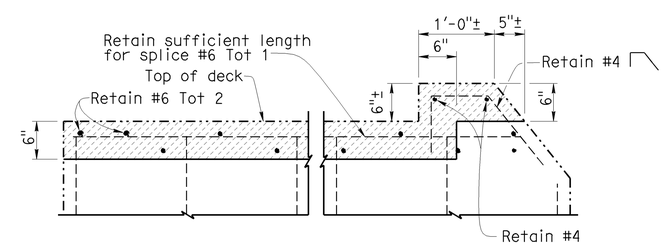

EXISTING

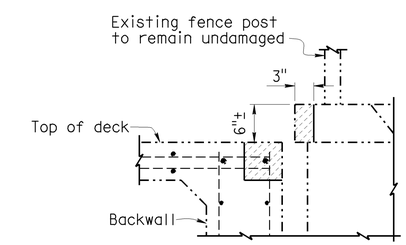

EXISTING

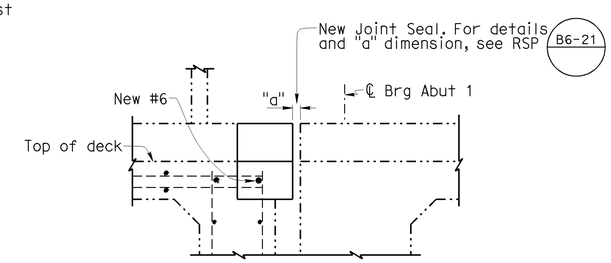

RECONSTRUCTION

Note: For details not shown, see "Existing"

SECTION C-C

1" = 1'-0"

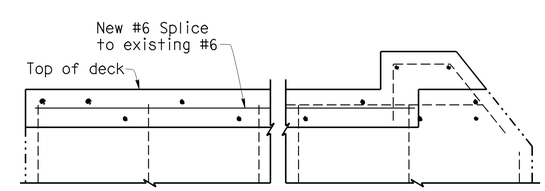

RECONSTRUCTION

Note: For details not shown, see "Existing"

SECTION D-D

1" = 1'-0"

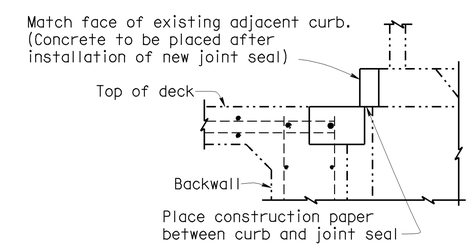

RECONSTRUCTION

SECTION E-E

1" = 1'-0"

Note: For details not shown or noted, see "Section C-C" & "Section D-D"

NOTE:
THE CONTRACTOR SHALL VERIFY ALL CONTROLLING FIELD DIMENSIONS BEFORE ORDERING OR FABRICATING ANY MATERIAL.

DESIGN ENGINEER 10-28-09	DESIGN	BY Don Acoba	CHECKED Scott Davis	LAYOUT	BY Dale Kubochi	CHECKED Don Acoba
	DETAILS	BY Dale Kubochi	CHECKED Scott Davis	SPECIFICATIONS	BY Xiahong Li	PLANS AND SPECS COMPARED Xiahong Li
	QUANTITIES	BY Don Acoba	CHECKED Scott Davis			

STATE OF CALIFORNIA DEPARTMENT OF TRANSPORTATION

DIVISION OF MAINTENANCE STRUCTURE MAINTENANCE DESIGN

BRIDGE NO. VARIOUS
POST MILE VARIES

ROUTES 17, 35, 85 & 101 BRIDGES
GENERAL PLAN NO. 9

STRUCTURES MAINTENANCE GENERAL PLAN SHEET (ENGLISH) (REV. 10/25/05)

ORIGINAL SCALE IN INCHES FOR REDUCED PLANS 0 1 2 3

CU 04609
EA 1E4901

DISREGARD PRINTS BEARING EARLIER REVISION DATES

REVISION DATES: 2-1-09 3-13-09 4-7-09 5-1-09 5-29-09 6-4-09 10-6-09

SHEET 9 OF 15

FILE => 04-1e4901-a-gp09.dgn

USERNAME => s124428 DATE PLOTTED => 30-OCT-2009 TIME PLOTTED => 09:06

DIST	COUNTY	ROUTE	POST MILES TOTAL PROJECT	SHEET No	TOTAL SHEETS
04	SCI	17, 35, 85, 101	Var	24	29

REGISTERED CIVIL ENGINEER 10-28-09 DATE

2-1-10
PLANS APPROVAL DATE

REGISTERED PROFESSIONAL ENGINEER DIOSDADO ACOBA No. 52003 Exp. 12-31-10 CIVIL STATE OF CALIFORNIA

The State of California or its officers or agents shall not be responsible for the accuracy or completeness of electronic copies of this plan sheet.

JOINT SEAL TABLE

BRIDGE NAME	BRIDGE NUMBER	LOCATION		MINIMUM "MR" (INCHES)	APPROXIMATE LENGTH (FEET)	EXISTING WATERSTOP	APPROX DEPTH TO CLEAN EXP JOINT (INCHES)	APPROX DEPTH OF JOINT SPALLS (INCHES)	APPROX WIDTH OF JOINT SPALLS (INCHES)	APPROX LENGTH OF JOINT SPALLS (FEET)
SANTA CRUZ AVENUE UNDERCROSSING	37-0124L	Bent 11		1½	33.0	NO	12	3	6	7
BLOSSOM HILL ROAD OVERCROSSING	37-0148	Bent 2		1	48.0	NO	12	3	6	10
		Bent 4		1	48.0	NO	12	3	6	10
N17-S280 CONNECTOR OVERCROSSING	37-0139G	Abut 1	BW	½	41.8	NO	12	3	6	8
		Abut 2	BW	½	43.6	NO	12	3	6	9
		Abut 2	EB	½	27.0	NO	12	3	6	5
ROUTE 17/280 SEPARATION	37-0131	Abut 1(NB)	BB	1	58.2	YES	6	3	6	12
		Abut 3(NB)	EB	1½	57.9	YES	6	3	6	12
		Abut 1(SB)	BB	2	72.4	YES	6	3	6	14
		Abut 3(SB)	EB	2	78.1	YES	6	3	6	16
SUMMIT ROAD SEPARATION	37-0343	Abut 1	BB	2	39.0	NO	12	3	6	8
		Abut 4	EB	1½	43.7	NO	12	3	6	9
N85-N87 CONNECTOR OVERCROSSING	37-0414G	Abut 1	BB	2½	38.8	NO	12	3	6	8
		Span 3	H	2½	39.0	NO	12	3	6	8
		Abut 8	EB	2½	77.2	NO	12	3	6	15
GUADALUPE RIVER	37-0467R	Abut 1	BB	1½	68.0	NO	12	3	6	14
		Abut 11	EB	1½	69.1	NO	12	3	6	14
STEVENS CREEK	37-0197	Abut 1(NB)	BB	½	84.8	NO	12	3	6	17
		Abut 4(NB)	EB	½	83.1	NO	12	3	6	17
		Abut 1(NB/On-Ramp)	BB	½	38.1	NO	12	3	6	8
		Abut 1(NB/On-Ramp)	EB	½	37.3	NO	12	3	6	7
		Abut 1(SB)	BB	½	78.7	NO	12	3	6	16
		Abut 4(SB)	EB	½	76.2	NO	12	3	6	15
AHWANEE AVENUE PEDESTRIAN OVERCROSSING	37-0395	Abut 1		½	11.0	NO	12	3	6	2
		Abut 1	BB	1½	11.0	NO	12	3	6	2
		Abut 5	BW	2½ ✳	11.0	NO	12	3	6	2
		Abut 5	EB	½	11.0	NO	12	3	6	2

The following notes apply to JOINT SEAL TYPE B:

1) Seal must satisfy both minimum Movement Rating (MR) and minimum W1 requirements.
2) Minimum W1 is the calculated maximum width of the joint based on field measurements. After the joints have been cleaned, minimum W1 is to be calculated by the Engineer.
3) W1 shall be the smaller of the values determined as follows:
   A) 0.85 times the manufacturer's designed minimum uncompressed width of the seal.
   B) The width of the seal on the third successive test cycle of the pressure deflection test, when compressed to an average pressure of 3 psi.
4) Bend Type B joint seal 6" up into curb or rail on the low side of the deck where deck joint matches curb or rail joint.
5) For details not shown, see RSP B6-21

LEGEND:
BB - Paving Notch at beginning of bridge
EB - Paving Notch at end of bridge
BW - Abutment backwall joint
H - Hinge Joint
✳ - Use Type B Seal only

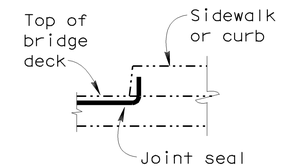

SIDEWALK OR CURB

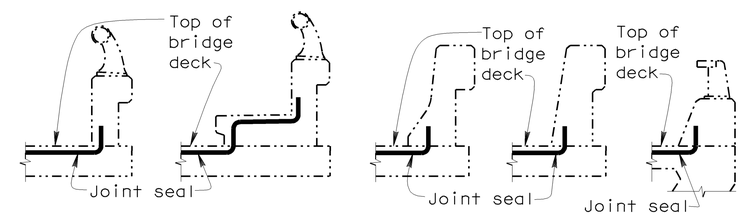

BARRIER RAIL

JOINT SEAL AT LOW SIDE OF DECK

Notes: Details shown for illustration purposes only. For use only where deck joint matches the sidewalk, curb or barrier rail joint.

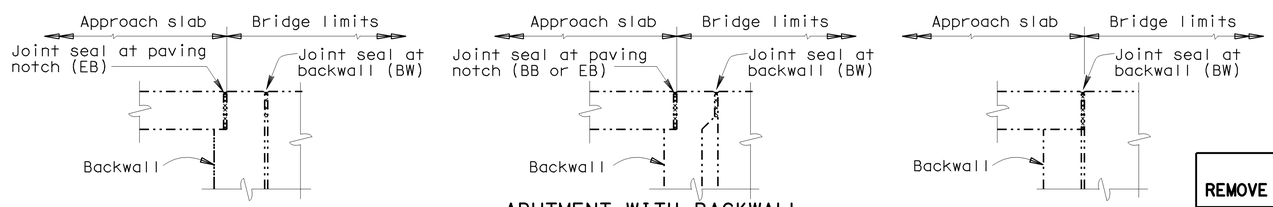

ABUTMENT WITH BACKWALL

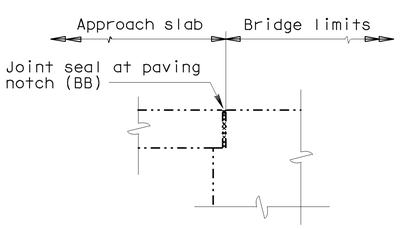

DIAPHRAGM ABUTMENT

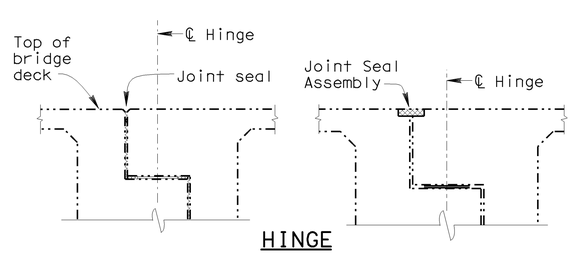

HINGE

JOINT SEAL LOCATION

NOTE:
THE CONTRACTOR SHALL VERIFY ALL CONTROLLING FIELD DIMENSIONS BEFORE ORDERING OR FABRICATING ANY MATERIAL.

DECK REPAIR TABLE
REMOVE UNSOUND CONCRETE AND RAPID SETTING CONCRETE (PATCH)

BRIDGE NAME	BRIDGE NUMBER	APPROXIMATE AREA DAMAGED (PERCENT)	APPROXIMATE DEPTH (INCHES)
BLOSSOM HILL ROAD OVERCROSSING	37-0148	10	3
LARK AVENUE OVERCROSSING	37-0151	1	3
ROUTE 17/85 SEPARATION	37-0493	1	3
N17-S280 CONNECTOR OVERCROSSING	37-0139G	1	3
ROUTE 17/280 SEPARATION	37-0131	1	3
SNELL AVENUE OVERCROSSING	37-0442	1	3
S85-N87/87 CONNECTOR SEPARATION	37-0633F	1	3
STEVENS CREEK	37-0185	10	3
ROUTE 85/237 SEPARATION	37-0198	1	3
STEVENS CREEK	37-0197	1	3

Locations to be determined by the Engineer. For details see "DECK REPAIR DETAIL".

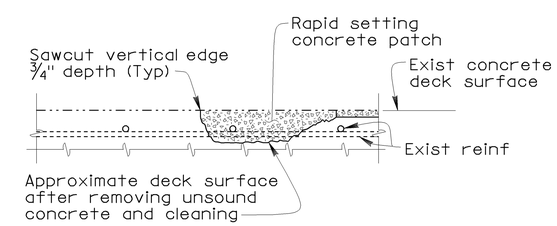

DECK REPAIR DETAIL

Note: Locations to be determined by the Engineer. Reinforcement may be encountered during deck concrete removal.

NO SCALE

	BY	CHECKED
DESIGN	Don Acoba	Scott Davis
DETAILS	Dale Kubochi	Scott Davis
QUANTITIES	Don Acoba	Scott Davis

STATE OF CALIFORNIA
DEPARTMENT OF TRANSPORTATION

DIVISION OF MAINTENANCE
STRUCTURE MAINTENANCE DESIGN

BRIDGE NO. VARIOUS
POST MILE VARIES

ROUTE 17, 35, 85 & 101 BRIDGES
JOINT SEAL DETAILS NO. 1

STRUCTURES MAINTENANCE GENERAL PLAN & DETAIL SHEET (ENGLISH) (REV. 5/17/06)

ORIGINAL SCALE IN INCHES FOR REDUCED PLANS 0 1 2 3

CU 04609
EA 1E4901

DISREGARD PRINTS BEARING EARLIER REVISION DATES

REVISION DATES 1-5-09 3-17-09 4-14-09 5-28-09

SHEET 10 OF 15

FILE => 04-1e4901-e-jtsdet01.dgn

USERNAME => s124428 DATE PLOTTED => 30-OCT-2009 TIME PLOTTED => 09:06

DIST	COUNTY	ROUTE	POST MILES TOTAL PROJECT	SHEET No	TOTAL SHEETS
04	SCI	17, 35, 85, 101	Var	25	29

REGISTERED CIVIL ENGINEER 10-28-09 DATE

2-1-10
PLANS APPROVAL DATE

REGISTERED PROFESSIONAL ENGINEER DIOSDADO ACOBA No. 52003 Exp. 12-31-10 CIVIL STATE OF CALIFORNIA

The State of California or its officers or agents shall not be responsible for the accuracy or completeness of electronic copies of this plan sheet.

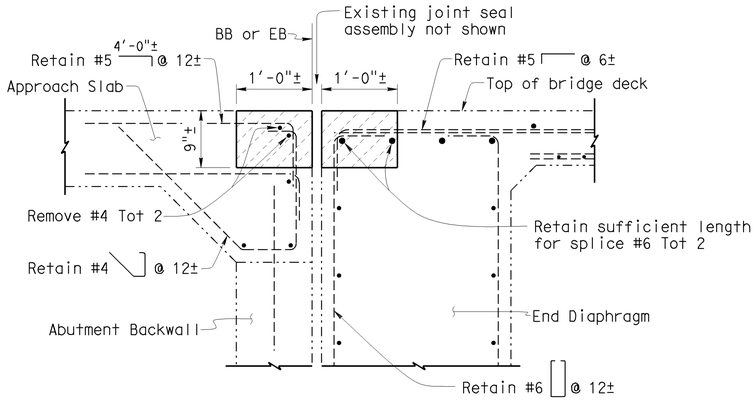

EXISTING

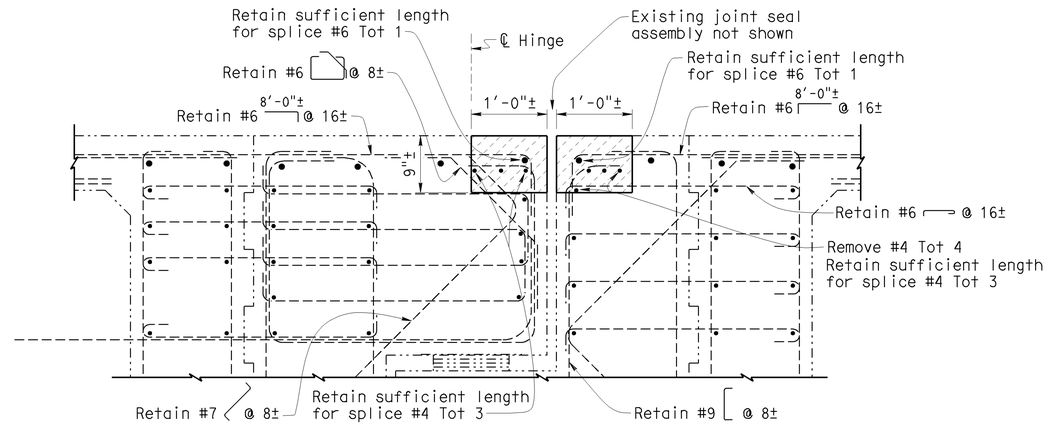

EXISTING

NOTES: (APPLY TO THIS SHEET ONLY)

Indicates limits of remove existing concrete and joint seal assembly. Retain existing reinforcing steel (except where noted otherwise).

"a" Reconstructed gap width as determined by the Engineer.

- For additional details, see "JOINT DETAILS NO. 3" thru "JOINT DETAILS NO. 5" and "JOINT SEAL ASSEMBLY (MAXIMUM MOVEMENT RATING = 4")" sheets.

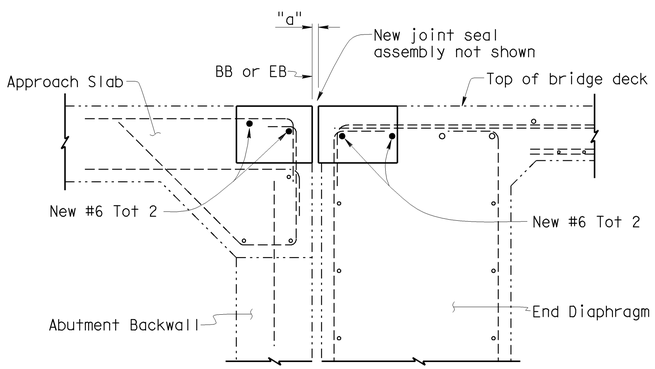

RECONSTRUCTION

SECTION A-A

1" = 1'-0"

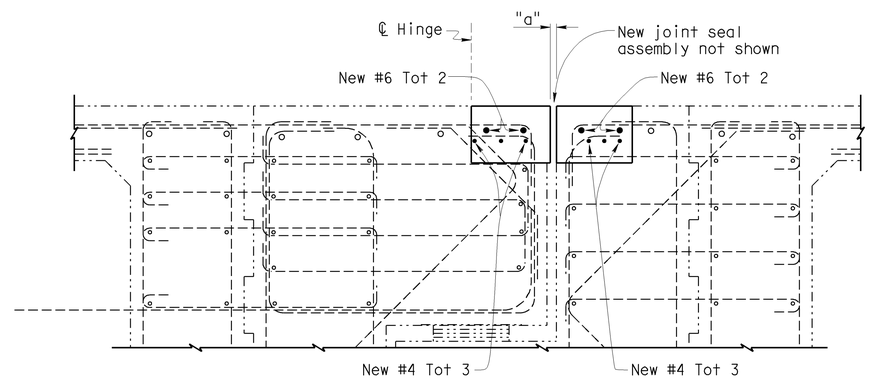

RECONSTRUCTION

SECTION B-B

1" = 1'-0"

NOTE:
THE CONTRACTOR SHALL VERIFY ALL CONTROLLING FIELD DIMENSIONS BEFORE ORDERING OR FABRICATING ANY MATERIAL.

	BY	CHECKED
DESIGN	Don Acoba	Scott Davis
DETAILS	Dale Kubochi	Scott Davis
QUANTITIES	Don Acoba	Scott Davis

STATE OF CALIFORNIA DEPARTMENT OF TRANSPORTATION

DIVISION OF MAINTENANCE STRUCTURE MAINTENANCE DESIGN

BRIDGE NO. VARIOUS
POST MILE VARIES

ROUTE 17, 35, 85 & 101 BRIDGES
JOINT SEAL DETAILS NO. 2

STRUCTURES MAINTENANCE GENERAL PLAN & DETAIL SHEET (ENGLISH) (REV. 5/17/06)

ORIGINAL SCALE IN INCHES FOR REDUCED PLANS 0 1 2 3

CU 04609
EA 1E4901

DISREGARD PRINTS BEARING EARLIER REVISION DATES 4-16-09

REVISION DATES

SHEET 11 OF 15

FILE => 04-1e4901-e-jtsdet02.dgn

USERNAME => s124428 DATE PLOTTED => 30-OCT-2009 TIME PLOTTED => 09:06

DIST	COUNTY	ROUTE	POST MILES TOTAL PROJECT	SHEET No	TOTAL SHEETS
04	SCI	17, 35, 85, 101	Var	26	29

REGISTERED CIVIL ENGINEER 10-28-09 DATE

2-1-10
PLANS APPROVAL DATE

REGISTERED PROFESSIONAL ENGINEER
DIOSDADO ACOBA
No. 52003
Exp. 12-31-10
CIVIL
STATE OF CALIFORNIA

The State of California or its officers or agents shall not be responsible for the accuracy or completeness of electronic copies of this plan sheet.

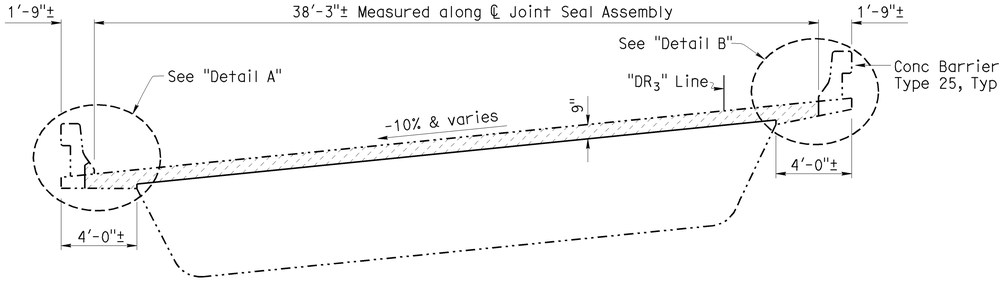

END DIAPHRAGM ABUTMENT 1

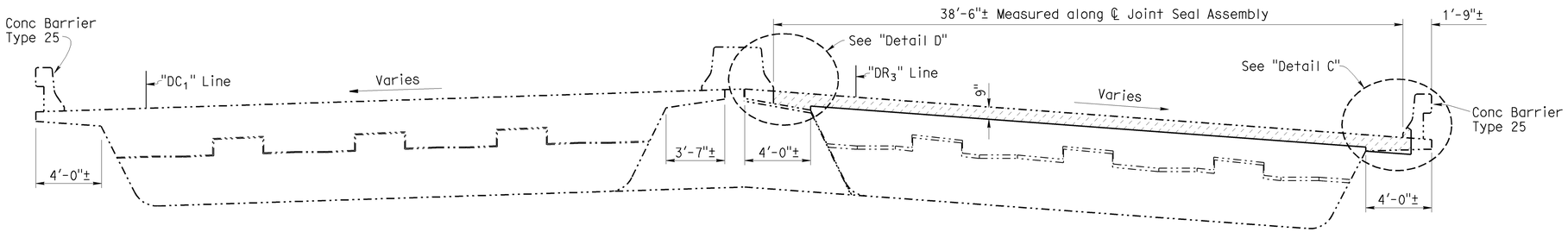

HINGE

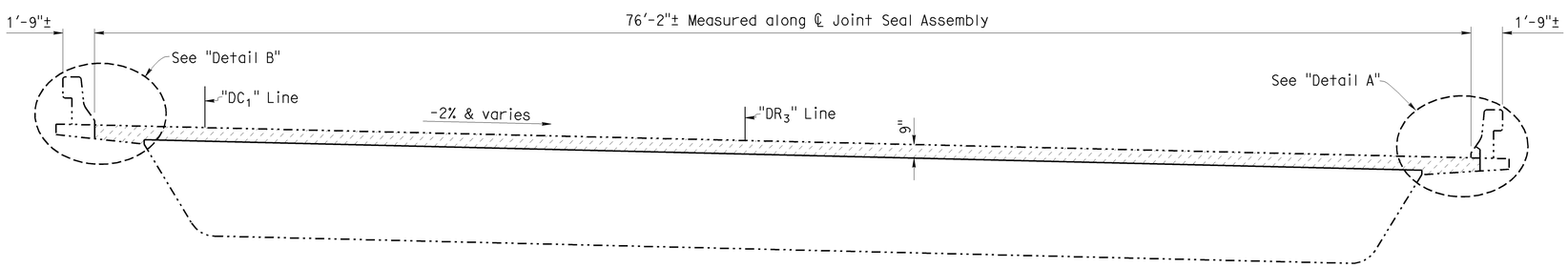

END DIAPHRAGM ABUTMENT 8

ELEVATIONS
(N85-N87 CONNECTOR OVERCROSSING)

1/4" = 1'-0"

NOTES: (APPLY TO THIS SHEET ONLY)

Indicates limits of remove existing concrete and joint seal assembly. Retain existing reinforcing and place new concrete and joint seal assembly.

- For "Detail A" and "Detail B", see "JOINT SEAL DETAILS NO. 4" sheet.
- For "Detail C" and "Detail D", see "JOINT SEAL DETAILS NO. 5" sheet.

GENERAL NOTES
LOAD FACTOR DESIGN

DESIGN: BRIDGE DESIGN SPECIFICATIONS
(1996 AASHTO with Interims and Revisions by CALTRANS)

DEAD LOAD: Includes 35 psf for future wearing surface.
LIVE LOADING: HS20-44 and alternative and permit design load.

REINFORCED CONCRETE: fy = 60,000 psi
f'c = 4,000 psi
n = 9

TEMPORARY DECK PLATE LOAD CRITERIA

MOMENT DEMAND/FOOT (kips-ft/ft)	BOLT SHEAR/FOOT (kips/ft)	BOLT TENSION (kips) / bolt
15.6	7.8	10.4

Plate deflection shall not exceed s/12 inches (s = span of plate).
Maximum anchor bolt spacing = 1'-0".

NOTE:
THE CONTRACTOR SHALL VERIFY ALL CONTROLLING FIELD DIMENSIONS BEFORE ORDERING OR FABRICATING ANY MATERIAL.

	BY	CHECKED
DESIGN	Don Acoba	Scott Davis
DETAILS	Dale Kubochi	Scott Davis
QUANTITIES	Don Acoba	Scott Davis

STATE OF CALIFORNIA
DEPARTMENT OF TRANSPORTATION

DIVISION OF MAINTENANCE
STRUCTURE MAINTENANCE DESIGN

BRIDGE NO. VARIOUS
POST MILE VARIES

ROUTE 17, 35, 85 & 101 BRIDGES
JOINT SEAL DETAILS NO. 3

STRUCTURES MAINTENANCE GENERAL PLAN & DETAIL SHEET (ENGLISH) (REV. 5/17/06)

ORIGINAL SCALE IN INCHES FOR REDUCED PLANS 0 1 2 3

CU 04609
EA 1E4901

DISREGARD PRINTS BEARING EARLIER REVISION DATES 5-8-09

REVISION DATES

SHEET 12 OF 15

FILE => 04-1e4901-e-jtsdet03.dgn

USERNAME => s124428 DATE PLOTTED => 30-OCT-2009 TIME PLOTTED => 09:06

DIST	COUNTY	ROUTE	POST MILES TOTAL PROJECT	SHEET No	TOTAL SHEETS
04	SCI	17, 35, 85, 101	Var	27	29

REGISTERED CIVIL ENGINEER 10-28-09 DATE

2-1-10
PLANS APPROVAL DATE

REGISTERED PROFESSIONAL ENGINEER
DIOSDADO ACOBA
No. 52003
Exp. 12-31-10
CIVIL
STATE OF CALIFORNIA

The State of California or its officers or agents shall not be responsible for the accuracy or completeness of electronic copies of this plan sheet.

NOTES: (APPLY TO THIS SHEET ONLY)

Indicates limits of remove existing concrete and joint seal assembly. Retain existing reinforcing and place new concrete and joint seal assembly.

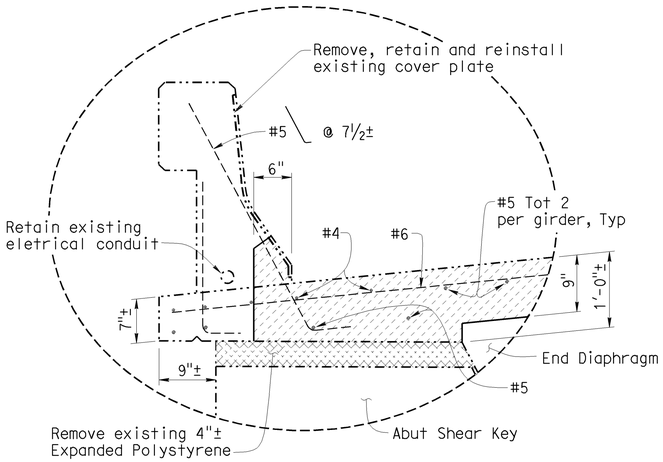

EXISTING

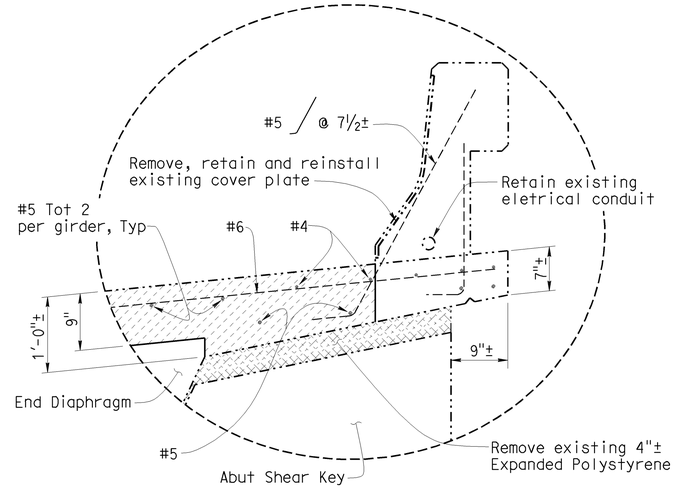

EXISTING

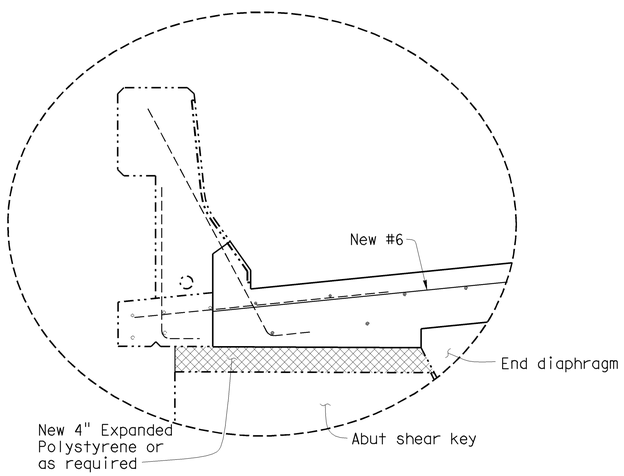

RECONSTRUCTION

DETAIL A

1"=1'-0"

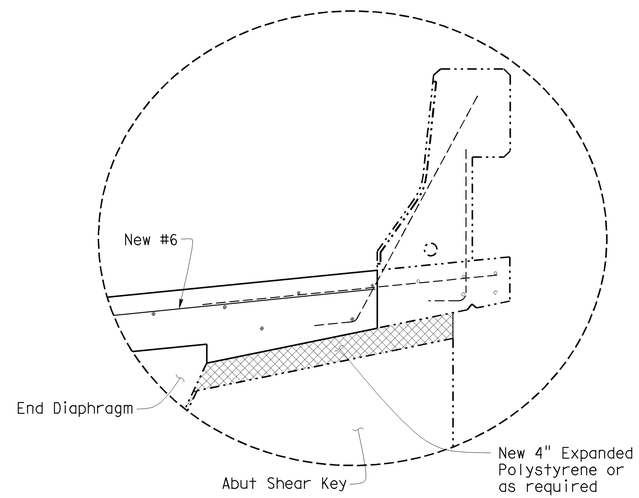

RECONSTRUCTION

DETAIL B

1"=1'-0"

Note:
"Detail A" and "Detail B" shown for Abutment 1, Abutment 8 similar.

NOTE:
THE CONTRACTOR SHALL VERIFY ALL CONTROLLING FIELD DIMENSIONS BEFORE ORDERING OR FABRICATING ANY MATERIAL.

	BY	CHECKED
DESIGN	Don Acoba	Scott Davis
DETAILS	Dale Kubochi	Scott Davis
QUANTITIES	Don Acoba	Scott Davis

STATE OF CALIFORNIA
DEPARTMENT OF TRANSPORTATION

DIVISION OF MAINTENANCE
STRUCTURE MAINTENANCE DESIGN

CU 04609
EA 1E4901

BRIDGE NO. VARIOUS
POST MILE VARIES

ROUTE 17, 35, 85 & 101 BRIDGES
JOINT SEAL DETAILS NO. 4

STRUCTURES MAINTENANCE GENERAL PLAN & DETAIL SHEET (ENGLISH) (REV. 5/17/06)

ORIGINAL SCALE IN INCHES FOR REDUCED PLANS 0 1 2 3

DISREGARD PRINTS BEARING EARLIER REVISION DATES 5-15-09 5-28-09

REVISION DATES

SHEET 13 OF 15

FILE => 04-1e4901-e-jtsdet04.dgn

USERNAME => s124428 DATE PLOTTED => 30-OCT-2009 TIME PLOTTED => 09:06

DIST	COUNTY	ROUTE	POST MILES TOTAL PROJECT	SHEET No	TOTAL SHEETS
04	SCI	17, 35, 85, 101	Var	28	29

REGISTERED CIVIL ENGINEER 10-28-09 DATE

2-1-10
PLANS APPROVAL DATE

REGISTERED PROFESSIONAL ENGINEER
DIOSDADO ACOBA
No. 52003
Exp. 12-31-10
CIVIL
STATE OF CALIFORNIA

The State of California or its officers or agents shall not be responsible for the accuracy or completeness of electronic copies of this plan sheet.

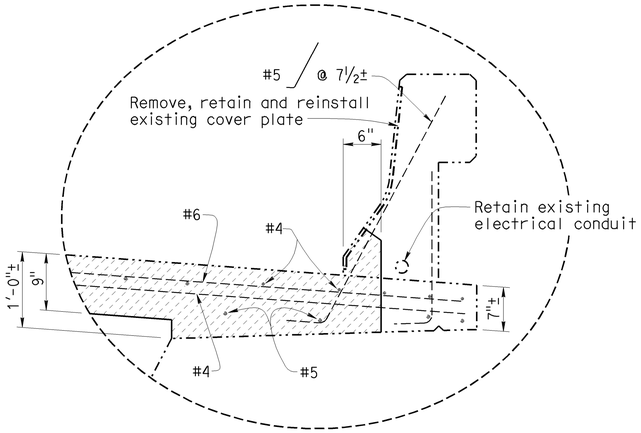

EXISTING

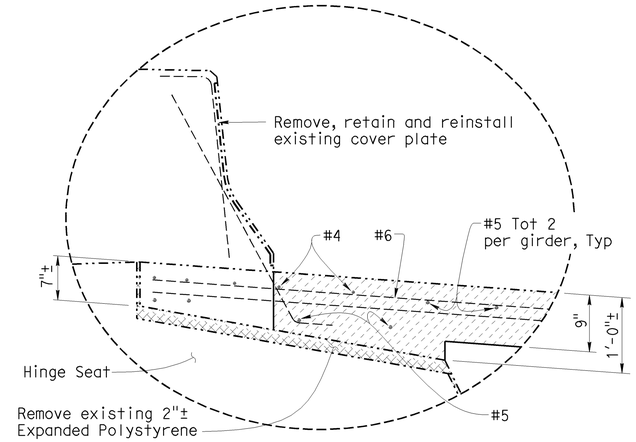

EXISTING

NOTES: (APPLY TO THIS SHEET ONLY)

Indicates limits of remove existing concrete and joint seal assembly. Retain existing reinforcing and place new concrete and joint seal assembly.

Indicates limits of remove existing 2"± depth concrete expansion dam, prepare the bridge deck surface and place 2"± depth polyester concrete expansion dam.

① Cut or bend existing longidutinal reinforcement as required to clear new joint seal assembly.

② For additional details, see "JOINT SEAL ASSEMBLY (MAXIMUM MOVEMENT RATING = 4") sheet.

"a" Reconstructed gap width as determined by the Engineer.

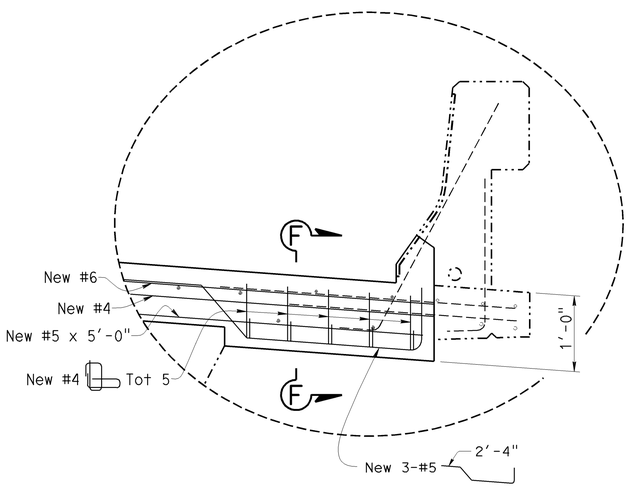

RECONSTRUCTION

DETAIL C

1"=1'-0"

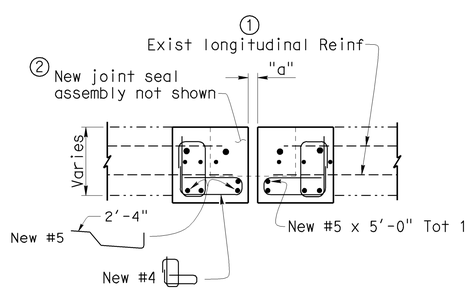

SECTION F-F

1" = 1'-0"

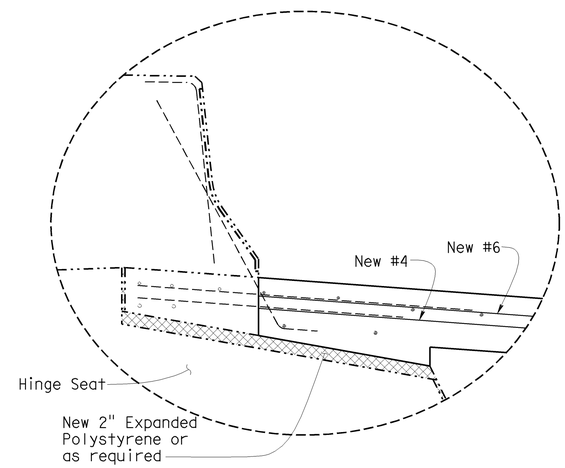

RECONSTRUCTION

DETAIL D

1"=1'-0"

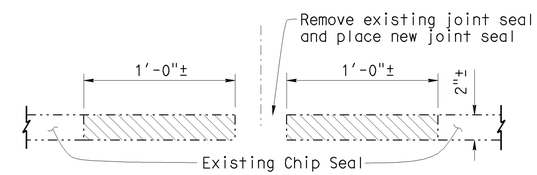

SECTION G-G

No Scale

NOTE:
THE CONTRACTOR SHALL VERIFY ALL CONTROLLING FIELD DIMENSIONS BEFORE ORDERING OR FABRICATING ANY MATERIAL.

	BY	CHECKED
DESIGN	Don Acoba	Scott Davis
DETAILS	Dale Kubochi	Scott Davis
QUANTITIES	Don Acoba	Scott Davis

STATE OF CALIFORNIA
DEPARTMENT OF TRANSPORTATION

DIVISION OF MAINTENANCE
STRUCTURE MAINTENANCE DESIGN

CU 04609
EA 1E4901

BRIDGE NO. VARIOUS
POST MILE VARIES

ROUTE 17, 35, 85 & 101 BRIDGES
JOINT SEAL DETAILS NO. 5

STRUCTURES MAINTENANCE GENERAL PLAN & DETAIL SHEET (ENGLISH) (REV. 5/17/06)

ORIGINAL SCALE IN INCHES FOR REDUCED PLANS 0 1 2 3

DISREGARD PRINTS BEARING EARLIER REVISION DATES 5-15-09 5-28-09

REVISION DATES

SHEET 14 OF 15

FILE => 04-1e4901-e-jtsdet05.dgn

USERNAME => s124428 DATE PLOTTED => 30-OCT-2009 TIME PLOTTED => 09:06

DIST	COUNTY	ROUTE	POST MILES TOTAL PROJECT	SHEET No	TOTAL SHEETS
04	SCI	17, 35, 85, 101	Var	29	29

REGISTERED CIVIL ENGINEER 10-28-09 DATE

2-1-10
PLANS APPROVAL DATE

REGISTERED PROFESSIONAL ENGINEER DIOSDADO ACOBA No. 52003 Exp. 12-31-10 CIVIL STATE OF CALIFORNIA

The State of California or its officers or agents shall not be responsible for the accuracy or completeness of electronic copies of this plan sheet.

The Caltrans web site is at www.dot.ca.gov

NOTE:
THE CONTRACTOR SHALL VERIFY ALL CONTROLLING FIELD DIMENSIONS BEFORE ORDERING OR FABRICATING ANY MATERIAL.

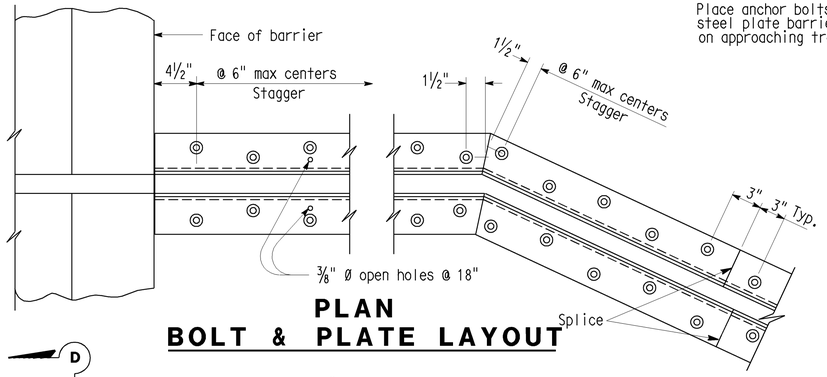

PLAN
BOLT & PLATE LAYOUT

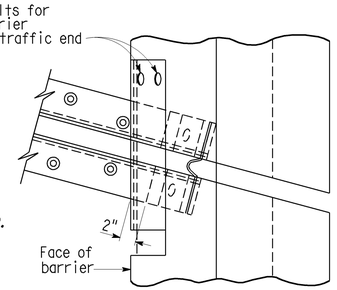

SKEW < 20°

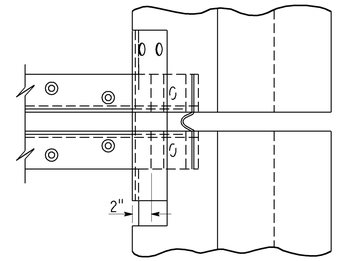

SKEW > 20°

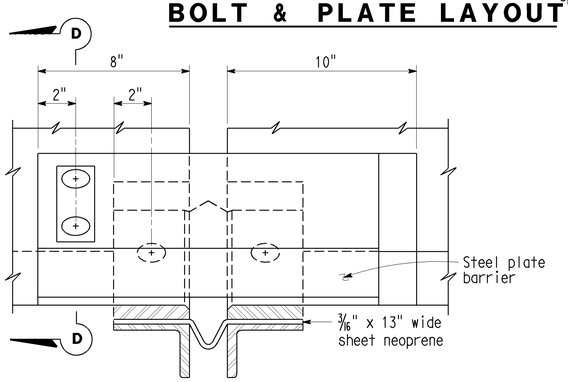

VIEW B-B

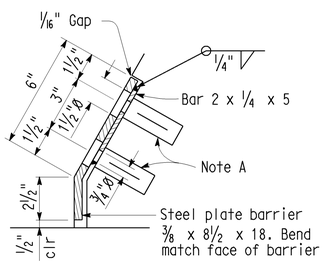

SECTION D-D

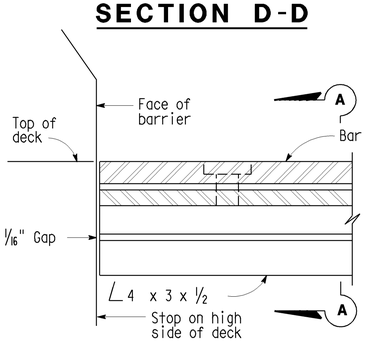

HIGH SIDE BARRIER DETAIL

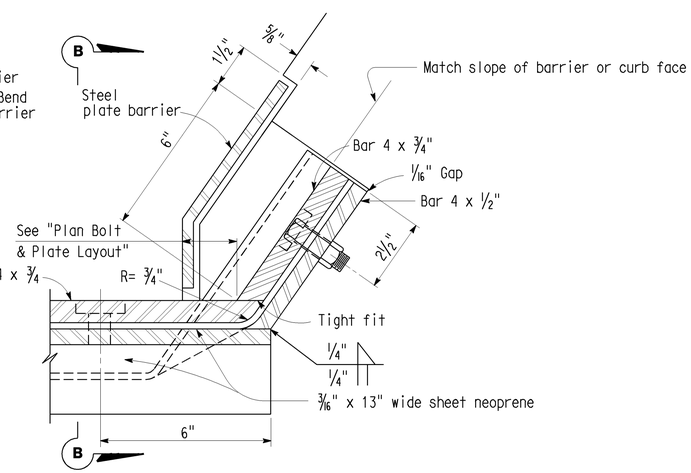

LOW SIDE BARRIER DETAIL

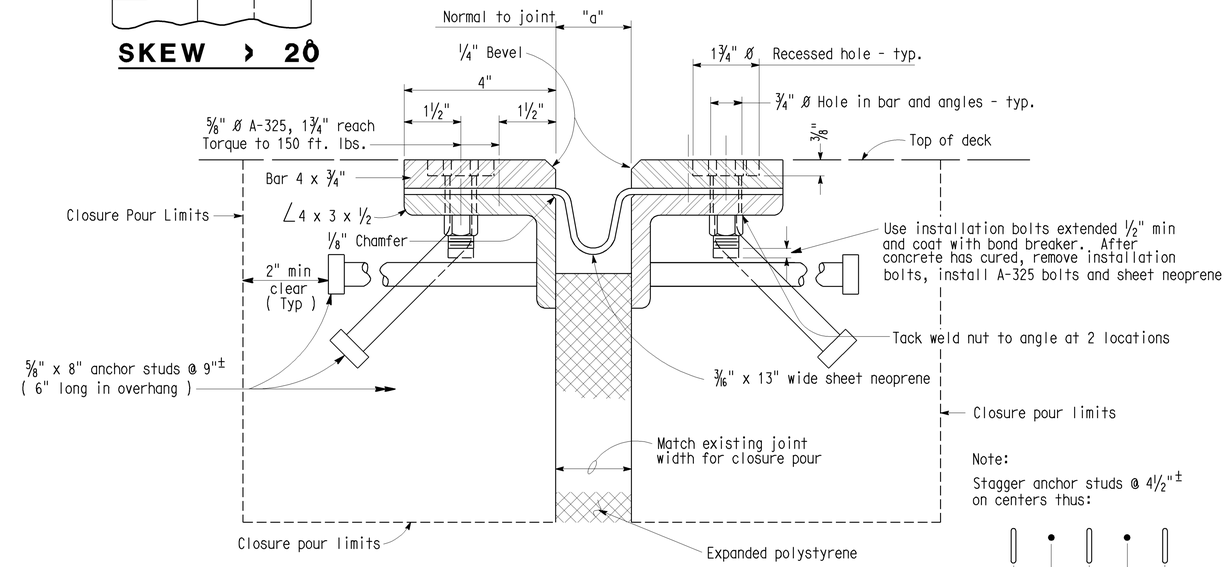

SECTION A-A

Note:
Stagger anchor studs @ 4½"± on centers thus:

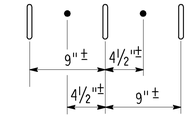

NOTES:

Full penetration butt welds may be substituted for fillet welds on all anchor studs.

Alternate types of anchor studs may be permitted subject to the approval by the Engineer.

Joint seal assembly to be used in conjunction with closure pour. (See other sheets for limits). Closure pour shall not be placed until final deck surface is within the tolerance specified.

Use joint at crown of roadway, at any change in transverse slope in deck and at changes in horizontal direction. Place other joints at or near lanes. All metal parts to be painted or galvanized after fabrication.

Sheet neoprene shall be fabricated in one continuous piece or joints shall be vulcanized. Neoprene shall be fabricated to bend around corners. 1" holes in neoprene sheets shall be drilled or punched so that the neoprene is not distorted at the time of installation.

NOTE A

Insert assembly or expansion anchorage for ⅝" x 1¾" A-325 bolt.

	BY	CHECKED
DESIGN	Don Acoba	Scott Davis
DETAILS	N. Kelley	Scott Davis
QUANTITIES	Don Acoba	Scott Davis

STATE OF CALIFORNIA
DEPARTMENT OF TRANSPORTATION

DIVISION OF MAINTENANCE
STRUCTURE MAINTENANCE DESIGN

BRIDGE NO. VARIOUS
POST MILE VARIES

ROUTE 17, 35, 85 & 101 BRIDGES
JOINT SEAL ASSEMBLY (MAXIMUM MOVEMENT RATING = 4")

STRUCTURES MAINTENANCE GENERAL PLAN & DETAIL SHEET (ENGLISH) (REV. 5/17/06)

ORIGINAL SCALE IN INCHES FOR REDUCED PLANS 0 1 2 3

CU 04609
EA 1E4901

DISREGARD PRINTS BEARING EARLIER REVISION DATES 4-23-07 4-24-07

REVISION DATES

SHEET 15 OF 15

FILE => 04-1e4901-f-jtassem.dgn

USERNAME => s124428 DATE PLOTTED => 30-OCT-2009 TIME PLOTTED => 09:07