Dist	COUNTY	ROUTE	POST MILES TOTAL PROJECT	SHEET No.	TOTAL SHEETS
04	Son	116	0.0/8.0	1	17

INDEX OF PLANS

SHEET No.	DESCRIPTION
1	TITLE AND LOCATION MAP
2	TYPICAL CROSS SECTIONS
3	CONSTRUCTION DETAILS
4	CONSTRUCTION AREA SIGN
5-7	PAVEMENT DELINEATION PLAN
8	PAVEMENT DELINEATION QUANTITIES
9	SUMMARY OF QUANTITIES
10-17	REVISED AND NEW STANDARD PLANS

THE STANDARD PLANS LIST APPLICABLE TO THIS CONTRACT IS INCLUDED IN THE NOTICE TO BIDDERS AND SPECIAL PROVISIONS BOOK.

STATE OF CALIFORNIA

DEPARTMENT OF TRANSPORTATION

PROJECT PLANS FOR CONSTRUCTION ON STATE HIGHWAY

IN SONOMA COUNTY
NEAR JENNER
FROM ROUTE 1
TO 0.22 MILE EAST OF BOHEMIAN HIGHWAY

TO BE SUPPLEMENTED BY STANDARD PLANS DATED MAY 2006

LOCATION MAP

BEGIN CONSTRUCTION PM 0.0

END CONSTRUCTION PM 8.0

End Work
1000' FROM PM 8.0

Begin Work
1000' FROM PM 0.0

NO SCALE

08-06-10

PROJECT ENGINEER DATE
REGISTERED CIVIL ENGINEER

Ba Nhu Nguyen
No. 64527
Exp. 6-30-11
CIVIL
REGISTERED PROFESSIONAL ENGINEER
STATE OF CALIFORNIA

August 13, 2010

PLANS APPROVAL DATE

THE STATE OF CALIFORNIA OR ITS OFFICERS OR AGENTS SHALL NOT BE RESPONSIBLE FOR THE ACCURACY OR COMPLETENESS OF SCANNED COPIES OF THIS PLAN SHEET.

PROJECT MANAGER: RAMSES SARGISS

DESIGN ENGINEER: BA NGUYEN

THE CONTRACTOR SHALL POSSESS THE CLASS (OR CLASSES) OF LICENSE AS SPECIFIED IN THE "NOTICE TO BIDDERS."

CONTRACT No.	04-1E8901
PROJECT ID	0400000587

LAST REVISION 08-09-10
DATE PLOTTED => 16-SEP-2010
TIME PLOTTED => 14:43

BORDER LAST REVISED 7/2/2010 | CALTRANS WEB SITE IS: HTTP//WWW.DOT.CA.GOV/ | RELATIVE BORDER SCALE IS IN INCHES 0 1 2 3 | USERNAME => s110549 DGN FILE => 41e890ab001.dgn | UNIT 0976 | PROJECT NUMBER & PHASE 04000005871

Dist	COUNTY	ROUTE	POST MILES TOTAL PROJECT	SHEET No.	TOTAL SHEETS
04	Son	116	0.0/8.0	2	17

08-06-10
REGISTERED CIVIL ENGINEER DATE

09-13-10
PLANS APPROVAL DATE

REGISTERED PROFESSIONAL ENGINEER
Ba Nhu Nguyen
No. 64527
Exp. 6-30-11
CIVIL
STATE OF CALIFORNIA

THE STATE OF CALIFORNIA OR ITS OFFICERS OR AGENTS SHALL NOT BE RESPONSIBLE FOR THE ACCURACY OR COMPLETENESS OF SCANNED COPIES OF THIS PLAN SHEET.

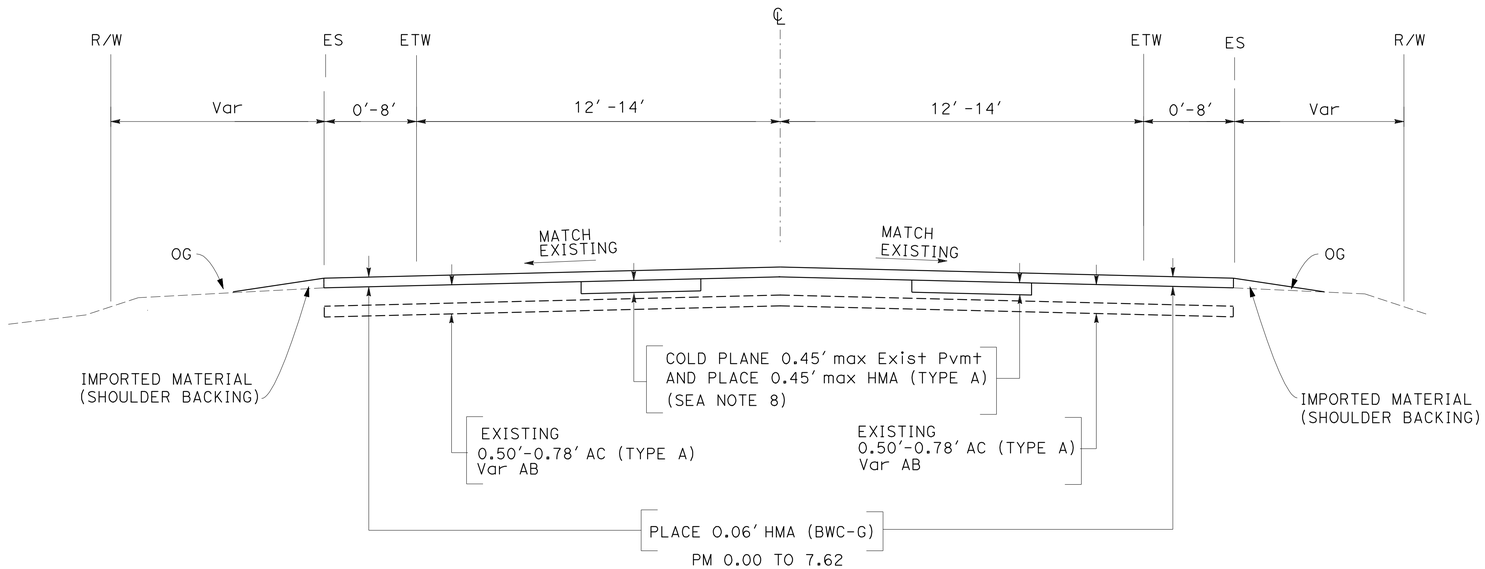

WESTBOUND EASTBOUND

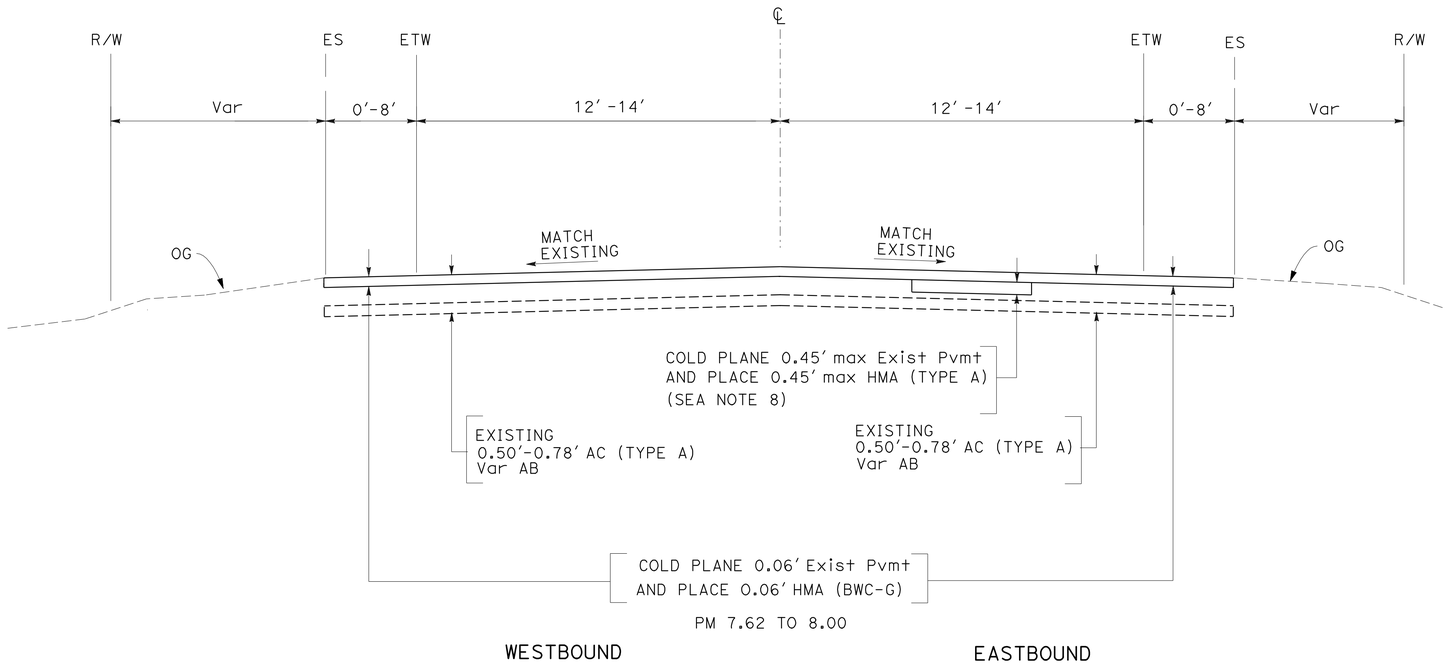

WESTBOUND EASTBOUND

ABBREVIATION:

HMA(BWC-G) HOT MIX ASPHALT (BONDED WEARING COURSE-GAP GRADED)

NOTES:

1 DIMENSIONS OF THE STRUCTURAL SECTIONS ARE SUBJET TO TOLERANCES SPECIFIED IN THE STANDARD SPECIFICATIONS.

2 SUPERELEVATION AS SHOWN OR AS DIRECTED BY THE ENGINEER.

3 EXISTING UTILITY FACILITIES ARE NOT PLOTTED ON THESE PLANS.

4 FOR COMPLETE RIGHT OF WAY DATA, SEE RIGHT OF WAY RECORD MAPS AT THE DISTRICT OFFICE.

5 ALL EXISTING DELINEATION REMOVED SHALL BE REPLACED AT THE SAME LOCATION AS THE EXISTING.

6 CONFORM AREA 10' FOR DRIVEWAY AND CROSS STREETS, AND 10' FOR MAIN LINE.

7 CONTRACTOR IS RESPONSIBLE TO PROVIDE POSITIVE DRAINAGE FROM ALL DRIVEWAY AREA AT ALL ITEMS. ADDITIONAL ITMES SHALL BE IDENTIFIED BY THE CONTRACTOR AND CONSTRUCTED AT THE APPROPRIATE TIMES TO MEET THE REQUIREMENTS.

8 REPAIR AREAS OF SEVERE DISTRESS PRIOR TO OVERLAY SEE SHEET Q-1. THE EXACT LOCATIONS AND DIMENSIONS SHALL BE DETERMINED BY ENGINEER IN THE FIELD.

TYPICAL CROSS SECTIONS

NO SCALE **X-1**

CALCULATED-DESIGNED BY BA NGUYEN
CHECKED BY RONNIE CHUA
FUNCTIONAL SUPERVISOR RONNIE CHUA
REVISED BY
DATE REVISED
STATE OF CALIFORNIA - DEPARTMENT OF TRANSPORTATION
Caltrans®
DESIGN

LAST REVISION 09-07-10
DATE PLOTTED => 16-SEP-2010
TIME PLOTTED => 14:43

BORDER LAST REVISED 7/2/2010
USERNAME => s110549
DGN FILE => 41e890ca001.dgn
RELATIVE BORDER SCALE IS IN INCHES 0 1
UNIT 0976
PROJECT NUMBER & PHASE 04000005871

Dist	COUNTY	ROUTE	POST MILES TOTAL PROJECT	SHEET No.	TOTAL SHEETS
04	Son	116	0.0/8.0	3	17

08-06-10
REGISTERED CIVIL ENGINEER — DATE

09-13-10
PLANS APPROVAL DATE

Ba Nhu Nguyen
No. 64527
Exp. 6-30-11
CIVIL
REGISTERED PROFESSIONAL ENGINEER
STATE OF CALIFORNIA

THE STATE OF CALIFORNIA OR ITS OFFICERS OR AGENTS SHALL NOT BE RESPONSIBLE FOR THE ACCURACY OR COMPLETENESS OF SCANNED COPIES OF THIS PLAN SHEET.

NOTE:

1. EXACT LIMITS OF PAVEMENT CONFORMS AT CROSS STREETS AND DRIVEWAYS TO BE DETERMINED BY THE ENGINEER.

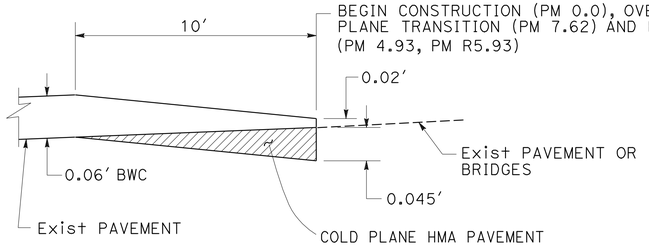

LONGITUDINAL PAVEMENT CONFORM

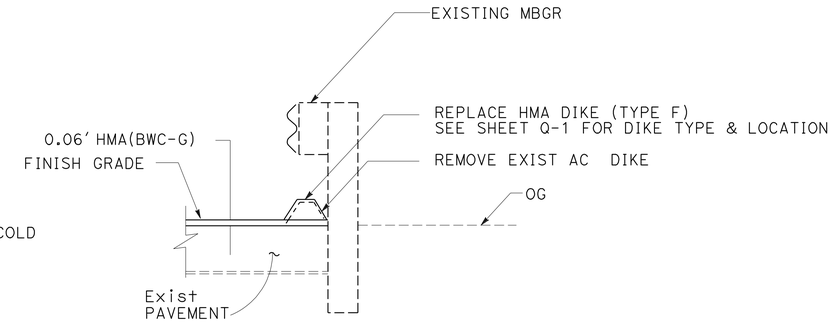

PAVING AT DIKE UNDERNEATH MBGR

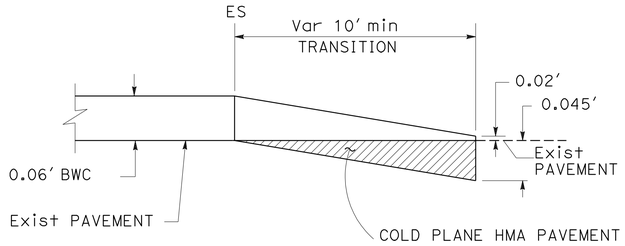

PAVED DRIVEWAY TRANSITION

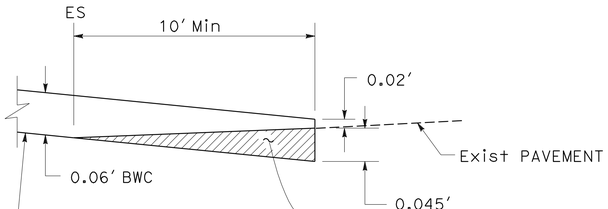

PAVEMENT CONFORM AT CROSS STREETS

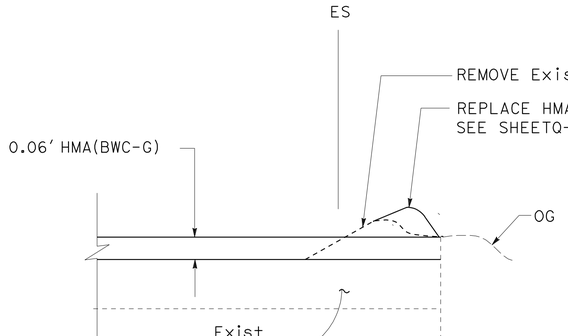

PAVING AT DIKE

UNPAVED DRIVEWAY TRANSITION

AC DIKE TRANSITION TO DI NEAR PM 4.41 (EAST BOUND)

CONSTRUCTION DETAILS

NO SCALE

C-1

STATE OF CALIFORNIA - DEPARTMENT OF TRANSPORTATION
DESIGN
FUNCTIONAL SUPERVISOR: RONNIE CHUA
CALCULATED-DESIGNED BY: BA NGUYEN
CHECKED BY: RONNIE CHUA
REVISED BY
DATE REVISED

LAST REVISION DATE PLOTTED => 16-SEP-2010
TIME PLOTTED => 14:43
08-09-10

BORDER LAST REVISED 7/2/2010
USERNAME => s110549
DGN FILE => 41e890ga001.dgn
RELATIVE BORDER SCALE IS IN INCHES 0 1
UNIT 0976
PROJECT NUMBER & PHASE 04000005871

Dist	COUNTY	ROUTE	POST MILES TOTAL PROJECT	SHEET No.	TOTAL SHEETS
04	SON	116	0.0/8.0	4	17

Lily Ting 08-06-10
REGISTERED CIVIL ENGINEER DATE

09-13-10
PLANS APPROVAL DATE

Lily Y. Ting No. 37330 Exp. 6-30-10 CIVIL — REGISTERED PROFESSIONAL ENGINEER — STATE OF CALIFORNIA

THE STATE OF CALIFORNIA OR ITS OFFICERS OR AGENTS SHALL NOT BE RESPONSIBLE FOR THE ACCURACY OR COMPLETENESS OF SCANNED COPIES OF THIS PLAN SHEET.

LEGEND:

A — CONSTRUCTION AREA SIGN LETTER

NOTE:

1. EXACT LOCATION AND POSITION OF CONSTRUCTION AREA SIGNS TO BE DETERMINED BY THE ENGINEER.
2. CONSTRUCTION AREA SIGNS TO BE STATIONARY MOUNTED UNLESS OTHERWISE NOTED.
3. ALL DIMENSIONS ARE IN INCHES UNLESS OTHERWISE SHOWN.

CONSTRUCTION AREA SIGNS

SIGN No.	SIGN CODE	PANEL SIZE (INCH X INCH)	SIGN MESSAGE	NUMBER OF SIGNS	NUMBER OF POSTS AND SIZE (INCH X INCH)
				EACH	(EACH-INCH X INCH)
A	SPEC	54 X 42	ROAD WORK NEXT 8 MILES ON ROUTE 116	2	2-4 X 6
B	W20-1	36 X 36	ROAD WORK AHEAD	18	1-4 X 6
C	G20-2	36 X 18	END ROAD WORK	10	1-4 X 6
D	C40(CA)	72 X 36	TRAFFIC FINES DOUBLED	3	2-4 X 6
E	G20-1	36 X 18	ROAD WORK NEXT 8 MILES	1	1-4 X 6

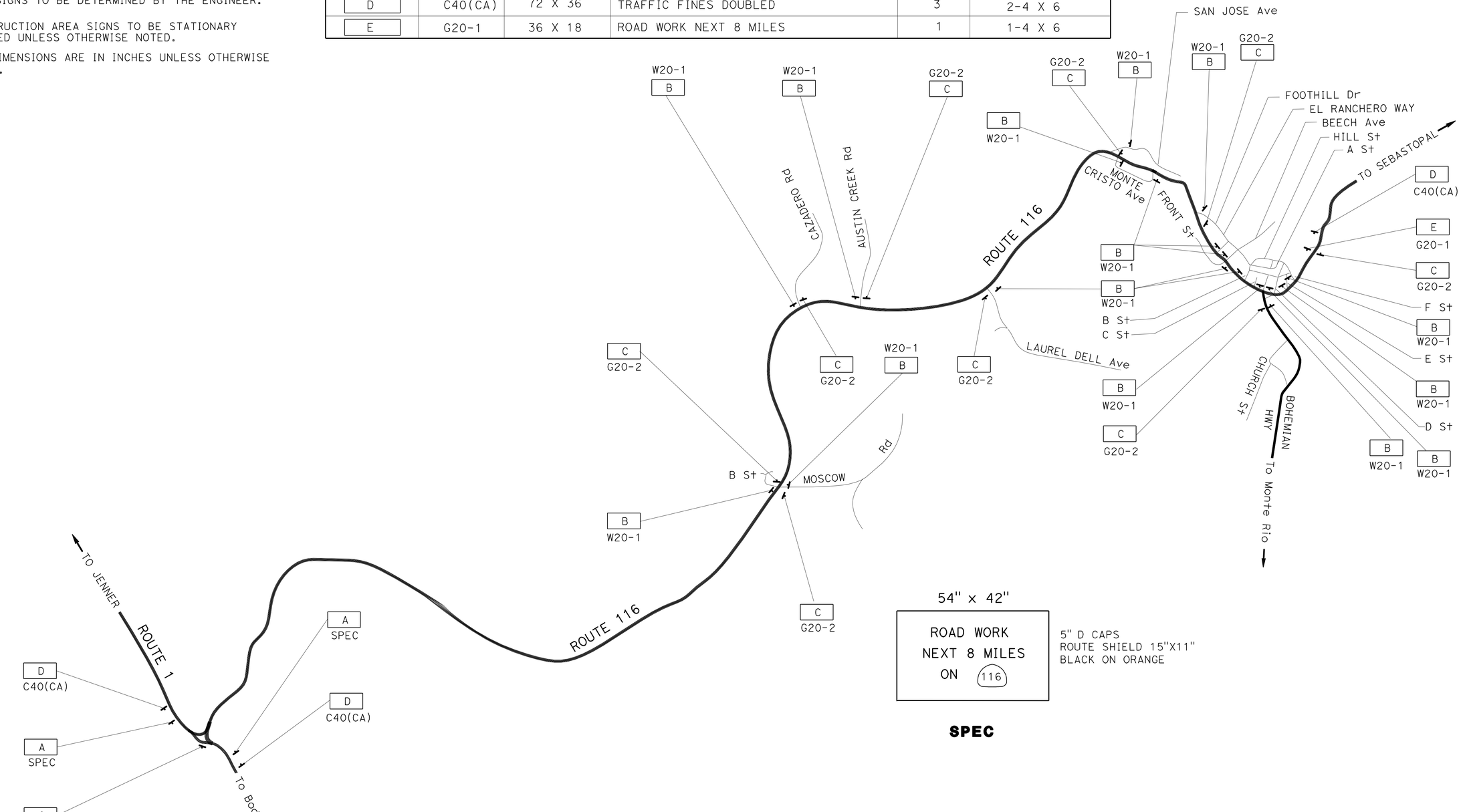

54" x 42"

ROAD WORK
NEXT 8 MILES
ON 116

5" D CAPS
ROUTE SHIELD 15"X11"
BLACK ON ORANGE

SPEC

CONSTRUCTION AREA SIGN

NO SCALE **CS-1**

STATE OF CALIFORNIA - DEPARTMENT OF TRANSPORTATION
TRAFFIC
Caltrans
FUNCTIONAL SUPERVISOR: JERILYN STRUVEN
CALCULATED-DESIGNED BY: LILY TING
CHECKED BY: JERILYN STRUVEN
REVISED BY
DATE REVISED

LAST REVISION 08-09-10
DATE PLOTTED => 16-SEP-2010
TIME PLOTTED => 14:43

BORDER LAST REVISED 7/2/2010
USERNAME => s110549
DGN FILE => 41e890la001.dgn
RELATIVE BORDER SCALE IS IN INCHES 0 1
UNIT 0976
PROJECT NUMBER & PHASE 04000005871

Dist	COUNTY	ROUTE	POST MILES TOTAL PROJECT	SHEET No.	TOTAL SHEETS
04	Son	116	0.0-8.0	5	17

08-06-10
REGISTERED CIVIL ENGINEER DATE

09-13-10
PLANS APPROVAL DATE

Ba Nhu Nguyen
No. 64527
Exp. 6-30-11
CIVIL
REGISTERED PROFESSIONAL ENGINEER
STATE OF CALIFORNIA

THE STATE OF CALIFORNIA OR ITS OFFICERS OR AGENTS SHALL NOT BE RESPONSIBLE FOR THE ACCURACY OR COMPLETENESS OF SCANNED COPIES OF THIS PLAN SHEET.

LEGEND:

(No.) PAVEMENT DELINEATION DETAIL

CHANGE OF PAVEMENT DELINEATION DETAIL

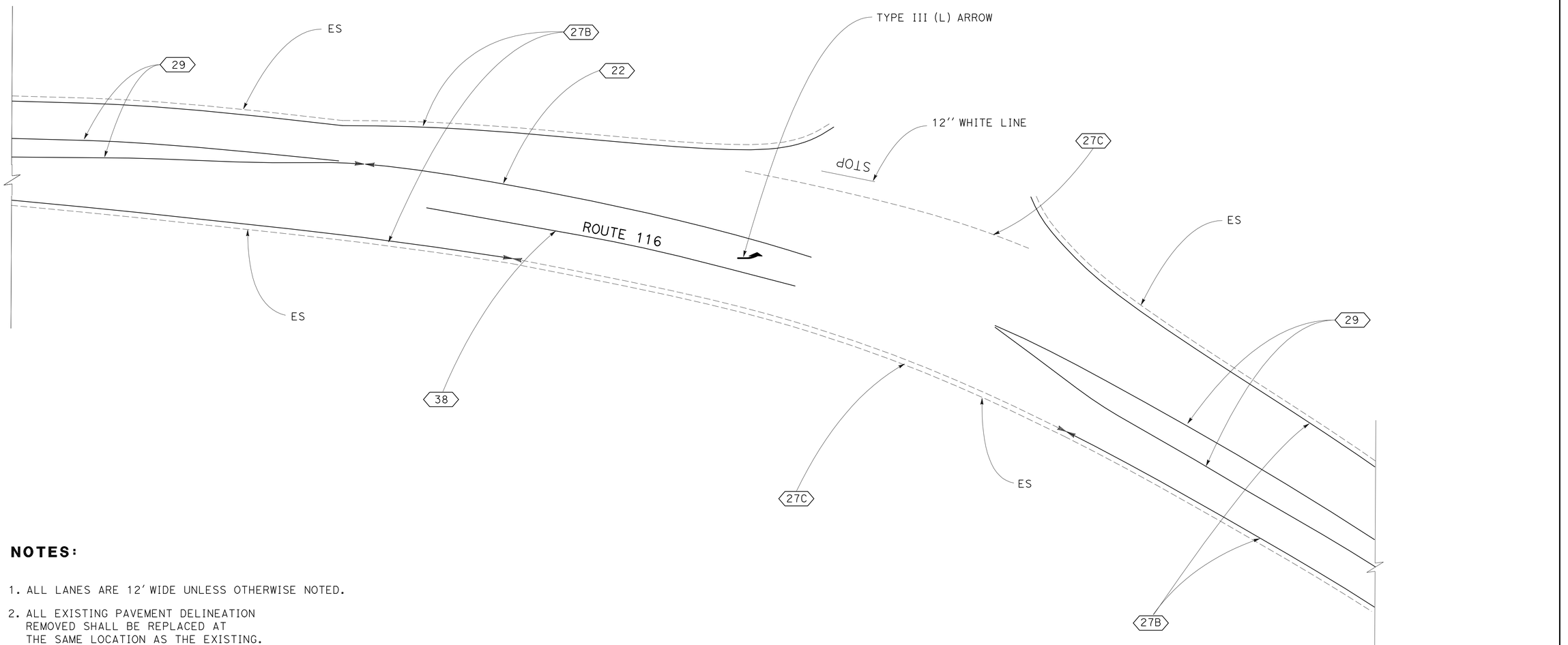

NOTES:

1. ALL LANES ARE 12' WIDE UNLESS OTHERWISE NOTED.
2. ALL EXISTING PAVEMENT DELINEATION REMOVED SHALL BE REPLACED AT THE SAME LOCATION AS THE EXISTING.

PAVEMENT DELINEATION PLAN
(TYPICAL)

THIS PLAN ACCURATE FOR PAVEMENT DELINEATION WORK ONLY

No SCALE

PD-1

REVISED BY	DATE REVISED

CALCULATED-DESIGNED BY: BA NGUYEN
CHECKED BY: RONNIE CHUA
FUNCTIONAL SUPERVISOR: RONNIE CHUA

STATE OF CALIFORNIA - DEPARTMENT OF TRANSPORTATION
DESIGN

LAST REVISION: DATE PLOTTED => 16-SEP-2010 TIME PLOTTED => 14:44
08-09-10

BORDER LAST REVISED 7/2/2010

USERNAME => s110549
DGN FILE => 41e890na001.dgn

RELATIVE BORDER SCALE IS IN INCHES 0 1

UNIT 0976 | PROJECT NUMBER & PHASE 04000005871

Dist	COUNTY	ROUTE	POST MILES TOTAL PROJECT	SHEET No.	TOTAL SHEETS
04	Son	116	0.0-8.0	6	17

REGISTERED CIVIL ENGINEER — 08-06-10 DATE

PLANS APPROVAL DATE — 09-13-10

Ba Nhu Nguyen
No. 64527
Exp. 6-30-11
CIVIL
REGISTERED PROFESSIONAL ENGINEER
STATE OF CALIFORNIA

THE STATE OF CALIFORNIA OR ITS OFFICERS OR AGENTS SHALL NOT BE RESPONSIBLE FOR THE ACCURACY OR COMPLETENESS OF SCANNED COPIES OF THIS PLAN SHEET.

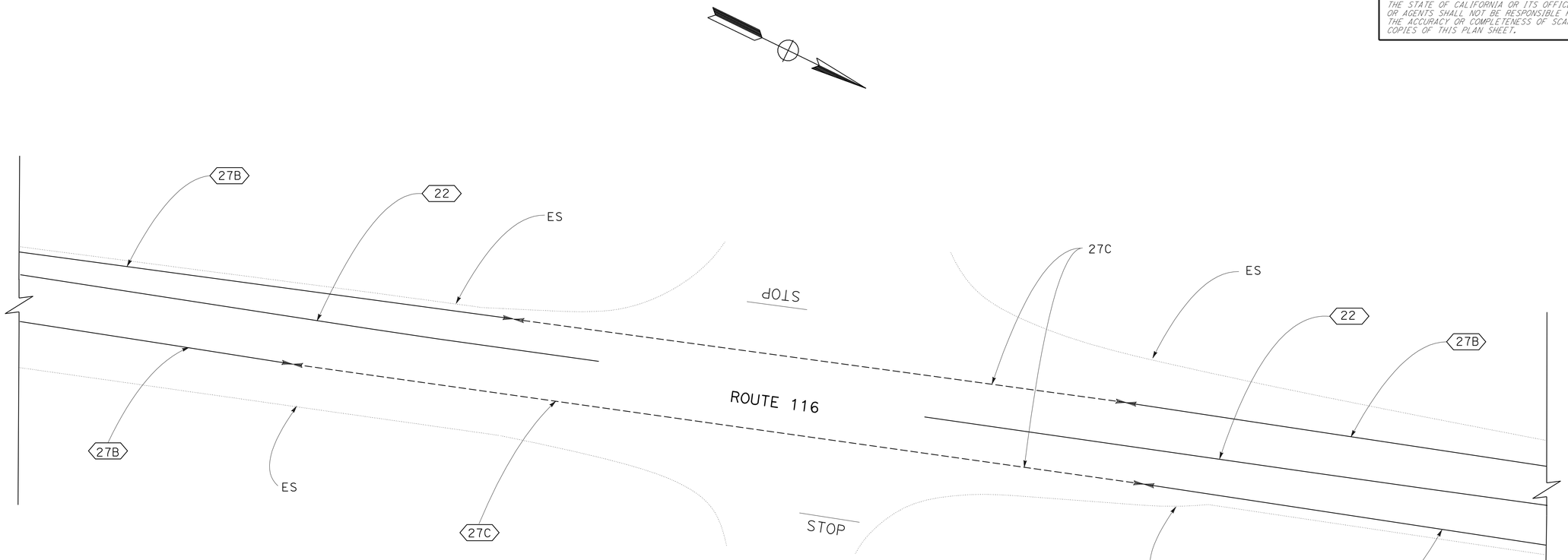

FOR NOTES, ABBREVIATIONS AND LEGEND, SEE SHEET PD-1

THIS PLAN ACCURATE FOR PAVEMENT DELINEATION WORK ONLY

PAVEMENT DELINEATION PLAN

(TYPICAL)

NO SCALE

PD-2

REVISED BY | DATE REVISED

CALCULATED-DESIGNED BY: BA NGUYEN
CHECKED BY: RONNIE CHUA

FUNCTIONAL SUPERVISOR: RONNIE CHUA

STATE OF CALIFORNIA - DEPARTMENT OF TRANSPORTATION
Caltrans®
DESIGN

LAST REVISION | DATE PLOTTED => 16-SEP-2010
08-09-10 | TIME PLOTTED => 14:44

BORDER LAST REVISED 7/2/2010

USERNAME => s110549
DGN FILE => 41e890na002.dgn

RELATIVE BORDER SCALE IS IN INCHES 0 1

UNIT 0976 | PROJECT NUMBER & PHASE 04000005871

Dist	COUNTY	ROUTE	POST MILES TOTAL PROJECT	SHEET No.	TOTAL SHEETS
04	Son	116	0.0-8.0	7	17

08-06-10
REGISTERED CIVIL ENGINEER DATE

09-13-10
PLANS APPROVAL DATE

Ba Nhu Nguyen
No. 64527
Exp. 6-30-11
CIVIL
REGISTERED PROFESSIONAL ENGINEER
STATE OF CALIFORNIA

THE STATE OF CALIFORNIA OR ITS OFFICERS OR AGENTS SHALL NOT BE RESPONSIBLE FOR THE ACCURACY OR COMPLETENESS OF SCANNED COPIES OF THIS PLAN SHEET.

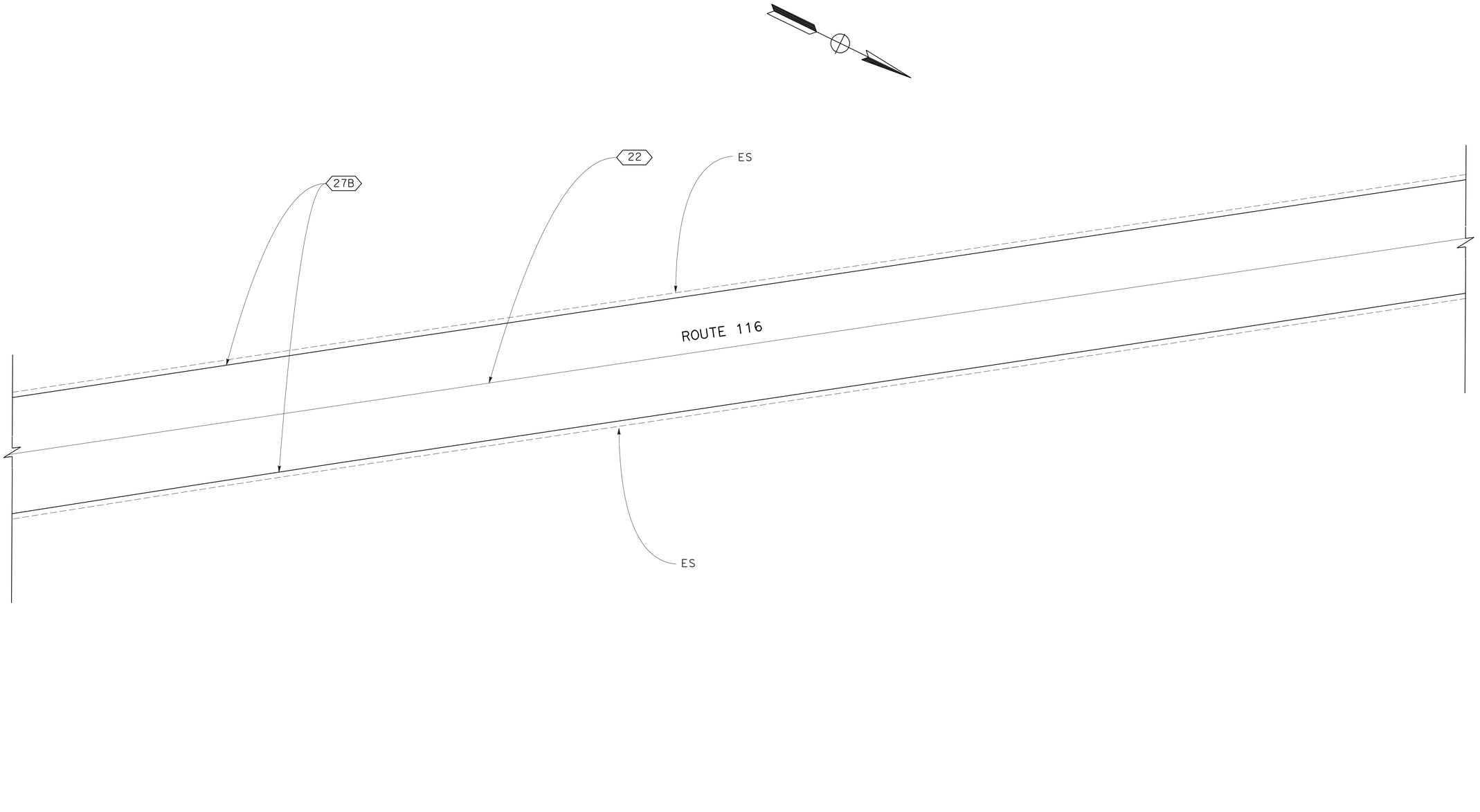

FOR NOTES, ABBREVIATIONS AND LEGEND, SEE SHEET PD-1

THIS PLAN ACCURATE FOR PAVEMENT DELINEATION WORK ONLY

PAVEMENT DELINEATION PLAN
(TYPICAL)
NO SCALE

PD-3

REVISED BY | DATE REVISED

CALCULATED-DESIGNED BY: BA NGUYEN
CHECKED BY: RONNIE CHUA

FUNCTIONAL SUPERVISOR: RONNIE CHUA

STATE OF CALIFORNIA - DEPARTMENT OF TRANSPORTATION
Caltrans® DESIGN

LAST REVISION | DATE PLOTTED => 16-SEP-2010
08-09-10 | TIME PLOTTED => 14:44

BORDER LAST REVISED 7/2/2010

USERNAME => s110549
DGN FILE => 41e890na003.dgn

RELATIVE BORDER SCALE IS IN INCHES 0 1

UNIT 0976 | PROJECT NUMBER & PHASE | 04000005871

Dist	COUNTY	ROUTE	POST MILES TOTAL PROJECT	SHEET No.	TOTAL SHEETS
04	Son	116	0.0-8.0	8	17

08-06-10
DATE
REGISTERED CIVIL ENGINEER

09-13-10
PLANS APPROVAL DATE

REGISTERED PROFESSIONAL ENGINEER
Ba Nhu Nguyen
No. 64527
Exp. 6-30-11
CIVIL
STATE OF CALIFORNIA

THE STATE OF CALIFORNIA OR ITS OFFICERS OR AGENTS SHALL NOT BE RESPONSIBLE FOR THE ACCURACY OR COMPLETENESS OF SCANNED COPIES OF THIS PLAN SHEET.

TRAFFIC STRIPES, PAVEMENT MARKINGS AND PAVEMENT MARKERS

PM LIMITS	DIRECTION OR LOCATION	DETAIL No. OR PAVEMENT MARKING	THERMOPLASTIC TRAFFIC STRIPE							PAVEMENT MARKER RETROREFLECTIVE			THERMO-PLASTIC PAVEMENT MARKING	REMOVE THERMOPLASTIC TRAFFIC STRIPE	REMOVE YELLOW THERMOPLASTIC TRAFFIC STRIPE	REMOVE THERMOPLASTIC PAVEMENT MARKING	REMOVE PAVEMENT MARKER
			4" WHITE	4" YELLOW	8" WHITE	12" WHITE	12" YELLOW	4" YELLOW (BROKEN 36'- 12')	4"WHITE (BROKEN 12'- 3')	TYPE D	TYPE G	TYPE H					
			LF							EA			SQFT	EA		SQFT	EA
0.00 TO 8.00	CL	6						1795			39				1795		39
	CL	19		2798				2798			62	121			5596		183
	CL	22		72125							3015				68112		2846
	WB & EB	27B	84038											80025			
	WB & EB	27C							442					442			
	CL	29		6125						132					6125		132
	WB & EB	38			750						34			750			34
	WB & EB	INTERSECTION LINE				132	88							132	88		
	LOCAL ROADS	LIMIT LINE				260								260			
	WB & EB	TYPE III (L) ARROW											126			126	
	LOCAL ROADS	TYPE IV (L) ARROW											60			60	
	LOCAL ROADS	TYPE IV (R) ARROW											60			60	
	WB & EB	AHEAD											62			62	
	WB & EB	STOP											88			88	
	WB	SCHOOL											35			35	
	WB & EB	XING											42			42	
	EB	PED											18			18	
	LOCAL ROACS	STOP											266			266	
SUBTOTAL			84038	81048	750	392	88	4594	442	132	3150	121	777	81609	81717	777	3234
TOTAL			165086		750	480		4594	442	3403			777	81609	81717	777	3234

PAVEMENT DELINEATION QUANTITIES

PDQ-1

REVISED BY | DATE REVISED
BA NGUYEN | RONNIE CHUA
CALCULATED-DESIGNED BY | CHECKED BY
FUNCTIONAL SUPERVISOR
RONNIE CHUA

STATE OF CALIFORNIA - DEPARTMENT OF TRANSPORTATION
DESIGN

LAST REVISION | DATE PLOTTED => 16-SEP-2010
08-09-10 | TIME PLOTTED => 14:44

Dist	COUNTY	ROUTE	POST MILES TOTAL PROJECT	SHEET No.	TOTAL SHEETS
04	Son	116	0.0-8.0	9	17

REGISTERED CIVIL ENGINEER — DATE: 08-06-10

PLANS APPROVAL DATE: 09-13-10

REGISTERED PROFESSIONAL ENGINEER — Ba Nhu Nguyen — No. 64527 — Exp. 6-30-11 — CIVIL — STATE OF CALIFORNIA

THE STATE OF CALIFORNIA OR ITS OFFICERS OR AGENTS SHALL NOT BE RESPONSIBLE FOR THE ACCURACY OR COMPLETENESS OF SCANNED COPIES OF THIS PLAN SHEET.

TEMPORARY DRAINAGE INLET PROTECTION

PM (LOCATION)	EACH
0.0 To 8.0 (Var)	18
TOTAL	18

CRACK TREATMENT

PM	LNMI
0.0 To 8.00	8
TOTAL	8

ROADWAY QUANTITIES (1)

PM BEGIN	PM END	DIRECTION	LOCATION	HOT MIX ASPHALT (BONDED WEARING COURSE- GAP GRADED)	ASPHALTIC EMULSION MEMBRANE (BONDED WEARING COURSE)	IMPORTED MATERIAL (SHOULDER BACKING)
				TON		
0.00	8.00	EB/WB	ALL LANES *	6463	133	
0.00	8.00	EB/WB	Var (ES AT ALL VEHICLE PULLOUT AREAS)			349
TOTAL				6463	133	349

* ''ALL LANES'' INCLUDES LANE 1 PLUS ANY AUXILIARY LANES AND SHOULDERS.

PLACE HOT MIX ASPHALT (TYPE A) DIKE

PM BEGIN	PM END	DIRECTION	LOCATION	TYPE C	TYPE D	TYPE E	TYPE F	REMOVE AC DIKE	HMA (TYPE A)
				LF					TON
3.48	3.66	EB	R†		950			950	56.4
3.87	3.93	EB	R†		317			317	18.8
4.07	4.11	EB	R†		211			211	12.5
4.32	4.41	EB	R†				475	475	6.3
4.41	4.50	EB	R†		475			475	28.2
4.57	4.84	EB	R†		1426			1426	84.6
4.97	5.11	EB	R†			739		739	19.5
5.11	5.19	EB	R†				422	422	5.6
5.19	5.32	EB	R†			686		686	18.1
6.37	6.41	EB	R†			211		211	5.6
7.47	7.56	EB	R†			475		475	12.5
3.48	3.66	WB	R†		950			950	56.4
3.82	3.91	WB	R†		475			475	28.2
3.93	3.97	WB	R†		211			211	12.5
4.77	4.78	WB	R†		53			53	3.1
4.78	4.84	WB	R†		317			317	18.8
4.98	5.01	WB	R†			158		158	4.2
5.52	5.58	WB	R†			317		317	8.3
7.47	7.56	WB	R†			475		475	12.5
7.82	7.84	WB	R†	106				106	0.8
SUBTOTAL				106	5386	3062	897	9451	413
TOTAL OF HMA (TYPE A) FROM ROADWAY QUANTITIES (2)									118
TOTAL				106	5386	3062	897	9451	531

ROADWAY QUANTITIES (2)

DIRECTION	LOCATION PM	DIMENSION WIDTH	DIMENSION LENGTH	COLD PLANE AC PAVEMENT 0.45′ max	COLD PLANE AC PAVEMENT 0.06′	HMA (TYPE A)
		FT		SQYD		TON
EB	7.02	6	12	8		2.4
EB	7.05	6	15	10		3.0
EB	7.71	6	15	10		3.0
		12	20	27		8.1
		12	45	60		18.2
EB	7.73	6	15	10		3.0
		6	20	13		4.0
EB	7.62 TO 8.00	ALL LANES *	2006		3790	
WB	7.26	12	60	80		24.3
WB	7.35	6	45	30		9.1
WB	7.45	6	60	40		12.2
WB	7.58	6	150	100		30.4
WB	7.62 TO 8.00	ALL LANES *	2006		3790	
SUBTOTAL				388	7580	118
TOTAL				7968		118 * *

* ''ALL LANES'' INCLUDES LANE 1 PLUS ANY AUXILIARY LANES AND SHOULDERS.

* * THIS QUANTITY IS ADDED TO HMA (TYPE A) FOR DIKE.

SUMMARY OF QUANTITIES

Q-1

CALCULATED-DESIGNED BY: BA NGUYEN
CHECKED BY: RONNIE CHUA
FUNCTIONAL SUPERVISOR: RONNIE CHUA
REVISED BY / DATE REVISED

STATE OF CALIFORNIA - DEPARTMENT OF TRANSPORTATION
DESIGN

LAST REVISION: DATE PLOTTED => 16-SEP-2010; TIME PLOTTED => 14:44; 09-07-10

BORDER LAST REVISED 7/2/2010

USERNAME => s110549
DGN FILE => 41e890pa001.dgn

RELATIVE BORDER SCALE IS IN INCHES (0 1)

UNIT 0976 | PROJECT NUMBER & PHASE 04000005871

DIST	COUNTY	ROUTE	POST MILES TOTAL PROJECT	SHEET NO.	TOTAL SHEETS
04	Son	116	0.0/8.0	14	17

Randell D. Hiatt
REGISTERED CIVIL ENGINEER

June 6, 2008
PLANS APPROVAL DATE

Randell D. Hiatt
No. C50200
Exp. 6-30-09
CIVIL
REGISTERED PROFESSIONAL ENGINEER
STATE OF CALIFORNIA

The State of California or its officers or agents shall not be responsible for the accuracy or completeness of electronic copies of this plan sheet.

To accompany plans dated 08-13-10

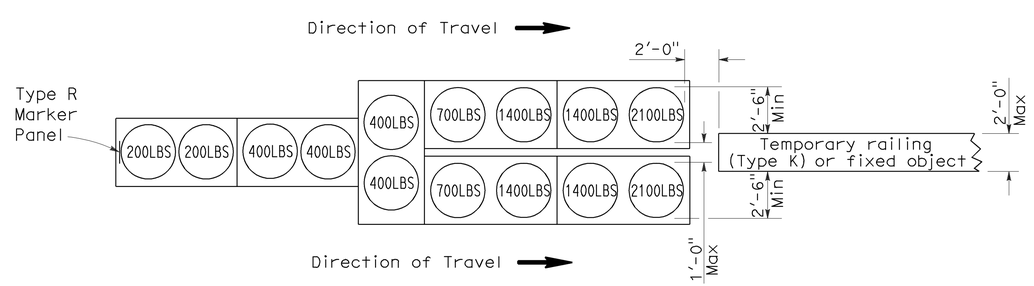

ARRAY 'TU14'

Approach speed 45 mph or more

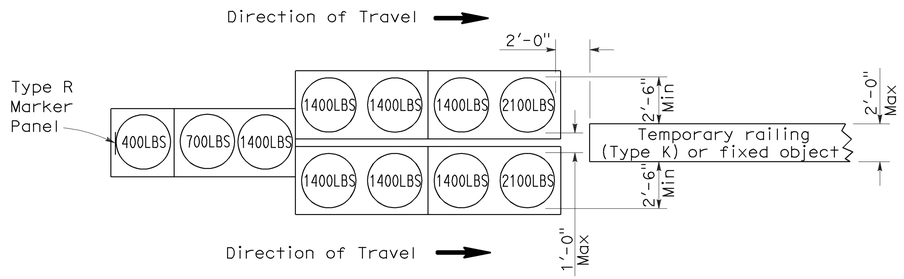

ARRAY 'TU11'

Approach speed less than 45 mph

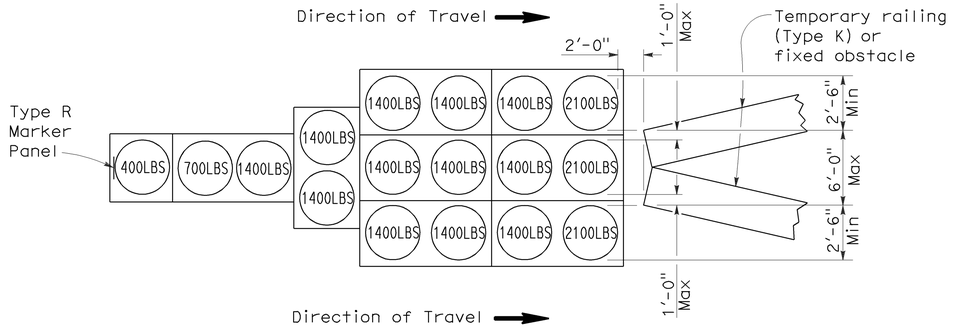

ARRAY 'TU17'

Approach speed less than 45 mph

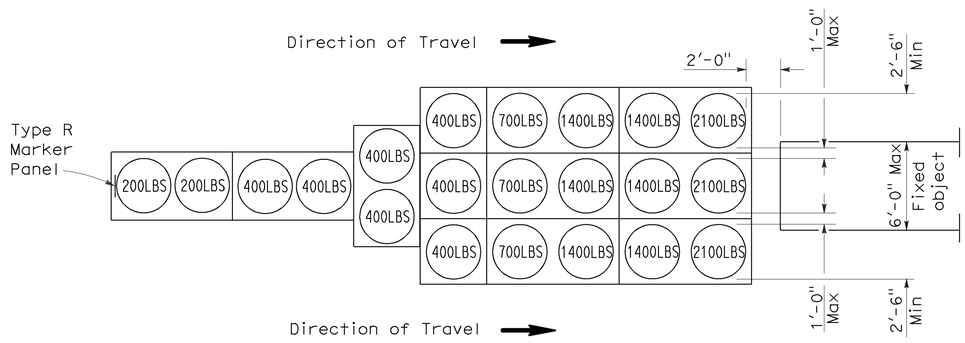

ARRAY 'TU21'

Approach speed 45 mph or more

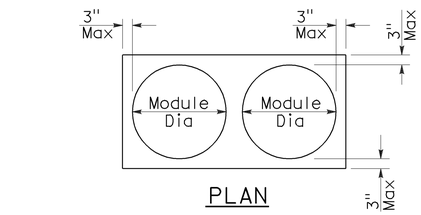

PLAN

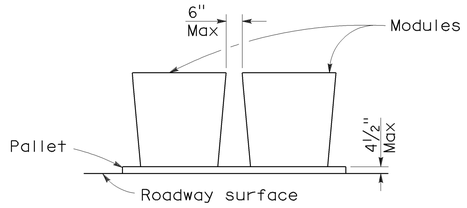

ELEVATION

CRASH CUSHION PALLET DETAIL

See Note 7

NOTES:

1. (XXX) Indicates sand filled module location and weight of sand in pounds for each module. Module spacing is based on the greater diameter of the module.
2. All sand weights are nominal.
3. Temporary crash cushion arrays shall not encroach on the traveled way.
4. Place the top of Type R marker panel 1" below the module lid.
5. Refer to Standard Plan A73B for marker details.
6. Approach speeds indicated conform to NCHRP 350 Report criteria.
7. Use of pallets is optional.

STATE OF CALIFORNIA
DEPARTMENT OF TRANSPORTATION

TEMPORARY CRASH CUSHION, SAND FILLED (UNIDIRECTIONAL)

NO SCALE

RSP T1A DATED JUNE 6, 2008 SUPERSEDES STANDARD PLAN T1A
DATED MAY 1, 2006 - PAGE 211 OF THE STANDARD PLANS BOOK DATED MAY 2006.

REVISED STANDARD PLAN RSP T1A

2006 REVISED STANDARD PLAN RSP T1A

5-15-08

DIST	COUNTY	ROUTE	POST MILES TOTAL PROJECT	SHEET NO.	TOTAL SHEETS
04	Son	116	0.0/8.0	15	17

Randell D. Hiatt
REGISTERED CIVIL ENGINEER

June 6, 2008
PLANS APPROVAL DATE

Registered Professional Engineer — Randell D. Hiatt — No. C50200 — Exp. 6-30-09 — CIVIL — State of California

The State of California or its officers or agents shall not be responsible for the accuracy or completeness of electronic copies of this plan sheet.

To accompany plans dated 08-13-10

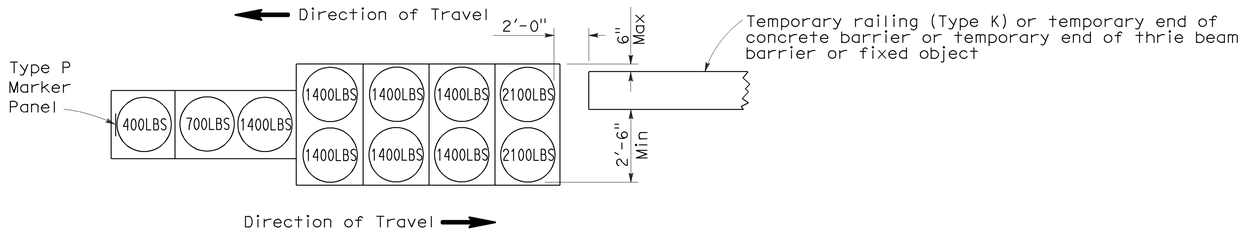

ARRAY 'TB11'

Approach speed less than 45 mph

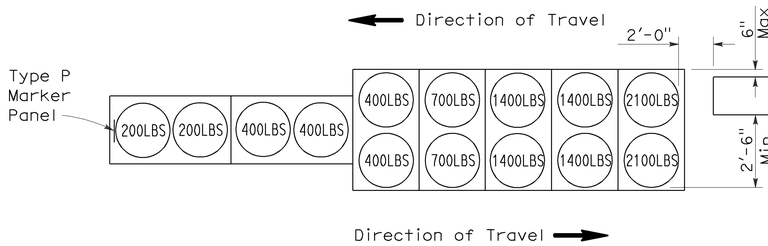

ARRAY 'TB14'

Approach speed 45 mph or more

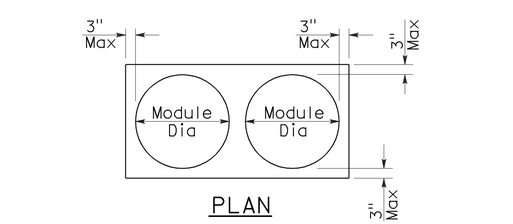

CRASH CUSHION PALLET DETAIL

See Note 7

NOTES:

1. (XXX) Indicates sand filled module location and weight of sand in pounds for each module. Module spacing is based on the greater diameter of the module.
2. All sand weights are nominal.
3. Temporary crash cushion arrays shall not encroach on the traveled way.
4. Place the Type P marker panel so that the bottom of the panel rests upon the pallet.
5. Refer to Standard Plan A73B for marker details.
6. Approach speeds indicated conform to NCHRP 350 Report criteria.
7. Use of pallets is optional.

STATE OF CALIFORNIA
DEPARTMENT OF TRANSPORTATION

TEMPORARY CRASH CUSHION, SAND FILLED (BIDIRECTIONAL)

NO SCALE

RSP T1B DATED JUNE 6, 2008 SUPERSEDES STANDARD PLAN T1B
DATED MAY 1, 2006 - PAGE 212 OF THE STANDARD PLANS BOOK DATED MAY 2006.

REVISED STANDARD PLAN RSP T1B

2006 REVISED STANDARD PLAN RSP T1B

5-15-08

DIST	COUNTY	ROUTE	POST MILES TOTAL PROJECT	SHEET NO.	TOTAL SHEETS
04	Son	116	0.0/8.0	16	17

Randell D. Hiatt
REGISTERED CIVIL ENGINEER

June 6, 2008
PLANS APPROVAL DATE

REGISTERED PROFESSIONAL ENGINEER
Randell D. Hiatt
No. C50200
Exp. 6-30-09
CIVIL
STATE OF CALIFORNIA

The State of California or its officers or agents shall not be responsible for the accuracy or completeness of electronic copies of this plan sheet.

To accompany plans dated 08-13-10

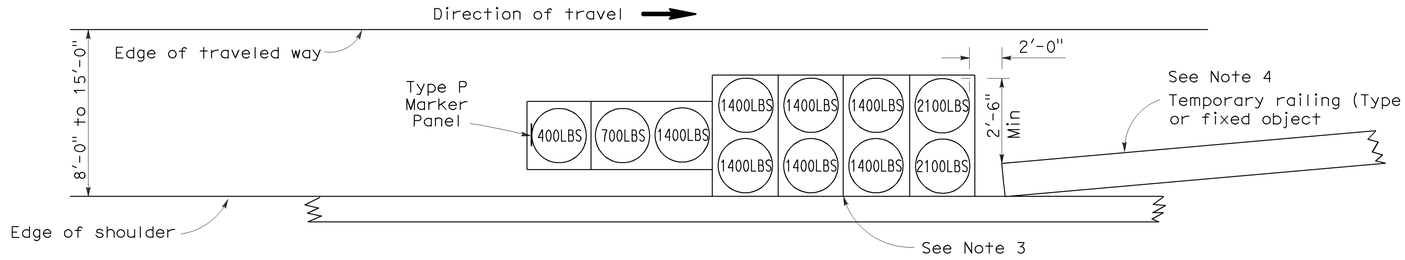

ARRAY 'TS11'

Approach speed less than 45 mph
See Note 9

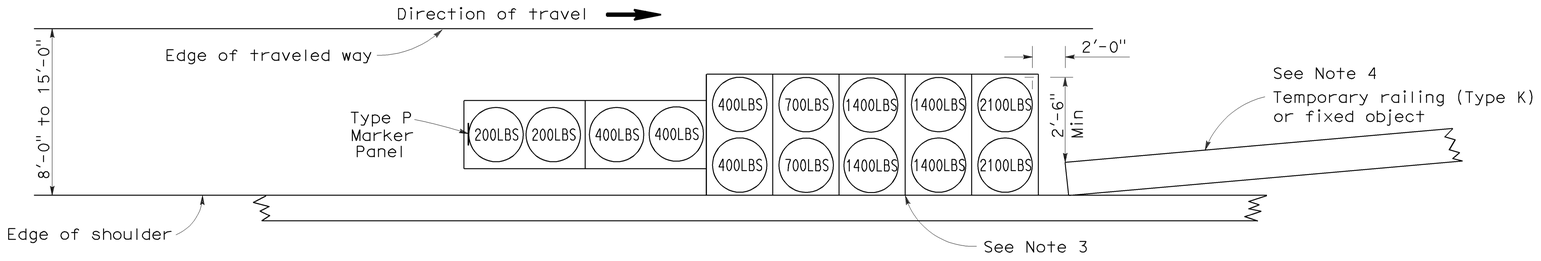

ARRAY 'TS14'

Approach speed 45 mph or more
See Note 9

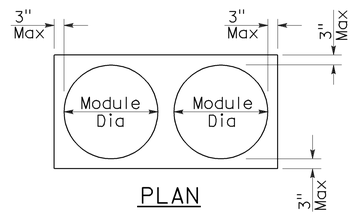

PLAN

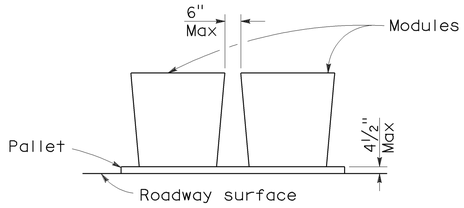

ELEVATION

CRASH CUSHION PALLET DETAIL

See Note 11

NOTES:

1. (XXX) Indicates sand filled module location and weight of sand in pounds for each module. Module spacing is based on the greater diameter of the module.
2. All sand weights are nominal.
3. The temporary crash cushion arrays shown on this plan shall be used only in locations where there will be traffic on one side of the temporary crash cushion array.
4. If the fixed object or approach end of the temporary railing is less than 15'-0" from the edge of traveled way, a temporary crash cushion is required in a construction or work zone.
5. Temporary crash cushion arrays shall not encroach on the traveled way.
6. Arrays for median shoulders shall conform to details shown on this plan for outside shoulders.
7. Place the Type P marker panel so that the bottom of the panel rests upon the pallet and faces traffic.
8. Refer to Standard Plan A73B for marker details.
9. For shoulder widths less than 8'-0", appropriate approved crash cushion protection, other than sand filled modules, shall be provided at fixed objects and at approach ends of temporary railing. The specific type of crash cushion shall be as shown on the project plans or as specified in the Special Provisions, or if not shown on the project plans or specified in the Special Provisions, shall be as approved by the Engineer.
10. Approach speeds indicated conform to NCHRP 350 Report criteria.
11. Use of pallets is optional.

STATE OF CALIFORNIA
DEPARTMENT OF TRANSPORTATION

TEMPORARY CRASH CUSHION, SAND FILLED (SHOULDER INSTALLATIONS)

NO SCALE

RSP T2 DATED JUNE 6, 2008 SUPERSEDES STANDARD PLAN T2
DATED MAY 1, 2006 - PAGE 213 OF THE STANDARD PLANS BOOK DATED MAY 2006.

REVISED STANDARD PLAN RSP T2

2006 REVISED STANDARD PLAN RSP T2

5-15-08

DIST	COUNTY	ROUTE	POST MILES TOTAL PROJECT	SHEET NO.	TOTAL SHEETS
04	Son	116	0.0/8.0	17	17

Greg W. Edwards
REGISTERED CIVIL ENGINEER

November 17, 2006
PLANS APPROVAL DATE

REGISTERED PROFESSIONAL ENGINEER — Greg W. Edwards — No. C36386 — Exp. 6-30-08 — CIVIL — STATE OF CALIFORNIA

The State of California or its officers or agents shall not be responsible for the accuracy or completeness of electronic copies of this plan sheet.

To accompany plans dated 08-13-10

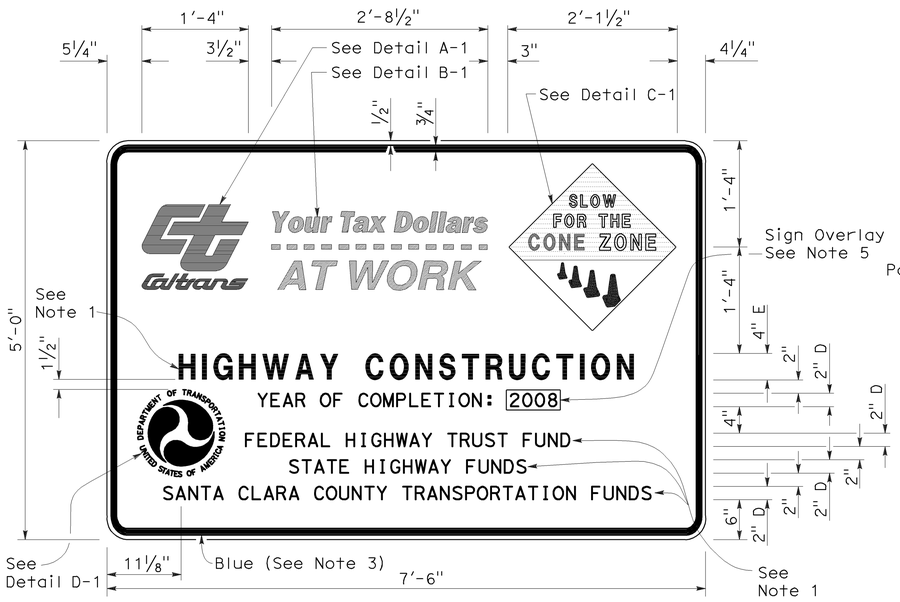

TYPE 1

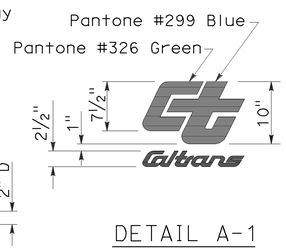

DETAIL A-1

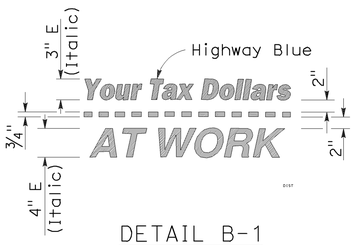

DETAIL B-1
(See Note 3)

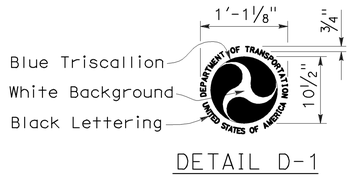

DETAIL D-1
(See Note 6)

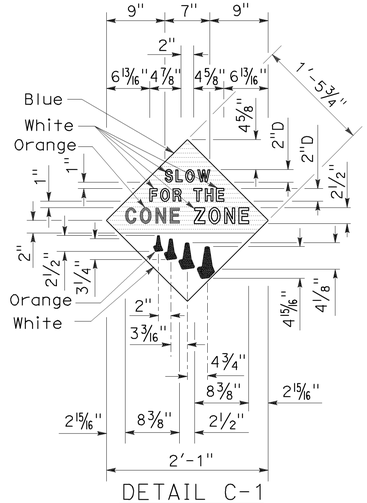

DETAIL C-1
(See Note 4)

NOTES:

1. The sign messages shown for type of project and fund types are examples only. See the Special Provisions for the applicable type of project and fund type messages to be used.
2. Except as otherwise shown, the legend of sign shall be black on a white background (non-reflective).
3. The border of the signs and details "B-1" and "B-2" shall be blue (non-reflective).
4. The diamond in details "C-1" and "C-2" shall be blue for the background of message, " SLOW FOR THE CONE ZONE", and white background for the orange cones. The color and type of font for the "SLOW FOR THE CONE ZONE" message shall be: "SLOW" white D; "FOR THE" white D; "CONE" orange Arial font; "ZONE" white Arial font.
5. Year of completion of project construction shown on the overlay is an example only. See the Special Provisions.
6. Use when the Project involves Federal Highway Trust Fund.

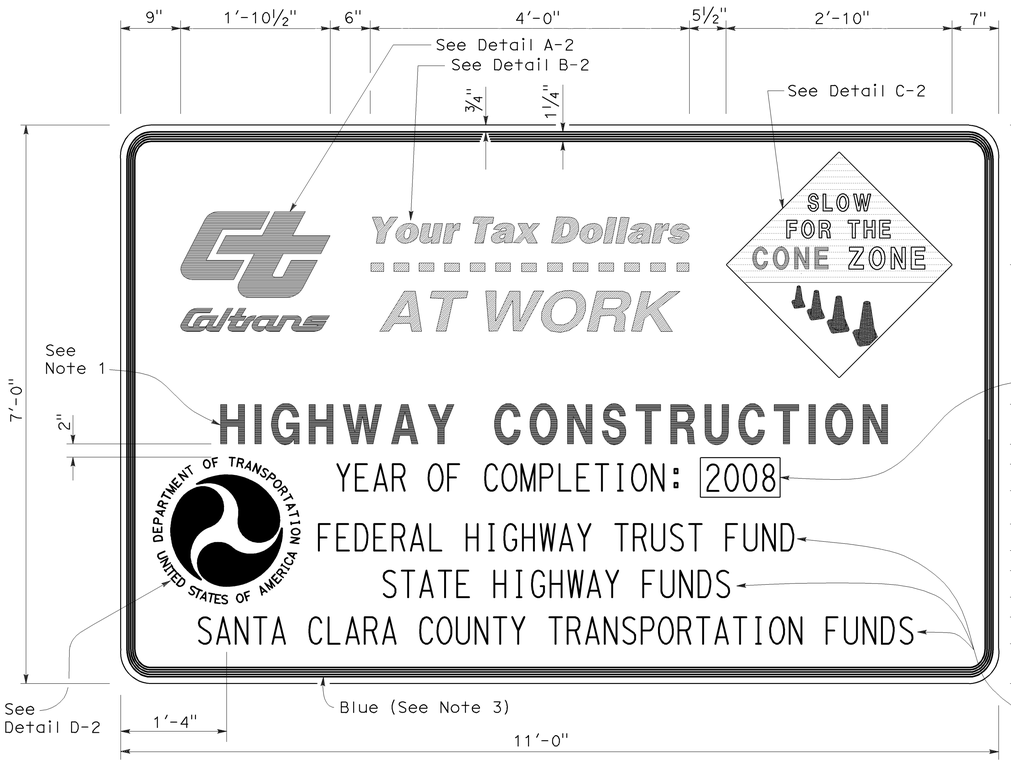

TYPE 2

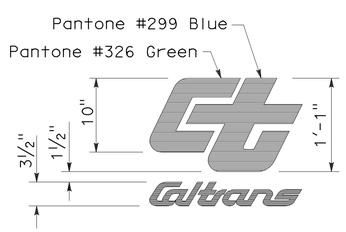

DETAIL A-2

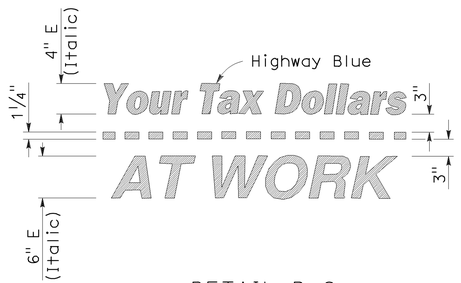

DETAIL B-2
(See Note 3)

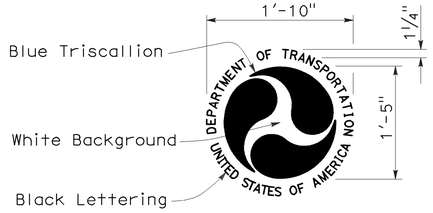

DETAIL D-2
(See Note 6)

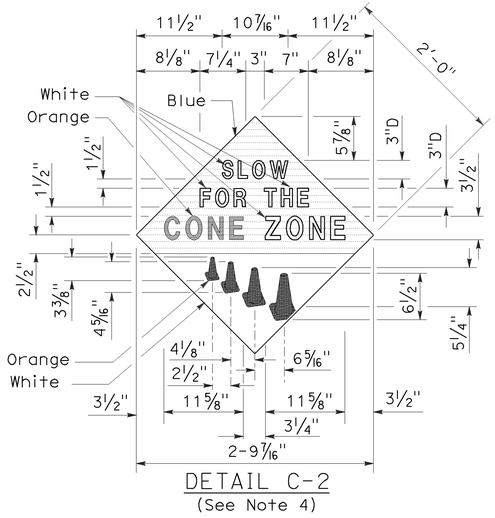

DETAIL C-2
(See Note 4)

STATE OF CALIFORNIA
DEPARTMENT OF TRANSPORTATION

CONSTRUCTION PROJECT FUNDING IDENTIFICATION SIGNS

NO SCALE

RSP T7 DATED NOVEMBER 17, 2006 SUPERSEDES STANDARD PLAN T7
DATED MAY 1, 2006 - PAGE 217 OF THE STANDARD PLANS BOOK DATED MAY 2006.

REVISED STANDARD PLAN RSP T7

2006 REVISED STANDARD PLAN RSP T7

9-7-06

DIST	COUNTY	ROUTE	POST MILES TOTAL PROJECT	SHEET NO.	TOTAL SHEETS
04	Son	116	0.0/8.0	10	17

Robert B Schott
LICENSED LANDSCAPE ARCHITECT

August 15, 2008
PLANS Approval DATE

The State of California or its officers or agents shall not be responsible for the accuracy or completeness of electronic copies of this plan sheet.

LICENSED LANDSCAPE ARCHITECT — Robert B. Schott 3695 — Signature 11-04-08 Renewal Date — 08-11-08 Date — STATE OF CALIFORNIA

To accompany plans dated 08-13-10

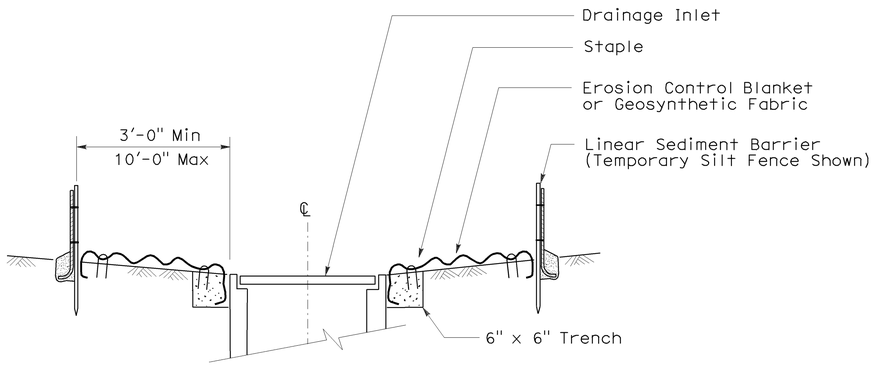

SECTION A-A

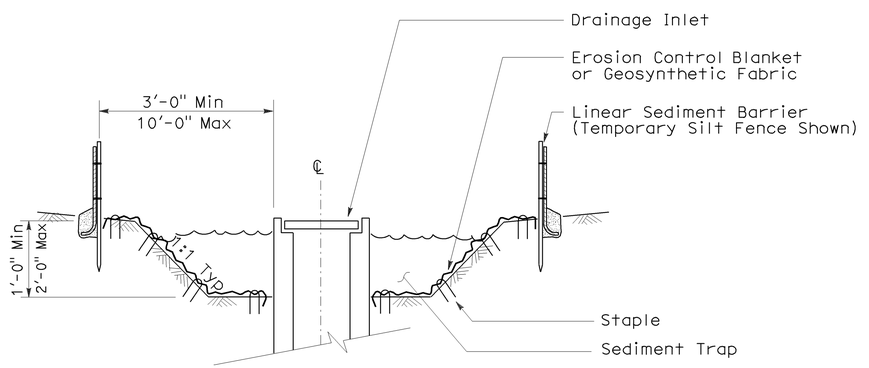

SECTION B-B

NOTES:

1. See Standard Plan T51 for Temporary Silt Fence.
2. Dimensions may vary to fit field conditions.

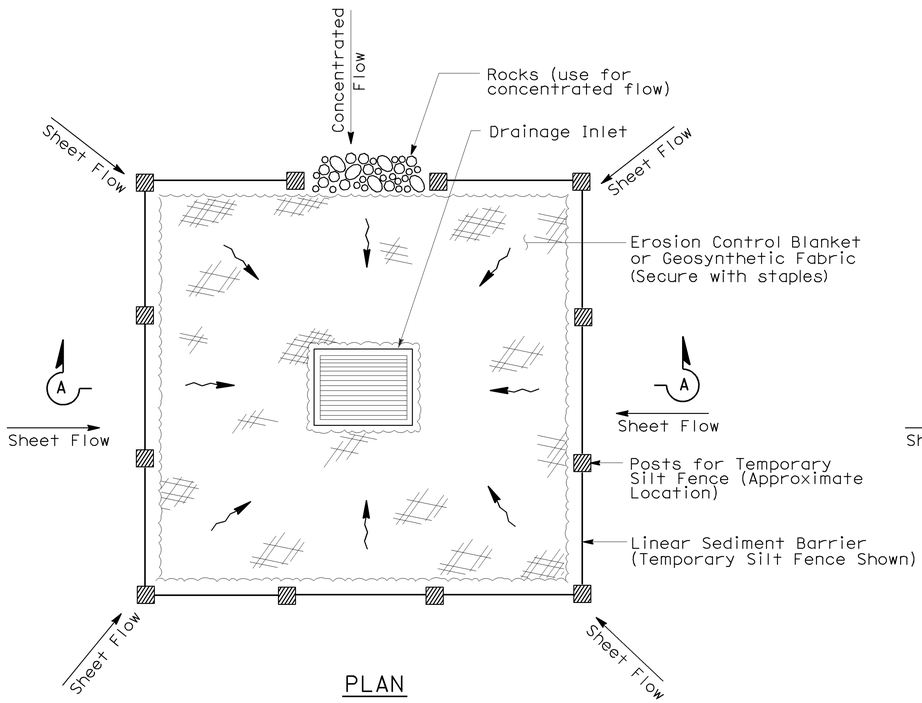

PLAN

TEMPORARY DRAINAGE INLET PROTECTION (TYPE 1)

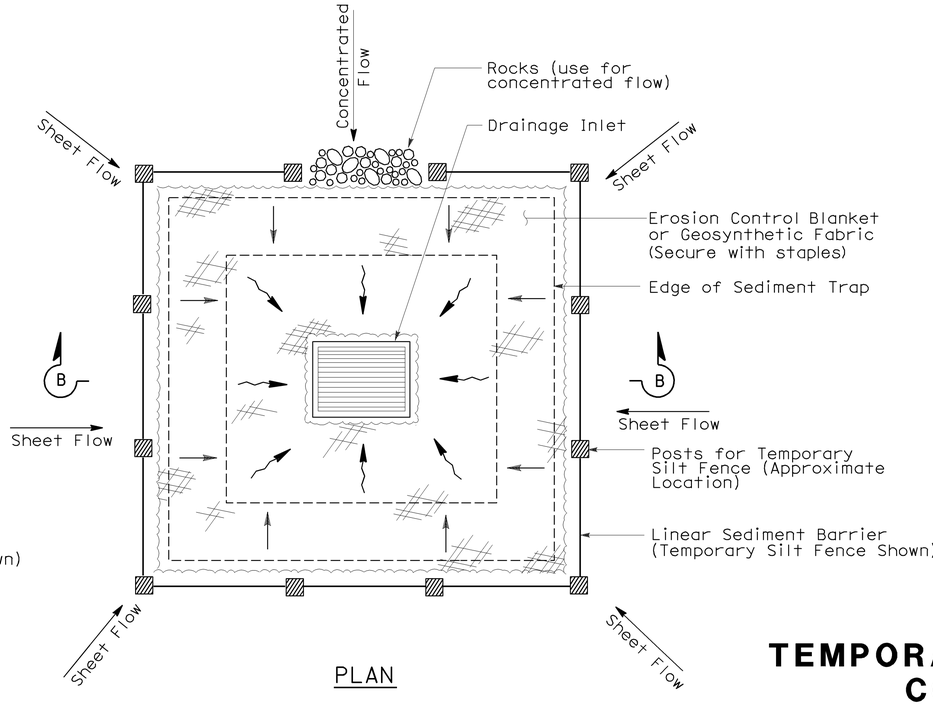

PLAN

TEMPORARY DRAINAGE INLET PROTECTION (TYPE 2) (EXCAVATED SEDIMENT TRAP)

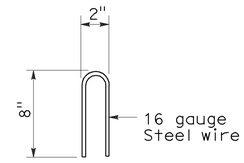

STAPLE DETAIL

STATE OF CALIFORNIA
DEPARTMENT OF TRANSPORTATION

TEMPORARY WATER POLLUTION CONTROL DETAILS (TEMPORARY DRAINAGE INLET PROTECTION)

NO SCALE

Nsp t61 dated august 15, 2008 supplements the standard plans book dated may 2006.

NEW STANDARD PLAN NSP T61

2006 NEW STANDARD PLAN NSP T61

7-11-08

DIST	COUNTY	ROUTE	POST MILES TOTAL PROJECT	SHEET NO.	TOTAL SHEETS
04	Son	116	0.0/8.0	11	17

Robert B Schott
LICENSED LANDSCAPE ARCHITECT

August 15, 2008
PLANS APPROVAL DATE

LICENSED LANDSCAPE ARCHITECT
Robert B. Schott 3695
Signature
11-04-08
Renewal Date
08-11-08
Date
STATE OF CALIFORNIA

The State of California or its officers or agents shall not be responsible for the accuracy or completeness of electronic copies of this plan sheet.

To accompany plans dated 08-13-10

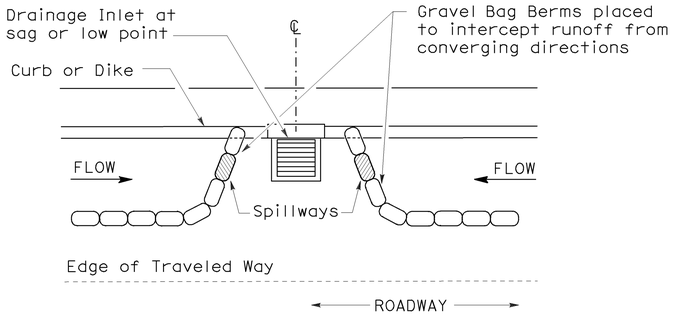

PLAN

CONFIGURATION FOR SAG POINT INLET (GRAVEL BAG BERM)

GRAVEL BAG BERM (TYPE 3A) SPACING TABLE

SLOPE OF ROADWAY (PERCENT)	1 to 3.9	4 to 5.9	6 to 7.9	8 to 10	10+
INTERVAL BETWEEN BERM	100′	75′	50′	25′	12′

For slope of less than 1%, install barriers only if erosion/sediment is prevalent

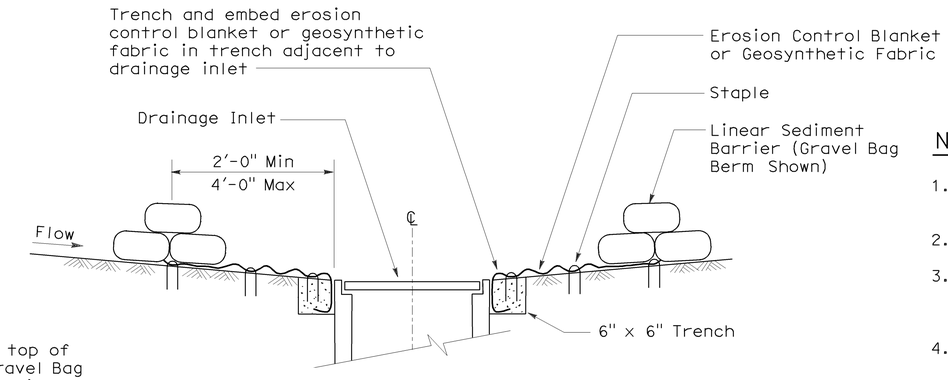

SECTION A-A

NOTES:

1. Place safety cones adjacent to drainage inlet protection.
2. Dimensions may vary to fit field conditions.
3. Install a minimum of 3 gravel bag berms upstream of each drainage inlet to be protected.
4. Position erosion control blanket or geosynthetic fabric at edge of concrete apron and secure in trench.
5. Erosion control blanket or geosynthetic fabric is not required if the area adjacent to the drainage inlet is vegetated or paved.

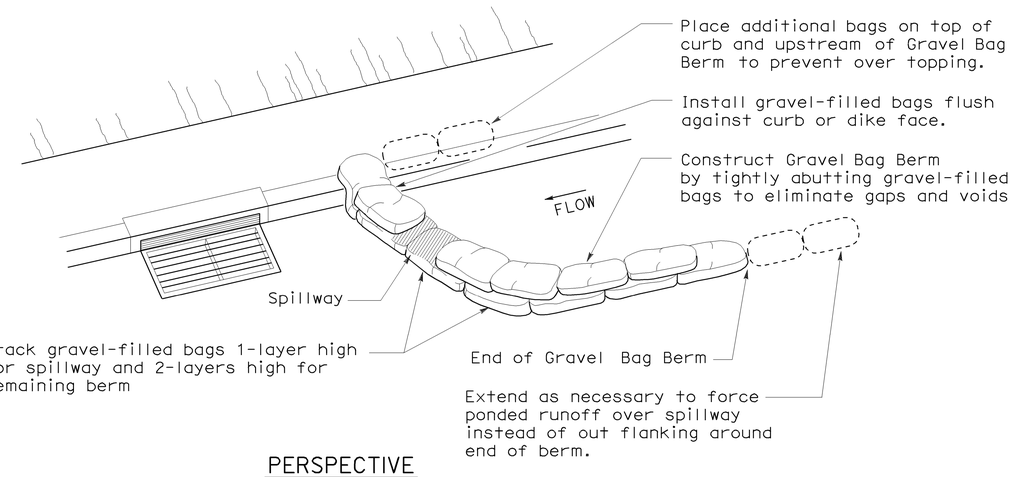

PERSPECTIVE

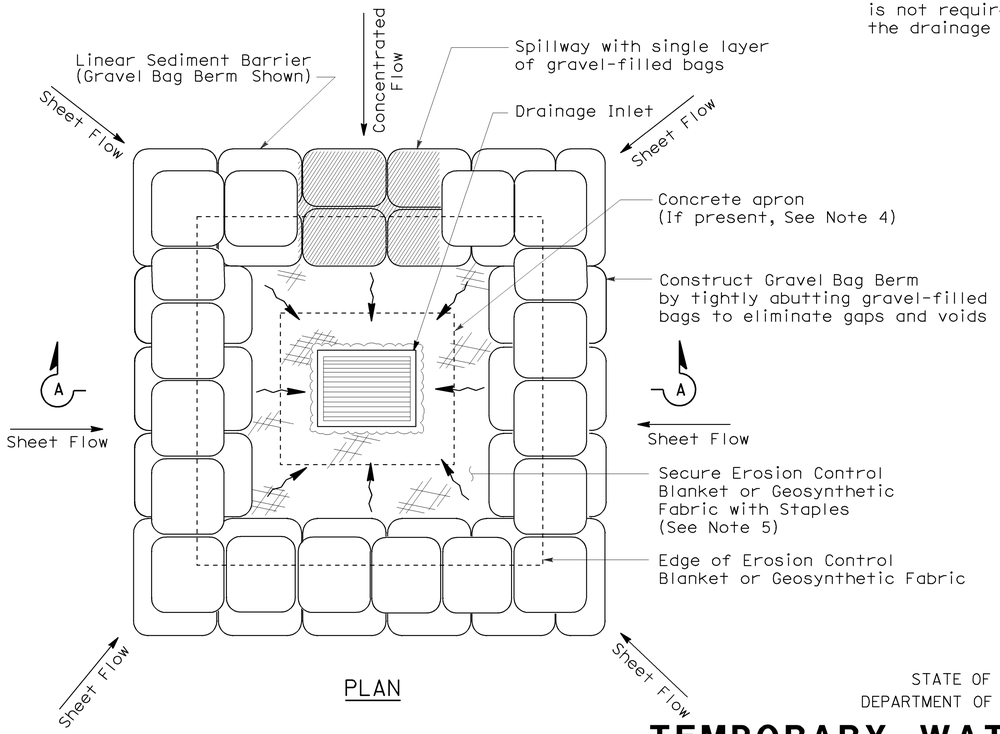

PLAN

TEMPORARY DRAINAGE INLET PROTECTION (TYPE 3B)

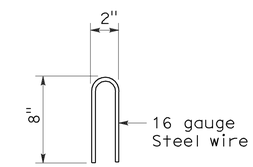

STAPLE DETAIL

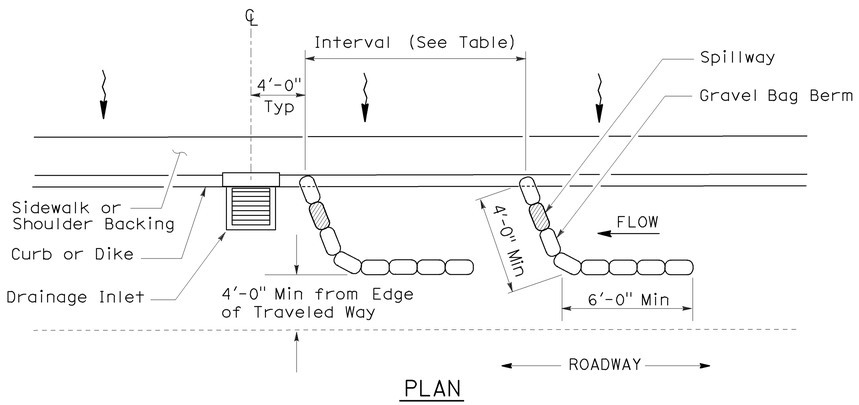

PLAN

TEMPORARY DRAINAGE INLET PROTECTION (TYPE 3A) (GRAVEL BAG BERM)

STATE OF CALIFORNIA
DEPARTMENT OF TRANSPORTATION

TEMPORARY WATER POLLUTION CONTROL DETAILS (TEMPORARY DRAINAGE INLET PROTECTION)

NO SCALE

NSP T62 DATED AUGUST 15, 2008 SUPPLEMENTS
THE STANDARD PLANS BOOK DATED MAY 2006.

NEW STANDARD PLAN NSP T62

2006 NEW STANDARD PLAN NSP T62

7-11-08

DIST	COUNTY	ROUTE	POST MILES TOTAL PROJECT	SHEET NO.	TOTAL SHEETS
04	Son	116	0.0/8.0	12	17

Robert B Schott
LICENSED LANDSCAPE ARCHITECT

August 15, 2008
PLANS APPROVAL DATE

LICENSED LANDSCAPE ARCHITECT
Robert B. Schott 3695
Signature
11-04-08
Renewal Date
08-11-08
Date
STATE OF CALIFORNIA

The State of California or its officers or agents shall not be responsible for the accuracy or completeness of electronic copies of this plan sheet.

To accompany plans dated 08-13-10

FLEXIBLE SEDIMENT BARRIER SPACING TABLE

SLOPE OF ROADWAY (PERCENT)	0 to 0.9	1 to 1.9	2 to 2.9	3 to 4	5+
INTERVAL BETWEEN BARRIERS	50′	35′	30′	25′	20′
ANGLE FROM FACE OF CURB	70°	70°	70°	45°	45°
SUGGESTED BARRIER LENGTH	6′	6′	6′	6′	6′

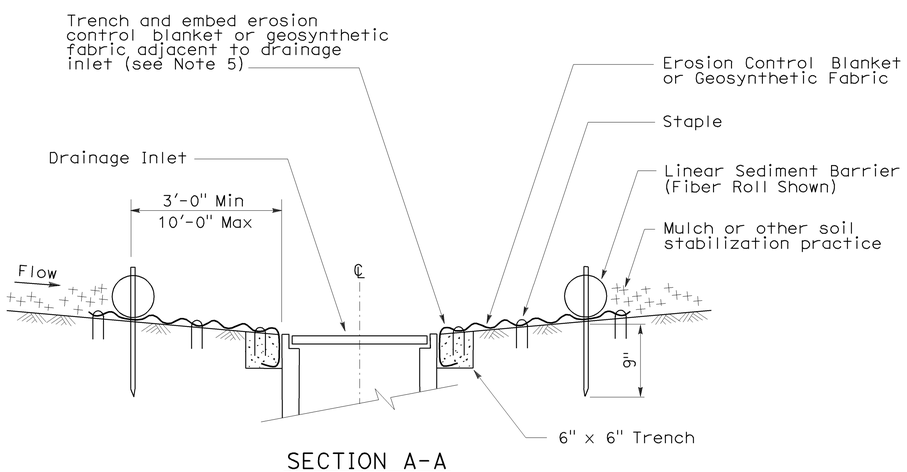

SECTION A-A

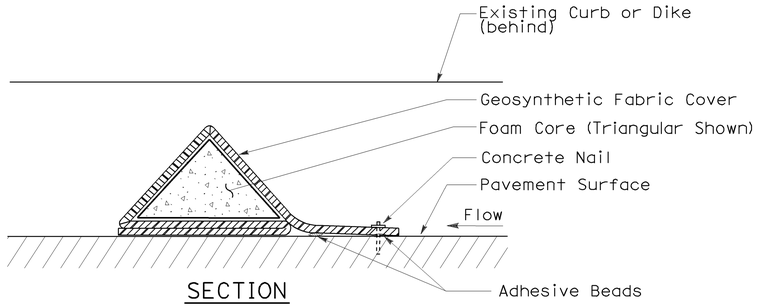

SECTION

FLEXIBLE SEDIMENT BARRIER DETAIL
(FOAM BARRIER SHOWN)

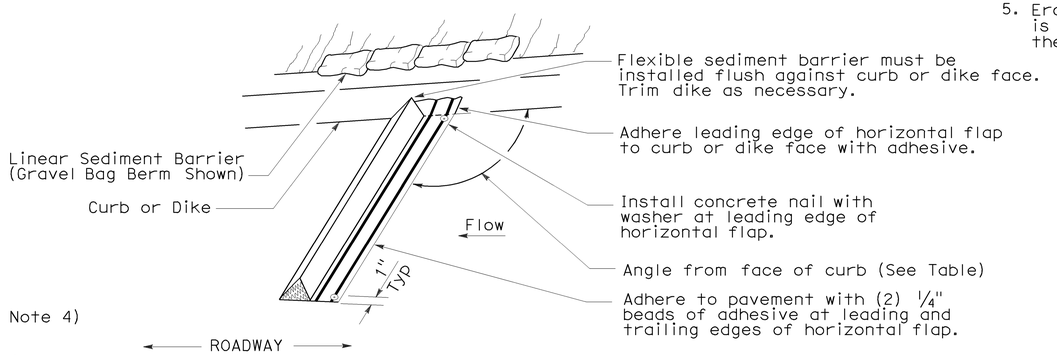

PERSPECTIVE

NOTES:

1. See Standard Plan T51 for Temporary Silt Fence.
2. Dimensions may vary to fit field conditions.
3. Install a minimum of 3 flexible sediment barriers upstream of each drainage inlet to be protected.
4. Position erosion control blanket or geosynthetic fabric at edge of concrete apron and secure in trench.
5. Erosion control blanket or geosynthetic fabric is not required if the area adjacent to the drainage inlet is vegetated.

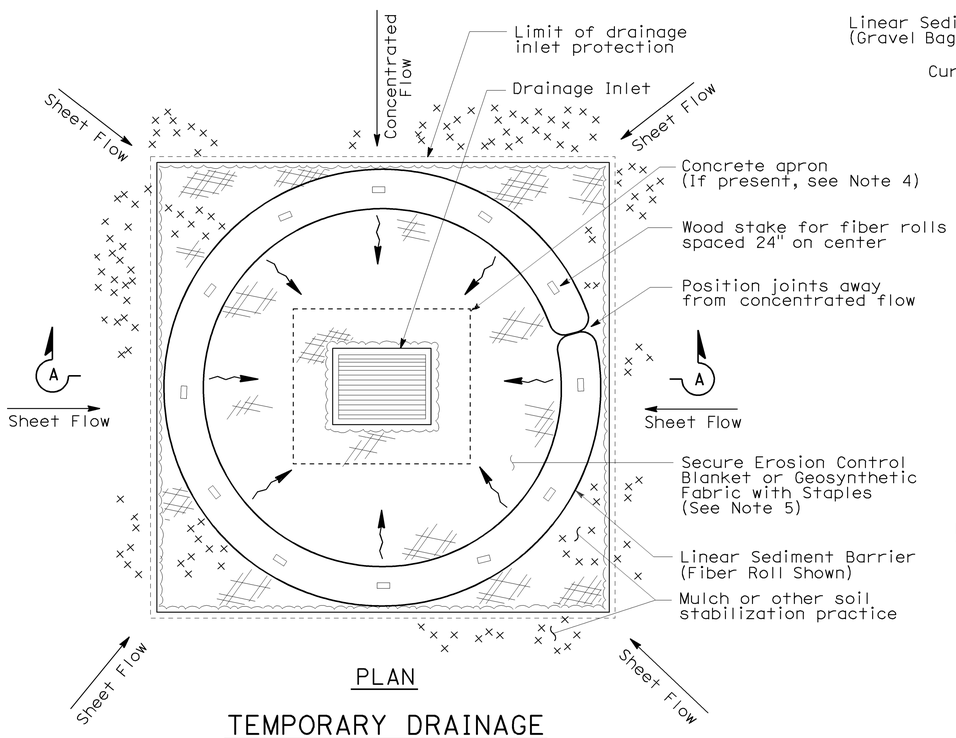

PLAN

TEMPORARY DRAINAGE
INLET PROTECTION (TYPE 4A)

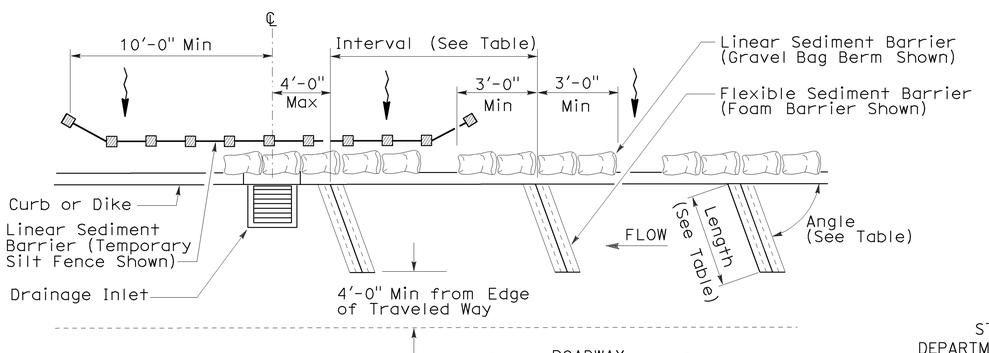

PLAN

TEMPORARY DRAINAGE
INLET PROTECTION (TYPE 4B)
FLEXIBLE SEDIMENT BARRIER

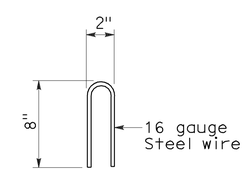

STAPLE DETAIL

STATE OF CALIFORNIA
DEPARTMENT OF TRANSPORTATION

TEMPORARY WATER POLLUTION CONTROL DETAILS (TEMPORARY DRAINAGE INLET PROTECTION)

NO SCALE

NSP T63 DATED AUGUST 15, 2008 SUPPLEMENTS
THE STANDARD PLANS BOOK DATED MAY 2006.

NEW STANDARD PLAN NSP T63

2006 NEW STANDARD PLAN NSP T63

7-11-08

DIST	COUNTY	ROUTE	POST MILES TOTAL PROJECT	SHEET NO.	TOTAL SHEETS
04	Son	116	0.0/8.0	13	17

Robert B Schott
LICENSED LANDSCAPE ARCHITECT

August 15, 2008
PLANS APPROVAL DATE

LICENSED LANDSCAPE ARCHITECT — Robert B. Schott 3695 — Signature — 11-04-08 Renewal Date — 08-11-08 Date — STATE OF CALIFORNIA

The State of California or its officers or agents shall not be responsible for the accuracy or completeness of electronic copies of this plan sheet.

To accompany plans dated 08-13-10

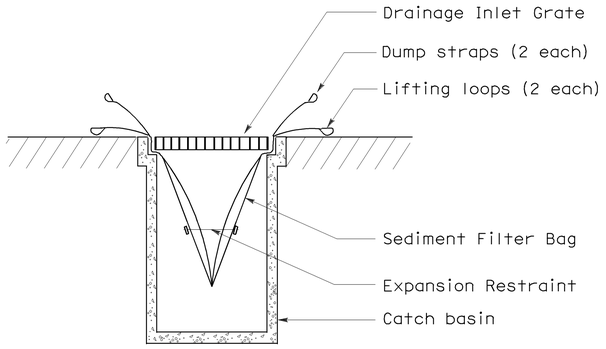

SECTION B-B

SEDIMENT FILTER BAG DETAIL

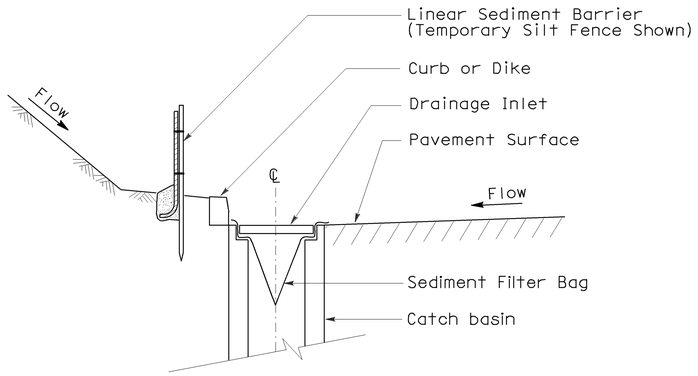

SECTION A-A

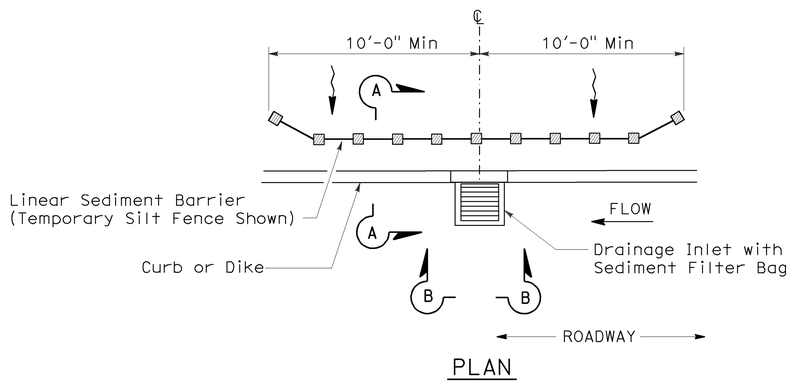

PLAN

TEMPORARY DRAINAGE INLET PROTECTION (TYPE 5) (SEDIMENT FILTER BAG)

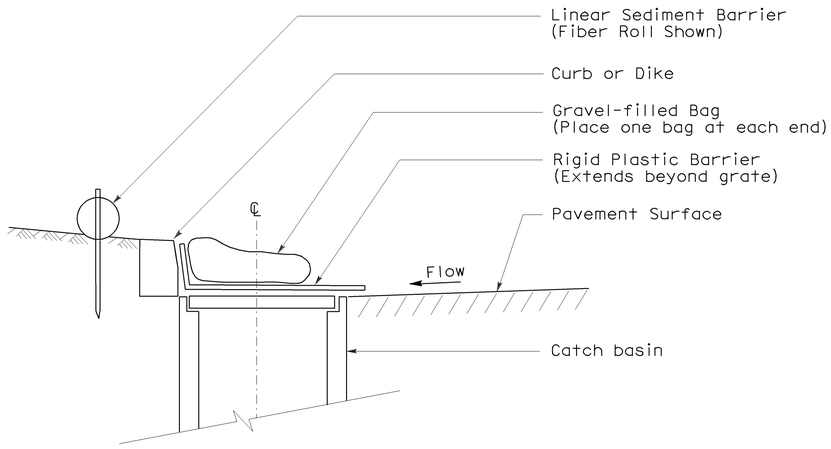

SECTION

TEMPORARY DRAINAGE INLET PROTECTION (TYPE 6A) (CATCH BASIN WITH GRATE)

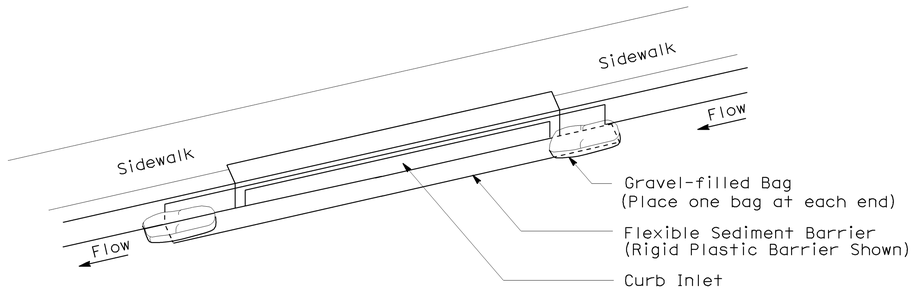

PERSPECTIVE

TEMPORARY DRAINAGE INLET PROTECTION (TYPE 6B) (CURB INLET WITHOUT GRATE)

NOTES:

1. See Standard Plan T51 for Temporary Silt Fence.
2. Dimensions may vary to fit field conditions.

STATE OF CALIFORNIA
DEPARTMENT OF TRANSPORTATION

TEMPORARY WATER POLLUTION CONTROL DETAILS (TEMPORARY DRAINAGE INLET PROTECTION)

NO SCALE

NSP T64 DATED AUGUST 15, 2008 SUPPLEMENTS THE STANDARD PLANS BOOK DATED MAY 2006.

NEW STANDARD PLAN NSP T64

2006 NEW STANDARD PLAN NSP T64

7-11-08