Dist	COUNTY	ROUTE	POST MILES TOTAL PROJECT	SHEET No.	TOTAL SHEETS
04	Son	116	34.1/34.5	1	45

ACHSSTP-P116(045)E

STATE OF CALIFORNIA
DEPARTMENT OF TRANSPORTATION

PROJECT PLANS FOR CONSTRUCTION ON
STATE HIGHWAY

IN SONOMA COUNTY
IN COTATI
FROM 0.5 MILE EAST OF STONY POINT ROAD
TO 0.2 MILE WEST OF ALDER AVENUE

TO BE SUPPLEMENTED BY STANDARD PLANS DATED MAY 2006

INDEX OF PLANS

SHEET No.	DESCRIPTION
1	TITLE AND LOCATION MAP
2	TYPICAL CROSS SECTIONS
3-4	LAYOUTS
5	TEMPORARY WATER POLLUTION CONTROL QUANTITIES
6-8	EROSION CONTROL PLANS AND DETAILS
9-14	DRAINAGE PLANS, PROFILES AND DETAILS
15	DRAINAGE QUANTITIES
16-17	UTILITY PLANS
18-19	CONSTRUCTION AREA SIGNS
20-21	STAGE CONSTRUCTION AND TRAFFIC HANDLING PLANS
22	STAGE CONSTRUCTION QUANTITIES
23-25	PAVEMENT DELINEATION PLANS AND QUANTITIES
26	SUMMARY OF QUANTITIES
27-29	SIGN PLANS, DETAILS AND QUANTITIES
30	PLANTING PLAN AND PLANT LIST
31-45	REVISED AND NEW STANDARD PLANS

THE STANDARD PLANS LIST APPLICABLE TO THIS CONTRACT IS INCLUDED IN THE NOTICE TO BIDDERS AND SPECIAL PROVISIONS BOOK.

LOCATION MAP

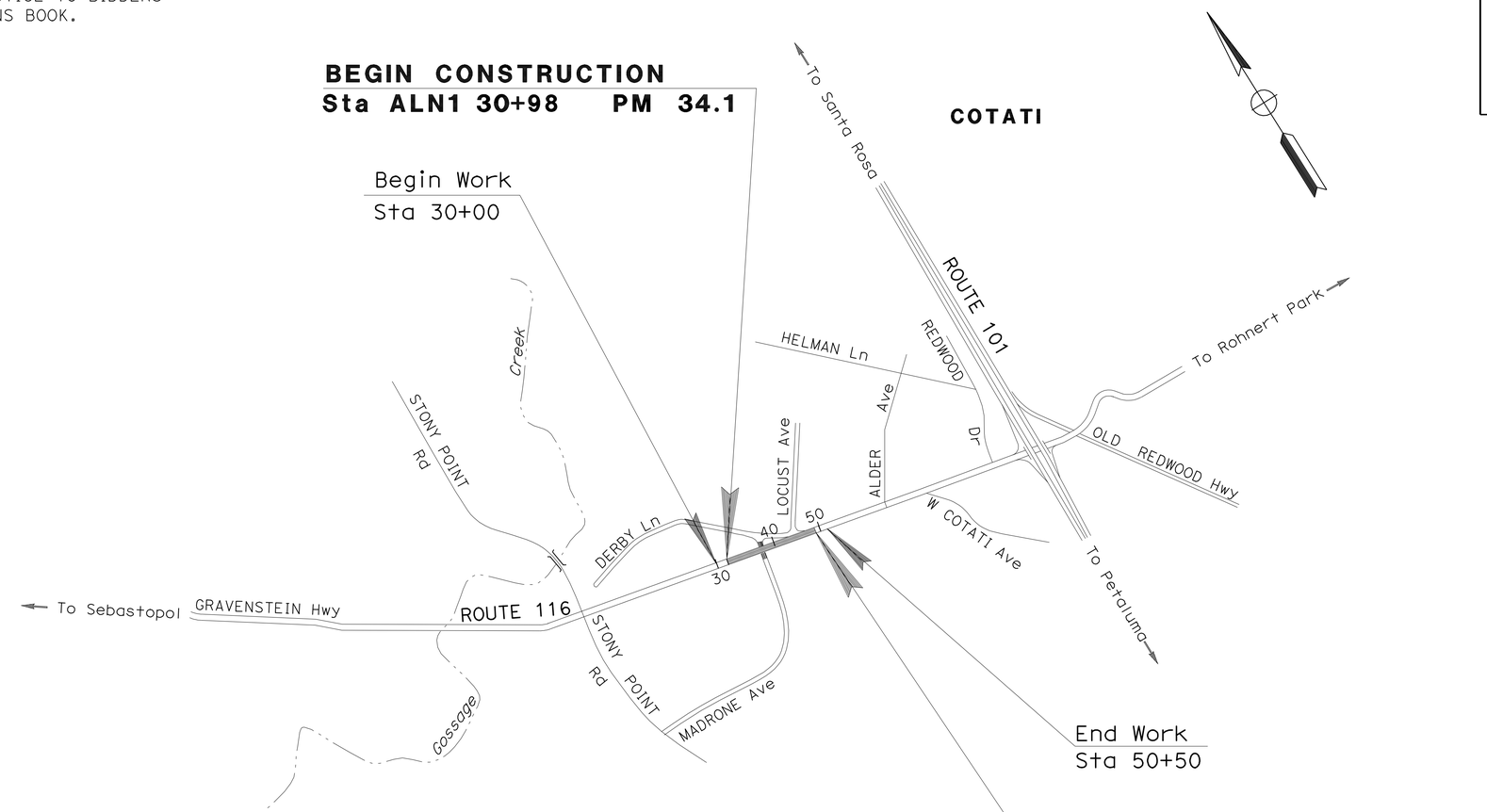

NO SCALE

Parirokh Abedi 03-26-12
PROJECT ENGINEER DATE
REGISTERED CIVIL ENGINEER

June 25, 2012
PLANS APPROVAL DATE

REGISTERED PROFESSIONAL ENGINEER
Parirokh Abedi
No. 36025
Exp. 6-30-12
CIVIL
STATE OF CALIFORNIA

THE STATE OF CALIFORNIA OR ITS OFFICERS OR AGENTS SHALL NOT BE RESPONSIBLE FOR THE ACCURACY OR COMPLETENESS OF SCANNED COPIES OF THIS PLAN SHEET.

CONTRACT No.	04-1G2404
PROJECT ID	0400020025

PROJECT MANAGER: LILIAN ACORDA
DESIGN ENGINEER: CALVIN TRAN

THE CONTRACTOR SHALL POSSESS THE CLASS (OR CLASSES) OF LICENSE AS SPECIFIED IN THE "NOTICE TO BIDDERS."

LAST REVISION 02-16-12 | DATE PLOTTED => 12-SEP-2012 | TIME PLOTTED => 05:46

Dist	COUNTY	ROUTE	POST MILES TOTAL PROJECT	SHEET No.	TOTAL SHEETS
04	Son	116	34.1/34.5	2	45

Parirokl Abedi 03-26-12
REGISTERED CIVIL ENGINEER DATE

6-25-12
PLANS APPROVAL DATE

REGISTERED PROFESSIONAL ENGINEER
Parirokl Abedi
No. 36025
Exp. 6-30-12
CIVIL
STATE OF CALIFORNIA

THE STATE OF CALIFORNIA OR ITS OFFICERS OR AGENTS SHALL NOT BE RESPONSIBLE FOR THE ACCURACY OR COMPLETENESS OF SCANNED COPIES OF THIS PLAN SHEET.

NOTE:

1. DIMENSIONS OF THE PAVEMENT STRUCTURES (STRUCTURAL SECTIONS) ARE SUBJECT TO TOLERANCES SPECIFIED IN THE STANDARD SPECIFICATIONS.

LEGEND:

[No.] STRUCTURAL SECTION NUMBER

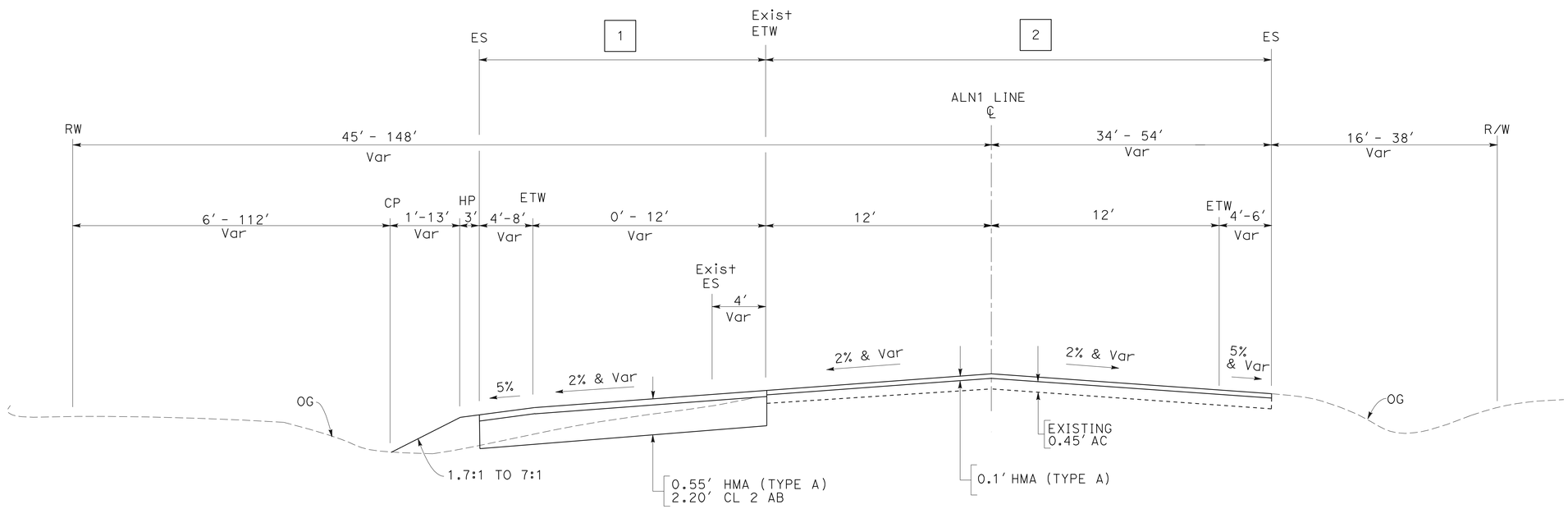

WESTBOUND

EASTBOUND

ROUTE 116

Sta ALN1 30+98 TO 49+42

TYPICAL CROSS SECTIONS

NO SCALE

X-1

REVISED BY	DATE REVISED

CALVIN TRAN — PARI ABEDI

CALCULATED-DESIGNED BY — CHECKED BY

FUNCTIONAL SUPERVISOR — MORTEZA AZIMI

STATE OF CALIFORNIA - DEPARTMENT OF TRANSPORTATION

Caltrans® **DESIGN**

LAST REVISION 02-16-12 | DATE PLOTTED => 29-JUN-2012 | TIME PLOTTED => 07:43

Dist	COUNTY	ROUTE	POST MILES TOTAL PROJECT	SHEET No.	TOTAL SHEETS
04	Son	116	34.1/34.5	3	45

Parirokh Abedi 03-26-12
REGISTERED CIVIL ENGINEER DATE

6-25-12
PLANS APPROVAL DATE

REGISTERED PROFESSIONAL ENGINEER Parirokh Abedi No. 36025 Exp 6-30-12 CIVIL STATE OF CALIFORNIA

THE STATE OF CALIFORNIA OR ITS OFFICERS OR AGENTS SHALL NOT BE RESPONSIBLE FOR THE ACCURACY OR COMPLETENESS OF SCANNED COPIES OF THIS PLAN SHEET.

NOTE:

FOR ACCURATE RIGHT OF WAY DATA, CONTACT RIGHT OF WAY ENGINEERING AT THE DISTRICT OFFICE.

LEGEND:

PAVING CONFORM / COLD PLANE

No. STRUCTURAL SECTION NUMBER

REPLACE AC SURFACING

NOTES:

1. EXACT LOCATIONS OF DRIVEWAY CONFORM AS DIRECTED BY ENGINEER (DETAIL B).
2. FOR PAVING CONFORM DETAIL, SEE DETAIL A.
3. IDENTIFIED MANHOLES TO BE RAISED TO MATCH THE NEW GRADE.
4. ACTUAL LOCATION OF DIGOUTS TO BE DETERMINED BY THE ENGINEER.

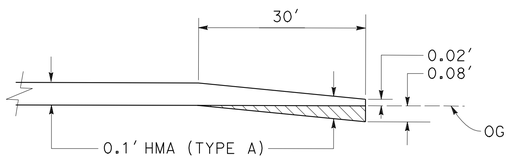

DETAIL A

PAVING CONFORM

Sta ALN1 30+98 TO 31+28
Sta ALN1 49+12 TO 49+42

NO SCALE

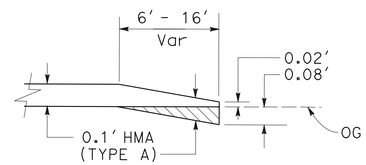

DETAIL B

DRIVEWAY CONFORM

NO SCALE

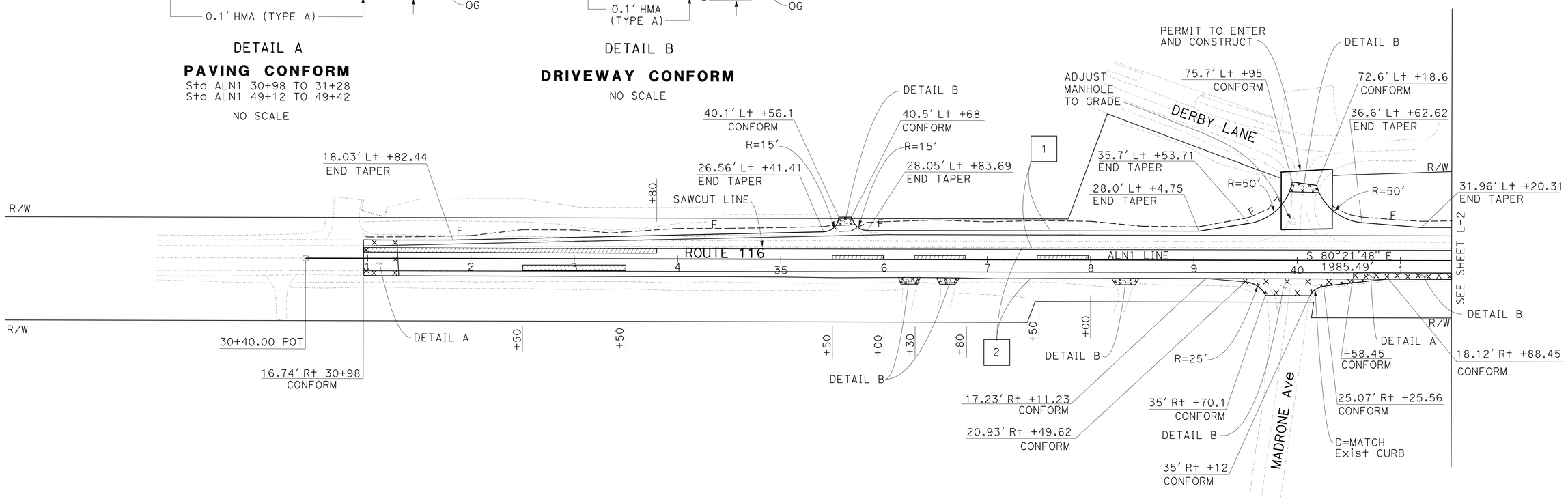

LAYOUT

SCALE: 1" = 50'

L-1

REVISED BY	DATE REVISED

CALCULATED-DESIGNED BY
CHECKED BY
FUNCTIONAL SUPERVISOR

STATE OF CALIFORNIA - DEPARTMENT OF TRANSPORTATION

DESIGN

Caltrans

LAST REVISION 03-19-12
DATE PLOTTED => 29-JUN-2012
TIME PLOTTED => 07:43

Dist	COUNTY	ROUTE	POST MILES TOTAL PROJECT	SHEET No.	TOTAL SHEETS
04	Son	116	34.1/34.5	4	45

Parirokh Abedi 03-26-12
REGISTERED CIVIL ENGINEER DATE

6-25-12
PLANS APPROVAL DATE

REGISTERED PROFESSIONAL ENGINEER
Parirokh Abedi
No. 36025
Exp 6-30-12
CIVIL
STATE OF CALIFORNIA

THE STATE OF CALIFORNIA OR ITS OFFICERS OR AGENTS SHALL NOT BE RESPONSIBLE FOR THE ACCURACY OR COMPLETENESS OF SCANNED COPIES OF THIS PLAN SHEET.

NOTE:

FOR ACCURATE RIGHT OF WAY DATA, CONTACT
RIGHT OF WAY ENGINEERING AT THE DISTRICT OFFICE.

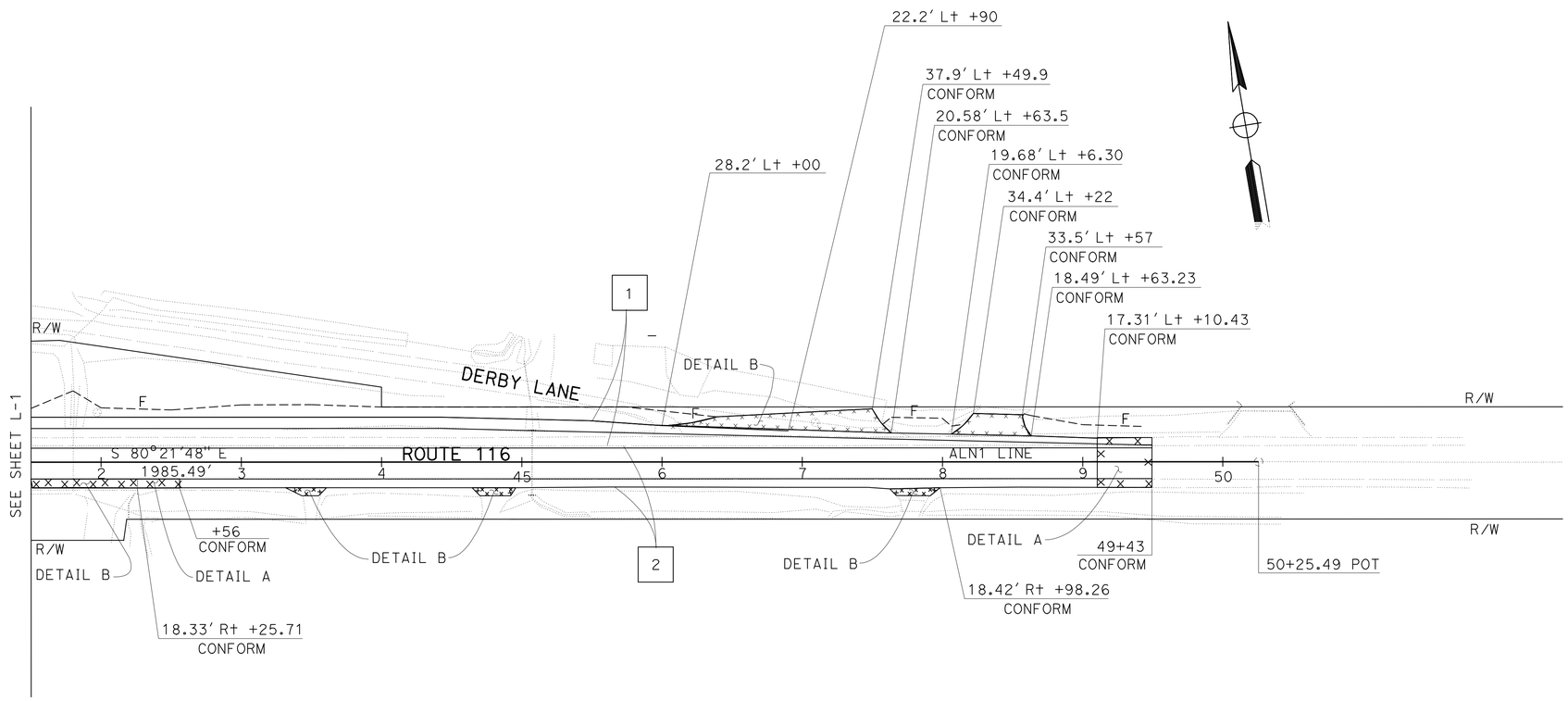

FOR NOTES AND LEGEND,
SEE SHEET L-1

LAYOUT

SCALE: 1" = 50'

L-2

REVISED BY	DATE REVISED

CALCULATED-DESIGNED BY
CHECKED BY

CALVIN TRAN
PARI ABEDI

FUNCTIONAL SUPERVISOR
MORTEZA AZIMI

STATE OF CALIFORNIA - DEPARTMENT OF TRANSPORTATION
Caltrans
DESIGN

LAST REVISION 03-20-12
DATE PLOTTED => 29-JUN-2012
TIME PLOTTED => 07:43

Dist	COUNTY	ROUTE	POST MILES TOTAL PROJECT	SHEET No.	TOTAL SHEETS
04	Son	116	34.1/34.5	5	45

3/8/12
REGISTERED CIVIL ENGINEER DATE

6-25-12
PLANS APPROVAL DATE

REGISTERED PROFESSIONAL ENGINEER
JIANGFAN CHEN
No. C 77248
Exp. 6/30/13
CIVIL
STATE OF CALIFORNIA

THE STATE OF CALIFORNIA OR ITS OFFICERS OR AGENTS SHALL NOT BE RESPONSIBLE FOR THE ACCURACY OR COMPLETENESS OF SCANNED COPIES OF THIS PLAN SHEET.

TEMPORARY WATER POLLUTION CONTROL QUANTITIES

STATION	TEMPORARY DRAINAGE INLET PROTECTION EA	TEMPORARY FIBER ROLLS LF	TEMPORARY COVER SQYD
ALNI LINE 30+40.00 TO 50+00.00	4	300	500
TOTAL	4	300	500

TEMPORARY WATER POLLUTION CONTROL QUANTITIES

WPCQ-1

REVISED BY | DATE REVISED
JENNIFER CHEN | KAMRAN NAKHJIRI
CALCULATED-DESIGNED BY | CHECKED BY
FUNCTIONAL SUPERVISOR
KAMRAN NAKHJIRI

STATE OF CALIFORNIA - DEPARTMENT OF TRANSPORTATION
Caltrans® WATER QUALITY

LAST REVISION 3/8/12
DATE PLOTTED => 29-JUN-2012
TIME PLOTTED => 07:43

Dist	COUNTY	ROUTE	POST MILES TOTAL PROJECT	SHEET No.	TOTAL SHEETS
04	Son	116	34.1/34.5	6	45

LICENSED LANDSCAPE ARCHITECT

6-25-12
PLANS APPROVAL DATE

LICENSED LANDSCAPE ARCHITECT
CHRIS PADICK No. 4255
11-30-12
Renewal Date
04-09-12
Date
STATE OF CALIFORNIA

THE STATE OF CALIFORNIA OR ITS OFFICERS OR AGENTS SHALL NOT BE RESPONSIBLE FOR THE ACCURACY OR COMPLETENESS OF SCANNED COPIES OF THIS PLAN SHEET.

NOTE:

FOR ACCURATE RIGHT OF WAY DATA, CONTACT RIGHT OF WAY ENGINEERING AT THE DISTRICT OFFICE.

LEGEND:

EROSION CONTROL (TYPE 1)
- EROSION CONTROL (COMPOST BLANKET)
- FIBER ROLLS
- EROSION CONTROL (HYDROSEED)

EROSION CONTROL (TYPE 2)
- ROLLED EROSION CONTROL PRODUCT (NETTING)
- EROSION CONTROL (HYDROSEED)

EROSION CONTROL (TYPE 3) BIOFILTRATION STRIP
- EROSION CONTROL (COMPOST INCORPORATE)
- EROSION CONTROL (HYDROSEED)

FIBER ROLLS

ABBREVIATIONS:

ERC	EROSION CONTROL
RECP	ROLLED EROSION CONTROL PRODUCT

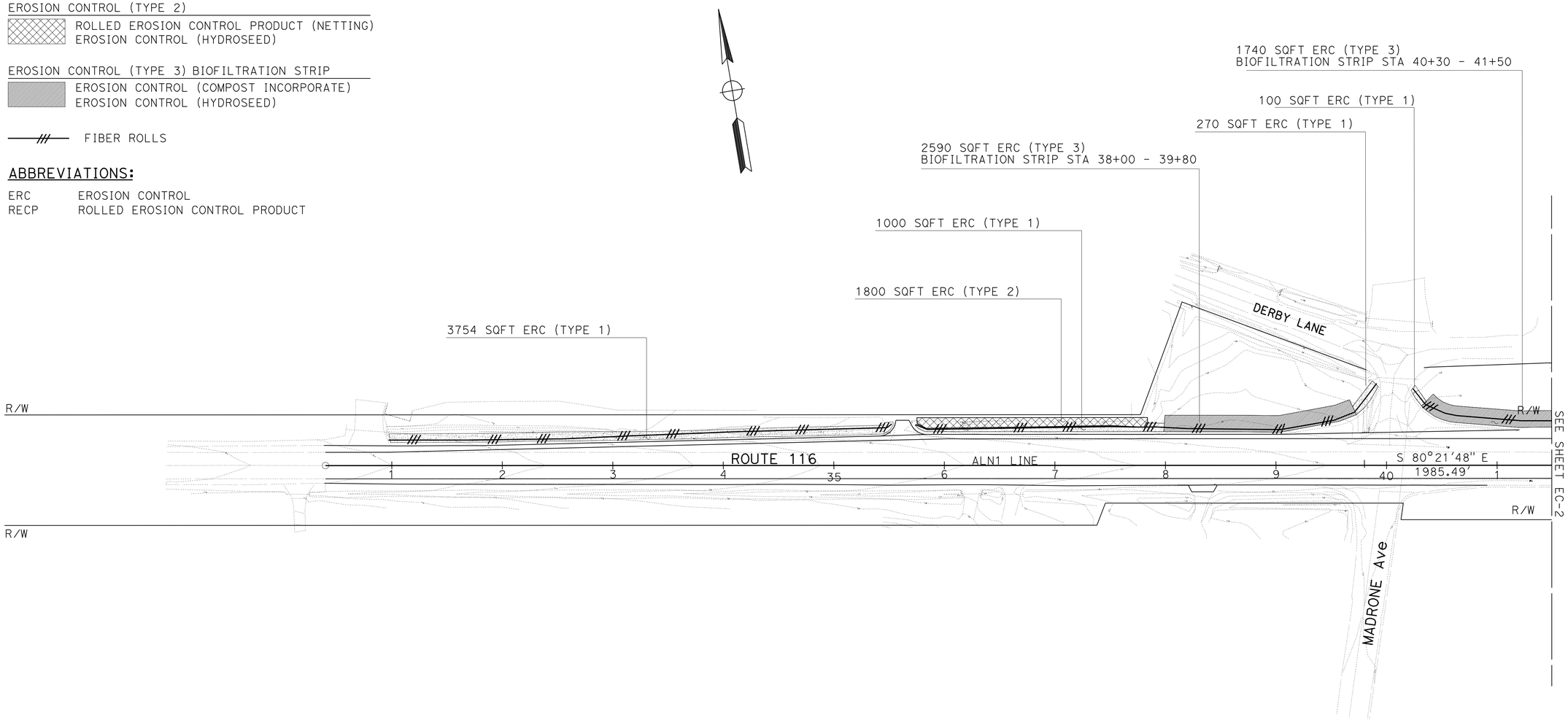

EROSION CONTROL PLAN

SCALE: 1" = 50'

EC-1

APPROVED FOR EROSION CONTROL WORK ONLY

STATE OF CALIFORNIA - DEPARTMENT OF TRANSPORTATION
Caltrans®
WATER QUALITY

SENIOR LANDSCAPE ARCHITECT: DAVID YAM

CALCULATED-DESIGNED BY: CHRIS PADICK
CHECKED BY: ALEX MCDONALD

REVISED BY | DATE REVISED

LAST REVISION 04-09-12 | DATE PLOTTED => 29-JUN-2012 | TIME PLOTTED => 07:43

Dist	COUNTY	ROUTE	POST MILES TOTAL PROJECT	SHEET No.	TOTAL SHEETS
04	Son	116	34.1/34.5	7	45

LICENSED LANDSCAPE ARCHITECT

6-25-12
PLANS APPROVAL DATE

LICENSED LANDSCAPE ARCHITECT
CHRIS PADICK No. 4732
Signature
11-30-12
Renewal Date
04-09-12
Date
STATE OF CALIFORNIA

THE STATE OF CALIFORNIA OR ITS OFFICERS OR AGENTS SHALL NOT BE RESPONSIBLE FOR THE ACCURACY OR COMPLETENESS OF SCANNED COPIES OF THIS PLAN SHEET.

NOTE:

FOR ACCURATE RIGHT OF WAY DATA, CONTACT
RIGHT OF WAY ENGINEERING AT THE DISTRICT OFFICE.

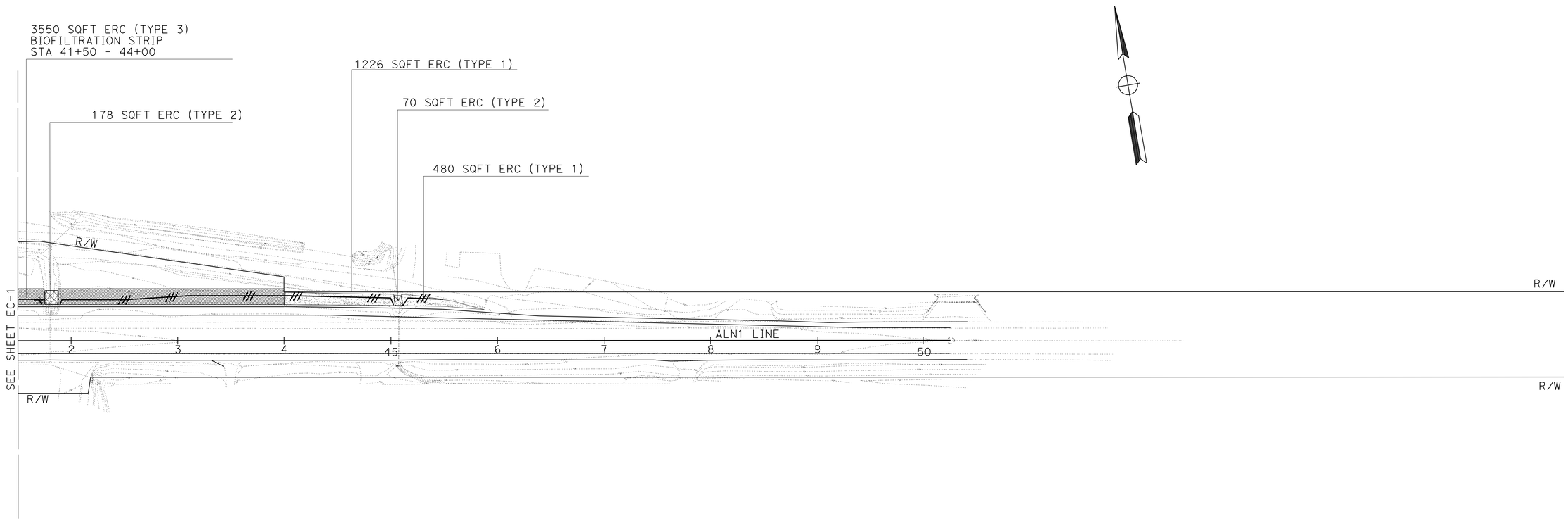

EROSION CONTROL PLAN

SCALE: 1" = 50'

EC-2

APPROVED FOR EROSION CONTROL WORK ONLY

STATE OF CALIFORNIA - DEPARTMENT OF TRANSPORTATION
Caltrans
WATER QUALITY

LANDSCAPE ARCHITECT: CHRIS PADICK

CALCULATED-DESIGNED BY: CHRIS PADICK
CHECKED BY: ALEX MCDONALD

REVISED BY
DATE REVISED

LAST REVISION 04-09-12
DATE PLOTTED => 29-JUN-2012
TIME PLOTTED => 07:43

Dist	COUNTY	ROUTE	POST MILES TOTAL PROJECT	SHEET No.	TOTAL SHEETS
04	Son	116	34.1/34.5	8	45

LICENSED LANDSCAPE ARCHITECT

6-25-12
PLANS APPROVAL DATE

LICENSED LANDSCAPE ARCHITECT
CHRIS PADICK No. 4255
Signature
11-30-12
Renewal Date
5-15-12
Date
STATE OF CALIFORNIA

THE STATE OF CALIFORNIA OR ITS OFFICERS OR AGENTS SHALL NOT BE RESPONSIBLE FOR THE ACCURACY OR COMPLETENESS OF SCANNED COPIES OF THIS PLAN SHEET.

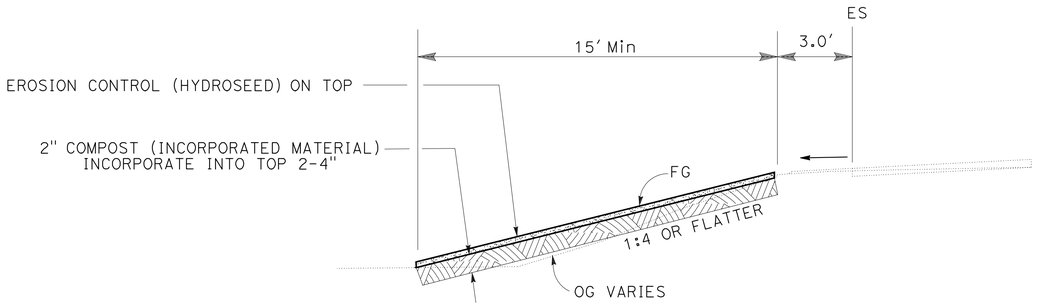

SECTION

BIOFILTRATION STRIP TYP

EROSION CONTROL QUANTITIES

SHEET NUMBER	EROSION CONTROL (COMPOST BLANKET)	FIBER ROLLS	EROSION CONTROL (HYDROSEED)	ROLLED EROSION CONTROL PRODUCT (NETTING)	COMPOST (INCORPORATE)	MOVE IN/ MOVE OUT (EROSION CONTROL)
	CY	LF	SQFT	SQFT	SQYD	EA
EC-1	12	1025	11,254	1,800	482	
EC-2	4	400	5,504	248	394	
TOTAL	16	1,425	16,758	2,048	876	3

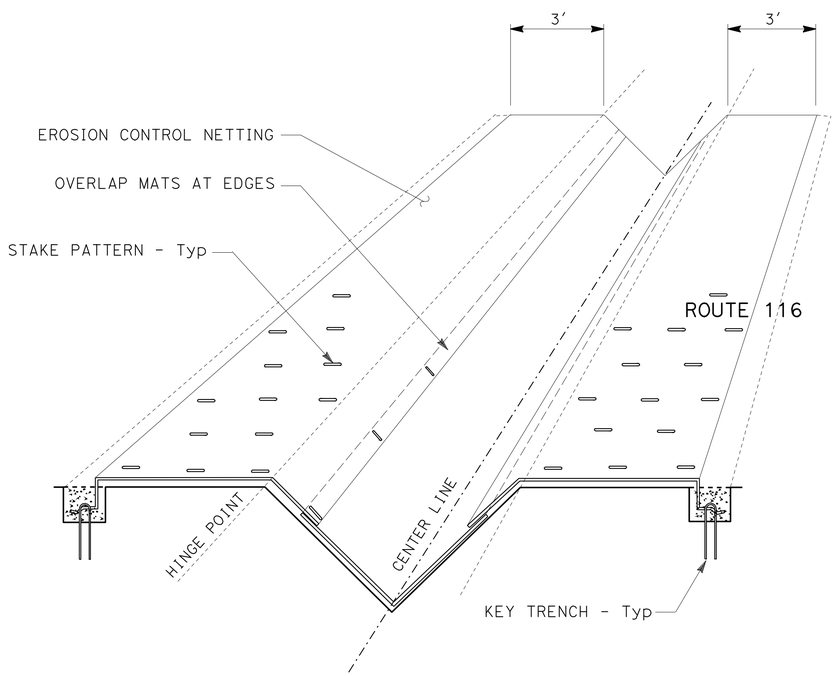

PERSPECTIVE

ROLLED EROSION CONTROL PRODUCT (NETTING) IN UNLINED V-DITCH

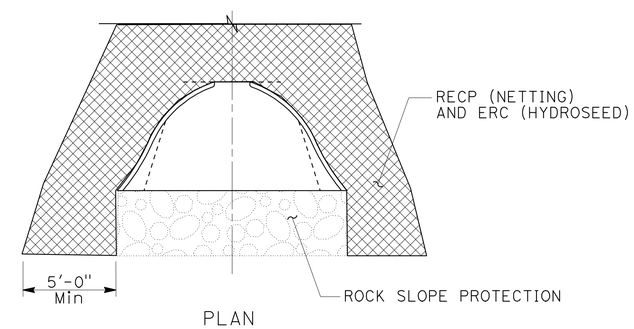

PLAN

ROLLED EROSION CONTROL PRODUCT (NETTING) AT ROCK SLOPE PROTECTION

EROSION CONTROL DETAILS AND QUANTITIES

NO SCALE

ECD-1

APPROVED FOR EROSION CONTROL WORK ONLY

STATE OF CALIFORNIA - DEPARTMENT OF TRANSPORTATION
Caltrans®
WATER QUALITY
SENIOR LANDSCAPE ARCHITECT: DAVID YAM
CALCULATED-DESIGNED BY: CHRIS PADICK
CHECKED BY: ALEX MCDONALD
REVISED BY
DATE REVISED

LAST REVISION 5-12-12
DATE PLOTTED => 29-JUN-2012
TIME PLOTTED => 07:43

Dist	COUNTY	ROUTE	POST MILES TOTAL PROJECT	SHEET No.	TOTAL SHEETS
04	Son	116	34.1/34.5	9	45

REGISTERED CIVIL ENGINEER 03-26-12 DATE

6-25-12
PLANS APPROVAL DATE

REGISTERED PROFESSIONAL ENGINEER Richard K. Yu No. 53804 Exp. 6-30-13 CIVIL STATE OF CALIFORNIA

THE STATE OF CALIFORNIA OR ITS OFFICERS OR AGENTS SHALL NOT BE RESPONSIBLE FOR THE ACCURACY OR COMPLETENESS OF SCANNED COPIES OF THIS PLAN SHEET.

NOTES:

1. FOR ACCURATE RIGHT OF WAY DATA, CONTACT RIGHT OF WAY ENGINEERING AT THE DISTRICT OFFICE.
2. FOR UTILITIES, SEE UTILITY PLAN SHEET.
3. FOR FINISHED GRADE ELEVATIONS, SEE DRAINAGE PROFILES.
4. STATION AND OFFSET TIED TO DRAINAGE STRUCTURES ARE MEASURED AS SHOWN IN THE DETAILS SHEETS (DD-2).
5. LOCATION OF EXISTING DRAINAGE FACILITIES ARE APPROXIMATE, VERIFY LOCATION AND ELEVATION OF EXISTING DRAINAGE FACILITES PRIOR TO MODIFYING.
6. TOP OF GRADE ELEVATION INCLUDES STANDARD GUTTER DEPRESSION WHERE SGD IS SPECIFIED, SEE PROFILE SHEETS.

LEGEND:

- (No.) DRAINAGE SYSTEM NUMBER
- (a) DRAINAGE UNIT
- UNLINED GUTTER (SEE DD-1)
- RSP

ABBREVIATIONS:

SGD STANDARD GUTTER DEPRESSION
SO SIDE OPENING

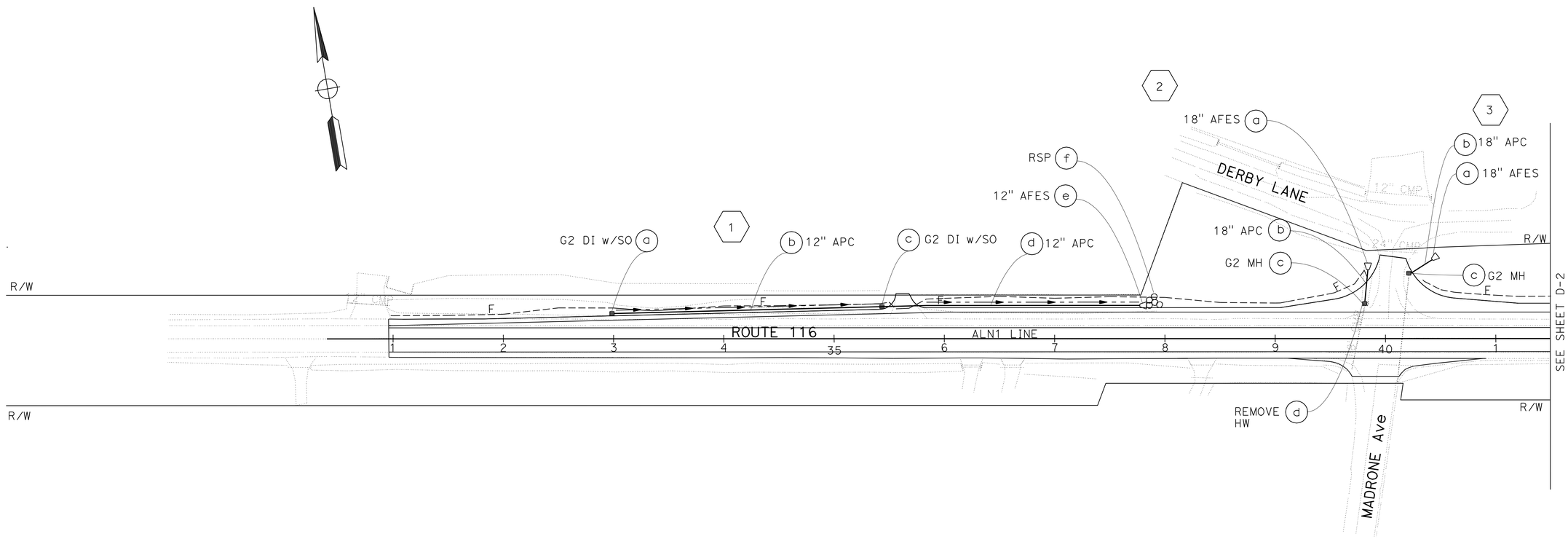

DRAINAGE PLAN

SCALE: 1" = 50'

APPROVED FOR DRAINAGE WORK ONLY

D-1

STATE OF CALIFORNIA - DEPARTMENT OF TRANSPORTATION
Caltrans DESIGN

FUNCTIONAL SUPERVISOR: KATHLEEN REILY
CALCULATED-DESIGNED BY: RICHARD YU
CHECKED BY: KATHLEEN REILY
REVISED BY
DATE REVISED

LAST REVISION 03-14-12
DATE PLOTTED => 29-JUN-2012
TIME PLOTTED => 07:41

Dist	COUNTY	ROUTE	POST MILES TOTAL PROJECT	SHEET No.	TOTAL SHEETS
04	Son	116	34.1/34.5	10	45

REGISTERED CIVIL ENGINEER 03-26-12 DATE

6-25-12
PLANS APPROVAL DATE

REGISTERED PROFESSIONAL ENGINEER Richard K. Yu No. 53804 Exp. 6-30-13 CIVIL STATE OF CALIFORNIA

THE STATE OF CALIFORNIA OR ITS OFFICERS OR AGENTS SHALL NOT BE RESPONSIBLE FOR THE ACCURACY OR COMPLETENESS OF SCANNED COPIES OF THIS PLAN SHEET.

NOTE:

FOR ACCURATE RIGHT OF WAY DATA, CONTACT RIGHT OF WAY ENGINEERING AT THE DISTRICT OFFICE.

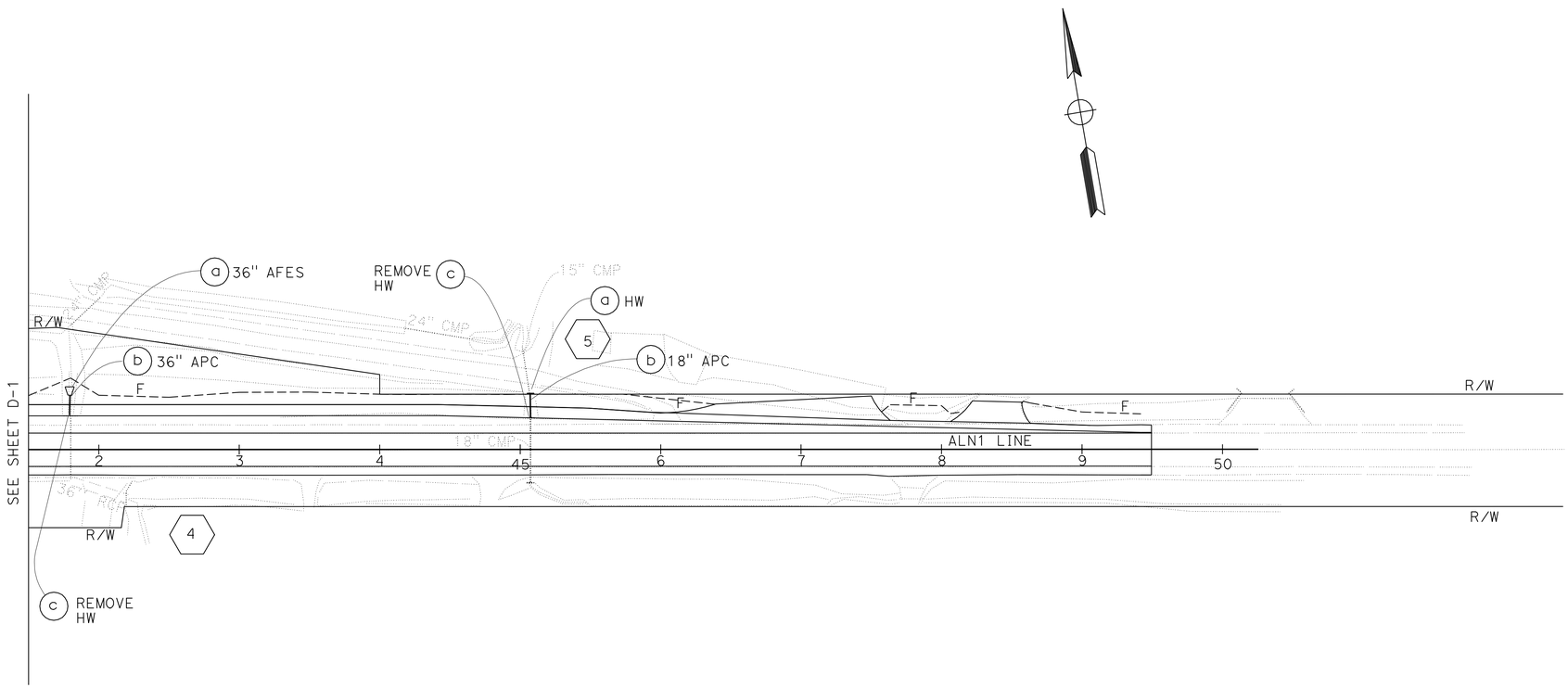

APPROVED FOR DRAINAGE WORK ONLY

FOR NOTES, ABBREVIATIONS AND LEGEND, SEE SHEET D-1

DRAINAGE PLAN

SCALE: 1" = 50'

D-2

STATE OF CALIFORNIA - DEPARTMENT OF TRANSPORTATION

Caltrans

DESIGN

FUNCTIONAL SUPERVISOR: KATHLEEN REILY

CALCULATED-DESIGNED BY: RICHARD YU

CHECKED BY: KATHLEEN REILY

REVISED BY

DATE REVISED

LAST REVISION 03-14-12 | DATE PLOTTED => 29-JUN-2012 | TIME PLOTTED => 07:41

Dist	COUNTY	ROUTE	POST MILES TOTAL PROJECT	SHEET No.	TOTAL SHEETS
04	Son	116	34.1/34.5	11	45

REGISTERED CIVIL ENGINEER 03-26-12 DATE

6-25-12
PLANS APPROVAL DATE

REGISTERED PROFESSIONAL ENGINEER Richard K. Yu No. 53804 Exp. 6-30-13 CIVIL STATE OF CALIFORNIA

THE STATE OF CALIFORNIA OR ITS OFFICERS OR AGENTS SHALL NOT BE RESPONSIBLE FOR THE ACCURACY OR COMPLETENESS OF SCANNED COPIES OF THIS PLAN SHEET.

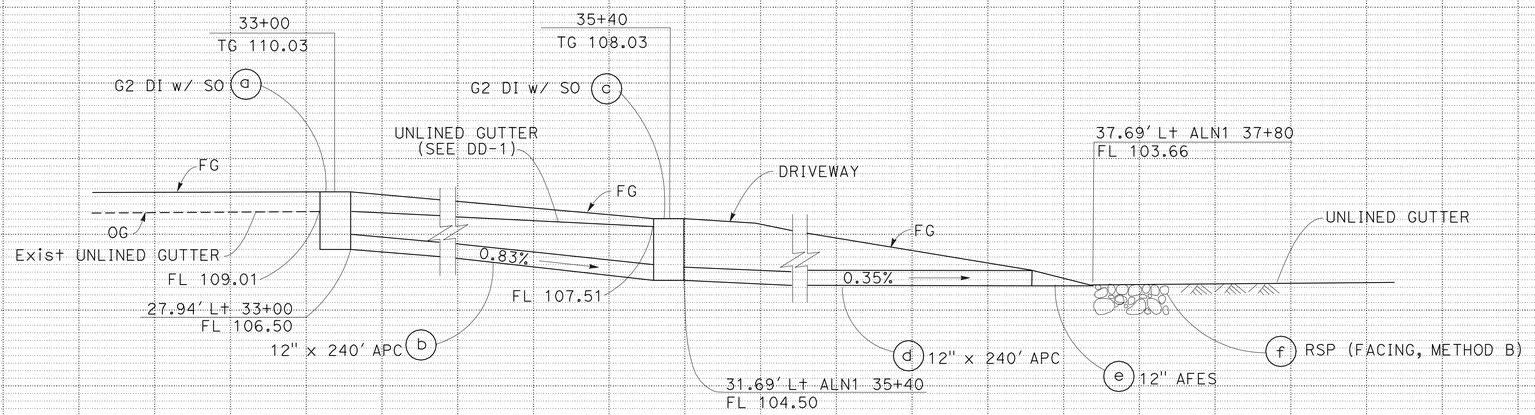

DRAINAGE SYSTEM No. 1

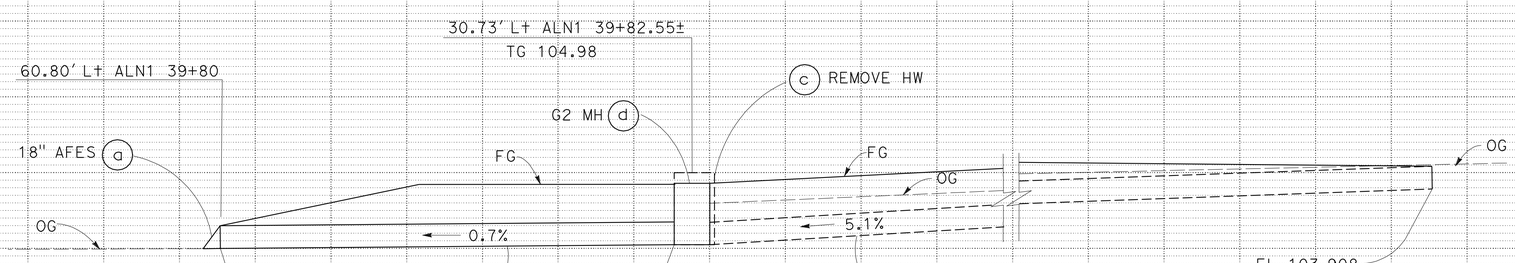

DRAINAGE SYSTEM No. 2

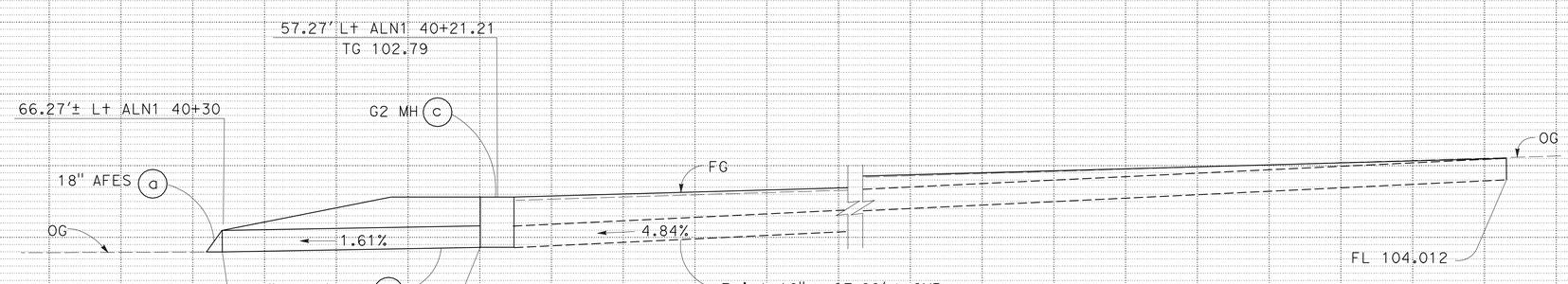

DRAINAGE SYSTEM No. 3

DRAINAGE PROFILES

SCALE: Horiz 1" = 5'
Vert 1" = 5'

DP-1

STATE OF CALIFORNIA - DEPARTMENT OF TRANSPORTATION
Caltrans
HYDRAULICS

FUNCTIONAL SUPERVISOR: KATHLEEN REILY
CALCULATED-DESIGNED BY: RICHARD YU
CHECKED BY: KATHLEEN YU
REVISED BY / DATE REVISED

LAST REVISION 01-23-12
DATE PLOTTED => 29-JUN-2012
TIME PLOTTED => 07:41

Dist	COUNTY	ROUTE	POST MILES TOTAL PROJECT	SHEET No.	TOTAL SHEETS
04	Son	116	34.1/34.5	12	45

REGISTERED CIVIL ENGINEER 03-26-12 DATE

6-25-12
PLANS APPROVAL DATE

REGISTERED PROFESSIONAL ENGINEER Richard K. Yu No. 53804 Exp 6-30-13 CIVIL STATE OF CALIFORNIA

THE STATE OF CALIFORNIA OR ITS OFFICERS OR AGENTS SHALL NOT BE RESPONSIBLE FOR THE ACCURACY OR COMPLETENESS OF SCANNED COPIES OF THIS PLAN SHEET.

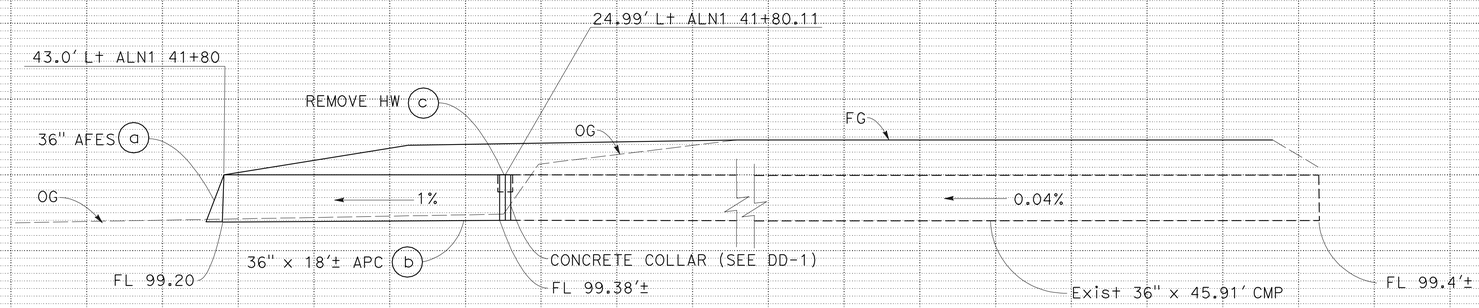

DRAINAGE SYSTEM No. 4

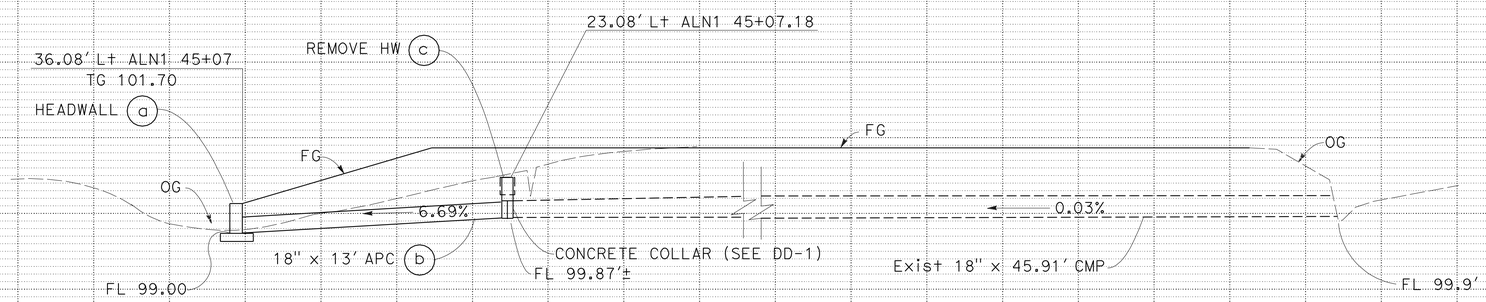

DRAINAGE SYSTEM No. 5

DRAINAGE PROFILES

SCALE: Horiz 1" = 5'
Vert 1" = 5'

DP-2

STATE OF CALIFORNIA - DEPARTMENT OF TRANSPORTATION
Caltrans
HYDRAULICS

FUNCTIONAL SUPERVISOR: KATHLEEN REILY
CALCULATED-DESIGNED BY: RICHARD YU
CHECKED BY: KATHLEEN REILY
REVISED BY: A
DATE REVISED: A

LAST REVISION 03-20-12
DATE PLOTTED => 29-JUN-2012
TIME PLOTTED => 09:46

Dist	COUNTY	ROUTE	POST MILES TOTAL PROJECT	SHEET No.	TOTAL SHEETS
04	Son	116	34.1/34.5	13	45

REGISTERED CIVIL ENGINEER 03-26-12 DATE

6-25-12
PLANS APPROVAL DATE

REGISTERED PROFESSIONAL ENGINEER Richard K. Yu No. 53804 Exp. 6-30-13 CIVIL STATE OF CALIFORNIA

THE STATE OF CALIFORNIA OR ITS OFFICERS OR AGENTS SHALL NOT BE RESPONSIBLE FOR THE ACCURACY OR COMPLETENESS OF SCANNED COPIES OF THIS PLAN SHEET.

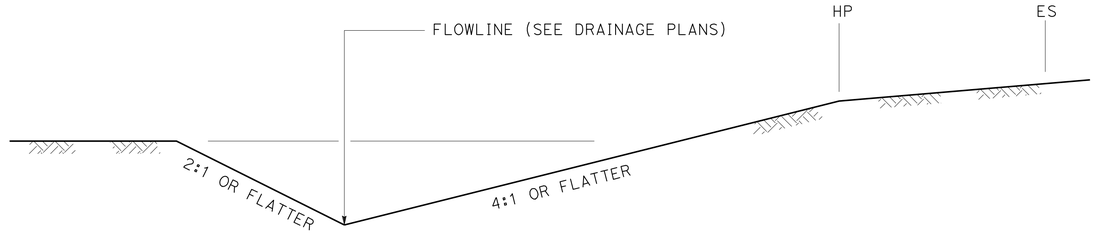

UNLINED GUTTER

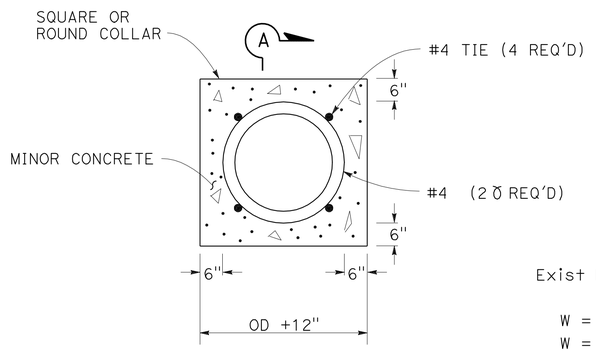

PLAN

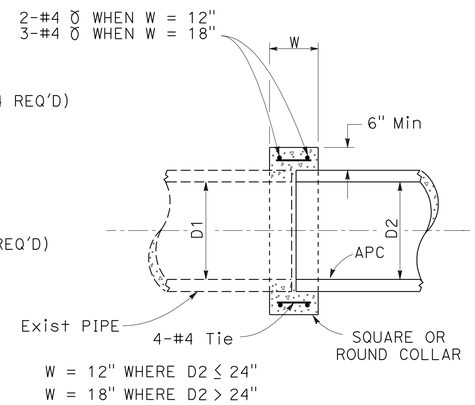

SECTION A-A

CONCRETE COLLAR

4 b 5 b

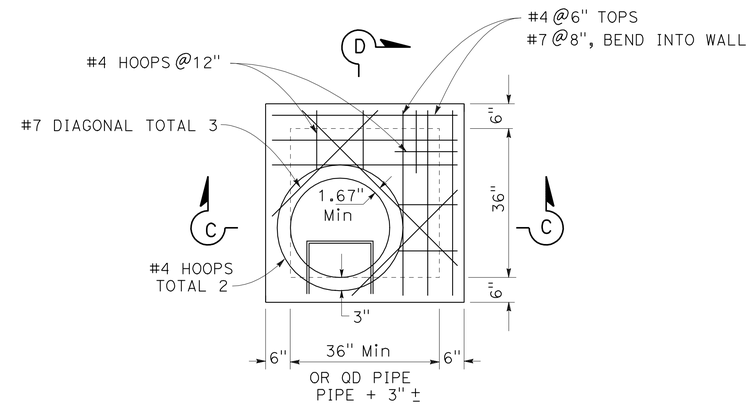

PLAN

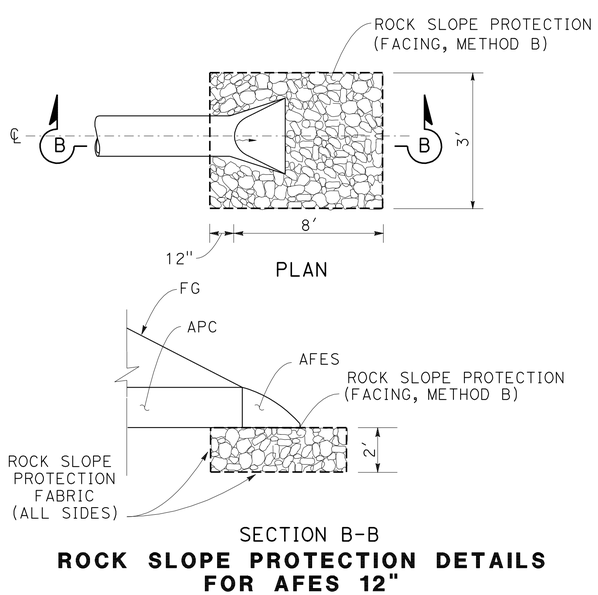

PLAN

SECTION B-B

ROCK SLOPE PROTECTION DETAILS FOR AFES 12"

1 f

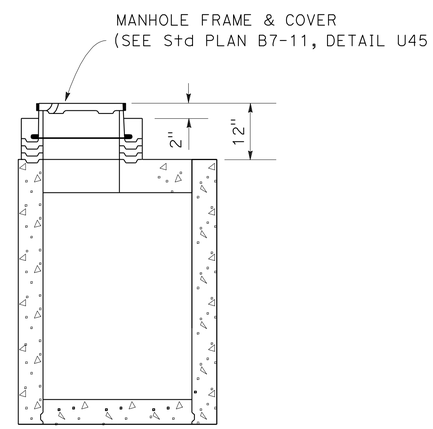

SECTION C-C

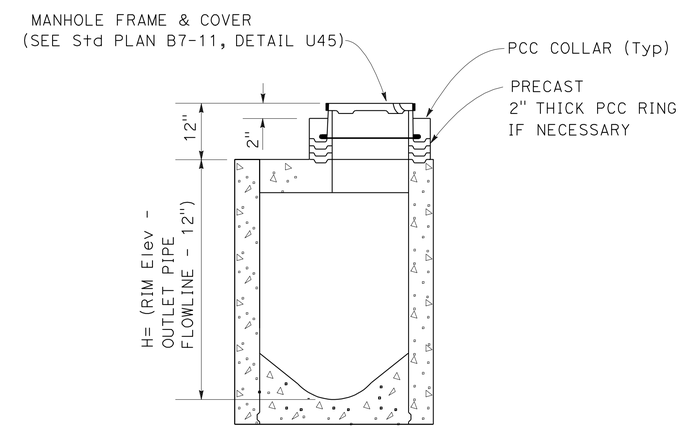

SECTION D-D

NOTE:
FOR DETAILS NOT SHOWN, SEE Std PLAN D73

G2 MANHOLE

2 c 3 c

DRAINAGE DETAILS

NO SCALE

DD-1

STATE OF CALIFORNIA - DEPARTMENT OF TRANSPORTATION
Caltrans® DESIGN
FUNCTIONAL SUPERVISOR KATHLEEN REILY
CALCULATED-DESIGNED BY RICHARD YU
CHECKED BY KATHLEEN REILY
REVISED BY
DATE REVISED

LAST REVISION 03-14-12
DATE PLOTTED => 29-JUN-2012
TIME PLOTTED => 07:42

Dist	COUNTY	ROUTE	POST MILES TOTAL PROJECT	SHEET No.	TOTAL SHEETS
04	Son	116	34.1/34.5	14	45

REGISTERED CIVIL ENGINEER 03-26-12 DATE

6-25-12
PLANS APPROVAL DATE

REGISTERED PROFESSIONAL ENGINEER Richard K. Yu No. 53804 Exp. 6-30-13 CIVIL STATE OF CALIFORNIA

THE STATE OF CALIFORNIA OR ITS OFFICERS OR AGENTS SHALL NOT BE RESPONSIBLE FOR THE ACCURACY OR COMPLETENESS OF SCANNED COPIES OF THIS PLAN SHEET.

NOTE:

FOR INFORMATION NOT SHOWN, SEE STANDARD PLAN D73 THROUGH D74B.

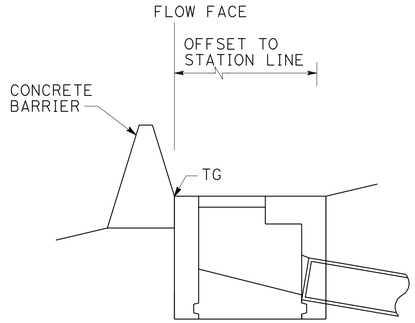

SECTION B-B

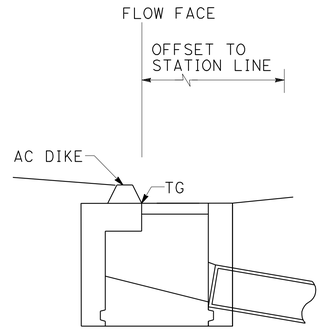

SECTION C-C

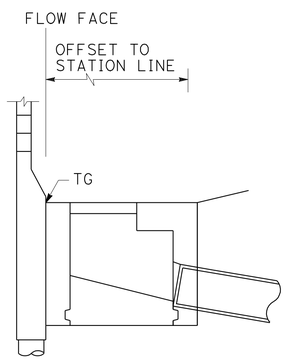

SECTION A-A

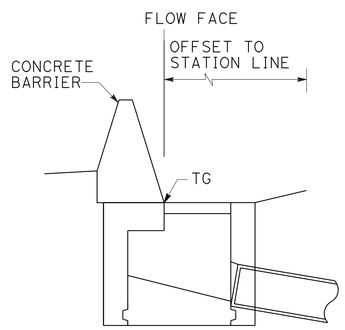

SECTION D-D

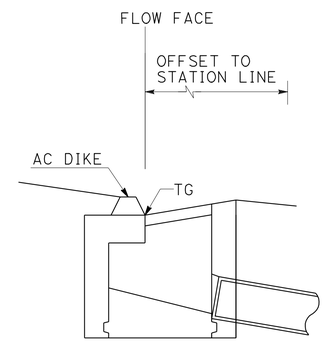

ELEVATION

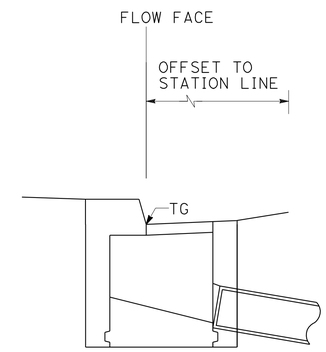

ELEVATION

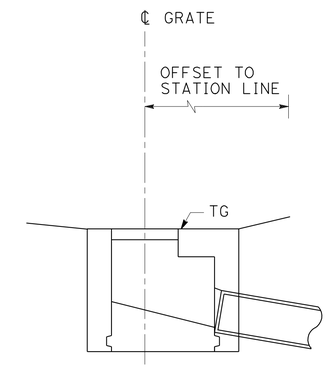

ELEVATION

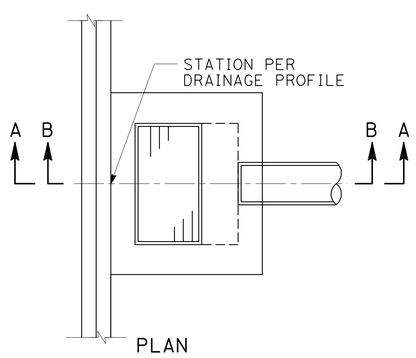

PLAN

INLET

ADJACENT TO SOUNDWALL (SECTION A-A)
ADJACENT TO CONCRETE BARRIER (SECTION B-B)

(TYPES 60E, 60GE, 60SC, 60SE, OR HIGH SIDE OF TYPES 60C, 60GC)

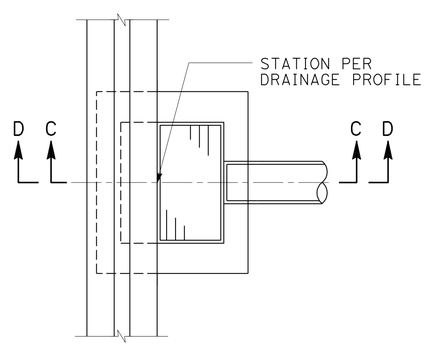

PLAN

INLET

ADJACENT TO AC DIKE (SECTION C-C)
ADJACENT TO CONCRETE BARRIER (SECTION D-D)

(TYPE 60C SHOWN, TYPES 60, 60G, 60GC SIMILAR)

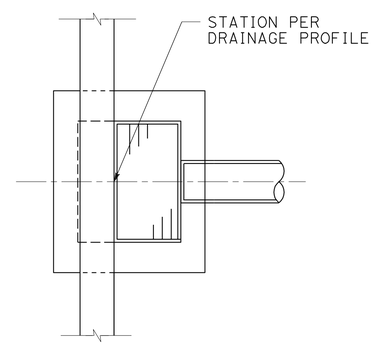

PLAN

INLET

WITHIN AC SIDE GUTTER

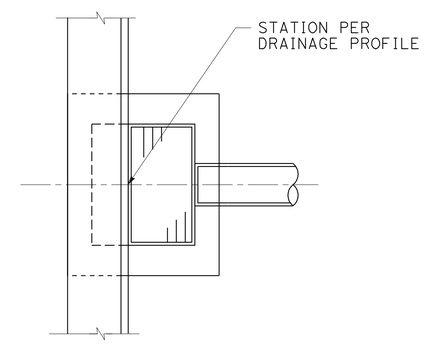

PLAN

INLET

ADJACENT TO CURB

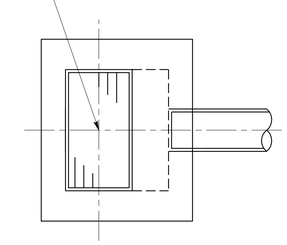

PLAN

FIELD INLET

DRAINAGE DETAILS

NO SCALE

DD-2

STATE OF CALIFORNIA - DEPARTMENT OF TRANSPORTATION
Caltrans® DESIGN

FUNCTIONAL SUPERVISOR: KATHLEEN REILY
CALCULATED-DESIGNED BY: RICHARD YU
CHECKED BY: KATHLEEN REILY
REVISED BY
DATE REVISED

LAST REVISION 03-14-12
DATE PLOTTED => 29-JUN-2012
TIME PLOTTED => 07:42

Dist	COUNTY	ROUTE	POST MILES TOTAL PROJECT	SHEET No.	TOTAL SHEETS
04	Son	116	34.1/34.5	15	45

Parirokh Abedi 03-26-12
REGISTERED CIVIL ENGINEER DATE

6-25-12
PLANS APPROVAL DATE

REGISTERED PROFESSIONAL ENGINEER Parirokh Abedi No. 36025 Exp 6-30-12 CIVIL STATE OF CALIFORNIA

THE STATE OF CALIFORNIA OR ITS OFFICERS OR AGENTS SHALL NOT BE RESPONSIBLE FOR THE ACCURACY OR COMPLETENESS OF SCANNED COPIES OF THIS PLAN SHEET.

APC ALLOWABLE PIPE MATERIAL

DESIGNATION	RCP SIZE (IN)	PLASTIC PIPE (1) SIZE (IN)
12" APC	12	12
18" APC	18	18
36" APC	36	36

NOTES:

(1) PLASTIC PIPES ALTERNATIVE SHALL BE SMOOTH INTERIOR WALL TYPE ONLY.

(N) = NOT A SEPARATE PAY ITEM, FOR INFORMATION ONLY.

ABBREVIATION:

w/ WITH

DRAINAGE QUANTITIES

DRAINAGE SHEET No.	DRAINAGE SYSTEM No. ⬡	DRAINAGE UNIT ○	12" APC LF	18" APC LF	36" APC LF	12" AFES EA	18" AFES EA	36" AFES EA	ROCK SLOPE (FACING, PROTECTION METHOD B) CY	ROCK SLOPE PROTECTION FABRIC SQFT	DRAINAGE INLET MARKER EA	GRATE TYPE 24 X 12 (N) EA	U45 MANHOLE (N)	HEIGHT OF INLET OR MH (N) LF	MINOR CONCRETE / MINOR STRUCTURE CY	Misc IRON & STEEL LB	REMOVE HEADWALL EA	CONCRETE COLLAR (N) EA	DESCRIPTION	STATION	DRAINAGE SHEET No.	DRAINAGE SYSTEM No. ⬡	DRAINAGE UNIT ○
D-1	1	a									1	1		2.7	1.31	239			G2 DI WITH SIDE OPENING	27.94' L+ ALN1 33+00	D-1	1	a
		b	240																12" APC	27.94' L+ ALN1 33+00 TO 31.69' L+ ALN1 35+40			b
		c									1	1		3.1	1.34	239			G2 DI WITH SIDE OPENING	31.69' L+ ALN1 35+40			c
		d	240																12" APC	31.69' L+ ALN1 35+40 TO 37.69' L+ ALN1 37+80			d
		e				1													12" AFES	37.69' L+ ALN1 37+80			e
		f							2	54									RSP	37.69' L+ ALN1 37+80			f
D-1	2	a					1												18" AFES	60.8' L+ ALN1 39+80	D-1	2	a
		b		30															18" APC	60.8' L+ ALN1 39+80 TO 30.73' L+ ALN1 39+82.55			b
		c															1		REMOVE HEADWALL	30.73' L+ ALN1 39+82.55			c
		d											1		1.76	235			G2 MH	30.73' L+ ALN1 39+82.55			d
D-1	3	a					1												18" AFES	66.27' L+ ALN1 40+30	D-1	3	a
		b		18															18" APC	66.27' L+ ALN1 40+30 TO 57.27' L+ ALN1 40+21.21			b
		c											1		1.44	235			G2 MH	57.27' L+ ALN1 40+21.21			c
D-2	4	a						1											36" AFES	43.0' L+ ALN1 41+80	D-2	4	a
		b			18													1	36" APC w/ Conc COLLAR	43.00' L+ ALN1 41+80 TO 24.99' L+ ALN1 41+80.11			b
		c															1		REMOVE HEADWALL	24.99' L+ ALN1 41+80.11			c
D-2	5	a													0.91	50			HEADWALL	36.08' L+ ALN1 45+07	D-2	5	a
		b		13														1	18" APC w/ Conc COLLAR	36.08' L+ ALN1 45+07 TO 23.08' L+ ALN1 45+07.18			b
		c															1		REMOVE HEADWALL	23.08' L+ ALN1 45+07.18			c
SHEET TOTAL			480	61	18	1	2	1	2	54	2	2	2	5.8	6.76	998	3	2	SHEET TOTAL				

REVISED BY | DATE REVISED
CALVIN TRAN | PARI ABEDI
CALCULATED-DESIGNED BY | CHECKED BY
FUNCTIONAL SUPERVISOR | MORTEZA AZIMI

STATE OF CALIFORNIA - DEPARTMENT OF TRANSPORTATION
Caltrans
HYDRAULICS

DRAINAGE QUANTITIES

DQ-1

LAST REVISION 03-14-12 | DATE PLOTTED => 29-JUN-2012 | TIME PLOTTED => 07:42

Dist	COUNTY	ROUTE	POST MILES TOTAL PROJECT	SHEET No.	TOTAL SHEETS
04	Son	116	34.1/34.5	16	45

Parirokh Abedi 03-26-12
REGISTERED CIVIL ENGINEER DATE

6-25-12
PLANS APPROVAL DATE

REGISTERED PROFESSIONAL ENGINEER
Parirokh Abedi
No. 36025
Exp. 6-30-12
CIVIL
STATE OF CALIFORNIA

THE STATE OF CALIFORNIA OR ITS OFFICERS OR AGENTS SHALL NOT BE RESPONSIBLE FOR THE ACCURACY OR COMPLETENESS OF SCANNED COPIES OF THIS PLAN SHEET.

NOTE:

FOR ACCURATE RIGHT OF WAY DATA, CONTACT RIGHT OF WAY ENGINEERING AT THE DISTRICT OFFICE.

NOTES:

1. UTILITIES SHOWN ARE EXISTING AND LOCATIONS ARE APPROXIMATE EXCEPT AS NOTED.
2. LOCATIONS OF UTILITIES SHOWN ON THESE PLANS ARE APPROXIMATE AND SHALL BE VERIFIED BY THE CONTRACTOR.

LEGEND:

UTILITIES	EXISTING UTILITIES	OWNERSHIP
SANITARY SEWER	s	CITY OF COTATI
STORM DRAIN	sd	
ELECTRICAL (OH)	(oh) e	PG&E
EXISTING MH	⊗	

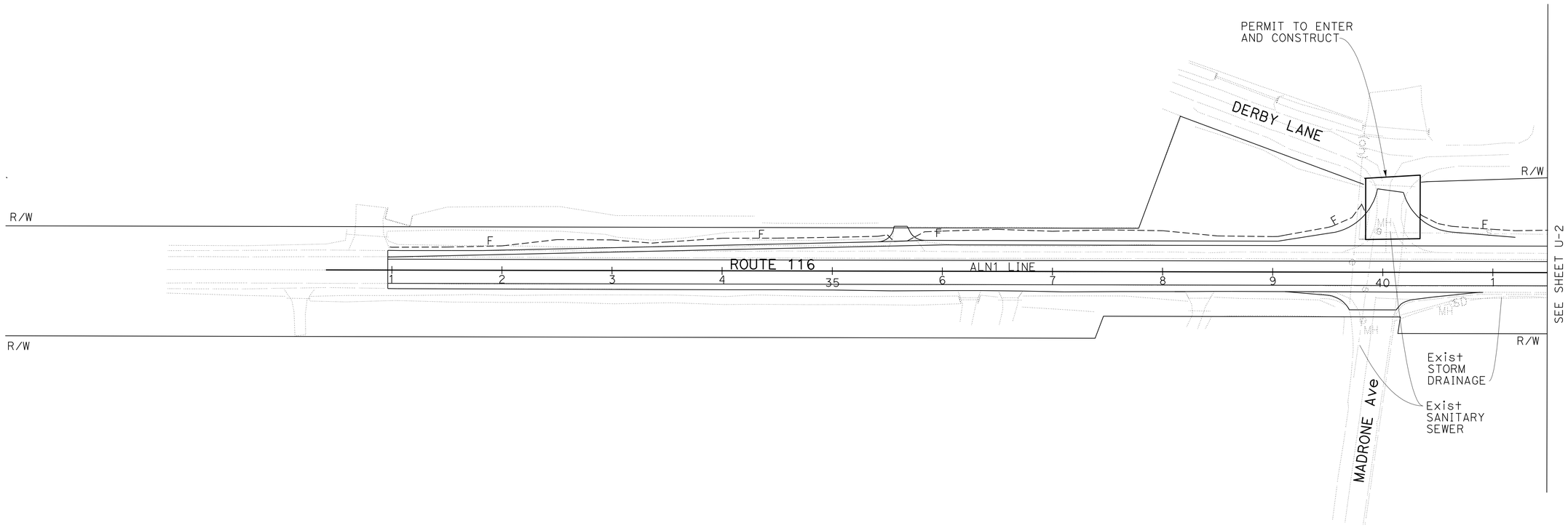

UTILITY PLAN

SCALE: 1" = 50'

U-1

APPROVED FOR UTILITY INFORMATION ONLY

STATE OF CALIFORNIA - DEPARTMENT OF TRANSPORTATION
Caltrans
DESIGN

FUNCTIONAL SUPERVISOR: MORTEZA AZIMI
CALCULATED-DESIGNED BY: PARI ABEDI
CHECKED BY: CALVIN TRAN
REVISED BY
DATE REVISED

LAST REVISION 02-22-12
DATE PLOTTED => 29-JUN-2012
TIME PLOTTED => 07:42

Dist	COUNTY	ROUTE	POST MILES TOTAL PROJECT	SHEET No.	TOTAL SHEETS
04	Son	116	34.1/34.5	17	45

Parirokh Abedi 03-26-12
REGISTERED CIVIL ENGINEER DATE

6-25-12
PLANS APPROVAL DATE

REGISTERED PROFESSIONAL ENGINEER
Parirokh Abedi
No. 36025
Exp. 6-30-12
CIVIL
STATE OF CALIFORNIA

THE STATE OF CALIFORNIA OR ITS OFFICERS OR AGENTS SHALL NOT BE RESPONSIBLE FOR THE ACCURACY OR COMPLETENESS OF SCANNED COPIES OF THIS PLAN SHEET.

NOTE:

FOR ACCURATE RIGHT OF WAY DATA, CONTACT RIGHT OF WAY ENGINEERING AT THE DISTRICT OFFICE.

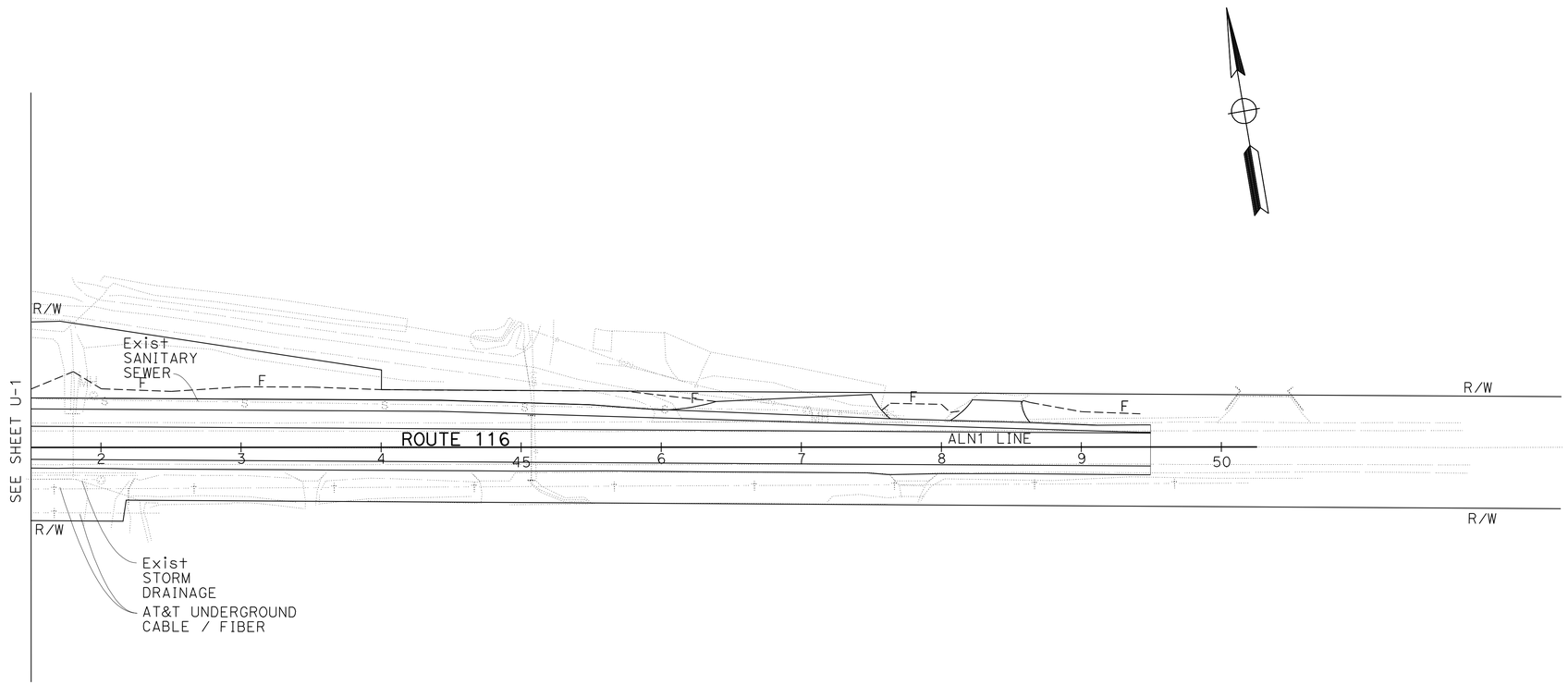

APPROVED FOR UTILITY WORK ONLY

FOR NOTES AND LEGEND, SEE SHEET U-1

UTILITY PLAN

SCALE: 1" = 50'

U-2

REVISED BY | DATE REVISED

CALCULATED-DESIGNED BY: CALVIN TRAN
CHECKED BY: PARI ABEDI

FUNCTIONAL SUPERVISOR: MORTEZA AZIMI

STATE OF CALIFORNIA - DEPARTMENT OF TRANSPORTATION
Caltrans
DESIGN

LAST REVISION 02-13-12 | DATE PLOTTED => 29-JUN-2012 | TIME PLOTTED => 07:02

Dist	COUNTY	ROUTE	POST MILES TOTAL PROJECT	SHEET No.	TOTAL SHEETS
04	Son	116	34.1/34.5	18	45

REGISTERED CIVIL ENGINEER 03-27-12 DATE

6-25-12
PLANS APPROVAL DATE

REGISTERED PROFESSIONAL ENGINEER Jerilyn L. Struven No. 49964 Exp. 12-31-12 CIVIL STATE OF CALIFORNIA

THE STATE OF CALIFORNIA OR ITS OFFICERS OR AGENTS SHALL NOT BE RESPONSIBLE FOR THE ACCURACY OR COMPLETENESS OF SCANNED COPIES OF THIS PLAN SHEET.

CONSTRUCTION AREA SIGNS

SIGN	SIGN CODE	MESSAGE	PANEL SIZE (Inches)	No. OF POSTS & SIZE (Inches) (EA)	No. of Signs
1	W20-1	ROAD WORK AHEAD	48 x 48	1-4 x 6	5
2	G20-2	END ROAD WORK	36 x 18	1-4 x 4	5

LEGEND:

CONSTRUCTION AREA SIGN

NOTES:

1. EXACT LOCATION AND POSITITON OF CONSTRUCTION AREA SIGNS TO BE DETERMINED BY THE ENGINEER.
2. CONSTRUCTION AREA SIGNS TO BE STATIONARY MOUNTED.

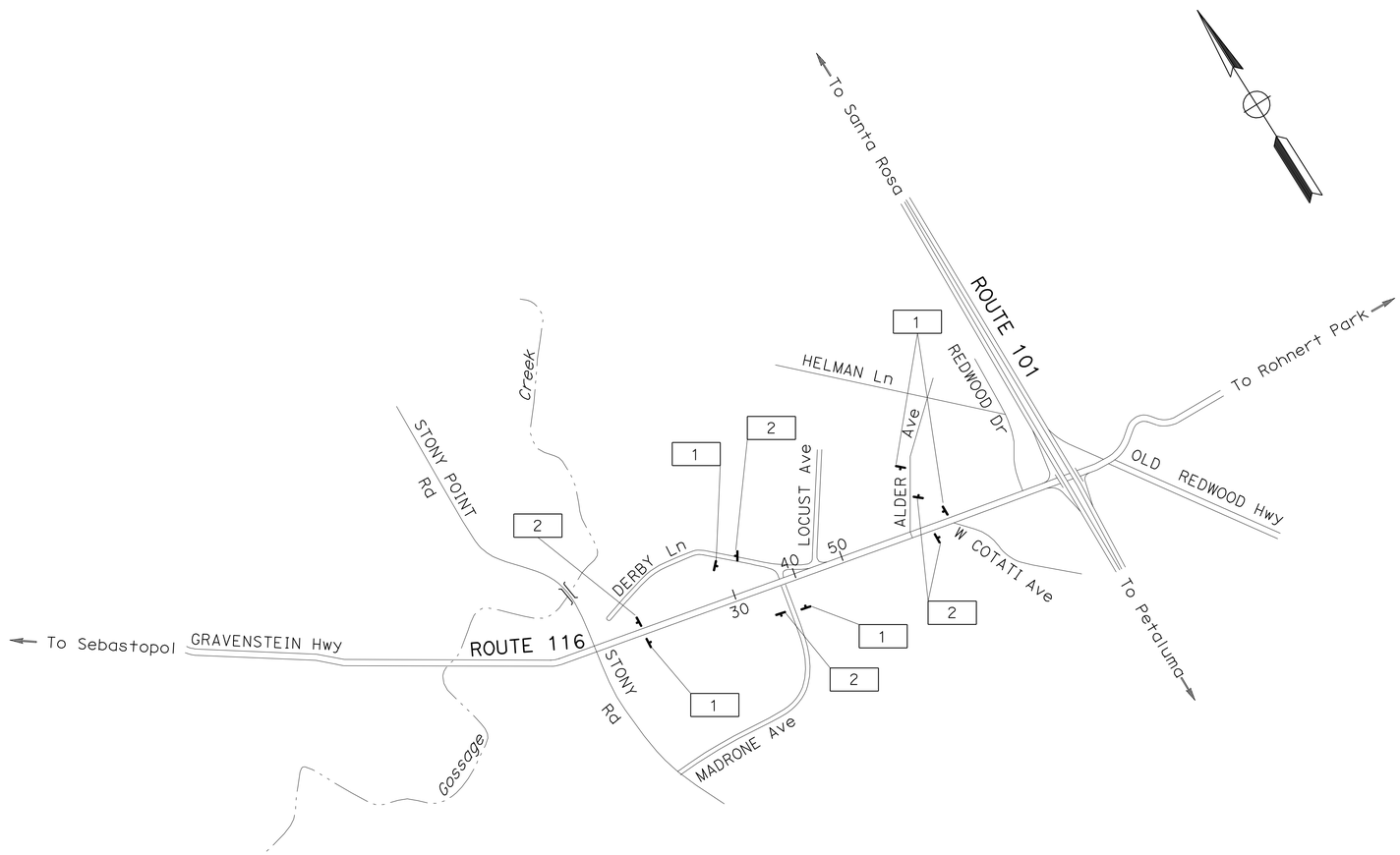

APPROVED FOR CONSTRUCTION AREA SIGN WORK ONLY

CONSTRUCTION AREA SIGNS

NO SCALE

CS-1

STATE OF CALIFORNIA - DEPARTMENT OF TRANSPORTATION
Caltrans
TRAFFIC

FUNCTIONAL SUPERVISOR: JERILYN L. STRUVEN
CALCULATED-DESIGNED BY: HERMINIO S. RUIDERA
CHECKED BY: JERILYN L. STRUVEN
REVISED BY
DATE REVISED

LAST REVISION 02-17-12 | DATE PLOTTED => 29-JUN-2012 | TIME PLOTTED => 07:02

Dist	COUNTY	ROUTE	POST MILES TOTAL PROJECT	SHEET No.	TOTAL SHEETS
04	Son	116	34.1/34.5	19	45

REGISTERED CIVIL ENGINEER 03-27-12 DATE

6-25-12
PLANS APPROVAL DATE

REGISTERED PROFESSIONAL ENGINEER Jerilyn L. Struven No. 49964 Exp. 12-31-12 CIVIL STATE OF CALIFORNIA

THE STATE OF CALIFORNIA OR ITS OFFICERS OR AGENTS SHALL NOT BE RESPONSIBLE FOR THE ACCURACY OR COMPLETENESS OF SCANNED COPIES OF THIS PLAN SHEET.

CONSTRUCTION AREA SIGNS

SIGN	SIGN CODE FEDERAL	SIGN CODE CALIFORNIA	MESSAGE	PANEL SIZE (Inches)	No. OF POSTS & SIZE (Inches) (EA)	No. of Signs
3	W20-2		DETOUR AHEAD	36 x 36	1-4 x 6	1
4		SC-3	↑ DETOUR	36 x 12	1-4 x 4	1
5	R3-1		(NO RIGHT TURN)	24 x 24	1-4 x 4	1
6	M4-10		DETOUR →	48 x 18	1-4 x 4	1
7	M4-8a		END DETOUR	24 x 18	1-4 x 4	1
A		SC6-4	ROAD CLOSED DATE _____ TIME _____	48 x 60	1-4 x 6	1

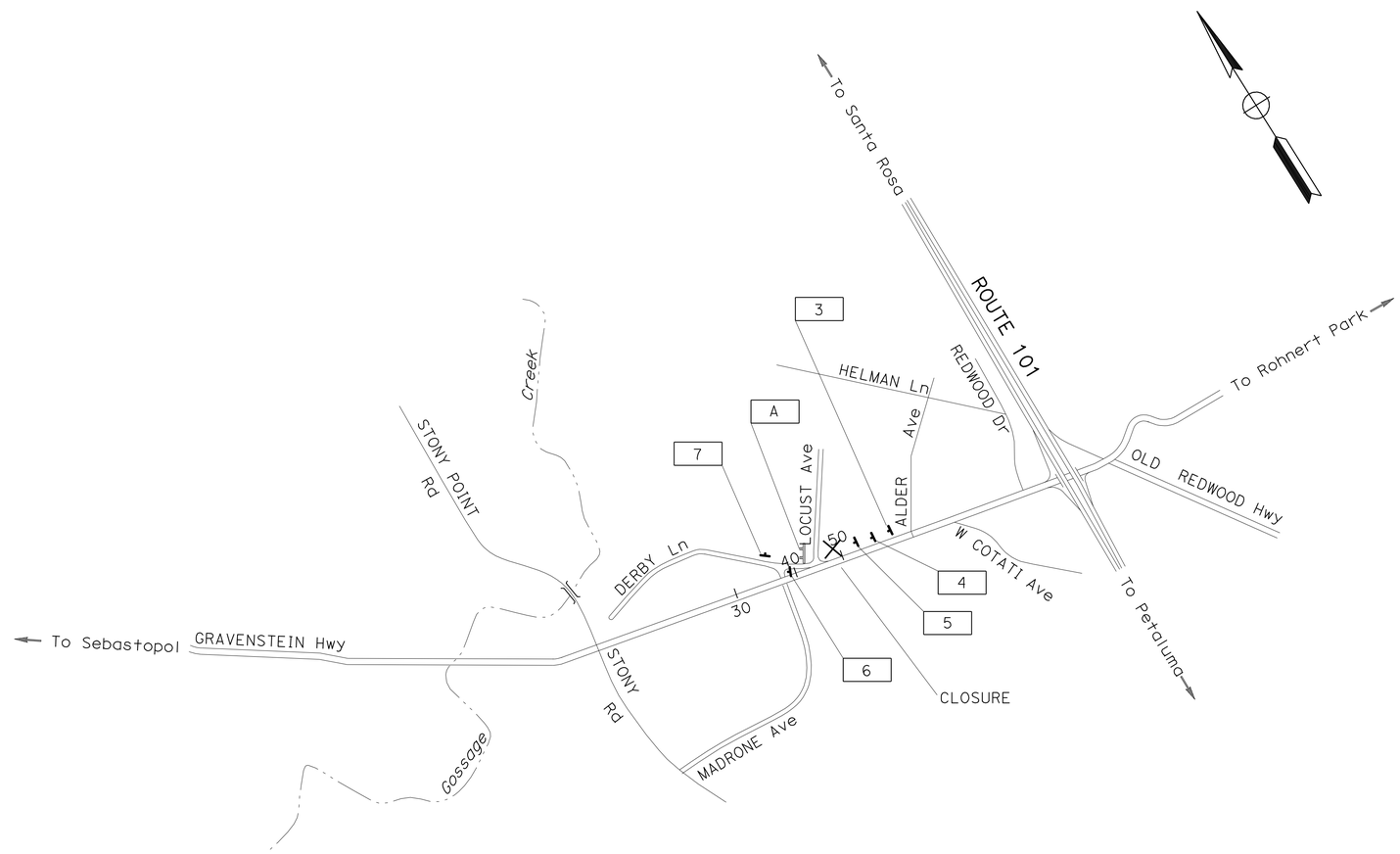

DETOUR PLAN
WB DERBY LANE
CLOSED

APPROVED FOR CONSTRUCTION AREA SIGN WORK ONLY

FOR NOTES AND LEGEND, SEE SHEET CS-1

CONSTRUCTION AREA SIGNS

NO SCALE

CS-2

STATE OF CALIFORNIA - DEPARTMENT OF TRANSPORTATION
Caltrans
TRAFFIC

FUNCTIONAL SUPERVISOR: JERILYN L. STRUVEN
CALCULATED-DESIGNED BY: HERMINIO S. RUIDERA
CHECKED BY: JERILYN L. STRUVEN
REVISED BY
DATE REVISED

LAST REVISION 03-22-12
DATE PLOTTED => 29-JUN-2012
TIME PLOTTED => 07:02

Dist	COUNTY	ROUTE	POST MILES TOTAL PROJECT	SHEET No.	TOTAL SHEETS
04	Son	116	34.1/34.5	20	45

Parirokl Abedi 03-26-12
REGISTERED CIVIL ENGINEER DATE

6-25-12
PLANS APPROVAL DATE

REGISTERED PROFESSIONAL ENGINEER Parirokl Abedi No. 36025 Exp 6-30-12 CIVIL STATE OF CALIFORNIA

THE STATE OF CALIFORNIA OR ITS OFFICERS OR AGENTS SHALL NOT BE RESPONSIBLE FOR THE ACCURACY OR COMPLETENESS OF SCANNED COPIES OF THIS PLAN SHEET.

NOTES:

1. FOR ACCURATE RIGHT OF WAY DATA, CONTACT RIGHT OF WAY ENGINEERING AT THE DISTRICT OFFICE.
2. ALL ACCESS TO PRIVATE PROPERTY TO REMAIN OPEN ALL THE TIME.
3. ALL POST MILE MARKERS TO BE PRESERVED & REINSTALLED.
4. EXACT LOCATION OF TRSF TO BE DETERMINED BY THE ENGINEER
5. IN INSTANCES WHERE THERE IS A SEPARATION OF LESS THAN 2'-0" BETWEEN THE BACK OF THE TEMPORARY RAILING (TYPE K) AND THE EDGE OF AN EXCAVATION, TEMPORARY RAILING SHALL BE STAKED AS FOLLOWS:
   - * A 1-INCH DIAMETER, 2-FOOT LONG STEEL STAKE SHALL BE DRIVEN THROUGH EACH OF THE FOUR SLOTTED STAKE HOLES IN EACH TEMPORARY RAILING SEGMENT.
   - * THE STAKES SHALL BE DRIVEN UNTIL THE TOPS ARE FLUSH WITH THE OUTER PROFILE OF THE TEMPORARY RAILING.
6. DELINEATION AS SHOWN OR AS DIRECTED BY THE ENGINEER.
7. CONSTRUCT MADRONE Ave WIDENING BEFORE CONSTRUCTING DERBY Ln INTERSECTION AND WIDENING FROM STATION 46+00 TO 49+10.

LEGEND:

- CONSTRUCT THIS STAGE
- Temp RAILING (TYPE K)
- BR <No.> BEGIN REMOVAL PAVEMENT DELINEATION
- ER <No.> END REMOVAL PAVEMENT DELINEATION
- BT <No.> BEGIN TEMPORARY TRAFFIC STRIPE (PAINT)
- ET <No.> END TEMPORARY TRAFFIC STRIPE (PAINT)
- TRSF TEMPORARY REINFORCED SILT FENCE
- CHANGE OF PAVEMENT DELINEATION DETAILS
- DIRECTION OF TRAFFIC

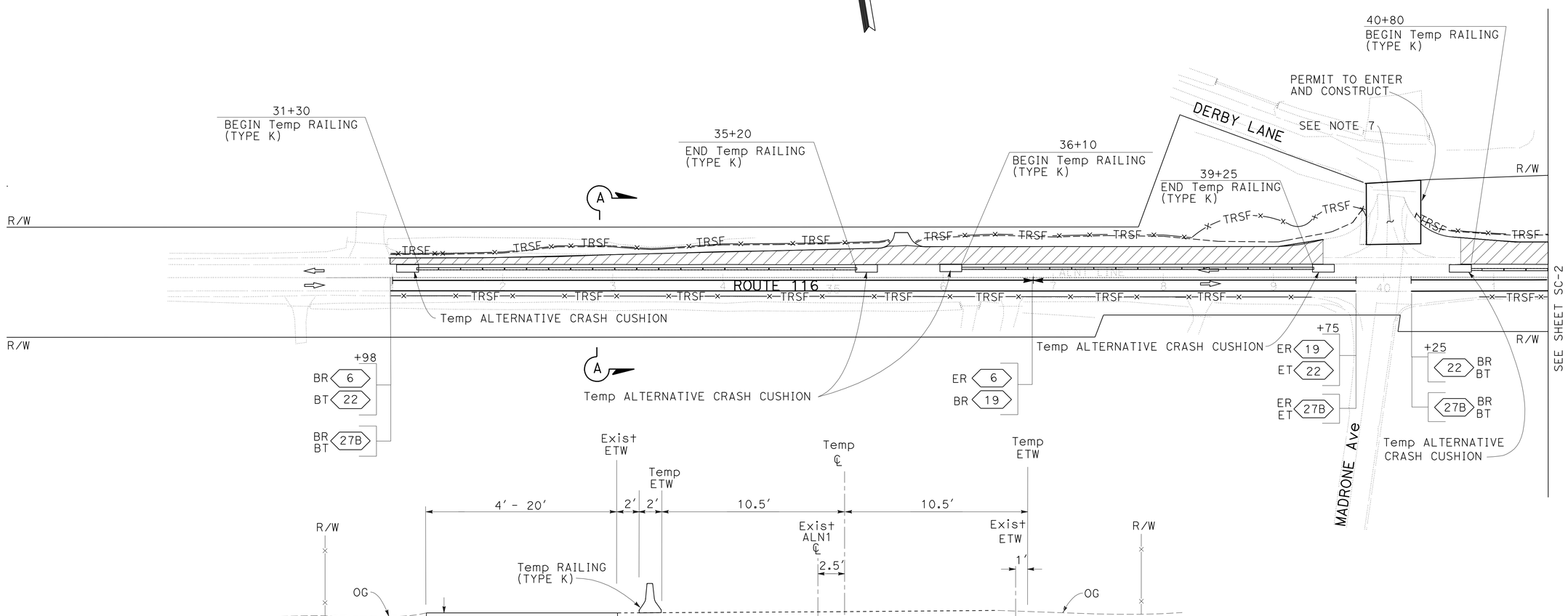

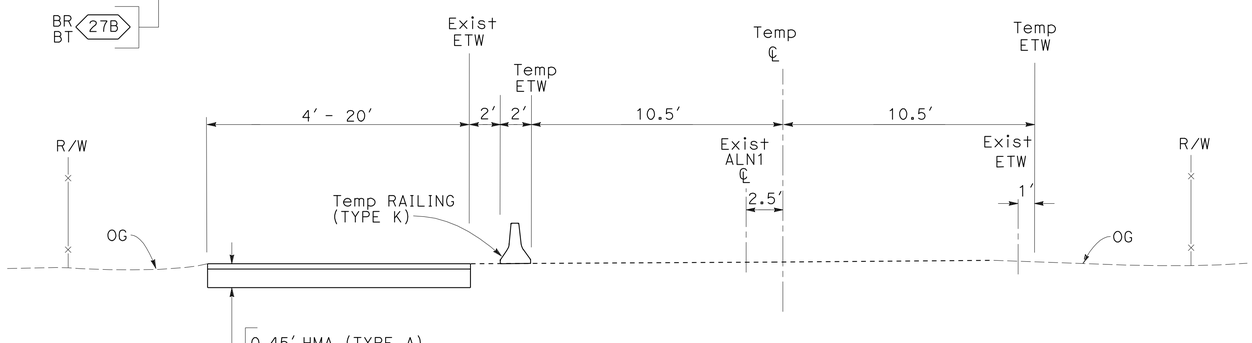

SECTION A-A
NO SCALE

STAGE CONSTRUCTION AND TRAFFIC HANDLING PLAN

SCALE: 1" = 50'

APPROVED FOR STAGE CONSTRUCTION WORK ONLY

SC-1

STATE OF CALIFORNIA - DEPARTMENT OF TRANSPORTATION
Caltrans® DESIGN
FUNCTIONAL SUPERVISOR: MORTEZA AZIMI
CALCULATED-DESIGNED BY: PARI ABEDI
CHECKED BY
REVISED BY
DATE REVISED

LAST REVISION 03-20-12 | DATE PLOTTED => 29-JUN-2012 | TIME PLOTTED => 07:18

Dist	COUNTY	ROUTE	POST MILES TOTAL PROJECT	SHEET No.	TOTAL SHEETS
04	Son	116	34.1/34.5	21	45

Parirokh Abedi 03-26-12
REGISTERED CIVIL ENGINEER DATE

6-25-12
PLANS APPROVAL DATE

REGISTERED PROFESSIONAL ENGINEER
Parirokh Abedi
No. 36025
Exp. 6-30-12
CIVIL
STATE OF CALIFORNIA

THE STATE OF CALIFORNIA OR ITS OFFICERS OR AGENTS SHALL NOT BE RESPONSIBLE FOR THE ACCURACY OR COMPLETENESS OF SCANNED COPIES OF THIS PLAN SHEET.

NOTE:

FOR ACCURATE RIGHT OF WAY DATA, CONTACT
RIGHT OF WAY ENGINEERING AT THE DISTRICT OFFICE.

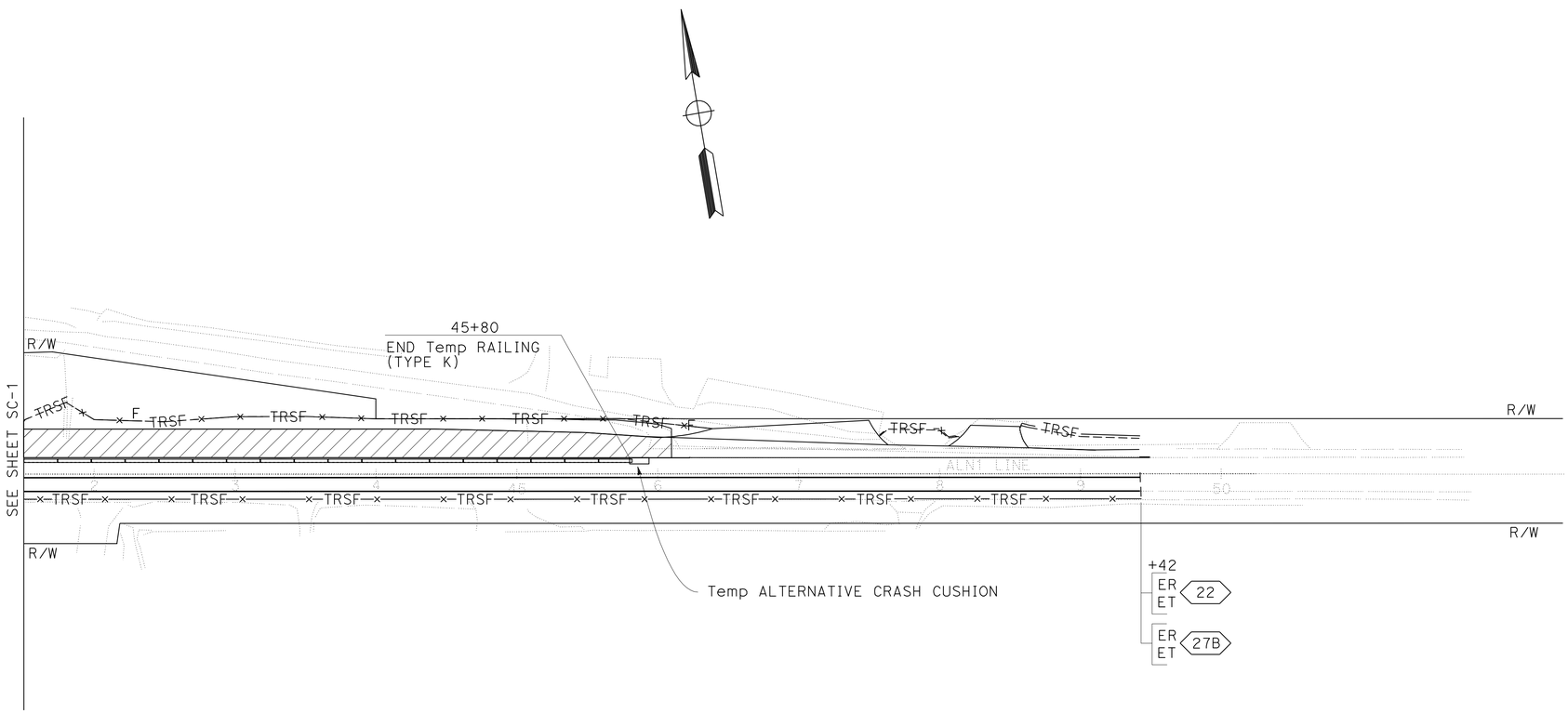

STAGE CONSTRUCTION AND TRAFFIC HANDLING PLAN

SCALE: 1" = 50'

APPROVED FOR STAGE CONSTRUCTION WORK ONLY

FOR NOTES AND LEGEND, SEE SHEET SC-1

SC-2

REVISED BY | DATE REVISED
CALCULATED-DESIGNED BY | CHECKED BY
CALVIN TRAN | PARI ABEDI
FUNCTIONAL SUPERVISOR
MORTEZA AZIMI
STATE OF CALIFORNIA - DEPARTMENT OF TRANSPORTATION
Caltrans
DESIGN

LAST REVISION 03-20-12 | DATE PLOTTED => 29-JUN-2012 | TIME PLOTTED => 07:18

Dist	COUNTY	ROUTE	POST MILES TOTAL PROJECT	SHEET No.	TOTAL SHEETS
04	Son	116	34.1/34.5	22	45

Parirokl Abedi 03-26-12
REGISTERED CIVIL ENGINEER DATE

6-25-12
PLANS APPROVAL DATE

REGISTERED PROFESSIONAL ENGINEER
Parirokl Abedi
No. 36025
Exp. 6-30-12
CIVIL
STATE OF CALIFORNIA

THE STATE OF CALIFORNIA OR ITS OFFICERS OR AGENTS SHALL NOT BE RESPONSIBLE FOR THE ACCURACY OR COMPLETENESS OF SCANNED COPIES OF THIS PLAN SHEET.

STAGE CONSTRUCTION QUANTITIES

SHEET No.	STATION	TEMPORARY RAILING (TYPE K)	TEMPORARY ALTERNATIVE CRASH CUSHION	TEMPORARY REINFORCED SILT FENCE
		LF	EA	LF
SC-1	ALN1 30+98 TO 41+50	935	5	2104
SC-2	ALN1 41+50 TO 49+42	430	1	1584
	TOTAL	1365	6	3688

REMOVE EXISTING PAVEMENT DELINEATION

STATION	REMOVE PAVEMENT MARKER	REMOVE YELLOW THERMOPLASTIC TRAFFIC STRIPE (HAZARDOUS WASTE)	REMOVE PAINTED PAVEMENT MARKING	REMOVE THERMOPLASTIC TRAFFIC STRIPE
	EA	LF	SQFT	LF
ALN1 30+98 TO 49+42	110	2930	72	1800

TEMPORARY PAVEMENT DELINEATION

STATION	TEMPORARY TRAFFIC STRIPE (PAINT)	TEMPORARY PAVEMENT MARKERS
	LF	EA
ALN1 30+98 TO 49+42	5390	152

STATE OF CALIFORNIA - DEPARTMENT OF TRANSPORTATION
DESIGN
Caltrans

FUNCTIONAL SUPERVISOR: MORTEZA AZIMI
CALCULATED-DESIGNED BY: CALVIN TRAN
CHECKED BY: PARI ABEDI
REVISED BY
DATE REVISED

LAST REVISION 03-20-12
DATE PLOTTED => 29-JUN-2012
TIME PLOTTED => 07:18

STAGE CONSTRUCTION QUANTITIES
SCQ-1

Dist	COUNTY	ROUTE	POST MILES TOTAL PROJECT	SHEET No.	TOTAL SHEETS
04	Son	116	34.1/34.5	23	45

Parirokh Abedi 03-26-12
REGISTERED CIVIL ENGINEER DATE

6-25-12
PLANS APPROVAL DATE

REGISTERED PROFESSIONAL ENGINEER
Parirokh Abedi
No. 36025
Exp. 6-30-12
CIVIL
STATE OF CALIFORNIA

THE STATE OF CALIFORNIA OR ITS OFFICERS OR AGENTS SHALL NOT BE RESPONSIBLE FOR THE ACCURACY OR COMPLETENESS OF SCANNED COPIES OF THIS PLAN SHEET.

NOTES:

1. FOR ACCURATE RIGHT OF WAY DATA, CONTACT RIGHT OF WAY ENGINEERING AT THE DISTRICT OFFICE.
2. ALL LANES 12′ WIDE UNLESS NOTED.
3. EDGELINE OFFSET 2′ FROM CENTERLINE.
4. DELINEATION AS SHOWN OR AS DIRECTED BY THE ENGINEER.

LEGEND:

(No.) PAVEMENT DELINEATION DETAIL

CHANGE OF PAVEMENT DELINEATION DETAIL

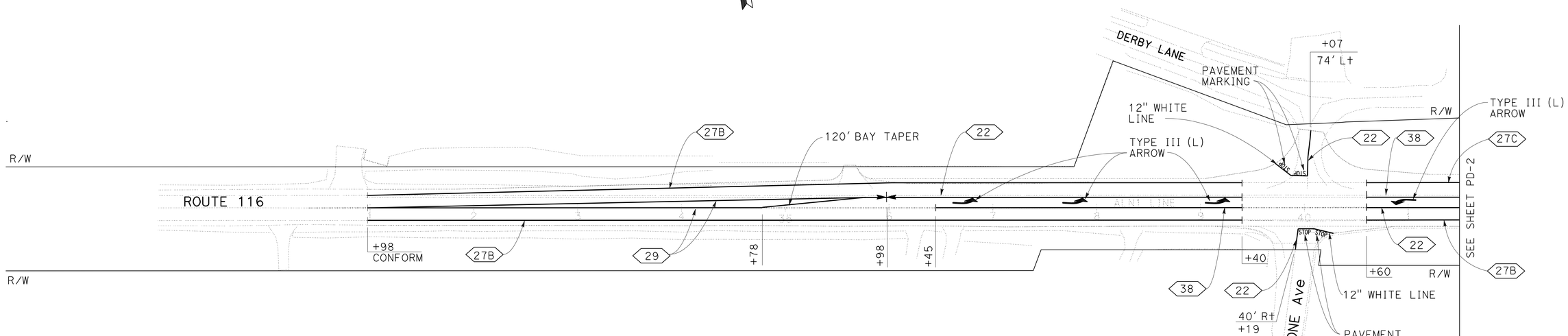

PAVEMENT DELINEATION PLAN

SCALE: 1" = 50′

APPROVED FOR PAVEMENT DELINEATION WORK ONLY

PD-1

REVISED BY | DATE REVISED
CALVIN TRAN | PARI ABEDI
CALCULATED-DESIGNED BY | CHECKED BY
FUNCTIONAL SUPERVISOR: MORTEZA AZIMI

STATE OF CALIFORNIA - DEPARTMENT OF TRANSPORTATION
Caltrans
TRAFFIC

LAST REVISION 03-14-12 | DATE PLOTTED => 29-JUN-2012 | TIME PLOTTED => 07:18

Dist	COUNTY	ROUTE	POST MILES TOTAL PROJECT	SHEET No.	TOTAL SHEETS
04	Son	116	34.1/34.5	24	45

Parirokh Abedi 03-26-12
REGISTERED CIVIL ENGINEER DATE

6-25-12
PLANS APPROVAL DATE

REGISTERED PROFESSIONAL ENGINEER
Parirokh Abedi
No. 36025
Exp. 6-30-12
CIVIL
STATE OF CALIFORNIA

THE STATE OF CALIFORNIA OR ITS OFFICERS OR AGENTS SHALL NOT BE RESPONSIBLE FOR THE ACCURACY OR COMPLETENESS OF SCANNED COPIES OF THIS PLAN SHEET.

NOTE:

FOR ACCURATE RIGHT OF WAY DATA, CONTACT
RIGHT OF WAY ENGINEERING AT THE DISTRICT OFFICE.

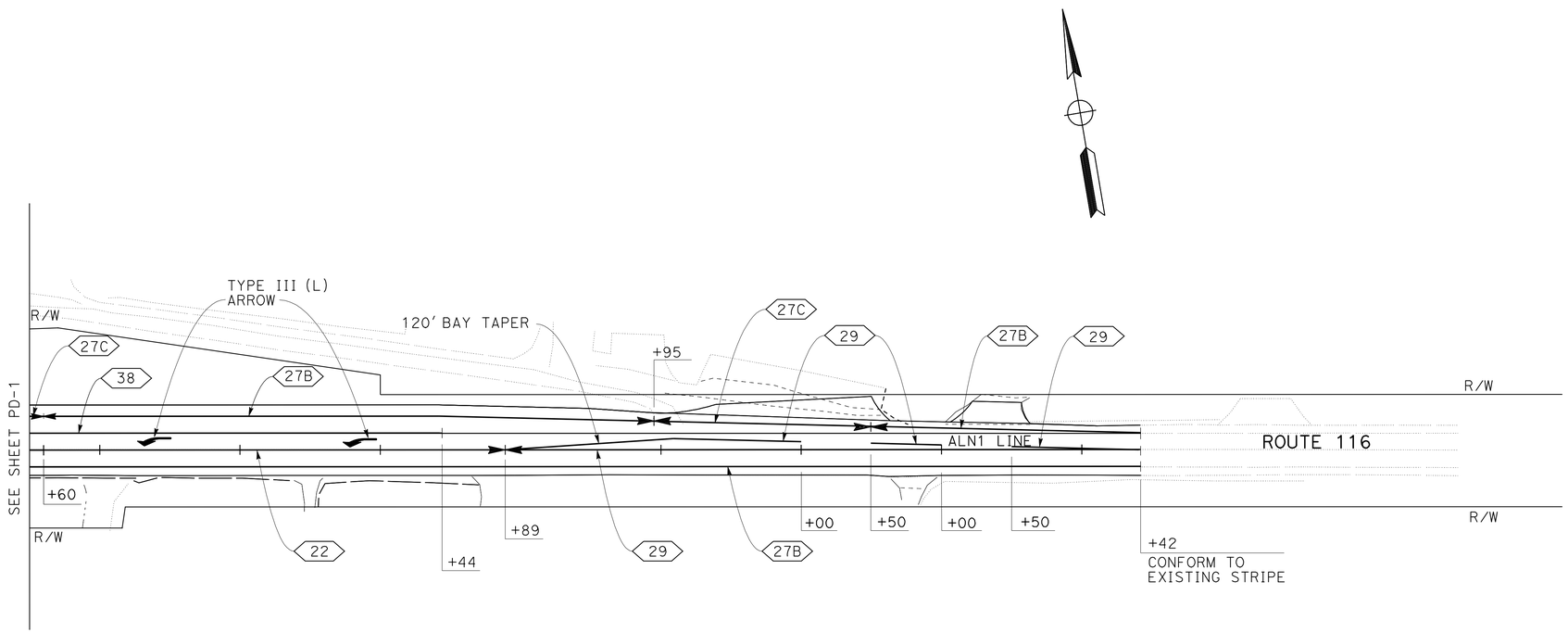

PAVEMENT DELINEATION PLAN

SCALE: 1" = 50'

APPROVED FOR PAVEMENT DELINEATION WORK ONLY

FOR NOTES AND LEGEND,
SEE SHEET PD-1

PD-2

STATE OF CALIFORNIA - DEPARTMENT OF TRANSPORTATION
Caltrans
TRAFFIC

FUNCTIONAL SUPERVISOR: MORTEZA AZIMI
CALCULATED-DESIGNED BY: PARI ABEDI
CHECKED BY
REVISED BY
DATE REVISED

LAST REVISION 02-03-12
DATE PLOTTED => 29-JUN-2012
TIME PLOTTED => 07:34

Dist	COUNTY	ROUTE	POST MILES TOTAL PROJECT	SHEET No.	TOTAL SHEETS
04	Son	116	34.1/34.5	25	45

Parirokh Abedi 03-26-12
REGISTERED CIVIL ENGINEER DATE

6-25-12
PLANS APPROVAL DATE

REGISTERED PROFESSIONAL ENGINEER
Parirokh Abedi
No. 36025
Exp. 6-30-12
CIVIL
STATE OF CALIFORNIA

THE STATE OF CALIFORNIA OR ITS OFFICERS OR AGENTS SHALL NOT BE RESPONSIBLE FOR THE ACCURACY OR COMPLETENESS OF SCANNED COPIES OF THIS PLAN SHEET.

TRAFFIC STRIPES, PAVEMENT MARKINGS AND PAVEMENT MARKERS

SHEET No.	STATION	DETAIL No.	PAVEMENT MARKER		THERMOPLASTIC TRAFFIC STRIPE			THERMOPLASTIC PAVEMENT MARKING		
			RETRO-REFLECTIVE (TYPE D)	RETRO-REFLECTIVE (TYPE G)	4" WHITE	4" YELLOW	8" WHITE	TYPE III (L) ARROW	STOP	12" WHITE LINE
			EA		LF			SQFT		
PD-1	ALN1 30+98 TO 41+50	27B			1774					
	ALN1 30+98 TO 35+55	29	44			2000				
	ALN1 35+98 TO 41+50	22	38			870				
	ALN1 36+45 TO 41+50	38		18			385			
	ALN1 36+45 TO 41+50							84	168	141
	ALN1 40+60 TO 41+50	27C			90					
PD-2	ALN1 41+50 TO 49+42	27B			1424					
	ALN1 44+89 TO 49+42	29	40			1612				
	ALN1 41+50 TO 44+89	22	30			680				
	ALN1 41+50 TO 44+44	38		14			294			
	ALN1 41+50 TO 47+50	27C			160					
	ALN1 41+50 TO 44+44							84		
SUBTOTAL			152	32	3448	5162	679	252	88	141
TOTAL			152	32	8610		679	481		

PAVEMENT DELINEATION QUANTITIES

PDQ-1

STATE OF CALIFORNIA - DEPARTMENT OF TRANSPORTATION
Caltrans® TRAFFIC

FUNCTIONAL SUPERVISOR: MORTEZA AZIMI
CALCULATED-DESIGNED BY: PARI ABEDI
CHECKED BY
REVISED BY
DATE REVISED

LAST REVISION 01-23-12
DATE PLOTTED => 29-JUN-2012
TIME PLOTTED => 07:34

Dist	COUNTY	ROUTE	POST MILES TOTAL PROJECT	SHEET No.	TOTAL SHEETS
04	Son	116	34.1/34.5	26	45

Parirokh Abedi 03-26-12
REGISTERED CIVIL ENGINEER DATE

6-25-12
PLANS APPROVAL DATE

REGISTERED PROFESSIONAL ENGINEER
Parirokh Abedi
No. 36025
Exp. 6-30-12
CIVIL
STATE OF CALIFORNIA

THE STATE OF CALIFORNIA OR ITS OFFICERS OR AGENTS SHALL NOT BE RESPONSIBLE FOR THE ACCURACY OR COMPLETENESS OF SCANNED COPIES OF THIS PLAN SHEET.

ROADWAY QUANTITIES

STATION	HOT MIX ASPHALT (TYPE A)	COLD PLANE ASPHALT CONCRETE PAVEMENT	TACK COAT	CLASS 2 AGGREGATE BASE	CRACK TREATMENT
	TON	SQYD	TON	CY	LNMI
ALN1 30+98 TO 49+42	2030	646	4	2600	0.4
TOTAL	2030	646	4	2600	0.4

EARTHWORK

STATION	ROADWAY EXCAVATION	EMBANKMENT (N)*
	CY	
ALN1 30+98 TO 49+42	2248	470
TOTAL	2248	470

(N) = NOT A SEPARATE PAY ITEM, FOR INFORMATION ONLY

REPLACE AC SURFACING

DIRECTION	STATION	WIDTH (N)*	DEPTH (N)*	VOLUME
		FT		CY
WB	ALN1 30+98 TO 34+00	4	0.45	20
EB	ALN1 32+50 TO 33+50	4	0.45	7
EB	ALN1 35+50 TO 36+00	4	0.45	3
EB	ALN1 36+30 TO 36+80	4	0.45	3
EB	ALN1 37+50 TO 38+00	4	0.45	3
TOTAL				37

ADJUST MANHOLE TO GRADE

SHEET NUMBER	ADJUST MH TO GRADE
	EA
L-1	1
L-2	2
TOTAL	3

SUMMARY OF QUANTITIES

Q-1

STATE OF CALIFORNIA - DEPARTMENT OF TRANSPORTATION
Caltrans
TRAFFIC

FUNCTIONAL SUPERVISOR: MORTEZA AZIMI
CALCULATED-DESIGNED BY: CALVIN TRAN
CHECKED BY: PARI ABEDI
REVISED BY
DATE REVISED

LAST REVISION 04-03-12
DATE PLOTTED => 29-JUN-2012
TIME PLOTTED => 07:34

Dist	COUNTY	ROUTE	POST MILES TOTAL PROJECT	SHEET No.	TOTAL SHEETS
04	Son	116	34.1/34.5	27	45

REGISTERED CIVIL ENGINEER 03-27-12 DATE

6-25-12
PLANS APPROVAL DATE

REGISTERED PROFESSIONAL ENGINEER Jerilyn L. Struven No. 49964 Exp. 12-31-12 CIVIL STATE OF CALIFORNIA

THE STATE OF CALIFORNIA OR ITS OFFICERS OR AGENTS SHALL NOT BE RESPONSIBLE FOR THE ACCURACY OR COMPLETENESS OF SCANNED COPIES OF THIS PLAN SHEET.

NOTES:

1. EXACT LOCATION AND POSITION OF ROADSIDE SIGNS AND CONSTRUCTION AREA SIGNS TO BE DETERMINED BY THE ENGINEER.

LEGEND:

- (No.) ROADSIDE SIGN NUMBER
- ■ SALVAGE ROADSIDE SIGN
- ▲ RELOCATE ROADSIDE SIGN
- ✳ ROADSIDE SIGN/OVERHEAD SIGN TO REMAIN

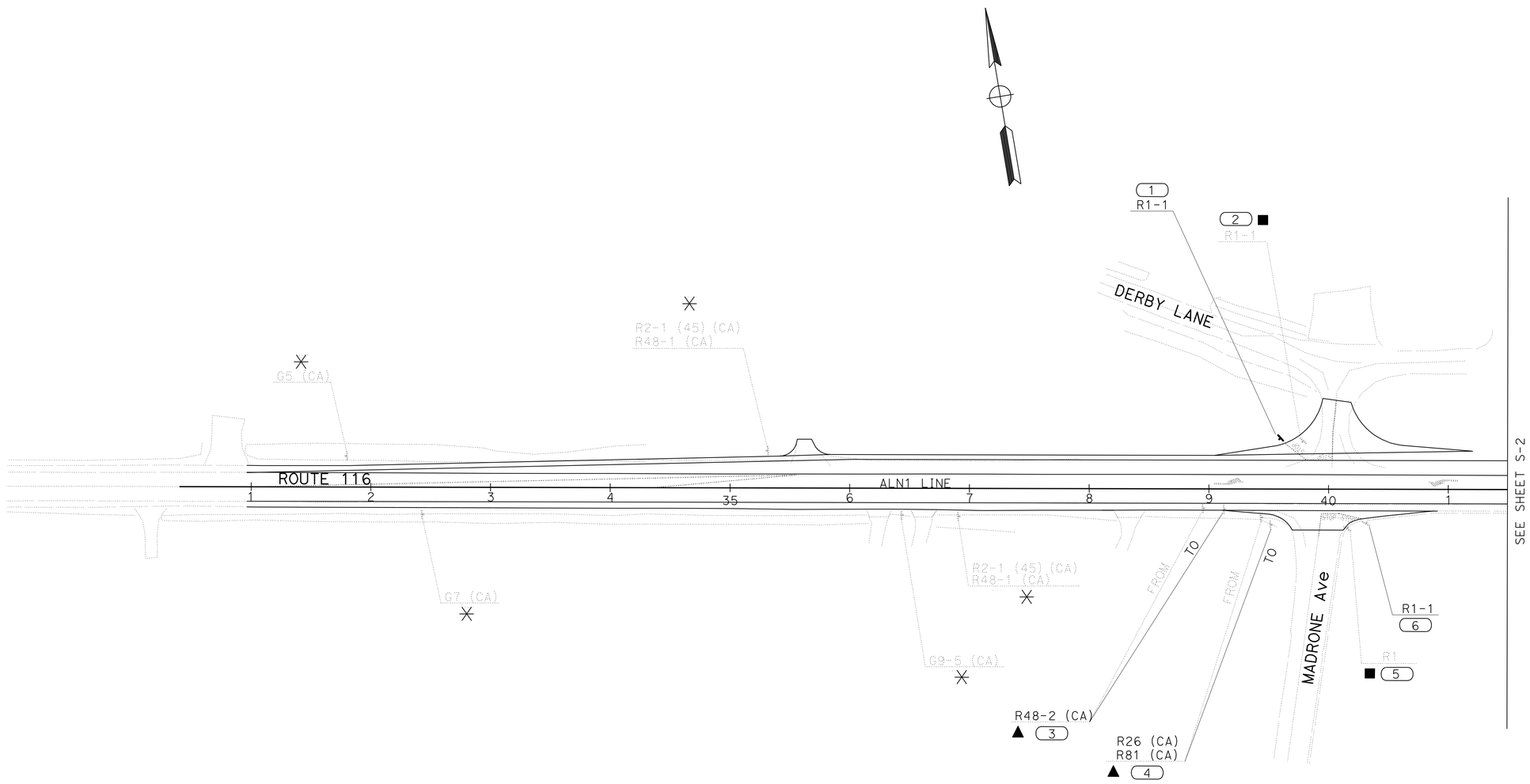

SIGN PLAN
NO SCALE

APPROVED FOR SIGN WORK ONLY

S-1

STATE OF CALIFORNIA - DEPARTMENT OF TRANSPORTATION
Caltrans
TRAFFIC

FUNCTIONAL SUPERVISOR: JERILYN L. STRUVEN
CALCULATED-DESIGNED BY: HERMINIO S. RUIDERA
CHECKED BY: JERILYN L. STRUVEN
REVISED BY
DATE REVISED

LAST REVISION 12-06-11
DATE PLOTTED => 29-JUN-2012
TIME PLOTTED => 07:34

Dist	COUNTY	ROUTE	POST MILES TOTAL PROJECT	SHEET No.	TOTAL SHEETS
04	Son	116	34.1/34.5	28	45

REGISTERED CIVIL ENGINEER 03-27-12 DATE

6-25-12
PLANS APPROVAL DATE

REGISTERED PROFESSIONAL ENGINEER
Jerilyn L. Struven
No. 49964
Exp. 12-31-12
CIVIL
STATE OF CALIFORNIA

THE STATE OF CALIFORNIA OR ITS OFFICERS OR AGENTS SHALL NOT BE RESPONSIBLE FOR THE ACCURACY OR COMPLETENESS OF SCANNED COPIES OF THIS PLAN SHEET.

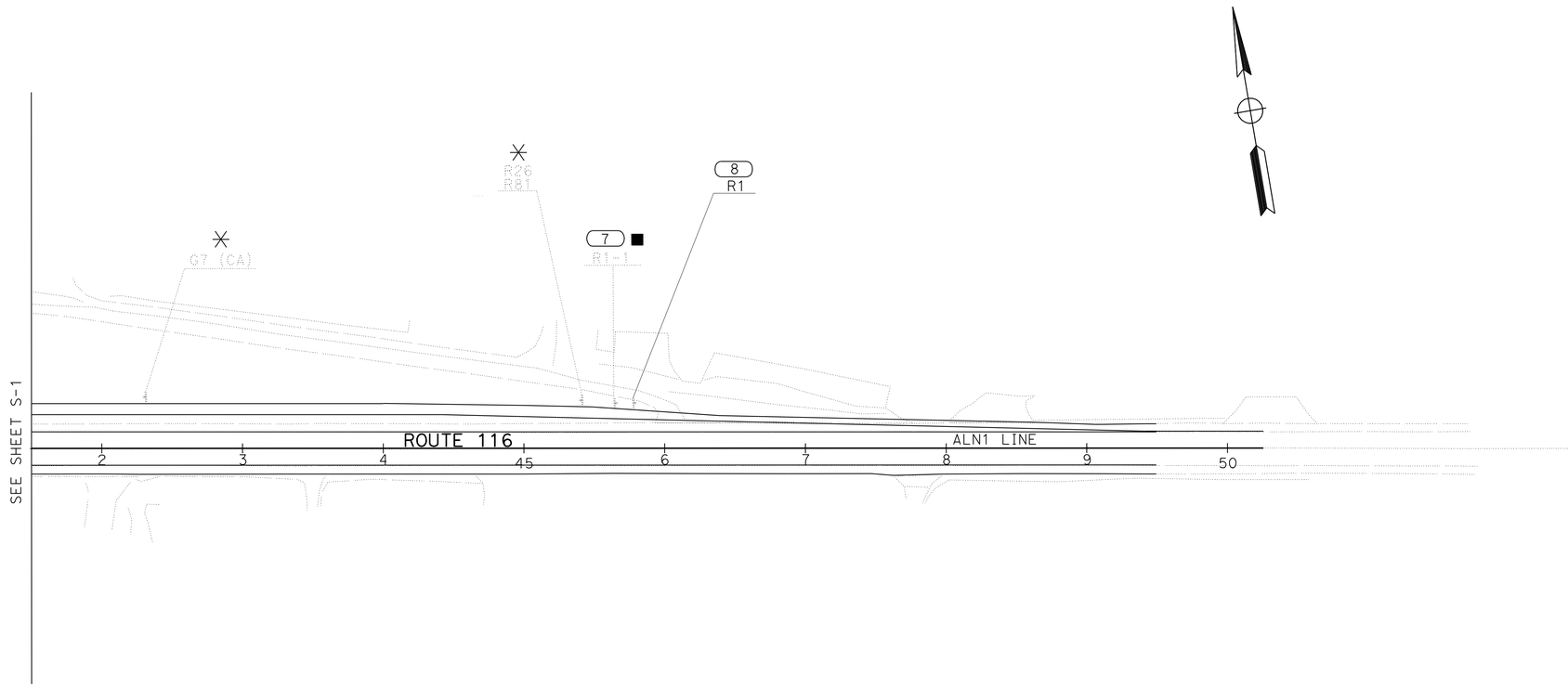

SIGN PLAN
NO SCALE

APPROVED FOR SIGN WORK ONLY

FOR NOTES AND LEGEND, SEE SHEET S-1

S-2

STATE OF CALIFORNIA - DEPARTMENT OF TRANSPORTATION
Caltrans
TRAFFIC

FUNCTIONAL SUPERVISOR: JERILYN L.STRUVEN
CALCULATED-DESIGNED BY: HERMINIO S. RUIDERA
CHECKED BY: JERILYN L.STRUVEN
REVISED BY
DATE REVISED

LAST REVISION 12-06-11
DATE PLOTTED => 29-JUN-2012
TIME PLOTTED => 07:48

Dist	COUNTY	ROUTE	POST MILES TOTAL PROJECT	SHEET No.	TOTAL SHEETS
04	Son	116	34.1/34.5	29	45

REGISTERED CIVIL ENGINEER 03-27-12 DATE

6-25-12
PLANS APPROVAL DATE

REGISTERED PROFESSIONAL ENGINEER Jerilyn L. Struven No. 49964 Exp. 12-31-12 CIVIL STATE OF CALIFORNIA

THE STATE OF CALIFORNIA OR ITS OFFICERS OR AGENTS SHALL NOT BE RESPONSIBLE FOR THE ACCURACY OR COMPLETENESS OF SCANNED COPIES OF THIS PLAN SHEET.

ROADSIDE SIGN QUANTITIES

SIGN No.	CODE	PANEL SIZE	POST SIZE AND LENGTH		ROADSIDE SIGN ONE POST	REMOVE ROADSIDE SIGN (WOOD POST)	RELOCATE ROADSIDE SIGN (ONE POST)
			4" X 4"	4" X 6"	EA	EA	EA
1	R1-1	30"	13'-0"		1		
2	R1-1					1	
3	R48-2 (CA)						1
4	R26 (CA) R81 (CA)						1
5	R1-1						
6	R1-1	30"	13'-0"		1		
7	R1-1					1	
8	R1-1	30"	13'-0"		1		
				TOTAL	3	3	2

SIGN PANEL SUMMARY

SIGN No.	SIGN CODE	SIGN SIZE (INCHES)	SIGN AREA (SQ FT)	SINGLED FACED	DOUBLED FACED	BACKGROUND		LEGEND		GRAPHIC FILM		UNFRAMED ALUMINUM
						SHEETING COLOR	RETROREFLECTIVE ASTM TYPE	SHEETING COLOR	RETROREFLECTIVE ASTM TYPE	STANDARD	PREMIUM	0.063"
												SQ FT
1	R1-1	30"	5.18	X		RED	III	WHITE	PLAIN		X	5.18
6	R1-1	30"	5.18	X		RED	III	WHITE	PLAIN		X	5.18
8	R1-1	30"	5.18	X		RED	III	WHITE	PLAIN		X	5.18
											TOTAL	15.54

SIGN QUANTITIES

SQ-1

STATE OF CALIFORNIA - DEPARTMENT OF TRANSPORTATION
Caltrans
TRAFFIC

FUNCTIONAL SUPERVISOR: JERILYN L. STRUVEN
CALCULATED-DESIGNED BY: HERMINIO S. RUIDERA
CHECKED BY: JERILYN L. STRUVEN
REVISED BY
DATE REVISED

LAST REVISION 03-22-12
DATE PLOTTED => 29-JUN-2012
TIME PLOTTED => 07:48

Dist	COUNTY	ROUTE	POST MILES TOTAL PROJECT	SHEET No.	TOTAL SHEETS
04	Son	116	34.1/34.5	30	45

LICENSED LANDSCAPE ARCHITECT

6-25-12
PLANS APPROVAL DATE

LICENSED LANDSCAPE ARCHITECT MARTIN A. HOGAN No. 4604 Signature 3-31-14 Renewal Date 6-30-12 Date STATE OF CALIFORNIA

THE STATE OF CALIFORNIA OR ITS OFFICERS OR AGENTS SHALL NOT BE RESPONSIBLE FOR THE ACCURACY OR COMPLETENESS OF SCANNED COPIES OF THIS PLAN SHEET.

NOTES:

1. FOR ACCURATE RIGHT OF WAY DATA, CONTACT RIGHT OF WAY ENGINEERING AT THE DISTRICT OFFICE.
2. EXACT LOCATION OF TRSF TO BE DETERMINED BY THE ENGINEER
3. UTILITIES SHOWN ARE EXISTING AND THEIR LOCATIONS ARE APPROXIMATE AND SHALL BE VERIFIED BY THE CONTRACTOR.

LEGEND:

- TRSF -x- TEMPORARY REINFORCED SILT FENCE
⇨ DIRECTION OF TRAFFIC

UTILITIES	EXISTING UTILITIES	OWNERSHIP
ELECTRICAL (OH)	(OH)	PG&E

ABBREVIATION:

TRWA TIME RELEASE WATER ASSEMBLY

PLANT LIST AND PLANTING SPECIFICATIONS

PLANT GROUP	PLANT No.	SYMBOL	BOTANICAL NAME	COMMON NAME	SIZE	QUANTITY EACH	HOLE SIZE (INCH) Dia	HOLE SIZE (INCH) DEPTH	BASIN TYPE	TRWA ① ④	SOIL AMEND ①	COMMERCIAL FERTILIZER ① PLANTING	COMMERCIAL FERTILIZER ① PLT ESTB	BASIN MULCH (CF)	STAKING	PLANTING LIMITS MINIMUM DISTANCE (Ft) FROM TRVD WAY	PVMT	FENCE	WALL	PAVED DITCH	EARTH DITCH	ON CENTER (Ft)	REMARKS
U	1	⊙	QUERCUS LOBATA	VALLEY OAK	No.15	3	24	36	II	5	3.0 CF	4 Pkt	1.0 Oz	2.0 CF	④	30	--	20	20	20	22	--	TREE

APPLICABLE WHEN CIRCLED:

① - QUANTITIES SHOWN ARE "PER PLANT" UNLESS SHOWN AS SQFT OR SQYD APPLICATION RATES
2 - BASIN MULCH IS INCLUDED WITH MULCH QUANTITIES SHOWN ON PLANTING PLAN
3 - SUFFICIENT TO RECEIVE ROOT BALL AND AMENDMENTS IF REQUIRED
④ - SEE DETAIL
5 - SEE SPECIAL PROVISIONS
6 - SEE STANDARD SPECIFICATIONS
7 - AS SHOWN ON PLANS
8 - UNLESS OTHERWISE SHOWN ON PLANS
9 - FOLIAGE PROTECTOR REQUIRED
10 - ROOT PROTECTOR REQUIRED
11 - ROOT BARRIER REQUIRED
12 - STATE-FURNISHED

NOTE:
UNDERLINED PORTIONS OF BOTANICAL NAME INDICATE ABBREVIATIONS USED ON PLANTING PLANS.

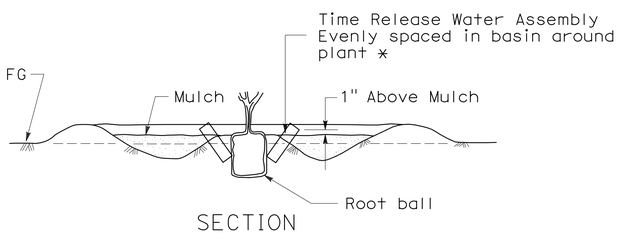

SECTION
(Flat Area)

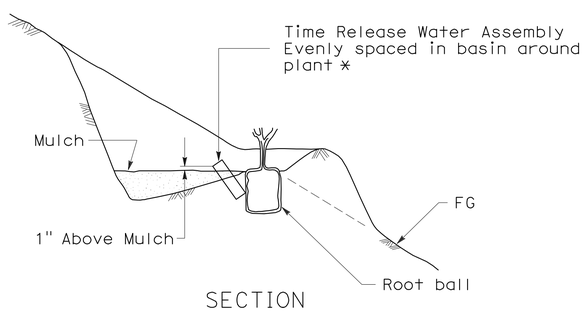

SECTION
(Slope Area)

* Install Time Release Water Assembly with bottom in direct contact with the root ball

TIME RELEASE WATER ASSEMBLY

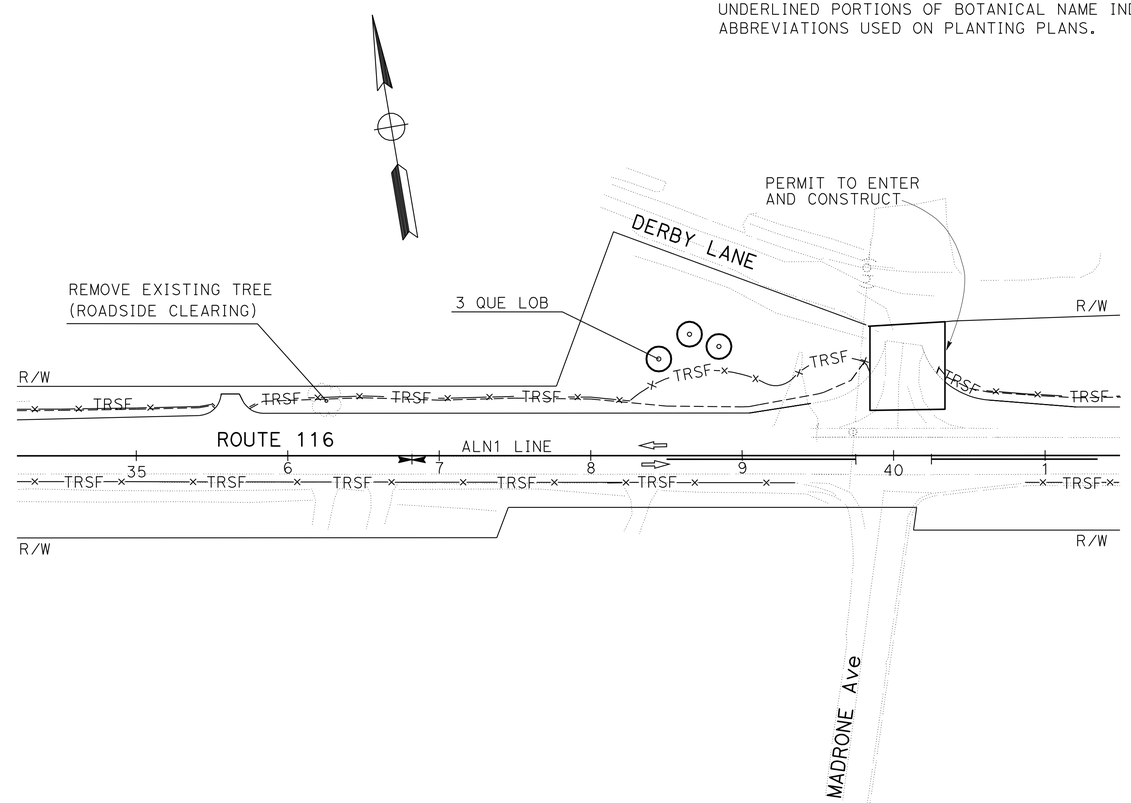

PLANTING PLAN AND PLANT LIST

SCALE: 1" = 50'

PP-1

APPROVED FOR PLANTING WORK ONLY

STATE OF CALIFORNIA - DEPARTMENT OF TRANSPORTATION
LANDSCAPE ARCHITECTURE
FUNCTIONAL SUPERVISOR: MARTIN A. HOGAN
CALCULATED-DESIGNED BY
CHECKED BY
REVISED BY
DATE REVISED
ANTHONY MASSARWEH

LAST REVISION 04-25-12
DATE PLOTTED => 29-JUN-2012
TIME PLOTTED => 07:48

DIST	COUNTY	ROUTE	POST MILES TOTAL PROJECT	SHEET NO.	TOTAL SHEETS
04	Son	116	34.1/34.5	31	45

REGISTERED CIVIL ENGINEER

November 17, 2006
PLANS APPROVAL DATE

REGISTERED PROFESSIONAL ENGINEER Dallas Forester No. C37765 Exp. 12-31-06 CIVIL STATE OF CALIFORNIA

The State of California or its officers or agents shall not be responsible for the accuracy or completeness of electronic copies of this plan sheet.

To accompany plans dated 6-25-12

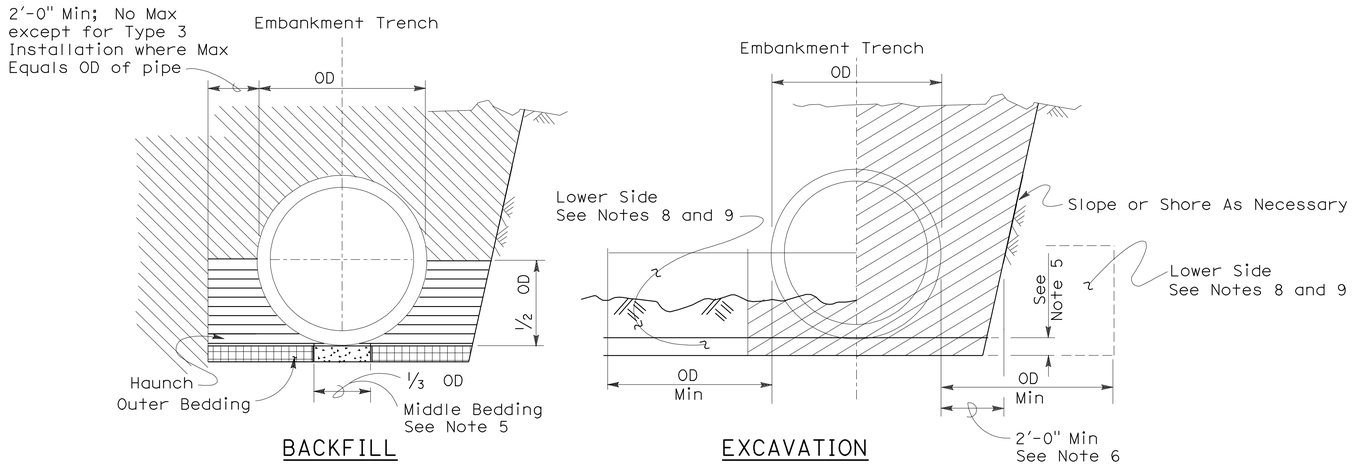

Roadway Embankment

Structure Backfill (Culvert) See Note 6

Structure Backfill (Culvert) See Note 6

Loose Backfill

Excavation Structure (Culvert)

TYPE 1 INSTALLATION:

The haunch and outer bedding shall be compacted to a minimum 90 percent relative compaction. In addition, the minimum sand equivalent in these areas shall be 30 and the maximum percentage passing the 75 μm sieve size shall be 12.

TYPE 2 INSTALLATION:

The haunch and outer bedding shall be compacted to a minimum 90 percent relative compaction. In addition, the minimum sand equivalent in these areas shall be 25.

TYPE 3 INSTALLATION:

The haunch and outer bedding shall be compacted to a minimum 85 percent relative compaction. 90 percent relative compaction will be required where the fill over the pipe is less than 4'-0" or 1/2 OD.

INSTALLATION TYPE 1

MINIMUM CLASS AND D-LOAD	COVER	
	108" Dia AND SMALLER	OVER 108" Dia
Class II 1000D	14.9'	12.9'
Class III 1350D	15.0' - 20.9'	13.0' - 18.9'
Class III Special 1700D	21.0' - 26.9'	19.0' - 24.9'
Class IV 2000D	27.0' - 31.9'	25.0' - 29.9'
Class IV Special 2500D	32.0' - 40.9'	30.0' - 38.9'
Class V 3000D	41.0' - 49.9'	39.0' - 46.9'
Class V Special 3600D	50.0' - 59.0'	47.0' - 58.0'

INSTALLATION TYPE 2

MINIMUM CLASS AND D-LOAD	COVER
Class II 1000D	9.9'
Class III 1350D	10.0'- 14.9'
Class III Special 1700D	15.0' - 19.9'
Class IV 2000D	20.0' - 24.9'
Class IV Special 2500D	25.0' - 31.9'
Class V 3000D	32.0' - 38.9'
Class V Special 3600D	39.0' - 47.0'

INSTALLATION TYPE 3

MINIMUM CLASS AND D-LOAD	COVER	
	48" Dia AND SMALLER	OVER 48" Dia
Class II 1000D	7.9'	5.9'
Class III 1350D	8.0' - 10.9'	6.0' - 8.9'
Class III Special 1700D	11.0' - 14.9'	9.0' - 12.9'
Class IV 2000D	15.0' - 17.9'	13.0' - 15.9'
Class IV Special 2500D	18.0' - 21.9'	16.0' - 19.9'
Class V 3000D	22.0' - 26.9'	20.0' - 24.9'
Class V Special 3600D	30.0' - 33.0'	25.0' - 31.0'

NOTES:

1. Unless otherwise shown on the plans or specified in the special provision, the Contractor shall have the option of selecting the class of RCP and the type of installation to be used, provided the height of cover does not exceed the value shown for the RCP selected.
   Example: 24" RCP culvert with maximum cover of 19'-0" the options are:
   a) Class III or stronger with Installation Type 1.
   b) Class III Special or stronger with Installation Type 2.
   c) Class IV Special or stronger with Installation Type 3.
   Cover is defined as the maximum vertical distance from top of the pipe to finished grade within the length of any given culvert.
2. The class of RCP and Installation Type selected shall be the same throughout the length of any given culvert.
3. The "length of any culvert" is defined as the culvert between:
   a) Successive drainage structure (inlets, junction boxes, headwalls, etc.).
   b) A drainage structure and the inlet or outlet end of the culvert.
   c) The inlet and outlet end of the culvert when there are no intervening drainage structures.
4. Oval and arch shaped RCP shall not be used.
5. 1/25 OD Min, not less than 3".
6. Slurry cement backfill may be substituted for backfill in the outer bedding and haunch areas. If slurry is used the outer and middle beddings shall be omitted. Prior to installation the soil under the middle 1/3 of the outside diameter of the pipe shall be softened by scarifying or other means to a minimum depth of 1/25 OD, but not less than 3". Where slurry cement backfill is used clear distance to trench wall may be reduced as set forth in Section 19-3.062 of the Standard Specifications.
7. Backfill shall be placed full width of excavation except where dimensions are shown for backfill width or thickness. Dimensions shown are minimums.
8. Lower side shall be suitable material as determined by the Engineer. Otherwise it shall be considered unsuitable as set forth in Section 19-2.02 of the Standard Specifications. See Note 9.
9. Where the pipe is placed in a trench, if the trench walls are sloped at 5 vertical to 1 horizontal or steeper for at least 90 percent of the trench height or up to not less than 12" from the grading plane, the firmness of the soil in the lower side need not be considered.
10. Non-reinforced precast concrete pipe sizes 3'-0" or smaller may be placed under installation Types 1, 2 or 3.

STATE OF CALIFORNIA
DEPARTMENT OF TRANSPORTATION

EXCAVATION AND BACKFILL CONCRETE PIPE CULVERTS

NO SCALE

RSP A62DA DATED NOVEMBER 17, 2006 SUPERSEDES STANDARD PLAN A62DA DATED MAY 1, 2006 - PAGE 20 OF THE STANDARD PLANS BOOK DATED MAY 2006.

REVISED STANDARD PLAN RSP A62DA

2006 REVISED STANDARD PLAN RSP A62DA

10-26-06

DIST	COUNTY	ROUTE	POST MILES TOTAL PROJECT	SHEET NO.	TOTAL SHEETS
04	Son	116	34.1/34.5	32	45

Robert B Schott
LICENSED LANDSCAPE ARCHITECT

April 3, 2009
PLANS APPROVAL DATE

The State of California or its officers or agents shall not be responsible for the accuracy or completeness of electronic copies of this plan sheet.

LICENSED LANDSCAPE ARCHITECT
Robert B. Schott 3025
Signature
11-30-10
Renewal Date
2-25-09
Date
STATE OF CALIFORNIA

To accompany plans dated 6-25-12

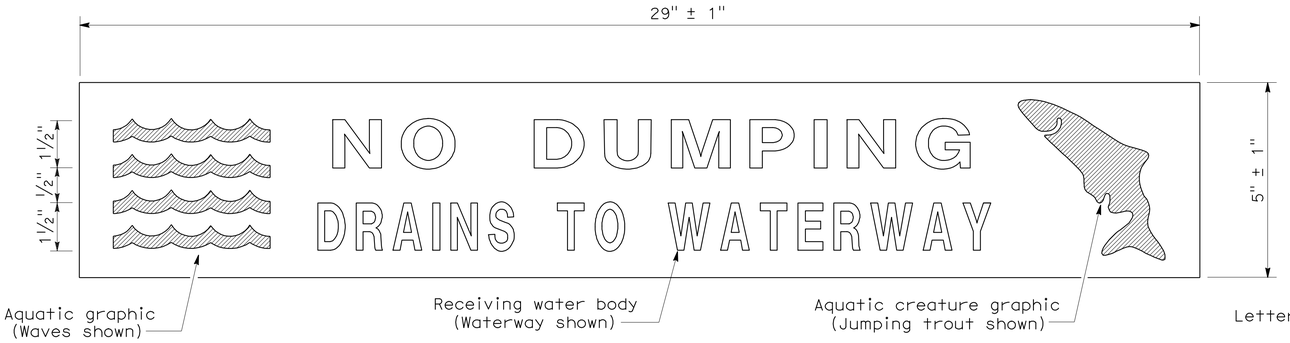

PLAN
DRAINAGE INLET MARKER
(PREFABRICATED THERMOPLASTIC)

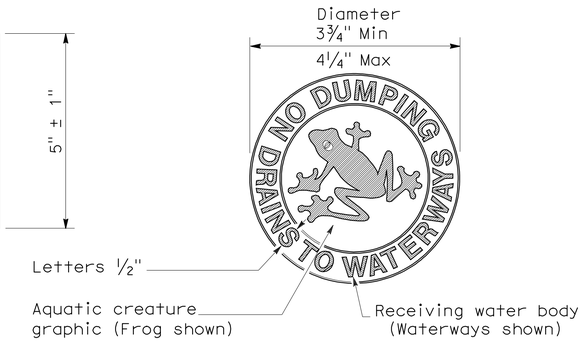

PLAN
DRAINAGE INLET MARKER
(MEDALLION)

PLAN
DRAINAGE INLET MARKER
(STAMPED CONCRETE IMPRINT)

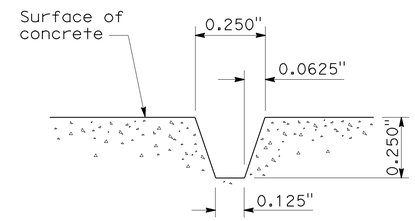

SECTION A-A
STAMPED CONCRETE
IMPRINT DETAIL

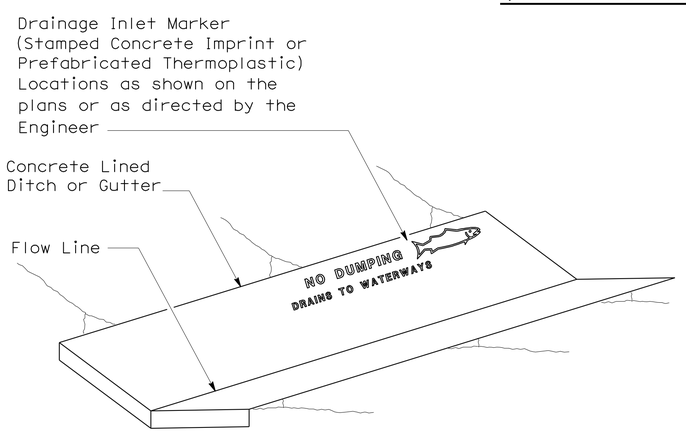

PERSPECTIVE
DRAINAGE INLET MARKER ON
CONCRETE LINED DITCH

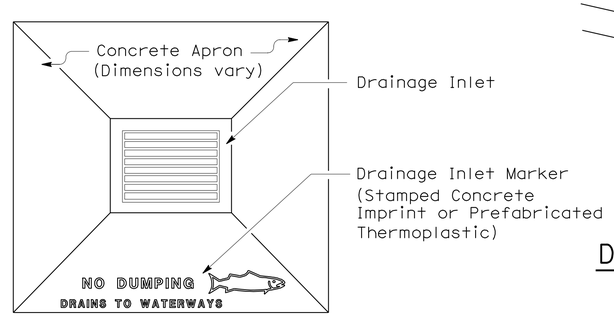

PLAN
DRAINAGE INLET MARKER ON
DRAINAGE INLET APRON

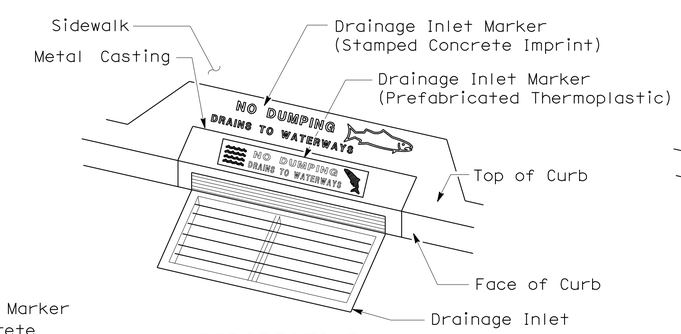

PERSPECTIVE
DRAINAGE INLET MARKER ON
DRAINAGE INLET

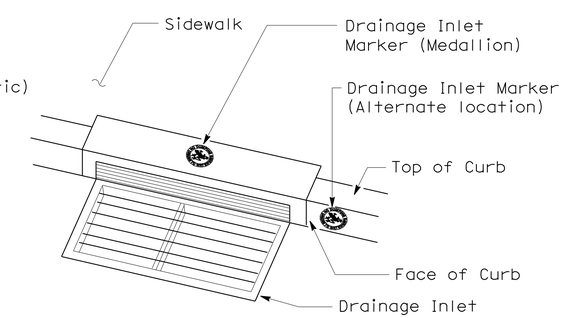

PERSPECTIVE
DRAINAGE INLET MARKER (MEDALLION)
ON DRAINAGE INLET

STATE OF CALIFORNIA
DEPARTMENT OF TRANSPORTATION

DRAINAGE INLET MARKERS

NO SCALE

NSP D71 DATED APRIL 3, 2009 SUPPLEMENTS
THE STANDARD PLANS BOOK DATED MAY 2006.

NEW STANDARD PLAN NSP D71

2006 NEW STANDARD PLAN NSP D71

7-24-08

DIST	COUNTY	ROUTE	POST MILES TOTAL PROJECT	SHEET NO.	TOTAL SHEETS
04	Son	116	34.1/34.5	33	45

LICENSED LANDSCAPE ARCHITECT

April 3, 2009
PLANS APPROVAL DATE

The State of California or its officers or agents shall not be responsible for the accuracy or completeness of electronic copies of this plan sheet.

LICENSED LANDSCAPE ARCHITECT — Gregory A. Balzer 3598 — Signature — 02-28-11 Renewal Date — 03-04-09 Date — STATE OF CALIFORNIA

To accompany plans dated 6-25-12

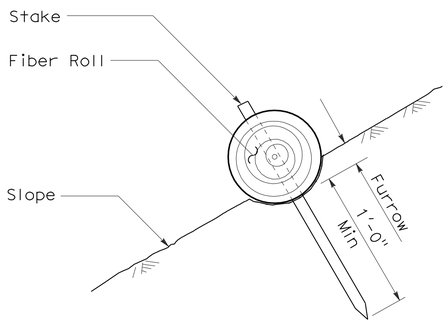

SECTION

FIBER ROLL (TYPE 1)

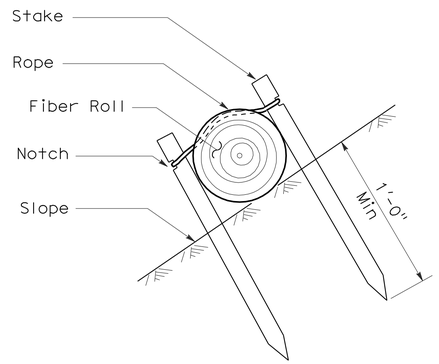

SECTION

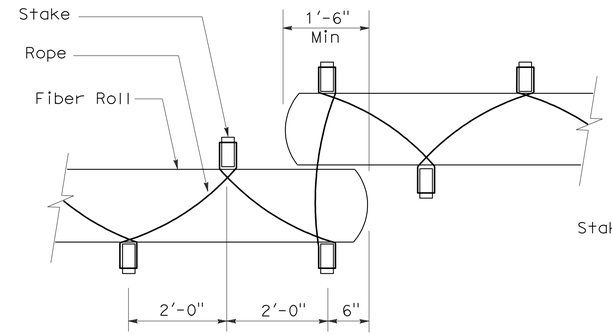

PLAN

FIBER ROLL (TYPE 2)

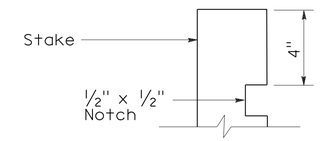

ELEVATION

STAKE NOTCH DETAIL

NOTES:

1. Fiber roll spacing varies depending upon slope inclination.
2. Installations shown in the perspectives are for slope inclination of 10:1 and steeper.

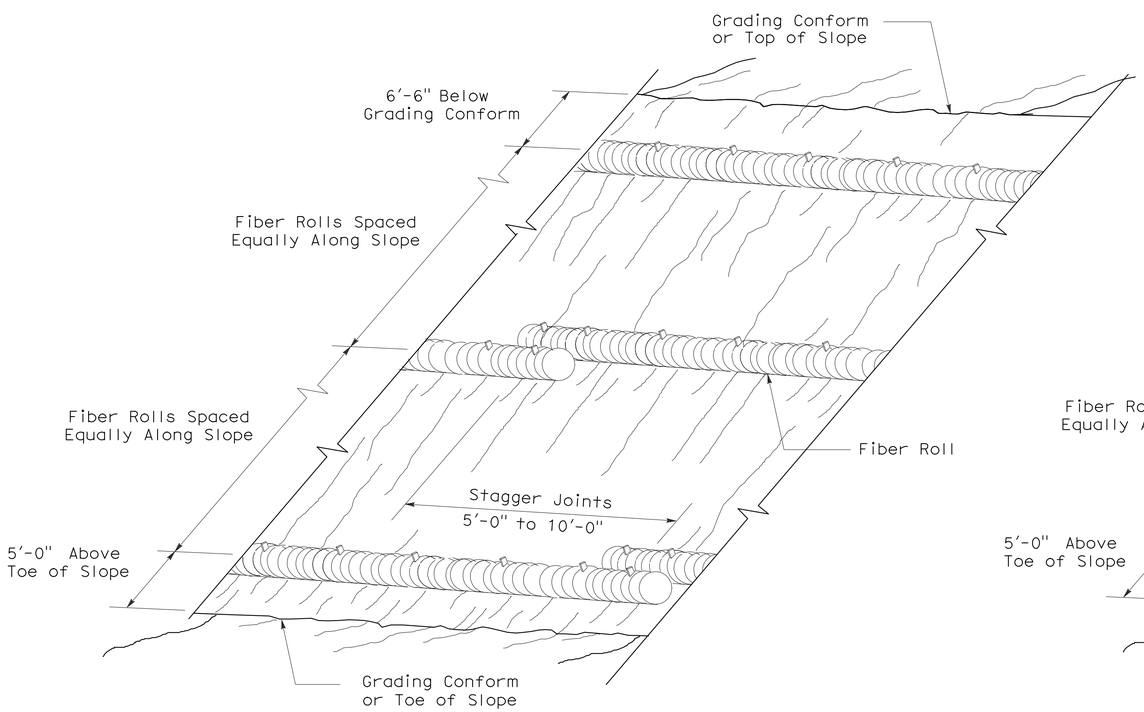

PERSPECTIVE

FIBER ROLL (TYPE 1)

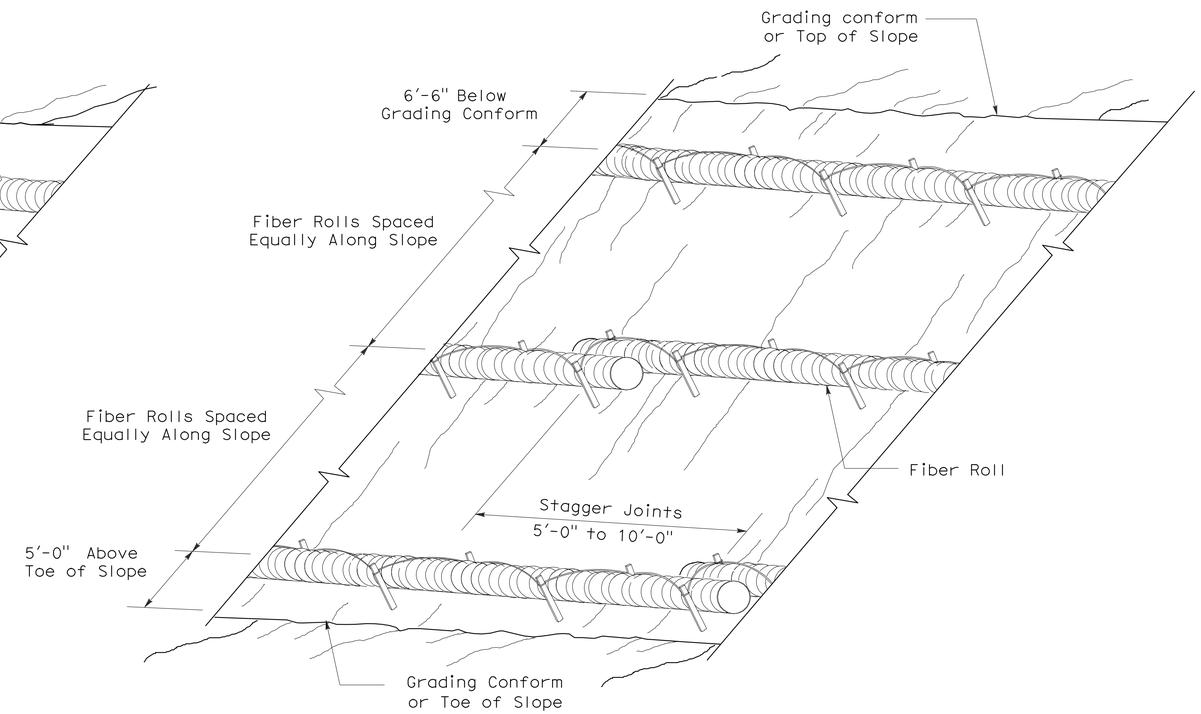

PERSPECTIVE

FIBER ROLL (TYPE 2)

STATE OF CALIFORNIA
DEPARTMENT OF TRANSPORTATION

EROSION CONTROL DETAILS (FIBER ROLL)

NO SCALE

RNSP H51 DATED APRIL 3, 2009 SUPERSEDES NSP H51 DATED DECEMBER 1, 2006 THAT SUPPLEMENTS THE STANDARD PLANS BOOK DATED MAY 2006.

REVISED NEW STANDARD PLAN RNSP H51

2006 REVISED NEW STANDARD PLAN RNSP H51

DIST	COUNTY	ROUTE	POST MILES TOTAL PROJECT	SHEET NO.	TOTAL SHEETS
04	Son	116	34.1/34.5	34	45

LICENSED LANDSCAPE ARCHITECT

June 5, 2009
PLANS APPROVAL DATE

The State of California or its officers or agents shall not be responsible for the accuracy or completeness of electronic copies of this plan sheet.

LICENSED LANDSCAPE ARCHITECT — Gregory A. Balzer 2572 — 6-9-09 Signature — 2-28-11 Renewal Date — 5-14-09 Date — STATE OF CALIFORNIA

To accompany plans dated 6-25-12

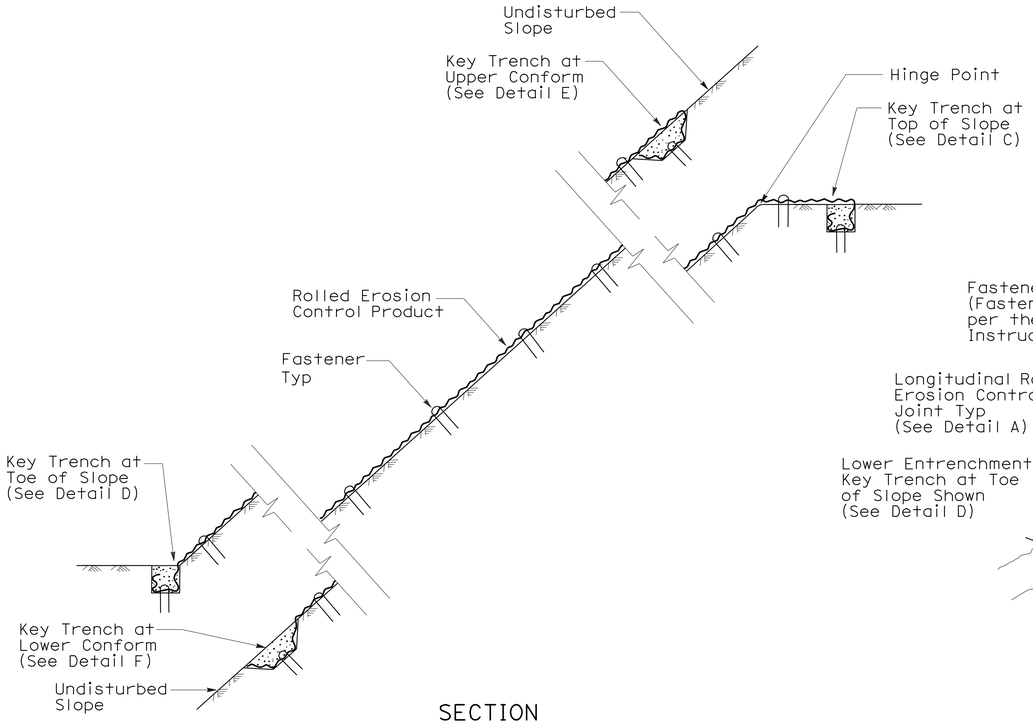

SECTION

ROLLED EROSION CONTROL PRODUCT ON SLOPE WITH VARIOUS KEY ENTRENCHMENTS

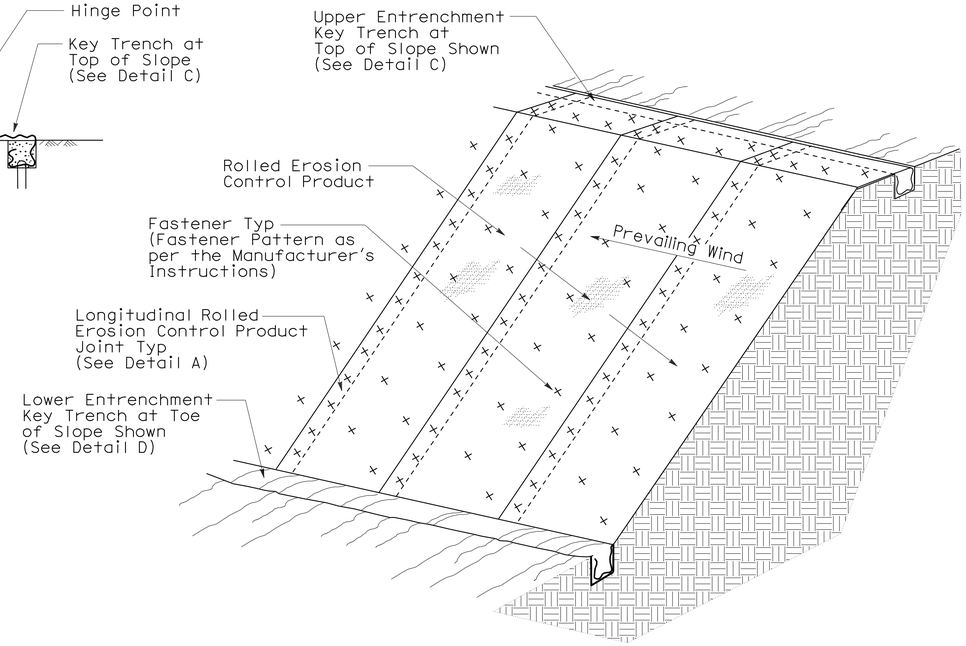

ISOMETRIC

ROLLED EROSION CONTROL PRODUCT ON SLOPE

NOTE:

1. Fiber Roll/Compost Sock shown for reference purposes only.
2. If transverse rolled erosion control product joints are required on slopes, see Detail B.

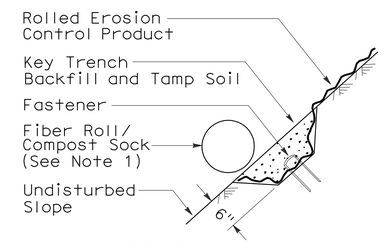

SECTION

DETAIL F
KEY TRENCH AT LOWER CONFORM

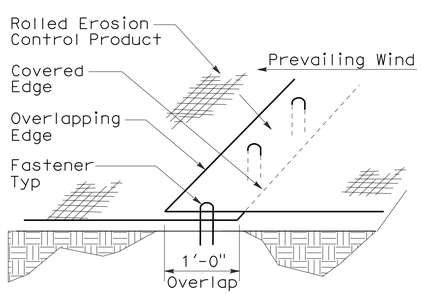

PERSPECTIVE

DETAIL A
LONGITUDINAL ROLLED EROSION CONTROL PRODUCT JOINT

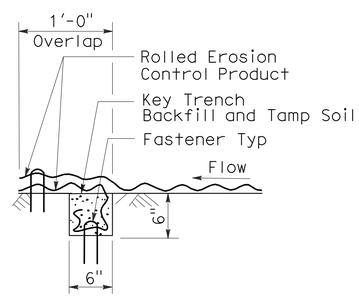

SECTION

DETAIL B
TRANSVERSE ROLLED EROSION CONTROL PRODUCT JOINT

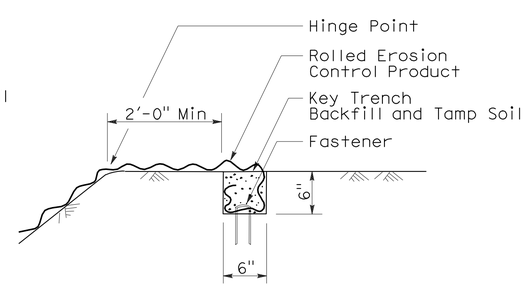

SECTION

DETAIL C
KEY TRENCH AT TOP OF SLOPE

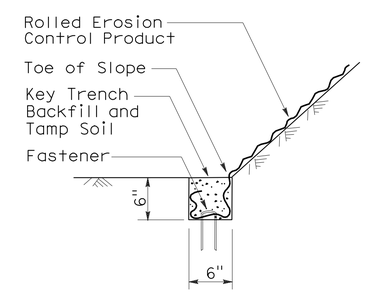

SECTION

DETAIL D
KEY TRENCH AT TOE OF SLOPE

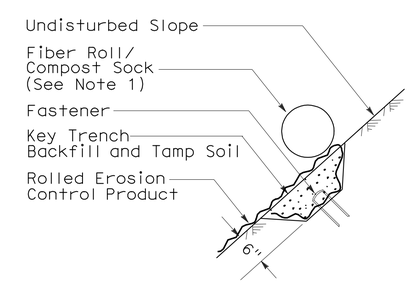

SECTION

DETAIL E
KEY TRENCH AT UPPER CONFORM

STATE OF CALIFORNIA
DEPARTMENT OF TRANSPORTATION

ROLLED EROSION CONTROL PRODUCT

NO SCALE

NSP H53 DATED JUNE 5, 2009 SUPPLEMENTS
THE STANDARD PLANS BOOK DATED MAY 2006.

NEW STANDARD PLAN NSP H53

2006 NEW STANDARD PLAN NSP H53

3-4-09

DIST	COUNTY	ROUTE	POST MILES TOTAL PROJECT	SHEET NO.	TOTAL SHEETS
04	Son	116	34.1/34.5	35	45

Randell D. Hiatt
REGISTERED CIVIL ENGINEER

June 6, 2008
PLANS APPROVAL DATE

REGISTERED PROFESSIONAL ENGINEER
Randell D. Hiatt
No. C50200
Exp. 6-30-09
CIVIL
STATE OF CALIFORNIA

The State of California or its officers or agents shall not be responsible for the accuracy or completeness of electronic copies of this plan sheet.

To accompany plans dated 6-25-12

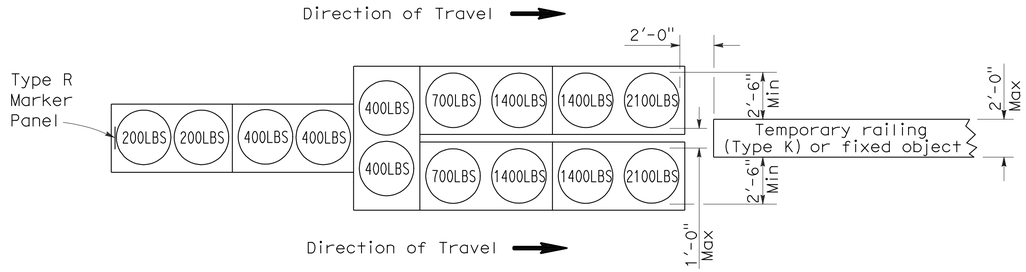

ARRAY 'TU14'

Approach speed 45 mph or more

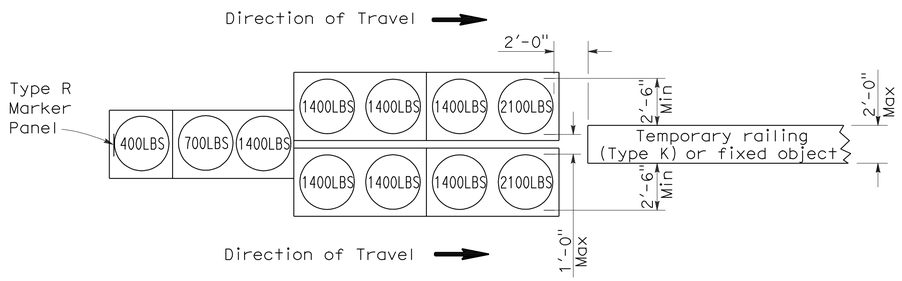

ARRAY 'TU11'

Approach speed less than 45 mph

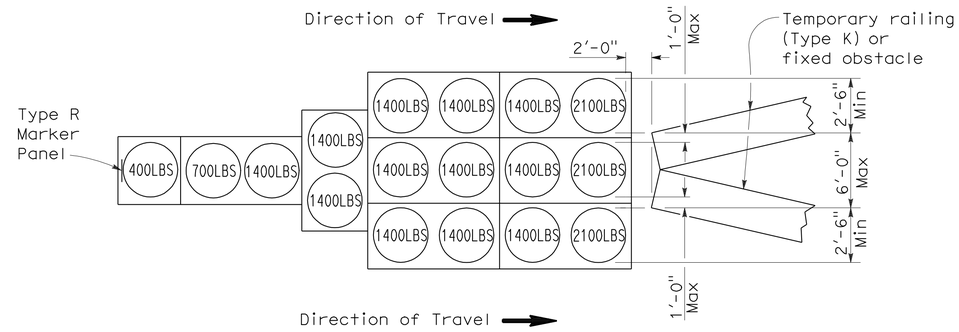

ARRAY 'TU17'

Approach speed less than 45 mph

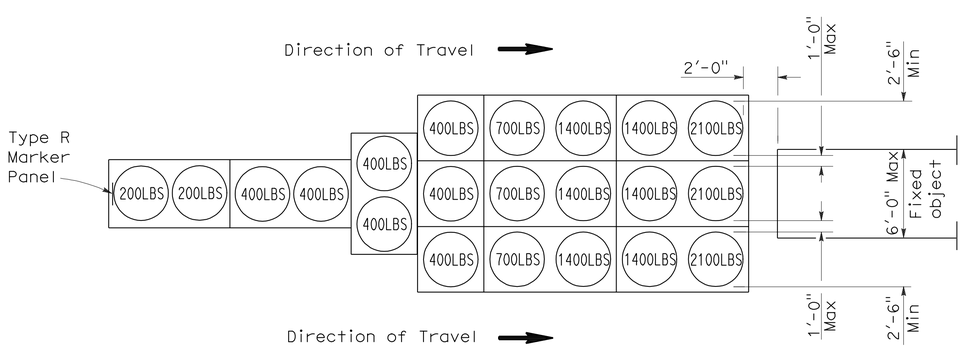

ARRAY 'TU21'

Approach speed 45 mph or more

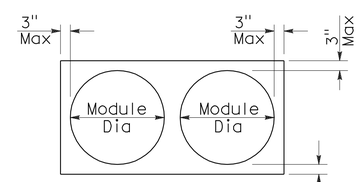

PLAN

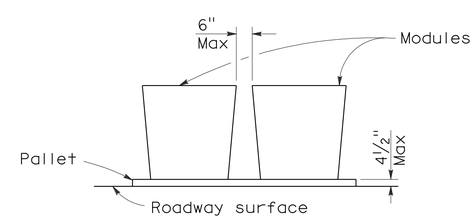

ELEVATION

CRASH CUSHION PALLET DETAIL

See Note 7

NOTES:

1. (XXX) Indicates sand filled module location and weight of sand in pounds for each module. Module spacing is based on the greater diameter of the module.
2. All sand weights are nominal.
3. Temporary crash cushion arrays shall not encroach on the traveled way.
4. Place the top of Type R marker panel 1" below the module lid.
5. Refer to Standard Plan A73B for marker details.
6. Approach speeds indicated conform to NCHRP 350 Report criteria.
7. Use of pallets is optional.

STATE OF CALIFORNIA
DEPARTMENT OF TRANSPORTATION

TEMPORARY CRASH CUSHION, SAND FILLED (UNIDIRECTIONAL)

NO SCALE

RSP T1A DATED JUNE 6, 2008 SUPERSEDES STANDARD PLAN T1A
DATED MAY 1, 2006 - PAGE 211 OF THE STANDARD PLANS BOOK DATED MAY 2006.

REVISED STANDARD PLAN RSP T1A

2006 REVISED STANDARD PLAN RSP T1A

DIST	COUNTY	ROUTE	POST MILES TOTAL PROJECT	SHEET NO.	TOTAL SHEETS
04	Son	116	34.1/34.5	36	45

Randell D. Hiatt
REGISTERED CIVIL ENGINEER

June 6, 2008
PLANS APPROVAL DATE

REGISTERED PROFESSIONAL ENGINEER
Randell D. Hiatt
No. C50200
Exp. 6-30-09
CIVIL
STATE OF CALIFORNIA

The State of California or its officers or agents shall not be responsible for the accuracy or completeness of electronic copies of this plan sheet.

To accompany plans dated 6-25-12

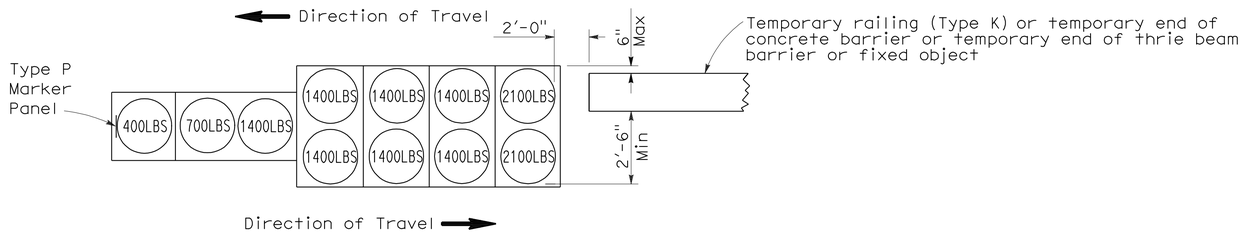

ARRAY 'TB11'

Approach speed less than 45 mph

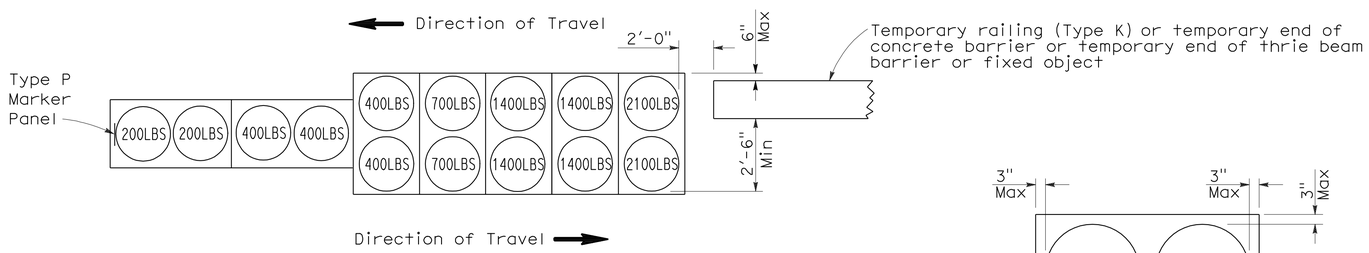

ARRAY 'TB14'

Approach speed 45 mph or more

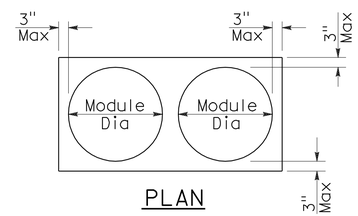

PLAN

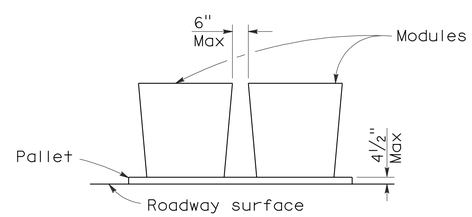

ELEVATION

CRASH CUSHION PALLET DETAIL

See Note 7

NOTES:

1. (XXX) Indicates sand filled module location and weight of sand in pounds for each module. Module spacing is based on the greater diameter of the module.
2. All sand weights are nominal.
3. Temporary crash cushion arrays shall not encroach on the traveled way.
4. Place the Type P marker panel so that the bottom of the panel rests upon the pallet.
5. Refer to Standard Plan A73B for marker details.
6. Approach speeds indicated conform to NCHRP 350 Report criteria.
7. Use of pallets is optional.

STATE OF CALIFORNIA
DEPARTMENT OF TRANSPORTATION

TEMPORARY CRASH CUSHION, SAND FILLED (BIDIRECTIONAL)

NO SCALE

RSP T1B DATED JUNE 6, 2008 SUPERSEDES STANDARD PLAN T1B
DATED MAY 1, 2006 - PAGE 212 OF THE STANDARD PLANS BOOK DATED MAY 2006.

REVISED STANDARD PLAN RSP T1B

2006 REVISED STANDARD PLAN RSP T1B

5-15-08

DIST	COUNTY	ROUTE	POST MILES TOTAL PROJECT	SHEET NO.	TOTAL SHEETS
04	Son	116	34.1/34.5	37	45

Randell D. Hiatt
REGISTERED CIVIL ENGINEER

June 6, 2008
PLANS APPROVAL DATE

REGISTERED PROFESSIONAL ENGINEER
Randell D. Hiatt
No. C50200
Exp. 6-30-09
CIVIL
STATE OF CALIFORNIA

The State of California or its officers or agents shall not be responsible for the accuracy or completeness of electronic copies of this plan sheet.

To accompany plans dated 6-25-12

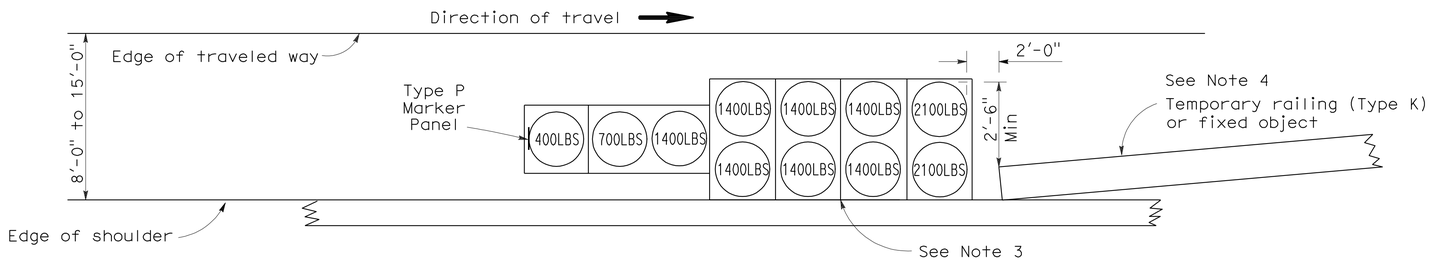

ARRAY 'TS11'

Approach speed less than 45 mph
See Note 9

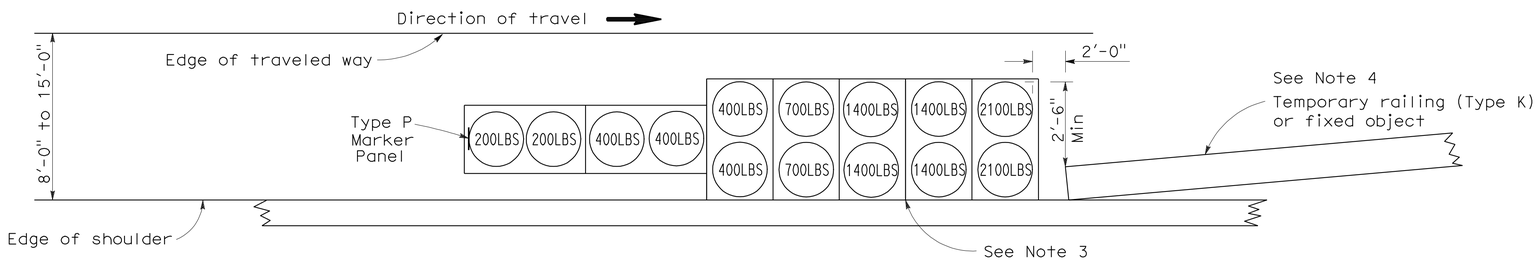

ARRAY 'TS14'

Approach speed 45 mph or more
See Note 9

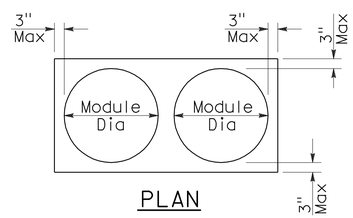

PLAN

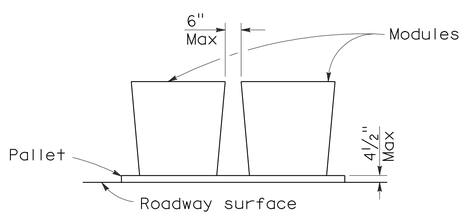

ELEVATION

CRASH CUSHION PALLET DETAIL

See Note 11

NOTES:

1. (XXX) Indicates sand filled module location and weight of sand in pounds for each module. Module spacing is based on the greater diameter of the module.
2. All sand weights are nominal.
3. The temporary crash cushion arrays shown on this plan shall be used only in locations where there will be traffic on one side of the temporary crash cushion array.
4. If the fixed object or approach end of the temporary railing is less than 15'-0" from the edge of traveled way, a temporary crash cushion is required in a construction or work zone.
5. Temporary crash cushion arrays shall not encroach on the traveled way.
6. Arrays for median shoulders shall conform to details shown on this plan for outside shoulders.
7. Place the Type P marker panel so that the bottom of the panel rests upon the pallet and faces traffic.
8. Refer to Standard Plan A73B for marker details.
9. For shoulder widths less than 8'-0", appropriate approved crash cushion protection, other than sand filled modules, shall be provided at fixed objects and at approach ends of temporary railing. The specific type of crash cushion shall be as shown on the project plans or as specified in the Special Provisions, or if not shown on the project plans or specified in the Special Provisions, shall be as approved by the Engineer.
10. Approach speeds indicated conform to NCHRP 350 Report criteria.
11. Use of pallets is optional.

STATE OF CALIFORNIA
DEPARTMENT OF TRANSPORTATION

TEMPORARY CRASH CUSHION, SAND FILLED (SHOULDER INSTALLATIONS)

NO SCALE

RSP T2 DATED JUNE 6, 2008 SUPERSEDES STANDARD PLAN T2
DATED MAY 1, 2006 - PAGE 213 OF THE STANDARD PLANS BOOK DATED MAY 2006.

REVISED STANDARD PLAN RSP T2

2006 REVISED STANDARD PLAN RSP T2

5-15-08

Dist	COUNTY	ROUTE	POST MILES TOTAL PROJECT	SHEET No.	TOTAL SHEETS
04	Son	116	34.1/34.5	38	45

Randell D. Hiatt
REGISTERED CIVIL ENGINEER

May 20, 2011
PLANS APPROVAL DATE

REGISTERED PROFESSIONAL ENGINEER
Randell D. Hiatt
No. C50200
Exp. 6-30-11
CIVIL
STATE OF CALIFORNIA

The State of California or its officers or agents shall not be responsible for the accuracy or completeness of electronic copies of this plan sheet.

To accompany plans dated 6-25-12

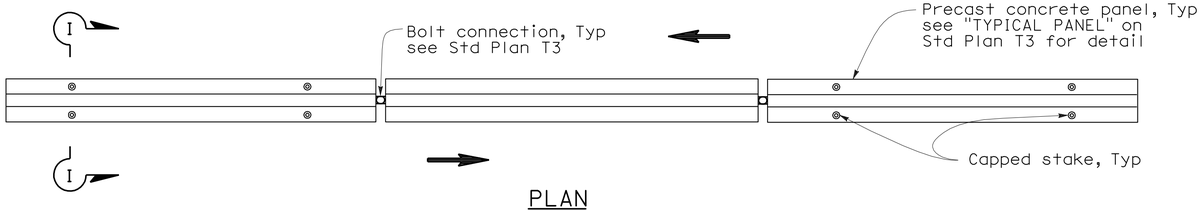

PLAN

RAILING STAKING CONFIGURATION FOR TWO-WAY TRAFFIC

See Note 1

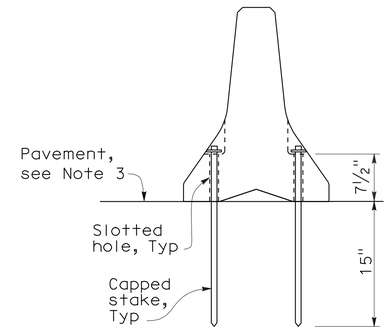

SECTION I-I

NOTES:

1. Where Type K Temporary Railing is placed as a temporary or long term barrier in two-way traffic on highways with less than 24" from the edge of traveled way, use four capped stakes per every other panel with end panels staked.
2. Where Type K Temporary Railing is placed 3" to 24" from the edge of an excavation on highways, use two capped stakes per panel along the traffic side.
3. Staked Type K Temporary Railing must be supported by at least 4" thick concrete, hot mix asphalt or existing asphalt concrete pavement.
4. The minimum yield strength for the washer must be 60,000 psi.
5. Direction of adjacent traffic indicated by ⟹.

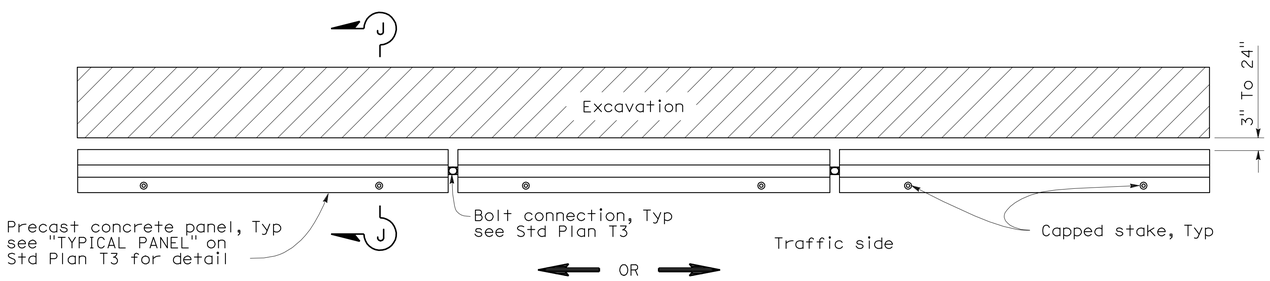

PLAN

RAILING STAKING CONFIGURATION ADJACENT TO AN EXCAVATION

See Note 2

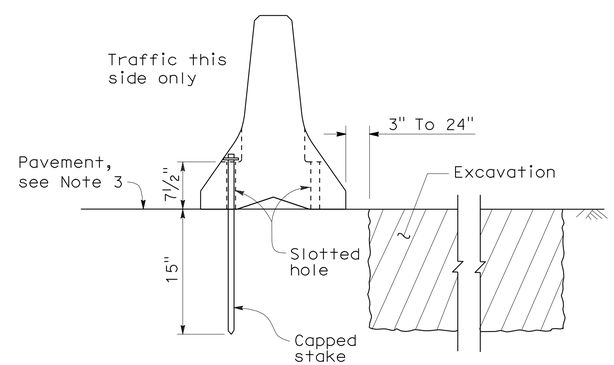

SECTION J-J

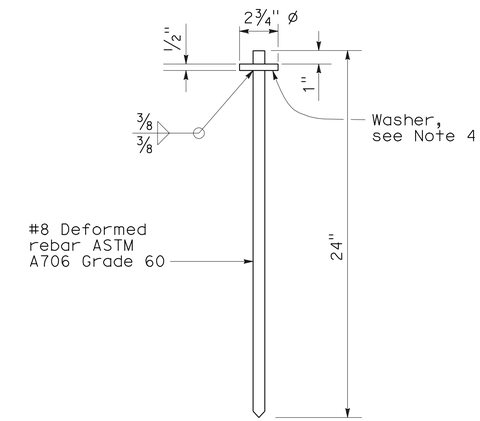

CAPPED STAKE DETAIL

STATE OF CALIFORNIA
DEPARTMENT OF TRANSPORTATION

TEMPORARY RAILING (TYPE K)

NO SCALE

NSP T3A DATED MAY 20, 2011 SUPPLEMENTS THE STANDARD PLANS BOOK DATED MAY 2006.

NEW STANDARD PLAN NSP T3A

2006 NEW STANDARD PLAN NSP T3A

DIST	COUNTY	ROUTE	POST MILES TOTAL PROJECT	SHEET NO.	TOTAL SHEETS
04	Son	116	34.1/34.5	39	45

REGISTERED CIVIL ENGINEER

November 17, 2006
PLANS APPROVAL DATE

REGISTERED PROFESSIONAL ENGINEER
Greg W. Edwards
No. C36386
Exp. 6-30-08
CIVIL
STATE OF CALIFORNIA

The State of California or its officers or agents shall not be responsible for the accuracy or completeness of electronic copies of this plan sheet.

To accompany plans dated 6-25-12

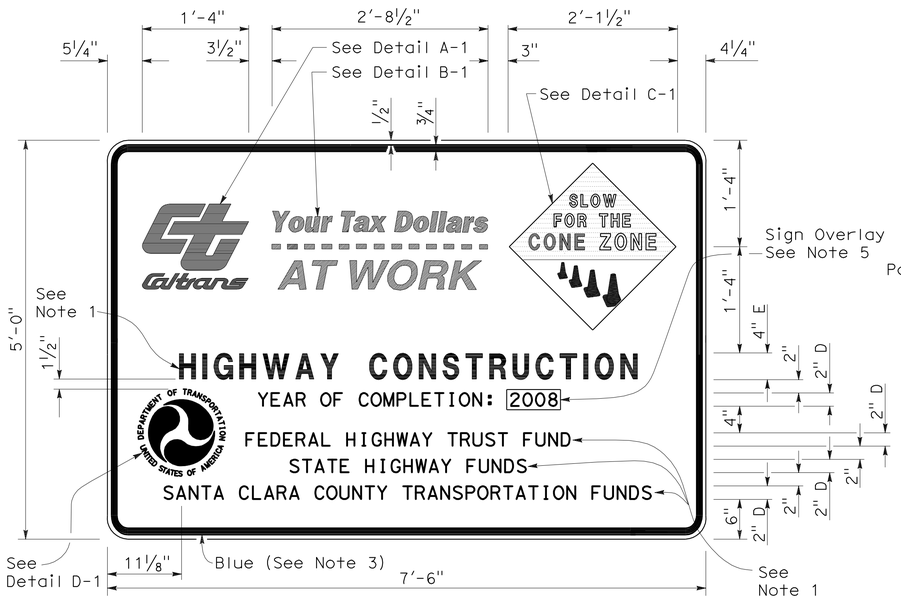

TYPE 1

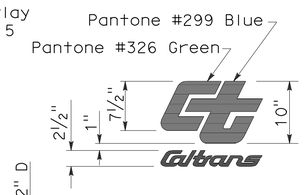

DETAIL A-1

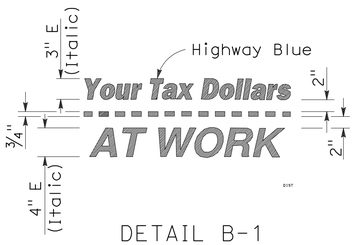

DETAIL B-1
(See Note 3)

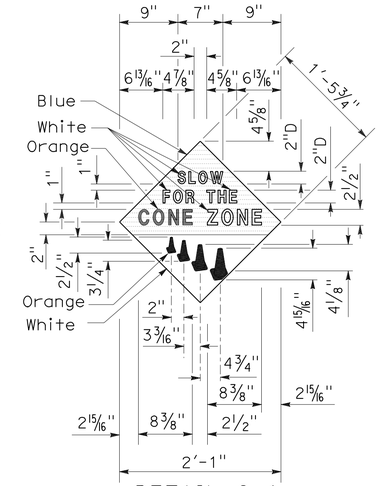

DETAIL C-1
(See Note 4)

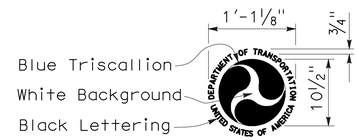

DETAIL D-1
(See Note 6)

NOTES:

1. The sign messages shown for type of project and fund types are examples only. See the Special Provisions for the applicable type of project and fund type messages to be used.
2. Except as otherwise shown, the legend of sign shall be black on a white background (non-reflective).
3. The border of the signs and details "B-1" and "B-2" shall be blue (non-reflective).
4. The diamond in details "C-1" and "C-2" shall be blue for the background of message, " SLOW FOR THE CONE ZONE", and white background for the orange cones. The color and type of font for the "SLOW FOR THE CONE ZONE" message shall be: "SLOW" white D; "FOR THE" white D; "CONE" orange Arial font; "ZONE" white Arial font.
5. Year of completion of project construction shown on the overlay is an example only. See the Special Provisions.
6. Use when the Project involves Federal Highway Trust Fund.

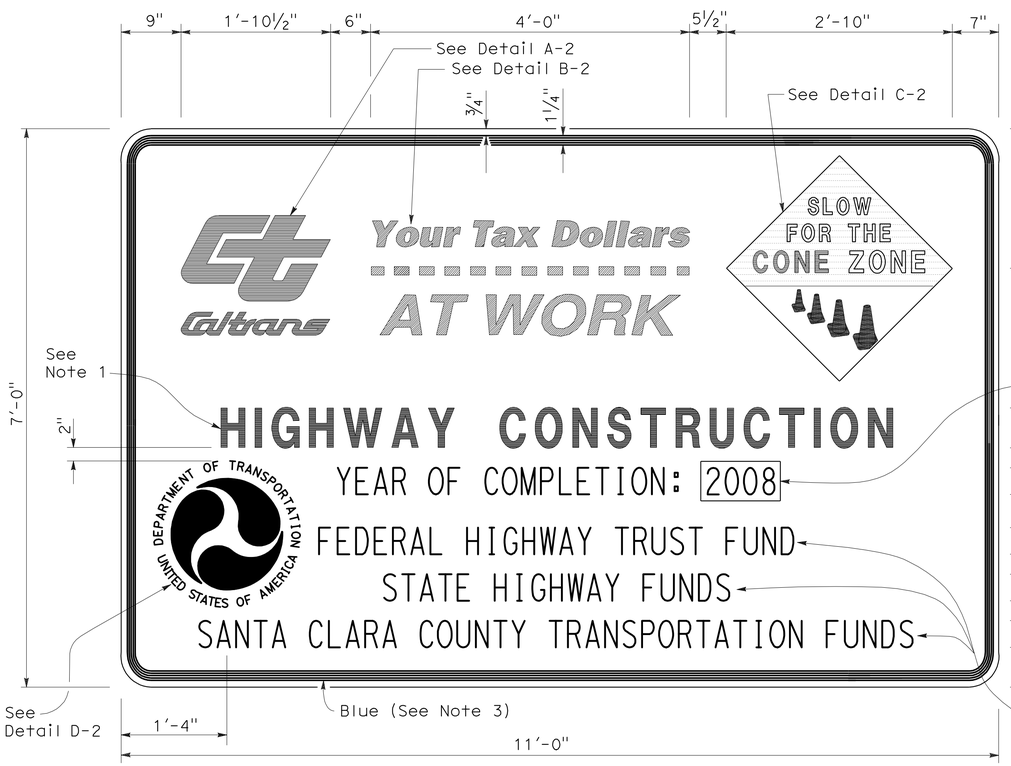

TYPE 2

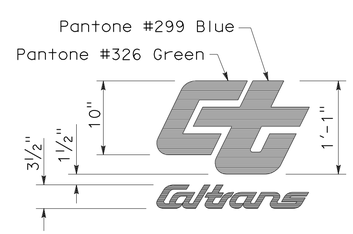

DETAIL A-2

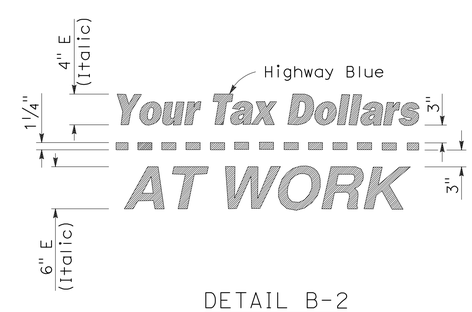

DETAIL B-2
(See Note 3)

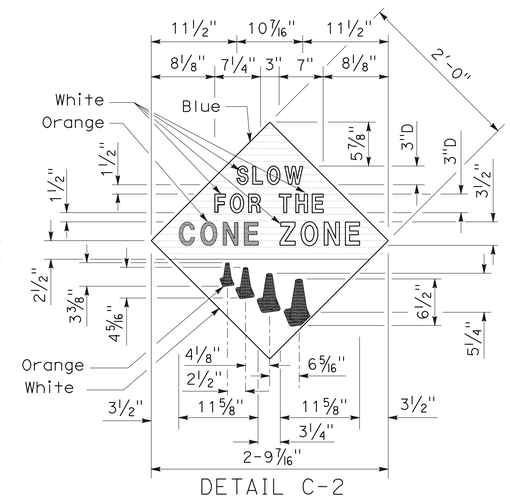

DETAIL C-2
(See Note 4)

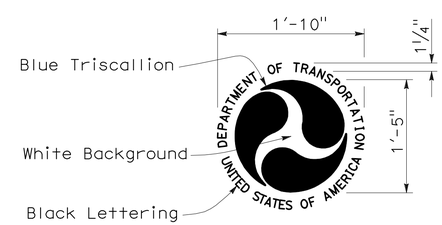

DETAIL D-2
(See Note 6)

STATE OF CALIFORNIA
DEPARTMENT OF TRANSPORTATION

CONSTRUCTION PROJECT FUNDING IDENTIFICATION SIGNS

NO SCALE

RSP T7 DATED NOVEMBER 17, 2006 SUPERSEDES STANDARD PLAN T7
DATED MAY 1, 2006 - PAGE 217 OF THE STANDARD PLANS BOOK DATED MAY 2006.

REVISED STANDARD PLAN RSP T7

2006 REVISED STANDARD PLAN RSP T7

9-7-06

DIST	COUNTY	ROUTE	POST MILES TOTAL PROJECT	SHEET NO.	TOTAL SHEETS
04	Son	116	34.1/34.5	40	45

Robert B. Schott
LICENSED LANDSCAPE ARCHITECT

April 3, 2009
PLANS APPROVAL DATE

LICENSED LANDSCAPE ARCHITECT
ROBERT B. SCHOTT 3035
Robert B. Schott
Signature
11-30-10
Renewal Date
2-25-09
Date
STATE OF CALIFORNIA

The State of California or its officers or agents shall not be responsible for the accuracy or completeness of electronic copies of this plan sheet.

To accompany plans dated 6-25-12

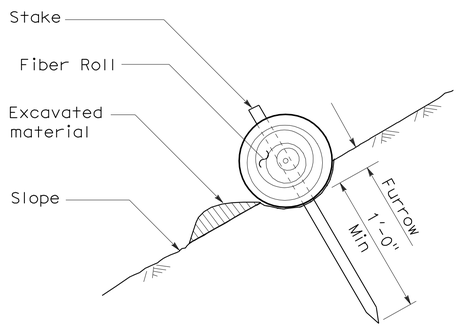

SECTION

TEMPORARY FIBER ROLL (TYPE 1)

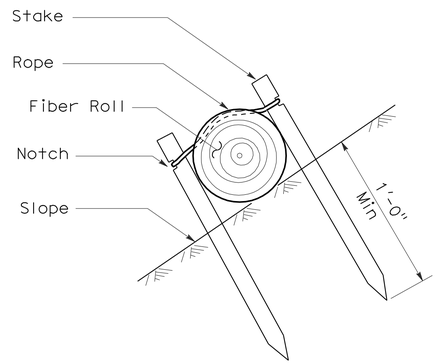

SECTION

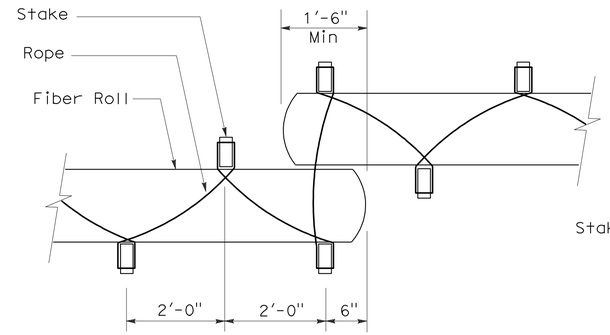

PLAN

TEMPORARY FIBER ROLL (TYPE 2)

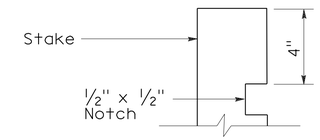

ELEVATION

STAKE NOTCH DETAIL

NOTES:

1. Temporary fiber roll spacing varies depending upon slope inclination.
2. Installations shown in the perspectives are for slope inclination of 10:1 and steeper.

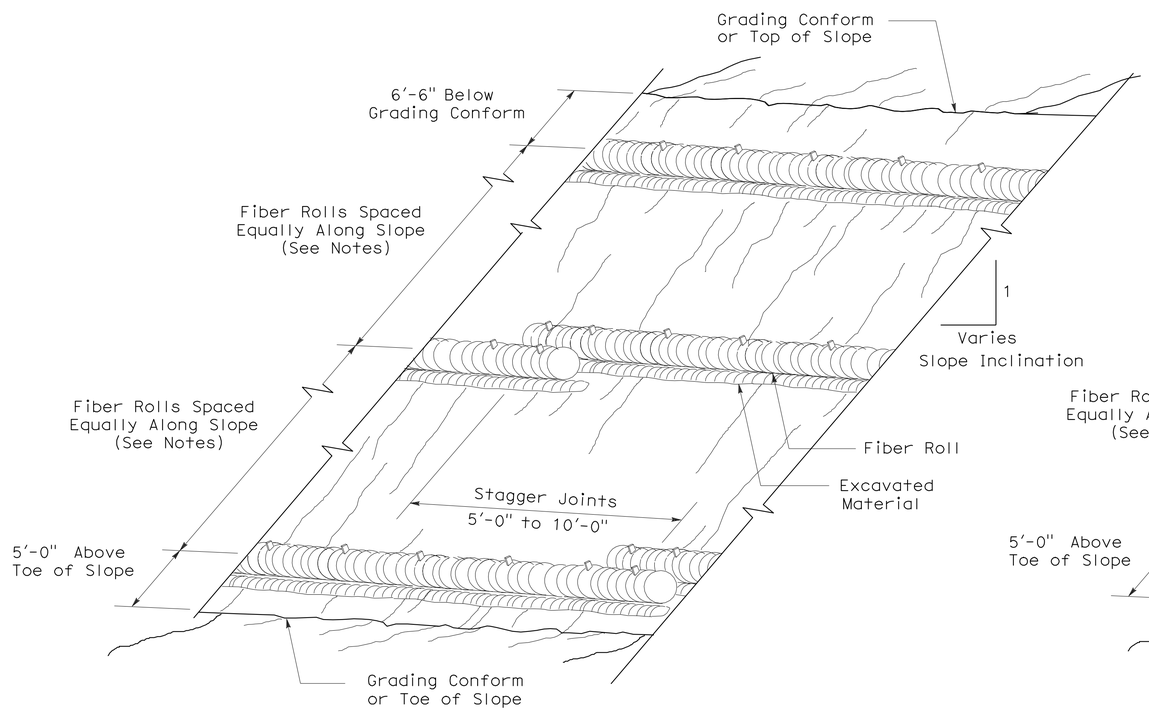

PERSPECTIVE

TEMPORARY FIBER ROLL (TYPE 1)

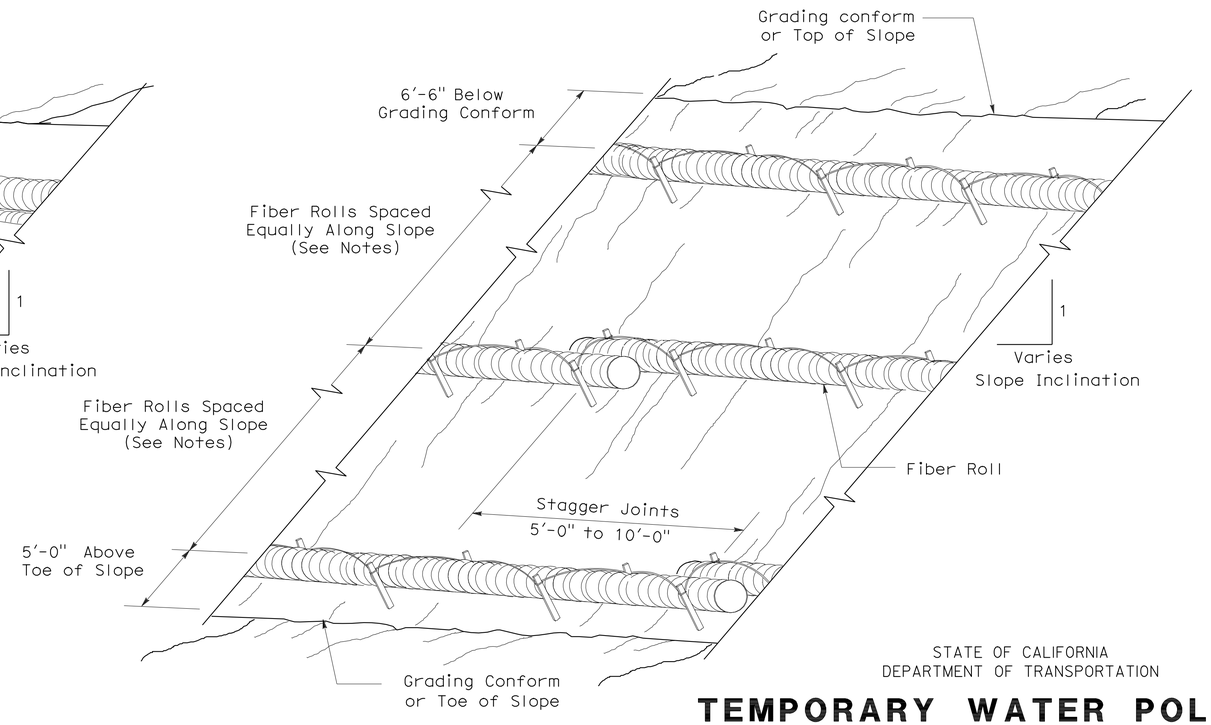

PERSPECTIVE

TEMPORARY FIBER ROLL (TYPE 2)

STATE OF CALIFORNIA
DEPARTMENT OF TRANSPORTATION

TEMPORARY WATER POLLUTION CONTROL DETAILS (TEMPORARY FIBER ROLL)

NO SCALE

RSP T56 DATED APRIL 3, 2009 SUPERSEDES STANDARD PLAN T56
DATED MAY 1, 2006 - PAGE 232 OF THE STANDARD PLANS BOOK DATED MAY 2006.

REVISED STANDARD PLAN RSP T56

2006 REVISED STANDARD PLAN RSP T56

2-23-09

DIST	COUNTY	ROUTE	POST MILES TOTAL PROJECT	SHEET NO.	TOTAL SHEETS
04	Son	116	34.1/34.5	41	45

LICENSED LANDSCAPE ARCHITECT

April 3, 2009
PLANS APPROVAL DATE

LICENSED LANDSCAPE ARCHITECT
Robert B. Schott 3025
Signature
11-30-10
Renewal Date
2-25-09
Date
STATE OF CALIFORNIA

The State of California or its officers or agents shall not be responsible for the accuracy or completeness of electronic copies of this plan sheet.

To accompany plans dated 6-25-12

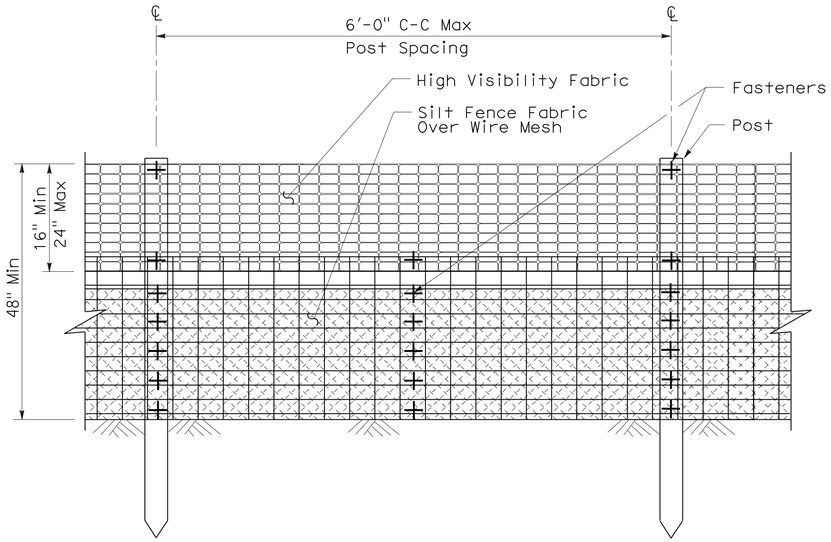

ELEVATION

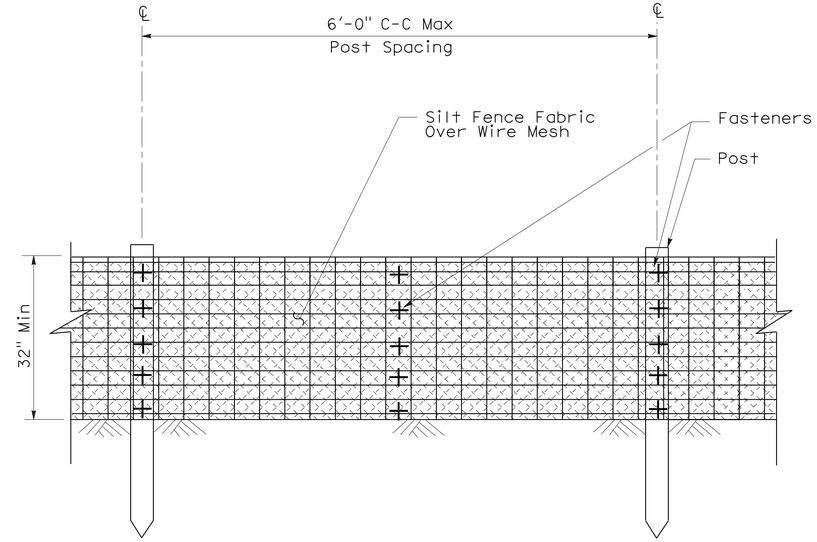

ELEVATION

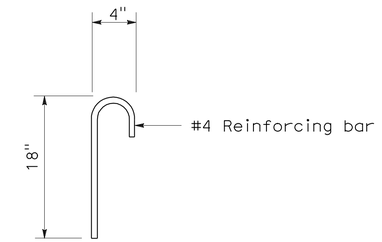

ANCHOR

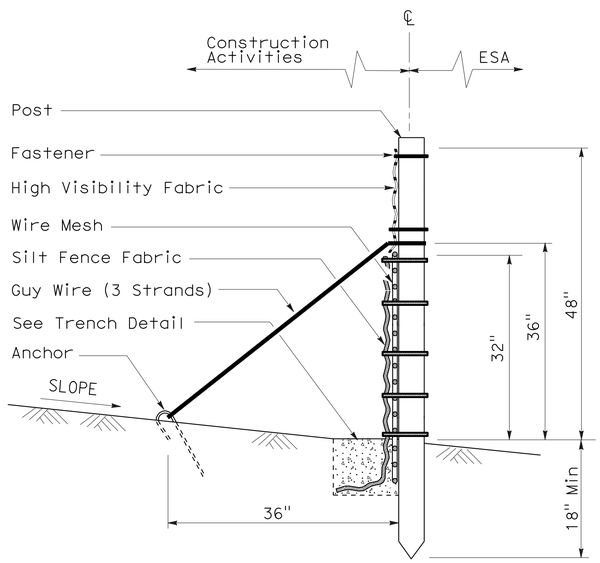

SECTION

TEMPORARY REINFORCED SILT FENCE (TYPE 1)

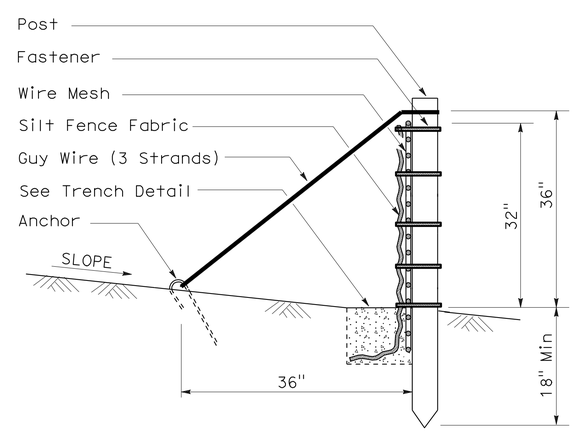

SECTION

TEMPORARY REINFORCED SILT FENCE (TYPE 2)

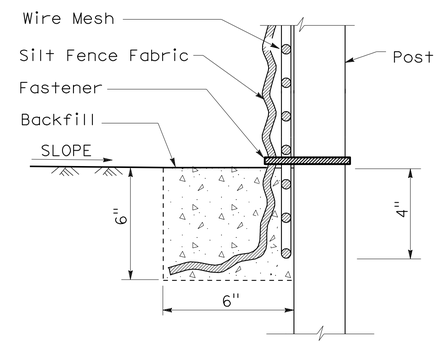

SECTION

TRENCH DETAIL

STATE OF CALIFORNIA
DEPARTMENT OF TRANSPORTATION

TEMPORARY WATER POLLUTION CONTROL DETAILS (TEMPORARY REINFORCED SILT FENCE)

NO SCALE

NSP T60 DATED APRIL 3, 2009 SUPPLEMENTS
THE STANDARD PLANS BOOK DATED MAY 2006.

NEW STANDARD PLAN NSP T60

2006 NEW STANDARD PLAN NSP T60

1-7-09

DIST	COUNTY	ROUTE	POST MILES TOTAL PROJECT	SHEET NO.	TOTAL SHEETS
04	Son	116	34.1/34.5	42	45

LICENSED LANDSCAPE ARCHITECT

August 15, 2008
PLANS Approval DATE

LICENSED LANDSCAPE ARCHITECT
Robert B. Schott 3025
Signature
11-04-08
Renewal Date
08-11-08
Date
STATE OF CALIFORNIA

The State of California or its officers or agents shall not be responsible for the accuracy or completeness of electronic copies of this plan sheet.

To accompany plans dated 6-25-12

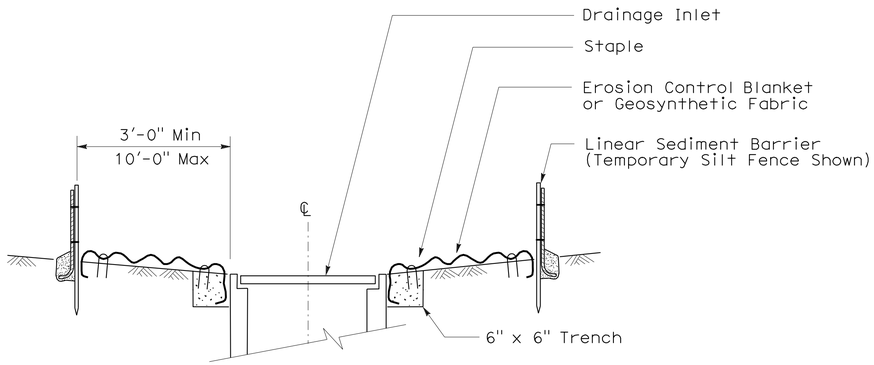

SECTION A-A

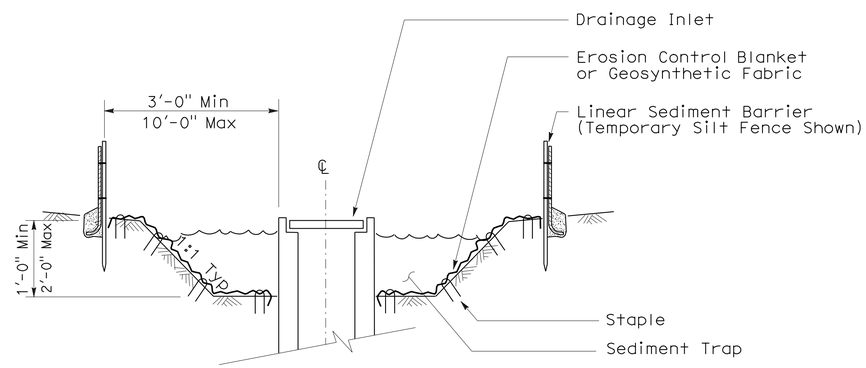

SECTION B-B

NOTES:

1. See Standard Plan T51 for Temporary Silt Fence.
2. Dimensions may vary to fit field conditions.

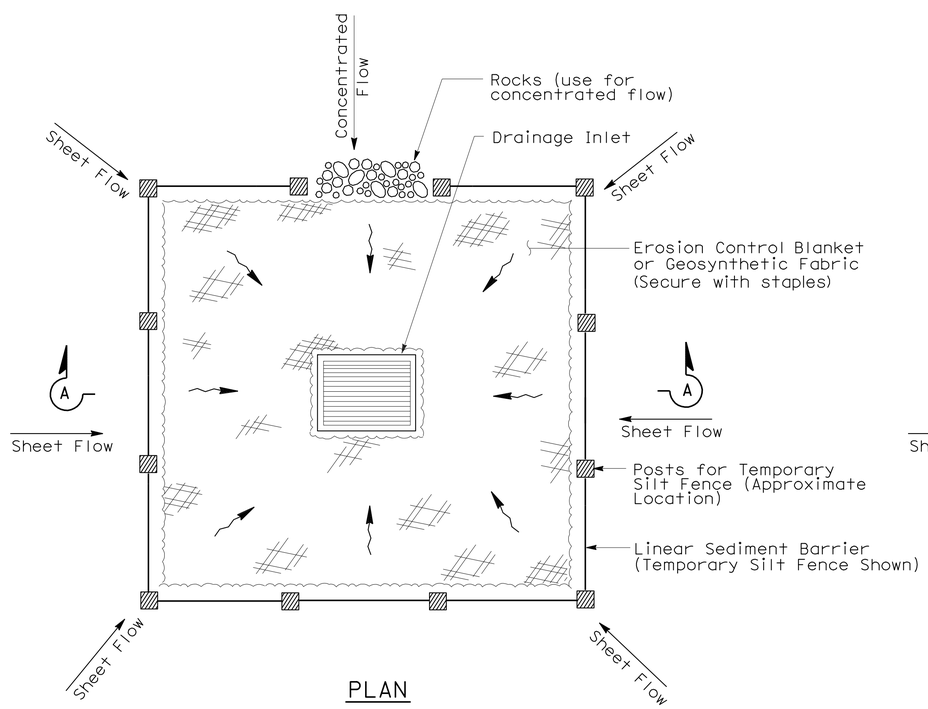

PLAN

TEMPORARY DRAINAGE INLET PROTECTION (TYPE 1)

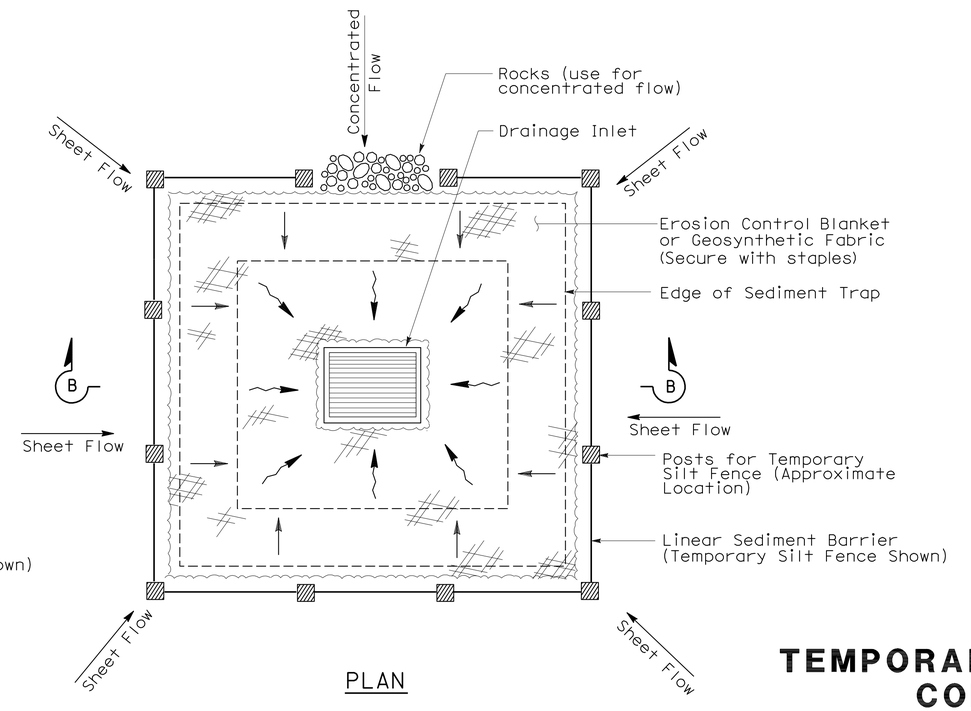

PLAN

TEMPORARY DRAINAGE INLET PROTECTION (TYPE 2) (EXCAVATED SEDIMENT TRAP)

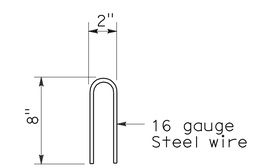

STAPLE DETAIL

STATE OF CALIFORNIA
DEPARTMENT OF TRANSPORTATION

TEMPORARY WATER POLLUTION CONTROL DETAILS (TEMPORARY DRAINAGE INLET PROTECTION)

NO SCALE

NSP T61 DATED AUGUST 15, 2008 SUPPLEMENTS THE STANDARD PLANS BOOK DATED MAY 2006.

NEW STANDARD PLAN NSP T61

2006 NEW STANDARD PLAN NSP T61

7-11-08

DIST	COUNTY	ROUTE	POST MILES TOTAL PROJECT	SHEET NO.	TOTAL SHEETS
04	Son	116	34.1/34.5	43	45

LICENSED LANDSCAPE ARCHITECT

August 15, 2008
PLANS APPROVAL DATE

The State of California or its officers or agents shall not be responsible for the accuracy or completeness of electronic copies of this plan sheet.

LICENSED LANDSCAPE ARCHITECT — Robert B. Schott — Signature — 11-04-08 Renewal Date — 08-11-08 Date — STATE OF CALIFORNIA

To accompany plans dated 6-25-12

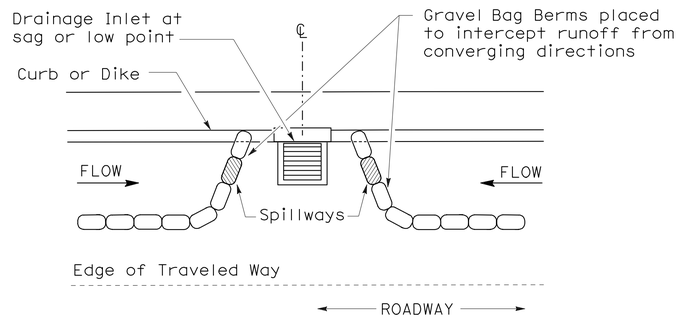

PLAN

CONFIGURATION FOR SAG POINT INLET (GRAVEL BAG BERM)

GRAVEL BAG BERM (TYPE 3A) SPACING TABLE

SLOPE OF ROADWAY (PERCENT)	1 to 3.9	4 to 5.9	6 to 7.9	8 to 10	10+
INTERVAL BETWEEN BERM	100′	75′	50′	25′	12′

For slope of less than 1%, install barriers only if erosion/sediment is prevalent

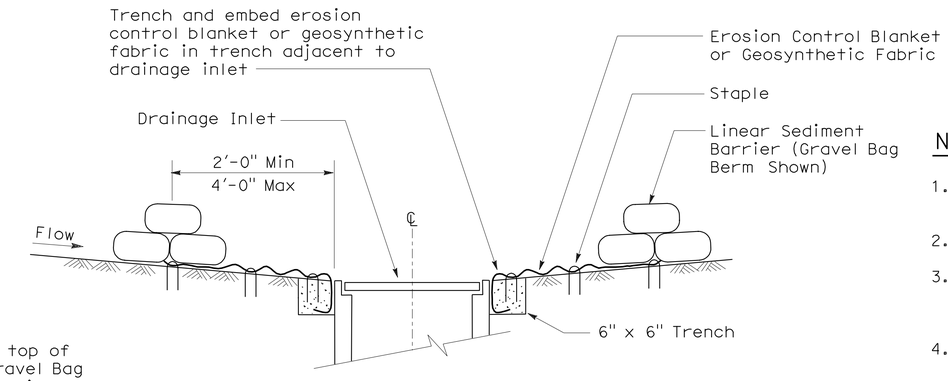

SECTION A-A

NOTES:

1. Place safety cones adjacent to drainage inlet protection.
2. Dimensions may vary to fit field conditions.
3. Install a minimum of 3 gravel bag berms upstream of each drainage inlet to be protected.
4. Position erosion control blanket or geosynthetic fabric at edge of concrete apron and secure in trench.
5. Erosion control blanket or geosynthetic fabric is not required if the area adjacent to the drainage inlet is vegetated or paved.

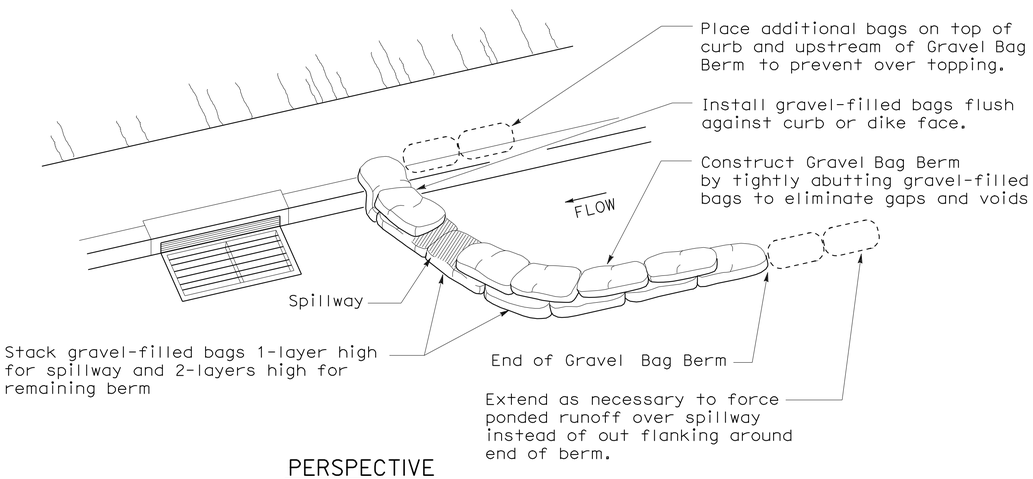

PERSPECTIVE

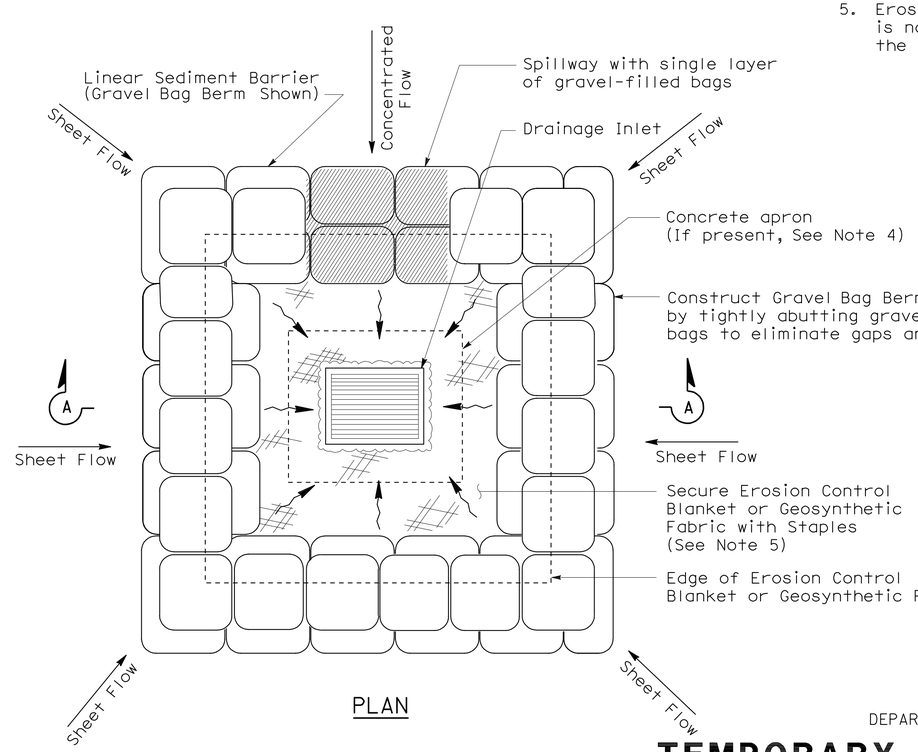

PLAN

TEMPORARY DRAINAGE INLET PROTECTION (TYPE 3B)

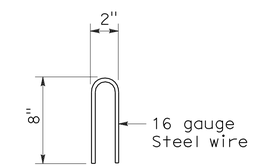

STAPLE DETAIL

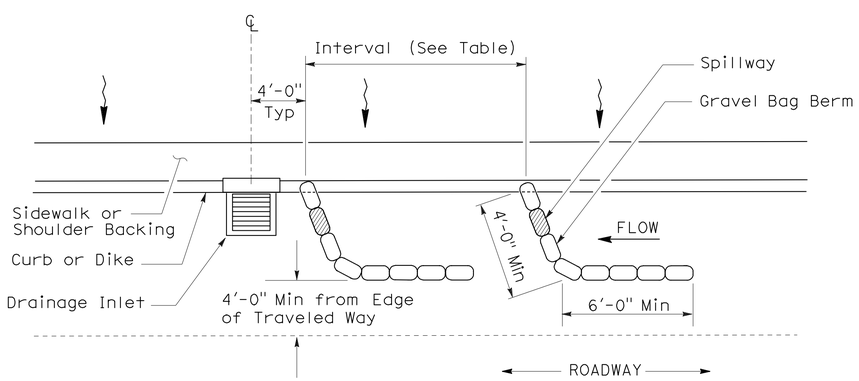

PLAN

TEMPORARY DRAINAGE INLET PROTECTION (TYPE 3A) (GRAVEL BAG BERM)

STATE OF CALIFORNIA
DEPARTMENT OF TRANSPORTATION

TEMPORARY WATER POLLUTION CONTROL DETAILS (TEMPORARY DRAINAGE INLET PROTECTION)

NO SCALE

NSP T62 DATED AUGUST 15, 2008 SUPPLEMENTS THE STANDARD PLANS BOOK DATED MAY 2006.

NEW STANDARD PLAN NSP T62

2006 NEW STANDARD PLAN NSP T62

7-11-08

DIST	COUNTY	ROUTE	POST MILES TOTAL PROJECT	SHEET NO.	TOTAL SHEETS
04	Son	116	34.1/34.5	44	45

Robert B Schott
LICENSED LANDSCAPE ARCHITECT

August 15, 2008
PLANS APPROVAL DATE

The State of California or its officers or agents shall not be responsible for the accuracy or completeness of electronic copies of this plan sheet.

LICENSED LANDSCAPE ARCHITECT — Robert B. Schott — Signature — 11-04-08 Renewal Date — 08-11-08 Date — STATE OF CALIFORNIA

To accompany plans dated 6-25-12

FLEXIBLE SEDIMENT BARRIER SPACING TABLE

SLOPE OF ROADWAY (PERCENT)	0 to 0.9	1 to 1.9	2 to 2.9	3 to 4	5+
INTERVAL BETWEEN BARRIERS	50′	35′	30′	25′	20′
ANGLE FROM FACE OF CURB	70°	70°	70°	45°	45°
SUGGESTED BARRIER LENGTH	6′	6′	6′	6′	6′

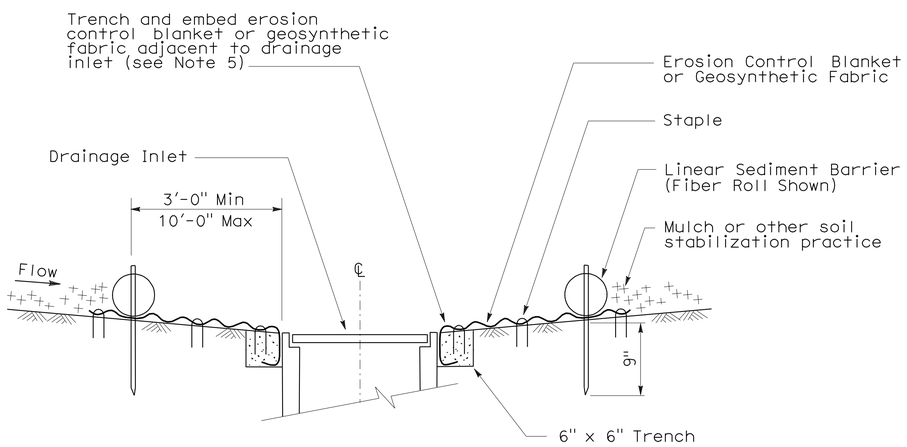

SECTION A-A

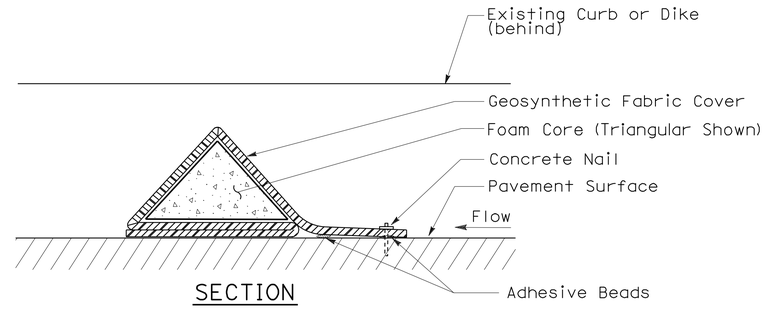

SECTION

FLEXIBLE SEDIMENT BARRIER DETAIL (FOAM BARRIER SHOWN)

NOTES:

1. See Standard Plan T51 for Temporary Silt Fence.
2. Dimensions may vary to fit field conditions.
3. Install a minimum of 3 flexible sediment barriers upstream of each drainage inlet to be protected.
4. Position erosion control blanket or geosynthetic fabric at edge of concrete apron and secure in trench.
5. Erosion control blanket or geosynthetic fabric is not required if the area adjacent to the drainage inlet is vegetated.

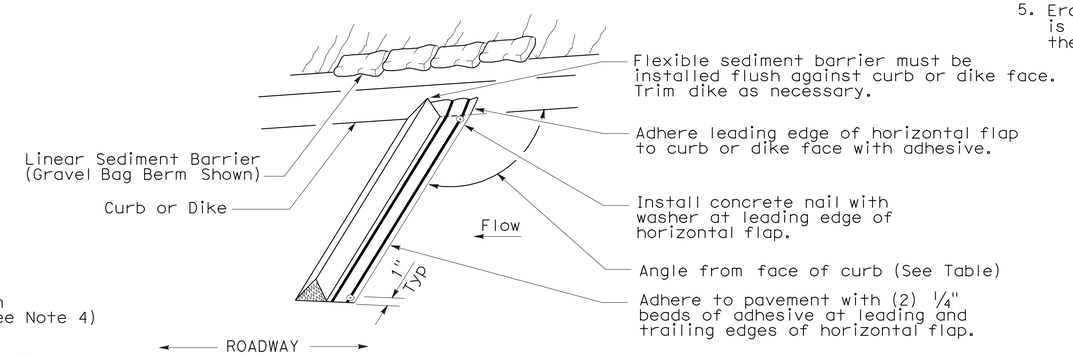

PERSPECTIVE

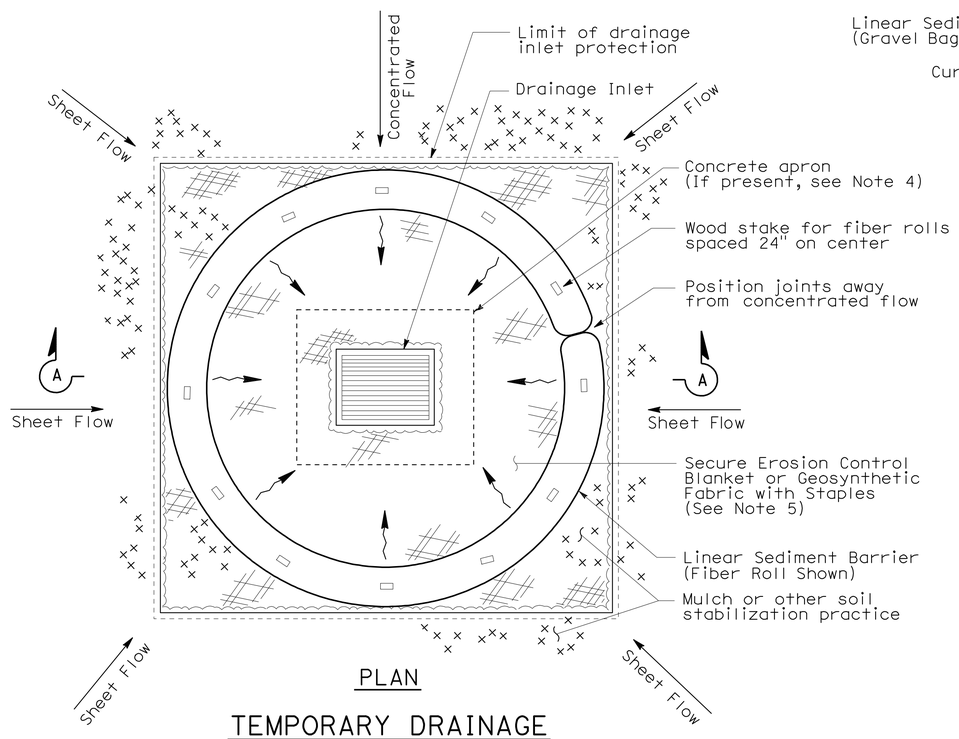

PLAN

TEMPORARY DRAINAGE INLET PROTECTION (TYPE 4A)

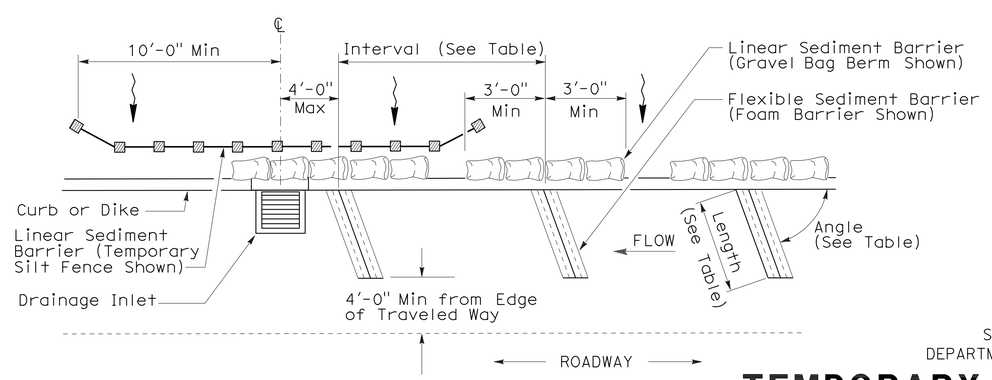

PLAN

TEMPORARY DRAINAGE INLET PROTECTION (TYPE 4B) FLEXIBLE SEDIMENT BARRIER

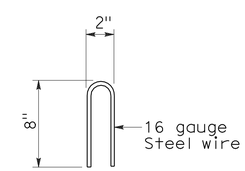

STAPLE DETAIL

STATE OF CALIFORNIA
DEPARTMENT OF TRANSPORTATION

TEMPORARY WATER POLLUTION CONTROL DETAILS (TEMPORARY DRAINAGE INLET PROTECTION)

NO SCALE

NSP T63 DATED AUGUST 15, 2008 SUPPLEMENTS THE STANDARD PLANS BOOK DATED MAY 2006.

NEW STANDARD PLAN NSP T63

2006 NEW STANDARD PLAN NSP T63

7-11-08

DIST	COUNTY	ROUTE	POST MILES TOTAL PROJECT	SHEET NO.	TOTAL SHEETS
04	Son	116	34.1/34.5	45	45

LICENSED LANDSCAPE ARCHITECT

August 15, 2008
PLANS APPROVAL DATE

LICENSED LANDSCAPE ARCHITECT — Robert B. Schott — Signature 11-04-08 Renewal Date — 08-11-08 Date — STATE OF CALIFORNIA

The State of California or its officers or agents shall not be responsible for the accuracy or completeness of electronic copies of this plan sheet.

To accompany plans dated 6-25-12

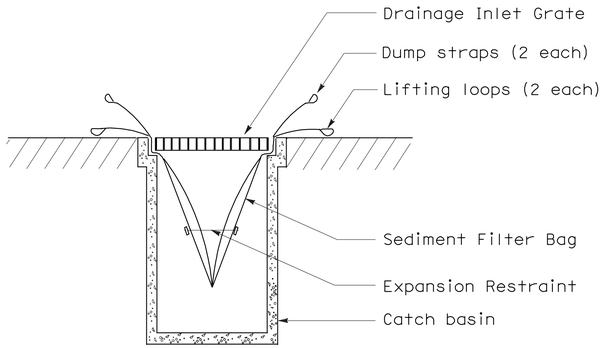

SECTION B-B

SEDIMENT FILTER BAG DETAIL

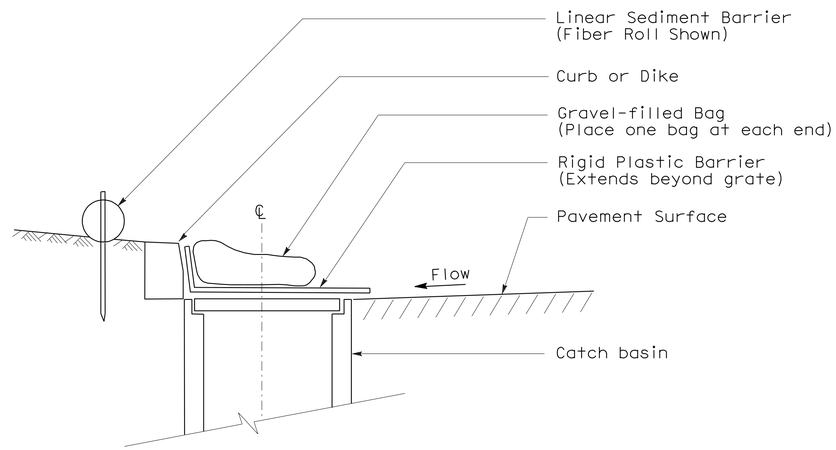

SECTION

TEMPORARY DRAINAGE INLET PROTECTION (TYPE 6A) (CATCH BASIN WITH GRATE)

NOTES:

1. See Standard Plan T51 for Temporary Silt Fence.
2. Dimensions may vary to fit field conditions.

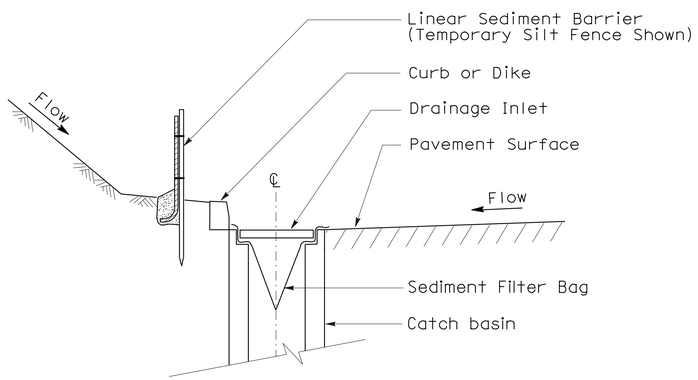

SECTION A-A

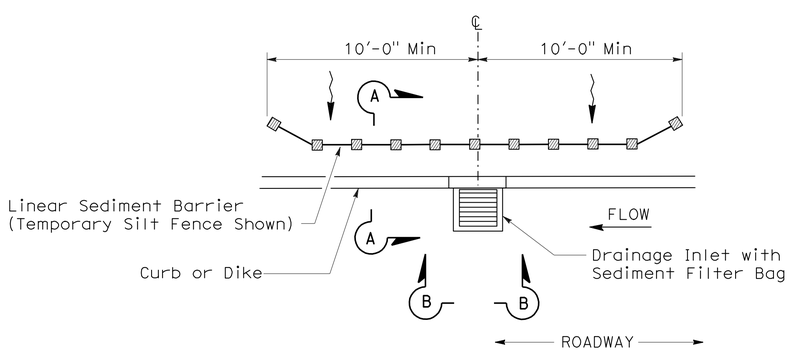

PLAN

TEMPORARY DRAINAGE INLET PROTECTION (TYPE 5) (SEDIMENT FILTER BAG)

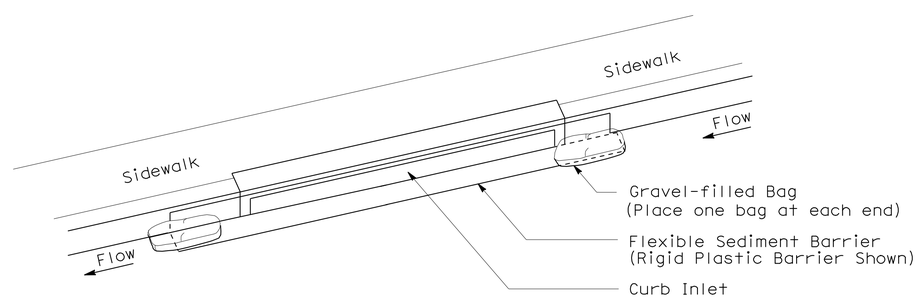

PERSPECTIVE

TEMPORARY DRAINAGE INLET PROTECTION (TYPE 6B) (CURB INLET WITHOUT GRATE)

STATE OF CALIFORNIA
DEPARTMENT OF TRANSPORTATION

TEMPORARY WATER POLLUTION CONTROL DETAILS (TEMPORARY DRAINAGE INLET PROTECTION)

NO SCALE

NSP T64 DATED AUGUST 15, 2008 SUPPLEMENTS THE STANDARD PLANS BOOK DATED MAY 2006.

NEW STANDARD PLAN NSP T64

2006 NEW STANDARD PLAN NSP T64

7-11-08