INDEX OF PLANS

SHEET No.	DESCRIPTION
1	TITLE AND LOCATION MAP
2	TYPICAL CROSS SECTIONS
3-4	LAYOUTS
5	CONSTRUCTION DETAILS
6-8	EROSION CONTROL PLAN AND DETAILS
9-14	DRAINAGE PLANS, PROFILES, DETAILS AND QUANTITIES
15-16	UTILITY PLANS
17-23	CONSTRUCTION AREA SIGNS
24-27	STAGE CONSTRUCTION AND TRAFFIC HANDLING PLANS
28-30	PAVEMENT DELINEATION PLANS AND QUANTITIES
31-35	SIGN PLANS AND QUANTITIES
36	SUMMARY OF QUANTITIES
37-40	SIGNAL AND LIGHTING
41-59	REVISED AND NEW STANDARD PLANS

THE STANDARD PLANS LIST APPLICABLE TO THIS CONTRACT IS INCLUDED IN THE NOTICE TO BIDDERS AND SPECIAL PROVISIONS BOOK.

STATE OF CALIFORNIA

DEPARTMENT OF TRANSPORTATION

NH-Q101(207)E

PROJECT PLANS FOR CONSTRUCTION ON STATE HIGHWAY

IN SONOMA COUNTY AT AND NEAR WINDSOR AT 0.1 MILE WEST OF RIVER ROAD OVERCROSSING AND AT 0.1 MILE WEST OF SHILOH ROAD OVERCROSSING

TO BE SUPPLEMENTED BY STANDARD PLANS DATED MAY 2006

Dist	COUNTY	ROUTE	POST MILES TOTAL PROJECT	SHEET No.	TOTAL SHEETS
04	Son	101	25.1, 27.8	1	59

LOCATION MAP

LOCATION OF CONSTRUCTION
PM 25.1

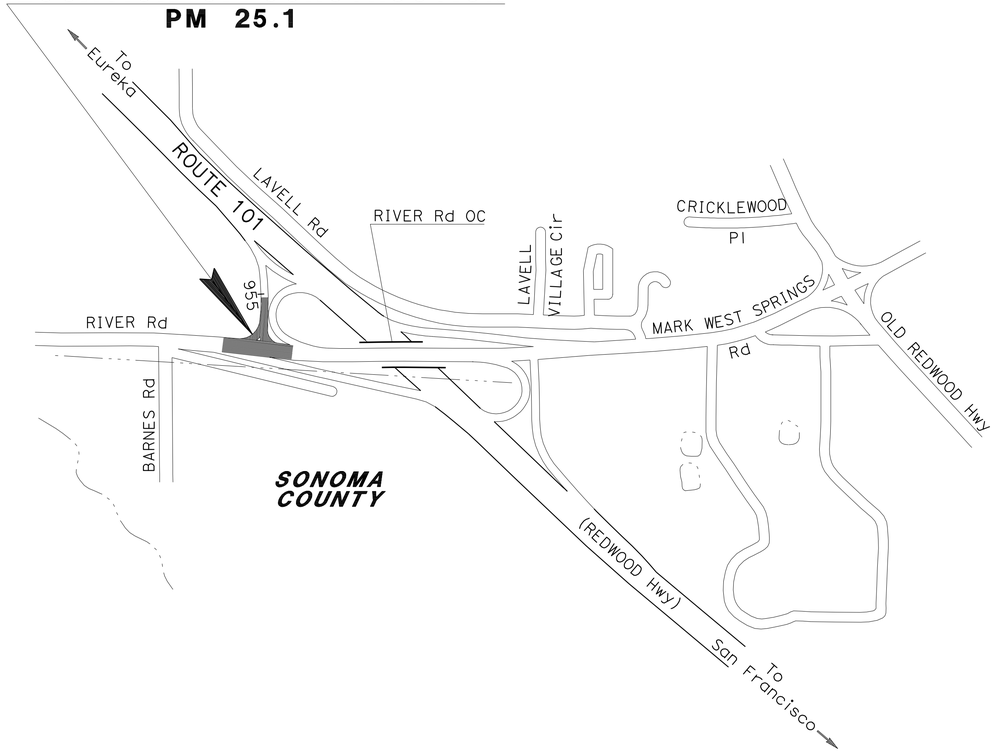

LOCATION OF CONSTRUCTION
PM 27.8

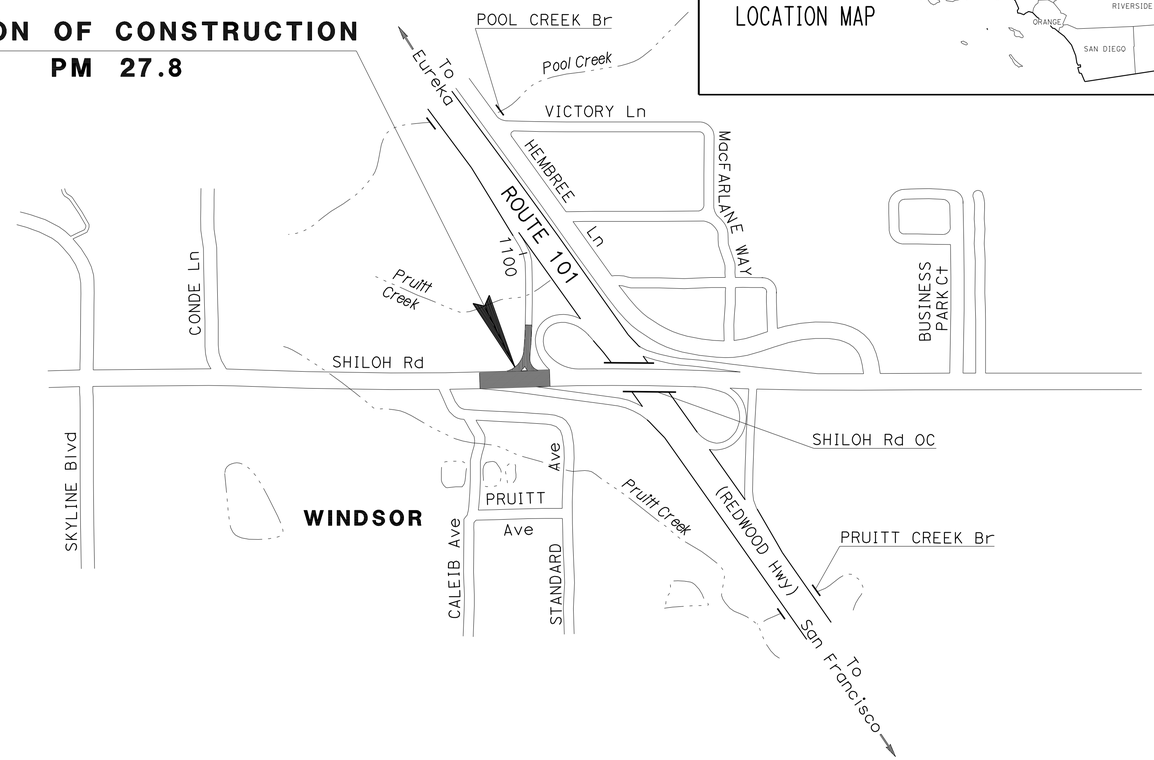

George A. Acquaye 5/9/11
PROJECT ENGINEER DATE
REGISTERED CIVIL ENGINEER

REGISTERED PROFESSIONAL ENGINEER
George A. Acquaye
No. 53859
Exp. 12-31-11
CIVIL
STATE OF CALIFORNIA

May 16, 2011
PLANS APPROVAL DATE

THE STATE OF CALIFORNIA OR ITS OFFICERS OR AGENTS SHALL NOT BE RESPONSIBLE FOR THE ACCURACY OR COMPLETENESS OF SCANNED COPIES OF THIS PLAN SHEET.

PROJECT MANAGER: R. CENTENO
DESIGN ENGINEER: GEORGE A. ACQUAYE

THE CONTRACTOR SHALL POSSESS THE CLASS (OR CLASSES) OF LICENSE AS SPECIFIED IN THE "NOTICE TO BIDDERS."

NO SCALE

CONTRACT No.	04-1G5704
PROJECT ID	0400020160

LAST REVISION 05-16-11
DATE PLOTTED => 18-AUG-2011
TIME PLOTTED => 08:54

BORDER LAST REVISED 7/2/2010 | CALTRANS WEB SITE IS: HTTP//WWW.DOT.CA.GOV/ | RELATIVE BORDER SCALE IS IN INCHES 0 1 2 3 | USERNAME => s131681 DGN FILE => 0400020160ab001.dgn | UNIT 0735 | PROJECT NUMBER & PHASE 04000201601

Dist	COUNTY	ROUTE	POST MILES TOTAL PROJECT	SHEET No.	TOTAL SHEETS
04	Son	101	25.1, 27.8	2	59

George A. Acquaye 5/9/11
REGISTERED CIVIL ENGINEER DATE

5-16-11
PLANS APPROVAL DATE

REGISTERED PROFESSIONAL ENGINEER — George A. Acquaye — No. 53859 — Exp. 12-31-11 — CIVIL — STATE OF CALIFORNIA

THE STATE OF CALIFORNIA OR ITS OFFICERS OR AGENTS SHALL NOT BE RESPONSIBLE FOR THE ACCURACY OR COMPLETENESS OF SCANNED COPIES OF THIS PLAN SHEET.

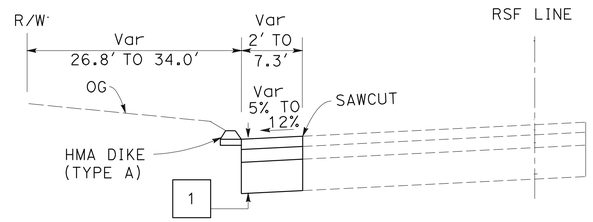

RSF 952+46 TO 953+41

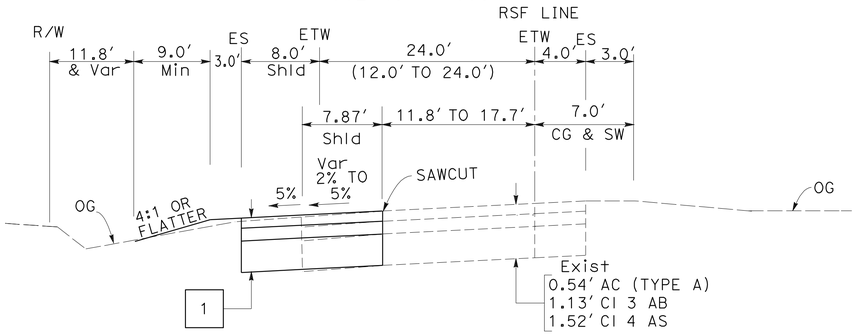

RSF 951+73 TO 953+41

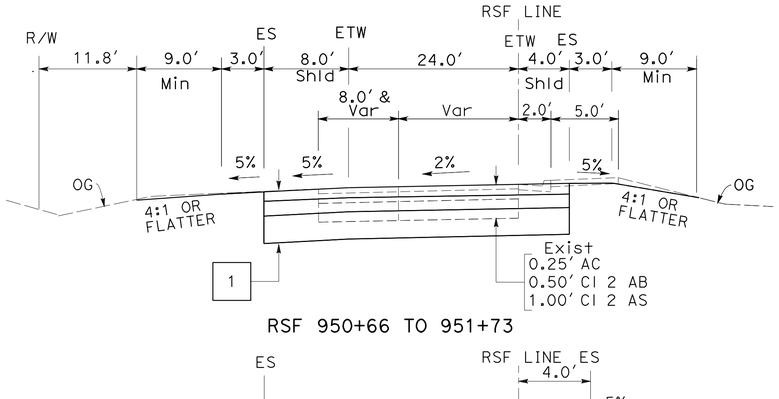

RSF 950+66 TO 951+73

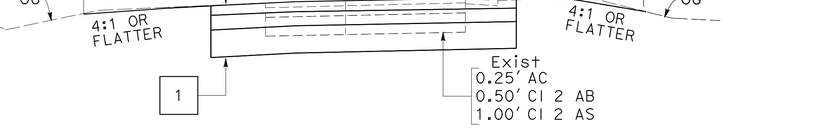

RSF 950+22 TO 950+66

RSF 950+13 TO 950+66

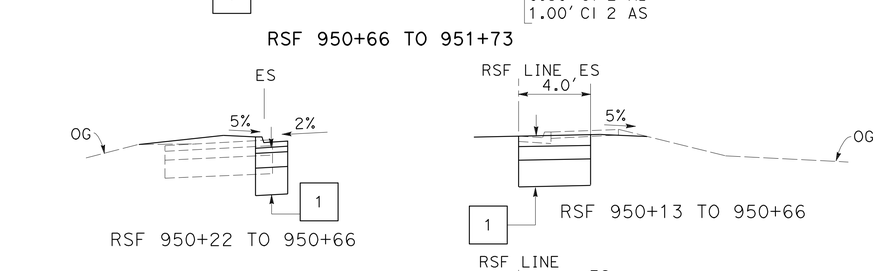

RSF 949+83 TO 950+22

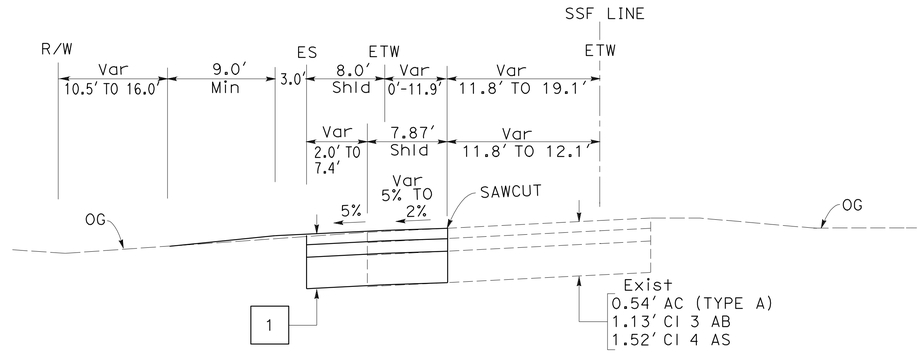

SSF 1096+76 TO 1097+47

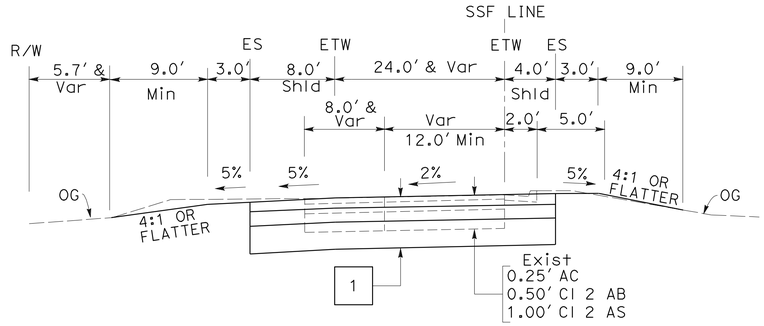

SSF 1094+05 TO 1096+76

SSF 1093+53 TO 1094+05

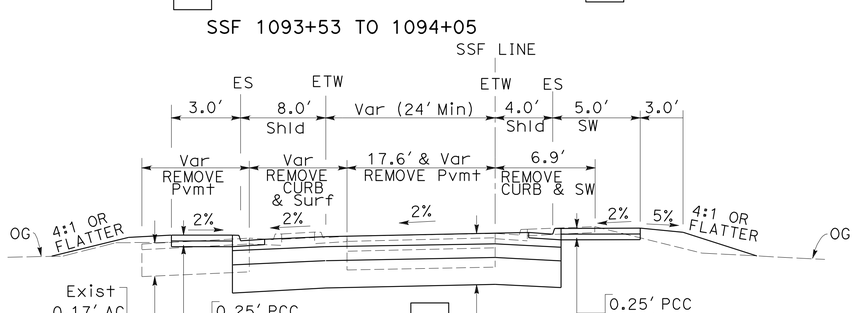

SSF 1093+24 TO 1094+05

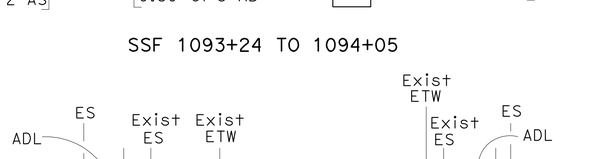

EXISTING AREA CONTAINING
AERIALLY DEPOSITED LEAD (ADL)

TYPICAL PAVEMENT STRUCTURE SECTION

1	0.55' HMA (TYPE A) 1.15' Cl 3 AB 1.55' Cl 4 AS
2	0.25' HMA

TYPICAL CROSS SECTIONS

NO SCALE

X-1

ROUTE 101

STATE OF CALIFORNIA - DEPARTMENT OF TRANSPORTATION
DESIGN

FUNCTIONAL SUPERVISOR: SOTERO ANGELES

CALCULATED-DESIGNED BY: BARBARA HERCZEG
CHECKED BY: GEORGE A. ACQUAYE

REVISED BY: BH
DATE REVISED: 5/16/11

LAST REVISION — DATE PLOTTED => 18-AUG-2011
TIME PLOTTED => 08:54
05-16-11

BORDER LAST REVISED 7/2/2010

USERNAME => s131681
DGN FILE => 04000020160ca001.dgn

RELATIVE BORDER SCALE IS IN INCHES 0 1 2 3

UNIT 0735

PROJECT NUMBER & PHASE 04000201601

NOTE:

FOR ACCURATE RIGHT OF WAY DATA, CONTACT
RIGHT OF WAY ENGINEERING AT THE DISTRICT OFFICE.

Dist	COUNTY	ROUTE	POST MILES TOTAL PROJECT	SHEET No.	TOTAL SHEETS
04	Son	101	25.1, 27.8	3	59

George A. Acquaye 5/9/11
REGISTERED CIVIL ENGINEER DATE

5-16-11
PLANS APPROVAL DATE

THE STATE OF CALIFORNIA OR ITS OFFICERS OR AGENTS SHALL NOT BE RESPONSIBLE FOR THE ACCURACY OR COMPLETENESS OF SCANNED COPIES OF THIS PLAN SHEET.

REGISTERED PROFESSIONAL ENGINEER
George A. Acquaye
No. 53859
Exp. 12-31-11
CIVIL
STATE OF CALIFORNIA

LEGEND

- COLD PLANE 0.25' AC PAVEMENT
- TFESA — TEMPORARY FENCE (TYPE ESA)
- (No.) — CURB DATA NUMBER

CURVE DATA

No.	R	Δ	T	L	N-COORDINATE	E-COORDINATE
1	403.54'	43°19'16"	160.27'	305.12'	1943784.917	6344109.110
2	25.00'	83°45'06"	22.41'	36.54'	1943494.115	6344537.990
3	762.62'	06°53'08"	45.88'	91.65'	1944258.505	6344427.400
4	106.45'	14°59'50"	14.01'	27.86'	1943602.481	6344413.684
5	50.78'	75°28'12"	39.22'	66.75'	1943548.317	6344426.987

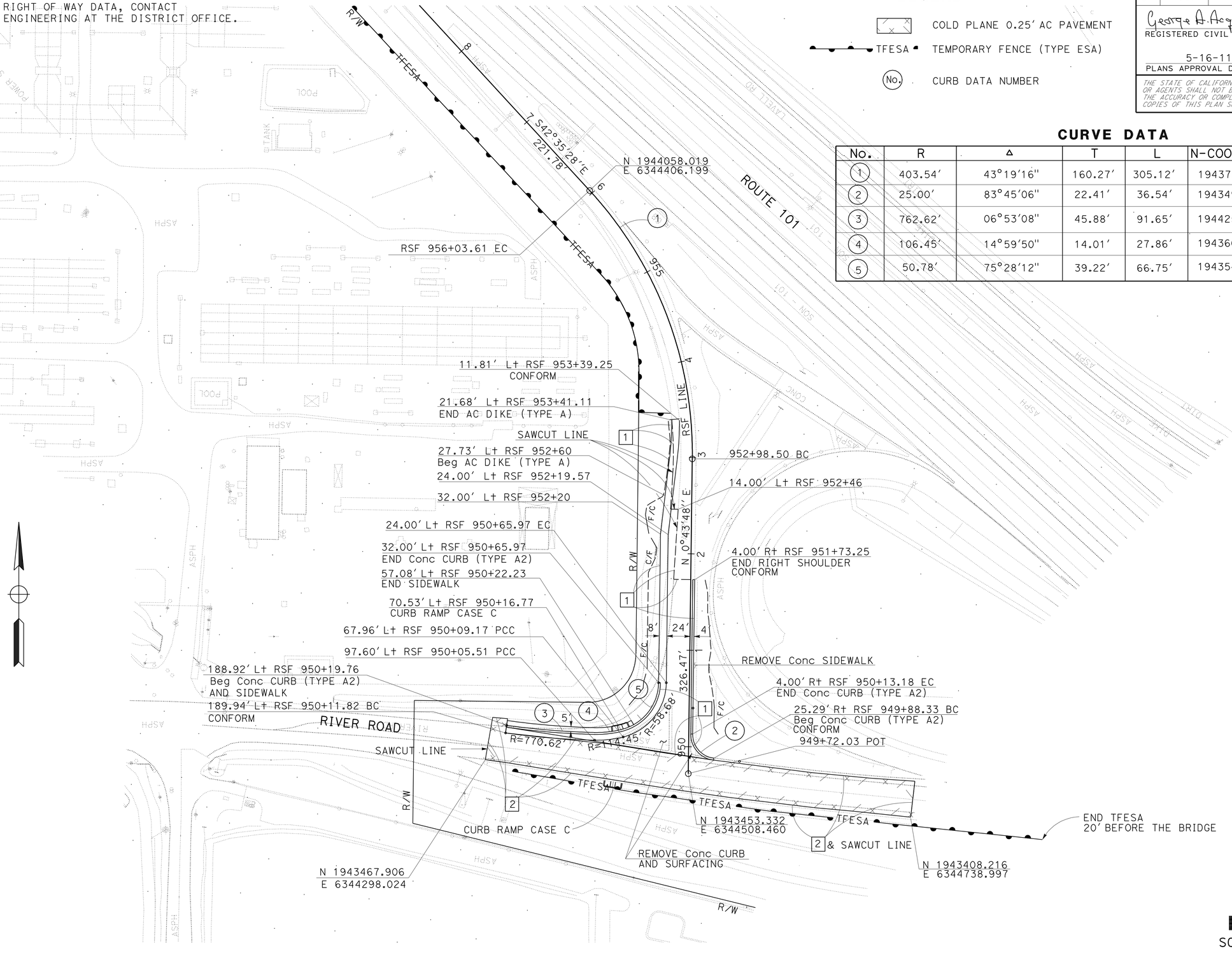

LAYOUT

SCALE: 1'' = 50'

L-1

STATE OF CALIFORNIA - DEPARTMENT OF TRANSPORTATION
DESIGN
Caltrans
FUNCTIONAL SUPERVISOR: SOTERO ANGELES
CALCULATED-DESIGNED BY: BARBARA HERCZEG
CHECKED BY: GEORGE A. ACQUAYE
REVISED BY: BH
DATE REVISED: 4/13/11

LAST REVISION DATE PLOTTED => 18-AUG-2011
05-16-11 TIME PLOTTED => 08:54

BORDER LAST REVISED 7/2/2010
USERNAME => s131681
DGN FILE => 0400020160ea001.dgn
RELATIVE BORDER SCALE IS IN INCHES 0 1 2 3
UNIT 0735
PROJECT NUMBER & PHASE 04000201601

Dist	COUNTY	ROUTE	POST MILES TOTAL PROJECT	SHEET No.	TOTAL SHEETS
04	Son	101	25.1, 27.8	4	59

George A. Acquaye 5/9/11
REGISTERED CIVIL ENGINEER DATE

5-16-11
PLANS APPROVAL DATE

REGISTERED PROFESSIONAL ENGINEER — George A. Acquaye — No. 53859 — Exp. 2-31-11 — CIVIL — STATE OF CALIFORNIA

THE STATE OF CALIFORNIA OR ITS OFFICERS OR AGENTS SHALL NOT BE RESPONSIBLE FOR THE ACCURACY OR COMPLETENESS OF SCANNED COPIES OF THIS PLAN SHEET.

NOTE:

FOR ACCURATE RIGHT OF WAY DATA, CONTACT RIGHT OF WAY ENGINEERING AT THE DISTRICT OFFICE.

CURVE DATA

No.	R	Δ	T	L	N-COORDINATE	E-COORDINATE
1	492.12′	33°13′54"	146.86′	285.43′	1954792.210	6334590.425
2	25.00′	94°13′59"	26.91′	41.11′	1954342.845	6335089.878
3	762.62′	2°46′14"	18.44′	36.87′	1955073.485	6334839.715
4	106.45′	20°26′43"	19.20′	37.98′	1954426.467	6334948.906
5	57.24′	57°07′58"	31.16′	57.07′	1954383.858	6334973.530

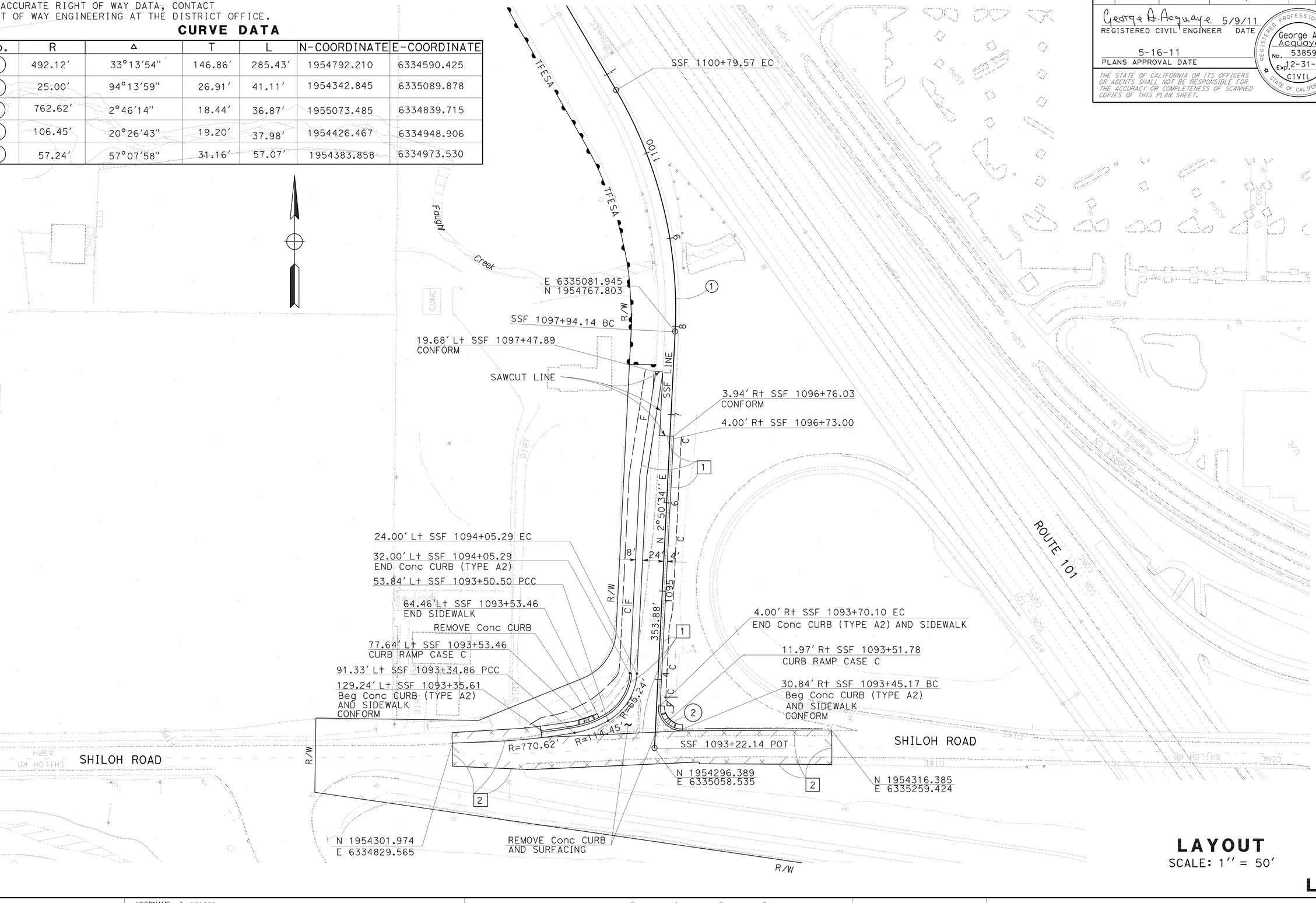

LAYOUT

SCALE: 1″ = 50′

L-2

STATE OF CALIFORNIA - DEPARTMENT OF TRANSPORTATION
DESIGN

REVISED BY	DATE REVISED
BH	4/13/11

CALCULATED-DESIGNED BY: BARBARA HERCZEG, GEORGE A. ACQUAYE
CHECKED BY:
FUNCTIONAL SUPERVISOR: SOTERO ANGELES

LAST REVISION — DATE PLOTTED => 16-AUG-2011, TIME PLOTTED => 08:55
05-16-11

BORDER LAST REVISED 7/2/2010 | USERNAME => s131681 | DGN FILE => 0400020160ea002.dgn | RELATIVE BORDER SCALE IS IN INCHES 0 1 2 3 | UNIT 0735 | PROJECT NUMBER & PHASE 04000201601

NOTE:

FOR ACCURATE RIGHT OF WAY DATA, CONTACT
RIGHT OF WAY ENGINEERING AT THE DISTRICT OFFICE.

ABBREVIATION

LG LIP OF GUTTER

Dist	COUNTY	ROUTE	POST MILES TOTAL PROJECT	SHEET No.	TOTAL SHEETS
04	Son	101	25.1, 27.8	5	59

George A. Acquaye 5/9/11
REGISTERED CIVIL ENGINEER DATE

5-16-11
PLANS APPROVAL DATE

REGISTERED PROFESSIONAL ENGINEER
George A. Acquaye
No. 53859
Exp. 12-31-11
CIVIL
STATE OF CALIFORNIA

THE STATE OF CALIFORNIA OR ITS OFFICERS OR AGENTS SHALL NOT BE RESPONSIBLE FOR THE ACCURACY OR COMPLETENESS OF SCANNED COPIES OF THIS PLAN SHEET.

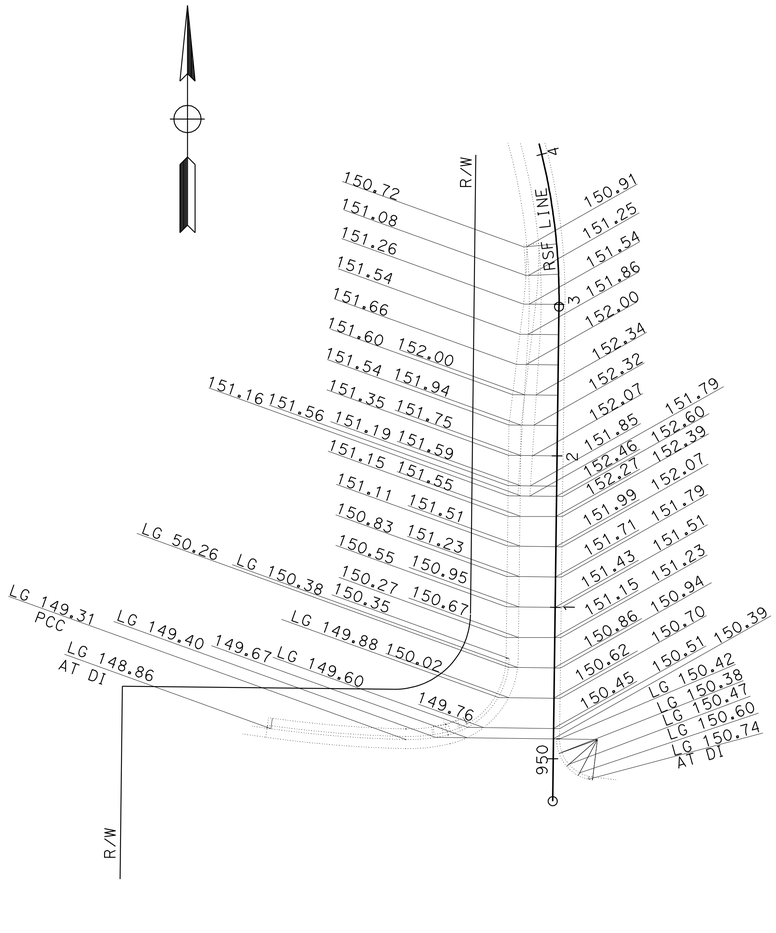

RSF RAMP

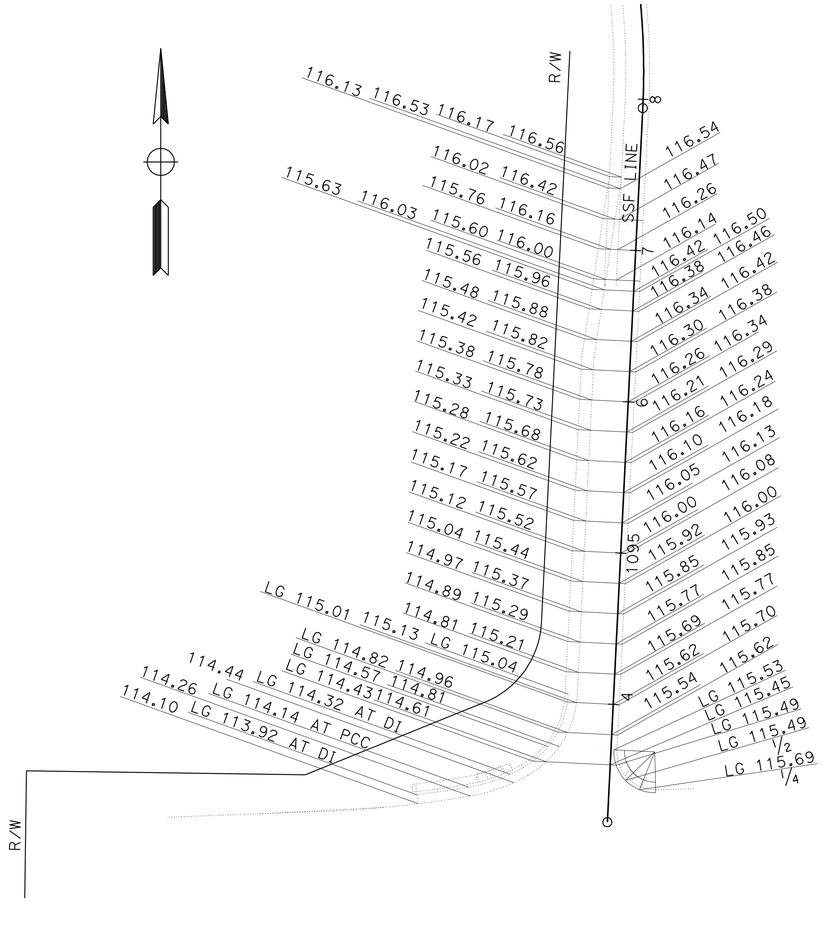

SSF RAMP

CONSTRUCTION DETAILS
PAVEMENT ELEVATION PLAN

SCALE: 1'' = 50'

THIS PLAN ACCURATE FOR PAVEMENT ELEVATION WORK ONLY

C-1

STATE OF CALIFORNIA - DEPARTMENT OF TRANSPORTATION
DESIGN
Caltrans

FUNCTIONAL SUPERVISOR: SOTERO ANGELES

REVISED BY	DATE REVISED
BH	4/13/11

CALCULATED-DESIGNED BY: BARBARA HERCZEG
CHECKED BY: GEORGE A. ACQUAYE

LAST REVISION | DATE PLOTTED => 18-AUG-2011
05-16-11 | TIME PLOTTED => 08:55

BORDER LAST REVISED 7/2/2010

USERNAME => s131681
DGN FILE => 0400020160ga001.dgn

RELATIVE BORDER SCALE IS IN INCHES 0 1 2 3

UNIT 0735

PROJECT NUMBER & PHASE 04000201601

Dist	COUNTY	ROUTE	POST MILES TOTAL PROJECT	SHEET No.	TOTAL SHEETS
04	Son	101	25.1, 27.8	6	59

LICENSED LANDSCAPE ARCHITECT

5-16-11
PLANS APPROVAL DATE

LICENSED LANDSCAPE ARCHITECT
SALLY BANG No.5060
Signature
11-30-11
Renewal Date
5/12/11
Date
STATE OF CALIFORNIA

THE STATE OF CALIFORNIA OR ITS OFFICERS OR AGENTS SHALL NOT BE RESPONSIBLE FOR THE ACCURACY OR COMPLETENESS OF SCANNED COPIES OF THIS PLAN SHEET.

NOTE:

FOR ACCURATE RIGHT OF WAY DATA, CONTACT RIGHT OF WAY ENGINEERING AT THE DISTRICT OFFICE.

LEGEND

EROSION CONTROL (HYDROSEED)

FIBER ROLLS

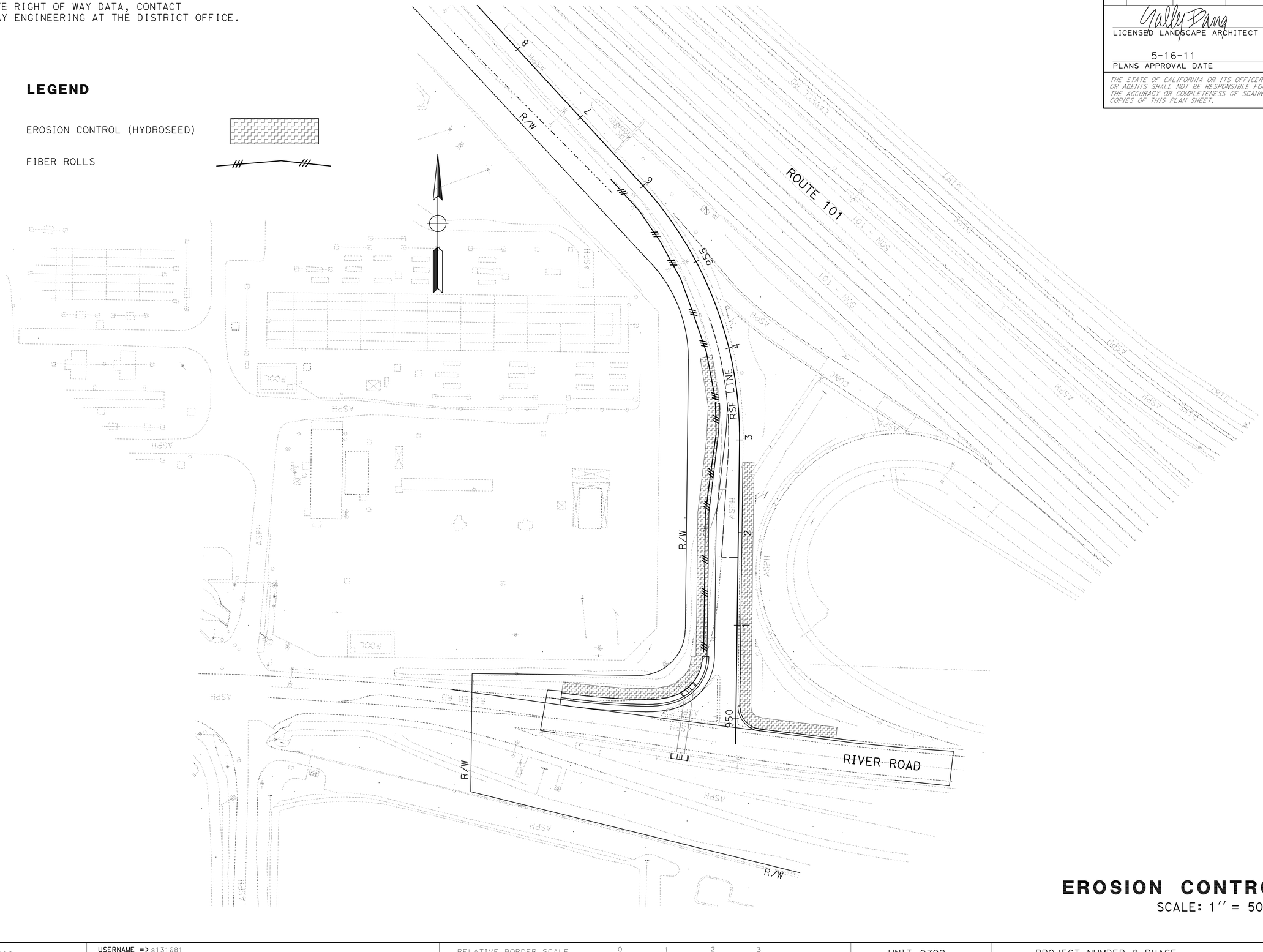

EROSION CONTROL PLAN

SCALE: 1'' = 50'

EC-1

STATE OF CALIFORNIA - DEPARTMENT OF TRANSPORTATION

Caltrans® **EROSION CONTROL**

SENIOR LANDSCAPE ARCHITECT: DAVID YAM

CALCULATED-DESIGNED BY: SALLY BANG

CHECKED BY: ANGELA KWAN

REVISED BY: SB

DATE REVISED: 5/12/11

LAST REVISION 05-16-11

DATE PLOTTED => 18-AUG-2011
TIME PLOTTED => 08:55

Dist	COUNTY	ROUTE	POST MILES TOTAL PROJECT	SHEET No.	TOTAL SHEETS
04	Son	101	25.1, 27.8	7	59

LICENSED LANDSCAPE ARCHITECT

5-16-11
PLANS APPROVAL DATE

LICENSED LANDSCAPE ARCHITECT
SALLY BANG No.5060
Signature
11-30-11
Renewal Date
5/12/11
Date
STATE OF CALIFORNIA

THE STATE OF CALIFORNIA OR ITS OFFICERS OR AGENTS SHALL NOT BE RESPONSIBLE FOR THE ACCURACY OR COMPLETENESS OF SCANNED COPIES OF THIS PLAN SHEET.

NOTE:

FOR ACCURATE RIGHT OF WAY DATA, CONTACT RIGHT OF WAY ENGINEERING AT THE DISTRICT OFFICE.

5-16-11

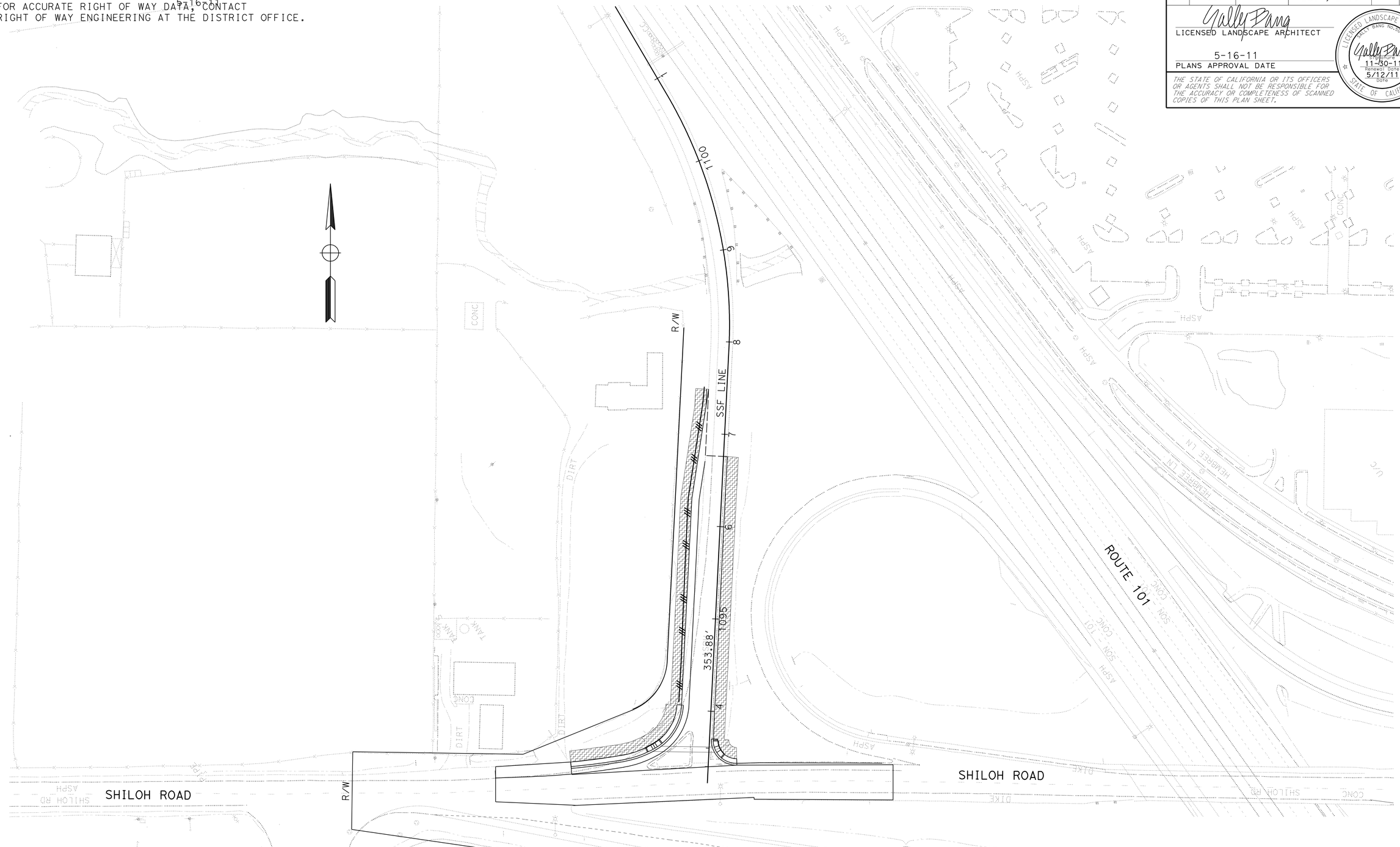

EROSION CONTROL PLAN

SCALE: 1'' = 50'

EC-2

STATE OF CALIFORNIA - DEPARTMENT OF TRANSPORTATION

Caltrans® EROSION CONTROL

SENIOR LANDSCAPE ARCHITECT: DAVID YAM

CALCULATED-DESIGNED BY: SALLY BANG

CHECKED BY: ANGELA KWAN

REVISED BY: SB

DATE REVISED: 5/12/11

LAST REVISION 05-12-11

DATE PLOTTED => 18-AUG-2011
TIME PLOTTED => 08:55

BORDER LAST REVISED 7/2/2010

USERNAME => s131681
DGN FILE => 0400020160ge002.dgn

RELATIVE BORDER SCALE IS IN INCHES 0 1 2 3

UNIT 0792

PROJECT NUMBER & PHASE 04000201601

Dist	COUNTY	ROUTE	POST MILES TOTAL PROJECT	SHEET No.	TOTAL SHEETS
04	Son	101	25.1, 27.8	8	59

LICENSED LANDSCAPE ARCHITECT

5-16-11
PLANS APPROVAL DATE

LICENSED LANDSCAPE ARCHITECT
SALLY BANG No.5068
Signature
11-30-11
Renewal Date
5/12/11
Date
STATE OF CALIFORNIA

THE STATE OF CALIFORNIA OR ITS OFFICERS OR AGENTS SHALL NOT BE RESPONSIBLE FOR THE ACCURACY OR COMPLETENESS OF SCANNED COPIES OF THIS PLAN SHEET.

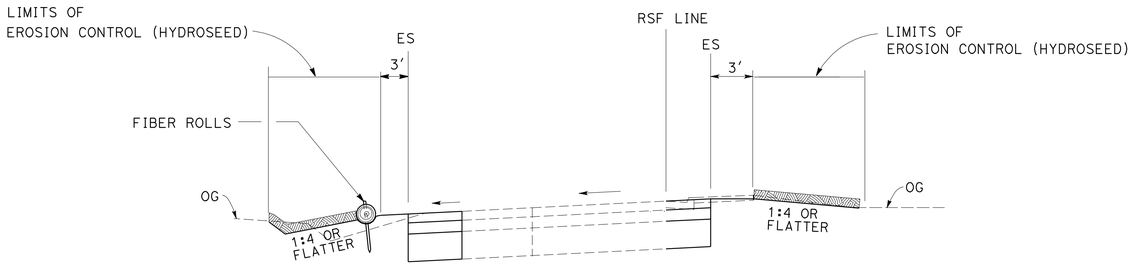

EROSION CONTROL APPLICATION TYP
RSF LINE

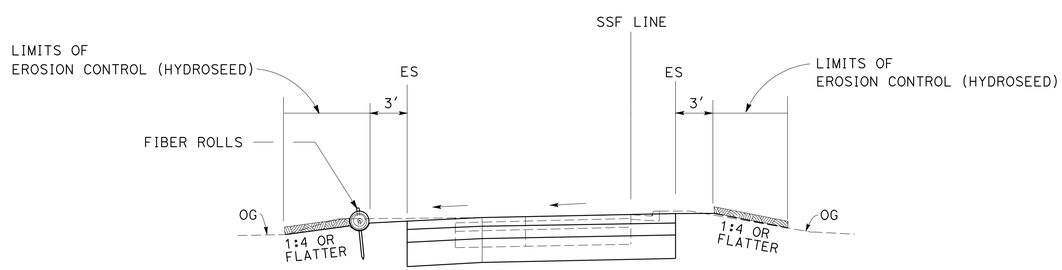

EROSION CONTROL APPLICATION TYP
SSF LINE

EROSION CONTROL DETAILS

NO SCALE

ECD-1

STATE OF CALIFORNIA - DEPARTMENT OF TRANSPORTATION
Caltrans® EROSION CONTROL

SENIOR LANDSCAPE ARCHITECT: DAVID YAM
CALCULATED-DESIGNED BY: SALLY BANG
CHECKED BY: ANGELA KWAN
REVISED BY: SB
DATE REVISED: 5/12/11

LAST REVISION 05-12-11
DATE PLOTTED => 18-AUG-2011
TIME PLOTTED => 08:55

NOTE:

FOR ACCURATE RIGHT OF WAY DATA, CONTACT RIGHT OF WAY ENGINEERING AT THE DISTRICT OFFICE.

NOTE:

EXISTING DRAINAGE LOCATIONS ARE APPROXIMATE ONLY. VERIFY LOCATION AND ELEVATION BEFORE MODIFYING EXISTING DRAINAGE FACILITIES.

LEGEND:

(No.) DRAINAGE SYSTEM NUMBER

(a) DRAINAGE UNIT

UNLINED DITCH

Dist	COUNTY	ROUTE	POST MILES TOTAL PROJECT	SHEET No.	TOTAL SHEETS
04	Son	101	25.1, 27.8	9	59

George A. Acquaye 5/9/11
REGISTERED CIVIL ENGINEER DATE

5-16-11
PLANS APPROVAL DATE

REGISTERED PROFESSIONAL ENGINEER
George A. Acquaye
No. 53859
Exp. 2-31-11
CIVIL
STATE OF CALIFORNIA

THE STATE OF CALIFORNIA OR ITS OFFICERS OR AGENTS SHALL NOT BE RESPONSIBLE FOR THE ACCURACY OR COMPLETENESS OF SCANNED COPIES OF THIS PLAN SHEET.

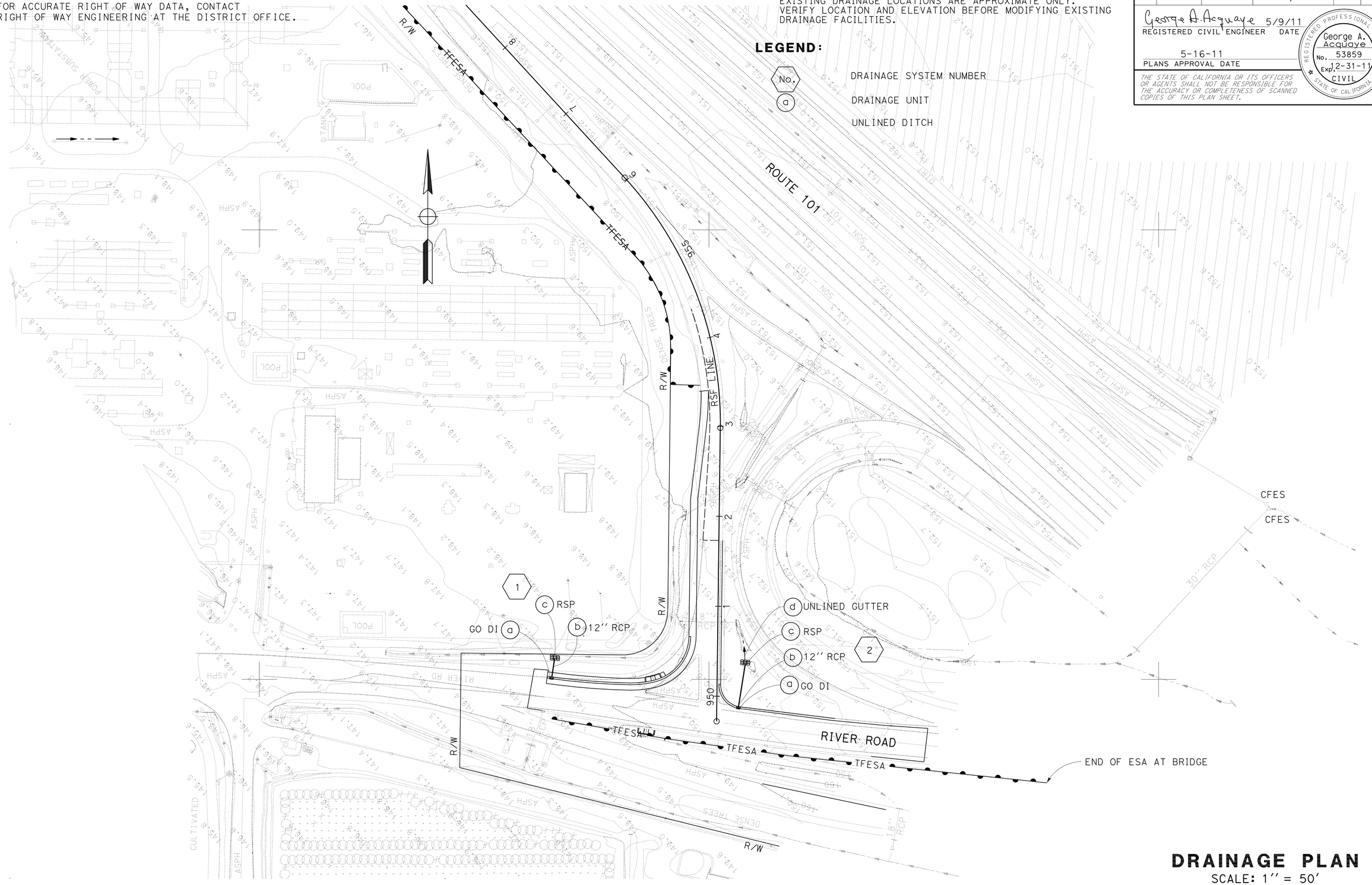

DRAINAGE PLAN

SCALE: 1'' = 50'

THIS PLAN FOR DRAINAGE WORK ONLY

D - 1

STATE OF CALIFORNIA - DEPARTMENT OF TRANSPORTATION
Caltrans®
HYDRAULICS

FUNCTIONAL SUPERVISOR: SOTERO ANGELES

CALCULATED-DESIGNED BY: LI LI CHAN
CHECKED BY: BARBARA HERCZEG

REVISED BY	DATE REVISED
BH	3/24/11

LAST REVISION
DATE PLOTTED => 18-AUG-2011
TIME PLOTTED => 08:56
05-16-11

BORDER LAST REVISED 7/2/2010

USERNAME => s131681
DGN FILE => 04000201601a001.dgn

RELATIVE BORDER SCALE IS IN INCHES 0 1 2 3

UNIT 0735

PROJECT NUMBER & PHASE 04000201601

Dist	COUNTY	ROUTE	POST MILES TOTAL PROJECT	SHEET No.	TOTAL SHEETS
04	Son	101	25.1, 27.8	10	59

George A. Acquaye 5/9/11
REGISTERED CIVIL ENGINEER DATE

5-16-11
PLANS APPROVAL DATE

REGISTERED PROFESSIONAL ENGINEER
George A. Acquaye
No. 53859
Exp. 12-31-11
CIVIL
STATE OF CALIFORNIA

THE STATE OF CALIFORNIA OR ITS OFFICERS OR AGENTS SHALL NOT BE RESPONSIBLE FOR THE ACCURACY OR COMPLETENESS OF SCANNED COPIES OF THIS PLAN SHEET.

NOTE:

FOR ACCURATE RIGHT OF WAY DATA, CONTACT RIGHT OF WAY ENGINEERING AT THE DISTRICT OFFICE.

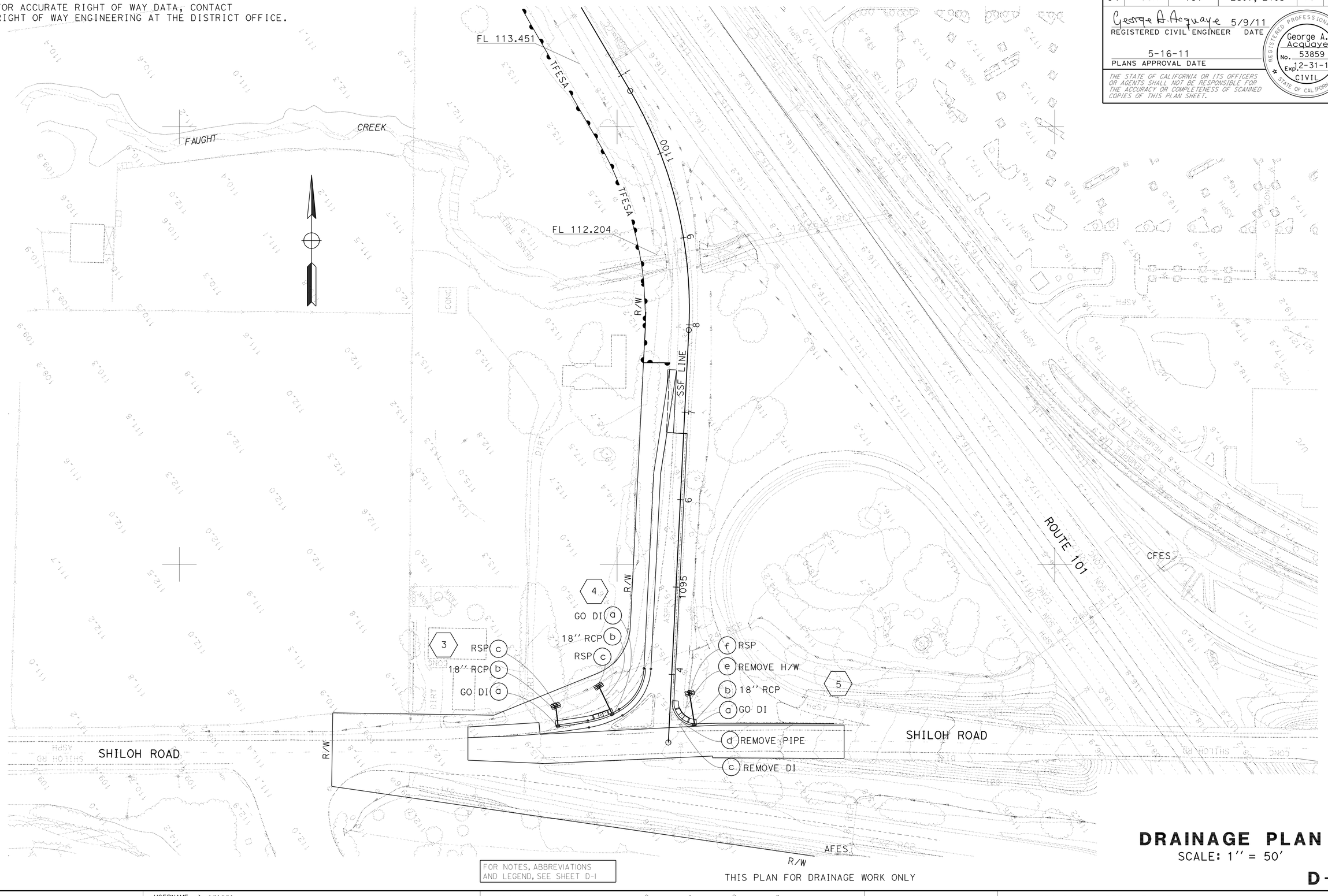

FOR NOTES, ABBREVIATIONS AND LEGEND, SEE SHEET D-1

THIS PLAN FOR DRAINAGE WORK ONLY

DRAINAGE PLAN

SCALE: 1'' = 50'

D- 2

STATE OF CALIFORNIA - DEPARTMENT OF TRANSPORTATION
Caltrans
HYDRAULICS

FUNCTIONAL SUPERVISOR: SOTERO ANGELES
CALCULATED-DESIGNED BY: LI LI CHAN
CHECKED BY: BARBARA HERCZEG
REVISED BY: BH
DATE REVISED: 3/24/11

LAST REVISION 05-16-11
DATE PLOTTED => 18-AUG-2011
TIME PLOTTED => 08:56

Dist	COUNTY	ROUTE	POST MILES TOTAL PROJECT	SHEET No.	TOTAL SHEETS
04	Son	101	25.1, 27.8	11	59

George A. Acquaye 5/9/11
REGISTERED CIVIL ENGINEER DATE

REGISTERED PROFESSIONAL ENGINEER
George A. Acquaye
No. 53859
Exp. 12-31-11
CIVIL
STATE OF CALIFORNIA

5-16-11
PLANS APPROVAL DATE

THE STATE OF CALIFORNIA OR ITS OFFICERS OR AGENTS SHALL NOT BE RESPONSIBLE FOR THE ACCURACY OR COMPLETENESS OF SCANNED COPIES OF THIS PLAN SHEET.

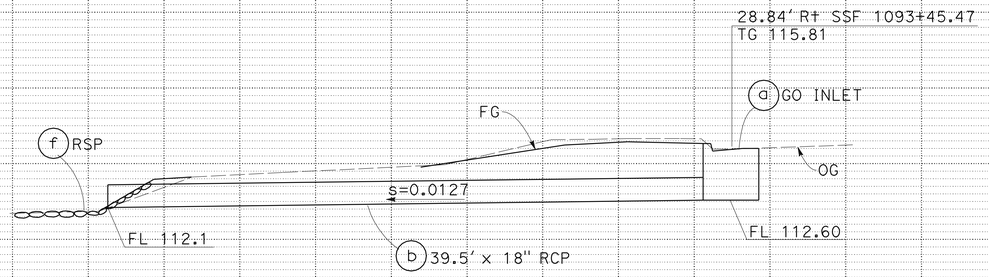

DRAINAGE SYSTEM 5

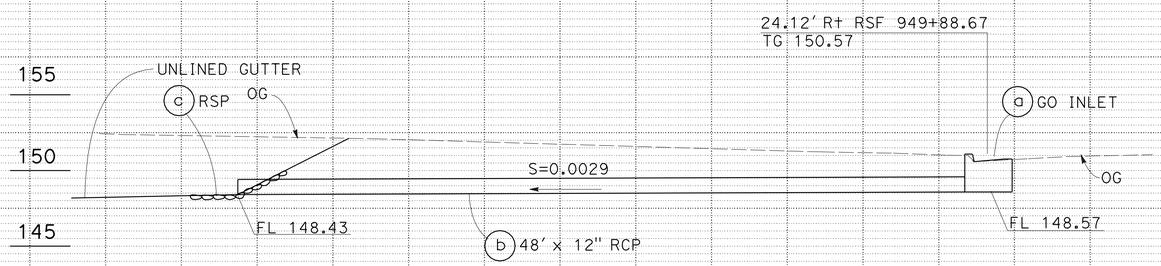

DRAINAGE SYSTEM 2

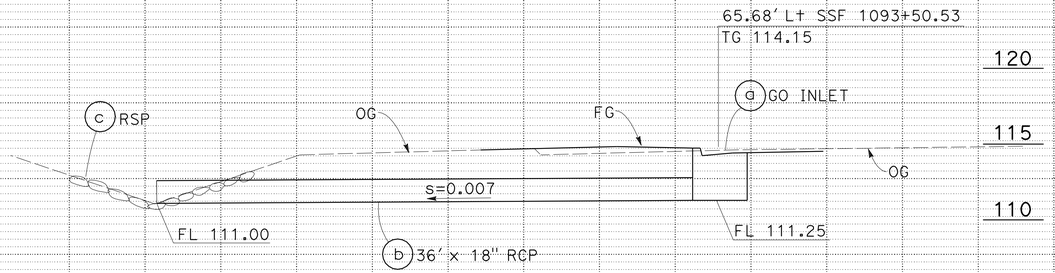

DRAINAGE SYSTEM 4

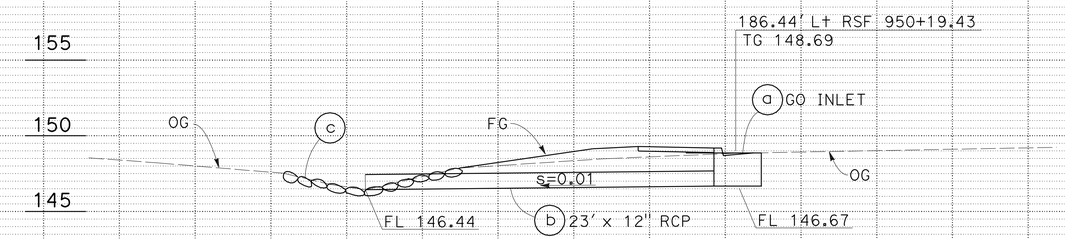

DRAINAGE SYSTEM 1

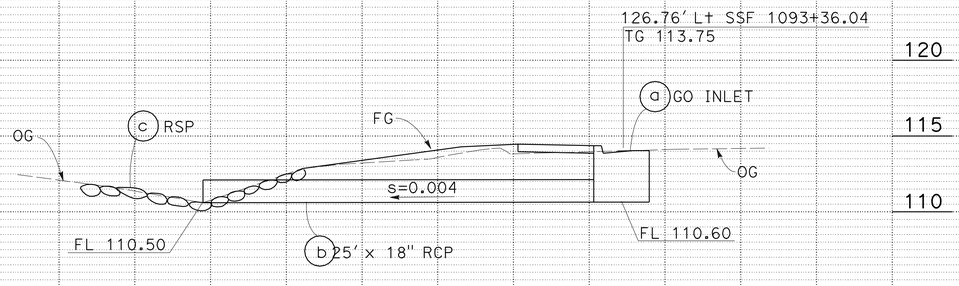

DRAINAGE SYSTEM 3

DRAINAGE PROFILES

SCALE: HORIZ 1'' = 10'
VERT 1'' = 5'

DP-1

CALCULATED-DESIGNED BY
CHECKED BY
FUNCTIONAL SUPERVISOR: SOTERO ANGELES
REVISED BY: BH
DATE REVISED: 3/24/11
LI LI CHAN
BARBARA HERCZEG

STATE OF CALIFORNIA - DEPARTMENT OF TRANSPORTATION
Caltrans®
HYDRAULICS

LAST REVISION DATE PLOTTED => 18-AUG-2011
05-16-11 TIME PLOTTED => 08:56

BORDER LAST REVISED 7/2/2010
USERNAME => s131681
DGN FILE => 04000201601b001.dgn
RELATIVE BORDER SCALE IS IN INCHES 0 1 2 3
UNIT 0735
PROJECT NUMBER & PHASE 04000201601

Dist	COUNTY	ROUTE	POST MILES TOTAL PROJECT	SHEET No.	TOTAL SHEETS
04	Son	101	25.1, 27.8	12	59

George A. Acquaye 5/18/11
REGISTERED CIVIL ENGINEER DATE

5-16-11
PLANS APPROVAL DATE

REGISTERED PROFESSIONAL ENGINEER
George A. Acquaye
No. 53859
Exp. 12-31-11
CIVIL
STATE OF CALIFORNIA

THE STATE OF CALIFORNIA OR ITS OFFICERS OR AGENTS SHALL NOT BE RESPONSIBLE FOR THE ACCURACY OR COMPLETENESS OF SCANNED COPIES OF THIS PLAN SHEET.

NOTE:

FOR INFORMATION NOT SHOWN, SEE Std PLAN D73 THRU D74B SHEETS.

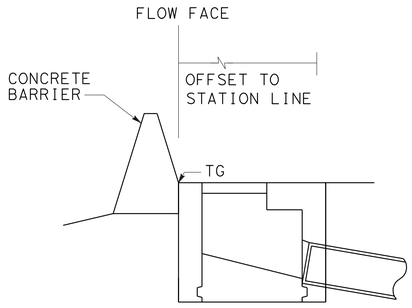

SECTION B-B

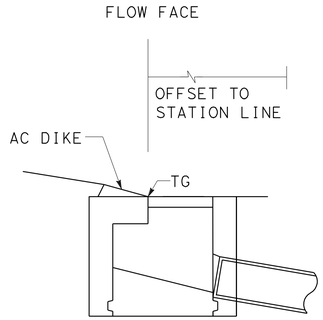

SECTION C-C

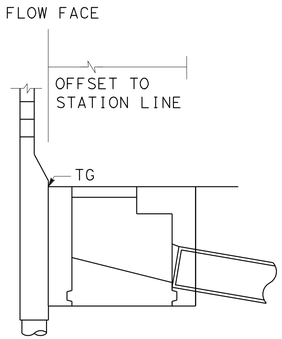

SECTION A-A

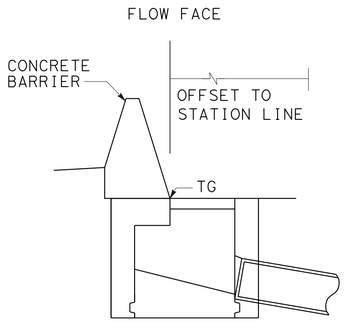

SECTION D-D

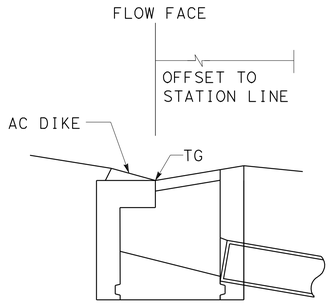

ELEVATION

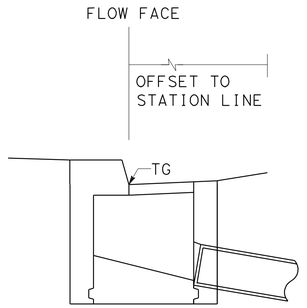

ELEVATION

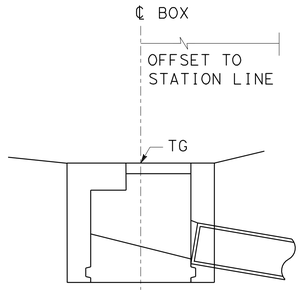

ELEVATION

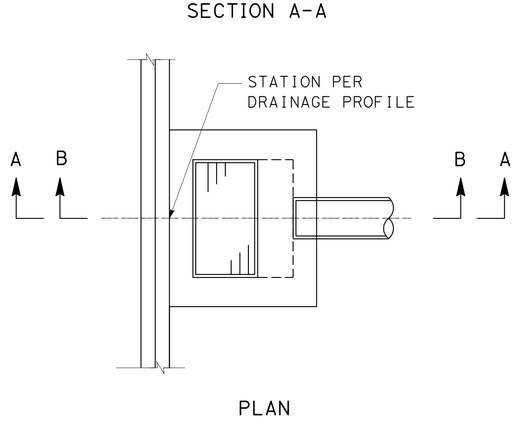

PLAN

INLET ADJACENT TO SOUNDWALL (SECTION A-A)
OR CONCRETE BARRIER (SECTION B-B)
(TYPES 60E, 60GE, 60SC, 60SE, OR HIGH SIDE OF TYPES 60C, 60GC)

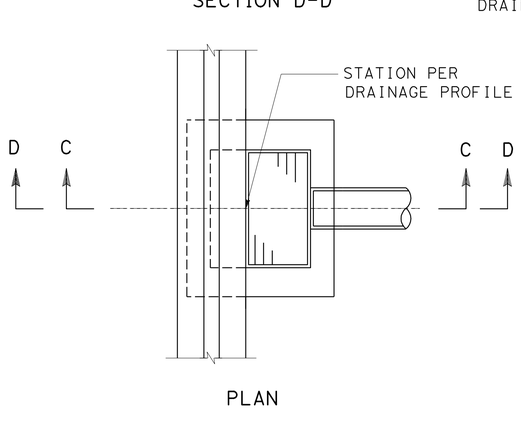

PLAN

INLET ADJACENT TO AC DIKE (SECTION C-C)
OR CONCRETE BARRIER (SECTION D-D)
(TYPE 60C SHOWN, TYPES 60, 60G, 60GC SIMILAR)

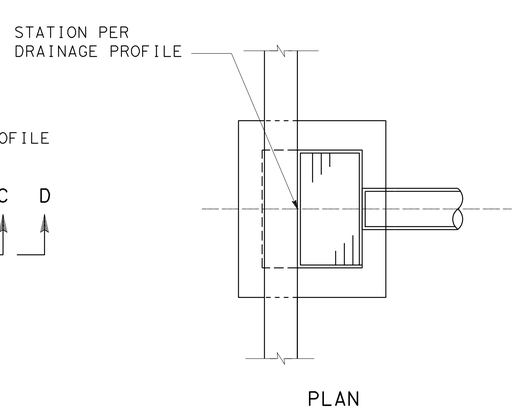

PLAN

INLET WITHIN AC SIDE GUTTER

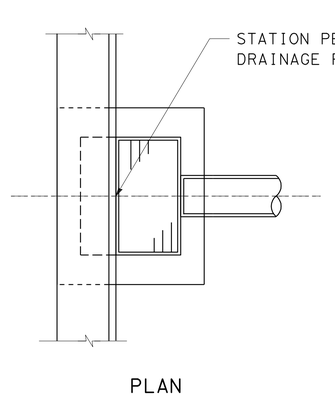

PLAN

INLET ADJACENT TO CURB

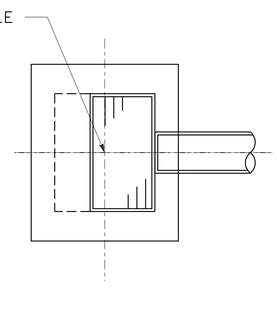

PLAN

FIELD INLET

DRAINAGE DETAILS

NO SCALE

DD-1

STATE OF CALIFORNIA - DEPARTMENT OF TRANSPORTATION
Caltrans®
HYDRAULICS

FUNCTIONAL SUPERVISOR: KATHLEEN REILLY

CALCULATED-DESIGNED BY: LI LI CHAN
CHECKED BY: KATHLEEN REILLY

REVISED BY: LC
DATE REVISED: 3/24/11

LAST REVISION | DATE PLOTTED => 18-AUG-2011
05-16-11 | TIME PLOTTED => 08:56

BORDER LAST REVISED 7/2/2010

USERNAME => s131681
DGN FILE => 04000201601c001.dgn

RELATIVE BORDER SCALE IS IN INCHES 0 1 2 3

UNIT 0735

PROJECT NUMBER & PHASE 04000201601

Dist	COUNTY	ROUTE	POST MILES TOTAL PROJECT	SHEET No.	TOTAL SHEETS
04	Son	101	25.1, 27.8	13	59

George A. Acquaye 5/18/11
REGISTERED CIVIL ENGINEER DATE

5-16-11
PLANS APPROVAL DATE

REGISTERED PROFESSIONAL ENGINEER George A. Acquaye No. 53859 Exp. 12-31-11 CIVIL STATE OF CALIFORNIA

THE STATE OF CALIFORNIA OR ITS OFFICERS OR AGENTS SHALL NOT BE RESPONSIBLE FOR THE ACCURACY OR COMPLETENESS OF SCANNED COPIES OF THIS PLAN SHEET.

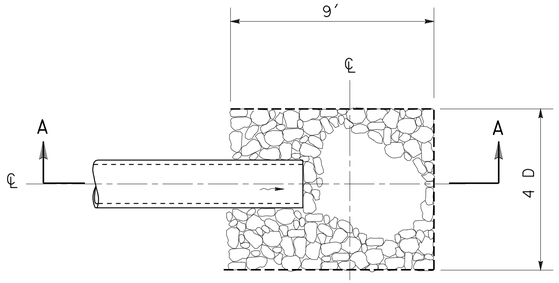

PLAN

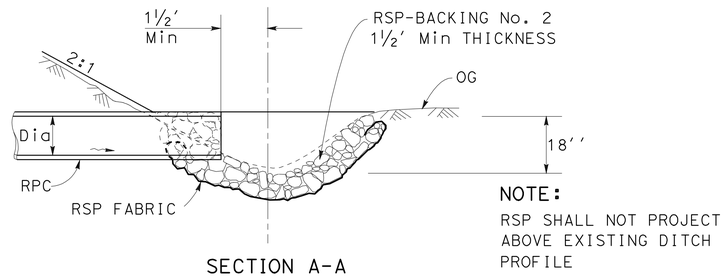

NOTE:
RSP SHALL NOT PROJECT ABOVE EXISTING DITCH PROFILE

SECTION A-A

PIPE w/ROCK SLOPE PROTECTION

1 c, 3 c, 4 c

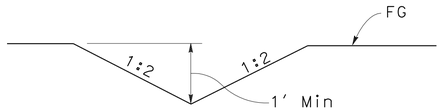

UNLINED DITCH/GUTTER

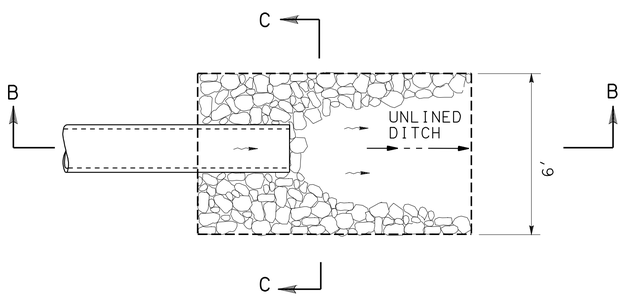

PLAN

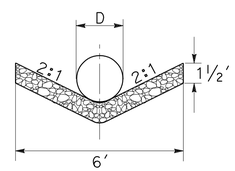

SECTION C-C

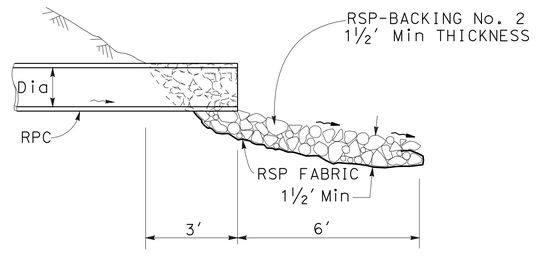

SECTION B-B

PIPE ROCK SLOPE PROTECTION

2 c, 5 f

DRAINAGE DETAILS

NO SCALE

DD-2

STATE OF CALIFORNIA - DEPARTMENT OF TRANSPORTATION
Caltrans® HYDRAULICS

FUNCTIONAL SUPERVISOR: KATHLEEN REILLY
CALCULATED-DESIGNED BY: LI LI CHAN
CHECKED BY: KATHLEEN REILLY
REVISED BY: LC
DATE REVISED: 3/24/11

LAST REVISION 05-16-11
DATE PLOTTED => 18-AUG-2011
TIME PLOTTED => 08:56

Dist	COUNTY	ROUTE	POST MILES TOTAL PROJECT	SHEET No.	TOTAL SHEETS
04	Son	101	25.1, 27.8	14	59

George A. Acquaye 5/9/11
REGISTERED CIVIL ENGINEER DATE

5-16-11
PLANS APPROVAL DATE

REGISTERED PROFESSIONAL ENGINEER
George A. Acquaye
No. 53859
Exp. 12-31-11
CIVIL
STATE OF CALIFORNIA

THE STATE OF CALIFORNIA OR ITS OFFICERS OR AGENTS SHALL NOT BE RESPONSIBLE FOR THE ACCURACY OR COMPLETENESS OF SCANNED COPIES OF THIS PLAN SHEET.

DRAINAGE QUANTITIES

DRAINAGE SYSTEM No.	DRAINAGE UNIT	24-12x FRAME AND GRATE(N)	Misc IRON AND STEEL	ROCK SLOPE PROTECTION (BACKINGNNo.2)	ROCK SLOPE PROTECTION FABRIC	MINOR CONCRETE (MINOR STRUCTURE)	PIPE JOINT CLASSIFICATION (N)	MAXIMUM COVER (N)	HEIGHT OF INLET (N)	RCP		REMOVE HEADWALL	REMOVE INLET	REMOVE PIPE	DESCRIPTION	STATION	DRAINAGE PLAN SHEET No.	DRAINAGE SYSTEM No.	DRAINAGE UNIT
										12"	18"								
			LB	CY	SF	CY		FT				EA		FT					
1	a	1	326			1.04			2.2						GO INLET	186.4 LT RSF 950+19.43	D-1	1	a
	b						S	1.7		23.0					12" RCP	LT RSF 950+19 TO 950+42			b
	c			3.4	60.3										ROCK SLOPE PROTECTION	180.9' LT RSF 950+41.9			c
2	a	1	326			1.03			2.2						GO INLET		D-1	2	a
	b						S	2.6		48.0					12" RCP				b
	c			3.4											ROCK SLOPE PROTECTION				c
3	a	1	326			1.32			3.3						GO INLET	126.76 LT SSF 1093+36.04	D-2	3	a
	b						S	2.3		25.0					18" RCP	126.76 LT SSF 1093+36 TO 132 LT 1093+60			b
	c			3.4	60.3										ROCK SLOPE PROTECTION	132 LT SSF 1093+60			c
4	a	1	326			1.26			3.1						GO INLET	65.68 LT SSF 1093+50.53	D-2	4	a
	b						S	2.0		36.0					18" RCP	65.7 Lt SSF 1093+50.5 TO 1093+84.8			b
	c			3.4	60.3										ROCK SLOPE PROTECTION	50.5 LT SSF 1093+84.8			c
5	a	1	326			1.33			3.4						GO INLET	28.84 RT SSF 1093+45,47	D-2	5	a
	b						S	2.4		39.5					18" RCP	28.8 LT SSF 1093+45.5 TO 20.7 RT 1093+83.1			b
	c												1		REMOVE INLET	14.7 RT SSF 1093+43.3			c
	d													21	REMOVE PIPE	14.7 RT SSF 1093+43.3 TO 18.5 RT 1093+63.6			d
	e											1			REMOVE HEADWALL	18.5 RT SSF 1093+63.6			e
	f			3.4	60.3										ROCK SLOPE PROTECTION	20.7 RT SSF 1093+83.2			f
TOTAL			1630	17	241	5.98				71	100.5	1	1	21		SHEET TOTAL			

CALCULATED- DESIGNED BY: BARBARA HERCZEG
CHECKED BY: GEORGE A. ACQUAYE
REVISED BY: BH
DATE REVISED: 5/12/11
FUNCTIONAL SUPERVISOR: SOTERO ANGELES
STATE OF CALIFORNIA - DEPARTMENT OF TRANSPORTATION
Caltrans®
HYDRAULICS

LAST REVISION: DATE PLOTTED => 18-AUG-2011
05-16-11 TIME PLOTTED => 08:57

DRAINAGE QUANTITIES DQ-1

Dist	COUNTY	ROUTE	POST MILES TOTAL PROJECT	SHEET No.	TOTAL SHEETS
04	Son	101	25.1, 27.8	15	59

George A. Acquaye 5/9/11
REGISTERED CIVIL ENGINEER DATE

5-16-11
PLANS APPROVAL DATE

REGISTERED PROFESSIONAL ENGINEER
George A. Acquaye
No. 53859
Exp. 12-31-11
CIVIL
STATE OF CALIFORNIA

THE STATE OF CALIFORNIA OR ITS OFFICERS OR AGENTS SHALL NOT BE RESPONSIBLE FOR THE ACCURACY OR COMPLETENESS OF SCANNED COPIES OF THIS PLAN SHEET.

NOTE:

FOR ACCURATE RIGHT OF WAY DATA, CONTACT RIGHT OF WAY ENGINEERING AT THE DISTRICT OFFICE.

POSITIVE LOCATION INFORMATION

POTHOLE No.	NORTHING	EASTING	OG Elev	TOP PIPE Elev	TYPE OF UTILITY	REMARKS
PH-22	1943799.924	6344483.654	150.190	145.107	GAS	28.70' Lt RSF 953+19.80
PH-68	1943520.577	6344424.872	148.314	145.855	WATER	84.44' Lt RSF 950+38.20

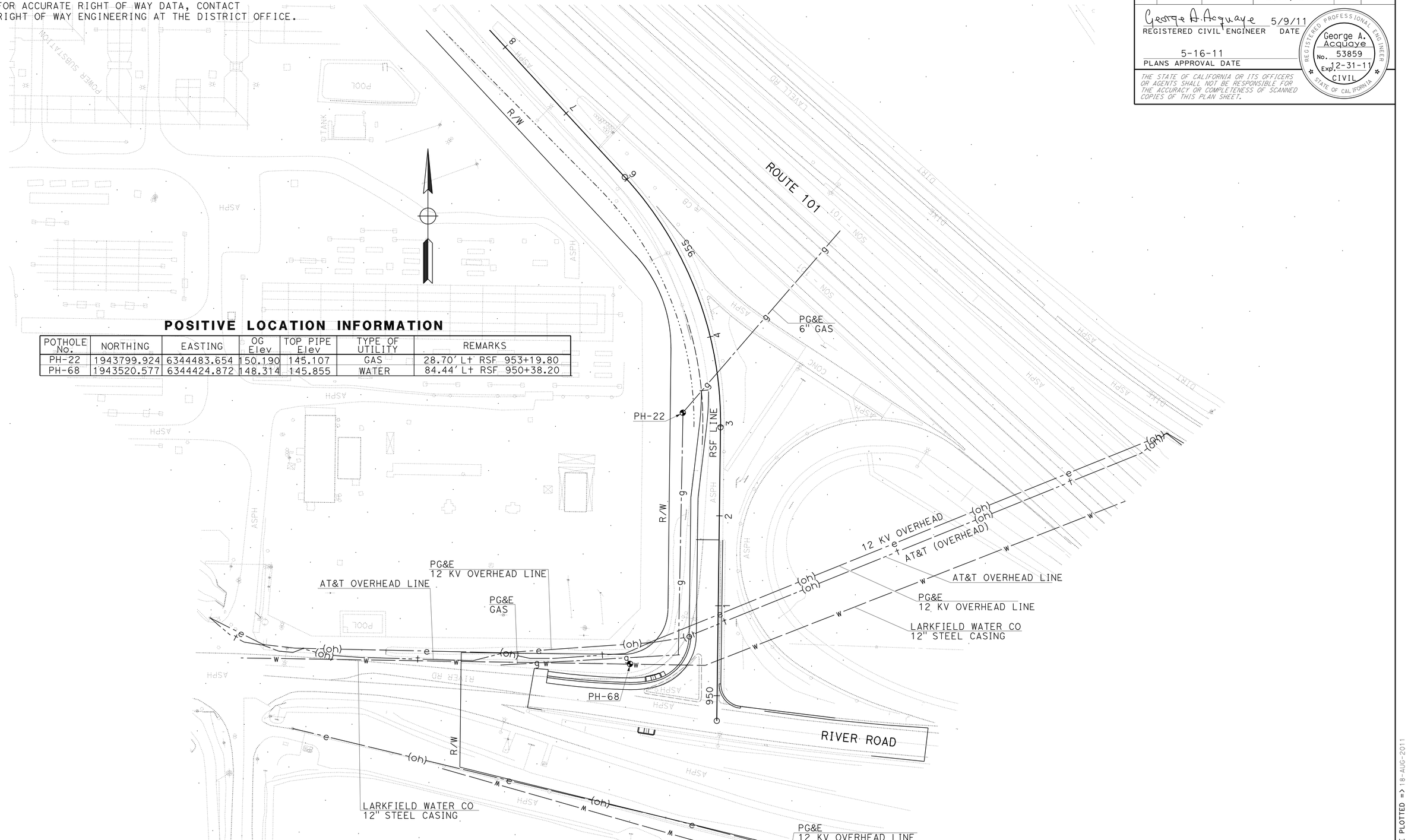

THIS PLAN FOR UTILITY INFORMATION ONLY

UTILITY PLAN

SCALE: 1'' = 50'

U-1

STATE OF CALIFORNIA - DEPARTMENT OF TRANSPORTATION
DESIGN
SOTERO ANGELES
FUNCTIONAL SUPERVISOR
RAY CHAN
GEORGE ACQUAYE
CALCULATED-DESIGNED BY
CHECKED BY
BH
4/13/11
REVISED BY
DATE REVISED

LAST REVISION DATE PLOTTED => 18-AUG-2011
05-16-11 TIME PLOTTED => 08:57

BORDER LAST REVISED 7/2/2010
USERNAME => s131681
DGN FILE => 0400020160ka001.dgn
RELATIVE BORDER SCALE IS IN INCHES 0 1 2 3
UNIT 0735
PROJECT NUMBER & PHASE 04000201601

NOTE:

FOR ACCURATE RIGHT OF WAY DATA, CONTACT
RIGHT OF WAY ENGINEERING AT THE DISTRICT OFFICE.

Dist	COUNTY	ROUTE	POST MILES TOTAL PROJECT	SHEET No.	TOTAL SHEETS
04	Son	101	25.1, 27.8	16	59

George A. Acquaye 5/9/11
REGISTERED CIVIL ENGINEER DATE

5-16-11
PLANS APPROVAL DATE

REGISTERED PROFESSIONAL ENGINEER
George A. Acquaye
No. 53859
Exp. 12-31-11
CIVIL
STATE OF CALIFORNIA

THE STATE OF CALIFORNIA OR ITS OFFICERS OR AGENTS SHALL NOT BE RESPONSIBLE FOR THE ACCURACY OR COMPLETENESS OF SCANNED COPIES OF THIS PLAN SHEET.

Faught Creek

I 101

R/W

SSF LINE

12KV (OVERHEAD)

TOWN OF WINDSOR WATER DEPT
12"

TOWN OF WINDSOR SANITARY SEWER
21"

PG&E
12 KV OVERHEAD LINE

ROUTE 101

SHILOH ROAD

SHILOH ROAD

R/W

FOR NOTES, ABBREVIATIONS AND LEGEND, SEE SHEET U-1

THIS PLAN FOR UTILITY INFORMATION ONLY

UTILITY PLAN

SCALE: 1'' = 50'

U-2

REVISED BY	DATE REVISED
BH	4/13/11

BARBARA HERCZEG
GEORGE ACQUAYE

CALCULATED-DESIGNED BY
CHECKED BY

FUNCTIONAL SUPERVISOR
SOTERO ANGELES

STATE OF CALIFORNIA - DEPARTMENT OF TRANSPORTATION
Caltrans
DESIGN

LAST REVISION DATE PLOTTED => 18-AUG-2011
TIME PLOTTED => 08:57

BORDER LAST REVISED 7/2/2010

USERNAME => s131681
DGN FILE => 0400020160ka002.dgn

RELATIVE BORDER SCALE IS IN INCHES 0 1 2 3

UNIT 0735

PROJECT NUMBER & PHASE 04000201601

Dist	COUNTY	ROUTE	POST MILES TOTAL PROJECT	SHEET No.	TOTAL SHEETS
04	Son	101	25.1, 27.8	17	59

5/10/11
REGISTERED CIVIL ENGINEER DATE

Jerilyn L. Struven
No. 49964
Exp 12-31-12
CIVIL
REGISTERED PROFESSIONAL ENGINEER
STATE OF CALIFORNIA

5-16-11
PLANS APPROVAL DATE

THE STATE OF CALIFORNIA OR ITS OFFICERS OR AGENTS SHALL NOT BE RESPONSIBLE FOR THE ACCURACY OR COMPLETENESS OF SCANNED COPIES OF THIS PLAN SHEET.

NOTES

1. EXACT LOCATION AND POSITION OF CONSTRUCTION AREA SIGNS TO BE DETERMINED BY THE ENGINEER.
2. CONSTRUCTION AREA SIGNS TO BE STATIONARY MOUNTED.

STATIONARY MOUNTED CONSTRUCTION AREA SIGNS

SIGN No. [X]	SIGN CODE	PANEL SIZE	SIGN MESSAGE	NUMBER OF POSTS AND SIZE	No. OF SIGNS
1	W20-1	36'' x 36''	ROAD WORK AHEAD	1-4'' x 6''	6
2	G20-2	36'' x 18''	END ROAD WORK	1-4'' x 4''	4

LEGEND

- [No.] CONSTRUCTION AREA SIGNS
- → DIRECTION OF TRAFFIC
- X PROJECT AREA CLOSED TO TRAFFIC

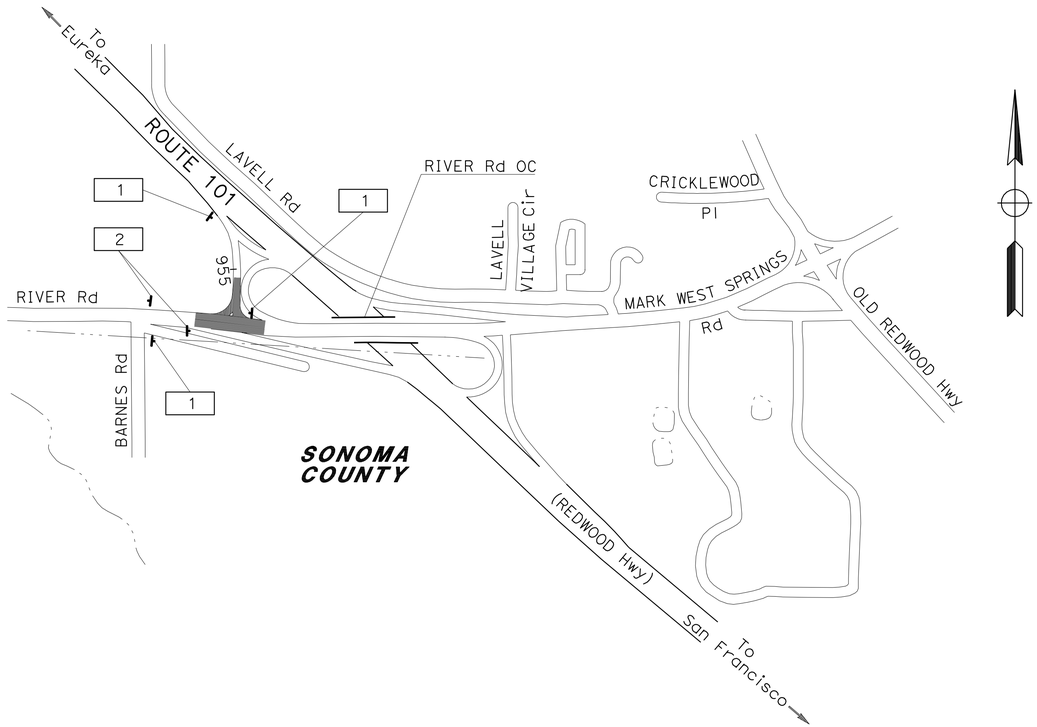

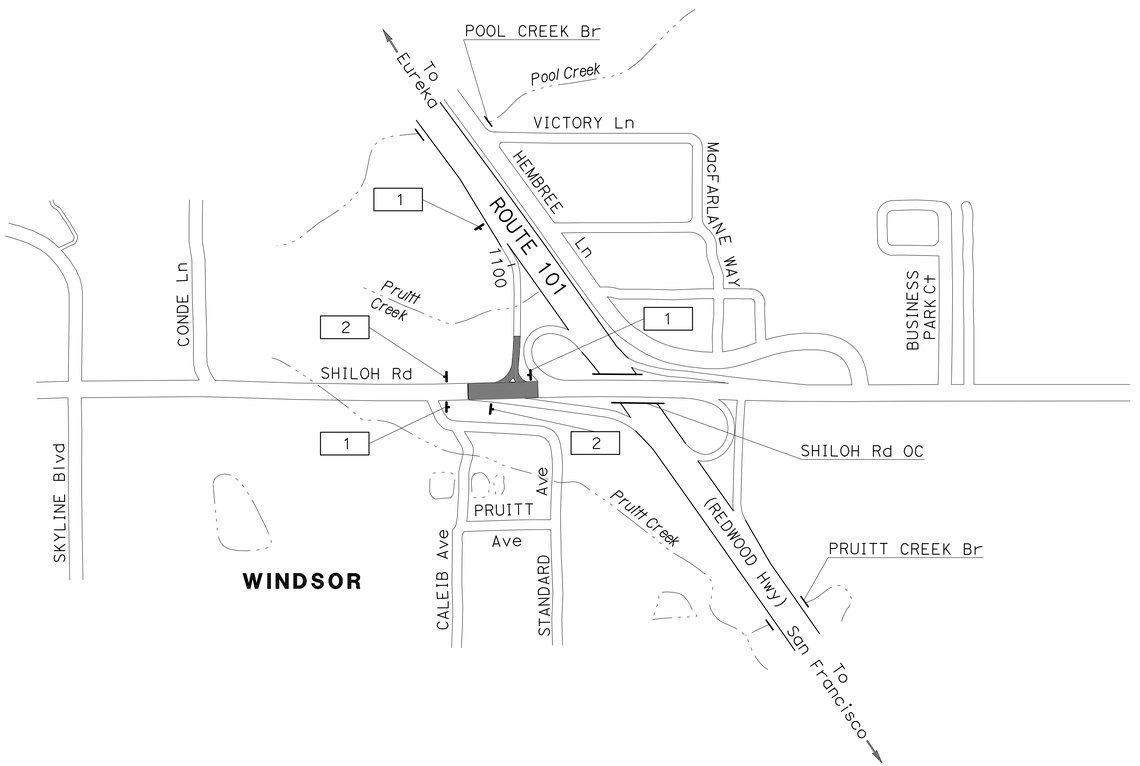

CONSTRUCTION AREA SIGNS

NO SCALE

THIS PLAN ACCURATE FOR CONSTRUCTION AREA SIGN WORK ONLY

CS-1

STATE OF CALIFORNIA - DEPARTMENT OF TRANSPORTATION
TRAFFIC
Caltrans
FUNCTIONAL SUPERVISOR: ROLAND AU-YEUNG
CALCULATED-DESIGNED BY: HERMINIO S. RUIDERA
CHECKED BY: JERILYN L. STRUVEN
REVISED BY: HR
DATE REVISED: 4/13/11

LAST REVISION DATE PLOTTED => 18-AUG-2011
05-16-11 TIME PLOTTED => 08:57

BORDER LAST REVISED 7/2/2010
USERNAME => s131681
DGN FILE => 04000201601a001.dgn
RELATIVE BORDER SCALE IS IN INCHES 0 1 2 3
UNIT 0735
PROJECT NUMBER & PHASE 04000201601

Dist	COUNTY	ROUTE	POST MILES TOTAL PROJECT	SHEET No.	TOTAL SHEETS
04	Son	101	25.1, 27.8	18	59

REGISTERED CIVIL ENGINEER — 5/10/11 DATE

Jerilyn L. Struven, No. 49964, Exp. 12-31-12, CIVIL — REGISTERED PROFESSIONAL ENGINEER — STATE OF CALIFORNIA

5-16-11
PLANS APPROVAL DATE

THE STATE OF CALIFORNIA OR ITS OFFICERS OR AGENTS SHALL NOT BE RESPONSIBLE FOR THE ACCURACY OR COMPLETENESS OF SCANNED COPIES OF THIS PLAN SHEET.

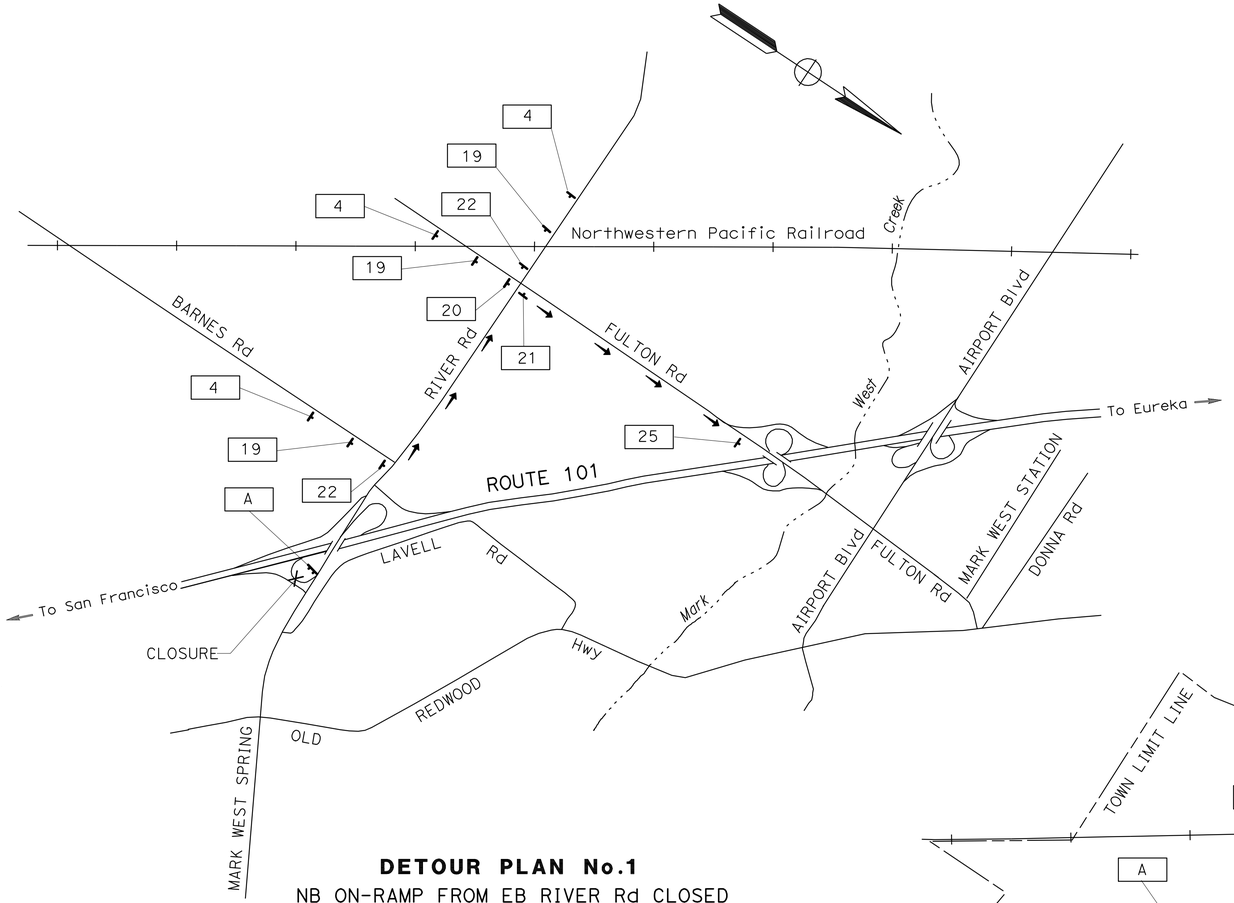

DETOUR PLAN No.1
NB ON-RAMP FROM EB RIVER Rd CLOSED

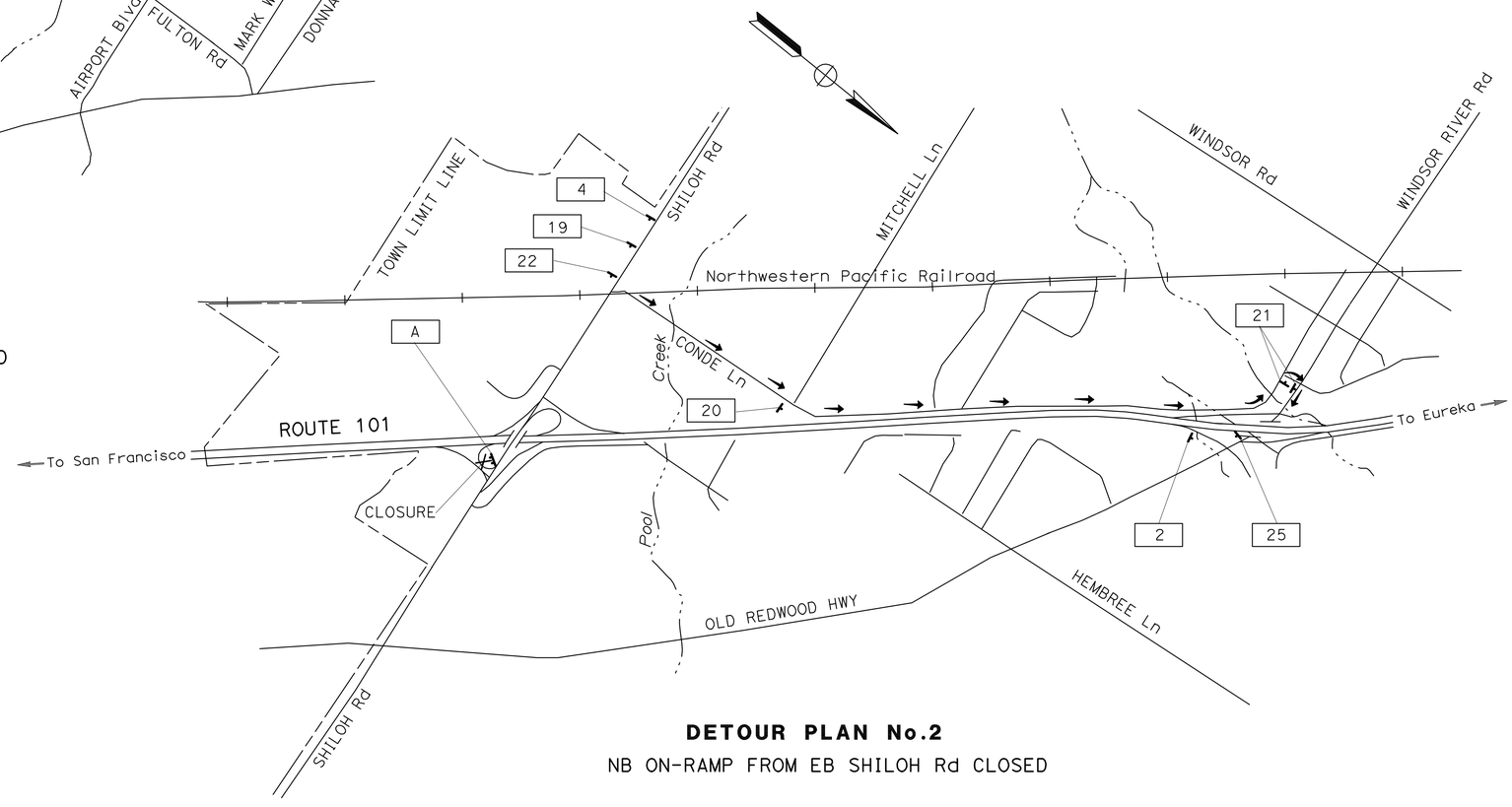

DETOUR PLAN No.2
NB ON-RAMP FROM EB SHILOH Rd CLOSED

CONSTRUCTION AREA SIGNS

NO SCALE

FOR NOTES, ABBREVIATIONS AND LEGEND, SEE SHEET CS-1

THIS PLAN ACCURATE FOR CONSTRUCTION AREA SIGN WORK ONLY

CS-2

STATE OF CALIFORNIA - DEPARTMENT OF TRANSPORTATION
Caltrans®
TRAFFIC

FUNCTIONAL SUPERVISOR: ROLAND AU-YEUNG

CALCULATED-DESIGNED BY: HERMINIO S. RUIDERA
CHECKED BY: JERILYN L. STRUVEN

REVISED BY: HR
DATE REVISED: 4/13/11

LAST REVISION | DATE PLOTTED => 18-AUG-2011 | TIME PLOTTED => 08:57
05-16-11

BORDER LAST REVISED 7/2/2010

USERNAME => s131681
DGN FILE => 04000201601a002.dgn

RELATIVE BORDER SCALE IS IN INCHES 0 1 2 3

UNIT 0735

PROJECT NUMBER & PHASE 04000201601

Dist	COUNTY	ROUTE	POST MILES TOTAL PROJECT	SHEET No.	TOTAL SHEETS
04	Son	101	25.1, 27.8	19	59

REGISTERED CIVIL ENGINEER — 5/10/11 DATE

Jerilyn L. Struven, No. 49964, Exp. 12-31-12, CIVIL — REGISTERED PROFESSIONAL ENGINEER — STATE OF CALIFORNIA

5-16-11
PLANS APPROVAL DATE

THE STATE OF CALIFORNIA OR ITS OFFICERS OR AGENTS SHALL NOT BE RESPONSIBLE FOR THE ACCURACY OR COMPLETENESS OF SCANNED COPIES OF THIS PLAN SHEET.

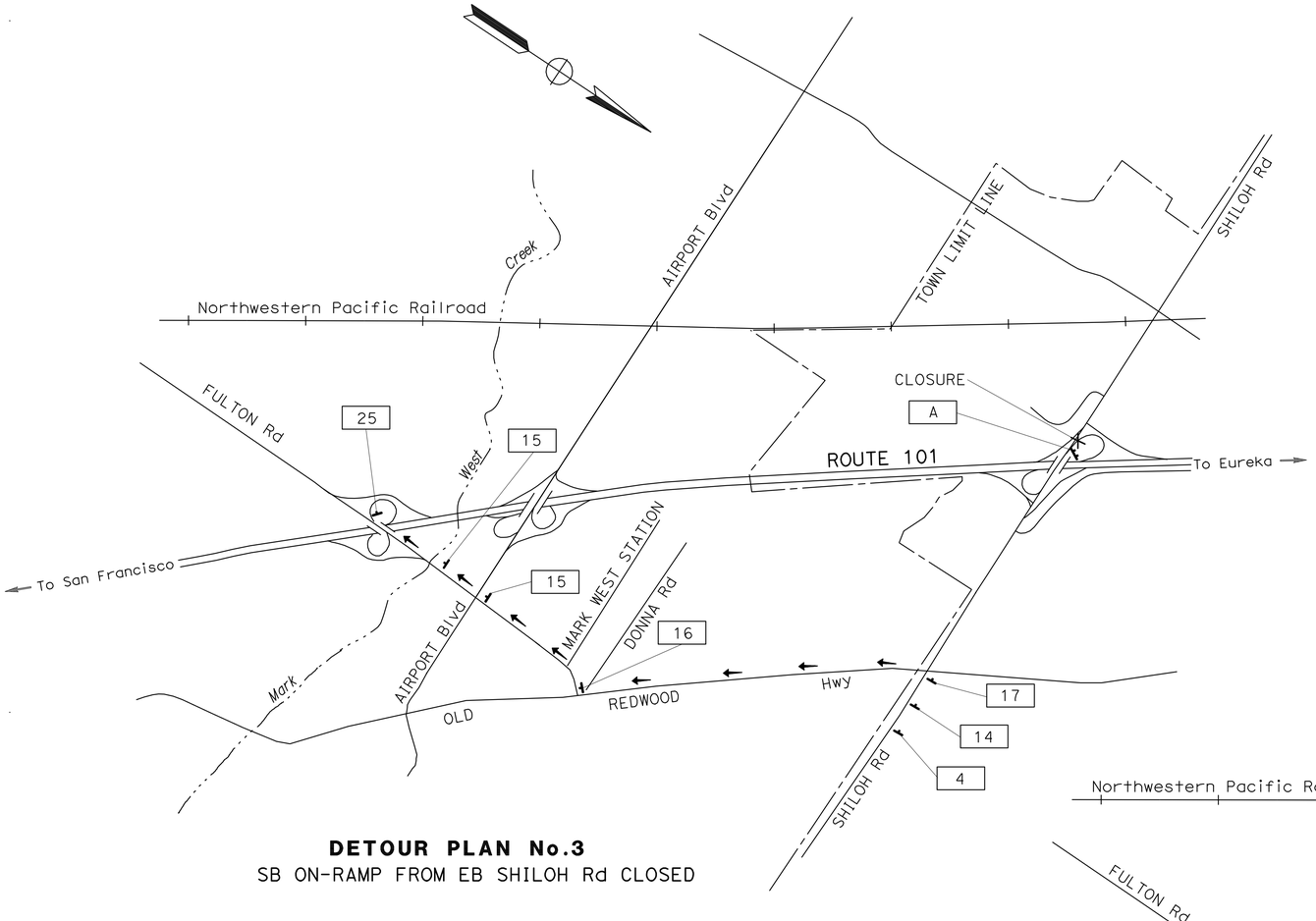

DETOUR PLAN No.3
SB ON-RAMP FROM EB SHILOH Rd CLOSED

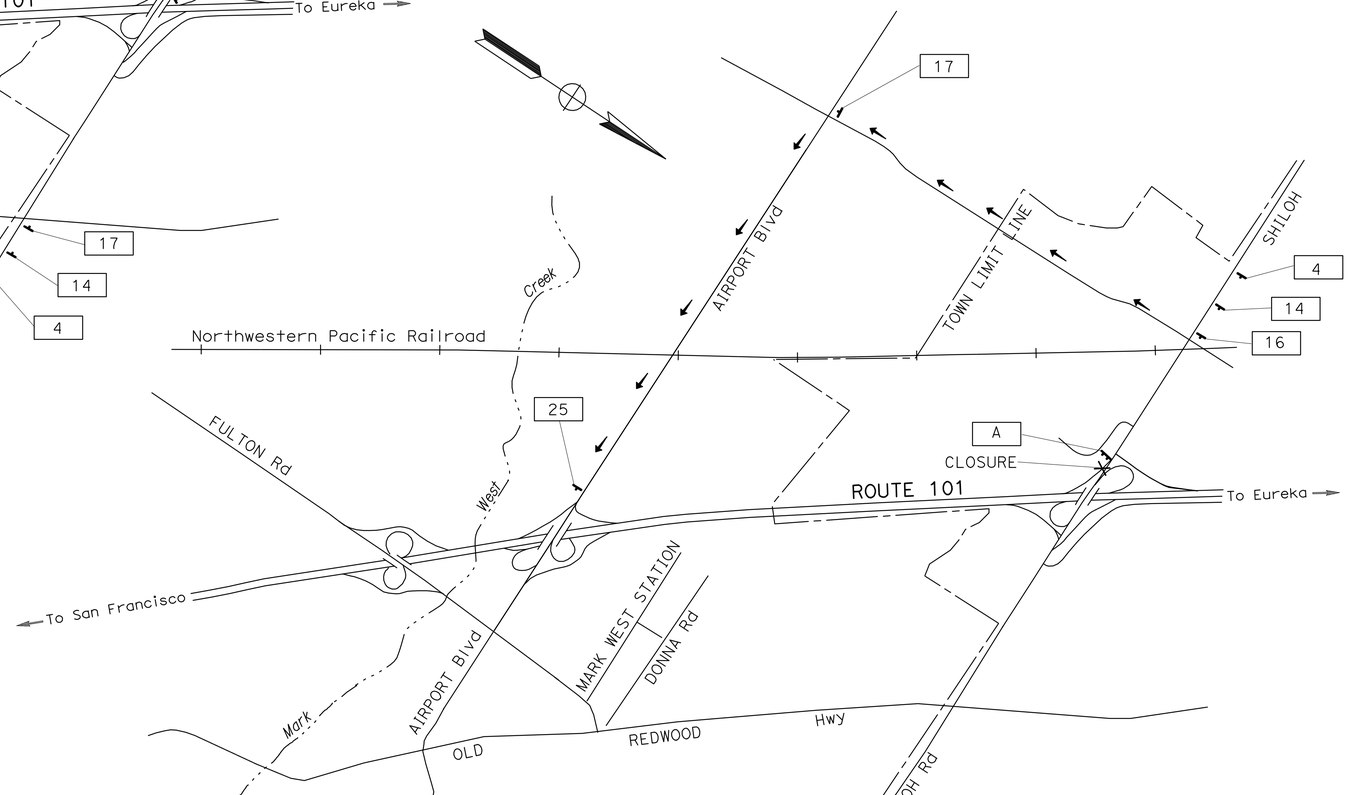

DETOUR PLAN No.4
SB ON-RAMP FROM WB SHILOH Rd CLOSED

CONSTRUCTION AREA SIGNS

NO SCALE

FOR NOTES, ABBREVIATIONS AND LEGEND, SEE SHEET CS-1

THIS PLAN ACCURATE FOR CONSTRUCTION AREA SIGN WORK ONLY

CS-3

STATE OF CALIFORNIA - DEPARTMENT OF TRANSPORTATION
Caltrans®
TRAFFIC

FUNCTIONAL SUPERVISOR: ROLAND AU-YEUNG

CALCULATED-DESIGNED BY	CHECKED BY	REVISED BY	DATE REVISED
HERMINIO S. RUIDERA	JERILYN L. STRUVEN	HR	4/13/11

LAST REVISION — DATE PLOTTED => 18-AUG-2011 — TIME PLOTTED => 08:58 — 05-16-11

Dist	COUNTY	ROUTE	POST MILES TOTAL PROJECT	SHEET No.	TOTAL SHEETS
04	Son	101	25.1, 27.8	20	59

5/10/11
REGISTERED CIVIL ENGINEER DATE

Jerilyn L. Struven
No. 49964
Exp. 12-31-12
CIVIL
REGISTERED PROFESSIONAL ENGINEER
STATE OF CALIFORNIA

5-16-11
PLANS APPROVAL DATE

THE STATE OF CALIFORNIA OR ITS OFFICERS OR AGENTS SHALL NOT BE RESPONSIBLE FOR THE ACCURACY OR COMPLETENESS OF SCANNED COPIES OF THIS PLAN SHEET.

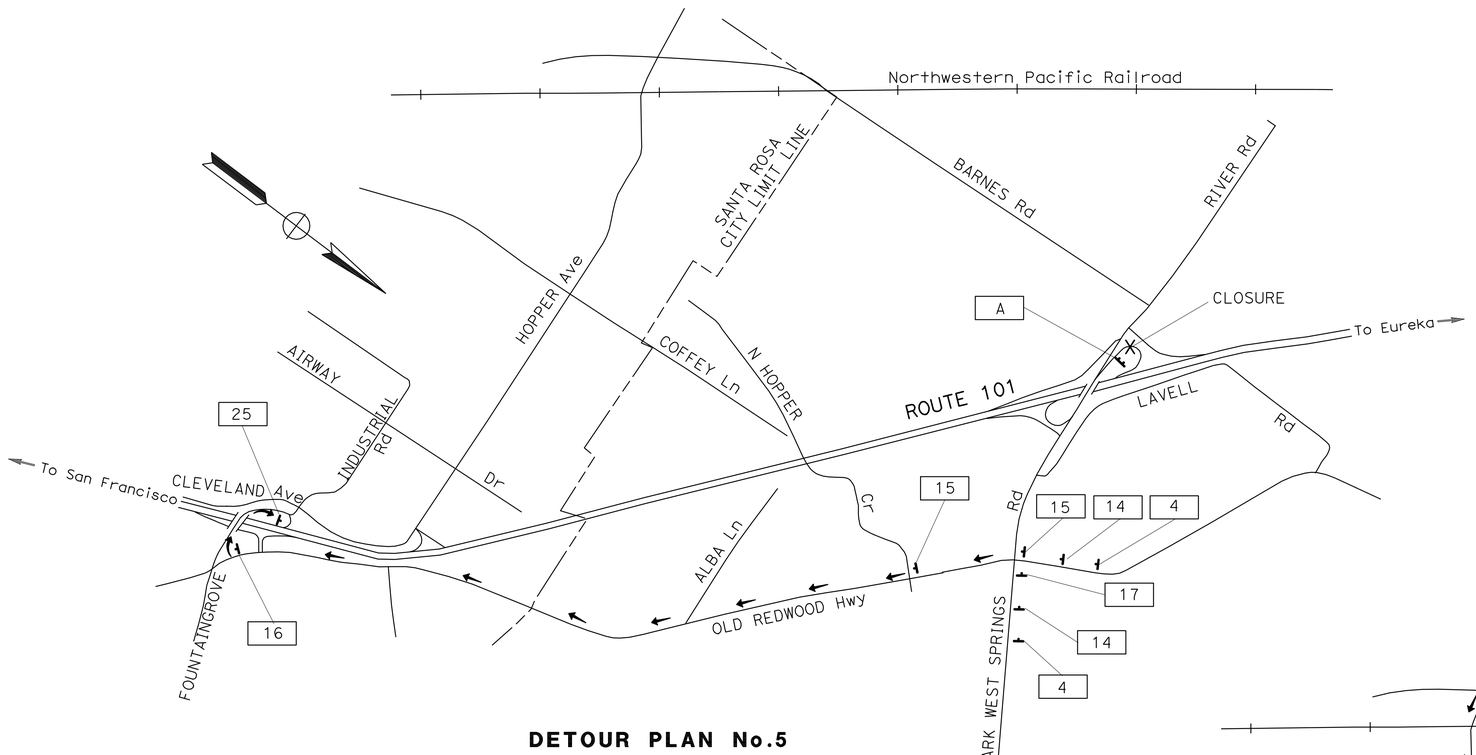

DETOUR PLAN No.5
SB ON-RAMP FROM WB RIVER Rd CLOSED

DETOUR PLAN No.6
SB ON-RAMP FROM EB RIVER Rd CLOSED

CONSTRUCTION AREA SIGNS
NO SCALE

CS-4

FOR NOTES, ABBREVIATIONS AND LEGEND, SEE SHEET CS-1

THIS PLAN ACCURATE FOR CONSTRUCTION AREA SIGN WORK ONLY

CALCULATED-DESIGNED BY	REVISED BY	HR	4/13/11
CHECKED BY	DATE REVISED		

STATE OF CALIFORNIA - DEPARTMENT OF TRANSPORTATION
TRAFFIC
FUNCTIONAL SUPERVISOR: ROLAND AU-YEUNG
HERMINIO S. RUIDERA
JERILYN L. STRUVEN

LAST REVISION | DATE PLOTTED => 18-AUG-2011 | TIME PLOTTED => 08:58
05-1611

BORDER LAST REVISED 7/2/2010 | USERNAME => s131681 | DGN FILE => 04000201601a004.dgn | RELATIVE BORDER SCALE IS IN INCHES 0 1 2 3 | UNIT 0735 | PROJECT NUMBER & PHASE 04000201601

Dist	COUNTY	ROUTE	POST MILES TOTAL PROJECT	SHEET No.	TOTAL SHEETS
04	Son	101	25.1, 27.8	21	59

REGISTERED CIVIL ENGINEER — 5/10/11 DATE

Jerilyn L. Struven, No. 49964, Exp. 12-31-12, CIVIL, REGISTERED PROFESSIONAL ENGINEER, STATE OF CALIFORNIA

5-16-11
PLANS APPROVAL DATE

THE STATE OF CALIFORNIA OR ITS OFFICERS OR AGENTS SHALL NOT BE RESPONSIBLE FOR THE ACCURACY OR COMPLETENESS OF SCANNED COPIES OF THIS PLAN SHEET.

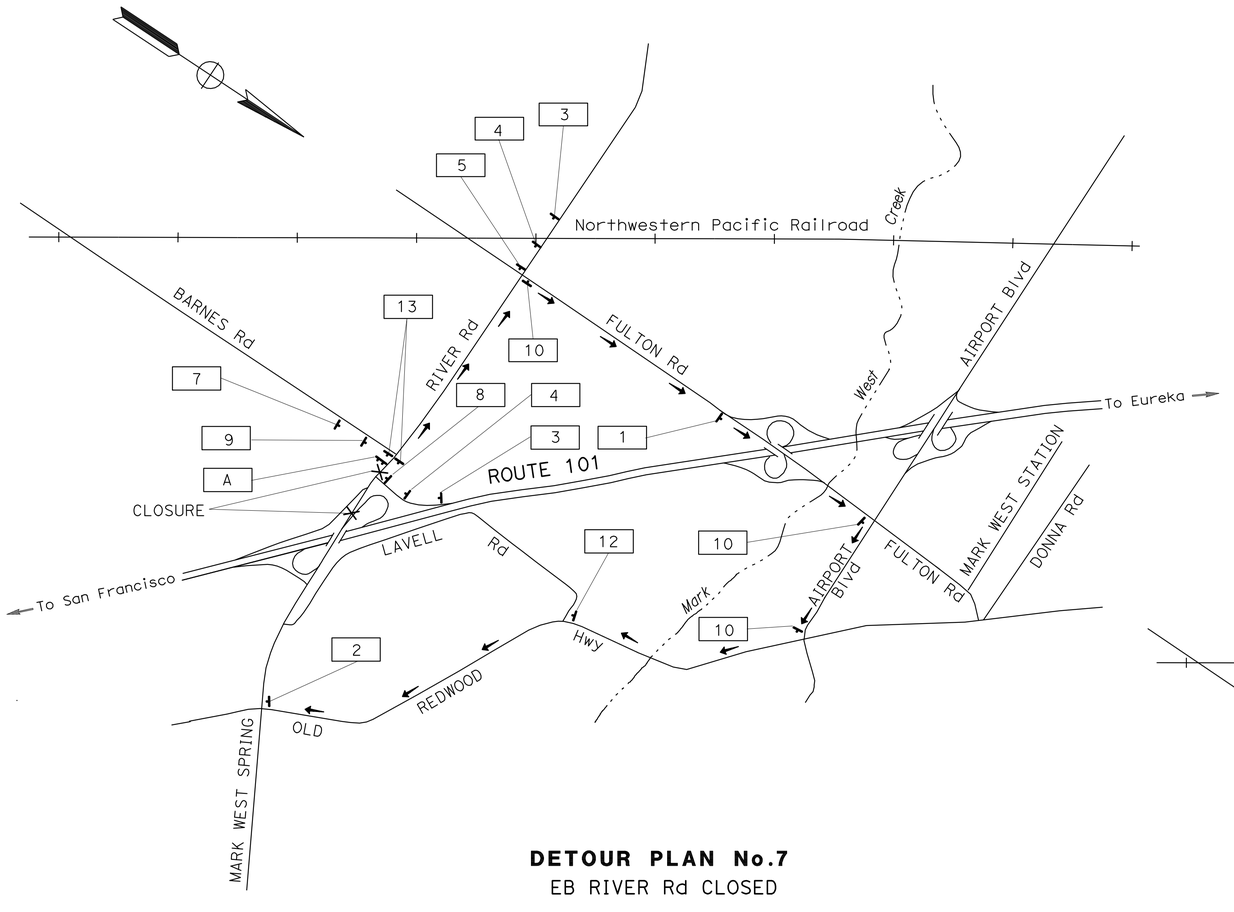

DETOUR PLAN No.7
EB RIVER Rd CLOSED

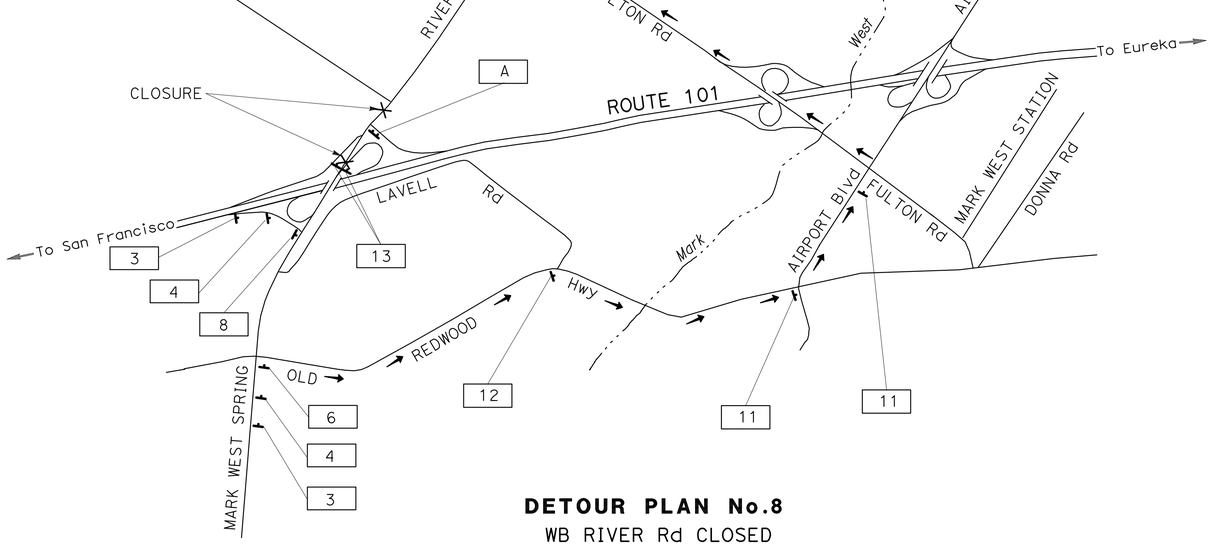

DETOUR PLAN No.8
WB RIVER Rd CLOSED

CONSTRUCTION AREA SIGNS

NO SCALE

FOR NOTES, ABBREVIATIONS AND LEGEND, SEE SHEET CS-1

THIS PLAN ACCURATE FOR CONSTRUCTION AREA SIGN WORK ONLY

CS-5

STATE OF CALIFORNIA - DEPARTMENT OF TRANSPORTATION
Caltrans
TRAFFIC

FUNCTIONAL SUPERVISOR: ROLAND AU-YEUNG
CALCULATED-DESIGNED BY: HERMINIO S. RUIDERA
CHECKED BY: JERILYN L. STRUVEN
REVISED BY: RH
DATE REVISED: 4/13/11

LAST REVISION — DATE PLOTTED => 18-AUG-2011, TIME PLOTTED => 08:58
05-16-11

BORDER LAST REVISED 7/2/2010
USERNAME => s131681
DGN FILE => 04000201601a005.dgn
RELATIVE BORDER SCALE IS IN INCHES 0 1 2 3
UNIT 0735
PROJECT NUMBER & PHASE 04000201601

Dist	COUNTY	ROUTE	POST MILES TOTAL PROJECT	SHEET No.	TOTAL SHEETS
04	Son	101	25.1, 27.8	22	59

5/10/11
REGISTERED CIVIL ENGINEER DATE

Jerilyn L. Struven
No. 49964
Exp. 12-31-12
CIVIL
REGISTERED PROFESSIONAL ENGINEER
STATE OF CALIFORNIA

5-16-11
PLANS APPROVAL DATE

THE STATE OF CALIFORNIA OR ITS OFFICERS OR AGENTS SHALL NOT BE RESPONSIBLE FOR THE ACCURACY OR COMPLETENESS OF SCANNED COPIES OF THIS PLAN SHEET.

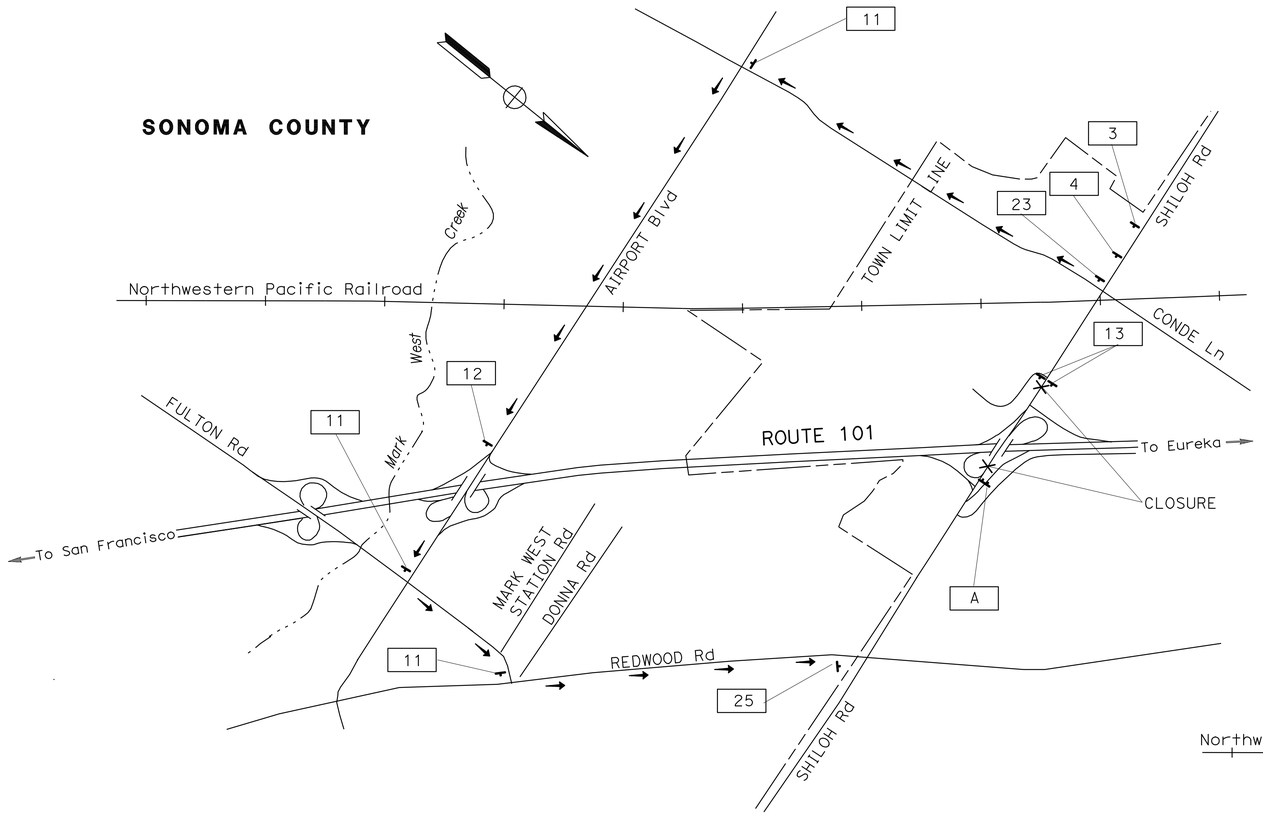

DETOUR PLAN No.9
EB SHILOH Rd CLOSED

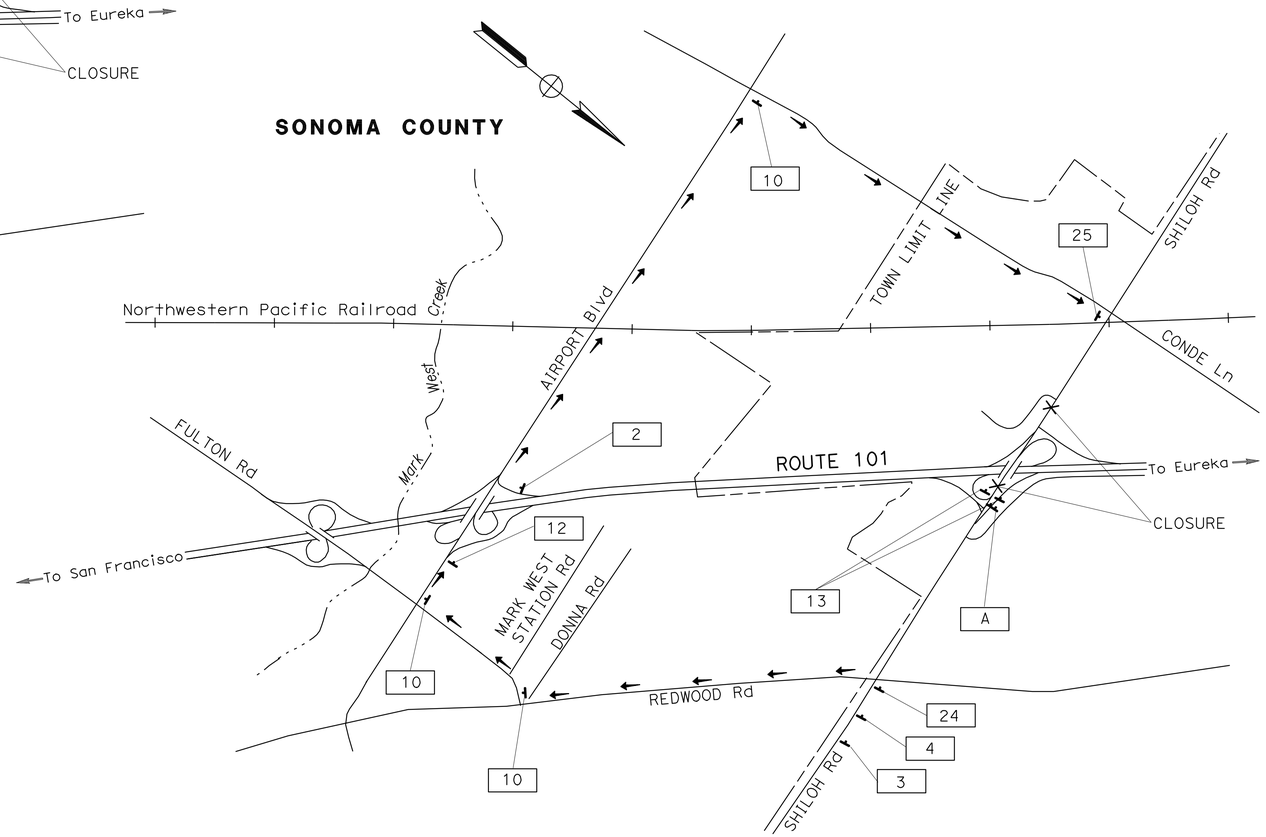

DETOUR PLAN No.10
WB SHILOH Rd CLOSED

CONSTRUCTION AREA SIGNS
NO SCALE

FOR NOTES, ABBREVIATIONS AND LEGEND, SEE SHEET CS-1

THIS PLAN ACCURATE FOR CONSTRUCTION AREA SIGN WORK ONLY

CS-6

STATE OF CALIFORNIA - DEPARTMENT OF TRANSPORTATION
Caltrans
TRAFFIC

FUNCTIONAL SUPERVISOR: ROLAND AU-YEUNG
CALCULATED-DESIGNED BY: HERMINIO S. RUIDERA
CHECKED BY: JERILYN L. STRUVEN
REVISED BY: HR
DATE REVISED: 4/13/11

LAST REVISION | DATE PLOTTED => 18-AUG-2011
05-16-11 | TIME PLOTTED => 08:58

BORDER LAST REVISED 7/2/2010
USERNAME => s131681
DGN FILE => 04000201601a006.dgn
RELATIVE BORDER SCALE IS IN INCHES 0 1 2 3
UNIT 0735
PROJECT NUMBER & PHASE 04000201601

Dist	COUNTY	ROUTE	POST MILES TOTAL PROJECT	SHEET No.	TOTAL SHEETS
04	Son	101	25.1, 27.8	23	59

5/10/11
REGISTERED CIVIL ENGINEER DATE

Jerilyn L. Struven
No. 49964
Exp. 12-31-12
CIVIL
REGISTERED PROFESSIONAL ENGINEER
STATE OF CALIFORNIA

5-16-11
PLANS APPROVAL DATE

THE STATE OF CALIFORNIA OR ITS OFFICERS OR AGENTS SHALL NOT BE RESPONSIBLE FOR THE ACCURACY OR COMPLETENESS OF SCANNED COPIES OF THIS PLAN SHEET.

CONSTRUCTION AREA SIGNS

SIGN No.	MUTCD CODE FEDERAL	MUTCD CODE CALIFORNIA	PANEL SIZE	MESSAGE	NUMBER OF POSTS AND SIZE	No. OF SIGNS
3	G20-3		36'' x 36''	ROAD CLOSED AHEAD	1 - 4'' x 6''	6
4	G20-2		36'' x 18''	DETOUR AHEAD		15
5		SG	48'' x 24''	(SEE DETAILS)	1 - 4'' x 6''	1
	M4-10L		48'' x 18''	← DETOUR		
6		SG	48'' x 24''	(SEE DETAILS)	1 - 4'' x 6''	1
	M4-10R		48'' x 18''	DETOUR→		
7	R3-1		24'' x 24''	NO RIGHT TURN	1 - 4'' x 4''	1
8	R3-2		24'' x 24''	NO LEFT TURN	1 - 4'' x 4''	1
9	M4-10L		48'' x 18''	← DETOUR	1 - 4'' x 4''	
	R6-1L		36'' x 12''	← ONE WAY		
10	M4-10R		48'' x 18''	DETOUR→	1 - 4'' x 4''	5
11	M4-10L		48'' x 18''	← DETOUR	1 - 4'' x 4''	5
12	SC3 (CA)		48'' x 18''	↑ DETOUR	1 - 4'' x 4''	6
13	R5-1		30'' x 30''	DO NOT ENTER	1 - 4'' x 4''	8
14	W20-3		36'' x 36''	RAMP CLOSED AHEAD	1 - 4'' x 6''	4
		G26-2	28'' x 24''	101		
	M3-2		24'' x 12''	SOUTH		
15	M4-8		24'' x 12''	DETOUR	1 - 4'' x 6''	5
		G26-2	28'' x 24''	101		
	M3-2		24'' x 12''	SOUTH		
	M6-3		21'' x 15''	↑		
16	M4-8		24'' x 12''	DETOUR	1 - 4'' x 6''	4
		G26-2	28'' x 24''	101		
	M3-3		24'' x 12''	SOUTH		
	M6-1		21'' x 15''	→		
17	M4-8		24'' x 12''	DETOUR	1 - 4'' x 6''	5
		G26-2	28'' x 24''	101		
	M3-3		24'' x 12''	SOUTH		
			21'' x 15''	←		
19	W20-3		36'' x 36''	RAMP CLOSED AHEAD	1 - 4'' x 6''	4
		G26-2	28'' x 24''	101		
	M3-3		24'' x 12''	NORTH		
20	M4-8		21'' x 12''	DETOUR	1 - 4'' x 6''	1
		G26-2	28'' x 24''	101		
	M3-1		24'' x 12''	NORTH		
	M6-3		21'' x 15''	↑		
21	M4-8		21'' x 12''	DETOUR	1 - 4'' x 6''	4
		G26-2	28'' x 24''	101		
	M3-1		24'' x 12''	NORTH		
	M6-1		21'' x 15''	→		
22	M4-8		21'' x 12''	DETOUR	1 - 4'' x 6''	3
		G26-2	28'' x 24''	101		
	M3-1		24'' x 12''	NORTH		
	M6-1		21'' x 15''	←		

CONSTRUCTION AREA SIGNS

SIGN No.	MUTCD CODE FEDERAL	MUTCD CODE CALIFORNIA	PANEL SIZE	MESSAGE	NUMBER OF POSTS AND SIZE	No. OF SIGNS
23		SG	54'' x 24''	(SEE DETAILS)	1 - 4'' x 6''	1
	M4-10R		48'' x 18''	DETOUR →		
24		SG	54'' x 24''	(SEE DETAILS)	1 - 4'' x 6''	1
	M4-10L		48'' x 18''	← DETOUR		
25	M4-8a		24'' x 12''	END DETOUR	1 - 4'' x 4''	10
A		SC6-4	48'' x 60''	ROAD/RAMP CLOSED DATE___ TIME___	1 - 4'' x 4''	10

DETAILS

5 6
SG 5''D
RIVER Rd CLOSED
48'' x 24'' BLK/ORANGE

23 24
SG 5''D
SHILOH Rd CLOSED
54'' x 24'' BLK/ORANGE

CONSTRUCTION AREA SIGNS

CS-7

REVISED BY: HR | DATE REVISED: 4/13/11
CALCULATED-DESIGNED BY: HERMINIO S. RUIDERA | CHECKED BY: JERILYN L. STRUVEN
FUNCTIONAL SUPERVISOR: ROLAND AU-YEUNG
STATE OF CALIFORNIA - DEPARTMENT OF TRANSPORTATION
Caltrans® TRAFFIC

LAST REVISION 05-16-11 | DATE PLOTTED => 18-AUG-2011 | TIME PLOTTED => 08:58

BORDER LAST REVISED 7/2/2010 | USERNAME => s131681 | DGN FILE => 04000201601a007.dgn | RELATIVE BORDER SCALE IS IN INCHES 0 1 2 3 | UNIT 0735 | PROJECT NUMBER & PHASE 04000201601

Dist	COUNTY	ROUTE	POST MILES TOTAL PROJECT	SHEET No.	TOTAL SHEETS
04	Son	101	25.1, 27.8	24	59

George A. Acquaye 5/9/11
REGISTERED CIVIL ENGINEER DATE

5-16-11
PLANS APPROVAL DATE

REGISTERED PROFESSIONAL ENGINEER George A. Acquaye No. 53859 Exp. 12-31-11 CIVIL STATE OF CALIFORNIA

THE STATE OF CALIFORNIA OR ITS OFFICERS OR AGENTS SHALL NOT BE RESPONSIBLE FOR THE ACCURACY OR COMPLETENESS OF SCANNED COPIES OF THIS PLAN SHEET.

NOTE:

FOR ACCURATE RIGHT OF WAY DATA, CONTACT RIGHT OF WAY ENGINEERING AT THE DISTRICT OFFICE.

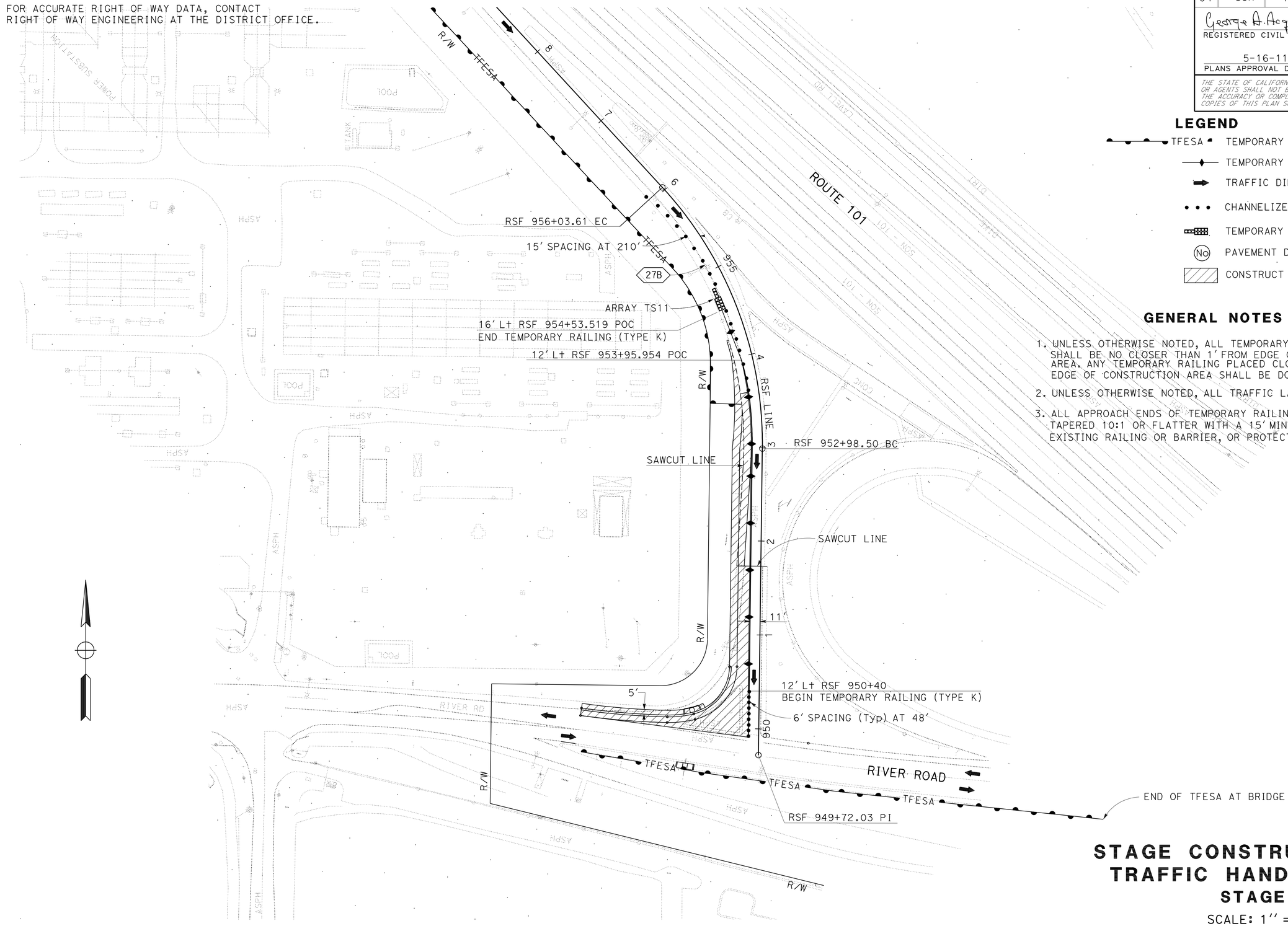

LEGEND

- TFESA — TEMPORARY FENCE (TYPE ESA)
- TEMPORARY RAILING (TYPE K)
- TRAFFIC DIRECTION
- CHANNELIZERS (SURFACE MOUNTED)
- TEMPORARY CRASH CUSHION MODULES
- No — PAVEMENT DELINEATION DETAIL
- CONSTRUCT THIS STAGE

GENERAL NOTES

1. UNLESS OTHERWISE NOTED, ALL TEMPORARY RAILING (TYPE K) SHALL BE NO CLOSER THAN 1' FROM EDGE OF CONSTRUCTION AREA. ANY TEMPORARY RAILING PLACED CLOSER THAN 2' FROM EDGE OF CONSTRUCTION AREA SHALL BE DOWELLED TO PAVEMENT.
2. UNLESS OTHERWISE NOTED, ALL TRAFFIC LANES SHALL BE 12' WIDE.
3. ALL APPROACH ENDS OF TEMPORARY RAILING (TYPE K) SHALL BE EITHER TAPERED 10:1 OR FLATTER WITH A 15' MINIMUM OFFSET, PLACED BEHIND EXISTING RAILING OR BARRIER, OR PROTECTED BY A CRASH CUSION.

STAGE CONSTRUCTION AND TRAFFIC HANDLING PLAN

STAGE 1

SCALE: 1'' = 50'

THIS PLAN ACCURATE FOR STAGE CONSTRUCTION AND TRAFFIC HANDLING WORK ONLY

SC-1

STATE OF CALIFORNIA - DEPARTMENT OF TRANSPORTATION
Caltrans
DESIGN

FUNCTIONAL SUPERVISOR: SOTERO ANGELES
CALCULATED-DESIGNED BY: QUANG NGO
CHECKED BY: BARBARA HERCZEG
REVISED BY: BH
DATE REVISED: 5/11/11

LAST REVISION 05-16-11
DATE PLOTTED => 18-AUG-2011
TIME PLOTTED => 08:58

Dist	COUNTY	ROUTE	POST MILES TOTAL PROJECT	SHEET No.	TOTAL SHEETS
04	Son	101	25.1, 27.8	25	59

George A. Acquaye 5/9/11
REGISTERED CIVIL ENGINEER DATE

5-16-11
PLANS APPROVAL DATE

REGISTERED PROFESSIONAL ENGINEER
George A. Acquaye
No. 53859
Exp. 12-31-11
CIVIL
STATE OF CALIFORNIA

THE STATE OF CALIFORNIA OR ITS OFFICERS OR AGENTS SHALL NOT BE RESPONSIBLE FOR THE ACCURACY OR COMPLETENESS OF SCANNED COPIES OF THIS PLAN SHEET.

NOTE:

FOR ACCURATE RIGHT OF WAY DATA, CONTACT RIGHT OF WAY ENGINEERING AT THE DISTRICT OFFICE.

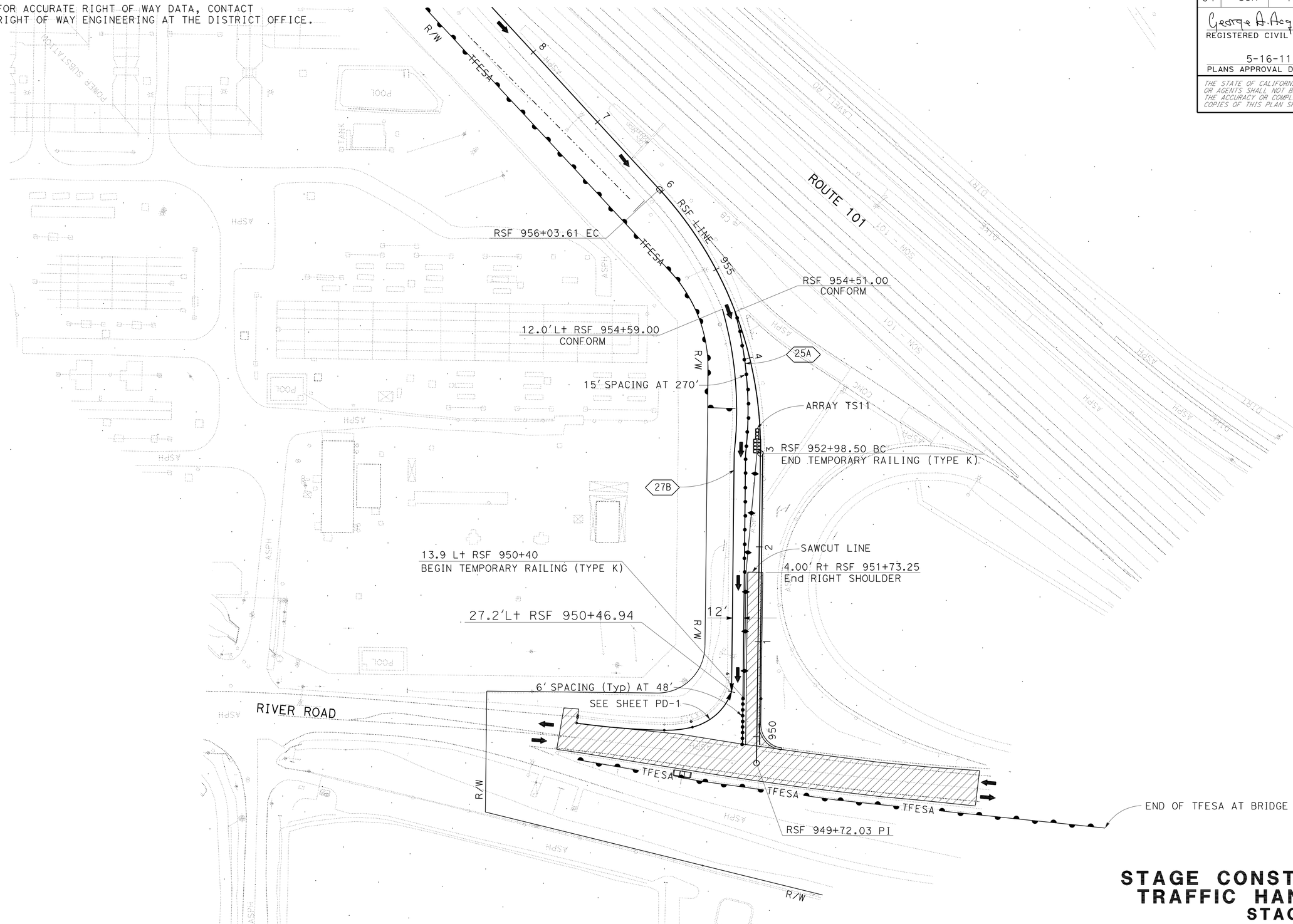

STAGE CONSTRUCTION AND TRAFFIC HANDLING PLAN
STAGE 2
SCALE 1'' = 50'

FOR NOTES, ABBREVIATIONS &/OR LEGEND, SEE SHEET SC-1

THIS PLAN ACCURATE FOR STAGE CONSTRUCTION AND TRAFFIC HANDLING WORK ONLY

SC-2

STATE OF CALIFORNIA - DEPARTMENT OF TRANSPORTATION
Caltrans
DESIGN

FUNCTIONAL SUPERVISOR: SOTERO ANGELES
CALCULATED-DESIGNED BY: QUANG NGO
CHECKED BY: BARBARA HERCZEG
REVISED BY: BH
DATE REVISED: 5/11/11

LAST REVISION 05-16-11
DATE PLOTTED => 18-AUG-2011
TIME PLOTTED => 08:59

NOTE:

FOR ACCURATE RIGHT OF WAY DATA, CONTACT
RIGHT OF WAY ENGINEERING AT THE DISTRICT OFFICE.

Dist	COUNTY	ROUTE	POST MILES TOTAL PROJECT	SHEET No.	TOTAL SHEETS
04	Son	101	25.1, 27.8	26	59

George A. Acquaye 5/9/11
REGISTERED CIVIL ENGINEER DATE

5-16-11
PLANS APPROVAL DATE

REGISTERED PROFESSIONAL ENGINEER
George A. Acquaye
No. 53859
Exp. 12-31-11
CIVIL
STATE OF CALIFORNIA

THE STATE OF CALIFORNIA OR ITS OFFICERS OR AGENTS SHALL NOT BE RESPONSIBLE FOR THE ACCURACY OR COMPLETENESS OF SCANNED COPIES OF THIS PLAN SHEET.

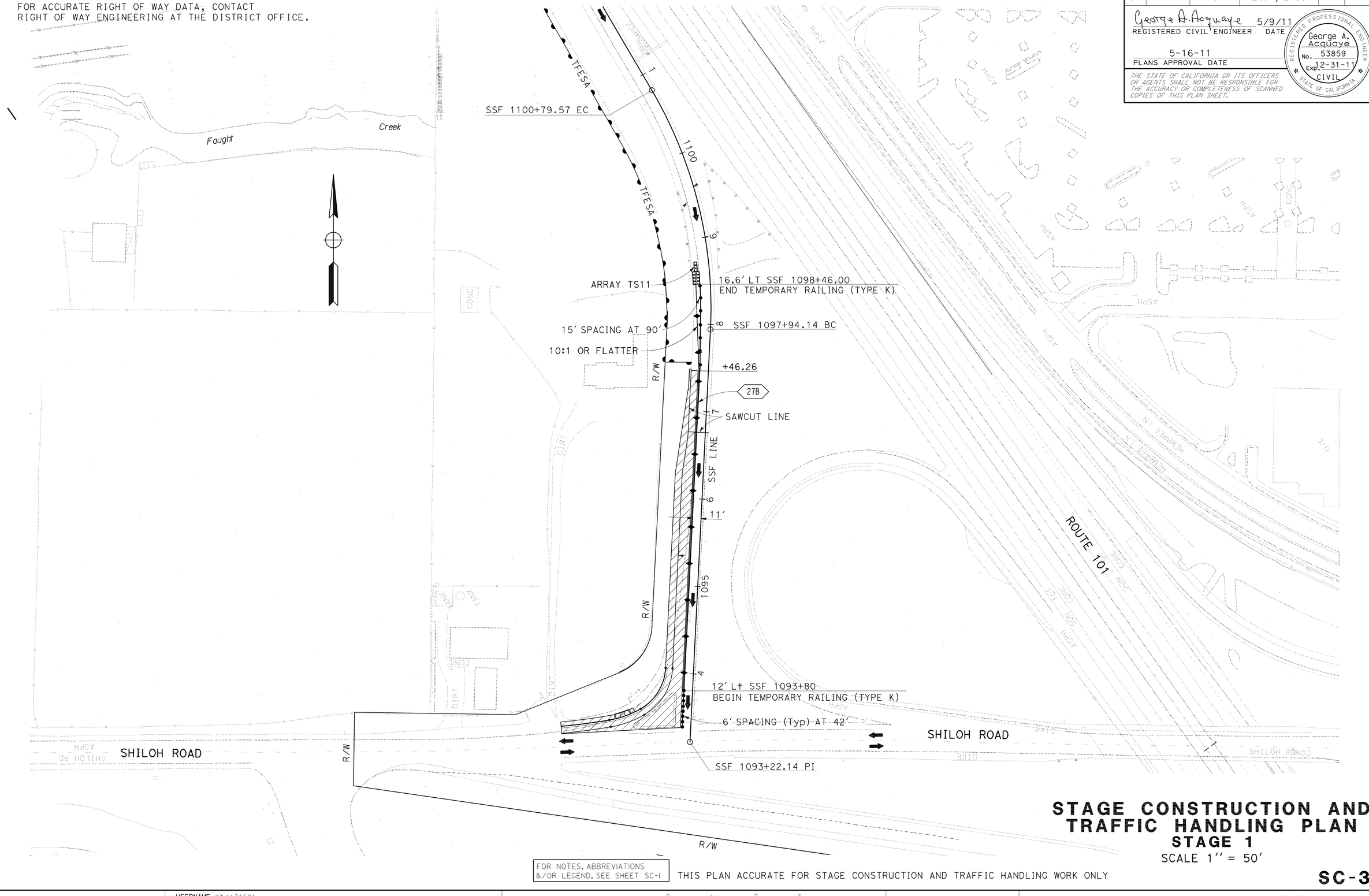

STAGE CONSTRUCTION AND TRAFFIC HANDLING PLAN

STAGE 1

SCALE 1'' = 50'

FOR NOTES, ABBREVIATIONS &/OR LEGEND, SEE SHEET SC-1

THIS PLAN ACCURATE FOR STAGE CONSTRUCTION AND TRAFFIC HANDLING WORK ONLY

SC-3

REVISED BY	DATE REVISED
BH	5/11/11

CALCULATED-DESIGNED BY: QUANG NGO
CHECKED BY: BARBARA HERCZEG
FUNCTIONAL SUPERVISOR: SOTERO ANGELES

STATE OF CALIFORNIA - DEPARTMENT OF TRANSPORTATION
Caltrans®
DESIGN

LAST REVISION DATE PLOTTED => 18-AUG-2011
05-16-11 TIME PLOTTED => 08:59

BORDER LAST REVISED 7/2/2010
USERNAME => s131681
DGN FILE => 0400020160ma003.dgn
RELATIVE BORDER SCALE IS IN INCHES 0 1 2 3
UNIT 0735
PROJECT NUMBER & PHASE 04000201601

NOTE:

FOR ACCURATE RIGHT OF WAY DATA, CONTACT
RIGHT OF WAY ENGINEERING AT THE DISTRICT OFFICE.

Dist	COUNTY	ROUTE	POST MILES TOTAL PROJECT	SHEET No.	TOTAL SHEETS
04	Son	101	25.1, 27.8	27	59

George A. Acquaye 5/9/11
REGISTERED CIVIL ENGINEER DATE

5-16-11
PLANS APPROVAL DATE

REGISTERED PROFESSIONAL ENGINEER
George A. Acquaye
No. 53859
Exp. 12-31-11
CIVIL
STATE OF CALIFORNIA

THE STATE OF CALIFORNIA OR ITS OFFICERS OR AGENTS SHALL NOT BE RESPONSIBLE FOR THE ACCURACY OR COMPLETENESS OF SCANNED COPIES OF THIS PLAN SHEET.

SSF 1100+79.57 EC

1100 SSF LINE 9

12' Lt SSF 1198+19.00
CONFORM

SSF 1097+94.14 BC

ARRAY TS11
SSF 1097+58.00
END TEMPORARY RAILING (TYPE K)

10:1 OR FLATTER

25A

SAWCUT LINE

15' SPACING AT 120'

27B

12'

1095

25.6' Lt SSF 1093+90.80

12.8' Lt SSF 1093+80.00
BEGIN TEMPORARY RAILING (TYPE K)
6' SPACING (Typ) AT 42'

SSF 1093+22.14 PI

SEE SHEET PD-2

ROUTE 101

SHILOH ROAD

SHILOH ROAD

R/W

STAGE CONSTRUCTION AND TRAFFIC HANDLING PLAN
STAGE 2

SCALE 1'' = 50'

FOR NOTES, ABBREVIATIONS &/OR LEGEND, SEE SHEET SC-1

THIS PLAN ACCURATE FOR STAGE CONSTRUCTION AND TRAFFIC HANDLING WORK ONLY

SC-4

CALCULATED-DESIGNED BY	QUANG NGO
CHECKED BY	BARBARA HERCZEG

REVISED BY	DATE REVISED
BH	5/11/11

FUNCTIONAL SUPERVISOR: SOTERO ANGELES

STATE OF CALIFORNIA - DEPARTMENT OF TRANSPORTATION
DESIGN

LAST REVISION DATE PLOTTED => 18-AUG-2011
TIME PLOTTED => 08:59
05-16-11

BORDER LAST REVISED 7/2/2010

USERNAME => s131681
DGN FILE => 0400020160ma004.dgn

RELATIVE BORDER SCALE IS IN INCHES 0 1 2 3

UNIT 0735

PROJECT NUMBER & PHASE 04000201601

Dist	COUNTY	ROUTE	POST MILES TOTAL PROJECT	SHEET No.	TOTAL SHEETS
04	Son	101	25.1, 27.8	28	59

REGISTERED CIVIL ENGINEER 5/10/11 DATE

5-16-11
PLANS APPROVAL DATE

REGISTERED PROFESSIONAL ENGINEER Asuncion L. Ahmadi No. 52788 Exp. 12-31-12 CIVIL STATE OF CALIFORNIA

THE STATE OF CALIFORNIA OR ITS OFFICERS OR AGENTS SHALL NOT BE RESPONSIBLE FOR THE ACCURACY OR COMPLETENESS OF SCANNED COPIES OF THIS PLAN SHEET.

NOTE:

FOR ACCURATE RIGHT OF WAY DATA, CONTACT RIGHT OF WAY ENGINEERING AT THE DISTRICT OFFICE.

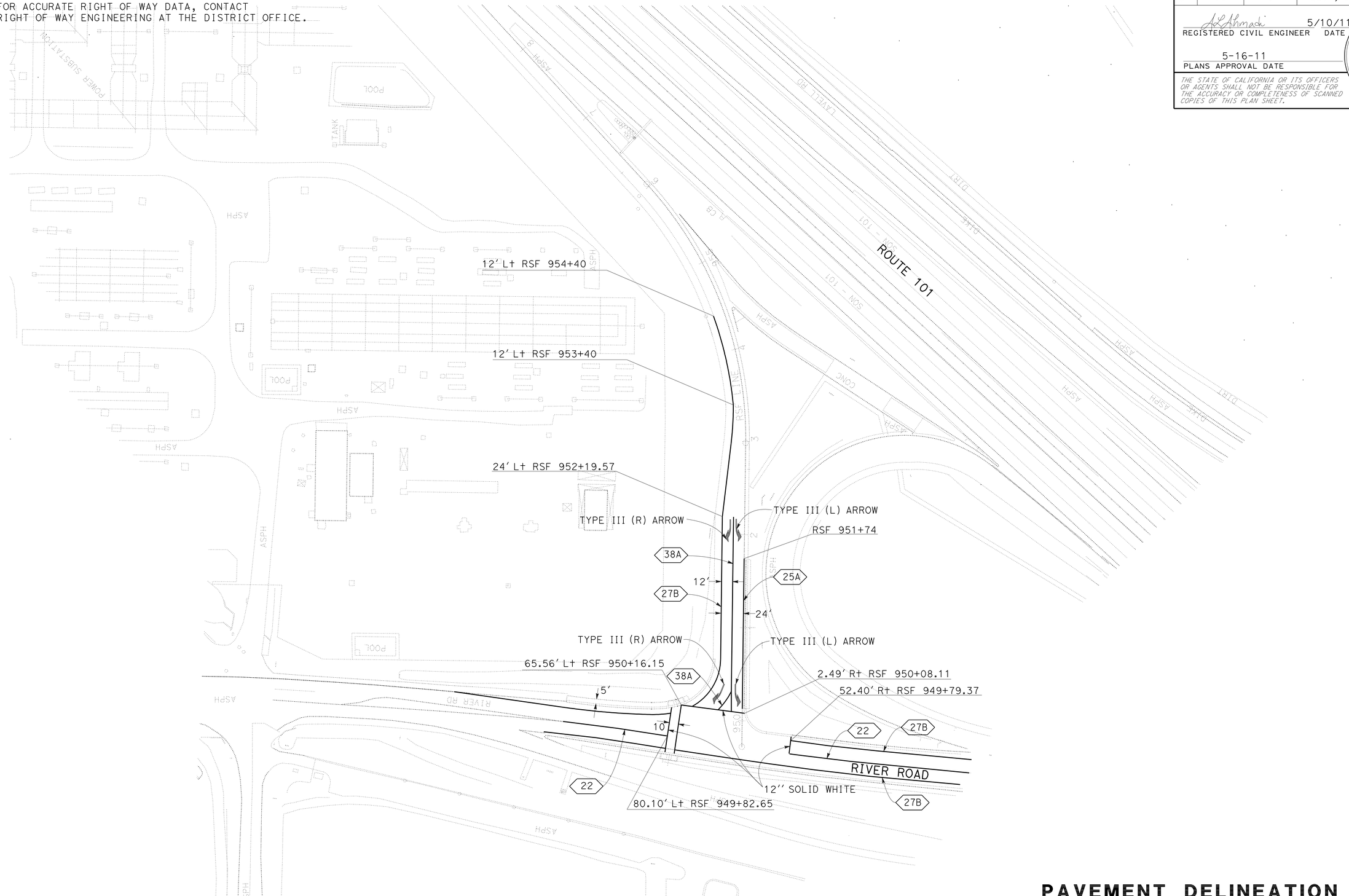

PAVEMENT DELINEATION PLAN

SCALE: 1'' = 50'

THIS PLAN ACCURATE FOR PAVEMENT DELINEATION WORK ONLY

PD-1

STATE OF CALIFORNIA - DEPARTMENT OF TRANSPORTATION

Caltrans® TRAFFIC

FUNCTIONAL SUPERVISOR: PHILIPPE VAN

CALCULATED-DESIGNED BY: RAYMOND CHAN

CHECKED BY: ASUNCION L. AHMADI

REVISED BY: BH

DATE REVISED: 4/13/11

LAST REVISION 05-16-11

DATE PLOTTED => 18-AUG-2011
TIME PLOTTED => 08:59

NOTE:

FOR ACCURATE RIGHT OF WAY DATA, CONTACT
RIGHT OF WAY ENGINEERING AT THE DISTRICT OFFICE.

Dist	COUNTY	ROUTE	POST MILES TOTAL PROJECT	SHEET No.	TOTAL SHEETS
04	Son	101	25.1, 27.8	29	59

A.L.Ahmadi 5/10/11
REGISTERED CIVIL ENGINEER DATE

Asuncion L. Ahmadi
No. 52788
Exp. 12-31-12
CIVIL
REGISTERED PROFESSIONAL ENGINEER
STATE OF CALIFORNIA

5-16-11
PLANS APPROVAL DATE

THE STATE OF CALIFORNIA OR ITS OFFICERS OR AGENTS SHALL NOT BE RESPONSIBLE FOR THE ACCURACY OR COMPLETENESS OF SCANNED COPIES OF THIS PLAN SHEET.

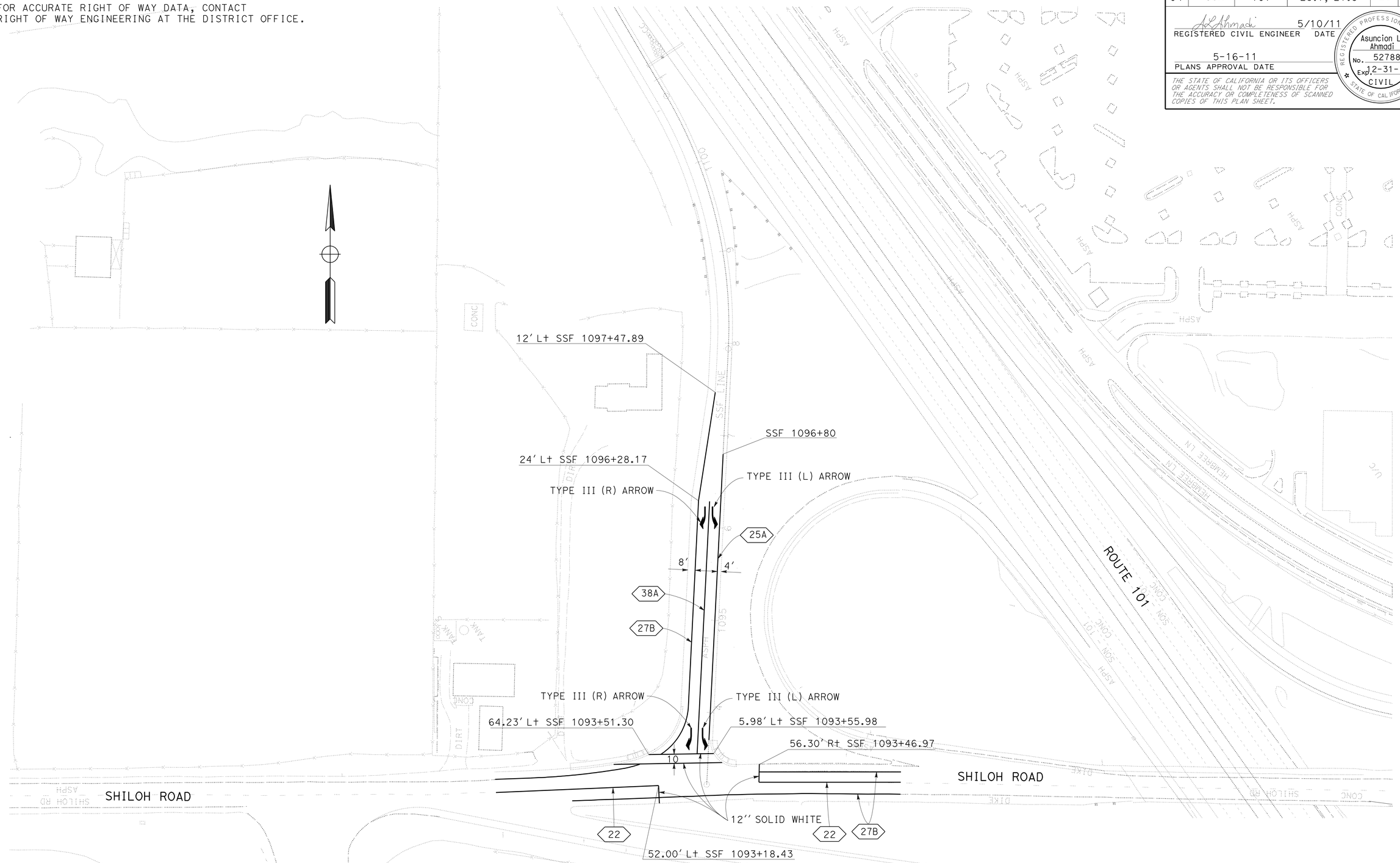

PAVEMENT DELINEATION PLAN

SCALE: 1'' = 50'

FOR NOTES, ABBREVIATIONS AND LEGEND, SEE SHEET PD-1

THIS PLAN ACCURATE FOR PAVEMENT DELINEATION WORK ONLY

PD-2

STATE OF CALIFORNIA - DEPARTMENT OF TRANSPORTATION
TRAFFIC
FUNCTIONAL SUPERVISOR: PHILIPPE VAN
CALCULATED-DESIGNED BY: RAYMOND CHAN
CHECKED BY: ASUNCION L. AHMADI
REVISED BY: BH
DATE REVISED: 4/13/11

LAST REVISION | DATE PLOTTED => 18-AUG-2011
05-16-11 | TIME PLOTTED => 08:59

BORDER LAST REVISED 7/2/2010
USERNAME => s131681
DGN FILE => 0400020160na002.dgn
RELATIVE BORDER SCALE IS IN INCHES 0 1 2 3
UNIT 0735
PROJECT NUMBER & PHASE 04000201601

Dist	COUNTY	ROUTE	POST MILES TOTAL PROJECT	SHEET No.	TOTAL SHEETS
04	Son	101	25.1, 27.8	30	59

REGISTERED CIVIL ENGINEER 5/10/11 DATE

5-16-11
PLANS APPROVAL DATE

REGISTERED PROFESSIONAL ENGINEER Asuncion L. Ahmadi No. 52788 Exp. 12-31-12 CIVIL STATE OF CALIFORNIA

THE STATE OF CALIFORNIA OR ITS OFFICERS OR AGENTS SHALL NOT BE RESPONSIBLE FOR THE ACCURACY OR COMPLETENESS OF SCANNED COPIES OF THIS PLAN SHEET.

TRAFFIC STRIPES, PAVEMENT MARKINGS AND PAVEMENT MARKERS

SHEET No.	STATION LIMITS	SIDE	DETAIL No. /PAVEMENT MARKING	REMOVE THERMOPLASTIC			REMOVE PAVEMENT MARKERS	THERMOPLASTIC TRAFFIC STRIPE			PAVEMENT MARKER		THERMOPLASTIC PAVEMENT MARKING	
				PAVEMENT MARKING	TRAFFIC STRIPE	YELLOW TRAFIC STRIPE		4'' YELLOW	4'' WHITE	8'' WHITE	TYPE H	TYPE D	TYPE III ARROW S & R	LIMIT LINE CROSSWALK 12'' WHITE
				SF	LF	LF	EA	LF			EA		SQFT	SQFT
PD-1	RSF 949+93 to 951+73	Rt	25A			180	8							
	RSF 950+05 to 950+45	Lt	25A			68	3							
	RSF 950+20 to 954+40	Lt	27B		660									
	RSF 950+00 TO 951+00	Lt	TYPE V,STOP	88										
	RIVER ROAD	Lt & Rt	23, 27B		658		178							
	RSF 950+08 to 951+74	Rt	25A					166			8			
	RSF 950+08 to 952+20	Lt	38A							233			168	
	RSF 950+16 TO 954+40	Lt	27B						428					
	RIVER ROAD	MEDIAN	22					619				30		
	RIVER ROAD	Lt & Rt	27B						870					
	RIVER ROAD & RSF INTERSECTION		LL & XWALK											188
PD-2	SSF 1093+48 TO 1096+76	Rt	25A			340	15							
	SSF 1093+36 TO 1093+78	Lt	25A, LIMIT LINE	17		58	3							
	SSF 1093+20 TO 1097+48	Lt	27B,ARROW	66	573									
	SHILOH ROAD	MEDIAN	22, 23			422	111							
	SHILOH ROAD	27B			603									
	SSF 1093+56 TO 1096+80	CL	25A					324			15			
	SSF 1093+56 TO 1097+48	Lt	27B						404					
	SSF 1093+56 TO 1096+28	Lt	38A, ARROW							273			168	
	SHILOH ROAD	Lt & Rt	27B						668					
	SHILOH ROAD	MEDIAN	22					665				30		
	SHILOH ROAD & SSF INTERSECTION		LL & XWALK											227
SUBTOTAL								1774	2370				336	415
TOTAL				171	2494	1068	317	4144		506	23	60	751	

PAVEMENT DELINEATION QUANTITIES

PDQ-1

STATE OF CALIFORNIA - DEPARTMENT OF TRANSPORTATION
Caltrans
TRAFFIC

FUNCTIONAL SUPERVISOR: PHILIPPE VAN
CALCULATED-DESIGNED BY: BARBARA HERCZEG
CHECKED BY: ASUNCION L. AHMADI
REVISED BY: BH
DATE REVISED: 5/16/11

LAST REVISION 05-16-11
DATE PLOTTED => 18-AUG-2011
TIME PLOTTED => 09:00

NOTE:

FOR ACCURATE RIGHT OF WAY DATA, CONTACT
RIGHT OF WAY ENGINEERING AT THE DISTRICT OFFICE.

Dist	COUNTY	ROUTE	POST MILES TOTAL PROJECT	SHEET No.	TOTAL SHEETS
04	Son	101	25.1, 27.8	31	59

Jerilyn L. Struven 5/10/11
REGISTERED CIVIL ENGINEER DATE

5-16-11
PLANS APPROVAL DATE

REGISTERED PROFESSIONAL ENGINEER
Jerilyn L. Struven
No. 49964
Exp. 12-31-12
CIVIL
STATE OF CALIFORNIA

THE STATE OF CALIFORNIA OR ITS OFFICERS OR AGENTS SHALL NOT BE RESPONSIBLE FOR THE ACCURACY OR COMPLETENESS OF SCANNED COPIES OF THIS PLAN SHEET.

LEGEND:

- (No.) ROADSIDE SIGN NUMBER
- ▲ RELOCATE ROADSIDE SIGN
- ■ REMOVE ROADSIDE SIGN
- ✳ ROADSIDE SIGN TO REMAIN

NOTE:

EXACT LOCATION AND POSITION OF ROADSIDE SIGNS TO BE DETERMINED BY THE ENGINEER.

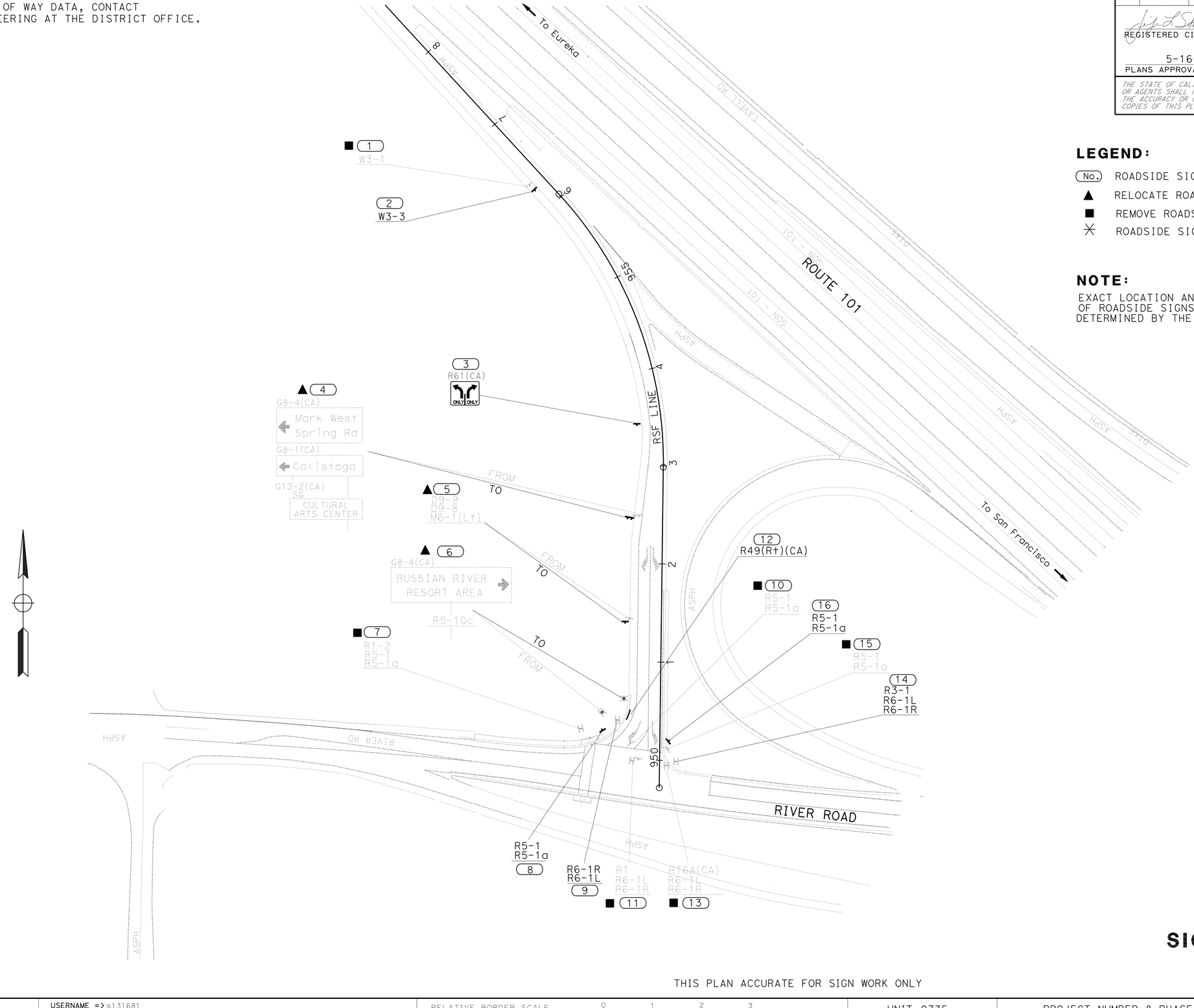

SIGN PLAN

NO SCALE

THIS PLAN ACCURATE FOR SIGN WORK ONLY

S-1

CALCULATED-DESIGNED BY			
CHECKED BY			
REVISED BY	HR		
DATE REVISED	4/13/11		
HERMINIO S. RUIDERA			
JERILYN L. STRUVEN			
FUNCTIONAL SUPERVISOR	ROLAND AU-YEUNG		
STATE OF CALIFORNIA - DEPARTMENT OF TRANSPORTATION	TRAFFIC		
Caltrans			

LAST REVISION | DATE PLOTTED => 18-AUG-2011
05-16-11 | TIME PLOTTED => 09:00

NOTE:

FOR ACCURATE RIGHT OF WAY DATA, CONTACT
RIGHT OF WAY ENGINEERING AT THE DISTRICT OFFICE.

Dist	COUNTY	ROUTE	POST MILES TOTAL PROJECT	SHEET No.	TOTAL SHEETS
04	Son	101	25.1, 27.8	32	59

REGISTERED CIVIL ENGINEER — DATE: 5/10/11

Jerilyn L. Struven
No. 49964
Exp 12-31-12
CIVIL
REGISTERED PROFESSIONAL ENGINEER
STATE OF CALIFORNIA

5-16-11
PLANS APPROVAL DATE

THE STATE OF CALIFORNIA OR ITS OFFICERS OR AGENTS SHALL NOT BE RESPONSIBLE FOR THE ACCURACY OR COMPLETENESS OF SCANNED COPIES OF THIS PLAN SHEET.

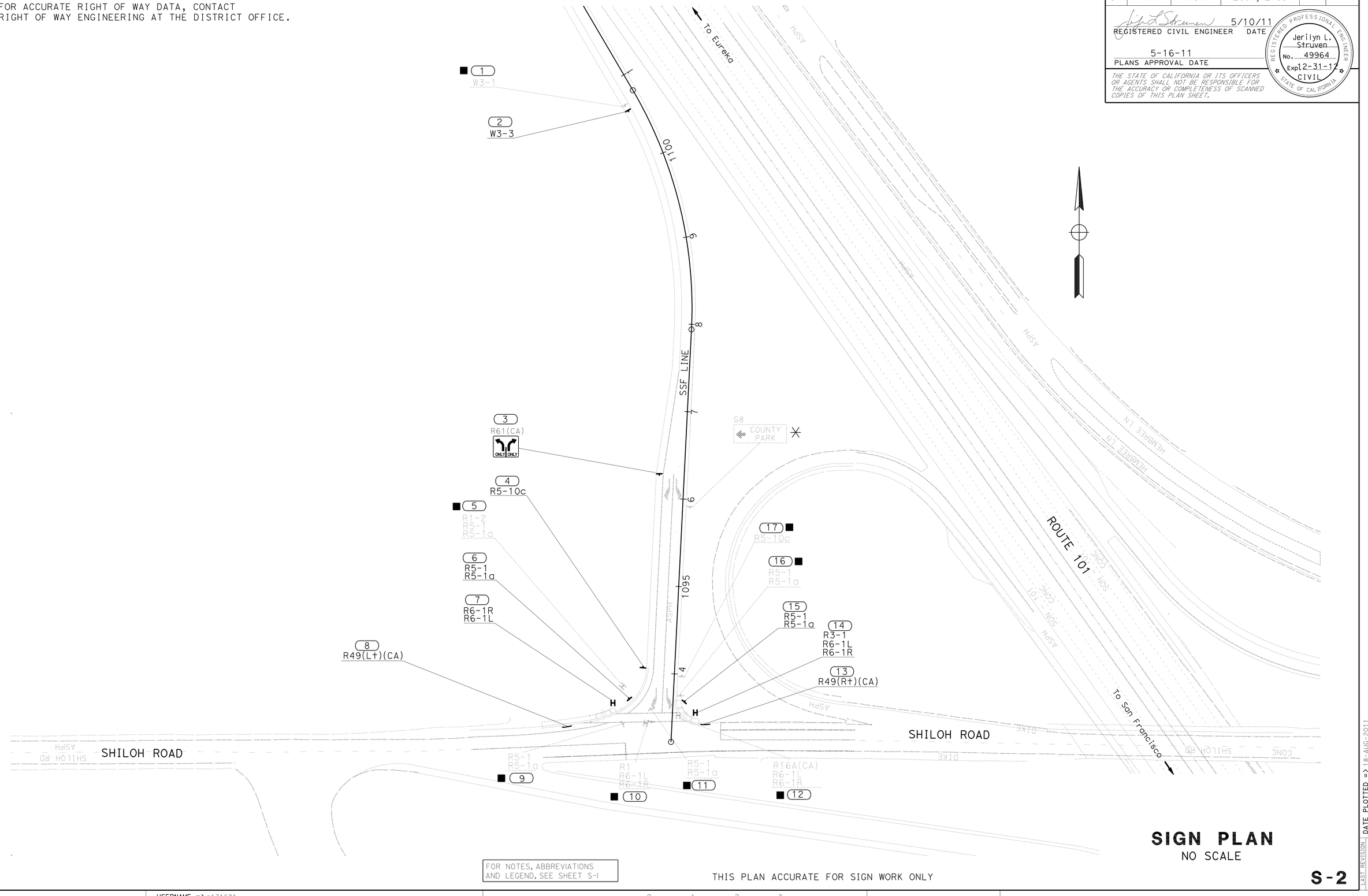

SIGN PLAN

NO SCALE

FOR NOTES, ABBREVIATIONS AND LEGEND, SEE SHEET S-1

THIS PLAN ACCURATE FOR SIGN WORK ONLY

S-2

CALCULATED-DESIGNED BY	HR	4/13/11
CHECKED BY	JERILYN L. STRUVEN	DATE REVISED
FUNCTIONAL SUPERVISOR	ROLAND AU-YEUNG	REVISED BY

STATE OF CALIFORNIA - DEPARTMENT OF TRANSPORTATION
Caltrans®
TRAFFIC

LAST REVISION | DATE PLOTTED => 18-AUG-2011 | 05-16-11 | TIME PLOTTED => 09:00

BORDER LAST REVISED 7/2/2010 | USERNAME => s131681 | DGN FILE => 0400020160oa002.dgn | RELATIVE BORDER SCALE IS IN INCHES 0 1 2 3 | UNIT 0735 | PROJECT NUMBER & PHASE 04000201601

Dist	COUNTY	ROUTE	POST MILES TOTAL PROJECT	SHEET No.	TOTAL SHEETS
04	Son	101	25.1, 27.8	33	59

REGISTERED CIVIL ENGINEER — DATE: 5/10/11

PLANS APPROVAL DATE: 5-16-11

REGISTERED PROFESSIONAL ENGINEER — Jerilyn L. Struven — No. 49964 — Exp 12-31-12 — CIVIL — STATE OF CALIFORNIA

THE STATE OF CALIFORNIA OR ITS OFFICERS OR AGENTS SHALL NOT BE RESPONSIBLE FOR THE ACCURACY OR COMPLETENESS OF SCANNED COPIES OF THIS PLAN SHEET.

ROADSIDE SIGN INSTALLATION

SHEET No.	SIGN No.	SIGN CODE	PANEL SIZE	POST LENGTH FEET 4'' x 4''	4'' x 6''	6'' x 6''	6'' x 8''	ROADSIDE SIGN ONE POST	ONE POST	RELOCATE ROADSIDE SIGN EA	REMOVE ROADSIDE SIGN EA	REMARKS
S-1	1	W3-1									1	
	2	W3-3	48'' x 48''		17'-2''			1				
	3	R61(CA)	36'' x 30''	13'-00''				1				
	4	G8-4(CA)										
		G8-1(CA)								1		
		G13-2(CA)										
		SG										
	5	D9-9										
		D9-8								1		
		M6-1(L†)										
	6	G8-4(CA)								1		INSTALL BACK TO BACK
		R5-10C										
	7	R1-2										
		R5-1									1	
		R5-1a										
	8	R5-1	36'' x 36''		14'-3''			1				
		R5-1a	36'' x 24''									
	9	R6-1R	36'' x 12''	6'-0''				1				
		R6-1L	36'' x 12''									
	10	R5-1									1	
		R5-1a										
	11	R1										
		R6-1L									1	
		R6-1R										
	12	R49(R†)(CA)	42'' x 18''									ELECTRICAL PAY ITEM
	13	R16A(CA)										
		R6-1L									1	
		R6-1R										
	14	R3-1	42'' x 18''	12'-6''				1				
		R6-1R	36'' x 12''									
		R6-1L	36'' x 12''									
	15	R5-1									1	
		R5-1a										
	16	R5-1	36'' x 36''		14'-3''			1				
		R5-1a	36'' x 24''									
SHEET TOTAL								6		3	6	

SIGN QUANTITIES

SQ-1

STATE OF CALIFORNIA - DEPARTMENT OF TRANSPORTATION — TRAFFIC — Caltrans

FUNCTIONAL SUPERVISOR: ROLAND AU-YEUNG

CALCULATED-DESIGNED BY: HERMINIO S. RUIDERA

CHECKED BY: JERILYN L. STRUVEN

REVISED BY: HR — DATE REVISED: 4/13/11

LAST REVISION — DATE PLOTTED => 18-AUG-2011 — TIME PLOTTED => 09:00 — 05-16-11

BORDER LAST REVISED 7/2/2010

USERNAME => s131681

DGN FILE => 0400020160od001.dgn

RELATIVE BORDER SCALE IS IN INCHES 0 1 2 3

UNIT 0735

PROJECT NUMBER & PHASE 04000201601

Dist	COUNTY	ROUTE	POST MILES TOTAL PROJECT	SHEET No.	TOTAL SHEETS
04	Son	101	25.1, 27.8	34	59

Jerilyn L. Struven 5/10/11
REGISTERED CIVIL ENGINEER DATE

5-16-11
PLANS APPROVAL DATE

REGISTERED PROFESSIONAL ENGINEER — Jerilyn L. Struven — No. 49964 — Exp 12-31-12 — CIVIL — STATE OF CALIFORNIA

THE STATE OF CALIFORNIA OR ITS OFFICERS OR AGENTS SHALL NOT BE RESPONSIBLE FOR THE ACCURACY OR COMPLETENESS OF SCANNED COPIES OF THIS PLAN SHEET.

ROADSIDE SIGN INSTALLATION

SHEET No.	SIGN No.	SIGN CODE	PANEL SIZE	POST LENGTH FEET 4'' x 4''	4'' x 6''	6'' x 6''	6'' x 8''	ROADSIDE SIGN ONE POST	ONE POST	RELOCATE ROADSIDE SIGN EA	REMOVE ROADSIDE SIGN EA	REMARKS
S-2	1	W3-1									1	
	2	W3-3	48'' x 48''		17'-2''			1				
	3	R61(CA)	36'' x 30''	13'-0''				1				
	4	R5-10C	30'' x 18''	12'-0''				1				
	5	R1-2									1	
		R5-1										
		R5-1a										
	6	R5-1	36'' x 36''		14'-3''			1				
		R5-1a	36'' x 24''									
	7	R6-1L	36'' x 12''	6'-0''				1				
		R6-1R	36'' x 12''									
	8	R49(R†)(CA)	42'' x 18''									ELECTRICAL PAY ITEM
	9	R5-1									1	
		R5-1a										
	10	R1									1	
		R6-1R										
		R6-1L										
	11	R5-1									1	
		R5-1a										
	12	R3-1										
		R6-1R										
		R6-1L										
	13	R49(R†)(CA)	42'' x 18''									ELECTRICAL PAY ITEM
	14	R3-1	24'' x 24''	12'-6''				1				
		R6-1R	36'' x 12''									
		R6-1L	36'' x 12''									
	15	R5-1	36'' x 36''		14'-3''			1				
		R5-1a	36'' x 24''									
	16	R5-1									1	
		R5-1a										
	17	R5-10c									1	
	SHEET TOTAL SQ-2							7			7	
	SHEET TOTAL SQ-1							6		3	6	
	TOTAL							13		3	13	

SIGN QUANTITIES

SQ-2

REVISED BY	DATE REVISED
HR	4/13/11

CALCULATED-DESIGNED BY: HERMINIO S. RUIDERA
CHECKED BY: JERILYN L. STRUVEN
FUNCTIONAL SUPERVISOR: ROLAND AU-YEUNG

STATE OF CALIFORNIA - DEPARTMENT OF TRANSPORTATION
Caltrans®
TRAFFIC

LAST REVISION DATE PLOTTED => 18-AUG-2011
05-16-11 TIME PLOTTED => 09:00

Dist	COUNTY	ROUTE	POST MILES TOTAL PROJECT	SHEET No.	TOTAL SHEETS
04	Son	101	25.1, 27.8	35	59

REGISTERED CIVIL ENGINEER — DATE: 5/10/11

PLANS APPROVAL DATE: 5-16-11

Jerilyn L. Struven, No. 49964, Exp 12-31-12, CIVIL, REGISTERED PROFESSIONAL ENGINEER, STATE OF CALIFORNIA

THE STATE OF CALIFORNIA OR ITS OFFICERS OR AGENTS SHALL NOT BE RESPONSIBLE FOR THE ACCURACY OR COMPLETENESS OF SCANNED COPIES OF THIS PLAN SHEET.

SIGN PANEL SUMMARY

SHEET No.	NUMBER	SIGN CODE	SIGN SIZE	SIGN AREA (SQFT)	SIGN FACED	DOUBLE FACED	BACKGROUND		LEGEND		GRAPHIC FILM		ROADSIDE SIGN									ROADSIDE SIGN			REMARKS
													SIGN SHEET						LAMINATED						
													FRP	FRAMED ALUMINUM		UNFRAMED ALUMINUM						FORMED	LAMINATED TYPE A	FORMED w/o RSPF	FORMED WITH RSPF	
							SHEETING COLOR	RETROREFLECTIVE ASTM TYPE	SHEETING COLOR	RETROREFLECTIVE ASTM TYPE	STANDARD	PREMIUM	0.136''	0.064''	0.080''	0.063''	0.080''	0.136''	1.016'' T6YPE B	2.534'' T6YPE B	2.54'' T6YPE H					
S-1	2	W3-3	48'' x 48''	16.00	X		YELLOW	III	BLACK	PLAIN		X					16.00									
	3	R61(CA)	36'' x 30''	7.50	X		WHITE	III	BLACK	PLAIN		X				7.50										
	8	R5-1	36'' x 36''	9.00	X		RED	III	WHITE	PLAIN		X				9.00										
		R5-1a	36'' x 24''	6.00	X		RED	III	WHITE	PLAIN		X				6.00										
	12	R49(R†)(CA)	42'' x 18''	5.25	X		WHITE	III	BLACK	PLAIN		X				5.25										
	14	R3-1	24'' x 24''	4.00	X		WHITE	III	RED	PLAIN		X				4.00										
		R6-1R	36'' x 12''	3.00	X		WHITE	III	BLACK	PLAIN		X				3.00										
		R6-1L	36'' x 12''	3.00	X		WHITE	III	BLACK	PLAIN		X				3.00										
	16	R5-1	36'' x 36''	9.00	X		RED	III	WHITE	PLAIN		X				9.00										
		R5-1a	36'' x 24''	6.00	X		RED	III	WHITE	PLAIN		X				6.00										
S-2	2	W3-3	48'' x 48''	16.00	X		YELLOW	III	BLACK	PLAIN		X					16.00									
	3	R61(CA)	36'' x 30''	7.50	X		WHITE	III	BLACK	PLAIN		X				7.50										
	6	R5-1	36'' x 36''	9.00	X		RED	III	WHITE	PLAIN		X				9.00										
		R5-1a	36'' x 24''	6.00	X		RED	III	WHITE	PLAIN		X				6.00										
	8	R49L†)(CA)	42'' x 18''	5.25	X		WHITE	III	BLACK	PLAIN		X				5.25										
	13	R49(R†)(CA)	42'' x 18''	5.25	X		WHITE	III	BLACK	PLAIN		X				5.25										
	14	R3-1	24'' x 24''	4.00	X		WHITE	III	RED	PLAIN		X				4.00										
		R6-1R	36'' x 12''	3.00	X		WHITE	III	BLACK	PLAIN		X				3.00										
		R6-1L	36'' x 12''	3.00	X		WHITE	III	BLACK	PLAIN		X				3.00										
	15	R5-1	36'' x 36''	9.00	X		RED	III	WHITE	PLAIN		X				9.00										
		R5-1a	36'' x 24''	6.00	X		RED	III	WHITE	PLAIN		X				6.00										
											TOTAL					110.75	32.00									

SIGN QUANTITIES

SQ-3

CALCULATED-DESIGNED BY: HERMINIO S. RUIDERA
CHECKED BY: JERILYN L. STRUVEN
REVISED BY: HR — DATE REVISED: 4/13/11
FUNCTIONAL SUPERVISOR: ROLAND AU-YEUNG
STATE OF CALIFORNIA - DEPARTMENT OF TRANSPORTATION — TRAFFIC — Caltrans

LAST REVISION | DATE PLOTTED => 18-AUG-2011 | 05-16-11 | TIME PLOTTED => 09:00

BORDER LAST REVISED 7/2/2010 | USERNAME => s131681 | DGN FILE => 0400020160od003.dgn | RELATIVE BORDER SCALE IS IN INCHES 0 1 2 3 | UNIT 0735 | PROJECT NUMBER & PHASE 04000201601

Dist	COUNTY	ROUTE	POST MILES TOTAL PROJECT	SHEET No.	TOTAL SHEETS
04	Son	101	25.1, 27.8	36	59

George A. Acquaye 5/9/11
REGISTERED CIVIL ENGINEER DATE

5-16-11
PLANS APPROVAL DATE

REGISTERED PROFESSIONAL ENGINEER
George A. Acquaye
No. 53859
Exp. 12-31-11
CIVIL
STATE OF CALIFORNIA

THE STATE OF CALIFORNIA OR ITS OFFICERS OR AGENTS SHALL NOT BE RESPONSIBLE FOR THE ACCURACY OR COMPLETENESS OF SCANNED COPIES OF THIS PLAN SHEET.

REMOVE CONCRETE

SHEET No.	STATION LIMITS	SIDE/ LOCATION	CURB	SIDEWALK	ISLAND SLAB
			CY		
L-1	RSF 949+91 TO 951+73	Rt	12.1	11.2	
	RSF 949+91 TO 950+46	Lt	10.4		15.4
		RIVER ROAD	1.2	1.0	
L-2	SSF 1093+42 TO 1096+76	Rt	20.1	1.8	
	SSF 1093+42 TO 1093+77	Lt	17	1.0	9.3
TOTAL			100.5		

EARTHWORK QUANTITIES

LOCATION	ROADWAY EXCAVATION	ROADWAY EXCAVATION (TYPE Y-1) (ADL)	EMBANKMENT (N)
	CY		
RSF RAMP	1341	149	14
SSF RAMP	1766	196	33
TOTAL	3107	345	47

(N) = NOT A SEPARATE PAY ITEM, FOR INFORMATION ONLY.

ROADWAY QUANTITIES

SHEET No.	STATION LIMITS	SIDE/ LOCATION	CL 3 AB	CL4 AC	HMA (TYPE A)			PLACE AC DIKE	COLD PLANE AC PAVEMENT
			Str Sect	Str Sect	Str Sect	OVERLAY	DIKE (TYPE A)	TYPE A	
			CY	CY	TON			LF	SY
L-1	RSF 949+85 TO 953+41	Lt & Rt	443.7	590.6	401.2	304.3	0.09	80	
	RIVER ROAD								1810
L-2	SSF 1093+45 TO 1097+48	Lt & Rt	652.2	873.2	609.3	304.7			
	SHILOH ROAD								1806
		TOTAL	1095.9	1463.8	1619.6			80	3616

TEMPORARY FENCE (ESA)

LOCATION	LENGTH
L-1	1251
L-2	460
TOTAL	1711

STAGE CONSTRUCTION

STAGE No.	SHEET No.	CHANNELIZERS (SURFACE MOUNTED)	TEMPORARY RAILING (TYPE K)	TEMPORARY CRASH CUSHION MODULE	TEMPORARY STRIPE (PAINT)	
				ARRAY TS11	27B	25A
1	SC-1	24	410	11	402	
2	SC-2	28	259	11	405	460
1	SC-3	15	466	11	511	
2	SC-4	17	379	11	427	481
TOTAL		84	1514	44	2686	

MINOR CONCRETE (MISC. CONSTRUCTION)

SHEET No.	STATION LIMITS	SIDE/ LOCATION	A2 C & G	SIDEWALK
			CY	
L-1	RSF 949+85 TO 950+40	Rt	2.2	
	RSF 950+19 TO 950+66	Lt	11.2	7.3
		RIVER ROAD	1.2	1.1
L-2	SSF 1093+45 TO 1093+70	Rt	2.4	2.3
	SSF 1093+32 TO 1094+05	Lt	8.0	3.7
TOTAL			39.3	

SUMMARY OF QUANTITIES

Q-1

REVISED BY	DATE REVISED
BH	5/16/11

CALCULATED-DESIGNED BY: BARBARA HERCZEG
CHECKED BY: GEORGE ACQUAYE
FUNCTIONAL SUPERVISOR: SOTERO ANGELES
STATE OF CALIFORNIA - DEPARTMENT OF TRANSPORTATION
DESIGN

LAST REVISION DATE PLOTTED => 18-AUG-2011
05-16-11 TIME PLOTTED => 09:01

BORDER LAST REVISED 7/2/2010
USERNAME => s131681
DGN FILE => 0400020160pa001.dgn
RELATIVE BORDER SCALE IS IN INCHES 0 1 2 3
UNIT 0735
PROJECT NUMBER & PHASE 04000201601

Dist	COUNTY	ROUTE	POST MILES TOTAL PROJECT	SHEET No.	TOTAL SHEETS
04	Son	101	25.1, 27.8	37	59

Elaine Wong 5/18/11
REGISTERED ELECT ENGINEER DATE

5-16-11
PLANS APPROVAL DATE

REGISTERED PROFESSIONAL ENGINEER
Elaine T. Wong
No. 13753
Exp 6-30-13
ELEC
STATE OF CALIFORNIA

THE STATE OF CALIFORNIA OR ITS OFFICERS OR AGENTS SHALL NOT BE RESPONSIBLE FOR THE ACCURACY OR COMPLETENESS OF SCANNED COPIES OF THIS PLAN SHEET.

NOTE:

FOR ACCURATE RIGHT OF WAY DATA, CONTACT
RIGHT OF WAY ENGINEERING AT THE DISTRICT OFFICE.

PROJECT NOTES

1. RC EXISTING TYPE 10 LIGHTING STANDARD. RS EXISTING 200 W HPS LUMINAIRE.
2. INSTALL 2''C, 1DLC, 1SIC.
3. INSTALL 2''C, 2#8 (240 V, LTGHTING).
4. INSTALL 1½''C, 2#6 (120 V, SIGNAL), 2#8 (240 V, LIGHTING).
5. INSTALL 2''C, 2DLC, 1SIC.
6. INSTALL 2''C, 2#6 (120 V, SIGNAL), 2#8 (240 V, LTGHTING), 1DLC.
7. INSTALL 2''C, 2DLC.
8. EXISTING 2''C, 2#6 (240 V, Hwy LIGHTING), 2#8 (240 V, SIGN LIGHTING), 5#14 (120 V, TEST SWITCH & peu), 4#6 (120 V, SERVICE TO RMS), 2#10 (120 V, TDC), 2#6 (120 V, SERVICE TO TMS/EMS), ADD 2#6 (120 V, SERVICE TO SIGNAL).
9. EXISTING CONDUIT TO REMAIN.
10. INSTALL 2''C, 1SIC.
11. INSTALL 2''C, 1DLC.
12. INSTALL PEDESTRIAN BARRICADE.
13. INSTALL 2''C, 3DLC.
14. EXISTING 2''C, 4#6, 2#8, 2#14.

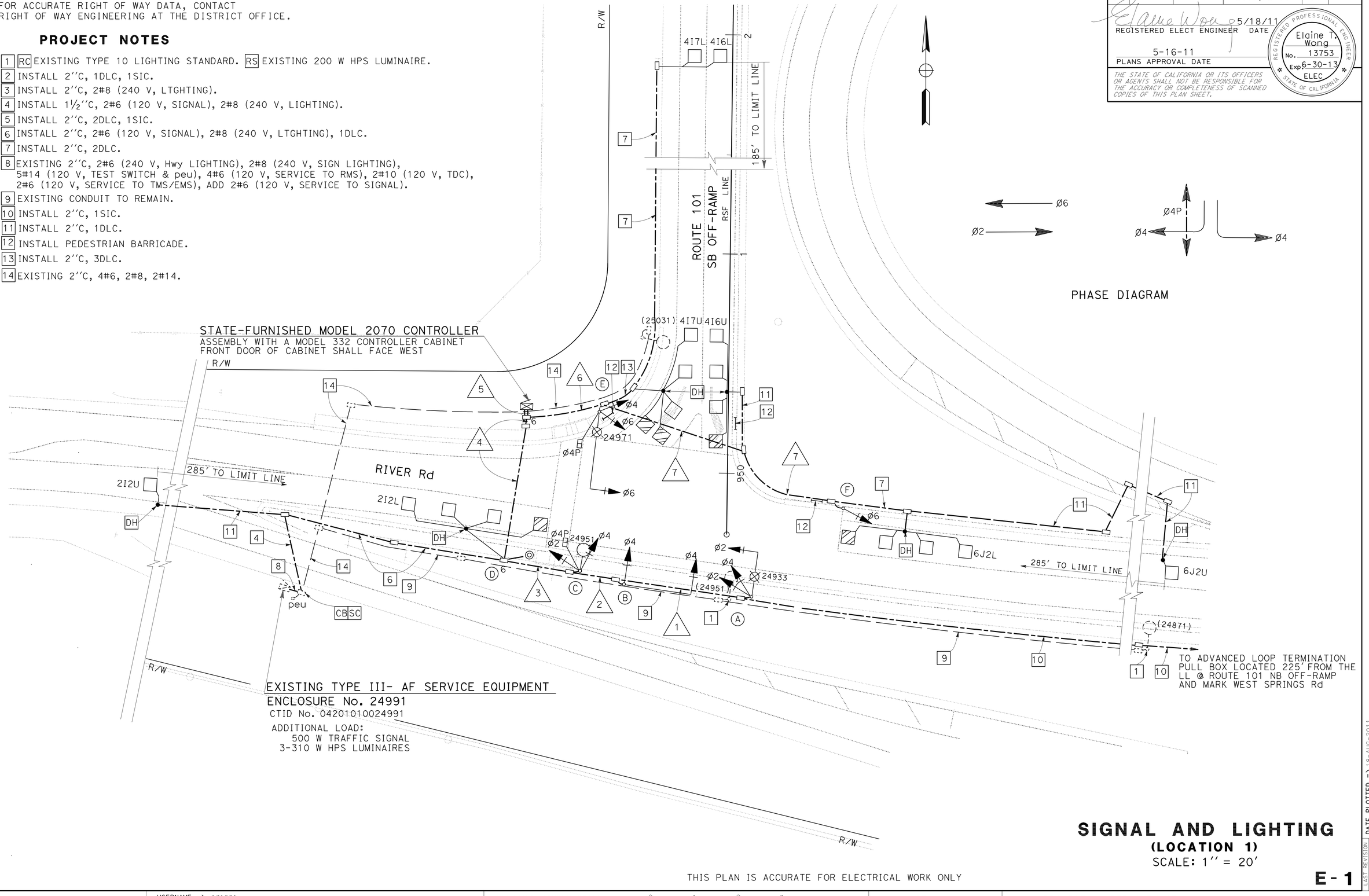

PHASE DIAGRAM

EXISTING TYPE III- AF SERVICE EQUIPMENT
ENCLOSURE No. 24991
CTID No. 04201010024991

ADDITIONAL LOAD:
500 W TRAFFIC SIGNAL
3-310 W HPS LUMINAIRES

SIGNAL AND LIGHTING
(LOCATION 1)
SCALE: 1'' = 20'

THIS PLAN IS ACCURATE FOR ELECTRICAL WORK ONLY

E-1

REVISED BY	DATE REVISED
NG	4/5/11

CALCULATED-DESIGNED BY: NASRIN GHARIB
CHECKED BY: ELAINE WONG
FUNCTIONAL SUPERVISOR: ELAINE WONG

STATE OF CALIFORNIA - DEPARTMENT OF TRANSPORTATION
ELECTRICAL
Caltrans

LAST REVISION | DATE PLOTTED => 18-AUG-2011
05-17-11 | TIME PLOTTED => 09:01

BORDER LAST REVISED 7/2/2010
USERNAME => s131681
DGN FILE => 0400020160ua001.dgn
RELATIVE BORDER SCALE IS IN INCHES 0 1 2 3
UNIT 0735
PROJECT NUMBER & PHASE 04000201601

Dist	COUNTY	ROUTE	POST MILES TOTAL PROJECT	SHEET No.	TOTAL SHEETS
04	Son	101	25.1, 27.8	38	59

Elaine Wong 5/18/11
REGISTERED ELECT ENGINEER DATE

5-16-11
PLANS APPROVAL DATE

REGISTERED PROFESSIONAL ENGINEER
Elaine T. Wong
No. 13753
Exp. 6-30-13
ELEC
STATE OF CALIFORNIA

THE STATE OF CALIFORNIA OR ITS OFFICERS OR AGENTS SHALL NOT BE RESPONSIBLE FOR THE ACCURACY OR COMPLETENESS OF SCANNED COPIES OF THIS PLAN SHEET.

CONDUCTOR AND CONDUIT SCHEDULE

AWG OR CABLE	CONDUCTOR RUN	1	2	3	4	5	6	7
#14	Ø2	3	3	3	3	3		
	Ø4	3	3	3	3	3		
	Ø6					6	3	3
	Ø4P			2	2	2		
	PPB (Ø4P)			1	1	1		
	PPB (NEUTRAL)			1	1	1		
	SPARES	3	3	3	3	3	3	3
	TOTAL No. 14	9	9	13	13	19	6	6
#8	LIGHTING (240 V)	2	2	2	2	2	2	
	SIGNAL NEUTRAL (120 V)	1	1	1	2	2	1	1
	TOTAL No. 8	3	3	3	4	4	3	1
#6	SERVICE (120 V)				2	2		
	TOTAL No. 6				2	2		
	SIC	1	1	1	1	1		
DLC	2I2L				1	1		
	2I2U				1	1		
	4I6U					1	1	
	4I6L					1	1	
	6J2U					1	1	1
	6J2L					1	1	1
	4I7U					1	1	
	4I7L					1	1	
	TOTAL DLC			1	2	8	6	2
	CONDUIT SIZE	2½''	2½''	2½''	2½''	2-3''	3''	2½''

POLE AND EQUIPMENT SCHEDULE

No.	STANDARD TYPE	STANDARD SIG. MA (FEET)	STANDARD LUM. MA (FEET)	VEH SIG MTG MAST ARM	VEH SIG MTG POLE	PED SIGNAL MTG	PPB Ø	PPB ARROW	HPS LUMINAIRE	SPECIAL REQUIREMENTS
A	17A-2-100	20	15	MAS	SV-2-T				310 W	
B	19-3-100	30	15	MAS	SV-1-T					
C	15TS		15		SV-2-T	SP-1-T	4		200 W	
D	PPB POST						4			
E	19A-3-100	35	15	MAS	SV-2-T	SP-1-T	4		310 W	
F	1-B				TV-1-T					

OTHER REQUIREMENTS ARE COVERED BY NOTES, LEGENDS, SPECIAL PROVISIONS, AND STANDARD SPECIFICATIONS. FOR TYPE OF STANDARD, VEHICLE AND PEDESTRIAN SIGNAL MOUNTING, SEE STANDARD PLANS.

SIGNAL AND LIGHTING
(LOCATION 1)
(CONDUCTOR, POLE & EQUIPMENT SCHEDULE)

E-2

STATE OF CALIFORNIA - DEPARTMENT OF TRANSPORTATION
Caltrans ELECTRICAL

FUNCTIONAL SUPERVISOR: ELAINE WONG
CALCULATED-DESIGNED BY: NASRIN GHARIB
CHECKED BY: ELAINE WONG
REVISED BY: NG
DATE REVISED: 4/5/11

LAST REVISION 05-16-11
DATE PLOTTED => 18-AUG-2011
TIME PLOTTED => 09:01

Dist	COUNTY	ROUTE	POST MILES TOTAL PROJECT	SHEET No.	TOTAL SHEETS
04	Son	101	25.1, 27.8	39	59

Elaine Wong 5/18/11
REGISTERED ELECT ENGINEER DATE

5-16-11
PLANS APPROVAL DATE

REGISTERED PROFESSIONAL ENGINEER
Elaine T. Wong
No. 13753
Exp. 6-30-13
ELEC
STATE OF CALIFORNIA

THE STATE OF CALIFORNIA OR ITS OFFICERS OR AGENTS SHALL NOT BE RESPONSIBLE FOR THE ACCURACY OR COMPLETENESS OF SCANNED COPIES OF THIS PLAN SHEET.

NOTE:

FOR ACCURATE RIGHT OF WAY DATA, CONTACT
RIGHT OF WAY ENGINEERING AT THE DISTRICT OFFICE.

EXISTING TYPE III-AF SERVICE EQUIPMENT ENCLOSURE No. 27751

CT ID No. 04201010027751 (TOU)
ADDITIONAL LOAD:
500 W TRAFFIC SIGNAL
3-310 W HPS LUMINAIRE

STATE FURNISH MODEL 2070 CONTROLLER ASSEMBLY WITH A MODEL 332 CONTROLLER
FRONT DOOR OF CABINET SHALL FACE WEST

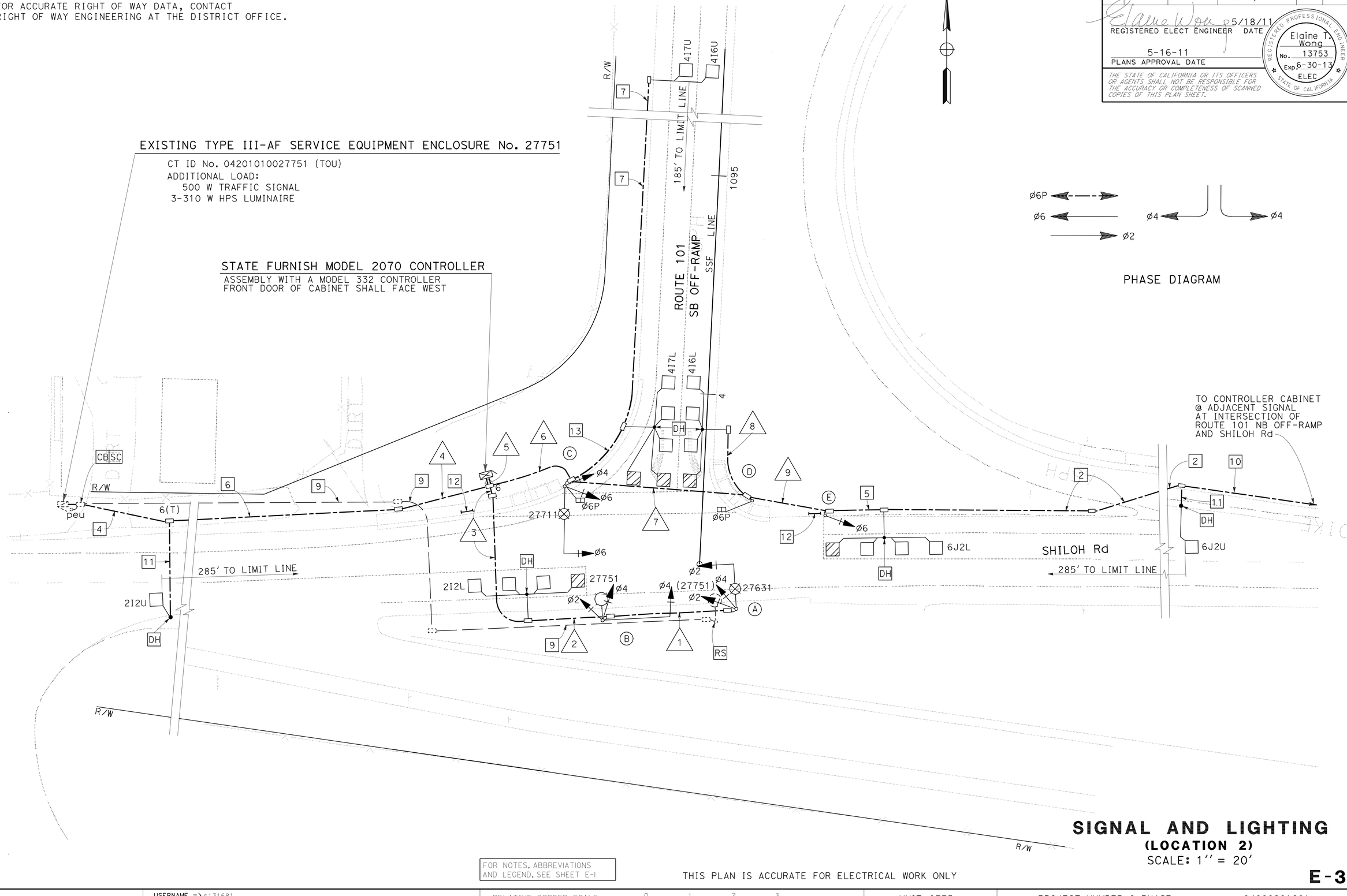

PHASE DIAGRAM

SIGNAL AND LIGHTING
(LOCATION 2)
SCALE: 1'' = 20'

FOR NOTES, ABBREVIATIONS AND LEGEND, SEE SHEET E-1

THIS PLAN IS ACCURATE FOR ELECTRICAL WORK ONLY

E-3

REVISED BY	NG
DATE REVISED	4/5/11
NASRIN GHARIB	
ELAINE WONG	
CALCULATED-DESIGNED BY	
CHECKED BY	
FUNCTIONAL SUPERVISOR	ELAINE WONG

STATE OF CALIFORNIA - DEPARTMENT OF TRANSPORTATION
ELECTRICAL

LAST REVISION | DATE PLOTTED => 18-AUG-2011
05-16-11 | TIME PLOTTED => 09:01

Dist	COUNTY	ROUTE	POST MILES TOTAL PROJECT	SHEET No.	TOTAL SHEETS
04	Son	101	25.1, 27.8	40	59

Elaine Wong 5/18/11
REGISTERED ELECT ENGINEER DATE

5-16-11
PLANS APPROVAL DATE

REGISTERED PROFESSIONAL ENGINEER
Elaine T. Wong
No. 13753
Exp 6-30-13
ELEC
STATE OF CALIFORNIA

THE STATE OF CALIFORNIA OR ITS OFFICERS OR AGENTS SHALL NOT BE RESPONSIBLE FOR THE ACCURACY OR COMPLETENESS OF SCANNED COPIES OF THIS PLAN SHEET.

CONDUCTOR AND CONDUIT SCHEDULE

AWG OR CABLE	CONDUCTOR RUN	1	2	3	4	5	6	7	8	9
#14	Ø2	3	3	3		3				
	Ø4	3	3	3		3				
	Ø6					6	3	3		3
	Ø6P					2	2	2		
	PPB (Ø6P)					1	1	1		
	PPB (NEUTRAL)					1	1	1		
	Sign Test Switch (120V)									
	Spares	3	3	3		6	3	3		3
	TOTAL No. 14	9	9	9		22	10	10		6
#8	Flashing Beacons (120V)									
	Lighting (240V)	2	2	2	2	2	2			
	Signal Neutral (120V)	1	1	1		1	1	1		
	TOTAL No. 8	3	3	3	2	3	3	1		1
#6										
	Service (120V)				2	2				
	TOTAL No. 6				2	2				
#10	PEU (Sign)									
	TOTAL No. 10									
SIC	SIC					1	1	1		1
DLC	2I2L			1		1				
	2I2U				1	1				
	2I3U (Future)			1		1				
	4I6U					1	1	1		
	4I6L					1	1		1	
	4I7U					1	1			
	4I7L					1	1			
	6J2U					1	1	1		1
	6J2L					1	1	1		1
	6J3U (Future)					1	1	1		1
	TOTAL DLC			2	1	10	7	4	1	3
	SIC									
	CONDUIT SIZE	2½''	2½''	2½''	2½''	2-3''	2-3''	2½''	2½''	2½''

POLE AND EQUIPMENT SCHEDULE

No.	STANDARD			VEH SIG MTG		PED SIGNAL	PPB		HPS LUMINAIRE	SPECIAL REQUIREMENTS
	TYPE	SIG. MA (FEET)	LUM. MA (FEET)	MAST ARM	POLE	MTG	Ø	ARROW		
(A)	17A-2-100	20	15	MAS	SV-2-T				310 W	
(B)	19A-3-100	30	15	MAS	SV-2-T				310 W	LUMINAIRE ARM TO BE PERPENDICULAR TO MAST ARM
(C)	19A-3-100	30	15	MAS	SV-2-T	SP-1-T	6		310 W	
(D)	1-B					TP-1-T	6			
(E)	1-B				TV-1-T					

OTHER REQUIREMENTS ARE COVERED BY NOTES, LEGENDS, SPECIAL PROVISIONS, AND STANDARD SPECIFICATIONS. FOR TYPE OF STANDARD, VEHICLE AND PEDESTRIAN SIGNAL MOUNTING, SEE STANDARD PLANS.

SIGNAL AND LIGHTING
(LOCATION 2)
(CONDUCTOR, POLE & EQUIPMENT SCHEDULE)

E-4

CALCULATED-DESIGNED BY	NASRIN GHARIB	REVISED BY	NG
CHECKED BY	ELAINE WONG	DATE REVISED	4/5/11
FUNCTIONAL SUPERVISOR	ELAINE WONG		

STATE OF CALIFORNIA - DEPARTMENT OF TRANSPORTATION
ELECTRICAL

LAST REVISION 05-16-11
DATE PLOTTED => 18-AUG-2011
TIME PLOTTED => 09:01

BORDER LAST REVISED 7/2/2010
USERNAME => s131681
DGN FILE => 0400020160ua004.dgn
RELATIVE BORDER SCALE IS IN INCHES 0 1 2 3
UNIT 0735
PROJECT NUMBER & PHASE 04000201601

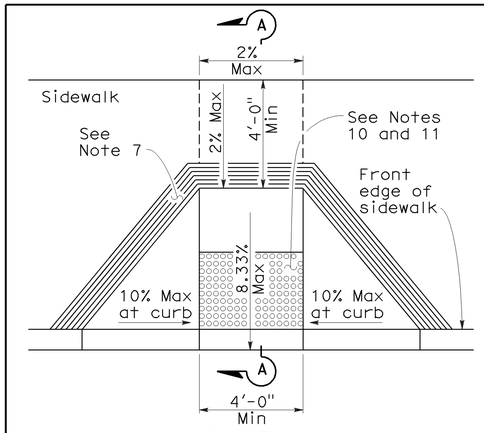

CASE A

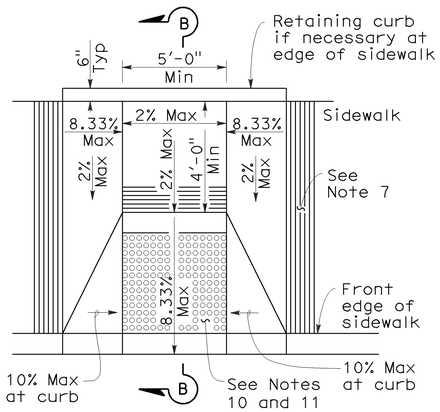

CASE B

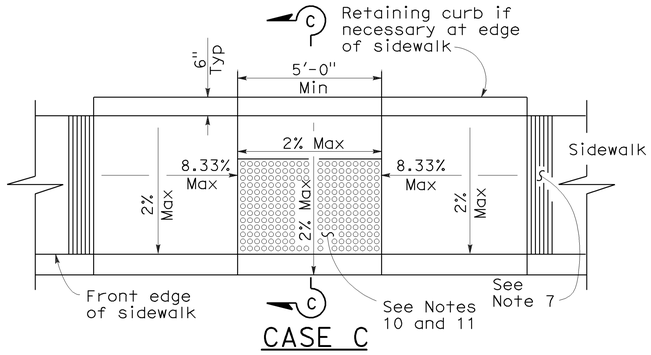

CASE C

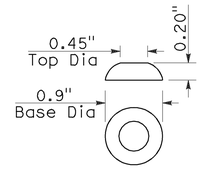

RAISED TRUNCATED DOME

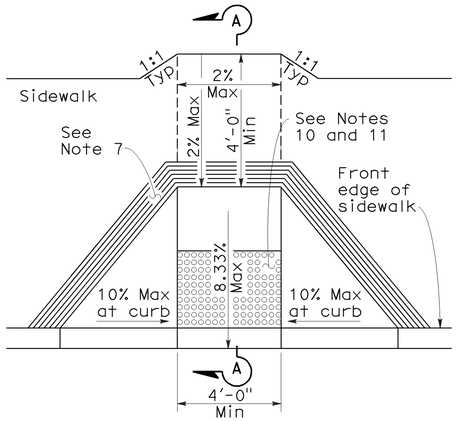

CASE D

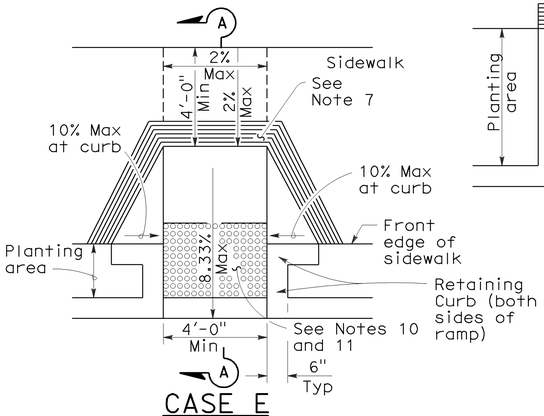

CASE E

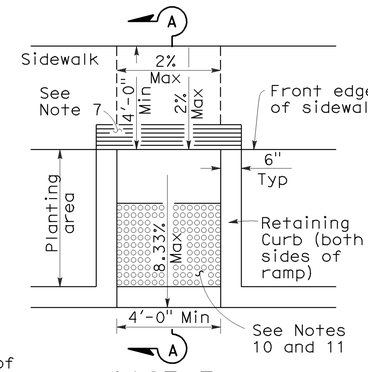

CASE F

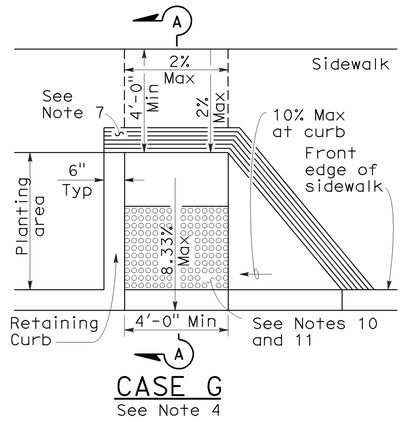

CASE G
See Note 4

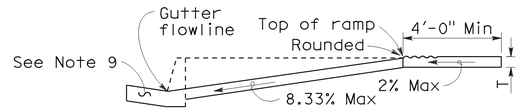

SECTION A-A

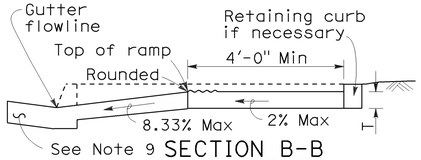

SECTION B-B

Depress entire sidewalk as required

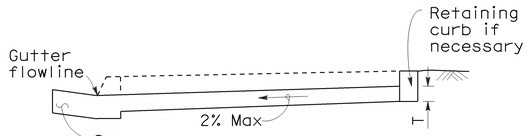

SECTION C-C

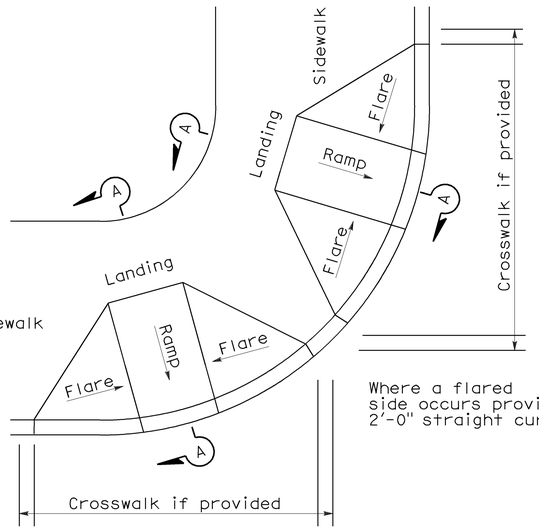

DETAIL A

TYPICAL TWO-RAMP CORNER INSTALLATION

See Note 1

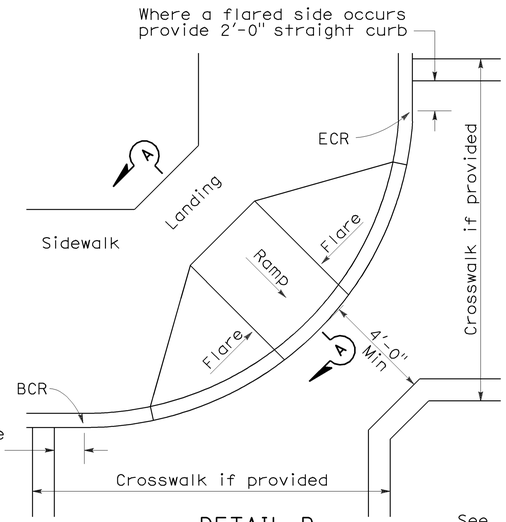

DETAIL B

TYPICAL ONE-RAMP CORNER INSTALLATION

See Notes 1 and 3

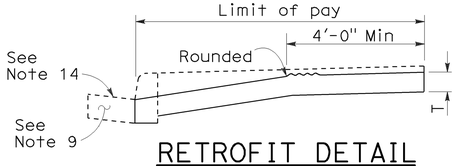

RETROFIT DETAIL

Existing curb and sidewalk

GROOVING DETAIL

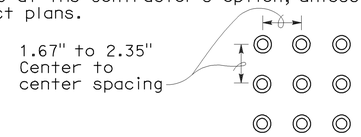

RAISED TRUNCATED DOME PATTERN (IN-LINE)

DETECTABLE WARNING SURFACE

See Note 10

NOTES:

1. As site conditions dictate, Case A through Case G curb ramps may be used for corner installations similar to those shown in Detail A and Detail B. The case of curb ramps used in Detail A do not have to be the same. Case A through Case G curb ramps also may be used at mid block locations, as site conditions dictate.
2. If distance from curb to back of sidewalk is too short to accommodate ramp and 4'-0" platform (landing) as shown in Case A, the sidewalk may be depressed longitudinally as in Case B, or C or may be widened as in Case D.
3. When ramp is located in center of curb return, crosswalk configuration must be similar to that shown for Detail B.
4. As site conditions dictate, the retaining curb side and the flared side of the Case G ramp shall be constructed in reversed position.
5. If located on a curve, the sides of the ramp need not be parallel, but the minimum width of the ramp shall be 4'-0".
6. Side slope of ramp flares vary uniformly from a maximum of 10% at curb to conform with longitudinal sidewalk slope adjacent to top of the ramp, except in Case C and Case F.
7. The curb ramp shall be outlined, as shown, with a 1'-0" wide border with ¼" grooves approximately ¾" on center. See grooving detail.
8. Transitions from ramps and landing to walks, gutters or streets shall be flush and free of abrupt changes.
9. Maximum slopes of adjoining gutters, the road surface immediately adjacent to the curb ramp or accessible route shall not exceed 5 percent within 4'-0" of the top and bottom of the curb ramp.
10. Curb ramps shall have a detectable warning surface that extends the full width and 3'-0" depth of the ramp. Detectable Warning Surfaces shall conform to the details on this plan and the requirements in the Special Provisions.
11. The edge of the detectable warning surface nearest the street shall be between 6" and 8" from the gutter flowline.
12. Sidewalk and ramp thickness, "T", shall be 3½" minimum.
13. Utility pull boxes, manholes, vaults and all other utility facilities within the boundaries of the curb ramp will be relocated or adjusted to grade by the owner prior to, or in conjunction with, curb ramp construction.
14. For retrofit conditions, removal and replacement of curb apron will be at the Contractor's option, unless otherwise shown on project plans.

DIST	COUNTY	ROUTE	POST MILES TOTAL PROJECT	SHEET NO.	TOTAL SHEETS
04	Son	101	25.1, 27.8	41	59

H. David Cordova
REGISTERED CIVIL ENGINEER

September 1, 2006
PLANS APPROVAL DATE

REGISTERED PROFESSIONAL ENGINEER — Hector David Cordova — No. C41957 — Exp. 3-31-08 CIVIL — STATE OF CALIFORNIA

The State of California or its officers or agents shall not be responsible for the accuracy or completeness of electronic copies of this plan sheet.

To accompany plans dated 5-16-11

STATE OF CALIFORNIA
DEPARTMENT OF TRANSPORTATION

CURB RAMP DETAILS

NO SCALE

RSP A88A DATED SEPTEMBER 1, 2006 SUPERSEDES STANDARD PLAN A88A DATED MAY 1, 2006 - PAGE 115 OF THE STANDARD PLANS BOOK DATED MAY 2006.

REVISED STANDARD PLAN RSP A88A

2006 REVISED STANDARD PLAN RSP A88A

8-3-06

DIST	COUNTY	ROUTE	POST MILES TOTAL PROJECT	SHEET NO.	TOTAL SHEETS
04	Son	101	25.1, 27.8	42	59

Randell D. Hiatt
REGISTERED CIVIL ENGINEER

June 6, 2008
PLANS APPROVAL DATE

REGISTERED PROFESSIONAL ENGINEER
Randell D. Hiatt
No. C50200
Exp. 6-30-09
CIVIL
STATE OF CALIFORNIA

The State of California or its officers or agents shall not be responsible for the accuracy or completeness of electronic copies of this plan sheet.

To accompany plans dated 5-16-11

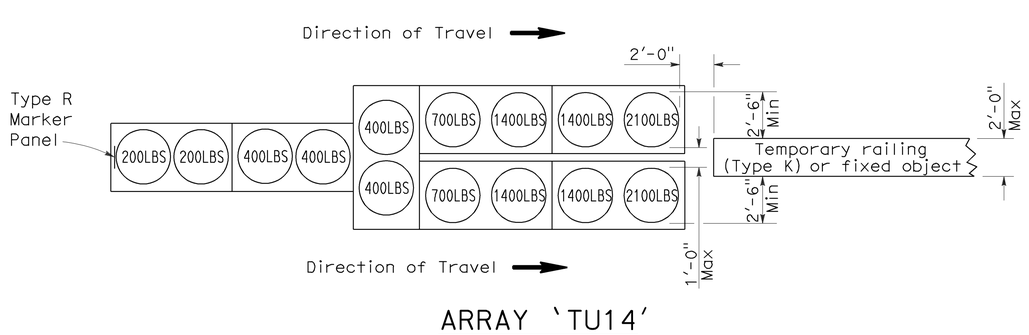

ARRAY 'TU14'

Approach speed 45 mph or more

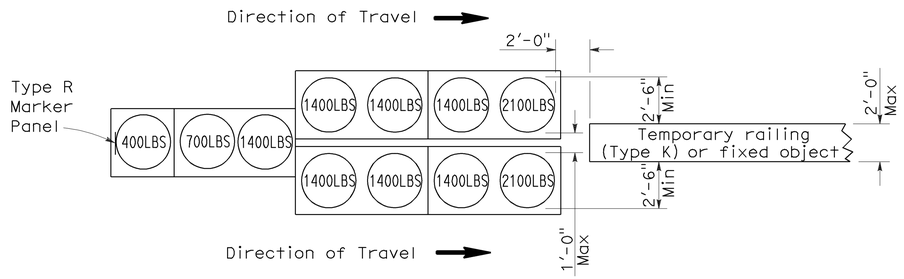

ARRAY 'TU11'

Approach speed less than 45 mph

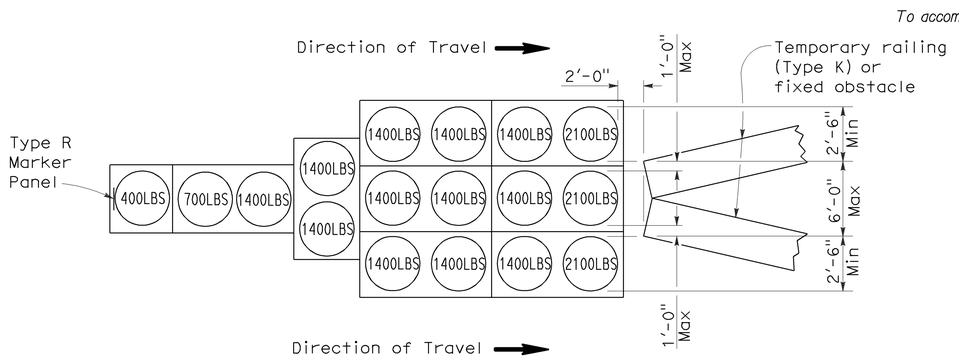

ARRAY 'TU17'

Approach speed less than 45 mph

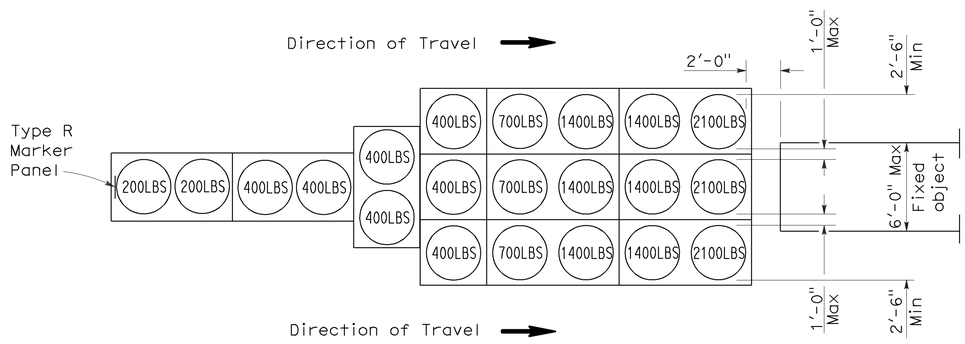

ARRAY 'TU21'

Approach speed 45 mph or more

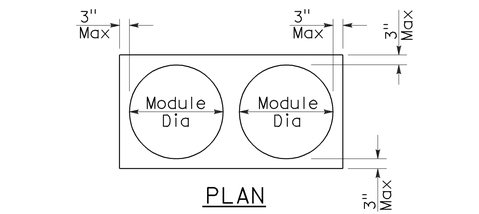

PLAN

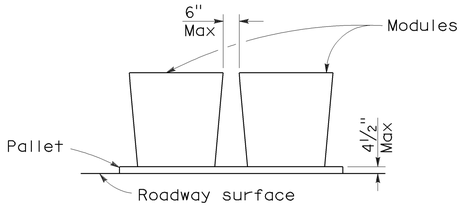

ELEVATION

CRASH CUSHION PALLET DETAIL

See Note 7

NOTES:

1. (XXX) Indicates sand filled module location and weight of sand in pounds for each module. Module spacing is based on the greater diameter of the module.
2. All sand weights are nominal.
3. Temporary crash cushion arrays shall not encroach on the traveled way.
4. Place the top of Type R marker panel 1" below the module lid.
5. Refer to Standard Plan A73B for marker details.
6. Approach speeds indicated conform to NCHRP 350 Report criteria.
7. Use of pallets is optional.

STATE OF CALIFORNIA
DEPARTMENT OF TRANSPORTATION

TEMPORARY CRASH CUSHION, SAND FILLED (UNIDIRECTIONAL)

NO SCALE

RSP T1A DATED JUNE 6, 2008 SUPERSEDES STANDARD PLAN T1A
DATED MAY 1, 2006 - PAGE 211 OF THE STANDARD PLANS BOOK DATED MAY 2006.

REVISED STANDARD PLAN RSP T1A

2006 REVISED STANDARD PLAN RSP T1A

5-15-08

DIST	COUNTY	ROUTE	POST MILES TOTAL PROJECT	SHEET NO.	TOTAL SHEETS
04	Son	101	25.1, 27.8	43	59

Randell D. Hiatt
REGISTERED CIVIL ENGINEER

June 6, 2008
PLANS APPROVAL DATE

REGISTERED PROFESSIONAL ENGINEER
Randell D. Hiatt
No. C50200
Exp. 6-30-09
CIVIL
STATE OF CALIFORNIA

The State of California or its officers or agents shall not be responsible for the accuracy or completeness of electronic copies of this plan sheet.

To accompany plans dated 5-16-11

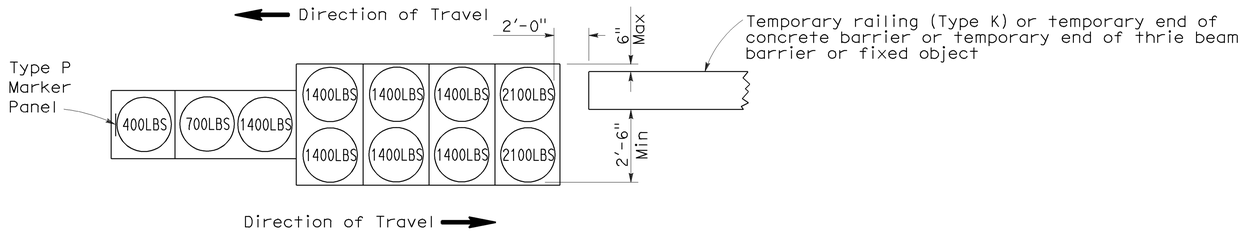

ARRAY 'TB11'

Approach speed less than 45 mph

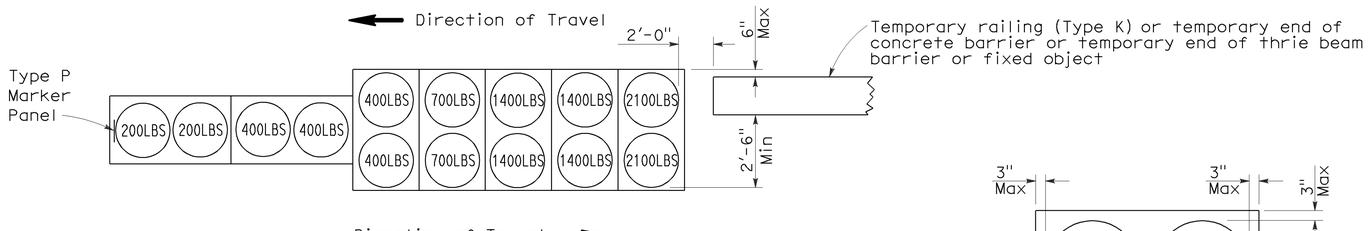

ARRAY 'TB14'

Approach speed 45 mph or more

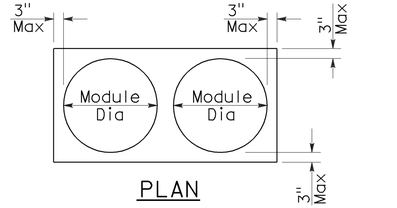

PLAN

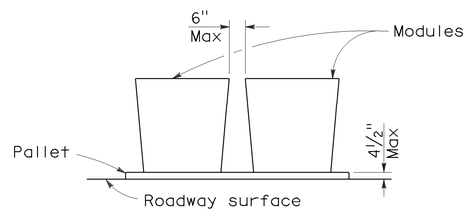

ELEVATION

CRASH CUSHION PALLET DETAIL

See Note 7

NOTES:

1. (XXX) Indicates sand filled module location and weight of sand in pounds for each module. Module spacing is based on the greater diameter of the module.
2. All sand weights are nominal.
3. Temporary crash cushion arrays shall not encroach on the traveled way.
4. Place the Type P marker panel so that the bottom of the panel rests upon the pallet.
5. Refer to Standard Plan A73B for marker details.
6. Approach speeds indicated conform to NCHRP 350 Report criteria.
7. Use of pallets is optional.

STATE OF CALIFORNIA
DEPARTMENT OF TRANSPORTATION

TEMPORARY CRASH CUSHION, SAND FILLED (BIDIRECTIONAL)

NO SCALE

RSP T1B DATED JUNE 6, 2008 SUPERSEDES STANDARD PLAN T1B
DATED MAY 1, 2006 - PAGE 212 OF THE STANDARD PLANS BOOK DATED MAY 2006.

REVISED STANDARD PLAN RSP T1B

2006 REVISED STANDARD PLAN RSP T1B

5-15-08

DIST	COUNTY	ROUTE	POST MILES TOTAL PROJECT	SHEET NO.	TOTAL SHEETS
04	Son	101	25.1, 27.8	44	59

Randell D. Hiatt
REGISTERED CIVIL ENGINEER

June 6, 2008
PLANS APPROVAL DATE

REGISTERED PROFESSIONAL ENGINEER
Randell D. Hiatt
No. C50200
Exp. 6-30-09
CIVIL
STATE OF CALIFORNIA

The State of California or its officers or agents shall not be responsible for the accuracy or completeness of electronic copies of this plan sheet.

To accompany plans dated 5-16-11

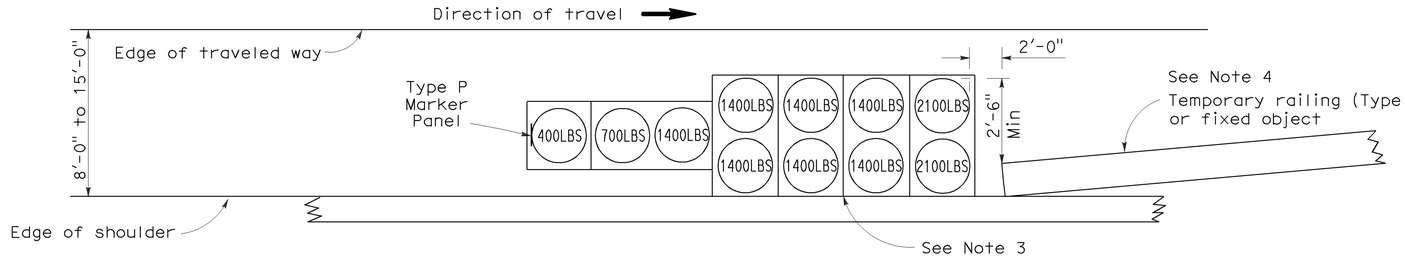

ARRAY 'TS11'

Approach speed less than 45 mph
See Note 9

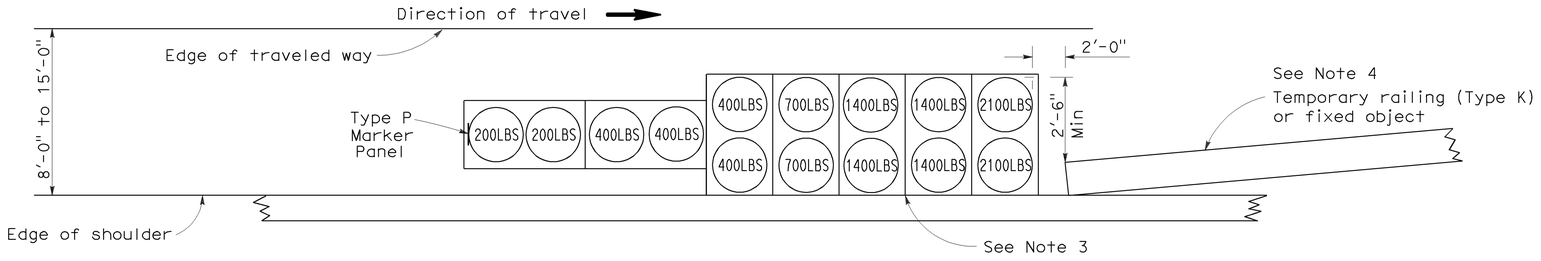

ARRAY 'TS14'

Approach speed 45 mph or more
See Note 9

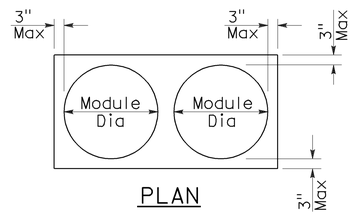

PLAN

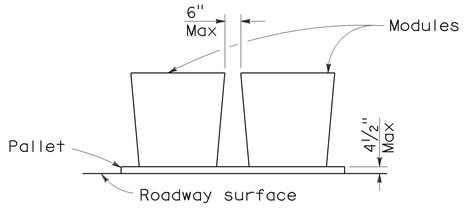

ELEVATION

CRASH CUSHION PALLET DETAIL

See Note 11

NOTES:

1. (XXX) Indicates sand filled module location and weight of sand in pounds for each module. Module spacing is based on the greater diameter of the module.
2. All sand weights are nominal.
3. The temporary crash cushion arrays shown on this plan shall be used only in locations where there will be traffic on one side of the temporary crash cushion array.
4. If the fixed object or approach end of the temporary railing is less than 15'-0" from the edge of traveled way, a temporary crash cushion is required in a construction or work zone.
5. Temporary crash cushion arrays shall not encroach on the traveled way.
6. Arrays for median shoulders shall conform to details shown on this plan for outside shoulders.
7. Place the Type P marker panel so that the bottom of the panel rests upon the pallet and faces traffic.
8. Refer to Standard Plan A73B for marker details.
9. For shoulder widths less than 8'-0", appropriate approved crash cushion protection, other than sand filled modules, shall be provided at fixed objects and at approach ends of temporary railing. The specific type of crash cushion shall be as shown on the project plans or as specified in the Special Provisions, or if not shown on the project plans or specified in the Special Provisions, shall be as approved by the Engineer.
10. Approach speeds indicated conform to NCHRP 350 Report criteria.
11. Use of pallets is optional.

STATE OF CALIFORNIA
DEPARTMENT OF TRANSPORTATION

TEMPORARY CRASH CUSHION, SAND FILLED (SHOULDER INSTALLATIONS)

NO SCALE

RSP T2 DATED JUNE 6, 2008 SUPERSEDES STANDARD PLAN T2
DATED MAY 1, 2006 - PAGE 213 OF THE STANDARD PLANS BOOK DATED MAY 2006.

REVISED STANDARD PLAN RSP T2

2006 REVISED STANDARD PLAN RSP T2

5-15-08

DIST	COUNTY	ROUTE	POST MILES TOTAL PROJECT	SHEET NO.	TOTAL SHEETS
04	Son	101	25.1, 27.8	45	59

Jeffrey G. McRae
REGISTERED ELECTRICAL ENGINEER

October 5, 2007
PLANS APPROVAL DATE

REGISTERED PROFESSIONAL ENGINEER — Jeffery G. McRae — No. E14512 — Exp. 6-30-08 — ELECTRICAL — STATE OF CALIFORNIA

The State of California or its officers or agents shall not be responsible for the accuracy or completeness of electronic copies of this plan sheet.

To accompany plans dated 5-16-11

ELECTROLIERS

STANDARD TYPES
15, 15D
15 STRUCTURE
21, 21D STRUCTURE
30
31
32
35
36-20A

High mast light pole

Double Arm lighting standard

Existing electrolier

Electrolier foundation (Future installation)

NOTES:

1. Luminaires shall be 310 W HPS when installed on Type 21, 21D, 30, 31, 32, 35 and 36-20A Standards, unless otherwise specified. Luminaires shall be 200 W HPS when installed on other type standards or poles, unless otherwise specified.
2. Luminaires shall be the cutoff type, ANSI Type III medium cutoff lighting distribution, unless otherwise specified.
3. Variations noted adjacent to symbol on project plans.

Electrolier (see project notes or project plans)

Luminaire on wood pole

STANDARD NOTES:

- AB — Abandon. If applied to conduit, remove conductors.
- BC — Install pull box in existing conduit run.
- BP — Pedestrian barricade, type as indicated on plan.
- CB — Install conduit into existing pull box.
- CC — Connect new and existing conduit. Remove existing conductors and install conductors as indicated.
- CF — Conduit to remain for future use. Remove conductors. Install pull wire or rope.
- DH — Detector handhole.
- FA — Foundation to be abandoned.
- IS — Install sign on signal mast arm.
- NS — No slip base on standard.
- PEC — Photoelectric control.
- PEU — Photoelectric unit.
- RC — Equipment or material to be removed and become the property of the Contractor.
- RE — Remove electrolier, fuses and ballast. Tape ends of conductors.
- RL — Relocate equipment.
- RR — Remove and reuse equipment.
- RS — Remove and salvage equipment.
- SC — Splice new to existing conductors.
- SD — Service disconnect.
- SF — Standard to remain for future use. Remove luminaire, pole conductors, fuses and ballast.
- TSP — Telephone service point.

ABBREVIATIONS AND EQUIPMENT DESIGNATIONS

PROPOSED	EXISTING	
BBS	bbs	Battery backup system
BC	bc	Bolt circle
C	C	Conduit
CCTV	cctv	Closed circuit television
CKT	ckt	Circuit
CMS	cms	Changeable message sign
DLC	dlc	Loop detector lead-in cable
EMS	ems	Extinguishable message sign
EVC	evc	Emergency vehicle cable
EVD	evd	Emergency vehicle detector
FB	fb	Flashing beacon
FBCA	fbca	Flashing beacon control assembly
FBS	fbs	Flashing beacon with slip base
FO	fo	Fiber optic
G	G	Ground (Equipment Grounding Conductor)
GFCI	GFCI	Ground fault circuit interrupt
HAR	har	Highway advisory radio
HEX	hex	Hexagonal
HPS	hps	High pressure sodium
IISNS	iisns	Internally illuminated street name sign
ISL	isl	Induction sign lighting
LED	led	Light emitting diode
LMA	lma	Luminaire mast arm
LPS	lps	Low pressure sodium
LTG	ltg	Lighting
LUM	lum	Luminaire
MAT	mat	Mast arm mounting vehicle signal faces, top attachment
MAS	mas	Mast arm mounting vehicle signal faces, side attachment
MAS-4A	mas-4A	Mast arm mounting vehicle signal faces,
MAS-4B	mas-4B	side attachment - 4 signal section
MAS-4C	mas-4C	
MAS-5A	mas-5A	Mast arm mounting vehicle signal faces,
MAS-5B	mas-5B	side attachment - 5 signal section
MC	mc	Mercury contactor
M/M	m/m	Multiple to multiple transformer
MT	mt	Conduit with pull wire or rope only
MTG	mtg	Mounting
	mv	Mercury vapor lighting fixture
N	N	Neutral (Grounded Conductor)
NC	NC	Normally closed
NO	NO	Normally open
PB	pb	Pull box
PEC	pec	Photoelectric control (Type I, II, III, IV or V as shown)
PED	ped	Pedestrian
PEU	peu	Photoelectric unit
PPB	ppb	Pedestrian push button
RL		Relocated equipment
RM	rm	Ramp metering
SB	sb	Slip base
SIC	sic	Signal interconnect cable
SIG	sig	Signal
SMA	sma	Signal mast arm
SNS	sns	Street name sign
SP	sp	Service point
TDC	tdc	Telephone demarcation cabinet
TMS	tms	Traffic monitoring station
TOS	tos	Traffic Operations System
VEH	veh	Vehicle
XFMR	xfmr	Transformer
COMM	comm	Communication
RWIS	rwis	Roadway weather information system

SOFFIT AND WALL MOUNTED LUMINAIRES

- Pendant, 70 W HPS unless otherwise specified.
- Flush, 70 W HPS unless otherwise specified.
- Wall surface, 70 W HPS unless otherwise specified.
- Existing soffit or wall luminaire to remain unmodified.
- (M) Existing soffit or wall luminaire to be modified as specified.

NOTE:
Arrow indicates "street side" of luminaire.

STATE OF CALIFORNIA
DEPARTMENT OF TRANSPORTATION

ELECTRICAL SYSTEMS (SYMBOLS AND ABBREVIATIONS)

NO SCALE

RSP ES-1A DATED OCTOBER 5, 2007 SUPERSEDES STANDARD PLAN ES-1A
DATED MAY 1, 2006 - PAGE 400 OF THE STANDARD PLANS BOOK DATED MAY 2006.

REVISED STANDARD PLAN RSP ES-1A

2006 REVISED STANDARD PLAN RSP ES-1A

7-10-07

DIST	COUNTY	ROUTE	POST MILES TOTAL PROJECT	SHEET NO.	TOTAL SHEETS
04	Son	101	25.1, 27.8	46	59

Jeffery G. McRae
REGISTERED ELECTRICAL ENGINEER

October 5, 2007
PLANS APPROVAL DATE

REGISTERED PROFESSIONAL ENGINEER — Jeffery G. McRae — No. E14512 — Exp. 6-30-08 — ELECTRICAL — STATE OF CALIFORNIA

The State of California or its officers or agents shall not be responsible for the accuracy or completeness of electronic copies of this plan sheet.

To accompany plans dated 5-16-11

CONDUIT

PROPOSED	EXISTING	
— — —	— — —	Lighting Conduit, unless otherwise indicated or noted
— - — - —	— - — - —	Traffic signal conduit
—C— —	—c— —	Communication conduit
—T— —	—t— —	Telephone conduit
—F— —	—f— —	Fire alarm conduit
—FO— —	—fo— —	Fiber optic conduit
— — —┐	— — —┐	Conduit termination (RSP ES-9A C)
R	r	Conduit riser in/on structure or service pole

SERVICE EQUIPMENT

PROPOSED	EXISTING	
—OH—	—oh—	Overhead lines
U	U	Wood pole "U" indicates utility owned
		Pole guy with anchor
		Utility transformer - ground mounted
III		Service equipment enclosure type
		Service equipment enclosure door indicates front of enclosure
T	t	Telephone demarcation cabinet

POLE-MOUNTED SERVICE DESIGNATION

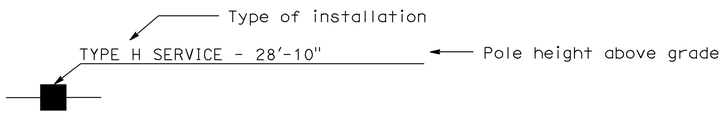

ILLUMINATED OVERHEAD SIGN

PROPOSED	EXISTING	
		Overhead sign - Single post
		Overhead sign - Two post
		Overhead sign - Mounted on structure
		Overhead sign with electrolier

SIGNAL EQUIPMENT

PROPOSED	EXISTING	
		Pedestrian signal face
		Pedestrian push button post
		Pedestrian barricade
		Vehicle signal face (with backplate, 3-Section: red, yellow and green)
		Vehicle signal face with angle visors
PV	PV	Modifications of basic symbols: "L" Indicates all non-arrow sections louvered "LG" Indicates louvered green section only "PV" indicates 12" programmed visibility sections "8" indicates all 8" sections (only when specified)
		Type 15TS and Vehicle signal face
		Vehicle signal face with red, yellow and green left arrow sections
		Vehicle signal face with red and yellow sections and up green arrow
		Vehicle signal face (5 Section) with red, yellow and green sections and yellow and green right arrows
		Type 1 Standard and attached vehicle signal faces
		Standard with signal mast arm only and attached vehicle signal faces and internally illuminated street name sign
		Type 33 Standard, Left-turn vehicle signal face and sign
		Standard with luminaire and signal mast arms and attached vehicle signal faces
		Cantilever flashing beacon Type 9 Frame, with a sign unless otherwise specified or indicated
		Type 15-FBS Standard with two vehicle signal face sections with lens, backplate and visor with a sign
R	Y	Flashing beacon. One vehicle signal face section with lens, backplate and visor. "R" indicates red indication, "Y" indicates yellow indication
		Controller assembly. Door indicates front of cabinet

SIGNAL EQUIPMENT Cont

PROPOSED	EXISTING	
		Guard post
		Type 1 Standard with "Meter On" sign
		Emergency Vehicle detector

NOTES:

1. All signal sections shall be 12" unless shown otherwise.
2. Signal heads shall be provided with backplates unless shown otherwise.
3. Signal indication shall be LED.

STATE OF CALIFORNIA
DEPARTMENT OF TRANSPORTATION

ELECTRICAL SYSTEMS (SYMBOLS AND ABBREVIATIONS)

NO SCALE

RSP ES-1B DATED OCTOBER 5, 2007 SUPERCEDES STANDARD PLAN ES-1B DATED MAY 1, 2006 - PAGE 401 OF THE STANDARD PLANS BOOK DATED MAY 2006.

REVISED STANDARD PLAN RSP ES-1B

2006 REVISED STANDARD PLAN RSP ES-1B

7-10-07

DIST	COUNTY	ROUTE	POST MILES TOTAL PROJECT	SHEET NO.	TOTAL SHEETS
04	Son	101	25.1, 27.8	47	59

Jeffery G. McRae
REGISTERED ELECTRICAL ENGINEER

October 5, 2007
PLANS APPROVAL DATE

REGISTERED PROFESSIONAL ENGINEER — Jeffery G. McRae — No. E14512 — Exp. 6-30-08 — ELECTRICAL — STATE OF CALIFORNIA

The State of California or its officers or agents shall not be responsible for the accuracy or completeness of electronic copies of this plan sheet.

To accompany plans dated 5-16-11

EQUIPMENT IDENTIFICATION

ILLUMINATED SIGN IDENTIFICATION NUMBER:

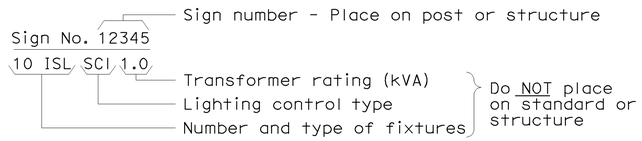

ELECTROLIER OR EQUIPMENT IDENTIFICATION NUMBER:

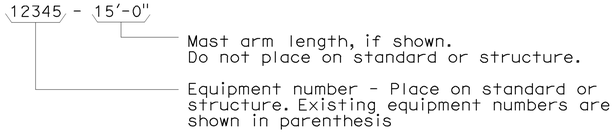

CONDUIT AND CONDUCTOR IDENTIFICATION:

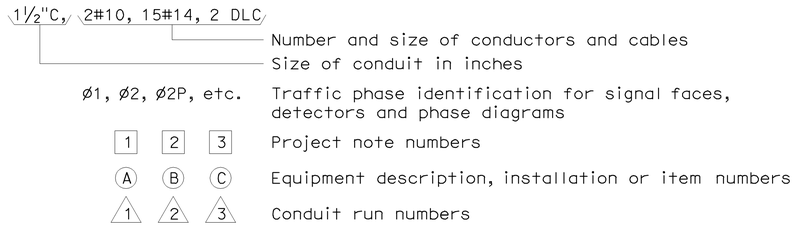

SIGNAL AND LIGHTING STANDARD (TYPICAL DESIGNATION):

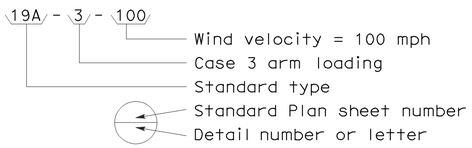

WIRING DIAGRAM LEGEND

P	Pole
CB	Circuit breaker
A	Ampere
V	Volt
M	Metered
UM	Unmetered
NB	Neutral bus
GB	Ground bus
G	Equipment grounding conductor
N	Grounded conductor (Neutral)

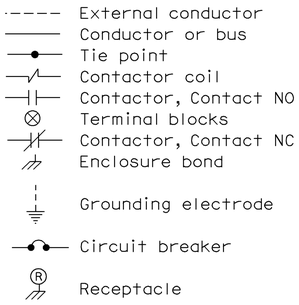

PULL BOXES

PROPOSED EXISTING

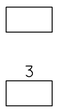

Pull box-No. 5 unless otherwise indicated or noted.

Pull box-Additional designations or descriptions

(C) = Communications pull box
(E) = Pull box with extension
(S) = Sprinkler control pull box
(21) = Anchor bolts and conduit for future installation of Type 21 Standard
(T) = Traffic pull box

3 = No. 3½ pull box
5 = No. 5 pull box
6 = No. 6 pull box
7 = No. 7 (Ceiling pull box)
8 = No. 8 (Pendant soffit pull box)
9 = No. 9 pull box
9A = No. 9A pull box

VEHICLE DETECTORS

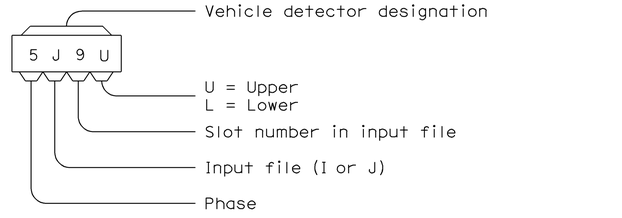

PROPOSED EXISTING

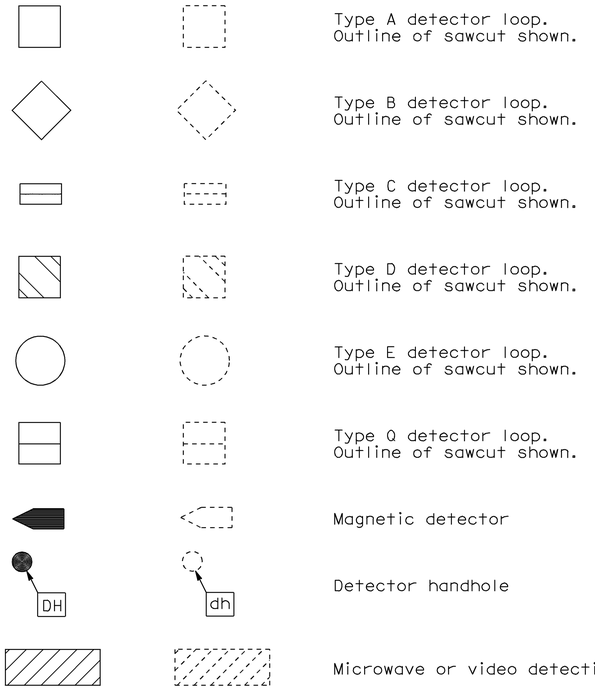

MISCELLANEOUS EQUIPMENT

PROPOSED EXISTING

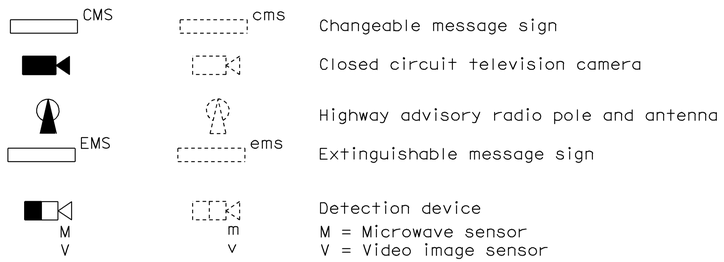

STATE OF CALIFORNIA
DEPARTMENT OF TRANSPORTATION

ELECTRICAL SYSTEMS (SYMBOLS AND ABBREVIATIONS)

NO SCALE

RSP ES-1C DATED OCTOBER 5, 2007 SUPERCEDES STANDARD PLAN ES-1C
DATED MAY 1, 2006 - PAGE 402 OF THE STANDARD PLANS BOOK DATED MAY 2006.

REVISED STANDARD PLAN RSP ES-1C

2006 REVISED STANDARD PLAN RSP ES-1C

7-10-07

DIST	COUNTY	ROUTE	POST MILES TOTAL PROJECT	SHEET NO.	TOTAL SHEETS
04	Son	101	25.1, 27.8	48	59

Jeffrey G. McRae
REGISTERED ELECTRICAL ENGINEER

June 6, 2008
PLANS APPROVAL DATE

REGISTERED PROFESSIONAL ENGINEER — Jeffery G. McRae — No. E14512 — Exp. 6-30-10 — ELECTRICAL — STATE OF CALIFORNIA

The State of California or its officers or agents shall not be responsible for the accuracy or completeness of electronic copies of this plan sheet.

To accompany plans dated 5-16-11

TUNNEL FULL CIRCLE CAP OR CUT AWAY LEFT ANGLE

(Right angle is reversed of figure)

VISORS

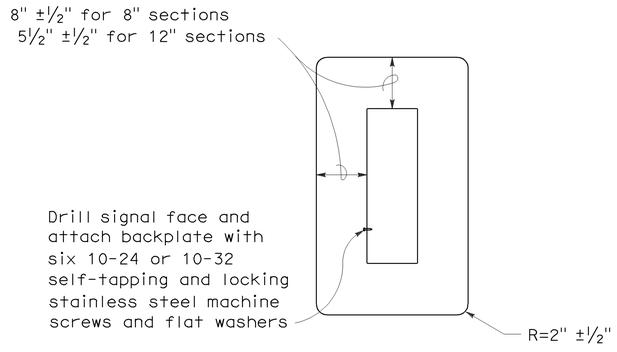

8" AND 12" SECTIONS

BACKPLATE

1/16" minimum thickness
3001-14 aluminum, or plastic when specified

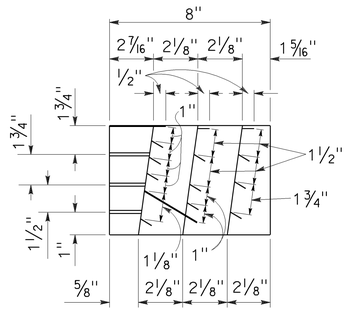

SECTION A-A

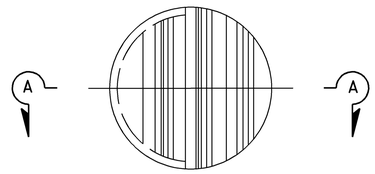

FRONT VIEW

DIRECTIONAL LOUVER

Directional louvers shall be oriented as directed by the Engineer and secured in place with one plated brass machine screw and nut.

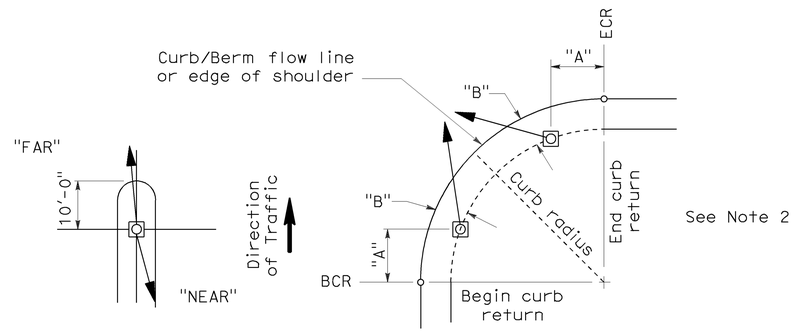

NOTES:

1. Typical signal pole placement unless dimensioned on plans.
2. For "A" and "B" dimensions, see Pole Schedule, or as directed by the Engineer.

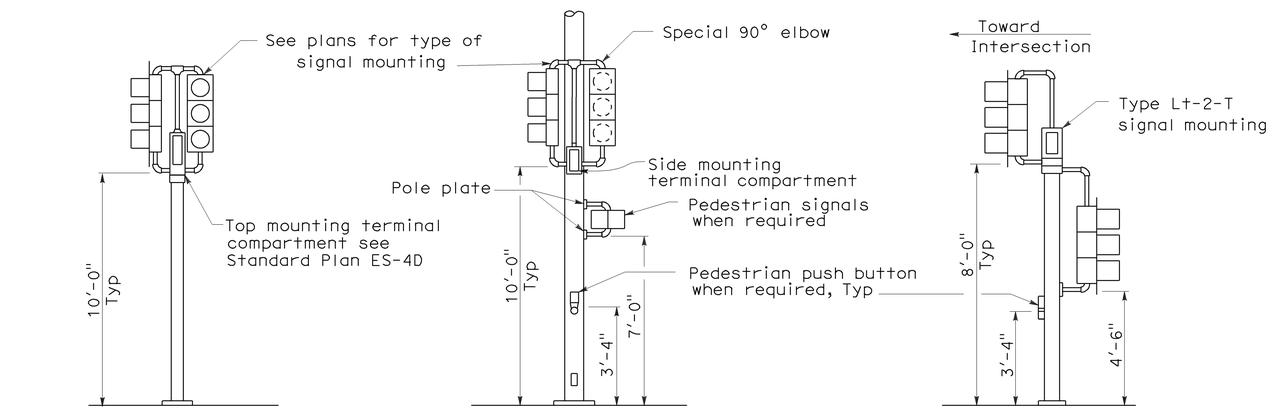

TOP MOUNTED SIGNALS (TV)

Type 1-A, 1-B, 1-C and 1-D standard as indicated on the plans

SIDE MOUNTED SIGNALS (SV AND SP)

Normally used on standards with luminaire or signal mast arm

LEFT TURN LANE SIGNAL

Type 1-A, 1-B, 1-C and 1-D standard as indicated on plans

TYPICAL SIGNAL INSTALLATIONS

SIGNAL STANDARD PLACEMENT DIMENSIONS AND EQUIPMENT LOCATIONS

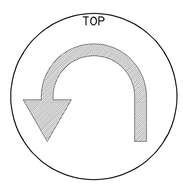

U-TURN SIGNAL FACE

BICYCLE SIGNAL FACE

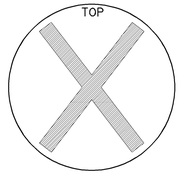

LANE CONTROL SIGNAL FACE

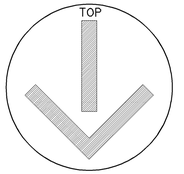

LANE CONTROL SIGNAL FACE

STATE OF CALIFORNIA
DEPARTMENT OF TRANSPORTATION

ELECTRICAL SYSTEMS (SIGNAL HEADS AND MOUNTINGS)

NO SCALE

RSP ES-4C DATED JUNE 6, 2008 SUPERSEDES STANDARD PLAN ES-4C DATED MAY 1, 2006 - PAGE 420 OF THE STANDARD PLANS BOOK DATED MAY 2006.

REVISED STANDARD PLAN RSP ES-4C

2006 REVISED STANDARD PLAN RSP ES-4C

5-19-08

DIST	COUNTY	ROUTE	POST MILES TOTAL PROJECT	SHEET NO.	TOTAL SHEETS
04	Son	101	25.1, 27.8	49	59

Jeffery G. McRae
REGISTERED ELECTRICAL ENGINEER

REGISTERED PROFESSIONAL ENGINEER
Jeffery G. McRae
No. E14512
Exp. 6-30-10
ELECTRICAL
STATE OF CALIFORNIA

June 6, 2008
PLANS APPROVAL DATE

The State of California or its officers or agents shall not be responsible for the accuracy or completeness of electronic copies of this plan sheet.

To accompany plans dated 5-16-11

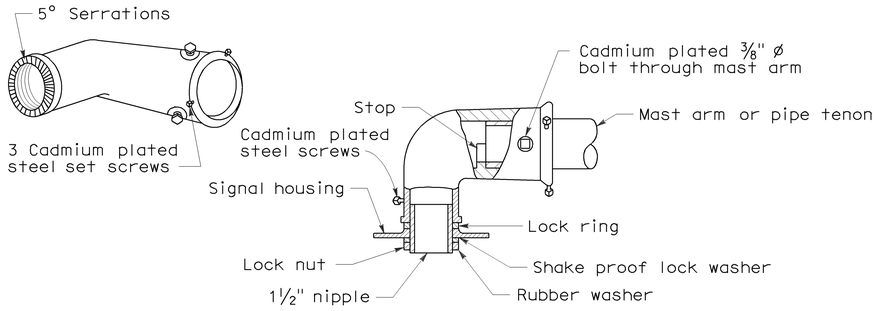

MAST ARM MOUNTING - TYPE "MAT"

For 2 NPS pipe, see Note 1.

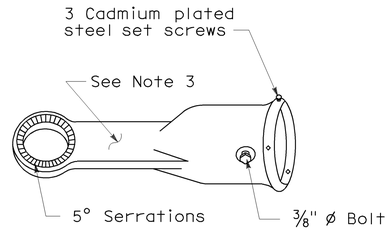

MAST ARM MOUNTING - TYPE "MAS"

For 2 NPS pipe. See Note 1.

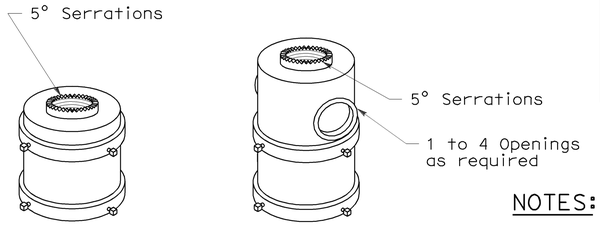

For one mounting For mulitiple mountings

TOP MOUNTINGS

For 4 NPS pipe, see Note 2.

NOTES:

1. After mast arm signal has been plumbed and secured, drill 7/16" hole through mast arm tenon in line with slip fitter hole. Place a cadmium plated ⅜" ø galvanized bolt with washer under bolt head through hole and secure with washer, nut, and locknut. Seal openings between mast arm mountings and mast arm with mastic.
2. (a) Threaded top mounted slip fitter openings shall be 1½ NPS.
   (b) Serrations in fittings shall match those on bottom of signal heads or in lock ring.
   (c) Top opening shall be offset when backplate is used.
3. Wireway shall have a cross section area of 0.95 square inch minimum. Minimum width of ½".

SIGNAL SLIP FITTERS

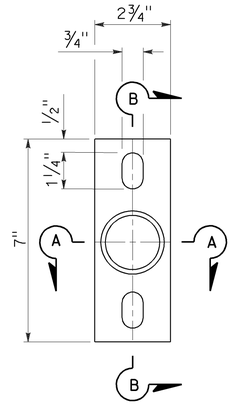

POLE PLATE

For side mountings

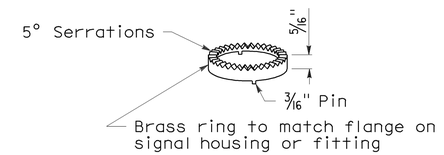

LOCK RING

Use where locking ring is not integral with signal housing or fitting.

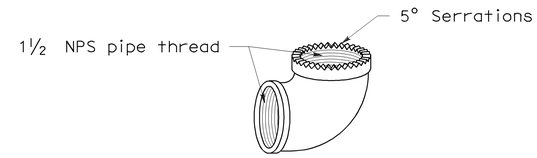

SPECIAL 90° ELBOW

One for each signal head, except those with special slip fitter mounting

MISCELLANEOUS MOUNTING HARDWARE

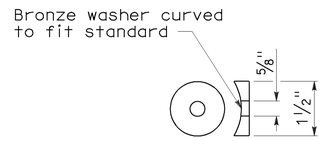

DETAIL "C"

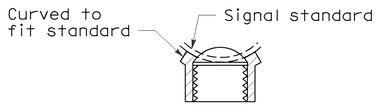

SECTION A-A

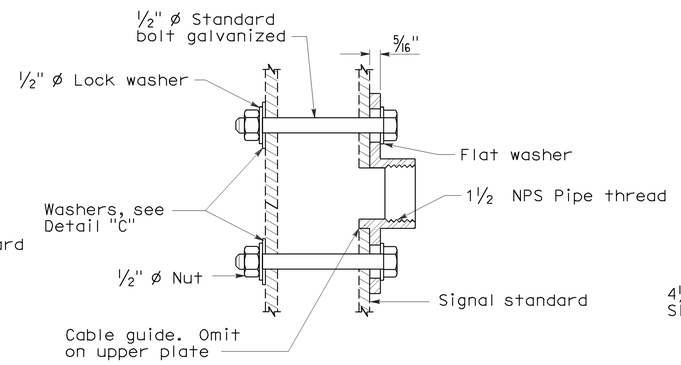

SECTION B-B

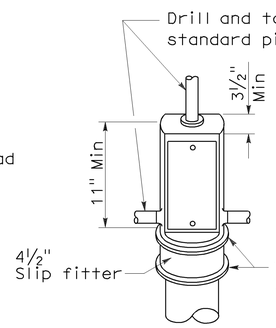

TOP MOUNTING

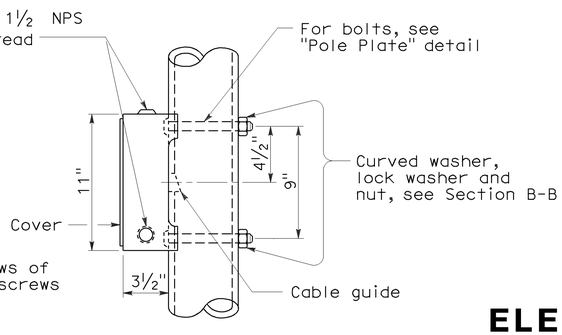

SIDE MOUNTING

TERMINAL COMPARTMENTS

STATE OF CALIFORNIA
DEPARTMENT OF TRANSPORTATION

ELECTRICAL SYSTEMS (SIGNAL HEADS AND MOUNTINGS)

NO SCALE

RSP ES-4D DATED June 6, 2008 SUPERSEDES STANDARD PLAN ES-4D DATED MAY 1, 2006 - PAGE 421 OF THE STANDARD PLANS BOOK DATED MAY 2006.

REVISED STANDARD PLAN RSP ES-4D

2006 REVISED STANDARD PLAN RSP ES-4D

5-19-08

LOOP INSTALLATION PROCEDURE

1. Loops shall be centered in lanes.
2. Saw slots in pavement for loop conductors as shown in details.
3. Distance between side of loop and a lead-in saw cut from adjacent detectors shall be 2'-0" minimum. Distance between lead-in saw cuts shall be 6" minimum.
4. Bottom of saw slot shall be smooth with no sharp edges.
5. Slots shall be washed until clean, blown out and thoroughly dried before installing loop conductors.
6. Adjacent loops on the same sensor unit channel shall be wound in opposite directions.
7. Identify and tag loop circuit pairs in the pull box with loop number, start (S) and finish (F) of conductor. Identify and tag lead-in-cable with sensor number and phase.
8. Install loop conductor in slot using a 3/16" to 1/4" thick wood paddle. Hold loop conductors with wood paddles (at the bottom of the sawed slot) during sealant placement.
9. No more than 2 twisted pairs shall be installed in one sawed slot.
10. Allow additional 5'-0" of slack length of conductor for the lead-in run to pull box.
11. The additional length of each conductor for each loop shall be twisted together into a pair (6 turns per 3'-4" minimum) before being placed in the slot and conduit leading to pull box.
12. Test each loop circuit for continuity, circuit resistance and insulation resistance at the pull box before filling slots.
13. Fill slots as shown in details.
14. Splice loop conductors to lead-in-cable. Splices shall be soldered.
15. End of lead-in-cable and Type 2 loop conductor shall be waterproofed prior to installing in conduit to prevent moisture from entering the cable.
16. Lead-in-cable shall not be spliced between the pull box and the controller cabinet terminals.
17. Test each loop circuit for continuity, circuit resistance and insulation resistance at the controller cabinet location.
18. Where loop conductors are not to be spliced to a lead-in-cable, the ends of the conductors shall be taped and waterproofed with electrical insulating coating.

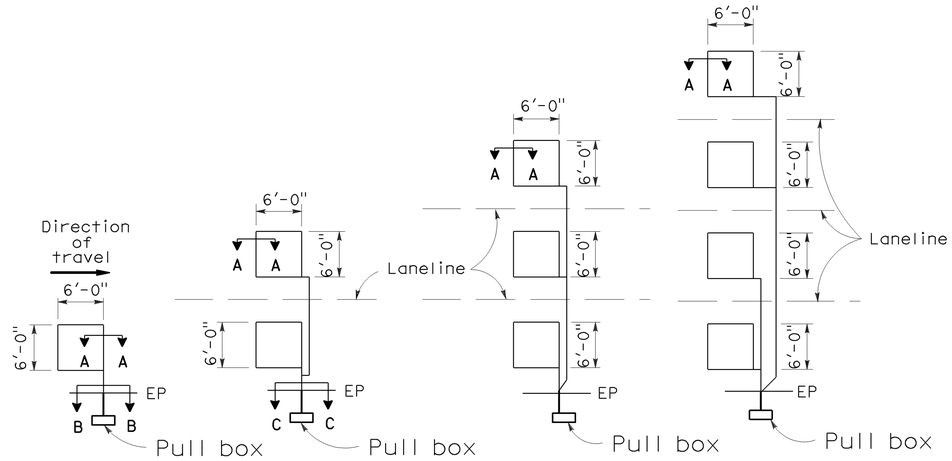

SAWCUT DETAILS

(Type A loop detector configurations illustrated)

1. 1A thru 4A = 1 Type A loop configuration in each lane.
2. 1B thru 4B = 1 Type B loop configuration in each lane.
3. 1C = 1 Type C loop configuration entering lanes as required.
4. 1D thru 4D = 1 Type D loop configuration in each lane.
5. 1E thru 4E = 1 Type E loop configuration in each lane.
6. 1Q thru 4Q = 1 Type Q loop configuration in each lane. (Use Type A, B, C, D, E or Q loop detector configurations only when specified or shown on plans)

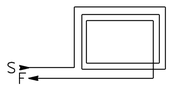

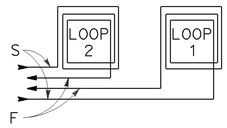

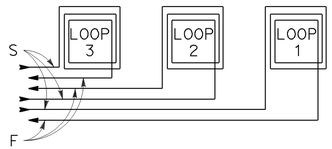

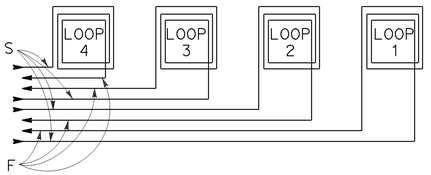

WINDING DETAILS

See Notes 6 and 7

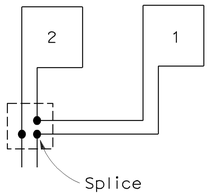

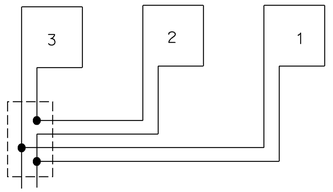

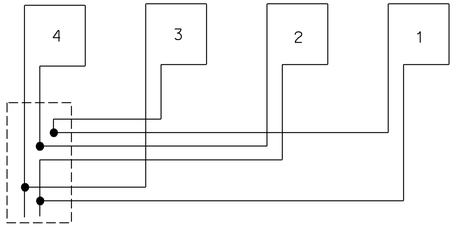

TYPICAL LOOP CONNECTIONS

(Dashed lines represent the pull box)

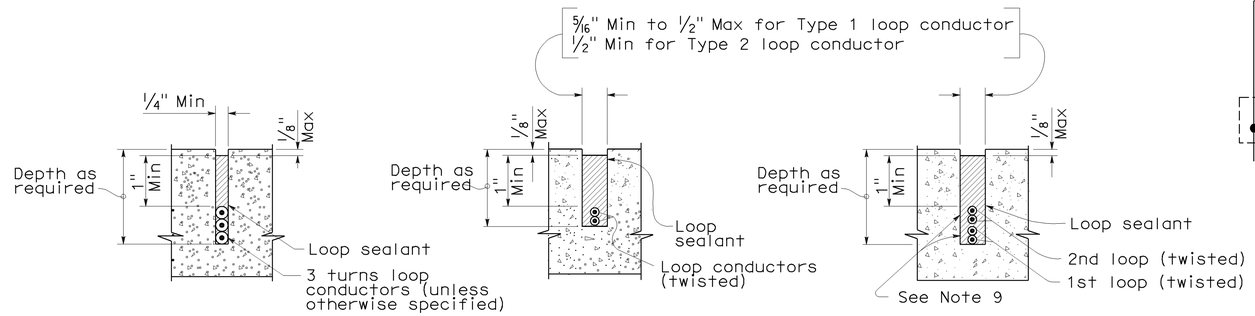

SLOT DETAILS - TYPE 1 AND TYPE 2 LOOP CONDUCTOR

DIST	COUNTY	ROUTE	POST MILES TOTAL PROJECT	SHEET NO.	TOTAL SHEETS
04	Son	101	25.1, 27.8	50	59

Jeffery G. McRae
REGISTERED ELECTRICAL ENGINEER

REGISTERED PROFESSIONAL ENGINEER
Jeffery G. McRae
No. E14512
Exp. 6-30-08
ELECTRICAL
STATE OF CALIFORNIA

October 5, 2007
PLANS APPROVAL DATE

The State of California or its officers or agents shall not be responsible for the accuracy or completeness of electronic copies of this plan sheet.

To accompany plans dated 5-16-11

STATE OF CALIFORNIA
DEPARTMENT OF TRANSPORTATION

ELECTRICAL SYSTEMS (DETECTORS)

NO SCALE

RSP ES-5A DATED OCTOBER 5, 2007 SUPERCEDES STANDARD PLAN ES-5A
DATED MAY 1, 2006 - PAGE 423 OF THE STANDARD PLANS BOOK DATED MAY 2006.

REVISED STANDARD PLAN RSP ES-5A

2006 REVISED STANDARD PLAN RSP ES-5A

8-17-07

DIST	COUNTY	ROUTE	POST MILES TOTAL PROJECT	SHEET NO.	TOTAL SHEETS
04	Son	101	25.1, 27.8	51	59

REGISTERED CIVIL ENGINEER

Stanley P. Johnson No. C57793 Exp. 3-31-08 CIVIL — REGISTERED PROFESSIONAL ENGINEER — STATE OF CALIFORNIA

October 5, 2007
PLANS APPROVAL DATE

The State of California or its officers or agents shall not be responsible for the accuracy or completeness of electronic copies of this plan sheet.

To accompany plans dated 5-16-11

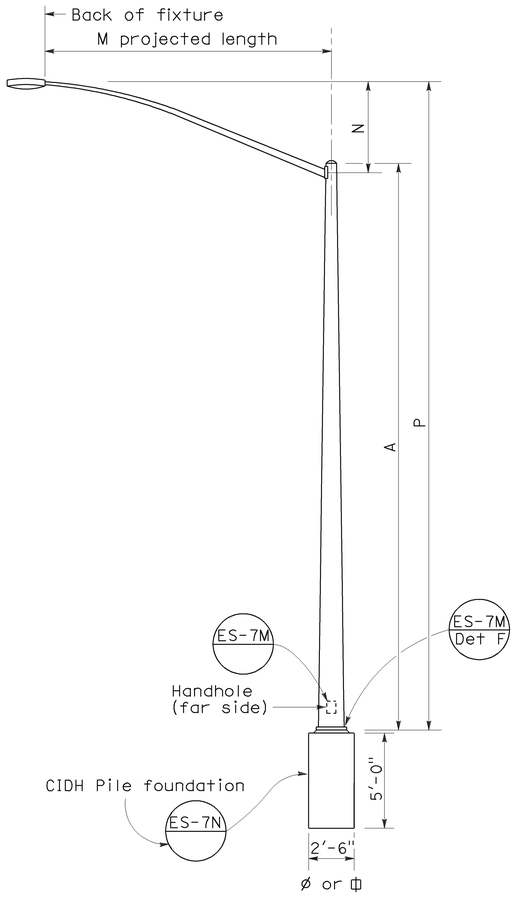

ELEVATION
TYPE 15 AND TYPE 21

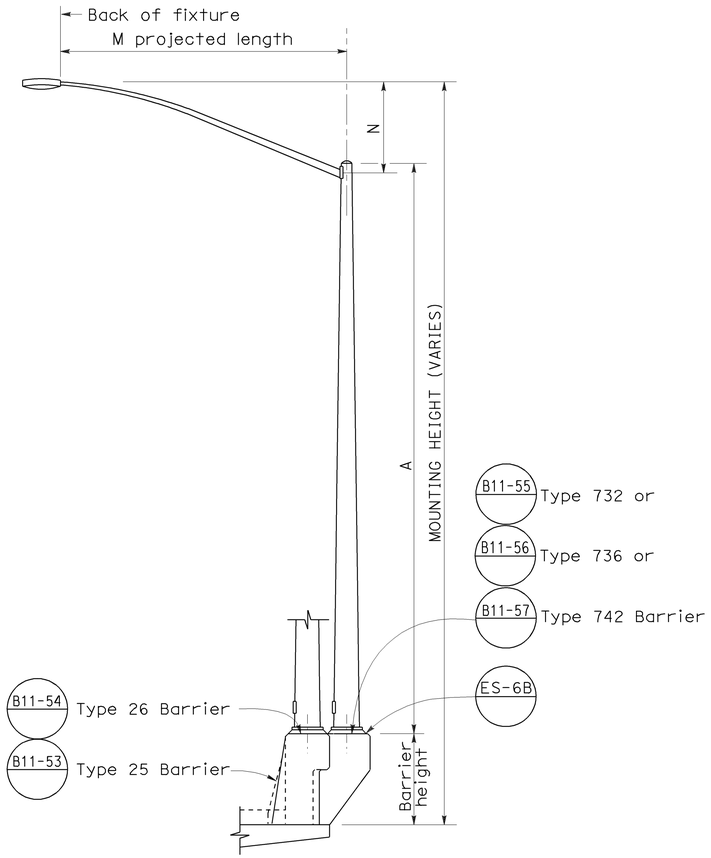

ELEVATION
TYPE 15 AND TYPE 21 BARRIER RAIL MOUNTED

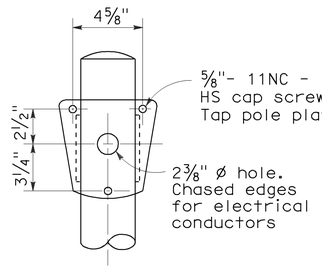

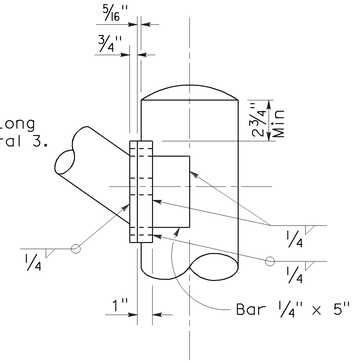

DETAIL R
LUMINAIRE ARM CONNECTION

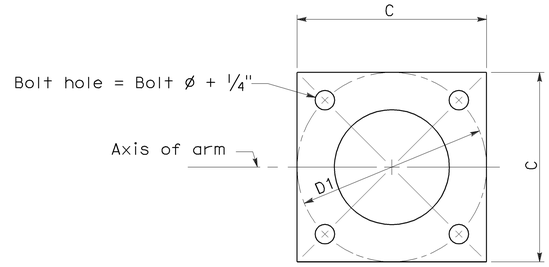

BASE PLATE

POLE TYPE	POLE DATA				BASE PLATE DATA				LUMINAIRE ARM
	A Height	Min OD		Wall Thickness	C	D1 Bolt Circle	Thick-ness	Anchor Bolts Size	
		Base	Top						
15	30′	8"	3⅞"	0.1196"	1′-0"	1′-0"	1"	1" ø x 3′-0" x 4"*	6′ - 15′ [12′]
21	35′	8⅝"	3⅞"	0.1196"	1′-0"	1′-0"	1"	1¼"ø x 3′-0" x 4"*	6′ - 15′ [12′]

* For barrier rail bolts, see Standard Plan ES-6B.

LUMINAIRE ARM DATA					
M Projected Length	N Rise	Min OD At Pole	Nominal Thickness	P	
				Type 15	Type 21
6′-0"	2′-0"±	3¼"	0.1196"	31′-6"±	36′-6"±
8′-0"	2′-6"±	3½"	0.1196"	32′-0"±	37′-0"±
10′-0"	3′-3"±	3⅞"	0.1196"	32′-9"±	37′-9"±
12′-0"	4′-3"±	3⅞"	0.1196"	33′-9"±	38′-9"±
15′-0"	4′-9"±	4¼"	0.1196"	34′-3"±	39′-3"±

NOTES:

1. □ Indicates arm length to be used unless otherwise noted on the plans.
2. For Type 15-SB, use Type 15 standard with Type 30 slip base plate details, see Standard Plan ES-6F.
3. For additional notes, see Standard Plan ES-7M and ES-7N.

STATE OF CALIFORNIA
DEPARTMENT OF TRANSPORTATION

ELECTRICAL SYSTEMS (LIGHTING STANDARD TYPES 15 AND 21)

NO SCALE

RSP ES-6A DATED OCTOBER 5, 2007 SUPERCEDES STANDARD PLAN ES-6A
DATED MAY 1, 2006 - PAGE 427 OF THE STANDARD PLANS BOOK DATED MAY 2006.

REVISED STANDARD PLAN RSP ES-6A

2006 REVISED STANDARD PLAN RSP ES-6A

7-10-07

DIST	COUNTY	ROUTE	POST MILES TOTAL PROJECT	SHEET NO.	TOTAL SHEETS
04	Son	101	25.1, 27.8	52	59

Stanley P. Johnson
REGISTERED CIVIL ENGINEER

October 5, 2007
PLANS APPROVAL DATE

REGISTERED PROFESSIONAL ENGINEER — Stanley P. Johnson — No. C57793 — Exp. 3-31-08 CIVIL — STATE OF CALIFORNIA

The State of California or its officers or agents shall not be responsible for the accuracy or completeness of electronic copies of this plan sheet.

To accompany plans dated 5-16-11

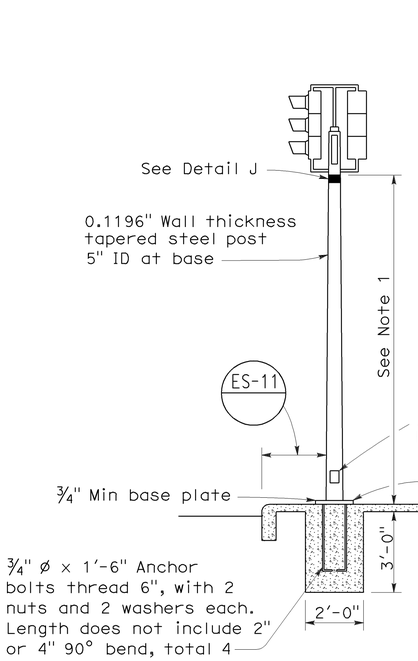

BASE PLATE
For Type 1-A
For Type 1-C
For Type 1-D

TYPE 1-A STANDARD

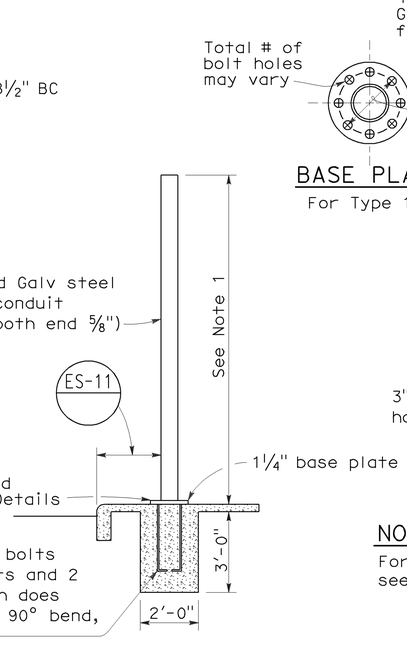

BASE PLATE
For Type 1-B

TYPE 1-B STANDARD

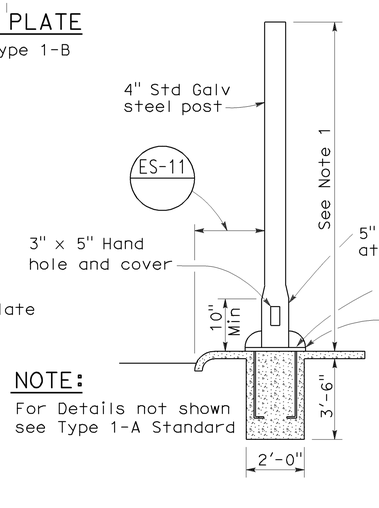

NOTE:
For Details not shown see Type 1-A Standard

TYPE 1-C STANDARD

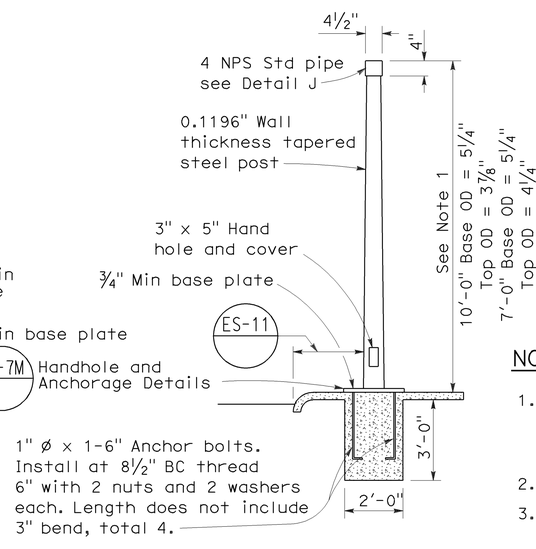

TYPE 1-D STANDARD

TYPE 1 SIGNAL STANDARDS

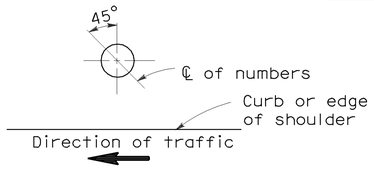

PLAN

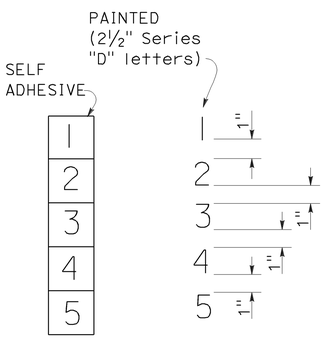

NUMBER DETAIL

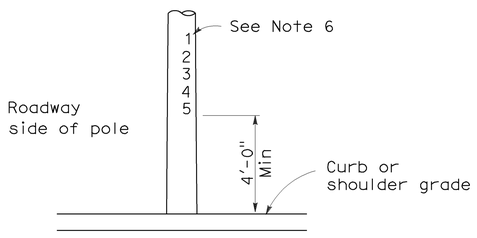

TYPICAL NUMBER FORMAT

LOCATION OF EQUIPMENT NUMBERS ON STANDARDS AND POSTS

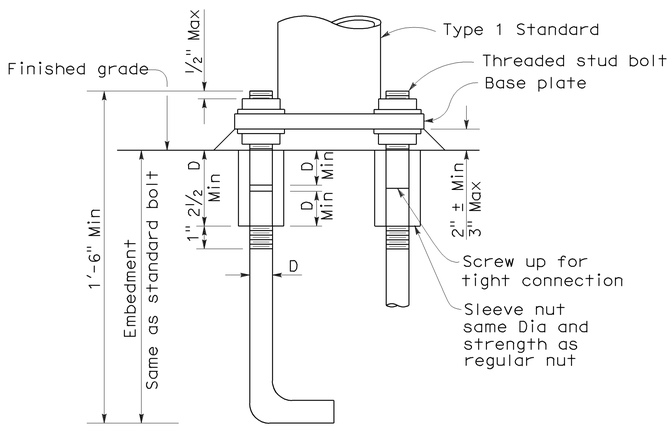

ANCHOR BOLTS WITH SLEEVE NUTS

Sleeve nuts to be used only when shown or specified on Project Plans

D = Diameter of anchor bolt

NOTES:

1. Standards shall be 10'-0" ± 2" for vehicle signals and 7'-0" ± 2" for pedestrian signals unless otherwise noted on plans.
2. Top of standards shall be 4½" OD.
3. Conduits shall extend 2" maximum above finished surface of foundation and for Types 1-A, 1-C and 1-D shall be sloped toward handhole.
4. Anchor bolts shall be bonded to conduit or grounding conductor.
5. Conduit between standard and adjacent pull box shall be 2" minimum.
6. Paint numbers on roadway side facing traffic when electrolier or post is left of direction of traffic.

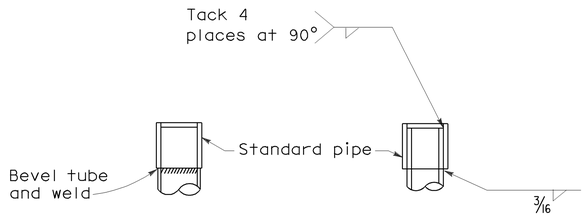

DETAIL J

Tube may be inserted into pipe or butted as required

STATE OF CALIFORNIA
DEPARTMENT OF TRANSPORTATION

ELECTRICAL SYSTEMS (SIGNAL AND LIGHTING STANDARD TYPE 1 STANDARD AND EQUIPMENT NUMBERING)

NO SCALE

RSP ES-7B DATED OCTOBER 5, 2007 SUPERCEDES STANDARD PLAN ES-7B DATED MAY 1, 2006 - PAGE 438 OF THE STANDARD PLANS BOOK DATED MAY 2006.

REVISED STANDARD PLAN RSP ES-7B

2006 REVISED STANDARD PLAN RSP ES-7B

7-10-07

DIST	COUNTY	ROUTE	POST MILES TOTAL PROJECT	SHEET NO.	TOTAL SHEETS
04	Son	101	25.1, 27.8	53	59

REGISTERED CIVIL ENGINEER

October 5, 2007
PLANS APPROVAL DATE

Stanley P. Johnson
No. C57793
Exp. 3-31-08
CIVIL
REGISTERED PROFESSIONAL ENGINEER
STATE OF CALIFORNIA

The State of California or its officers or agents shall not be responsible for the accuracy or completeness of electronic copies of this plan sheet.

To accompany plans dated 5-16-11

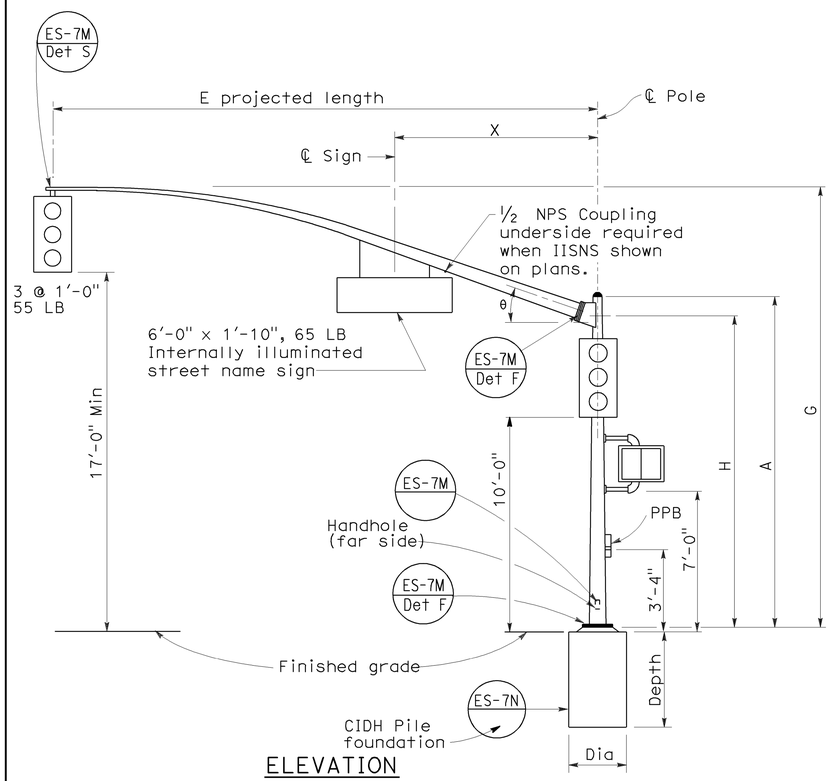

ELEVATION

TYPE 16-2-100, 18-2-100

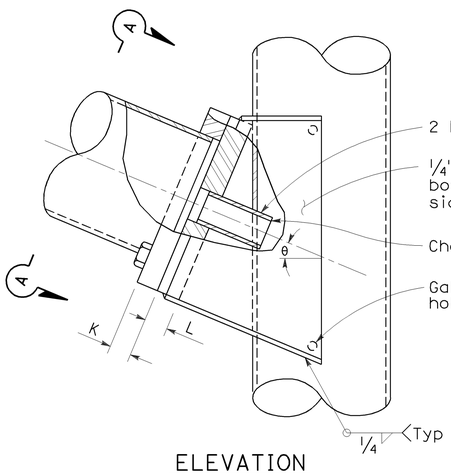

ELEVATION

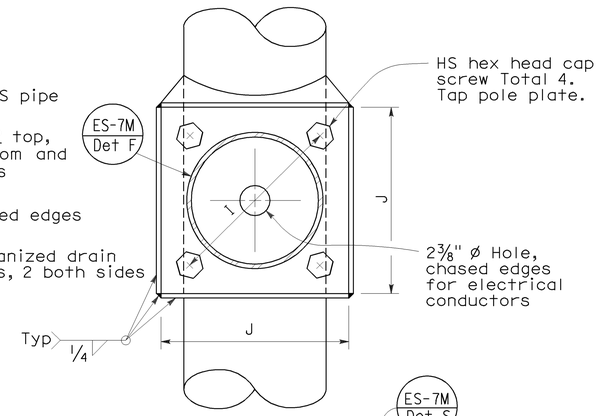

VIEW A-A

SIGNAL ARM CONNECTION DETAILS

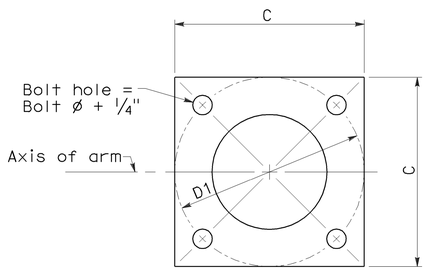

BASE PLATE

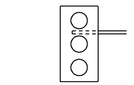

Required for Type 17-2-100 Type 17A-2-100

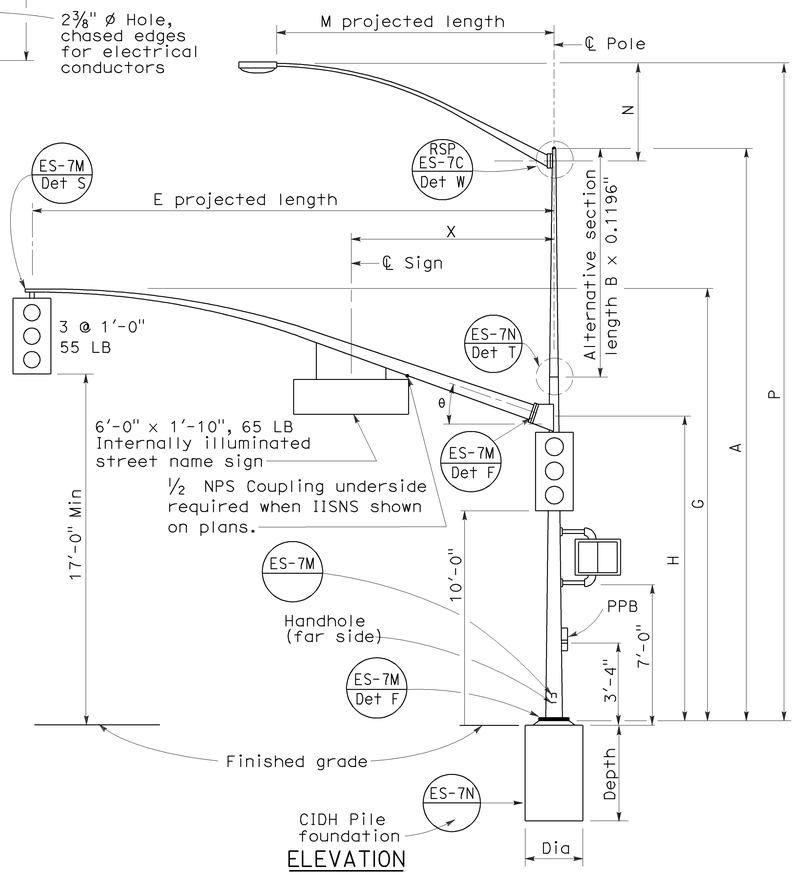

ELEVATION

TYPE 17-2-100, 17A-2-100, 19-2-100, 19A-2-100

SIGNAL ARM DATA											
E Projected Length	G Mounting Height	H	Min OD At Pole	Thickness	I Bolt Circle	HS Cap Screws	J Plate Size	K Arm ℙ Thickness	L Pole ℙ Thickness	θ	X Max
15'-0"	21'-8"±	17'-6"	6⅝"	0.1793"	12"	1¼"-7NC-3"	1'-0"	1¼"	1½"	23°	10'-6"
20'-0"	21'-8"±		6⅝"								
25'-0"	22'-8"±	16'-0"	7⅝"								
30'-0"	23'-0"±		8"								

LUMINAIRE ARM DATA						
M Projected Length	N Rise	Min OD at Pole	Thickness	P Mounting Height		
				30'-0" Pole	35'-0" Pole	
6'-0"	2'-0"±	3¼"	0.1196"	31'-6"±	36'-6"±	
8'-0"	2'-6"±	3½"		32'-0"±	37'-0"±	
10'-0"	3'-3"±	3⅞"		32'-9"±	37'-9"±	
12'-0"	4'-3"±			33'-9"±	38'-9"±	
15'-0"	4'-9"±	4¼"		34'-3"±	39'-3"±	

POLE DATA									BASE PLATE DATA				LUMINAIRE ARM	SIGNAL ARM	CIDH PILE FOUNDATION		
Pole Type	Load Case	Wind Velocity mph	A Height	Min OD		Thickness	Alternative Section			C	D1 Bolt Circle	Thickness	Anchor Bolts Size			Diameter	Depth	Reinforced
				Base	Top		B Length	Bottom	Top									
16-2-100	2	100	18'-6"	10¾"	8¼"	0.1793"	None			1'-6"	1'-5½"	1½"	2"ø x 42" x 6"	None	15'-0", 20'-0"	2'-6"	7'-2"	Yes
17-2-100			30'-0"		6⅝"		10'-0"	8"	6⅝"					6'-15' [12'-0"]				
17A-2-100			35'-0"		5¹⁵⁄₁₆"		15'-0"		5¹⁵⁄₁₆"					6'-15' [15'-0"]				
18-2-100			17'-0"		8⅞"		None							None	25'-0", 30'-0"			
19-2-100			30'-0"		6⅝"	0.2391"	10'-0"	8"	6⅝"					6'-15' [12'-0"]				
19A-2-100			35'-0"		5¹⁵⁄₁₆"		15'-0"		5⅝"					6'-15' [15'-0"]				

☐ Indicates arm length to be used unless otherwise noted on plans.

STATE OF CALIFORNIA
DEPARTMENT OF TRANSPORTATION

ELECTRICAL SYSTEMS (SIGNAL AND LIGHTING STANDARD CASE 2 ARM LOADING WIND VELOCITY=100 MPH ARM LENGTHS 15' TO 30')

NO SCALE

RSP ES-7D DATED OCTOBER 5, 2007 SUPERCEDES STANDARD PLAN ES-7D DATED MAY 1, 2006 - PAGE 440 OF THE STANDARD PLANS BOOK DATED MAY 2006.

REVISED STANDARD PLAN RSP ES-7D

2006 REVISED STANDARD PLAN RSP ES-7D

7-10-07

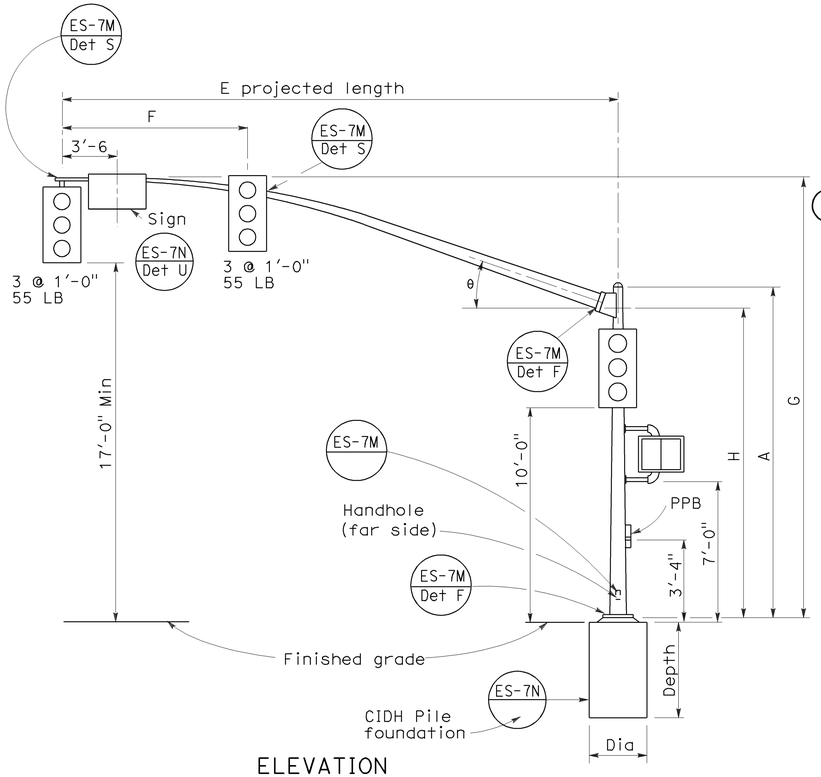

ELEVATION

TYPE 16-3-100, 18-3-100,
23-3-100, 27-3-100

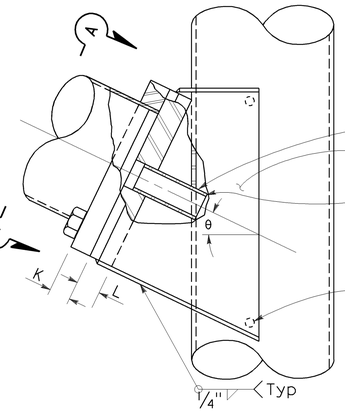

ELEVATION

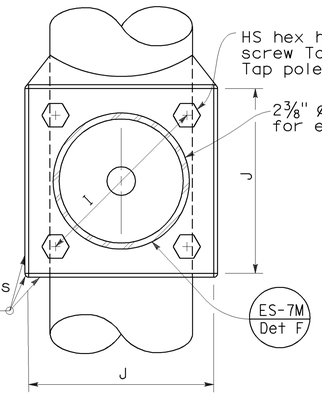

VIEW A-A

SIGNAL ARM CONNECTION DETAILS

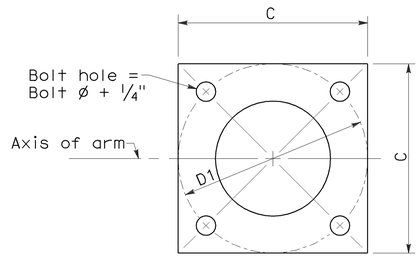

BASE PLATE

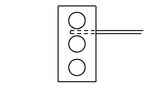

Type 17-3-100

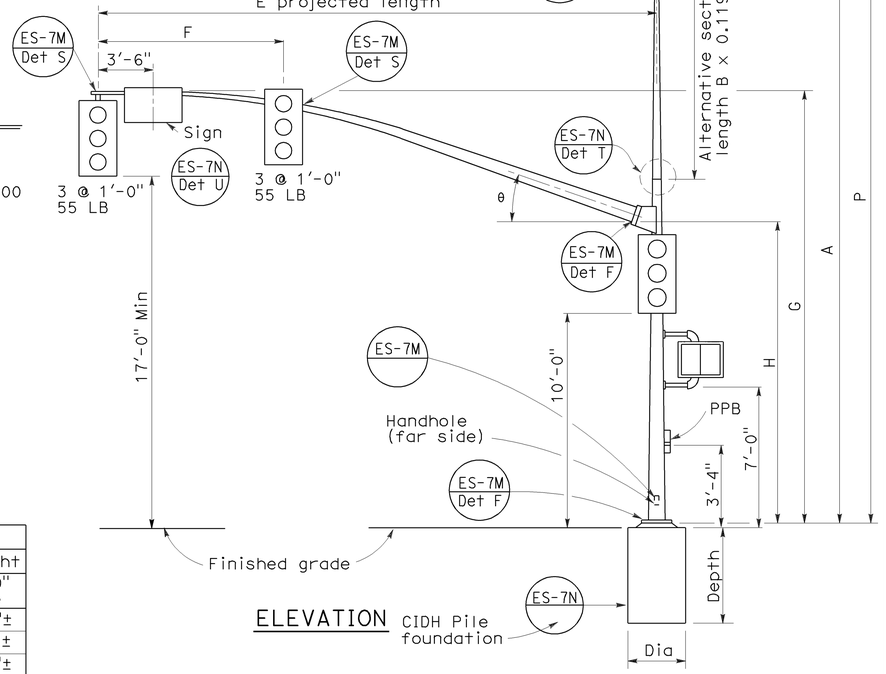

ELEVATION

TYPE 17-3-100, 24A-3-100,
19-3-100, 26-3-100,
19A-3-100, 26A-3-100, 24-3-100

SIGNAL ARM DATA											
E Projected Length	F Min Spacing	G Mounting Height	H	Min OD At Pole	Thickness	I Bolt Circle	HS Cap Screws	J Plate Size	K Arm ℄ Thickness	L Pole ℄ Thickness	θ
15'-0"	8'-0"	21'-8"±	17'-6"	6⅝"	0.1793"	12"	1¼"-7NC-3"	1'-0"	1¼"	1½"	23°
20'-0"		21'-8"±		7"							
25'-0"	12'-0"	22'-8"±		7 5/16"							
30'-0"				8"							
35'-0"	14'-0"	23'-0"±	16'-0"	8¾"	0.2391"	13"		1'-1"	1½"	1¾"	21°
40'-0"	15'-0"			9⅜"							15°
45'-0"		23'-8"±		10 1/16"							

LUMINAIRE ARM DATA					
M Projected Length	N Rise	Min OD at Pole	Thickness	P Mounting Height 30'-0" Pole	P Mounting Height 35'-0" Pole
6'-0"	2'-0"±	3¼"	0.1196"	31'-6"±	36'-6"±
8'-0"	2'-6"±	3½"		32'-0"±	37'-0"±
10'-0"	3'-3"±	3⅞"		32'-9"±	37'-9"±
12'-0"	4'-3"±			33'-9"±	38'-9"±
15'-0"	4'-9"±	4¼"		34'-3"±	39'-3"±

POLE DATA									BASE PLATE DATA						CIDH PILE FOUNDATION		
Pole Type	Load Case	Wind Velocity mph	A Height	Min OD Base	Min OD Top	Thickness	Alternative Section B Length	Alternative Section Bottom	Alternative Section Top	C	D1 Bolt Circle	Thickness	Anchor Bolts Size	Luminaire Arm	Signal Arm	Diameter	Depth	Reinforced
16-3-100	3	100	18'-6"	10¾"	8¼"	0.1793"	None			1'-6"	1'-5½"	1½"	2"ø x 42" x 6"	None	15'-0", 20'-0"	3'-0"	9'-0"	Yes
17-3-100			30'-0"		6⅝"		10'-0"	8"	7 5/16"					6'-15' [12'-0"]				
18-3-100			17'-0"		8 7/16"	0.2391"	None							None	25' -0", [30'-0"]			
19-3-100			30'-0"	1'-0"	7⅞"		10'-0"	9¼"	7⅞"					6'-15' [12'-0"]				
19A-3-100			35'-0"		7 3/16"		15'-0"		7 3/16"					6'-15' [15'-0"]				
23-3-100			17'-0"		9⅝"		None							None	35'-0"			
24-3-100			30'-0"		7⅞"		10'-0"	9¼"	7⅞"					6'-15' [12'-0"]				
24A-3-100			35'-0"		7 3/16"		15'-0"		7 3/16"					6'-15' [15'-0"]				
26-3-100			30'-0"	1'-1/8"	8"	0.3125"	10'-0"	9⅜"	8"					6'-15' [12'-0"]	40' -0", [45'-0"]			
26A-3-100			35'-0"		7 5/16"		15'-0"		7 5/16"					6'-15' [15'-0"]				
27-3-100			17'-0"		9¾"		None							None				

☐ Indicates arm length to be used unless otherwise noted on plans.

DIST	COUNTY	ROUTE	POST MILES TOTAL PROJECT	SHEET NO.	TOTAL SHEETS
04	Son	101	25.1, 27.8	54	59

Jeffrey B. Woody
REGISTERED CIVIL ENGINEER

June 30, 2006
PLANS APPROVAL DATE

REGISTERED PROFESSIONAL ENGINEER — Jeffrey B. Woody — No. C41260 — Exp. 3-31-07 CIVIL — STATE OF CALIFORNIA

The State of California or its officers or agents shall not be responsible for the accuracy or completeness of electronic copies of this plan sheet.

To accompany plans dated 5-16-11

STATE OF CALIFORNIA
DEPARTMENT OF TRANSPORTATION

ELECTRICAL SYSTEMS (SIGNAL AND LIGHTING STANDARD CASE 3 ARM LOADING WIND VELOCITY=100 MPH ARM LENGTHS 15' TO 45')

NO SCALE

RSP ES-7E DATED JUNE 30, 2006 SUPERSEDES STANDARD PLAN DATED MAY 1, 2006 - PAGE 441 OF THE STANDARD PLANS BOOK DATED MAY 2006.

REVISED STANDARD PLAN RSP ES-7E

2006 REVISED STANDARD PLAN RSP ES-7E

5-9-06

DIST	COUNTY	ROUTE	POST MILES TOTAL PROJECT	SHEET NO.	TOTAL SHEETS
04	Son	101	25.1, 27.8	55	59

Robert B Schott
LICENSED LANDSCAPE ARCHITECT

August 15, 2008
PLANS Approval DATE

LICENSED LANDSCAPE ARCHITECT
Robert B. Schott 3695
Signature
11-04-08
Renewal Date
08-11-08
Date
STATE OF CALIFORNIA

The State of California or its officers or agents shall not be responsible for the accuracy or completeness of electronic copies of this plan sheet.

To accompany plans dated 5-16-11

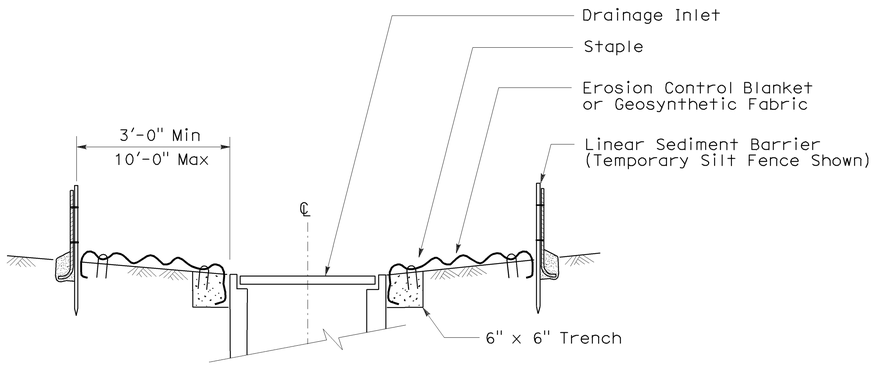

SECTION A-A

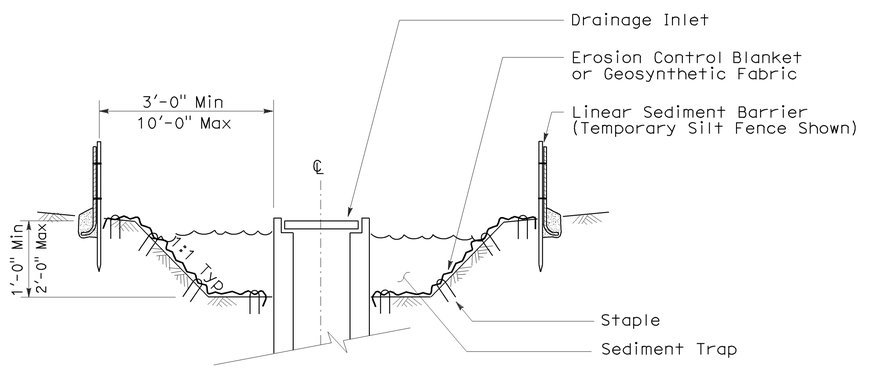

SECTION B-B

NOTES:

1. See Standard Plan T51 for Temporary Silt Fence.
2. Dimensions may vary to fit field conditions.

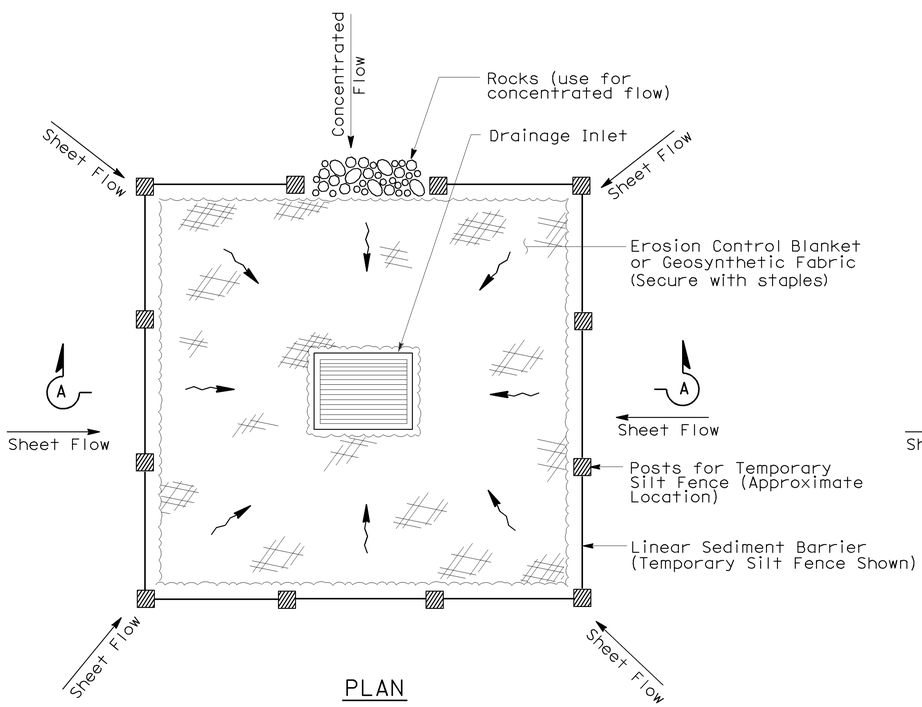

PLAN

TEMPORARY DRAINAGE
INLET PROTECTION (TYPE 1)

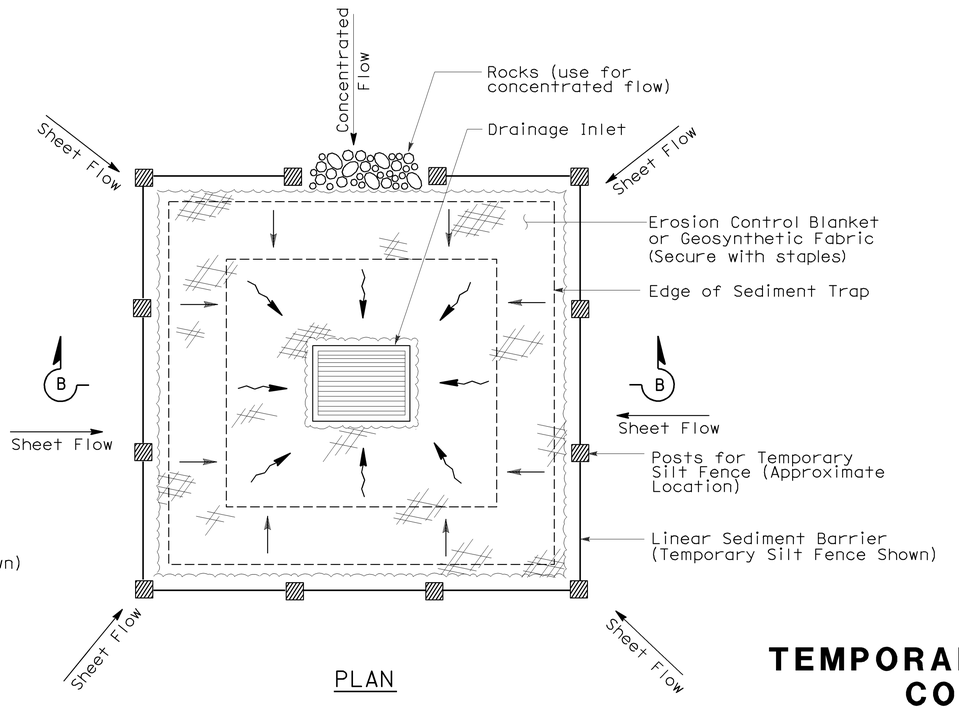

PLAN

TEMPORARY DRAINAGE
INLET PROTECTION (TYPE 2)
(EXCAVATED SEDIMENT TRAP)

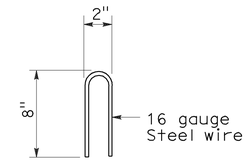

STAPLE DETAIL

STATE OF CALIFORNIA
DEPARTMENT OF TRANSPORTATION

TEMPORARY WATER POLLUTION CONTROL DETAILS (TEMPORARY DRAINAGE INLET PROTECTION)

NO SCALE

Nsp t61 dated august 15, 2008 supplements the standard plans book dated may 2006.

NEW STANDARD PLAN NSP T61

2006 NEW STANDARD PLAN NSP T61

7-11-08

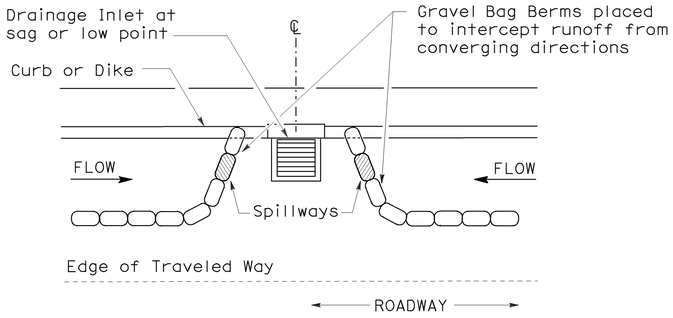

PLAN

CONFIGURATION FOR SAG POINT INLET (GRAVEL BAG BERM)

GRAVEL BAG BERM (TYPE 3A) SPACING TABLE

SLOPE OF ROADWAY (PERCENT)	1 to 3.9	4 to 5.9	6 to 7.9	8 to 10	10+
INTERVAL BETWEEN BERM	100′	75′	50′	25′	12′

For slope of less than 1%, install barriers only if erosion/sediment is prevalent

DIST	COUNTY	ROUTE	POST MILES TOTAL PROJECT	SHEET NO.	TOTAL SHEETS
04	Son	101	25.1, 27.8	56	59

Robert B Schott
LICENSED LANDSCAPE ARCHITECT

August 15, 2008
PLANS APPROVAL DATE

LICENSED LANDSCAPE ARCHITECT — Robert B. Schott — 3895 — Robert B Schott — Signature — 11-04-08 Renewal Date — 08-11-08 Date — STATE OF CALIFORNIA

The State of California or its officers or agents shall not be responsible for the accuracy or completeness of electronic copies of this plan sheet.

To accompany plans dated 5-16-11

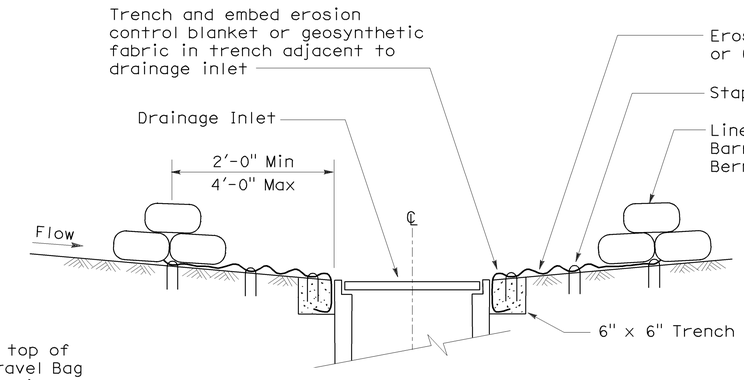

SECTION A-A

NOTES:

1. Place safety cones adjacent to drainage inlet protection.
2. Dimensions may vary to fit field conditions.
3. Install a minimum of 3 gravel bag berms upstream of each drainage inlet to be protected.
4. Position erosion control blanket or geosynthetic fabric at edge of concrete apron and secure in trench.
5. Erosion control blanket or geosynthetic fabric is not required if the area adjacent to the drainage inlet is vegetated or paved.

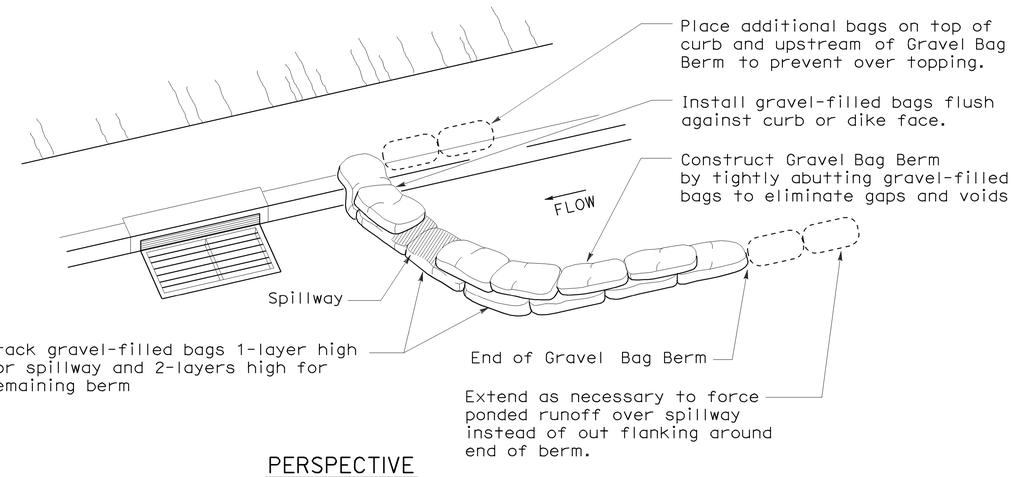

PERSPECTIVE

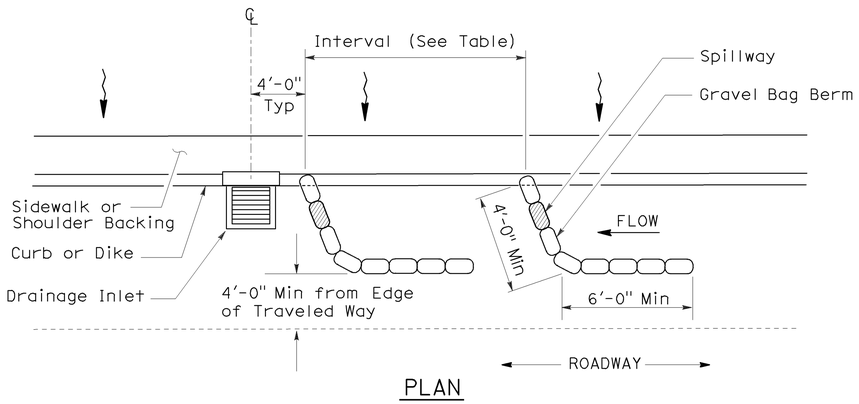

PLAN

TEMPORARY DRAINAGE INLET PROTECTION (TYPE 3A) (GRAVEL BAG BERM)

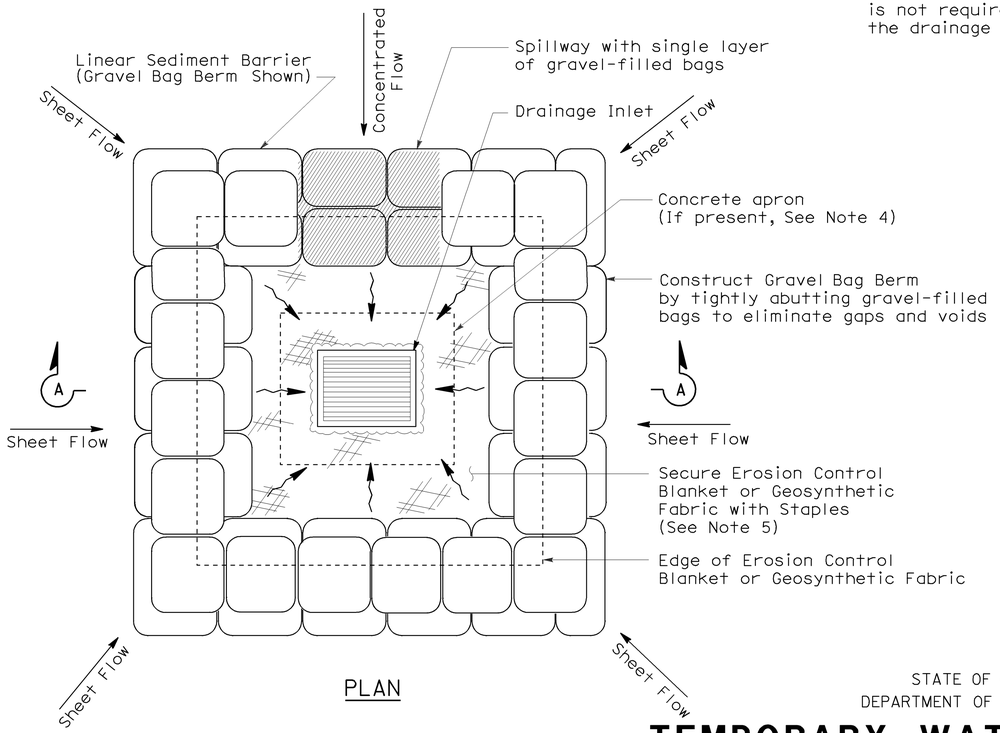

PLAN

TEMPORARY DRAINAGE INLET PROTECTION (TYPE 3B)

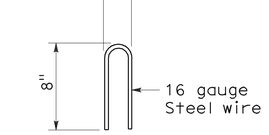

STAPLE DETAIL

STATE OF CALIFORNIA
DEPARTMENT OF TRANSPORTATION

TEMPORARY WATER POLLUTION CONTROL DETAILS (TEMPORARY DRAINAGE INLET PROTECTION)

NO SCALE

NSP T62 DATED AUGUST 15, 2008 SUPPLEMENTS THE STANDARD PLANS BOOK DATED MAY 2006.

NEW STANDARD PLAN NSP T62

2006 NEW STANDARD PLAN NSP T62

7-11-08

DIST	COUNTY	ROUTE	POST MILES TOTAL PROJECT	SHEET NO.	TOTAL SHEETS
04	Son	101	25.1, 27.8	57	59

Robert B Schott
LICENSED LANDSCAPE ARCHITECT

August 15, 2008
PLANS APPROVAL DATE

LICENSED LANDSCAPE ARCHITECT — Robert B. Schott — 3835 — Registration Date 11-04-08 — Renewal Date 08-11-08 — STATE OF CALIFORNIA

The State of California or its officers or agents shall not be responsible for the accuracy or completeness of electronic copies of this plan sheet.

To accompany plans dated 5-16-11

FLEXIBLE SEDIMENT BARRIER SPACING TABLE

SLOPE OF ROADWAY (PERCENT)	0 to 0.9	1 to 1.9	2 to 2.9	3 to 4	5+
INTERVAL BETWEEN BARRIERS	50′	35′	30′	25′	20′
ANGLE FROM FACE OF CURB	70°	70°	70°	45°	45°
SUGGESTED BARRIER LENGTH	6′	6′	6′	6′	6′

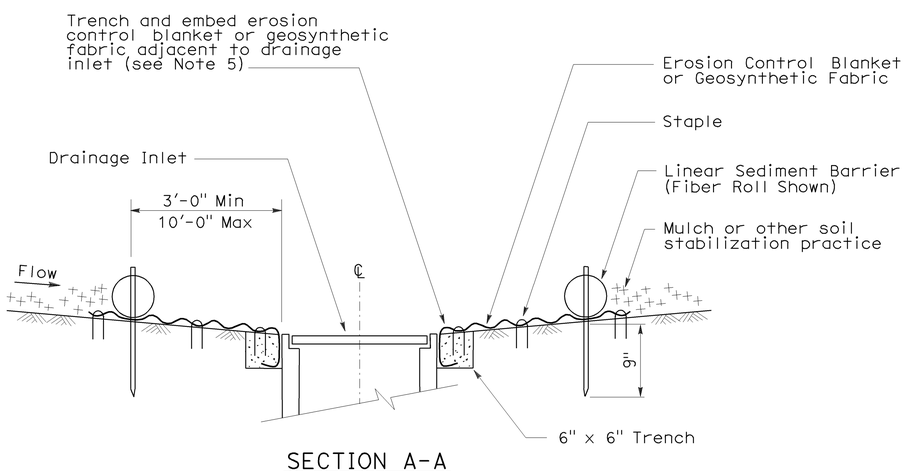

SECTION A-A

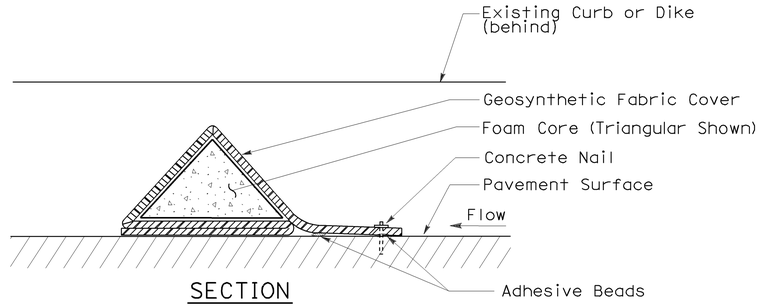

SECTION

FLEXIBLE SEDIMENT BARRIER DETAIL (FOAM BARRIER SHOWN)

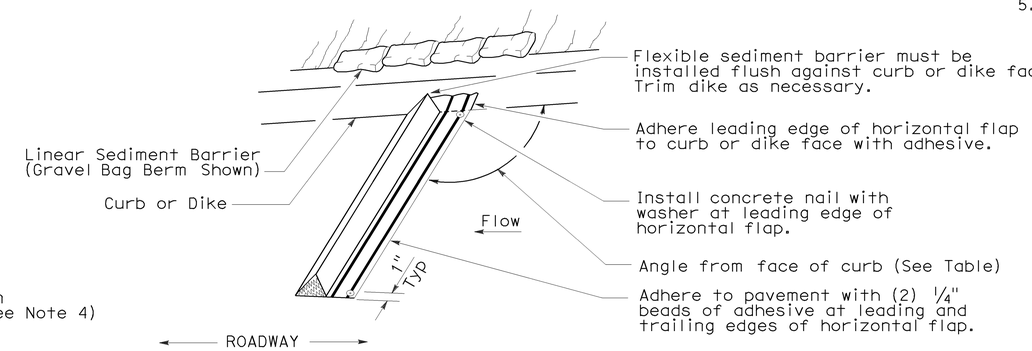

PERSPECTIVE

NOTES:

1. See Standard Plan T51 for Temporary Silt Fence.
2. Dimensions may vary to fit field conditions.
3. Install a minimum of 3 flexible sediment barriers upstream of each drainage inlet to be protected.
4. Position erosion control blanket or geosynthetic fabric at edge of concrete apron and secure in trench.
5. Erosion control blanket or geosynthetic fabric is not required if the area adjacent to the drainage inlet is vegetated.

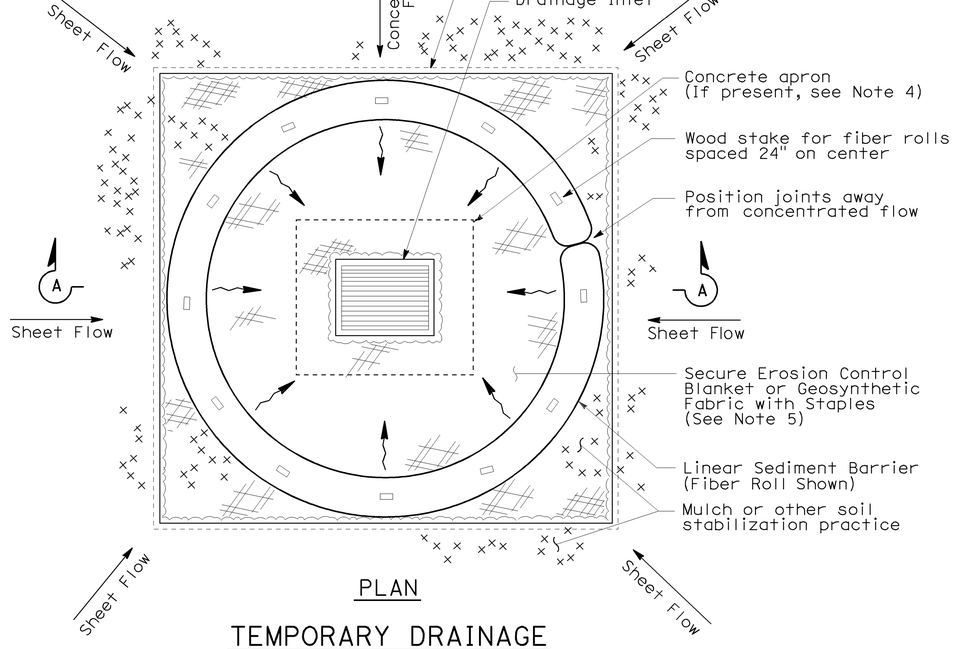

PLAN

TEMPORARY DRAINAGE INLET PROTECTION (TYPE 4A)

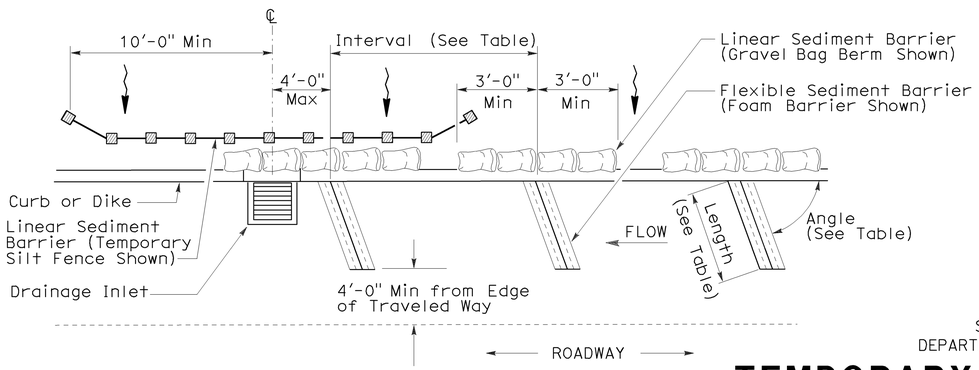

PLAN

TEMPORARY DRAINAGE INLET PROTECTION (TYPE 4B) FLEXIBLE SEDIMENT BARRIER

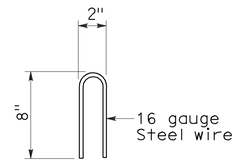

STAPLE DETAIL

STATE OF CALIFORNIA
DEPARTMENT OF TRANSPORTATION

TEMPORARY WATER POLLUTION CONTROL DETAILS (TEMPORARY DRAINAGE INLET PROTECTION)

NO SCALE

NSP T63 DATED AUGUST 15, 2008 SUPPLEMENTS THE STANDARD PLANS BOOK DATED MAY 2006.

NEW STANDARD PLAN NSP T63

2006 NEW STANDARD PLAN NSP T63

7-11-08

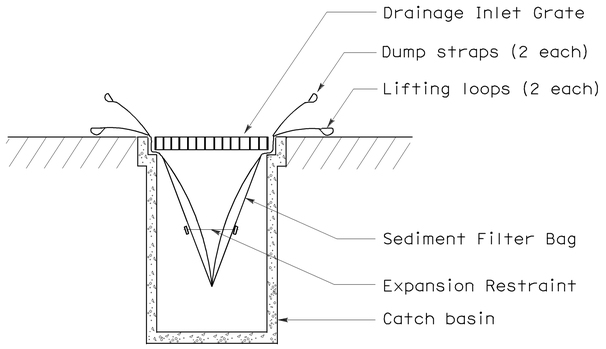

SECTION B-B

SEDIMENT FILTER BAG DETAIL

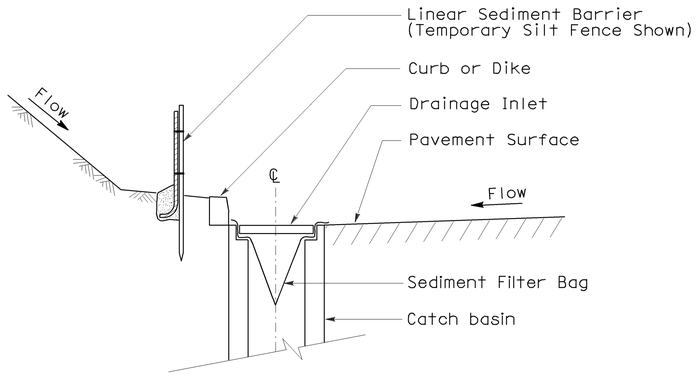

SECTION A-A

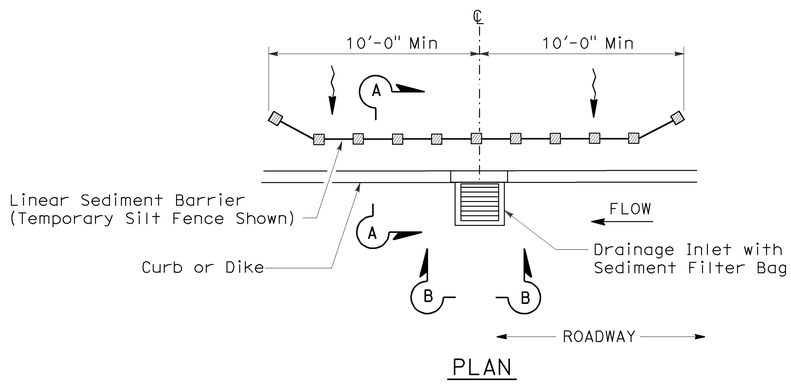

PLAN

TEMPORARY DRAINAGE INLET PROTECTION (TYPE 5) (SEDIMENT FILTER BAG)

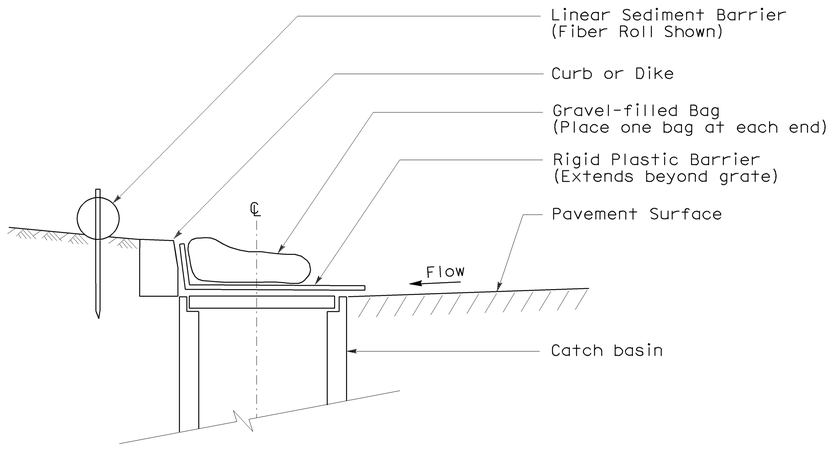

SECTION

TEMPORARY DRAINAGE INLET PROTECTION (TYPE 6A) (CATCH BASIN WITH GRATE)

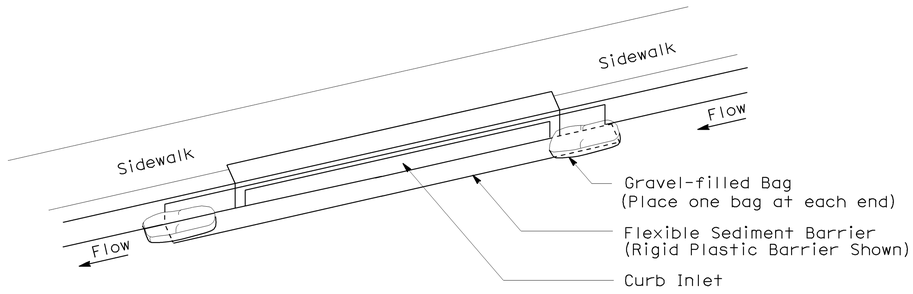

PERSPECTIVE

TEMPORARY DRAINAGE INLET PROTECTION (TYPE 6B) (CURB INLET WITHOUT GRATE)

DIST	COUNTY	ROUTE	POST MILES TOTAL PROJECT	SHEET NO.	TOTAL SHEETS
04	Son	101	25.1, 27.8	58	59

Robert B Schott
LICENSED LANDSCAPE ARCHITECT

August 15, 2008
PLANS APPROVAL DATE

LICENSED LANDSCAPE ARCHITECT — Robert B. Schott 3695 — Signature — 11-04-08 Renewal Date — 08-11-08 Date — STATE OF CALIFORNIA

The State of California or its officers or agents shall not be responsible for the accuracy or completeness of electronic copies of this plan sheet.

To accompany plans dated 5-16-11

NOTES:

1. See Standard Plan T51 for Temporary Silt Fence.
2. Dimensions may vary to fit field conditions.

STATE OF CALIFORNIA
DEPARTMENT OF TRANSPORTATION

TEMPORARY WATER POLLUTION CONTROL DETAILS (TEMPORARY DRAINAGE INLET PROTECTION)

NO SCALE

NSP T64 DATED AUGUST 15, 2008 SUPPLEMENTS THE STANDARD PLANS BOOK DATED MAY 2006.

NEW STANDARD PLAN NSP T64

2006 NEW STANDARD PLAN NSP T64

7-11-08

DIST	COUNTY	ROUTE	POST MILES TOTAL PROJECT	SHEET NO.	TOTAL SHEETS
04	Son	101	25.1, 27.8	59	59

Robert B Schott
LICENSED LANDSCAPE ARCHITECT

April 3, 2009
PLANS APPROVAL DATE

LICENSED LANDSCAPE ARCHITECT — Robert B. Schott 3695 — Signature — 11-30-10 Renewal Date — 2-25-09 Date — STATE OF CALIFORNIA

The State of California or its officers or agents shall not be responsible for the accuracy or completeness of electronic copies of this plan sheet.

To accompany plans dated 5-16-11

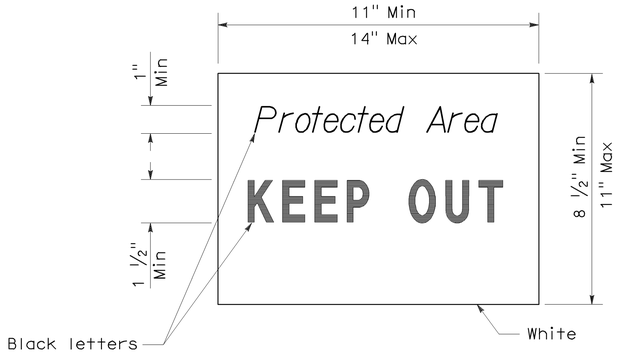

SIGN DETAIL

NOTE:

1. Temporary silt fence and temporary straw bale barrier shown for reference purposes only.

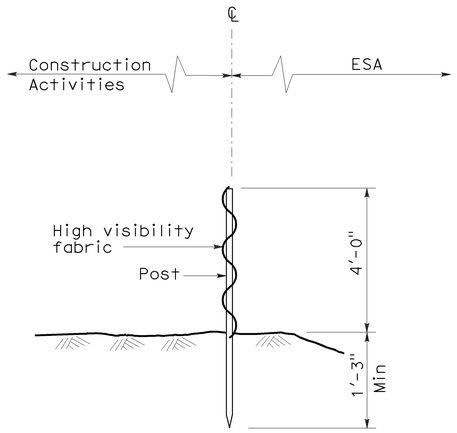

SECTION
TEMPORARY FENCE (TYPE ESA)

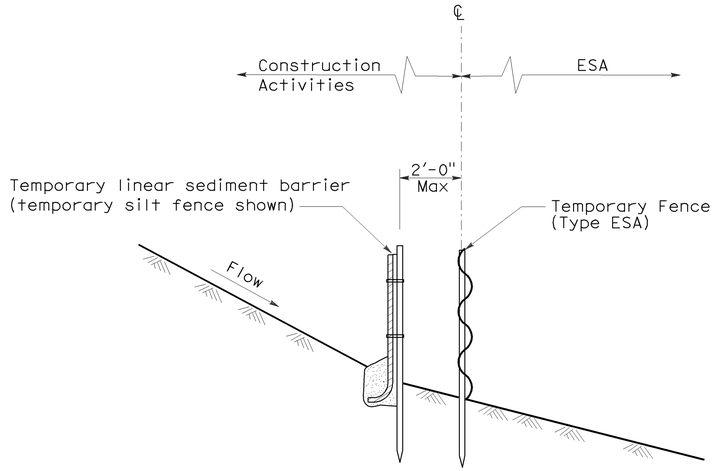

SECTION
PLACEMENT DETAIL
FOR TEMPORARY LINEAR SEDIMENT BARRIER
USED WITH TEMPORARY
FENCE (TYPE ESA)
(See Note 1)

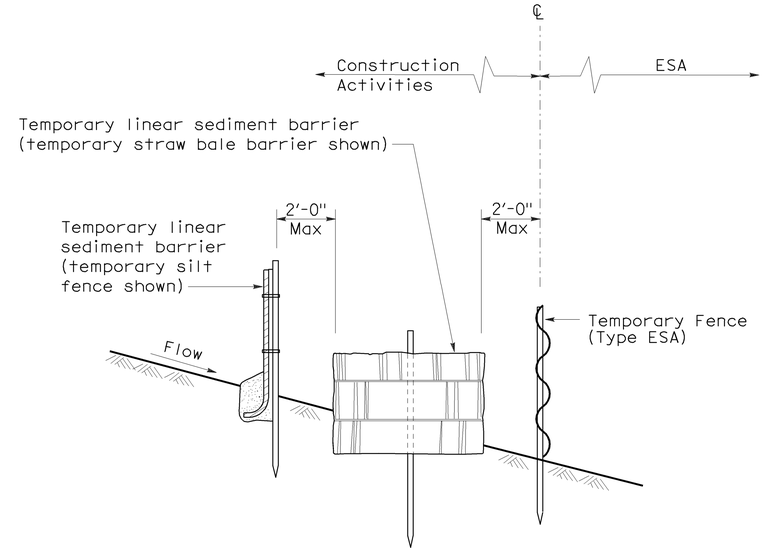

SECTION
PLACEMENT DETAIL
FOR TEMPORARY SILT FENCE
AND TEMPORARY STRAW BALE BARRIER
USED WITH TEMPORARY FENCE (TYPE ESA)
(See Note 1)

STATE OF CALIFORNIA
DEPARTMENT OF TRANSPORTATION

TEMPORARY WATER POLLUTION CONTROL DETAILS [TEMPORARY FENCE (TYPE ESA)]

NO SCALE

NSP T65 DATED APRIL 3, 2009 SUPPLEMENTS
THE STANDARD PLANS BOOK DATED MAY 2006.

NEW STANDARD PLAN NSP T65

2006 NEW STANDARD PLAN NSP T65

1-7-09