Dist	COUNTY	ROUTE	POST MILES TOTAL PROJECT	SHEET No.	TOTAL SHEETS
04	SM	280	Var	1	92

ACHSNHPIG-2801-1(142)E

STATE OF CALIFORNIA
DEPARTMENT OF TRANSPORTATION

PROJECT PLANS FOR CONSTRUCTION ON
STATE HIGHWAY

IN SAN MATEO COUNTY
AT VARIOUS LOCATIONS

TO BE SUPPLEMENTED BY STANDARD PLANS DATED 2010

INDEX OF PLANS

SHEET No.	DESCRIPTION
1	TITLE SHEET AND LOCATION MAP
2	LOCATIONS OF CONSTRUCTION
3	TYPICAL CROSS SECTIONS
4 - 15	CONSTRUCTION DETAILS
16 - 22	DRAINAGE DETAILS AND QUANTITIES
23 - 24	UTILITY PLAN
25 - 31	CONSTRUCTION AREA SIGNS
32 - 35	SUMMARY OF QUANTITIES
36 - 37	LANDSCAPE DETAILS AND QUANTITIES
38 - 40	EROSION CONTROL LEGEND, PLAN AND QUANTITIES
41 - 44	ELECTRICAL PLANS
45 - 74	REVISED STANDARD PLANS
	STRUCTURE PLANS
75 - 92	CONCRETE BARRIER TRANSITIONS

THE STANDARD PLANS LIST APPLICABLE TO THIS CONTRACT IS INCLUDED IN THE NOTICE TO BIDDERS AND SPECIAL PROVISIONS BOOK.

LOCATION MAP

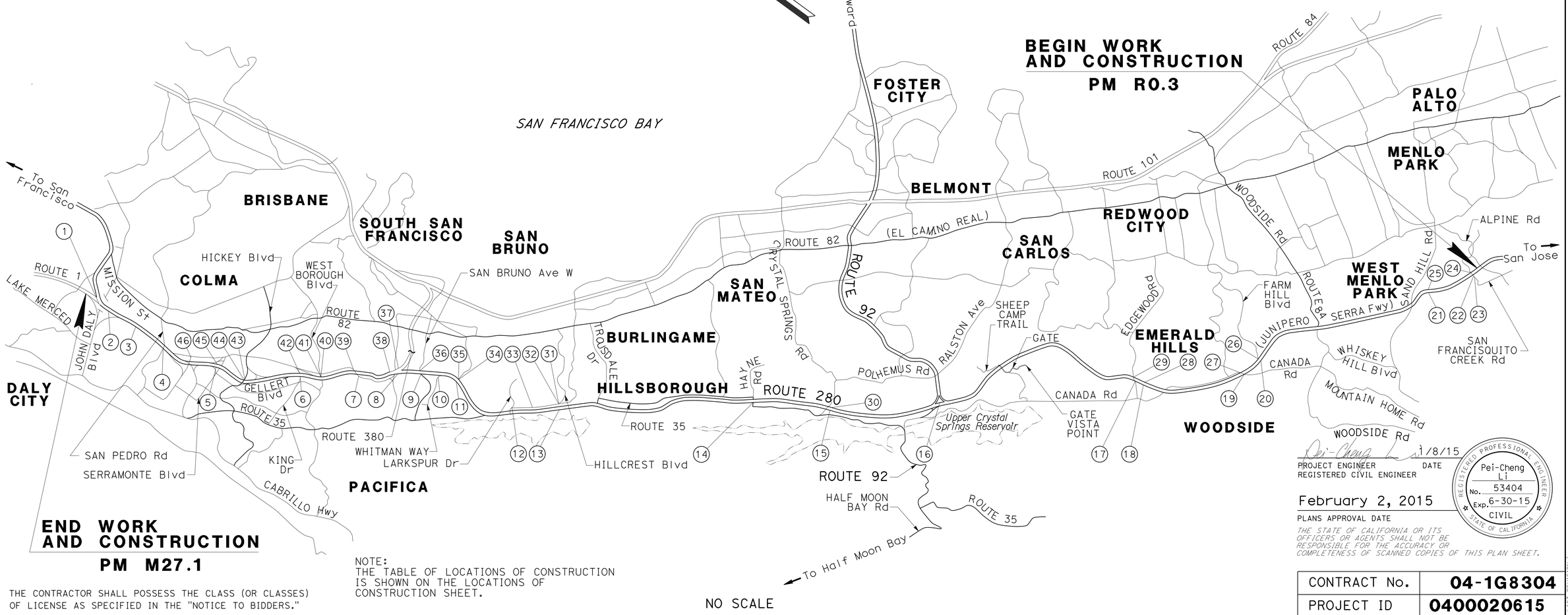

NOTE:
THE TABLE OF LOCATIONS OF CONSTRUCTION IS SHOWN ON THE LOCATIONS OF CONSTRUCTION SHEET.

THE CONTRACTOR SHALL POSSESS THE CLASS (OR CLASSES) OF LICENSE AS SPECIFIED IN THE "NOTICE TO BIDDERS."

NO SCALE

PROJECT MANAGER: MOHAMMAD SULEIMAN
DESIGN MANAGER: PATRICK T. NG

Pei-Cheng Li 1/8/15
PROJECT ENGINEER REGISTERED CIVIL ENGINEER — DATE

REGISTERED PROFESSIONAL ENGINEER: Pei-Cheng Li, No. 53404, Exp. 6-30-15, CIVIL, STATE OF CALIFORNIA

February 2, 2015
PLANS APPROVAL DATE

THE STATE OF CALIFORNIA OR ITS OFFICERS OR AGENTS SHALL NOT BE RESPONSIBLE FOR THE ACCURACY OR COMPLETENESS OF SCANNED COPIES OF THIS PLAN SHEET.

CONTRACT No.	04-1G8304
PROJECT ID	0400020615

LAST REVISION 01-08-15 — DATE PLOTTED => 07-APR-2015 TIME PLOTTED => 16:20

Dist	COUNTY	ROUTE	POST MILES TOTAL PROJECT	SHEET No.	TOTAL SHEETS
04	SM	280	Var	2	92

REGISTERED CIVIL ENGINEER 1/8/15 DATE

2-2-15
PLANS APPROVAL DATE

REGISTERED PROFESSIONAL ENGINEER Pei-Cheng Li No. 53404 Exp. 6-30-15 CIVIL STATE OF CALIFORNIA

THE STATE OF CALIFORNIA OR ITS OFFICERS OR AGENTS SHALL NOT BE RESPONSIBLE FOR THE ACCURACY OR COMPLETENESS OF SCANNED COPIES OF THIS PLAN SHEET.

LOCATIONS OF CONSTRUCTION

Loc No.	ROUTE	PM	DIRECTION NB/SB	HIGHWAY (H) RAMP (R)	LEFT (L) OR RIGHT (R) SIDE	DESCRIPTION
1	280	M27.11	SB	H	R	BEGINNING ROUTE 1/280 SEPARATION 35-0173L-TUNNEL
2	280	R26.5	SB	H	R	JUNIPERO SERRA Blvd OC, BRIDGE No. 35-0184
3	280	R26.09	SB	H	R	SB OFF-RAMP TO SULLIVAN Ave
4	280	R25.78	SB	H	R	SAN PEDRO ROAD OC BRIDGE No. 35-0181
5	280	R24.63	SB	H	R	SERRAMONTE Blvd UC, BRIDGE No. 35-0209L
6	280	R23.16	SB	H	R	KING DRIVE UC, BRIDGE No. 35-0202L
7	280	R22.04	SB	H	R	AVALON DRIVE UC, BRIDGE No. 35-0228L
8	280	R20.97	SB	H	R	ROUTE 280/380 SEPARATION, BRIDGE No. 35-0217
9	280	R20.75	SB	H	R	SAN BRUNO Ave UC, BRIDGE No. 35-0227
10	280	R20.22	SB	R	R	WHITMAN WAY OFF-RAMP UC, BRIDGE No. 35-0197K
11	280	R20.04	SB	H	R	JUNIPERO Blvd OFF-RAMP UC, BRIDGE No. 35-0196L
12	280	R18.52	SB	H	R	LARKSPUR DRIVE UC, BRIDGE No. 35-0216L
13	280	R17.92	SB	H	R	HILLCREST Blvd UC, BRIDGE No. 35-0211L
14	280	R14.22	SB	H	L	HAYNE ROAD UC, BRIDGE No. 35-0210L
15	280	R13.04	SB	H	R	SAN MATEO CREEK, BRIDGE No. 35-0199
16	280	10.82	SB	H	R	ROUTE 280/92 SEPARATION, BRIDGE No. 35-0243L
17	280	6.65	SB	R	R	EDGEWOOD ROAD UC, BRIDGE No. 35-0250L
18	280	R6.99	SB	H	R	SERVICE ROAD UC, BRIDGE No. 35-0277L
19	280	R4.99	SB	H	L	CANADA ROAD UC, BRIDGE No. 35-0231L
20	280	R4.71	SB	H	L	FARM HILL Blvd UC, BRIDGE No. 35-0230L
21	280	R1.02	SB	H	R	STANFORD LINEAR ACCEL UC, BRIDGE No. 35-0194
22	280	R0.30	SB	H	R	SAN FRANCISQUITO CREEK, BRIDGE No. 35-0234L
23	280	R0.30	SB	H	L	SAN FRANCISQUITO CREEK, BRIDGE No. 35-0234L
24	280	R0.30	NB	H	L	SAN FRANCISQUITO CREEK UC, BRIDGE No. 35-0234R

Loc No.	ROUTE	PM	DIRECTION NB/SB	DIRECTION NB/SB	LEFT (L) OR RIGHT (R) SIDE	DESCRIPTION
25	280	R1.02	NB	H	R	STANFORD LINEAR ACCEL UC, BRIDGE No. 35-0194
26	280	R4.65	NB	H	R	FARM HILL Blvd UC, BRIDGE No. 35-0230R
27	280	R4.99	NB	H	R	CANADA ROAD UC, BRIDGE No. 35-0231R
28	280	R6.99	NB	R	R	SERVICE ROAD UC, BRIDGE No. 35-0277R
29	280	6.65	NB	H	R	EDGEWOOD ROAD UC, BRIDGE No. 35-0250R
30	280	R12.73	NB	H	R	SAN MATEO CREEK, BRIDGE No. 35-0199, RIGHT SIDE SLOPE
31	280	R17.92	NB	H	R	HILLCREST Blvd UC, BRIDGE No. 35-0211R
32	280	R17.92	NB	H	L	HILLCREST Blvd UC, BRIDGE No. 35-0211R
33	280	R18.31	NB	H	R	APPROXIMATELY 0.3 MILE SOUTH OF LARKSPUR DRIVE UC
34	280	R20.08	NB	H	R	JUNIPERO Blvd OFF-RAMP UC, BRIDGE No. 35-0196R
35	280	R20.08	NB	H	L	JUNIPERO Blvd OFF-RAMP UC, BRIDGE No. 35-0196R
36	280	R20.22	NB	H	L	WHITMAN WAY UC, BRIDGE No. 35-0197R
37	280	R20.97	NB	H	R	ROUTE 280/380 SEPARATION, BRIDGE No. 35-0217
38	280	R21.55	NB	H	R	NATIONAL CEMETERY SIDE HILL VIADUCT, BRIDGE No. 35-0320
39	280	R22.05	NB	H	L	AVALON DRIVE UC, BRIDGE No. 35-0228R
40	280	R22.62	NB	R	R	WESTBOROUGH Blvd UC, BRIDGE No. 35-0212R
41	280	R22.62	NB	H	L	WESTBOROUGH Blvd UC, BRIDGE No. 35-0212R
42	280	R23.16	NB	H	L	KING DRIVE UC, BRIDGE No. 35-0202R
43	280	R24.20	NB	R	R	HICKEY Blvd UC, BRIDGE No. 35-0116R
44	280	R24.20	NB	H	L	HICKEY Blvd UC, BRIDGE No. 35-0116R
45	280	R24.60	NB	H	R	SERRAMONTE Blvd UC, BRIDGE No. 35-0209R
46	280	R24.65	NB	H	L	SERRAMONTE Blvd UC, BRIDGE No. 35-0209R

LOCATIONS OF CONSTRUCTION

LC-1

STATE OF CALIFORNIA - DEPARTMENT OF TRANSPORTATION
Caltrans DESIGN

FUNCTIONAL SUPERVISOR: PATRICK T. NG
CALCULATED-DESIGNED BY: GAMINI RANDENI
CHECKED BY: HON MING KONG
REVISED BY: GR
DATE REVISED: 1/8/15

LAST REVISION DATE PLOTTED => 07-APR-2015 TIME PLOTTED => 16:20
01-08-15

Dist	COUNTY	ROUTE	POST MILES TOTAL PROJECT	SHEET No.	TOTAL SHEETS
04	SM	280	Var	3	92

Pei-Cheng Li 1/8/15
REGISTERED CIVIL ENGINEER DATE

2-2-15
PLANS APPROVAL DATE

REGISTERED PROFESSIONAL ENGINEER Pei-Cheng Li No. 53404 Exp. 6-30-15 CIVIL STATE OF CALIFORNIA

THE STATE OF CALIFORNIA OR ITS OFFICERS OR AGENTS SHALL NOT BE RESPONSIBLE FOR THE ACCURACY OR COMPLETENESS OF SCANNED COPIES OF THIS PLAN SHEET.

NOTES:

1. FOR DIKE POSITIONING, SEE REVISED STANDARD PLAN RSP A77N4.
2. FOR STANDARD RAILING POST EMBEDMENT, SEE REVISED STANDARD PLAN RSP A77N3.
3. GUARD RAILING DELINEATION TO BE USED WHERE SHOWN ON THE PROJECT PLANS.
4. FOR LIMITS AND DETAILS OF MIDWEST GUARDRAIL SYSTEM VEGETATION CONTROL (ASPHALT COMPOSITE), SEE CONSTRUCTION DETAILS SHEETS C-8 TO C-11.

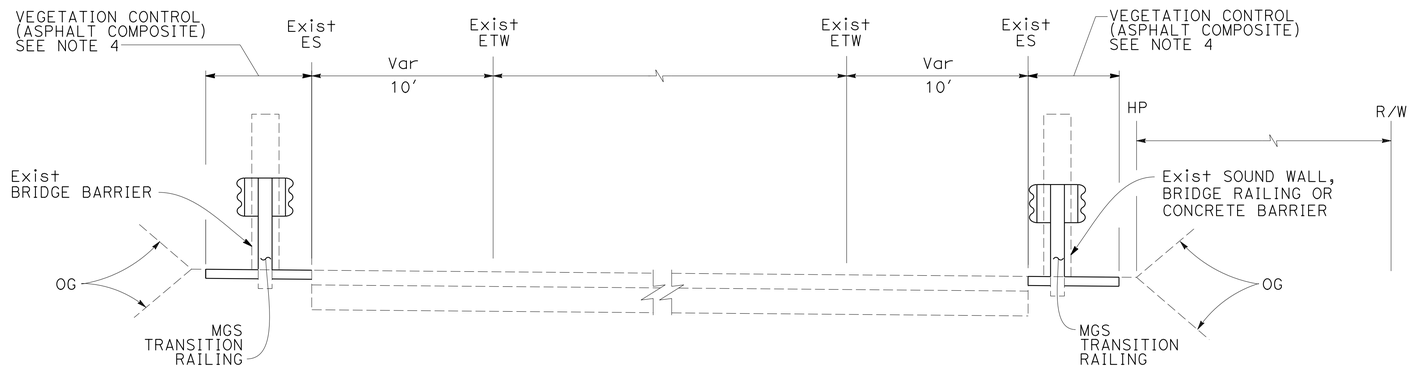

FREEWAY

MGS TRANSITION RAILING AT BRIDGE APPROACH

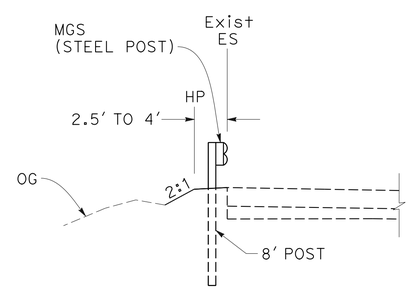

NARROW EMBANKMENT

TYPICAL CROSS SECTIONS

NO SCALE

X-1

STATE OF CALIFORNIA - DEPARTMENT OF TRANSPORTATION
Caltrans® DESIGN

FUNCTIONAL SUPERVISOR: PATRICK T. NG
CALCULATED-DESIGNED BY: GAMINI RANDENI
CHECKED BY: HON MING KONG
REVISED BY: GR
DATE REVISED: 1/8/15

LAST REVISION 01-08-15
DATE PLOTTED => 07-APR-2015
TIME PLOTTED => 16:20

Dist	COUNTY	ROUTE	POST MILES TOTAL PROJECT	SHEET No.	TOTAL SHEETS
04	SM	280	Var	4	92

REGISTERED CIVIL ENGINEER 1/8/15 DATE

2-2-15
PLANS APPROVAL DATE

REGISTERED PROFESSIONAL ENGINEER Pei-Cheng Li No. 53404 Exp. 6-30-15 CIVIL STATE OF CALIFORNIA

THE STATE OF CALIFORNIA OR ITS OFFICERS OR AGENTS SHALL NOT BE RESPONSIBLE FOR THE ACCURACY OR COMPLETENESS OF SCANNED COPIES OF THIS PLAN SHEET.

NOTES:

1. EXACT LOCATION OF POST ON MGS SHALL BE DETERMINED BY THE ENGINEER.
2. INSTALL GUARD RAILING DELINEATOR 25′ FROM THE END OF MGS, SPACING 25′.
3. FOR ADDITIONAL INFORMATION, SEE SUMMARY OF QUANTITIES.

NOTE: (FOR THIS SHEET ONLY):

1. FOR ADDITIONAL DETAILS, SEE REVISED STANDARD PLANS RSP A77Q1 AND RSP A77Q2.

LEGEND:

ROADWAY EXCAVATION

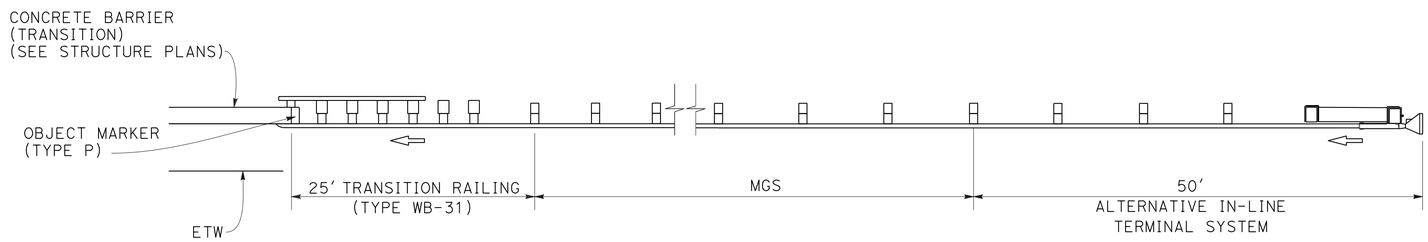

LOCATIONS No. 8, 9, 13, 15, 22, 28, 29, 31, 40
TYPE 12A LAYOUT

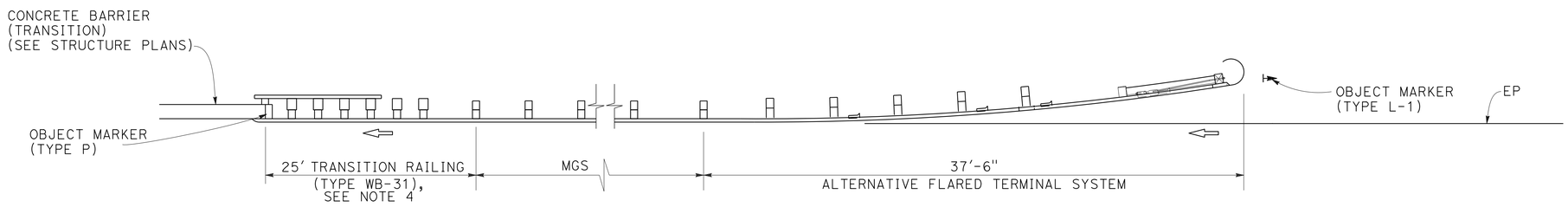

LOCATIONS No. 5, 10, 11, 12, 14, 16, 17, 21, 26, 33, 43
TYPE 12B LAYOUT

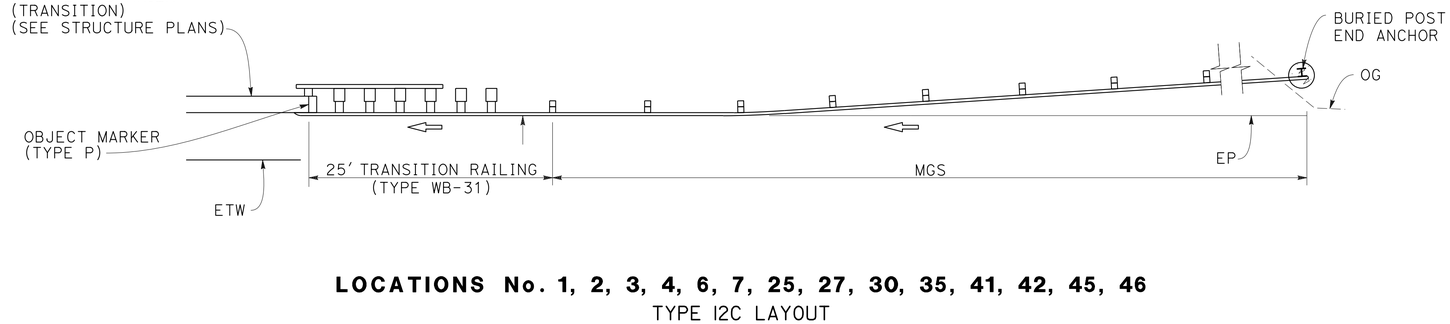

LOCATIONS No. 1, 2, 3, 4, 6, 7, 25, 27, 30, 35, 41, 42, 45, 46
TYPE I2C LAYOUT

CONSTRUCTION DETAILS
NO SCALE

C-1

STATE OF CALIFORNIA - DEPARTMENT OF TRANSPORTATION
Caltrans DESIGN
FUNCTIONAL SUPERVISOR: PATRICK T. NG
CALCULATED-DESIGNED BY: GAMINI RANDENI
CHECKED BY: HON MING KONG
REVISED BY: GR
DATE REVISED: 1/8/15

LAST REVISION 01-08-15 | DATE PLOTTED => 07-APR-2015 | TIME PLOTTED => 16:20

Dist	COUNTY	ROUTE	POST MILES TOTAL PROJECT	SHEET No.	TOTAL SHEETS
04	SM	280	Var	5	92

REGISTERED CIVIL ENGINEER 1/8/15 DATE

2-2-15
PLANS APPROVAL DATE

REGISTERED PROFESSIONAL ENGINEER Pei-Cheng Li No. 53404 Exp. 6-30-15 CIVIL STATE OF CALIFORNIA

THE STATE OF CALIFORNIA OR ITS OFFICERS OR AGENTS SHALL NOT BE RESPONSIBLE FOR THE ACCURACY OR COMPLETENESS OF SCANNED COPIES OF THIS PLAN SHEET.

NOTES: (FOR THIS SHEET ONLY)

1. FOR ADDITIONAL DETAILS, SEE REVISED STANDARD PLAN RSP A77Q2.
2. FOR TRANSITION RAILING (TYPE WB-31) DETAILS, SEE REVISED STANDARD PLAN RSP A77U4.
3. THE 15:1 OR FLATTER FLARE FOR TYPE 12D LAYOUT (MODIFIED) IS BASED ON THE EDGE OF THE PAVED SHOULDER OR OFFSET LINE OF EDGE OF THE TRAVELED WAY. THE LENGTH OF MGS WITH THE 15:1 OR FLATTER FLARE IS BASED ON SITE CONDITIONS AND SHOULD BE A LENGTH EQUAL TO MULTIPLES OF 12′-6″.
4. FOR TYPICAL FLARE OFFSETS FOR 25′-0″ LENGTH PARABOLA WITH MAXIMUM OFFSET OF 1′-0″, SEE REVISED STANDARD PLAN RSP A77P1.

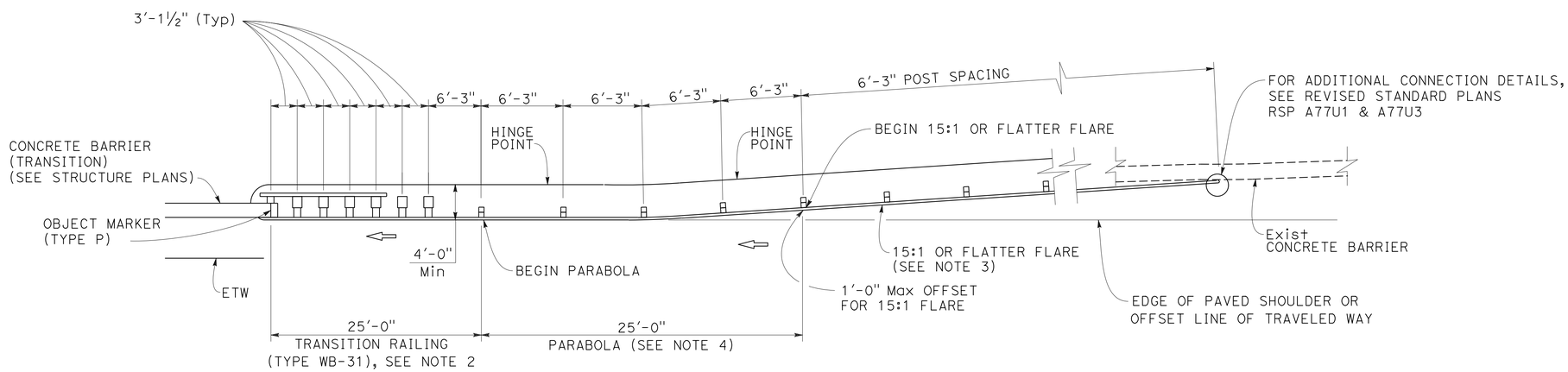

TYPE 12D LAYOUT (MODIFIED)
LOCATION 18

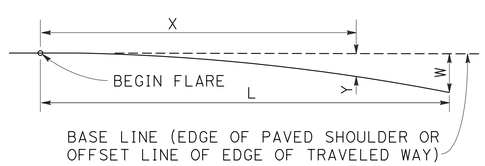

$$Y = \frac{WX^2}{L^2}$$

Y = OFFSET FROM BASE LINE
W = MAXIMUM OFFSET
X = DISTANCE ALONG BASE LINE
L = LENGTH OF FLARE

PARABOLIC FLARE OFFSETS

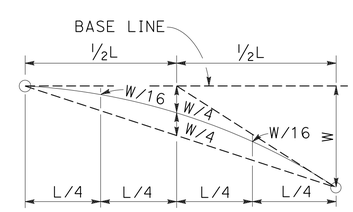

TYPICAL PARABOLIC LAYOUT

FOR NOTES AND LEGEND, SEE SHEET C-1

CONSTRUCTION DETAILS
NO SCALE

C-2

STATE OF CALIFORNIA - DEPARTMENT OF TRANSPORTATION
Caltrans
DESIGN

GAMINI RANDENI	REVISED BY	GR	
HON MING KONG	DATE REVISED	1/8/15	
CALCULATED-DESIGNED BY			
CHECKED BY			
FUNCTIONAL SUPERVISOR			
PATRICK T. NG			

LAST REVISION 12-01-14 | DATE PLOTTED => 07-APR-2015 | TIME PLOTTED => 16:20

Dist	COUNTY	ROUTE	POST MILES TOTAL PROJECT	SHEET No.	TOTAL SHEETS
04	SM	280	Var	6	92

REGISTERED CIVIL ENGINEER 1/8/15 DATE

2-2-15
PLANS APPROVAL DATE

REGISTERED PROFESSIONAL ENGINEER Pei-Cheng Li No. 53404 Exp. 6-30-15 CIVIL STATE OF CALIFORNIA

THE STATE OF CALIFORNIA OR ITS OFFICERS OR AGENTS SHALL NOT BE RESPONSIBLE FOR THE ACCURACY OR COMPLETENESS OF SCANNED COPIES OF THIS PLAN SHEET.

NOTES: (FOR THIS SHEET ONLY):

1. FOR ADDITIONAL DETAILS, SEE STANDARD PLAN A78J.
2. FOR SINGLE THRIE BEAM BARRIER, SEE REVISED STANDARD PLAN A78A.
3. THE 15:1 OR FLATTER FLARE IS MEASURED OFF OF THE EDGE OF TRAVELED WAY.

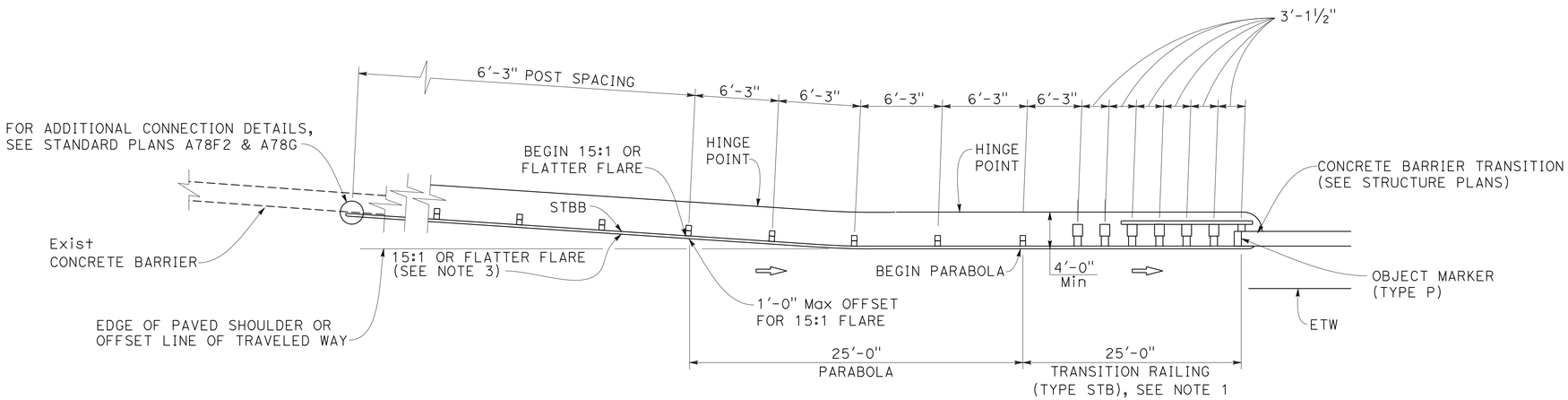

LAYOUT
STBB CONNECTION AT EXISTING CONCRETE BARRIER
LOCATIONS 19, 20, 23, 24, 32, 39, 44

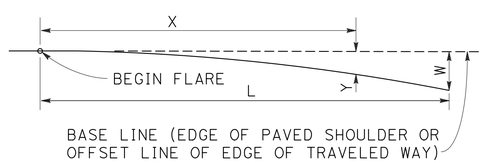

$$Y = \frac{WX^2}{L^2}$$

Y = OFFSET FROM BASE LINE
W = MAXIMUM OFFSET
X = DISTANCE ALONG BASE LINE
L = LENGTH OF FLARE

PARABOLIC FLARE OFFSETS

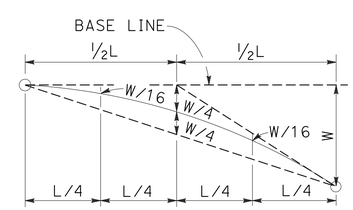

TYPICAL PARABOLIC LAYOUT

FOR NOTES AND LEGEND, SEE SHEET C-1

CONSTRUCTION DETAILS
NO SCALE

C-3

STATE OF CALIFORNIA - DEPARTMENT OF TRANSPORTATION
Caltrans
DESIGN
FUNCTIONAL SUPERVISOR: PATRICK T. NG
CALCULATED-DESIGNED BY: GAMINI RANDENI
CHECKED BY: HON MING KONG
REVISED BY: GR
DATE REVISED: 1/8/15

LAST REVISION 01-08-15
DATE PLOTTED => 07-APR-2015
TIME PLOTTED => 16:20

Dist	COUNTY	ROUTE	POST MILES TOTAL PROJECT	SHEET No.	TOTAL SHEETS
04	SM	280	Var	7	92

REGISTERED CIVIL ENGINEER 1/8/15 DATE

2-2-15
PLANS APPROVAL DATE

REGISTERED PROFESSIONAL ENGINEER Pei-Cheng Li No. 53404 Exp. 6-30-15 CIVIL STATE OF CALIFORNIA

THE STATE OF CALIFORNIA OR ITS OFFICERS OR AGENTS SHALL NOT BE RESPONSIBLE FOR THE ACCURACY OR COMPLETENESS OF SCANNED COPIES OF THIS PLAN SHEET.

NOTES: (FOR THIS SHEET ONLY)

1. FOR TRANSITION RAILING (TYPE STB) DETAILS, SEE STANDARD PLAN A78J.
2. FOR SINGLE THRIE BEAM BARRIER, SEE REVISED STANDARD PLAN A78A.
3. THE 15:1 OR FLATTER FLARE IS BASED ON THE EDGE OF THE PAVED SHOULDER OR OFFSET LINE OF EDGE OF THE TRAVELED WAY. THE LENGTH OF MGS WITH THE 15:1 OR FLATTER FLARE IS BASED ON SITE CONDITIONS AND SHOULD BE A LENGTH EQUAL TO MULTIPLES OF 12′-6″.
4. FOR DETAILS OF THE BURIED POST END ANCHOR, SEE REVISED STANDARD PLAN A77T2.
5. FOR TYPICAL FLARE OFFSETS FOR 25′-0″ LENGTH PARABOLA WITH MAXIMUM OFFSET OF 1′-0″, SEE REVISED STANDARD PLAN A77P1.

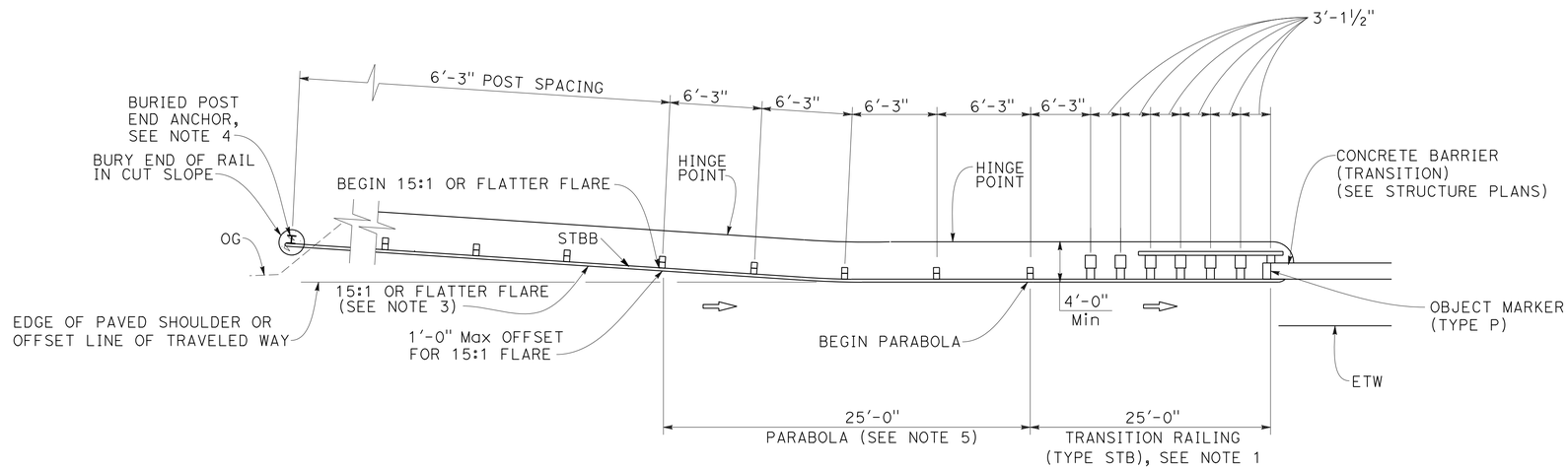

TYPE 12C LAYOUT (MODIFIED)
LOCATION 36

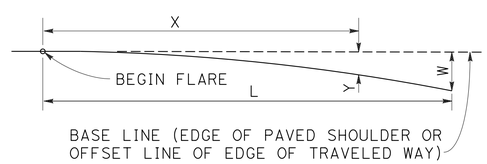

$$Y = \frac{WX^2}{L^2}$$

Y = OFFSET FROM BASE LINE
W = MAXIMUM OFFSET
X = DISTANCE ALONG BASE LINE
L = LENGTH OF FLARE

PARABOLIC FLARE OFFSETS

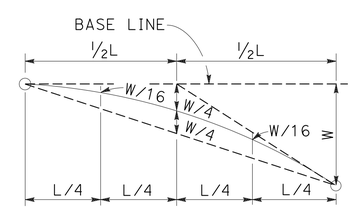

TYPICAL PARABOLIC LAYOUT

FOR NOTES AND LEGEND, SEE SHEET C-1

CONSTRUCTION DETAILS
NO SCALE

C-4

STATE OF CALIFORNIA - DEPARTMENT OF TRANSPORTATION
Caltrans
DESIGN

FUNCTIONAL SUPERVISOR: PATRICK T. NG
CALCULATED-DESIGNED BY: GAMINI RANDENI
CHECKED BY: HON MING KONG
REVISED BY: GR
DATE REVISED: 1/8/15

LAST REVISION 01-08-15
DATE PLOTTED => 07-APR-2015
TIME PLOTTED => 16:20

Dist	COUNTY	ROUTE	POST MILES TOTAL PROJECT	SHEET No.	TOTAL SHEETS
04	SM	280	Var	8	92

REGISTERED CIVIL ENGINEER 1/8/15 DATE

2-2-15
PLANS APPROVAL DATE

REGISTERED PROFESSIONAL ENGINEER Pei-Cheng Li No. 53404 Exp. 6-30-15 CIVIL STATE OF CALIFORNIA

THE STATE OF CALIFORNIA OR ITS OFFICERS OR AGENTS SHALL NOT BE RESPONSIBLE FOR THE ACCURACY OR COMPLETENESS OF SCANNED COPIES OF THIS PLAN SHEET.

NOTES: (FOR THIS SHEET ONLY):

1. FOR TRANSITION RAILING (TYPE WB-31) DETAILS, SEE REVISED STANDARD PLAN A77U4.
2. FOR MGS TRANSITION TO MBGR, SEE REVISED STANDARD PLAN A77U5.

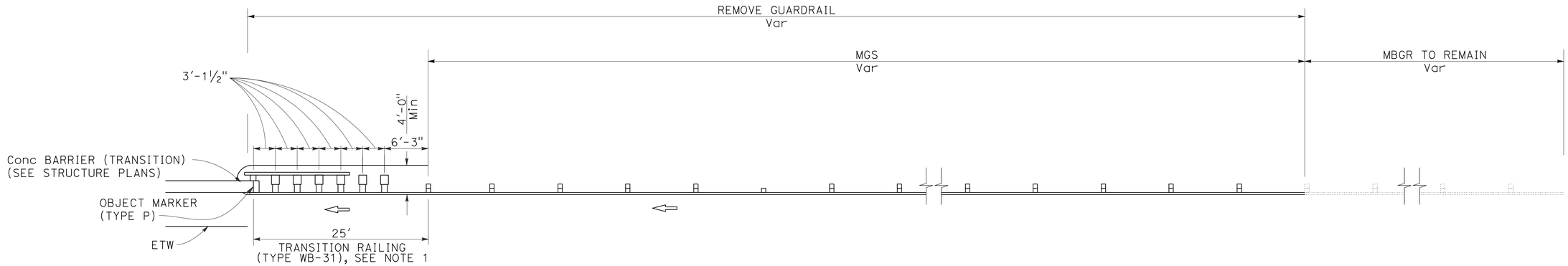

LOCATIONS No. 34, 37, 38

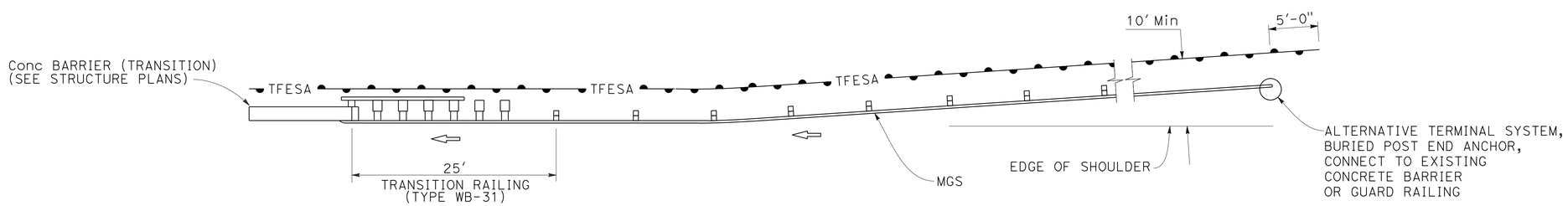

LOCATIONS No. 12, 13, 15, 16, 17, 18, 22, 28, 29, 30, 34
TEMPORARY FENCE FOR ESA

CONSTRUCTION DETAILS
NO SCALE

FOR NOTES AND LEGEND, SEE SHEET C-1

C-5

STATE OF CALIFORNIA - DEPARTMENT OF TRANSPORTATION
Caltrans DESIGN

FUNCTIONAL SUPERVISOR: PATRICK T. NG
CALCULATED-DESIGNED BY: GAMINI RANDENI
CHECKED BY: HON MING KONG
REVISED BY: GR
DATE REVISED: 1/8/15

LAST REVISION DATE PLOTTED => 07-APR-2015
TIME PLOTTED => 16:20

Dist	COUNTY	ROUTE	POST MILES TOTAL PROJECT	SHEET No.	TOTAL SHEETS
04	SM	280	Var	9	92

REGISTERED CIVIL ENGINEER 1/8/15 DATE

2-2-15
PLANS APPROVAL DATE

REGISTERED PROFESSIONAL ENGINEER Pei-Cheng Li No. 53404 Exp. 6-30-15 CIVIL STATE OF CALIFORNIA

THE STATE OF CALIFORNIA OR ITS OFFICERS OR AGENTS SHALL NOT BE RESPONSIBLE FOR THE ACCURACY OR COMPLETENESS OF SCANNED COPIES OF THIS PLAN SHEET.

NOTE: (FOR THIS SHEET ONLY)

1. FOR DETAILS NOT SHOWN, SEE STRUCTURE PLANS.

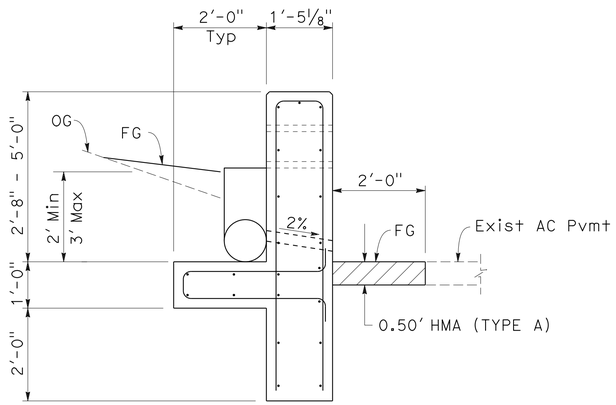

LOCATION No. 1

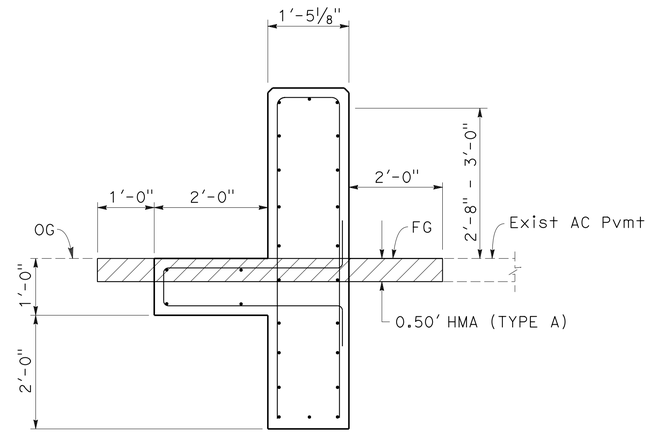

LOCATIONS No. 5, 7 TO 14, 22, 27, 31, 37, 39, 40, 42, 43, 45

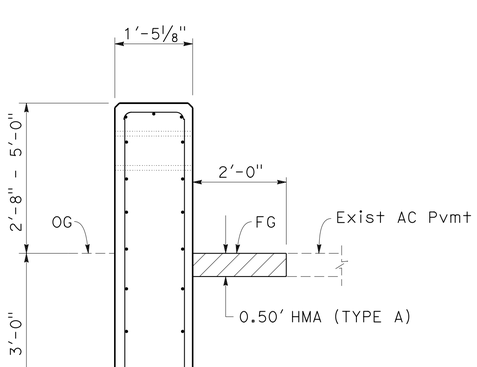

LOCATIONS No. 2, 3, 4, 6, 16 TO 21, 23 TO 26, 28, 29, 32, 33, 38

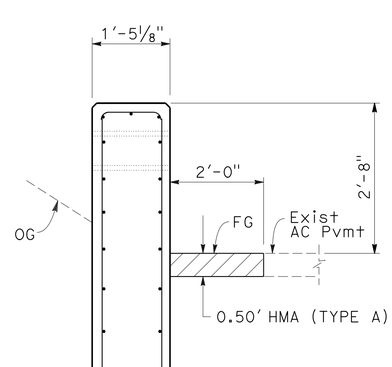

LOCATIONS No. 30, 35, 36, 41, 44, 46

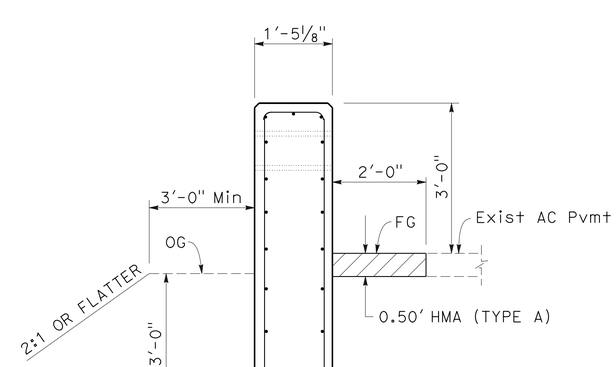

LOCATIONS No. 15, 34

CONCRETE BARRIER TRANSITION SECTIONS

CONSTRUCTION DETAILS

NO SCALE

FOR NOTES AND LEGEND, SEE SHEET C-1

C-6

STATE OF CALIFORNIA - DEPARTMENT OF TRANSPORTATION
Caltrans® DESIGN

FUNCTIONAL SUPERVISOR: PATRICK T. NG
CALCULATED-DESIGNED BY: GAMINI RANDENI
CHECKED BY: HON MING KONG
REVISED BY: GR
DATE REVISED: 1/8/15

LAST REVISION: 01-08-15
DATE PLOTTED => 07-APR-2015
TIME PLOTTED => 16:20

Dist	COUNTY	ROUTE	POST MILES TOTAL PROJECT	SHEET No.	TOTAL SHEETS
04	SM	280	Var	10	92

REGISTERED CIVIL ENGINEER 1/8/15 DATE

2-2-15
PLANS APPROVAL DATE

REGISTERED PROFESSIONAL ENGINEER Pei-Cheng Li No. 53404 Exp. 6-30-15 CIVIL STATE OF CALIFORNIA

THE STATE OF CALIFORNIA OR ITS OFFICERS OR AGENTS SHALL NOT BE RESPONSIBLE FOR THE ACCURACY OR COMPLETENESS OF SCANNED COPIES OF THIS PLAN SHEET.

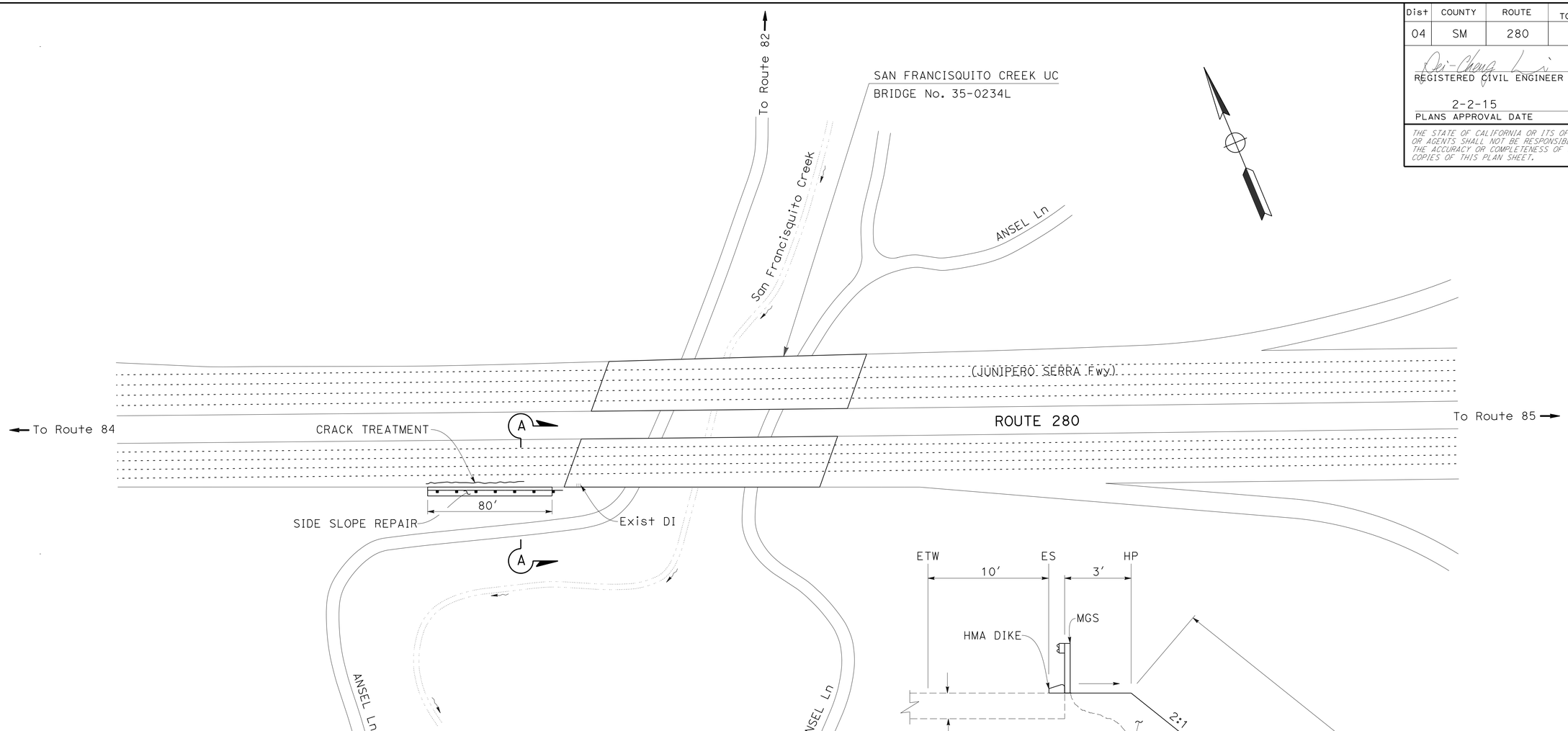

LOCATION No. 22

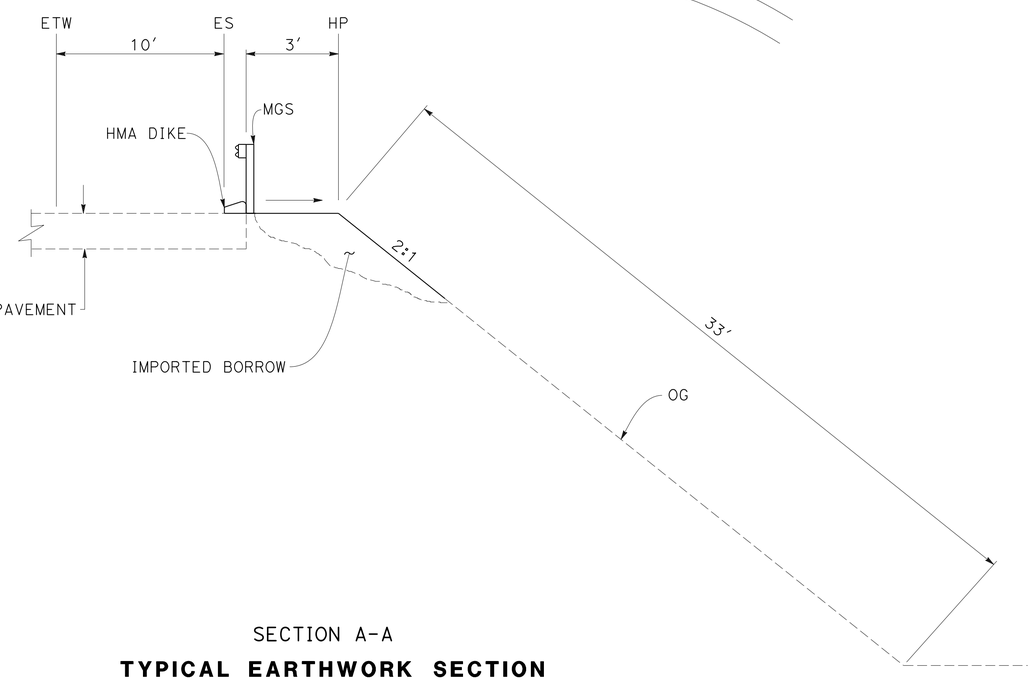

SECTION A-A

TYPICAL EARTHWORK SECTION

CONSTRUCTION DETAILS

NO SCALE

C-7

GAMINI RANDENI	HON MING KONG
REVISED BY	GR
DATE REVISED	1/8/15
CALCULATED-DESIGNED BY	
CHECKED BY	
FUNCTIONAL SUPERVISOR	PATRICK T. NG

STATE OF CALIFORNIA - DEPARTMENT OF TRANSPORTATION

Caltrans®

DESIGN

LAST REVISION 01-08-15 | DATE PLOTTED => 07-APR-2015 | TIME PLOTTED => 16:20

Dist	COUNTY	ROUTE	POST MILES TOTAL PROJECT	SHEET No.	TOTAL SHEETS
04	SM	280	Var	11	92

REGISTERED CIVIL ENGINEER 1/8/15 DATE

2-2-15
PLANS APPROVAL DATE

REGISTERED PROFESSIONAL ENGINEER Pei-Cheng Li No. 53404 Exp. 6-30-15 CIVIL STATE OF CALIFORNIA

THE STATE OF CALIFORNIA OR ITS OFFICERS OR AGENTS SHALL NOT BE RESPONSIBLE FOR THE ACCURACY OR COMPLETENESS OF SCANNED COPIES OF THIS PLAN SHEET.

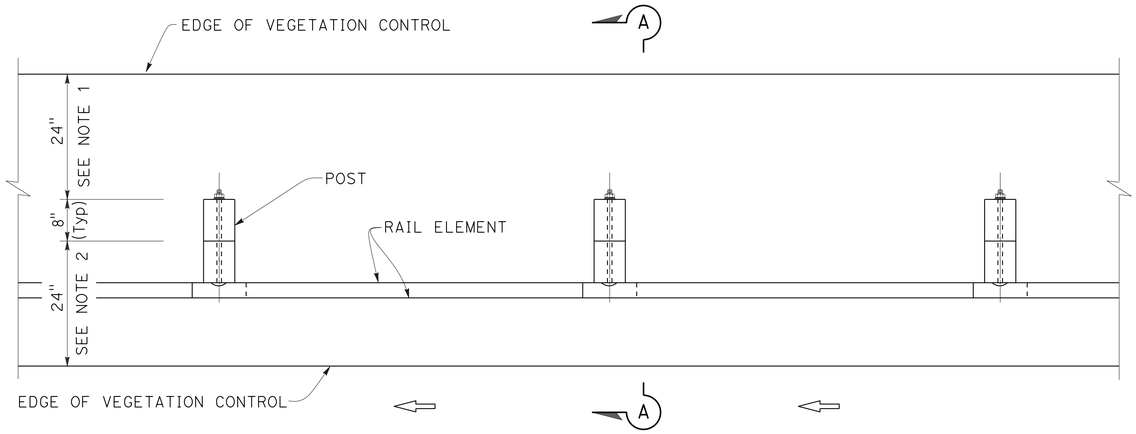

PLAN

NOTES:

1. WHERE THE DISTANCE BETWEEN BACK OF POST AND HINGE POINT IS LESS THAN 24", VEGETATION CONTROL TO BE CONSTRUCTED 6" BEYOND THE HINGE POINT WITH THE EDGE KEYED IN.
2. WHERE CURB OR DIKE IS CONSTRUCTED UNDER RAILING, CONSTRUCT VEGETATION CONTROL TO BACK EDGE OF CURB OR DIKE. WHERE PAVED SHOULDER IS CONSTRUCTED WITHIN 24" IN FRONT OF THE POST, CONSTRUCT VEGETATION CONTROL TO THE EDGE OF PAVED SHOULDER.
3. FEATHER EDGE OF ASPHALT COMPOSITE TRANSITION UP POSTS AND BACK OF CURBS AND DIKES. TRANSITION LINE SHALL FORM A REASONABLY STRAIGHT LINE, HORIZONTALLY FROM POST TO POST OR ALONG TOP EDGE OF CURB OR DIKE.
4. DIRECTION OF ADJACENT TRAFFIC INDICATED BY ⇦ .

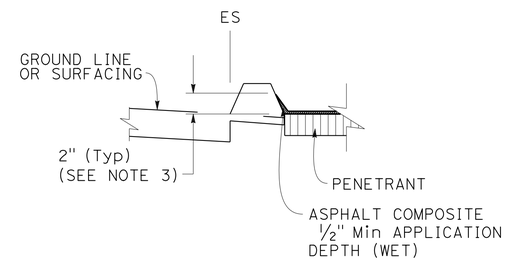

VEGETATION CONTROL AT CURB OR DIKE

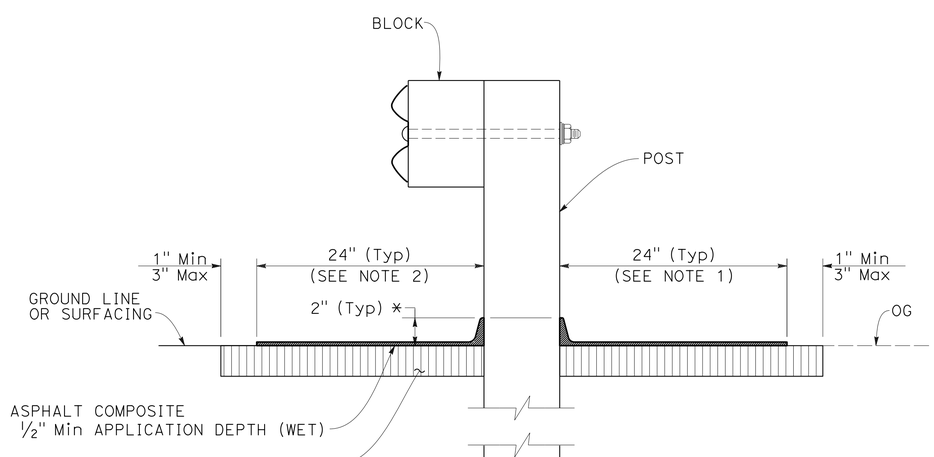

SECTION A-A
* (SEE NOTE 3)

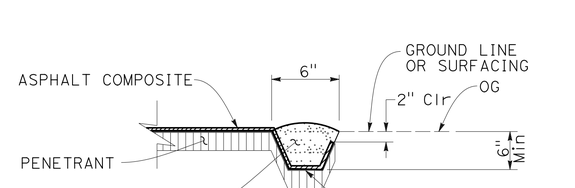

KEY EDGE

CONSTRUCTION DETAILS
MIDWEST GUARDRAIL SYSTEM VEGETATION CONTROL (ASPHALT COMPOSITE) STANDARD RAILING SECTION

NO SCALE

C-8

REVISED BY	DATE REVISED
GR	1/8/15

GAMINI RANDENI — HON MING KONG
CALCULATED-DESIGNED BY — CHECKED BY
FUNCTIONAL SUPERVISOR — PATRICK T. NG

STATE OF CALIFORNIA - DEPARTMENT OF TRANSPORTATION
Caltrans DESIGN

LAST REVISION 12-01-14 | DATE PLOTTED => 07-APR-2015 | TIME PLOTTED => 16:20

Dist	COUNTY	ROUTE	POST MILES TOTAL PROJECT	SHEET No.	TOTAL SHEETS
04	SM	280	Var	12	92

REGISTERED CIVIL ENGINEER 1/8/15 DATE

2-2-15
PLANS APPROVAL DATE

REGISTERED PROFESSIONAL ENGINEER Pei-Cheng Li No. 53404 Exp. 6-30-15 CIVIL STATE OF CALIFORNIA

THE STATE OF CALIFORNIA OR ITS OFFICERS OR AGENTS SHALL NOT BE RESPONSIBLE FOR THE ACCURACY OR COMPLETENESS OF SCANNED COPIES OF THIS PLAN SHEET.

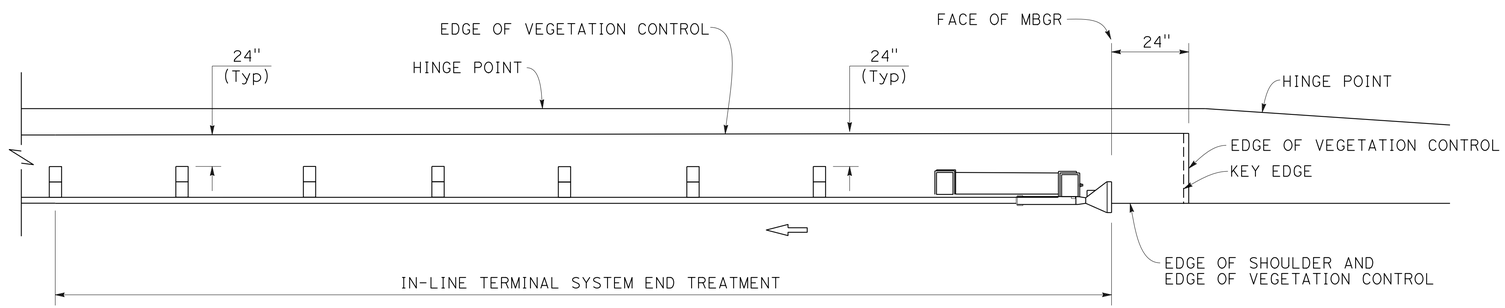

PLAN

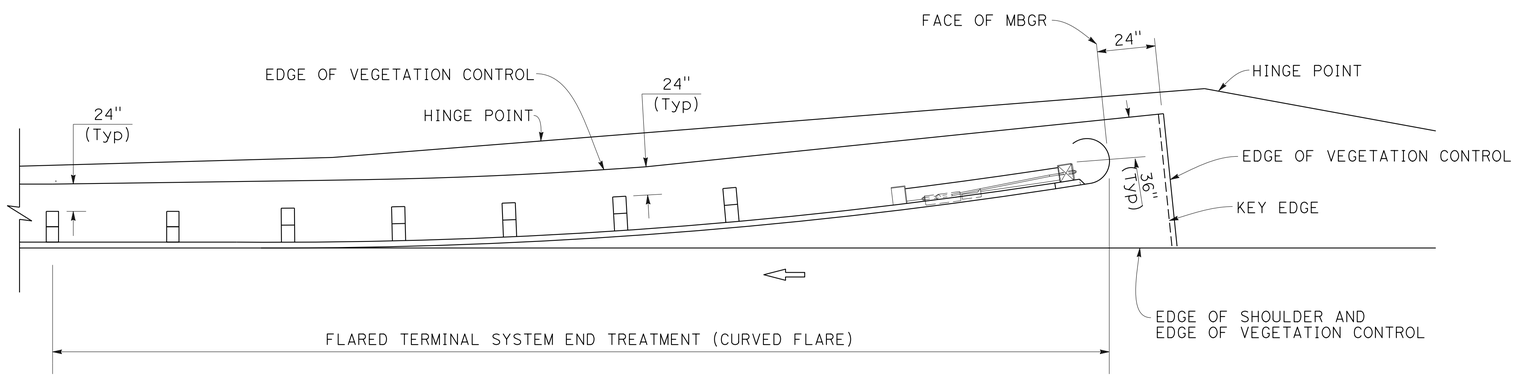

PLAN

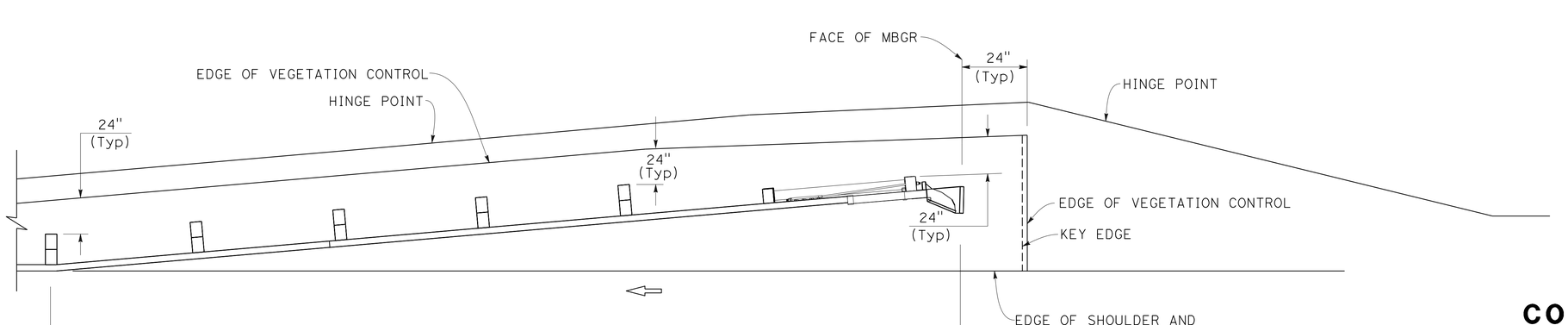

PLAN

NOTES:

1. SEE SHEET C-8 FOR ADDITIONAL VEGETATION CONTROL DETAILS.
2. WHERE THE DISTANCE BETWEEN BACK OF POST AND HINGE POINT IS LESS THAN 24", VEGETATION CONTROL TO BE CONSTRUCTED 6" BEYOND THE HINGE POINT WITH THE EDGE KEYED IN.
3. WHERE DIKE IS CONSTRUCTED UNDER RAILING, CONSTRUCT VEGETATION CONTROL TO BACK EDGE OF CURB OR DIKE. WHERE PAVED SHOULDER IS CONSTRUCTED WITHIN 24" IN FRONT OF THE POST, CONSTRUCT VEGETATION CONTROL TO THE EDGE OF PAVED SHOULDER.
4. DIRECTION OF ADJACENT TRAFFIC INDICATED BY ⇦ .

CONSTRUCTION DETAILS

MIDWEST GUARDRAIL SYSTEM VEGETATION CONTROL (ASPHALT COMPOSITE) FOR TERMINAL SYSTEM END TREATMENTS

NO SCALE

C-9

REVISED BY	DATE REVISED	CALCULATED-DESIGNED BY	CHECKED BY	FUNCTIONAL SUPERVISOR
GR	1/8/15	GAMINI RANDENI	HON MING KONG	PATRICK T. NG

STATE OF CALIFORNIA - DEPARTMENT OF TRANSPORTATION
DESIGN
Caltrans

LAST REVISION 12-01-14 | DATE PLOTTED => 07-APR-2015 | TIME PLOTTED => 16:20

Dist	COUNTY	ROUTE	POST MILES TOTAL PROJECT	SHEET No.	TOTAL SHEETS
04	SM	280	Var	13	92

REGISTERED CIVIL ENGINEER — DATE 1/8/15

2-2-15
PLANS APPROVAL DATE

REGISTERED PROFESSIONAL ENGINEER — Pei-Cheng Li — No. 53404 — Exp. 6-30-15 — CIVIL — STATE OF CALIFORNIA

THE STATE OF CALIFORNIA OR ITS OFFICERS OR AGENTS SHALL NOT BE RESPONSIBLE FOR THE ACCURACY OR COMPLETENESS OF SCANNED COPIES OF THIS PLAN SHEET.

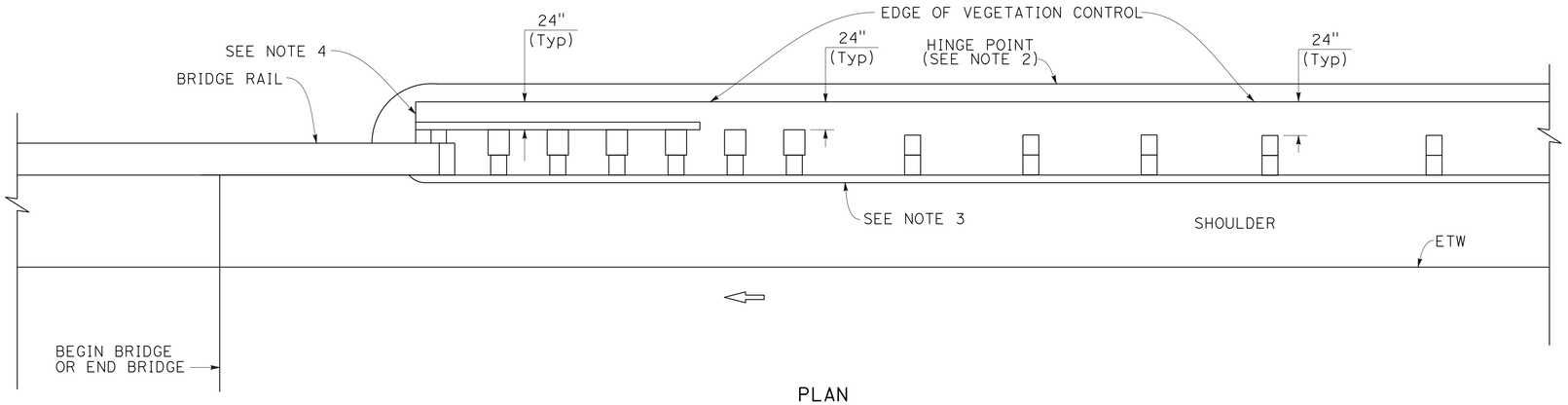

PLAN

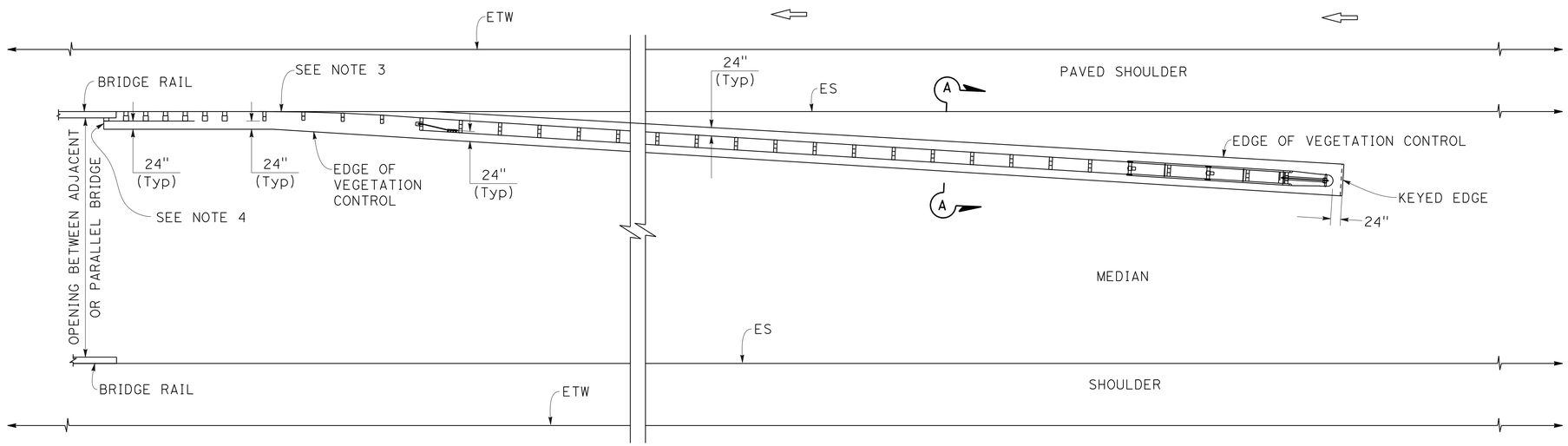

PLAN

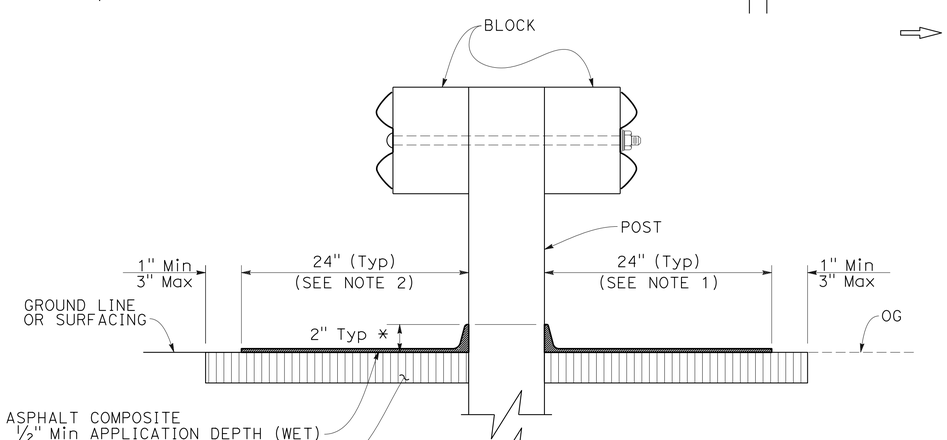

SECTION A-A
* (SEE NOTE 3)

NOTES:

1. SEE SHEET C-8 FOR ADDITIONAL VEGETATION CONTROL DETAILS.
2. WHERE THE DISTANCE BETWEEN BACK OF POST AND HINGE POINT IS LESS THAN 24", VEGETATION CONTROL TO BE CONSTRUCTED 6" BEYOND THE HINGE POINT WITH THE EDGE KEYED IN.
3. WHERE DIKE IS CONSTRUCTED UNDER RAILING, CONSTRUCT VEGETATION CONTROL TO BACK EDGE OF CURB OR DIKE. WHERE PAVED SHOULDER IS CONSTRUCTED WITHIN 24" IN FRONT OF THE POST, CONSTRUCT VEGETATION CONTROL TO THE EDGE OF PAVED SHOULDER.
4. END VEGETATION CONTROL AT END OF BACKSIDE RAIL ELEMENT.
5. DIRECTION OF ADJACENT TRAFFIC INDICATED BY ⇦ .

CONSTRUCTION DETAILS
MIDWEST GUARDRAIL SYSTEM VEGETATION CONTROL (ASPHALT COMPOSITE) AT STRUCTURE APPROACH AND DEPARTURE

NO SCALE

C-10

REVISED BY	DATE REVISED
GR	1/8/15

CALCULATED-DESIGNED BY: GAMINI RANDENI
CHECKED BY: HON MING KONG
FUNCTIONAL SUPERVISOR: PATRICK T. NG

STATE OF CALIFORNIA - DEPARTMENT OF TRANSPORTATION
Caltrans
DESIGN

LAST REVISION 12-01-14 | DATE PLOTTED => 07-APR-2015 | TIME PLOTTED => 16:20

Dist	COUNTY	ROUTE	POST MILES TOTAL PROJECT	SHEET No.	TOTAL SHEETS
04	SM	280	Var	14	92

Pei-Cheng Li 1/8/15
REGISTERED CIVIL ENGINEER DATE

2-2-15
PLANS APPROVAL DATE

REGISTERED PROFESSIONAL ENGINEER Pei-Cheng Li No. 53404 Exp. 6-30-15 CIVIL STATE OF CALIFORNIA

THE STATE OF CALIFORNIA OR ITS OFFICERS OR AGENTS SHALL NOT BE RESPONSIBLE FOR THE ACCURACY OR COMPLETENESS OF SCANNED COPIES OF THIS PLAN SHEET.

NOTES:

1. SEE SHEET C-8 FOR ADDITIONAL VEGETATION CONTROL DETAILS.
2. WHERE THE DISTANCE BETWEEN BACK OF POST OR FIXED OBJECT AND HINGE POINT IS LESS THAN 24", VEGETATION CONTROL TO BE CONSTRUCTED 6" BEYOND THE HINGE POINT WITH THE EDGE KEYED IN.
3. WHERE DIKE IS CONSTRUCTED UNDER RAILING, CONSTRUCT VEGETATION CONTROL TO BACK EDGE OF CURB OR DIKE. WHERE PAVED SHOULDER IS CONSTRUCTED WITHIN 24" IN FRONT OF THE POST, CONSTRUCT VEGETATION CONTROL TO THE EDGE OF PAVED SHOULDER.
4. DIRECTION OF ADJACENT TRAFFIC INDICATED BY ⇦ .

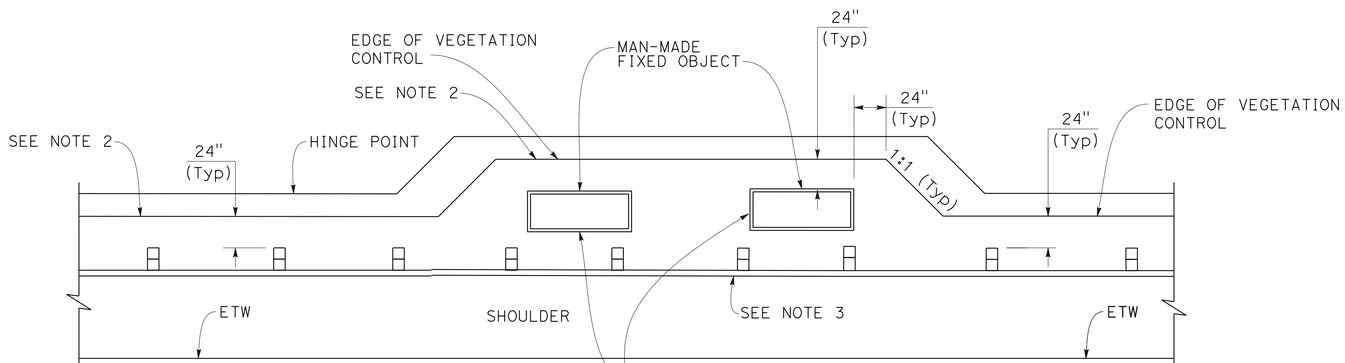

PLAN

FIXED OBJECT(S) ON SHOULDER

CONSTRUCTION DETAILS

MIDWEST GUARDRAIL SYSTEM VEGETATION CONTROL (ASPHALT COMPOSITE) AT FIXED OBJECT

NO SCALE

C-11

STATE OF CALIFORNIA - DEPARTMENT OF TRANSPORTATION
Caltrans® DESIGN

FUNCTIONAL SUPERVISOR: PATRICK T. NG
CALCULATED-DESIGNED BY: GAMINI RANDENI
CHECKED BY: HON MING KONG
REVISED BY: GR
DATE REVISED: 1/8/15

LAST REVISION 12-01-14
DATE PLOTTED => 07-APR-2015
TIME PLOTTED => 16:20

Dist	COUNTY	ROUTE	POST MILES TOTAL PROJECT	SHEET No.	TOTAL SHEETS
04	SM	280	Var	15	92

REGISTERED CIVIL ENGINEER 1/8/15 DATE

2-2-15
PLANS APPROVAL DATE

REGISTERED PROFESSIONAL ENGINEER Pei-Cheng Li No. 53404 Exp. 6-30-15 CIVIL STATE OF CALIFORNIA

THE STATE OF CALIFORNIA OR ITS OFFICERS OR AGENTS SHALL NOT BE RESPONSIBLE FOR THE ACCURACY OR COMPLETENESS OF SCANNED COPIES OF THIS PLAN SHEET.

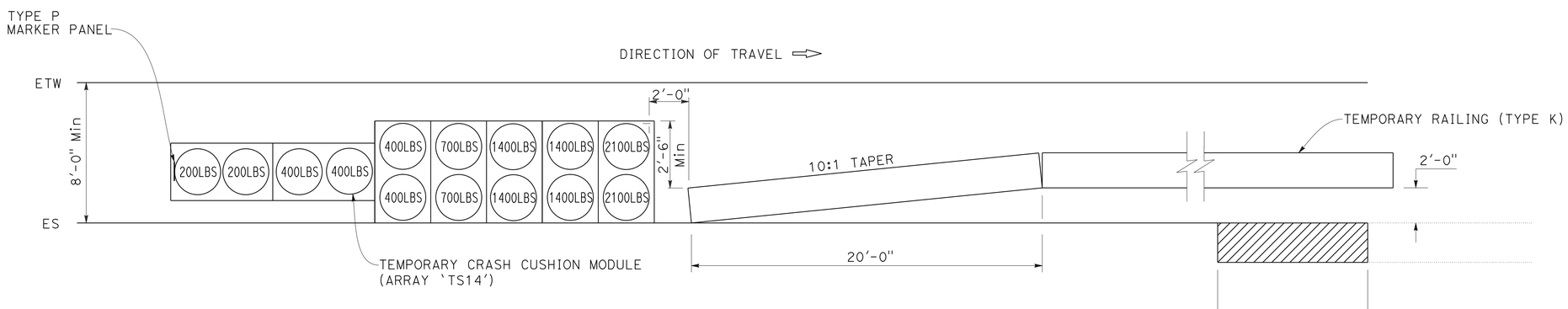

TYPICAL BRIDGE RAILING END PROTECTION

CONSTRUCTION DETAILS

NO SCALE

C-12

STATE OF CALIFORNIA - DEPARTMENT OF TRANSPORTATION
Caltrans® DESIGN

FUNCTIONAL SUPERVISOR: PATRICK T. NG
CALCULATED-DESIGNED BY: GAMINI RANDENI
CHECKED BY: HON MING KONG
REVISED BY: GR
DATE REVISED: 1/8/15

LAST REVISION 12-01-14 | DATE PLOTTED => 07-APR-2015 | TIME PLOTTED => 16:20

Dist	COUNTY	ROUTE	POST MILES TOTAL PROJECT	SHEET No.	TOTAL SHEETS
04	SM	280	Var	16	92

REGISTERED CIVIL ENGINEER DATE 12/31/14

PLANS APPROVAL DATE 2-2-15

REGISTERED PROFESSIONAL ENGINEER Eric K. Wong No. 70259 Exp. 9-30-16 CIVIL STATE OF CALIFORNIA

THE STATE OF CALIFORNIA OR ITS OFFICERS OR AGENTS SHALL NOT BE RESPONSIBLE FOR THE ACCURACY OR COMPLETENESS OF SCANNED COPIES OF THIS PLAN SHEET.

NOTES:

1. Exist DRAINAGE LOCATIONS ARE APPROXIMATE ONLY, VERIFY LOCATION AND ELEVATION BEFORE MODIFYING Exist DRAINAGE FACILITIES.
2. CONTRACTOR SHALL VERIFY ALL CONTROLLING FIELD DIMENSIONS BEFORE ORDERING OR FABRICATING ANY MATERIAL.
3. FOR INLET DETAILS NOT SHOWN, SEE REVISED STANDARD PLAN D73.
4. FOR INLET DEPRESSION DETAILS NOT SHOWN, SEE STANDARD PLAN D78C.

ABBREVIATIONS:

Req'd	REQUIRED
SGD	STANDARD GUTTER DEPRESSION
w/	WITH

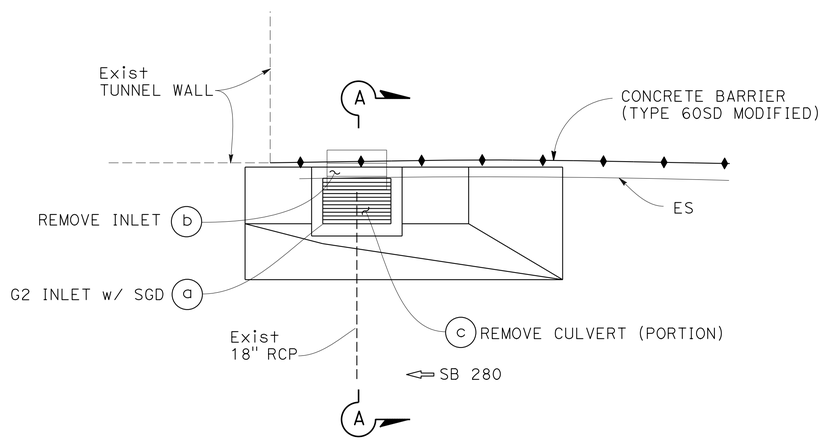

PLAN

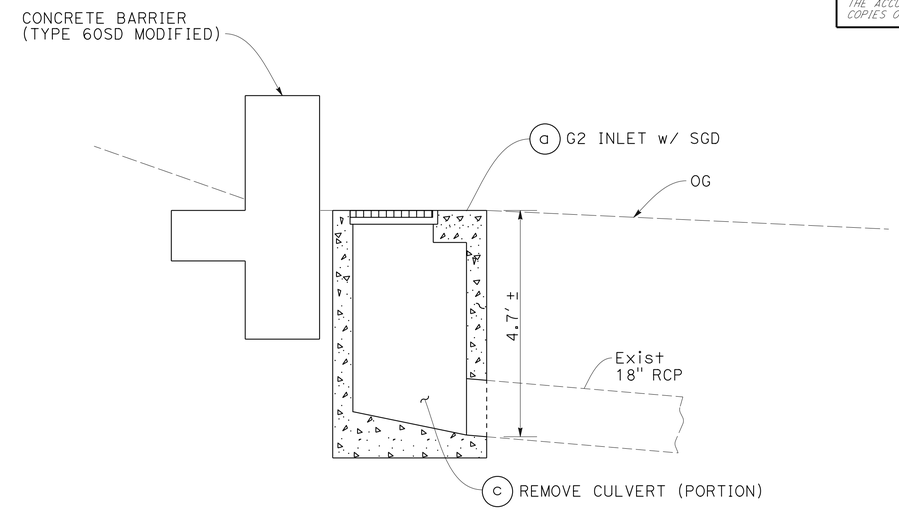

SECTION A-A

LOCATION No. 1

(1) (a) (b) (c)

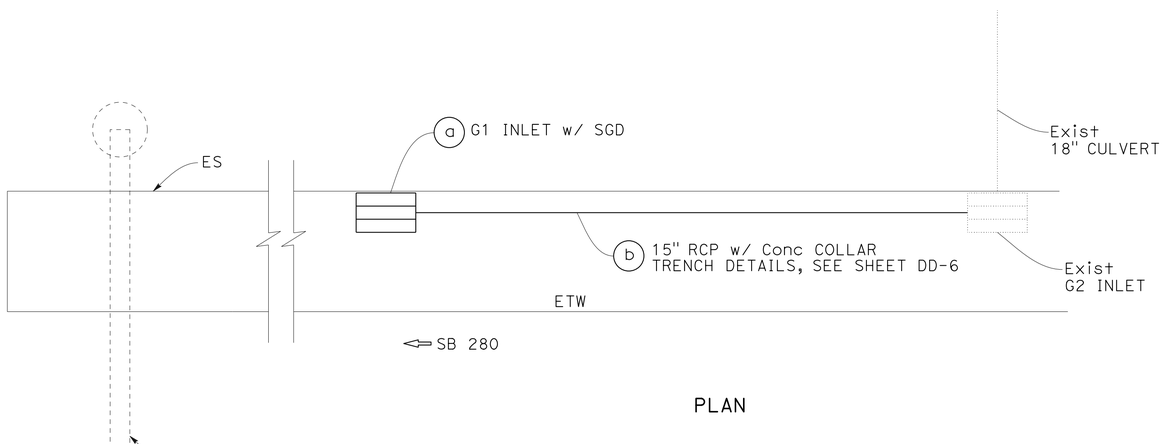

PLAN

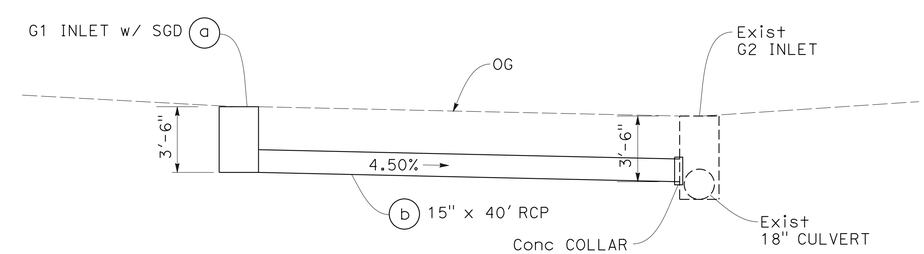

PROFILE

LOCATION No. 8

(2) (a) (b)

DRAINAGE DETAILS

NO SCALE

DD-1

STATE OF CALIFORNIA - DEPARTMENT OF TRANSPORTATION

Caltrans® HYDRAULICS

FUNCTIONAL SUPERVISOR: DIXON LAU

CALCULATED-DESIGNED BY: ERIC K. WONG

CHECKED BY: DIXON LAU

REVISED BY: EKW

DATE REVISED: 12/31/14

LAST REVISION 12-31-14

DATE PLOTTED => 07-APR-2015

TIME PLOTTED => 16:20

Dist	COUNTY	ROUTE	POST MILES TOTAL PROJECT	SHEET No.	TOTAL SHEETS
04	SM	280	Var	17	92

REGISTERED CIVIL ENGINEER DATE 12/31/14

2-2-15
PLANS APPROVAL DATE

REGISTERED PROFESSIONAL ENGINEER Eric K. Wong No. 70259 Exp. 9-30-16 CIVIL STATE OF CALIFORNIA

THE STATE OF CALIFORNIA OR ITS OFFICERS OR AGENTS SHALL NOT BE RESPONSIBLE FOR THE ACCURACY OR COMPLETENESS OF SCANNED COPIES OF THIS PLAN SHEET.

NOTES: (THIS SHEET ONLY)

1. CUTOFF WALL REQUIRED AT THE BEGINNING OF ALL PAVED DITCHES.
2. NO CUTOFF WALL REQUIRED WHEREVER PAVED DITCH TERMINATES AT A DRAINAGE STRUCTURE.
3. KEYS TO BE PLACED AT 150′ INTERVALS OR AS DIRECTED BY THE ENGINEER.
4. FOR INLET DETAILS NOT SHOWN, SEE REVISED STANDARD PLAN D73.
5. FOR INLET DEPRESSION DETAILS NOT SHOWN, SEE STANDARD PLAN D78C.

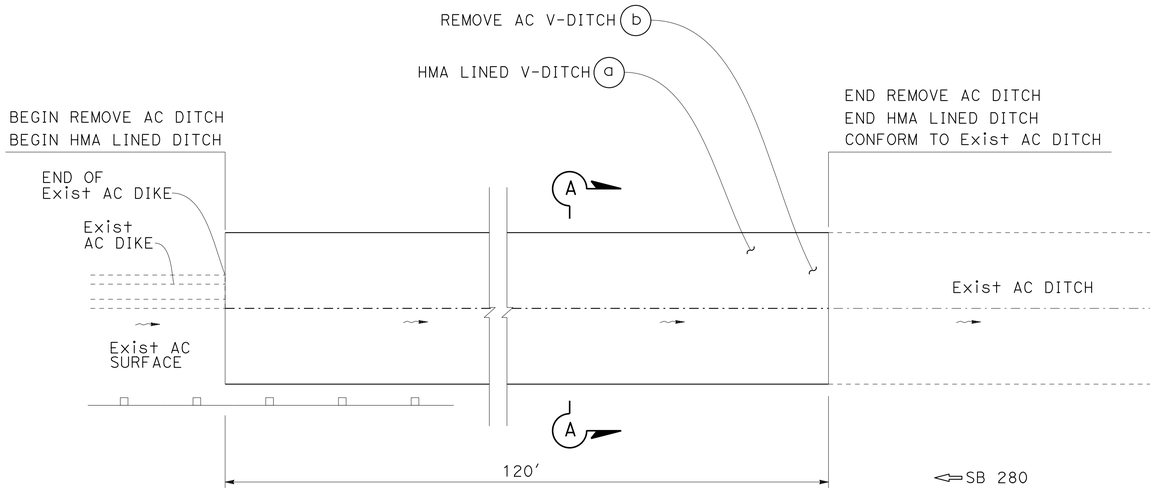

PLAN

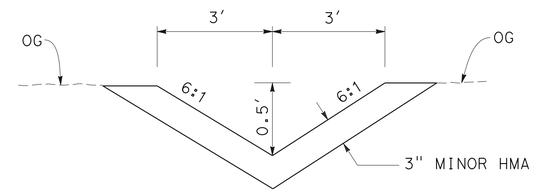

SECTION A-A

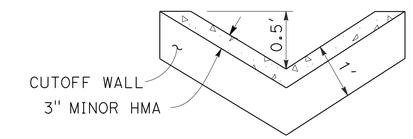

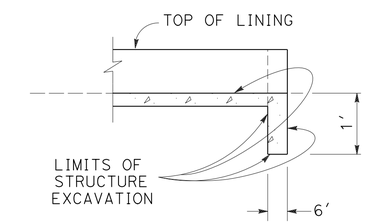

LONGITUDINAL SECTION

LOCATION No. 10

(3) (a) (b)

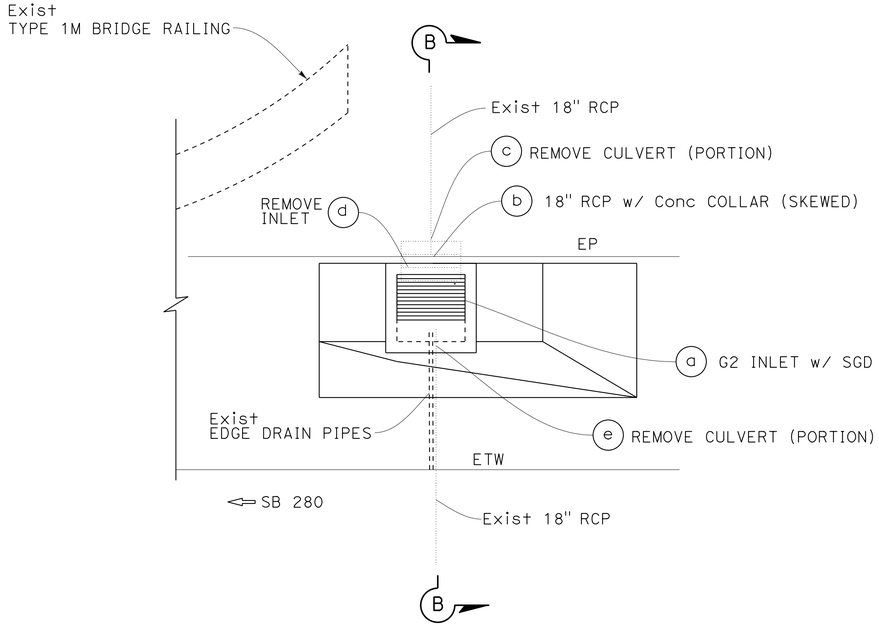

PLAN

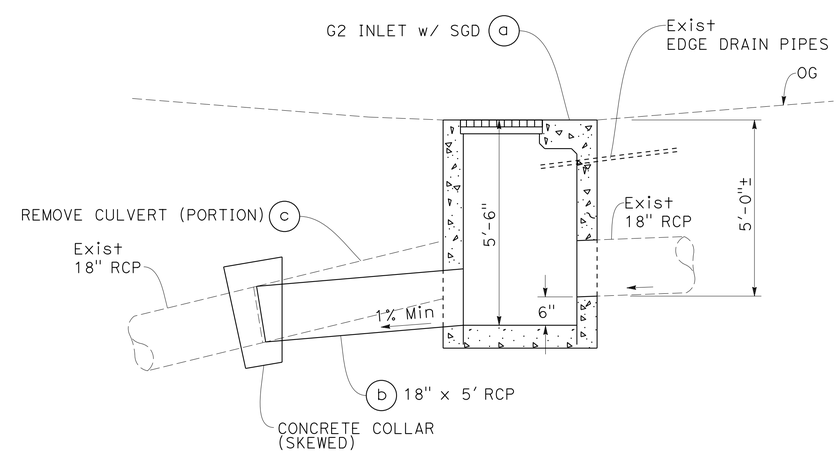

SECTION B-B

LOCATION No. 12

(4) (a) (b) (c) (d) (e)

FOR NOTES AND ABBREVIATIONS, SEE SHEET DD-1

DRAINAGE DETAILS

NO SCALE

DD-2

STATE OF CALIFORNIA - DEPARTMENT OF TRANSPORTATION
Caltrans® HYDRAULICS

FUNCTIONAL SUPERVISOR: DIXON LAU
CALCULATED-DESIGNED BY: ERIC K. WONG
CHECKED BY: DIXON LAU
REVISED BY: EKW
DATE REVISED: 12/31/14

LAST REVISION 12-31-14 | DATE PLOTTED => 07-APR-2015 | TIME PLOTTED => 16:21

Dist	COUNTY	ROUTE	POST MILES TOTAL PROJECT	SHEET No.	TOTAL SHEETS
04	SM	280	Var	18	92

REGISTERED CIVIL ENGINEER DATE 12/31/14

2-2-15
PLANS APPROVAL DATE

REGISTERED PROFESSIONAL ENGINEER Eric K. Wong No. 70259 Exp. 9-30-16 CIVIL STATE OF CALIFORNIA

THE STATE OF CALIFORNIA OR ITS OFFICERS OR AGENTS SHALL NOT BE RESPONSIBLE FOR THE ACCURACY OR COMPLETENESS OF SCANNED COPIES OF THIS PLAN SHEET.

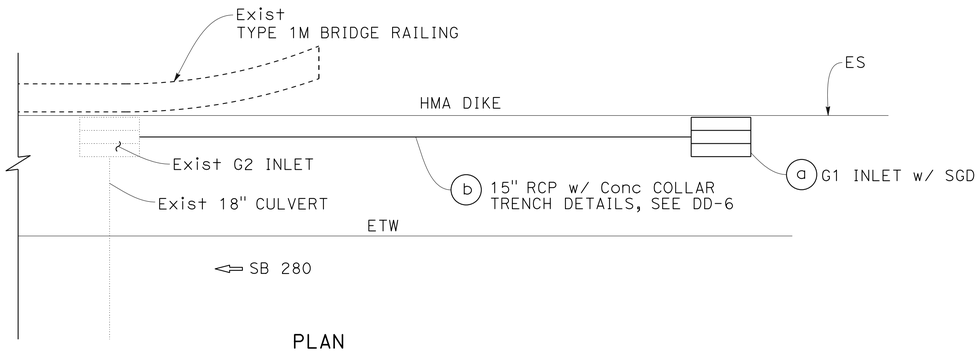

PLAN

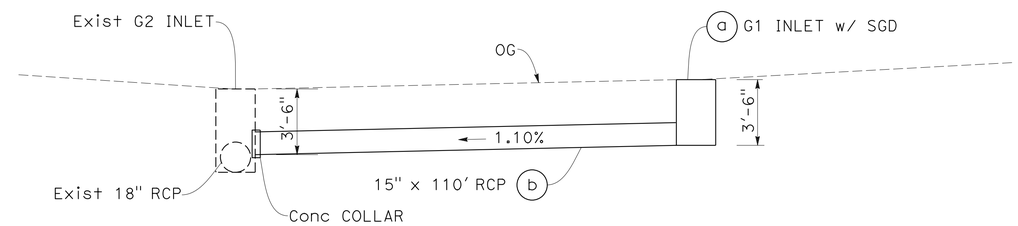

PROFILE

LOCATION No. 22

5 a b

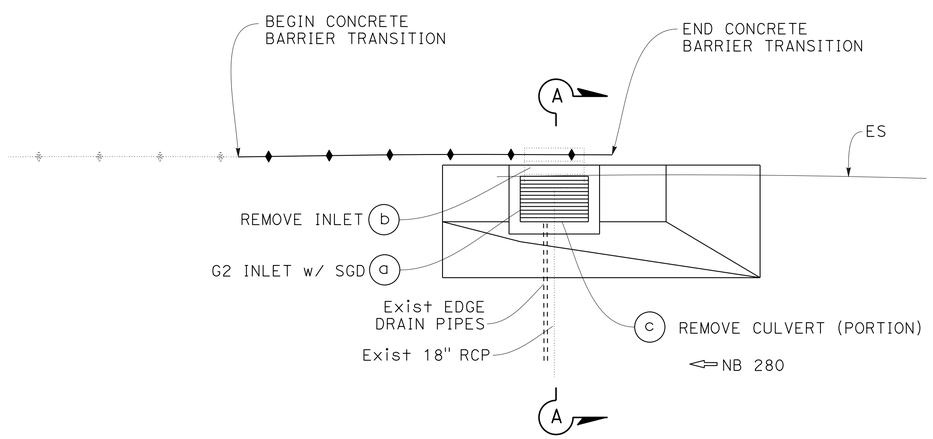

PLAN

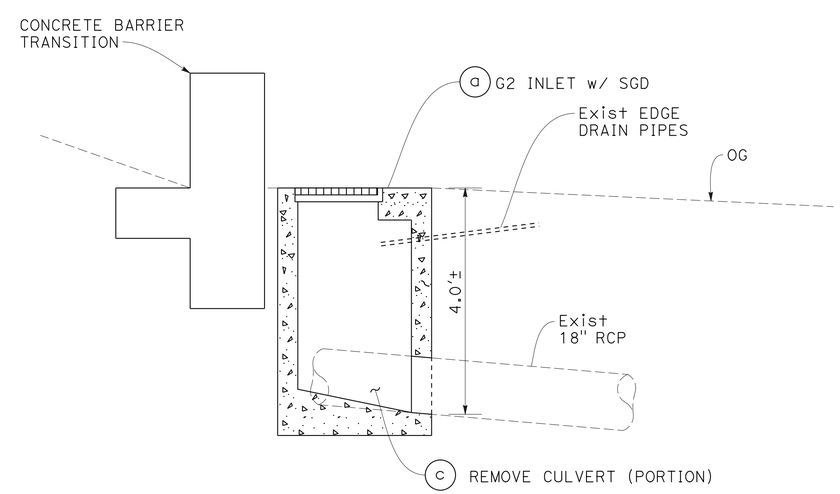

SECTION A-A

LOCATION No. 31

6 a b c

FOR NOTES AND ABBREVIATIONS, SEE SHEET DD-1

DRAINAGE DETAILS

NO SCALE

DD-3

REVISED BY	DATE REVISED
EKW	12/31/14

CALCULATED-DESIGNED BY: ERIC K. WONG
CHECKED BY: DIXON LAU
FUNCTIONAL SUPERVISOR: DIXON LAU

STATE OF CALIFORNIA - DEPARTMENT OF TRANSPORTATION
Caltrans
HYDRAULICS

LAST REVISION 12-31-14
DATE PLOTTED => 07-APR-2015
TIME PLOTTED => 16:21

Dist	COUNTY	ROUTE	POST MILES TOTAL PROJECT	SHEET No.	TOTAL SHEETS
04	SM	280	Var	19	92

REGISTERED CIVIL ENGINEER 12/31/14 DATE

2-2-15
PLANS APPROVAL DATE

REGISTERED PROFESSIONAL ENGINEER Eric K. Wong No. 70259 Exp. 9-30-16 CIVIL STATE OF CALIFORNIA

THE STATE OF CALIFORNIA OR ITS OFFICERS OR AGENTS SHALL NOT BE RESPONSIBLE FOR THE ACCURACY OR COMPLETENESS OF SCANNED COPIES OF THIS PLAN SHEET.

NOTES: (THIS SHEET ONLY)

1. SEE REVISED STANDARD PLANS D77A AND D77B FOR ADDITIONAL FRAME AND GRATE DETAILS.
2. SEE NOTES FOR REVISED STANDARD PLAN D73 AND STANDARD PLAN D74B.
3. FOR "T" WALL THICKNESS, SEE TABLE B.

CONCRETE QUANTITIES TABLE B

TYPE	H=3'-0" TO 8'-0" (T= 6")		H=8'-1"TO 20'-0" (T= 8")	
	H=3'-0" (CY)	ADDITIONAL PCC PER FOOT (CY)	H=8'-1" (CY)	ADDITIONAL PCC PER FOOT (CY)
GD2	2.84	0.552	6.15	0.615

TABLE BASED ON 8" FLOOR SLAB. NO DEDUCTIONS OR ADJUSTMENTS ARE TO BE MADE TO THESE QUANTITIES BECAUSE OF PIPE OPENINGS, DIFFERENT FLOOR ALTERNATIVES OR DIFFERENT CURB TYPES.

QUANTITIES FOR TYPE GD2 INLETS BASED ON Min INTERIOR DIMENSIONS SHOWN.

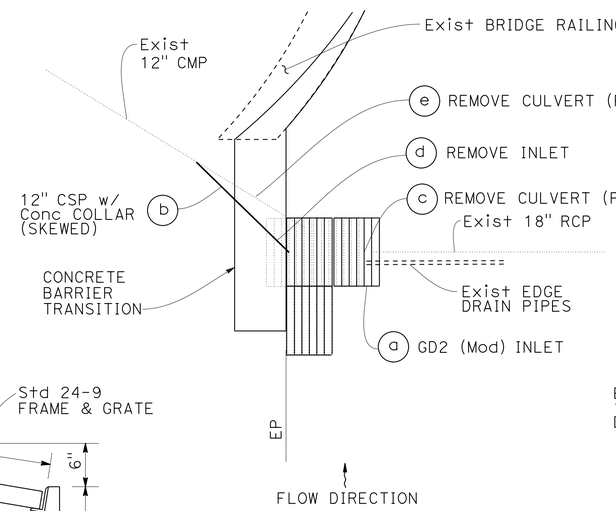

PLAN

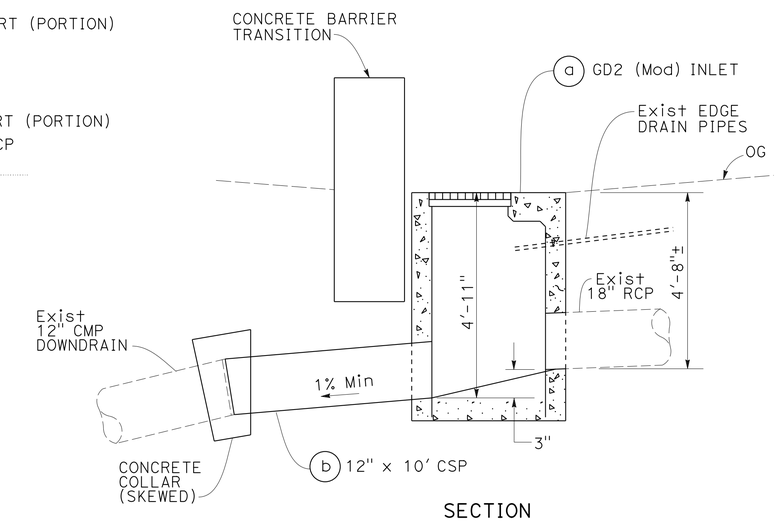

SECTION

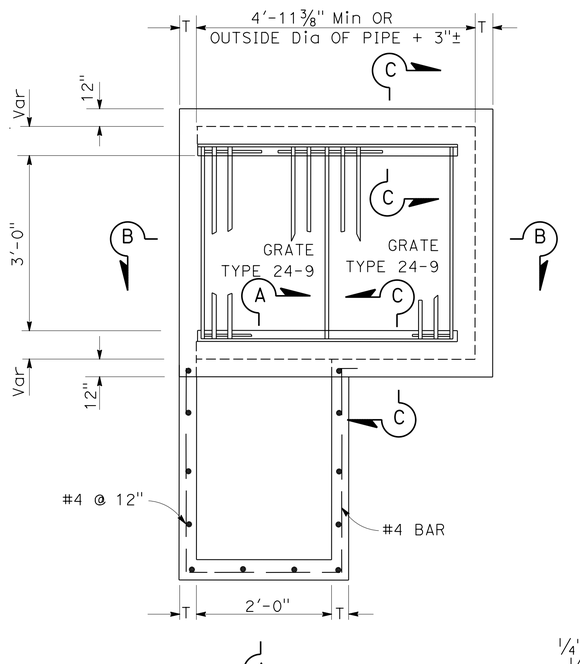

PLAN

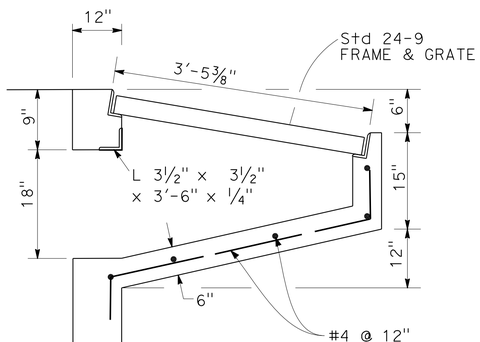

SECTION A-A

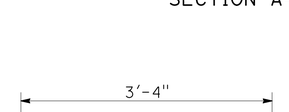

LONGITUDINAL SECTION

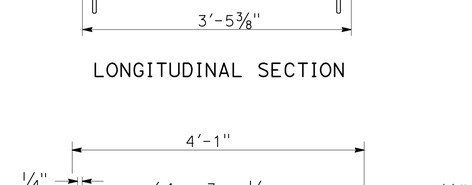

ANCHOR PLACEMENT

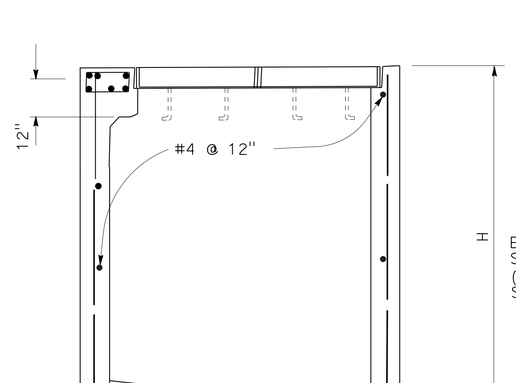

SECTION B-B
TYPE GD2 INLET

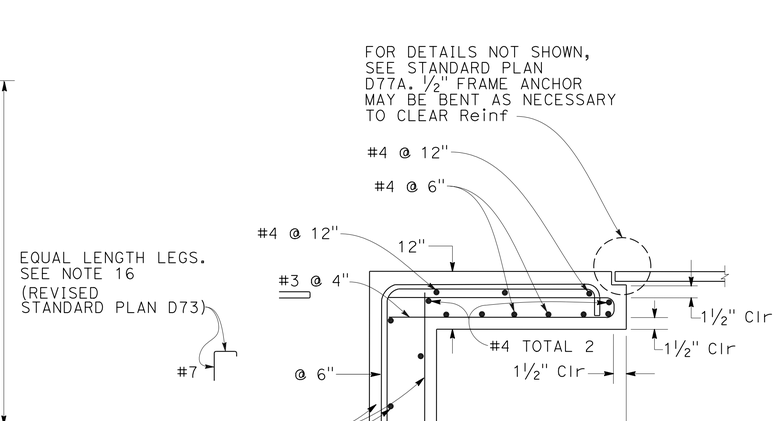

SECTION C-C

FOR NOTES AND ABBREVIATIONS, SEE SHEET DD-1

LOCATION No. 36

(7) (a) (b) (c) (d) (e)

DRAINAGE DETAILS

NO SCALE

DD-4

STATE OF CALIFORNIA - DEPARTMENT OF TRANSPORTATION
Caltrans
HYDRAULICS

FUNCTIONAL SUPERVISOR: DIXON LAU
CALCULATED-DESIGNED BY: ERIC K. WONG
CHECKED BY: DIXON LAU
REVISED BY: EKW
DATE REVISED: 12/31/14

LAST REVISION 12-31-14 | DATE PLOTTED => 07-APR-2015 | TIME PLOTTED => 16:21

Dist	COUNTY	ROUTE	POST MILES TOTAL PROJECT	SHEET No.	TOTAL SHEETS
04	SM	280	Var	20	92

REGISTERED CIVIL ENGINEER DATE 12/31/14

PLANS APPROVAL DATE 2-2-15

REGISTERED PROFESSIONAL ENGINEER Eric K. Wong No. 70259 Exp. 9-30-16 CIVIL STATE OF CALIFORNIA

THE STATE OF CALIFORNIA OR ITS OFFICERS OR AGENTS SHALL NOT BE RESPONSIBLE FOR THE ACCURACY OR COMPLETENESS OF SCANNED COPIES OF THIS PLAN SHEET.

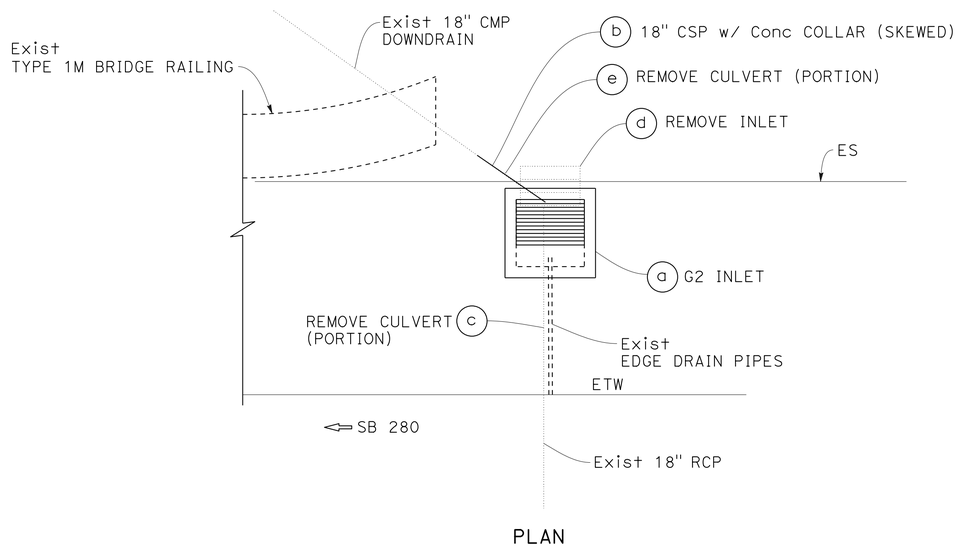

PLAN

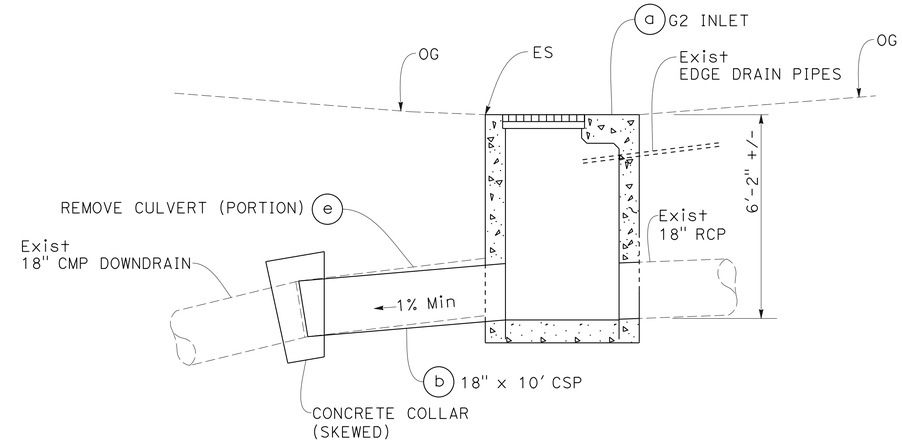

SECTION

LOCATION No. 45

8 a b c d e

FOR NOTES AND ABBREVIATIONS, SEE SHEET DD-1

DRAINAGE DETAILS

NO SCALE

DD-5

STATE OF CALIFORNIA - DEPARTMENT OF TRANSPORTATION

Caltrans

HYDRAULICS

FUNCTIONAL SUPERVISOR: DIXON LAU

CALCULATED-DESIGNED BY: ERIC K. WONG

CHECKED BY: DIXON LAU

REVISED BY: EKW

DATE REVISED: 12/31/14

LAST REVISION 12-31-14 DATE PLOTTED => 07-APR-2015 TIME PLOTTED => 16:21

Dist	COUNTY	ROUTE	POST MILES TOTAL PROJECT	SHEET No.	TOTAL SHEETS
04	SM	280	Var	21	92

12/31/14
REGISTERED CIVIL ENGINEER DATE

2-2-15
PLANS APPROVAL DATE

REGISTERED PROFESSIONAL ENGINEER Eric K. Wong No. 70259 Exp. 9-30-16 CIVIL STATE OF CALIFORNIA

THE STATE OF CALIFORNIA OR ITS OFFICERS OR AGENTS SHALL NOT BE RESPONSIBLE FOR THE ACCURACY OR COMPLETENESS OF SCANNED COPIES OF THIS PLAN SHEET.

NOTES: (SHOULDER TRENCH PAVING)

1. COMPACTION TO BE AT 95% RELATIVE COMPACTION, SUBJECT TO TESTING.
2. CONCRETE CAP MAY BE "RAPID SET" PCC.
3. ALL TRENCH WORK SUBJECT TO STATE REGULATIONS AND INSPECTION.

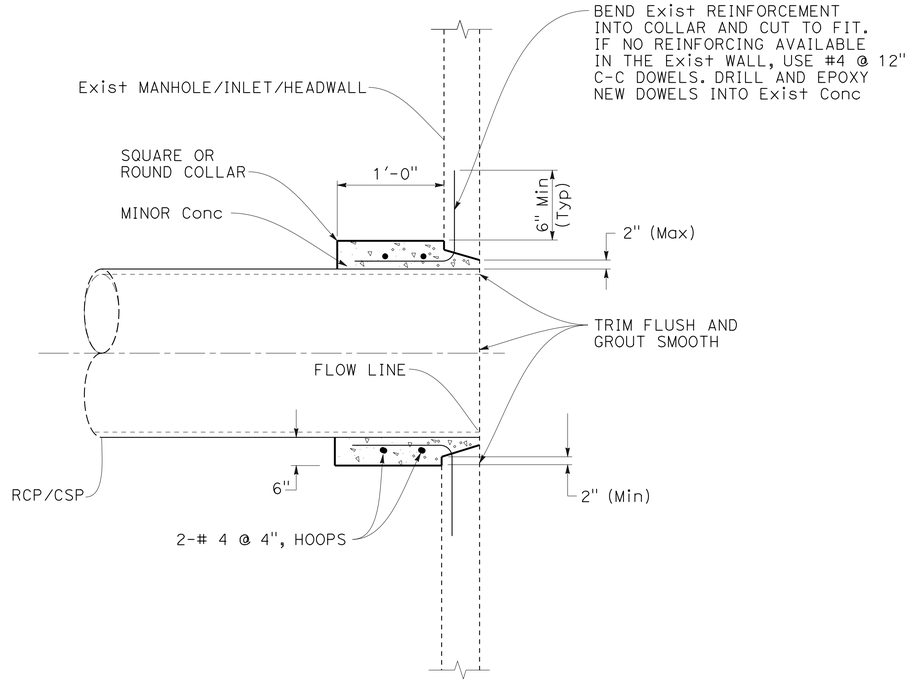

CONCRETE COLLAR
PIPE CONNECTION TO EXISTING INLET, MANHOLE, OR RCB

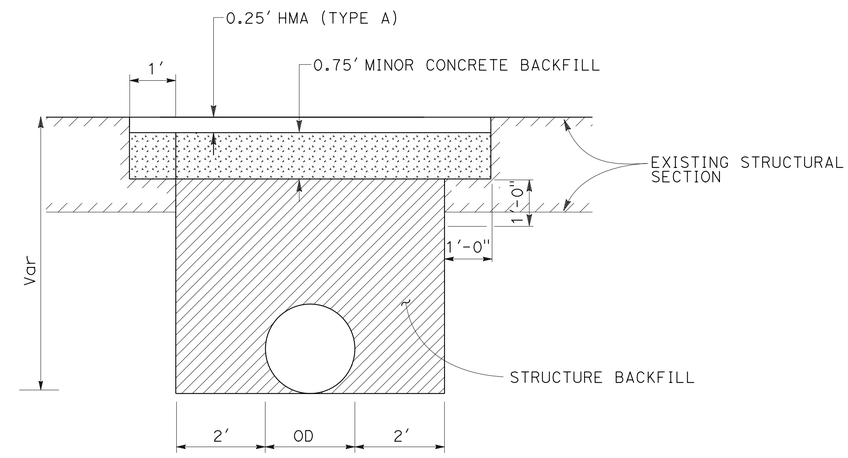

SHOULDER TRENCH PAVING

2 b 5 b

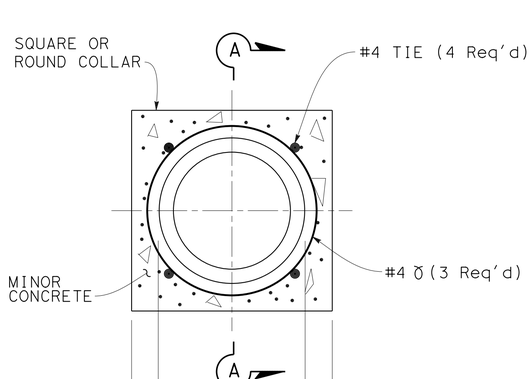

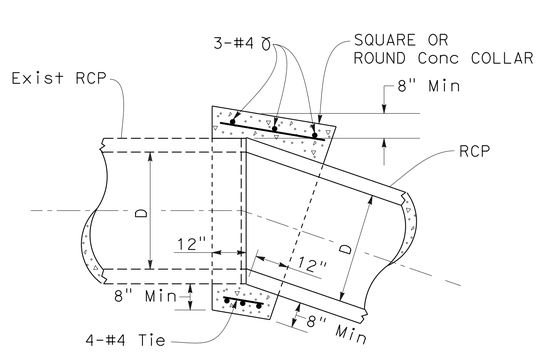

SECTION A-A

CONCRETE COLLAR (SKEWED)

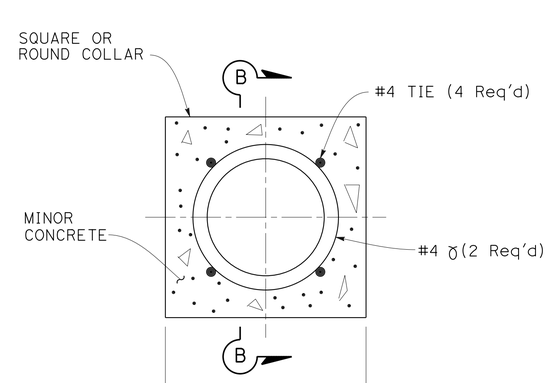

PLAN

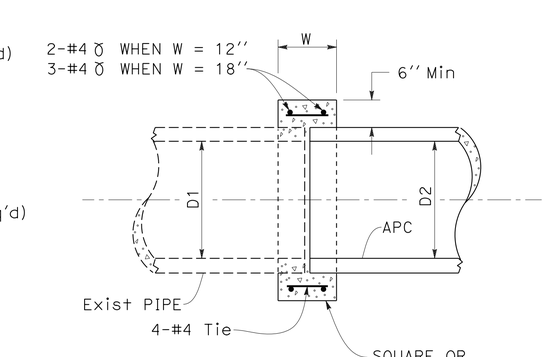

SECTION B-B

CONCRETE COLLAR

FOR NOTES AND ABBREVIATIONS, SEE SHEET DD-1

DRAINAGE DETAILS

NO SCALE

DD-6

STATE OF CALIFORNIA - DEPARTMENT OF TRANSPORTATION	HYDRAULICS	FUNCTIONAL SUPERVISOR	DIXON LAU
CALCULATED-DESIGNED BY	ERIC K. WONG	REVISED BY	EKW
CHECKED BY	DIXON LAU	DATE REVISED	12/31/14

LAST REVISION 12-31-14 | DATE PLOTTED => 07-APR-2015 | TIME PLOTTED => 16:21

NOTE:

1. ALL OFFSETS ARE TO THE CENTER OF GRATE.

ABBREVIATION:

SGD STANDARD GUTTER DEPRESSION

Dist	COUNTY	ROUTE	POST MILES TOTAL PROJECT	SHEET No.	TOTAL SHEETS
04	SM	280	Var	22	92

REGISTERED CIVIL ENGINEER 12/31/14 DATE

2-2-15
PLANS APPROVAL DATE

REGISTERED PROFESSIONAL ENGINEER Eric K. Wong No. 70259 Exp. 9-30-16 CIVIL STATE OF CALIFORNIA

THE STATE OF CALIFORNIA OR ITS OFFICERS OR AGENTS SHALL NOT BE RESPONSIBLE FOR THE ACCURACY OR COMPLETENESS OF SCANNED COPIES OF THIS PLAN SHEET.

DRAINAGE QUANTITIES

DRAINAGE SHEET No.	DRAINAGE SYSTEM No.	DRAINAGE UNIT	MINOR Conc: MINOR STRUCTURE (F)	MINOR Conc: Misc CONSTRUCTION	MINOR Conc: BACKFILL	FRAME GRATE COVER 24-12 (N)	Misc IRON & STEEL (F)	RCP 15"	RCP 18"	CSP 12"	CSP 18"	REMOVE INLET	REMOVE CULVERT: REMOVE 18" RCP	REMOVE CULVERT: REMOVE 12" CMP	REMOVE CULVERT: REMOVE 18" CMP	PIPE JOINT CLASSIFICATION (N)	Max COVER (N)	HEIGHT OF INLET (N)	REMOVE AC SURFACING	PLACE HOT MIX ASPHALT (MISCELLANEOUS AREA)	HOT MIX ASPHALT (TYPE A)	DESCRIPTION	LOCATION	DRAINAGE SYSTEM No.	DRAINAGE UNIT
			CY			EA	LB	LF				EA	LF				FT		SQFT	SQYD	TON				
DD-1	1	a	1.75	1.26		1	326											4.7				G2 INLET w/ SGD	LOCATION No. 1	1	a
		b										1										REMOVE INLET	LOCATION No. 1		b
		c											2									REMOVE CULVERT (PORTION)	LOCATION No. 1		c
DD-1	2	a	1.06	1.26		1	326											3.5				G1 INLET w/ SGD	LOCATION No. 8	2	a
	2	b			5.5			40								S	2.1				8.1	15" RCP w/ Conc COLLAR	LOCATION No. 8	2	b
DD-2	3	a																	744			REMOVE AC V-DITCH	LOCATION No. 10	3	a
	3	b																		83	13.9	HMA LINED V-DITCH	LOCATION No. 10	3	b
DD-2	4	a	1.96	1.26		1	326											5.5				G2 INLET w/ SGD	LOCATION No. 12	4	a
		b							5							S	4.0					18" RCP w/ Conc COLLAR (SKEWED)	LOCATION No. 12		b
		c											4									REMOVE CULVERT (PORTION)	LOCATION No. 12		c
		d										1										REMOVE INLET	LOCATION No. 12		d
		e											2									REMOVE CULVERT (PORTION)	LOCATION No. 12		e
DD-3	5	a	1.06	1.26		1	326											3.5				G1 INLET w/ SGD	LOCATION No. 22	5	a
	5	b			14.9			110								S	2.1				22.2	15" RCP w/ Conc COLLAR	LOCATION No. 22	5	b
DD-3	6	a	1.57	1.26		1	326											4.7				G2 INLET w/ SGD	LOCATION No. 31	6	a
		b										1										REMOVE INLET	LOCATION No. 31		b
		c											1									REMOVE CULVERT (PORTION)	LOCATION No. 31		c
DD-4	7	a	4.40			3	978											4.92				GD2 (Mod) INLET	LOCATION No. 36	7	a
		b								10						S	3.8					12" CSP w/ Conc COLLAR (SKEWED)	LOCATION No. 36		b
		c											2									REMOVE CULVERT (PORTION)	LOCATION No. 36		c
		d										1										REMOVE INLET	LOCATION No. 36		d
		e												9								REMOVE CULVERT (PORTION)	LOCATION No. 36		e
DD-5	8	a	2.12			1	326											6.08				G2 INLET	LOCATION No. 45	8	a
		b									10					S	4.5					18" CSP w/ Conc COLLAR (SKEWED)	LOCATION No. 45		b
		c											2									REMOVE CULVERT (PORTION)	LOCATION No. 45		c
		d										1										REMOVE INLET	LOCATION No. 45		d
		e													9							REMOVE CULVERT (PORTION)	LOCATION No. 45		e
SHEET TOTAL			14.0	6.3	20.4	9	2934	150	5	10	10	5	31						744	83	44.2	(*) SHEET TOTAL			

(N) NOT A SEPARATE PAY ITEM, FOR INFORMATION ONLY
(*) QUANTITY INCLUDED IN SUMMARY OF QUANTITIES SHEET

DRAINAGE QUANTITIES DQ-1

STATE OF CALIFORNIA - DEPARTMENT OF TRANSPORTATION
Caltrans® HYDRAULICS

FUNCTIONAL SUPERVISOR: DIXON LAU
CALCULATED-DESIGNED BY: ERIC K. WONG
CHECKED BY: DIXON LAU
REVISED BY: EKW
DATE REVISED: 12/31/14

LAST REVISION 12-31-14
DATE PLOTTED => 07-APR-2015
TIME PLOTTED => 16:21

Dist	COUNTY	ROUTE	POST MILES TOTAL PROJECT	SHEET No.	TOTAL SHEETS
04	SM	280	Var	23	92

Nabeel Alkhatib 12/30/14
REGISTERED ELECTRICAL ENGINEER DATE

2-2-15
PLANS APPROVAL DATE

REGISTERED PROFESSIONAL ENGINEER
Nabeel F. Alkhatib
No. 17162
Exp. 9-30-15
ELECT
STATE OF CALIFORNIA

THE STATE OF CALIFORNIA OR ITS OFFICERS OR AGENTS SHALL NOT BE RESPONSIBLE FOR THE ACCURACY OR COMPLETENESS OF SCANNED COPIES OF THIS PLAN SHEET.

NOTE:

FOR ACCURATE RIGHT OF WAY DATA, CONTACT RIGHT OF WAY ENGINEERING AT THE DISTRICT OFFICE.

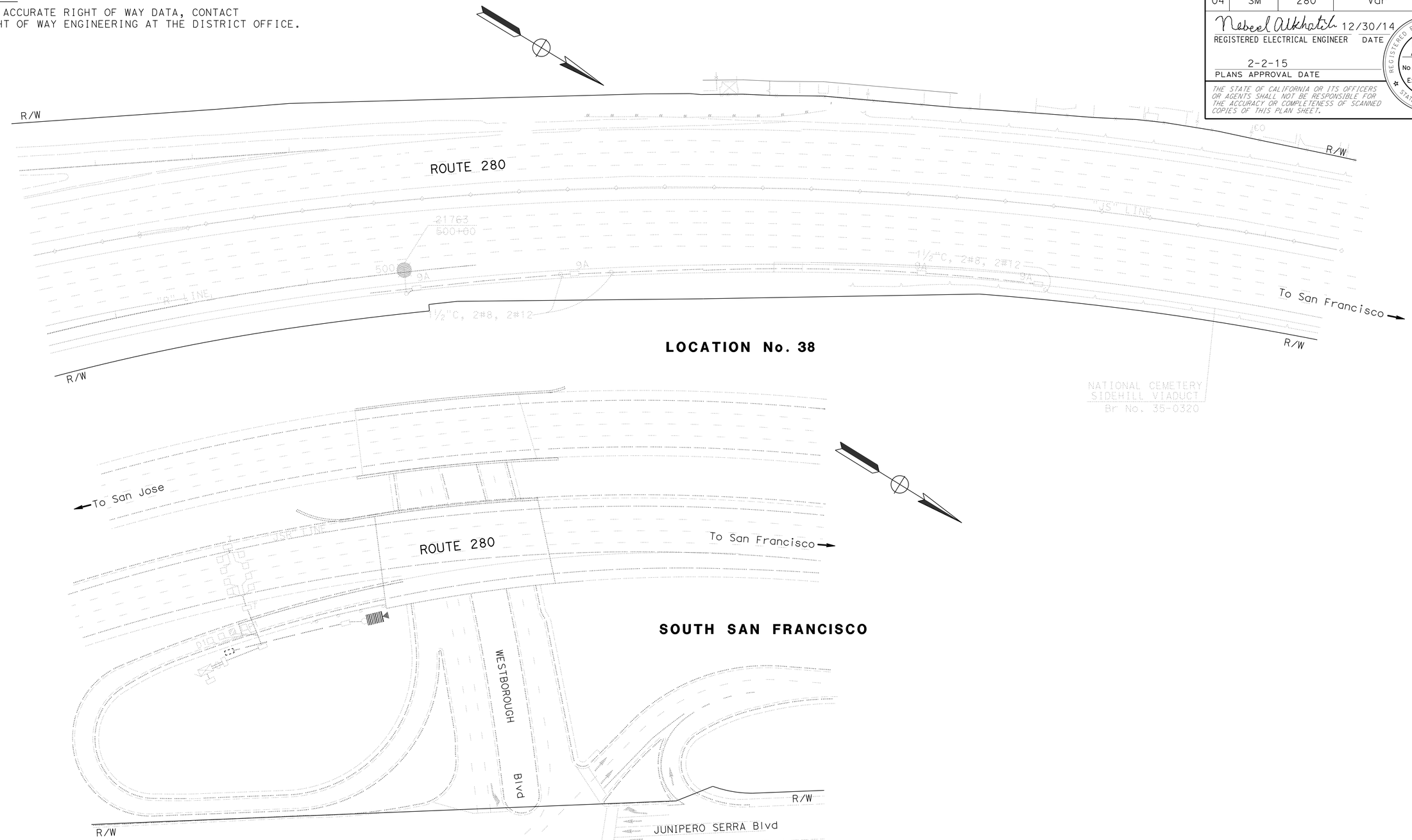

THIS PLAN TO BE USED FOR UTILITY INFORMATION ONLY

UTILITY PLAN

NO SCALE

U-1

STATE OF CALIFORNIA - DEPARTMENT OF TRANSPORTATION	Caltrans® DESIGN
FUNCTIONAL SUPERVISOR	PATRICK T. NG
CALCULATED-DESIGNED BY	GAMINI RANDENI
CHECKED BY	HON MING KONG
REVISED BY	GR
DATE REVISED	12/30/14

LAST REVISION 12-30-14 | DATE PLOTTED => 07-APR-2015 | TIME PLOTTED => 16:21

Dist	COUNTY	ROUTE	POST MILES TOTAL PROJECT	SHEET No.	TOTAL SHEETS
04	SM	280	Var	24	92

Nabeel Alkhatib 12/30/14
REGISTERED ELECTRICAL ENGINEER DATE

2-2-15
PLANS APPROVAL DATE

REGISTERED PROFESSIONAL ENGINEER
Nabeel F. Alkhatib
No. 17162
Exp. 9-30-15
ELECT
STATE OF CALIFORNIA

THE STATE OF CALIFORNIA OR ITS OFFICERS OR AGENTS SHALL NOT BE RESPONSIBLE FOR THE ACCURACY OR COMPLETENESS OF SCANNED COPIES OF THIS PLAN SHEET.

NOTE:

FOR ACCURATE RIGHT OF WAY DATA, CONTACT RIGHT OF WAY ENGINEERING AT THE DISTRICT OFFICE.

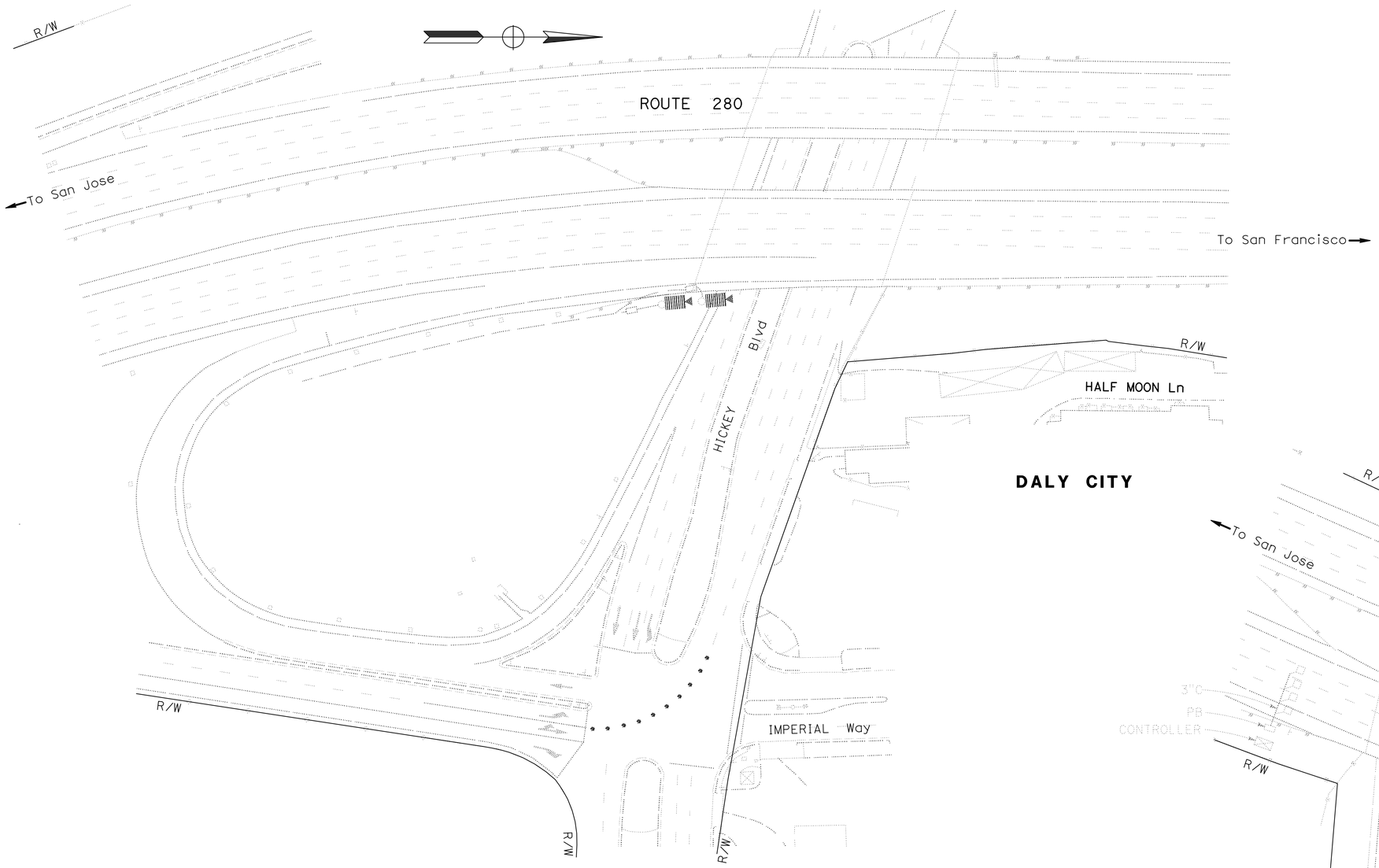

LOCATION No. 43

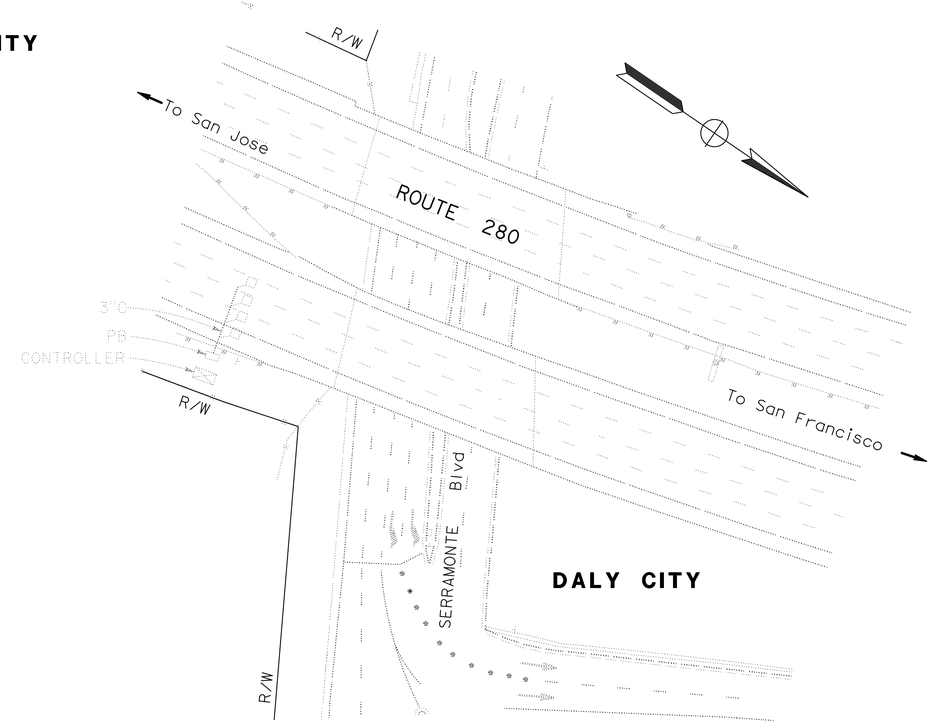

LOCATION No. 45

UTILITY PLAN

NO SCALE

THIS PLAN TO BE USED FOR UTILITY INFORMATION ONLY

U-2

REVISED BY	GR
DATE REVISED	12/30/14
GAMINI RANDENI	
HON MING KONG	
CALCULATED-DESIGNED BY	
CHECKED BY	
FUNCTIONAL SUPERVISOR	
PATRICK T. NG	

STATE OF CALIFORNIA - DEPARTMENT OF TRANSPORTATION
Caltrans
DESIGN

LAST REVISION 12-30-14
DATE PLOTTED => 07-APR-2015
TIME PLOTTED => 16:21

Dist	COUNTY	ROUTE	POST MILES TOTAL PROJECT	SHEET No.	TOTAL SHEETS
04	SM	280	Var	25	92

REGISTERED CIVIL ENGINEER 12/30/14 DATE

2-2-15
PLANS APPROVAL DATE

REGISTERED PROFESSIONAL ENGINEER Jerilyn L. Struven No. 49964 Exp. 12-31-16 CIVIL STATE OF CALIFORNIA

THE STATE OF CALIFORNIA OR ITS OFFICERS OR AGENTS SHALL NOT BE RESPONSIBLE FOR THE ACCURACY OR COMPLETENESS OF SCANNED COPIES OF THIS PLAN SHEET.

NOTE:

1. EXACT LOCATION AND POSITION OF SIGNS WILL BE DETERMINED BY THE ENGINEER.

LEGEND:

No. CONSTRUCTION AREA NUMBER

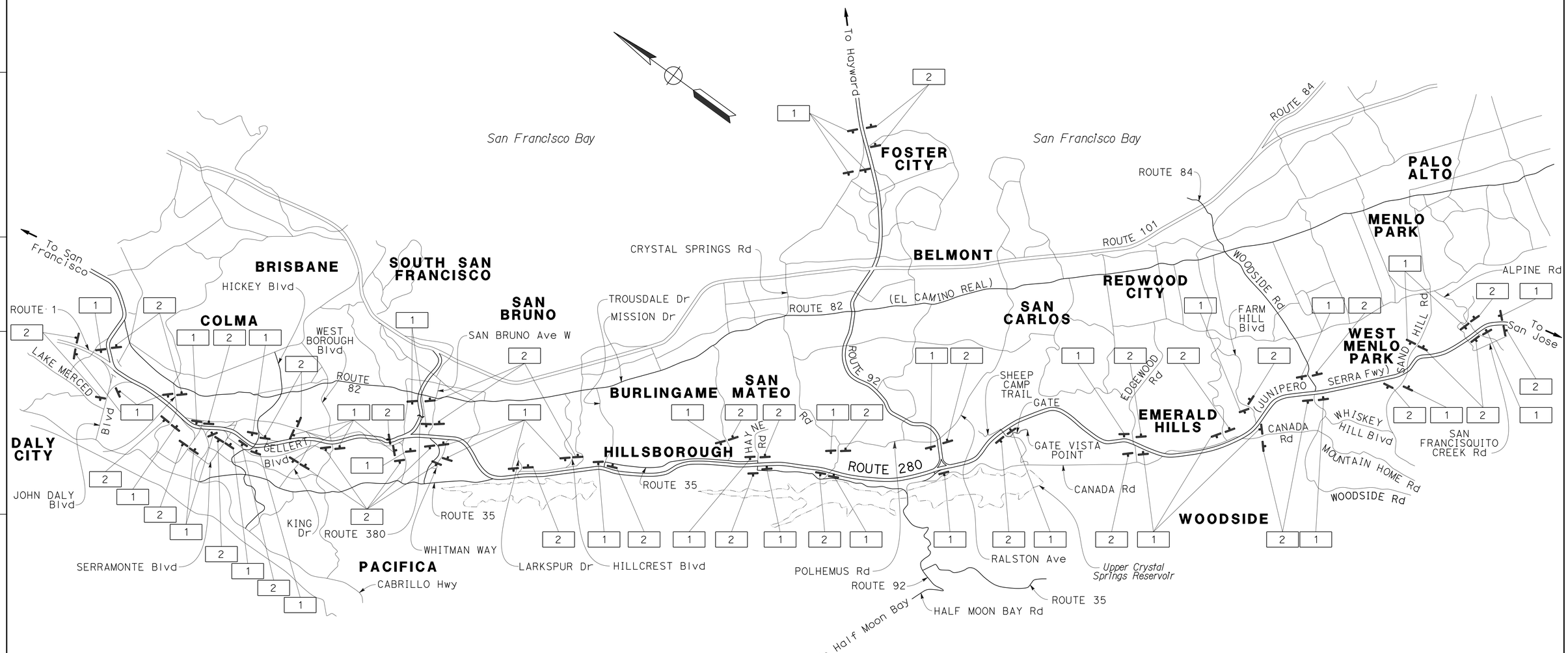

CONSTRUCTION AREA SIGNS

NO SCALE

APPROVED FOR CONSTRUCTION AREA SIGN WORK ONLY

CS-1

FUNCTIONAL SUPERVISOR	ROLAND AU-YEUNG
CALCULATED-DESIGNED BY	STEVE LAU
CHECKED BY	JERILYN L. STRUVEN
REVISED BY	SL
DATE REVISED	12/30/14

STATE OF CALIFORNIA - DEPARTMENT OF TRANSPORTATION

Caltrans®

TRAFFIC

LAST REVISION 12-05-14 | DATE PLOTTED => 07-APR-2015 | TIME PLOTTED => 16:21

Dist	COUNTY	ROUTE	POST MILES TOTAL PROJECT	SHEET No.	TOTAL SHEETS
04	SM	280	Var	26	92

REGISTERED CIVIL ENGINEER 12/30/14 DATE

2-2-15
PLANS APPROVAL DATE

REGISTERED PROFESSIONAL ENGINEER
Jerilyn L. Struven
No. 49964
Exp. 12-31-16
CIVIL
STATE OF CALIFORNIA

THE STATE OF CALIFORNIA OR ITS OFFICERS OR AGENTS SHALL NOT BE RESPONSIBLE FOR THE ACCURACY OR COMPLETENESS OF SCANNED COPIES OF THIS PLAN SHEET.

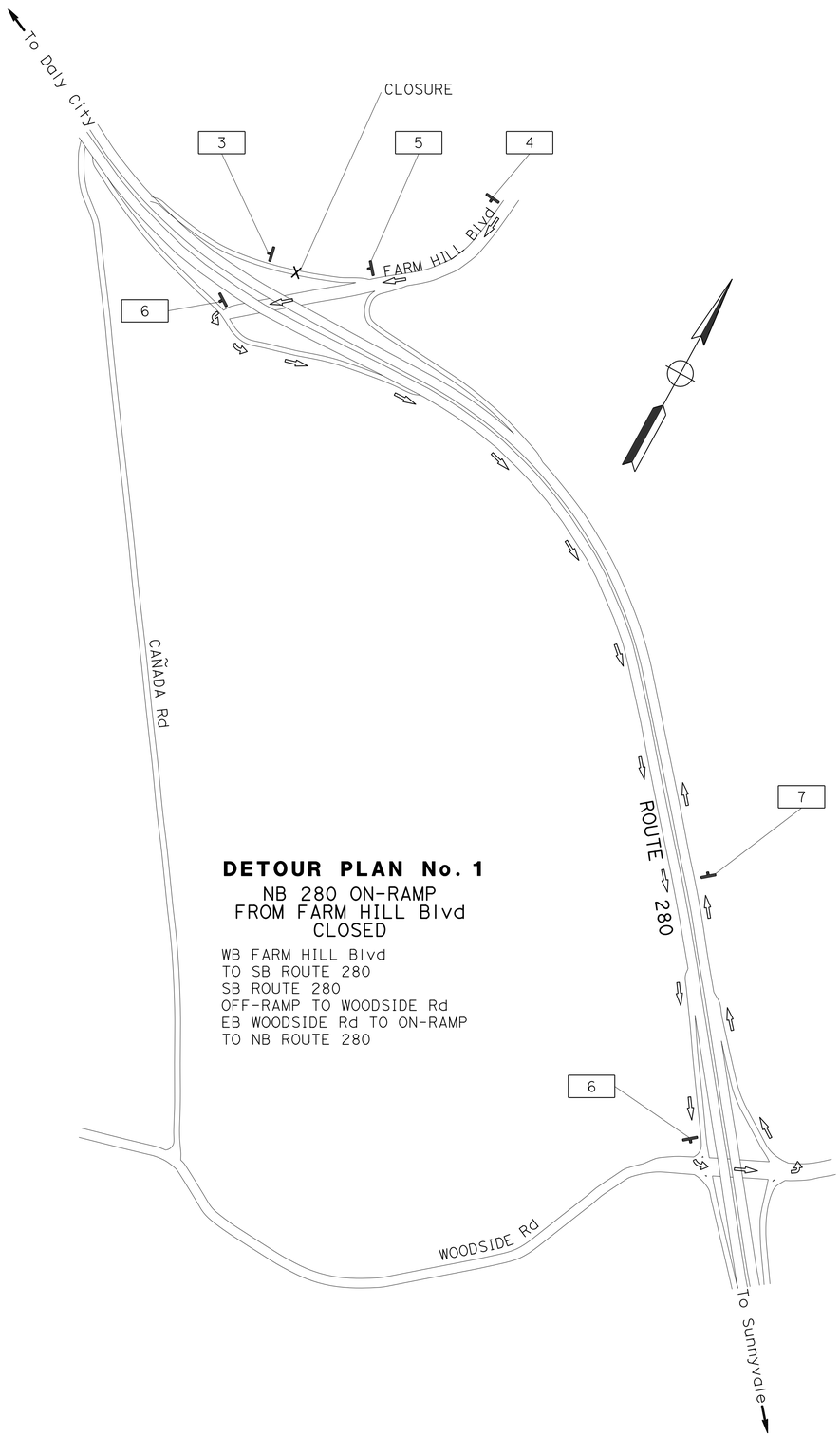

DETOUR PLAN No. 1

NB 280 ON-RAMP
FROM FARM HILL Blvd
CLOSED

WB FARM HILL Blvd
TO SB ROUTE 280
SB ROUTE 280
OFF-RAMP TO WOODSIDE Rd
EB WOODSIDE Rd TO ON-RAMP
TO NB ROUTE 280

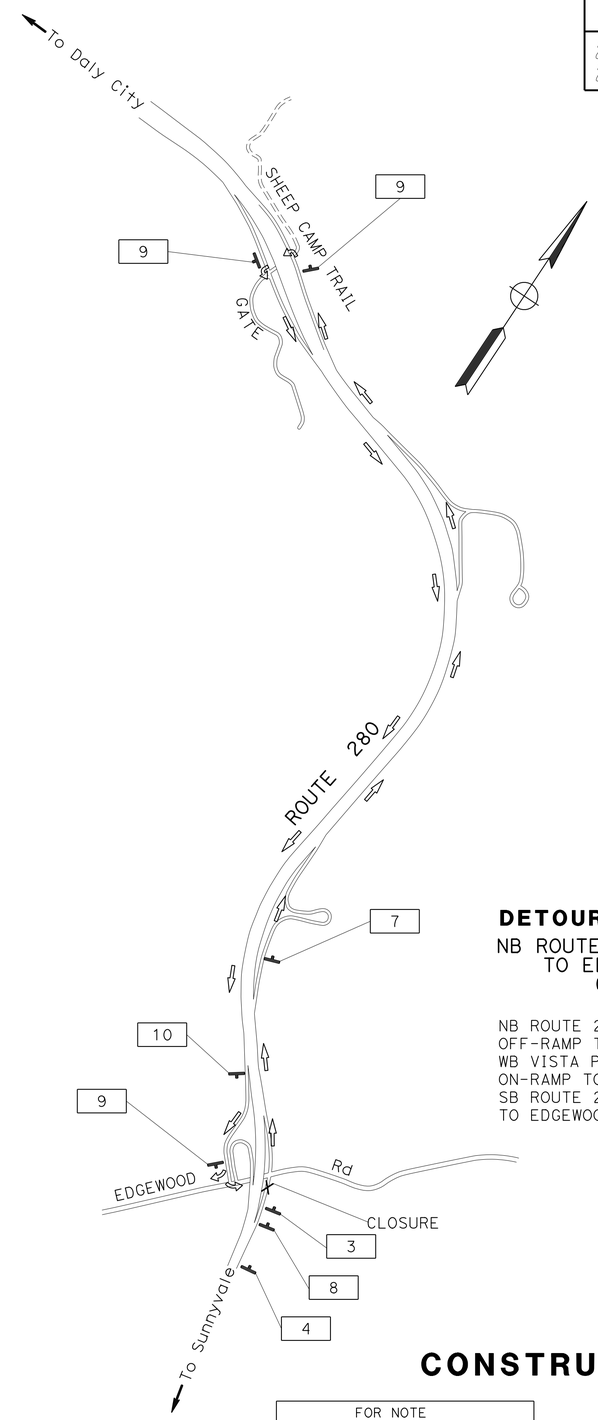

DETOUR PLAN No. 2

NB ROUTE 280 OFF-RAMP
TO EDGEWOOD Rd
CLOSED

NB ROUTE 280
OFF-RAMP TO VISTA POINT/SHEEP CAMP TRAIL
WB VISTA POINT
ON-RAMP TO SB ROUTE 280
SB ROUTE 280 TO OFF-RAMP
TO EDGEWOOD Rd

APPROVED FOR CONSTRUCTION AREA SIGN WORK ONLY

FOR NOTE
AND LEGEND, SEE SHEET CS-1

CONSTRUCTION AREA SIGNS

NO SCALE

CS-2

REVISED BY	SL
DATE REVISED	12/30/14
STEVE LAU	
JERILYN L. STRUVEN	
CALCULATED-DESIGNED BY	
CHECKED BY	
FUNCTIONAL SUPERVISOR	
ROLAND AU-YEUNG	

STATE OF CALIFORNIA - DEPARTMENT OF TRANSPORTATION
Caltrans
TRAFFIC

LAST REVISION 12-05-14 | DATE PLOTTED => 07-APR-2015 | TIME PLOTTED => 16:21

Dist	COUNTY	ROUTE	POST MILES TOTAL PROJECT	SHEET No.	TOTAL SHEETS
04	SM	280	Var	27	92

REGISTERED CIVIL ENGINEER 12/30/14 DATE

2-2-15
PLANS APPROVAL DATE

REGISTERED PROFESSIONAL ENGINEER Jerilyn L. Struven No. 49964 Exp. 12-31-16 CIVIL STATE OF CALIFORNIA

THE STATE OF CALIFORNIA OR ITS OFFICERS OR AGENTS SHALL NOT BE RESPONSIBLE FOR THE ACCURACY OR COMPLETENESS OF SCANNED COPIES OF THIS PLAN SHEET.

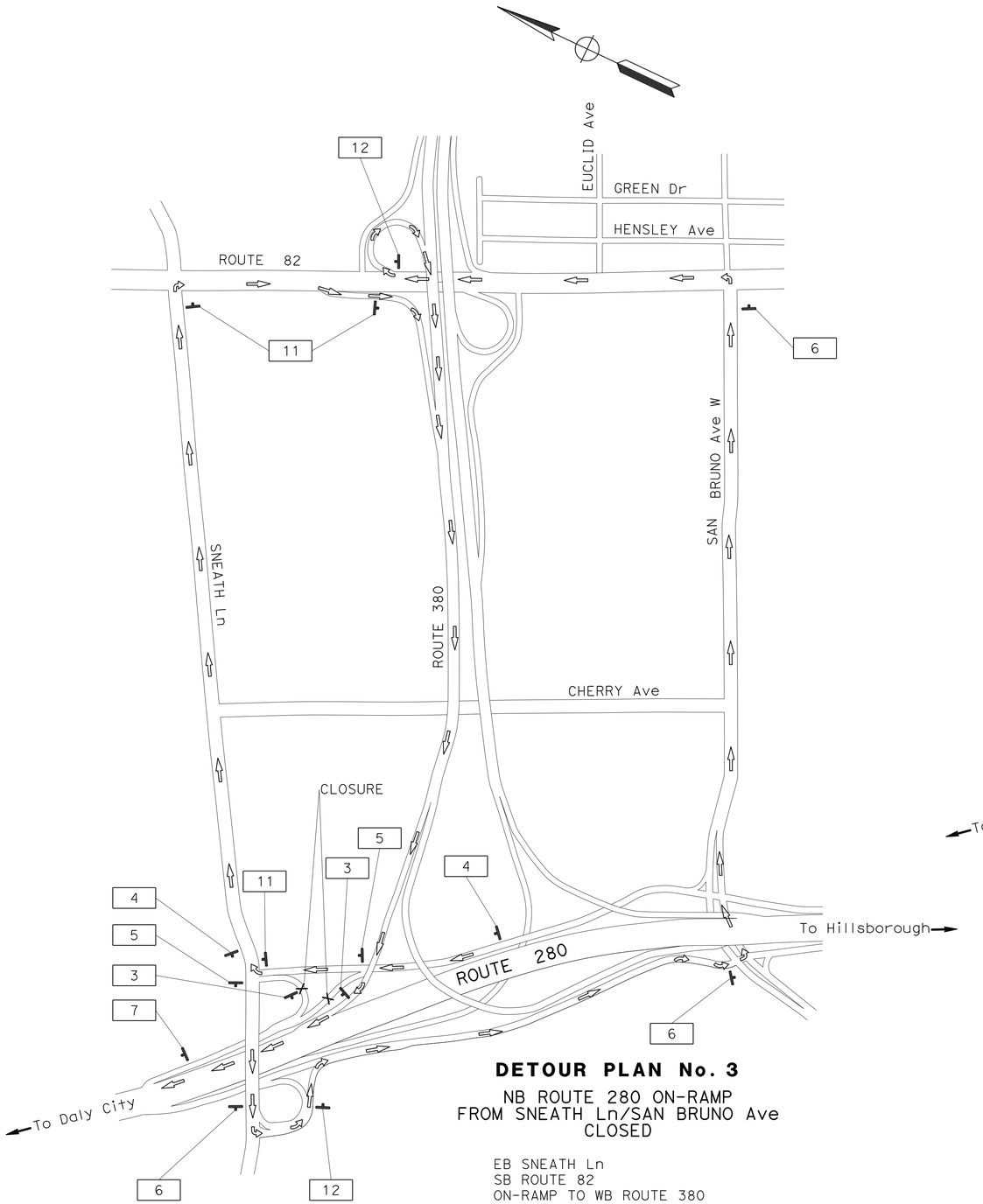

DETOUR PLAN No. 3

NB ROUTE 280 ON-RAMP
FROM SNEATH Ln/SAN BRUNO Ave
CLOSED

EB SNEATH Ln
SB ROUTE 82
ON-RAMP TO WB ROUTE 380
CONNECTOR OFF-RAMP TO NB ROUTE 280

WB SNEATH Ln
SB CONNECTOR RAMP TO SB ROUTE 280/SAN BRUNO Ave
EB SAN BRUNO Ave W
NB ROUTE 82
LOOP ON-RAMP TO WB ROUTE 380
CONNECTOR OFF-RAMP TO NB ROUTE 280

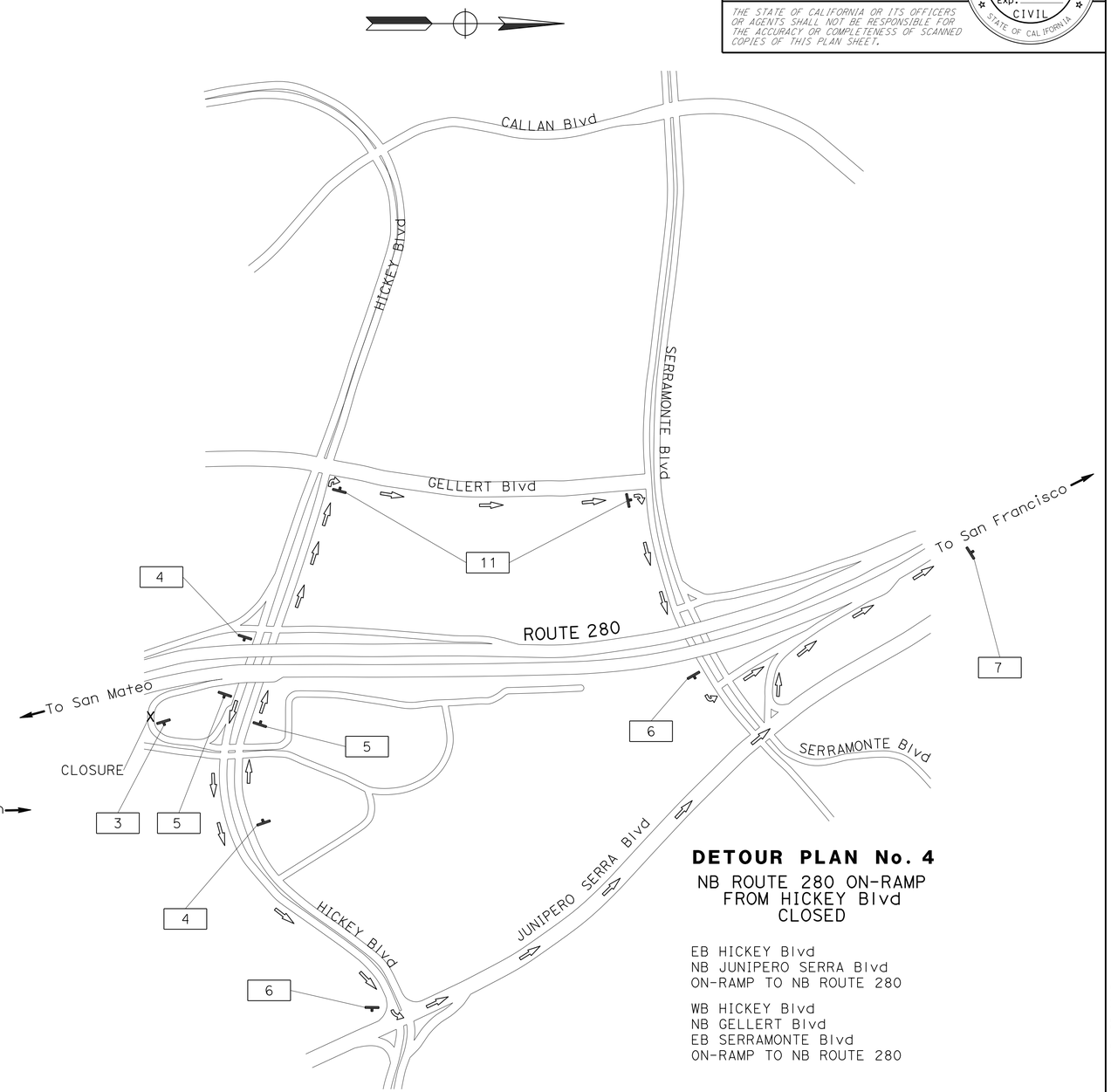

DETOUR PLAN No. 4

NB ROUTE 280 ON-RAMP
FROM HICKEY Blvd
CLOSED

EB HICKEY Blvd
NB JUNIPERO SERRA Blvd
ON-RAMP TO NB ROUTE 280

WB HICKEY Blvd
NB GELLERT Blvd
EB SERRAMONTE Blvd
ON-RAMP TO NB ROUTE 280

CONSTRUCTION AREA SIGNS

NO SCALE

APPROVED FOR CONSTRUCTION AREA SIGN WORK ONLY

FOR NOTE AND LEGEND, SEE SHEET CS-1

CS-3

STATE OF CALIFORNIA - DEPARTMENT OF TRANSPORTATION
Caltrans®
TRAFFIC

FUNCTIONAL SUPERVISOR: ROLAND AU-YEUNG

CALCULATED-DESIGNED BY: STEVE LAU
CHECKED BY: JERILYN L. STRUVEN

REVISED BY: SL
DATE REVISED: 12/30/14

LAST REVISION 12-19-14 | DATE PLOTTED => 07-APR-2015 | TIME PLOTTED => 16:21

Dist	COUNTY	ROUTE	POST MILES TOTAL PROJECT	SHEET No.	TOTAL SHEETS
04	SM	280	Var	28	92

REGISTERED CIVIL ENGINEER 12/30/14 DATE

2-2-15
PLANS APPROVAL DATE

REGISTERED PROFESSIONAL ENGINEER Jerilyn L. Struven No. 49964 Exp. 12-31-16 CIVIL STATE OF CALIFORNIA

THE STATE OF CALIFORNIA OR ITS OFFICERS OR AGENTS SHALL NOT BE RESPONSIBLE FOR THE ACCURACY OR COMPLETENESS OF SCANNED COPIES OF THIS PLAN SHEET.

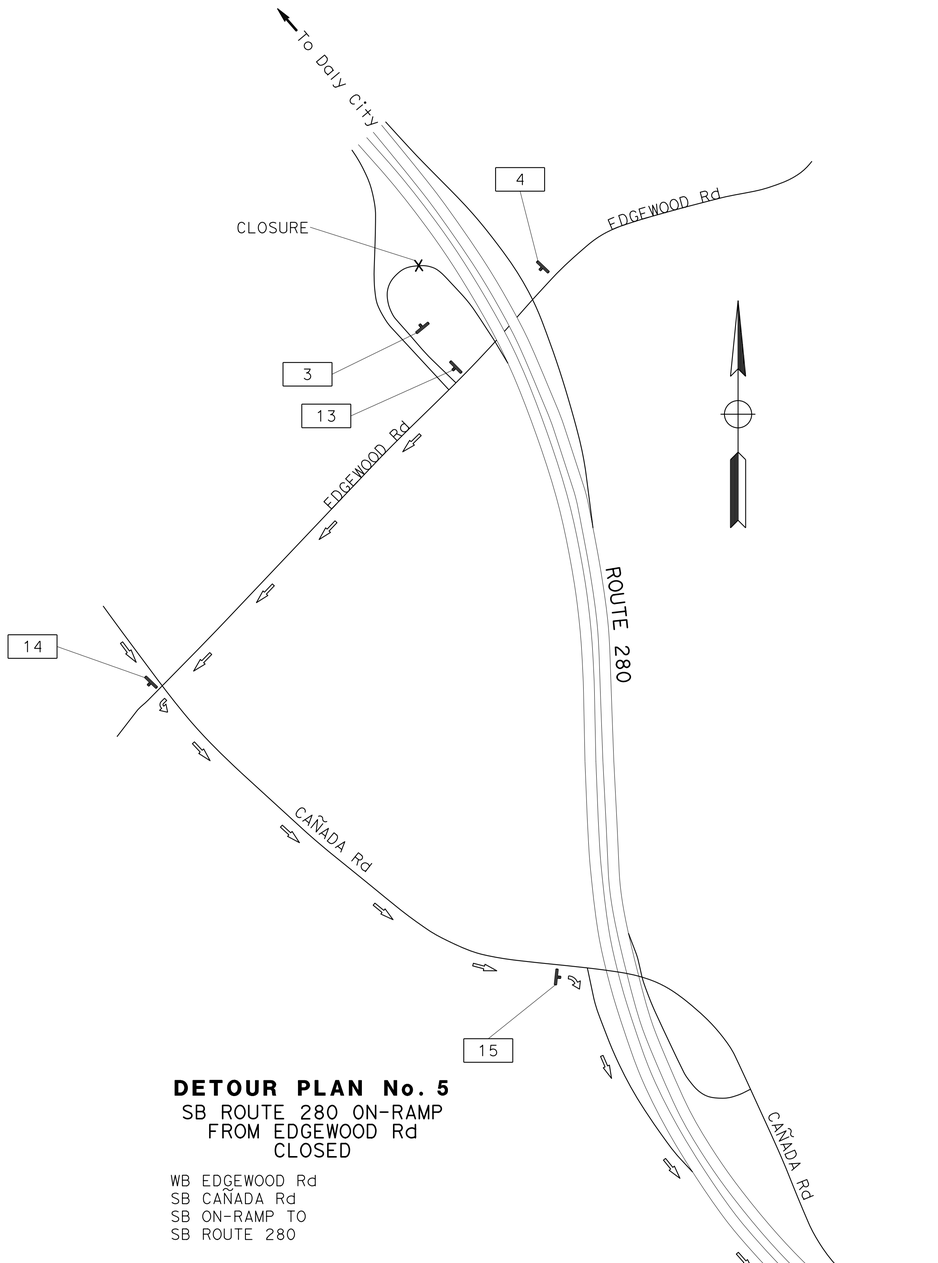

DETOUR PLAN No. 5
SB ROUTE 280 ON-RAMP
FROM EDGEWOOD Rd
CLOSED

WB EDGEWOOD Rd
SB CAÑADA Rd
SB ON-RAMP TO
SB ROUTE 280

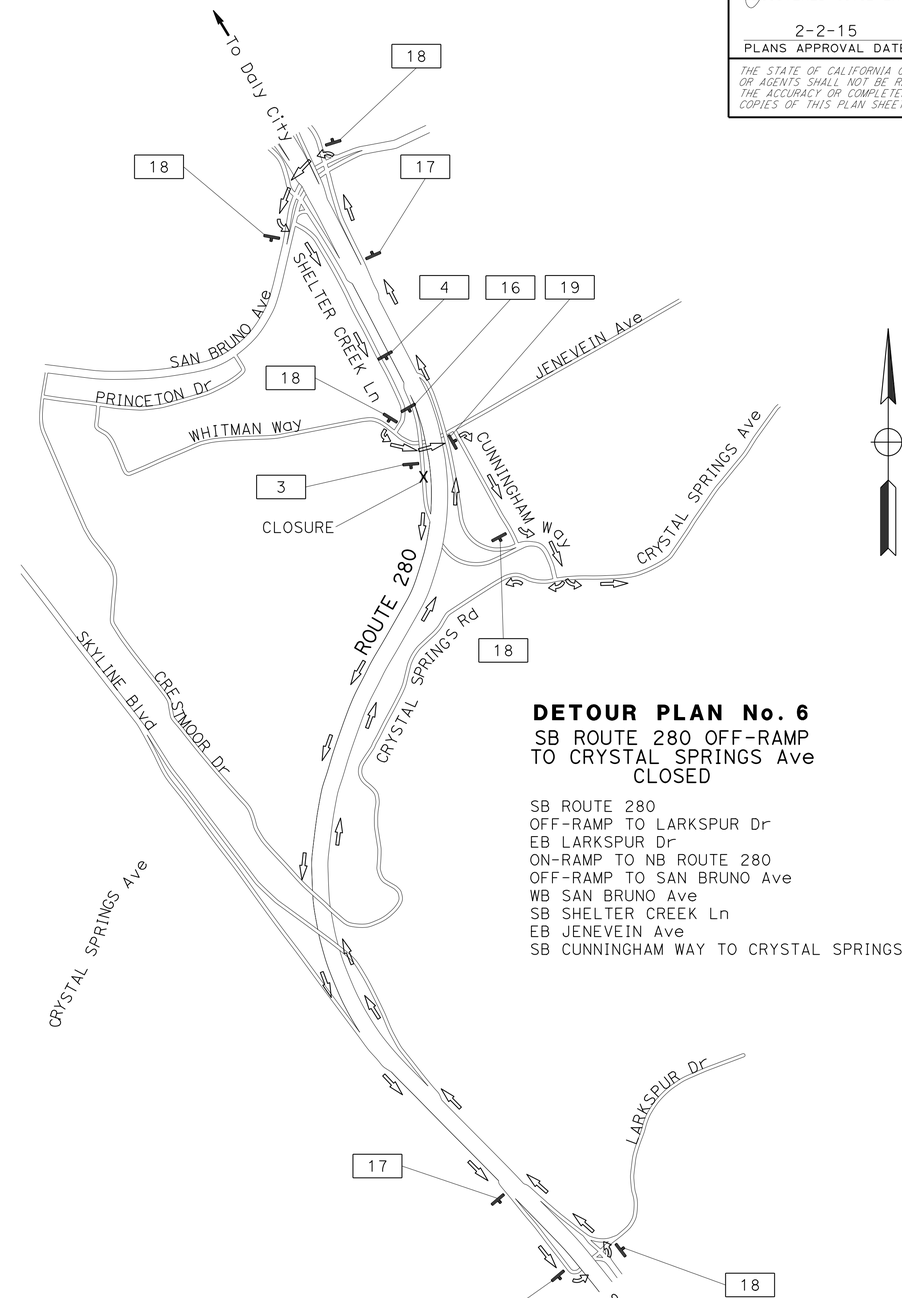

DETOUR PLAN No. 6
SB ROUTE 280 OFF-RAMP
TO CRYSTAL SPRINGS Ave
CLOSED

SB ROUTE 280
OFF-RAMP TO LARKSPUR Dr
EB LARKSPUR Dr
ON-RAMP TO NB ROUTE 280
OFF-RAMP TO SAN BRUNO Ave
WB SAN BRUNO Ave
SB SHELTER CREEK Ln
EB JENEVEIN Ave
SB CUNNINGHAM WAY TO CRYSTAL SPRINGS Ave

APPROVED FOR CONSTRUCTION AREA SIGN WORK ONLY

FOR NOTE
AND LEGEND, SEE SHEET CS-1

CONSTRUCTION AREA SIGNS
NO SCALE

CS-4

STATE OF CALIFORNIA - DEPARTMENT OF TRANSPORTATION	Caltrans® TRAFFIC
FUNCTIONAL SUPERVISOR	ROLAND AU-YEUNG
CALCULATED-DESIGNED BY	STEVE LAU
CHECKED BY	JERILYN L. STRUVEN
REVISED BY	SL
DATE REVISED	12/30/14

LAST REVISION 12-05-12 | DATE PLOTTED => 07-APR-2015 | TIME PLOTTED => 16:21

Dist	COUNTY	ROUTE	POST MILES TOTAL PROJECT	SHEET No.	TOTAL SHEETS
04	SM	280	Var	29	92

REGISTERED CIVIL ENGINEER 12/30/14 DATE

2-2-15
PLANS APPROVAL DATE

REGISTERED PROFESSIONAL ENGINEER
Jerilyn L. Struven
No. 49964
Exp. 12-31-16
CIVIL
STATE OF CALIFORNIA

THE STATE OF CALIFORNIA OR ITS OFFICERS OR AGENTS SHALL NOT BE RESPONSIBLE FOR THE ACCURACY OR COMPLETENESS OF SCANNED COPIES OF THIS PLAN SHEET.

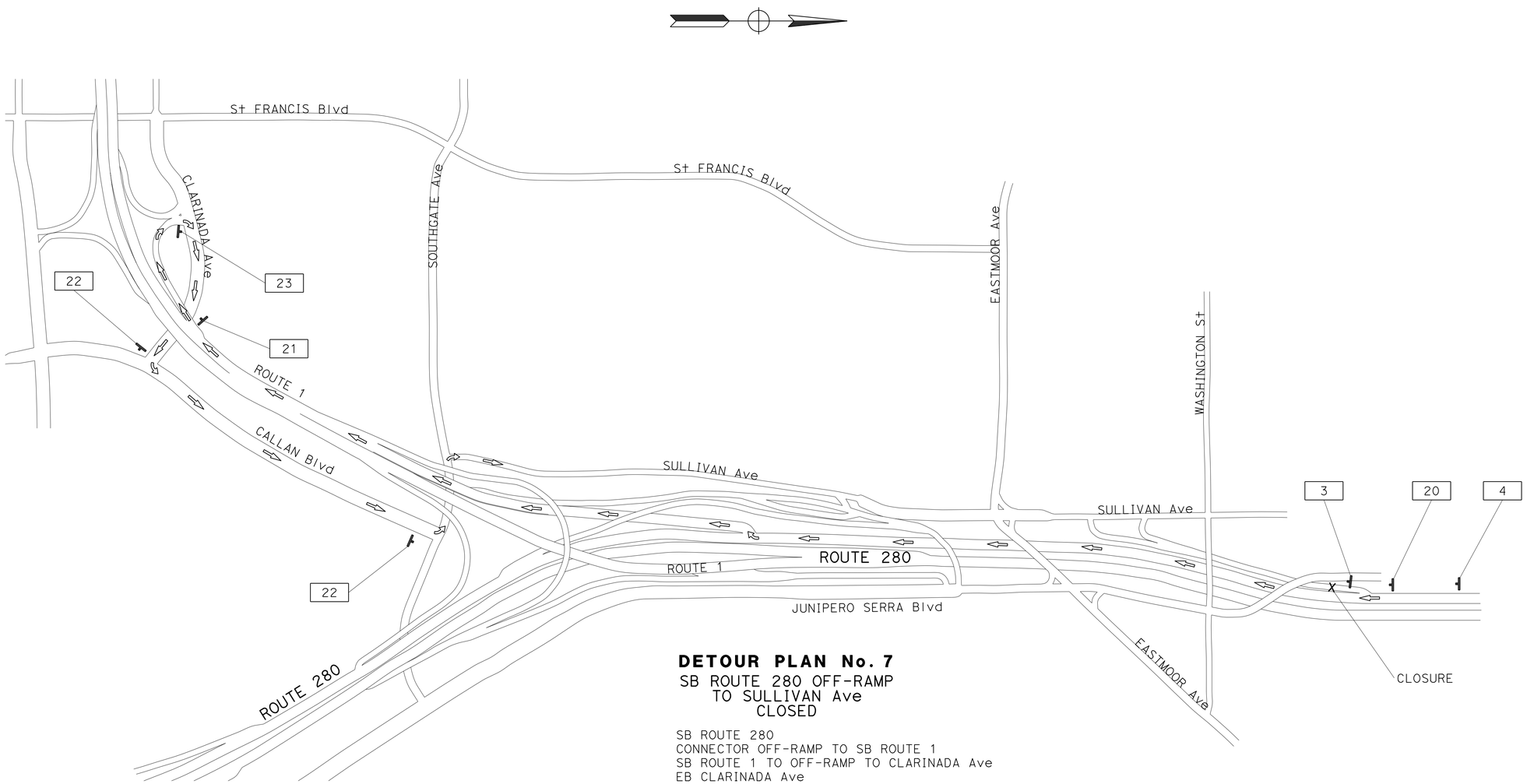

DETOUR PLAN No. 7
SB ROUTE 280 OFF-RAMP
TO SULLIVAN Ave
CLOSED

SB ROUTE 280
CONNECTOR OFF-RAMP TO SB ROUTE 1
SB ROUTE 1 TO OFF-RAMP TO CLARINADA Ave
EB CLARINADA Ave
NB CALLAN Blvd
WB SOUTHGATE Ave TO SULLIVAN Ave

CONSTRUCTION AREA SIGNS

NO SCALE

APPROVED FOR CONSTRUCTION AREA SIGN WORK ONLY

FOR NOTE
AND LEGEND, SEE SHEET CS-1

CS-5

STATE OF CALIFORNIA - DEPARTMENT OF TRANSPORTATION
Caltrans
TRAFFIC

FUNCTIONAL SUPERVISOR: ROLAND AU-YEUNG
CALCULATED-DESIGNED BY: STEVE LAU
CHECKED BY: JERILYN L. STRUVEN
REVISED BY: SL
DATE REVISED: 12/30/14

LAST REVISION 12-19-14
DATE PLOTTED => 07-APR-2015
TIME PLOTTED => 16:21

Dist	COUNTY	ROUTE	POST MILES TOTAL PROJECT	SHEET No.	TOTAL SHEETS
04	SM	280	Var	30	92

REGISTERED CIVIL ENGINEER 12/30/14 DATE

2-2-15
PLANS APPROVAL DATE

REGISTERED PROFESSIONAL ENGINEER Jerilyn L. Struven No. 49964 Exp. 12-31-16 CIVIL STATE OF CALIFORNIA

THE STATE OF CALIFORNIA OR ITS OFFICERS OR AGENTS SHALL NOT BE RESPONSIBLE FOR THE ACCURACY OR COMPLETENESS OF SCANNED COPIES OF THIS PLAN SHEET.

STATIONARY MOUNTED CONSTRUCTION AREA SIGNS

SIGN No.	SIGN CODE FEDERAL	SIGN CODE CALIFORNIA	PANEL SIZE	SIGN MESSAGE	NUMBER OF POSTS AND SIZE	NUMBER OF SIGNS
1	W20-1		48" x 48"	ROAD WORK AHEAD	(ONE) 4" x 6"	42
2	G20-2		36" x 18"	END ROAD WORK	(ONE) 4" x 4"	45
3		SC6-4	48" x 60"	RAMP CLOSED (DATE & TIME)	(ONE) 6" x 6"	8
4	W20-1		48" x 48"	DETOUR AHEAD	(ONE) 4" x 6"	9
5		SC-3 (↑)	48" x 16"	DETOUR AHEAD (↑)	(ONE) 4" x 6"	5
	M3-1		21" x 9"	NORTH		
		G27-1 (280)	30" x 25"	ROUTE SHIELD		
6	M4-10 (L+)		48" x 18"	DETOUR (LEFT)	(ONE) 4" x 6"	7
	M3-1		21" x 9"	NORTH		
		G27-1 (280)	30" x 25"	ROUTE SHIELD		
7	M4-8a		24" x 18"	END DETOUR	(ONE) 4" x 4"	5
8		SC-3 (↑)	48" x 16"	DETOUR AHEAD (↑)	(ONE) 4" x 6"	1
		Spec 1	54" x 30"	EDGEWOOD ROAD		
9	M4-10 (L+)		48" x 18"	DETOUR (LEFT)	(ONE) 4" x 6"	3
		Spec 1	54" x 30"	EDGEWOOD ROAD		
10	M6-2 (↗)		21" x 15"	DETOUR (↗)	(ONE) 4" x 6"	1
		Spec 1	54" x 30"	EDGEWOOD ROAD		
11	M4-10 (R+)		48" x 8"	DETOUR (RIGHT)	(ONE) 4" x 6"	5
	M3-1		21" x 9"	NORTH		
		G27-1 (280)	30" x 25"	ROUTE SHIELD		
12	M3-8		24" x 25"	DETOUR	(ONE) 4" x 6"	2
	M3-1		21" x 9"	NORTH		
		G27-1 (280)	28" x 24"	ROUTE SHIELD		
	M6-1 (↗)		48" x 18"	DETOUR (↗)		
13		SC-3 (↑)	48" x 16"	DETOUR (↑)	(ONE) 4" x 6"	1
	M3-3		21" x 9"	SOUTH		
		G27-1 (280)	30" x 25"	ROUTE SHIELD		
14	M4-10 (L+)		48" x 18"	DETOUR (LEFT)	(ONE) 4" x 6"	1
	M3-3		21" x 9"	SOUTH		
		G27-1 (280)	30" x 25"	ROUTE SHIELD		
15	M4-10 (R+)		48" x 18"	DETOUR (RIGHT)	(ONE) 4" x 6"	1
	M3-3		21" x 9"	SOUTH		
		G27-1 (280)	30" x 25"	ROUTE SHIELD		
16		SC-3 (↑)	48" x 16"	DETOUR (↑)	(ONE) 4" x 6"	1
		Spec 2	54" x 30"	CRYSTAL SPRINGS Ave		
17	M6-2 (↗)		21" x 15"	DETOUR (↗)	(ONE) 4" x 6"	2
		Spec 2	54" x 30"	CRYSTAL SPRINGS Ave		

6" Caps

EDGEWATER
ROAD

54" x 30"

SPECIAL 1

6" Caps

CRYSTAL
SPRINGS Ave

54" x 30"

SPECIAL 2

6" Caps

SULLIVAN
AVENUE

54" x 30"

SPECIAL 3

CONSTRUCTION AREA SIGNS

CS-6

STATE OF CALIFORNIA - DEPARTMENT OF TRANSPORTATION
Caltrans TRAFFIC

FUNCTIONAL SUPERVISOR: ROLAND AU-YEUNG
CALCULATED-DESIGNED BY: STEVE LAU
CHECKED BY: JERILYN L. STRUVEN
REVISED BY: SL
DATE REVISED: 12/30/14

LAST REVISION: 12-05-14
DATE PLOTTED => 07-APR-2015
TIME PLOTTED => 16:21

Dist	COUNTY	ROUTE	POST MILES TOTAL PROJECT	SHEET No.	TOTAL SHEETS
04	SM	280	Var	31	92

REGISTERED CIVIL ENGINEER 12/30/14 DATE

2-2-15
PLANS APPROVAL DATE

REGISTERED PROFESSIONAL ENGINEER Jerilyn L. Struven No. 49964 Exp. 12-31-16 CIVIL STATE OF CALIFORNIA

THE STATE OF CALIFORNIA OR ITS OFFICERS OR AGENTS SHALL NOT BE RESPONSIBLE FOR THE ACCURACY OR COMPLETENESS OF SCANNED COPIES OF THIS PLAN SHEET.

STATIONARY MOUNTED CONSTRUCTION AREA SIGNS (CONTINUED)

SIGN No.	SIGN CODE		PANEL SIZE	SIGN MESSAGE	NUMBER OF POSTS AND SIZE	NUMBER OF SIGNS
	FEDERAL	CALIFORNIA				
18	M4-10 (L+)		48" x 18"	DETOUR (LEFT)	(ONE) 4" x 6"	6
		Spec 2	54" x 30"	CRYSTAL SPRINGS Ave		
19	M4-10 (R+)		48" x 18"	DETOUR (RIGHT)	(ONE) 4" x 6"	1
		Spec 2	54" x 30"	CRYSTAL SPRINGS Ave		
20		SC-3 (↑)	48" x 16"	DETOUR (↑)	(ONE) 4" x 6"	1
		Spec 3	54" x 30"	SULLIVAN Ave		
21	M6-2 (↗)		21" x 15"	DETOUR (↗)	(ONE) 4" x 6"	1
		Spec 3	54" x 30"	SULLIVAN Ave		
22	M4-10 (L+)		48" x 18"	DETOUR (LEFT)	(ONE) 4" x 6"	2
		Spec 3	54" x 30"	SULLIVAN Ave		
23	M4-10 (R+)		48" x 18"	DETOUR (RIGHT)	(ONE) 4" x 6"	1
		Spec 3	54" x 30"	SULLIVAN Ave		

CONSTRUCTION AREA SIGNS

CS-7

STATE OF CALIFORNIA - DEPARTMENT OF TRANSPORTATION
Caltrans
TRAFFIC

FUNCTIONAL SUPERVISOR: ROLAND AU-YEUNG
CALCULATED-DESIGNED BY: STEVE LAU
CHECKED BY: JERILYN L. STRUVEN
REVISED BY: SL
DATE REVISED: 12/30/14

LAST REVISION 12-19-14 | DATE PLOTTED => 07-APR-2015 | TIME PLOTTED => 16:21

Dist	COUNTY	ROUTE	POST MILES TOTAL PROJECT	SHEET No.	TOTAL SHEETS
04	SM	280	Var	32	92

REGISTERED CIVIL ENGINEER 1/8/15 DATE

2-2-15
PLANS APPROVAL DATE

REGISTERED PROFESSIONAL ENGINEER Pei-Cheng Li No. 53404 Exp. 6-30-15 CIVIL STATE OF CALIFORNIA

THE STATE OF CALIFORNIA OR ITS OFFICERS OR AGENTS SHALL NOT BE RESPONSIBLE FOR THE ACCURACY OR COMPLETENESS OF SCANNED COPIES OF THIS PLAN SHEET.

ABBREVIATION:

LNMI LANE MILE

RAILING QUANTITIES

LOCATION No.	ROUTE	PM	DIRECTION	Hwy (H)/ RAMP (R)	LEFT (L) OR RIGHT (R) SIDE	CONSTRUCTION DETAILS SHEET No.	MGS STANDARD PLAN LAYOUT TYPE	REMOVE GUARDRAIL	TREATED WOOD WASTE	REMOVE STEEL ANCHOR POST ASSEMBLY (N)	TRANSITION RAILING (TYPE WB-31)	TRANSITION RAILING (TYPE STB)	MGS (STEEL POST)	SINGLE THRIE BEAM BARRIER (STEEL POST)	ALTERNATIVE FLARED TERMINAL SYSTEM	ALTERNATIVE IN-LINE TERMINAL SYSTEM	BURIED POST END ANCHOR (N)	STRENGTHEN RAILING SECTIONS FOR FIXED OBJECT (N)	END CAP (TYPE A)	END CAP (TYPE TC)	VEGETATION CONTROL (ASPHALT COMPOSITE)	GUARD RAILING DELINEATOR	OBJECT MARKER (TYPE L-1)	OBJECT MARKER (TYPE P)
								LF	LB	EA			LF		EA						SQYD	EA		
1		M27.11		H	R		12C	174	2610		1		62.5				1				53.9	2	1	1
2		R26.5		H	R		12C	57	855		1		62.5				1				53.9	2		1
3		R26.09		H	R		12C	100	1500		1		87.5				1	1			73.3	4		1
4		R25.78		H	R		12C	67	1005		1		62.5				1				53.9	3		1
5		R24.63		H	R		12B	63	945		1		12.5		1						42.8	2	1	1
6		R23.16		H	R		12C	56	840		1		50.0				1				44.3	2		1
7		R22.04		H	R		12C	65	975		1		50.0				1				44.3	2		1
8		R20.97		H	R		12A	228	3420		1		162.5			1		2			98.3	8	1	1
9		R20.75		H	R	C-1	12A	63	945		1		12.5			1					37.3	2	1	1
10		R20.22		R	R		12B	340	5100		1		275.0		1						149.6	12	1	1
11		R20.04		H	R		12B	77	1155		1		12.5		1						42.8	2	1	1
12	280	R18.52	SB	H	R		12B	77	1155		1		12.5		1						42.8	2	1	1
13		R17.92		H	R		12A	77	1155		1		12.5			1					37.3	2	1	1
14		R14.22		H	L		12B	193	2895		1		125.0		1						88.6	6	1	1
15		R13.04		H	R		12A	65	975		1		12.5			1					37.3	2	1	1
16		10.82		H	R		12B	139	2085		1		75.0		1						68.2	4	1	1
17		6.65		R	R		12B				1		12.5		1						42.8	2	1	1
18		R6.99		H	R	C-2					1		300.0						1		40.7	13		1
19		R4.99		H	L	C-3		95	1425	1		1		300.0						1	202.6	13		1
20		R4.71		H	L	C-3		135	2025			1		400.0						1	267.7	17		1
21		R1.02		H	R	C-1	12B	107	1605		1		50.0		1						58.0	4	1	1
22		R0.30		H	R	C-1	12A	76	1140		1		12.5			1					37.3	3	1	1
23		R0.30		H	L	C-3		150	2250	1		1		300.0						1	202.6	13		1
SUBTOTAL								2404	36060	2	20	3	1462.5	1000.0	8	5	6	3	1	3	1820.0	122	14	23

(N) NOT A SEPARATE PAY ITEM, FOR INFORMATION ONLY

SUMMARY OF QUANTITIES

Q-1

STATE OF CALIFORNIA - DEPARTMENT OF TRANSPORTATION

Caltrans®

DESIGN

FUNCTIONAL SUPERVISOR: PATRICK T. NG

CALCULATED-DESIGNED BY: GAMINI RANDENI

CHECKED BY: HON MING KONG

REVISED BY: GR

DATE REVISED: 1/8/15

LAST REVISION DATE PLOTTED => 07-APR-2015
01-08-15 TIME PLOTTED => 16:21

Dist	COUNTY	ROUTE	POST MILES TOTAL PROJECT	SHEET No.	TOTAL SHEETS
04	SM	280	Var	33	92

REGISTERED CIVIL ENGINEER 1/8/15 DATE

2-2-15
PLANS APPROVAL DATE

REGISTERED PROFESSIONAL ENGINEER Pei-Cheng Li No. 53404 Exp. 6-30-15 CIVIL STATE OF CALIFORNIA

THE STATE OF CALIFORNIA OR ITS OFFICERS OR AGENTS SHALL NOT BE RESPONSIBLE FOR THE ACCURACY OR COMPLETENESS OF SCANNED COPIES OF THIS PLAN SHEET.

RAILING QUANTITIES (CONTINUED)

LOCATION No.	ROUTE	PM	DIRECTION	Hwy (H)/ RAMP (R)	LEFT (L) OR RIGHT (R) SIDE	CONSTRUCTION DETAILS SHEET No.	MGS STANDARD PLAN LAYOUT TYPE	REMOVE GUARDRAIL	TREATED WOOD WASTE	REMOVE STEEL ANCHOR POST ASSEMBLY (N)	TRANSITION RAILING (TYPE WB-31)	TRANSITION RAILING (TYPE STB)	MGS (STEEL POST)	SINGLE THRIE BEAM BARRIER (STEEL POST)	ALTERNATIVE FLARED TERMINAL SYSTEM	ALTERNATIVE IN-LINE TERMINAL SYSTEM	BURIED POST END ANCHOR (N)	STRENGTHEN RAILING SECTIONS FOR FIXED OBJECT (N)	END CAP (TYPE A)	END CAP (TYPE TC)	VEGETATION CONTROL (ASPHALT COMPOSITE)	GUARD RAILING DELINEATOR	OBJECT MARKER (TYPE L-1)	OBJECT MARKER (TYPE P)	REMARKS
								LF	LB	EA			LF		EA						SQYD	EA			
24		R0.30		H	L	C-3		63	945	1		1		300.0						1	202.6	13		1	
25		R1.02		H	R	C-1	12C	63	945		1		75.0				1				63.6	3		1	
26		R4.65		H	R	C-1	12B	112	1680		1		50.0		1						58.0	3	1	1	
27		R4.99		H	R	C-1	12C	60	900		1		50.0				1				44.3	2		1	
28		R6.99		R	R	C-1	12A	181	2715		1		100.0			1					72.9	6	1	1	
29		6.65		H	R	C-1	12A	157	2355		1		87.5			1					67.8	6	1	1	
30		R12.73		H	R	C-1	12C	60	900		1		37.5				1				34.6	2		1	
31		R17.92		H	R	C-1	12A	63	945		1		12.5			1					37.3	2	1	1	
32		R17.92		H	L	C-3		120	1800			1		275.0						1	186.3	12		1	
33		R18.31		H	R	C-1	12B	164	2460		1		100.0		1						78.4	6	1	1	
34		R20.08		H	R	C-5		1263	18945	1	1		1250.0								518.9	50		1	REMOVE PORTION OF GUARDRAIL
35	280	R20.08	NB	H	L	C-1	12C	62	930		1		37.5				1				34.6	2		1	
36		R20.22		H	L	C-4		52	780			1		62.5			1				53.9	2		1	
37		R20.97		H	R	C-5		60	900		1		30.0								22.4	2		1	REMOVE PORTION OF GUARDRAIL
38		R21.55		H	R	C-5		60	900		1		30.0								22.4	2		1	REMOVE PORTION OF GUARDRAIL
39		R22.05		H	L	C-3		940	14100			1		250.0						1	170.0	11		1	
40		R22.62		R	R	C-1	12A	76	1140		1		12.5			1					37.3	3	1	1	
41		R22.62		H	L	C-1	12C	60	900		1		50.0				1				44.3	2		1	
42		R23.16		H	L	C-1	12C	72	1080		1		62.5				1				53.9	3		1	
43		R24.20		R	R	C-1	12B	62	930		1		12.5		1						42.8	2	1	1	
44		R24.20		H	L	C-3		75	1125			1		50.0						1	55.6	2		1	
45		R24.60		H	R	C-1	12C	60	900		1		50.0				1				44.3	2		1	
46		R24.65		H	L	C-1	12C	90	1350		1		62.5				1				53.9	3		1	
SUBTOTAL								3975	59625	2	18	5	2110.0	937.5	3	4	9			4	1999.9	141	7	23	
SUBTOTAL SHEET Q-1								2404	36060	2	20	3	1462.5	1000.0	8	5	6	3	1	3	1820.0	122	14	23	
TOTAL								6379	95685	4	38	8	3572.5	1937.5	11	9	15	3	1	7	3819.9	263	21	46	

(N) NOT A SEPARATE PAY ITEM, FOR INFORMATION ONLY

FOR ABBREVIATION, SEE SHEET Q-1

SUMMARY OF QUANTITIES
Q-2

CALCULATED-DESIGNED BY	GAMINI RANDENI	REVISED BY	GR
CHECKED BY	HON MING KONG	DATE REVISED	1/8/15

FUNCTIONAL SUPERVISOR: PATRICK T. NG

STATE OF CALIFORNIA - DEPARTMENT OF TRANSPORTATION
Caltrans
DESIGN

LAST REVISION 01-08-15 | DATE PLOTTED => 07-APR-2015 | TIME PLOTTED => 16:21

Dist	COUNTY	ROUTE	POST MILES TOTAL PROJECT	SHEET No.	TOTAL SHEETS
04	SM	280	Var	34	92

REGISTERED CIVIL ENGINEER 1/8/15 DATE

2-2-15
PLANS APPROVAL DATE

REGISTERED PROFESSIONAL ENGINEER Pei-Cheng Li No. 53404 Exp. 6-30-15 CIVIL STATE OF CALIFORNIA

THE STATE OF CALIFORNIA OR ITS OFFICERS OR AGENTS SHALL NOT BE RESPONSIBLE FOR THE ACCURACY OR COMPLETENESS OF SCANNED COPIES OF THIS PLAN SHEET.

ROADWAY QUANTITIES

LOCATION No.	PM	DIRECTION	LEFT (L) OR RIGHT (R) SIDE	CONSTRUCTION DETAILS SHEET No.	MGS STANDARD PLAN LAYOUT TYPE	ROADWAY EXCAVATION	IMPORTED BORROW	HMA (TYPE A)	CRACK TREATMENT	TEMPORARY RAILING (TYPE K)	TEMPORARY CRASH CUSHION MODULE	TEMPORARY DRAINAGE INLET PROTECTION	TEMPORARY FENCE (TYPE ESA)	TEMPORARY FIBER ROLL	TEMPORARY HYDRAULIC MULCH (BONDED FIBER MATRIX)
						CY		TON	LNMI	LF	EA		LF		SQYD
1	M27.11		R		12C	5.31		10.75		180	14	1		65	53.9
2	R26.50		R		12C	0.23		0.47		40	14			65	53.9
3	R26.09		R		12C	0.23		0.47		40	14	1		90	73.3
4	R25.78		R		12C	0.23		0.47		40	14	1		65	53.9
5	R24.63		R		12B	2.78		1.73		40	14				42.8
6	R23.16		R		12C	0.23		0.47		40	14	1		50	44.3
7	R22.04		R		12C	2.78		1.73		40	14	1		50	44.3
8	R20.97		R		12A	2.78		1.73		40	14	1		160	98.3
9	R20.75		R	C-1	12A	2.78		1.73		40	14				37.3
10	R20.22		R		12B	2.78		1.73		40	14			280	149.6
11	R20.04		R		12B	2.78		1.73		40	14				42.8
12	R18.52	SB	R		12B	2.78		1.73		40	14	1	120.0		42.8
13	R17.92		R		12A	2.78		1.73		40	14		132.5		37.3
14	R14.22		L		12B	2.78		1.73		60	14			130	88.6
15	R13.04		R		12A	0.45		0.91		80	14	1	102.5		37.3
16	10.82		R		12B	0.23		0.47		60	14	1	172.5	80	68.2
17	6.65		R		12B	0.23		0.47		40	14		110.0		42.8
18	R6.99		R	C-2		0.24		0.50		40	14	3	110.0	300	40.7
19	R4.99		L	C-3		0.24		0.50		80	14			300	202.6
20	R4.71		L	C-3		0.23		0.47		80	14			400	267.7
21	R1.02		R	C-1	12B	0.24		0.50		40	14			50	58.0
22	R0.30		R	C1, C-7	12A	0.23	14	1.73	0.1	40	14	1	132.5		37.3
23	R0.30		L	C-3		0.23		0.47		80	14	1		300	202.6
SUBTOTAL						36.17	14	34.26	0.1	1260	322	14	880.0	2385	1820.0

DIKE QUANTITIES

LOCATION No.	REMOVE AC DIKE	HMA DIKE (TYPE F)	HMA DIKE (TYPE C)	HMA (TYPE A)
	LF			TON
1	129.25			
2	9.33			
3	4.75			
4	4.75			
5	115.00	37.5	62.5	0.98
7	15.00			
8	277.50	187.5	75.0	3.08
9	127.50	37.5	75.0	1.08
11	115.00	37.5	62.5	0.98
12	115.00	37.5	62.5	0.98
13	127.50	37.5	75.0	1.08
16	167.50	100.0	62.5	1.82
17	105.00	37.5	62.5	0.98
21	142.50	75.0	62.5	1.48
22	127.50	37.5	75.0	1.08
23	4.75			
24	4.75			
25	4.75			
27	15.00			
30	4.75			
31	127.50	37.5	62.5	0.98
33	197.50	125.0	62.5	2.15
34	700.00	700.0		9.36
38	60.00	55.0		0.74
39	15.00			
41	4.75			
42	15.00			
43	115.00	37.5	62.5	0.98
44	4.75			
45	15.00			
46	4.75			
TOTAL	2876.33	1580.0	862.5	27.75**

** QUANTITIES INCLUDED IN THE ROADWAY QUANTITIES TABLE

FOR ABBREVIATION, SEE SHEET Q-1

SUMMARY OF QUANTITIES
Q-3

CALCULATED-DESIGNED BY GAMINI RANDENI
CHECKED BY HON MING KONG
REVISED BY GR
DATE REVISED 1/8/15
FUNCTIONAL SUPERVISOR PATRICK T. NG

STATE OF CALIFORNIA - DEPARTMENT OF TRANSPORTATION
Caltrans DESIGN

LAST REVISION 01-08-15
DATE PLOTTED => 07-APR-2015
TIME PLOTTED => 16:21

Dist	COUNTY	ROUTE	POST MILES TOTAL PROJECT	SHEET No.	TOTAL SHEETS
04	SM	280	Var	35	92

REGISTERED CIVIL ENGINEER 1/8/15 DATE

2-2-15
PLANS APPROVAL DATE

REGISTERED PROFESSIONAL ENGINEER Pei-Cheng Li No. 53404 Exp. 6-30-15 CIVIL STATE OF CALIFORNIA

THE STATE OF CALIFORNIA OR ITS OFFICERS OR AGENTS SHALL NOT BE RESPONSIBLE FOR THE ACCURACY OR COMPLETENESS OF SCANNED COPIES OF THIS PLAN SHEET.

ROADWAY QUANTITIES (CONTINUED)

LOCATION No.	PM	DIRECTION	LEFT (L) OR RIGHT (R) SIDE	CONSTRUCTION DETAILS SHEET No.	MGS STANDARD PLAN LAYOUT TYPE	ROADWAY EXCAVATION	IMPORTED BORROW	HMA (TYPE A)	CRACK TREATMENT	TEMPORARY RAILING (TYPE K)	TEMPORARY CRASH CUSHION MODULE	TEMPORARY DRAINAGE INLET PROTECTION	TEMPORARY FENCE (TYPE ESA)	TEMPORARY FIBER ROLL	TEMPORARY HYDRAULIC MULCH (BONDED FIBER MATRIX)
						CY		TON	LNMI	LF	EA		LF		SQYD
24	R0.30		L	C-3		0.23		0.47		80	14	1		300	202.6
25	R1.02		R	C-1	12C	0.23		0.47		40	14			80	63.6
26	R4.65		R	C-1	12B	0.23		0.47		40	14	1		50	58.0
27	R4.99		R	C-1	12C	2.78		1.73		40	14			50	44.3
28	R6.99		R	C-1	12A	0.23		0.47		40	14		185.0	100	72.9
29	6.65		R	C-1	12A	0.23		0.47		40	14		172.5	90	67.8
30	R12.73		R	C-1	12C	0.23		0.47		40	14	1	72.5	40	34.6
31	R17.92		R	C-1	12A	2.78		1.73		40	14	1			37.3
32	R17.92		L	C-3		0.18		0.37		40	14	1		280	186.3
33	R18.31		R	C-1	12B	0.42		0.85		40	14	1		100	78.4
34	R20.08		R	C-5		0.45		0.91		80	14	4	1290.0	1250	518.9
35	R20.08	NB	L	C-1	12C	0.23		0.47		40	14	1		40	34.6
36	R20.22		L	C-4		0.23		0.47		40	14	1		65	53.9
37	R20.97		R	C-5		2.78		1.73		60	14	1		30	22.4
38	R21.55		R	C-5		0.16		0.33		40	14	1		30	22.4
39	R22.05		L	C-3		2.78		1.73		40	14	1		250	170.0
40	R22.62		R	C-1	12A	2.78		1.73		60	14				37.3
41	R22.62		L	C-1	12C	0.23		0.47		40	14			50	44.3
42	R23.16		L	C-1	12C	2.78		1.73		40	14	1		65	53.9
43	R24.20		R	C-1	12B	2.78		1.73		40	14	1			42.8
44	R24.20		L	C-3		0.23		0.47		40	14			50	55.6
45	R24.60		R	C-1	12C	2.78		1.73		40	14	1		50	44.3
46	R24.65		L	C-1	12C	0.23		0.47		40	14	1		65	53.9
SUBTOTAL						26.04		21.54		1040	322	19	1720.0	3035	1999.9
SUBTOTAL SHEET Q-3						36.17	14	34.26	0.1	1260	322	14	880.0	2385	1820.0
FROM DIKE QUANTITIES TABLE								27.75							
FROM DRAINAGE QUANTITIES SHEET								44.20							
TOTAL						62.21	14	127.75	0.1	2300	644	33	2600.0	5420	3819.9

FOR ABBREVIATION, SEE SHEET Q-1

SUMMARY OF QUANTITIES
Q-4

STATE OF CALIFORNIA - DEPARTMENT OF TRANSPORTATION
Caltrans
DESIGN

FUNCTIONAL SUPERVISOR: PATRICK T. NG
CALCULATED-DESIGNED BY: GAMINI RANDENI
CHECKED BY: HON MING KONG
REVISED BY: GR
DATE REVISED: 1/8/15

LAST REVISION 01-08-15
DATE PLOTTED => 07-APR-2015
TIME PLOTTED => 16:21

Dist	COUNTY	ROUTE	POST MILES TOTAL PROJECT	SHEET No.	TOTAL SHEETS
04	SM	280	Var	36	92

LICENSED LANDSCAPE ARCHITECT

2-2-15
PLANS APPROVAL DATE

LICENSED LANDSCAPE ARCHITECT
KIMBERLY WHITE No. 4635
Renewal Date
2-28-16
Renewal Date
12-3-14
Date
STATE OF CALIFORNIA

THE STATE OF CALIFORNIA OR ITS OFFICERS OR AGENTS SHALL NOT BE RESPONSIBLE FOR THE ACCURACY OR COMPLETENESS OF SCANNED COPIES OF THIS PLAN SHEET.

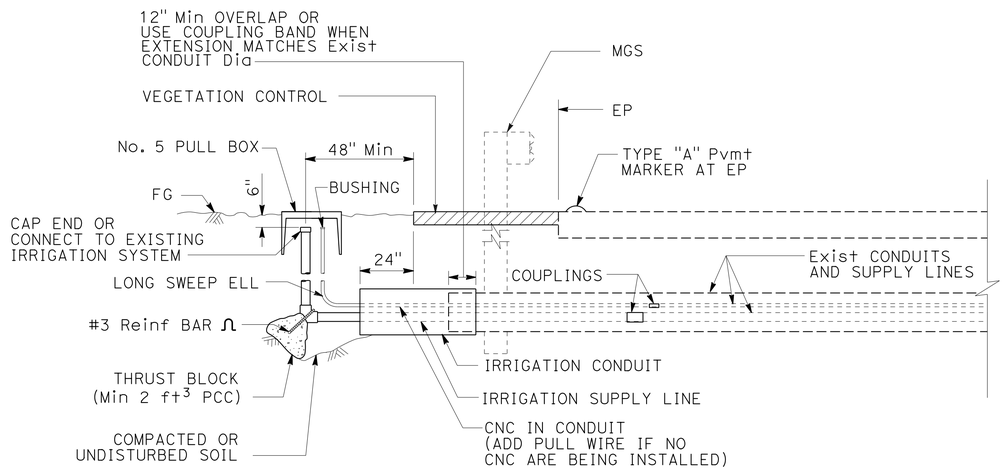

SECTION

IRRIGATION CONDUIT (EXTENSION)

AT MGS AND VEGETATION CONTROL LOCATIONS

LANDSCAPE DETAILS

NO SCALE

LD-1

REVISED BY	KAW
DATE REVISED	12/3/14
KIMBERLY WHITE	
LAURIE SMITH	
CALCULATED-DESIGNED BY	
CHECKED BY	
SENIOR LANDSCAPE ARCHITECT	
KIMBERLY WHITE	

STATE OF CALIFORNIA - DEPARTMENT OF TRANSPORTATION
Caltrans® LANDSCAPE ARCHITECTURE

LAST REVISION 12-03-14 | DATE PLOTTED => 07-APR-2015 | TIME PLOTTED => 16:21

Dist	COUNTY	ROUTE	POST MILES TOTAL PROJECT	SHEET No.	TOTAL SHEETS
04	SM	280	Var	37	92

LICENSED LANDSCAPE ARCHITECT

2-2-15
PLANS APPROVAL DATE

LICENSED LANDSCAPE ARCHITECT
KIMBERLY WHITE No. 4583
Signature
2-28-16
Renewal Date
12-3-14
Date
STATE OF CALIFORNIA

THE STATE OF CALIFORNIA OR ITS OFFICERS OR AGENTS SHALL NOT BE RESPONSIBLE FOR THE ACCURACY OR COMPLETENESS OF SCANNED COPIES OF THIS PLAN SHEET.

IRRIGATION CONDUIT

LOCATION No.	LOCATION		SIDE		EXTENSION TYPE		(N) GALVANIZED STEEL PIPE SUPPLY LINE		(N) ELECTRICAL CONDUIT		CORRUGATED HIGH DENSITY POLYETHYLENE PIPE	
							SIZE (INCH)				CONDUIT SIZE (INCH)	
	ROUTE	PM	L†	R†	OL	CB	2½"	3"	2"	-	8"	-
							FT				LENGTH (LF)	
6	280	R23.16 NB	-	X	X	-	10	-	10	-	10	-
40	280	R22.62 NB	-	X	X	-	-	10	10	-	10	-
41	280	R22.62 NB	X	-	X	-	-	10	10	-	10	-
TOTAL											30	-

X - DENOTES REQUIREMENT
OL - OVERLAP
CB - COUPLING BAND

(N) - NOT A SEPARATE PAY ITEM, FOR INFORMATION ONLY

RELOCATE IRRIGATION FACILITIES

LOCATION No.	LOCATION		RELOCATE IRRIGATION VALVES	RELOCATE SPRINKLER ASSEMBLY	CNC (N)	PLASTIC PIPE SUPPLY LINE (SCH 40)		
						SIZE (INCH)		
	ROUTE	PM	EA	EA	FT	3"	1"	-
						LENGTH (LF)		
6	280	R23.16 NB	3	-	60	60	-	-
10	280	R20.22 SB	3	-	300	300	-	-
31	280	R17.92 NB	-	5	-	-	60	-
40	280	R22.62 NB	3	5	20	20	60	-
41	280	R22.62 NB	2	6	40	40	80	-
		TOTAL	11	16	420	420	200	-

(N) - NOT A SEPARATE PAY ITEM, FOR INFORMATION ONLY

PRUNE EXISTING PLANTS

LOCATION No.	LOCATION		① AREA	DESCRIPTION
	ROUTE	PM	SQFT (N)	
31	280	R17.92 NB	300	TREES AND SHRUBS
39	280	R22.05 NB	100	SHRUBS
40	280	R22.62 NB	300	SHRUBS
41	280	R22.62 NB	400	SHRUBS

(N) - NOT A SEPARATE PAY ITEM, FOR INFORMATION ONLY

① EXACT AREA AND LOCATION OF EXISTING PLANTS TO BE PRUNED WILL BE DETERMINED BY THE ENGINEER.

LANDSCAPE QUANTITIES

LQ-1

REVISED BY	DATE REVISED
KAW	12/3/14

KIMBERLY WHITE
LAURIE SMITH

CALCULATED-DESIGNED BY
CHECKED BY

SENIOR LANDSCAPE ARCHITECT
KIMBERLY WHITE

STATE OF CALIFORNIA - DEPARTMENT OF TRANSPORTATION
Caltrans® LANDSCAPE ARCHITECTURE

LAST REVISION 12-03-14
DATE PLOTTED => 07-APR-2015
TIME PLOTTED => 16:21

Dist	COUNTY	ROUTE	POST MILES TOTAL PROJECT	SHEET No.	TOTAL SHEETS
04	SM	280	Var	38	92

LICENSED LANDSCAPE ARCHITECT

2-2-15
PLANS APPROVAL DATE

LICENSED LANDSCAPE ARCHITECT
DAVID WARREN YAM No. 1909
Signature
11-30-15
Renewal Date
12/29/14
Date
STATE OF CALIFORNIA

THE STATE OF CALIFORNIA OR ITS OFFICERS OR AGENTS SHALL NOT BE RESPONSIBLE FOR THE ACCURACY OR COMPLETENESS OF SCANNED COPIES OF THIS PLAN SHEET.

EROSION CONTROL TYPE 1

SEQUENCE	ITEM	MATERIAL		APPLICATION RATE
		DESCRIPTION	TYPE	
STEP 1	COMPOST	COMPOST	MEDIUM	270 CY/ACRE
STEP 2	EROSION CONTROL (DRY SEED)	DRY SEED	MIX 1	50 LB/ACRE
STEP 3	ROLLED EROSION CONTROL PRODUCT	NETTING	TYPE A	-

SEED MIX

SEED	BOTANICAL NAME (COMMON NAME)	PERCENT GERMINATION (MINIMUM)	POUNDS PURE LIVE SEED PER ACRE (SLOPE MEASUREMENT)
MIX 1	ELYMUS GLAUCUS (BLUE WILD RYE)	40	11
	HORDEUM BRACHYANTHERUM (MEADOW BARLEY)	40	11
	LAYIA PLATGLOSSA (COMMON TIDY TIPS)	40	3
	NASSELLA PULCHRA (PURPLE NEEDLEGRASS)	40	10
	TRIFOLIUM WILDENOVII[1] (TOMCAT CLOVER)	40	4
	VULPIA MICROSTACHYS (THREE WEEKS FESCUE)	45	11
		TOTAL	50

[1] SEED PRODUCED IN CALIFORNIA ONLY.

EROSION CONTROL LEGEND

ECL-1

CALCULATED-DESIGNED BY	ANGELA KWAN	REVISED BY	AK
CHECKED BY	DAVID W YAM	DATE REVISED	12/29/14

SENIOR LANDSCAPE ARCHITECT: DAVID W YAM

STATE OF CALIFORNIA - DEPARTMENT OF TRANSPORTATION
Caltrans®
WATER QUALITY

LAST REVISION 12-29-14 | DATE PLOTTED => 07-APR-2015 | TIME PLOTTED => 16:21

Dist	COUNTY	ROUTE	POST MILES TOTAL PROJECT	SHEET No.	TOTAL SHEETS
04	SM	280	Var	39	92

LICENSED LANDSCAPE ARCHITECT

2-2-15
PLANS APPROVAL DATE

LICENSED LANDSCAPE ARCHITECT
DAVID WARREN YAM No. 1409
Signature
11-30-15
Renewal date
12/29/14
Date
STATE OF CALIFORNIA

THE STATE OF CALIFORNIA OR ITS OFFICERS OR AGENTS SHALL NOT BE RESPONSIBLE FOR THE ACCURACY OR COMPLETENESS OF SCANNED COPIES OF THIS PLAN SHEET.

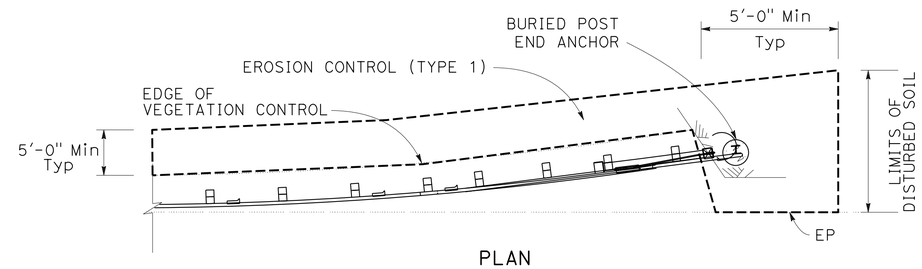

PLAN

EROSION CONTROL (TYPE 1) AT BURIED POST END ANCHOR

LOCATION 1, 2, 3, 4, 6, 7, 25, 27, 30, 35, 41, 42, 45, 46

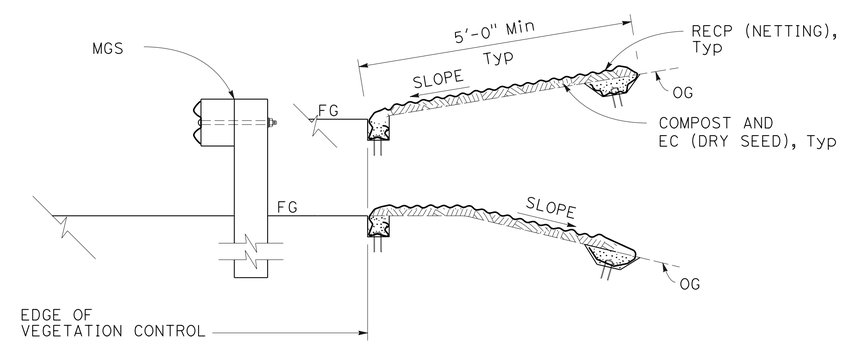

TYPICAL SECTION

EROSION CONTROL (TYPE 1) AT VEGETATION CONTROL, TYPICAL

EROSION CONTROL PLAN

EC-1

STATE OF CALIFORNIA - DEPARTMENT OF TRANSPORTATION
Caltrans®
WATER QUALITY

SENIOR LANDSCAPE ARCHITECT: DAVID YAM
CALCULATED-DESIGNED BY: ANGELA KWAN
CHECKED BY: DAVID YAM
REVISED BY: AK
DATE REVISED: 12/29/14

LAST REVISION 12-29-14
DATE PLOTTED => 07-APR-2015
TIME PLOTTED => 16:21

Dist	COUNTY	ROUTE	POST MILES TOTAL PROJECT	SHEET No.	TOTAL SHEETS
04	SM	280	Var	40	92

LICENSED LANDSCAPE ARCHITECT

2-2-15
PLANS APPROVAL DATE

LICENSED LANDSCAPE ARCHITECT
DAVID WARREN YAM No. 1909
Signature
11-30-15
Renewal Date
12/29/14
Date
STATE OF CALIFORNIA

THE STATE OF CALIFORNIA OR ITS OFFICERS OR AGENTS SHALL NOT BE RESPONSIBLE FOR THE ACCURACY OR COMPLETENESS OF SCANNED COPIES OF THIS PLAN SHEET.

EROSION CONTROL QUANTITIES

Loc No.	ROUTE	PM	DIRECTION NB/SB	HIGHWAY (H) RAMP (R)	LEFT (L) OR RIGHT (R) SIDE	COMPOST	EROSION CONTROL (DRY SEED)	ROLLED EROSION CONTROL PRODUCT (NETTING)
						SQFT		
1	280	M27.11	SB	H	R	1,116	1,116	1,116
2	280	R26.5	SB	H	R	504	504	504
3	280	R26.09	SB	H	R	672	672	672
4	280	R25.78	SB	H	R	480	480	480
5	280	R24.63	SB	H	R	450	450	450
6	280	R23.16	SB	H	R	408	408	408
7	280	R22.04	SB	H	R	462	462	462
8	280	R20.97	SB	H	R	1,440	1,440	1,440
9	280	R20.75	SB	H	R	450	450	450
10	280	R20.22	SB	R	R	2,112	2,112	2,112
11	280	R20.04	SB	H	R	534	534	534
12	280	R18.52	SB	H	R	267	267	267
13	280	R17.92	SB	H	R	267	267	267
14	280	R14.22	SB	H	L	1,230	1,230	1,230
15	280	R12.73	SB	H	R	462	462	462
16	280	10.82	SB	H	R	453	453	453
17	280	6.65	SB	R	R	45	45	45
18	280	R6.99	SB	H	R	45	45	45
19	280	R4.99	SB	H	L	1,500	1,500	1,500
20	280	R4.71	SB	H	L	2,472	2,472	2,472
21	280	R1.02	SB	H	R	90	90	90
22	280	R0.30	SB	H	R	528	528	528
23	280	R0.30	SB	H	L	1,872	1,872	1,872
24	280	R0.30	NB	H	L	1,872	1,872	1,872
25	280	R1.02	NB	H	R	516	516	516
26	280	R4.65	NB	H	R	684	684	684
27	280	R4.99	NB	H	R	432	432	432
28	280	R6.99	NB	R	R	579	579	579
29	280	6.65	NB	H	R	507	507	507
30	280	R12.73	NB	H	R	216	216	216
31	280	R17.92	NB	H	R	450	450	450
32	280	R17.92	NB	H	L	1,722	1,722	1,722
33	280	R18.22	NB	H	R	1,056	1,056	1,056
34	280	R20.08	NB	H	R	3,735	3,735	3,735
35	280	R20.08	NB	H	L	444	444	444
36	280	R20.22	NB	H	L	510	510	510
37	280	R20.97	NB	H	R	432	432	432
38	280	R21.55	NB	H	R	432	432	432
39	280	R22.05	NB	H	L	5,712	5,712	5,712
40	280	R22.62	NB	R	R	528	528	528
41	280	R22.62	NB	H	L	396	396	396
42	280	R23.16	NB	H	L	468	468	468
43	280	R24.20	NB	H	R	444	444	444
44	280	R24.20	NB	H	L	486	486	486
45	280	R24.60	NB	H	R	396	396	396
46	280	R24.65	NB	H	L	612	612	612
TOTAL						40,488	40,488	40,488

EROSION CONTROL QUANTITIES

ECQ-1

STATE OF CALIFORNIA - DEPARTMENT OF TRANSPORTATION
Caltrans®
WATER QUALITY

SENIOR LANDSCAPE ARCHITECT: DAVID W YAM
CALCULATED-DESIGNED BY: ANGELA KWAN
CHECKED BY: DAVID W YAM
REVISED BY: AK
DATE REVISED: 12/29/14

LAST REVISION 12-29-14
DATE PLOTTED => 07-APR-2015
TIME PLOTTED => 16:21

NOTE:

FOR ACCURATE RIGHT OF WAY DATA, CONTACT
RIGHT OF WAY ENGINEERING AT THE DISTRICT OFFICE.

PROJECT NOTES:(THIS SHEET ONLY)

1 DISCONNECT 2 #14, 2 #LC (LUMINAIRE SENSING CABLE)

2 RC 1"C, 2 #14, 1"C, 2 #LC (LUMINAIRE SENSING CABLE)

3 DISCONNECT 2 #14, 2#LC (LUMINAIRE SENSING CABLE) FROM PULL BOX

4 RC EXISTING PULL BOX

Dist	COUNTY	ROUTE	POST MILES TOTAL PROJECT	SHEET No.	TOTAL SHEETS
04	SM	280	Var	41	92

Nabeel Alkhatib 12/30/14
REGISTERED ELECTRICAL ENGINEER DATE

2-2-15
PLANS APPROVAL DATE

REGISTERED PROFESSIONAL ENGINEER
Nabeel F. Alkhatib
No. 17162
Exp: 9-30-15
ELECT
STATE OF CALIFORNIA

THE STATE OF CALIFORNIA OR ITS OFFICERS OR AGENTS SHALL NOT BE RESPONSIBLE FOR THE ACCURACY OR COMPLETENESS OF SCANNED COPIES OF THIS PLAN SHEET.

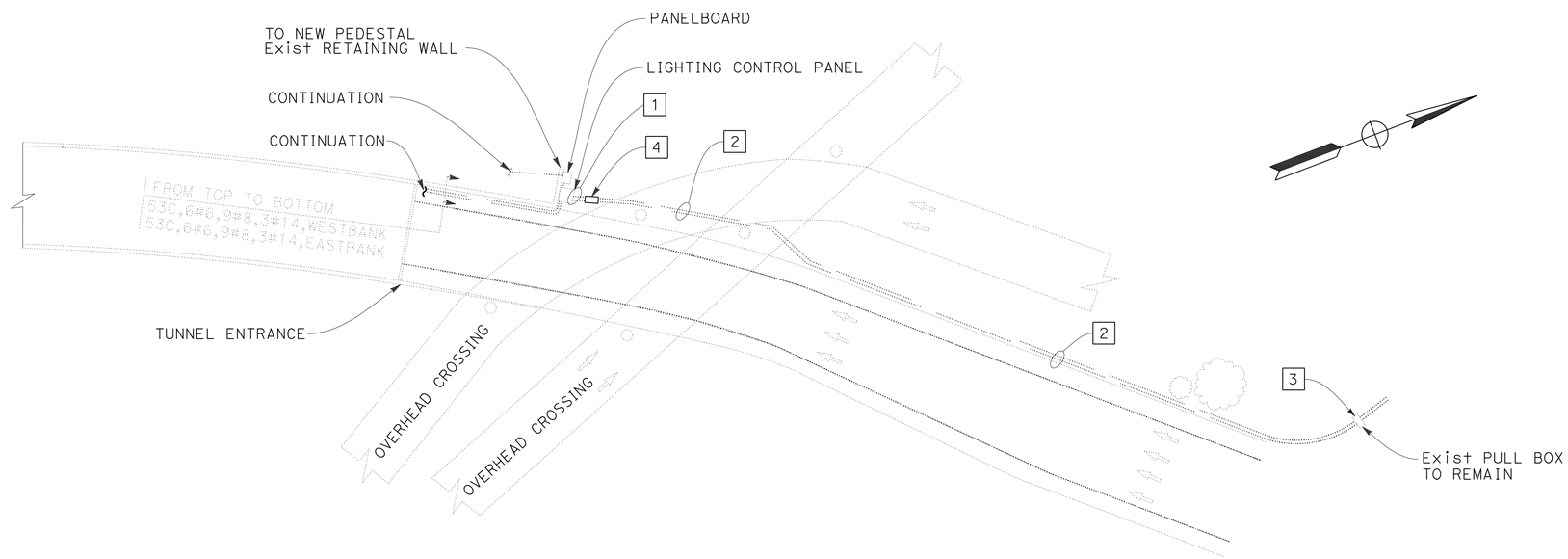

LOCATION No. 1

APPROVED FOR ELECTRICAL WORK ONLY

LIGHTING AND SIGN ILLUMINATION
(REMOVAL OF ELECTRICAL SYSTEMS)
LOCATION No. 1

NO SCALE

E-1

STATE OF CALIFORNIA - DEPARTMENT OF TRANSPORTATION
Caltrans
ELECTRICAL

FUNCTIONAL SUPERVISOR: ELAINE WONG

CALCULATED-DESIGNED BY: NABEEL ALKHATIB
CHECKED BY: JOHN PRESENTATION

REVISED BY: NA
DATE REVISED: 12/30/14

LAST REVISION 12-30-14 | DATE PLOTTED => 07-APR-2015 | TIME PLOTTED => 16:21

NOTE:

FOR ACCURATE RIGHT OF WAY DATA, CONTACT
RIGHT OF WAY ENGINEERING AT THE DISTRICT OFFICE.

PROJECT NOTES:(THIS SHEET ONLY)

1. RECONNECT 2#14, 2#LC (LUMINAIRE SENSING CABLE)
2. INSTALL 1"C, 2#14, 1"C, 2#LC (LUMINAIRE SENSING CABLE) 6' FROM THE EDGE OF THE CURB
3. SPLICE 2#14, 2#LC (LUMINAIRE SENSING CABLE) TO THE EXISTING CABLES
4. INSTALL NEW PULL BOX

Dist	COUNTY	ROUTE	POST MILES TOTAL PROJECT	SHEET No.	TOTAL SHEETS
04	SM	280	Var	42	92

Nabeel Alkhatib 12/30/14
REGISTERED ELECTRICAL ENGINEER DATE

2-2-15
PLANS APPROVAL DATE

REGISTERED PROFESSIONAL ENGINEER
Nabeel F. Alkhatib
No. 17162
Exp. 9-30-15
ELECT
STATE OF CALIFORNIA

THE STATE OF CALIFORNIA OR ITS OFFICERS OR AGENTS SHALL NOT BE RESPONSIBLE FOR THE ACCURACY OR COMPLETENESS OF SCANNED COPIES OF THIS PLAN SHEET.

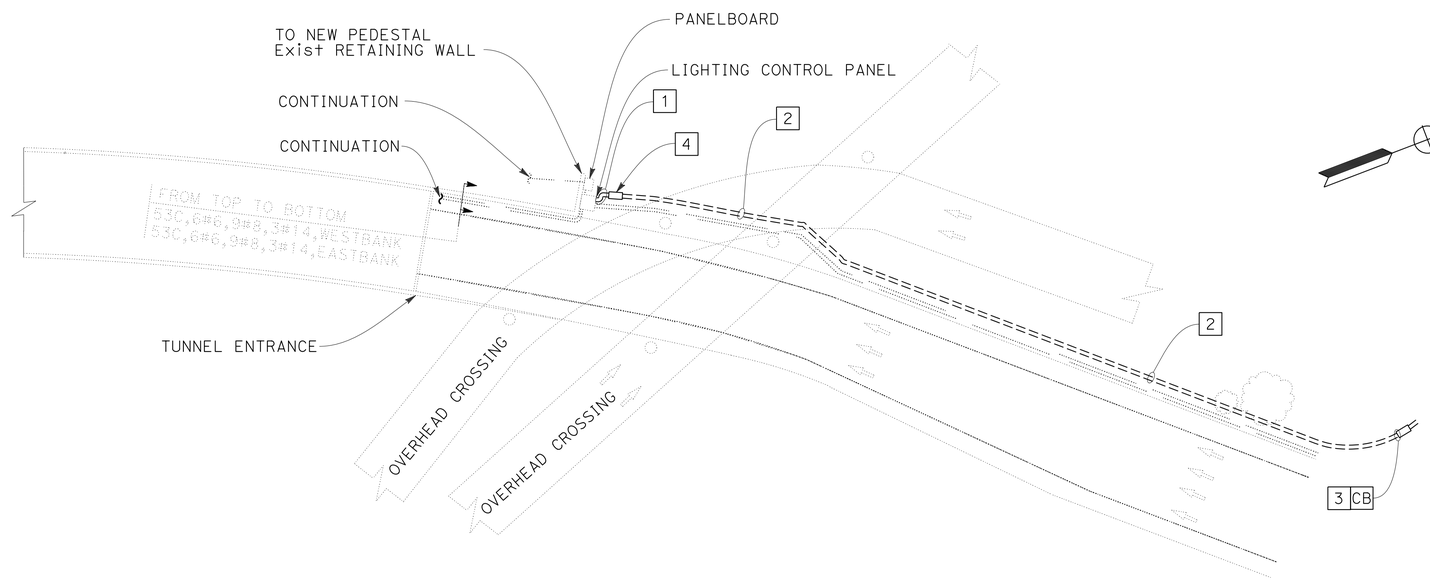

LOCATION No. 1

LIGHTING AND SIGN ILLUMINATION
(INSTALLATION OF ELECTRICAL SYSTEMS)
LOCATION No. 1

NO SCALE

APPROVED FOR ELECTRICAL WORK ONLY

E-2

NABEEL ALKHATIB	NA
JOHN PRESENTATION	12/30/14
CALCULATED-DESIGNED BY	REVISED BY
CHECKED BY	DATE REVISED
FUNCTIONAL SUPERVISOR	
ELAINE WONG	

STATE OF CALIFORNIA - DEPARTMENT OF TRANSPORTATION
Caltrans
ELECTRICAL

LAST REVISION 12-30-14 | DATE PLOTTED => 07-APR-2015 | TIME PLOTTED => 16:21

Dist	COUNTY	ROUTE	POST MILES TOTAL PROJECT	SHEET No.	TOTAL SHEETS
04	SM	280	Var	43	92

Nabeel Alkhatib 12/30/14
REGISTERED ELECTRICAL ENGINEER DATE

2-2-15
PLANS APPROVAL DATE

REGISTERED PROFESSIONAL ENGINEER Nabeel F. Alkhatib No. 17162 Exp. 9-30-15 ELECT STATE OF CALIFORNIA

THE STATE OF CALIFORNIA OR ITS OFFICERS OR AGENTS SHALL NOT BE RESPONSIBLE FOR THE ACCURACY OR COMPLETENESS OF SCANNED COPIES OF THIS PLAN SHEET.

NOTE:

FOR ACCURATE RIGHT OF WAY DATA, CONTACT RIGHT OF WAY ENGINEERING AT THE DISTRICT OFFICE.

PROJECT NOTES: (THIS SHEET ONLY)

1. EXISTING PULL BOX TO BE REMOVED
2. REMOVE EXISTING 2"C, 2#8
3. DISCONNECT 2#8

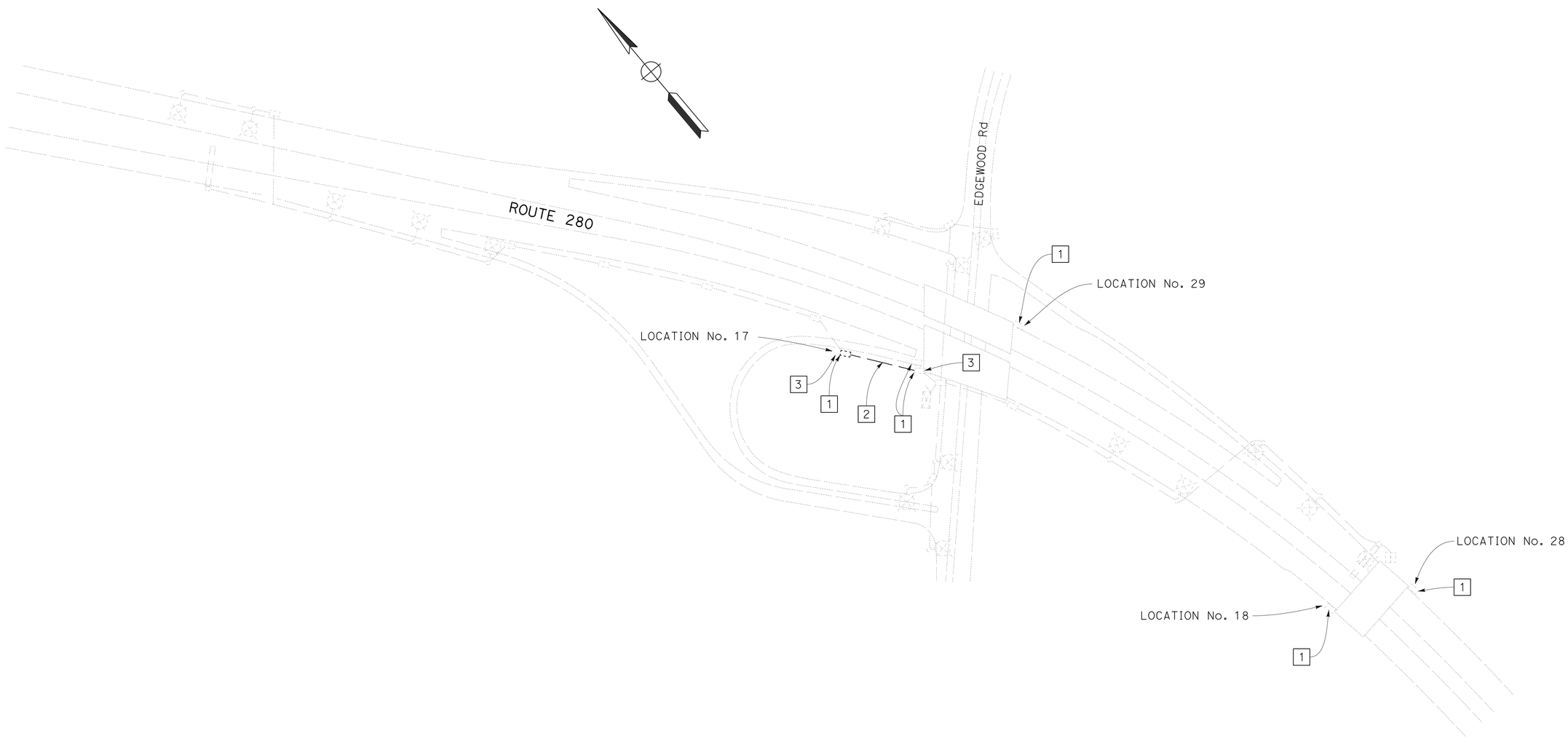

LIGHTING AND SIGN ILLUMINATION
(REMOVAL OF ELECTRICAL SYSTEMS)
LOCATION No. 17, 18, 28 AND 29

NO SCALE

APPROVED FOR ELECTRICAL WORK ONLY

E-3

REVISED BY	NA
DATE REVISED	12/30/14
CALCULATED-DESIGNED BY	NABEEL ALKHATIB
CHECKED BY	JOHN PRESENTATION
FUNCTIONAL SUPERVISOR	ELAINE WONG

STATE OF CALIFORNIA - DEPARTMENT OF TRANSPORTATION
Caltrans
ELECTRICAL

LAST REVISION 12-30-14 | DATE PLOTTED => 07-APR-2015 | TIME PLOTTED => 16:21

Dist	COUNTY	ROUTE	POST MILES TOTAL PROJECT	SHEET No.	TOTAL SHEETS
04	SM	280	Var	44	92

Nabeel Alkhatib 12/30/14
REGISTERED ELECTRICAL ENGINEER DATE

2-2-15
PLANS APPROVAL DATE

REGISTERED PROFESSIONAL ENGINEER
Nabeel F. Alkhatib
No. 17162
Exp. 9-30-15
ELECT
STATE OF CALIFORNIA

THE STATE OF CALIFORNIA OR ITS OFFICERS OR AGENTS SHALL NOT BE RESPONSIBLE FOR THE ACCURACY OR COMPLETENESS OF SCANNED COPIES OF THIS PLAN SHEET.

NOTE:

FOR ACCURATE RIGHT OF WAY DATA, CONTACT RIGHT OF WAY ENGINEERING AT THE DISTRICT OFFICE.

GENERAL NOTE:

1. THIS PAGE ONLY, TO STAY 3' AWAY FROM THE GUARD RAIL, AS DIRECTED BY THE ENGINEER.

PROJECT NOTES: (THIS SHEET ONLY)

1. INSTALL ALL NEW PULL BOX #5, 3' AWAY FROM GUARD RAIL LINE.
2. INSTALL 2"C, 2#8 3' AWAY FROM GUARD RAIL LINE. SPLICE 2#8 TO THE OLD CABLE.

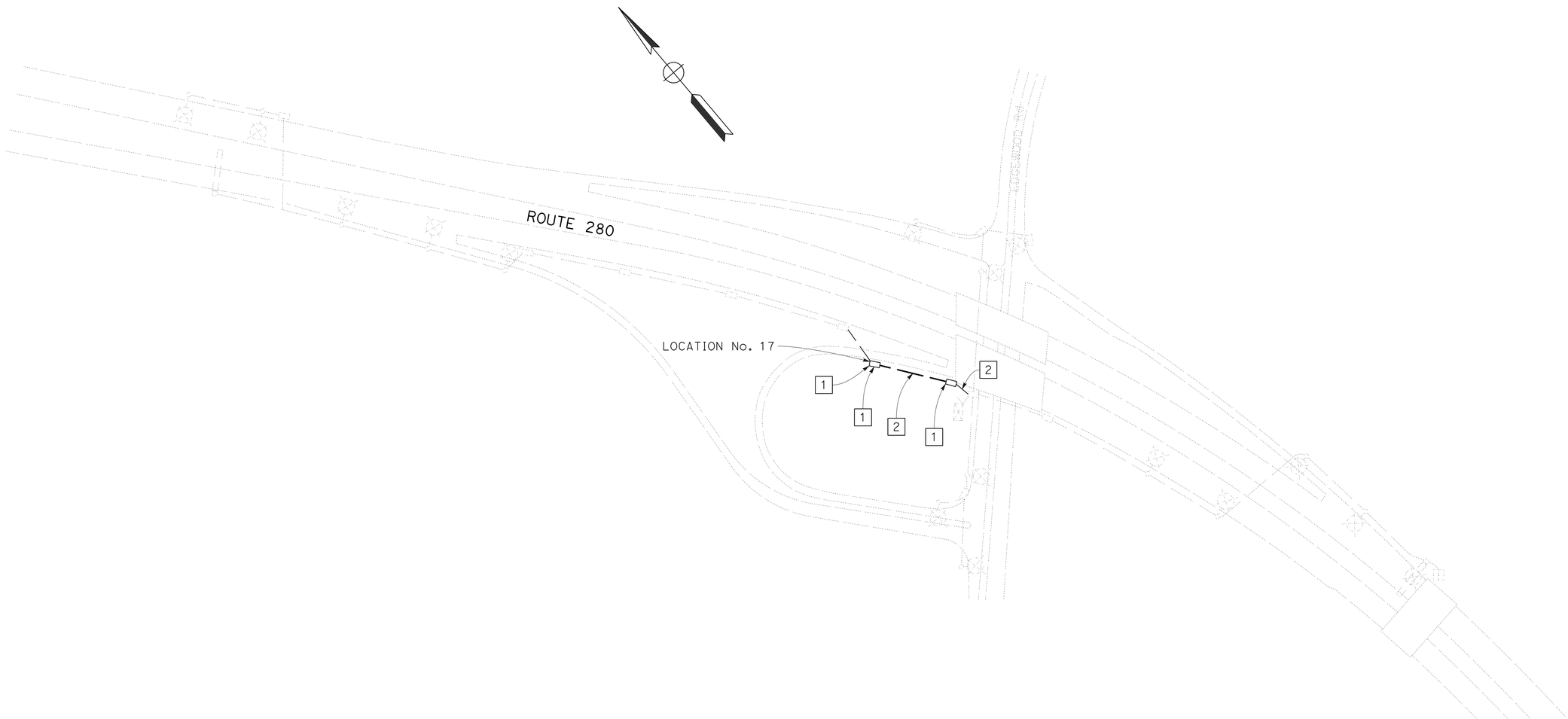

LIGHTING AND SIGN ILLUMINATION
(INSTALLATION OF NEW ELECTRICAL SYSTEMS)
LOCATION No. 17, 18, 28 AND 29

NO SCALE

APPROVED FOR ELECTRICAL WORK ONLY

E-4

STATE OF CALIFORNIA - DEPARTMENT OF TRANSPORTATION
Caltrans
ELECTRICAL

FUNCTIONAL SUPERVISOR: ELAINE WONG
CALCULATED-DESIGNED BY: NABEEL ALKHATIB
CHECKED BY: JOHN PRESENTATION
REVISED BY: NA
DATE REVISED: 12/30/14

LAST REVISION 12-30-14 | DATE PLOTTED => 07-APR-2015 | TIME PLOTTED => 16:21

M

Maint	MAINTENANCE
Max	MAXIMUM
MB	METAL BEAM
MBB	METAL BEAM BARRIER
MBGR	METAL BEAM GUARD RAILING
Med	MEDIAN
MGS	MIDWEST GUARDRAIL SYSTEM
MH	MANHOLE
Min	MINIMUM
Misc	MISCELLANEOUS
Misc I & S	MISCELLANEOUS IRON AND STEEL
Mkr	MARKER
Mod	MODIFIED,
	MODIFY
Mon	MONUMENT
MP	METAL PLATE
MPGR	METAL PLATE GUARD RAILING
MR	MOVEMENT RATING
MSE	MECHANICALLY STABILIZED EMBANKMENT
Mt	MOUNTAIN, MOUNT
Mtl	MATERIAL
MVP	MAINTENANCE VEHICLE PULLOUT

N

N	NORTH
NB	NORTHBOUND
No.	NUMBER (MUST HAVE PERIOD)
Nos.	NUMBERS (MUST HAVE PERIOD)
NPS	NOMINAL PIPE SIZE
NS	NEAR SIDE
NSP	NEW STANDARD PLAN
NTS	NOT TO SCALE

O

Oblr	OBLITERATE
OC	OVERCROSSING
OD	OUTSIDE DIAMETER
OF	OUTSIDE FACE
OG	ORIGINAL GROUND
OGAC	OPEN GRADED ASPHALT CONCRETE
OGFC	OPEN GRADED FRICTION COURSE
OH	OVERHEAD
OHWM	ORDINARY HIGH WATER MARK
O-O	OUT TO OUT
Opp	OPPOSITE
OSD	OVERSIDE DRAIN

P

P	PAGE
PAP	PERFORATED ALUMINUM PIPE
PB	PULL BOX
PC	POINT OF CURVATURE,
	PRECAST
PCC	POINT OF COMPOUND CURVE,
	PORTLAND CEMENT CONCRETE
PCMS	PORTABLE CHANGEABLE MESSAGE SIGN
PCP	PERFORATED CONCRETE PIPE,
	PRESTRESSED CONCRETE PIPE
PCVC	POINT OF COMPOUND VERTICAL CURVE
PEC	PERMIT TO ENTER AND CONSTRUCT
Ped	PEDESTRIAN
Ped OC	PEDESTRIAN OVERCROSSING
Ped UC	PEDESTRIAN UNDERCROSSING
Perm Mtl	PERMEABLE MATERIAL

P continued

PG	PROFILE GRADE
PI	POINT OF INTERSECTION
PJP	PARTIAL JOINT PENETRATION
Pkwy	PARKWAY
ℙ,PL	PLATE
P/L	PROPERTY LINE
PM	POST MILE,
	TIME FROM NOON TO MIDNIGHT
PN	PAVING NOTCH
POC	POINT OF HORIZONTAL CURVE
POT	POINT OF TANGENT
POVC	POINT OF VERTICAL CURVE
PP	PIPE PILE,
	PLASTIC PIPE,
	POWER POLE
PPL	PREFORMED PERMEABLE LINER
PPP	PERFORATED PLASTIC PIPE
PRC	POINT OF REVERSE CURVE
PRF	PAVEMENT REINFORCING FABRIC
PRVC	POINT OF REVERSE VERTICAL CURVE
PS&E	PLANS, SPECIFICATIONS AND ESTIMATES
PS, P/S	PRESTRESSED
PSP	PERFORATED STEEL PIPE
PT	POINT OF TANGENCY
PVC	POLYVINYL CHLORIDE
Pvmt	PAVEMENT

Q

Qty	QUANTITY

R

R	RADIUS
R & D	REMOVE AND DISPOSE
R & S	REMOVE AND SALVAGE
R/C	RATE OF CHANGE
RCA	REINFORCED CONCRETE ARCH
RCB	REINFORCED CONCRETE BOX
RCP	REINFORCED CONCRETE PIPE
RCPA	REINFORCED CONCRETE PIPE ARCH
Rd	ROAD
Reinf	REINFORCED,
	REINFORCEMENT,
	REINFORCING
Rel	RELOCATE
Repl	REPLACEMENT
Ret	RETAINING
Rev	REVISED, REVISION
Rdwy	ROADWAY
RHMA	RUBBERIZED HOT MIX ASPHALT
Riv	RIVER
RM	ROAD-MIXED
RP	RADIUS POINT,
	REFERENCE POINT
RR	RAILROAD
RSP	ROCK SLOPE PROTECTION,
	REVISED STANDARD PLAN
Rt	RIGHT
Rte	ROUTE
RW	REDWOOD,
	RETAINING WALL
R/W	RIGHT OF WAY
Rwy	RAILWAY

S

S	SOUTH,
	SUPPLEMENT
SAE	STRUCTURE APPROACH EMBANKMENT
Salv	SALVAGE
SAPP	STRUCTURAL ALUMINUM PLATE PIPE
SB	SOUTHBOUND
SC	SAND CUSHION
SCSP	SLOTTED CORRUGATED STEEL PIPE
SD	STORM DRAIN
Sec	SECOND,
	SECTION
Sep	SEPARATION
SG	SUBGRADE
Shld	SHOULDER
Sht	SHEET
Sim	SIMILAR
℄	STATION LINE
SM	SELECTED MATERIAL
Spec	SPECIAL,
	SPECIFICATIONS
SPP	SLOTTED PLASTIC PIPE
SS	SLOPE STAKE
SSBM	STRAP AND SADDLE BRACKET METHOD
SSD	STRUCTURAL SECTION DRAIN
SSPA	STRUCTURAL STEEL PLATE ARCH
SSPP	STRUCTURAL STEEL PLATE PIPE
SSPPA	STRUCTURAL STEEL PLATE PIPE ARCH
SSRP	STEEL SPIRAL RIB PIPE
St	STREET
Sta	STATION
STBB	SINGLE THRIE BEAM BARRIER
Std	STANDARD
Str	STRUCTURE
Surf	SURFACING
SW	SIDEWALK,
	SOUND WALL
Swr	SEWER
Sym	SYMMETRICAL
S4S	SURFACE 4 SIDES

T

T	SEMI-TANGENT
Tan	TANGENT
TBB	THRIE BEAM BARRIER
Tbr	TIMBER
TC	TOP OF CURB
TCB	TRAFFIC CONTROL BOX
TCE	TEMPORARY CONSTRUCTION EASEMENT
Tel	TELEPHONE
Temp	TEMPORARY
TG	TOP OF GRADE
Tot	TOTAL
TP	TELEPHONE POLE
TPB	TREATED PERMEABLE BASE
TPM	TREATED PERMEABLE MATERIAL
Trans	TRANSITION

T continued

TS	TRANSVERSE,
	TRAFFIC SIGNAL,
	TUBULAR STEEL
Typ	TYPICAL

U

UC	UNDERCROSSING
UD	UNDERDRAIN
UG	UNDERGROUND
UON	UNLESS OTHERWISE NOTED
UP	UNDERPASS

V

V	VALVE,
	DESIGN SPEED
Var	VARIABLE,
	VARIES
VC	VERTICAL CURVE
VCP	VITRIFIED CLAY PIPE
Vert	VERTICAL
Via	VIADUCT
Vol	VOLUME

W

W	WEST,
	WIDTH
WB	WESTBOUND
WH	WEEP HOLE
WM	WIRE MESH
WS	WATER SURFACE
WSP	WELDED STEEL PIPE
Wt	WEIGHT
WV	WATER VALVE
WW	WINGWALL
WWLOL	WINGWALL LAYOUT LINE

X

X Sec	CROSS SECTION
Xing	CROSSING

Y

Yr	YEAR
Yrs	YEARS

Dist	COUNTY	ROUTE	POST MILES TOTAL PROJECT	SHEET No.	TOTAL SHEETS
04	SM	280	Var	45	92

Grace M. Tsushima
REGISTERED CIVIL ENGINEER

July 19, 2013
PLANS APPROVAL DATE

REGISTERED PROFESSIONAL ENGINEER
Grace M. Tsushima
No. C49814
Exp. 9-30-14
CIVIL
STATE OF CALIFORNIA

THE STATE OF CALIFORNIA OR ITS OFFICERS OR AGENTS SHALL NOT BE RESPONSIBLE FOR THE ACCURACY OR COMPLETENESS OF SCANNED COPIES OF THIS PLAN SHEET.

TO ACCOMPANY PLANS DATED 2-2-15

UNIT OF MEASUREMENT SYMBOLS:

Some of the symbols used in the project plan quantity tables and in the Bid Item List are:

TABLE A

SYMBOL USED	DEFINITIONS
ACRE	ACRE
CF	CUBIC FOOT
CY	CUBIC YARD
EA	EACH
GAL	GALLON
LB	POUND
LF	LINEAR FOOT
SQFT	SQUARE FOOT
SQYD	SQUARE YARD
STA	100 FEET
TAB	TABLET
TON	2,000 POUNDS

Some of the symbols used in the plans other than in the project plan quantity tables are:

TABLE B

SYMBOL USED	DEFINITIONS
ksi	KIPS PER SQUARE INCH
ksf	KIPS PER SQUARE FOOT
psi	POUNDS PER SQUARE INCH
psf	POUNDS PER SQUARE FOOT
lb/ft^3, pcf	POUNDS PER CUBIC FOOT
tsf	TONS PER SQUARE FOOT
mph, MPH *	MILES PER HOUR
ø	NOMINAL DIAMETER
oz	OUNCE
lb	POUND
kip	1,000 POUNDS
cal	CALORIE
ft	FOOT OR FEET
gal	GALLON

* For use on a sign panel only

STATE OF CALIFORNIA
DEPARTMENT OF TRANSPORTATION

ABBREVIATIONS (SHEET 2 OF 2)

NO SCALE

RSP A10B DATED JULY 19, 2013 SUPERSEDES STANDARD PLAN A10B DATED MAY 20, 2011 - PAGE 2 OF THE STANDARD PLANS BOOK DATED 2010.

REVISED STANDARD PLAN RSP A10B

2010 REVISED STANDARD PLAN RSP A10B

6-7-13

Dist	COUNTY	ROUTE	POST MILES TOTAL PROJECT	SHEET No.	TOTAL SHEETS
04	SM	280	Var	46	92

Randell D. Hiatt
REGISTERED CIVIL ENGINEER

July 19, 2013
PLANS APPROVAL DATE

REGISTERED PROFESSIONAL ENGINEER
Randell D. Hiatt
No. C50200
Exp. 6-30-15
CIVIL
STATE OF CALIFORNIA

THE STATE OF CALIFORNIA OR ITS OFFICERS OR AGENTS SHALL NOT BE RESPONSIBLE FOR THE ACCURACY OR COMPLETENESS OF SCANNED COPIES OF THIS PLAN SHEET.

TO ACCOMPANY PLANS DATED 2-2-15

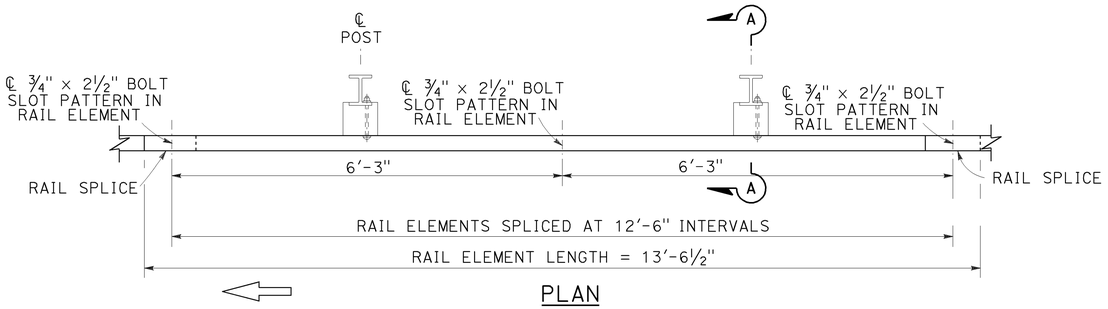

PLAN

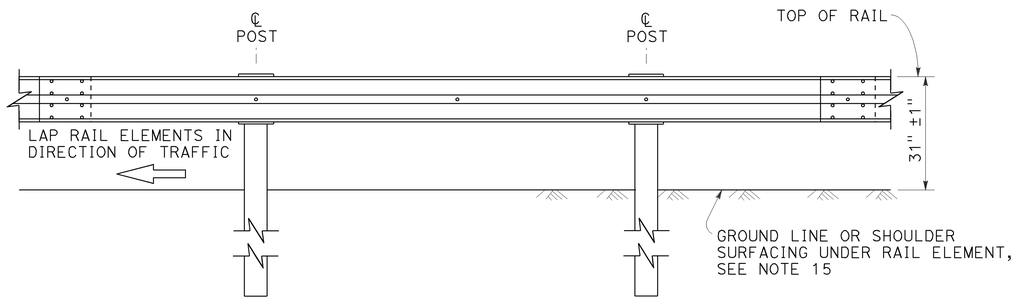

ELEVATION

MIDWEST GUARDRAIL SYSTEM WITH STEEL POSTS AND NOTCHED WOOD OR NOTCHED RECYCLED PLASTIC BLOCKS

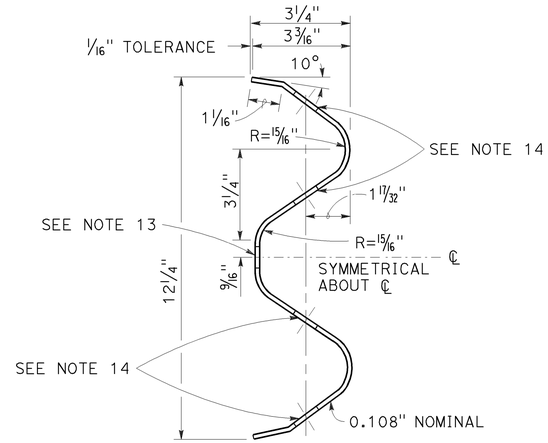

SECTION THRU RAIL ELEMENT

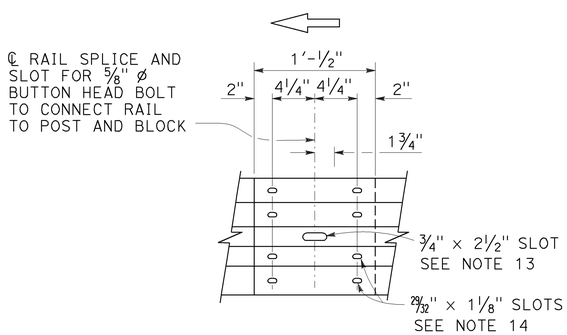

ELEVATION

RAIL ELEMENT SPLICE DETAIL

a) Connect the over lapped end of the rail elements with ⅝" ø × 1⅜" button head oval shoulder splice bolts inserted into the 29⁄32" × 1⅛" slots and bolted together with ⅝" ø recessed hex nuts. Recess of hex nut points toward rail element. A total of 8 bolts and nuts are to be used at each rail splice connection.

b) The ends of the rail elements are to be overlapped in the direction of traffic (see details).

c) Where end cap is to be attached to the end of a rail element, a total of 4 of the above described splice bolts and nuts are to be used.

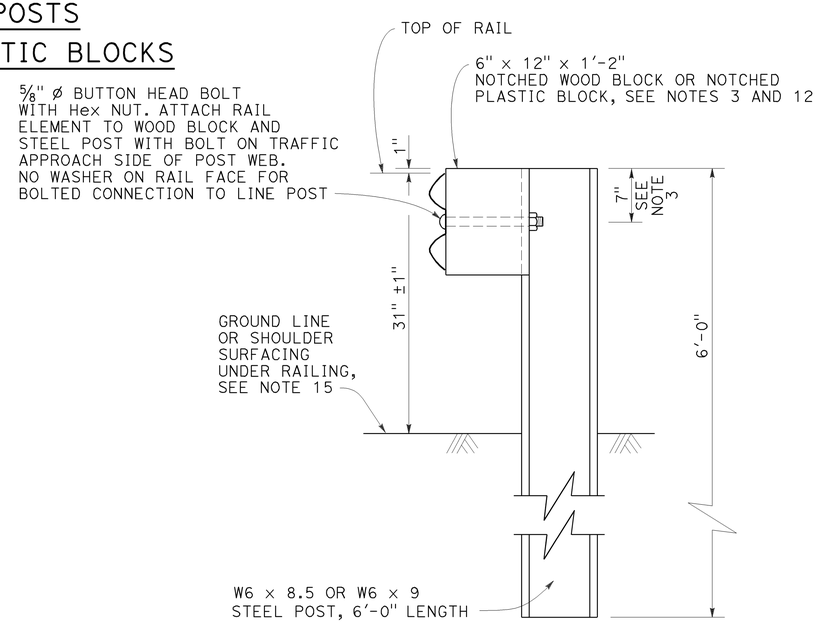

SECTION A-A

TYPICAL STEEL LINE POST INSTALLATION

See Note 4

NOTES:

1. For details of wood post installations, see Revised Standard Plan RSP A77L1.
2. For details of standard hardware used to construct MGS, see Revised Standard Plan RSP A77M1.
3. For details of steel posts and notched wood blocks used to construct MGS, see Revised Standard Plan RSP A77N2.
4. For additional installation details, see Revised Standard Plan RSP A77N3.
5. MGS post spacing to be 6'-3" center to center, except as otherwise noted.
6. For MGS typical layouts, see the A77P, A77Q and A77R Series of Standard Plans.
7. If railing is connected to terminal system end treatment, use 31" height terminal system end treatment.
8. For MGS end anchor details, see Revised Standard Plans RSP A77S1 and RSP A77T2.
9. For details of MGS transition to bridge railing, see Revised Standard Plan RSP A77U4.
10. For additional details of MGS connection to bridge railings, see Revised Standard Plans RSP A77U1, RSP A77U2 and RSP A77V1.
11. For dike positioning and MGS delineation details, see Revised Standard Plan RSP A77N4.
12. Notched face of block faces steel post.
13. Slotted hole for bolted connection of rail element to block and post. See "Section Thru Rail Element".
14. Slotted holes for splice bolts to overlap ends of rail element. See "Section Thru Rail Element".
15. Install posts in soil.

STATE OF CALIFORNIA
DEPARTMENT OF TRANSPORTATION

MIDWEST GUARDRAIL SYSTEM STANDARD RAILING SECTION (STEEL POST WITH NOTCHED WOOD OR NOTCHED RECYCLED PLASTIC BLOCK)

NO SCALE

RSP A77L2 DATED JULY 19, 2013 SUPPLEMENTS THE STANDARD PLANS BOOK DATED 2010.

REVISED STANDARD PLAN RSP A77L2

2010 REVISED STANDARD PLAN RSP A77L2

Dist	COUNTY	ROUTE	POST MILES TOTAL PROJECT	SHEET No.	TOTAL SHEETS
04	SM	280	Var	47	92

Randell D. Hiatt
REGISTERED CIVIL ENGINEER

July 19, 2013
PLANS APPROVAL DATE

REGISTERED PROFESSIONAL ENGINEER
Randell D. Hiatt
No. C50200
Exp. 6-30-15
CIVIL
STATE OF CALIFORNIA

THE STATE OF CALIFORNIA OR ITS OFFICERS OR AGENTS SHALL NOT BE RESPONSIBLE FOR THE ACCURACY OR COMPLETENESS OF SCANNED COPIES OF THIS PLAN SHEET.

TO ACCOMPANY PLANS DATED 2-2-15

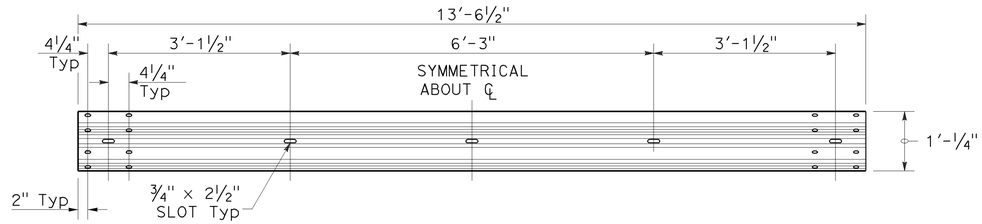

TYPICAL RAIL ELEMENT

NOTE:

1. Slotted holes for splice bolts to overlap ends of rail element.

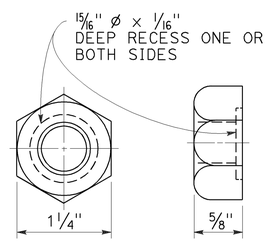

⅝" ø RECESS NUT

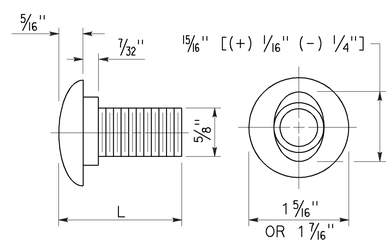

⅝" ø BUTTON HEAD BOLT

BUTTON HEAD BOLT

L	THREAD LENGTH
1⅜"	FULL THREAD LENGTH
2"	FULL THREAD LENGTH
10"	4" Min THREAD LENGTH
18"	4" Min THREAD LENGTH
20"	4" Min THREAD LENGTH
22"	4" Min THREAD LENGTH
26"	4" Min THREAD LENGTH
36"	4" Min THREAD LENGTH
** 2¾"	2" Min THREAD LENGTH
** 19"	4" Min THREAD LENGTH

** For nested rail applications.

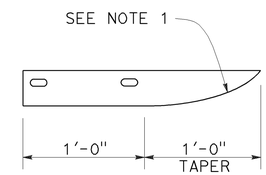

PLAN

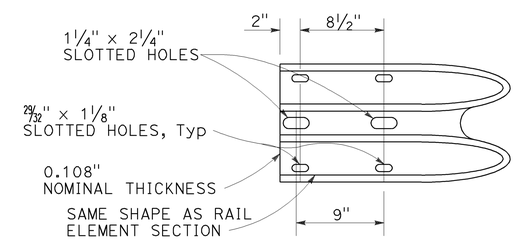

ELEVATION

END CAP
(TYPE A)

STATE OF CALIFORNIA
DEPARTMENT OF TRANSPORTATION

MIDWEST GUARDRAIL SYSTEM STANDARD HARDWARE

NO SCALE

RSP A77M1 DATED JULY 19, 2013 SUPPLEMENTS THE STANDARD PLANS BOOK DATED 2010.

REVISED STANDARD PLAN RSP A77M1

2010 REVISED STANDARD PLAN RSP A77M1

7-3-13

Dist	COUNTY	ROUTE	POST MILES TOTAL PROJECT	SHEET No.	TOTAL SHEETS
04	SM	280	Var	48	92

Randell D. Hiatt
REGISTERED CIVIL ENGINEER

November 15, 2013
PLANS APPROVAL DATE

REGISTERED PROFESSIONAL ENGINEER
Randell D. Hiatt
No. C50200
Exp. 6-30-15
CIVIL
STATE OF CALIFORNIA

THE STATE OF CALIFORNIA OR ITS OFFICERS OR AGENTS SHALL NOT BE RESPONSIBLE FOR THE ACCURACY OR COMPLETENESS OF SCANNED COPIES OF THIS PLAN SHEET.

TO ACCOMPANY PLANS DATED 2-2-15

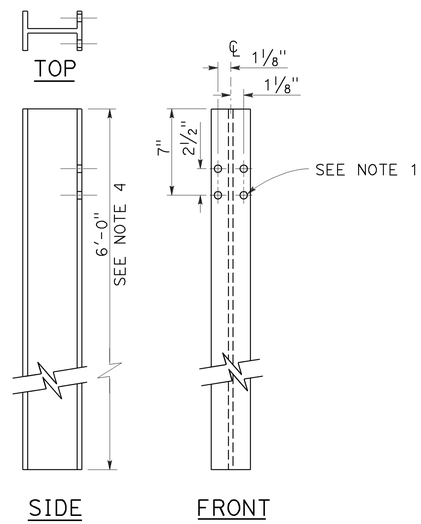

W6 x 9 OR W6 x 8.5
STEEL POST
See Note 4

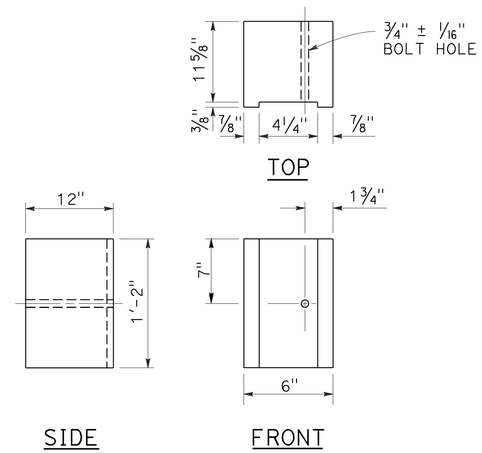

6" x 12"
NOTCHED WOOD BLOCK
See Notes 2 and 3

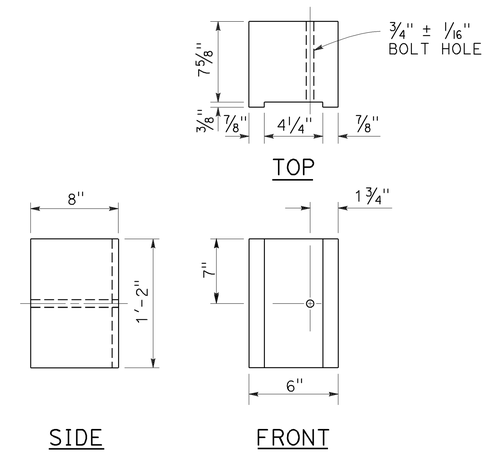

6" x 8"
NOTCHED WOOD BLOCK
Only for use with metal beam guard railing. See Note 5

NOTES:

1. All holes in steel post shall be 13/16" Dia maximum.
2. Dimensions shown for wood block are nominal.
3. Notched face of block faces steel post.
4. 6'-0" length posts to be used for typical roadway installation. See Revised Standard Plan RSP A77N3.
5. See Revised Standard Plan RSP A77L3 for use of 6" x 8" and 8" x 8" notched wood blocks.
6. This post and 8" x 12" block combination to be used for line post sections of MGS on narrow roadways and where strengthened line post sections of MGS are warranted to shield fixed objects.

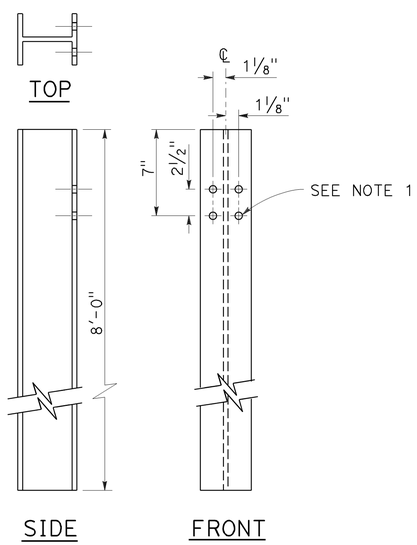

W6 x 15
STEEL POST
See Note 6

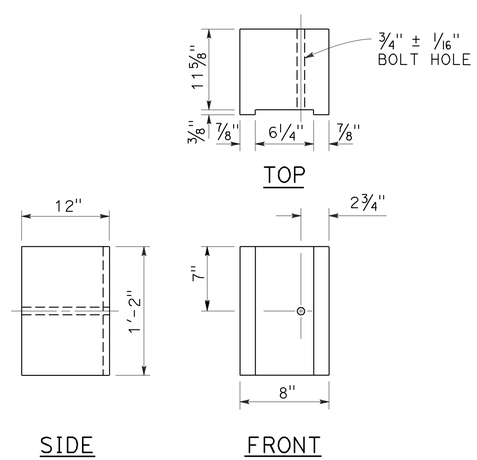

8" x 12"
NOTCHED WOOD BLOCK
See Notes 2 and 3

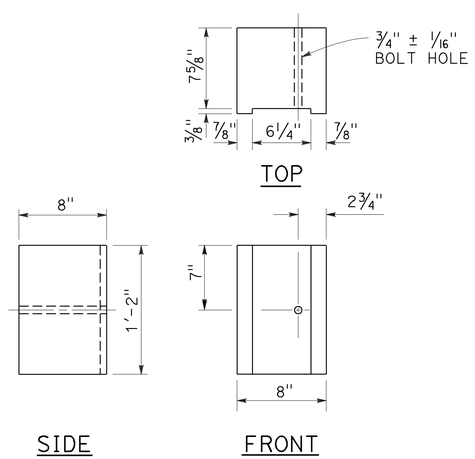

8" x 8"
NOTCHED WOOD BLOCK
Only for use with metal beam guard railing. See Note 5

STATE OF CALIFORNIA
DEPARTMENT OF TRANSPORTATION

MIDWEST GUARDRAIL SYSTEM STEEL POST AND NOTCHED WOOD BLOCK DETAILS

NO SCALE

RSP A77N2 DATED NOVEMBER 15, 2013 SUPERSEDES RSP A77N2
DATED JULY 19, 2013 THAT SUPPLEMENTS THE STANDARD PLANS BOOK DATED 2010.

REVISED STANDARD PLAN RSP A77N2

2010 REVISED STANDARD PLAN RSP A77N2

10-29-13

Dist	COUNTY	ROUTE	POST MILES TOTAL PROJECT	SHEET No.	TOTAL SHEETS
04	SM	280	Var	49	92

Randell D. Hiatt
REGISTERED CIVIL ENGINEER

November 15, 2013
PLANS APPROVAL DATE

REGISTERED PROFESSIONAL ENGINEER
Randell D. Hiatt
No. C50200
Exp. 6-30-15
CIVIL
STATE OF CALIFORNIA

THE STATE OF CALIFORNIA OR ITS OFFICERS OR AGENTS SHALL NOT BE RESPONSIBLE FOR THE ACCURACY OR COMPLETENESS OF SCANNED COPIES OF THIS PLAN SHEET.

TO ACCOMPANY PLANS DATED 2-2-15

2010 REVISED STANDARD PLAN RSP A77N3

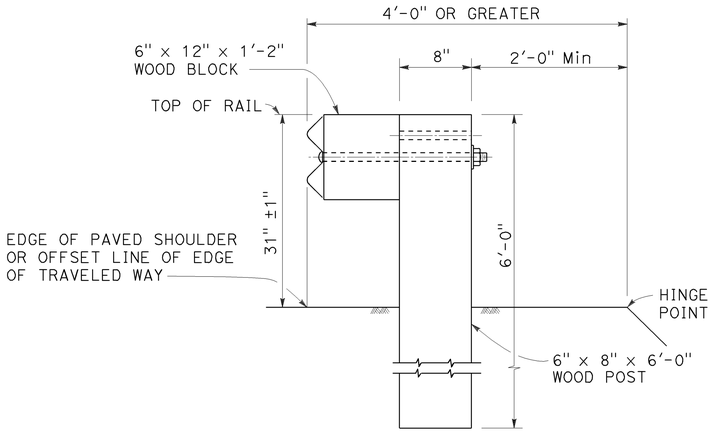

DETAIL A

TYPICAL ROADWAY INSTALLATION

See Note 1

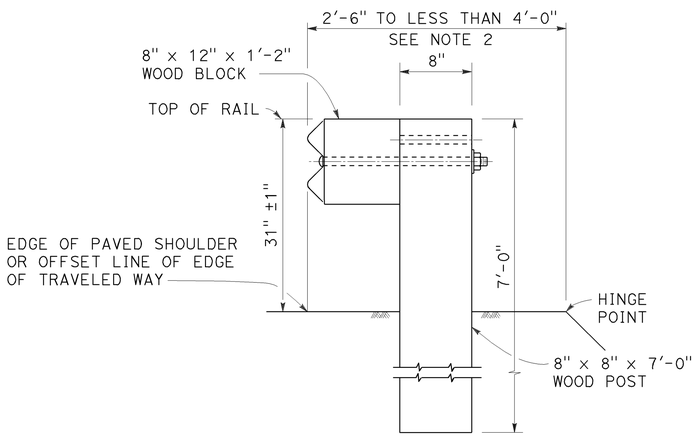

DETAIL B

NARROW ROADWAY INSTALLATION

See Note 1

POST EMBEDMENT

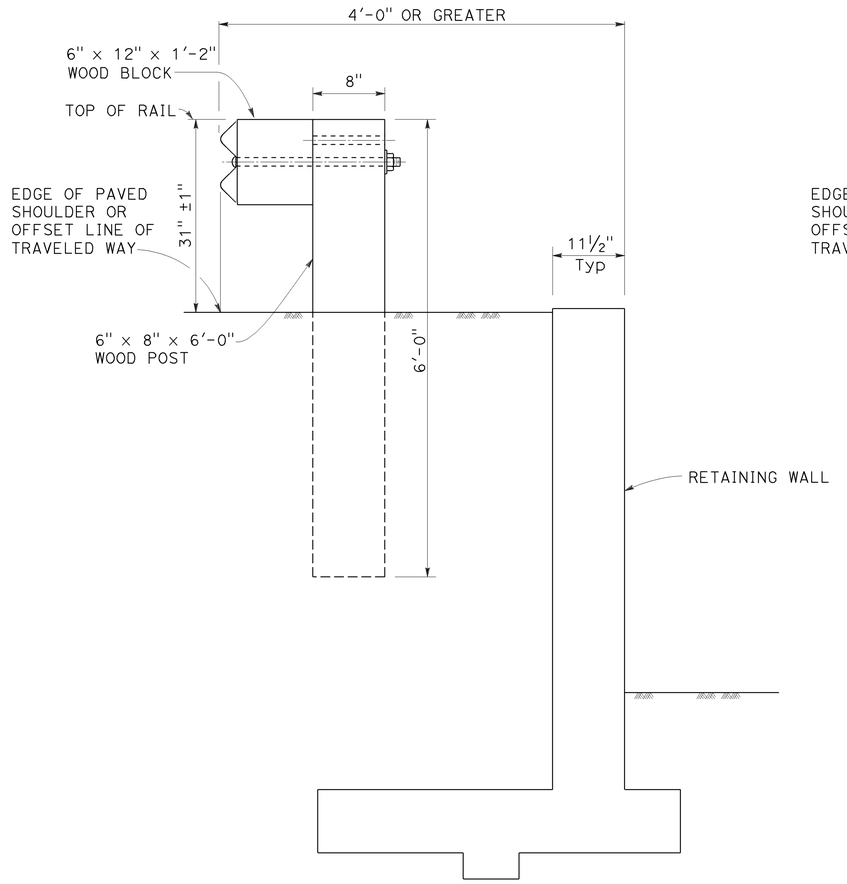

DETAIL C

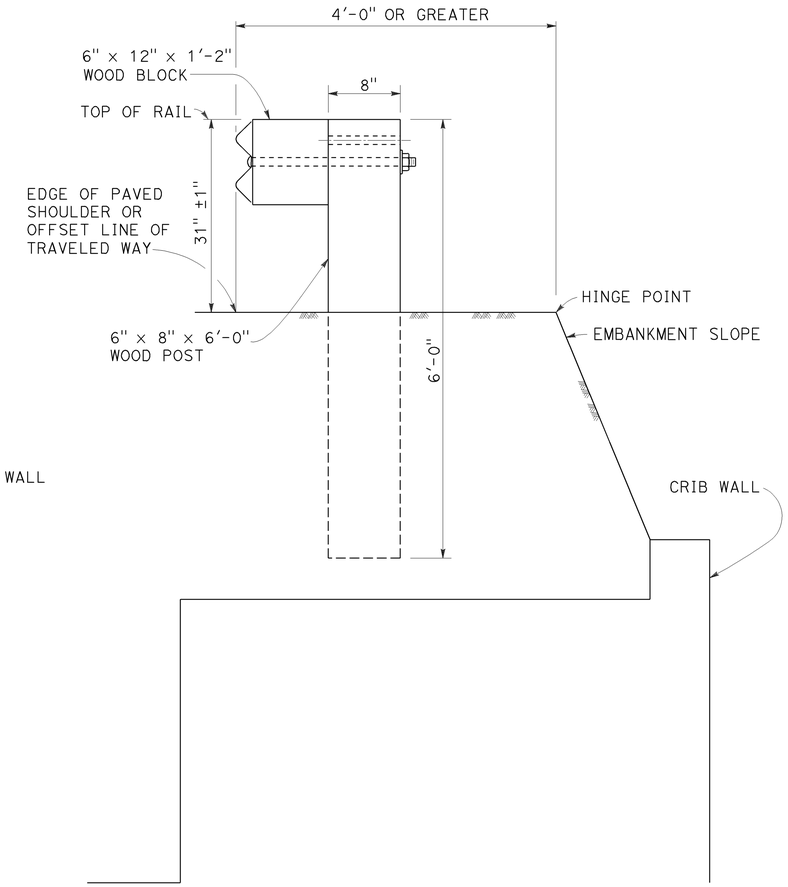

DETAIL D

INSTALLATION AT EARTH RETAINING WALLS

NOTES:

1. These installation details also applicable to steel line post installations. For Detail A, C, and D, where steel line post installations are constructed, W6 x 8.5 or W6 x 9 steel post, 6'-0" in length, with 6" x 12" x 1'-2" notched wood blocks or notched recycled plastic blocks are to be used in place of the size of wood post and wood block shown. For Detail B, where steel line post installations are constructed, W6 x 15 steel post, 8'-0" in length, with 8" x 12" x 1'-2" notched wood blocks or notched recycled plastic blocks are to be used in place of the size of wood post and wood block shown. For additional installation details, see Revised Standard Plan RSP A77L1 and RSP A77L2.
2. Where the distance between the face of the rail and the hinge point is less than 2'-6", see the Project Plans for special details.
3. For dike positioning with MGS installations, see Revised Standard Plan RSP A77N4.

STATE OF CALIFORNIA
DEPARTMENT OF TRANSPORTATION

MIDWEST GUARDRAIL SYSTEM TYPICAL LINE POST EMBEDMENT AND HINGE POINT OFFSET DETAILS

NO SCALE

RSP A77N3 DATED NOVEMBER 15, 2013 SUPERSEDES RSP A77N3
DATED JULY 19, 2013 THAT SUPPLEMENTS THE STANDARD PLANS BOOK DATED 2010.

REVISED STANDARD PLAN RSP A77N3

Dist	COUNTY	ROUTE	POST MILES TOTAL PROJECT	SHEET No.	TOTAL SHEETS
04	SM	280	Var	50	92

Randell D. Hiatt
REGISTERED CIVIL ENGINEER

July 19, 2013
PLANS APPROVAL DATE

REGISTERED PROFESSIONAL ENGINEER
Randell D. Hiatt
No. C50200
Exp. 6-30-15
CIVIL
STATE OF CALIFORNIA

THE STATE OF CALIFORNIA OR ITS OFFICERS OR AGENTS SHALL NOT BE RESPONSIBLE FOR THE ACCURACY OR COMPLETENESS OF SCANNED COPIES OF THIS PLAN SHEET.

TO ACCOMPANY PLANS DATED 2-2-15

NOTES:

1. When necessary to place dike more than 7" in front of face of MGS, only Type C dike may be used. For dike details, see Revised Standard Plan RSP A87B.
2. For standard railing post embedment, see Revised Standard Plan RSP A77N3.
3. MGS delineation to be used where shown on the Project Plans.
4. When dike or curb is placed under MGS, the maximum height of the dike or curb shall be 6". Mountable dike should not be used. For dike and curb details, see Revised Standard Plans RSP A87A and RSP A87B.
5. For details of typical distance between the face of rail and hinge point, see Revised Standard Plan RSP A77N3.
6. For steel line posts, use 1/4 - 20 self-tapping screws in 0.22" diameter holes or 1/4" bolts in 9/32" diameter holes.

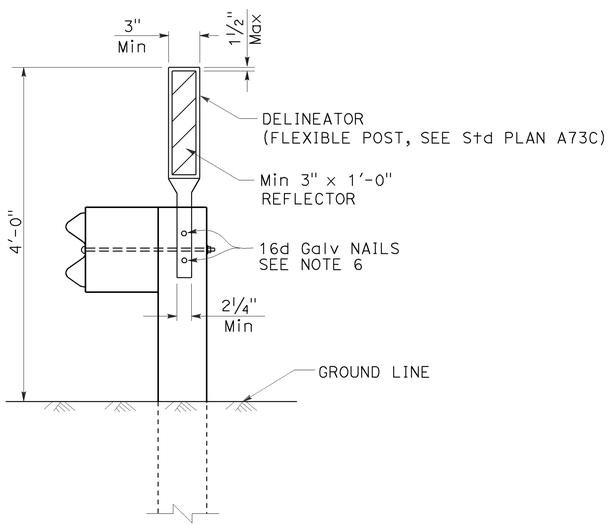

MGS DELINEATION

See Note 3

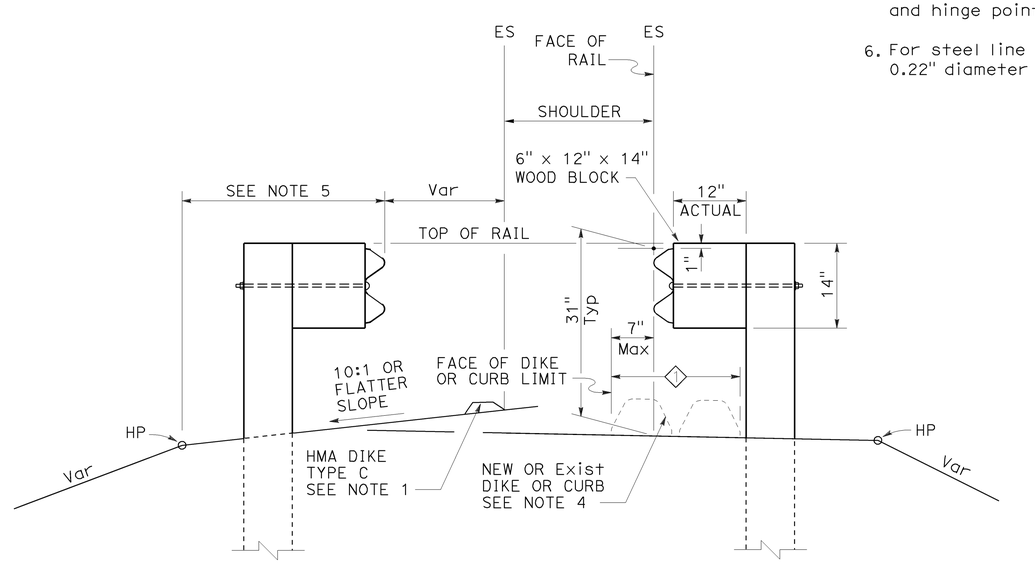

DIKE POSITIONING

See Note 1

1 PERMISSIBLE DIKE OR CURB PLACEMENT AREA

STATE OF CALIFORNIA
DEPARTMENT OF TRANSPORTATION

MIDWEST GUARDRAIL SYSTEM TYPICAL RAILING DELINEATION AND DIKE POSITIONING DETAILS

NO SCALE

RSP A77N4 DATED JULY 19, 2013 SUPPLEMENTS THE STANDARD PLANS BOOK DATED 2010.

REVISED STANDARD PLAN RSP A77N4

2010 REVISED STANDARD PLAN RSP A77N4

7-10-13

Dist	COUNTY	ROUTE	POST MILES TOTAL PROJECT	SHEET No.	TOTAL SHEETS
04	SM	280	Var	51	92

Randell D. Hiatt
REGISTERED CIVIL ENGINEER

November 15, 2013
PLANS APPROVAL DATE

REGISTERED PROFESSIONAL ENGINEER
Randell D. Hiatt
No. C50200
Exp. 6-30-15
CIVIL
STATE OF CALIFORNIA

THE STATE OF CALIFORNIA OR ITS OFFICERS OR AGENTS SHALL NOT BE RESPONSIBLE FOR THE ACCURACY OR COMPLETENESS OF SCANNED COPIES OF THIS PLAN SHEET.

TO ACCOMPANY PLANS DATED 2-2-15

2010 REVISED STANDARD PLAN RSP A77P1

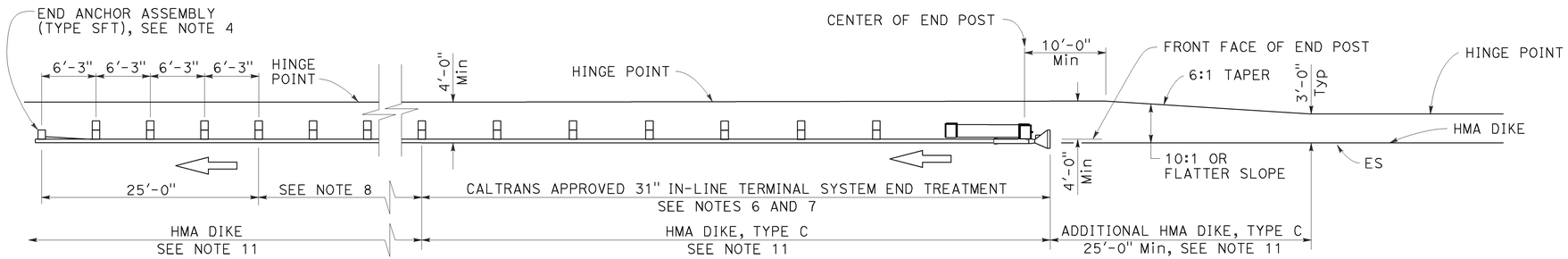

TYPE 11A LAYOUT

(Embankment MGS installation with 31" in-line end treatment at traffic approach end of railing) see Note 5

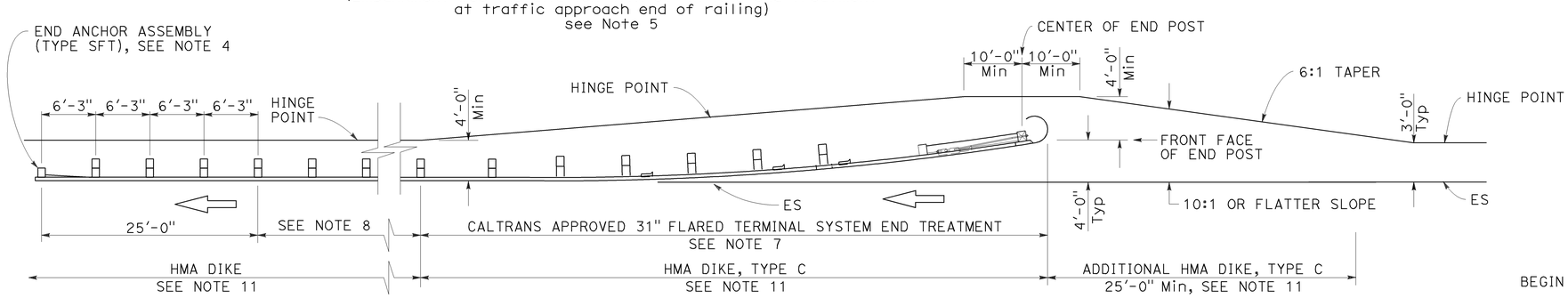

TYPE 11B LAYOUT

(Embankment MGS installation with 31" flared end treatment at traffic approach end of railing) see Note 5

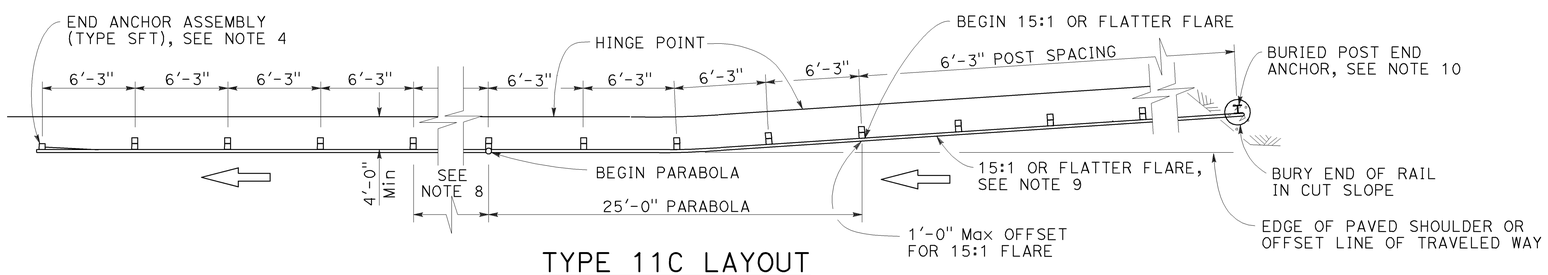

TYPE 11C LAYOUT

(Embankment MGS installation with buried end anchor treatment at traffic approach end of railing) see Notes 5 and 11

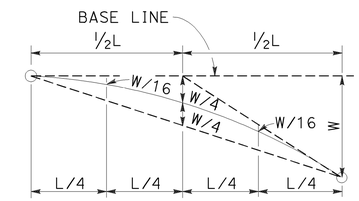

TYPICAL PARABOLIC LAYOUT

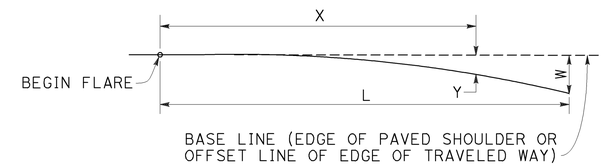

$$Y = \frac{WX^2}{L^2}$$

Y = OFFSET FROM BASE LINE
W = MAXIMUM OFFSET
X = DISTANCE ALONG BASE LINE
L = LENGTH OF FLARE

PARABOLIC FLARE OFFSETS

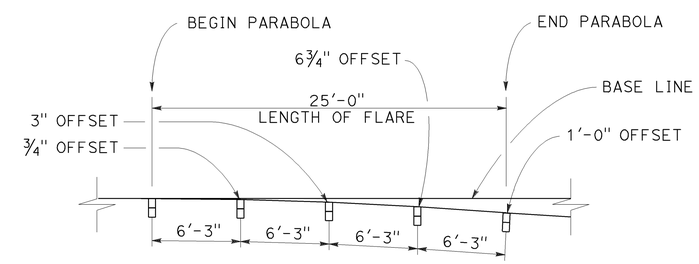

TYPICAL FLARE OFFSETS FOR 1 FOOT Max END OFFSET

NOTES:

1. Line post, blocks and hardware to be used are shown on Revised Standard Plans RSP A77L1, RSP A77L2, RSP A77M1, RSP A77N1 and RSP A77N2.
2. MGS post spacing to be 6'-3" center to center, except as otherwise noted.
3. Except as noted, line posts are 6" x 8" x 6'-0" wood with 6" x 12" x 1'-2" wood blocks. W6 x 8.5 or W6 x 9 steel posts, 6'-0" in length, with 6" x 12" x 1'-2" notched wood blocks or recycled plastic blocks may be used for 6" x 8" x 6'-0" wood post with 6" x 12" x 1'-2" wood blocks where applicable and when specified.
4. For End Anchor Assembly (Type SFT) details, see Revised Standard Plan RSP A77S1.
5. Layout Types 11A, 11B or 11C are typically used where MGS is recommended to shield embankment slopes and a crashworthy end treatment is required for only one direction of traffic.
6. 31" in-line terminal system end treatments are used where site conditions will not accommodate a flared end treatment.
7. The type of 31" terminal system end treatment to be used will be shown on the Project Plans.
8. Dependent on site conditions (embankment height and side slope), construction of additional MGS (length equal to multiples of 12'-6" with 6'-3" post spacing) may be advisable.
9. The 15:1 or flatter flare used with buried end anchors is based on the edge of the paved shoulder or offset line of edge of the traveled way. The length of MGS within the 15:1 or flatter flare is based on site conditions and should be a length equal to multiples of 12'-6".
10. For details of the buried post end anchor used with Type 11C Layout, see Revised Standard Plan RSP A77T2.
11. Where placement of dike is required with MGS installations, see Revised Standard Plan RSP A77N4 for dike positioning details.

STATE OF CALIFORNIA
DEPARTMENT OF TRANSPORTATION

MIDWEST GUARDRAIL SYSTEM TYPICAL LAYOUTS FOR EMBANKMENTS

NO SCALE

RSP A77P1 DATED NOVEMBER 15, 2013 SUPERSEDES RSP A77P1 DATED JULY 19, 2013 THAT SUPPLEMENTS THE STANDARD PLANS BOOK DATED 2010.

REVISED STANDARD PLAN RSP A77P1

10-4-13

Dist	COUNTY	ROUTE	POST MILES TOTAL PROJECT	SHEET No.	TOTAL SHEETS
04	SM	280	Var	52	92

Randell D. Hiatt
REGISTERED CIVIL ENGINEER

July 19, 2013
PLANS APPROVAL DATE

REGISTERED PROFESSIONAL ENGINEER
Randell D. Hiatt
No. C50200
Exp. 6-30-15
CIVIL
STATE OF CALIFORNIA

THE STATE OF CALIFORNIA OR ITS OFFICERS OR AGENTS SHALL NOT BE RESPONSIBLE FOR THE ACCURACY OR COMPLETENESS OF SCANNED COPIES OF THIS PLAN SHEET.

TO ACCOMPANY PLANS DATED 2-2-15

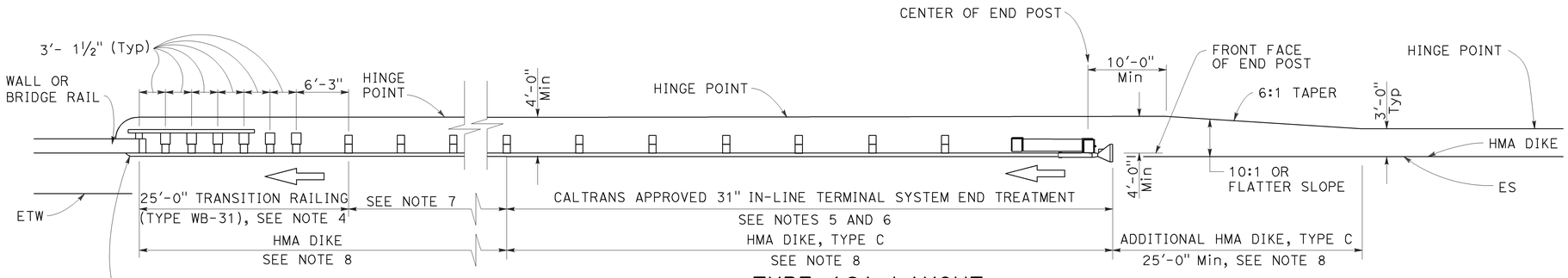

TYPE 12A LAYOUT

(MGS installation at structure approach with
31" In-line end treatment at traffic approach end of railing)
See Notes 9

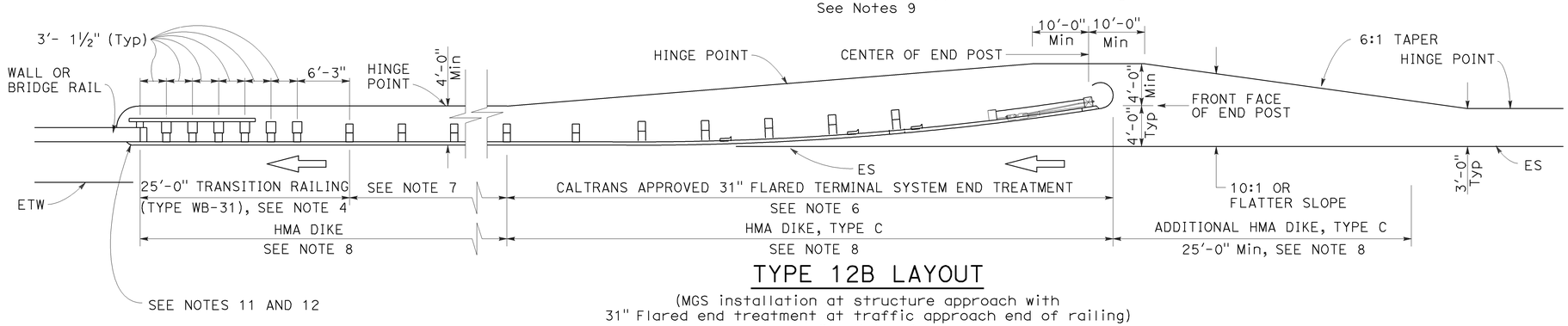

TYPE 12B LAYOUT

(MGS installation at structure approach with
31" Flared end treatment at traffic approach end of railing)
See Notes 9

NOTES:

1. Line post, blocks and hardware to be used are shown on Revised Standard Plans RSP A77L1, RSP A77L2, RSP A77M1, RSP A77N1 and RSP A77N2.
2. MGS post spacing to be 6'-3" center to center, except as otherwise noted.
3. Except as noted, line posts are 6" x 8" x 6'-0" wood with 6" x 12" x 1'-2" wood blocks. W6 x 8.5 or W6 x 9 steel posts, 6'-0" in length, with 6" x 12" x 1'-2" notched wood blocks or plastic blocks may be used for 6" x 8" x 6'-0" wood posts with 6" x 12" x 1'-2" wood blocks where applicable and when specified.
4. For Transition Railing (Type WB-31) details for Types 12A and 12B Layouts, see Revised Standard Plan RSP A77U4.
5. 31" in-line terminal system end treatments are used where site conditions will not accommodate a 31" flared end treatment.
6. The type 31" of terminal system end treatment to be used will be shown on the Project Plans.
7. Dependent on site conditions (embankment height, side slopes, or other fixed objects), it may be advisable to construct additional guard railing (a length equal to multiples of 12'-6" with 6'-3" post spacing) between the transition railing and end treatment. A 12.5 degree angle of departure can be drawn on the Project Plans from the edge of traveled way through the outer most point of the fixed object to determine the additional length of railing needed.
8. Where placement of dike is required with guard railing installations, see Revised Standard Plan RSP A77N4 for dike positioning details.
9. Type 12A or Type 12B Layouts are typically used:
   a. To the right of approaching traffic, at the end of a structure, on two-lane conventional highway where the roadbed width across the structure is less than 40 feet.
   b. To the left of approaching traffic, at the end of a structure, on two-lane conventional highway where the roadbed width across the structure is less than 40 feet.
   c. To the right of approaching traffic at the end of each structure on multilane freeways or expressways with separate adjacent or parallel bridges.
   d. To the right of approaching traffic at the end of the structure on multilane freeways or expressways with decked median on the bridge.
10. See Revised Standard Plan RSP A77Q3 for typical layout used left of approaching traffic at the ends of each structure on multilane freeways or expressways with separate adjacent or parallel bridges.
11. For additional details of typical connections to bridge rail, see Connection Detail AA on Revised Standard Plans RSP A77U1 and RSP A77U2 and Connection Detail FF on Revised Standard Plans RSP A77V1 and RSP A77V2.
12. For additional details of a typical connection to walls or abutments, see Revised Standard Plan RSP A77U3.

STATE OF CALIFORNIA
DEPARTMENT OF TRANSPORTATION

MIDWEST GUARDRAIL SYSTEM TYPICAL LAYOUTS FOR STRUCTURE APPROACH

NO SCALE

RSP A77Q1 DATED JULY 19, 2013 SUPPLEMENTS THE STANDARD PLANS BOOK DATED 2010.

REVISED STANDARD PLAN RSP A77Q1

2010 REVISED STANDARD PLAN RSP A77Q1

Dist	COUNTY	ROUTE	POST MILES TOTAL PROJECT	SHEET No.	TOTAL SHEETS
04	SM	280	Var	53	92

Randell D. Hiatt
REGISTERED CIVIL ENGINEER

July 19, 2013
PLANS APPROVAL DATE

REGISTERED PROFESSIONAL ENGINEER
Randell D. Hiatt
No. C50200
Exp. 6-30-15
CIVIL
STATE OF CALIFORNIA

THE STATE OF CALIFORNIA OR ITS OFFICERS OR AGENTS SHALL NOT BE RESPONSIBLE FOR THE ACCURACY OR COMPLETENESS OF SCANNED COPIES OF THIS PLAN SHEET.

TO ACCOMPANY PLANS DATED 2-2-15

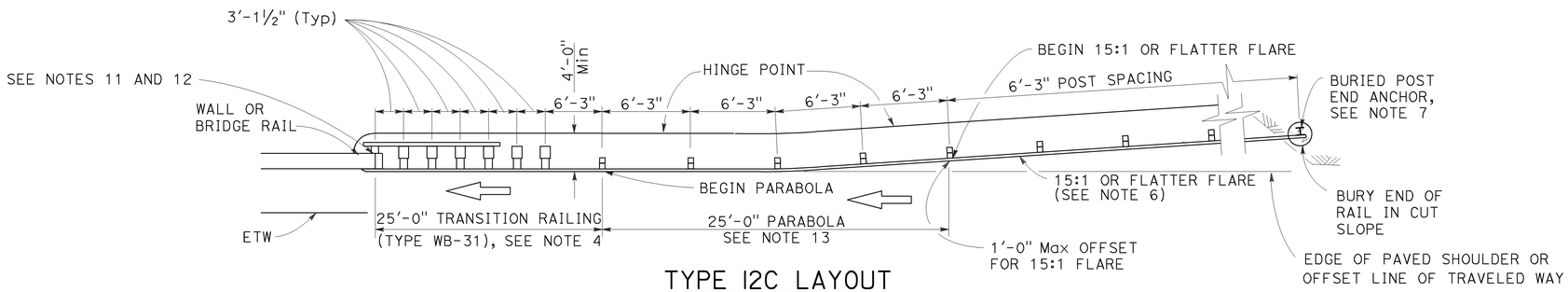

TYPE 12C LAYOUT

(MGS installation at structure approach with a Buried end anchor treatment at traffic approach end of railing)
See Notes 8 and 9

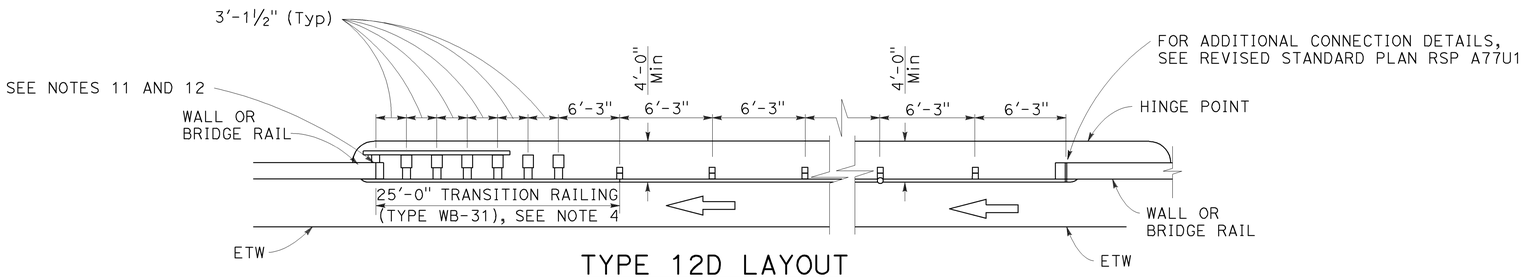

TYPE 12D LAYOUT

(Continuous MGS installation between structures)
See Notes 5 and 9

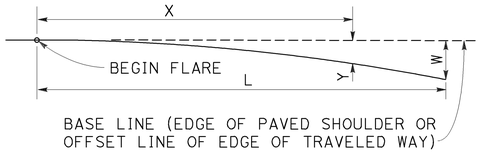

$$Y = \frac{WX^2}{L^2}$$

Y = OFFSET FROM BASE LINE
W = MAXIMUM OFFSET
X = DISTANCE ALONG BASE LINE
L = LENGTH OF FLARE

PARABOLIC FLARE OFFSETS

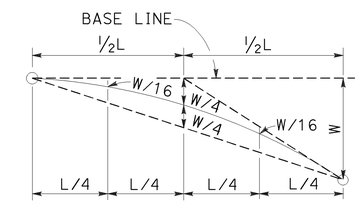

TYPICAL PARABOLIC LAYOUT

NOTES:

1. Line post, blocks and hardware to be used are shown on Revised Standard Plans RSP A77L1, RSP A77L2, RSP A77M1, RSP A77N1 and RSP A77N2.
2. MGS post spacing to be 6'-3" center to center, except as otherwise noted.
3. Except as noted, line posts are 6" x 8" x 6'-0" m wood with 6" x 12" x 1'-2" wood blocks. W6 x 8.5 or W6 x 9 steel posts, 6'-0" in length, with 6" x 12" x 1'-2" notched wood blocks or plastic blocks may be used for 6" x 8" x 6'-0" wood posts with 6" x 12" x 1'-2" wood blocks where applicable and when specified.
4. For Transition Railing (Type WB-31) details for Types 12C and 12D Layouts, see Revised Standard Plan RSP A77U4.
5. Type 12D layout is typically used where continous MGS is recommended between structures.
6. The 15:1 or flatter flare for Type 12C Layout is based on the edge of the paved shoulder or offset line of edge of the traveled way. The length of MGS with the 15:1 or flatter flare is based on site conditions and should be a length equal to multiples of 12'-6".
7. For details of the buried post end anchor used with Type 12C Layout, see Revised Standard Plan RSP A77T2.
8. Where placement of dike is required with MGS installations, see Revised Standard Plan RSP A77N4 for dike positioning details.
9. Type 12C Layout is typically used:
   a. To the right of approaching traffic, at the end of the structure, on two-lane conventional highway where the roadbed width across the structure is less than 40 feet.
   b. To the left of approaching traffic, at each of a structure, on two-lane conventional highway where the roadbed width across the structure is less than 40 feet.
   c. To the right of approaching traffic at the end of each structure on multilane freeways or expressways with separate adjacent or parallel bridges.
   d. To the right of approaching traffic at the end of the structure on multilane freeways or expressways with decked median on the bridge.
10. See Revised Standard Plan RSP A77Q3 for typical layout used left of approaching traffic at the ends of each structure on multilane freeways or expressways with separate adjacent or parallel bridges.
11. For additional details of typical connections to bridge rail, see Connection Detail AA on Revised Standard Plans RSP A77U1 and RSP A77U2 and Connection Detail FF on Revised Standard Plans RSP A77V1 and RSP A77V2.
12. For additional details of a typical connection to walls or abutments, see Revised Standard Plan RSP A77U3.
13. For typical flare offsets for 25'-0" length parabola with maximum offset of 1'-0", see Revised Standard Plan RSP A77P1.

STATE OF CALIFORNIA
DEPARTMENT OF TRANSPORTATION

MIDWEST GUARDRAIL SYSTEM TYPICAL LAYOUTS FOR STRUCTURE APPROACH AND BETWEEN STRUCTURES

NO SCALE

RSP A77Q2 DATED JULY 19, 2013 SUPPLEMENTS THE STANDARD PLANS BOOK DATED 2010.

REVISED STANDARD PLAN RSP A77Q2

2010 REVISED STANDARD PLAN RSP A77Q2

7-8-13

Dist	COUNTY	ROUTE	POST MILES TOTAL PROJECT	SHEET No.	TOTAL SHEETS
04	SM	280	Var	54	92

Randell D. Hiatt
REGISTERED CIVIL ENGINEER

July 19, 2013
PLANS APPROVAL DATE

REGISTERED PROFESSIONAL ENGINEER Randell D. Hiatt No. C50200 Exp. 6-30-15 CIVIL STATE OF CALIFORNIA

THE STATE OF CALIFORNIA OR ITS OFFICERS OR AGENTS SHALL NOT BE RESPONSIBLE FOR THE ACCURACY OR COMPLETENESS OF SCANNED COPIES OF THIS PLAN SHEET.

TO ACCOMPANY PLANS DATED 2-2-15

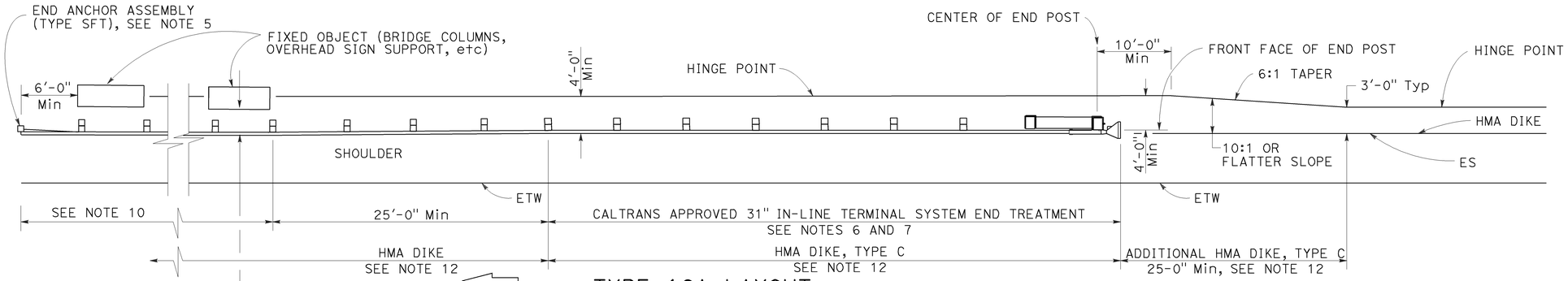

TYPE 16A LAYOUT

(MGS installation at roadside fixed object or objects with 31" in-line end treatment at traffic approach end of railing)
See Notes 11 and 12

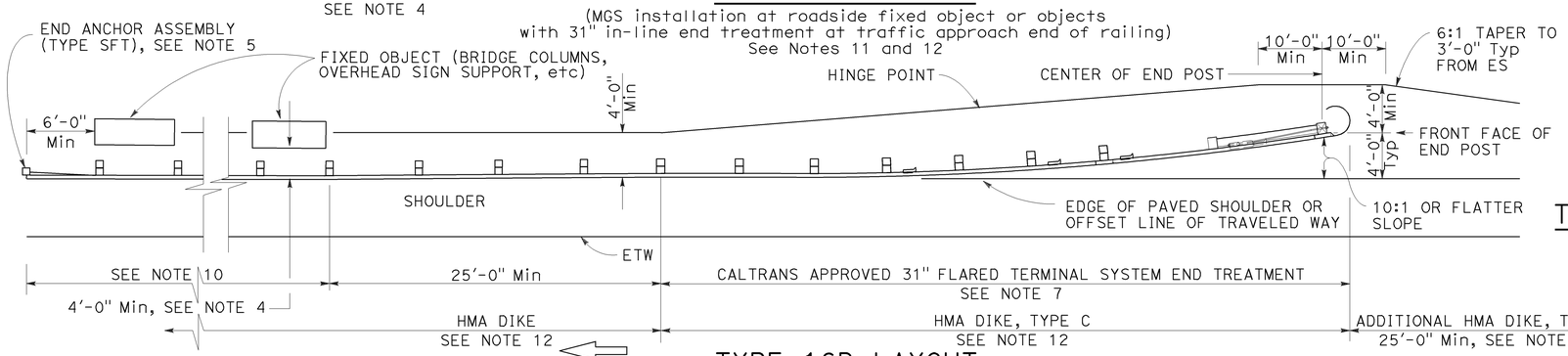

TYPE 16B LAYOUT

(MGS installation at roadside fixed object or objects with 31' flared end treatment at traffic approach end of railing)
See Notes 11 and 12

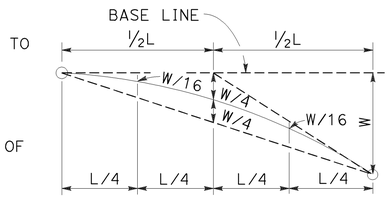

TYPIC AL PARABOLIC LAYOUT

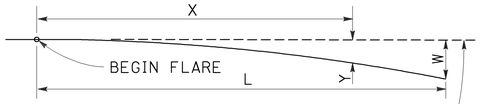

BASE LINE (EDGE OF PAVED SHOULDER OR OFFSET LINE OF EDGE OF TRAVELED WAY)

$$Y = \frac{WX^2}{L^2}$$

Y = OFFSET FROM BASE LINE
W = MAXIMUM OFFSET
X = DISTANCE ALONG BASE LINE
L = LENGTH OF FLARE

PARABOLIC FLARE OFFSETS

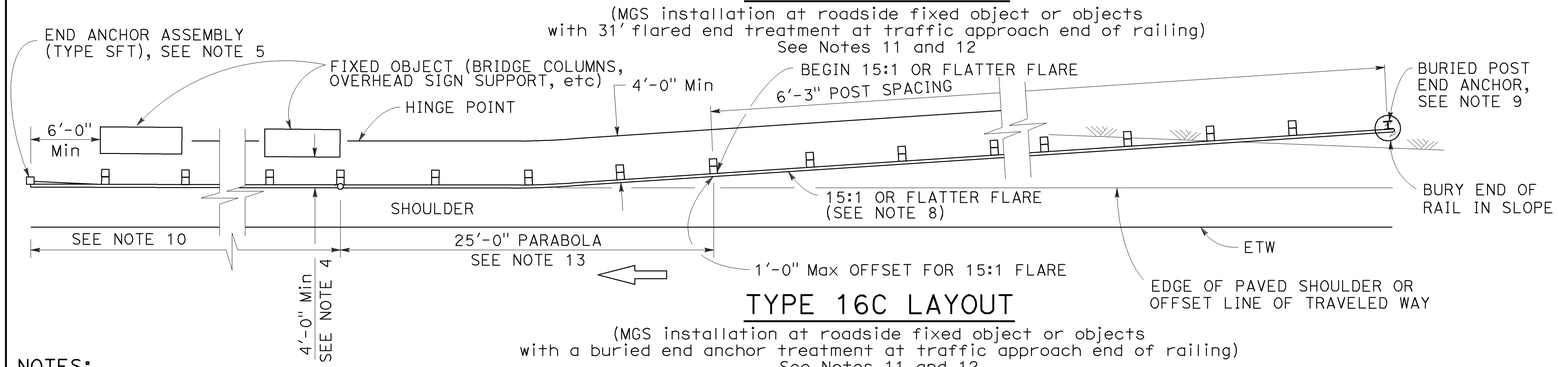

TYPE 16C LAYOUT

(MGS installation at roadside fixed object or objects with a buried end anchor treatment at traffic approach end of railing)
See Notes 11 and 12

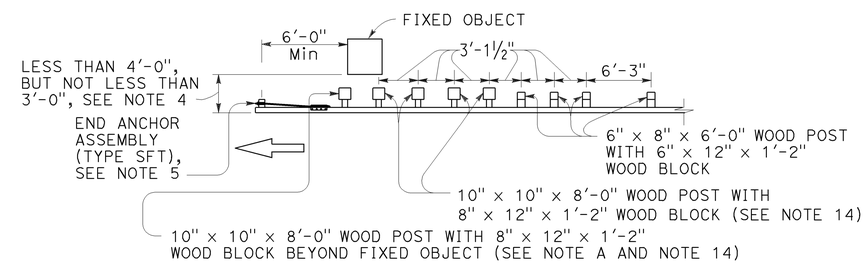

NOTE A: For a series of fixed objects (bridge columns, overhead sign supports, etc.) additional 10" x 10" x 8'-0" wood post with 8" x 12" x 1'-2" wood blocks at 3'-1½" center to center spacing are to be used between fixed objects.

STRENGTHENED MIDWEST GUARDRAIL SYSTEM SECTIONS FOR FIXED OBJECT

Use strengthened MGS sections with Types 16A, 16B or 16C layouts where minimum clearance between the face of the railing and fixed object(s) is less than 4'-0", but not less than 3'-0". See Note 4

NOTES:

1. Line post, blocks and hardware to be used are shown on Revised Standard Plans RSP A77L1, RSP A77L2, RSP A77M1, RSP A77N1 and RSP A77N2.
2. MGS post spacing to be 6'-3" center to center, except as otherwise noted.
3. Except as noted, line posts are 6" x 8" x 6'-0" wood with 6" x 12" x 1'-2" wood blocks. W6 x 8.5 or W6 x 9 steel posts, 6'-0" in length, with 6" x 12" x 1'-2" notched wood blocks or notched recycled plastic blocks may be used for 6" x 8" x 6'-0" wood line posts with 6" x 12" x 1'-2" wood blocks where applicable and when specified.
4. A 4'-0" minimum clearance is required between the face of the railing and the face of a fixed object located directly behind MGS sections with post spacing of 6'-3". Construct MGS as shown in the detail "Strengthened Midwest Guardrail System Sections for Fixed Object" on this plan, where the clearance between the face of the railing and the face of a fixed object is less than 4'-0", but not less than 3'-0". Where the clearance is less than 3'-0", a concrete wall or barrier should be constructed to shield the fixed object(s).
5. For End Anchor Assembly (Type SFT) details, see Revised Standard Plan RSP A77S1.
6. 31" in-line terminal system end treatments are used where site conditions will not accommodate a 31" flared end treatment.
7. The type of 31" terminal system to be used will be shown on the Project Plans.
8. The 15:1 or flatter flare used with Type 16C Layout is based on the edge of the paved shoulder or offset line of edge of the traveled way. The length of MGS within the 15:1 or flatter flare is based on site conditions and should be a length equal to multiples of 12'-6".
9. For details of the Buried Post End Anchor used with Type 16C Layout, see Revised Standard Plan RSP A77T2.
10. As site conditions dictate, construct additional MGS to shield fixed object(s). Additional MGS length equal to multiples of 12'-6". Post spacing at 6'-3" except as specified in Note 4.
11. Layout Types 16A, 16B or 16C are typically used where MGS is recommended to shield roadside fixed object(s) and a crashworthy 31" end treatment is required for only one direction of traffic.
12. Where placement of dike is required with MGS, see Revised Standard Plan RSP A77N4 for dike positioning details.
13. For typical flare offsets for 25'-0" length parabola with maximum offset of 1'-0", see Revised Standard Plan RSP A77P1.
14. W6 x 15 steel post, 8'-0" in length, with 8" x 12" x 1'-2" notched wood block or notched recycled plastic blocks may be used in place of the 10" x 10" x 8'-0" wood post with 8" x 12" x 1'-2" wood block shown in the detail "Strengthened Midwest Guardrail System Sections for Fixed Object".

STATE OF CALIFORNIA
DEPARTMENT OF TRANSPORTATION

MIDWEST GUARDRAIL SYSTEM TYPICAL LAYOUTS FOR ROADSIDE FIXED OBJECTS

NO SCALE

RSP A77R3 DATED JULY 19, 2013 SUPPLEMENTS THE STANDARD PLANS BOOK DATED 2010.

REVISED STANDARD PLAN RSP A77R3

2010 REVISED STANDARD PLAN RSP A77R3

6-20-13

Dist	COUNTY	ROUTE	POST MILES TOTAL PROJECT	SHEET No.	TOTAL SHEETS
04	SM	280	Var	55	92

Randell D. Hiatt
REGISTERED CIVIL ENGINEER

November 15, 2013
PLANS APPROVAL DATE

REGISTERED PROFESSIONAL ENGINEER
Randell D. Hiatt
No. C50200
Exp. 6-30-15
CIVIL
STATE OF CALIFORNIA

THE STATE OF CALIFORNIA OR ITS OFFICERS OR AGENTS SHALL NOT BE RESPONSIBLE FOR THE ACCURACY OR COMPLETENESS OF SCANNED COPIES OF THIS PLAN SHEET.

TO ACCOMPANY PLANS DATED 2-2-15

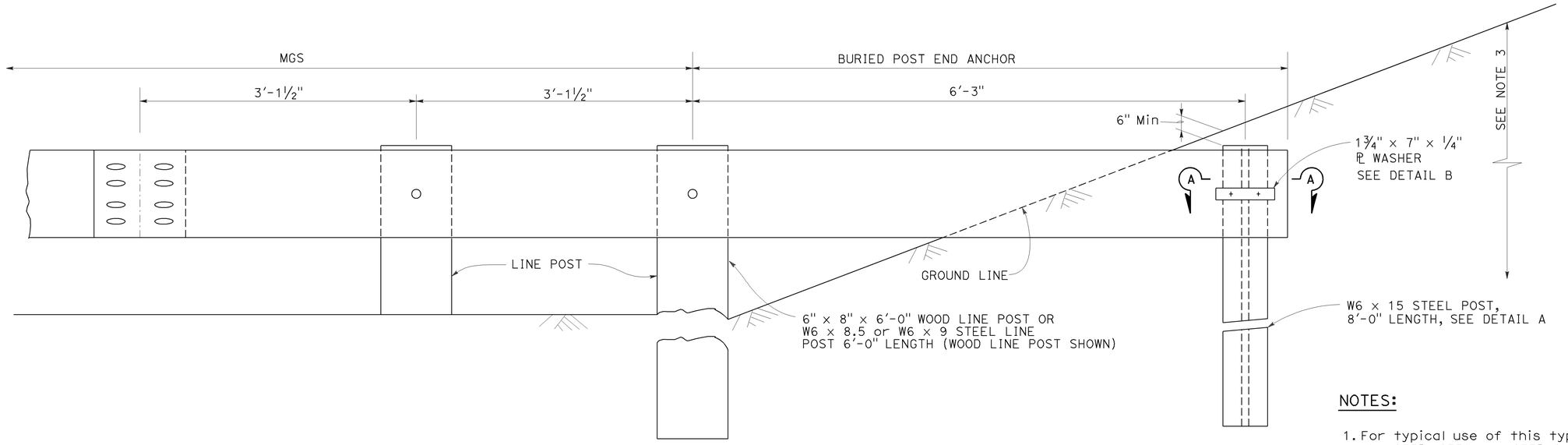

BURIED POST END ANCHOR

See Note 3

NOTES:

1. For typical use of this type of end anchor with MGS see the A77P, A77Q and A77R Series of the Standard Plans.
2. Holes excavation in the slope to construct the buried post end anchor shall be backfilled with selected earth, placed in layers approximately 1'-0" thick. Each layer shall be moistened and thoroughly compacted.
3. The buried post end anchor shall only be constructed at those locations where the slope perpendicular to the roadway is non-traversable.

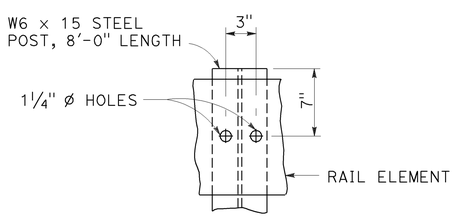

DETAIL A

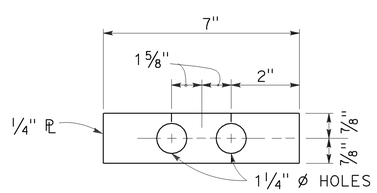

DETAIL B

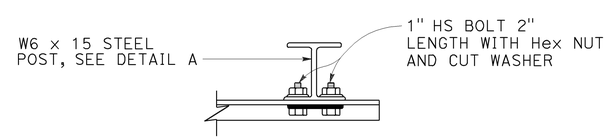

SECTION A-A

STATE OF CALIFORNIA
DEPARTMENT OF TRANSPORTATION

MIDWEST GUARDRAIL SYSTEM BURIED POST END ANCHOR

NO SCALE

RSP A77T2 DATED NOVEMBER 15, 2013 SUPERSEDES RSP A77T2
DATED JULY 19, 2013 THAT SUPPLEMENTS THE STANDARD PLANS BOOK DATED 2010.

REVISED STANDARD PLAN RSP A77T2

2010 REVISED STANDARD PLAN RSP A77T2

10-4-13

Dist	COUNTY	ROUTE	POST MILES TOTAL PROJECT	SHEET No.	TOTAL SHEETS
04	SM	280	Var	56	92

Randell D. Hiatt
REGISTERED CIVIL ENGINEER

July 19, 2013
PLANS APPROVAL DATE

REGISTERED PROFESSIONAL ENGINEER
Randell D. Hiatt
No. C50200
Exp. 6-30-15
CIVIL
STATE OF CALIFORNIA

THE STATE OF CALIFORNIA OR ITS OFFICERS OR AGENTS SHALL NOT BE RESPONSIBLE FOR THE ACCURACY OR COMPLETENESS OF SCANNED COPIES OF THIS PLAN SHEET.

TO ACCOMPANY PLANS DATED 2-2-15

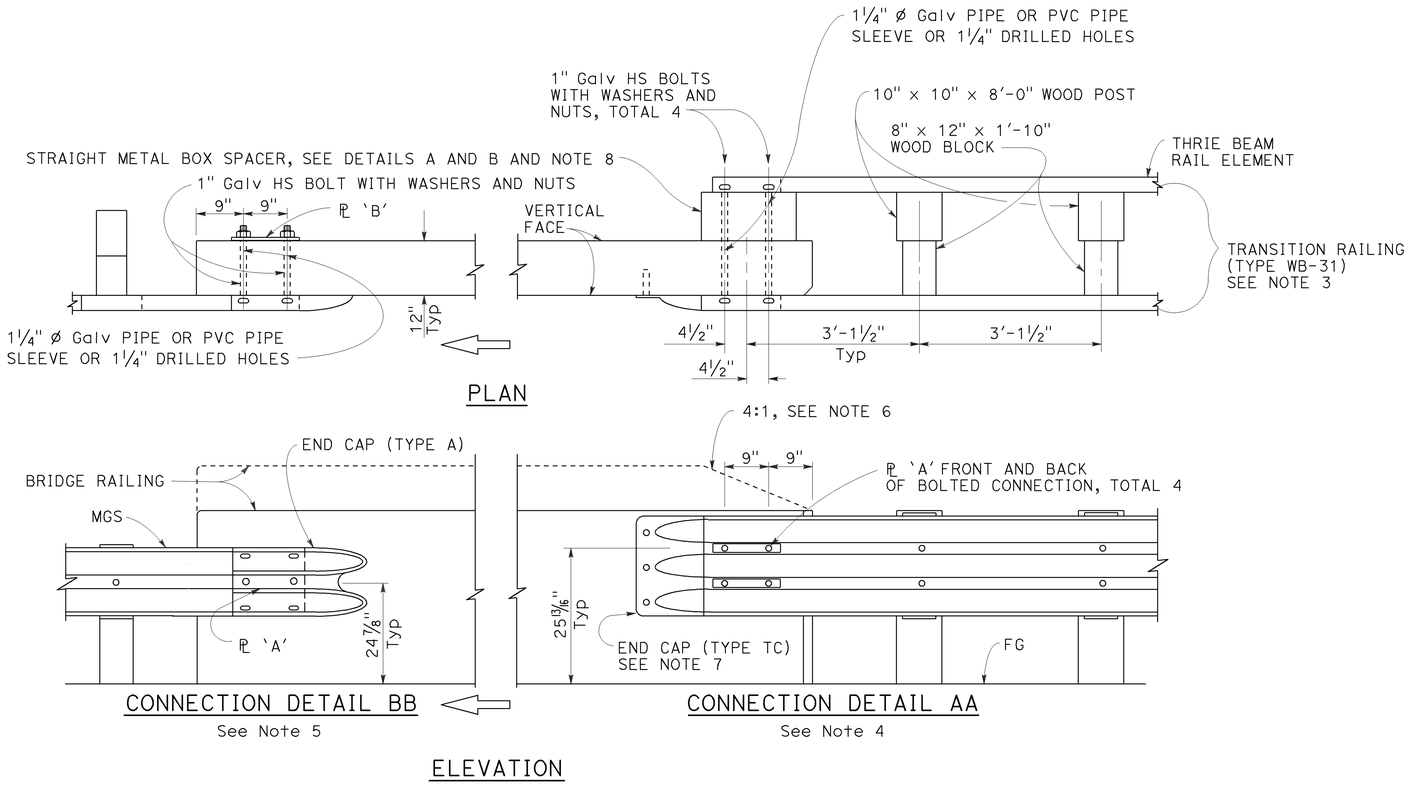

MIDWEST GUARDRAIL SYSTEM CONNECTION TO BRIDGE RAILING WITHOUT SIDEWALK

NOTES:

1. See Revised Standard Plan RSP A77U2 for additional connection details to bridges without sidewalks.
2. Additional details of posts, blocks and hardware are shown on Revised Standard Plans RSP A77M1, RSP A77N1 and RSP A77N2.
3. For additional details of Transition Railing (Type WB-31), see Revised Standard Plan RSP A77U4. Transition Railing (Type WB-31) transitions the 12 gauge MGS railing section to a heavier gage nested thrie beam railing section which is connected to the concrete bridge railing.
4. For typical use of Connection Detail AA, see Layout Types 12A and 12B on Revised Standard Plan RSP A77Q1, Layout Types 12C and 12D on Revised Standard Plan RSP A77Q2, and Layout Type 12E on Revised Standard Plan RSP A77Q3.
5. For typical use of Connection Detail BB, see Layout Type 12D (structure departure railing connection) on Revised Standard Plan RSP A77Q2 and Layout Type 12DD on Revised Standard Plan RSP A77Q5.
6. Where the height of the bridge railing exceeds the height of the thrie beam railing by more than 1" at Connection Detail AA, taper the top of the end of the bridge railing at 4:1 to match the top elevation of the thrie beam rail.
7. For details of End Cap (Type TC), see Revised Standard Plan RSP A77U4.
8. See Revised Standard Plan RSP A77U4 for additional details regarding depth dimension for straight metal box spacer.

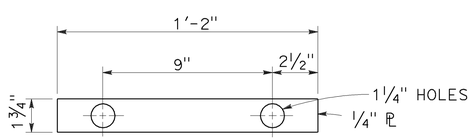

PLATE 'A'

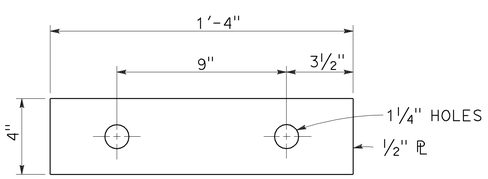

PLATE 'B'
(For backside of connection BB)

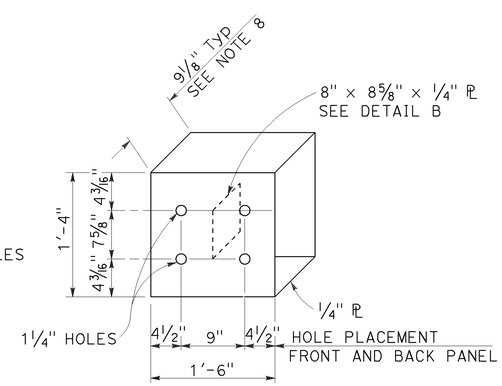

DETAIL A

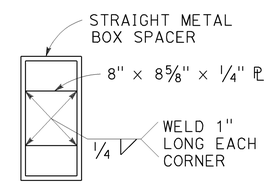

DETAIL B

STRAIGHT METAL BOX SPACER

STATE OF CALIFORNIA
DEPARTMENT OF TRANSPORTATION

MIDWEST GUARDRAIL SYSTEM CONNECTIONS TO BRIDGE RAILINGS WITHOUT SIDEWALKS DETAILS No. 1

NO SCALE

RSP A77U1 DATED JULY 19, 2013 SUPPLEMENTS THE STANDARD PLANS BOOK DATED 2010.

REVISED STANDARD PLAN RSP A77U1

2010 REVISED STANDARD PLAN RSP A77U1

7-8-13

Dist	COUNTY	ROUTE	POST MILES TOTAL PROJECT	SHEET No.	TOTAL SHEETS
04	SM	280	Var	57	92

Randell D. Hiatt
REGISTERED CIVIL ENGINEER

July 19, 2013
PLANS APPROVAL DATE

REGISTERED PROFESSIONAL ENGINEER
Randell D. Hiatt
No. C50200
Exp. 6-30-15
CIVIL
STATE OF CALIFORNIA

THE STATE OF CALIFORNIA OR ITS OFFICERS OR AGENTS SHALL NOT BE RESPONSIBLE FOR THE ACCURACY OR COMPLETENESS OF SCANNED COPIES OF THIS PLAN SHEET.

TO ACCOMPANY PLANS DATED 2-2-15

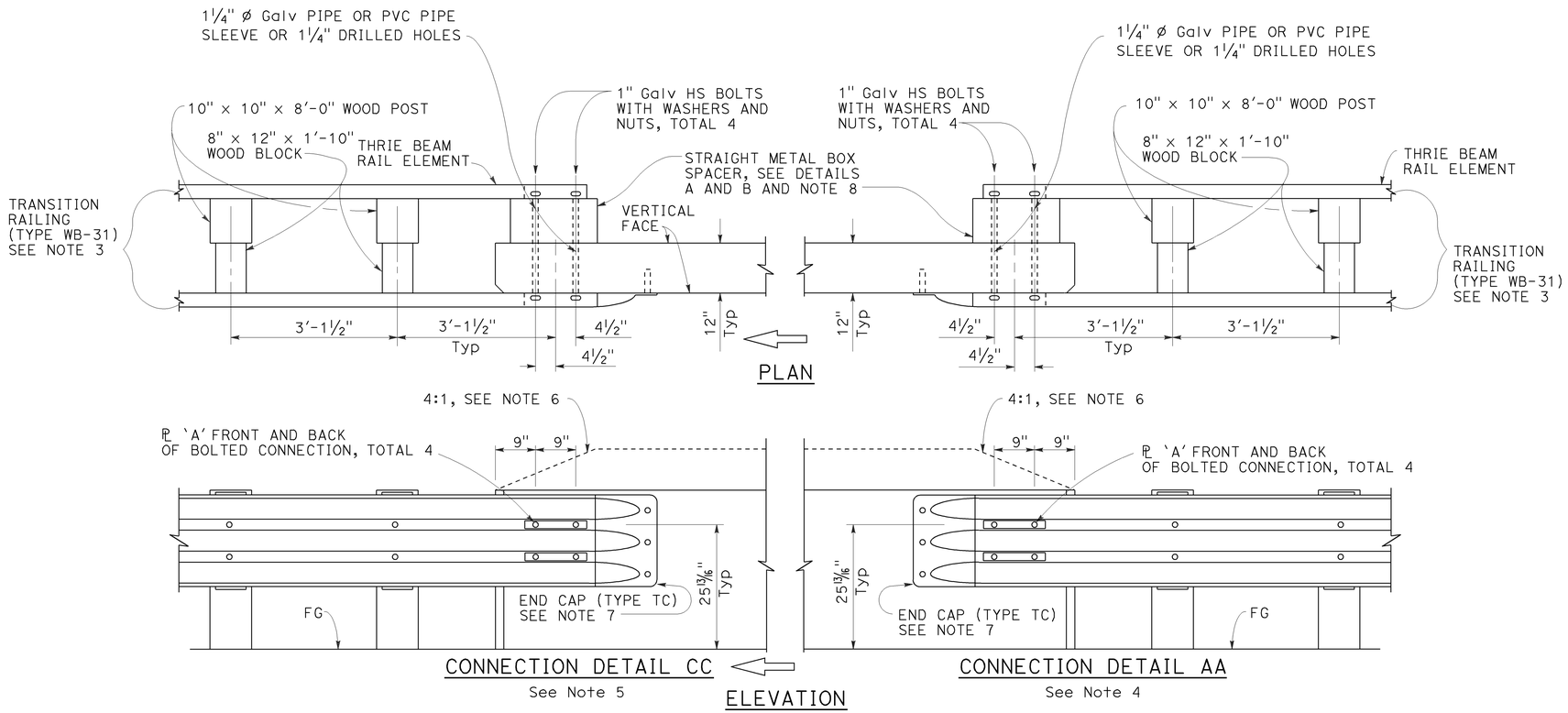

MIDWEST GUARDRAIL SYSTEM CONNECTION TO BRIDGE RAILING WITHOUT SIDEWALK

NOTES:

1. See Revised Standard Plan RSP A77U1 for additional connection details to bridges without sidewalks.
2. Additional details of posts, blocks and hardware are shown on Revised Standard Plans RSP A77M1, RSP A77N1 and RSP A77N2.
3. For additional details of Transition Railing (Type WB-31), see Revised Standard Plan RSP A77U4. Transition Railing (Type WB-31) transitions the 12 gauge MGS railing section to a heavier gage nested thrie beam railing section which is connected to the concrete bridge railing.
4. For typical use of Connection Detail AA, see Layout Types 12A and 12B on Revised Standard Plan RSP A77Q1, Layout Types 12C and 12D on Revised Standard Plan RSP A77Q2, and Layout Type 12E on Revised Standard Plan RSP A77Q3.
5. For typical use of Connection Detail CC, see Layout Types 12AA and 12BB on Revised Standard Plan RSP A77Q4 and Layout Type 12CC on Revised Standard Plan RSP A77Q5.
6. Where the height of the bridge railing exceeds the height of the thrie beam railing by more than 1" at Connection Detail AA and connection Detail CC, taper the top of the end of the bridge railing at 4:1 to match the top elevation of the thrie beam railing.
7. For details of End Cap (Type TC), see Revised Standard Plan RSP A77U4.
8. See Revised Standard Plan RSP A77U4 for additional details regarding depth dimension for straight metal box spacer.

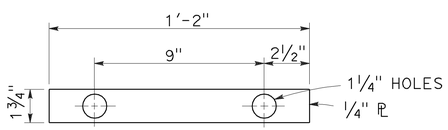

PLATE 'A'

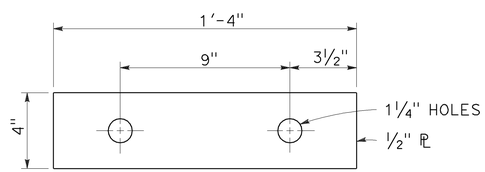

PLATE 'B'
(For backside of connection BB)

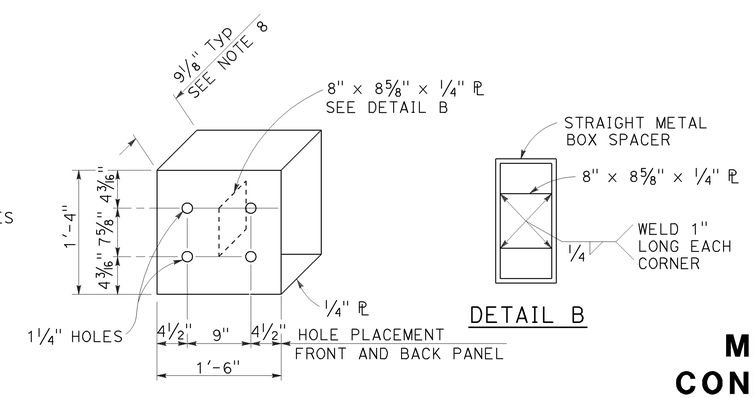

STATE OF CALIFORNIA
DEPARTMENT OF TRANSPORTATION

MIDWEST GUARDRAIL SYSTEM CONNECTIONS TO BRIDGE RAILINGS WITHOUT SIDEWALKS DETAILS No. 2

NO SCALE

RSP A77U2 DATED JULY 19, 2013 SUPPLEMENTS THE STANDARD PLANS BOOK DATED 2010.

REVISED STANDARD PLAN RSP A77U2

2010 REVISED STANDARD PLAN RSP A77U2

6-20-13

Dist	COUNTY	ROUTE	POST MILES TOTAL PROJECT	SHEET No.	TOTAL SHEETS
04	SM	280	Var	58	92

Randell D. Hiatt
REGISTERED CIVIL ENGINEER

July 19, 2013
PLANS APPROVAL DATE

REGISTERED PROFESSIONAL ENGINEER
Randell D. Hiatt
No. C50200
Exp. 6-30-15
CIVIL
STATE OF CALIFORNIA

THE STATE OF CALIFORNIA OR ITS OFFICERS OR AGENTS SHALL NOT BE RESPONSIBLE FOR THE ACCURACY OR COMPLETENESS OF SCANNED COPIES OF THIS PLAN SHEET.

TO ACCOMPANY PLANS DATED 2-2-15

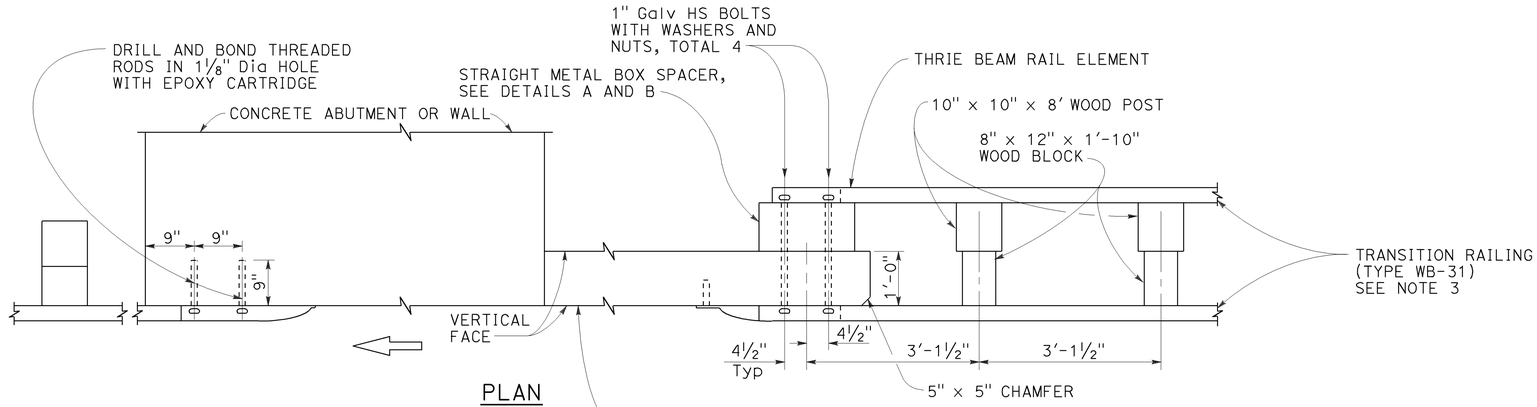

PLAN

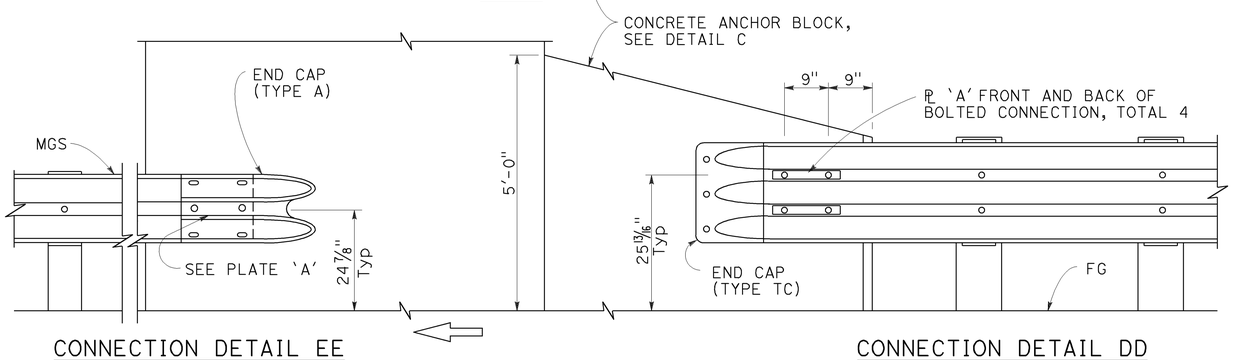

CONNECTION DETAIL EE
See Note 5

CONNECTION DETAIL DD
See Note 4

ELEVATION

MIDWEST GUARDRAIL SYSTEM CONNECTION TO ABUTMENT OR WALL

NOTES:

1. These connection details apply to abutments and walls.
2. Additional details of posts, blocks and hardware are shown on Revised Standard Plans RSP A77M1, RSP A77N1 and RSP A77N2.
3. For additional details of Transition Railing (Type WB-31), see Revised Standard Plan RSP A77U4. Transition Railing (Type WB-31) transitions the 12 gauge MGS railing section to a heavier gage nested thrie beam railingsection which is connected to the concrete anchor block.
4. For typical use of Connection Details DD, see Layout Types 12A and 12B on Revised Standard Plan RSP A77Q1 and Layout Types 12C and 12D on Revised Standard Plan RSP A77Q2.
5. For typical use of Connection Detail EE, see Layout Type 12D on Revised Standard Plan RSP A77Q2 and Layout Type 12DD on Revised Standard Plan RSP A77Q5.

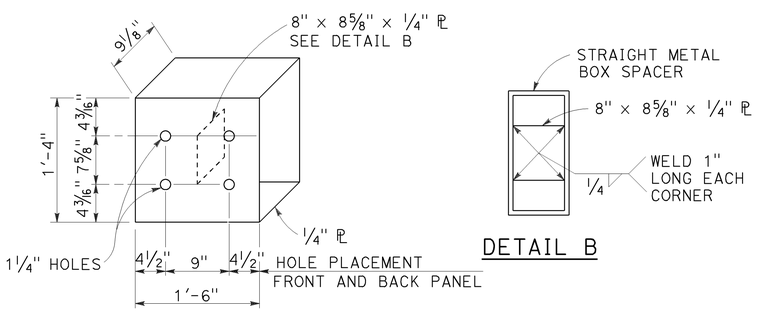

DETAIL A

DETAIL B

STRAIGHT METAL BOX SPACER

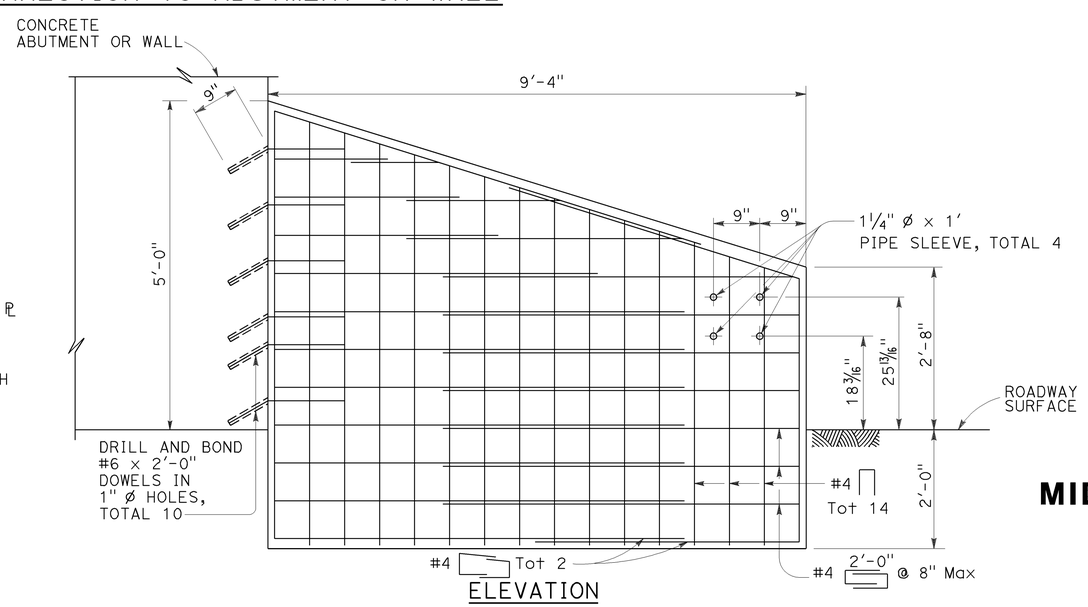

ELEVATION

ANCHOR BLOCK FOR TRANSITION RAILING CONNECTION

DETAIL C

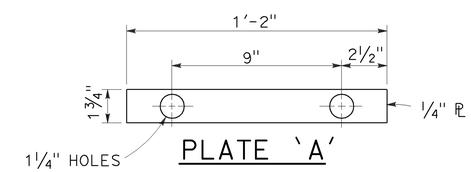

PLATE 'A'

STATE OF CALIFORNIA
DEPARTMENT OF TRANSPORTATION

MIDWEST GUARDRAIL SYSTEM CONNECTIONS TO ABUTMENTS AND WALLS

NO SCALE

RSP A77U3 DATED JULY 19, 2013 SUPPLEMENTS THE STANDARD PLANS BOOK DATED 2010.

REVISED STANDARD PLAN RSP A77U3

2010 REVISED STANDARD PLAN RSP A77U3

7-8-13

Dist	COUNTY	ROUTE	POST MILES TOTAL PROJECT	SHEET No.	TOTAL SHEETS
04	SM	280	Var	59	92

Randell D. Hiatt
REGISTERED CIVIL ENGINEER

November 15, 2013
PLANS APPROVAL DATE

REGISTERED PROFESSIONAL ENGINEER
Randell D. Hiatt
No. C50200
Exp. 6-30-15
CIVIL
STATE OF CALIFORNIA

THE STATE OF CALIFORNIA OR ITS OFFICERS OR AGENTS SHALL NOT BE RESPONSIBLE FOR THE ACCURACY OR COMPLETENESS OF SCANNED COPIES OF THIS PLAN SHEET.

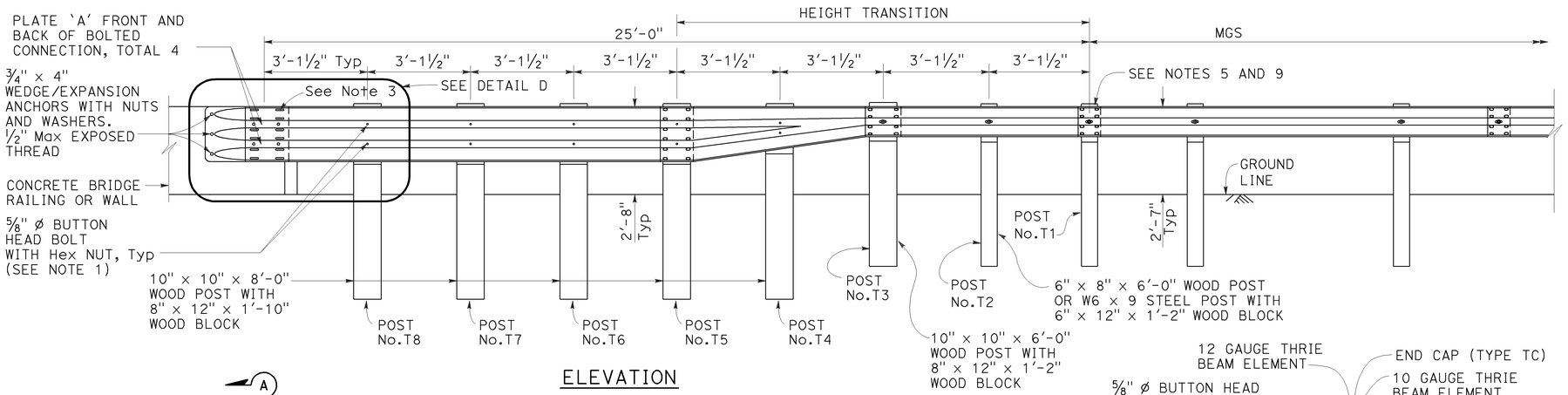

ELEVATION

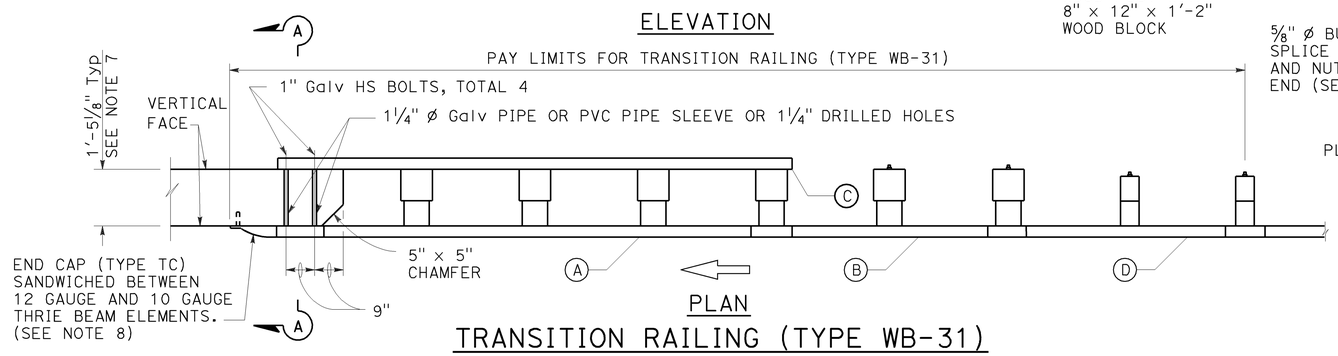

PLAN

TRANSITION RAILING (TYPE WB-31)

(No Blockout Attachment)

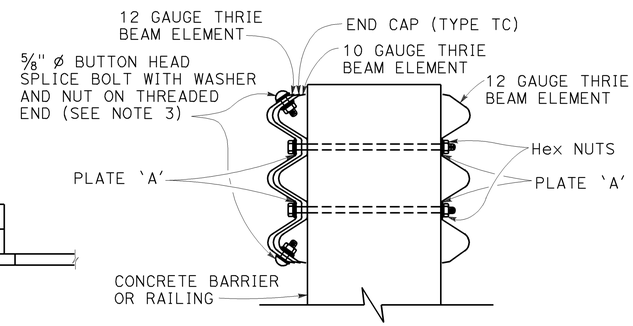

SECTION A-A

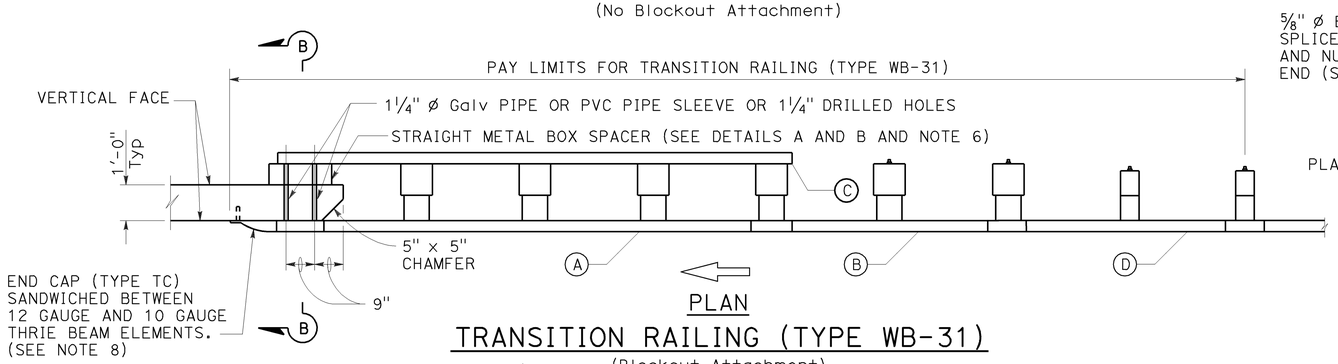

PLAN

TRANSITION RAILING (TYPE WB-31)

(Blockout Attachment)

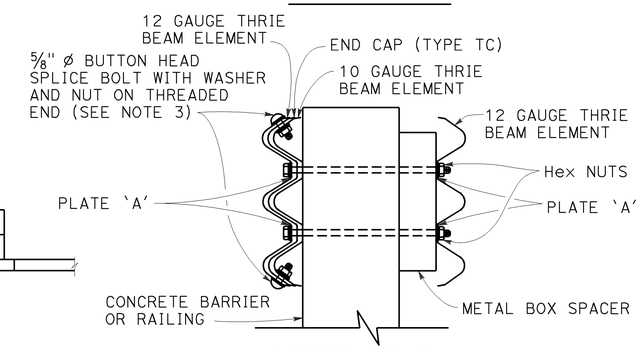

SECTION B-B

LEGEND:

(A) NESTED THRIE BEAM ELEMENTS (ONE 12 GAUGE ELEMENT NESTED OVER ONE 10 GAUGE ELEMENT).

(B) ONE ASYMMETRICAL 10 GAUGE "W" BEAM TO THRIE BEAM ELEMENT.

(C) ONE 12 GAUGE THRIE BEAM ELEMENT.

(D) ONE 10 GAUGE "W" BEAM RAIL ELEMENT (7'-3 1/2"LENGTH)

10 GAUGE = 0.138" THICK
12 GAUGE = 0.108" THICK

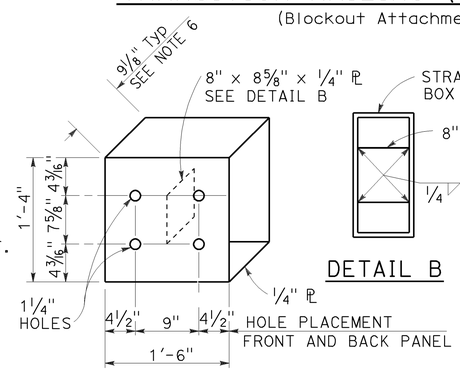

DETAIL A

STRAIGHT METAL BOX SPACER

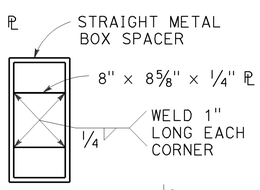

DETAIL B

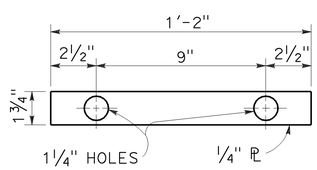

DETAIL C

PLATE 'A'

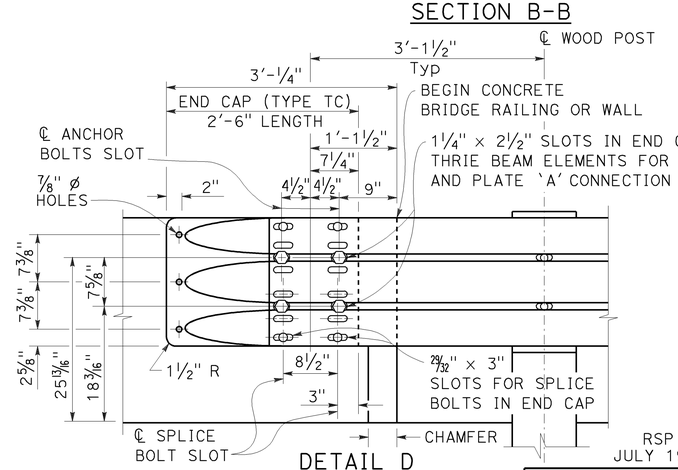

DETAIL D

NOTES:

TO ACCOMPANY PLANS DATED 2-2-15

1. Use 5/8" ø Button head bolts and hex nuts for connections to posts. No washer on rail face for bolted connections to post.

2. The nested rail elements, end cap, and 'W' beam to thrie beam element may be spliced together prior to bolting the elements to the wood post and concrete barrier or railing.

3. Exterior splice bolt holes for rail element splices at Post No. T5 and the connection to the concrete barrier or railing shall be the standard 29/32" × 1 1/8" slot size. Interior splice bolt holes at these locations may be increased up to 1 1/4" ø. Only the top 4 and the bottom 4 splice bolts with washers and nuts are required for rail splices at Post No. T5 and the connection to the concrete barrier or railing.

4. The top elevation of Posts No. T2 through No. T7 shall not project more than 1" above the top elevation of the rail element.

5. Typically, the railing connected to Transition Railing (Type WB-31) will be either standard railing section of MGS with height transition ratio of 150:1 or a Caltrans approved 31" end treatment attached to Post No. T1.

6. The depth of the metal box spacer varies from the 9 1/8" to 1 1/2" and is dependent on the width of the concrete railing or wall. The combined dimension for the depth of the metal box spacer plus the width of railing or wall is typically 21 1/8". Where the space between the backside of the concrete railing or wall and the rear thrie beam element is less than 1 1/2", metal plates similar to Plate 'A' are to be used as spacers.

7. Where the width of the concrete railing or wall is greater than 17 1/8", wood blocks are to be used to fill the space created between the backside of Posts No. T5 through No. T8 and the rear thrie beam element. These wood blocks shall be 8" in width and 1'-2" in length. The dimension between the front thrie beam element and the rear thrie beam element is to match the width of the concrete railing or wall.

8. End cap may be installed over 12 gauge and 10 gauge thrie beam elements where transition railing is installed on the departure end of bridge railing.

9. Conform standard railing section height to 31" at Post No. T1 using height transition ratio of 150:1.

STATE OF CALIFORNIA
DEPARTMENT OF TRANSPORTATION

MIDWEST GUARDRAIL SYSTEM TRANSITION RAILING (TYPE WB-31)

NO SCALE

RSP A77U4 DATED NOVEMBER 15, 2013 SUPERSEDES RSP A77U4 DATED JULY 19, 2013 THAT SUPPLEMENTS THE STANDARD PLANS BOOK DATED 2010.

REVISED STANDARD PLAN RSP A77U4

2010 REVISED STANDARD PLAN RSP A77U4

10-4-13

Dist	COUNTY	ROUTE	POST MILES TOTAL PROJECT	SHEET No.	TOTAL SHEETS
04	SM	280	Var	60	92

Randell D. Hiatt
REGISTERED CIVIL ENGINEER

July 19, 2013
PLANS APPROVAL DATE

REGISTERED PROFESSIONAL ENGINEER
Randell D. Hiatt
No. C50200
Exp. 6-30-15
CIVIL
STATE OF CALIFORNIA

THE STATE OF CALIFORNIA OR ITS OFFICERS OR AGENTS SHALL NOT BE RESPONSIBLE FOR THE ACCURACY OR COMPLETENESS OF SCANNED COPIES OF THIS PLAN SHEET.

TO ACCOMPANY PLANS DATED 2-2-15

NOTES:

1. Refer to Revised Standard Plans RSP A77L1 and RSP A77L2 for component details for MGS not shown on this plan.
2. All posts for any standard barrier run shall be of the same type: Wood or Steel.
3. Install posts in soil.

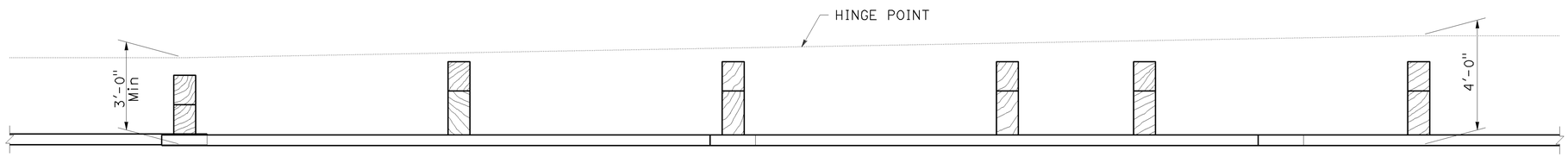

PLAN

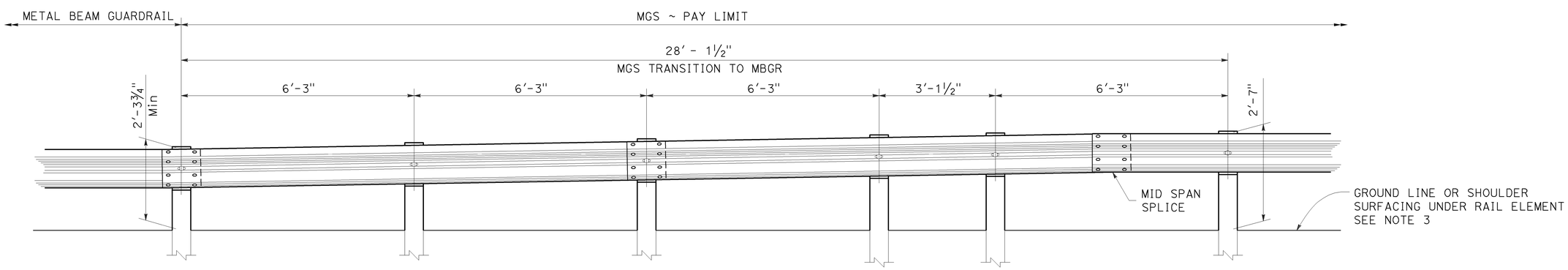

ELEVATION

STATE OF CALIFORNIA
DEPARTMENT OF TRANSPORTATION

MIDWEST GUARDRAIL SYSTEM TRANSITION TO METAL BEAM GUARDRAIL

NO SCALE

RSP A77U5 DATED JULY 19, 2013 SUPPLEMENTS THE STANDARD PLANS BOOK DATED 2010.

REVISED STANDARD PLAN RSP A77U5

2010 REVISED STANDARD PLAN RSP A77U5

Dist	COUNTY	ROUTE	POST MILES TOTAL PROJECT	SHEET No.	TOTAL SHEETS
04	SM	280	Var	61	92

Randell D. Hiatt
REGISTERED CIVIL ENGINEER

July 19, 2013
PLANS APPROVAL DATE

REGISTERED PROFESSIONAL ENGINEER Randell D. Hiatt No. C50200 Exp. 6-30-15 CIVIL STATE OF CALIFORNIA

THE STATE OF CALIFORNIA OR ITS OFFICERS OR AGENTS SHALL NOT BE RESPONSIBLE FOR THE ACCURACY OR COMPLETENESS OF SCANNED COPIES OF THIS PLAN SHEET.

TO ACCOMPANY PLANS DATED 2-2-15

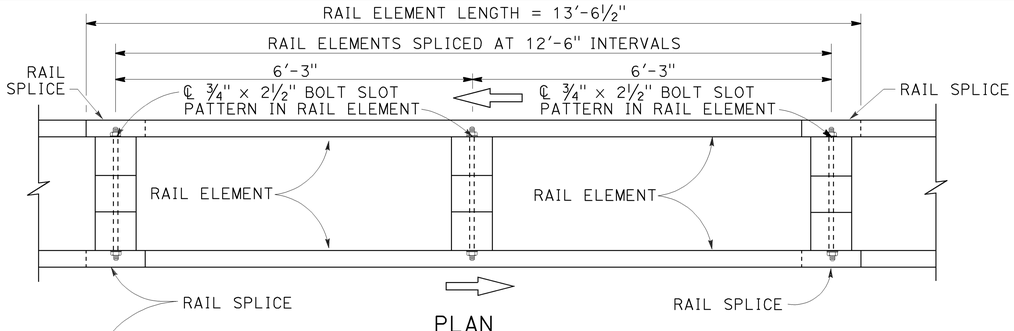

PLAN

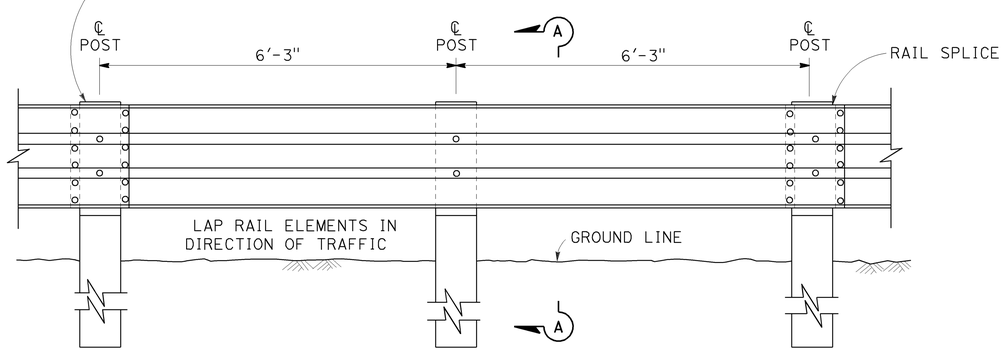

ELEVATION

DOUBLE THRIE BEAM BARRIER

(Wood post and blocks)
See Note 1

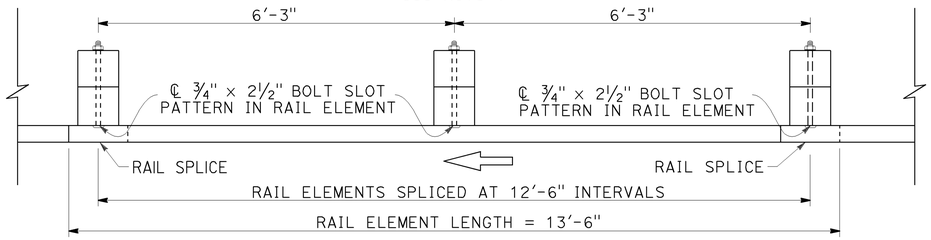

PLAN

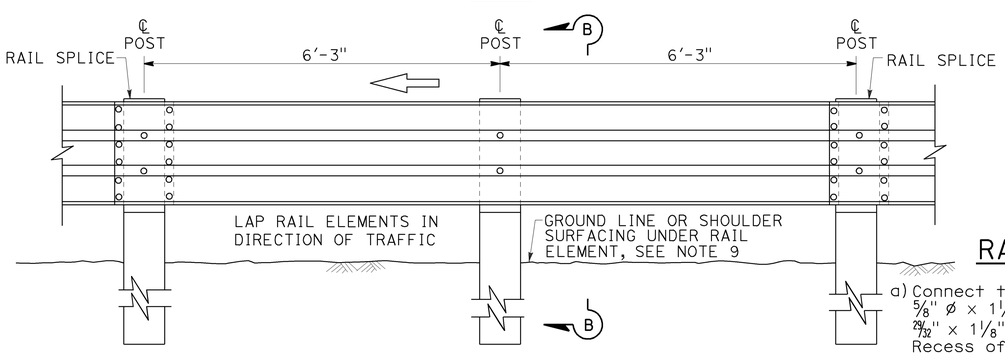

ELEVATION

SINGLE THRIE BEAM BARRIER

(Wood post and blocks)
See Note 1

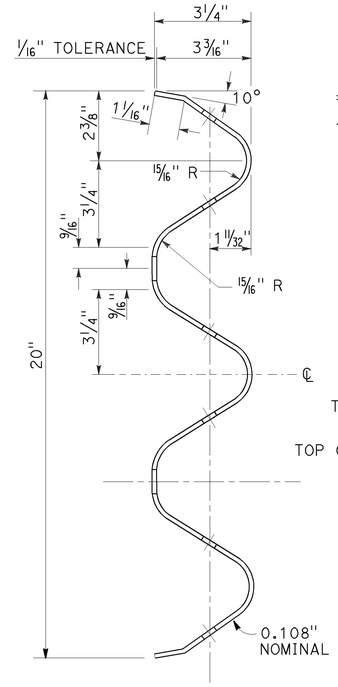

SECTION THRU
RAIL ELEMENT

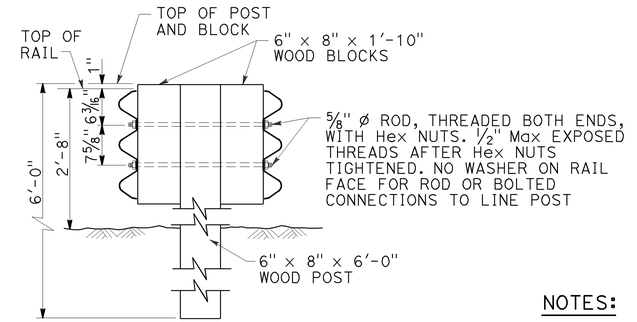

SECTION A-A

TYPICAL WOOD LINE POST INSTALLATION

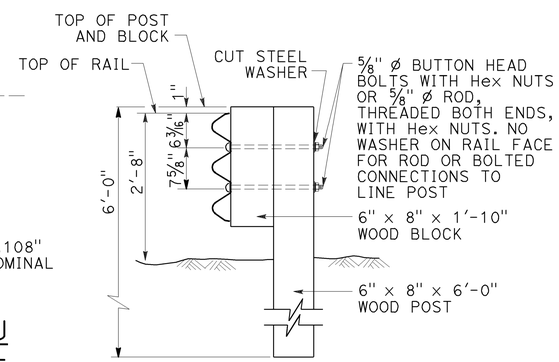

Where bolts are used, install so that the threaded end of the bolts and nuts are placed away from traffic side of rail.

SECTION B-B

TYPICAL WOOD LINE POST INSTALLATION

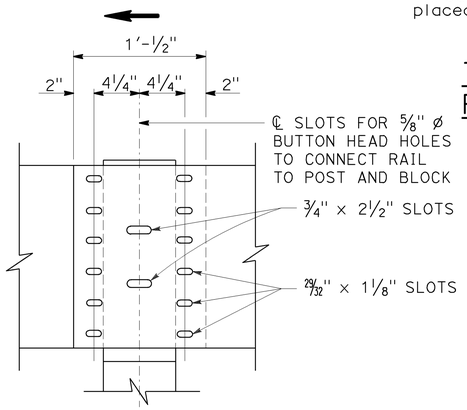

ELEVATION

RAIL ELEMENT SPLICE DETAIL

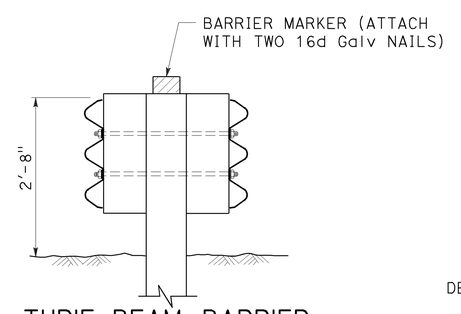

THRIE BEAM BARRIER DELINEATION

See Note 8

a) Connect the overlapped ends of the thrie beam rail elements with ⅝" ø x 1¼" button head oval shoulder bolts inserted into the 29/32" x 1⅛" slots and bolted together with ⅝" ø recessed hex nuts. Recess of hex nut points toward rail element. A total of 12 bolts and nuts are to be used at each rail splice connection.

b) The ends of the rail elements are to be overlapped in the direction of traffic (see details).

c) Where end cap is to be attached to the end of a rail element, a total of 4 of the above described splice bolts and nuts are to be used. Where a return cap is to be attached to the ends of rail elements, a total of 8 of the above described splice bolts and nuts are to be used.

NOTES:

1. For details of steel post thrie beam barrier, see Standard Plan A78B.
2. For details of standard hardware, posts and blocks used to construct thrie beam barrier, see Standard Plan A78C1 and Revised Standard Plan RSP A78C2.
3. Thrie beam barrier post spacing to be 6'-3" center to center, except as otherwise noted.
4. Top of barrier rail to be 2'-8" above ground line or shoulder surfacing under the rail element.
5. For barrier end treatments and barrier connections, see Standard Plans A78E3 and A78G, and Revised Standard Plans RSP A78E1, RSP A78E2 RSP A77Q1, RSP A77Q2 and RSP A78H.
6. For connection to Concrete Barrier (Type 60), see Standard Plans A78I.
7. For details of thrie beam barrier on bridge see Standard Plan A78D2. For details of thrie beam barrier at fixed object, see Revised Standard Plan RSP A78D1.
8. Median barrier delineation to be used when required by the Special Provisions. Spacing of barrier markers to match spacing of raised pavement markers on adjacent median edgeline pavement delineation.
9. Install posts in soil.

STATE OF CALIFORNIA
DEPARTMENT OF TRANSPORTATION

THRIE BEAM BARRIER STANDARD BARRIER RAILING SECTION (WOOD POST WITH WOOD BLOCK)

NO SCALE

RSP A78A DATED JULY 19, 2013 SUPERSEDES STANDARD PLAN A78A DATED MAY 20, 2011 - PAGE 89 OF THE STANDARD PLANS BOOK DATED 2010.

REVISED STANDARD PLAN RSP A78A

2010 REVISED STANDARD PLAN RSP A78A

6-27-13

Dist	COUNTY	ROUTE	POST MILES TOTAL PROJECT	SHEET No.	TOTAL SHEETS
04	SM	280	Var	62	92

Randell D. Hiatt
REGISTERED CIVIL ENGINEER

July 19, 2013
PLANS APPROVAL DATE

REGISTERED PROFESSIONAL ENGINEER
Randell D. Hiatt
No. C50200
Exp. 6-30-15
CIVIL
STATE OF CALIFORNIA

THE STATE OF CALIFORNIA OR ITS OFFICERS OR AGENTS SHALL NOT BE RESPONSIBLE FOR THE ACCURACY OR COMPLETENESS OF SCANNED COPIES OF THIS PLAN SHEET.

TO ACCOMPANY PLANS DATED 2-2-15

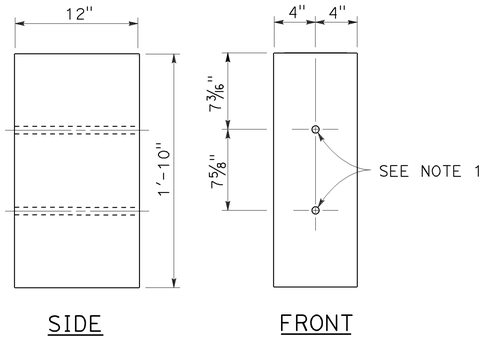

8" x 12"
WOOD BLOCK

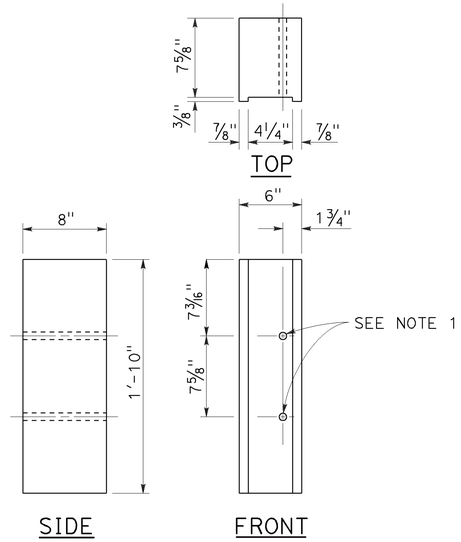

6" x 8"
NOTCHED WOOD BLOCK
See Notes 3 and 5

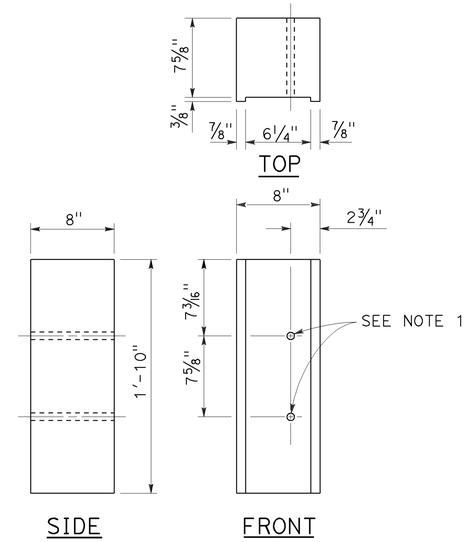

8" x 8"
NOTCHED WOOD BLOCK
See Notes 4 and 5

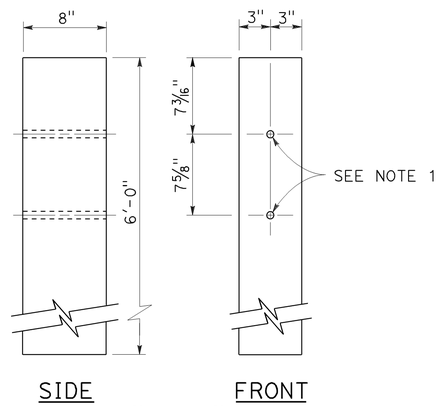

6" x 8"
WOOD POST

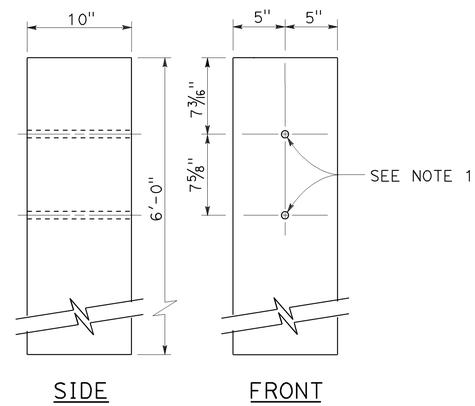

10" x 10"
WOOD POST

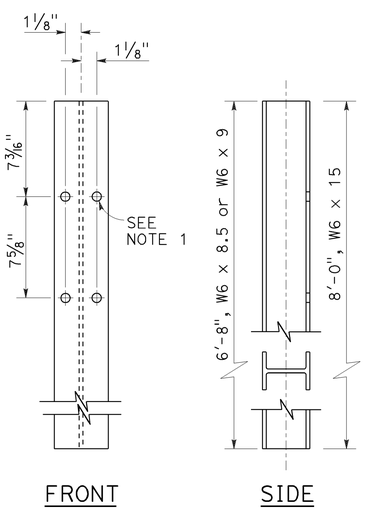

STEEL POST
W6 x 9 or W6 x 8.5 and W6 x 15

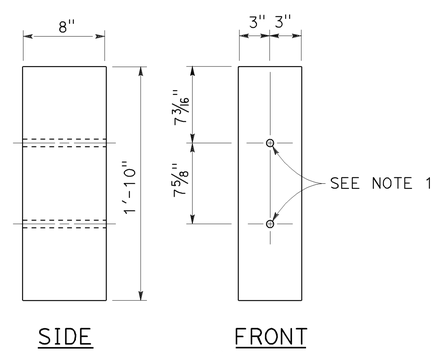

6" x 8"
WOOD BLOCK

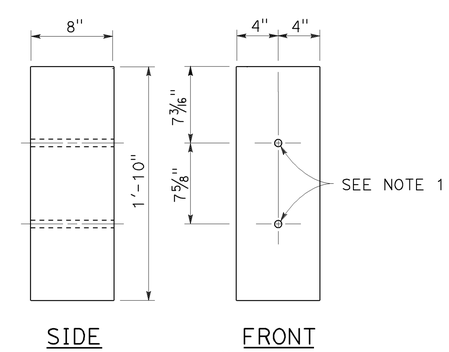

8" x 8"
WOOD BLOCK

NOTES:

1. All holes in steel post to be 13/16" Dia maximum. Holes in wood posts and wood blocks to be 3/4" Dia ±1/16".
2. Dimensions shown for wood post are nominal.
3. For use with W6 x 8.5 or W6 x 9 steel post.
4. For use with W6 x 15 steel post.
5. Notched face of block faces steel post.

STATE OF CALIFORNIA
DEPARTMENT OF TRANSPORTATION

THRIE BEAM BARRIER POST AND BLOCK DETAILS

NO SCALE

RSP A78C2 DATED JULY 19, 2013 SUPERSEDES STANDARD PLAN A78C2 DATED MAY 20, 2011 - PAGE 92 OF THE STANDARD PLANS BOOK DATED 2010.

REVISED STANDARD PLAN RSP A78C2

2010 REVISED STANDARD PLAN RSP A78C2

7-3-13

Dist	COUNTY	ROUTE	POST MILES TOTAL PROJECT	SHEET No.	TOTAL SHEETS
04	SM	280	Var	63	92

REGISTERED CIVIL ENGINEER

July 19, 2013
PLANS APPROVAL DATE

REGISTERED PROFESSIONAL ENGINEER
Michael Janzen
No. 44788
Exp. 03-31-14
CIVIL
STATE OF CALIFORNIA

THE STATE OF CALIFORNIA OR ITS OFFICERS OR AGENTS SHALL NOT BE RESPONSIBLE FOR THE ACCURACY OR COMPLETENESS OF SCANNED COPIES OF THIS PLAN SHEET.

TO ACCOMPANY PLANS DATED 2-2-15

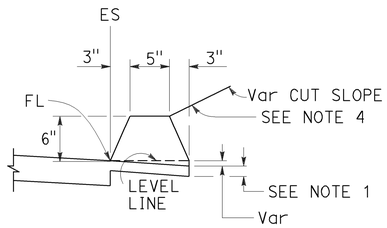

TYPE A
See Note 3

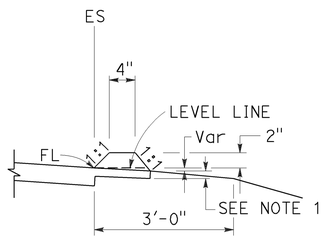

TYPE C

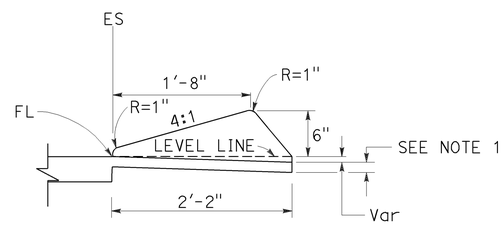

TYPE D

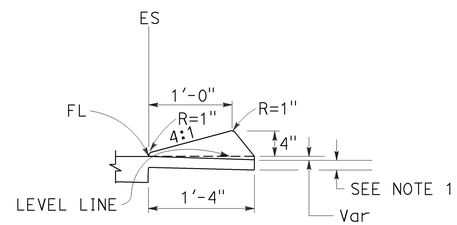

TYPE E

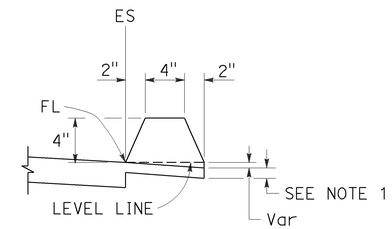

TYPE F
See Note 5

DIKES

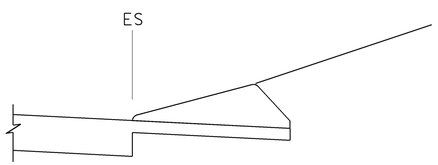

CASE C-1
Cut Slope

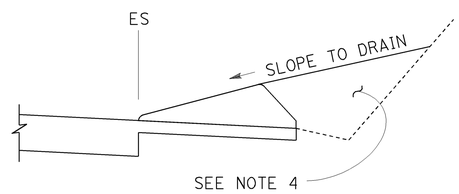

CASE C-2
Cut Slope

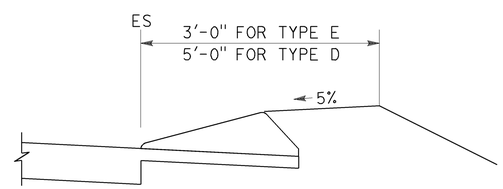

CASE F

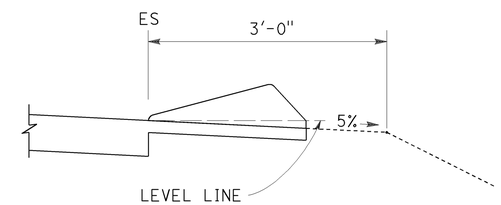

CASE R
See Note 2

TYPE D AND E BACKFILL DETAILS

NOTES:

1. For HMA shoulders only, extend top layer of HMA placed on the shoulder under dike with no joint at the ES. For projects with OGFC shoulders, do not extend OGFC under dike. See project plans for modified dike detail.
2. Case R applies to retrofit only projects where restrictive conditions do not provide enough width for Case F backfill.
3. Type A dike only to be used where restrictive slope conditions do not provide enough width to use Type D or Type E dike.
4. Fill and compact with excavated material to top of dike.
5. Use Type F dike, where dike is required with guard railing installations. See Revised Standard Plan RSP A77N4 for dike positioning details.

DIKE QUANTITIES

TYPE	CUBIC YARDS PER LINEAR FOOT
A	0.0135
C	0.0038
D	0.0293
E	0.0130
F	0.0066

Quantities based on 5% cross slope.

STATE OF CALIFORNIA
DEPARTMENT OF TRANSPORTATION

HOT MIX ASPHALT DIKES

NO SCALE

RSP A87B DATED JULY 19, 2013 SUPERSEDES STANDARD PLAN A87B DATED MAY 20, 2011 - PAGE 120 OF THE STANDARD PLANS BOOK DATED 2010.

REVISED STANDARD PLAN RSP A87B

2010 REVISED STANDARD PLAN RSP A87B

6-27-13

TO ACCOMPANY PLANS DATED 2-2-15

Dist	COUNTY	ROUTE	POST MILES TOTAL PROJECT	SHEET No.	TOTAL SHEETS
04	SM	280	Var	64	92

REGISTERED CIVIL ENGINEER

October 19, 2012
PLANS APPROVAL DATE

REGISTERED PROFESSIONAL ENGINEER Glenn DeCou No. C34547 Exp. 9-30-13 CIVIL STATE OF CALIFORNIA

THE STATE OF CALIFORNIA OR ITS OFFICERS OR AGENTS SHALL NOT BE RESPONSIBLE FOR THE ACCURACY OR COMPLETENESS OF SCANNED COPIES OF THIS PLAN SHEET.

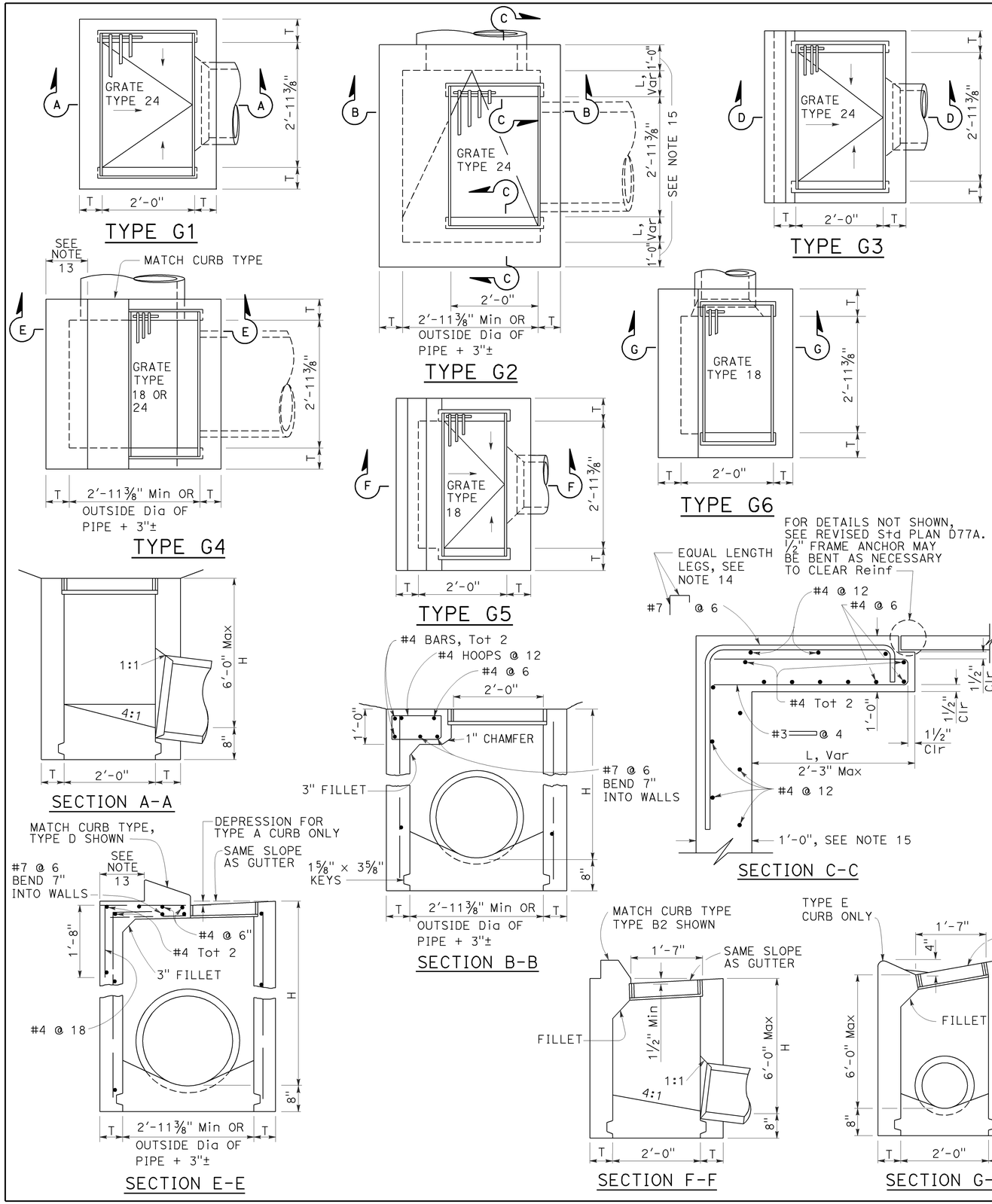

NOTES:

1. "H" is the difference in elevation between the outlet pipe flow line and the normal gutter grade line undepressed.
2. For "T" wall thickness, see Table A below.
3. Wall reinforcing not required when "H" is 8'-0" or less and the unsupported width or length is 7'-0" or less. Walls exceeding these limits shall be reinforced with #4 bars @ 1'-6" ± centers placed 1½" clear to inside of box unless otherwise shown.
4. Inlet bottom reinforcing not required. See Standard Plan D74C for alternative reinforced bottom and alternative half round bottom.
5. Steps-None required where "H" is less than 2'-6". Where "H" is 2'-6" or more, install steps with lowest rung 1'-0" above the floor and highest rung not more than 6" below top of inlet. The distance between steps shall not exceed 1'-0" and shall be uniform throughout the length of the wall. Place steps in the wall without an opening. Steps inserts may be substituted for the bar steps. Step inserts shall comply with State Industrial Safety requirements. See Standard Plan D74C for step details.
6. Details shown apply to both metal and concrete pipe.
7. Pipe(s) can be placed in any wall.
8. Curb section shall match adjacent curb.
9. Basin floors shall have wood trowel finish and a minimum slope of 12:3 from all directions toward outlet pipe.
10. Set inlet so that grate bars are parallel to direction of principal surface flow.
11. See Revised Standard Plans D77A and D77B for grate and frame details and weights of miscellaneous iron and steel.
12. See Standard Plan D78A for gutter depression details.
13. This dimenison will vary with different grates, curbs types, box width and wall thickness.
14. Bar may be rotated as necessary to clear opening. Where "L" is 6" or less, bar may be omitted.
15. Where "L" is 6" or less, wall thickness shall be as shown in Table A.
16. Cast-in-place inlets to be formed around all pipes/stubs intersecting the inlet, and concrete poured in one continuous operation. Precast inlets shall have mortared connections conforming to details for Type GCP Inlet shown on Standard Plan D75B. See Standard Specifications for mortar composition.

TABLE A

CONCRETE QUANTITIES				
TYPE	H=3'-0" TO 8'-0" (T=6")		H=8'-1" TO 20'-0" (T=8")	
	H=3'-0" (CY)	ADDITIONAL PCC PER FOOT (CY)	H=8'-1" (CY)	ADDITIONAL PCC PER FOOT (CY)
G-1	0.95	0.220	See Note A	SEE NOTE A
G-2*	1.31	0.255	3.50	0.357
G-3	1.03	0.220	See Note A	SEE NOTE A
G-4* (TYPE 24)	1.27	0.255	3.48	0.357
G-4* (TYPE 18)	1.30	0.255	3.50	0.357
G-5	1.02	0.220	SEE NOTE A	SEE NOTE A
G-6	1.04	0.220	SEE NOTE A	SEE NOTE A

TABLE BASED ON 8" FLOOR SLAB. NO DEDUCTIONS ARE TO BE MADE TO THESE QUANTITIES BECAUSE OF PIPE OPENINGS, DIFFERENT FLOOR ALTERNATIVES OR DIFFERENT CURB TYPES. * QUANTITIES FOR TYPE G-2 AND G-4 INLETS BASED ON THE MINIMUM INTERIOR DIMENSIONS.

NOTE A:

Maximum allowable height 6'-0".

STATE OF CALIFORNIA
DEPARTMENT OF TRANSPORTATION

DRAINAGE INLETS

NO SCALE

RSP D73 DATED OCTOBER 19, 2012 SUPERSEDES STANDARD PLAN D73 DATED MAY 20, 2011 - PAGE 156 OF THE STANDARD PLANS BOOK DATED 2010.

REVISED STANDARD PLAN RSP D73

2010 REVISED STANDARD PLAN RSP D73

7-19-12

Dist	COUNTY	ROUTE	POST MILES TOTAL PROJECT	SHEET No.	TOTAL SHEETS
04	SM	280	Var	65	92

REGISTERED CIVIL ENGINEER

April 19, 2013
PLANS APPROVAL DATE

REGISTERED PROFESSIONAL ENGINEER Raymond Don Tsztoo No. C37332 Exp. 6-30-14 CIVIL STATE OF CALIFORNIA

THE STATE OF CALIFORNIA OR ITS OFFICERS OR AGENTS SHALL NOT BE RESPONSIBLE FOR THE ACCURACY OR COMPLETENESS OF SCANNED COPIES OF THIS PLAN SHEET.

TO ACCOMPANY PLANS DATED 2-2-15

2010 REVISED STANDARD PLAN RSP D77A

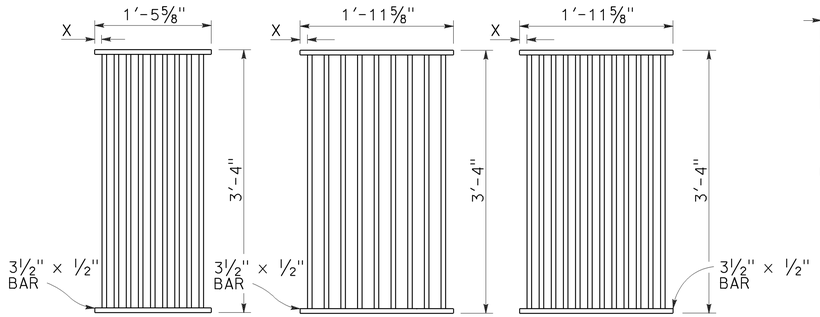

TYPE 18-9

1⅜" Clear spacing. Use within the roadbed on highways where bicycles and pedestrians are excluded.

TYPE 24-9

2" Clear spacing. Use in locations off the roadbed on all types of highways.

TYPE 24-12

1⅜" Clear spacing. Use within the roadbed on highways where bicycles and pedestrians are excluded.

RECTANGULAR GRATE DETAILS

(See table below)

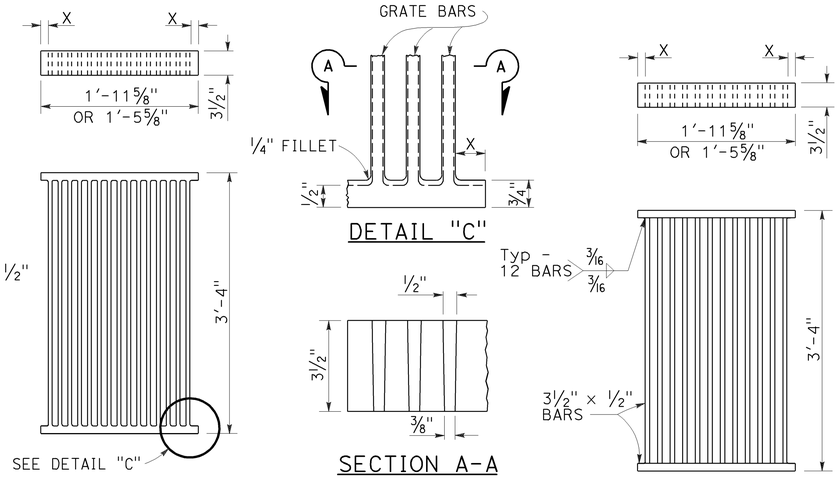

ALTERNATIVE CAST DUCTILE IRON GRATE OR CAST CARBON STEEL GRATE

ALTERNATIVE WELDED GRATE

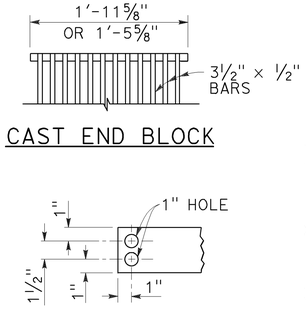

CAST END BLOCK

END OF BAR

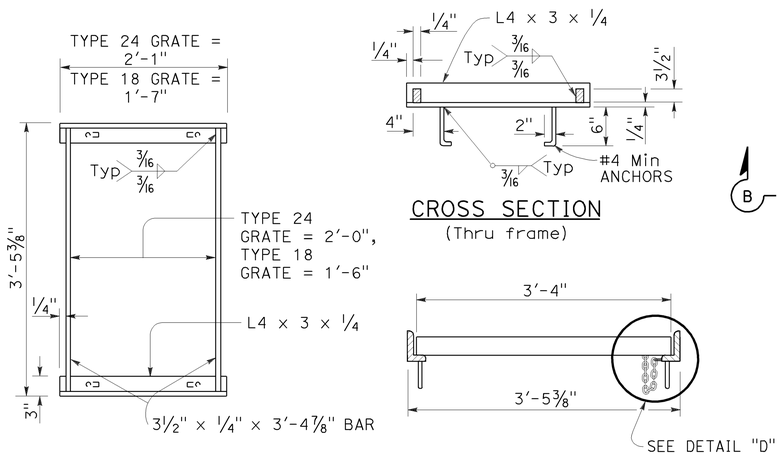

TYPICAL FRAME

CROSS SECTION
(Thru frame)

LONGITUDINAL SECTION
(Thru frame and grate)

RECTANGULAR FRAME DETAILS

(For all rectangular grates)

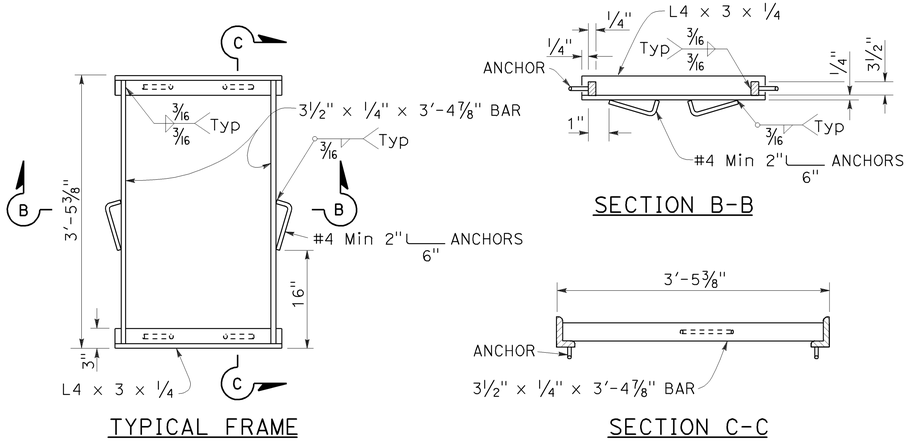

TYPICAL FRAME

ALTERNATIVE ANCHOR FOR RECTANGULAR FRAME

(For details not shown, See Rectangular Frame Details)

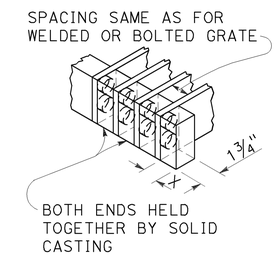

ALTERNATIVE CAST DUCTILE IRON OR CAST CARBON STEEL END BLOCK GRATE

NOTES:

1. Grate type numbers refer to approximate width of grate in inches and number of bars, respectively.
2. Contractor has the option of using cast ductile iron, cast carbon steel, welded, bolted, or cast end block grate.
3. Rounded top of bars optional on all grates.
4. Pipe inlets with a grate shall be placed so that bars parallel direction of principle surface flow.
5. Complete joint penetration butt welds may be substituted for the fillet welds on all anchors.
6. Standard square, hexagon, round or equivalent headed anchors may be substituted for the right angle hooks on the anchors shown on this plan.
7. Grate and frame weights are based on welded grates (weights of face angles, steps, protection bars, etc. are not included).
8. Connect chain to grate and frame only at locations shown on the plans. When chain is required, do not use cast ductile iron grates.

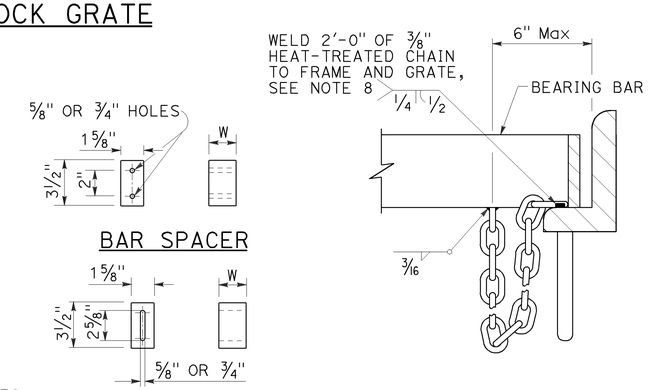

GRATE BAR SPACING TABLE

TYPE	No. OF BARS	CLEAR BAR SPACING	X
18-9	9	1⅜"	1 1/16"
24-9	9	2"	1 9/16"
24-12	12	1⅜"	1¼"

INLET TYPE	COVER TYPE	WEIGHT LB
OS	PLATE	174
OL-7	PLATE	170
OL-10	PLATE	170
OL-14	PLATE	170
OL-21	PLATE	170
OCP	PLATE	112
OCPI	PLATE	112
OCPI	REDWOOD	42
OMP	PLATE	177
OMPI	PLATE	177

INLET TYPE	GRATE TYPE	No. OF GRATES	WEIGHT LB
GDO	24-12	2	634
GOL-7	24-12	1	326
GOL-10	24-12	1	326
GO,G1,G2,G3,G4 (TYPE 24)	24-9	1	263
	24-12	1	326
G4 (TYPE 18),G5,G6	18-9	1	249
GT1	18-9	2	498
GT2	18-9	2	498
GT3	24-12	2	652
GT4	24-12	2	652
TRASH RACK			22
GRATE CHAIN			3

BASIS FOR Misc IRON & STEEL FINAL PAY WEIGHTS FOR DRAINAGE INLETS

(See Note 7)

STATE OF CALIFORNIA
DEPARTMENT OF TRANSPORTATION

GRATE DETAILS No. 1

NO SCALE

RSP D77A DATED APRIL 19, 2013 SUPERSEDES RSP D77A DATED JULY 20, 2012 AND STANDARD PLAN D77A DATED MAY 20, 2011 - PAGE 164 OF THE STANDARD PLANS BOOK DATED 2010.

REVISED STANDARD PLAN RSP D77A

4-4-13

Dist	COUNTY	ROUTE	POST MILES TOTAL PROJECT	SHEET No.	TOTAL SHEETS
04	SM	280	Var	66	92

REGISTERED CIVIL ENGINEER

April 19, 2013
PLANS APPROVAL DATE

Raymond Don Tsztoo
No. C37332
Exp. 6-30-14
CIVIL
STATE OF CALIFORNIA
REGISTERED PROFESSIONAL ENGINEER

THE STATE OF CALIFORNIA OR ITS OFFICERS OR AGENTS SHALL NOT BE RESPONSIBLE FOR THE ACCURACY OR COMPLETENESS OF SCANNED COPIES OF THIS PLAN SHEET.

TO ACCOMPANY PLANS DATED 2-2-15

2010 REVISED STANDARD PLAN RSP D77B

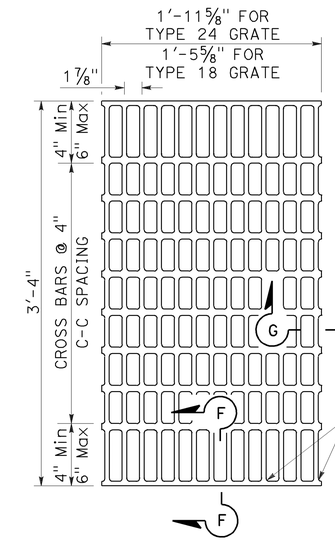

NOTES:

Bearing bars to be 3½" × ¼" bars on 1⅞" centers.

⅜"± ø Cross bars may be fillet welded, resistance welded or electroforged to bearing bars.

Weight of Type 24 grate = 141 LBS.

Weight of Type 18 grate = 107 LBS. (Type 24 grate shown).

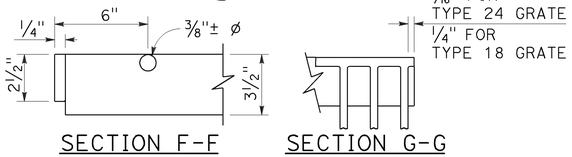

SECTION F-F SECTION G-G

TYPE 18-10 AND 24-13 GRATE

(Welded Steel)

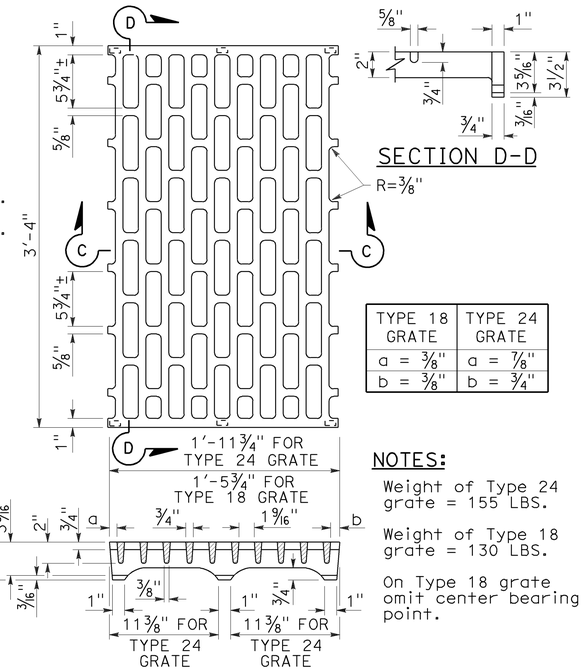

SECTION D-D

TYPE 18 GRATE	TYPE 24 GRATE
a = ⅜"	a = ⅞"
b = ⅜"	b = ¾"

NOTES:

Weight of Type 24 grate = 155 LBS.

Weight of Type 18 grate = 130 LBS.

On Type 18 grate omit center bearing point.

SECTION C-C

TYPE 18-8C AND 24-10C GRATE

(Cast ductile iron)

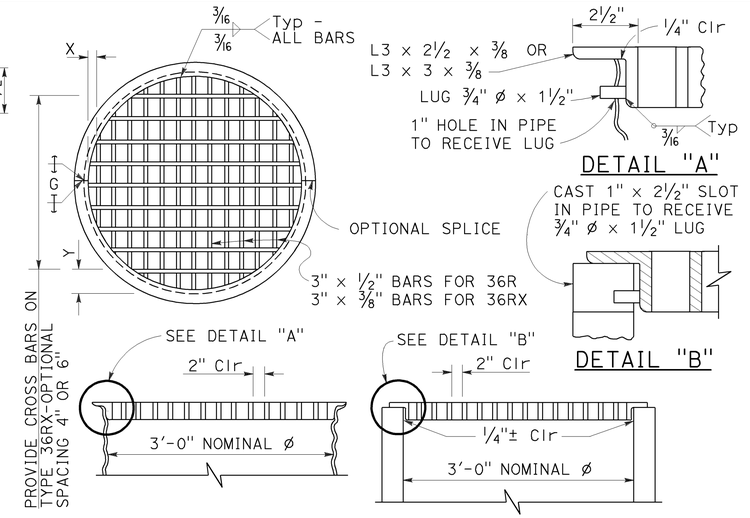

TYPE 36R AND 36RX GRATE DETAILS

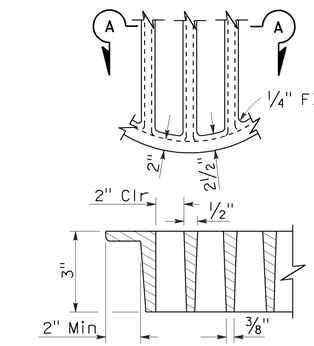

SECTION A-A

ALTERNATIVE CAST DUCTILE IRON GRATE OR CAST CARBON STEEL GRATE TYPE 36R AND 36RX

BASIS FOR Misc IRON AND STEEL FINAL PAY WEIGHTS FOR DRAINAGE INLETS

INLET TYPE	GRATE TYPE	No. OF GRATES	WEIGHT LB
GDO (SEE NOTE 4)	24-10C	2	391
	24-10S	2	456
	24-12X	2	473
	24-13	2	374
GO,GOL,G1,G2, G3,G4 (TYPE 24)	24-10C	1	202
	24-10S	1	229
	24-12X	1	239
	24-13	1	188
G4 (TYPE 18) G5,G6	18-8S	1	187
	18-9X	1	187
	18-10	1	149
GT1,GT2	18-8S	2	374
	18-9X	2	374
	18-10	2	298
GT3,GT4	24-10C	2	404
	24-10S	2	458
	24-12X	2	478
	24-13	2	376
ODI	36RX (Mod)	1	196
GMP,GCP,GCPI	36RX	1	215
ODI	36R (Mod)	1	220
GMP,GCP,GCPI	36R	1	236
TRASH RACK			22
GRATE CHAIN			3

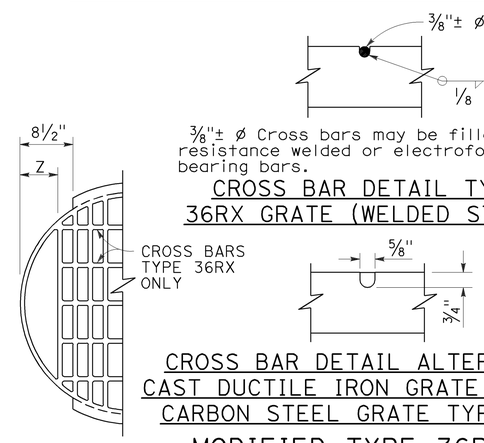

CROSS BAR DETAIL TYPE 36RX GRATE (WELDED STEEL)

CROSS BAR DETAIL ALTERNATIVE CAST DUCTILE IRON GRATE OR CAST CARBON STEEL GRATE TYPE 36RX

MODIFIED TYPE 36R AND 36RX GRATE FOR ODI INLET

NOTES:

1. When alternative grates are allowed - Final pay based on alternative with the lesser weight.
2. Use frame shown on Standard Plan D74A, D74B or RSP D77A as appropriate.
3. When Type 24-10S, 24-12X or 24-13 grates are used with GDO Inlets, a ¼" × 3½" × 3'-4⅞" steel bar shall be welded across the center of inlet frame to separate the individual grates.
4. See Revised Standard Plan RSP D77A for connecting chain to welded grate and frame. When chain is required, do not use cast ductile iron grate.

GRATE BAR SPACING TABLE

TYPE	No. OF BARS	CLEAR BAR SPACING	X	Y 4" SPACING	Y 6" SPACING	Z
36R	13	2"	2⅛"	-	-	-
36RX (STEEL)	15	2"	9/16"	3¾"	5¾"	-
36RX (CAST)	13	2"	2⅛"	3¾"	5¾"	-
36R Mod	12	2"	2⅛"	-	-	5"
36RX Mod (STEEL)	13	2"	9/16"	3¾"	5¾"	5 11/16"
36RX Mod (CAST)	12	2"	2⅛"	3¾"	5¾"	5"

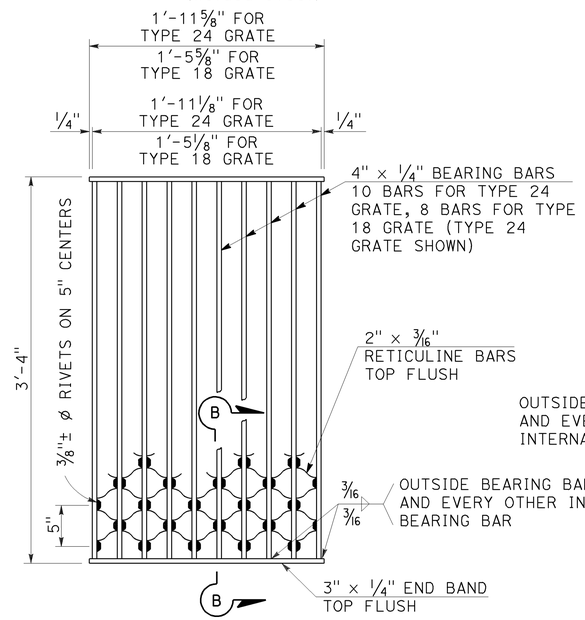

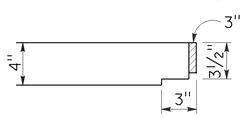

NOTES:

Weight of Type 24 grate = 182 LBS.
Weight of Type 18 grate = 145 LBS.

SECTION B-B

TYPE 18-8S AND 24-10S GRATE

(Welded Steel) Reticuline type

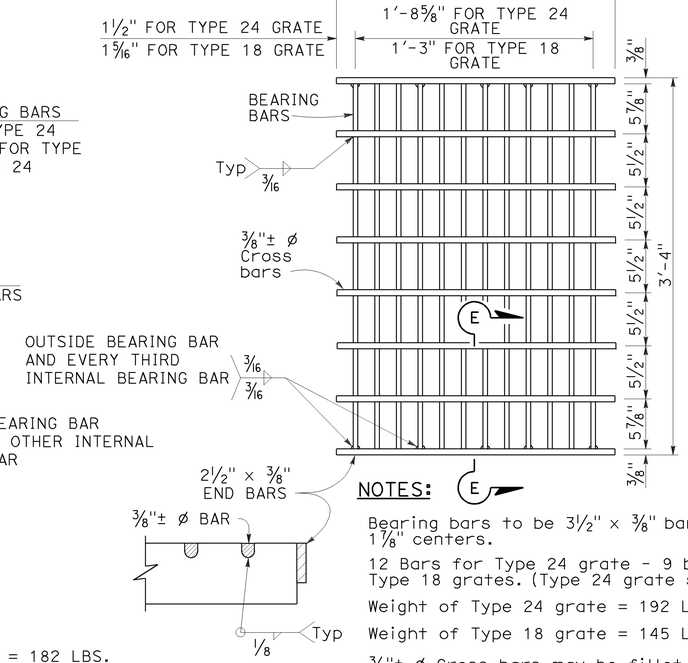

SECTION E-E

NOTES:

Bearing bars to be 3½" × ⅜" bars on 1⅞" centers.

12 Bars for Type 24 grate - 9 bars for Type 18 grates. (Type 24 grate shown).

Weight of Type 24 grate = 192 LBS.

Weight of Type 18 grate = 145 LBS.

⅜"± ø Cross bars may be fillet welded, resistance welded or electroforged to bearing bars.

TYPE 18-9X AND 24-12X GRATE

(Welded Steel)

STATE OF CALIFORNIA
DEPARTMENT OF TRANSPORTATION

GRATE DETAILS No. 2

NO SCALE

RSP D77B DATED APRIL 19, 2013 SUPERSEDES RSP D77B DATED JULY 20, 2012 AND STANDARD PLAN D77B DATED MAY 20, 2011 - PAGE 165 OF THE STANDARD PLANS BOOK DATED 2010.

REVISED STANDARD PLAN RSP D77B

4-4-13

Dist	COUNTY	ROUTE	POST MILES TOTAL PROJECT	SHEET No.	TOTAL SHEETS
04	SM	280	Var	67	92

LICENSED LANDSCAPE ARCHITECT

July 19, 2013
PLANS APPROVAL DATE

THE STATE OF CALIFORNIA OR ITS OFFICERS OR AGENTS SHALL NOT BE RESPONSIBLE FOR THE ACCURACY OR COMPLETENESS OF SCANNED COPIES OF THIS PLAN SHEET.

LICENSED LANDSCAPE ARCHITECT — Gregory A. Balzer — 2516 — 02-28-15 Renewal Date — 7-19-13 Date — STATE OF CALIFORNIA

TO ACCOMPANY PLANS DATED 2-2-15

2010 REVISED STANDARD PLAN RSP H1

A

AB	AGGREGATE BASE
ABS	ACRYLONITRILE-BUTADIENE-STYRENE
AC	ASPHALT CONCRETE
ACC	ARMOR-CLAD CONDUCTORS
Adj	ADJACENT/ADJUSTABLE
AIC	AUXILIARY IRRIGATION CONTROLLER
Alt	ALTERNATIVE
AMEND	AMENDMENT
ARV	AIR RELEASE VALVE
AUTO	AUTOMATIC
AUX	AUXILIARY
AVB	ATMOSPHERIC VACUUM BREAKER

B

B&B	BALLED AND BURLAPPED
B/B	BRASS/BRONZE
B/B/PL	BRASS/BRONZE/PLASTIC
B/PL	BRASS/PLASTIC
BFM	BONDED FIBER MATRIX
Bit Ctd	BITUMINOUS COATED
BP	BOOSTER PUMP
BPA	BACKFLOW PREVENTER ASSEMBLY
BPE	BACKFLOW PREVENTER ENCLOSURE
BV	BALL VALVE

C

C	CONDUIT
CAP	CORRUGATED ALUMINUM PIPE
CARV	COMBINATION AIR RELEASE VALVE
CB	COUPLING BAND
CCA	CAM COUPLER ASSEMBLY
CEC	CONTROLLER ENCLOSURE CABINET
CHDPE	CORRUGATED HIGH DENSITY POLYETHYLENE
CL	CHAIN LINK
CNC	CONTROL AND NEUTRAL CONDUCTORS
Conc	CONCRETE
CP	COPPER PIPE
CS	COMPOST SOCK
CSP	CORRUGATED STEEL PIPE
CST	CENTER STRIP
CV	CHECK VALVE

D

Dia	DIAMETER
DIP	DUCTILE IRON PIPE
DIT	DRIP IRRIGATION TUBING
DG	DECOMPOSED GRANITE
DN	DIAMETER NOMINAL
DVA	DRIP VALVE ASSEMBLY

E

EC	EROSION CONTROL
ECTC	EROSION CONTROL TECHNOLOGY COUNCIL
Elect	ELECTRIC/ELECTRICAL
Elev	ELEVATION
ELL	ELBOW
ENCL	ENCLOSURE
EP	EDGE OF PAVEMENT
ES	EDGE OF SHOULDER
EST	END STRIP
ESTB	ESTABLISHMENT
ETW	EDGE OF TRAVELED WAY

F

F	FULL CIRCLE
F/P	FULL/PART CIRCLE
FCV	FLOW CONTROL VALVE
FERT	FERTILIZER
FG	FINISHED GRADE
FH	FLEXIBLE HOSE
FIPT	FEMALE IRON PIPE THREAD
FIS	FERTILIZER INJECTOR SYSTEM
FL	FLOW LINE
FR	FIBER ROLL
FS	FLOW SENSOR
FSC	FLOW SENSOR CABLE
FV	FLUSH VALVE

G

Galv	GALVANIZED
GARV	GARDEN VALVE
GARVA	GARDEN VALVE ASSEMBLY
GM	GRAVEL MULCH
GPH	GALLONS PER HOUR
GPM	GALLONS PER MINUTE
GSP	GALVANIZED STEEL PIPE
GV	GATE VALVE

H

H	HALF CIRCLE
HDPE	HIGH DENSITY POLYETHYLENE
HP	HORSEPOWER/HINGE POINT
HPL	HIGH PRESSURE LINE
Hwy	HIGHWAY

I

IC	IRRIGATION CONTROLLER
ICC	IRRIGATION CONTROLLER(S) IN CONTROLLER ENCLOSURE CABINET
ID	INSIDE DIAMETER
IFS	IRRIGATION FILTRATION SYSTEM
IPS	IRON PIPE SIZE
IPT	IRON PIPE THREAD
Irr	IRRIGATION

L

L	LENGTH

M

Max	MAXIMUM
MBGR	METAL BEAM GUARD RAILING
MCV	MANUAL CONTROL VALVE
MIC	MASTER IRRIGATION CONTROLLER
Min	MINIMUM
MIPT	MALE IRON PIPE THREAD
Misc	MISCELLANEOUS
Mtl	MATERIAL
MVP	MAINTENANCE VEHICLE PULLOUT

N

NCN	NO COMMON NAME
NL	NOZZLE LINE
No.	NUMBER
NPT	NATIONAL PIPE THREAD

O

O/C	ON CENTER
OD	OUTSIDE DIAMETER
OL	OVERLAP

P

P	PART CIRCLE
PB	PULL BOX
PCC	PORTLAND CEMENT CONCRETE
PE	POLYETHYLENE
Pkt	PACKET
PL	PLASTIC
PLS	PURE LIVE SEED
PLT	PLANT/PLANTING
PLT ESTB	PLANT ESTABLISHMENT
PM	POST MILE
PR	PRESSURE RATED
PRLV	PRESSURE RELIEF VALVE
PRV	PRESSURE REGULATING VALVE
PVC	POLYVINYL CHLORIDE
Pvmt	PAVEMENT

Q

Q	QUARTER CIRCLE
QCV	QUICK COUPLING VALVE

R

R	RADIUS
RCP	REINFORCED CONCRETE PIPE
RCV	REMOTE CONTROL VALVE
RCVM	REMOTE CONTROL VALVE (MASTER)
RCVMF	REMOTE CONTROL VALVE (MASTER) W/FLOW SENSOR
RCVP	REMOTE CONTROL VALVE W/PRESSURE REGULATOR
RCW	RECYCLED WATER
RECP	ROLLED EROSION CONTROL PRODUCT
REQ	REQUIRED
RICS	REMOTE IRRIGATION CONTROL SYSTEM
R/W	RIGHT OF WAY

S

S	SLIP
SCH	SCHEDULE
SF	STATE-FURNISHED
Shld	SHOULDER
Sq	SQUARE
SST	SIDE STRIP
Sta	STATION
Std	STANDARD
SW	SIDEWALK/SOUND WALL

T

T	THIRD CIRCLE/THREAD
TLS	TRUCK LOADING STANDPIPE
TQ	THREE QUARTER CIRCLE
TRM	TURF REINFORCEMENT MAT
TT	TWO-THIRDS CIRCLE
TWSA	TREE WELL SPRINKLER ASSEMBLY
Typ	TYPICAL

U

UG	UNDERGROUND

W

W	WIDTH
W/	WITH
WM	WATER METER
WS	WYE STRAINER
WSA	WYE STRAINER ASSEMBLY
WSP	WELDED STEEL PIPE
WWM	WELDED WIRE MESH

NOTE:

For additional abbreviations, see Standard Plans A10A and A10B.

STATE OF CALIFORNIA
DEPARTMENT OF TRANSPORTATION

LANDSCAPE AND EROSION CONTROL ABBREVIATIONS

NO SCALE

RSP H1 DATED JULY 19, 2013 SUPERSEDES STANDARD PLAN H1 DATED MAY 20, 2011 - PAGE 218 OF THE STANDARD PLANS BOOK DATED 2010.

REVISED STANDARD PLAN RSP H1

Dist	COUNTY	ROUTE	POST MILES TOTAL PROJECT	SHEET No.	TOTAL SHEETS
04	SM	280	Var	68	92

LICENSED LANDSCAPE ARCHITECT

July 19, 2013
PLANS APPROVAL DATE

LICENSED LANDSCAPE ARCHITECT Gregory A. Balzer 2576 No. 2576 Renewal Date 2-28-15 7-19-13 Date STATE OF CALIFORNIA

THE STATE OF CALIFORNIA OR ITS OFFICERS OR AGENTS SHALL NOT BE RESPONSIBLE FOR THE ACCURACY OR COMPLETENESS OF SCANNED COPIES OF THIS PLAN SHEET.

TO ACCOMPANY PLANS DATED 2-2-15

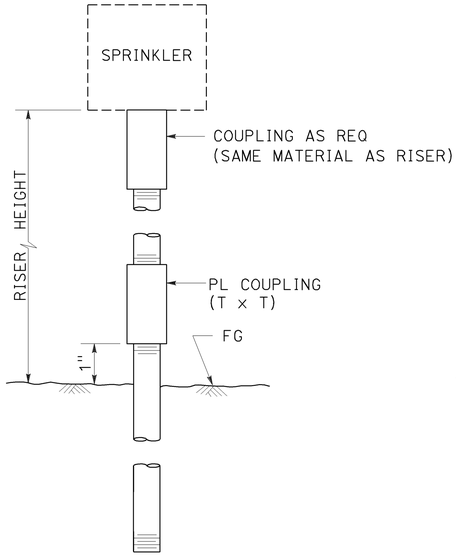

ELEVATION

RISER SPRINKLER ASSEMBLY TYPE I

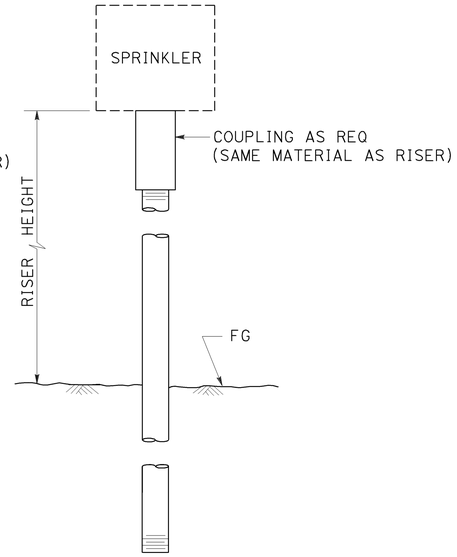

ELEVATION

RISER SPRINKLER ASSEMBLY TYPE II

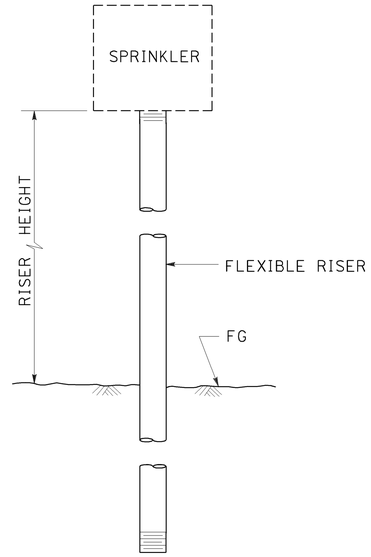

ELEVATION

RISER SPRINKLER ASSEMBLY TYPE III

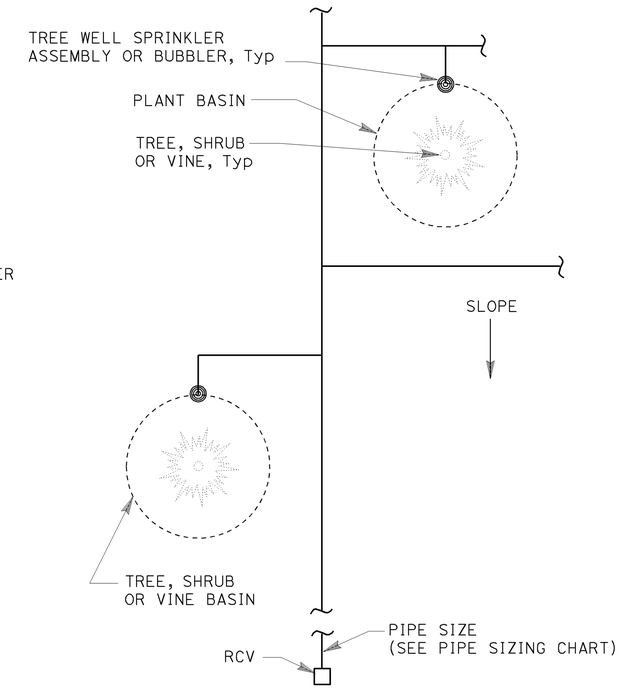

PLAN

NOTES:

1. Install tree well sprinkler assembly on up-hill side of plant when on slope.
2. Install bubbler within basin.

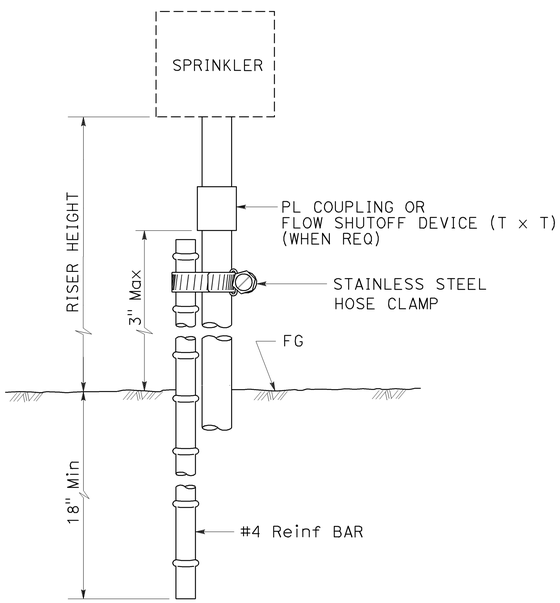

ELEVATION

RISER SPRINKLER ASSEMBLY TYPE IV

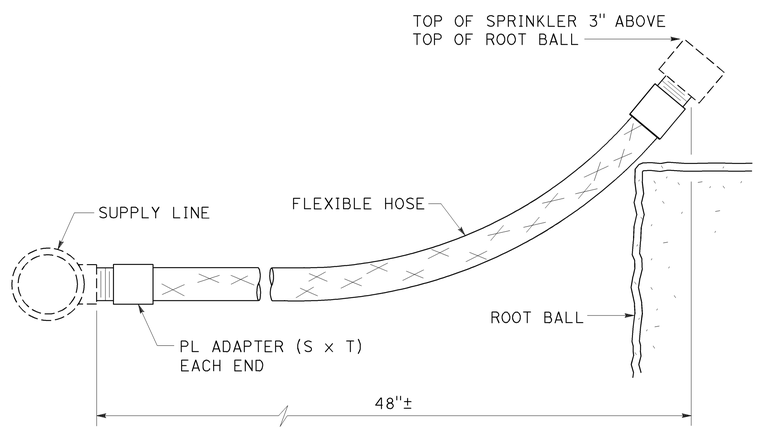

ELEVATION

RISER SPRINKLER ASSEMBLY TYPE V

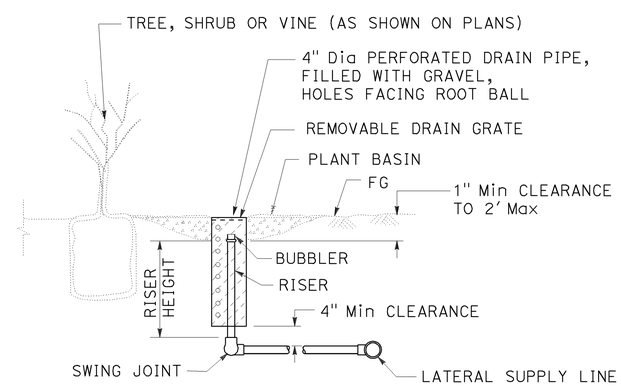

SECTION

TREE WELL SPRINKLER ASSEMBLY

STATE OF CALIFORNIA
DEPARTMENT OF TRANSPORTATION

LANDSCAPE DETAILS

NO SCALE

RSP H5 DATED JULY 19, 2013 SUPERSEDES STANDARD PLAN H5
DATED MAY 20, 2011 - PAGE 222 OF THE STANDARD PLANS BOOK DATED 2010.

REVISED STANDARD PLAN RSP H5

2010 REVISED STANDARD PLAN RSP H5

6-28-13

Dist	COUNTY	ROUTE	POST MILES TOTAL PROJECT	SHEET No.	TOTAL SHEETS
04	SM	280	Var	69	92

Gregory A. Balzer
LICENSED LANDSCAPE ARCHITECT

July 19, 2013
PLANS APPROVAL DATE

LICENSED LANDSCAPE ARCHITECT Gregory A. Balzer 2576 STATE OF CALIFORNIA
02-28-15 Renewal Date
7-19-13 Date

THE STATE OF CALIFORNIA OR ITS OFFICERS OR AGENTS SHALL NOT BE RESPONSIBLE FOR THE ACCURACY OR COMPLETENESS OF SCANNED COPIES OF THIS PLAN SHEET.

TO ACCOMPANY PLANS DATED 2-2-15

2010 REVISED STANDARD PLAN RSP H7

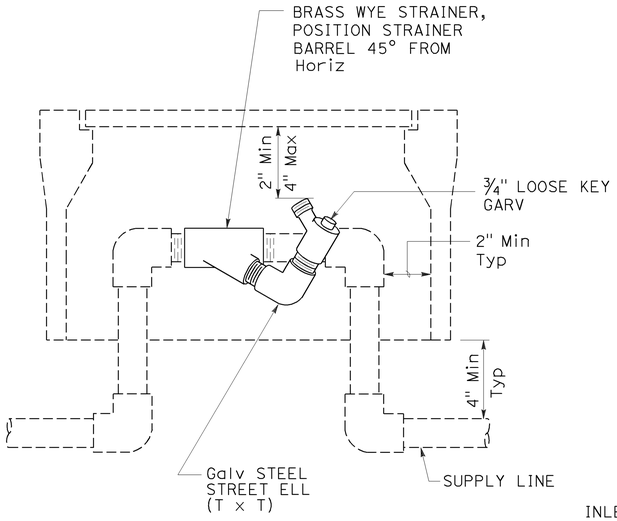

ELEVATION
WYE STRAINER ASSEMBLY

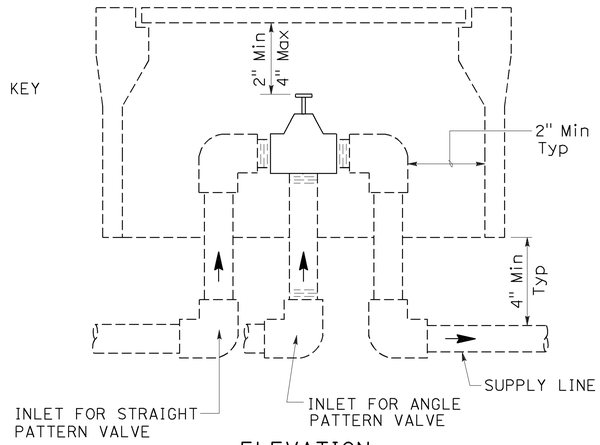

ELEVATION
VALVE

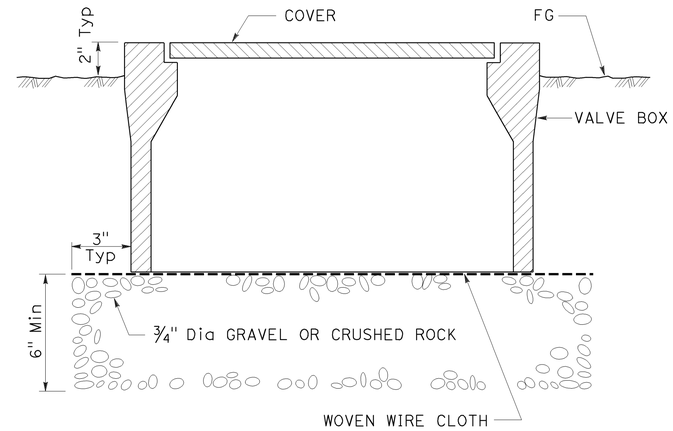

SECTION
VALVE BOX

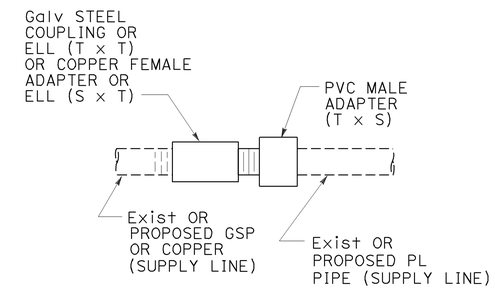

GALVANIZED OR COPPER PIPE CONNECTION TO PLASTIC PIPE

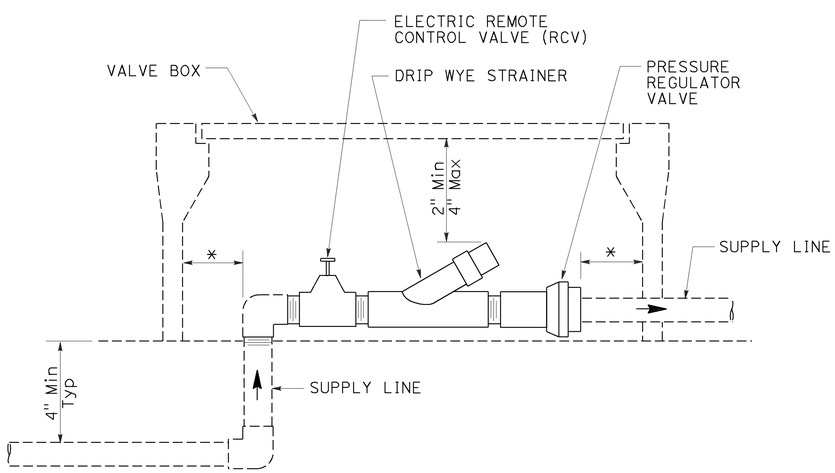

ELEVATION
DRIP VALVE ASSEMBLY

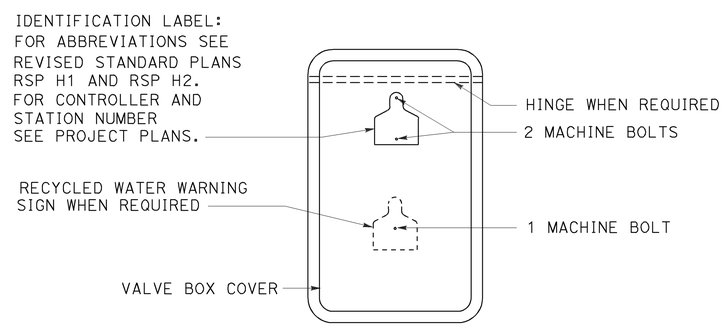

PLAN

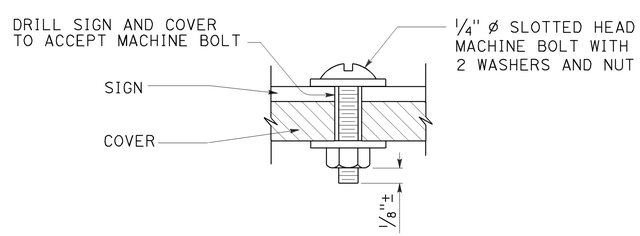

SECTION
VALVE BOX IDENTIFICATION

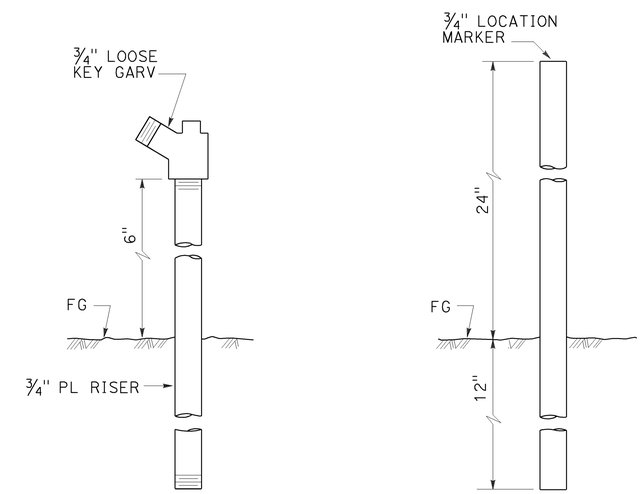

ELEVATION
GARDEN VALVE ASSEMBLY

ELEVATION
LOCATION MARKER

GARDEN VALVE ASSEMBLY

STATE OF CALIFORNIA
DEPARTMENT OF TRANSPORTATION

LANDSCAPE DETAILS

NO SCALE

RSP H7 DATED JULY 19, 2013 SUPERSEDES STANDARD PLAN H7
DATED MAY 20, 2011 - PAGE 224 OF THE STANDARD PLANS BOOK DATED 2010.

REVISED STANDARD PLAN RSP H7

6-20-13

TO ACCOMPANY PLANS DATED 2-2-15

Dist	COUNTY	ROUTE	POST MILES TOTAL PROJECT	SHEET No.	TOTAL SHEETS
04	SM	280	Var	70	92

REGISTERED CIVIL ENGINEER

April 19, 2013
PLANS APPROVAL DATE

REGISTERED PROFESSIONAL ENGINEER Gurinderpal Bhullar No. C48815 Exp. 9-30-14 CIVIL STATE OF CALIFORNIA

THE STATE OF CALIFORNIA OR ITS OFFICERS OR AGENTS SHALL NOT BE RESPONSIBLE FOR THE ACCURACY OR COMPLETENESS OF SCANNED COPIES OF THIS PLAN SHEET.

NOTES:

See Revised Standard Plan RSP T9 for tables.

Use cone spacing X for taper segment, Y for tangent segment or Z for conflict situations, as approriate, per Table 1, unless X, Y, or Z cone spacing is shown on this sheet.

Unless otherwise specified in the special provisions, all temporary warning signs shall have black legend on fluorescent orange background.

California codes are designated by (CA). Otherwise, Federal (MUTCD) codes are shown.

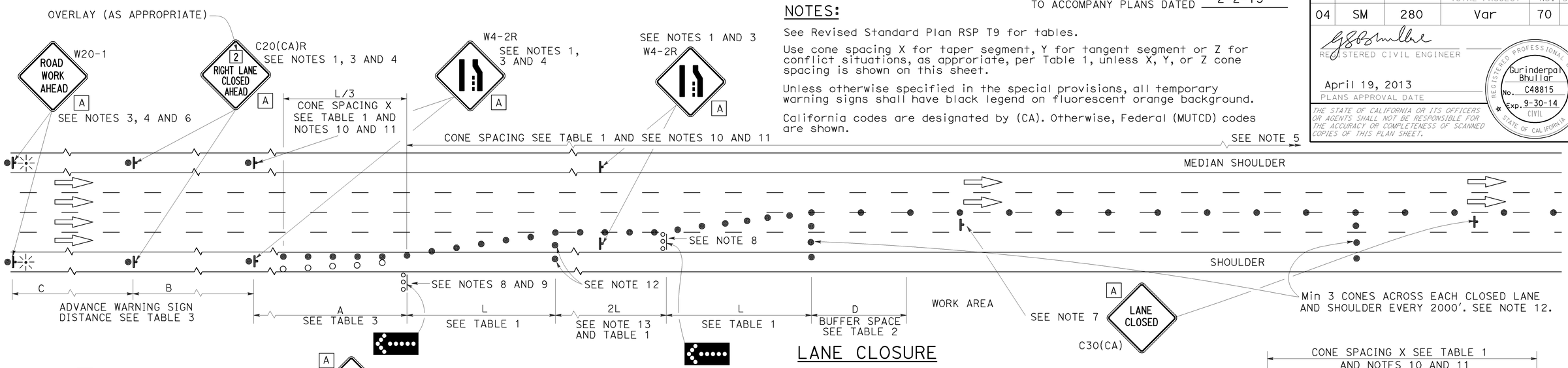

LANE CLOSURE

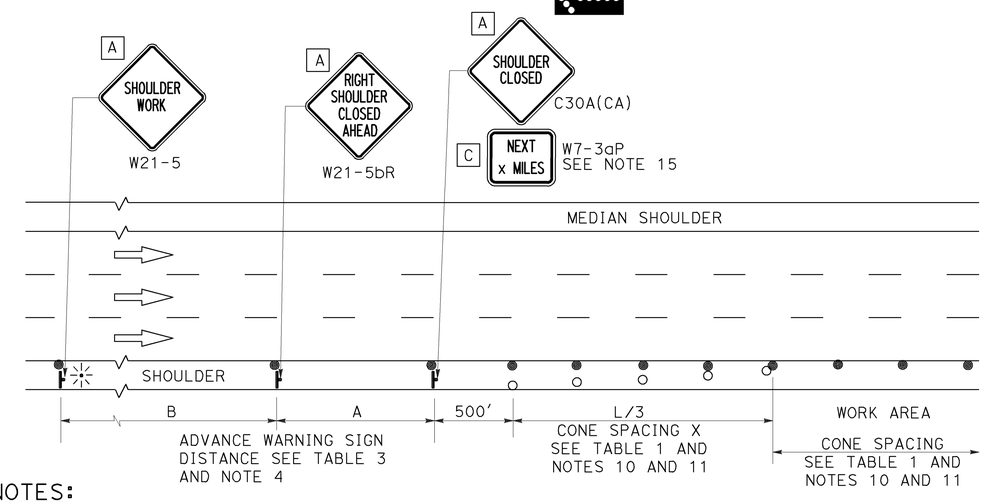

SHOULDER CLOSURE

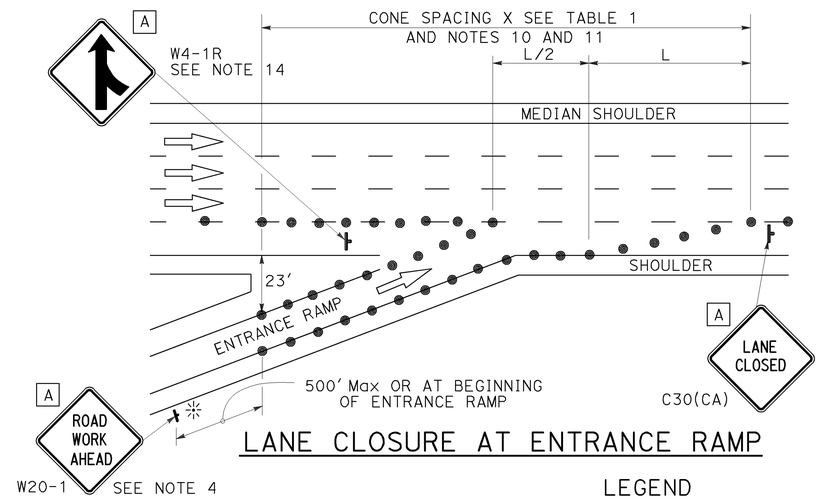

LANE CLOSURE AT ENTRANCE RAMP

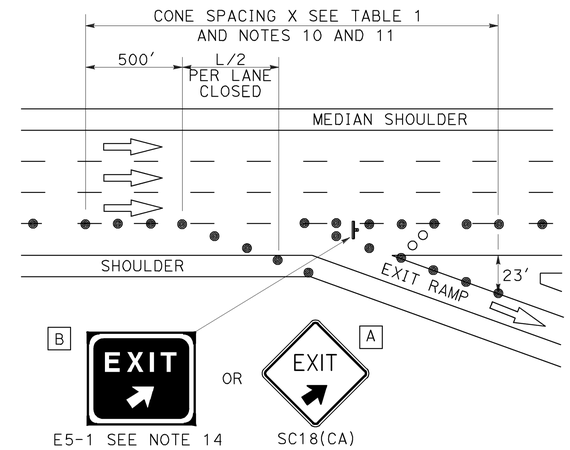

LANE CLOSURE AT EXIT RAMP

NOTES:

1. Median lane closures shall conform to the details as shown except that C20(CA)L and W4-2L signs shall be used.
2. At least one person shall be assigned to provide full time maintenance of traffic control devices for lane closures.
3. Duplicate sign installations are not required:
   a) On opposite shoulder if at least one-half of the available lanes remain open to traffic.
   b) In the median if the width of the median shoulder is less than 8' and the outside lanes are to be closed.
4. Each advance warning sign on each side of the roadway shall be equipped with at least two flags for daytime closure. Each flag shall be at least 16" x 16" in size and shall be orange or fluorescent red-orange in color. Flashing beacons shall be placed at the locations indicated for lane closure during hours of darkness.
5. A G20-2 "END ROAD WORK" sign, with minimum size of 48" x 24" as appropriate, shall be placed at the end of the lane closure unless the end of work area is obvious or ends within a larger project's limits.
6. If the W20-1 sign would follow within 2000' of a stationary W20-1 or G20-1 "ROAD WORK NEXT _____ MILES", use a C20(CA) sign for the first advance warning sign.
7. Place a C30(CA) sign every 2000' throughout length of lane closure.
8. One flashing arrow sign for each lane closed. The flashing arrow signs shall be Type I.
9. A minimum 1500' of sight distance shall be provided where possible for vehicles approaching the first flashing arrow sign. Lane closures shall not begin at top of crest vertical curve or on a horizontal curve.
10. All cones used for lane closures during the hours of darkness shall be fitted with retroreflective bands (or sleeves) as specified in the specifications.
11. Portable delineators, placed at one-half the spacing indicated for traffic cones may be used instead of cones for daytime closures only.
12. Unless otherwise specified in the special provisions, a minimum of 3 cones shall be placed transversely across each closed lane and shoulder at each location where a taper across a traffic lane ends and every 2000' as shown on the "Lane Closure" detail. Two Type II barricades may be used instead of the 3 cones. The transverse alignment of the cones or barricades on the closed shoulder may be shifted from the transverse alignment to provide access to the work.
13. Unless otherwise specified in the special provisions, the 2L tangent shown along lane lines shall be used between the L tapers required for each closed traffic lane.
14. Unless otherwise specified in the special provisions, the E5-1 or SC18(CA) and W4-1 signs shall be used as shown.
15. A W7-3aP "NEXT____ MILES" plaque must be used if theshoulder closure extends beyond the distance that can be perceived by road users.

LEGEND

- TRAFFIC CONE
- TRAFFIC CONE (OPTIONAL TAPER)
- TEMPORARY TRAFFIC CONTROL SIGN
- FLASHING ARROW SIGN (FAS)
- FAS SUPPORT OR TRAILER
- PORTABLE FLASHING BEACON

SIGN PANEL SIZE (Min)

A	48" x 48"
B	72" x 60"
C	36" x 30"

STATE OF CALIFORNIA
DEPARTMENT OF TRANSPORTATION

TRAFFIC CONTROL SYSTEM FOR LANE CLOSURE ON FREEWAYS AND EXPRESSWAYS

NO SCALE

RSP T10 DATED APRIL 19, 2013 SUPERSEDES STANDARD PLAN T10 DATED MAY 20, 2011 - PAGE 237 OF THE STANDARD PLANS BOOK DATED 2010.

REVISED STANDARD PLAN RSP T10

2010 REVISED STANDARD PLAN RSP T10

12-18-12

Dist	COUNTY	ROUTE	POST MILES TOTAL PROJECT	SHEET No.	TOTAL SHEETS
04	SM	280	Var	71	92

REGISTERED CIVIL ENGINEER

April 19, 2013
PLANS APPROVAL DATE

REGISTERED PROFESSIONAL ENGINEER Gurinderpal Bhullar No. C48815 Exp. 9-30-14 CIVIL STATE OF CALIFORNIA

THE STATE OF CALIFORNIA OR ITS OFFICERS OR AGENTS SHALL NOT BE RESPONSIBLE FOR THE ACCURACY OR COMPLETENESS OF SCANNED COPIES OF THIS PLAN SHEET.

TO ACCOMPANY PLANS DATED 2-2-15

TYPICAL RAMP CLOSURES

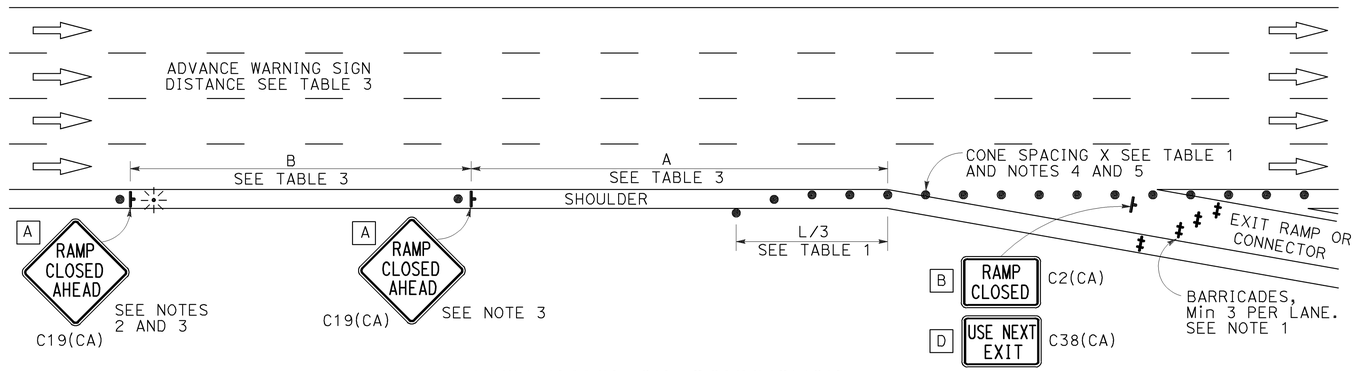

EXIT RAMP OR CONNECTOR

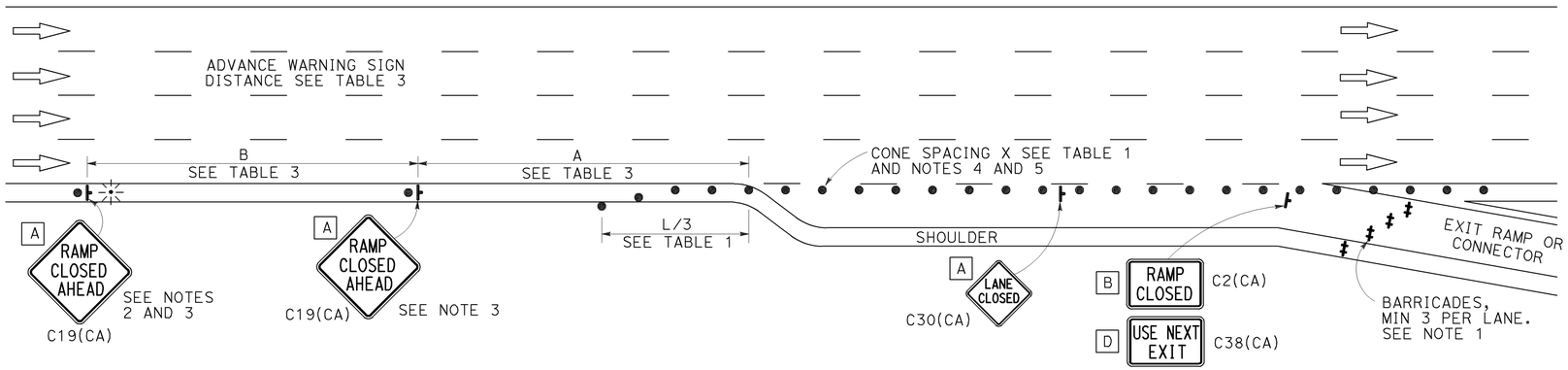

EXIT RAMP OR CONNECTOR WITH ADDITIONAL LANE

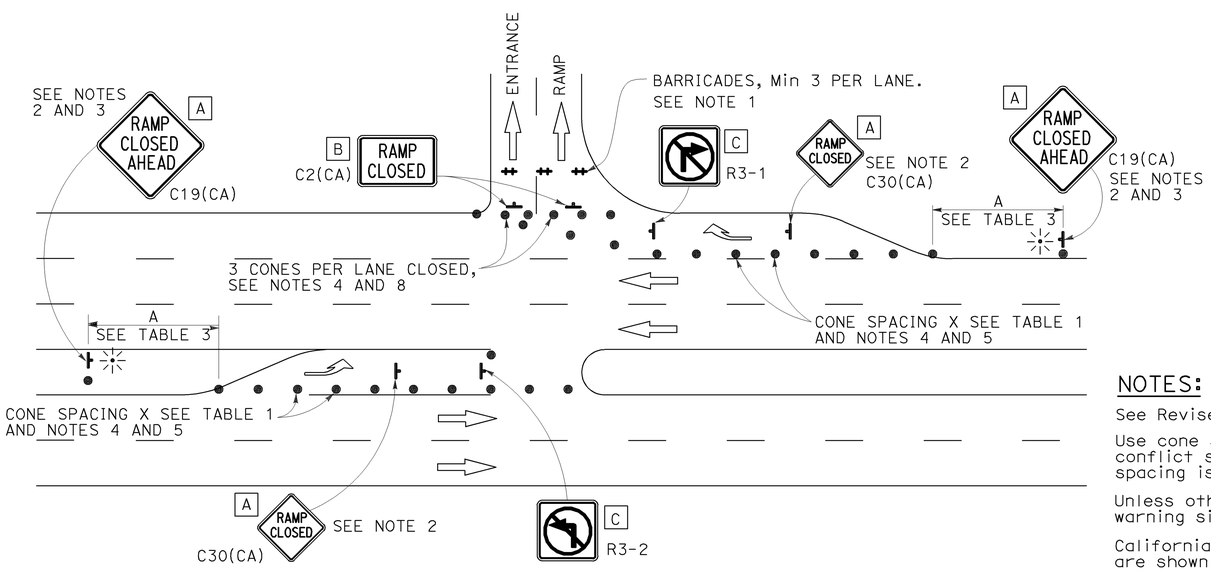

ENTRANCE RAMP WITH TURNING POCKETS

SIGN PANEL SIZE (Min)

- A 48" × 48"
- B 48" × 30"
- C 36" × 36"
- D 48" × 36"

LEGEND

- TRAFFIC CONE
- TEMPORARY TRAFFIC CONTROL SIGN
- BARRICADES
- PORTABLE FLASHING BEACON

NOTES:

1. Barricades shall be Type I, II, or III for closures lasting one week or less and Type III for closures lasting longer than one week.
2. In addition to placing the C19(CA) "RAMP CLOSED AHEAD" and C30(CA) "RAMP CLOSED" signs, black on orange overlay plates with the word "CLOSED" may be mounted, as directed by the Engineer, on all guide signs that refer to the closed ramp. The letter size on the overlay shall be the same as the guide sign.
3. Each advance C19(CA) "RAMP CLOSED AHEAD" sign shall be equipped with at least two flags for daytime closure. Each flag shall be at least 16" × 16" in size and shall be orange or fluorescent red-orange in color. A flashing beacon shall be placed on top of the first C19(CA) sign during hours of darkness.
4. All cones used for ramp closures during the hours of darkness shall be fitted with retroreflective bands (or sleeves) as specified in the specifications.
5. Portable delineators, placed at one-half the spacing indicated for traffic cones, may be used instead of cones for daytime ramp closures only.
6. At least one person shall be assigned to provide full time maintenance of traffic control devices, unless otherwise directed by the Engineer.
7. The existing "EXIT" signs shall be covered during ramp closures.
8. A minimum of 3 cones shall be placed transversely across each closed lane and shoulder.

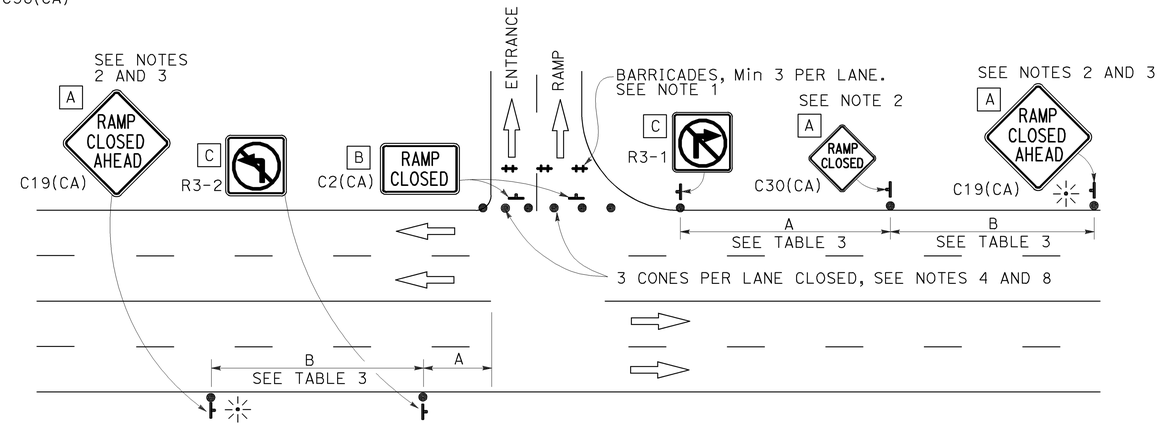

ENTRANCE RAMP WITHOUT TURNING POCKETS

NOTES:

See Revised Standard Plan RSP T9 for tables.

Use cone spacing X for taper segment, Y for tangent segment or Z for conflict situations, as approriate, per Table 1, unless X, Y, or Z cone spacing is shown on this sheet.

Unless otherwise specified in the special provisions, all temporary warning signs shall have black legend on fluorescent orange background.

California codes are designated by (CA). Otherwise, Federal (MUTCD) codes are shown.

STATE OF CALIFORNIA
DEPARTMENT OF TRANSPORTATION

TRAFFIC CONTROL SYSTEM FOR RAMP CLOSURE

NO SCALE

RSP T14 DATED APRIL 19, 2013 SUPERSEDES STANDARD PLAN T14
DATED MAY 20, 2011 - PAGE 242 OF THE STANDARD PLANS BOOK DATED 2010.

REVISED STANDARD PLAN RSP T14

2010 REVISED STANDARD PLAN RSP T14

12-18-12

Dist	COUNTY	ROUTE	POST MILES TOTAL PROJECT	SHEET No.	TOTAL SHEETS
04	SM	280	Var	72	92

Theresa Gabriel
REGISTERED ELECTRICAL ENGINEER

July 19, 2013
PLANS APPROVAL DATE

REGISTERED PROFESSIONAL ENGINEER
Theresa Aziz Gabriel
No. E15129
Exp. 6-30-14
ELECTRICAL
STATE OF CALIFORNIA

THE STATE OF CALIFORNIA OR ITS OFFICERS OR AGENTS SHALL NOT BE RESPONSIBLE FOR THE ACCURACY OR COMPLETENESS OF SCANNED COPIES OF THIS PLAN SHEET.

TO ACCOMPANY PLANS DATED 2-2-15

LEGEND:

AB	ABANDON. IF APPLIED TO CONDUIT, REMOVE CONDUCTORS
BC	INSTALL PULL BOX IN EXISTING CONDUIT RUN
BP	PEDESTRIAN BARRICADE, TYPE AS INDICATED ON PLAN
CB	INSTALL CONDUIT INTO EXISTING PULL BOX
CC	CONNECT NEW AND EXISTING CONDUIT. REMOVE EXISTING CONDUCTORS AND INSTALL CONDUCTORS AS INDICATED
CF	CONDUIT TO REMAIN FOR FUTURE USE. REMOVE CONDUCTORS. INSTALL PULL TAPE
DH	DETECTOR HANDHOLE
FA	FOUNDATION TO BE ABANDONED
IS	INSTALL SIGN ON SIGNAL MAST ARM
NS	NO SLIP BASE ON STANDARD
PEC	PHOTOELECTRIC CONTROL
PEU	PHOTOELECTRIC UNIT
RC	EQUIPMENT OR MATERIAL TO BE REMOVED AND BECOME THE PROPERTY OF THE CONTRACTOR
RE	REMOVE ELECTROLIER, FUSES AND BALLAST. TAPE ENDS OF CONDUCTORS
RL	RELOCATE EQUIPMENT
RR	REMOVE AND REUSE EQUIPMENT
RS	REMOVE AND SALVAGE EQUIPMENT
SC	SPLICE NEW TO EXISTING CONDUCTORS
SD	SERVICE DISCONNECT
TSP	TELEPHONE SERVICE POINT

ABBREVIATIONS

APS	ACCESSIBLE PEDESTRIAN SIGNAL
BBS	BATTERY BACKUP SYSTEM
BC	BOLT CIRCLE
BPB	BICYCLE PUSH BUTTON
C	CONDUIT
CB	CIRCUIT BREAKER
CCTV	CLOSED CIRCUIT TELEVISION
Ckt	CIRCUIT
CMS	CHANGEABLE MESSAGE SIGN
Ctid	CALTRANS IDENTIFICATION
Comm	COMMUNICATION
DLC	LOOP DETECTOR LEAD-IN CABLE
EMS	EXTINGUISHABLE MESSAGE SIGN
EVUC	EMERGENCY VEHICLE UNIT CABLE
EVUD	EMERGENCY VEHICLE UNIT DETECTOR
FB	FLASHING BEACON
FBCA	FLASHING BEACON CONTROL ASSEMBLY
FBS	FLASHING BEACON WITH SLIP BASE
FO	FIBER OPTIC
G	EQUIPMENT GROUNDING CONDUCTOR
GB	GROUND BUS
GFCI	GROUND FAULT CIRCUIT INTERRUPTER
HAR	HIGHWAY ADVISORY RADIO
Hex	HEXAGONAL
HPS	HIGH PRESSURE SODIUM
IISNS	INTERNALLY ILLUMINATED STREET NAME SIGN
ISL	INDUCTION SIGN LIGHTING
LED	LIGHT EMITTING DIODE
LMA	LUMINAIRE MAST ARM
LPS	LOW PRESSURE SODIUM
Ltg	LIGHTING
Lum	LUMINAIRE
M	METERED
MAT	MAST ARM MOUNTING TOP ATTACHMENT
MAS	MAST ARM MOUNTING SIDE ATTACHMENT
M/M	MULTIPLE TO MULTIPLE TRANSFORMER
Mtg	MOUNTING
MV	MERCURY VAPOR LIGHTING FIXTURE
MVDS	MICROWAVE VEHICLE DETECTION SYSTEM
N	NEUTRAL (GROUNDED CONDUCTOR)
NB	NEUTRAL BUS
NC	NORMALLY CLOSE
NO	NORMALLY OPEN
P	CIRCUIT BREAKER'S POLE
PB	PULL BOX
PBA	PUSH BUTTON ASSEMBLY
PEC	PHOTOELECTRIC CONTROL
Ped	PEDESTRIAN
PEU	PHOTOELECTRIC UNIT
PT	CONDUIT WITH PULL TAPE
RE	RELOCATED EQUIPMENT
RM	RAMP METERING
RWIS	ROADSIDE WEATHER INFORMATION SYSTEM
SB	SLIP BASE
SIC	SIGNAL INTERCONNECT CABLE
Sig	SIGNAL
SMA	SIGNAL MAST ARM
SNS	STREET NAME SIGN
SP	SERVICE POINT
TDC	TELEPHONE DEMARCATION CABINET
TMS	TRAFFIC MONITORING STATION
TOS	TRAFFIC OPERATIONS SYSTEM
Veh	VEHICLE
VIVDS	VIDEO IMAGE VEHICLE DETECTION SYSTEM
WIM	WEIGH-IN-MOTION
Xfmr	TRANSFORMER

SOFFIT AND WALL MOUNTED LUMINAIRES

PENDANT, 70 W HPS UNLESS OTHERWISE SPECIFIED

FLUSH, 70 W HPS UNLESS OTHERWISE SPECIFIED

WALL SURFACE, 70 W HPS UNLESS OTHERWISE SPECIFIED

EXISTING SOFFIT OR WALL LUMINAIRE TO REMAIN UNMODIFIED

EXISTING SOFFIT OR WALL LUMINAIRE TO BE MODIFIED AS SPECIFIED

NOTE:

Arrow indicates "street side" of luminaire.

COMMONLY USED SYMBOLS FOR UNITED STATES CUSTOMARY UNITS OF MEASUREMENT:

SYMBOL USED	DEFINITIONS
Ω	OHMS
min	MINUTE
s	SECOND
bps	BITS PER SECOND
Bps	BYTES PER SECOND
A	AMPERE
V	VOLT
V(dc)	VOLT (DIRECT CURRENT)
V(ac)	VOLT (ALTERNATING CURRENT)
FC	FOOT - CANDLE
W	WATTS
VA	VOLT-AMPERE
M	MEGA
k	KILO
m	MILLI
μ	MICRO
P	PICO
Hz	HERTZ

MISCELLANEOUS ELECTROLIERS

NEW	EXISTING	
		LUMINAIRE ON WOOD POLE
		NON-STANDARD ELECTROLIER (SEE PROJECT NOTES OR PROJECT PLANS)
		CITY ELECTROLIER
		ELECTROLIER FOUNDATION (FUTURE INSTALLATION)

NOTES:

1. HPS luminaires shall be 310 W HPS when installed on Type 21, 21D, 30, 31 and 32 Standards, unless otherwise specified. HPS luminaires shall be 200 W when installed on other type standards or poles, unless otherwise specified.
2. LED luminaires shall be 235 W when installed on Type 21, 21D, 30, 31 and 32 Standards, unless otherwise specified. LED luminaires shall be 165 W when installed on other type standards or poles, unless otherwise specified.
3. Luminaires shall be the cutoff type, ANSI Type III medium cutoff lighting distribution, unless otherwise specified.

STANDARD ELECTROLIER

NEW	EXISTING	STANDARD TYPE
		15
		15D
		15 STRUCTURE
		15D STRUCTURE
		21
		21D
		21 STRUCTURE
		21D STRUCTURE
		30
		31
		32

STATE OF CALIFORNIA
DEPARTMENT OF TRANSPORTATION

ELECTRICAL SYSTEMS (LEGEND AND ABBREVIATIONS)

NO SCALE

RSP ES-1A DATED JULY 19, 2013 SUPERSEDES STANDARD PLAN ES-1A DATED MAY 20, 2011 - PAGE 425 OF THE STANDARD PLANS BOOK DATED 2010.

REVISED STANDARD PLAN RSP ES-1A

2010 REVISED STANDARD PLAN RSP ES-1A

Dist	COUNTY	ROUTE	POST MILES TOTAL PROJECT	SHEET No.	TOTAL SHEETS
04	SM	280	Var	73	92

Theresa Gabriel
REGISTERED ELECTRICAL ENGINEER

July 19, 2013
PLANS APPROVAL DATE

REGISTERED PROFESSIONAL ENGINEER
Theresa Aziz Gabriel
No. E15129
Exp. 6-30-14
ELECTRICAL
STATE OF CALIFORNIA

THE STATE OF CALIFORNIA OR ITS OFFICERS OR AGENTS SHALL NOT BE RESPONSIBLE FOR THE ACCURACY OR COMPLETENESS OF SCANNED COPIES OF THIS PLAN SHEET.

TO ACCOMPANY PLANS DATED 2-2-15

CONDUIT

NEW	EXISTING	
		LIGHTING CONDUIT, UNLESS OTHERWISE INDICATED OR NOTED
		TRAFFIC SIGNAL CONDUIT
C	c	COMMUNICATION CONDUIT
T	t	TELEPHONE CONDUIT
F	f	FIRE ALARM CONDUIT
FO	fo	FIBER OPTIC CONDUIT
		CONDUIT TERMINATION
R	r	CONDUIT RISER ATTACHED TO THE STRUCTURE OR SERVICE POLE

SERVICE EQUIPMENT

NEW	EXISTING	
OH	oh	OVERHEAD LINES
U	U	WOOD POLE, "U" INDICATES UTILITY OWNED
		POLE GUY WITH ANCHOR
		UTILITY TRANSFORMER - GROUND MOUNTED
III	III	SERVICE EQUIPMENT ENCLOSURE TYPE. DOOR INDICATES FRONT OF ENCLOSURE
T	t	TELEPHONE DEMARCATION CABINET

POLE-MOUNTED SERVICE DESIGNATION

TYPE H SERVICE, 28'-10" — TYPE OF INSTALLATION AND POLE HEIGHT ABOVE GRADE

FLASHING BEACON

NEW	EXISTING	
R	R	FLASHING BEACON (ONE VEHICLE SIGNAL HEAD WITH BACKPLATE AND VISOR) "R" INDICATES RED INDICATION, "Y" INDICATES YELLOW INDICATION
Y Y	Y Y	FLASHING BEACON WITH TYPE 15-FBS STANDARD AND A SIGN.
R R	R R	FLASHING BEACON WITH TYPES 9, 9A OR 9B SIGN UNLESS OTHERWISE SPECIFIED OR INDICATED

SIGNAL EQUIPMENT

NEW	EXISTING	
C	C	PEDESTRIAN SIGNAL HEAD "C" INDICATES COUNTDOWN PEDESTRIAN HEAD
		PUSH BUTTON ASSEMBLY POST
		PEDESTRIAN BARRICADE
		VEHICLE SIGNAL HEAD (WITH BACKPLATE AND 3-SECTIONS: RED, YELLOW AND GREEN)
		VEHICLE SIGNAL HEAD WITH ANGLE VISOR
PV	PV	MODIFICATIONS OF BASIC SYMBOL: "L" INDICATES ALL NON-ARROW SECTIONS LOUVERED "LG" INDICATES LOUVERED GREEN SECTION ONLY "PV" INDICATES ALL 12" SECTIONS PROGRAMMED VISIBILITY "8" INDICATES ALL 8" SECTIONS (ONLY WHEN SPECIFIED)
		VEHICLE SIGNAL HEAD CONSISTING OF RED, YELLOW AND GREEN LEFT ARROW SECTIONS
		VEHICLE SIGNAL HEAD CONSISTING OF RED AND YELLOW SECTIONS WITH AN UP GREEN ARROW SECTION
		VEHICLE SIGNAL HEAD (5 SECTION) CONSISTING OF RED, YELLOW AND GREEN SECTIONS WITH YELLOW AND GREEN RIGHT ARROW SECTIONS
		TYPE 15TS STANDARD WITH VEHICLE SIGNAL HEAD AND LUMINAIRE
		TYPE 21TS STANDARD WITH VEHICLE SIGNAL HEAD AND LUMINAIRE
		STANDARD WITH LUMINAIRE AND SIGNAL MAST ARMS AND ATTACHED VEHICLE SIGNAL HEADS
		TYPE 1 STANDARD WITH ATTACHED VEHICLE SIGNAL HEADS
		STANDARD WITH A SIGNAL MAST ARM, ATTACHED VEHICLE SIGNAL HEADS AND INTERNALLY ILLUMINATED STREET NAME SIGN
		CONTROLLER ASSEMBLY. DOOR INDICATES FRONT OF CABINET

SIGNAL EQUIPMENT Cont

NEW	EXISTING	
		GUARD POST
		TYPE 1 STANDARD WITH RAMP METERING SIGN
		OPTICAL DETECTOR FOR THE EMERGENCY VEHICLE DETECTION SYSTEM

NOTES:

1. All signal sections shall be 12" unless shown otherwise.
2. Signal heads shall be provided with backplates unless shown otherwise.

ILLUMINATED OVERHEAD SIGN

NEW	EXISTING	
		SINGLE POST, SINGLE ILLUMINATED SIGN, BALANCED BUTTERFLY
		SINGLE POST, DOUBLE ILLUMINATED SIGN, BALANCED BUTTERFLY
		SINGLE POST, SINGLE ILLUMINATED SIGN, FULL CANTILEVER
		DOUBLE POST, SINGLE ILLUMINATED SIGN
		SINGLE ILLUMINATED SIGN MOUNTED ON STRUCTURE
		DOUBLE POST, SINGLE ILLUMINATED SIGN WITH ELECTROLIER

STATE OF CALIFORNIA
DEPARTMENT OF TRANSPORTATION

ELECTRICAL SYSTEMS (LEGEND AND ABBREVIATIONS)

NO SCALE

RSP ES-1B DATED JULY 19, 2013 SUPERSEDES STANDARD PLAN ES-1B DATED MAY 20, 2011 - PAGE 426 OF THE STANDARD PLANS BOOK DATED 2010.

REVISED STANDARD PLAN RSP ES-1B

2010 REVISED STANDARD PLAN RSP ES-1B

7-15-13

Dist	COUNTY	ROUTE	POST MILES TOTAL PROJECT	SHEET No.	TOTAL SHEETS
04	SM	280	Var	74	92

Theresa Gabriel
REGISTERED ELECTRICAL ENGINEER

July 19, 2013
PLANS APPROVAL DATE

REGISTERED PROFESSIONAL ENGINEER
Theresa Aziz Gabriel
No. E15129
Exp. 6-30-14
ELECTRICAL
STATE OF CALIFORNIA

THE STATE OF CALIFORNIA OR ITS OFFICERS OR AGENTS SHALL NOT BE RESPONSIBLE FOR THE ACCURACY OR COMPLETENESS OF SCANNED COPIES OF THIS PLAN SHEET.

TO ACCOMPANY PLANS DATED 2-2-15

EQUIPMENT IDENTIFICATION

ILLUMINATED SIGN IDENTIFICATION NUMBER:

SIGN No. 12345
10 ISL SCI 1.0

- SIGN NUMBER - PLACE ON POST OR STRUCTURE
- TRANSFORMER RATING (kVA)
- LIGHTING CONTROL TYPE
- NUMBER AND TYPE OF FIXTURES

DO NOT PLACE ON STANDARD OR STRUCTURE

ELECTROLIER OR EQUIPMENT IDENTIFICATION NUMBER:

12345 - 15'-0"

- MAST ARM LENGTH, IF SHOWN. DO NOT PLACE ON STANDARD OR STRUCTURE
- EQUIPMENT NUMBER - PLACE ON STANDARD OR STRUCTURE. EXISTING EQUIPMENT NUMBERS ARE SHOWN IN PARENTHESIS

CONDUIT AND CONDUCTOR IDENTIFICATION:

1½"C, 2#10, 15#14, 2 DLC, 12P#18

- PAIR
- NUMBER AND SIZE OF CONDUCTORS AND CABLES
- SIZE OF CONDUIT IN INCHES

ø1, ø2, ø2P, etc.	TRAFFIC PHASE IDENTIFICATION FOR SIGNAL FACES, DETECTORS AND PHASE DIAGRAMS
1 2 3	LEGEND NUMBERS
A B C	EQUIPMENT, SIGNAL POLES, INSTALLATION OR ITEMS
1 2 3	CONDUIT RUN NUMBERS

SIGNAL AND LIGHTING STANDARD (TYPICAL DESIGNATION):

19A - 3 - 100

- WIND VELOCITY = 100 mph
- CASE 3 ARM LOADING
- STANDARD TYPE
- STANDARD PLAN SHEET NUMBER
- DETAIL, NUMBER, SECTION, TYPE OR ELEVATION

MISCELLANEOUS EQUIPMENT

NEW	EXISTING	
CMS	cms	CHANGEABLE MESSAGE SIGN
		CLOSED CIRCUIT TELEVISION CAMERA
		HIGHWAY ADVISORY RADIO POLE AND ANTENNA
EMS	ems	EXTINGUISHABLE MESSAGE SIGN
M V	m v	DETECTION DEVICE M = MICROWAVE SENSOR V = VIDEO IMAGE SENSOR

WIRING DIAGRAM LEGEND

----	EXTERNAL CONDUCTOR
———	CONDUCTOR OR BUS
	TIE POINT
	CONTACTOR COIL
	CONTACTOR, NO CONTACT
	TERMINAL BLOCKS
	CONTACTOR, NC CONTACT
	ENCLOSURE BOND
	GROUNDING ELECTRODE
	CIRCUIT BREAKER
	RECEPTACLE

PULL BOXES

NEW	EXISTING	
		PULL BOX, No. 5 UNLESS OTHERWISE INDICATED OR NOTED
3	9A(21)	PULL BOX, ADDITIONAL DESIGNATIONS OR DESCRIPTIONS

3 No. 3½ PULL BOX
5 No. 5 PULL BOX
6 No. 6 PULL BOX
7 No. 7 (CEILING PULL BOX)
8 No. 8 (PENDANT SOFFIT PULL BOX)
9 No. 9 PULL BOX
9A No. 9A PULL BOX

(C) COMMUNICATIONS PULL BOX
(E) PULL BOX WITH EXTENSION
(S) SPRINKLER CONTROL PULL BOX
(21) ANCHOR BOLTS AND CONDUIT FOR FUTURE INSTALLATION OF TYPE 21 STANDARD
(T) TRAFFIC PULL BOX

VEHICLE DETECTORS

5 J 9 U

- VEHICLE DETECTOR DESIGNATION
- U = UPPER
  L = LOWER
- SLOT NUMBER IN INPUT FILE
- INPUT FILE (I OR J)
- PHASE

NEW	EXISTING	
		TYPE A DETECTOR LOOP. OUTLINE OF SAWCUT SHOWN
		TYPE B DETECTOR LOOP. OUTLINE OF SAWCUT SHOWN
		TYPE C DETECTOR LOOP. OUTLINE OF SAWCUT SHOWN
		TYPE D DETECTOR LOOP. OUTLINE OF SAWCUT SHOWN
		TYPE E DETECTOR LOOP. OUTLINE OF SAWCUT SHOWN
		TYPE Q DETECTOR LOOP. OUTLINE OF SAWCUT SHOWN
		MAGNETIC DETECTOR
DH	dh	DETECTOR HANDHOLE
		MICROWAVE OR VIDEO DETECTION ZONE

STATE OF CALIFORNIA
DEPARTMENT OF TRANSPORTATION

ELECTRICAL SYSTEMS (LEGEND AND ABBREVIATIONS)

NO SCALE

RSP ES-1C DATED JULY 19, 2013 SUPERSEDES STANDARD PLAN ES-1C DATED MAY 20, 2011 - PAGE 427 OF THE STANDARD PLANS BOOK DATED 2010.

REVISED STANDARD PLAN RSP ES-1C

2010 REVISED STANDARD PLAN RSP ES-1C

7-11-13

DIST	COUNTY	ROUTE	POST MILES TOTAL PROJECT	SHEET No.	TOTAL SHEETS
04	SM	280	Var	75	92

REGISTERED CIVIL ENGINEER 2-2-15 DATE

2-2-15
PLANS APPROVAL DATE

REGISTERED PROFESSIONAL ENGINEER AIMAN MALAK No. C73369 Exp. 12-31-2016 CIVIL STATE OF CALIFORNIA

The State of California or its officers or agents shall not be responsible for the accuracy or completeness of scanned copies of this plan sheet.

INDEX TO PLANS

SHEET No.	TITLE
1.	INDEX TO PLANS
2.	LOCATION TABLE
3.	LOCATION 1 TRANSITION AT BRIDGE COLUMN-DETAILS No. 1
4.	LOCATION 1 TRANSITION AT BRIDGE COLUMN-DETAILS No. 2
5.	LOCATIONS 2 & 4 DETAILS
6.	LOCATION 3 DETAILS
7.	LOCATIONS 5, 7, 8, 9, 10, 11, 12, 13, 14, 22, 27, 31, 37, 39, 40, 42, 43 & 45 DETAILS
8.	LOCATIONS 6, 25 & 26 DETAILS
9.	LOCATIONS 15 & 34 DETAILS
10.	LOCATION 16 DETAILS
11.	LOCATIONS 17 & 18 DETAILS
12.	LOCATIONS 19, 20, 23 & 24 DETAILS
13.	LOCATION 21 DETAILS
14.	LOCATIONS 28 & 29 DETAILS
15.	LOCATIONS 30, 35, 36, 41, 44 & 46 DETAILS
16.	LOCATION 32 DETAILS
17.	LOCATION 33 DETAILS
18.	LOCATION 38 DETAILS

STANDARD PLANS DATED 2010

A10A	ABBREVIATIONS (A-L)
RSP A10B	ABBREVIATIONS (M-Z)
A10C	LINES AND SYMBOLS (SHEET 1 OF 3)
A10D	LINES AND SYMBOLS (SHEET 2 OF 3)
A10E	LINES AND SYMBOLS (SHEET 3 OF 3)
B0-3	BRIDGE DETAILS
RSP A77U2	MIDWEST GUARDRAIL SYSTEM
RSP A77U4	MIDWEST GUARDRAIL SYSTEM
A78J	SINGLE THRIE BEAM BARRIER TRANSITION RAILING (TYPE STB)

QUANTITIES

SALVAGE METAL BRIDGE RAILING	240	LF
SALVAGE BRIDGE APPROACH GUARD RAILING	147	LF
REMOVE CONCRETE (CY)	66	CY
CONCRETE BARRIER (TRANSITION)	462	LF
CONCRETE BARRIER (TYPE 60SD MODIFIED)	130	LF

THE CONTRACTOR MUST VERIFY ALL CONTROLLING FIELD DIMENSIONS BEFORE ORDERING OR FABRICATING ANY MATERIAL.

DAVID NEUMANN
BRANCH CHIEF

	BY	CHECKED
DESIGN	AIMAN MALAK	VICTOR LOPEZ
DETAILS	MARTIN TOMAS	AIMAN MALAK
QUANTITIES	AIMAN MALAK	MICHAEL CHARAK

LOAD & RESISTANCE FACTOR DESIGN — LIVE LOADING: HL93 W/"LOW-BOY": PERMIT DESIGN VEHICLE
LAYOUT — BY — CHECKED
SPECIFICATIONS — BY X — PLANS AND SPECS COMPARED X

ORIGINAL SCALE IN INCHES FOR REDUCED PLANS 0 1 2 3

STATE OF CALIFORNIA
DEPARTMENT OF TRANSPORTATION

DIVISION OF ENGINEERING SERVICES
STRUCTURE DESIGN
DESIGN BRANCH B

BRIDGE NO. N/A
POST MILE N/A

CONCRETE BARRIER TRANSITIONS
INDEX TO PLANS

UNIT: 3619
PROJECT NUMBER & PHASE: 04000206151
CONTRACT NO.: 04-1G8301

DISREGARD PRINTS BEARING EARLIER REVISION DATES
REVISION DATES 10/30/14 2/2/15
SHEET 1 OF 18

USERNAME => s136183 DATE PLOTTED => 07-APR-2015 TIME PLOTTED => 16:23

STRUCTURES DESIGN GENERAL PLAN SHEET (ENGLISH) (REV.09-01-10)

FILE => 0400020615we001.dgn

THE CONTRACTOR MUST VERIFY ALL CONTROLLING FIELD DIMENSIONS BEFORE ORDERING OR FABRICATING ANY MATERIAL.

LOCATIONS OF CONSTRUCTION

DIST	COUNTY	ROUTE	POST MILES TOTAL PROJECT	SHEET No.	TOTAL SHEETS
04	SM	280	Var	76	92

REGISTERED CIVIL ENGINEER 2-2-15 DATE

2-2-15
PLANS APPROVAL DATE

REGISTERED PROFESSIONAL ENGINEER AIMAN MALAK No. C73369 Exp. 12-31-2016 CIVIL STATE OF CALIFORNIA

The State of California or its officers or agents shall not be responsible for the accuracy or completeness of scanned copies of this plan sheet.

Note:
For asphalt concrete dike removal see "Roadway Plans".

LOCATION											
ID No.	ROUTE	PM	DIRECTION NB/SB	HWY (H) RAMP (R)	LEFT (L) OR RIGHT (R) SIDE	DESCRIPTION	SALVAGE METAL RAIL (LF)	SALVAGE BAGR (LF)	REMOVE CONCRETE (CY)	CONC BARRIER TRANSITION (LF)	CONC BARRIER (TYPE 60 SD Mod) (LF)
1	280	M27.11	SB	H	R	BEGINNING ROUTE 1/280 SEPARATION 35-0173L-TUNNEL					129.25
2	280	R26.5	SB	H	R	JUNIPERO SERRA Blvd OC, BRIDGE No. 35-0184				9.33	
3	280	R26.09	SB	H	R	SB OFF TO SULLIVAN Ave				4.75	
4	280	R25.78	SB	H	R	SAN PEDRO ROAD OC BRIDGE No. 35-0181				4.75	
5	280	R24.63	SB	H	R	SERRAMONTE Blvd UC, BRIDGE No. 35-0209L				15.00	
6	280	R23.16	SB	H	R	KING DRIVE UC, BRIDGE No. 35-0202L			2.03	4.75	
7	280	R22.04	SB	H	R	AVALON DRIVE UC, BRIDGE No. 35-0228L				15.00	
8	280	R20.97	SB	H	R	ROUTE 280/380 SEPARATION, BRIDGE No. 35-0217				15.00	
9	280	R20.75	SB	H	R	SAN BRUNO Ave UC, BRIDGE No. 35-0227				15.00	
10	280	R20.22	SB	R	R	WHITMAN WAY OFF-RAMP UC, BRIDGE No. 35-0197K				15.00	
11	280	R20.04	SB	H	R	JUNIPERO Blvd OFF-RAMP UC, BRIDGE No. 35-0196L				15.00	
12	280	R18.52	SB	H	R	LARKSPUR DRIVE UC, BRIDGE No. 35-0216L				15.00	
13	280	R17.92	SB	H	R	HILLCREST Blvd UC, BRIDGE No. 35-0211L				15.00	
14	280	R14.22	SB	H	L	HAYNE ROAD UC, BRIDGE No. 35-0210L				15.00	
15	280	R13.04	SB	H	R	SAN MATEO CREEK, BRIDGE No. 35-0199	20.00		5.90	10.00	
16	280	10.82	SB	H	R	ROUTE 280/92 SEPARATION, BRIDGE No. 35-0243L				9.75	
17	280	6.65	SB	R	R	EDGEWOOD ROAD UC, BRIDGE No. 35-0250L		47		5.00	
18	280	R6.99	SB	H	R	SERVICE ROAD UC, BRIDGE No. 35-0277L		100		5.00	
19	280	R4.99	SB	H	L	CANADA ROAD UC, BRIDGE No. 35-0231L	50.00		11.71	4.75	
20	280	R4.71	SB	H	L	FARM HILL Blvd UC, BRIDGE No. 35-0230L	50.00		11.71	4.75	
21	280	R1.02	SB	H	R	STANFORD LINEAR ACCEL UC, BRIDGE No. 35-0194			0.20	5.00	
22	280	R0.30	SB	H	R	SAN FRANCISQUITO CREEK, BRIDGE No. 35-0234L				15.00	
23	280	R0.30	SB	H	L	SAN FRANCISQUITO CREEK, BRIDGE No. 35-0234L	50.00		11.71	4.75	
24	280	R0.30	NB	H	L	SAN FRANCISQUITO CREEK UC, BRIDGE No. 35-0234R	50.00		11.71	4.75	

LOCATION											
ID No.	ROUTE	PM	DIRECTION NB/SB	HWY (H) RAMP (R)	LEFT (L) OR RIGHT (R) SIDE	DESCRIPTION	SALVAGE METAL RAIL (LF)	SALVAGE BAGR (LF)	REMOVE CONCRETE (CY)	CONC BARRIER TRANSITION (LF)	CONC BARRIER (TYPE 60 SD Mod) (LF)
25	280	R1.02	NB	H	R	STANFORD LINEAR ACCEL UC, BRIDGE No. 35-0194			2.03	4.75	
26	280	R4.65	NB	H	R	FARM HILL Blvd UC, BRIDGE No. 35-0230R			2.03	4.75	
27	280	R4.99	NB	H	R	CANADA ROAD UC, BRIDGE No. 35-0231R				15.00	
28	280	R6.99	NB	R	R	SERVICE ROAD UC, BRIDGE No. 35-0277R				4.75	
29	280	6.65	NB	H	R	EDGEWOOD ROAD UC, BRIDGE No. 35-0250R				4.75	
30	280	R12.73	NB	H	R	SAN MATEO CREEK, BRIDGE No. 35-0199, RIGHT SIDE SLOPE			0.04	9.75	
31	280	R17.92	NB	H	R	HILLCREST Blvd UC, BRIDGE No. 35-0211R				15.00	
32	280	R17.92	NB	H	L	HILLCREST Blvd UC, BRIDGE No. 35-0211R				8.50	
33	280	R18.31	NB	H	R	APPROXIMATELY 0.3 MILES SOUTH OF LARKSPUR DRIVE UC				9.33	
34	280	R20.08	NB	H	R	JUNIPERO Blvd OFF-RAMP UC, BRIDGE No. 35-0196R	20.00		5.90	10.00	
35	280	R20.08	NB	H	L	JUNIPERO Blvd OFF-RAMP UC, BRIDGE No. 35-0196R			0.04	9.75	
36	280	R20.22	NB	H	L	WHITMAN WAY UC, BRIDGE No. 35-0197R			0.04	9.75	
37	280	R20.97	NB	H	R	ROUTE 280/380 SEPARATION, BRIDGE No. 35-0217				15.00	
38	280	R21.55	NB	H	R	NATIONAL CEMETERY SIDE HILL VIADUCT, BRIDGE No. 35-0320			0.59	9.00	
39	280	R22.05	NB	H	L	AVALON DRIVE UC, BRIDGE No. 35-0228R				15.00	
40	280	R22.62	NB	R	R	WESTBOROUGH Blvd UC, BRIDGE No. 35-0212R				15.00	
41	280	R22.62	NB	H	L	WESTBOROUGH Blvd UC, BRIDGE No. 35-0212R			0.04	9.75	
42	280	R23.16	NB	H	L	KING DRIVE UC, BRIDGE No. 35-0202R				15.00	
43	280	R24.20	NB	R	R	HICKEY Blvd UC, BRIDGE No. 35-0116R				15.00	
44	280	R24.20	NB	H	L	HICKEY Blvd UC, BRIDGE No. 35-0116R			0.04	9.75	
45	280	R24.60	NB	H	R	SERRAMONTE Blvd UC, BRIDGE No. 35-0209R				15.00	
46	280	R24.65	NB	H	L	SERRAMONTE Blvd UC, BRIDGE No. 35-0209R			0.04	9.75	

BRANCH CHIEF DAVID NEUMANN

	BY	CHECKED
DESIGN	AIMAN MALAK	VICTOR LOPEZ
DETAILS	HUNG NGUYEN	AIMAN MALAK
QUANTITIES	AIMAN MALAK	MICHEAL CHARAK

STATE OF CALIFORNIA
DEPARTMENT OF TRANSPORTATION

DIVISION OF ENGINEERING SERVICES
DESIGN AND TECHNICAL SERVICES
SPECIAL DESIGNS BRANCH B

BRIDGE NO. N/A
POST MILE N/A

CONCRETE BARRIER TRANSITIONS
LOCATION TABLE

STRUCTURES DESIGN DETAIL SHEET (ENGLISH) (REV. 09-01-10)

ORIGINAL SCALE IN INCHES FOR REDUCED PLANS 0 1 2 3

UNIT: X
PROJECT NUMBER & PHASE: 04000206151
CONTRACT NO.: 04-1G8301

DISREGARD PRINTS BEARING EARLIER REVISION DATES

REVISION DATES 10-23-14 10-23-14 2-2-15

SHEET 2 OF 18

FILE => 0400020615we002.dgn

USERNAME => s136183 DATE PLOTTED => 07-APR-2015 TIME PLOTTED => 16:23

DIST	COUNTY	ROUTE	POST MILES TOTAL PROJECT	SHEET No.	TOTAL SHEETS
04	SM	280	Var	77	92

REGISTERED CIVIL ENGINEER — DATE 2-2-15

PLANS APPROVAL DATE 2-2-15

REGISTERED PROFESSIONAL ENGINEER AIMAN MALAK No. C73369 Exp. 12-31-2016 CIVIL STATE OF CALIFORNIA

The State of California or its officers or agents shall not be responsible for the accuracy or completeness of scanned copies of this plan sheet.

NOTES:

1. All concrete end blocks have a 5" chamfer.
2. Where existing bridge footing is encountered, Apply bond breaker between bridge footing and new structure use 1/8" thick hard board for bond breaker.
3. Grade embankment slope behind retaining wall to drain.
4. See "Roadway Plans" for relocate exist DI.
5. 4" ø drains @ 12' center to center.
6. Minimum edge distance for drill & bond #6 dowels is 4".
7. Exact location of concrete barrier transition must be determined by the Engineer.

LEGEND:

Existing

New construction

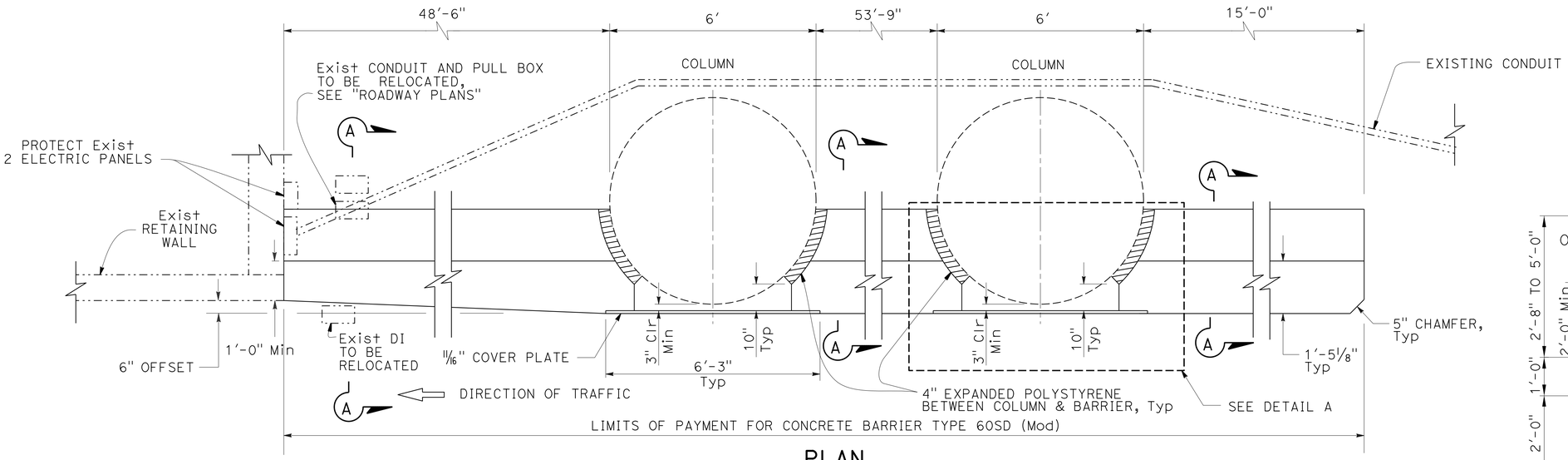

PLAN

NO SCALE

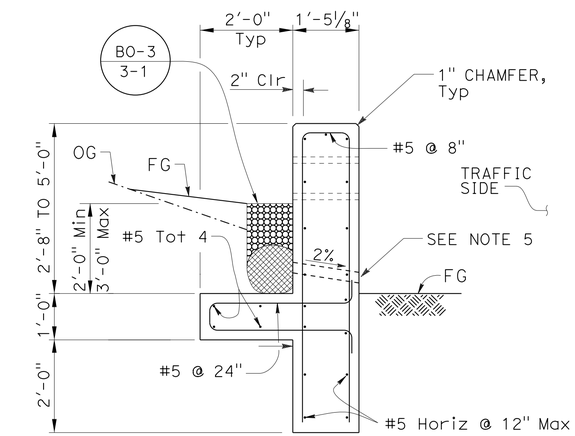

SECTION A-A

NO SCALE

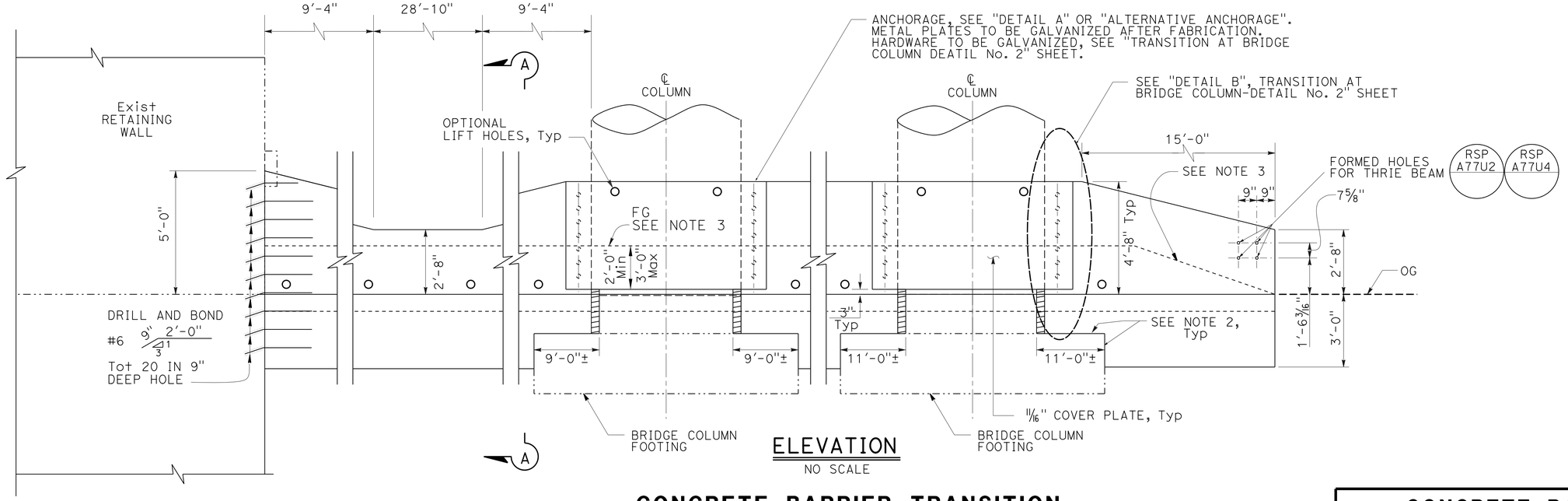

ELEVATION

NO SCALE

THE CONTRACTOR MUST VERIFY ALL CONTROLLING FIELD DIMENSIONS BEFORE ORDERING OR FABRICATING ANY MATERIAL.

CONCRETE BARRIER TRANSITION

	BY	CHECKED
DESIGN	AIMAN MALAK	VICTOR LOPEZ
DETAILS	MARTIN TOMAS	AIMAN MALAK
QUANTITIES	AIMAN MALAK	MICHAEL CHARAK

BRANCH CHIEF DAVID NEUMANN

STATE OF CALIFORNIA DEPARTMENT OF TRANSPORTATION

DIVISION OF ENGINEERING SERVICES DESIGN AND TECHNICAL SERVICES SPECIAL DESIGNS BRANCH B

BRIDGE NO. N/A

POST MILE N/A

CONCRETE BARRIER TRANSITIONS

LOCATION 1

TRANSITION AT BRIDGE COLUMN-DETAILS No. 1

STRUCTURES DESIGN DETAIL SHEET (ENGLISH) (REV. 09-01-10)

ORIGINAL SCALE IN INCHES FOR REDUCED PLANS 0 1 2 3

UNIT: X

PROJECT NUMBER & PHASE: 04000206151

CONTRACT NO.: 04-1G8301

DISREGARD PRINTS BEARING EARLIER REVISION DATES

REVISION DATES 10:13:14 10:28:14

SHEET 3 OF 18

FILE => 0400020615we003.dgn

USERNAME => s136183 DATE PLOTTED => 07-APR-2015 TIME PLOTTED => 16:23

DIST	COUNTY	ROUTE	POST MILES TOTAL PROJECT	SHEET No.	TOTAL SHEETS
04	SM	280	Var	78	92

REGISTERED CIVIL ENGINEER — DATE 2-2-15

PLANS APPROVAL DATE 2-2-15

REGISTERED PROFESSIONAL ENGINEER — AIMAN MALAK — No. C73369 — Exp. 12-31-2016 — CIVIL — STATE OF CALIFORNIA

The State of California or its officers or agents shall not be responsible for the accuracy or completeness of scanned copies of this plan sheet.

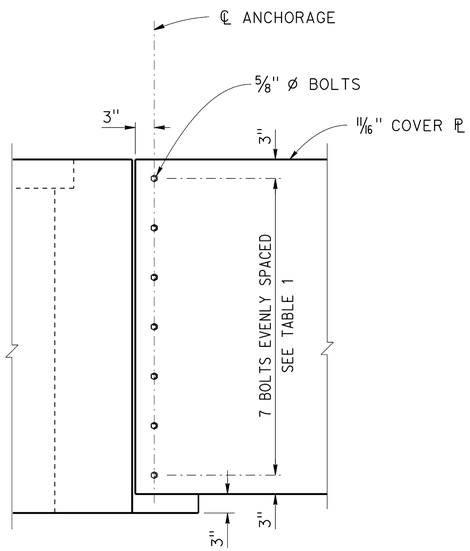

DETAIL B

1" = 1'-0"

TABLE 1		
L (ft)	PLATE THICKNESS (in)	TOTAL No. OF BOLTS
6'-6" Max	11/16	7

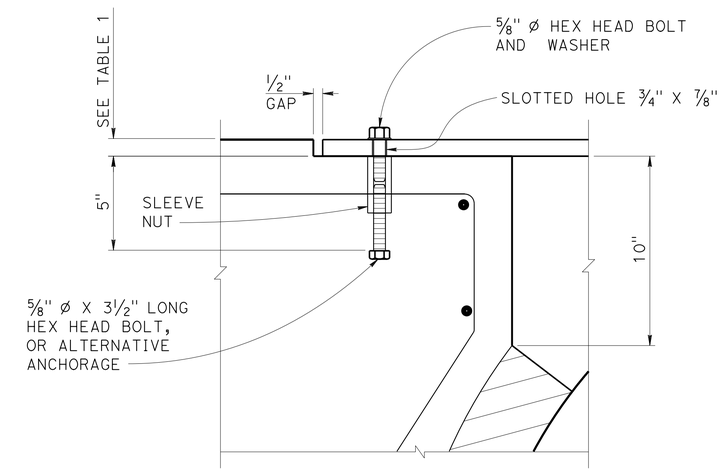

DETAIL A

NO SCALE

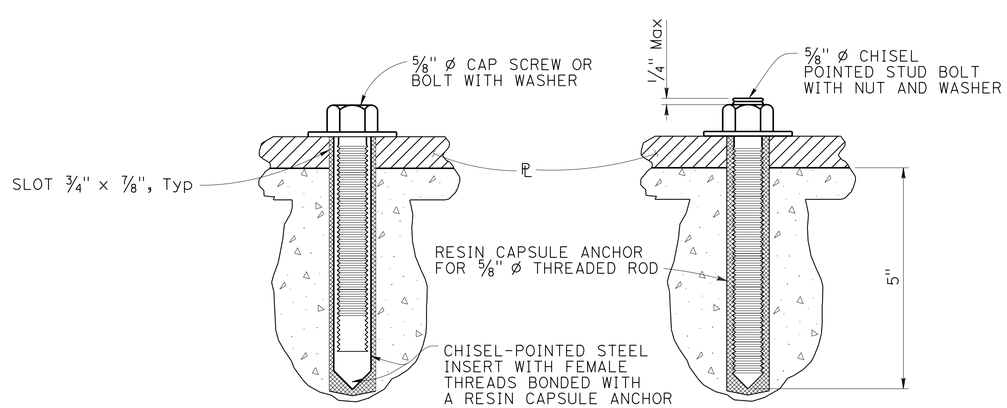

ALTERNATIVE A — ALTERNATIVE B

ALTERNATIVE ANCHORAGE

NO SCALE

NOTE:

Structural steel, fy = 50,000 psi
Unless otherwise noted.

THE CONTRACTOR MUST VERIFY ALL CONTROLLING FIELD DIMENSIONS BEFORE ORDERING OR FABRICATING ANY MATERIAL.

CONCRETE BARRIER TRANSITIONS

LOCATION 1

TRANSITION AT BRIDGE COLUMN-DETAILS No. 2

DESIGN	BY AIMAN MALAK	CHECKED VICTOR LOPEZ
DETAILS	BY MARTIN TOMAS	CHECKED AIMAN MALAK
QUANTITIES	BY AIMAN MALAK	CHECKED MICHAEL CHARAK

BRANCH CHIEF DAVID NEUMANN

STATE OF CALIFORNIA
DEPARTMENT OF TRANSPORTATION

DIVISION OF ENGINEERING SERVICES
DESIGN AND TECHNICAL SERVICES
SPECIAL DESIGNS BRANCH

BRIDGE No.

POST MILE

(ENGLISH) SPECIAL DESIGNS BRANCH BORDER SHEET (REV. 7-1-09)

ORIGINAL SCALE IN INCHES FOR REDUCED PLANS 0 1 2 3

UNIT: 3619
PROJECT NUMBER & PHASE: 0400020615

CONTRACT No.: 04-1G8301

DISREGARD PRINTS BEARING EARLIER REVISION DATES

REVISION DATES 10-28-14

SHEET 4 OF 18

FILE => 0400020615we004.dgn

USERNAME => s136183 DATE PLOTTED => 07-APR-2015 TIME PLOTTED => 16:23

DIST	COUNTY	ROUTE	POST MILES TOTAL PROJECT	SHEET No.	TOTAL SHEETS
04	SM	280	Var	79	92

REGISTERED CIVIL ENGINEER 2-2-15 DATE

2-2-15
PLANS APPROVAL DATE

REGISTERED PROFESSIONAL ENGINEER AIMAN MALAK No. C73369 Exp. 12-31-2016 CIVIL STATE OF CALIFORNIA

The State of California or its officers or agents shall not be responsible for the accuracy or completeness of scanned copies of this plan sheet.

NOTES:

1. All concrete end blocks have a 5" chamfer.
2. Minimum edge distance for drill and bond #6 dowels is 4".
3. Exact location of concrete barrier transition must be determined by the Engineer.

LEGEND:

Indicates existing

Indicates new structure

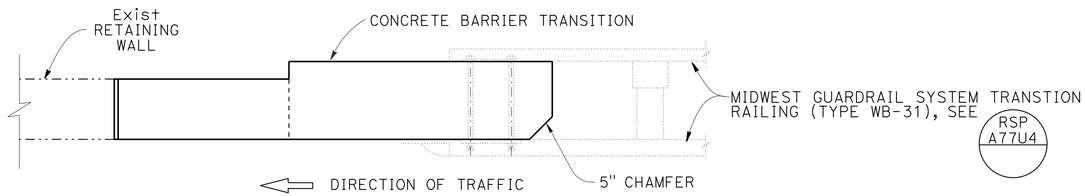

PLAN
NO SCALE

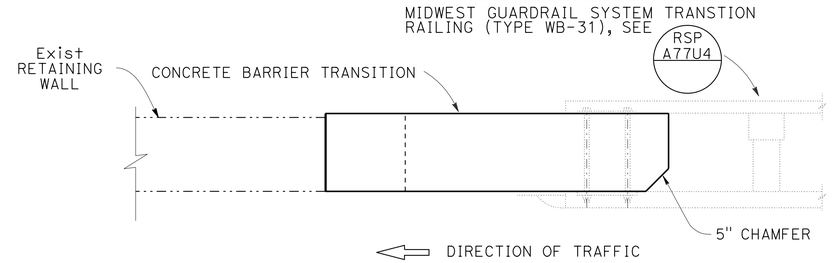

PLAN
NO SCALE

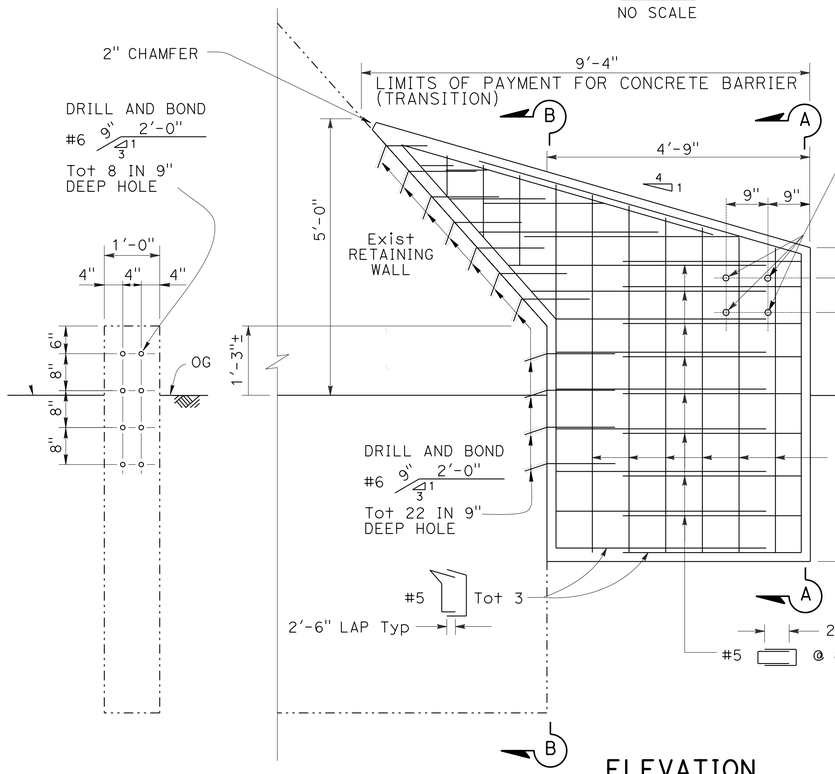

SECTION B-B
NO SCALE

ELEVATION
NO SCALE

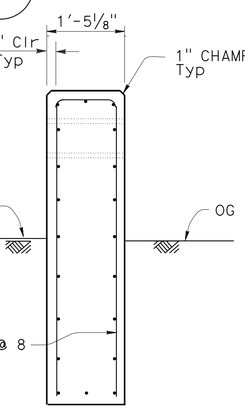

SECTION A-A
NO SCALE

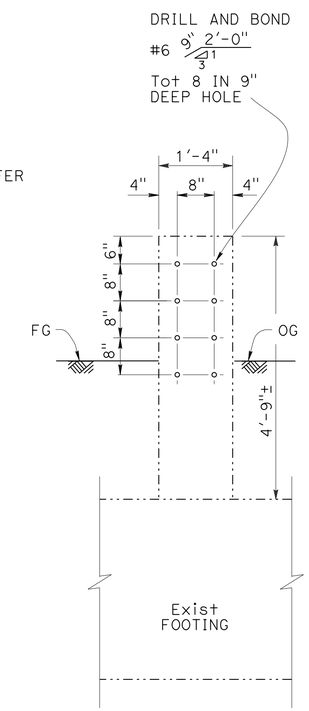

SECTION C-C
NO SCALE

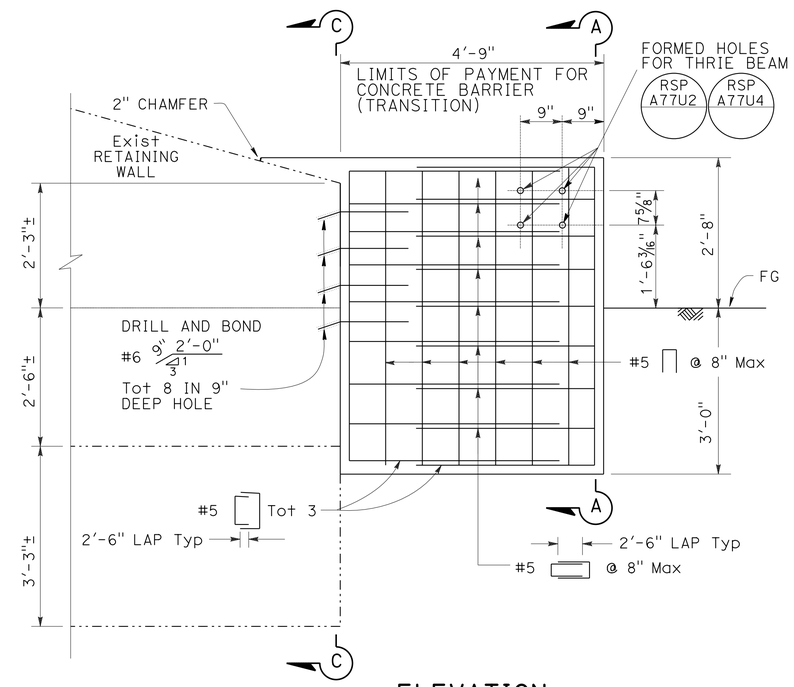

ELEVATION
NO SCALE

CONCRETE BARRIER TRANSITION LOCATION 2

CONCRETE BARRIER TRANSITION LOCATION 4

THE CONTRACTOR MUST VERIFY ALL CONTROLLING FIELD DIMENSIONS BEFORE ORDERING OR FABRICATING ANY MATERIAL.

BRANCH CHIEF DAVID NEUMANN

	BY	CHECKED
DESIGN	AIMAN MALAK	VICTOR LOPEZ
DETAILS	MARTIN TOMAS	AIMAN MALAK
QUANTITIES	AIMAN MALAK	MICHAEL CHARAK

STATE OF CALIFORNIA
DEPARTMENT OF TRANSPORTATION

DIVISION OF ENGINEERING SERVICES
DESIGN AND TECHNICAL SERVICES
SPECIAL DESIGNS BRANCH
B

BRIDGE NO. N/A
POST MILE N/A

CONCRETE BARRIER TRANSITIONS
LOCATIONS 2 AND 4 DETAILS

STRUCTURES DESIGN DETAIL SHEET (ENGLISH) (REV. 09-01-10)

ORIGINAL SCALE IN INCHES FOR REDUCED PLANS 0 1 2 3

UNIT: x
PROJECT NUMBER & PHASE: 04000206151
CONTRACT NO.: 04-1G8301

DISREGARD PRINTS BEARING EARLIER REVISION DATES

REVISION DATES 10-13-14 10-28-14

SHEET 5 OF 18

FILE => 0400020615we005.dgn

USERNAME => s136183 DATE PLOTTED => 07-APR-2015 TIME PLOTTED => 16:23

DIST	COUNTY	ROUTE	POST MILES TOTAL PROJECT	SHEET No.	TOTAL SHEETS
04	SM	280	Var	80	92

REGISTERED CIVIL ENGINEER 2-2-15 DATE

2-2-15
PLANS APPROVAL DATE

REGISTERED PROFESSIONAL ENGINEER AIMAN MALAK No. C73369 Exp. 12-31-2016 CIVIL STATE OF CALIFORNIA

The State of California or its officers or agents shall not be responsible for the accuracy or completeness of scanned copies of this plan sheet.

NOTES:

1. All concrete end blocks have a 5" chamfer.
2. Minimum edge distance for dill and bond #6 dowels is 4".
3. Exact location of concrete barrier transition must be determined by the Engineer.

LEGEND:

Indicates existing

Indicates new structure

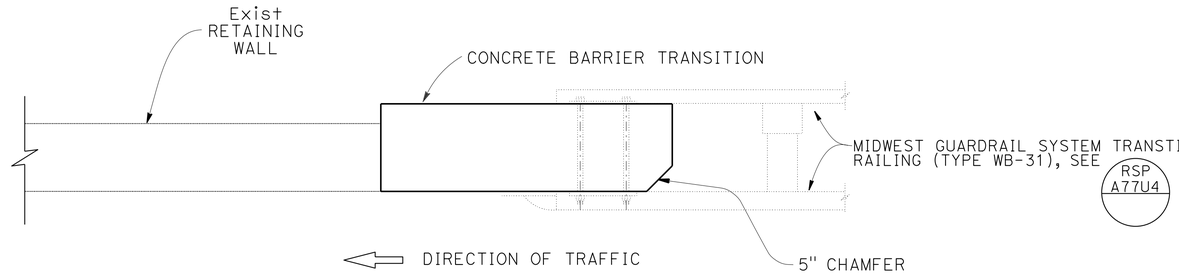

PLAN
NO SCALE

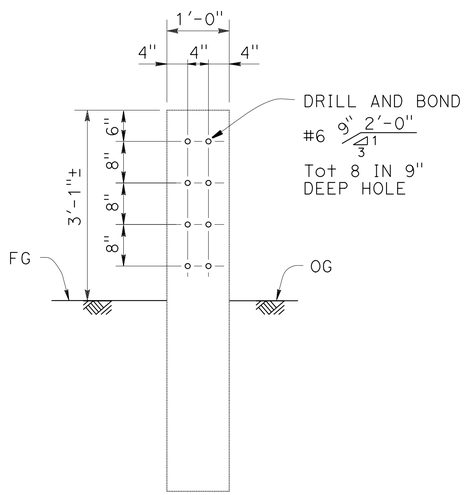

SECTION A-A
NO SCALE

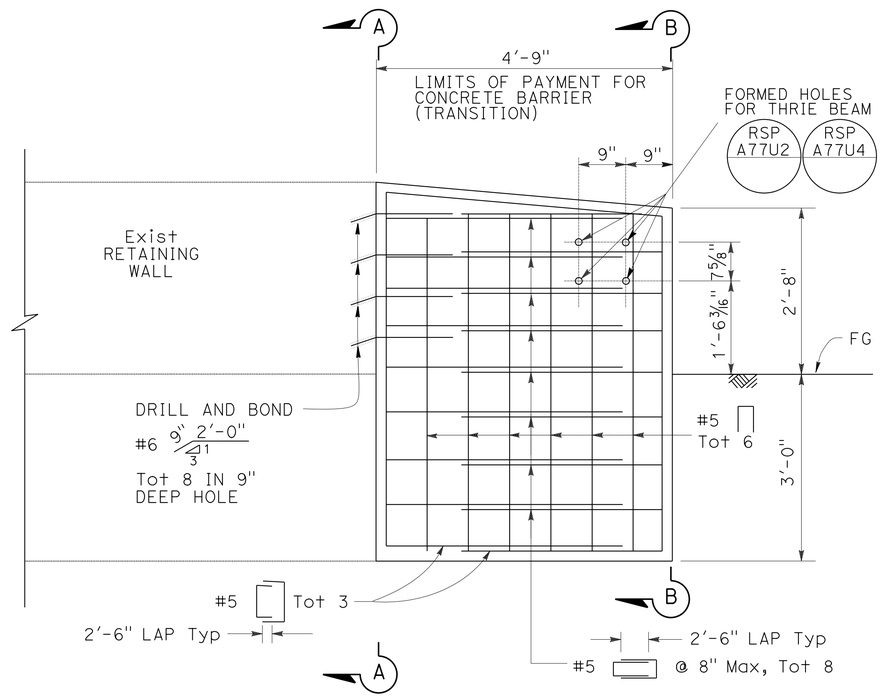

ELEVATION
NO SCALE

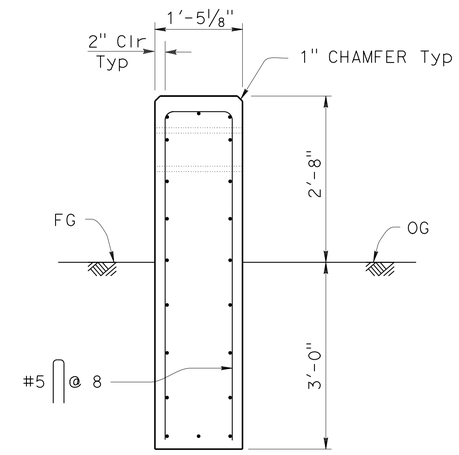

SECTION B-B
NO SCALE

THE CONTRACTOR MUST VERIFY ALL CONTROLLING FIELD DIMENSIONS BEFORE ORDERING OR FABRICATING ANY MATERIAL.

CONCRETE BARRIER TRANSITION LOCATION 3

BRANCH CHIEF DAVID NEUMANN	DESIGN	BY AIMAN MALAK	CHECKED VICTOR LOPEZ
	DETAILS	BY MARTIN TOMAS	CHECKED AIMAN MALAK
	QUANTITIES	BY AIMAN MALAK	CHECKED MICHAEL CHARAK

STATE OF CALIFORNIA
DEPARTMENT OF TRANSPORTATION

DIVISION OF ENGINEERING SERVICES
DESIGN AND TECHNICAL SERVICES
SPECIAL DESIGNS BRANCH B

BRIDGE NO. N/A
POST MILE N/A

CONCRETE BARRIER TRANSITIONS
LOCATION 3 DETAILS

STRUCTURES DESIGN DETAIL SHEET (ENGLISH) (REV. 09-01-10)

ORIGINAL SCALE IN INCHES FOR REDUCED PLANS 0 1 2 3

UNIT: X
PROJECT NUMBER & PHASE: 04000206151
CONTRACT NO.: 04-1G8301

DISREGARD PRINTS BEARING EARLIER REVISION DATES

REVISION DATES 10-13-14 10-28-14

SHEET 6 OF 18

FILE => 0400020615we006.dgn

USERNAME => s136183 DATE PLOTTED => 07-APR-2015 TIME PLOTTED => 16:23

DIST	COUNTY	ROUTE	POST MILES TOTAL PROJECT	SHEET No.	TOTAL SHEETS
04	SM	280	Var	81	92

REGISTERED CIVIL ENGINEER 2-2-15 DATE

2-2-15
PLANS APPROVAL DATE

REGISTERED PROFESSIONAL ENGINEER AIMAN MALAK No. C73369 Exp. 12-31-2016 CIVIL STATE OF CALIFORNIA

The State of California or its officers or agents shall not be responsible for the accuracy or completeness of scanned copies of this plan sheet.

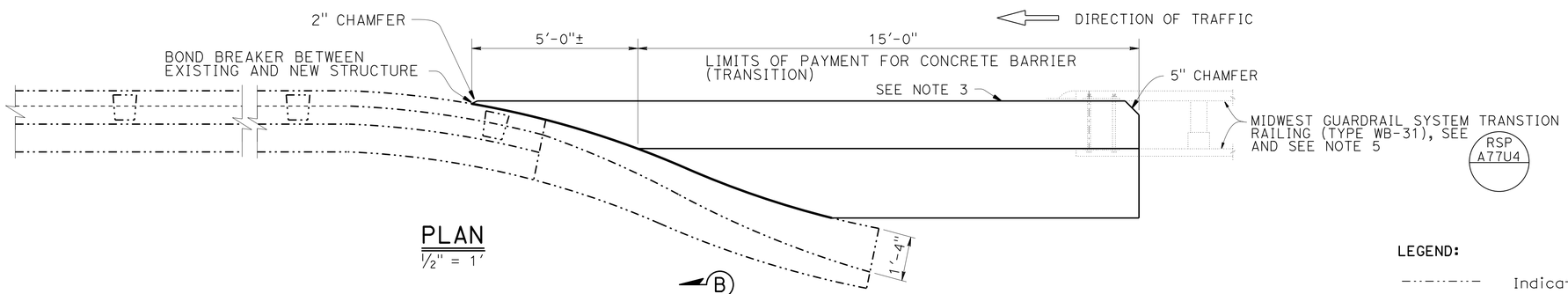

PLAN
1/2" = 1'

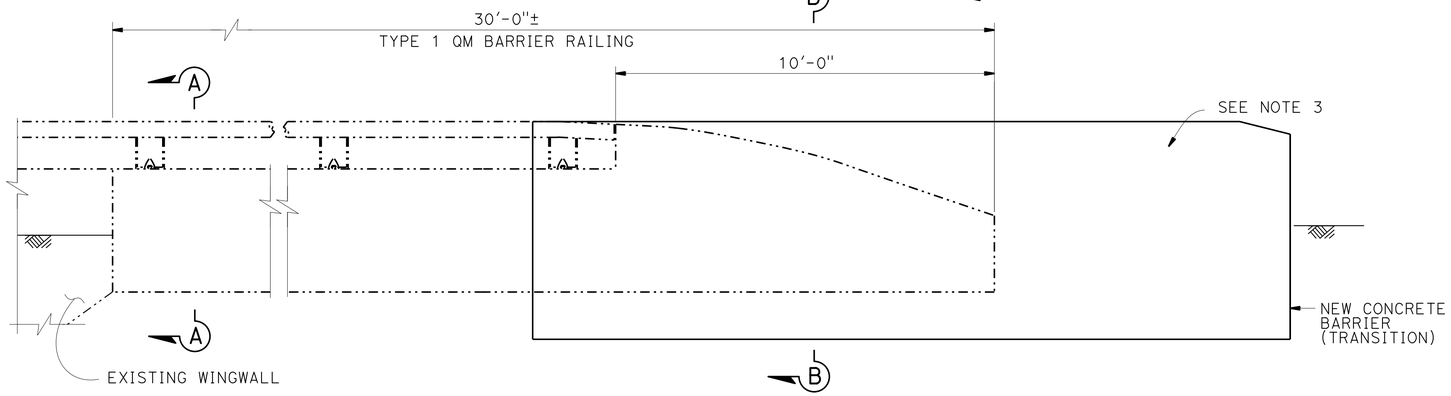

ELEVATION
1/2" = 1'

LEGEND:

Indicates existing

Indicates new structure

NOTES:

1. Exact location of concrete barrier transition must be determined by the Engineer.
2. All concrete end blocks have a 5" chamfer.
3. Paint bridge name and bridge number.
4. Drainage inlets at locations 12, 22 and 45 to be relocated, see "Roadway Plans".
5. For location 39, use Transition Railing Type (STB), see "Roadway Plans" and Standard Plan A78J.

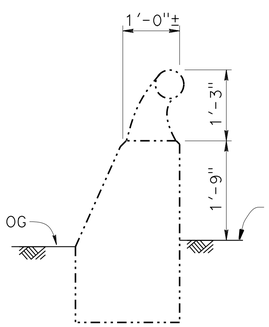

SECTION A-A
NO SCALE

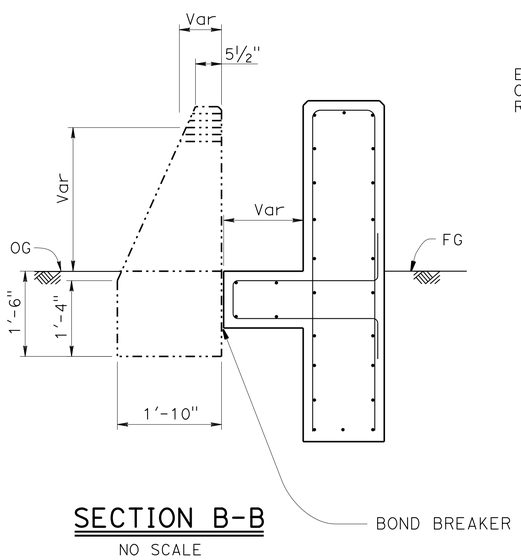

SECTION B-B
NO SCALE

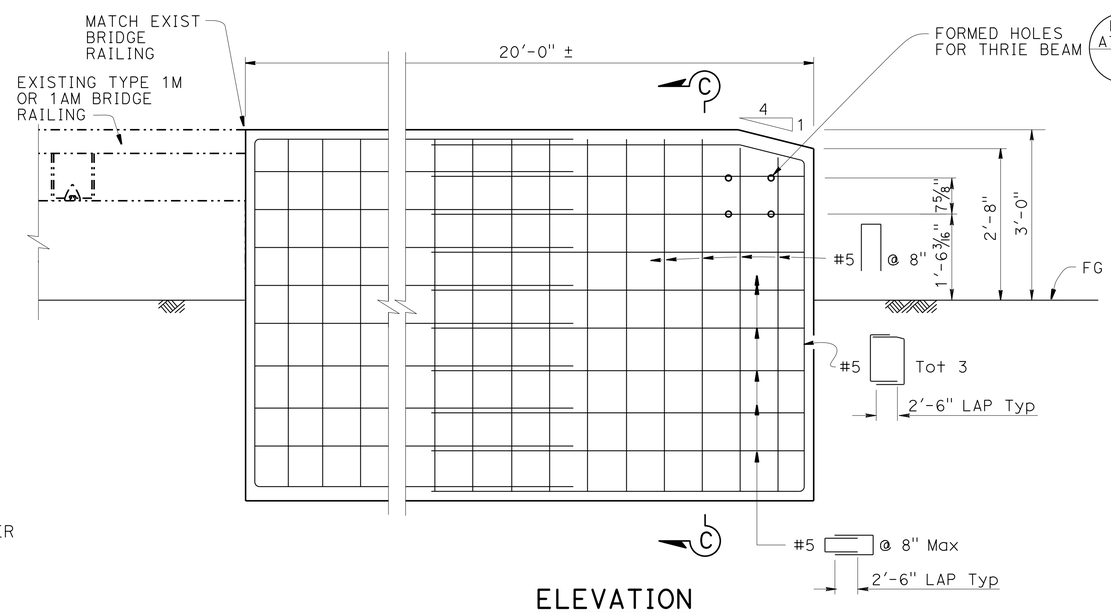

ELEVATION
3/4" = 1'

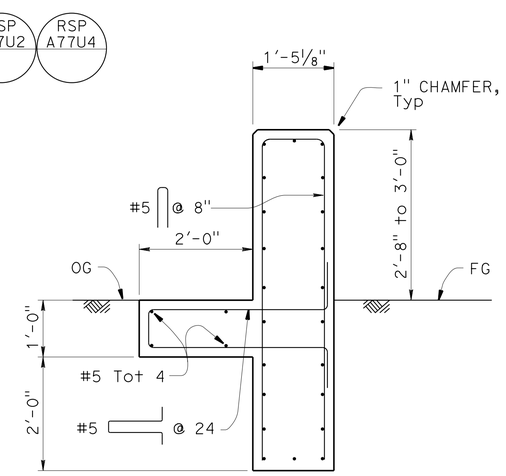

SECTION C-C
3/4" = 1'

THE CONTRACTOR MUST VERIFY ALL CONTROLLING FIELD DIMENSIONS BEFORE ORDERING OR FABRICATING ANY MATERIAL.

	BY	CHECKED
DESIGN	AIMAN MALAK	VICTOR LOPEZ
DETAILS	HUNG NGUYEN	AIMAN MALAK
QUANTITIES	AIMAN MALAK	MICHAEL CHARAK

BRANCH CHIEF DAVID NEUMANN

STATE OF CALIFORNIA
DEPARTMENT OF TRANSPORTATION

DIVISION OF ENGINEERING SERVICES
DESIGN AND TECHNICAL SERVICES
SPECIAL DESIGNS BRANCH B

BRIDGE NO. N/A
POST MILE N/A

CONCRETE BARRIER TRANSITIONS

LOCATIONS 5, 7, 8, 9, 10, 11, 12, 13, 14, 22 27, 31, 37, 39, 40, 42, 43 AND 45 DETAILS

STRUCTURES DESIGN DETAIL SHEET (ENGLISH) (REV. 09-01-10)

ORIGINAL SCALE IN INCHES FOR REDUCED PLANS 0 1 2 3

UNIT: x
PROJECT NUMBER & PHASE: 04000206151
CONTRACT NO.: 04-1G8301

DISREGARD PRINTS BEARING EARLIER REVISION DATES

REVISION DATES 10-24-14 10-24-14 2-2-15

SHEET 7 OF 18

FILE => 0400020615we007.dgn

USERNAME => s136183 DATE PLOTTED => 07-APR-2015 TIME PLOTTED => 16:23

DIST	COUNTY	ROUTE	POST MILES TOTAL PROJECT	SHEET No.	TOTAL SHEETS
04	SM	280	Var	82	92

REGISTERED CIVIL ENGINEER 2-2-15 DATE

2-2-15
PLANS APPROVAL DATE

REGISTERED PROFESSIONAL ENGINEER AIMAN MALAK No. C73369 Exp. 12-31-2016 CIVIL STATE OF CALIFORNIA

The State of California or its officers or agents shall not be responsible for the accuracy or completeness of scanned copies of this plan sheet.

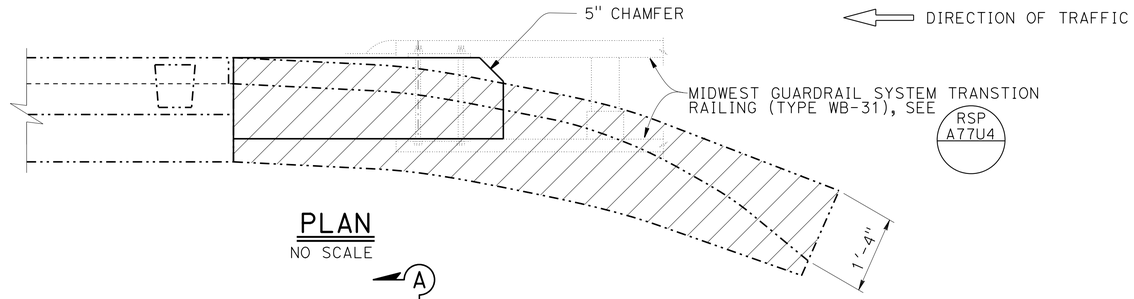

PLAN
NO SCALE

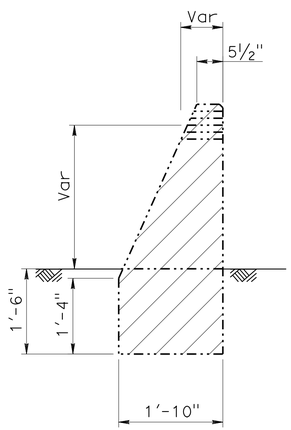

SECTION A-A
NO SCALE

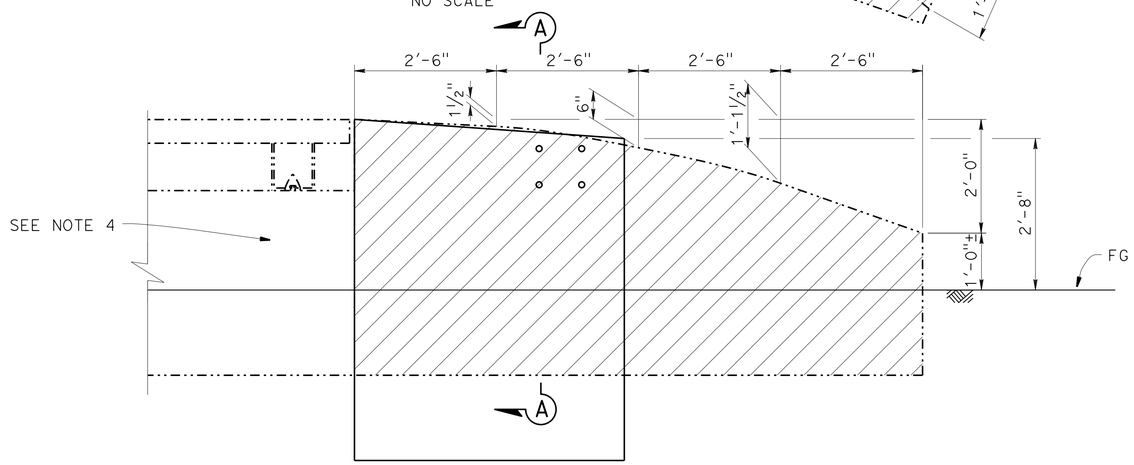

ELEVATION
NO SCALE

LEGEND:

Indicates existing

Indicates new structure

Indicates concrete removal

NOTES:

1. All concrete end blocks have a 5" chamfer.
2. Minimum edge distance for drill & bond #6 dowels is 4".
3. Paint bridge name and bridge number.
4. Exact location of concrete barrier transition must be determined by the Engineer.

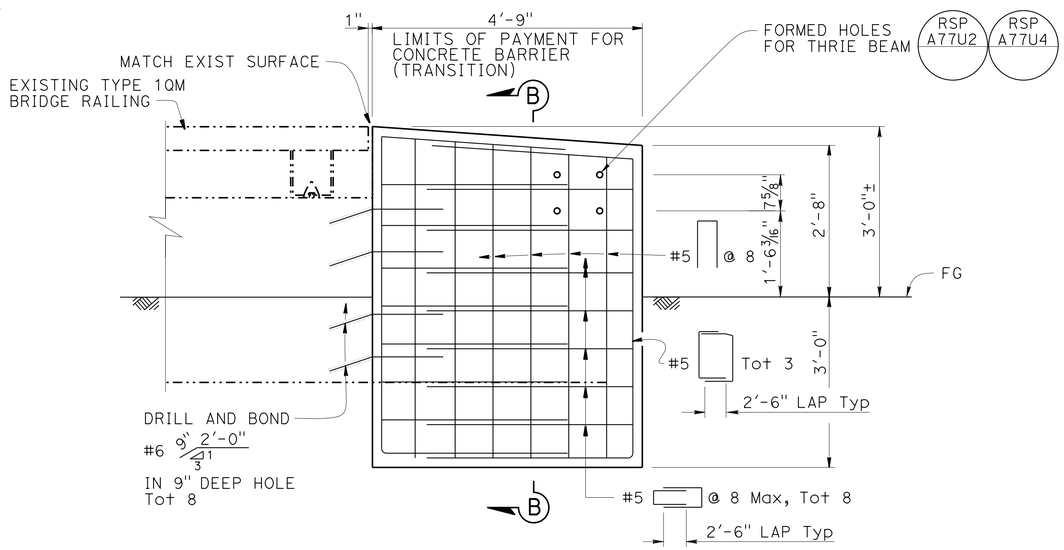

ELEVATION
NO SCALE

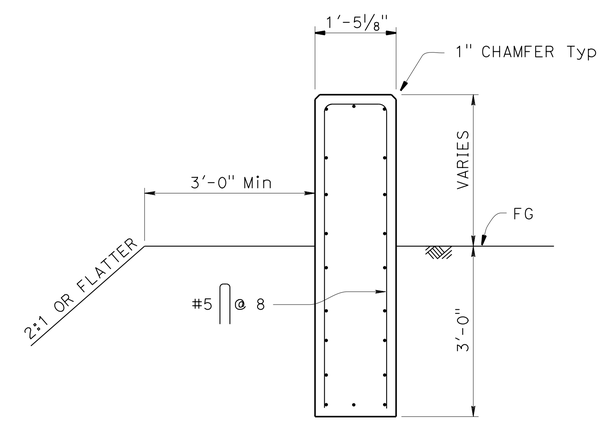

SECTION B-B
NO SCALE

THE CONTRACTOR MUST VERIFY ALL CONTROLLING FIELD DIMENSIONS BEFORE ORDERING OR FABRICATING ANY MATERIAL.

DESIGN	BY AIMAN MALAK	CHECKED VICTOR LOPEZ	
DETAILS	BY HUNG NGUYEN	CHECKED AIMAN MALAK	
QUANTITIES	BY AIMAN MALAK	CHECKED MICHAEL CHARAK	

BRANCH CHIEF DAVID NEUMANN

STATE OF CALIFORNIA
DEPARTMENT OF TRANSPORTATION

DIVISION OF ENGINEERING SERVICES
DESIGN AND TECHNICAL SERVICES
SPECIAL DESIGNS BRANCH B

BRIDGE NO. N/A
POST MILE N/A

CONCRETE BARRIER TRANSITIONS
LOCATIONS 6, 25 AND 26 DETAILS

STRUCTURES DESIGN DETAIL SHEET (ENGLISH) (REV. 09-01-10)

ORIGINAL SCALE IN INCHES FOR REDUCED PLANS 0 1 2 3

UNIT: X
PROJECT NUMBER & PHASE: 04000206151
CONTRACT NO.: 04-1G8301

DISREGARD PRINTS BEARING EARLIER REVISION DATES

REVISION DATES 9-10-14 10-28-14

SHEET 8 OF 18

FILE => 0400020615we008.dgn

USERNAME => s136183 DATE PLOTTED => 07-APR-2015 TIME PLOTTED => 16:23

DIST	COUNTY	ROUTE	POST MILES TOTAL PROJECT	SHEET No.	TOTAL SHEETS
04	SM	280	Var	83	92

REGISTERED CIVIL ENGINEER 2-2-15 DATE

2-2-15
PLANS APPROVAL DATE

REGISTERED PROFESSIONAL ENGINEER AIMAN MALAK No. C73369 Exp. 12-31-2016 CIVIL STATE OF CALIFORNIA

The State of California or its officers or agents shall not be responsible for the accuracy or completeness of scanned copies of this plan sheet.

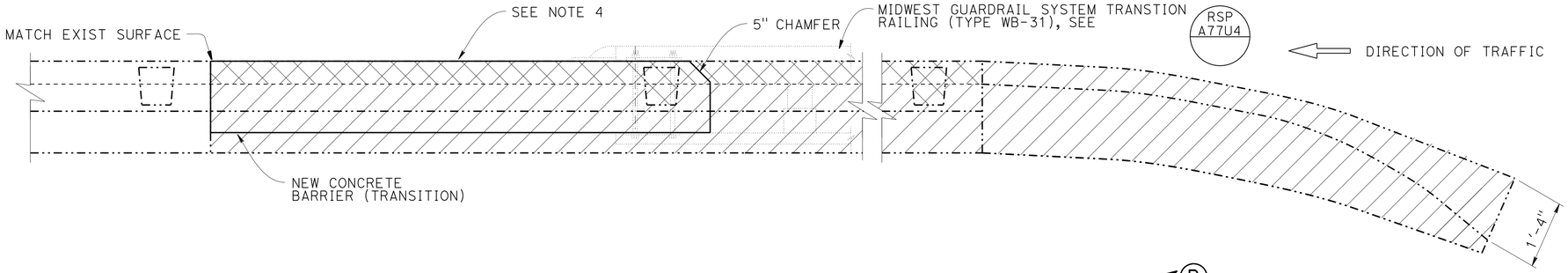

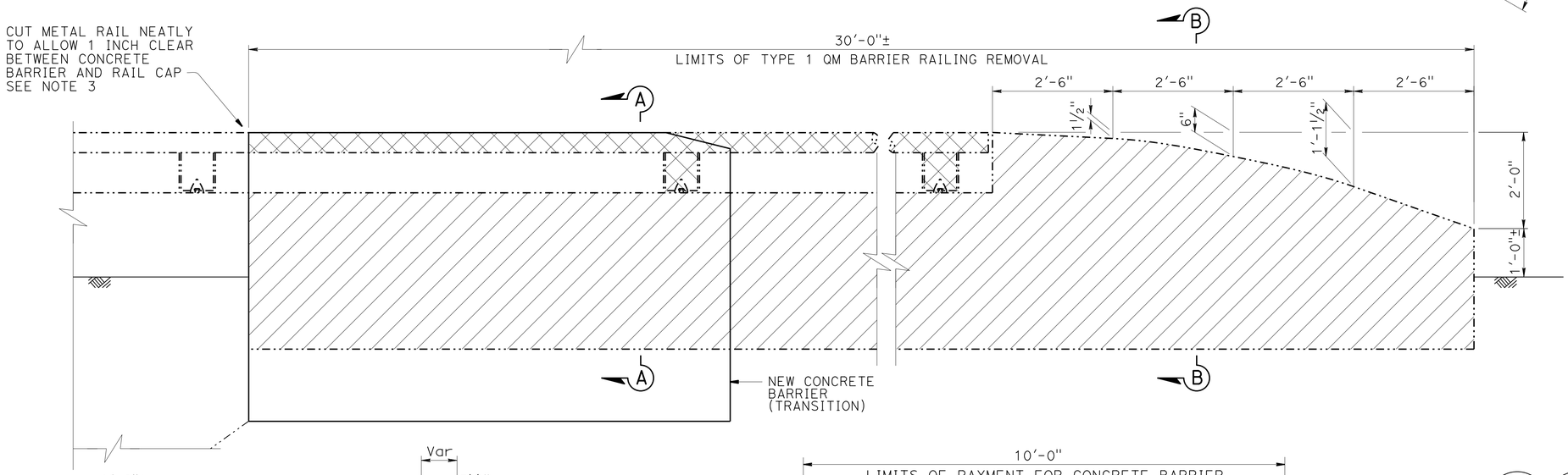

LEGEND:

- Indicates existing
- Indicates new structure
- Indicates concrete removal
- Indicates salvage metal rail

NOTES:

1. All concrete end blocks have a 5" chamfer.
2. Minimum edge distance for drill & bond #6 dowels is 4".
3. Remove rail cap from salvaged metal railing and install rail cap into end of remaining metal railing.
4. Paint bridge name and bridge number
5. Exact location of concrete barrier transition must be determined by the Engineer.

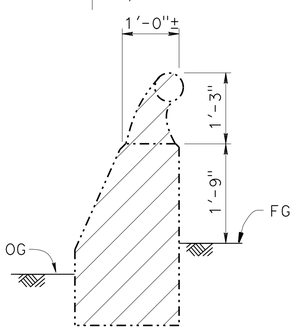

SECTION A-A

NO SCALE

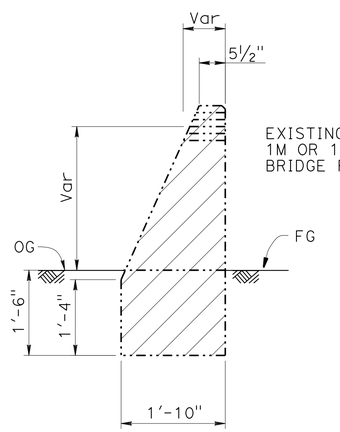

SECTION B-B

NO SCALE

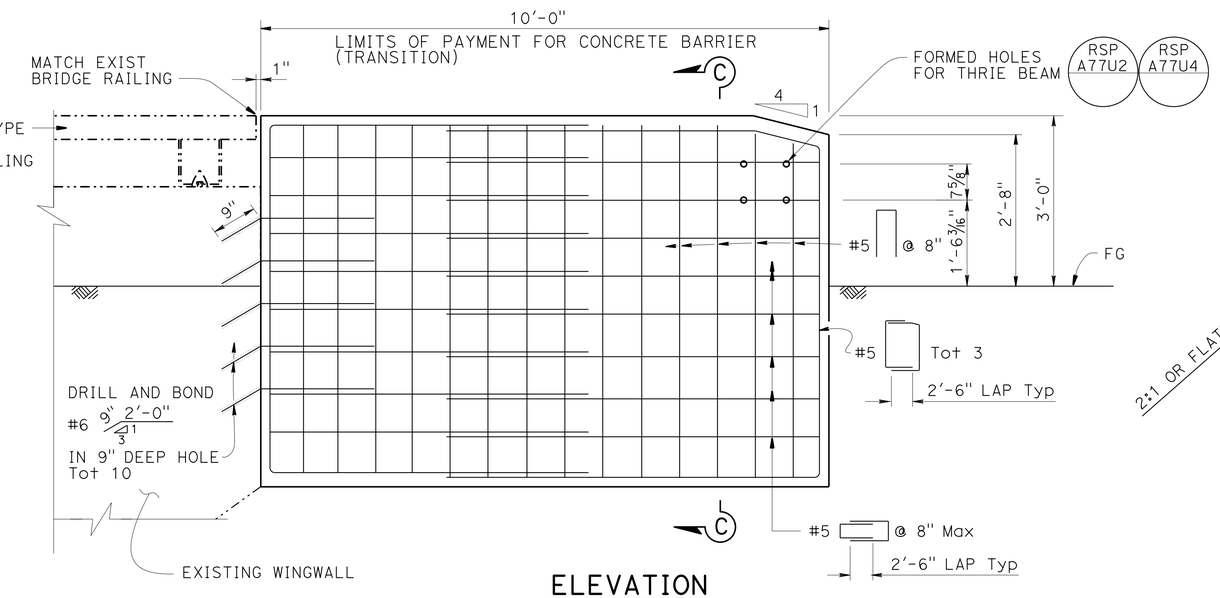

ELEVATION

NO SCALE

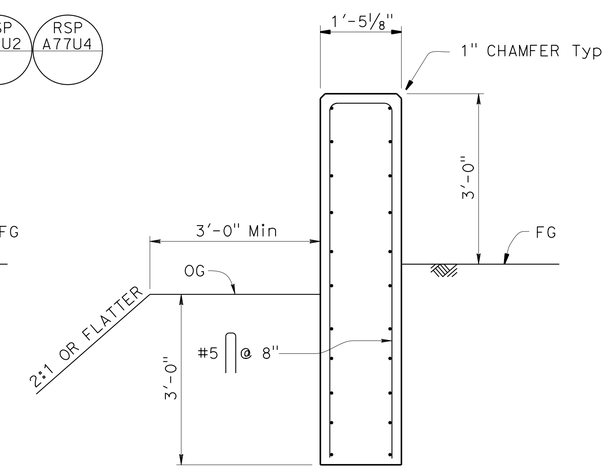

SECTION C-C

NO SCALE

THE CONTRACTOR MUST VERIFY ALL CONTROLLING FIELD DIMENSIONS BEFORE ORDERING OR FABRICATING ANY MATERIAL.

DESIGN	BY AIMAN MALAK	CHECKED VICTOR LOPEZ
DETAILS	BY HUNG NGUYEN	CHECKED AIMAN MALAK
QUANTITIES	BY AIMAN MALAK	CHECKED MICHAEL CHARAK

BRANCH CHIEF DAVID NEUMANN

STATE OF CALIFORNIA
DEPARTMENT OF TRANSPORTATION

DIVISION OF ENGINEERING SERVICES
DESIGN AND TECHNICAL SERVICES
SPECIAL DESIGNS BRANCH B

BRIDGE NO. N/A
POST MILE N/A

CONCRETE BARRIER TRANSITIONS
LOCATIONS 15 AND 34 DETAILS

STRUCTURES DESIGN DETAIL SHEET (ENGLISH) (REV. 09-01-10)

ORIGINAL SCALE IN INCHES FOR REDUCED PLANS 0 1 2 3

UNIT: X
PROJECT NUMBER & PHASE: 04000206151
CONTRACT NO.: 04-1G8301

DISREGARD PRINTS BEARING EARLIER REVISION DATES

REVISION DATES 8-18-14 10-28-14

SHEET 9 OF 18

FILE => 0400020615we009.dgn

USERNAME => s136183 DATE PLOTTED => 07-APR-2015 TIME PLOTTED => 16:23

DIST	COUNTY	ROUTE	POST MILES TOTAL PROJECT	SHEET No.	TOTAL SHEETS
04	SM	280	Var	84	92

REGISTERED CIVIL ENGINEER 2-2-15 DATE

2-2-15
PLANS APPROVAL DATE

REGISTERED PROFESSIONAL ENGINEER AIMAN MALAK No. C73369 Exp. 12-31-2016 CIVIL STATE OF CALIFORNIA

The State of California or its officers or agents shall not be responsible for the accuracy or completeness of scanned copies of this plan sheet.

NOTES:

1. All concrete end blocks have a 5" chamfer.
2. Match exist notch in exist concrete end block to clear exist grate opening.
3. Minimum edge distance for drill & bond #6 dowels is 4".
4. Exact location of concrete barrier transition must be determined by the Engineer.

LEGEND:

-·-·-·- Indicates existing

——— Indicates new structure

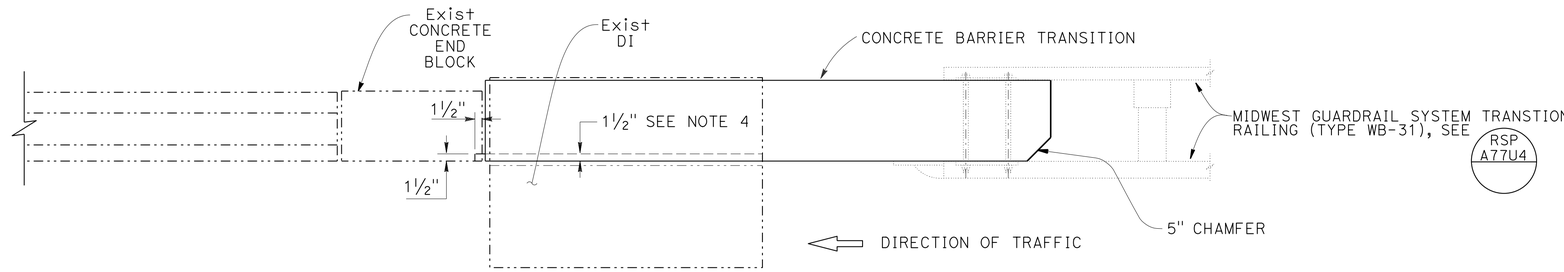

PLAN
NO SCALE

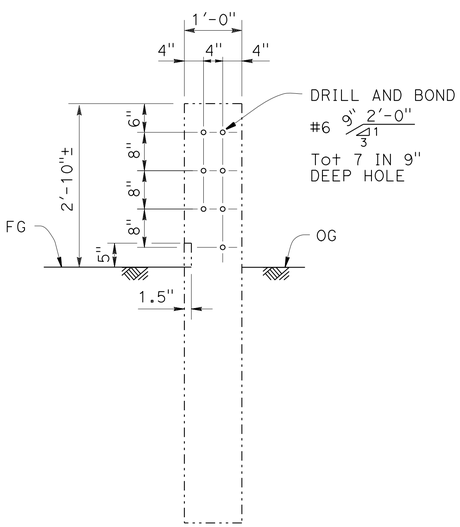

SECTION A-A
NO SCALE

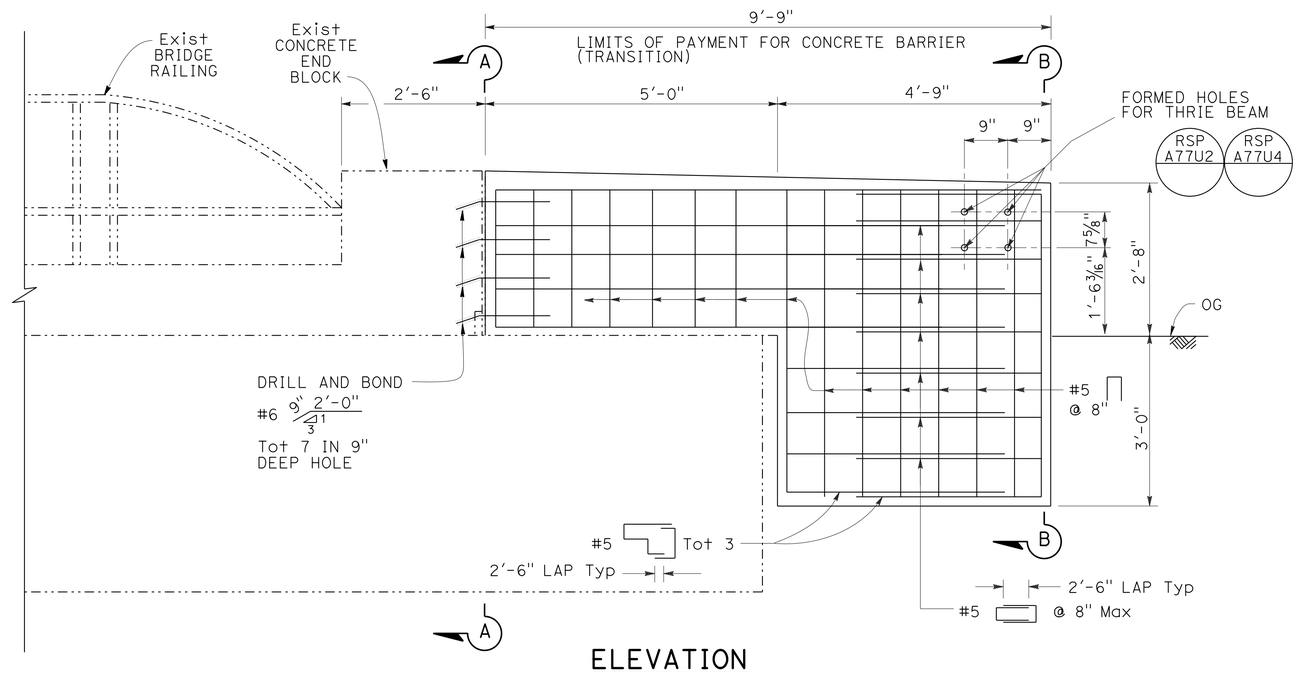

ELEVATION
NO SCALE

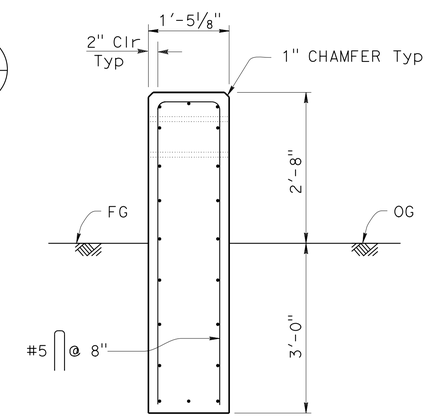

SECTION B-B
NO SCALE

THE CONTRACTOR MUST VERIFY ALL CONTROLLING FIELD DIMENSIONS BEFORE ORDERING OR FABRICATING ANY MATERIAL.

CONCRETE BARRIER TRANSITION
LOCATION 16

BRANCH CHIEF DAVID NEUMANN	DESIGN	BY AIMAN MALAK	CHECKED VICTOR LOPEZ
	DETAILS	BY MARTIN TOMAS	CHECKED AIMAN MALAK
	QUANTITIES	BY AIMAN MALAK	CHECKED MICHAEL CHARAK

STATE OF CALIFORNIA
DEPARTMENT OF TRANSPORTATION

DIVISION OF ENGINEERING SERVICES
DESIGN AND TECHNICAL SERVICES
SPECIAL DESIGNS BRANCH B

BRIDGE NO. N/A
POST MILE N/A

CONCRETE BARRIER TRANSITIONS
LOCATION 16 DETAILS

(ENGLISH) SPECIAL DESIGNS BRANCH BORDER SHEET (REV. 7-1-09)

ORIGINAL SCALE IN INCHES FOR REDUCED PLANS 0 1 2 3

UNIT: 3619
PROJECT NUMBER & PHASE: 04000206151 CONTRACT NO.: 04-1G8301

DISREGARD PRINTS BEARING EARLIER REVISION DATES

REVISION DATES 10-29-15

SHEET 10 OF 18

FILE => 0400020615we010.dgn

USERNAME => s136183 DATE PLOTTED => 07-APR-2015 TIME PLOTTED => 16:23

DIST	COUNTY	ROUTE	POST MILES TOTAL PROJECT	SHEET No.	TOTAL SHEETS
04	SM	280	Var	85	92

REGISTERED CIVIL ENGINEER — DATE 2-2-15

PLANS APPROVAL DATE 2-2-15

REGISTERED PROFESSIONAL ENGINEER — AIMAN MALAK — No. C73369 — Exp. 12-31-2016 — CIVIL — STATE OF CALIFORNIA

The State of California or its officers or agents shall not be responsible for the accuracy or completeness of scanned copies of this plan sheet.

NOTES:

1. Galvanize all plates and bolts.
2. For relocate pull box at location 17 & 18 information, see "Electrical Plans".
3. Coordinate with the engineer before work to relocate pull box.
4. All concrete end blocks have a 5" chamfer.
5. Minimum edge distance for drill & bond #6 is 4".
6. Exact location of concrete barrier transition must be determined by the Engineer.

LEGEND:

- Indicates existing
- Indicates new structure
- Indicates salvage BAGR
- Indicates concrete removal

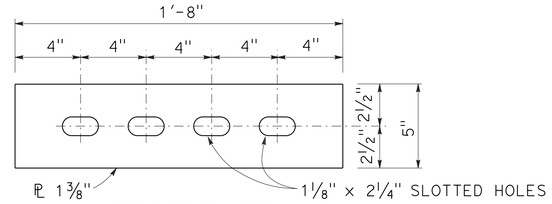

SPLICE PLATE

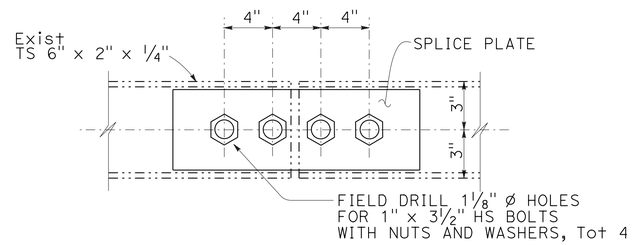

MODIFIED TUBE

RAIL SPLICE DETAIL

SEE NOTE 4

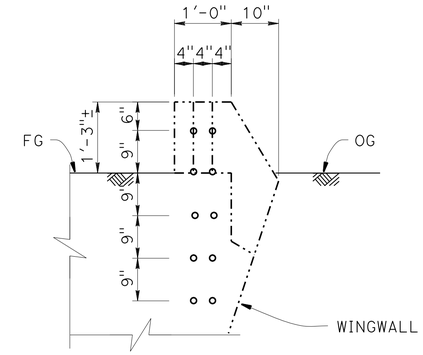

SECTION B-B

NO SCALE

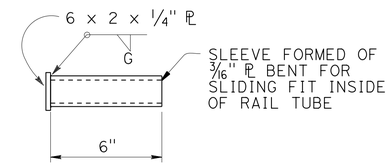

RAIL CAP DETAIL

Note: Contractor may submit alternative detail for approval

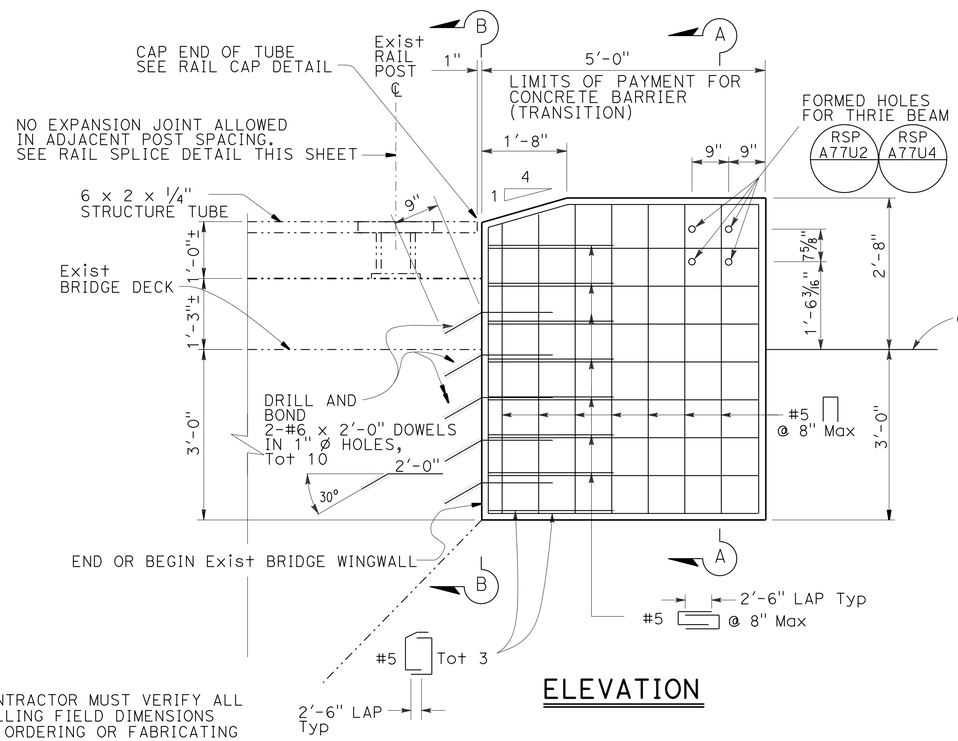

ELEVATION

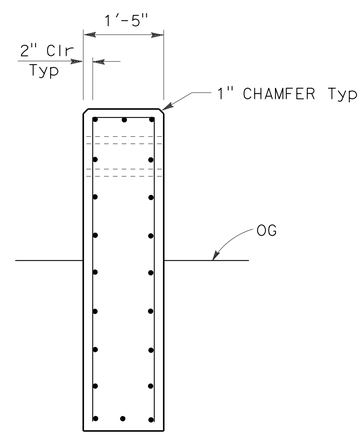

SECTION A-A

NO SCALE

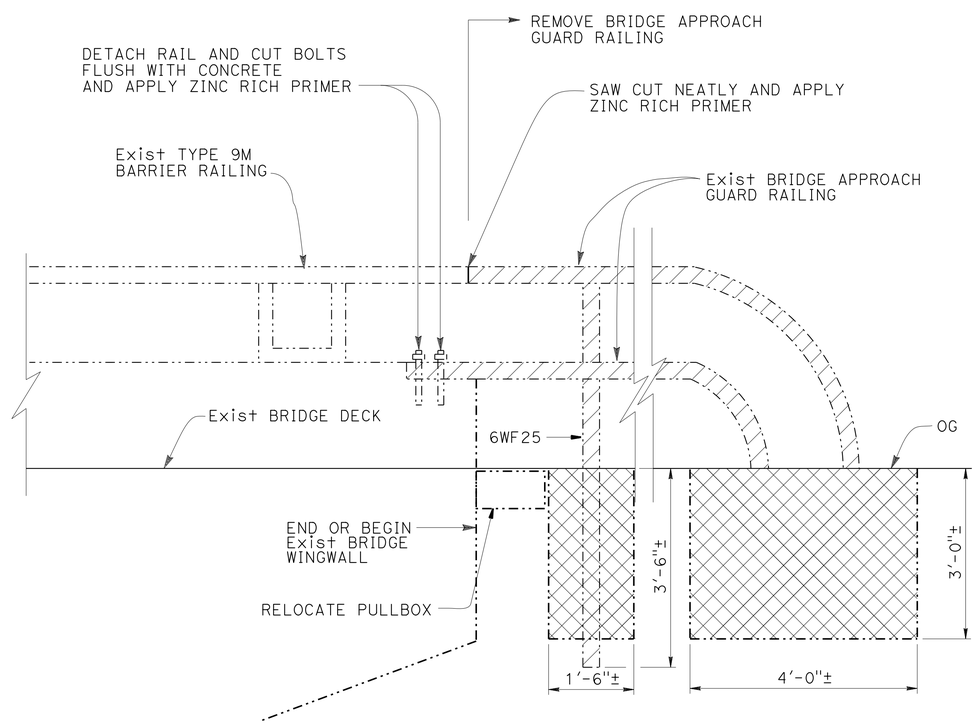

REMOVE BRIDGE APPROACH GUARD RAILING DETAIL

THE CONTRACTOR MUST VERIFY ALL CONTROLLING FIELD DIMENSIONS BEFORE ORDERING OR FABRICATING ANY MATERIAL.

DESIGN	BY AIMAN MALAK	CHECKED VICTOR LOPEZ	
DETAILS	BY HUNG NGUYEN	CHECKED AIMAN MALAK	
QUANTITIES	BY AIMAN MALAK	CHECKED MICHAEL CHARAK	

BRANCH CHIEF DAVID NEUMANN

STATE OF CALIFORNIA
DEPARTMENT OF TRANSPORTATION

DIVISION OF ENGINEERING SERVICES
DESIGN AND TECHNICAL SERVICES
SPECIAL DESIGNS BRANCH B

BRIDGE NO. N/A
POST MILE N/A

CONCRETE BARRIER TRANSITIONS
LOCATIONS 17 AND 18 DETAILS

STRUCTURES DESIGN DETAIL SHEET (ENGLISH) (REV. 09-01-10)

ORIGINAL SCALE IN INCHES FOR REDUCED PLANS 0 1 2 3

UNIT: X
PROJECT NUMBER & PHASE: 04000206151
CONTRACT NO.: 04-1G8301

DISREGARD PRINTS BEARING EARLIER REVISION DATES

REVISION DATES 9-22-14 9-28-14

SHEET 11 OF 18

FILE => 0400020615we011.dgn

USERNAME => s136183 DATE PLOTTED => 07-APR-2015 TIME PLOTTED => 16:23

DIST	COUNTY	ROUTE	POST MILES TOTAL PROJECT	SHEET No.	TOTAL SHEETS
04	SM	280	Var	86	92

REGISTERED CIVIL ENGINEER 2-2-15 DATE

2-2-15
PLANS APPROVAL DATE

REGISTERED PROFESSIONAL ENGINEER AIMAN MALAK No. C73369 Exp. 12-31-2016 CIVIL STATE OF CALIFORNIA

The State of California or its officers or agents shall not be responsible for the accuracy or completeness of scanned copies of this plan sheet.

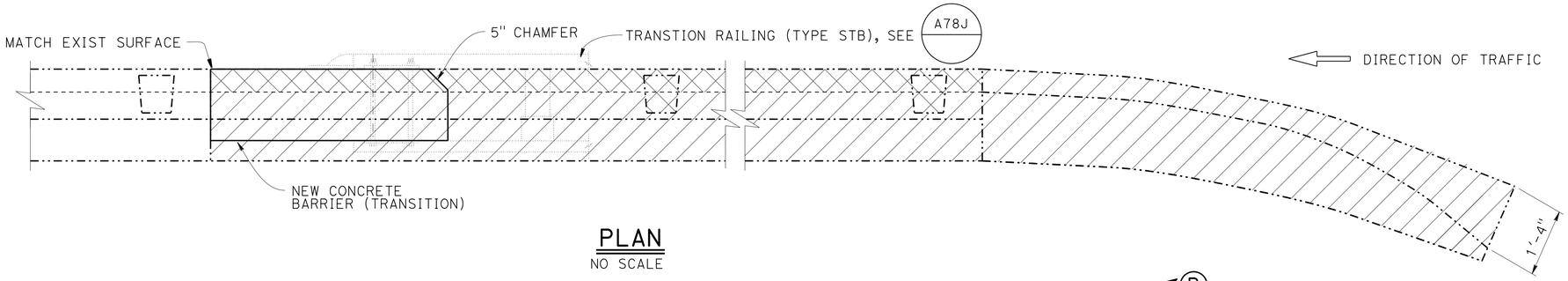

PLAN
NO SCALE

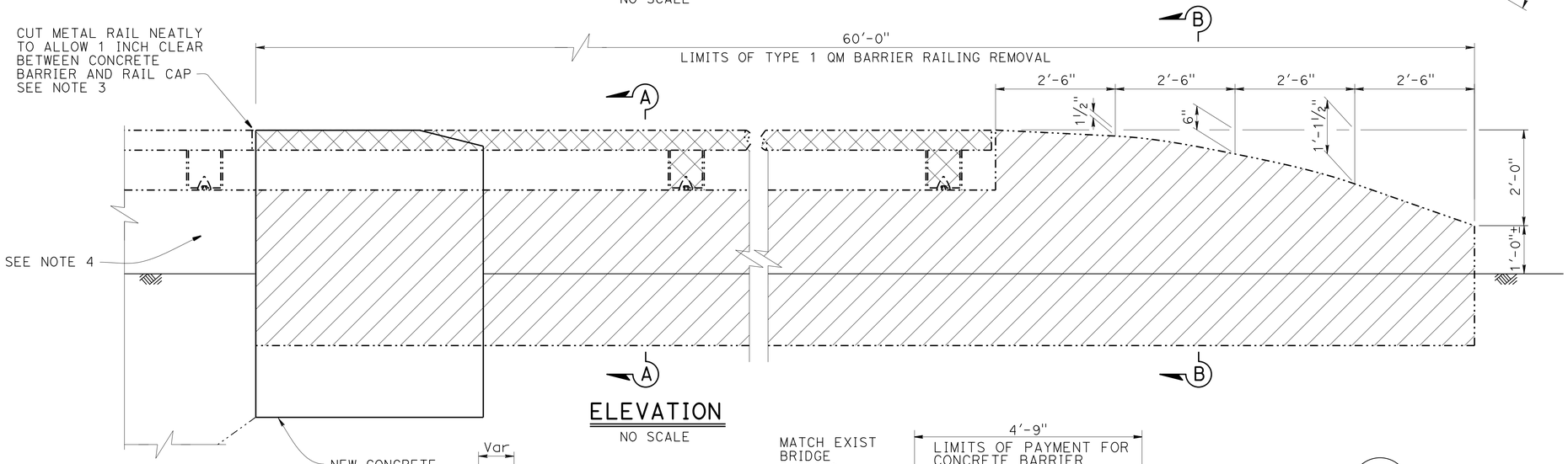

ELEVATION
NO SCALE

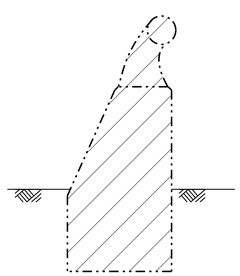

SECTION A-A
NO SCALE

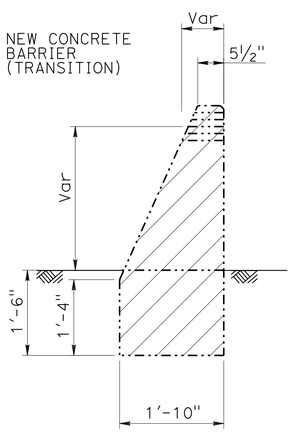

SECTION B-B
NO SCALE

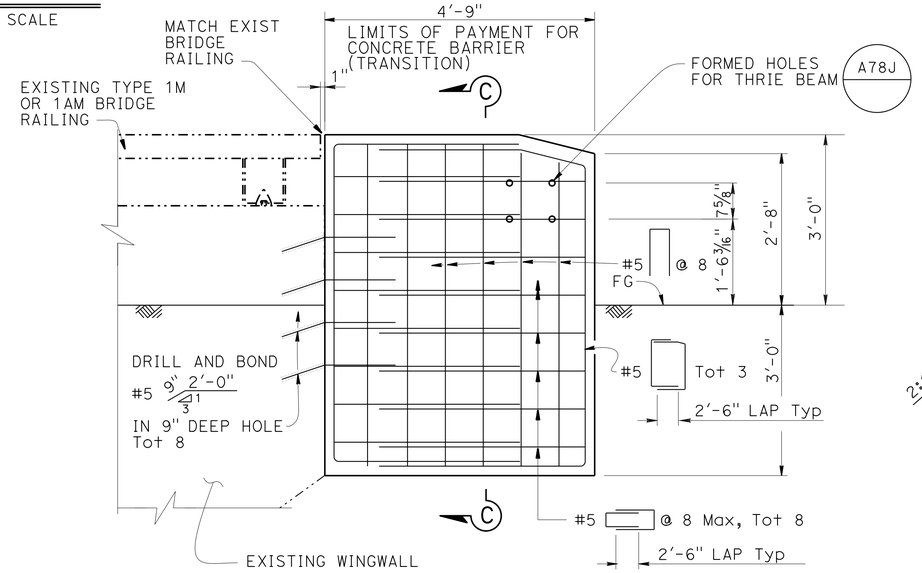

ELEVATION
NO SCALE

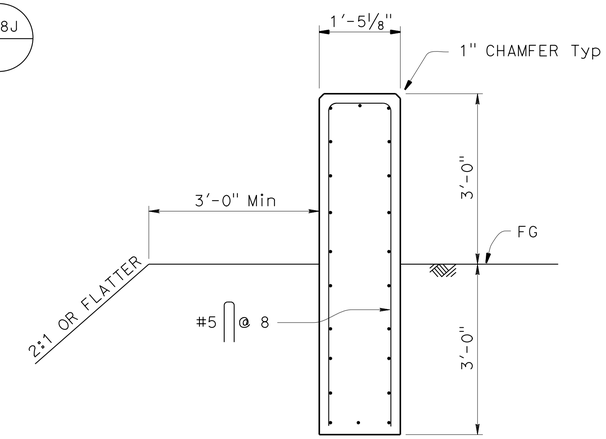

SECTION C-C
NO SCALE

LEGEND:

- Indicates existing
- Indicates new structure
- Indicates concrete removal
- Indicates salvage metal rail

NOTES:

1. All concrete end blocks have a 5" chamfer.
2. Minimum edge distance for drill & bond #6 dowels is 4".
3. Remove rail cap from salvaged metal railing and install rail cap into end of remaining metal railing.
4. Paint bridge name and bridge number
5. Exact location of concrete barrier transition must be determined by the Engineer.

THE CONTRACTOR MUST VERIFY ALL CONTROLLING FIELD DIMENSIONS BEFORE ORDERING OR FABRICATING ANY MATERIAL.

DESIGN	BY AIMAN MALAK	CHECKED VICTOR LOPEZ	
DETAILS	BY HUNG NGUYEN	CHECKED AIMAN MALAK	
QUANTITIES	BY AIMAN MALAK	CHECKED MICHAEL CHARAK	

BRANCH CHIEF DAVID NEUMANN

STATE OF CALIFORNIA
DEPARTMENT OF TRANSPORTATION

DIVISION OF ENGINEERING SERVICES
DESIGN AND TECHNICAL SERVICES
SPECIAL DESIGNS BRANCH B

BRIDGE NO. N/A
POST MILE N/A

CONCRETE BARRIER TRANSITIONS
LOCATIONS 19, 20, 23 AND 24 DETAILS

STRUCTURES DESIGN DETAIL SHEET (ENGLISH) (REV. 09-01-10)

ORIGINAL SCALE IN INCHES FOR REDUCED PLANS 0 1 2 3

UNIT: X
PROJECT NUMBER & PHASE: 04000206151
CONTRACT NO.: 04-1G8301

DISREGARD PRINTS BEARING EARLIER REVISION DATES

REVISION DATES 8-15-14 10-23-14 2-2-15

SHEET 12 OF 18

FILE => 0400020615we012.dgn

USERNAME => s136183 DATE PLOTTED => 07-APR-2015 TIME PLOTTED => 16:23

DIST	COUNTY	ROUTE	POST MILES TOTAL PROJECT	SHEET No.	TOTAL SHEETS
04	SM	280	Var	87	92

REGISTERED CIVIL ENGINEER 2-2-15 DATE

2-2-15
PLANS APPROVAL DATE

REGISTERED PROFESSIONAL ENGINEER AIMAN MALAK No. C73369 Exp. 12-31-2016 CIVIL STATE OF CALIFORNIA

The State of California or its officers or agents shall not be responsible for the accuracy or completeness of scanned copies of this plan sheet.

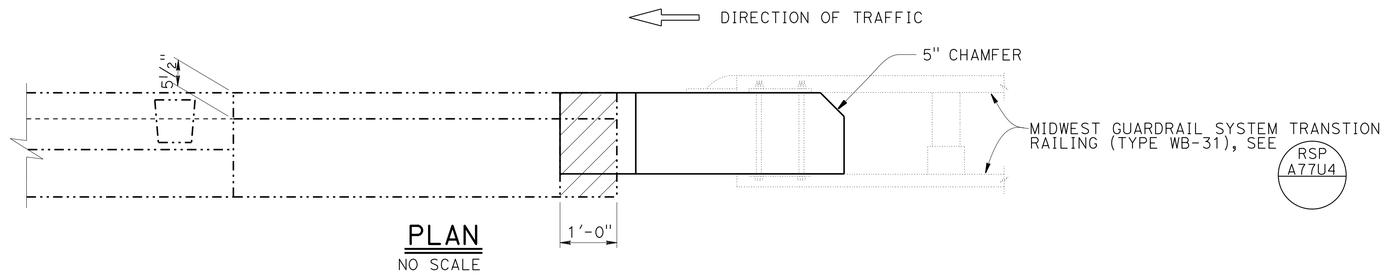

PLAN
NO SCALE

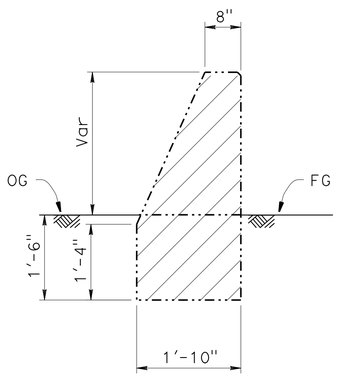

SECTION A-A
NO SCALE

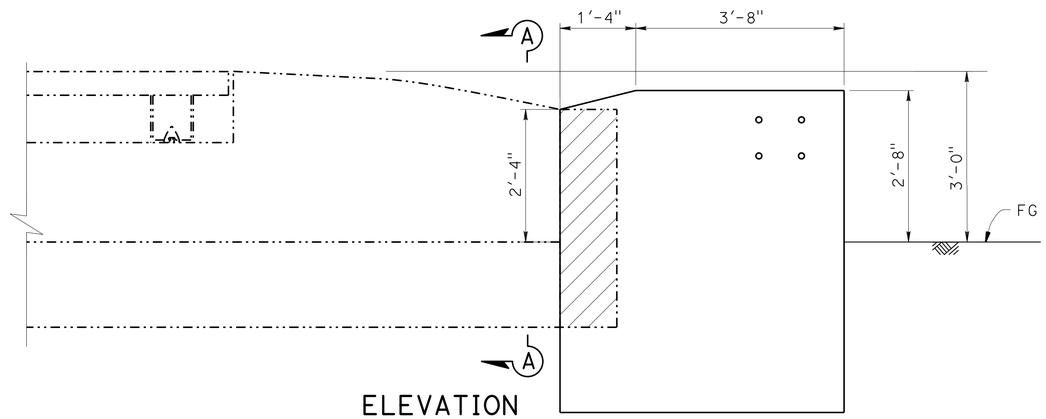

ELEVATION
NO SCALE

LEGEND:

- Indicates existing
- Indicates new structure
- Indicates concrete removal

NOTES:

1. All concrete end blocks have a 5" chamfer.
2. Minimum edge distance for drill & bond #6 dowels is 4".
3. Exact location of concrete barrier transition must be determined by the Engineer.

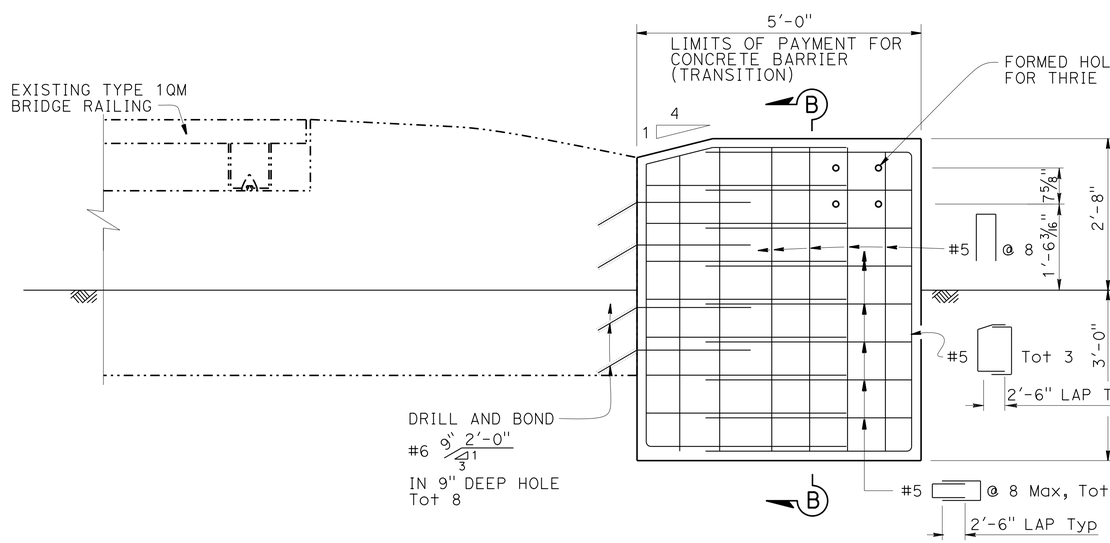

ELEVATION
NO SCALE

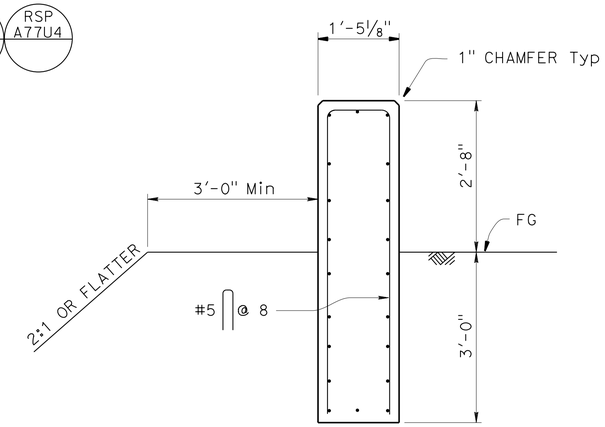

SECTION B-B
NO SCALE

THE CONTRACTOR MUST VERIFY ALL CONTROLLING FIELD DIMENSIONS BEFORE ORDERING OR FABRICATING ANY MATERIAL.

BRANCH CHIEF DAVID NEUMANN

	BY	CHECKED
DESIGN	AIMAN MALAK	VICTOR LOPEZ
DETAILS	HUNG NGUYEN	AIMAN MALAK
QUANTITIES	AIMAN MALAK	MICHAEL CHARAK

STATE OF CALIFORNIA
DEPARTMENT OF TRANSPORTATION

DIVISION OF ENGINEERING SERVICES
DESIGN AND TECHNICAL SERVICES
SPECIAL DESIGNS BRANCH B

BRIDGE NO. N/A
POST MILE N/A

CONCRETE BARRIER TRANSITIONS
LOCATION 21 DETAILS

STRUCTURES DESIGN DETAIL SHEET (ENGLISH) (REV. 09-01-10)

ORIGINAL SCALE IN INCHES FOR REDUCED PLANS 0 1 2 3

UNIT: X
PROJECT NUMBER & PHASE: 04000206151
CONTRACT NO.: 04-1G8301

DISREGARD PRINTS BEARING EARLIER REVISION DATES

REVISION DATES 9-29-14 10-28-14

SHEET 13 OF 18

FILE => 0400020615we013.dgn

USERNAME => s136183 DATE PLOTTED => 07-APR-2015 TIME PLOTTED => 16:23

DIST	COUNTY	ROUTE	POST MILES TOTAL PROJECT	SHEET No.	TOTAL SHEETS
04	SM	280	Var	88	92

REGISTERED CIVIL ENGINEER 2-2-15 DATE

2-2-15
PLANS APPROVAL DATE

REGISTERED PROFESSIONAL ENGINEER AIMAN MALAK No. C73369 Exp. 12-31-2016 CIVIL STATE OF CALIFORNIA

The State of California or its officers or agents shall not be responsible for the accuracy or completeness of scanned copies of this plan sheet.

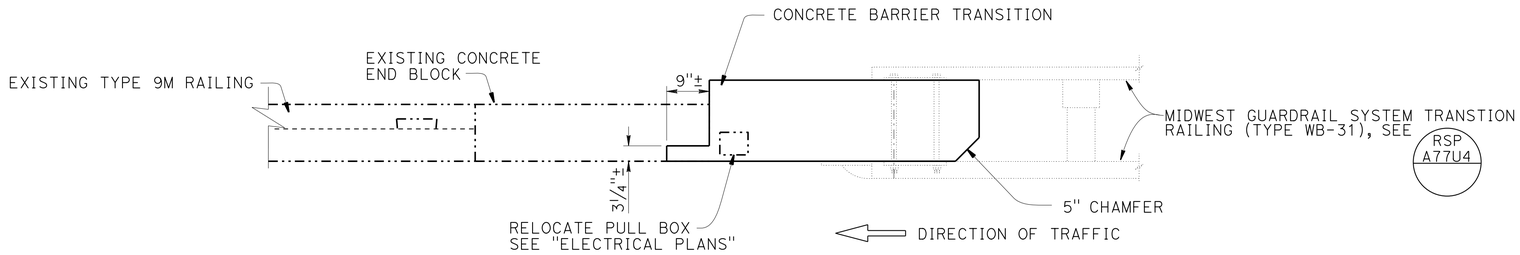

PLAN
NO SCALE

NOTES:

1. All concrete end blocks have a 5" chamfer.
2. Minimum edge distance for drill & bond #6 dowels is 4".
3. Exact location of concrete barrier transition must be determined by the Engineer.

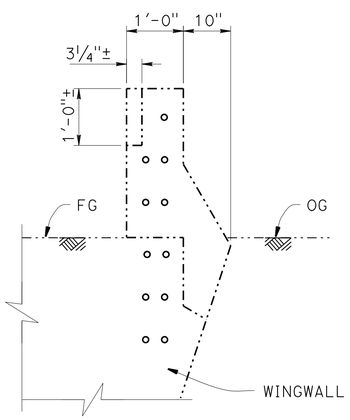

SECTION B-B
NO SCALE

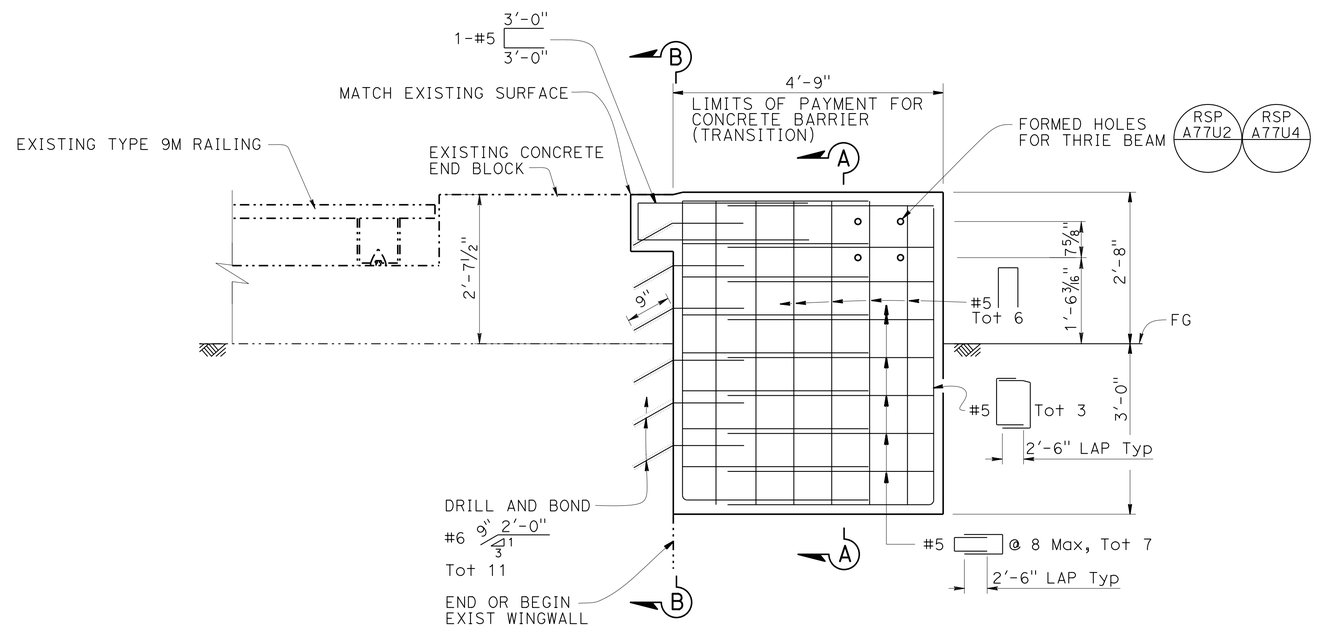

ELEVATION
NO SCALE

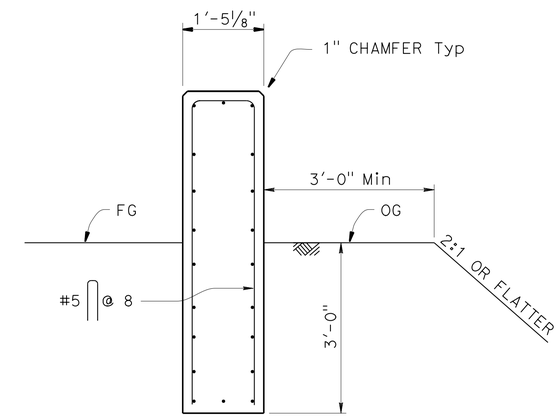

SECTION A-A
NO SCALE

LEGEND:

-·-·-·- Indicates existing

——— Indicates new structure

THE CONTRACTOR MUST VERIFY ALL CONTROLLING FIELD DIMENSIONS BEFORE ORDERING OR FABRICATING ANY MATERIAL.

BRANCH CHIEF DAVID NEUMANN

	BY	CHECKED
DESIGN	AIMAN MALAK	VICTOR LOPEZ
DETAILS	HUNG NGUYEN	AIMAN MALAK
QUANTITIES	AIMAN MALAK	MICHAEL CHARAK

STATE OF CALIFORNIA
DEPARTMENT OF TRANSPORTATION

DIVISION OF ENGINEERING SERVICES
DESIGN AND TECHNICAL SERVICES
SPECIAL DESIGNS BRANCH B

BRIDGE NO. N/A
POST MILE N/A

CONCRETE BARRIER TRANSITIONS
LOCATIONS 28 AND 29 DETAILS

STRUCTURES DESIGN DETAIL SHEET (ENGLISH) (REV. 09-01-10)

ORIGINAL SCALE IN INCHES FOR REDUCED PLANS 0 1 2 3

UNIT: X
PROJECT NUMBER & PHASE: 04000206151
CONTRACT NO.: 04-1G8301

DISREGARD PRINTS BEARING EARLIER REVISION DATES

REVISION DATES 9-22-14 10-28-14

SHEET 14 OF 18

FILE => 0400020615we014.dgn

USERNAME => s136283 DATE PLOTTED => 07-APR-2015 TIME PLOTTED => 16:23

DIST	COUNTY	ROUTE	POST MILES TOTAL PROJECT	SHEET No.	TOTAL SHEETS
04	SM	280	Var	89	92

REGISTERED CIVIL ENGINEER 2-2-15 DATE

2-2-15
PLANS APPROVAL DATE

REGISTERED PROFESSIONAL ENGINEER AIMAN MALAK No. C73369 Exp. 12-31-2016 CIVIL STATE OF CALIFORNIA

The State of California or its officers or agents shall not be responsible for the accuracy or completeness of scanned copies of this plan sheet.

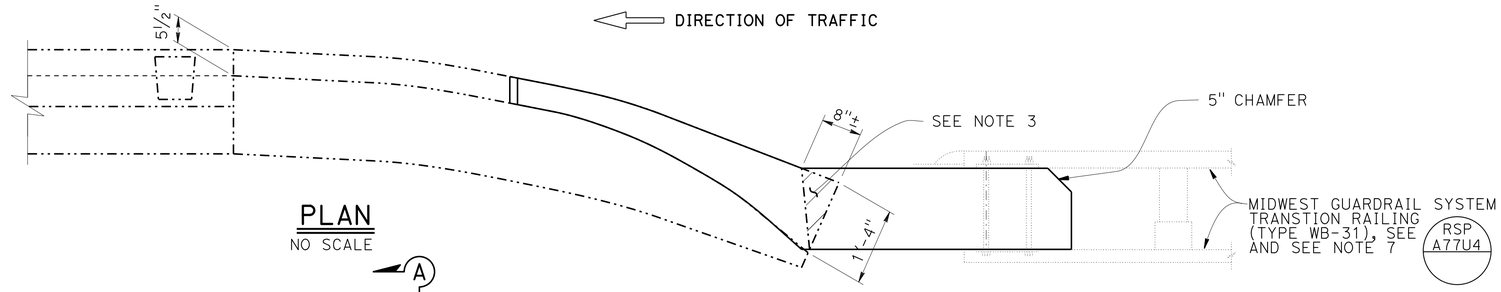

PLAN
NO SCALE

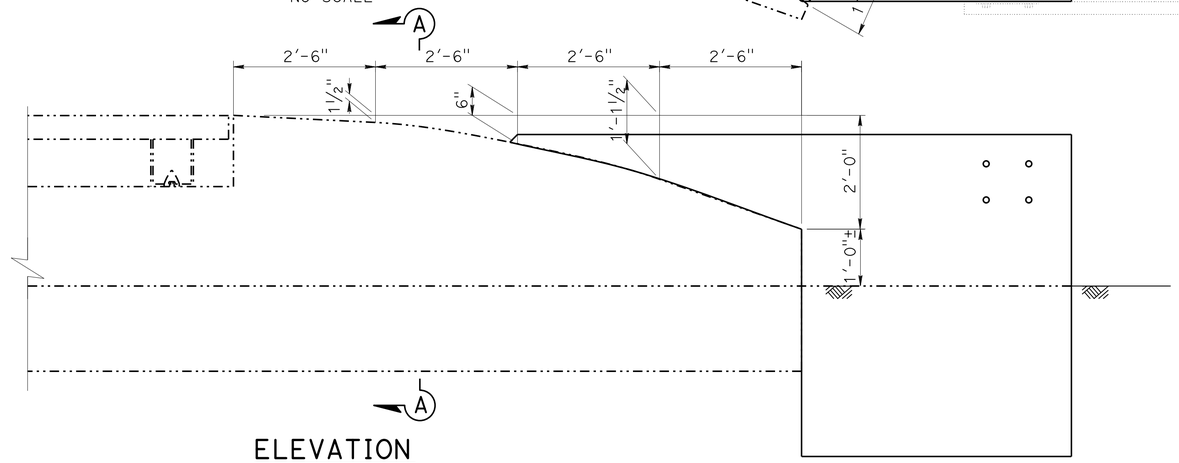

ELEVATION
NO SCALE

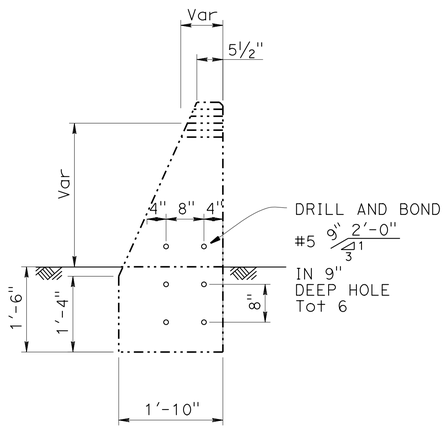

SECTION A-A
NO SCALE

LEGEND:

- Indicates existing
- Indicates new structure
- Indicates concrete removal

NOTES:

1. All concrete end blocks have a 5" chamfer.
2. Minimum edge distance for drill & bond #6 dowels is 4".
3. Existing reinforcement to stay intact.
4. Exact location of concrete barrier transition must be determined by the Engineer.
5. Protect 2 drainage inlets at location 35.
6. Drainage inlet at location 36 to be relocated, see "Roadway Plans".
7. For location 36 and 44, use Transition Railing Type STB, see "Roadway Plans" and Standard Plan A78J.

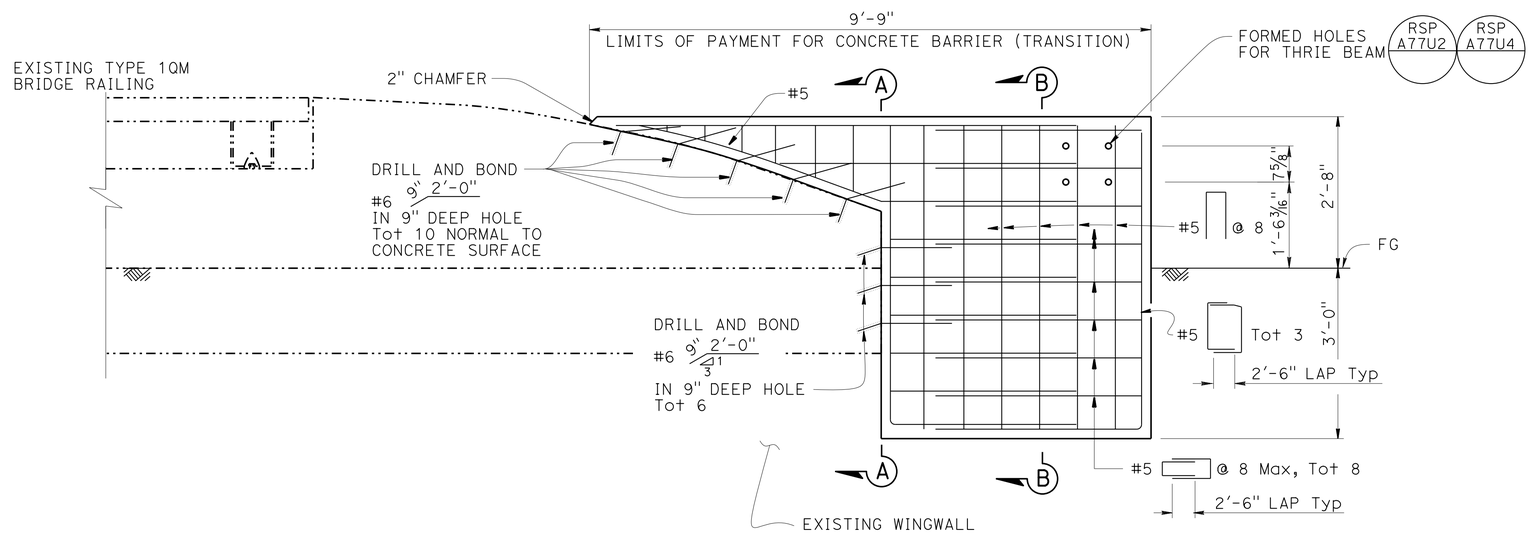

ELEVATION
NO SCALE

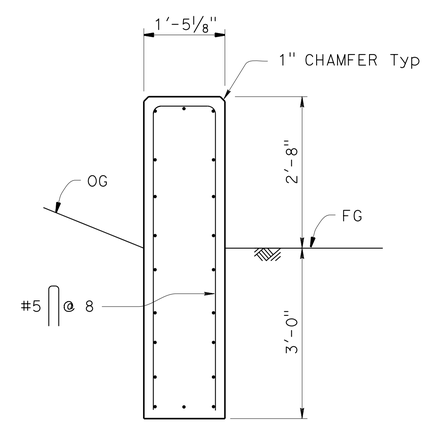

SECTION B-B
NO SCALE

THE CONTRACTOR SHALL VERIFY ALL CONTROLLING FIELD DIMENSIONS BEFORE ORDERING OR FABRICATING ANY MATERIAL.

DESIGN	BY AIMAN MALAK	CHECKED VICTOR LOPEZ	
DETAILS	BY HUNG NGUYEN	CHECKED AIMAN MALAK	
QUANTITIES	BY AIMAN MALAK	CHECKED MICHAEL CHARAK	

BRANCH CHIEF DAVID NEUMANN

STATE OF **CALIFORNIA** DEPARTMENT OF TRANSPORTATION

DIVISION OF ENGINEERING SERVICES DESIGN AND TECHNICAL SERVICES **SPECIAL DESIGNS BRANCH B**

BRIDGE NO. N/A
POST MILE N/A

CONCRETE BARRIER TRANSITIONS
LOCATIONS 30, 35, 36, 41, 44 AND 46 DETAILS

STRUCTURES DESIGN DETAIL SHEET (ENGLISH) (REV. 09-01-10)

ORIGINAL SCALE IN INCHES FOR REDUCED PLANS 0 1 2 3

UNIT: X
PROJECT NUMBER & PHASE: 04000206151
CONTRACT NO.: 04-1G8301

DISREGARD PRINTS BEARING EARLIER REVISION DATES

REVISION DATES 8-1-14 10-23-14 2-2-15

SHEET 15 OF 18

FILE => 0400020615we015.dgn

USERNAME => s136183 DATE PLOTTED => 07-APR-2015 TIME PLOTTED => 16:23

DIST	COUNTY	ROUTE	POST MILES TOTAL PROJECT	SHEET No.	TOTAL SHEETS
04	SM	280	Var	90	92

REGISTERED CIVIL ENGINEER 2-2-15 DATE

2-2-15
PLANS APPROVAL DATE

REGISTERED PROFESSIONAL ENGINEER AIMAN MALAK No. C73369 Exp. 12-31-2016 CIVIL STATE OF CALIFORNIA

The State of California or its officers or agents shall not be responsible for the accuracy or completeness of scanned copies of this plan sheet.

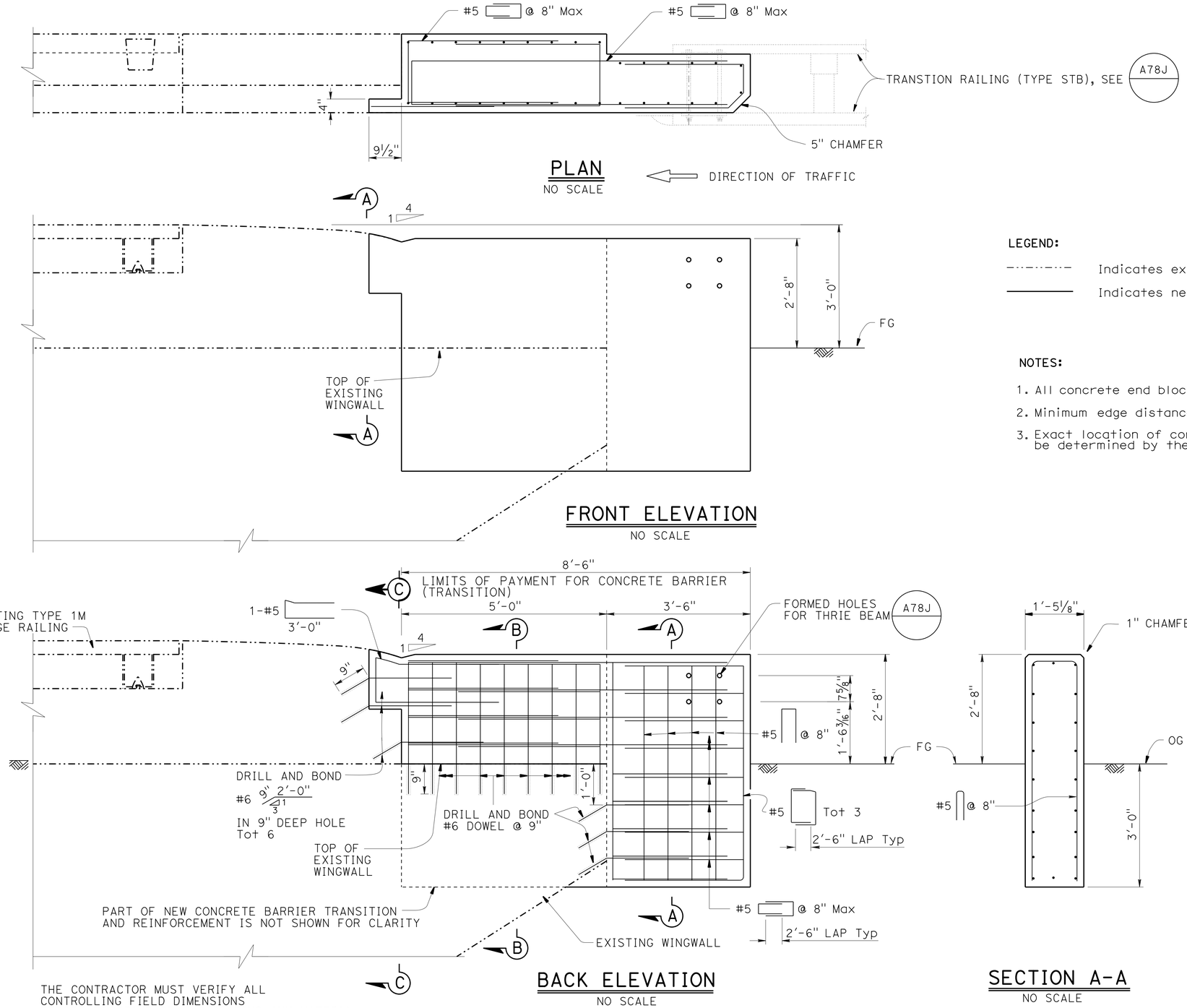

LEGEND:

Indicates existing

Indicates new structure

NOTES:

1. All concrete end blocks have a 5" chamfer.
2. Minimum edge distance for drill & bond #6 dowels is 4".
3. Exact location of concrete barrier transition must be determined by the Engineer.

THE CONTRACTOR MUST VERIFY ALL CONTROLLING FIELD DIMENSIONS BEFORE ORDERING OR FABRICATING ANY MATERIAL.

BRANCH CHIEF DAVID NEUMANN

	BY	CHECKED
DESIGN	AIMAN MALAK	VICTOR LOPEZ
DETAILS	HUNG NGUYEN	AIMAN MALAK
QUANTITIES	AIMAN MALAK	MICHAEL CHARAK

STATE OF CALIFORNIA
DEPARTMENT OF TRANSPORTATION

DIVISION OF ENGINEERING SERVICES
DESIGN AND TECHNICAL SERVICES
SPECIAL DESIGNS BRANCH B

BRIDGE NO. N/A
POST MILE N/A

CONCRETE BARRIER TRANSITIONS
LOCATION 32 DETAILS

STRUCTURES DESIGN DETAIL SHEET (ENGLISH) (REV. 09-01-10)

ORIGINAL SCALE IN INCHES FOR REDUCED PLANS 0 1 2 3

UNIT: x
PROJECT NUMBER & PHASE: 04000206151
CONTRACT NO.: 04-1G8301

DISREGARD PRINTS BEARING EARLIER REVISION DATES

REVISION DATES 10-24-14 10-24-14 2-2-15

SHEET 16 OF 18

FILE => 0400020615we016.dgn

USERNAME => b136183 DATE PLOTTED => 07-APR-2015 TIME PLOTTED => 16:23

DIST	COUNTY	ROUTE	POST MILES TOTAL PROJECT	SHEET No.	TOTAL SHEETS
04	SM	280	Var	91	92

REGISTERED CIVIL ENGINEER 2-2-15 DATE

2-2-15
PLANS APPROVAL DATE

REGISTERED PROFESSIONAL ENGINEER AIMAN MALAK No. C73369 Exp. 12-31-2016 CIVIL STATE OF CALIFORNIA

The State of California or its officers or agents shall not be responsible for the accuracy or completeness of scanned copies of this plan sheet.

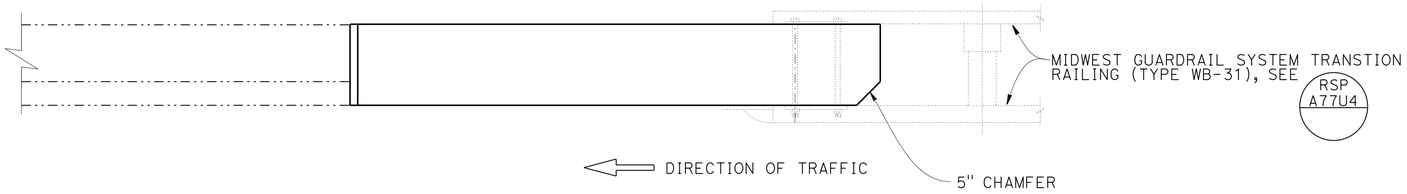

PLAN

NOTES:

1. Holes used for fastening existing MBGR must be mortar filled, unless holes were cast using pipe sleeves.
2. Minimum edge distance for drill & bond #6 dowels is 4".
3. Exact location of concrete barrier transition must be determined by the Engineer.

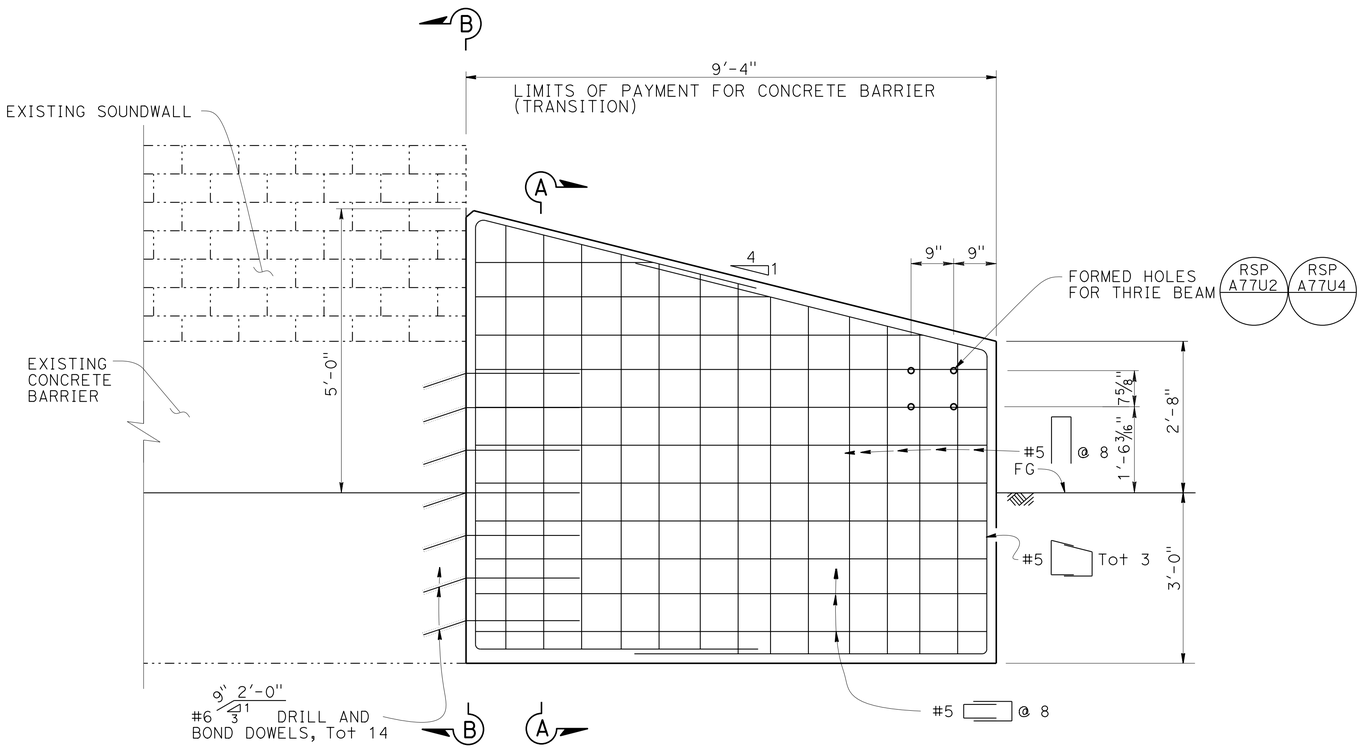

ELEVATION

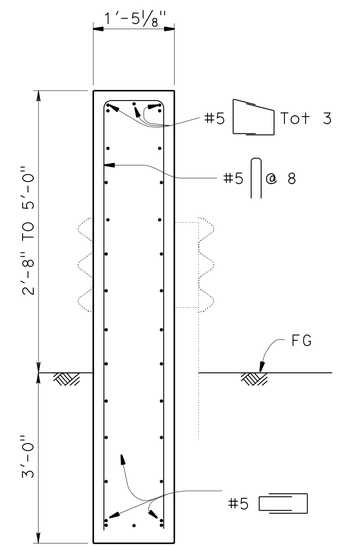

SECTION C-C

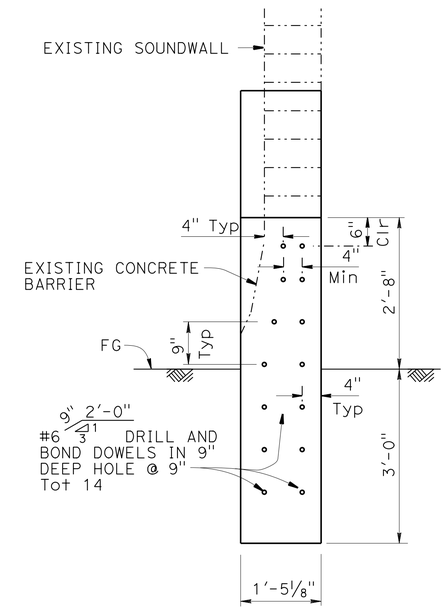

SECTION B-B

THE CONTRACTOR MUST VERIFY ALL CONTROLLING FIELD DIMENSIONS BEFORE ORDERING OR FABRICATING ANY MATERIAL.

SCALE = 3/4" = 1'-0"

LEGEND:

- - - - - - Indicates existing structure
——— Indicates new structure

	BY	CHECKED
DESIGN	AIMAN MALAK	VICTOR LOPEZ
DETAILS	HUNG NGUYEN	AIMAN MALAK
QUANTITIES	AIMAN MALAK	MICHAEL CHARAK

BRANCH CHIEF DAVID NEUMANN

STATE OF CALIFORNIA DEPARTMENT OF TRANSPORTATION

DIVISION OF ENGINEERING SERVICES DESIGN AND TECHNICAL SERVICES SPECIAL DESIGNS BRANCH B

BRIDGE NO. N/A
POST MILE N/A

CONCRETE BARRIER TRANSITIONS
LOCATION 33 DETAILS

STRUCTURES DESIGN DETAIL SHEET (ENGLISH) (REV. 09-01-10)

ORIGINAL SCALE IN INCHES FOR REDUCED PLANS 0 1 2 3

UNIT: X
PROJECT NUMBER & PHASE: 04000206151
CONTRACT NO.: 04-1G8301

DISREGARD PRINTS BEARING EARLIER REVISION DATES

REVISION DATES 10-13-14 10-28-14

SHEET 17 OF 18

FILE => 0400020615we017.dgn

USERNAME => s136183 DATE PLOTTED => 07-APR-2015 TIME PLOTTED => 16:23

DIST	COUNTY	ROUTE	POST MILES TOTAL PROJECT	SHEET No.	TOTAL SHEETS
04	SM	280	Var	92	92

REGISTERED CIVIL ENGINEER — DATE 2-2-15

2-2-15
PLANS APPROVAL DATE

REGISTERED PROFESSIONAL ENGINEER — AIMAN MALAK — No. C73369 — Exp. 12-31-2016 — CIVIL — STATE OF CALIFORNIA

The State of California or its officers or agents shall not be responsible for the accuracy or completeness of scanned copies of this plan sheet.

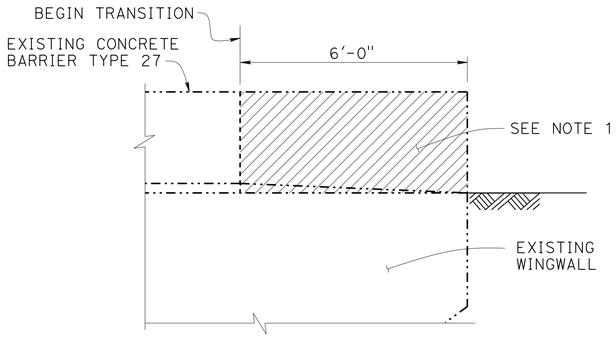

CONCRETE REMOVAL
½" = 1'-0"

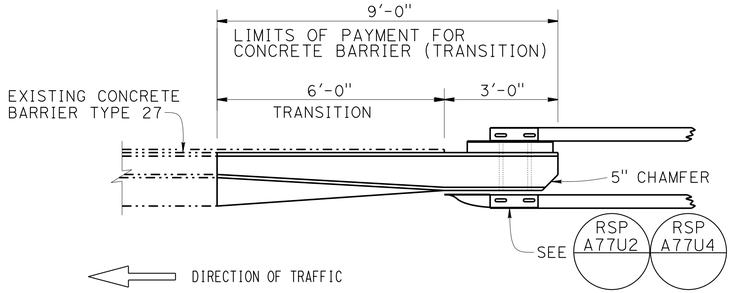

PLAN
½" = 1'-0"

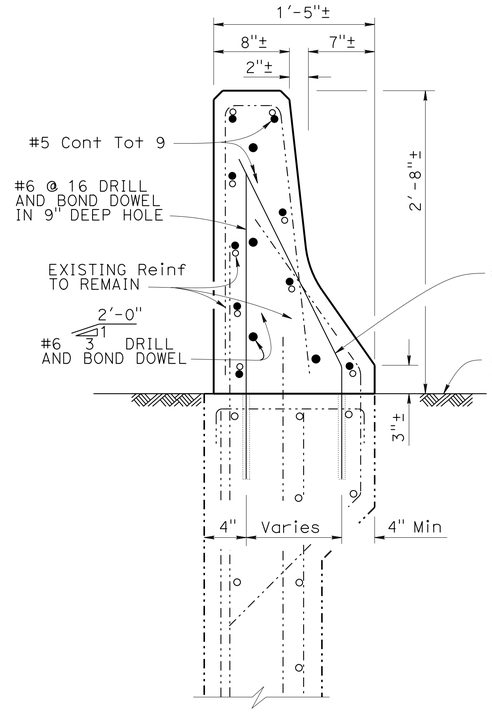

SECTION B-B
1½" = 1'-0"

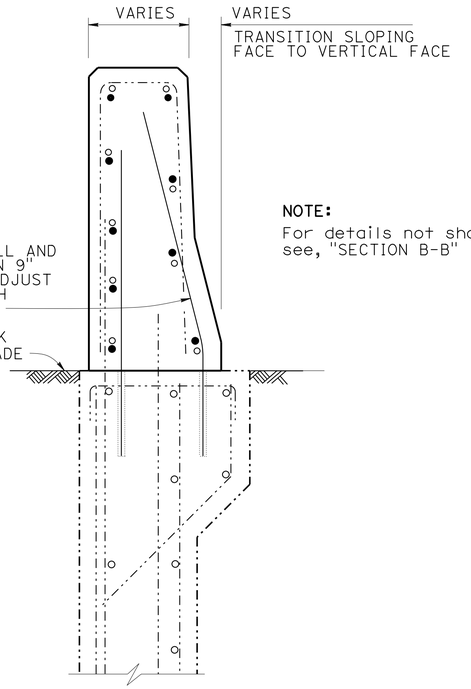

NOTE:
For details not shown see, "SECTION B-B"

SECTION C-C
1½" = 1'-0"

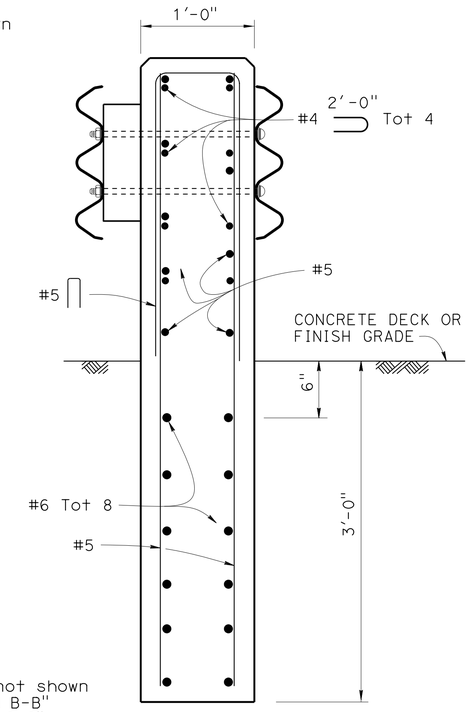

NOTE:
For details not shown see, "SECTION B-B" and "SECTION C-C"

SECTION D-D
1½" = 1'-0"

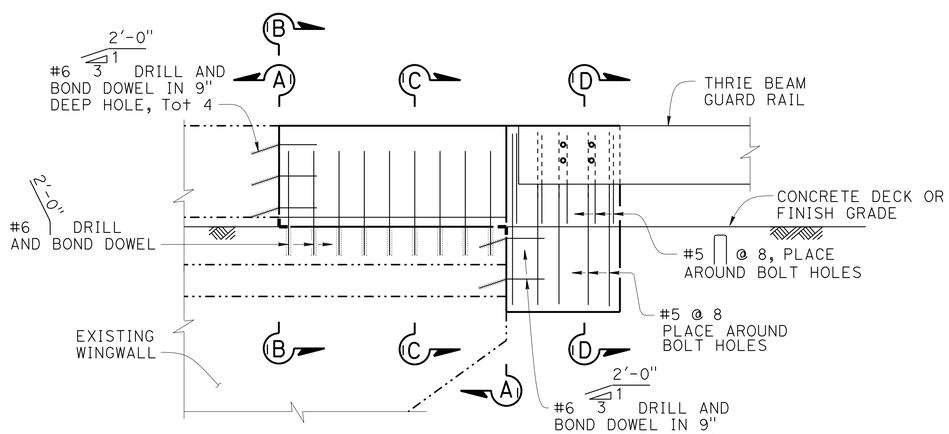

NOTE:
All Reinf not shown

ELEVATION
½" = 1'-0"

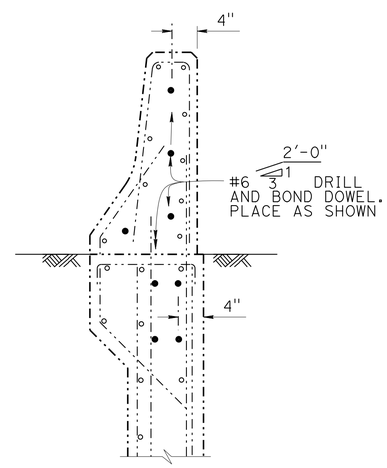

SECTION A-A
1" = 1'-0"

NOTES:

1. Cut and remove the portion of Concrete Barrier Type 27 as required. Existing reinforcement to remain.
2. Wingwall reinforcement to remain.
3. Minimum edge distance for drill & bond #6 dowels is 4".
4. Exact location of concrete barrier transition must be determined by the Engineer.

LEGEND:

- Indicates existing structure
- Indicates new structure
- Indicates concrete removal
- Indicates existing reinforcement

THE CONTRACTOR MUST VERIFY ALL CONTROLLING FIELD DIMENSIONS BEFORE ORDERING OR FABRICATING ANY MATERIAL.

	BY	CHECKED
DESIGN	AIMAN MALAK	VICTOR LOPEZ
DETAILS	HUNG NGUYEN	AIMAN MALAK
QUANTITIES	AIMAN MALAK	MICHAEL CHARAK

BRANCH CHIEF DAVID NEUMANN

STATE OF CALIFORNIA
DEPARTMENT OF TRANSPORTATION

DIVISION OF ENGINEERING SERVICES
DESIGN AND TECHNICAL SERVICES
SPECIAL DESIGNS BRANCH B

BRIDGE NO. N/A
POST MILE N/A

CONCRETE BARRIER TRANSITIONS
LOCATION 38 DETAILS

STRUCTURES DESIGN DETAIL SHEET (ENGLISH) (REV. 09-01-10)

ORIGINAL SCALE IN INCHES FOR REDUCED PLANS 0 1 2 3

UNIT: X
PROJECT NUMBER & PHASE: 04000206151
CONTRACT NO.: 04-1G8301

DISREGARD PRINTS BEARING EARLIER REVISION DATES

REVISION DATES 10-13-14 10-28-14

SHEET 18 OF 18

FILE => 0400020615we018.dgn

USERNAME => s136183 DATE PLOTTED => 07-APR-2015 TIME PLOTTED => 16:23