Dist	COUNTY	ROUTE	POST MILES TOTAL PROJECT	SHEET No.	TOTAL SHEETS
04	Mrn, Son	101	26.8/27.6, 0.0/2.0	101	710

REGISTERED CIVIL ENGINEER 06/30/14 DATE

8-18-14
PLANS APPROVAL DATE

REGISTERED PROFESSIONAL ENGINEER S. D. DANSKY No. 60220 Exp. 6/30/16 CIVIL STATE OF CALIFORNIA

THE STATE OF CALIFORNIA OR ITS OFFICERS OR AGENTS SHALL NOT BE RESPONSIBLE FOR THE ACCURACY OR COMPLETENESS OF SCANNED COPIES OF THIS PLAN SHEET.

MARK THOMAS & CO., INC.
3000 OAK RD, SUITE 650
WALNUT CREEK, CA 94597

TRANSPORTATION AUTHORITY OF MARIN
750 LINDARO ST, SUITE 200
SAN RAFAEL, CA 94901

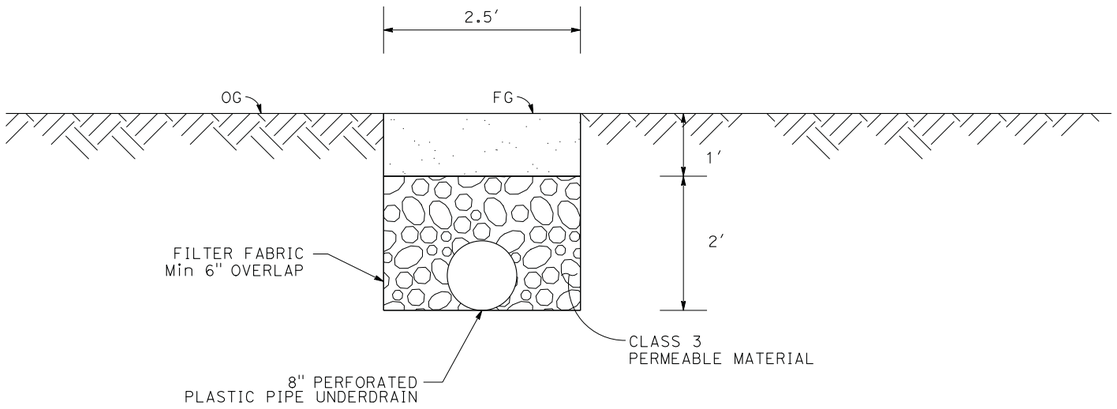

SECTION A-A

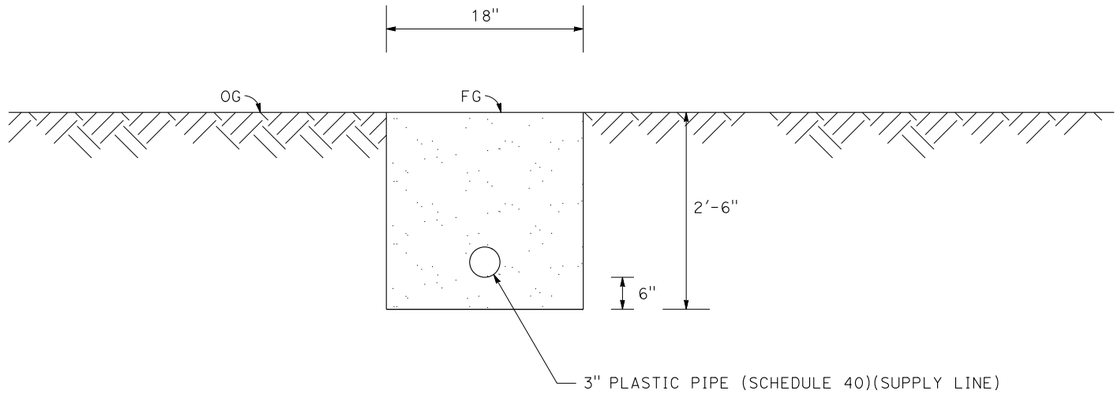

SECTION B-B

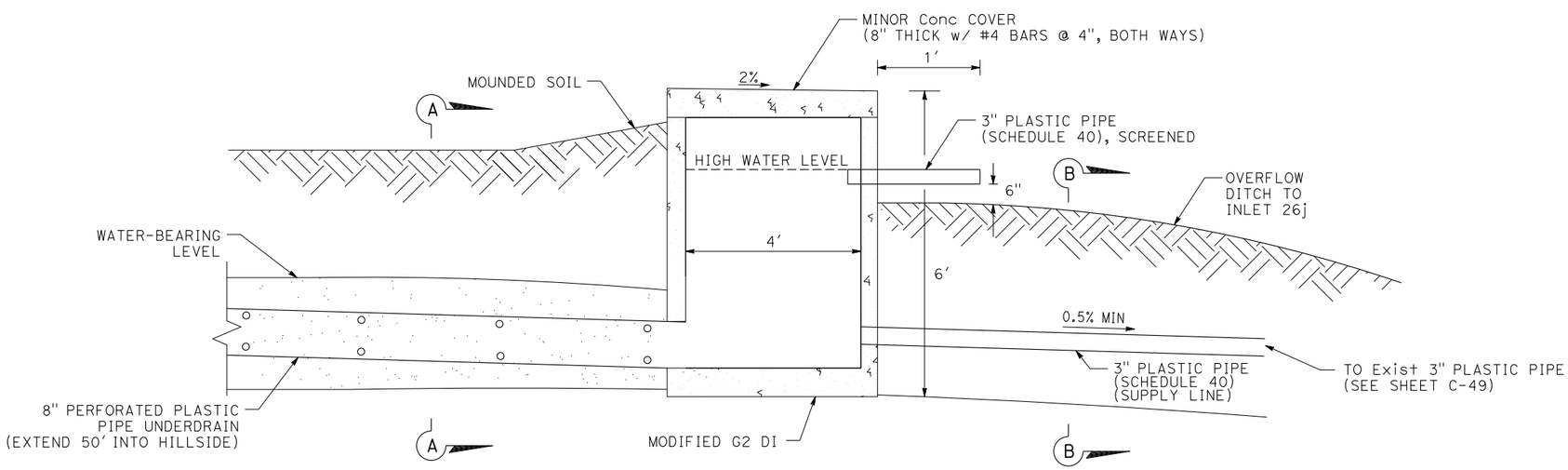

SPRING BOX DETAIL

CONSTRUCTION DETAILS

KLATTE SPRING

NO SCALE

C-50

STATE OF CALIFORNIA - DEPARTMENT OF TRANSPORTATION
Caltrans

CONSULTANT FUNCTIONAL SUPERVISOR: MICHAEL LOHMAN
CALCULATED-DESIGNED BY: CHRIS BRIANA
CHECKED BY: TOM CONNELL
REVISED BY: TC
DATE REVISED: 4/30/12
TC: 2/7/14
TC: 5/13/14

LAST REVISION 00-00-00
DATE PLOTTED => 30-SEP-2014
TIME PLOTTED => 14:12

Dist	COUNTY	ROUTE	POST MILES TOTAL PROJECT	SHEET No.	TOTAL SHEETS
04	Mrn, Son	101	26.8/27.6, 0.0/2.0	102	710

REGISTERED CIVIL ENGINEER — 06/30/14 DATE

8-18-14
PLANS APPROVAL DATE

REGISTERED PROFESSIONAL ENGINEER — S. D. DANSKY No. 60220 Exp. 6/30/16 CIVIL — STATE OF CALIFORNIA

THE STATE OF CALIFORNIA OR ITS OFFICERS OR AGENTS SHALL NOT BE RESPONSIBLE FOR THE ACCURACY OR COMPLETENESS OF SCANNED COPIES OF THIS PLAN SHEET.

MARK THOMAS & CO., INC.
3000 OAK RD, SUITE 650
WALNUT CREEK, CA 94597

TRANSPORTATION AUTHORITY OF MARIN
750 LINDARO ST, SUITE 200
SAN RAFAEL, CA 94901

NOTE:

FOR ACCURATE RIGHT OF WAY DATA, CONTACT RIGHT OF WAY ENGINEERING AT THE DISTRICT OFFICE.

LEGEND

0.2' HMA (TYPE A)

REPLACE AC SURFACING (SEE DETAIL A)

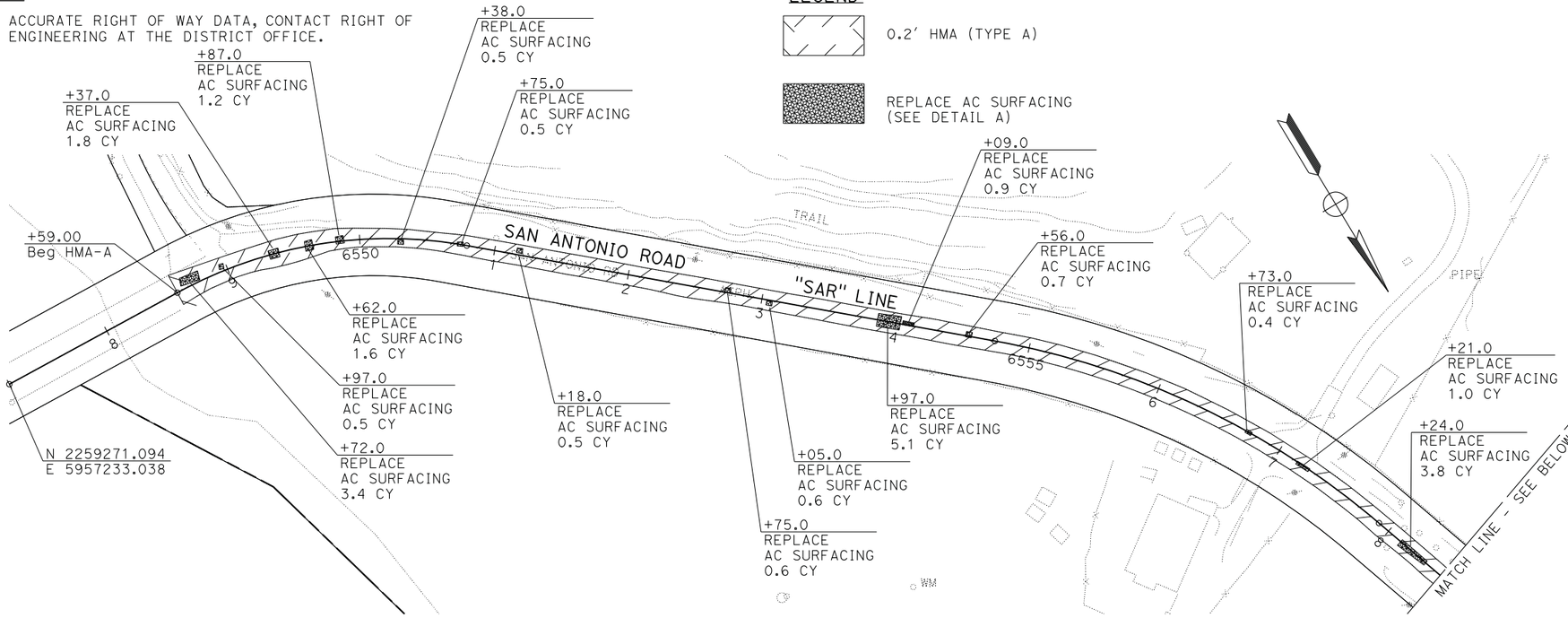

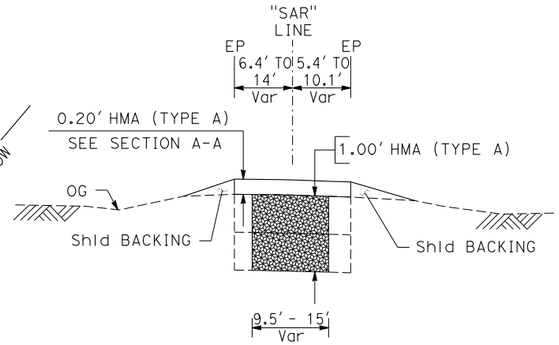

DETAIL A
NO SCALE

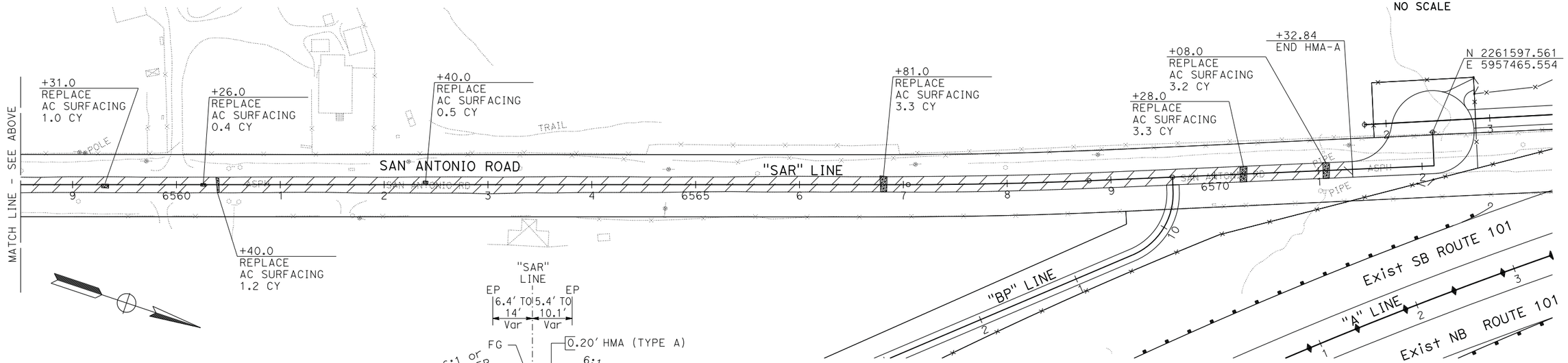

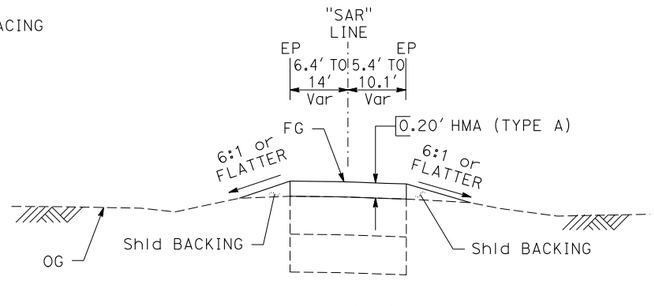

TYPICAL SECTION
"SAR" 6548+59 TO 6571+32.84
NO SCALE

CONSTRUCTION DETAILS
SAN ANTONIO ROAD OVERLAY

SCALE: 1" = 50'

C-51

REVISED BY	DATE REVISED
TC	4/30/12
TC	2/7/14
TC	5/13/14

CALCULATED-DESIGNED BY: TOM CONNELL
CHECKED BY: TOM CONNELL

CONSULTANT FUNCTIONAL SUPERVISOR: MICHAEL LOHMAN

STATE OF CALIFORNIA - DEPARTMENT OF TRANSPORTATION

LAST REVISION DATE PLOTTED => 30-SEP-2014
00-00-00 TIME PLOTTED => 14:12

Dist	COUNTY	ROUTE	POST MILES TOTAL PROJECT	SHEET No.	TOTAL SHEETS
04	Mrn, Son	101	26.8/27.6, 0.0/2.0	103	710

REGISTERED CIVIL ENGINEER — 06/30/14 DATE

S. D. DANSKY No. 60220 Exp. 6/30/16 CIVIL — REGISTERED PROFESSIONAL ENGINEER — STATE OF CALIFORNIA

8-18-14
PLANS APPROVAL DATE

THE STATE OF CALIFORNIA OR ITS OFFICERS OR AGENTS SHALL NOT BE RESPONSIBLE FOR THE ACCURACY OR COMPLETENESS OF SCANNED COPIES OF THIS PLAN SHEET.

MARK THOMAS & CO., INC.
3000 OAK RD, SUITE 650
WALNUT CREEK, CA 94597

TRANSPORTATION AUTHORITY OF MARIN
750 LINDARO ST, SUITE 200
SAN RAFAEL, CA 94901

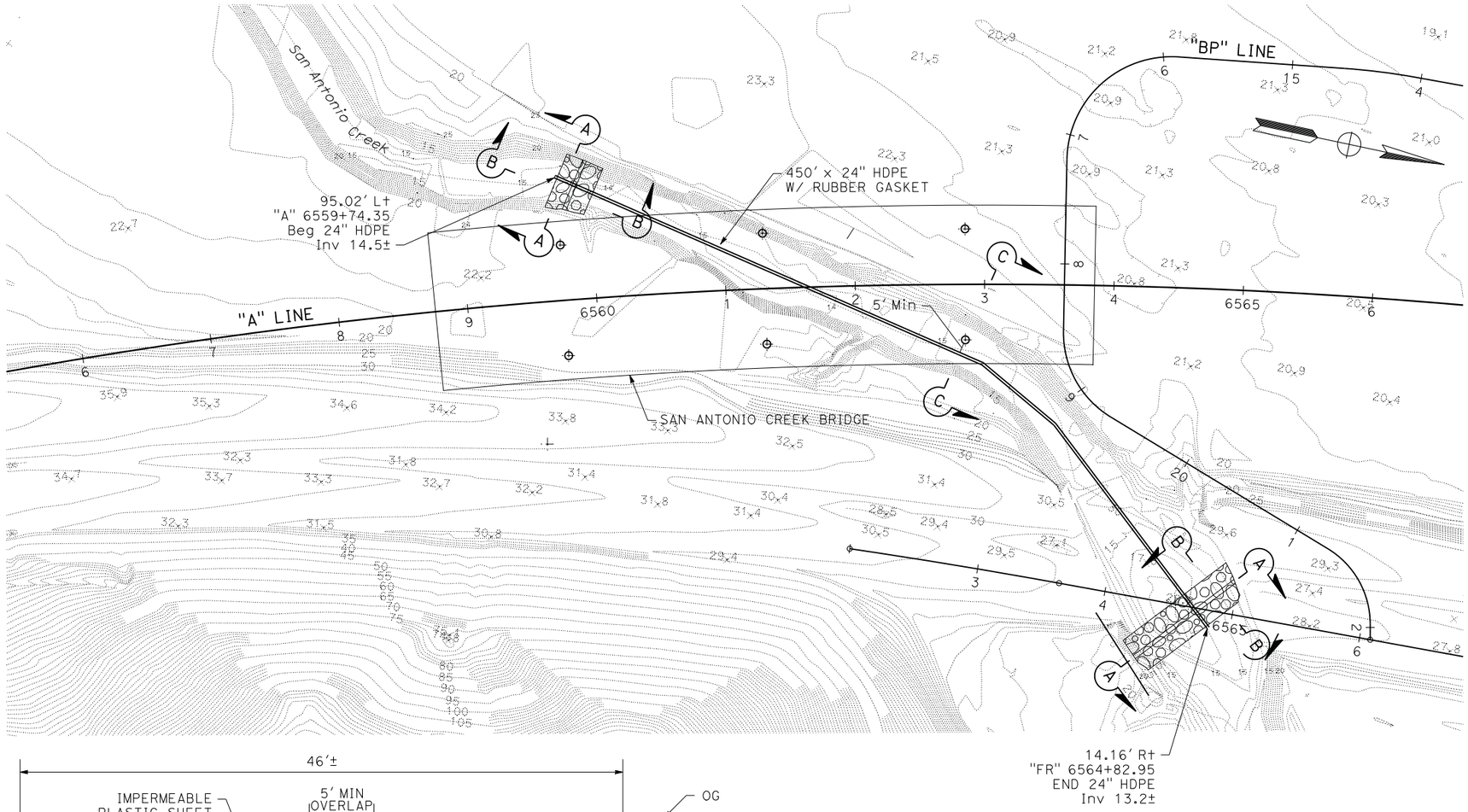

NOTES:

1. GRAVEL OR GRAVEL BAGS TO BE PLACED AT END OF PIPE AND AT INTERMITTENT LCATIONS AS DETERMINED BY THE CONTRACTOR AND APPROVED BY THE ENGINEER.

LEGEND

COFFERDAM

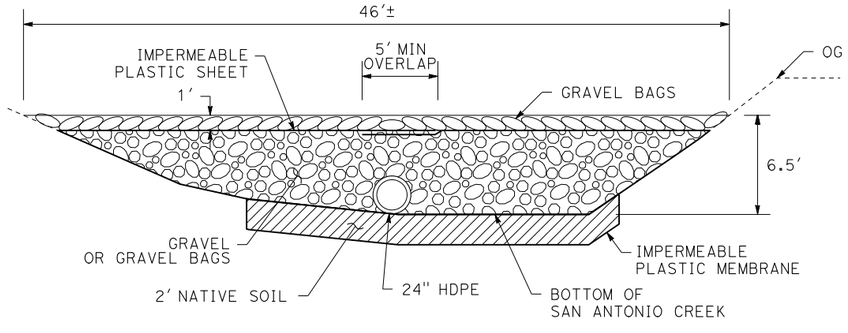

SECTION A-A
NO SCALE

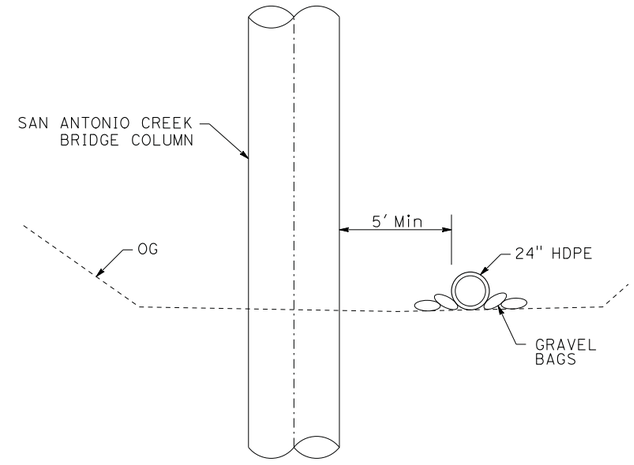

SECTION C-C
NO SCALE

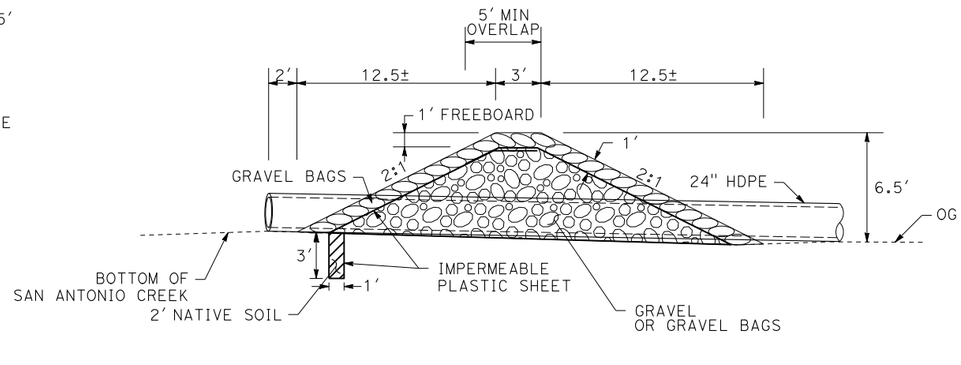

SECTION B-B
NO SCALE

QUANTITIES

DESCRIPTION	QUANTITY (N)
24" HDPE	450 LF
GRAVEL OR GRAVEL BAG	270 CY
IMPERMEABLE PLASTIC SHEETING	657 SQYD
GRAVEL BAG ANCHORS	AS NEEDED

(N) NOT A PAY ITEM, FOR INFORMATION ONLY

CONSTRUCTION DETAILS

TEMPORARY CREEK DIVERSION SYSTEM PLAN

SCALE: 1" = 50'

C-52

	CALCULATED-DESIGNED BY	CHECKED BY	CONSULTANT FUNCTIONAL SUPERVISOR	REVISED BY	DATE REVISED
AC	ALEX CROSKEY	TOM CONNELL	MICHAEL LOHMAN	AC	4/30/12
AC				AC	2/7/14
AC				AC	5/13/14

STATE OF CALIFORNIA - DEPARTMENT OF TRANSPORTATION

Caltrans

LAST REVISION 00-00-00
DATE PLOTTED => 30-SEP-2014
TIME PLOTTED => 14:12

BORDER LAST REVISED 7/2/2010 | USERNAME => acroskey | DGN FILE => 0400000735ga052.dgn | RELATIVE BORDER SCALE IS IN INCHES 0 1 2 3 | UNIT 0716 | PROJECT NUMBER & PHASE 04000007351

Dist	COUNTY	ROUTE	POST MILES TOTAL PROJECT	SHEET No.	TOTAL SHEETS
04	Mrn, Son	101	26.8/27.6, 0.0/2.0	104	710

REGISTERED CIVIL ENGINEER — 06/30/14 DATE

S. D. DANSKY No. 60220 Exp. 6/30/16 CIVIL — REGISTERED PROFESSIONAL ENGINEER — STATE OF CALIFORNIA

8-18-14
PLANS APPROVAL DATE

THE STATE OF CALIFORNIA OR ITS OFFICERS OR AGENTS SHALL NOT BE RESPONSIBLE FOR THE ACCURACY OR COMPLETENESS OF SCANNED COPIES OF THIS PLAN SHEET.

MARK THOMAS & CO., INC.
3000 OAK RD, SUITE 650
WALNUT CREEK, CA 94597

TRANSPORTATION AUTHORITY OF MARIN
750 LINDARO ST, SUITE 200
SAN RAFAEL, CA 94901

NOTE:

1. EXACT AREA AND LOCATION OF THE TEMPORARY ACCESS PAD TO BE APPROVED IN THE FEILD BY THE ENGINEER.

2. TEMPORARY ACCESS PAD TO BE USED AFTER JUNE 15 AND BEFORE OCTOBER 15

LEGEND

- TEMPORARY ACCESS PAD
- ROCK (TYPE A OR B)
- GRAVEL

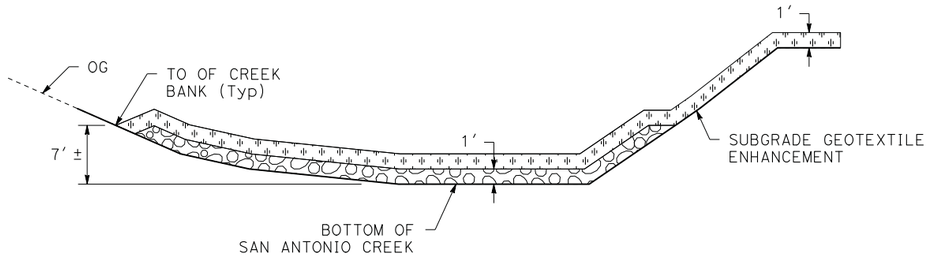

TYPICAL SECTION
NO SCALE

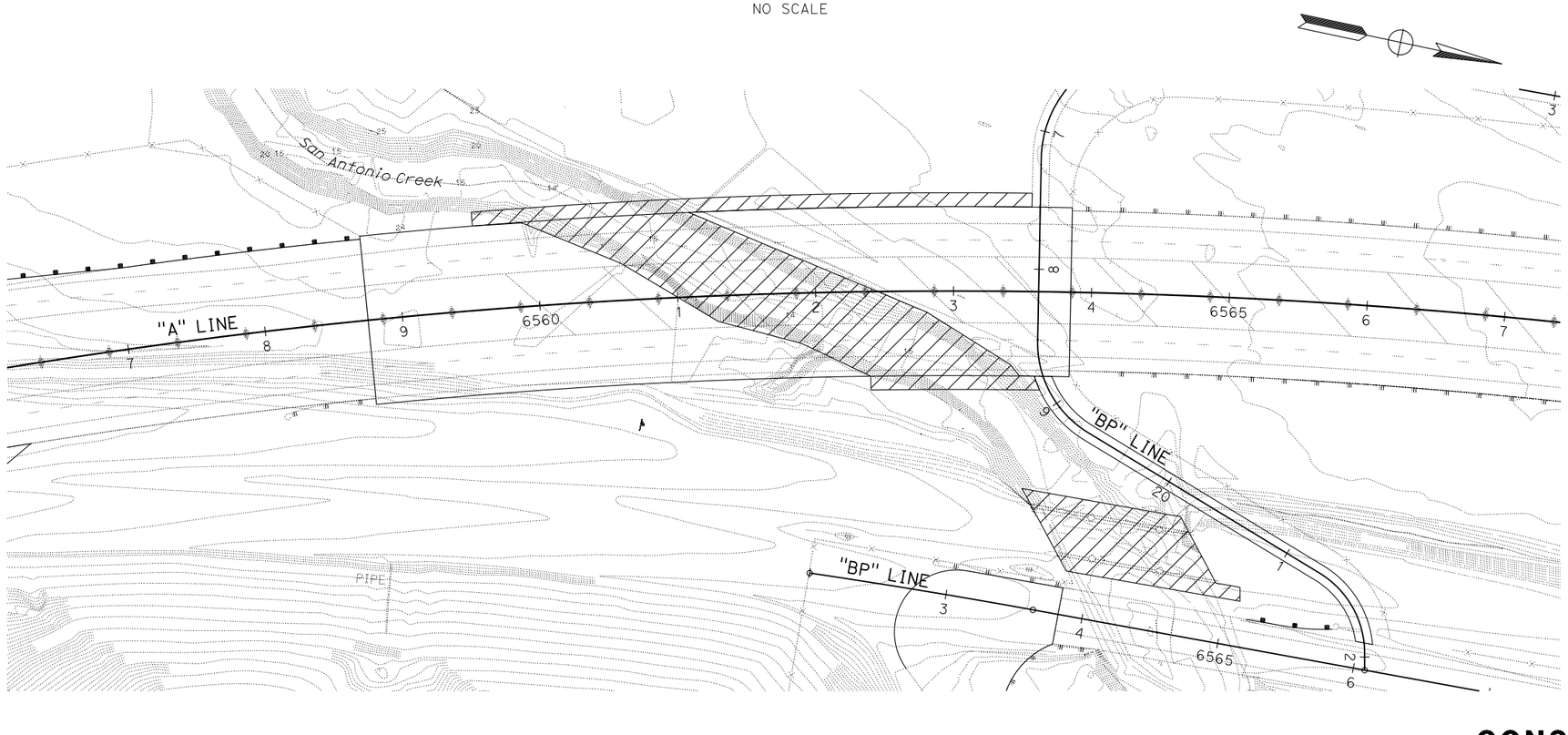

CONSTRUCTION DETAILS

TEMPORARY ACCESS PAD

SCALE: 1" = 50′

C-53

REVISED BY	AC	AC	AC
DATE REVISED	4/30/12	2/7/14	5/13/14
CALCULATED-DESIGNED BY	ALEX CROSKEY		
CHECKED BY	TOM CONNELL		
CONSULTANT FUNCTIONAL SUPERVISOR	MICHAEL LOHMAN		

STATE OF CALIFORNIA - DEPARTMENT OF TRANSPORTATION
Caltrans

LAST REVISION | DATE PLOTTED => 30-SEP-2014
00-00-00 | TIME PLOTTED => 14:12

Dist	COUNTY	ROUTE	POST MILES TOTAL PROJECT	SHEET No.	TOTAL SHEETS
04	Mrn, Son	101	26.8/27.6, 0.0/2.0	105	710

REGISTERED CIVIL ENGINEER 06/30/14 DATE

8-18-14
PLANS APPROVAL DATE

REGISTERED PROFESSIONAL ENGINEER S. D. DANSKY No. 60220 Exp. 6/30/16 CIVIL STATE OF CALIFORNIA

THE STATE OF CALIFORNIA OR ITS OFFICERS OR AGENTS SHALL NOT BE RESPONSIBLE FOR THE ACCURACY OR COMPLETENESS OF SCANNED COPIES OF THIS PLAN SHEET.

MARK THOMAS & CO., INC.
3000 OAK RD, SUITE 650
WALNUT CREEK, CA 94597

TRANSPORTATION AUTHORITY OF MARIN
750 LINDARO ST, SUITE 200
SAN RAFAEL, CA 94901

NOTE:

EXACT AREA AND LOCATION OF CONSTRUCTOR USE TO BE APPROVED IN THE FEILD BY THE ENGINEER.

LEGEND

TEMPORARY CONSTRUCTION ENTRANCE (CONSTRUCTION STAGING PAD)

ROCK (TYPE A OR B)

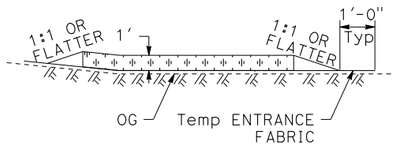

TYPICAL SECTION

NO SCALE

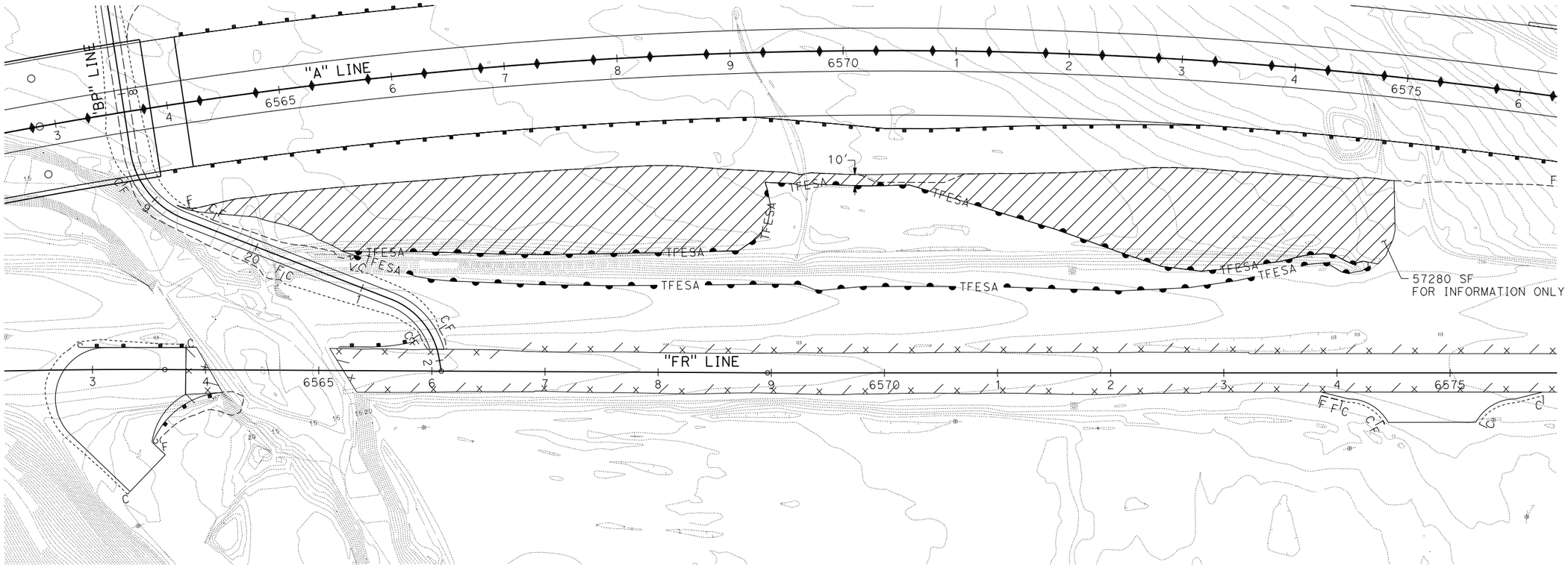

CONSTRUCTION DETAILS

CONSTRUCTION STAGING PAD

SCALE: 1" = 50'

C-54

STATE OF CALIFORNIA - DEPARTMENT OF TRANSPORTATION	Caltrans
CONSULTANT FUNCTIONAL SUPERVISOR	MICHAEL LOHMAN
CALCULATED-DESIGNED BY	BIANCA LIU
CHECKED BY	TOM CONNELL
REVISED BY	BL
DATE REVISED	4/30/12
BL	2/7/14
BL	5/13/14

LAST REVISION 00-00-00
DATE PLOTTED => 30-SEP-2014
TIME PLOTTED => 14:12

Dist	COUNTY	ROUTE	POST MILES TOTAL PROJECT	SHEET No.	TOTAL SHEETS
04	Mrn, Son	101	26.8/27.6, 0.0/2.0	106	710

REGISTERED CIVIL ENGINEER — DATE

8-18-14
PLANS APPROVAL DATE

REGISTERED PROFESSIONAL ENGINEER — Zhaohui Yang — No. 71801 — Exp. 12-31-15 — CIVIL — STATE OF CALIFORNIA

THE STATE OF CALIFORNIA OR ITS OFFICERS OR AGENTS SHALL NOT BE RESPONSIBLE FOR THE ACCURACY OR COMPLETENESS OF SCANNED COPIES OF THIS PLAN SHEET.

CALTRANS
111 GRAND AVENUE
OAKLAND, CA 94612

TRANSPORTATION AUTHORITY OF MARIN
750 LINDARO ST, SUITE 200
SAN RAFAEL, CA 94901

NOTES:

FOR ACCURATE RIGHT OF WAY DATA, CONTACT RIGHT OF WAY ENGINEERING AT DISTRICT OFFICE.

LEGEND:

RAMMED AGGREGATE COLUMNS

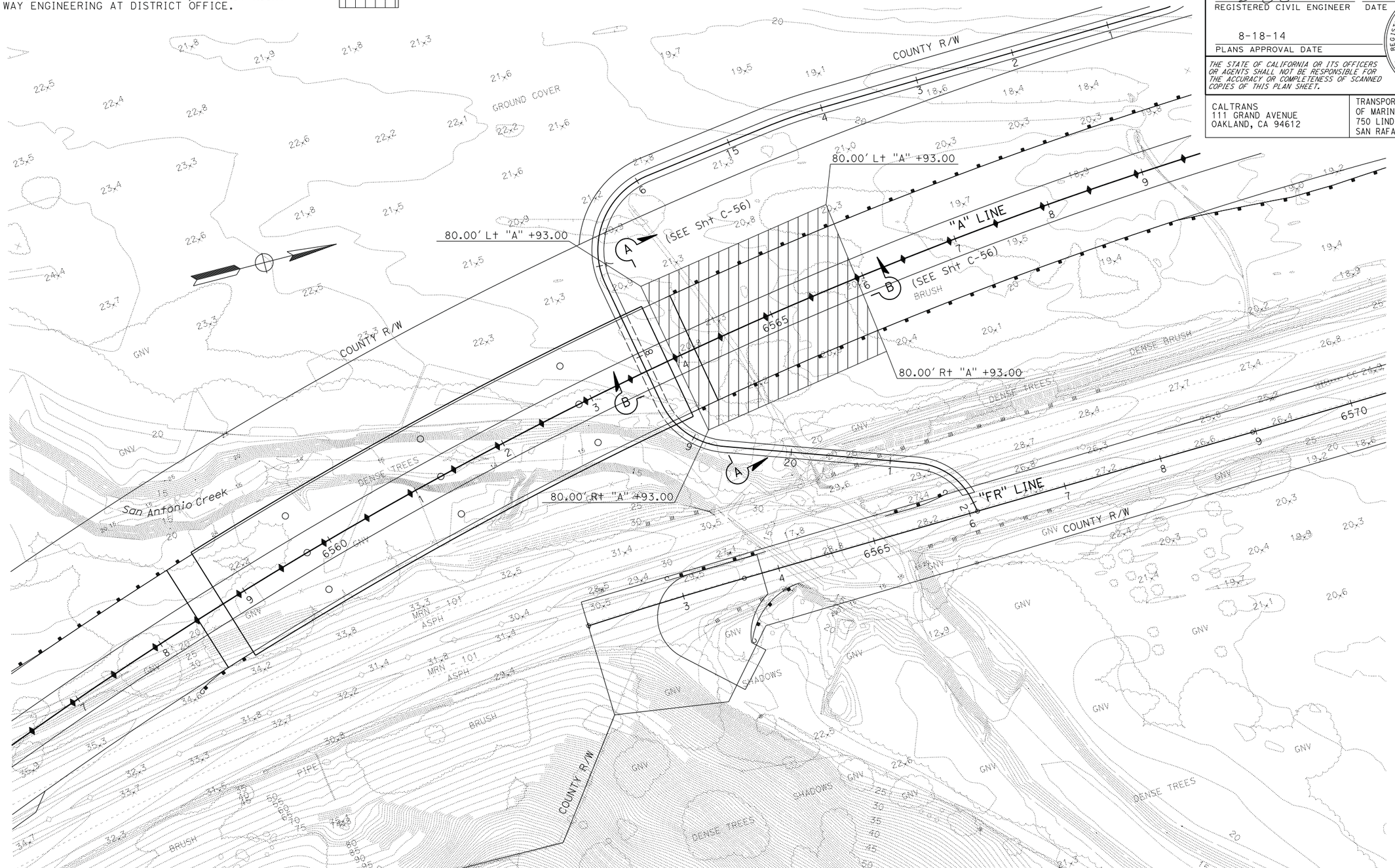

CONSTRUCTION DETAILS

RAMMED AGGREGATE COLUMNS

SCALE: 1" = 50'

THIS PLAN ACCUATE FOR PAVEMENT ELEVATION WORK ONLY

C-55

BL	5/13/14	CALCULATED-DESIGNED BY	BIANCA LIU
BL	2/7/14	CHECKED BY	TOM CONNELL
BL	4/30/12	CONSULTANT FUNCTIONAL SUPERVISOR	MICHAEL LOHMAN
REVISED BY	DATE REVISED	STATE OF CALIFORNIA - DEPARTMENT OF TRANSPORTATION	Caltrans

LAST REVISION 00-00-00 — DATE PLOTTED => 30-SEP-2014 — TIME PLOTTED => 14:12

BORDER LAST REVISED 7/2/2010 | USERNAME => acroskey | DGN FILE => 04000007351ga055.dgn | RELATIVE BORDER SCALE IS IN INCHES 0 1 2 3 | UNIT 0716 | PROJECT NUMBER & PHASE 04000007351

Dist	COUNTY	ROUTE	POST MILES TOTAL PROJECT	SHEET No.	TOTAL SHEETS
04	Mrn, Son	101	26.8/27.6, 0.0/2.0	107	710

S. Yang — 06/30/14
REGISTERED CIVIL ENGINEER — DATE

8-18-14
PLANS APPROVAL DATE

REGISTERED PROFESSIONAL ENGINEER — Zhaohui Yang — No. 71801 — Exp. 12-31-15 — CIVIL — STATE OF CALIFORNIA

THE STATE OF CALIFORNIA OR ITS OFFICERS OR AGENTS SHALL NOT BE RESPONSIBLE FOR THE ACCURACY OR COMPLETENESS OF SCANNED COPIES OF THIS PLAN SHEET.

CALTRANS
111 GRAND AVENUE
OAKLAND, CA 94612

TRANSPORTATION AUTHORITY OF MARIN
750 LINDARO ST, SUITE 200
SAN RAFAEL, CA 94901

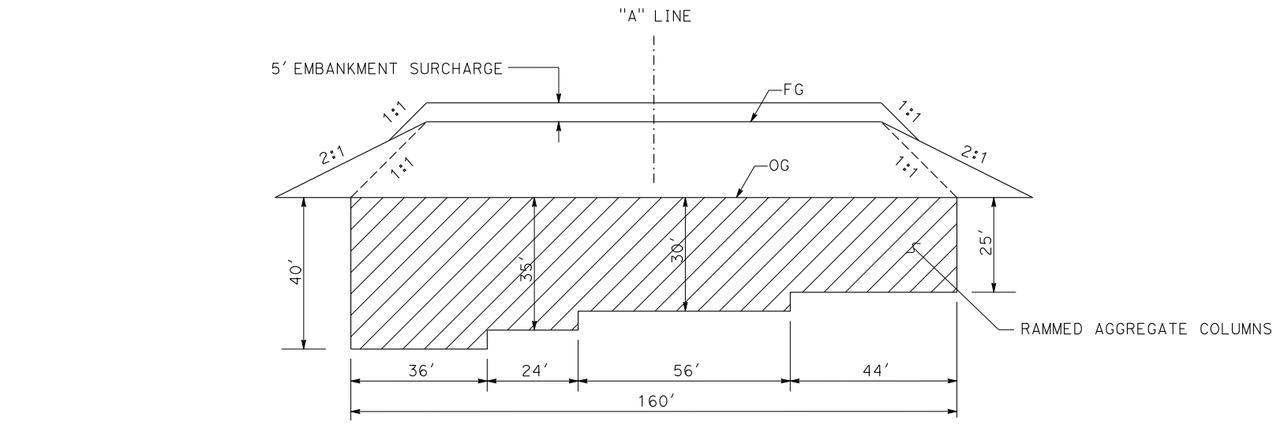

SECTION A-A
(SEE Sht C-55)

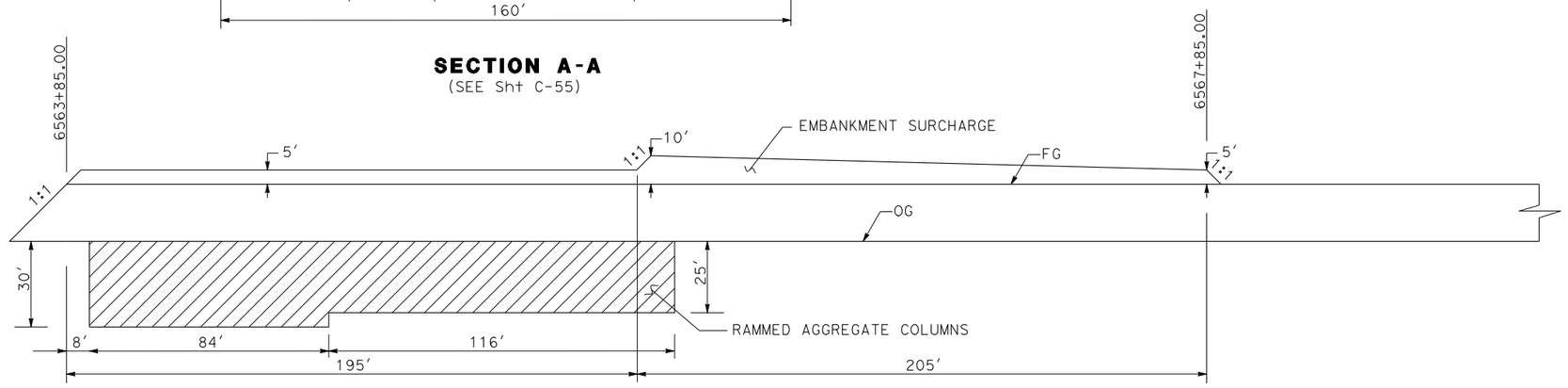

SECTION B-B
(SEE Sht C-55)

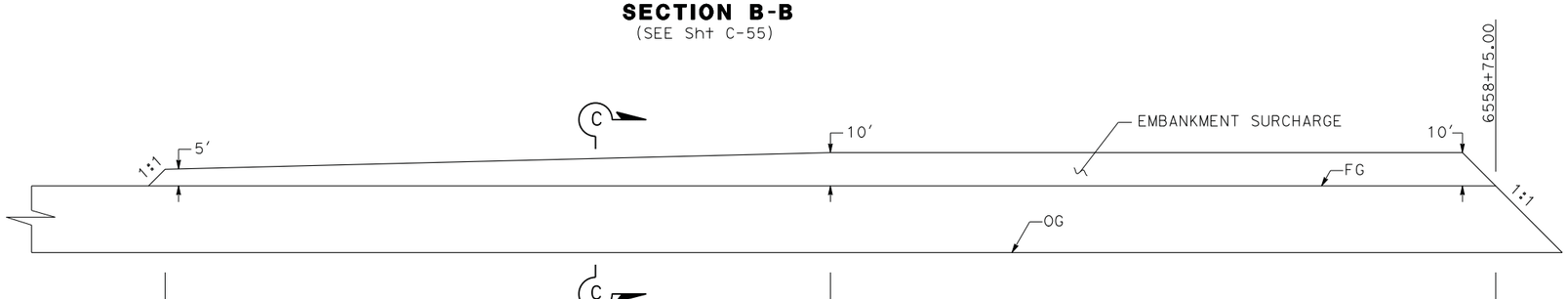

SOUTH APPROACH SURCHARGE PROFILE

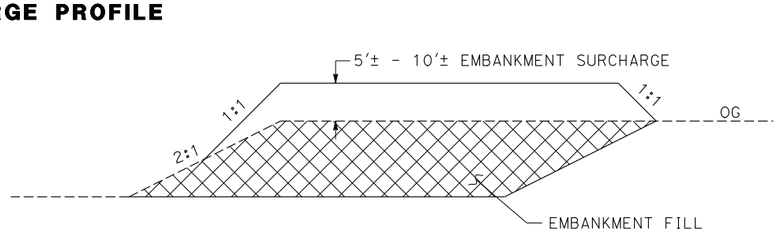

SECTION C-C

CONSTRUCTION DETAILS

RAMMED AGGREGATE COLUMNS

NO SCALE

C-56

REVISED BY	BL	BL	BL	BL
DATE REVISED	4/30/12	2/7/14	5/13/14	
CALCULATED-DESIGNED BY	BIANCA LIU			
CHECKED BY	TOM CONNELL			
CONSULTANT FUNCTIONAL SUPERVISOR	MICHAEL LOHMAN			

STATE OF CALIFORNIA - DEPARTMENT OF TRANSPORTATION
Caltrans

LAST REVISION 00-00-00
DATE PLOTTED => 30-SEP-2014
TIME PLOTTED => 14:12

BORDER LAST REVISED 7/2/2010
USERNAME => acroskey
DGN FILE => 0400000735ga056.dgn
RELATIVE BORDER SCALE IS IN INCHES 0 1 2 3
UNIT 0716
PROJECT NUMBER & PHASE 04000007351

Dist	COUNTY	ROUTE	POST MILES TOTAL PROJECT	SHEET No.	TOTAL SHEETS
04	Mrn, Son	101	26.8/27.6, 0.0/2.0	108	710

REGISTERED CIVIL ENGINEER — DATE

8-18-14
PLANS APPROVAL DATE

Zhaohui Yang, No. 71801, Exp. 12-31-15, CIVIL, REGISTERED PROFESSIONAL ENGINEER, STATE OF CALIFORNIA

THE STATE OF CALIFORNIA OR ITS OFFICERS OR AGENTS SHALL NOT BE RESPONSIBLE FOR THE ACCURACY OR COMPLETENESS OF SCANNED COPIES OF THIS PLAN SHEET.

CALTRANS
111 GRAND AVENUE
OAKLAND, CA 94612

TRANSPORTATION AUTHORITY OF MARIN
750 LINDARO ST, SUITE 200
SAN RAFAEL, CA 94901

LEGEND:

---------- LENGTH LIMITS OF RAMMED AGGREGATE COLUMNS

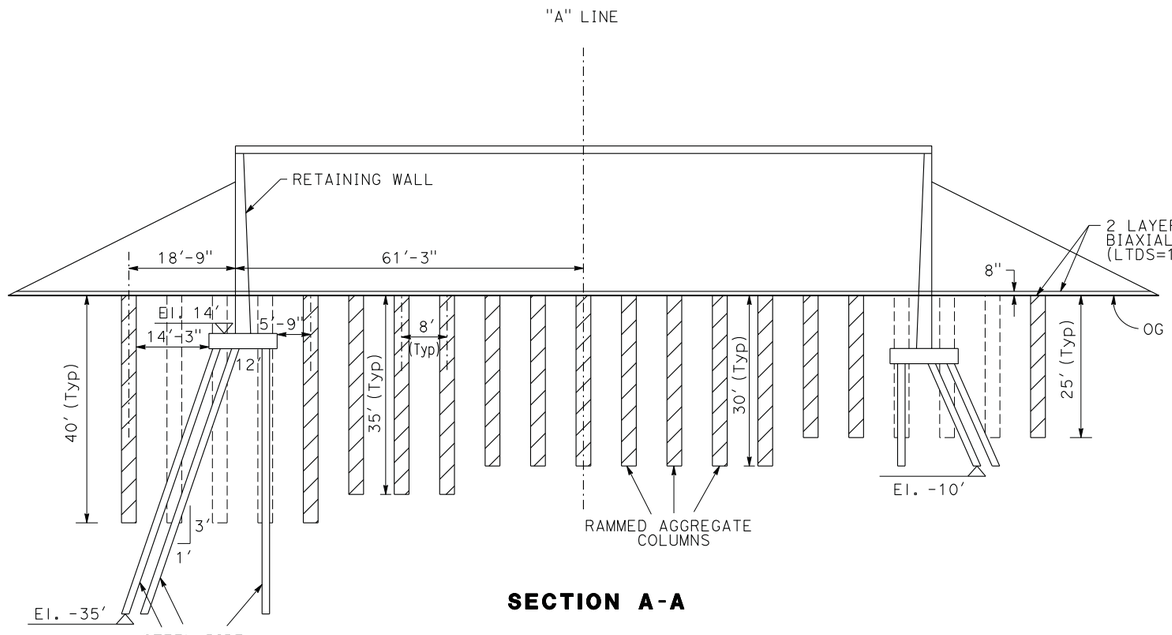

SECTION A-A

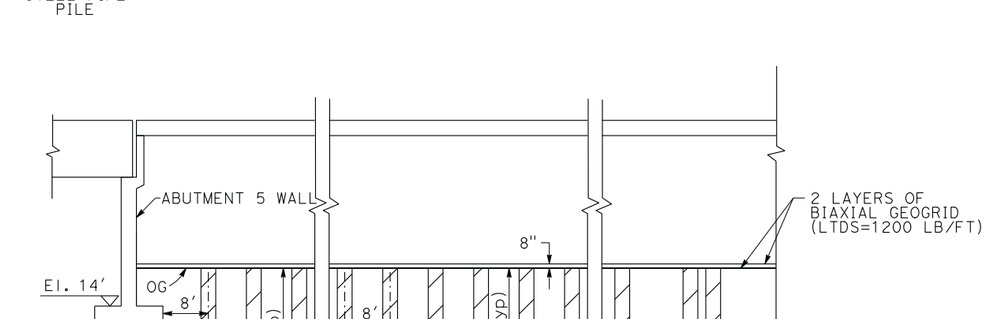

SECTION B-B

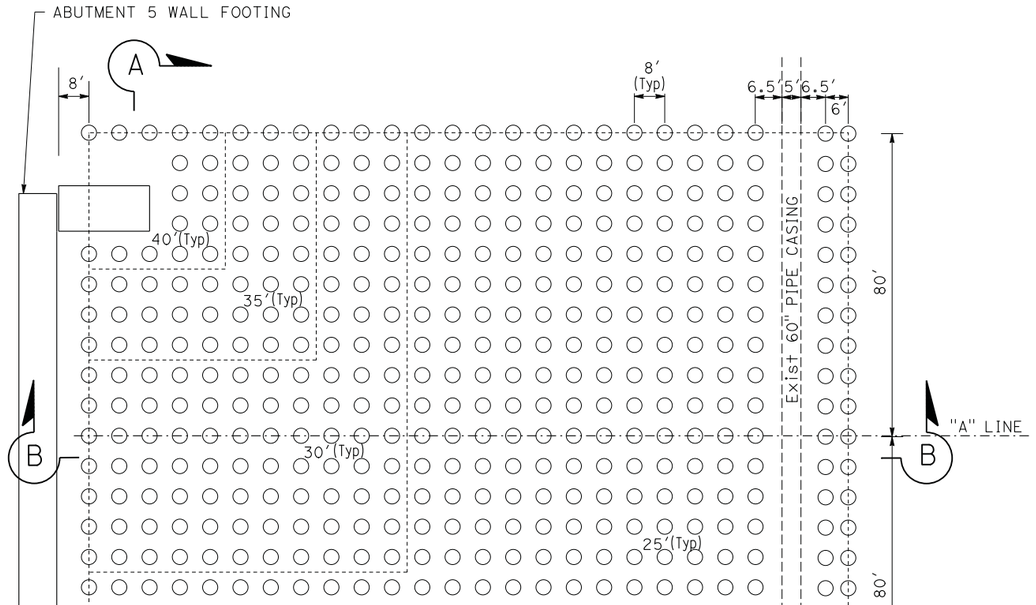

NORTH SIDE OF SAN ANTONIO BRIDGE

CONSTRUCTION DETAILS

RAMMED AGGREGATE COLUMNS

NO SCALE

C-57

BY	DATE REVISED
BL	5/13/14
BL	2/7/14
BL	4/30/12

BIANCA LIU — CALCULATED-DESIGNED BY
TOM CONNELL — CHECKED BY
MICHAEL LOHMAN — CONSULTANT FUNCTIONAL SUPERVISOR

STATE OF CALIFORNIA - DEPARTMENT OF TRANSPORTATION
Caltrans

LAST REVISION 00-00-00
DATE PLOTTED => 30-SEP-2014
TIME PLOTTED => 14:12

BORDER LAST REVISED 7/2/2010
USERNAME => acroskey
DGN FILE => 0400000735ga057.dgn
RELATIVE BORDER SCALE IS IN INCHES 0 1 2 3
UNIT 0716
PROJECT NUMBER & PHASE 04000007351

Dist	COUNTY	ROUTE	POST MILES TOTAL PROJECT	SHEET No.	TOTAL SHEETS
04	Mrn, Son	101	26.8/27.6, 0.0/2.0	109	710

REGISTERED CIVIL ENGINEER — DATE 06/30/14

8-18-14
PLANS APPROVAL DATE

REGISTERED PROFESSIONAL ENGINEER — S. D. DANSKY — No. 60220 — Exp. 6/30/16 — CIVIL — STATE OF CALIFORNIA

THE STATE OF CALIFORNIA OR ITS OFFICERS OR AGENTS SHALL NOT BE RESPONSIBLE FOR THE ACCURACY OR COMPLETENESS OF SCANNED COPIES OF THIS PLAN SHEET.

MARK THOMAS & CO., INC.
3000 OAK RD, SUITE 650
WALNUT CREEK, CA 94597

TRANSPORTATION AUTHORITY OF MARIN
750 LINDARO ST, SUITE 200
SAN RAFAEL, CA 94901

NOTE:

FOR ACCURATE RIGHT OF WAY DATA, CONTACT RIGHT OF WAY ENGINEERING AT THE DISTRICT OFFICE.

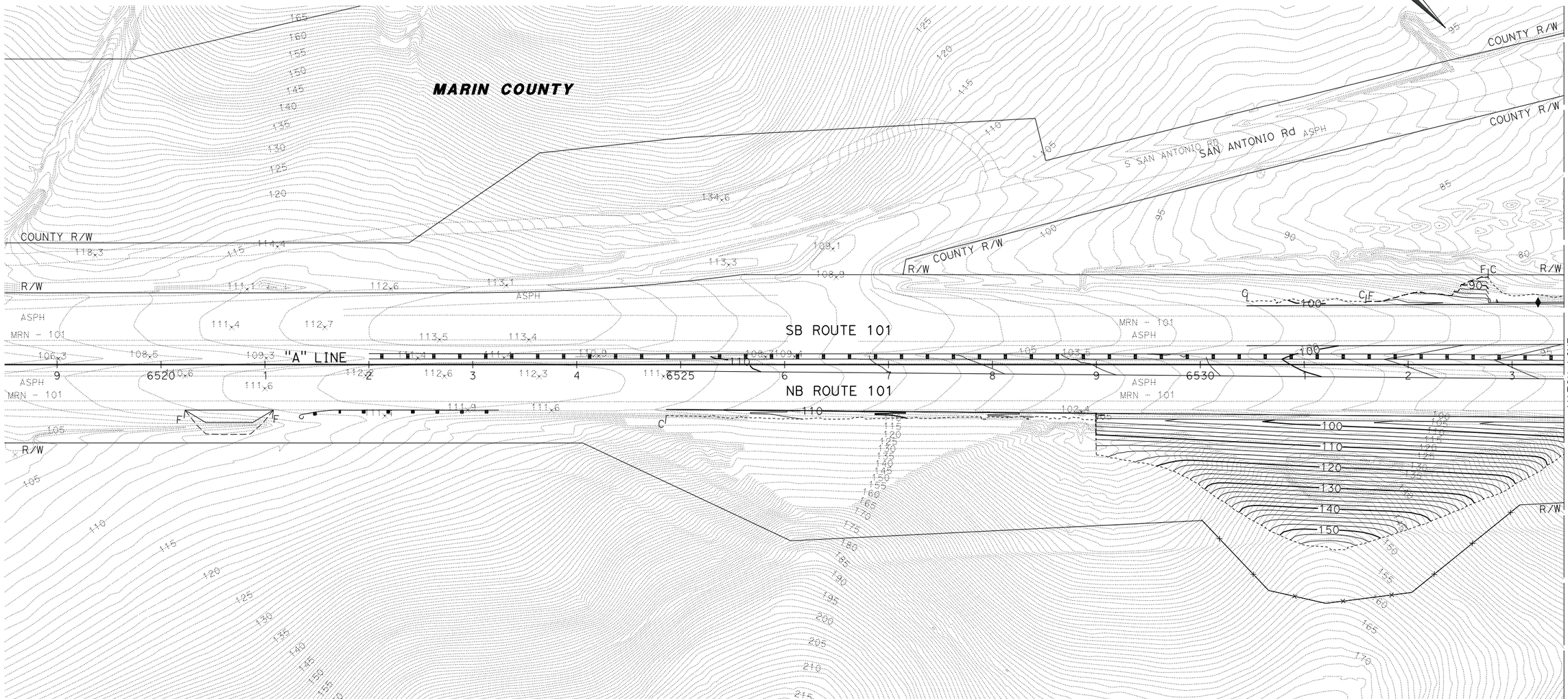

CONTOUR GRADING

SCALE: 1" = 50'

G-1

APPROVED FOR CONTOUR GRADING WORK ONLY

REVISED BY	CB	CB	CB	CHRIS BRIANA
DATE REVISED	4/30/12	2/7/14	5/13/14	TOM CONNELL
CALCULATED-DESIGNED BY				MICHAEL LOHMAN
CHECKED BY				

CONSULTANT FUNCTIONAL SUPERVISOR

STATE OF CALIFORNIA - DEPARTMENT OF TRANSPORTATION

Caltrans

LAST REVISION 00-00-00
DATE PLOTTED => 30-SEP-2014
TIME PLOTTED => 14:13

BORDER LAST REVISED 7/2/2010

USERNAME => acroskey
DGN FILE => 0400000735ha001.dgn

RELATIVE BORDER SCALE IS IN INCHES 0 1 2 3

UNIT 0716

PROJECT NUMBER & PHASE 04000007351

NOTE:

FOR ACCURATE RIGHT OF WAY DATA, CONTACT RIGHT OF WAY ENGINEERING AT THE DISTRICT OFFICE.

Dist	COUNTY	ROUTE	POST MILES TOTAL PROJECT	SHEET No.	TOTAL SHEETS
04	Mrn, Son	101	26.8/27.6, 0.0/2.0	110	710

REGISTERED CIVIL ENGINEER — 06/30/14 DATE

8-18-14
PLANS APPROVAL DATE

REGISTERED PROFESSIONAL ENGINEER — S. D. DANSKY No. 60220 Exp. 6/30/16 CIVIL — STATE OF CALIFORNIA

THE STATE OF CALIFORNIA OR ITS OFFICERS OR AGENTS SHALL NOT BE RESPONSIBLE FOR THE ACCURACY OR COMPLETENESS OF SCANNED COPIES OF THIS PLAN SHEET.

MARK THOMAS & CO., INC.
3000 OAK RD, SUITE 650
WALNUT CREEK, CA 94597

TRANSPORTATION AUTHORITY OF MARIN
750 LINDARO ST, SUITE 200
SAN RAFAEL, CA 94901

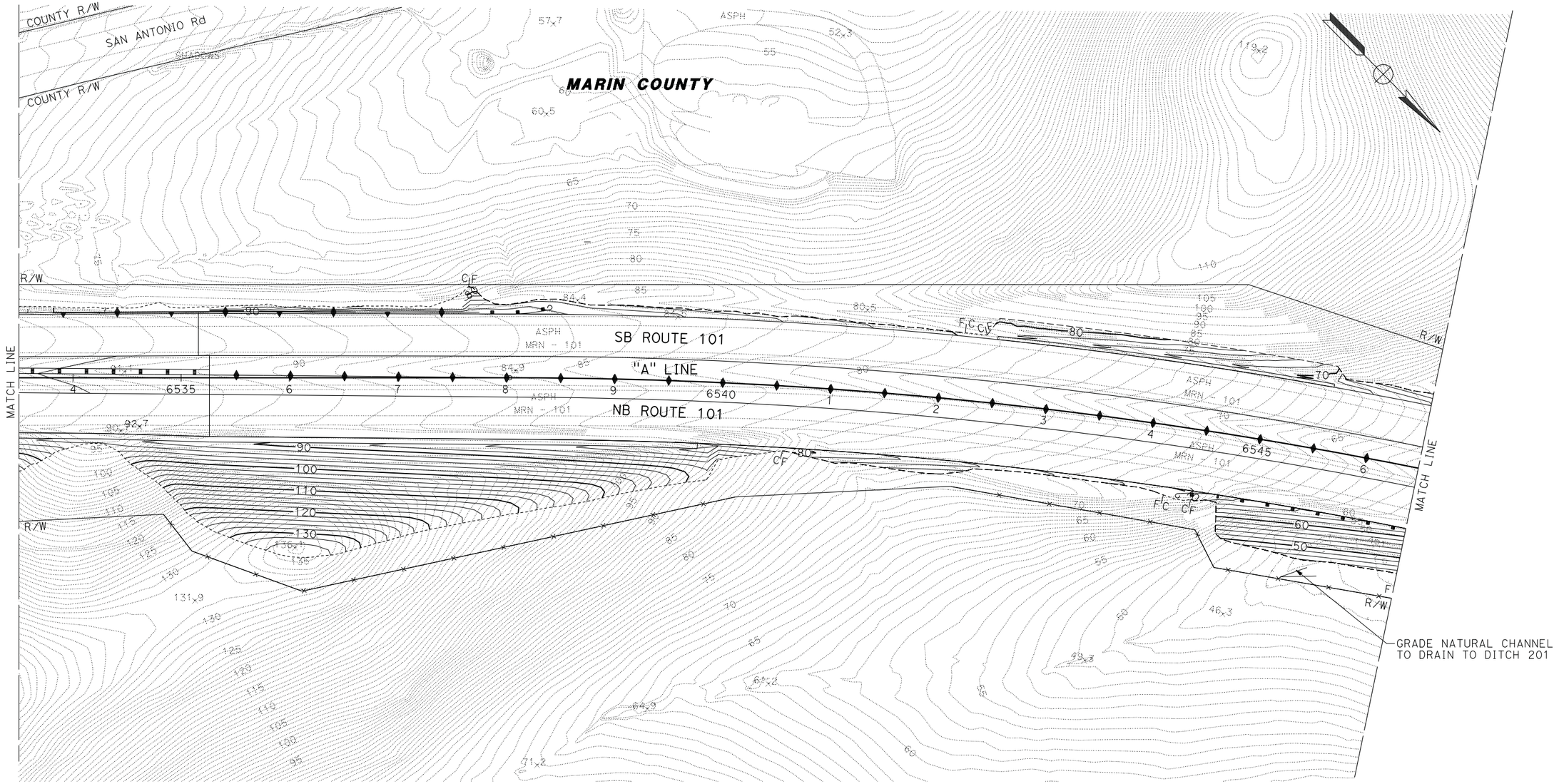

CONTOUR GRADING

SCALE: 1" = 50'

G-2

APPROVED FOR CONTOUR GRADING WORK ONLY

REVISED BY	DATE REVISED
CB	4/30/12
CB	2/7/14
CB	5/13/14

CALCULATED-DESIGNED BY
CHECKED BY
CHRIS BRIANA
TOM CONNELL

CONSULTANT FUNCTIONAL SUPERVISOR
MICHAEL LOHMAN

STATE OF CALIFORNIA - DEPARTMENT OF TRANSPORTATION
Caltrans

LAST REVISION 00-00-00
DATE PLOTTED => 30-SEP-2014
TIME PLOTTED => 14:13

BORDER LAST REVISED 7/2/2010
USERNAME => acroskey
DGN FILE => 0400000735ha002.dgn
RELATIVE BORDER SCALE IS IN INCHES 0 1 2 3
UNIT 0716
PROJECT NUMBER & PHASE 04000007351

NOTE:

FOR ACCURATE RIGHT OF WAY DATA, CONTACT RIGHT OF WAY ENGINEERING AT THE DISTRICT OFFICE.

Dist	COUNTY	ROUTE	POST MILES TOTAL PROJECT	SHEET No.	TOTAL SHEETS
04	Mrn, Son	101	26.8/27.6, 0.0/2.0	111	710

REGISTERED CIVIL ENGINEER — 06/30/14 DATE

8-18-14
PLANS APPROVAL DATE

REGISTERED PROFESSIONAL ENGINEER — S. D. DANSKY No. 60220 Exp. 6/30/16 CIVIL — STATE OF CALIFORNIA

THE STATE OF CALIFORNIA OR ITS OFFICERS OR AGENTS SHALL NOT BE RESPONSIBLE FOR THE ACCURACY OR COMPLETENESS OF SCANNED COPIES OF THIS PLAN SHEET.

MARK THOMAS & CO., INC.
3000 OAK RD, SUITE 650
WALNUT CREEK, CA 94597

TRANSPORTATION AUTHORITY OF MARIN
750 LINDARO ST, SUITE 200
SAN RAFAEL, CA 94901

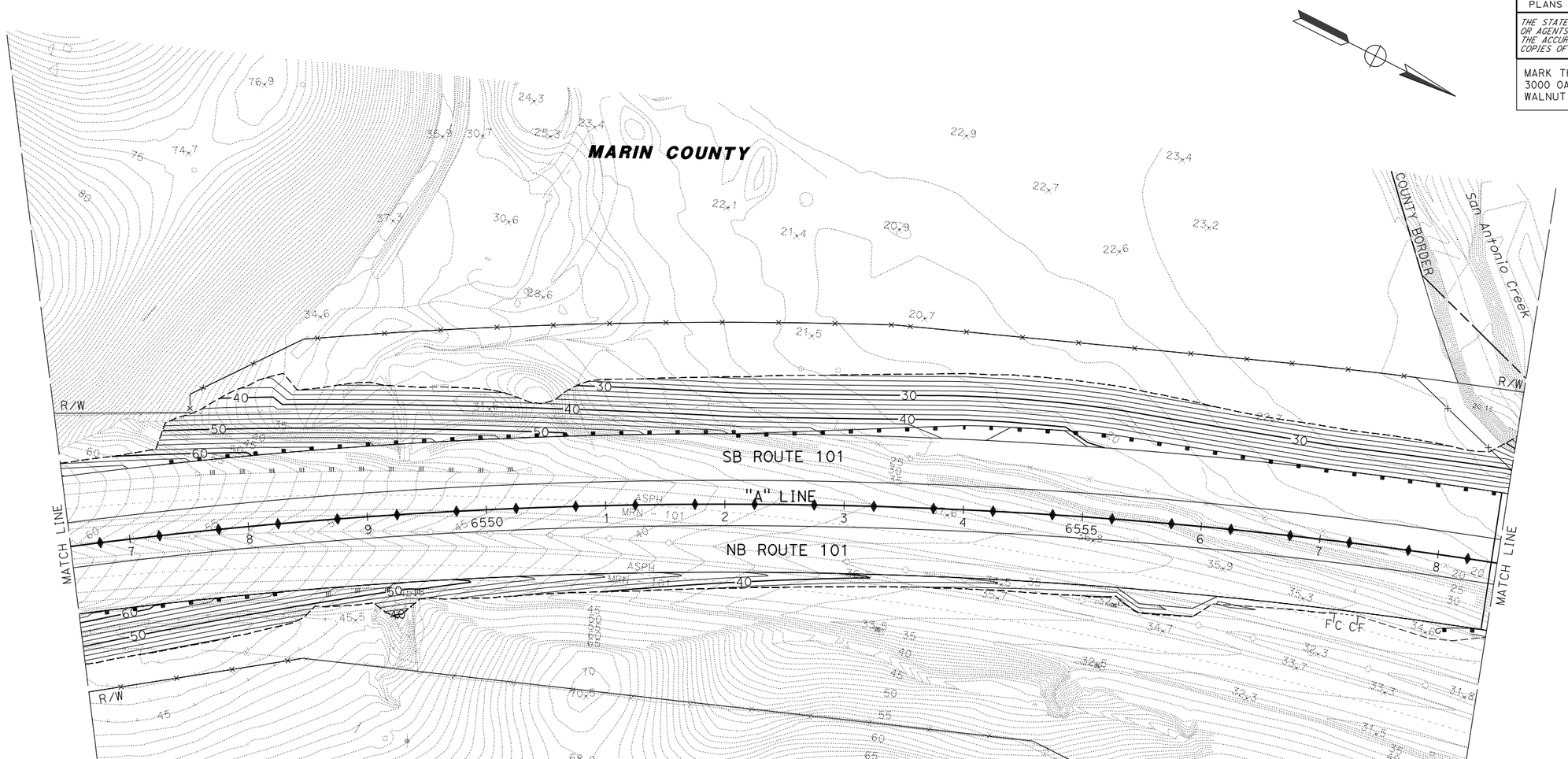

CONTOUR GRADING

SCALE: 1" = 50'

G-3

APPROVED FOR CONTOUR GRADING WORK ONLY

STATE OF CALIFORNIA - DEPARTMENT OF TRANSPORTATION
Caltrans

CONSULTANT FUNCTIONAL SUPERVISOR: MICHAEL LOHMAN

CALCULATED-DESIGNED BY: CHRIS BRIANA
CHECKED BY: TOM CONNELL

REVISED BY	DATE REVISED
CB	4/30/12
CB	2/7/14
CB	5/13/14

LAST REVISION 00-00-00
DATE PLOTTED => 30-SEP-2014
TIME PLOTTED => 14:13

BORDER LAST REVISED 7/2/2010

USERNAME => acroskey
DGN FILE => 0400000735ha003.dgn

RELATIVE BORDER SCALE IS IN INCHES 0 1 2 3

UNIT 0716

PROJECT NUMBER & PHASE 04000007351

Dist	COUNTY	ROUTE	POST MILES TOTAL PROJECT	SHEET No.	TOTAL SHEETS
04	Mrn, Son	101	26.8/27.6, 0.0/2.0	112	710

REGISTERED CIVIL ENGINEER — 06/30/14 DATE

8-18-14
PLANS APPROVAL DATE

REGISTERED PROFESSIONAL ENGINEER — S. D. DANSKY No. 60220 Exp. 6/30/16 CIVIL — STATE OF CALIFORNIA

THE STATE OF CALIFORNIA OR ITS OFFICERS OR AGENTS SHALL NOT BE RESPONSIBLE FOR THE ACCURACY OR COMPLETENESS OF SCANNED COPIES OF THIS PLAN SHEET.

MARK THOMAS & CO., INC.
3000 OAK RD, SUITE 650
WALNUT CREEK, CA 94597

TRANSPORTATION AUTHORITY OF MARIN
750 LINDARO ST, SUITE 200
SAN RAFAEL, CA 94901

NOTE:

FOR ACCURATE RIGHT OF WAY DATA, CONTACT RIGHT OF WAY ENGINEERING AT THE DISTRICT OFFICE.

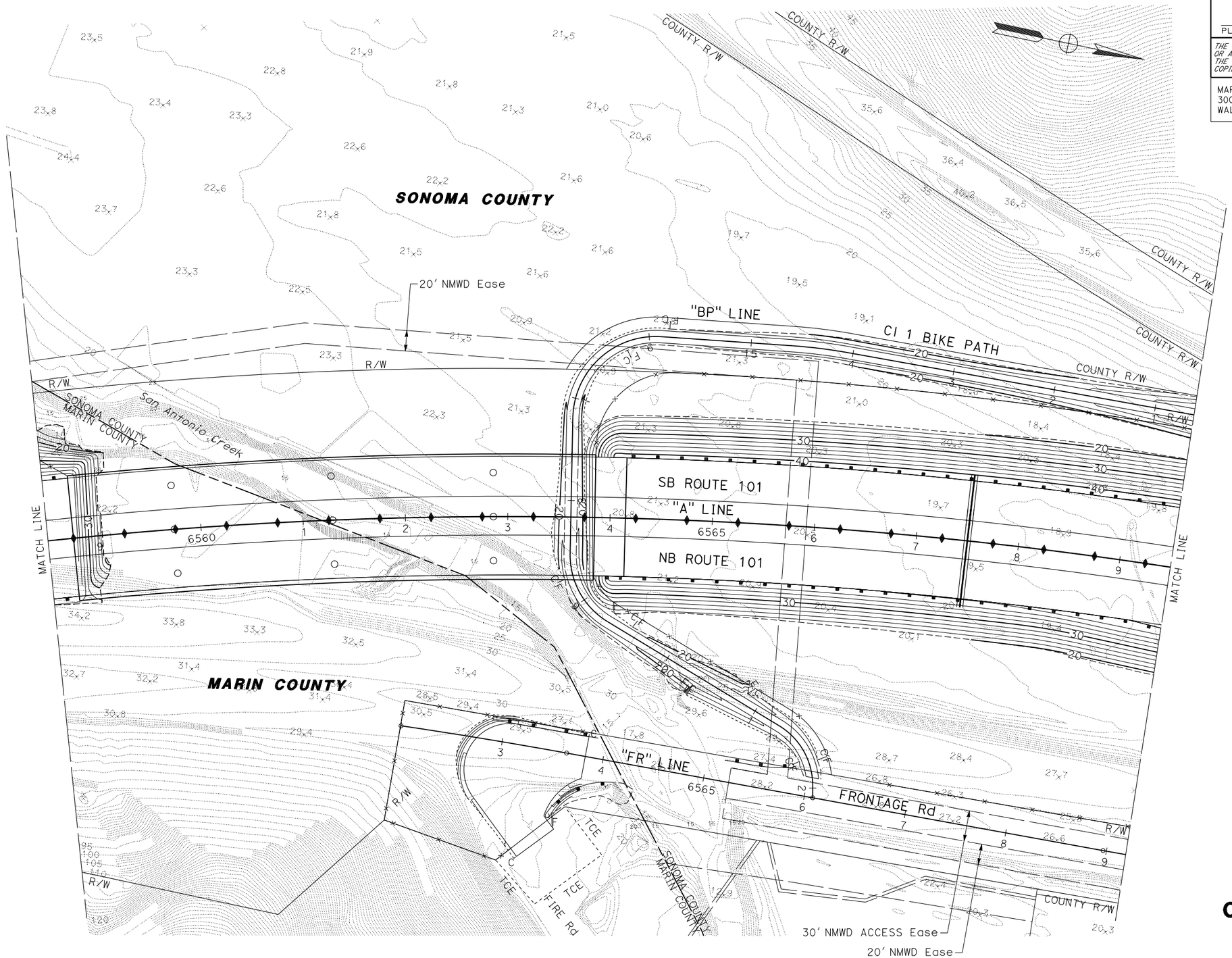

APPROVED FOR CONTOUR GRADING WORK ONLY

CONTOUR GRADING

SCALE: 1" = 50'

G-4

	REVISED BY	CHRIS BRIANA
CB	DATE REVISED	TOM CONNELL
5/13/14	CALCULATED-DESIGNED BY	
2/7/14	CHECKED BY	
CB	CONSULTANT FUNCTIONAL SUPERVISOR	MICHAEL LOHMAN
4/30/12	STATE OF CALIFORNIA - DEPARTMENT OF TRANSPORTATION	Caltrans

LAST REVISION 00-00-00 — DATE PLOTTED => 30-SEP-2014 — TIME PLOTTED => 14:13

BORDER LAST REVISED 7/2/2010 | USERNAME => acroskey | DGN FILE => 0400000735ha004.dgn | RELATIVE BORDER SCALE IS IN INCHES 0 1 2 3 | UNIT 0716 | PROJECT NUMBER & PHASE 04000007351

Dist	COUNTY	ROUTE	POST MILES TOTAL PROJECT	SHEET No.	TOTAL SHEETS
04	Mrn, Son	101	26.8/27.6, 0.0/2.0	113	710

REGISTERED CIVIL ENGINEER 06/30/14 DATE

8-18-14
PLANS APPROVAL DATE

REGISTERED PROFESSIONAL ENGINEER S. D. DANSKY No. 60220 Exp. 6/30/16 CIVIL STATE OF CALIFORNIA

THE STATE OF CALIFORNIA OR ITS OFFICERS OR AGENTS SHALL NOT BE RESPONSIBLE FOR THE ACCURACY OR COMPLETENESS OF SCANNED COPIES OF THIS PLAN SHEET.

MARK THOMAS & CO., INC.
3000 OAK RD, SUITE 650
WALNUT CREEK, CA 94597

TRANSPORTATION AUTHORITY OF MARIN
750 LINDARO ST, SUITE 200
SAN RAFAEL, CA 94901

NOTE:

FOR ACCURATE RIGHT OF WAY DATA, CONTACT RIGHT OF WAY ENGINEERING AT THE DISTRICT OFFICE.

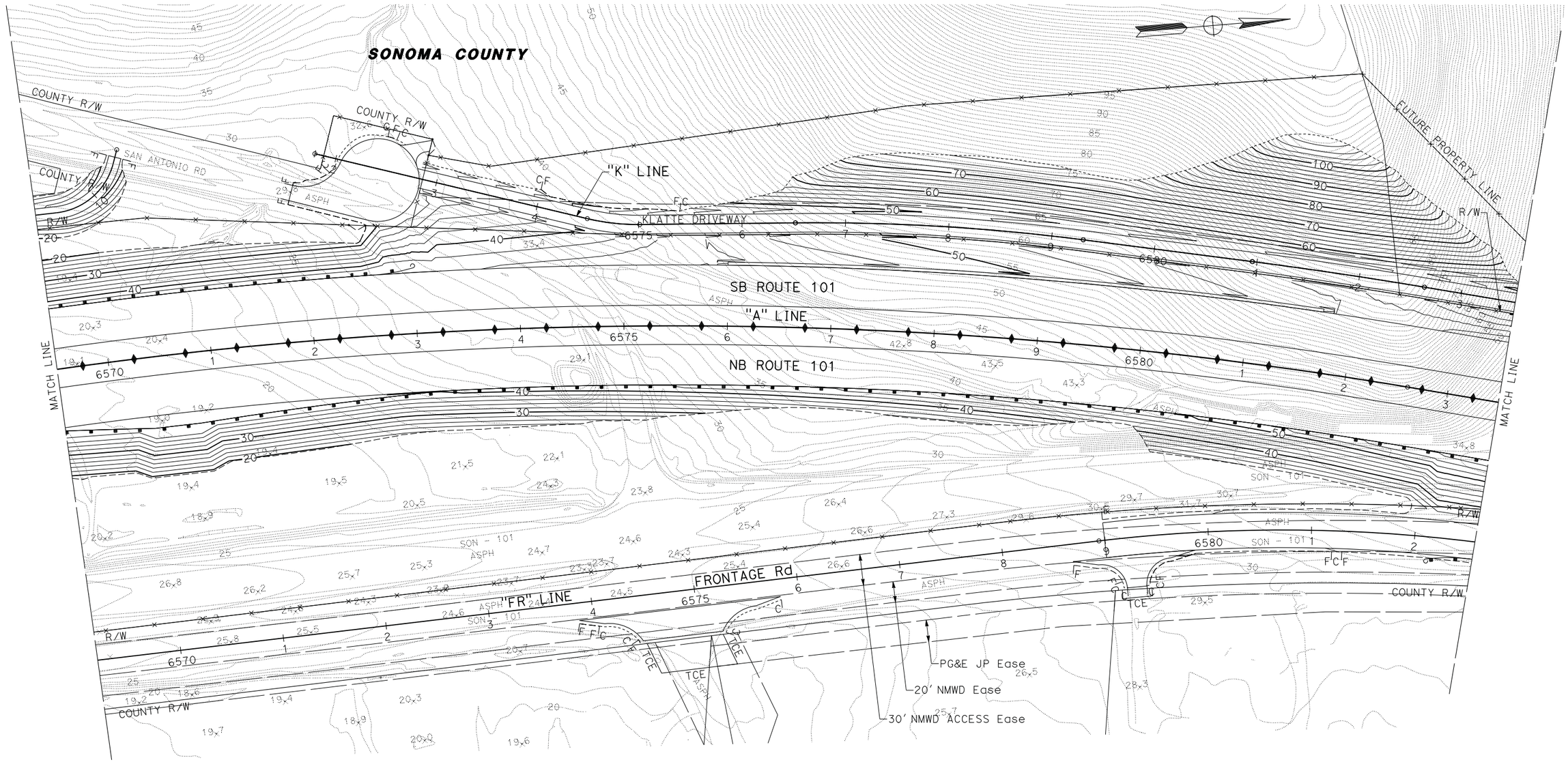

CONTOUR GRADING

SCALE: 1" = 50'

G-5

APPROVED FOR CONTOUR GRADING WORK ONLY

REVISED BY	DATE REVISED
CB	4/30/12
CB	2/7/14
CB	5/13/14

CHRIS BRIANA
TOM CONNELL

CALCULATED-DESIGNED BY
CHECKED BY

CONSULTANT FUNCTIONAL SUPERVISOR
MICHAEL LOHMAN

STATE OF CALIFORNIA - DEPARTMENT OF TRANSPORTATION
Caltrans

LAST REVISION 00-00-00
DATE PLOTTED => 30-SEP-2014
TIME PLOTTED => 14:13

NOTE:

FOR ACCURATE RIGHT OF WAY DATA, CONTACT RIGHT OF WAY ENGINEERING AT THE DISTRICT OFFICE.

Dist	COUNTY	ROUTE	POST MILES TOTAL PROJECT	SHEET No.	TOTAL SHEETS
04	Mrn, Son	101	26.8/27.6, 0.0/2.0	114	710

06/30/14
REGISTERED CIVIL ENGINEER DATE

8-18-14
PLANS APPROVAL DATE

REGISTERED PROFESSIONAL ENGINEER
S. D. DANSKY
No. 60220
Exp. 6/30/16
CIVIL
STATE OF CALIFORNIA

THE STATE OF CALIFORNIA OR ITS OFFICERS OR AGENTS SHALL NOT BE RESPONSIBLE FOR THE ACCURACY OR COMPLETENESS OF SCANNED COPIES OF THIS PLAN SHEET.

MARK THOMAS & CO., INC.
3000 OAK RD, SUITE 650
WALNUT CREEK, CA 94597

TRANSPORTATION AUTHORITY OF MARIN
750 LINDARO ST, SUITE 200
SAN RAFAEL, CA 94901

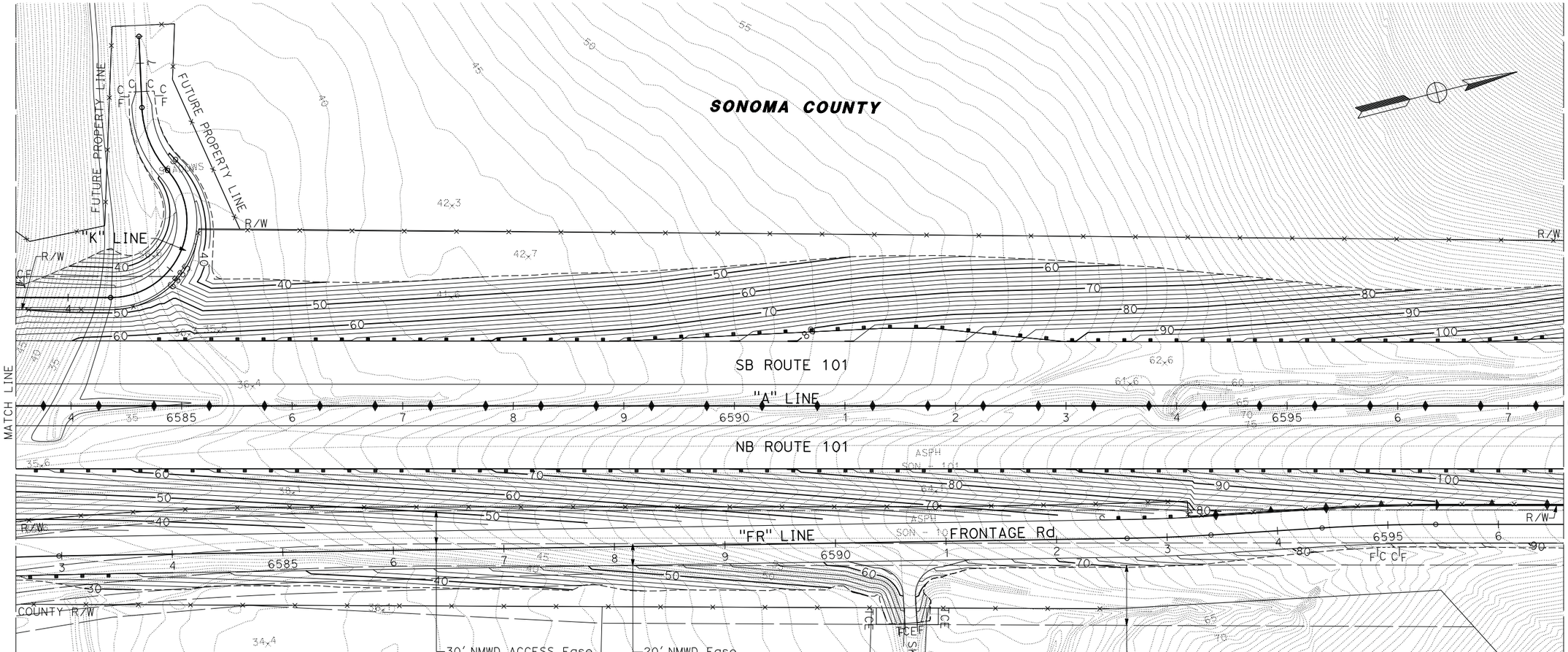

CONTOUR GRADING

SCALE: 1" = 50'

G-6

APPROVED FOR CONTOUR GRADING WORK ONLY

REVISED BY	DATE REVISED
CB	4/30/12
CB	2/7/14
CB	5/13/14

CALCULATED-DESIGNED BY: CHRIS BRIANA
CHECKED BY: TOM CONNELL
CONSULTANT FUNCTIONAL SUPERVISOR: MICHAEL LOHMAN
STATE OF CALIFORNIA - DEPARTMENT OF TRANSPORTATION
Caltrans

LAST REVISION 00-00-00
DATE PLOTTED => 30-SEP-2014
TIME PLOTTED => 14:13

BORDER LAST REVISED 7/2/2010
USERNAME => acroskey
DGN FILE => 0400000735ha006.dgn
RELATIVE BORDER SCALE IS IN INCHES 0 1 2 3
UNIT 0716
PROJECT NUMBER & PHASE 04000007351

Dist	COUNTY	ROUTE	POST MILES TOTAL PROJECT	SHEET No.	TOTAL SHEETS
04	Mrn, Son	101	26.8/27.6, 0.0/2.0	115	710

REGISTERED CIVIL ENGINEER 06/30/14 DATE

8-18-14
PLANS APPROVAL DATE

REGISTERED PROFESSIONAL ENGINEER S. D. DANSKY No. 60220 Exp. 6/30/16 CIVIL STATE OF CALIFORNIA

THE STATE OF CALIFORNIA OR ITS OFFICERS OR AGENTS SHALL NOT BE RESPONSIBLE FOR THE ACCURACY OR COMPLETENESS OF SCANNED COPIES OF THIS PLAN SHEET.

MARK THOMAS & CO., INC.
3000 OAK RD, SUITE 650
WALNUT CREEK, CA 94597

TRANSPORTATION AUTHORITY OF MARIN
750 LINDARO ST, SUITE 200
SAN RAFAEL, CA 94901

NOTE:

FOR ACCURATE RIGHT OF WAY DATA, CONTACT RIGHT OF WAY ENGINEERING AT THE DISTRICT OFFICE.

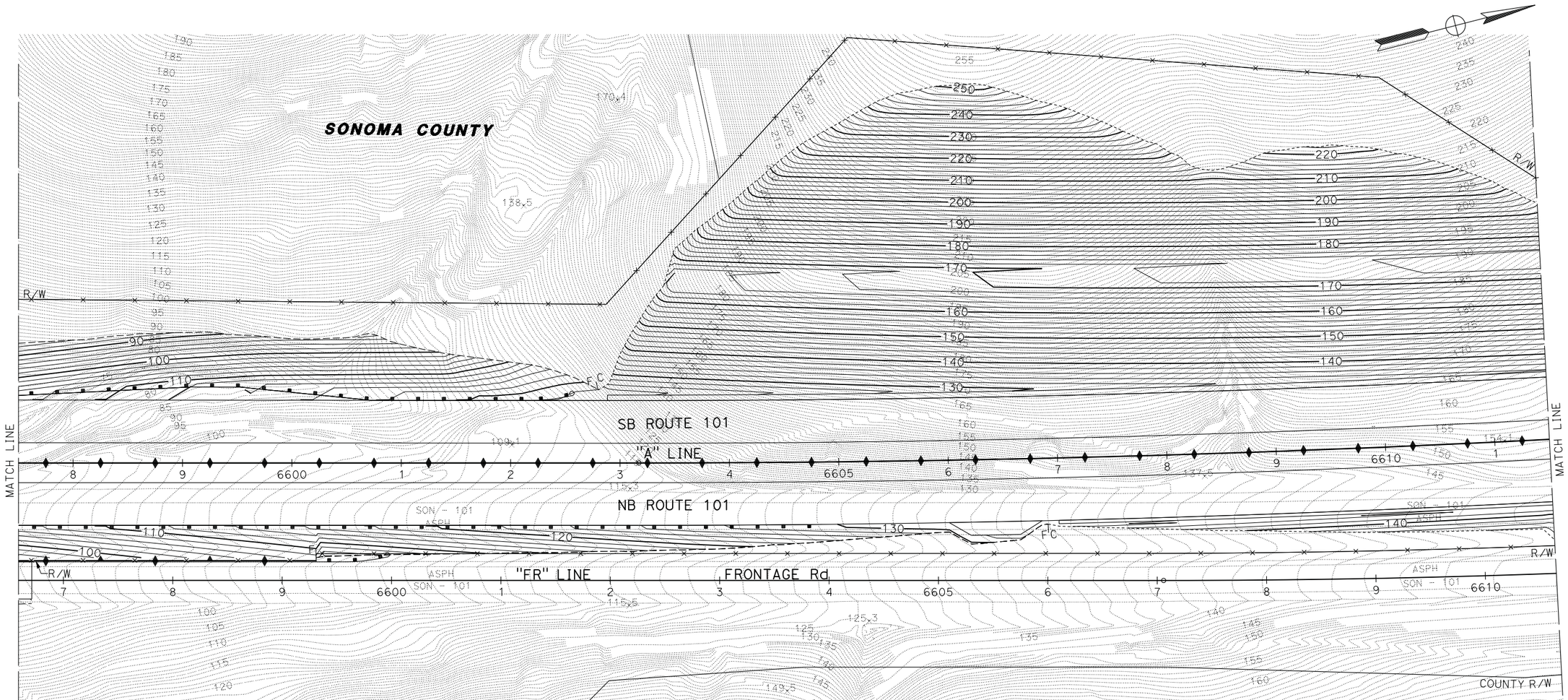

CONTOUR GRADING

SCALE: 1" = 50'

G-7

APPROVED FOR CONTOUR GRADING WORK ONLY

REVISED BY	DATE REVISED
CB	4/30/12
CB	2/7/14
CB	5/13/14

CHRIS BRIANA
TOM CONNELL

CALCULATED-DESIGNED BY
CHECKED BY

CONSULTANT FUNCTIONAL SUPERVISOR
MICHAEL LOHMAN

STATE OF CALIFORNIA - DEPARTMENT OF TRANSPORTATION
Caltrans

DATE PLOTTED => 30-SEP-2014
TIME PLOTTED => 14:13
LAST REVISION 00-00-00

NOTE:

FOR ACCURATE RIGHT OF WAY DATA, CONTACT RIGHT OF WAY ENGINEERING AT THE DISTRICT OFFICE.

Dist	COUNTY	ROUTE	POST MILES TOTAL PROJECT	SHEET No.	TOTAL SHEETS
04	Mrn, Son	101	26.8/27.6, 0.0/2.0	116	710

REGISTERED CIVIL ENGINEER — DATE 06/30/14

8-18-14
PLANS APPROVAL DATE

REGISTERED PROFESSIONAL ENGINEER — S. D. DANSKY No. 60220 Exp. 6/30/16 CIVIL — STATE OF CALIFORNIA

THE STATE OF CALIFORNIA OR ITS OFFICERS OR AGENTS SHALL NOT BE RESPONSIBLE FOR THE ACCURACY OR COMPLETENESS OF SCANNED COPIES OF THIS PLAN SHEET.

MARK THOMAS & CO., INC.
3000 OAK RD, SUITE 650
WALNUT CREEK, CA 94597

TRANSPORTATION AUTHORITY OF MARIN
750 LINDARO ST, SUITE 200
SAN RAFAEL, CA 94901

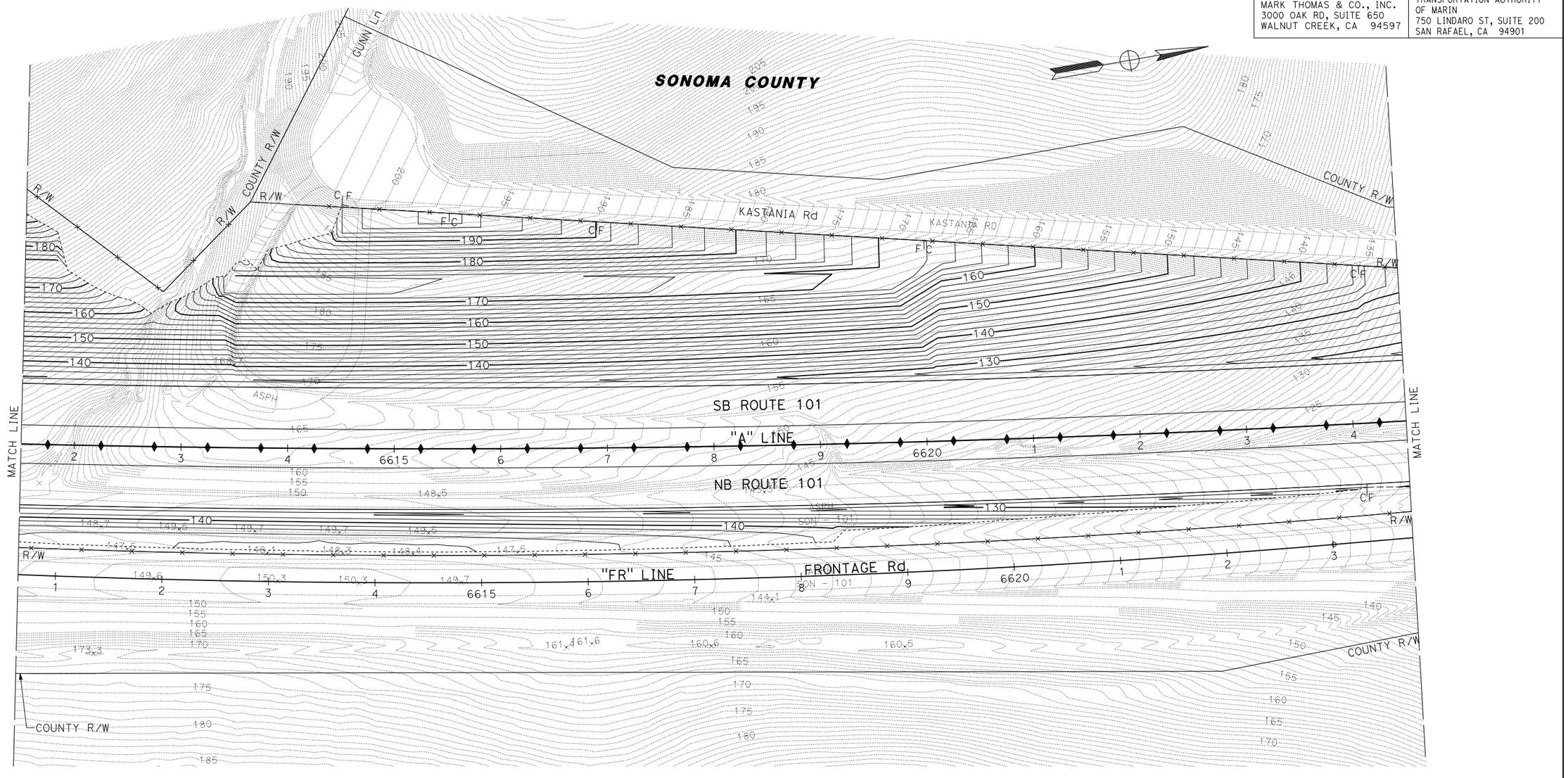

CONTOUR GRADING

SCALE: 1" = 50'

G-8

APPROVED FOR CONTOUR GRADING WORK ONLY

REVISED BY	CB	CB	CB	CB
DATE REVISED	4/30/12	2/7/14	5/13/14	
CALCULATED-DESIGNED BY	CHRIS BRIANA			
CHECKED BY	TOM CONNELL			
CONSULTANT FUNCTIONAL SUPERVISOR	MICHAEL LOHMAN			

STATE OF CALIFORNIA - DEPARTMENT OF TRANSPORTATION

Caltrans

LAST REVISION 00-00-00
DATE PLOTTED => 30-SEP-2014
TIME PLOTTED => 14:13

BORDER LAST REVISED 7/2/2010 | USERNAME => acroskey | DGN FILE => 0400000735hq008.dgn | RELATIVE BORDER SCALE IS IN INCHES 0 1 2 3 | UNIT 0716 | PROJECT NUMBER & PHASE 04000007351

Dist	COUNTY	ROUTE	POST MILES TOTAL PROJECT	SHEET No.	TOTAL SHEETS
04	Mrn, Son	101	26.8/27.6, 0.0/2.0	117	710

REGISTERED CIVIL ENGINEER — 06/30/14 DATE

8-18-14
PLANS APPROVAL DATE

REGISTERED PROFESSIONAL ENGINEER
S. D. DANSKY
No. 60220
Exp. 6/30/16
CIVIL
STATE OF CALIFORNIA

THE STATE OF CALIFORNIA OR ITS OFFICERS OR AGENTS SHALL NOT BE RESPONSIBLE FOR THE ACCURACY OR COMPLETENESS OF SCANNED COPIES OF THIS PLAN SHEET.

MARK THOMAS & CO., INC.
3000 OAK RD, SUITE 650
WALNUT CREEK, CA 94597

TRANSPORTATION AUTHORITY OF MARIN
750 LINDARO ST, SUITE 200
SAN RAFAEL, CA 94901

NOTE:

FOR ACCURATE RIGHT OF WAY DATA, CONTACT RIGHT OF WAY ENGINEERING AT THE DISTRICT OFFICE.

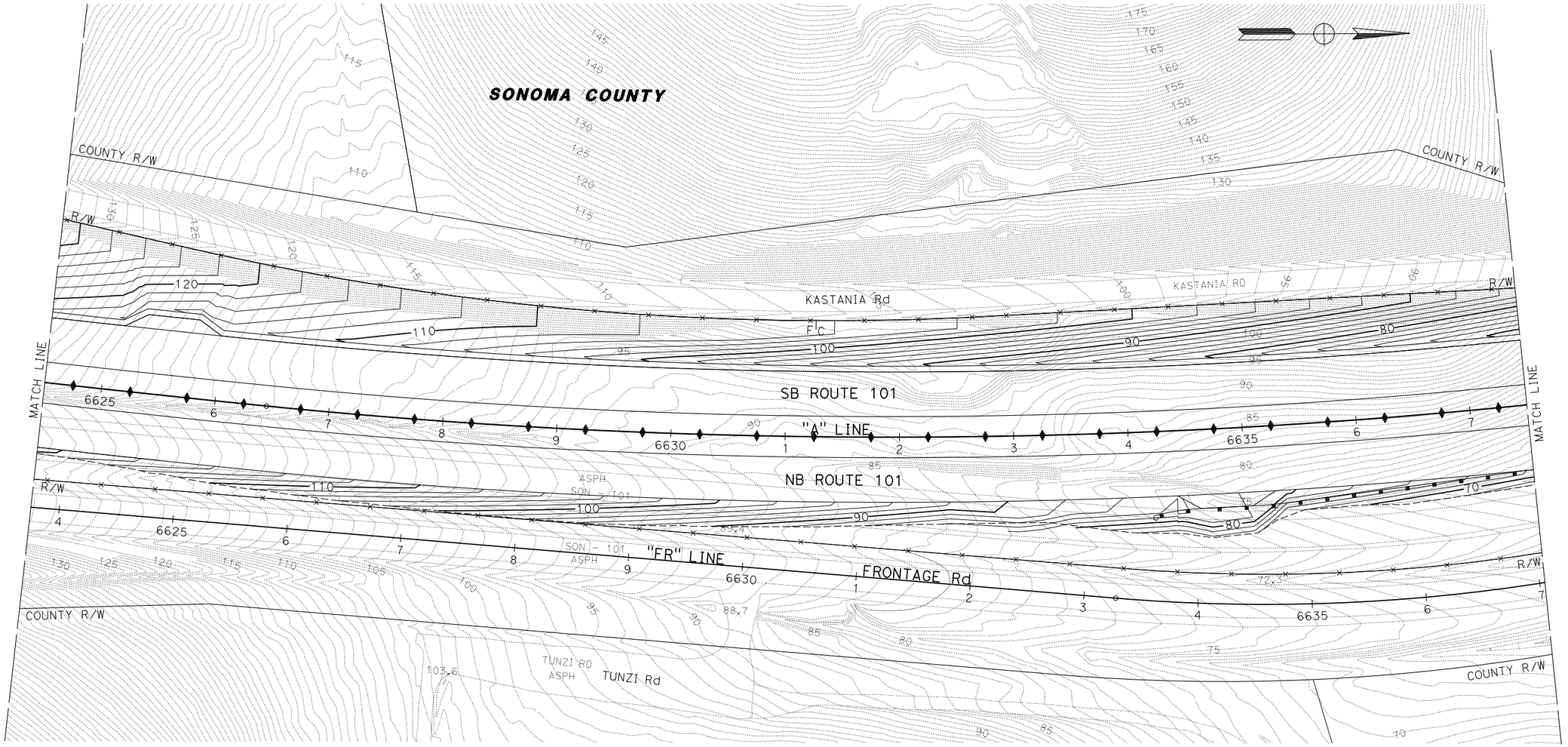

CONTOUR GRADING

SCALE: 1" = 50'

G-9

APPROVED FOR CONTOUR GRADING WORK ONLY

REVISED BY	DATE REVISED
CB	4/30/12
CB	2/7/14
CB	5/13/14

CALCULATED-DESIGNED BY: CHRIS BRIANA
CHECKED BY: TOM CONNELL
CONSULTANT FUNCTIONAL SUPERVISOR: MICHAEL LOHMAN
STATE OF CALIFORNIA - DEPARTMENT OF TRANSPORTATION
Caltrans

LAST REVISION 00-00-00
DATE PLOTTED => 30-SEP-2014
TIME PLOTTED => 14:13

BORDER LAST REVISED 7/2/2010
USERNAME => acroskey
DGN FILE => 0400000735ha009.dgn
RELATIVE BORDER SCALE IS IN INCHES 0 1 2 3
UNIT 0716
PROJECT NUMBER & PHASE 04000007351

Dist	COUNTY	ROUTE	POST MILES TOTAL PROJECT	SHEET No.	TOTAL SHEETS
04	Mrn, Son	101	26.8/27.6, 0.0/2.0	118	710

REGISTERED CIVIL ENGINEER — 06/30/14 DATE

8-18-14
PLANS APPROVAL DATE

REGISTERED PROFESSIONAL ENGINEER — S. D. DANSKY No. 60220 Exp. 6/30/16 CIVIL — STATE OF CALIFORNIA

THE STATE OF CALIFORNIA OR ITS OFFICERS OR AGENTS SHALL NOT BE RESPONSIBLE FOR THE ACCURACY OR COMPLETENESS OF SCANNED COPIES OF THIS PLAN SHEET.

MARK THOMAS & CO., INC.
3000 OAK RD, SUITE 650
WALNUT CREEK, CA 94597

TRANSPORTATION AUTHORITY OF MARIN
750 LINDARO ST, SUITE 200
SAN RAFAEL, CA 94901

REVISED BY	DATE REVISED
CB	4/30/12
CB	2/7/14
CB	5/13/14

CHRIS BRIANA — CALCULATED-DESIGNED BY
TOM CONNELL — CHECKED BY
MICHAEL LOHMAN — CONSULTANT FUNCTIONAL SUPERVISOR

STATE OF CALIFORNIA - DEPARTMENT OF TRANSPORTATION

NOTE:

FOR ACCURATE RIGHT OF WAY DATA, CONTACT RIGHT OF WAY ENGINEERING AT THE DISTRICT OFFICE.

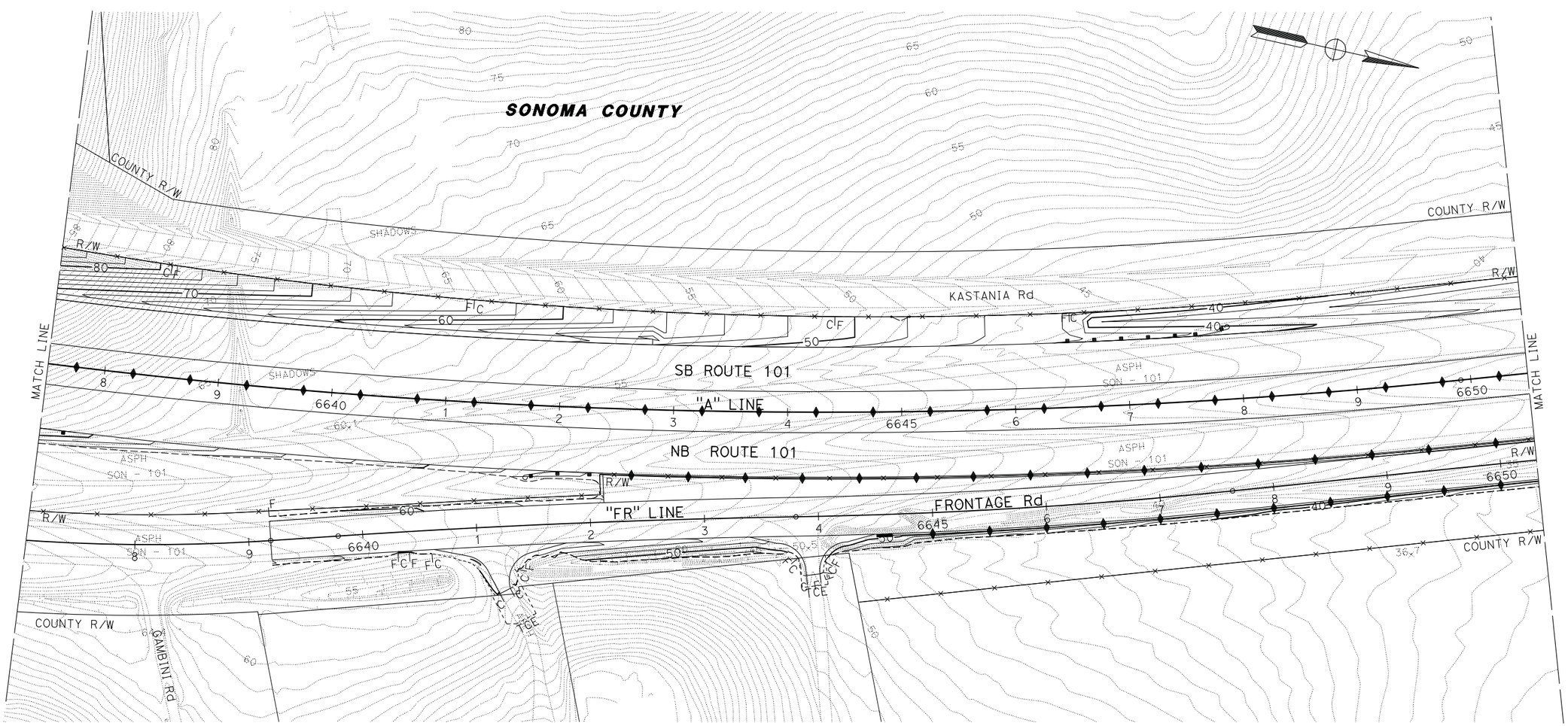

CONTOUR GRADING

SCALE: 1" = 50'

G-10

APPROVED FOR CONTOUR GRADING WORK ONLY

LAST REVISION 00-00-00
DATE PLOTTED => 30-SEP-2014
TIME PLOTTED => 14:13

BORDER LAST REVISED 7/2/2010
USERNAME => acroskey
DGN FILE => 0400000735ha010.dgn
RELATIVE BORDER SCALE IS IN INCHES 0 1 2 3
UNIT 0716
PROJECT NUMBER & PHASE 04000007351

NOTE:

FOR ACCURATE RIGHT OF WAY DATA, CONTACT RIGHT OF WAY ENGINEERING AT THE DISTRICT OFFICE.

Dist	COUNTY	ROUTE	POST MILES TOTAL PROJECT	SHEET No.	TOTAL SHEETS
04	Mrn, Son	101	26.8/27.6, 0.0/2.0	119	710

REGISTERED CIVIL ENGINEER — 06/30/14 DATE

8-18-14
PLANS APPROVAL DATE

REGISTERED PROFESSIONAL ENGINEER — S. D. DANSKY No. 60220 Exp. 6/30/16 CIVIL — STATE OF CALIFORNIA

THE STATE OF CALIFORNIA OR ITS OFFICERS OR AGENTS SHALL NOT BE RESPONSIBLE FOR THE ACCURACY OR COMPLETENESS OF SCANNED COPIES OF THIS PLAN SHEET.

MARK THOMAS & CO., INC.
3000 OAK RD, SUITE 650
WALNUT CREEK, CA 94597

TRANSPORTATION AUTHORITY OF MARIN
750 LINDARO ST, SUITE 200
SAN RAFAEL, CA 94901

DATE REVISED	REVISED BY	CHRIS BRIANA	CALCULATED-DESIGNED BY
4/30/12	CB	TOM CONNELL	CHECKED BY
2/7/14	CB		
5/13/14	CB		

CONSULTANT FUNCTIONAL SUPERVISOR: MICHAEL LOHMAN

STATE OF CALIFORNIA - DEPARTMENT OF TRANSPORTATION — Caltrans

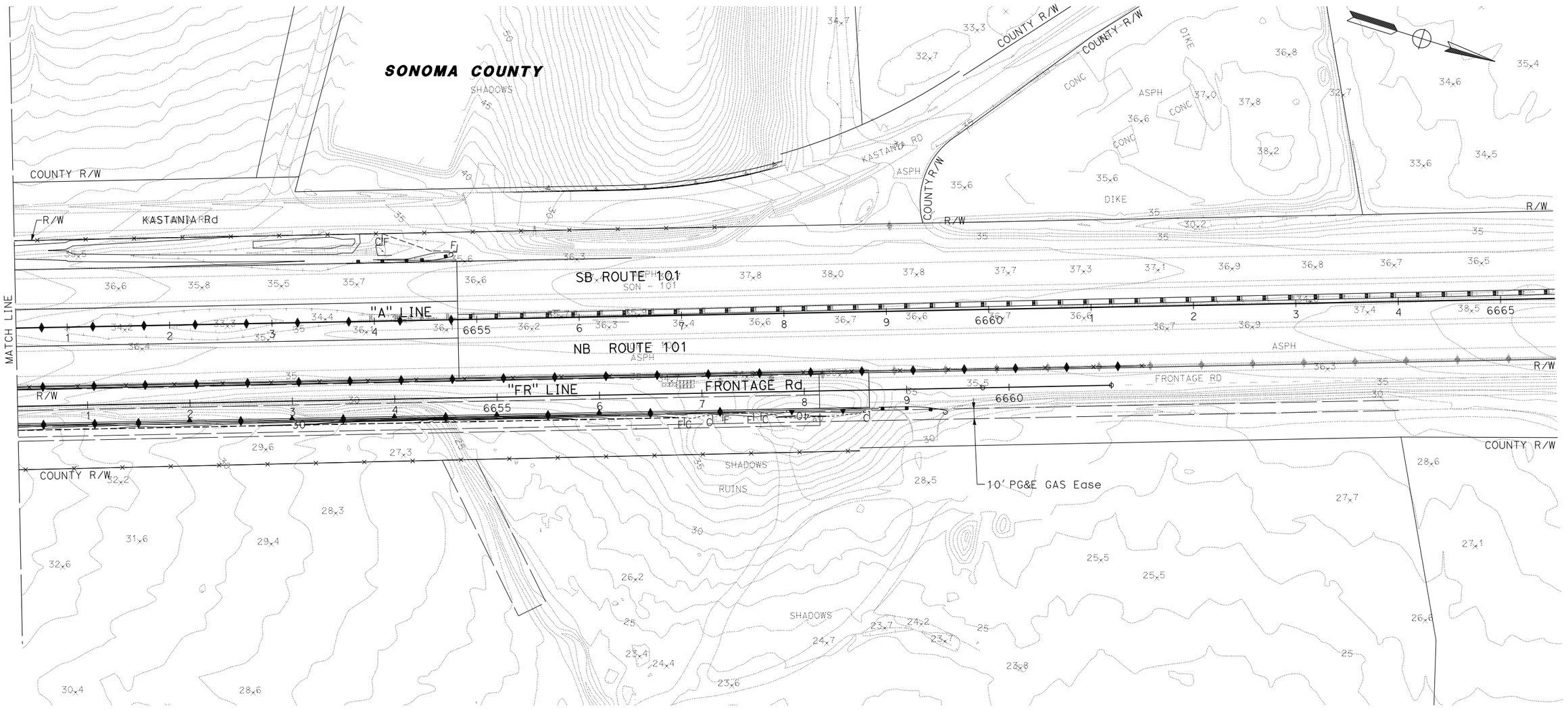

CONTOUR GRADING

SCALE: 1" = 50'

G-11

APPROVED FOR CONTOUR GRADING WORK ONLY

LAST REVISION 00-00-00 | DATE PLOTTED => 30-SEP-2014 | TIME PLOTTED => 14:13

BORDER LAST REVISED 7/2/2010 | USERNAME => acroskey | DGN FILE => 0400000735ha011.dgn | RELATIVE BORDER SCALE IS IN INCHES 0 1 2 3 | UNIT 0716 | PROJECT NUMBER & PHASE 04000007351

NOTES:

1. Exist DRAINAGE LOCATIONS ARE Approx ONLY. VERIFY LOCATION AND ELEVATION BEFORE MODIFYING Exist DRAINAGE FACILITIES.
2. FOR INLETS ADJACENT TO DIKE OR CURBS, TG IS AT THE FLOW LINE OF THE GUTTER. FOR FIELD INLETS OUTSIDE OF ROADBED, TG IS AT THE CENTER OF GRATE.
3. FOR ACCURATE RIGHT OF WAY DATA, CONTACT RIGHT OF WAY ENGINEERING AT THE DISTRICT OFFICE.
4. FOR BIOFILTRATION SWALE DETAILS SEE SHEETS DD-3 THRU DD-8.
5. FOR DITCH DEPTHS AND PROFILES SEE SHEETS DP-56 THRU DP-91.
6. GUTTER DEPRESSIONS SHALL BE PCC PER STD PLAN D78B. PCC SHALL BE 8" THICK. THE USE OF ISOLATION JOINTS IS NOT REQUIRED.

LEGEND:

- (No.) DRAINAGE SYSTEM NUMBER
- (a) DRAINAGE ITEM
- ALTERNATIVE FLARED END SECTION
- ROCK SLOPE PROTECTION (RSP)
- DITCH FLOW LINE
- BIOFILTRATION SWALES (SEE DRAINAGE DETAILS)
- GRADE TO DRAIN

ABBREVIATIONS:

HMAOD	HMA OVERSIDE DRAIN
Rem	REMOVE
SO	SIDE OPENING
w/	WITH
SGD	STANDARD GUTTER DEPRESSION
SCSP	SACKED-CONCRETE SLOPE PROTECTION
DI (G2)	DRAINAGE INLET (TYPE G2)
DI (GDO)	DRAINAGE INLET (TYPE GDO)
DI (GT4)	DRAINAGE INLET (TYPE GT4)

Dist	COUNTY	ROUTE	POST MILES TOTAL PROJECT	SHEET No.	TOTAL SHEETS
04	Mrn, Son	101	26.8/27.6, 0.0/2.0	120	710

06/30/14
REGISTERED CIVIL ENGINEER — DATE

8-18-14
PLANS APPROVAL DATE

REGISTERED PROFESSIONAL ENGINEER — S. D. DANSKY — No. 60220 — Exp. 6/30/16 — CIVIL — STATE OF CALIFORNIA

THE STATE OF CALIFORNIA OR ITS OFFICERS OR AGENTS SHALL NOT BE RESPONSIBLE FOR THE ACCURACY OR COMPLETENESS OF SCANNED COPIES OF THIS PLAN SHEET.

MARK THOMAS & CO., INC.
3000 OAK RD, SUITE 650
WALNUT CREEK, CA 94597

TRANSPORTATION AUTHORITY OF MARIN
750 LINDARO ST, SUITE 200
SAN RAFAEL, CA 94901

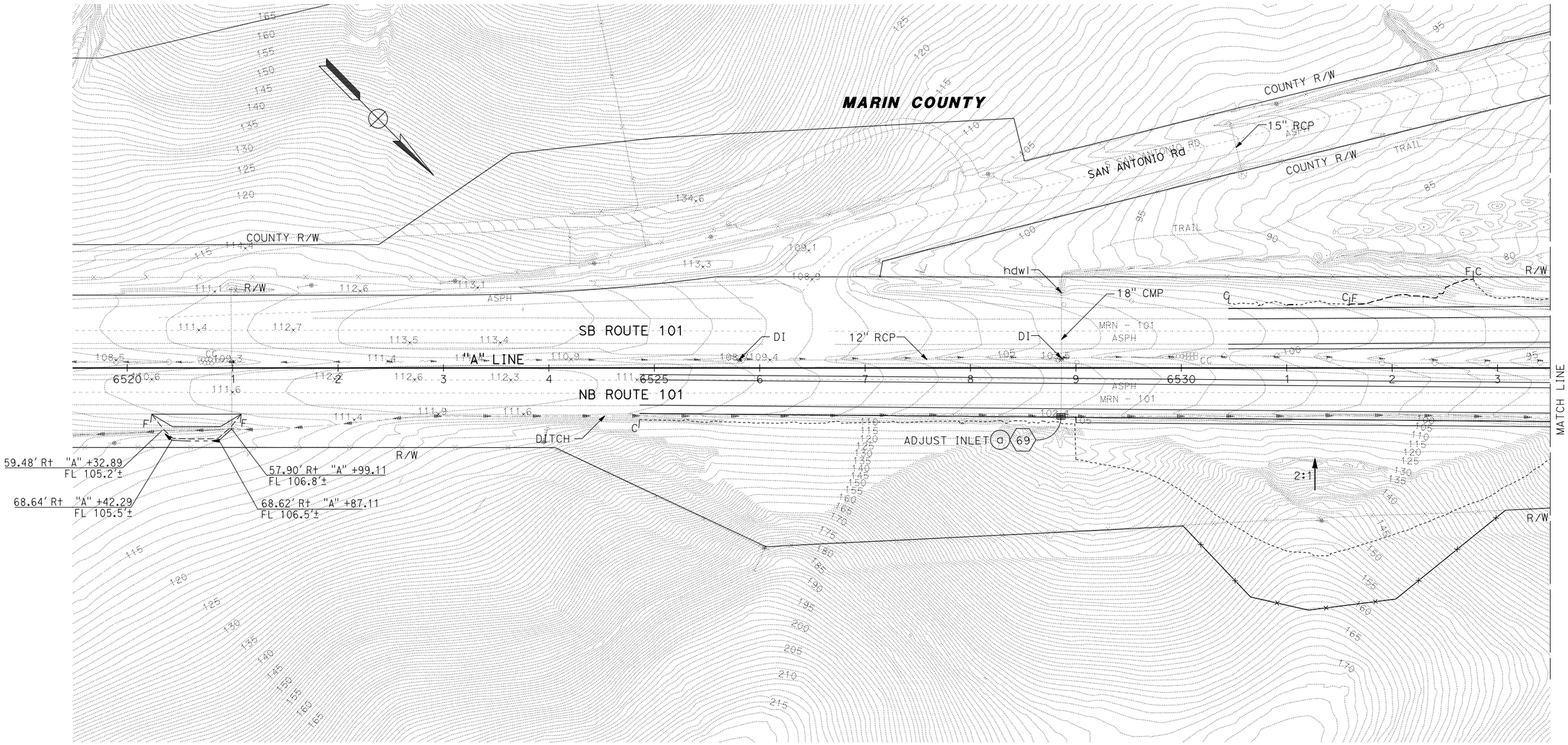

DRAINAGE PLAN

SCALE: 1" = 50'

D-1

APPROVED FOR DRAINAGE WORK ONLY

CB	5/13/14	CHRIS BRIANA	CALCULATED-DESIGNED BY	STATE OF CALIFORNIA - DEPARTMENT OF TRANSPORTATION	Caltrans
CB	2/7/14	TOM CONNELL	CHECKED BY		
CB	4/30/12	MICHAEL LOHMAN	CONSULTANT FUNCTIONAL SUPERVISOR		
REVISED BY	DATE REVISED				

LAST REVISION 00-00-00 | DATE PLOTTED => 30-SEP-2014 | TIME PLOTTED => 14:13

BORDER LAST REVISED 7/2/2010 | USERNAME => acroskey | DGN FILE => 04000007351a001.dgn | RELATIVE BORDER SCALE IS IN INCHES 0 1 2 3 | UNIT 0716 | PROJECT NUMBER & PHASE 04000007351

Dist	COUNTY	ROUTE	POST MILES TOTAL PROJECT	SHEET No.	TOTAL SHEETS
04	Mrn, Son	101	26.8/27.6, 0.0/2.0	121	710

REGISTERED CIVIL ENGINEER — 06/30/14 DATE

8-18-14
PLANS APPROVAL DATE

REGISTERED PROFESSIONAL ENGINEER — S. D. DANSKY No. 60220 Exp. 6/30/16 CIVIL — STATE OF CALIFORNIA

THE STATE OF CALIFORNIA OR ITS OFFICERS OR AGENTS SHALL NOT BE RESPONSIBLE FOR THE ACCURACY OR COMPLETENESS OF SCANNED COPIES OF THIS PLAN SHEET.

MARK THOMAS & CO., INC.
3000 OAK RD, SUITE 650
WALNUT CREEK, CA 94597

TRANSPORTATION AUTHORITY OF MARIN
750 LINDARO ST, SUITE 200
SAN RAFAEL, CA 94901

DATE REVISED	REVISED BY
4/30/12	CB
2/7/14	CB
5/13/14	CB

CALCULATED-DESIGNED BY: CHRIS BRIANA
CHECKED BY: TOM CONNELL
CONSULTANT FUNCTIONAL SUPERVISOR: MICHAEL LOHMAN
STATE OF CALIFORNIA - DEPARTMENT OF TRANSPORTATION

NOTE:

FOR ACCURATE RIGHT OF WAY DATA, CONTACT RIGHT OF WAY ENGINEERING AT THE DISTRICT OFFICE.

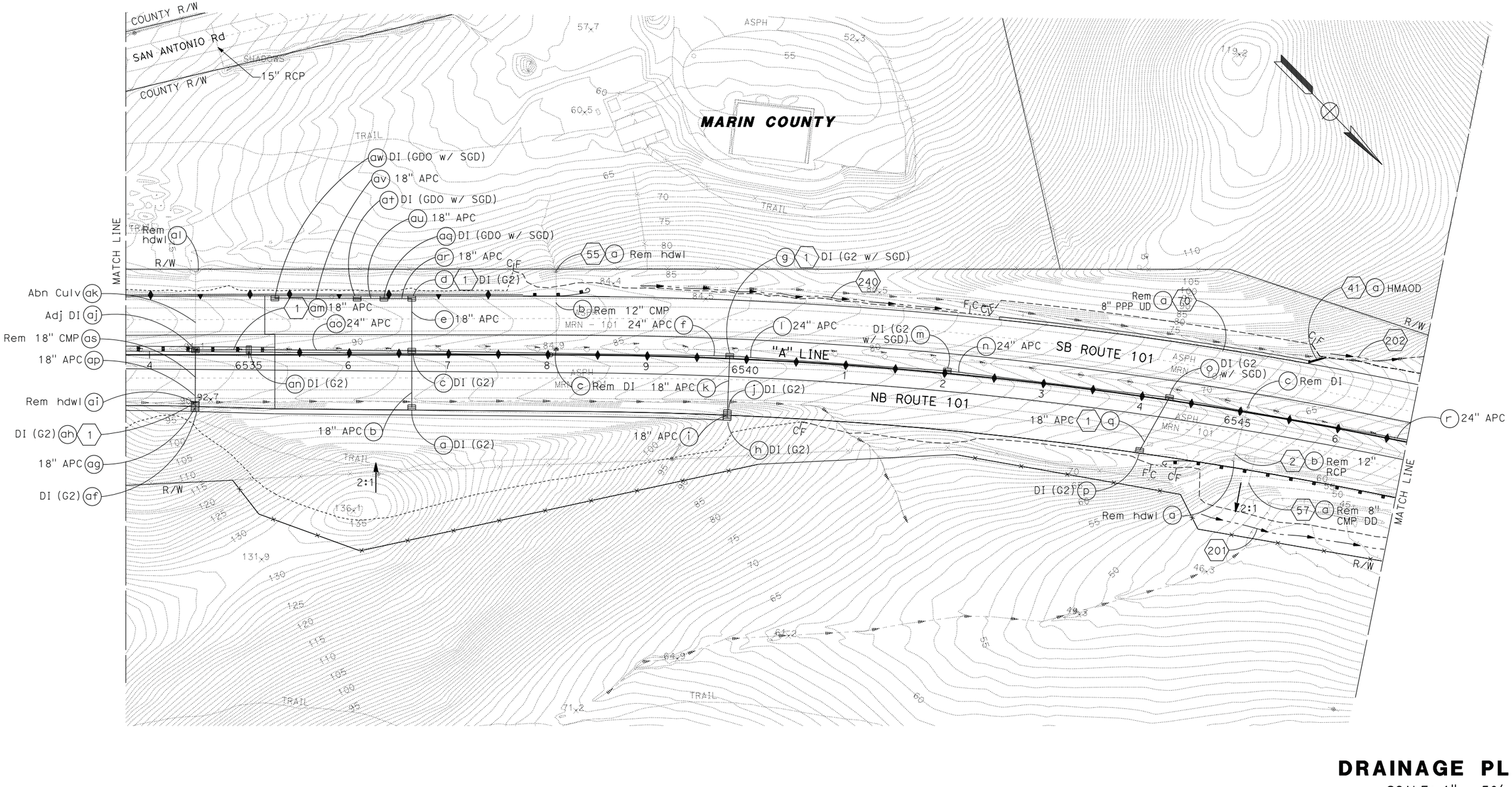

DRAINAGE PLAN

SCALE: 1" = 50'

D-2

APPROVED FOR DRAINAGE WORK ONLY

LAST REVISION 00-00-00
DATE PLOTTED => 30-SEP-2014
TIME PLOTTED => 14:13

BORDER LAST REVISED 7/2/2010 | USERNAME => acroskey | DGN FILE => 0400000735ia002.dgn | RELATIVE BORDER SCALE IS IN INCHES 0 1 2 3 | UNIT 0716 | PROJECT NUMBER & PHASE 04000007351

Dist	COUNTY	ROUTE	POST MILES TOTAL PROJECT	SHEET No.	TOTAL SHEETS
04	Mrn, Son	101	26.8/27.6, 0.0/2.0	122	710

REGISTERED CIVIL ENGINEER 06/30/14 DATE

8-18-14
PLANS APPROVAL DATE

REGISTERED PROFESSIONAL ENGINEER S. D. DANSKY No. 60220 Exp. 6/30/16 CIVIL STATE OF CALIFORNIA

THE STATE OF CALIFORNIA OR ITS OFFICERS OR AGENTS SHALL NOT BE RESPONSIBLE FOR THE ACCURACY OR COMPLETENESS OF SCANNED COPIES OF THIS PLAN SHEET.

MARK THOMAS & CO., INC.
3000 OAK RD, SUITE 650
WALNUT CREEK, CA 94597

TRANSPORTATION AUTHORITY OF MARIN
750 LINDARO ST, SUITE 200
SAN RAFAEL, CA 94901

NOTE:

FOR ACCURATE RIGHT OF WAY DATA, CONTACT RIGHT OF WAY ENGINEERING AT THE DISTRICT OFFICE.

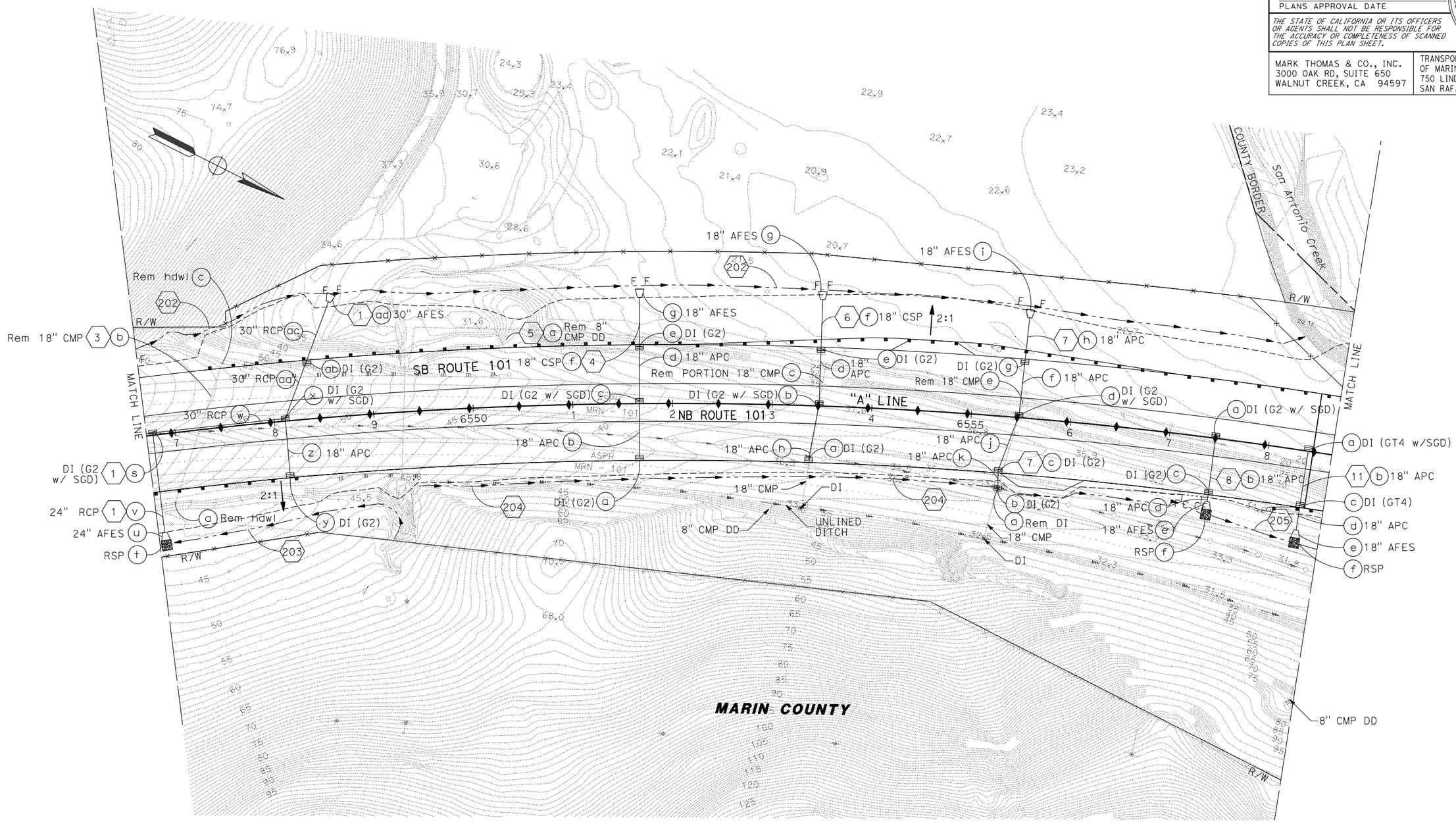

DRAINAGE PLAN

SCALE: 1" = 50'

D-3

APPROVED FOR DRAINAGE WORK ONLY

STATE OF CALIFORNIA - DEPARTMENT OF TRANSPORTATION
Caltrans

CONSULTANT FUNCTIONAL SUPERVISOR: MICHAEL LOHMAN
CALCULATED-DESIGNED BY: CHRIS BRIANA
CHECKED BY: TOM CONNELL
REVISED BY: CB
DATE REVISED: 4/30/12
CB 2/7/14
CB 5/13/14

LAST REVISION 00-00-00
DATE PLOTTED => 30-SEP-2014
TIME PLOTTED => 14:13

DATE REVISED	REVISED BY	CHECKED BY	CALCULATED-DESIGNED BY
5/13/14	CB		
2/7/14	CB		
4/30/12	CB	TOM CONNELL	CHRIS BRIANA

CONSULTANT FUNCTIONAL SUPERVISOR: MICHAEL LOHMAN

STATE OF CALIFORNIA - DEPARTMENT OF TRANSPORTATION

Caltrans

NOTE:

FOR ACCURATE RIGHT OF WAY DATA, CONTACT RIGHT OF WAY ENGINEERING AT THE DISTRICT OFFICE.

Dist	COUNTY	ROUTE	POST MILES TOTAL PROJECT	SHEET No.	TOTAL SHEETS
04	Mrn, Son	101	26.8/27.6, 0.0/2.0	123	710

REGISTERED CIVIL ENGINEER — 06/30/14 DATE

8-18-14
PLANS APPROVAL DATE

REGISTERED PROFESSIONAL ENGINEER — S. D. DANSKY No. 60220 Exp. 6/30/16 CIVIL — STATE OF CALIFORNIA

THE STATE OF CALIFORNIA OR ITS OFFICERS OR AGENTS SHALL NOT BE RESPONSIBLE FOR THE ACCURACY OR COMPLETENESS OF SCANNED COPIES OF THIS PLAN SHEET.

MARK THOMAS & CO., INC.
3000 OAK RD, SUITE 650
WALNUT CREEK, CA 94597

TRANSPORTATION AUTHORITY OF MARIN
750 LINDARO ST, SUITE 200
SAN RAFAEL, CA 94901

APPROVED FOR DRAINAGE WORK ONLY

DRAINAGE PLAN

SCALE: 1" = 50'

D-4

LAST REVISION | DATE PLOTTED => 30-SEP-2014
00-00-00 | TIME PLOTTED => 14:13

BORDER LAST REVISED 7/2/2010 | USERNAME => acroskey | DGN FILE => 04000007351ia004.dgn | RELATIVE BORDER SCALE IS IN INCHES 0 1 2 3 | UNIT 0716 | PROJECT NUMBER & PHASE 04000007351

Dist	COUNTY	ROUTE	POST MILES TOTAL PROJECT	SHEET No.	TOTAL SHEETS
04	Mrn, Son	101	26.8/27.6, 0.0/2.0	124	710

REGISTERED CIVIL ENGINEER — 06/30/14 DATE

8-18-14
PLANS APPROVAL DATE

REGISTERED PROFESSIONAL ENGINEER — S. D. DANSKY No. 60220 Exp. 6/30/16 CIVIL — STATE OF CALIFORNIA

THE STATE OF CALIFORNIA OR ITS OFFICERS OR AGENTS SHALL NOT BE RESPONSIBLE FOR THE ACCURACY OR COMPLETENESS OF SCANNED COPIES OF THIS PLAN SHEET.

MARK THOMAS & CO., INC.
3000 OAK RD, SUITE 650
WALNUT CREEK, CA 94597

TRANSPORTATION AUTHORITY OF MARIN
750 LINDARO ST, SUITE 200
SAN RAFAEL, CA 94901

NOTE:

FOR ACCURATE RIGHT OF WAY DATA, CONTACT RIGHT OF WAY ENGINEERING AT THE DISTRICT OFFICE.

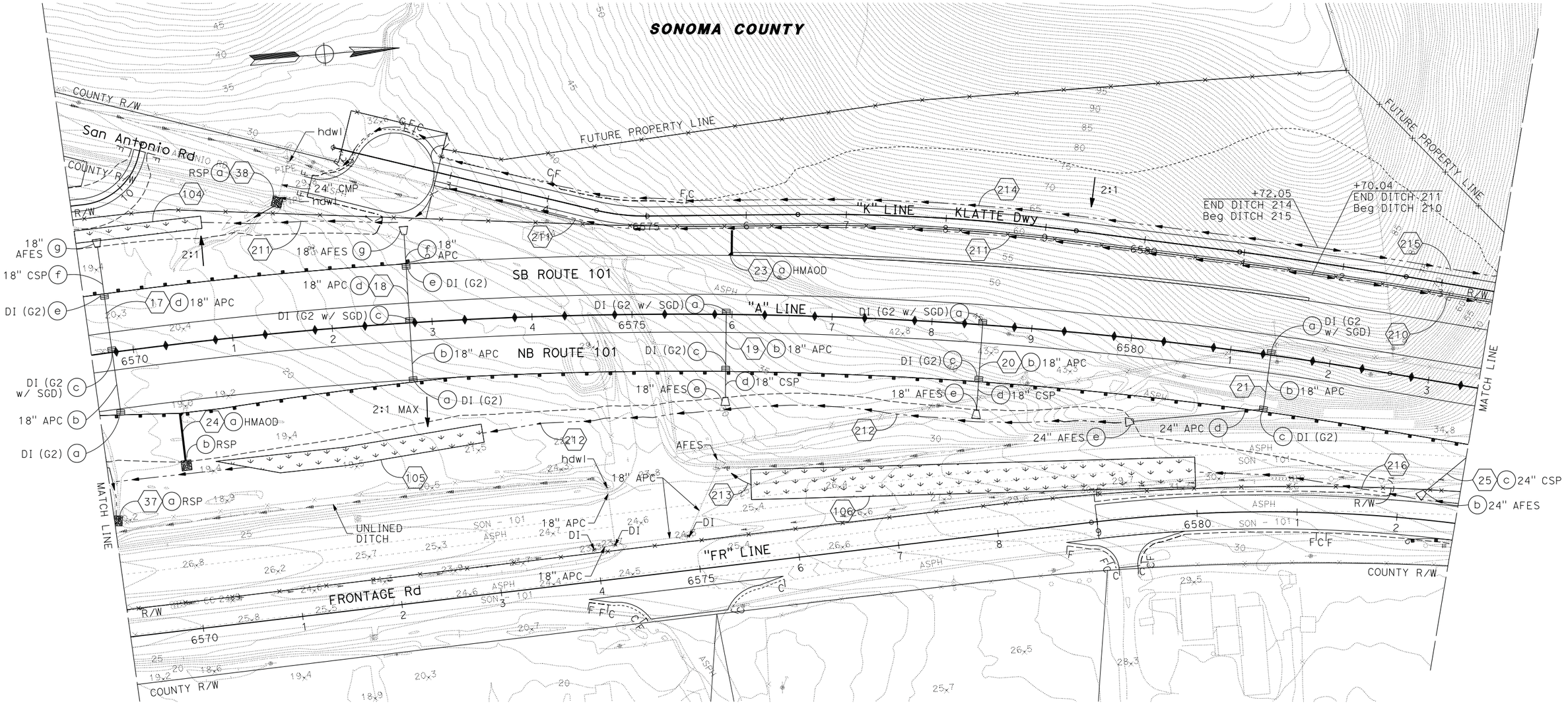

APPROVED FOR DRAINAGE WORK ONLY

DRAINAGE PLAN

SCALE: 1" = 50'

D-5

CALCULATED-DESIGNED BY	CB	5/13/14
CHECKED BY	CB	2/7/14
CHRIS BRIANA	CB	4/30/12
TOM CONNELL	REVISED BY	DATE REVISED

CONSULTANT FUNCTIONAL SUPERVISOR: MICHAEL LOHMAN

STATE OF CALIFORNIA - DEPARTMENT OF TRANSPORTATION

LAST REVISION 00-00-00 — DATE PLOTTED => 30-SEP-2014 — TIME PLOTTED => 14:13

BORDER LAST REVISED 7/2/2010 | USERNAME => acroskey | DGN FILE => 0400000735ia005.dgn | RELATIVE BORDER SCALE IS IN INCHES 0 1 2 3 | UNIT 0716 | PROJECT NUMBER & PHASE 04000007351

Dist	COUNTY	ROUTE	POST MILES TOTAL PROJECT	SHEET No.	TOTAL SHEETS
04	Mrn, Son	101	26.8/27.6, 0.0/2.0	125	710

REGISTERED CIVIL ENGINEER 06/30/14 DATE

8-18-14
PLANS APPROVAL DATE

REGISTERED PROFESSIONAL ENGINEER S. D. DANSKY No. 60220 Exp. 6/30/16 CIVIL STATE OF CALIFORNIA

THE STATE OF CALIFORNIA OR ITS OFFICERS OR AGENTS SHALL NOT BE RESPONSIBLE FOR THE ACCURACY OR COMPLETENESS OF SCANNED COPIES OF THIS PLAN SHEET.

MARK THOMAS & CO., INC.
3000 OAK RD, SUITE 650
WALNUT CREEK, CA 94597

TRANSPORTATION AUTHORITY OF MARIN
750 LINDARO ST, SUITE 200
SAN RAFAEL, CA 94901

NOTE:

FOR ACCURATE RIGHT OF WAY DATA, CONTACT RIGHT OF WAY ENGINEERING AT THE DISTRICT OFFICE.

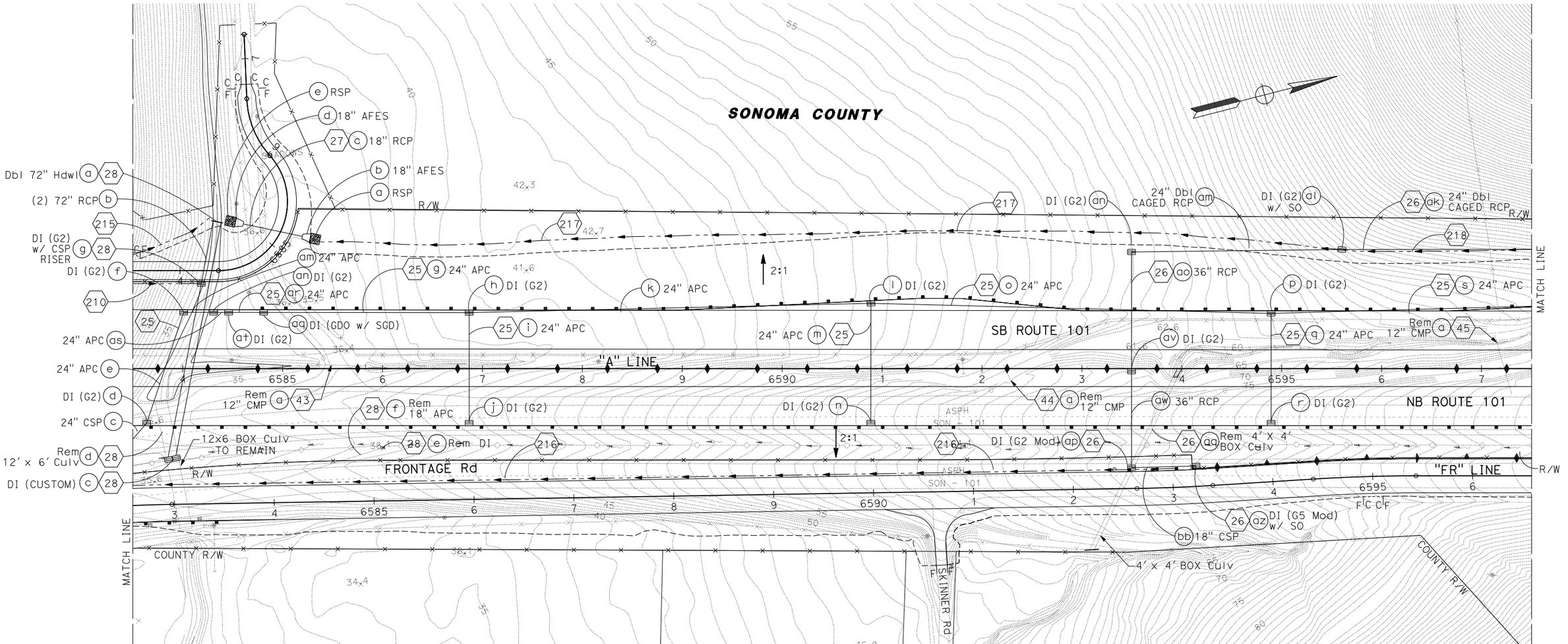

DRAINAGE PLAN

SCALE: 1" = 50'

D-6

APPROVED FOR DRAINAGE WORK ONLY

REVISED BY	DATE REVISED
CB	4/30/12
CB	2/7/14
CB	5/13/14

CHRIS BRIANA — TOM CONNELL

CALCULATED-DESIGNED BY — CHECKED BY

CONSULTANT FUNCTIONAL SUPERVISOR — MICHAEL LOHMAN

STATE OF CALIFORNIA - DEPARTMENT OF TRANSPORTATION

Caltrans

LAST REVISION 00-00-00 — DATE PLOTTED => 30-SEP-2014 — TIME PLOTTED => 14:13

NOTE:

FOR ACCURATE RIGHT OF WAY DATA, CONTACT RIGHT OF WAY ENGINEERING AT THE DISTRICT OFFICE.

Dist	COUNTY	ROUTE	POST MILES TOTAL PROJECT	SHEET No.	TOTAL SHEETS
04	Mrn, Son	101	26.8/27.6, 0.0/2.0	126	710

REGISTERED CIVIL ENGINEER — DATE 06/30/14

8-18-14
PLANS APPROVAL DATE

REGISTERED PROFESSIONAL ENGINEER — S. D. DANSKY No. 60220 Exp. 6/30/16 CIVIL — STATE OF CALIFORNIA

THE STATE OF CALIFORNIA OR ITS OFFICERS OR AGENTS SHALL NOT BE RESPONSIBLE FOR THE ACCURACY OR COMPLETENESS OF SCANNED COPIES OF THIS PLAN SHEET.

MARK THOMAS & CO., INC.
3000 OAK RD, SUITE 650
WALNUT CREEK, CA 94597

TRANSPORTATION AUTHORITY OF MARIN
750 LINDARO ST, SUITE 200
SAN RAFAEL, CA 94901

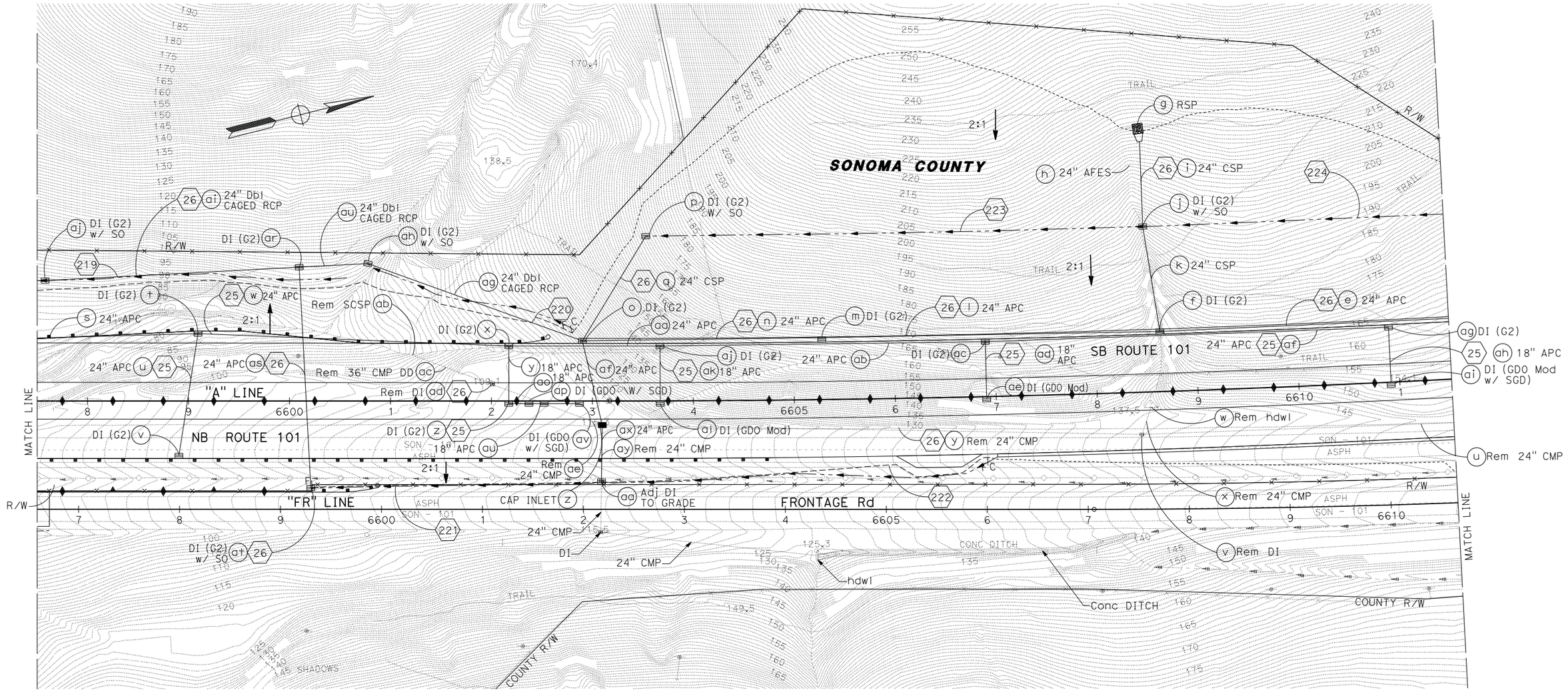

DRAINAGE PLAN

SCALE: 1" = 50'

D-7

APPROVED FOR DRAINAGE WORK ONLY

STATE OF CALIFORNIA - DEPARTMENT OF TRANSPORTATION

CONSULTANT FUNCTIONAL SUPERVISOR: MICHAEL LOHMAN

CALCULATED-DESIGNED BY: CHRIS BRIANA

CHECKED BY: TOM CONNELL

REVISED BY	DATE REVISED
CB	4/30/12
CB	2/7/14
CB	5/13/14

LAST REVISION — DATE PLOTTED => 30-SEP-2014 TIME PLOTTED => 14:13

00-00-00

BORDER LAST REVISED 7/2/2010

USERNAME => acroskey
DGN FILE => 0400000735ia007.dgn

RELATIVE BORDER SCALE IS IN INCHES 0 1 2 3

UNIT 0716

PROJECT NUMBER & PHASE 04000007351

Dist	COUNTY	ROUTE	POST MILES TOTAL PROJECT	SHEET No.	TOTAL SHEETS
04	Mrn, Son	101	26.8/27.6, 0.0/2.0	127	710

REGISTERED CIVIL ENGINEER 06/30/14 DATE

8-18-14
PLANS APPROVAL DATE

REGISTERED PROFESSIONAL ENGINEER S. D. DANSKY No. 60220 Exp. 6/30/16 CIVIL STATE OF CALIFORNIA

THE STATE OF CALIFORNIA OR ITS OFFICERS OR AGENTS SHALL NOT BE RESPONSIBLE FOR THE ACCURACY OR COMPLETENESS OF SCANNED COPIES OF THIS PLAN SHEET.

MARK THOMAS & CO., INC.
3000 OAK RD, SUITE 650
WALNUT CREEK, CA 94597

TRANSPORTATION AUTHORITY OF MARIN
750 LINDARO ST, SUITE 200
SAN RAFAEL, CA 94901

NOTE:

FOR ACCURATE RIGHT OF WAY DATA, CONTACT RIGHT OF WAY ENGINEERING AT THE DISTRICT OFFICE.

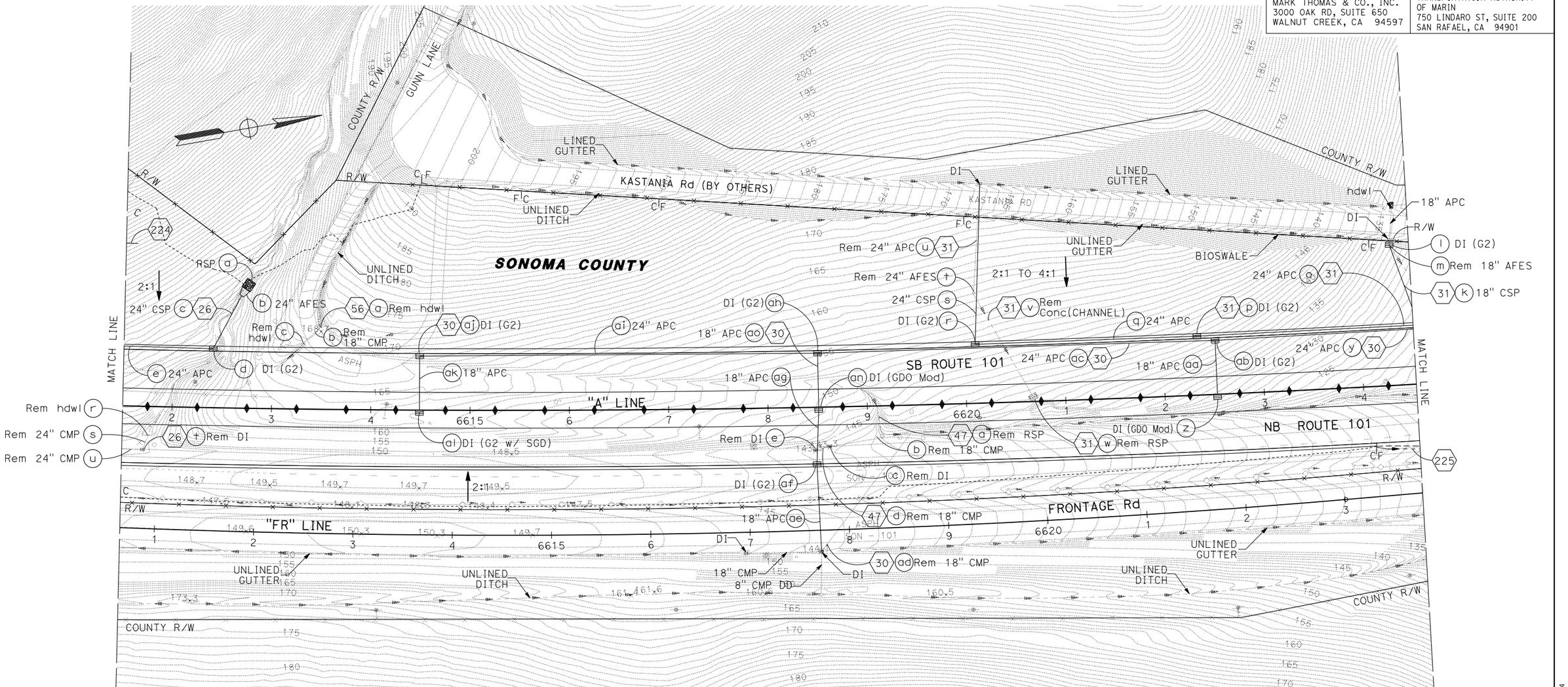

DRAINAGE PLAN

SCALE: 1" = 50'

D-8

APPROVED FOR DRAINAGE WORK ONLY

REVISED BY	DATE REVISED
CB	5/13/14
CB	2/7/14
CB	4/30/12

CHRIS BRIANA — TOM CONNELL

CALCULATED-DESIGNED BY — CHECKED BY

CONSULTANT FUNCTIONAL SUPERVISOR — MICHAEL LOHMAN

STATE OF CALIFORNIA - DEPARTMENT OF TRANSPORTATION

Caltrans

LAST REVISION 00-00-00 DATE PLOTTED => 30-SEP-2014 TIME PLOTTED => 14:13

Dist	COUNTY	ROUTE	POST MILES TOTAL PROJECT	SHEET No.	TOTAL SHEETS
04	Mrn, Son	101	26.8/27.6, 0.0/2.0	128	710

REGISTERED CIVIL ENGINEER — 06/30/14 DATE

8-18-14
PLANS APPROVAL DATE

REGISTERED PROFESSIONAL ENGINEER
S. D. DANSKY
No. 60220
Exp. 6/30/16
CIVIL
STATE OF CALIFORNIA

THE STATE OF CALIFORNIA OR ITS OFFICERS OR AGENTS SHALL NOT BE RESPONSIBLE FOR THE ACCURACY OR COMPLETENESS OF SCANNED COPIES OF THIS PLAN SHEET.

MARK THOMAS & CO., INC.
3000 OAK RD, SUITE 650
WALNUT CREEK, CA 94597

TRANSPORTATION AUTHORITY OF MARIN
750 LINDARO ST, SUITE 200
SAN RAFAEL, CA 94901

NOTE:

FOR ACCURATE RIGHT OF WAY DATA, CONTACT RIGHT OF WAY ENGINEERING AT THE DISTRICT OFFICE.

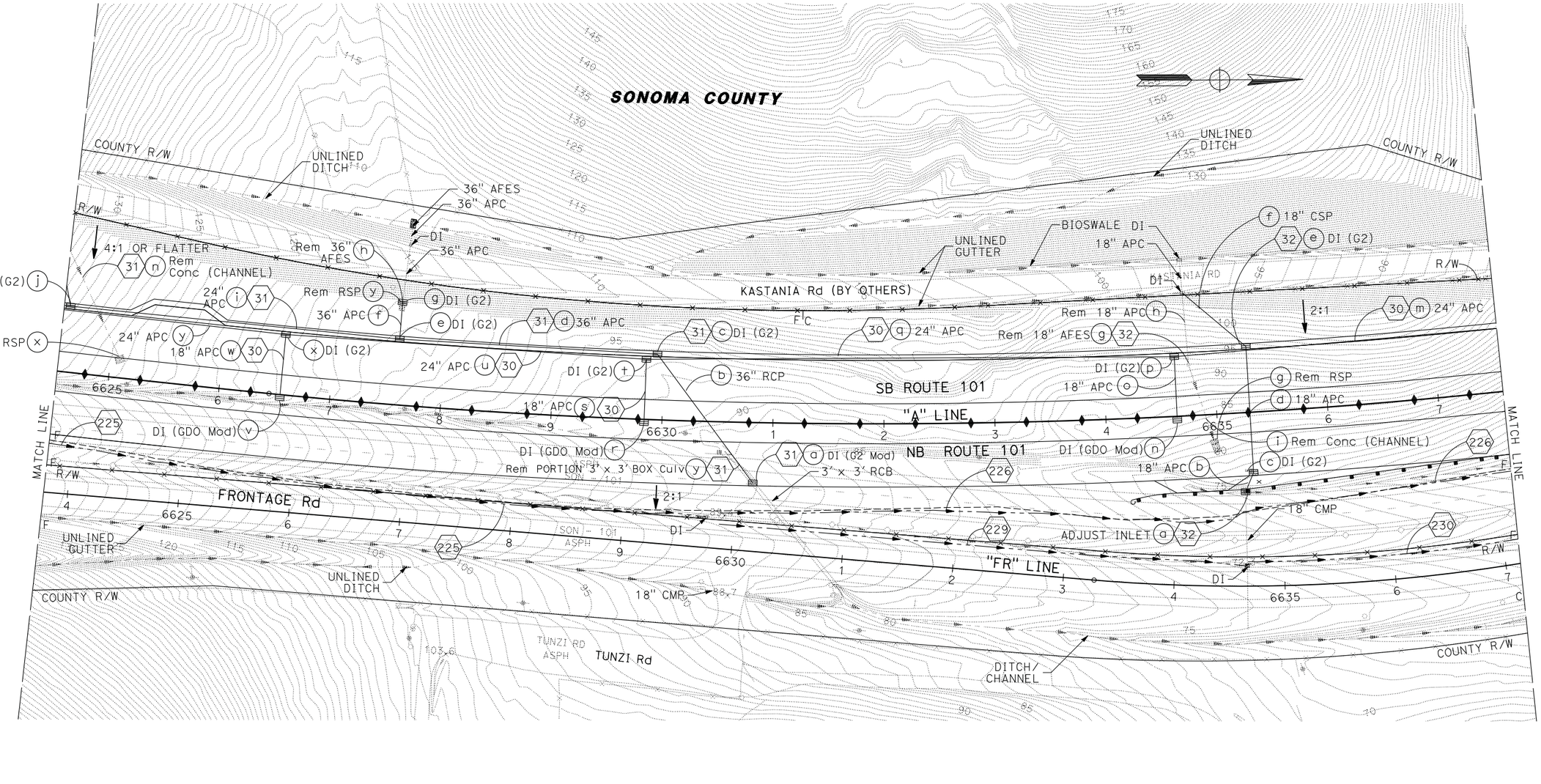

APPROVED FOR DRAINAGE WORK ONLY

DRAINAGE PLAN

SCALE: 1" = 50'

D-9

	CALCULATED-DESIGNED BY	CHECKED BY
5/13/14	CB	
2/7/14	CB	
4/30/12	CB	
DATE REVISED	REVISED BY	
	CHRIS BRIANA	TOM CONNELL

CONSULTANT FUNCTIONAL SUPERVISOR: MICHAEL LOHMAN

STATE OF CALIFORNIA - DEPARTMENT OF TRANSPORTATION

Caltrans

LAST REVISION 00-00-00
DATE PLOTTED => 30-SEP-2014
TIME PLOTTED => 14:13

BORDER LAST REVISED 7/2/2010 | USERNAME => acroskey | DGN FILE => 04000007351ia009.dgn | RELATIVE BORDER SCALE IS IN INCHES 0 1 2 3 | UNIT 0716 | PROJECT NUMBER & PHASE 04000007351

Dist	COUNTY	ROUTE	POST MILES TOTAL PROJECT	SHEET No.	TOTAL SHEETS
04	Mrn, Son	101	26.8/27.6, 0.0/2.0	129	710

REGISTERED CIVIL ENGINEER — DATE 06/30/14

S. D. DANSKY No. 60220 Exp. 6/30/16 CIVIL — REGISTERED PROFESSIONAL ENGINEER — STATE OF CALIFORNIA

8-18-14
PLANS APPROVAL DATE

THE STATE OF CALIFORNIA OR ITS OFFICERS OR AGENTS SHALL NOT BE RESPONSIBLE FOR THE ACCURACY OR COMPLETENESS OF SCANNED COPIES OF THIS PLAN SHEET.

MARK THOMAS & CO., INC.
3000 OAK RD, SUITE 650
WALNUT CREEK, CA 94597

TRANSPORTATION AUTHORITY OF MARIN
750 LINDARO ST, SUITE 200
SAN RAFAEL, CA 94901

NOTE:

FOR ACCURATE RIGHT OF WAY DATA, CONTACT RIGHT OF WAY ENGINEERING AT THE DISTRICT OFFICE.

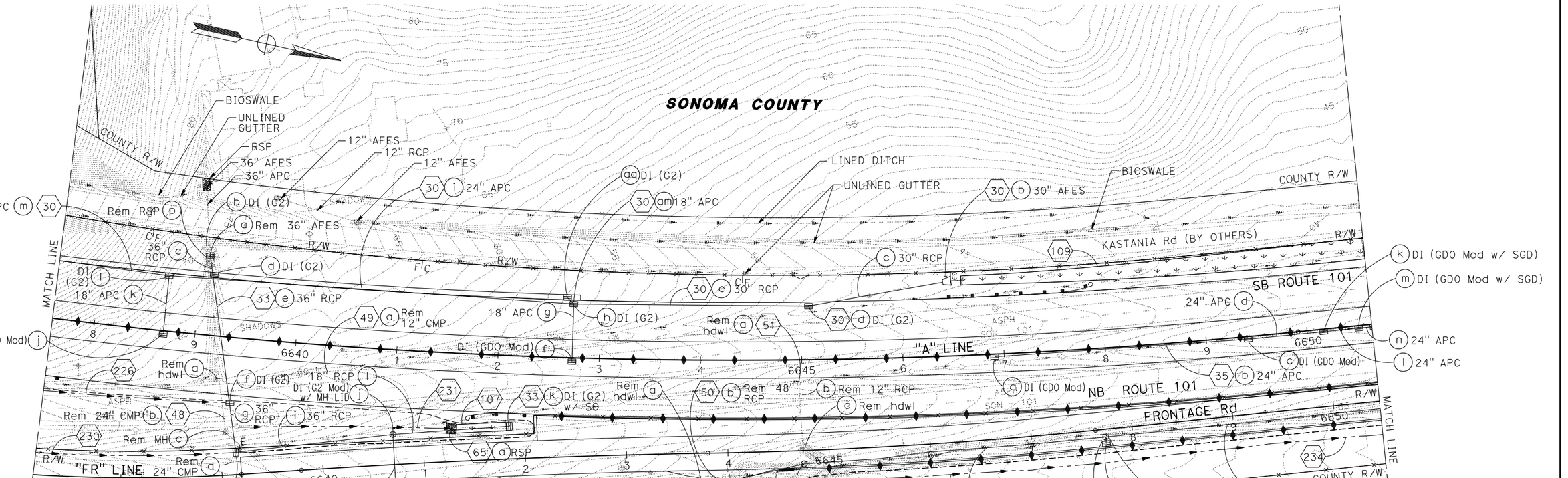

APPROVED FOR DRAINAGE WORK ONLY

DRAINAGE PLAN

SCALE: 1" = 50'

D-10

REVISED BY	DATE REVISED
CB	4/30/12
CB	2/7/14
CB	5/13/14

CALCULATED-DESIGNED BY: CHRIS BRIANA
CHECKED BY: TOM CONNELL

CONSULTANT FUNCTIONAL SUPERVISOR: MICHAEL LOHMAN

STATE OF CALIFORNIA - DEPARTMENT OF TRANSPORTATION
Caltrans

LAST REVISION: DATE PLOTTED => 30-SEP-2014
00-00-00 TIME PLOTTED => 14:13

BORDER LAST REVISED 7/2/2010 | USERNAME => acroskey | DGN FILE => 0400000735ia010.dgn | RELATIVE BORDER SCALE IS IN INCHES 0 1 2 3 | UNIT 0716 | PROJECT NUMBER & PHASE 04000007351

Dist	COUNTY	ROUTE	POST MILES TOTAL PROJECT	SHEET No.	TOTAL SHEETS
04	Mrn, Son	101	26.8/27.6, 0.0/2.0	130	710

REGISTERED CIVIL ENGINEER — 06/30/14 DATE

8-18-14
PLANS APPROVAL DATE

REGISTERED PROFESSIONAL ENGINEER — S. D. DANSKY No. 60220 Exp. 6/30/16 CIVIL — STATE OF CALIFORNIA

THE STATE OF CALIFORNIA OR ITS OFFICERS OR AGENTS SHALL NOT BE RESPONSIBLE FOR THE ACCURACY OR COMPLETENESS OF SCANNED COPIES OF THIS PLAN SHEET.

MARK THOMAS & CO., INC.
3000 OAK RD, SUITE 650
WALNUT CREEK, CA 94597

TRANSPORTATION AUTHORITY OF MARIN
750 LINDARO ST, SUITE 200
SAN RAFAEL, CA 94901

NOTE:

FOR ACCURATE RIGHT OF WAY DATA, CONTACT RIGHT OF WAY ENGINEERING AT THE DISTRICT OFFICE.

SONOMA COUNTY

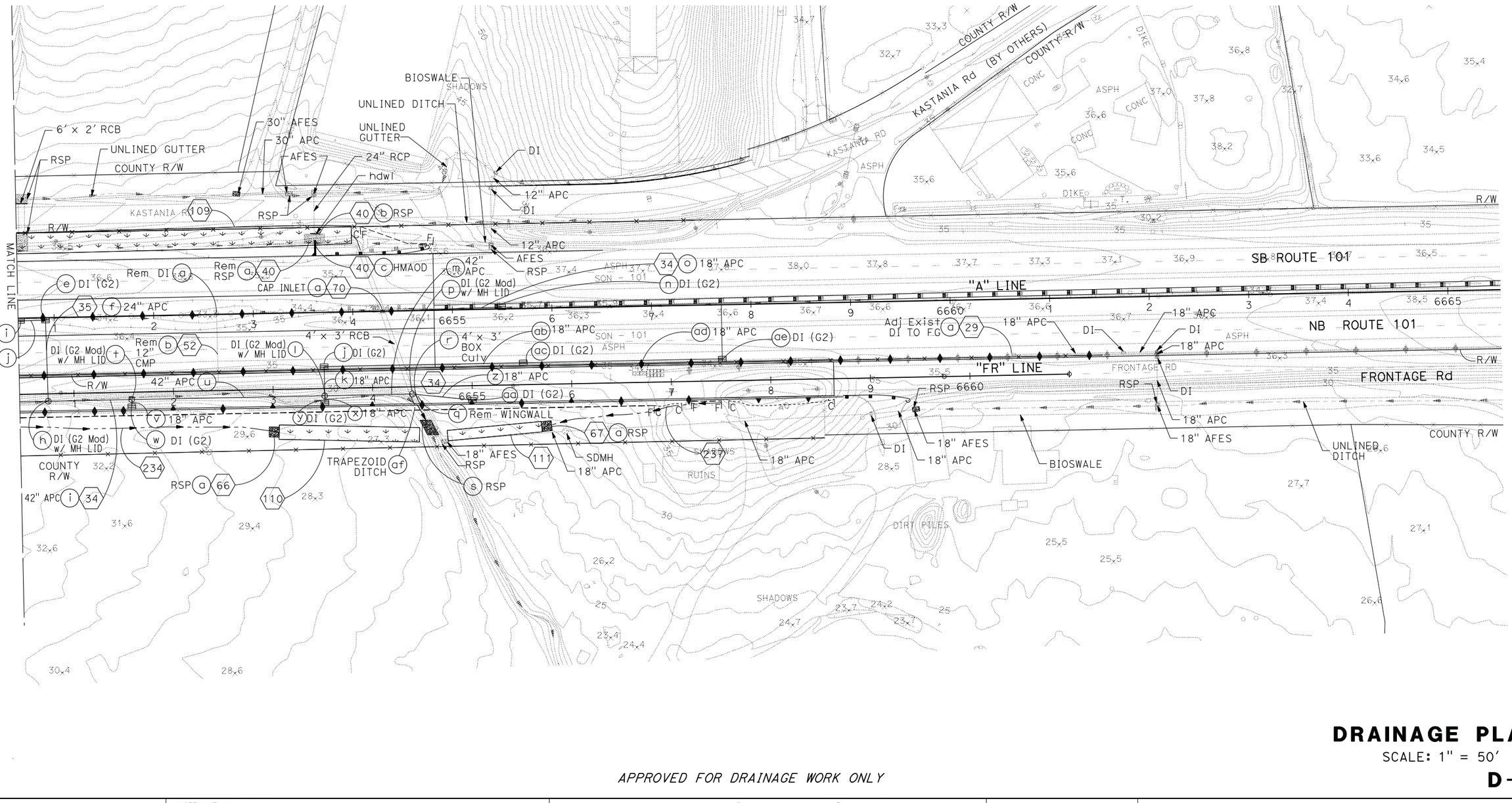

DRAINAGE PLAN

SCALE: 1" = 50'

D-11

APPROVED FOR DRAINAGE WORK ONLY

STATE OF CALIFORNIA - DEPARTMENT OF TRANSPORTATION
Caltrans

CONSULTANT FUNCTIONAL SUPERVISOR: MICHAEL LOHMAN

CALCULATED-DESIGNED BY: CHRIS BRIANA
CHECKED BY: TOM CONNELL

REVISED BY	DATE REVISED
CB	4/30/12
CB	2/7/14
CB	5/13/14

LAST REVISION — DATE PLOTTED => 30-SEP-2014
00-00-00 — TIME PLOTTED => 14:13

BORDER LAST REVISED 7/2/2010 | USERNAME => acroskey | DGN FILE => 04000007351ia011.dgn | RELATIVE BORDER SCALE IS IN INCHES 0 1 2 3 | UNIT 0716 | PROJECT NUMBER & PHASE 04000007351

Dist	COUNTY	ROUTE	POST MILES TOTAL PROJECT	SHEET No.	TOTAL SHEETS
04	Mrn, Son	101	26.8/27.6, 0.0/2.0	131	710

REGISTERED CIVIL ENGINEER 06/30/14 DATE

8-18-14
PLANS APPROVAL DATE

REGISTERED PROFESSIONAL ENGINEER S. D. DANSKY No. 60220 Exp. 6/30/16 CIVIL STATE OF CALIFORNIA

THE STATE OF CALIFORNIA OR ITS OFFICERS OR AGENTS SHALL NOT BE RESPONSIBLE FOR THE ACCURACY OR COMPLETENESS OF SCANNED COPIES OF THIS PLAN SHEET.

MARK THOMAS & CO., INC.
3000 OAK RD, SUITE 650
WALNUT CREEK, CA 94597

TRANSPORTATION AUTHORITY OF MARIN
750 LINDARO ST, SUITE 200
SAN RAFAEL, CA 94901

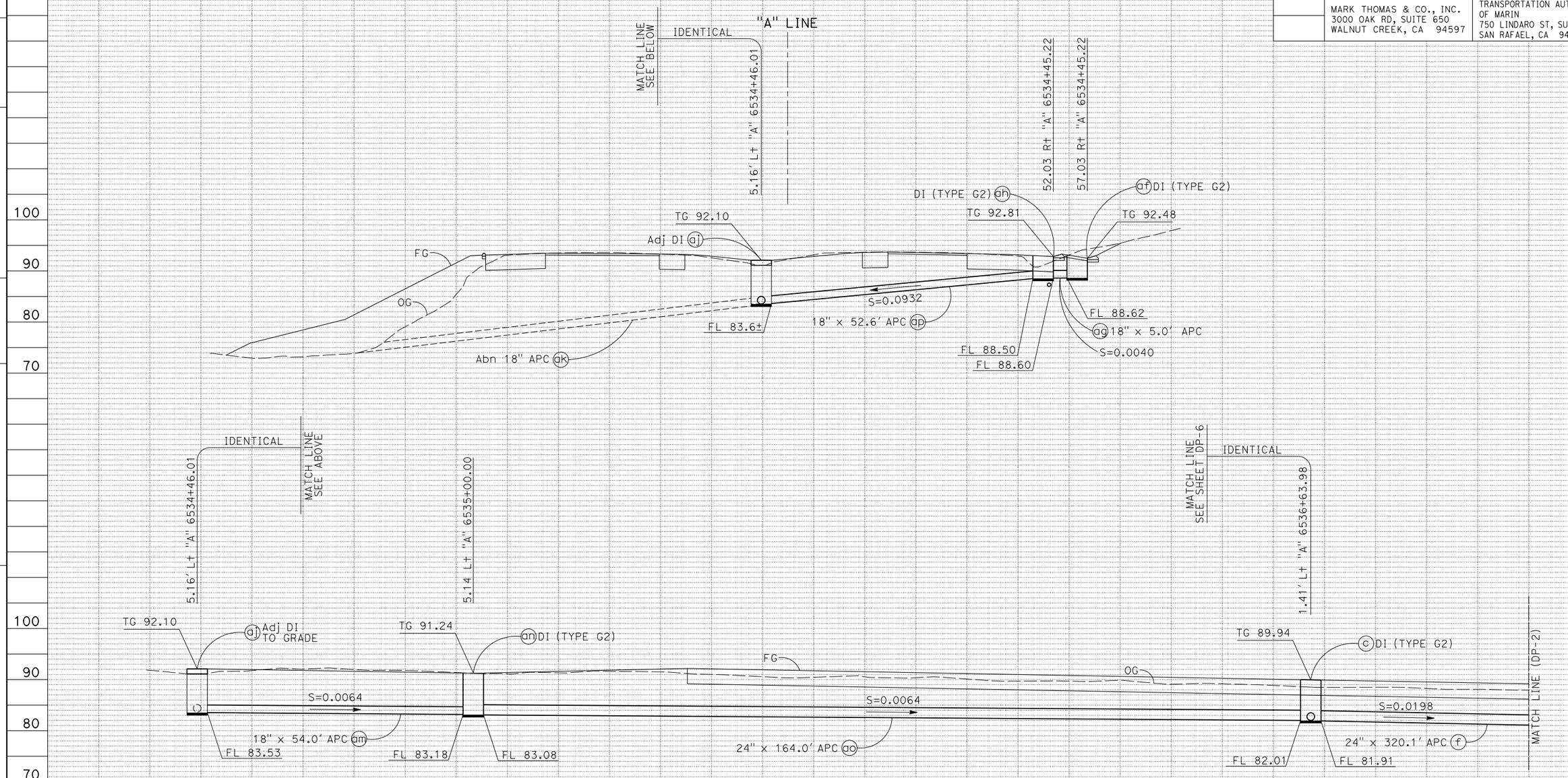

DRAINAGE SYSTEM No. 1

DRAINAGE PROFILES

SCALE: Horiz 1" = 10'
Vert 1" = 10'

DP-1

STATE OF CALIFORNIA - DEPARTMENT OF TRANSPORTATION
Caltrans

CONSULTANT FUNCTIONAL SUPERVISOR: MICHAEL LOHMAN
CALCULATED-DESIGNED BY: CHRIS BRIANA
CHECKED BY: TOM CONNELL
REVISED BY: CB
DATE REVISED: 4/30/12
CB 2/7/14
CB 5/13/14

LAST REVISION 00-00-00
DATE PLOTTED => 30-SEP-2014
TIME PLOTTED => 14:14

Dist	COUNTY	ROUTE	POST MILES TOTAL PROJECT	SHEET No.	TOTAL SHEETS
04	Mrn, Son	101	26.8/27.6, 0.0/2.0	132	710

REGISTERED CIVIL ENGINEER 06/30/14 DATE

8-18-14
PLANS APPROVAL DATE

REGISTERED PROFESSIONAL ENGINEER S. D. DANSKY No. 60220 Exp. 6/30/16 CIVIL STATE OF CALIFORNIA

THE STATE OF CALIFORNIA OR ITS OFFICERS OR AGENTS SHALL NOT BE RESPONSIBLE FOR THE ACCURACY OR COMPLETENESS OF SCANNED COPIES OF THIS PLAN SHEET.

MARK THOMAS & CO., INC.
3000 OAK RD, SUITE 650
WALNUT CREEK, CA 94597

TRANSPORTATION AUTHORITY OF MARIN
750 LINDARO ST, SUITE 200
SAN RAFAEL, CA 94901

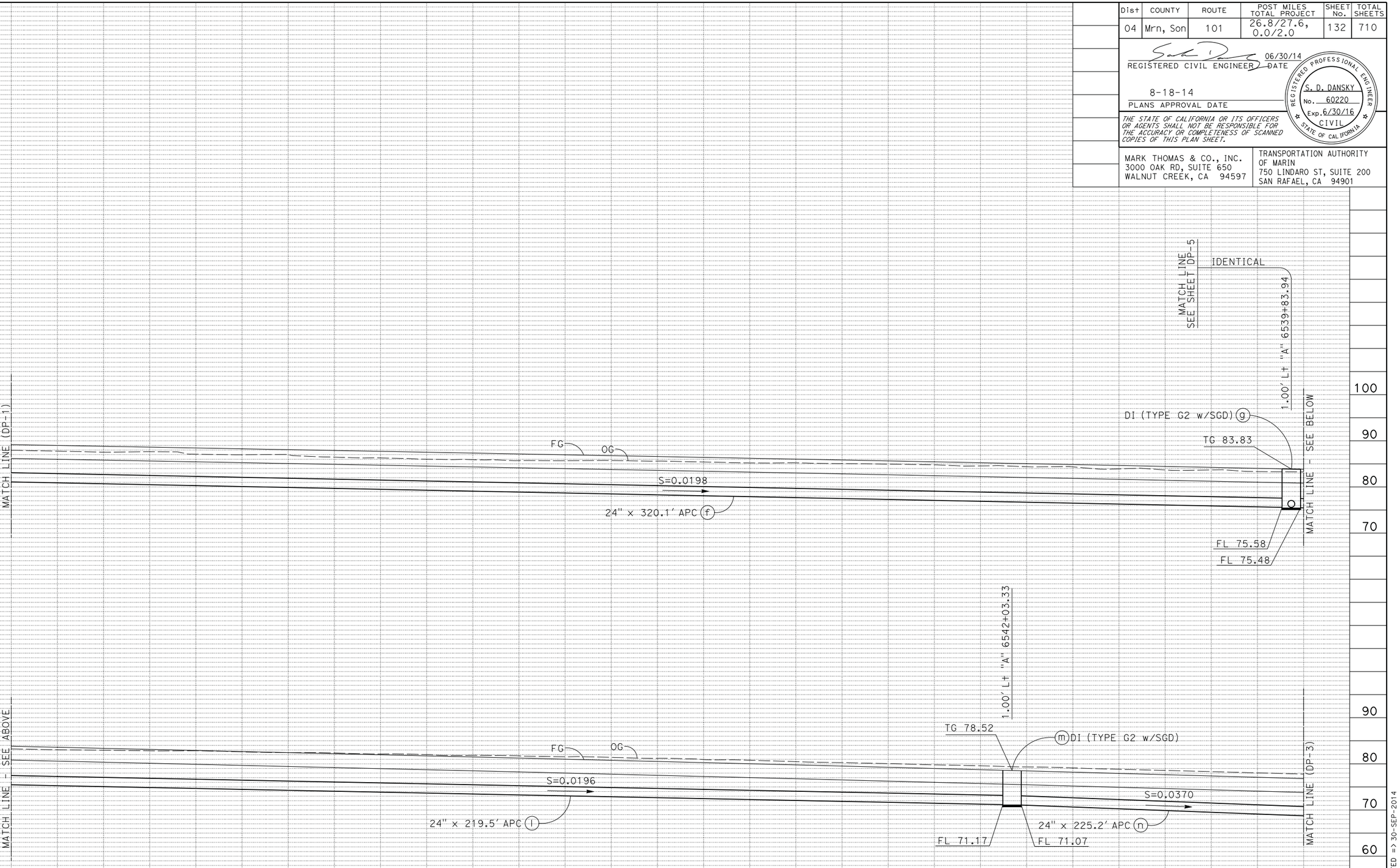

DRAINAGE SYSTEM No. 1

DRAINAGE PROFILES

SCALE: Horiz 1" = 10'
Vert 1" = 10'

DP-2

CB	5/13/14
CB	2/7/14
CB	4/30/12
REVISED BY	DATE REVISED
CHRIS BRIANA	TOM CONNELL
CALCULATED-DESIGNED BY	CHECKED BY
CONSULTANT FUNCTIONAL SUPERVISOR	MICHAEL LOHMAN

STATE OF CALIFORNIA - DEPARTMENT OF TRANSPORTATION
Caltrans

DATE PLOTTED => 30-SEP-2014
TIME PLOTTED => 14:14
LAST REVISION 00-00-00

Dist	COUNTY	ROUTE	POST MILES TOTAL PROJECT	SHEET No.	TOTAL SHEETS
04	Mrn, Son	101	26.8/27.6, 0.0/2.0	133	710

REGISTERED CIVIL ENGINEER — 06/30/14 DATE

8-18-14
PLANS APPROVAL DATE

REGISTERED PROFESSIONAL ENGINEER
S. D. DANSKY
No. 60220
Exp. 6/30/16
CIVIL
STATE OF CALIFORNIA

THE STATE OF CALIFORNIA OR ITS OFFICERS OR AGENTS SHALL NOT BE RESPONSIBLE FOR THE ACCURACY OR COMPLETENESS OF SCANNED COPIES OF THIS PLAN SHEET.

MARK THOMAS & CO., INC.
3000 OAK RD, SUITE 650
WALNUT CREEK, CA 94597

TRANSPORTATION AUTHORITY OF MARIN
750 LINDARO ST, SUITE 200
SAN RAFAEL, CA 94901

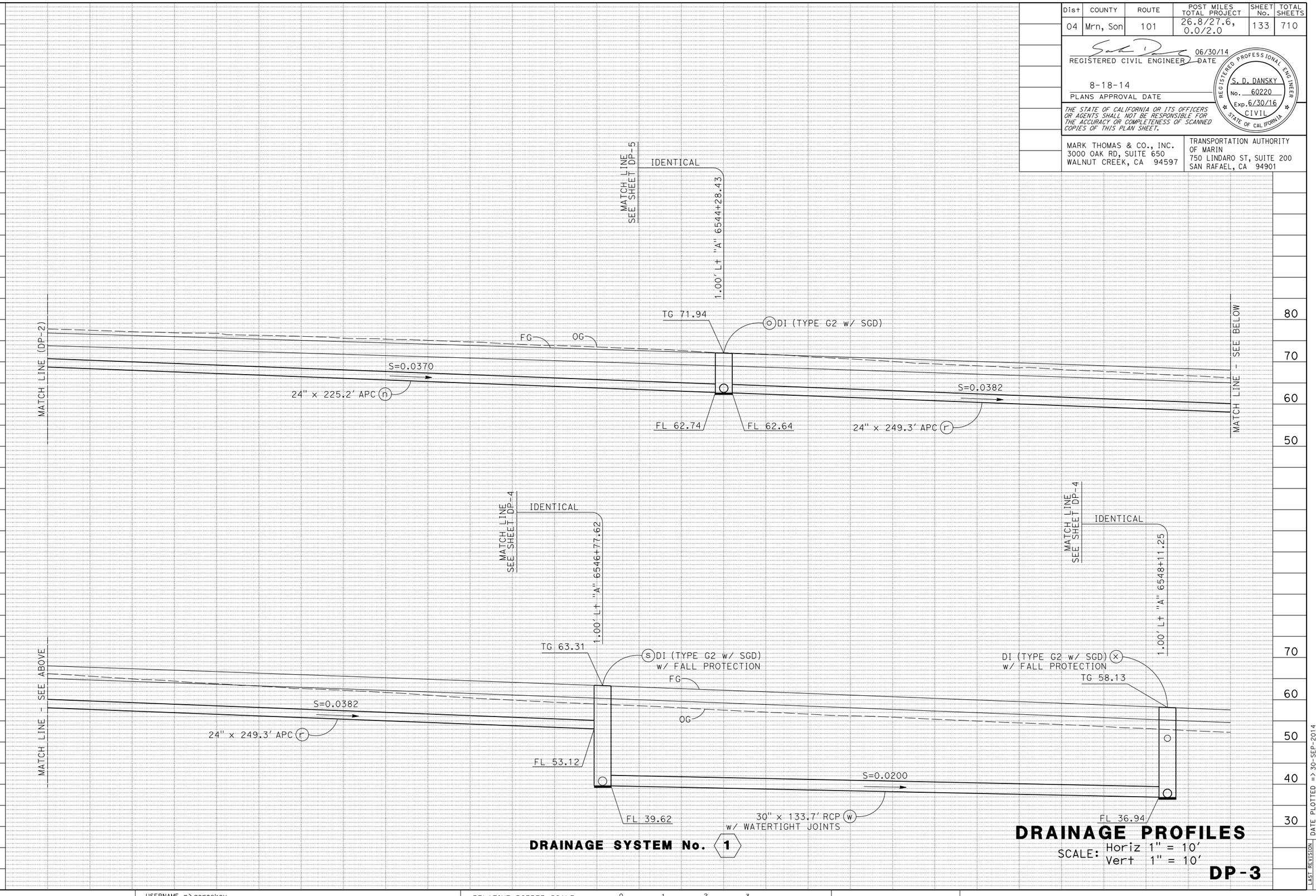

DRAINAGE SYSTEM No. 1

DRAINAGE PROFILES

SCALE: Horiz 1" = 10'
Vert 1" = 10'

DP-3

CHRIS BRIANA — CB — 5/13/14
TOM CONNELL — CB — 2/7/14
REVISED BY — CB — 4/30/12
DATE REVISED
CALCULATED-DESIGNED BY
CHECKED BY
CONSULTANT FUNCTIONAL SUPERVISOR
MICHAEL LOHMAN
STATE OF CALIFORNIA - DEPARTMENT OF TRANSPORTATION
Caltrans

LAST REVISION 00-00-00
DATE PLOTTED => 30-SEP-2014
TIME PLOTTED => 14:14

BORDER LAST REVISED 7/2/2010
USERNAME => acroskey
DGN FILE => 0400000735ib003.dgn
RELATIVE BORDER SCALE IS IN INCHES 0 1 2 3
UNIT 0716
PROJECT NUMBER & PHASE 04000007351

Dist	COUNTY	ROUTE	POST MILES TOTAL PROJECT	SHEET No.	TOTAL SHEETS
04	Mrn, Son	101	26.8/27.6, 0.0/2.0	134	710

REGISTERED CIVIL ENGINEER — 06/30/14 DATE

8-18-14
PLANS APPROVAL DATE

S. D. DANSKY No. 60220 Exp. 6/30/16 CIVIL — REGISTERED PROFESSIONAL ENGINEER — STATE OF CALIFORNIA

THE STATE OF CALIFORNIA OR ITS OFFICERS OR AGENTS SHALL NOT BE RESPONSIBLE FOR THE ACCURACY OR COMPLETENESS OF SCANNED COPIES OF THIS PLAN SHEET.

MARK THOMAS & CO., INC.
3000 OAK RD, SUITE 650
WALNUT CREEK, CA 94597

TRANSPORTATION AUTHORITY OF MARIN
750 LINDARO ST, SUITE 200
SAN RAFAEL, CA 94901

REVISED BY	DATE REVISED
CB	4/30/12
CB	2/7/14
CB	5/13/14

CALCULATED-DESIGNED BY: CHRIS BRIANA
CHECKED BY: TOM CONNELL

CONSULTANT FUNCTIONAL SUPERVISOR: MICHAEL LOHMAN

STATE OF CALIFORNIA - DEPARTMENT OF TRANSPORTATION

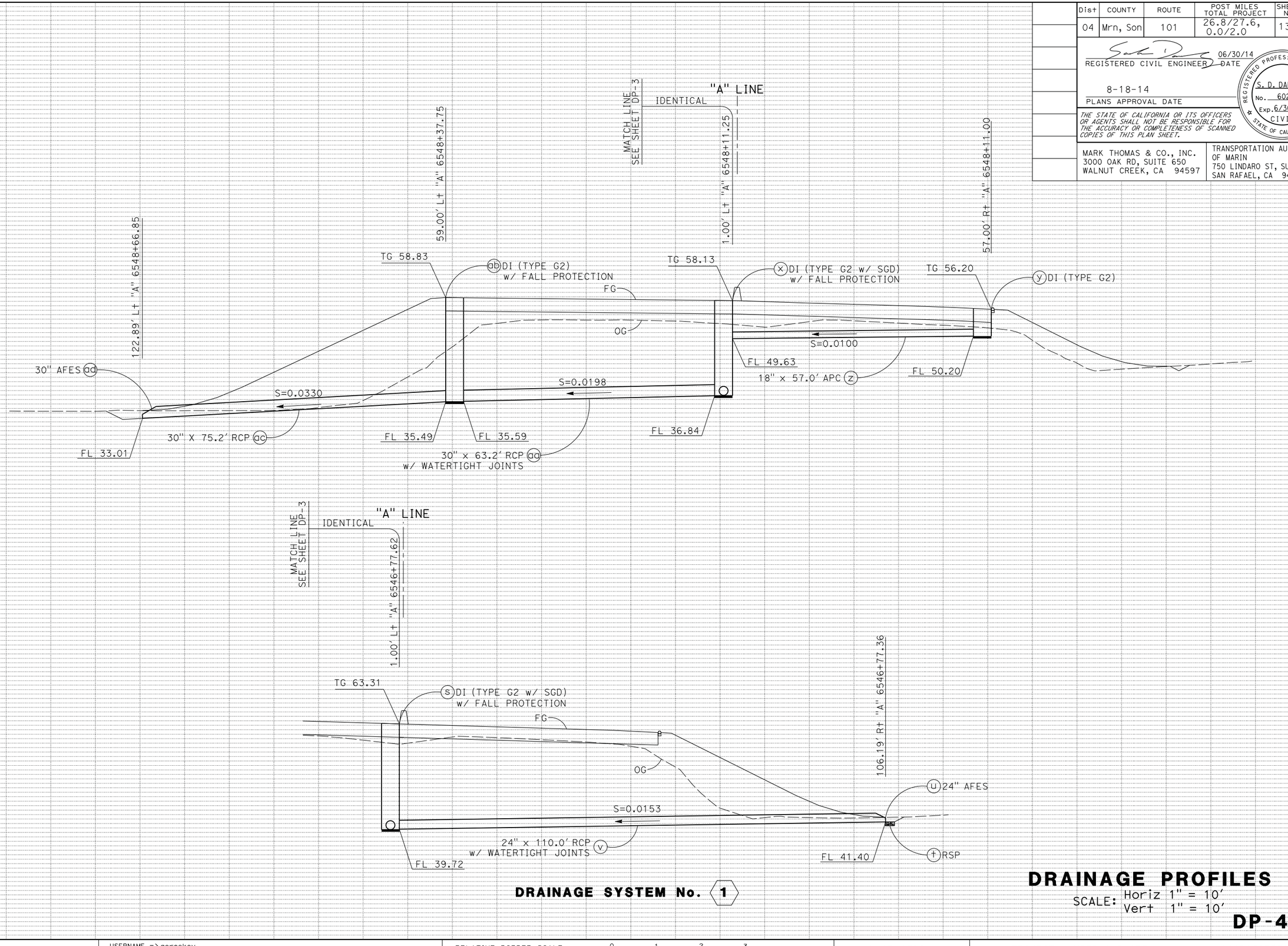

DRAINAGE SYSTEM No. 1

DRAINAGE PROFILES

SCALE: Horiz 1" = 10'
Vert 1" = 10'

DP-4

LAST REVISION 00-00-00 DATE PLOTTED => 30-SEP-2014 TIME PLOTTED => 14:14

BORDER LAST REVISED 7/2/2010 | USERNAME => acroskey | DGN FILE => 0400000735ib004.dgn | RELATIVE BORDER SCALE IS IN INCHES 0 1 2 3 | UNIT 0716 | PROJECT NUMBER & PHASE 04000007351

Dist	COUNTY	ROUTE	POST MILES TOTAL PROJECT	SHEET No.	TOTAL SHEETS
04	Mrn, Son	101	26.8/27.6, 0.0/2.0	135	710

REGISTERED CIVIL ENGINEER — 06/30/14 DATE

8-18-14
PLANS APPROVAL DATE

REGISTERED PROFESSIONAL ENGINEER — S. D. DANSKY No. 60220 Exp. 6/30/16 CIVIL — STATE OF CALIFORNIA

THE STATE OF CALIFORNIA OR ITS OFFICERS OR AGENTS SHALL NOT BE RESPONSIBLE FOR THE ACCURACY OR COMPLETENESS OF SCANNED COPIES OF THIS PLAN SHEET.

MARK THOMAS & CO., INC.
3000 OAK RD, SUITE 650
WALNUT CREEK, CA 94597

TRANSPORTATION AUTHORITY OF MARIN
750 LINDARO ST, SUITE 200
SAN RAFAEL, CA 94901

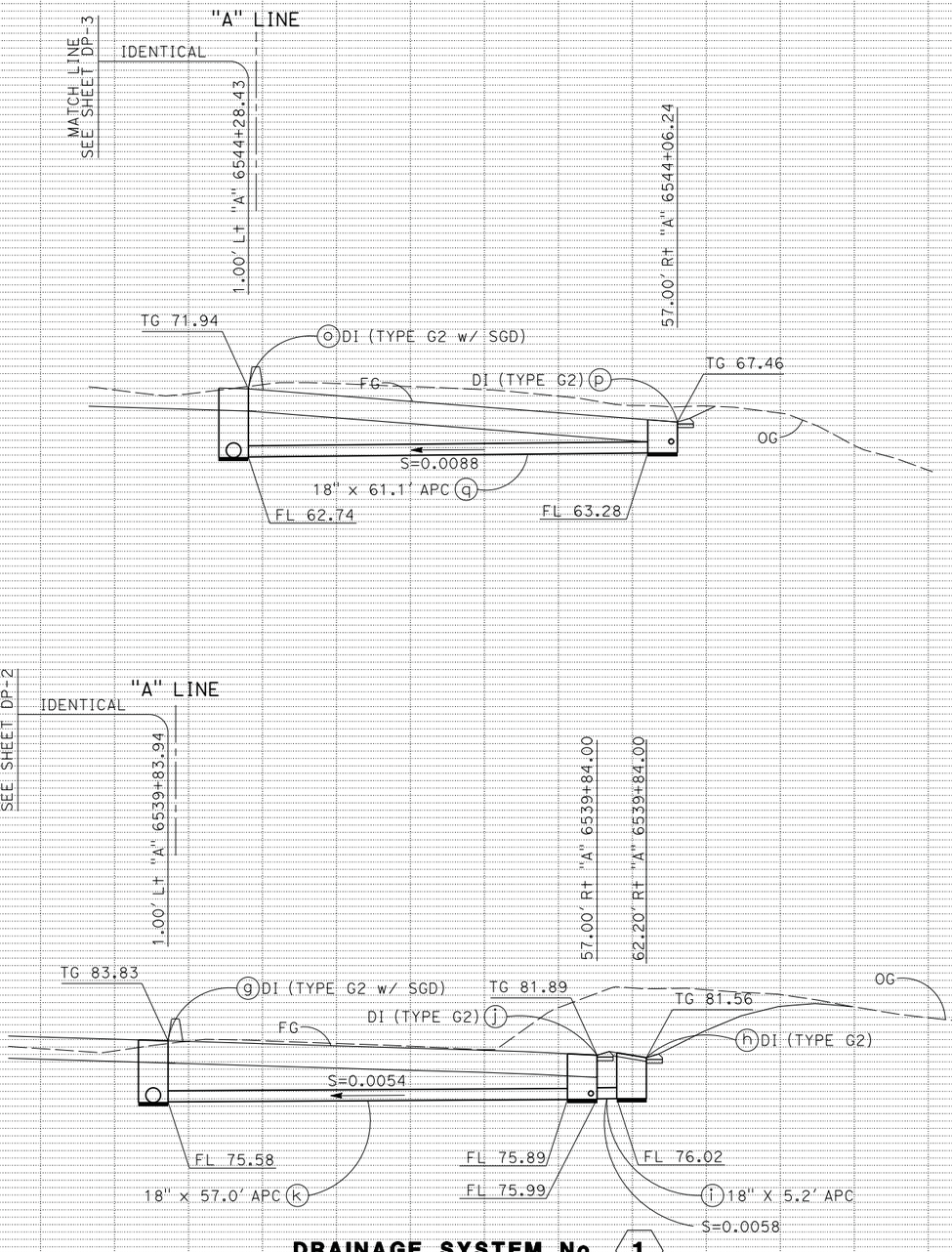

DRAINAGE SYSTEM No. 1

DRAINAGE PROFILES

SCALE: Horiz 1" = 10'
Vert 1" = 10'

DP-5

CHRIS BRIANA — CALCULATED-DESIGNED BY
TOM CONNELL — CHECKED BY
MICHAEL LOHMAN — CONSULTANT FUNCTIONAL SUPERVISOR

REVISED BY	DATE REVISED
CB	4/30/12
CB	2/7/14
CB	5/13/14

LAST REVISION 00-00-00
DATE PLOTTED => 30-SEP-2014
TIME PLOTTED => 14:14

STATE OF CALIFORNIA - DEPARTMENT OF TRANSPORTATION
Caltrans

BORDER LAST REVISED 7/2/2010
USERNAME => acroskey
DGN FILE => 0400000735ib005.dgn
RELATIVE BORDER SCALE IS IN INCHES 0 1 2 3
UNIT 0716
PROJECT NUMBER & PHASE 04000007351

Dist	COUNTY	ROUTE	POST MILES TOTAL PROJECT	SHEET No.	TOTAL SHEETS
04	Mrn, Son	101	26.8/27.6, 0.0/2.0	136	710

REGISTERED CIVIL ENGINEER — DATE 06/30/14

8-18-14
PLANS APPROVAL DATE

REGISTERED PROFESSIONAL ENGINEER — S. D. DANSKY — No. 60220 — Exp. 6/30/16 — CIVIL — STATE OF CALIFORNIA

THE STATE OF CALIFORNIA OR ITS OFFICERS OR AGENTS SHALL NOT BE RESPONSIBLE FOR THE ACCURACY OR COMPLETENESS OF SCANNED COPIES OF THIS PLAN SHEET.

MARK THOMAS & CO., INC.
3000 OAK RD, SUITE 650
WALNUT CREEK, CA 94597

TRANSPORTATION AUTHORITY OF MARIN
750 LINDARO ST, SUITE 200
SAN RAFAEL, CA 94901

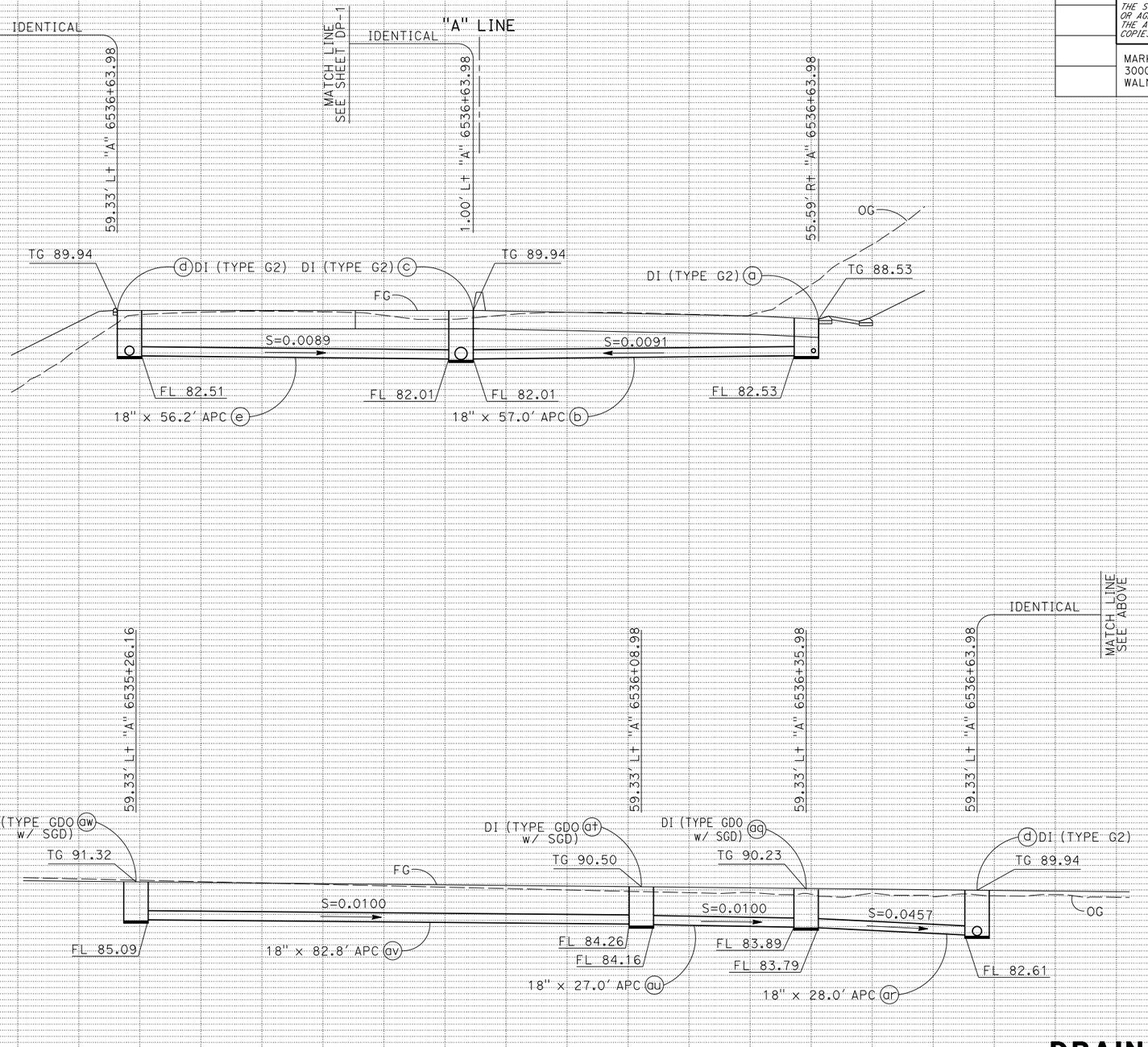

DRAINAGE PROFILES

SCALE: Horiz 1" = 10'
Vert 1" = 10'

DRAINAGE SYSTEM No. 1

DP-6

STATE OF CALIFORNIA - DEPARTMENT OF TRANSPORTATION
Caltrans

CONSULTANT FUNCTIONAL SUPERVISOR: MICHAEL LOHMAN

CALCULATED-DESIGNED BY: CHRIS BRIANA
CHECKED BY: TOM CONNELL

REVISED BY	DATE REVISED
CB	4/30/12
CB	2/7/14
CB	5/13/14

LAST REVISION 00-00-00
DATE PLOTTED => 30-SEP-2014
TIME PLOTTED => 14:14

BORDER LAST REVISED 7/2/2010
USERNAME => acroskey
DGN FILE => 04000007351ib006.dgn
RELATIVE BORDER SCALE IS IN INCHES 0 1 2 3
UNIT 0716
PROJECT NUMBER & PHASE 04000007351

Dist	COUNTY	ROUTE	POST MILES TOTAL PROJECT	SHEET No.	TOTAL SHEETS
04	Mrn, Son	101	26.8/27.6, 0.0/2.0	137	710

REGISTERED CIVIL ENGINEER — DATE 06/30/14

8-18-14
PLANS APPROVAL DATE

REGISTERED PROFESSIONAL ENGINEER — S. D. DANSKY — No. 60220 — Exp. 6/30/16 — CIVIL — STATE OF CALIFORNIA

THE STATE OF CALIFORNIA OR ITS OFFICERS OR AGENTS SHALL NOT BE RESPONSIBLE FOR THE ACCURACY OR COMPLETENESS OF SCANNED COPIES OF THIS PLAN SHEET.

MARK THOMAS & CO., INC.
3000 OAK RD, SUITE 650
WALNUT CREEK, CA 94597

TRANSPORTATION AUTHORITY OF MARIN
750 LINDARO ST, SUITE 200
SAN RAFAEL, CA 94901

REVISED BY	DATE REVISED
CB	5/13/14
CB	2/7/14
CB	4/30/12

CALCULATED-DESIGNED BY: CHRIS BRIANA
CHECKED BY: TOM CONNELL

CONSULTANT FUNCTIONAL SUPERVISOR: MICHAEL LOHMAN

STATE OF CALIFORNIA - DEPARTMENT OF TRANSPORTATION
Caltrans

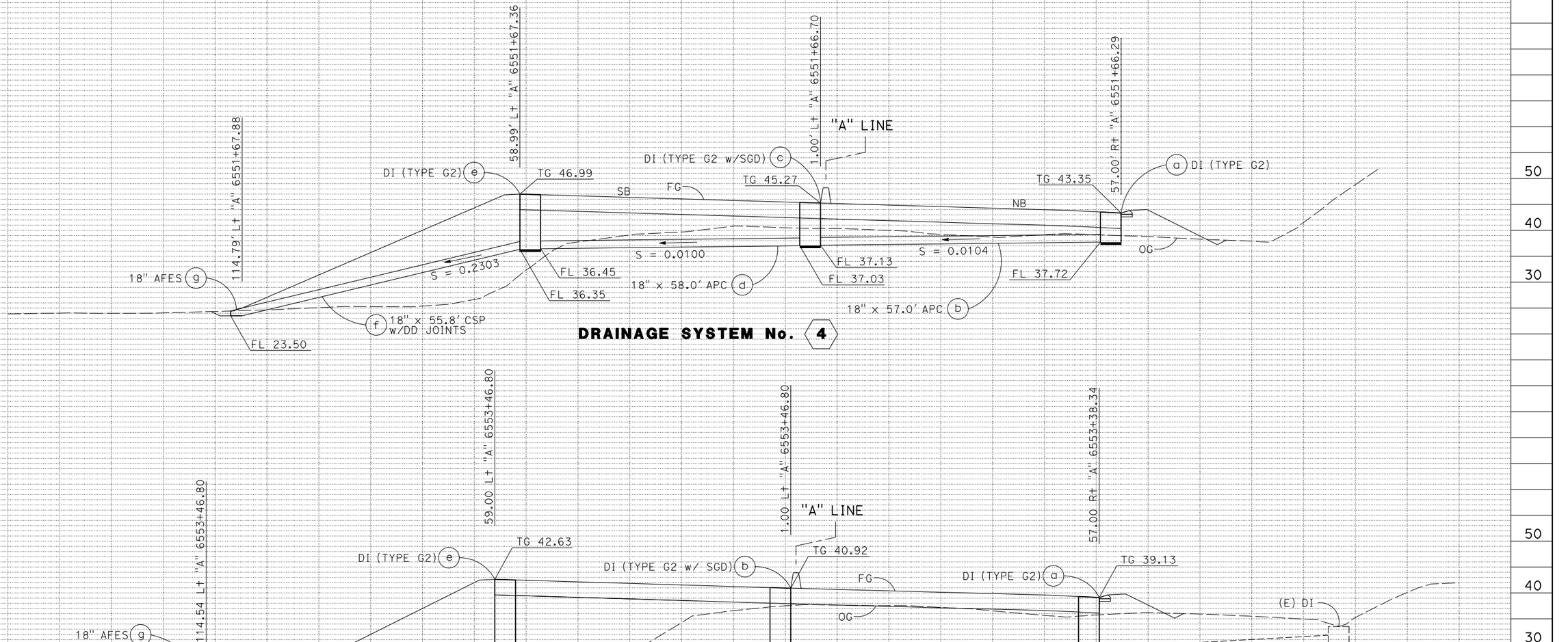

DRAINAGE PROFILES

SCALE: Horiz 1" = 10'
Vert 1" = 10'

DP-7

LAST REVISION — DATE PLOTTED => 30-SEP-2014
00-00-00 — TIME PLOTTED => 14:14

BORDER LAST REVISED 7/2/2010 | USERNAME => acroskey | DGN FILE => 0400000735ib007.dgn | RELATIVE BORDER SCALE IS IN INCHES 0 1 2 3 | UNIT 0716 | PROJECT NUMBER & PHASE 04000007351

Dist	COUNTY	ROUTE	POST MILES TOTAL PROJECT	SHEET No.	TOTAL SHEETS
04	Mrn, Son	101	26.8/27.6, 0.0/2.0	138	710

REGISTERED CIVIL ENGINEER 06/30/14 DATE

8-18-14
PLANS APPROVAL DATE

REGISTERED PROFESSIONAL ENGINEER S. D. DANSKY No. 60220 Exp. 6/30/16 CIVIL STATE OF CALIFORNIA

THE STATE OF CALIFORNIA OR ITS OFFICERS OR AGENTS SHALL NOT BE RESPONSIBLE FOR THE ACCURACY OR COMPLETENESS OF SCANNED COPIES OF THIS PLAN SHEET.

MARK THOMAS & CO., INC.
3000 OAK RD, SUITE 650
WALNUT CREEK, CA 94597

TRANSPORTATION AUTHORITY OF MARIN
750 LINDARO ST, SUITE 200
SAN RAFAEL, CA 94901

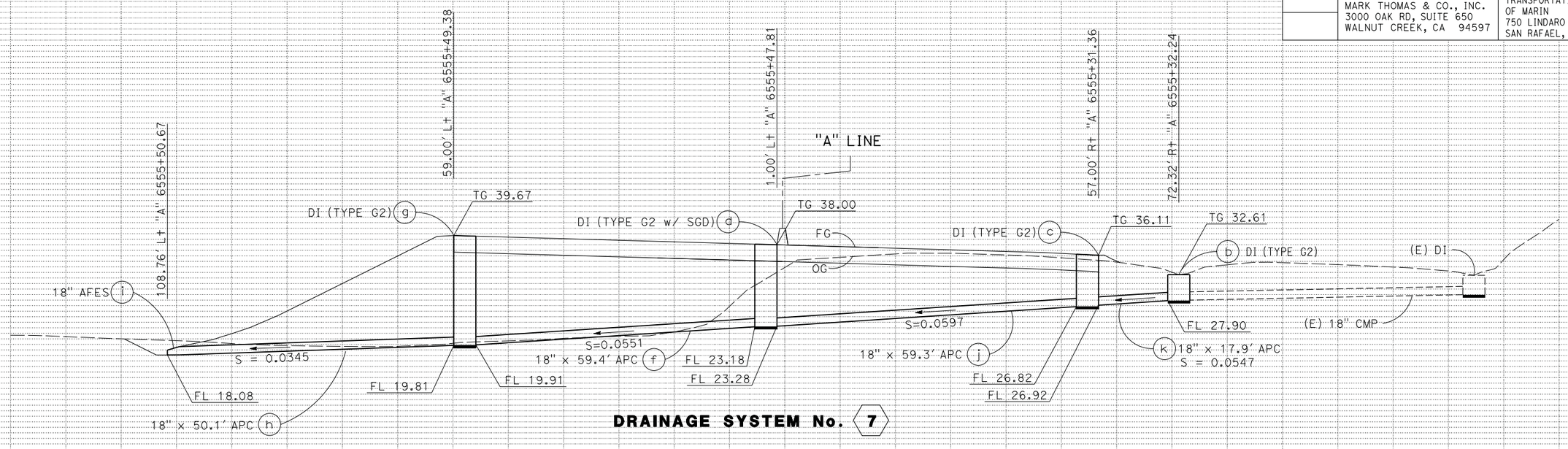

DRAINAGE SYSTEM No. 7

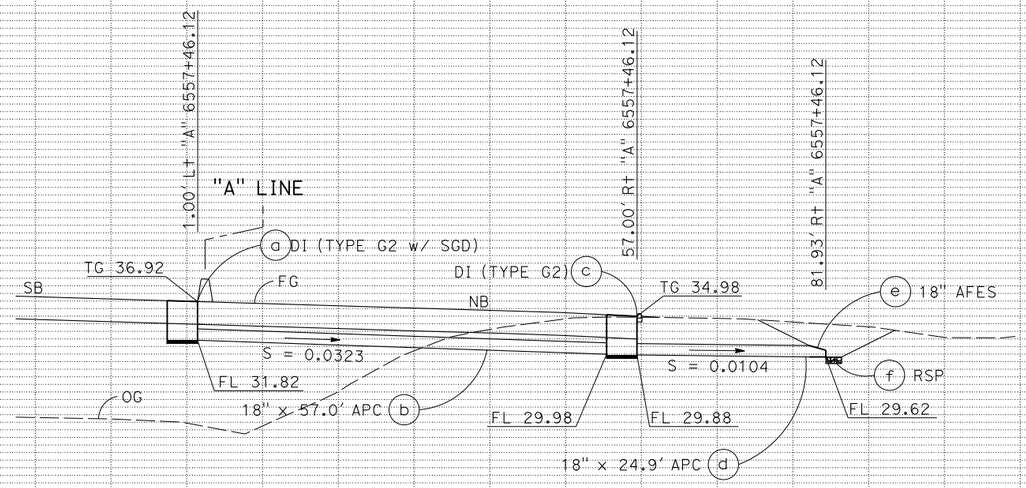

DRAINAGE SYSTEM No. 8

DRAINAGE PROFILES

SCALE: Horiz 1" = 10'
Vert 1" = 10'

DP-8

STATE OF CALIFORNIA - DEPARTMENT OF TRANSPORTATION
Caltrans

CONSULTANT FUNCTIONAL SUPERVISOR: MICHAEL LOHMAN
CALCULATED-DESIGNED BY: CHRIS BRIANA
CHECKED BY: TOM CONNELL
REVISED BY: CB
DATE REVISED: 4/30/12
CB 2/7/14
CB 5/13/14

LAST REVISION 00-00-00
DATE PLOTTED => 30-SEP-2014
TIME PLOTTED => 14:14

Dist	COUNTY	ROUTE	POST MILES TOTAL PROJECT	SHEET No.	TOTAL SHEETS
04	Mrn, Son	101	26.8/27.6, 0.0/2.0	139	710

REGISTERED CIVIL ENGINEER — 06/30/14 DATE

8-18-14
PLANS APPROVAL DATE

REGISTERED PROFESSIONAL ENGINEER
S. D. DANSKY
No. 60220
Exp. 6/30/16
CIVIL
STATE OF CALIFORNIA

THE STATE OF CALIFORNIA OR ITS OFFICERS OR AGENTS SHALL NOT BE RESPONSIBLE FOR THE ACCURACY OR COMPLETENESS OF SCANNED COPIES OF THIS PLAN SHEET.

MARK THOMAS & CO., INC.
3000 OAK RD, SUITE 650
WALNUT CREEK, CA 94597

TRANSPORTATION AUTHORITY OF MARIN
750 LINDARO ST, SUITE 200
SAN RAFAEL, CA 94901

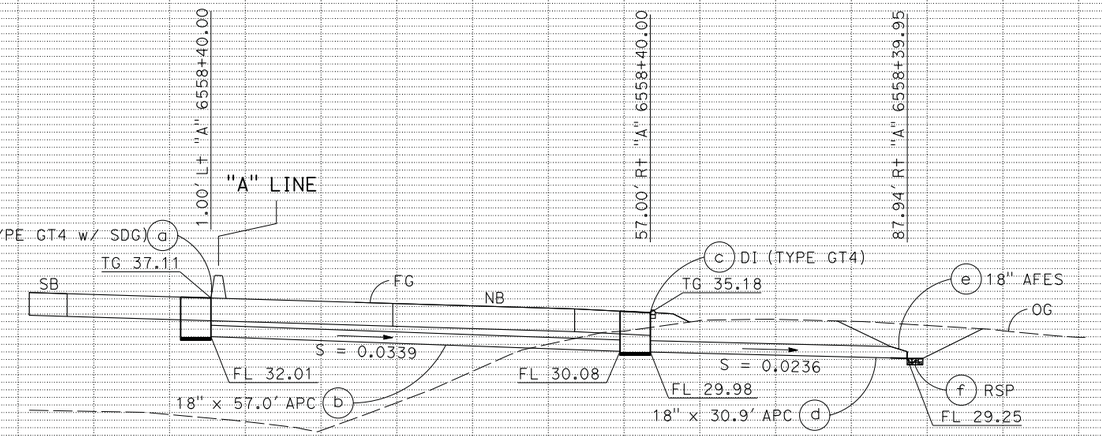

DRAINAGE SYSTEM No. 11

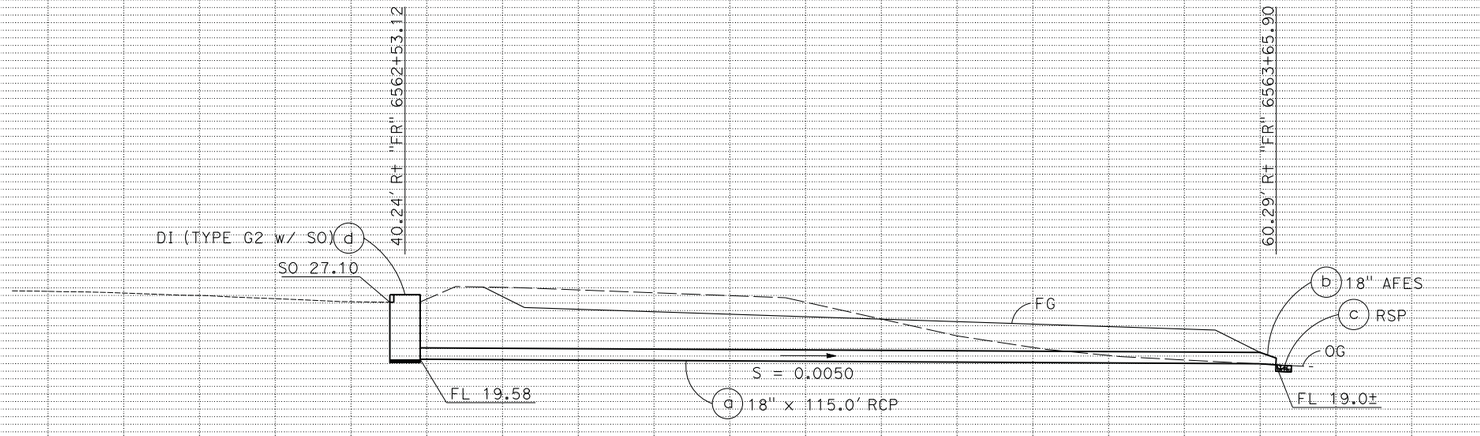

DRAINAGE SYSTEM No. 13

DRAINAGE PROFILES

SCALE: Horiz 1" = 10'
Vert 1" = 10'

DP-9

STATE OF CALIFORNIA - DEPARTMENT OF TRANSPORTATION
Caltrans
CONSULTANT FUNCTIONAL SUPERVISOR: MICHAEL LOHMAN
CALCULATED-DESIGNED BY: CHRIS BRIANA
CHECKED BY: TOM CONNELL

REVISED BY	DATE REVISED
CB	4/30/12
CB	2/7/14
CB	5/13/14

LAST REVISION 00-00-00
DATE PLOTTED => 30-SEP-2014
TIME PLOTTED => 14:14

BORDER LAST REVISED 7/2/2010
USERNAME => acroskey
DGN FILE => 04000007351ib009.dgn
RELATIVE BORDER SCALE IS IN INCHES 0 1 2 3
UNIT 0716
PROJECT NUMBER & PHASE 04000007351

Dist	COUNTY	ROUTE	POST MILES TOTAL PROJECT	SHEET No.	TOTAL SHEETS
04	Mrn, Son	101	26.8/27.6, 0.0/2.0	140	710

REGISTERED CIVIL ENGINEER — DATE 06/30/14

8-18-14
PLANS APPROVAL DATE

REGISTERED PROFESSIONAL ENGINEER
S. D. DANSKY
No. 60220
Exp. 6/30/16
CIVIL
STATE OF CALIFORNIA

THE STATE OF CALIFORNIA OR ITS OFFICERS OR AGENTS SHALL NOT BE RESPONSIBLE FOR THE ACCURACY OR COMPLETENESS OF SCANNED COPIES OF THIS PLAN SHEET.

MARK THOMAS & CO., INC.
3000 OAK RD, SUITE 650
WALNUT CREEK, CA 94597

TRANSPORTATION AUTHORITY OF MARIN
750 LINDARO ST, SUITE 200
SAN RAFAEL, CA 94901

REVISED BY	DATE REVISED
CB	4/30/12
CB	2/7/14
CB	5/13/14

CHRIS BRIANA
TOM CONNELL
CALCULATED-DESIGNED BY
CHECKED BY

CONSULTANT FUNCTIONAL SUPERVISOR - MICHAEL LOHMAN

STATE OF CALIFORNIA - DEPARTMENT OF TRANSPORTATION
Caltrans

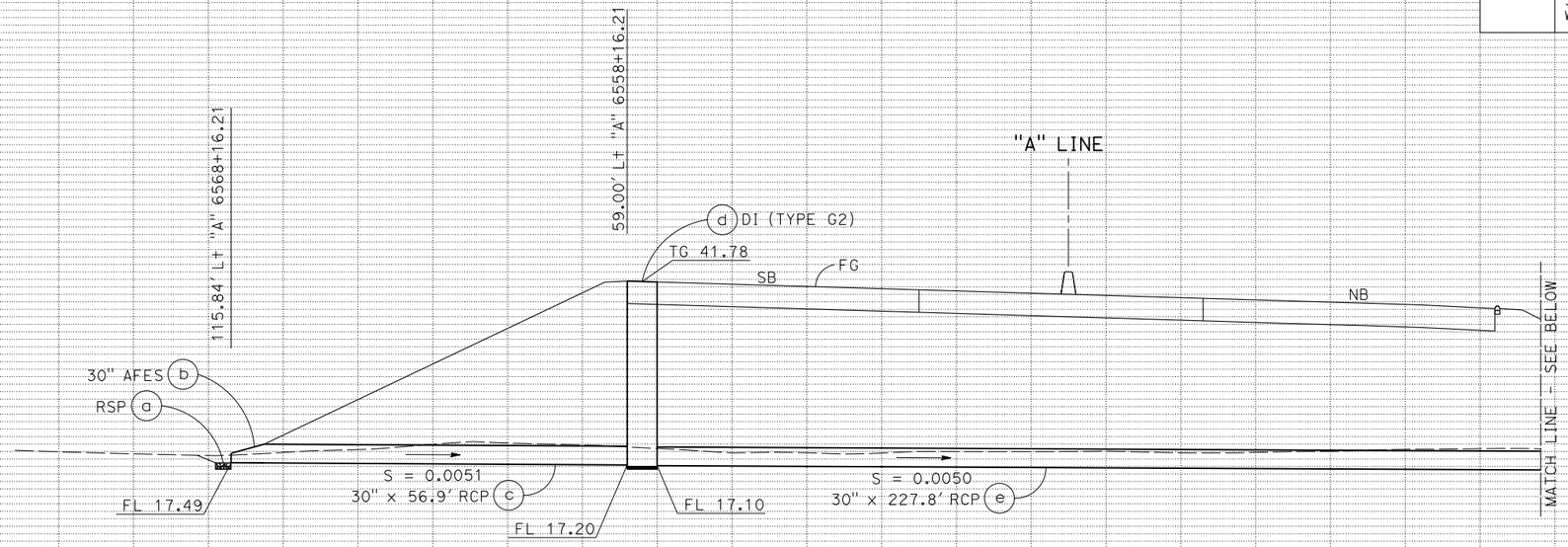

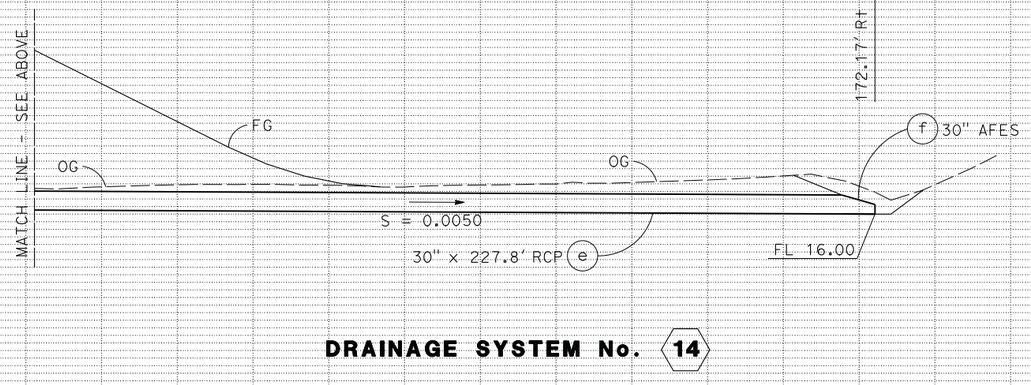

DRAINAGE SYSTEM No. 14

DRAINAGE PROFILES

SCALE: Horiz 1" = 10'
Vert 1" = 10'

DP-10

LAST REVISION 00-00-00
DATE PLOTTED => 30-SEP-2014
TIME PLOTTED => 14:14

BORDER LAST REVISED 7/2/2010
USERNAME => acroskey
DGN FILE => 04000007351b010.dgn
RELATIVE BORDER SCALE IS IN INCHES 0 1 2 3
UNIT 0716
PROJECT NUMBER & PHASE 04000007351

Dist	COUNTY	ROUTE	POST MILES TOTAL PROJECT	SHEET No.	TOTAL SHEETS
04	Mrn, Son	101	26.8/27.6, 0.0/2.0	141	710

REGISTERED CIVIL ENGINEER — DATE 06/30/14

8-18-14
PLANS APPROVAL DATE

REGISTERED PROFESSIONAL ENGINEER — S. D. DANSKY — No. 60220 — Exp. 6/30/16 — CIVIL — STATE OF CALIFORNIA

THE STATE OF CALIFORNIA OR ITS OFFICERS OR AGENTS SHALL NOT BE RESPONSIBLE FOR THE ACCURACY OR COMPLETENESS OF SCANNED COPIES OF THIS PLAN SHEET.

MARK THOMAS & CO., INC.
3000 OAK RD, SUITE 650
WALNUT CREEK, CA 94597

TRANSPORTATION AUTHORITY OF MARIN
750 LINDARO ST, SUITE 200
SAN RAFAEL, CA 94901

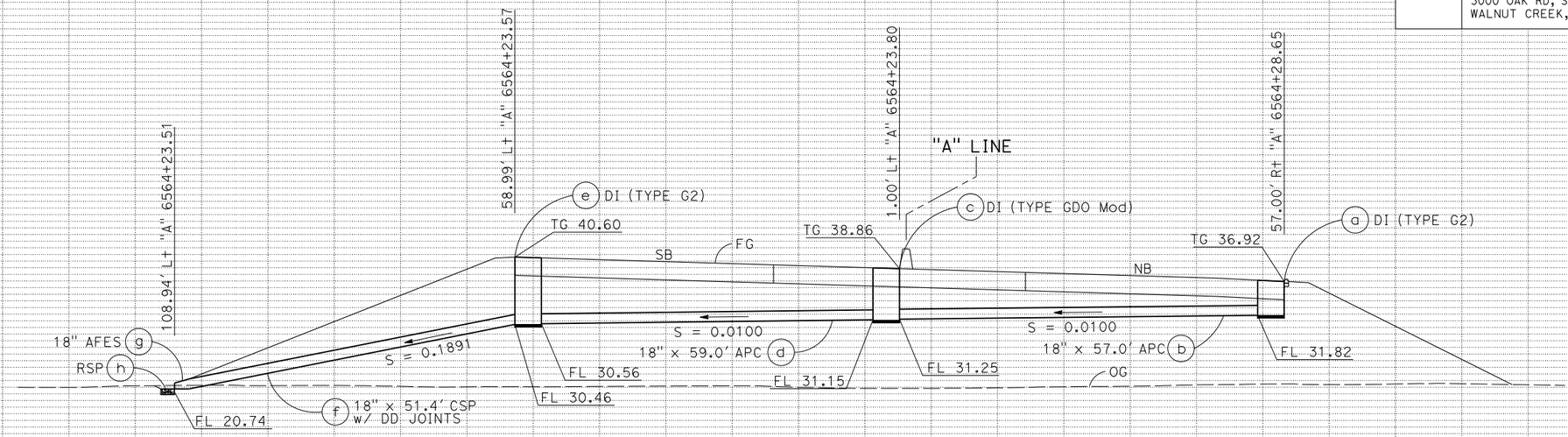

DRAINAGE SYSTEM No. 15

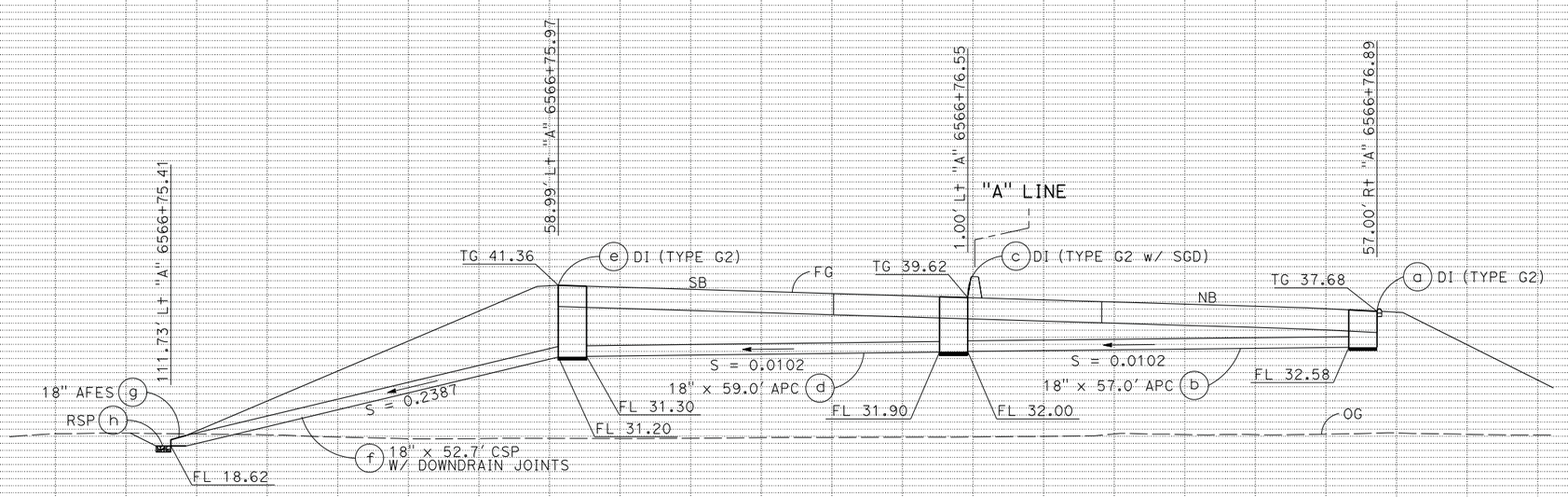

DRAINAGE SYSTEM No. 16

DRAINAGE PROFILES

SCALE: Horiz 1" = 10'
Vert 1" = 10'

DP-11

STATE OF CALIFORNIA - DEPARTMENT OF TRANSPORTATION
Caltrans

CONSULTANT FUNCTIONAL SUPERVISOR: MICHAEL LOHMAN
CALCULATED-DESIGNED BY: CHRIS BRIANA
CHECKED BY: TOM CONNELL

REVISED BY	DATE REVISED
CB	4/30/12
CB	2/7/14
CB	5/13/14

LAST REVISION 00-00-00
DATE PLOTTED => 30-SEP-2014
TIME PLOTTED => 14:14

BORDER LAST REVISED 7/2/2010
USERNAME => acroskey
DGN FILE => 04000007351ib011.dgn
RELATIVE BORDER SCALE IS IN INCHES 0 1 2 3
UNIT 0716
PROJECT NUMBER & PHASE 04000007351

Dist	COUNTY	ROUTE	POST MILES TOTAL PROJECT	SHEET No.	TOTAL SHEETS
04	Mrn, Son	101	26.8/27.6, 0.0/2.0	142	710

REGISTERED CIVIL ENGINEER — 06/30/14 DATE

8-18-14
PLANS APPROVAL DATE

REGISTERED PROFESSIONAL ENGINEER — S. D. DANSKY No. 60220 Exp. 6/30/16 CIVIL — STATE OF CALIFORNIA

THE STATE OF CALIFORNIA OR ITS OFFICERS OR AGENTS SHALL NOT BE RESPONSIBLE FOR THE ACCURACY OR COMPLETENESS OF SCANNED COPIES OF THIS PLAN SHEET.

MARK THOMAS & CO., INC.
3000 OAK RD, SUITE 650
WALNUT CREEK, CA 94597

TRANSPORTATION AUTHORITY OF MARIN
750 LINDARO ST, SUITE 200
SAN RAFAEL, CA 94901

REVISED BY	DATE REVISED
CB	4/30/12
CB	2/7/14
CB	5/13/14

CALCULATED-DESIGNED BY: CHRIS BRIANA
CHECKED BY: TOM CONNELL
CONSULTANT FUNCTIONAL SUPERVISOR: MICHAEL LOHMAN
STATE OF CALIFORNIA - DEPARTMENT OF TRANSPORTATION

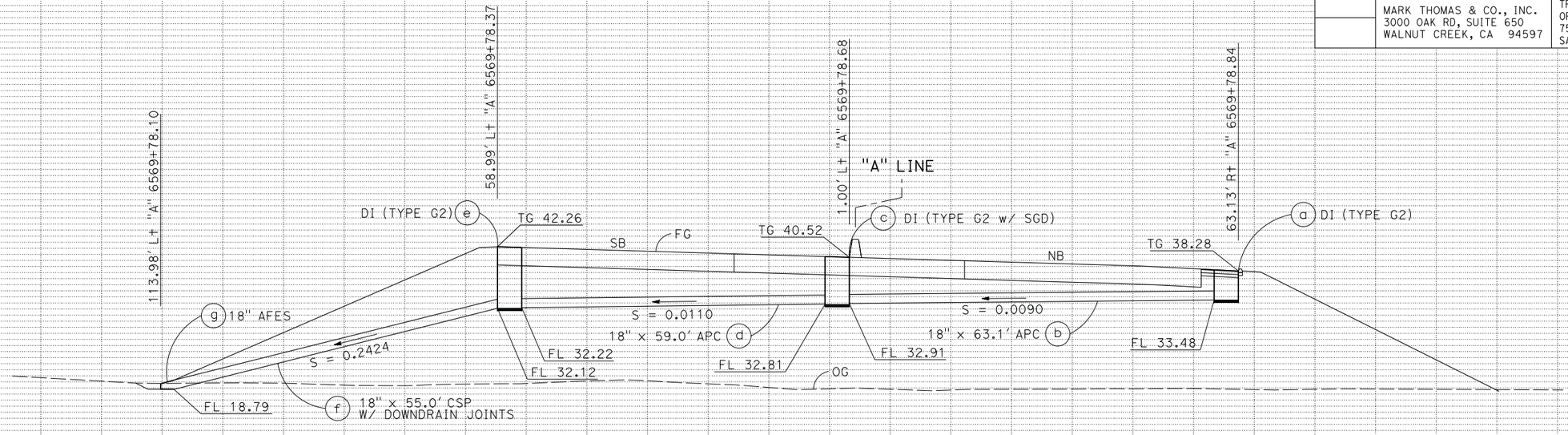

DRAINAGE SYSTEM No. 17

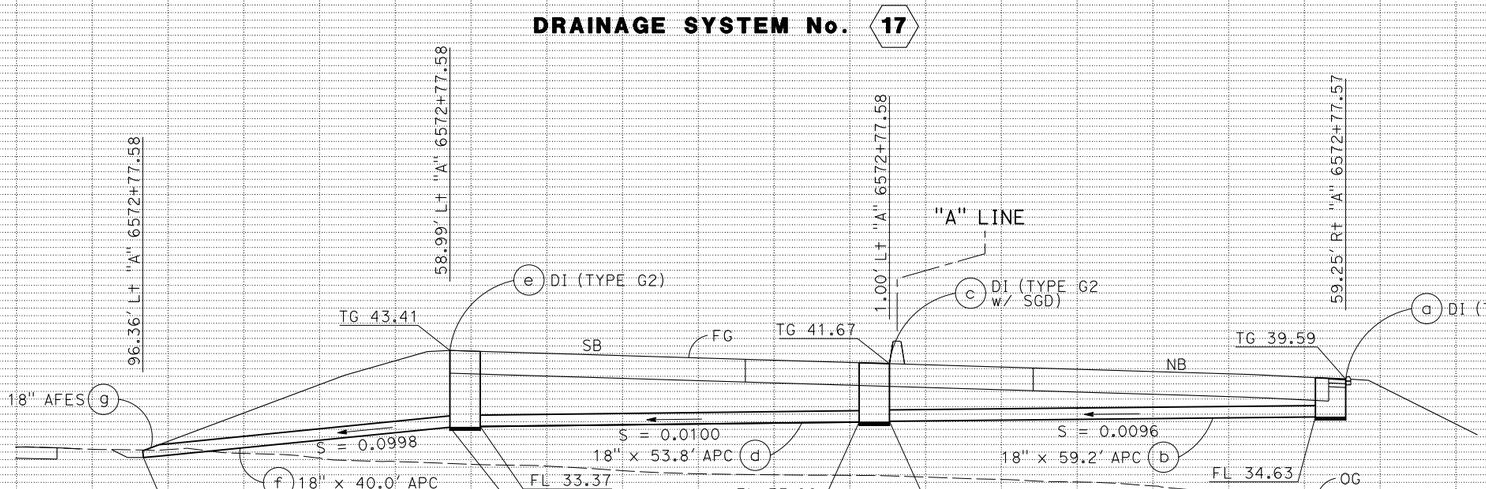

DRAINAGE SYSTEM No. 18

DRAINAGE PROFILES

SCALE: Horiz 1" = 10'
Vert 1" = 10'

DP-12

LAST REVISION 00-00-00 | DATE PLOTTED => 30-SEP-2014 | TIME PLOTTED => 14:14

BORDER LAST REVISED 7/2/2010 | USERNAME => acroskey | DGN FILE => 04000007351b012.dgn | RELATIVE BORDER SCALE IS IN INCHES 0 1 2 3 | UNIT 0716 | PROJECT NUMBER & PHASE 04000007351

Dist	COUNTY	ROUTE	POST MILES TOTAL PROJECT	SHEET No.	TOTAL SHEETS
04	Mrn, Son	101	26.8/27.6, 0.0/2.0	143	710

REGISTERED CIVIL ENGINEER — 06/30/14 DATE

S. D. DANSKY No. 60220 Exp. 6/30/16 CIVIL — REGISTERED PROFESSIONAL ENGINEER — STATE OF CALIFORNIA

8-18-14
PLANS APPROVAL DATE

THE STATE OF CALIFORNIA OR ITS OFFICERS OR AGENTS SHALL NOT BE RESPONSIBLE FOR THE ACCURACY OR COMPLETENESS OF SCANNED COPIES OF THIS PLAN SHEET.

MARK THOMAS & CO., INC.
3000 OAK RD, SUITE 650
WALNUT CREEK, CA 94597

TRANSPORTATION AUTHORITY OF MARIN
750 LINDARO ST, SUITE 200
SAN RAFAEL, CA 94901

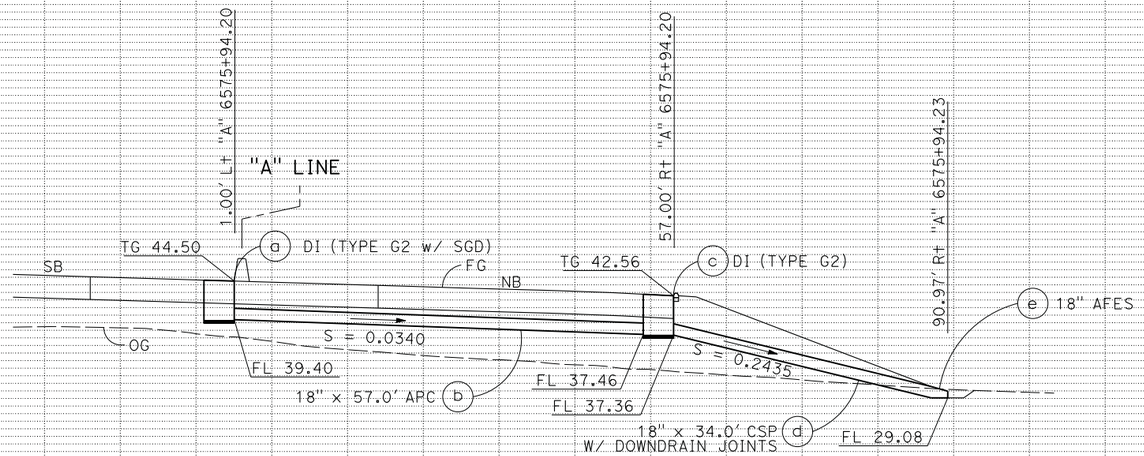

DRAINAGE SYSTEM No. 19

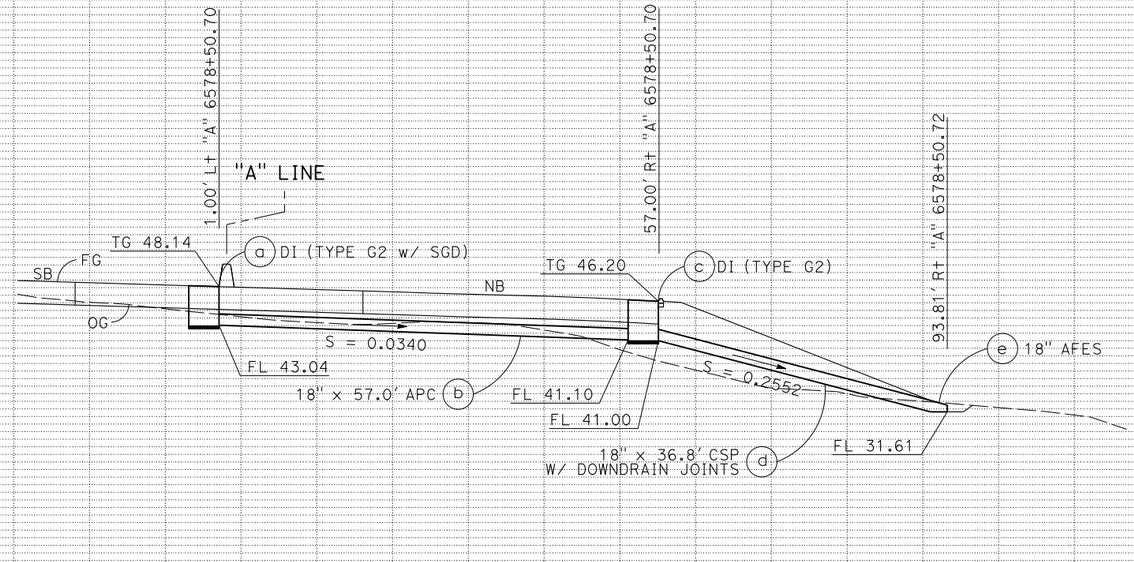

DRAINAGE SYSTEM No. 20

DRAINAGE PROFILES

SCALE: Horiz 1" = 10'
Vert 1" = 10'

DP-13

CB 5/13/14 — CHRIS BRIANA
CB 2/7/14 — TOM CONNELL
CB 4/30/12 — CALCULATED-DESIGNED BY
REVISED BY — CHECKED BY
DATE REVISED

CONSULTANT FUNCTIONAL SUPERVISOR — MICHAEL LOHMAN

STATE OF CALIFORNIA - DEPARTMENT OF TRANSPORTATION

LAST REVISION 00-00-00 — DATE PLOTTED => 30-SEP-2014 — TIME PLOTTED => 14:14

BORDER LAST REVISED 7/2/2010 | USERNAME => acroskey | DGN FILE => 0400000735ib013.dgn | RELATIVE BORDER SCALE IS IN INCHES 0 1 2 3 | UNIT 0716 | PROJECT NUMBER & PHASE 04000007351

Dist	COUNTY	ROUTE	POST MILES TOTAL PROJECT	SHEET No.	TOTAL SHEETS
04	Mrn, Son	101	26.8/27.6, 0.0/2.0	144	710

REGISTERED CIVIL ENGINEER — DATE 06/30/14

8-18-14
PLANS APPROVAL DATE

REGISTERED PROFESSIONAL ENGINEER — S. D. DANSKY — No. 60220 — Exp. 6/30/16 — CIVIL — STATE OF CALIFORNIA

THE STATE OF CALIFORNIA OR ITS OFFICERS OR AGENTS SHALL NOT BE RESPONSIBLE FOR THE ACCURACY OR COMPLETENESS OF SCANNED COPIES OF THIS PLAN SHEET.

MARK THOMAS & CO., INC.
3000 OAK RD, SUITE 650
WALNUT CREEK, CA 94597

TRANSPORTATION AUTHORITY OF MARIN
750 LINDARO ST, SUITE 200
SAN RAFAEL, CA 94901

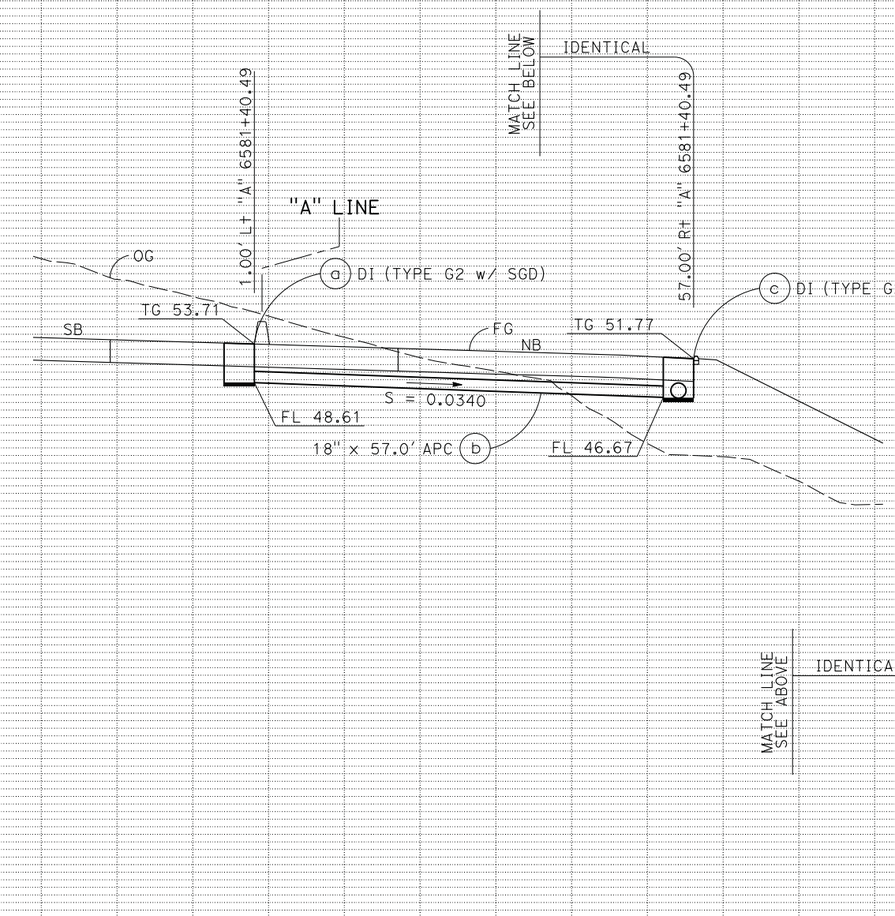

DRAINAGE SYSTEM No. 21

DRAINAGE PROFILES

SCALE: Horiz 1" = 10'
Vert 1" = 10'

DP-14

CB 5/13/14
CB 2/7/14
CB 4/30/12
REVISED BY / DATE REVISED
CHRIS BRIANA / TOM CONNELL
CALCULATED-DESIGNED BY
CHECKED BY
CONSULTANT FUNCTIONAL SUPERVISOR: MICHAEL LOHMAN
STATE OF CALIFORNIA - DEPARTMENT OF TRANSPORTATION
Caltrans

LAST REVISION 00-00-00 | DATE PLOTTED => 30-SEP-2014 | TIME PLOTTED => 14:14

BORDER LAST REVISED 7/2/2010 | USERNAME => acroskey | DGN FILE => 0400000735ib014.dgn | RELATIVE BORDER SCALE IS IN INCHES 0 1 2 3 | UNIT 0716 | PROJECT NUMBER & PHASE 04000007351

Dist	COUNTY	ROUTE	POST MILES TOTAL PROJECT	SHEET No.	TOTAL SHEETS
04	Mrn, Son	101	26.8/27.6, 0.0/2.0	145	710

REGISTERED CIVIL ENGINEER — 06/30/14 DATE

8-18-14
PLANS APPROVAL DATE

REGISTERED PROFESSIONAL ENGINEER
S. D. DANSKY
No. 60220
Exp. 6/30/16
CIVIL
STATE OF CALIFORNIA

THE STATE OF CALIFORNIA OR ITS OFFICERS OR AGENTS SHALL NOT BE RESPONSIBLE FOR THE ACCURACY OR COMPLETENESS OF SCANNED COPIES OF THIS PLAN SHEET.

MARK THOMAS & CO., INC.
3000 OAK RD, SUITE 650
WALNUT CREEK, CA 94597

TRANSPORTATION AUTHORITY OF MARIN
750 LINDARO ST, SUITE 200
SAN RAFAEL, CA 94901

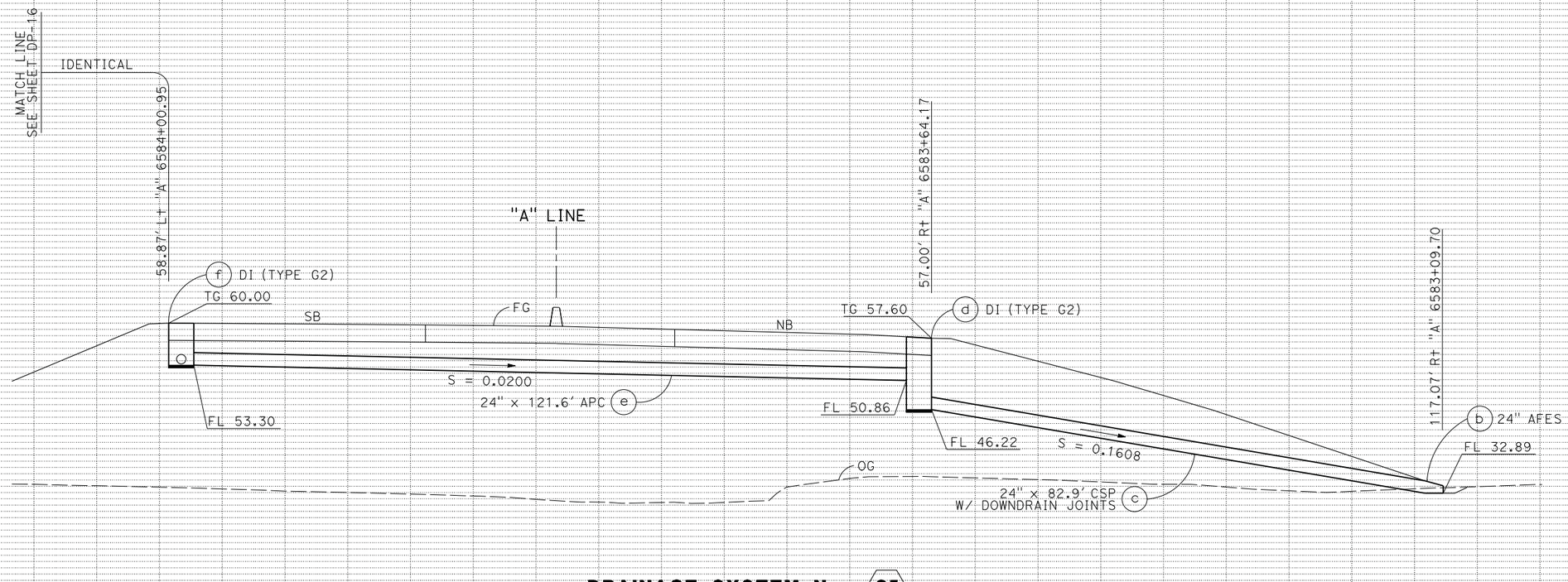

DRAINAGE SYSTEM No. 25

DRAINAGE PROFILES

SCALE: Horiz 1" = 10'
Vert 1" = 10'

DP-15

CHRIS BRIANA — CALCULATED-DESIGNED BY
TOM CONNELL — CHECKED BY
MICHAEL LOHMAN — CONSULTANT FUNCTIONAL SUPERVISOR
STATE OF CALIFORNIA - DEPARTMENT OF TRANSPORTATION — Caltrans

REVISED BY	DATE REVISED
CB	4/30/12
CB	2/7/14
CB	5/13/14

LAST REVISION 00-00-00
DATE PLOTTED => 30-SEP-2014
TIME PLOTTED => 14:14

BORDER LAST REVISED 7/2/2010
USERNAME => acroskey
DGN FILE => 04000007351ib015.dgn
RELATIVE BORDER SCALE IS IN INCHES 0 1 2 3
UNIT 0716
PROJECT NUMBER & PHASE 04000007351

Dist	COUNTY	ROUTE	POST MILES TOTAL PROJECT	SHEET No.	TOTAL SHEETS
04	Mrn, Son	101	26.8/27.6, 0.0/2.0	146	710

REGISTERED CIVIL ENGINEER — DATE 06/30/14

8-18-14
PLANS APPROVAL DATE

REGISTERED PROFESSIONAL ENGINEER
S. D. DANSKY
No. 60220
Exp. 6/30/16
CIVIL
STATE OF CALIFORNIA

THE STATE OF CALIFORNIA OR ITS OFFICERS OR AGENTS SHALL NOT BE RESPONSIBLE FOR THE ACCURACY OR COMPLETENESS OF SCANNED COPIES OF THIS PLAN SHEET.

MARK THOMAS & CO., INC.
3000 OAK RD, SUITE 650
WALNUT CREEK, CA 94597

TRANSPORTATION AUTHORITY OF MARIN
750 LINDARO ST, SUITE 200
SAN RAFAEL, CA 94901

REVISED BY	DATE REVISED
CB	5/13/14
CB	2/7/14
CB	4/30/12

CHRIS BRIANA
TOM CONNELL

CALCULATED-DESIGNED BY
CHECKED BY

CONSULTANT FUNCTIONAL SUPERVISOR
MICHAEL LOHMAN

STATE OF CALIFORNIA - DEPARTMENT OF TRANSPORTATION
Caltrans

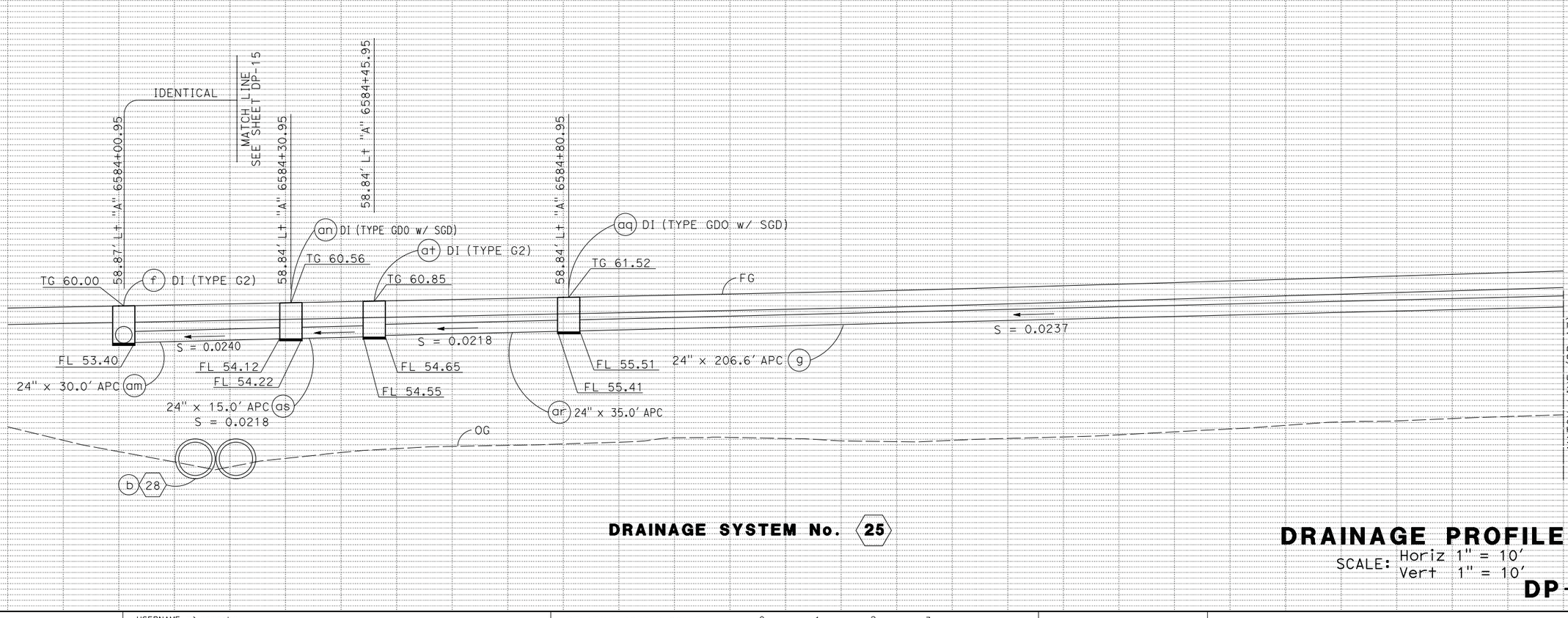

DRAINAGE SYSTEM No. 25

DRAINAGE PROFILES

SCALE: Horiz 1" = 10'
Vert 1" = 10'

DP-16

LAST REVISION 00-00-00
DATE PLOTTED => 30-SEP-2014
TIME PLOTTED => 14:14

BORDER LAST REVISED 7/2/2010
USERNAME => acroskey
DGN FILE => 04000007351ib016.dgn
RELATIVE BORDER SCALE IS IN INCHES 0 1 2 3
UNIT 0716
PROJECT NUMBER & PHASE 04000007351

Dist	COUNTY	ROUTE	POST MILES TOTAL PROJECT	SHEET No.	TOTAL SHEETS
04	Mrn, Son	101	26.8/27.6, 0.0/2.0	147	710

REGISTERED CIVIL ENGINEER — DATE 06/30/14

8-18-14
PLANS APPROVAL DATE

REGISTERED PROFESSIONAL ENGINEER
S. D. DANSKY
No. 60220
Exp. 6/30/16
CIVIL
STATE OF CALIFORNIA

THE STATE OF CALIFORNIA OR ITS OFFICERS OR AGENTS SHALL NOT BE RESPONSIBLE FOR THE ACCURACY OR COMPLETENESS OF SCANNED COPIES OF THIS PLAN SHEET.

MARK THOMAS & CO., INC.
3000 OAK RD, SUITE 650
WALNUT CREEK, CA 94597

TRANSPORTATION AUTHORITY OF MARIN
750 LINDARO ST, SUITE 200
SAN RAFAEL, CA 94901

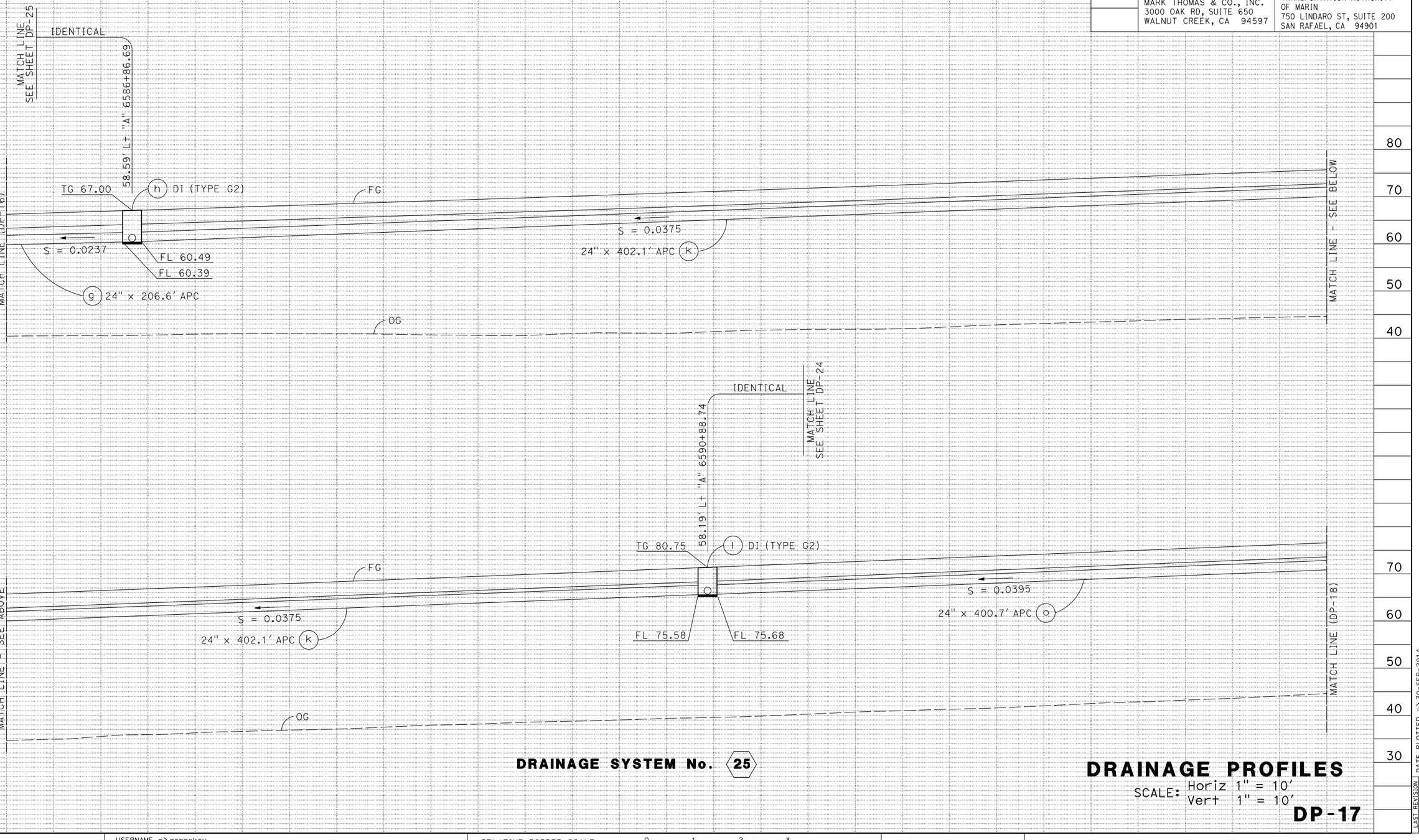

DRAINAGE SYSTEM No. 25

DRAINAGE PROFILES

SCALE: Horiz 1" = 10'
Vert 1" = 10'

DP-17

REVISED BY	CB	CB	CB
DATE REVISED	4/30/12	2/7/14	5/13/14

CHRIS BRIANA
TOM CONNELL
CALCULATED-DESIGNED BY
CHECKED BY

CONSULTANT FUNCTIONAL SUPERVISOR
MICHAEL LOHMAN

STATE OF CALIFORNIA - DEPARTMENT OF TRANSPORTATION
Caltrans

LAST REVISION 00-00-00
DATE PLOTTED => 30-SEP-2014
TIME PLOTTED => 14:14

BORDER LAST REVISED 7/2/2010
USERNAME => acroskey
DGN FILE => 0400000735ib017.dgn
RELATIVE BORDER SCALE IS IN INCHES 0 1 2 3
UNIT 0716
PROJECT NUMBER & PHASE 04000007351

Dist	COUNTY	ROUTE	POST MILES TOTAL PROJECT	SHEET No.	TOTAL SHEETS
04	Mrn, Son	101	26.8/27.6, 0.0/2.0	148	710

REGISTERED CIVIL ENGINEER — 06/30/14 DATE

REGISTERED PROFESSIONAL ENGINEER — S. D. DANSKY — No. 60220 — Exp. 6/30/16 — CIVIL — STATE OF CALIFORNIA

8-18-14
PLANS APPROVAL DATE

THE STATE OF CALIFORNIA OR ITS OFFICERS OR AGENTS SHALL NOT BE RESPONSIBLE FOR THE ACCURACY OR COMPLETENESS OF SCANNED COPIES OF THIS PLAN SHEET.

MARK THOMAS & CO., INC.
3000 OAK RD, SUITE 650
WALNUT CREEK, CA 94597

TRANSPORTATION AUTHORITY OF MARIN
750 LINDARO ST, SUITE 200
SAN RAFAEL, CA 94901

REVISED BY	DATE REVISED
CB	4/30/12
CB	2/7/14
CB	5/13/14

CHRIS BRIANA — TOM CONNELL — CALCULATED-DESIGNED BY — CHECKED BY

CONSULTANT FUNCTIONAL SUPERVISOR — MICHAEL LOHMAN

STATE OF CALIFORNIA - DEPARTMENT OF TRANSPORTATION — Caltrans

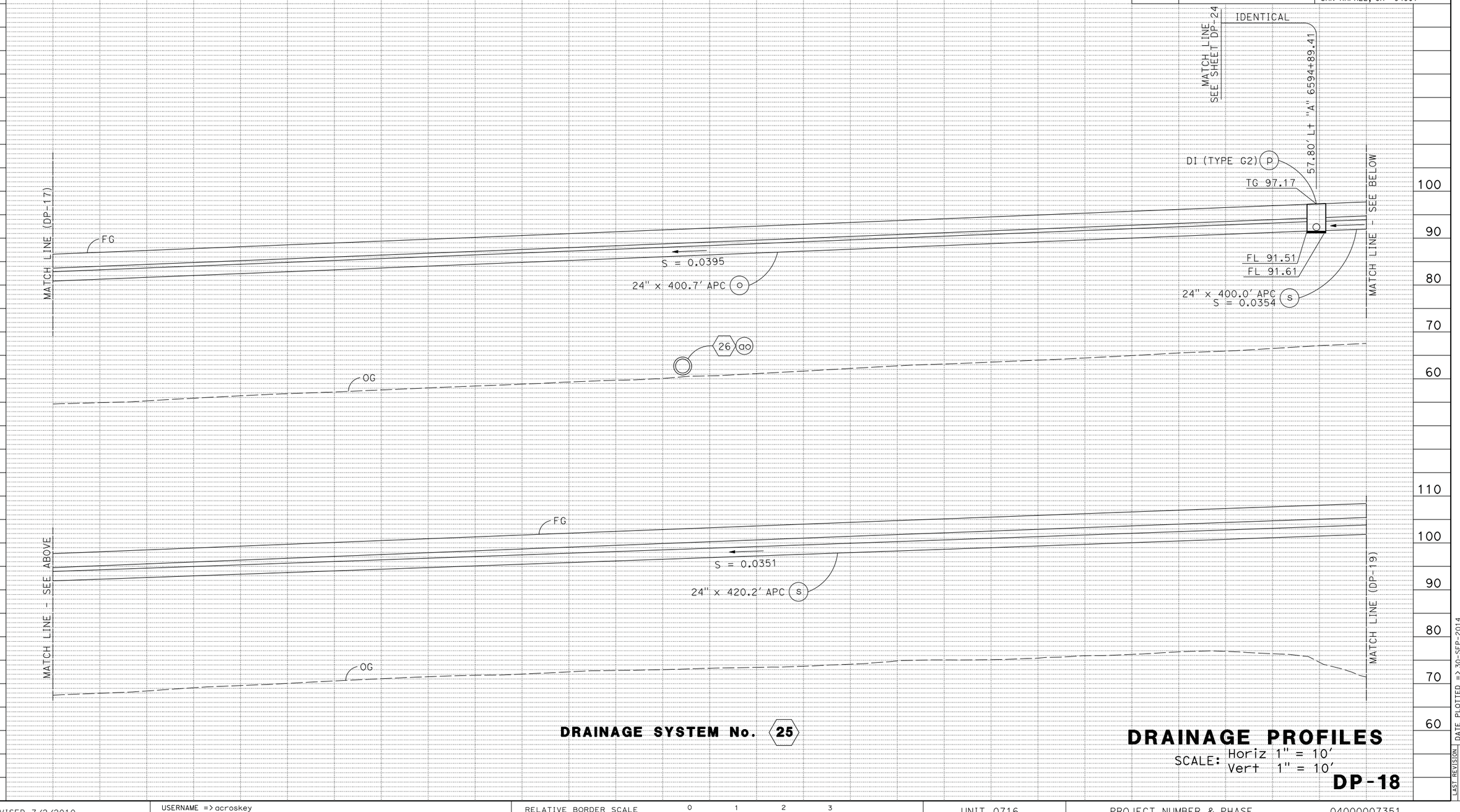

DRAINAGE SYSTEM No. 25

DRAINAGE PROFILES

SCALE: Horiz 1" = 10'
Vert 1" = 10'

DP-18

LAST REVISION 00-00-00 | DATE PLOTTED => 30-SEP-2014 | TIME PLOTTED => 14:14

BORDER LAST REVISED 7/2/2010 | USERNAME => acroskey | DGN FILE => 04000007351b018.dgn | RELATIVE BORDER SCALE IS IN INCHES 0 1 2 3 | UNIT 0716 | PROJECT NUMBER & PHASE 04000007351

Dist	COUNTY	ROUTE	POST MILES TOTAL PROJECT	SHEET No.	TOTAL SHEETS
04	Mrn, Son	101	26.8/27.6, 0.0/2.0	149	710

REGISTERED CIVIL ENGINEER — 06/30/14 DATE

8-18-14
PLANS APPROVAL DATE

REGISTERED PROFESSIONAL ENGINEER — S. D. DANSKY No. 60220 Exp. 6/30/16 CIVIL — STATE OF CALIFORNIA

THE STATE OF CALIFORNIA OR ITS OFFICERS OR AGENTS SHALL NOT BE RESPONSIBLE FOR THE ACCURACY OR COMPLETENESS OF SCANNED COPIES OF THIS PLAN SHEET.

MARK THOMAS & CO., INC.
3000 OAK RD, SUITE 650
WALNUT CREEK, CA 94597

TRANSPORTATION AUTHORITY OF MARIN
750 LINDARO ST, SUITE 200
SAN RAFAEL, CA 94901

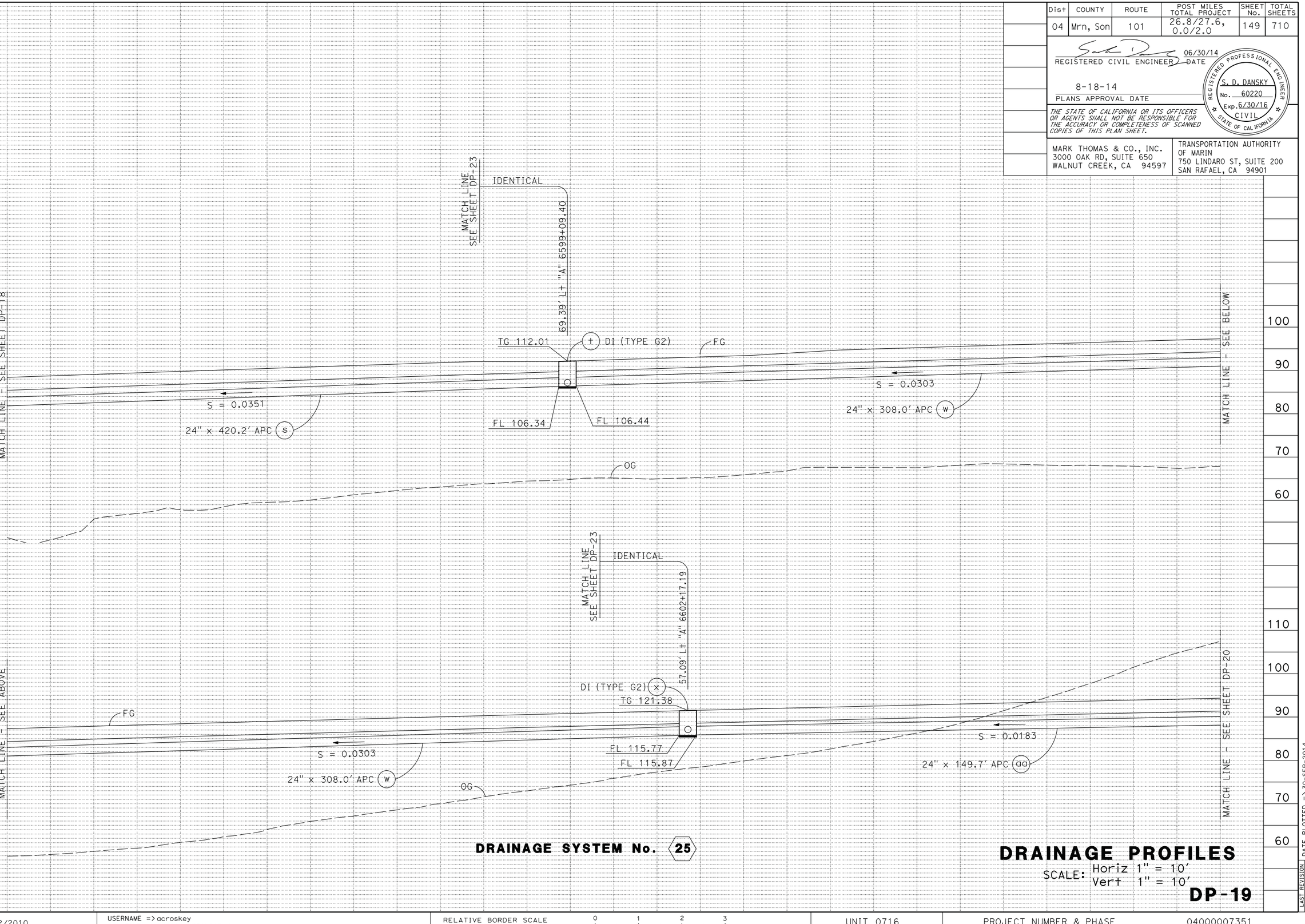

DRAINAGE SYSTEM No. 25

DRAINAGE PROFILES

SCALE: Horiz 1" = 10'
Vert 1" = 10'

DP-19

REVISED BY	DATE REVISED
CB	4/30/12
CB	2/7/14
CB	5/13/14

CALCULATED-DESIGNED BY: CHRIS BRIANA
CHECKED BY: TOM CONNELL

CONSULTANT FUNCTIONAL SUPERVISOR: MICHAEL LOHMAN

STATE OF CALIFORNIA - DEPARTMENT OF TRANSPORTATION

LAST REVISION 00-00-00
DATE PLOTTED => 30-SEP-2014
TIME PLOTTED => 14:14

BORDER LAST REVISED 7/2/2010
USERNAME => acroskey
DGN FILE => 04000007351ib019.dgn
RELATIVE BORDER SCALE IS IN INCHES 0 1 2 3
UNIT 0716
PROJECT NUMBER & PHASE 04000007351

Dist	COUNTY	ROUTE	POST MILES TOTAL PROJECT	SHEET No.	TOTAL SHEETS
04	Mrn, Son	101	26.8/27.6, 0.0/2.0	150	710

REGISTERED CIVIL ENGINEER — DATE 06/30/14

8-18-14
PLANS APPROVAL DATE

REGISTERED PROFESSIONAL ENGINEER
S. D. DANSKY
No. 60220
Exp. 6/30/16
CIVIL
STATE OF CALIFORNIA

THE STATE OF CALIFORNIA OR ITS OFFICERS OR AGENTS SHALL NOT BE RESPONSIBLE FOR THE ACCURACY OR COMPLETENESS OF SCANNED COPIES OF THIS PLAN SHEET.

MARK THOMAS & CO., INC.
3000 OAK RD, SUITE 650
WALNUT CREEK, CA 94597

TRANSPORTATION AUTHORITY OF MARIN
750 LINDARO ST, SUITE 200
SAN RAFAEL, CA 94901

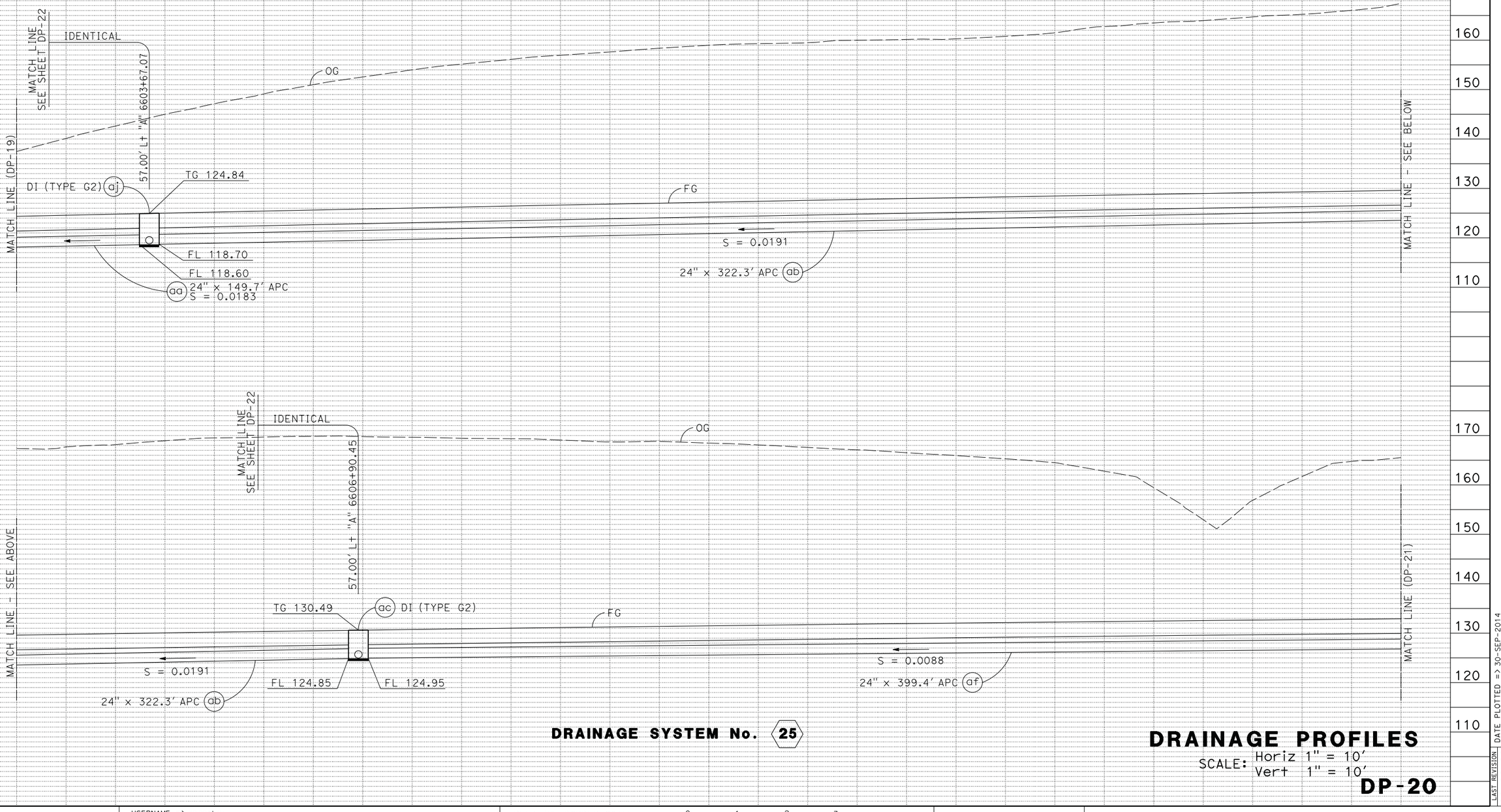

DRAINAGE SYSTEM No. 25

DRAINAGE PROFILES

SCALE: Horiz 1" = 10'
Vert 1" = 10'

DP-20

CB	CB	CB	REVISED BY
5/13/14	2/7/14	4/30/12	DATE REVISED

CHRIS BRIANA
TOM CONNELL
CALCULATED-DESIGNED BY
CHECKED BY

CONSULTANT FUNCTIONAL SUPERVISOR
MICHAEL LOHMAN

STATE OF CALIFORNIA - DEPARTMENT OF TRANSPORTATION
Caltrans

LAST REVISION 00-00-00
DATE PLOTTED => 30-SEP-2014
TIME PLOTTED => 14:14

BORDER LAST REVISED 7/2/2010
USERNAME => acroskey
DGN FILE => 04000007351b020.dgn
RELATIVE BORDER SCALE IS IN INCHES 0 1 2 3
UNIT 0716
PROJECT NUMBER & PHASE 04000007351

Dist	COUNTY	ROUTE	POST MILES TOTAL PROJECT	SHEET No.	TOTAL SHEETS
04	Mrn, Son	101	26.8/27.6, 0.0/2.0	151	710

REGISTERED CIVIL ENGINEER — DATE 06/30/14

8-18-14
PLANS APPROVAL DATE

REGISTERED PROFESSIONAL ENGINEER — S. D. DANSKY — No. 60220 — Exp. 6/30/16 — CIVIL — STATE OF CALIFORNIA

THE STATE OF CALIFORNIA OR ITS OFFICERS OR AGENTS SHALL NOT BE RESPONSIBLE FOR THE ACCURACY OR COMPLETENESS OF SCANNED COPIES OF THIS PLAN SHEET.

MARK THOMAS & CO., INC.
3000 OAK RD, SUITE 650
WALNUT CREEK, CA 94597

TRANSPORTATION AUTHORITY OF MARIN
750 LINDARO ST, SUITE 200
SAN RAFAEL, CA 94901

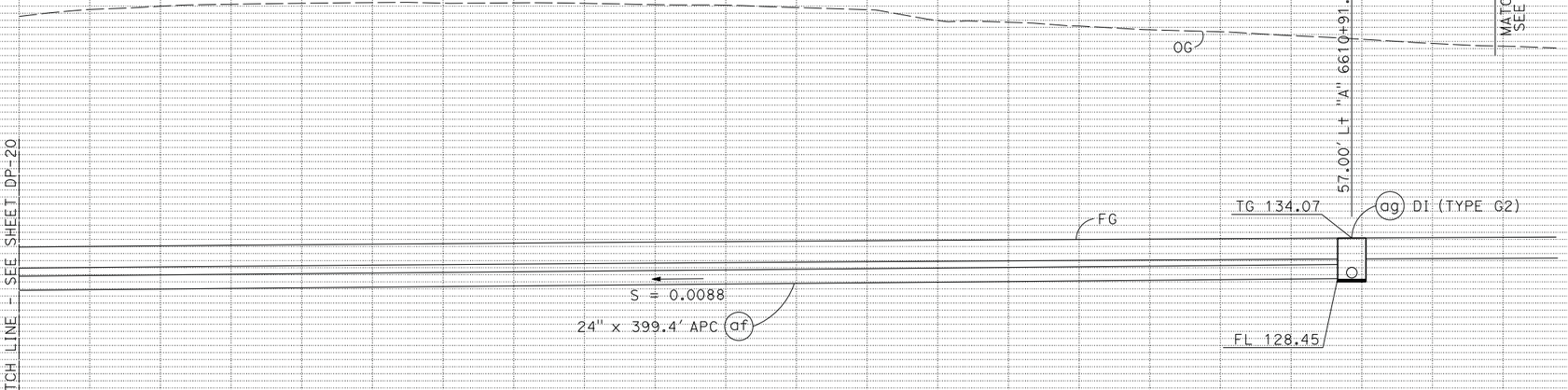

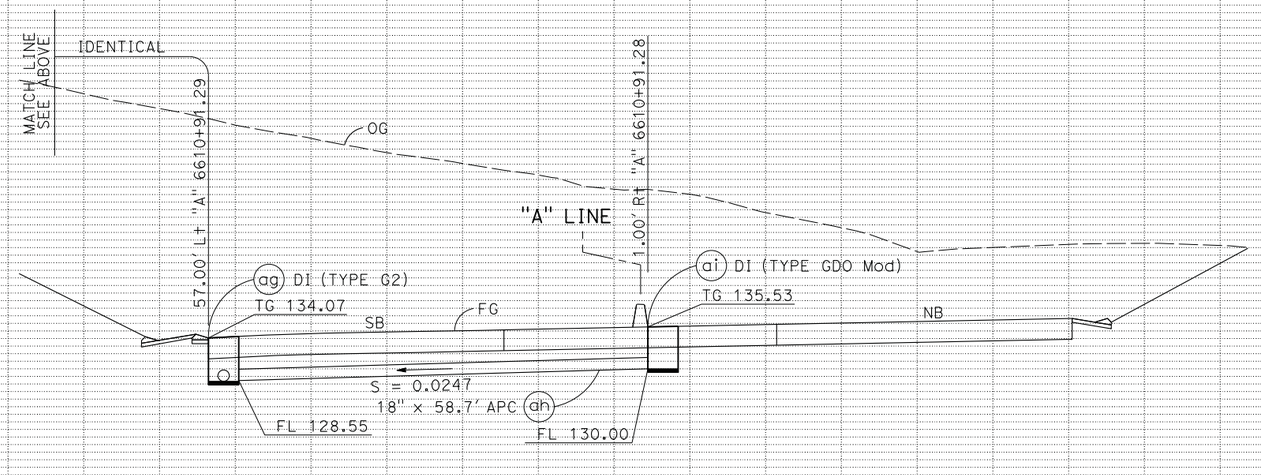

DRAINAGE SYSTEM No. 25

DRAINAGE PROFILES

SCALE: Horiz 1" = 10'
Vert 1" = 10'

DP-21

STATE OF CALIFORNIA - DEPARTMENT OF TRANSPORTATION — Caltrans

CONSULTANT FUNCTIONAL SUPERVISOR: MICHAEL LOHMAN

CALCULATED-DESIGNED BY: CHRIS BRIANA
CHECKED BY: TOM CONNELL

REVISED BY	DATE REVISED
CB	5/13/14
CB	2/7/14
CB	4/30/12

LAST REVISION 00-00-00
DATE PLOTTED => 30-SEP-2014
TIME PLOTTED => 14:14

BORDER LAST REVISED 7/2/2010
USERNAME => acroskey
DGN FILE => 0400000735ib021.dgn
RELATIVE BORDER SCALE IS IN INCHES 0 1 2 3
UNIT 0716
PROJECT NUMBER & PHASE 04000007351

Dist	COUNTY	ROUTE	POST MILES TOTAL PROJECT	SHEET No.	TOTAL SHEETS
04	Mrn, Son	101	26.8/27.6, 0.0/2.0	152	710

REGISTERED CIVIL ENGINEER — DATE 06/30/14

8-18-14
PLANS APPROVAL DATE

REGISTERED PROFESSIONAL ENGINEER
S. D. DANSKY
No. 60220
Exp. 6/30/16
CIVIL
STATE OF CALIFORNIA

THE STATE OF CALIFORNIA OR ITS OFFICERS OR AGENTS SHALL NOT BE RESPONSIBLE FOR THE ACCURACY OR COMPLETENESS OF SCANNED COPIES OF THIS PLAN SHEET.

MARK THOMAS & CO., INC.
3000 OAK RD, SUITE 650
WALNUT CREEK, CA 94597

TRANSPORTATION AUTHORITY OF MARIN
750 LINDARO ST, SUITE 200
SAN RAFAEL, CA 94901

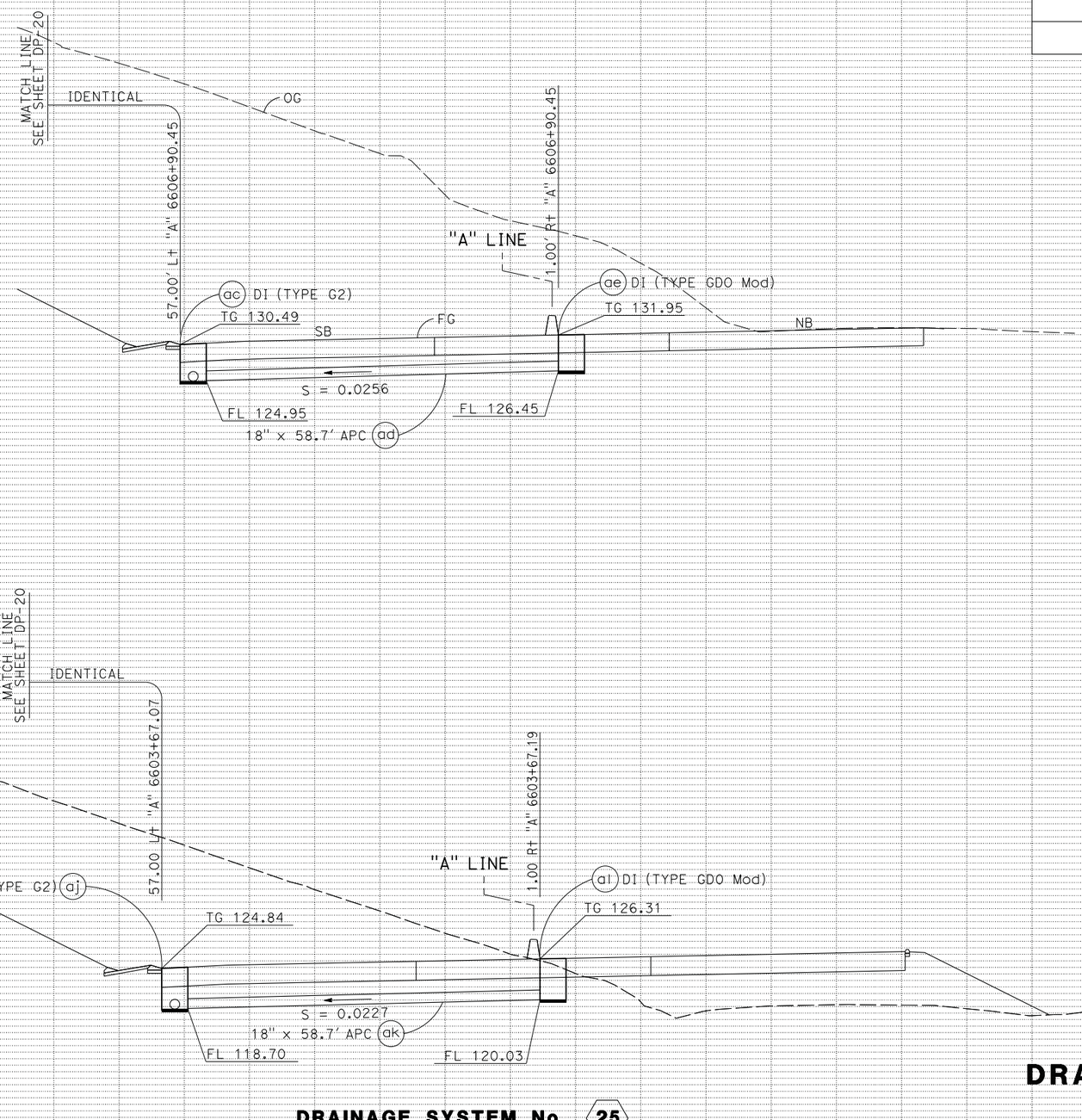

DRAINAGE SYSTEM No. 25

DRAINAGE PROFILES

SCALE: Horiz 1" = 10'
Vert 1" = 10'

DP-22

REVISED BY	DATE REVISED
CB	4/30/12
CB	2/7/14
CB	5/13/14

CALCULATED-DESIGNED BY: CHRIS BRIANA
CHECKED BY: TOM CONNELL

CONSULTANT FUNCTIONAL SUPERVISOR: MICHAEL LOHMAN

STATE OF CALIFORNIA - DEPARTMENT OF TRANSPORTATION
Caltrans

LAST REVISION 00-00-00
DATE PLOTTED => 30-SEP-2014
TIME PLOTTED => 14:14

Dist	COUNTY	ROUTE	POST MILES TOTAL PROJECT	SHEET No.	TOTAL SHEETS
04	Mrn, Son	101	26.8/27.6, 0.0/2.0	153	710

REGISTERED CIVIL ENGINEER — 06/30/14 DATE

REGISTERED PROFESSIONAL ENGINEER — S. D. DANSKY No. 60220 Exp. 6/30/16 CIVIL — STATE OF CALIFORNIA

8-18-14
PLANS APPROVAL DATE

THE STATE OF CALIFORNIA OR ITS OFFICERS OR AGENTS SHALL NOT BE RESPONSIBLE FOR THE ACCURACY OR COMPLETENESS OF SCANNED COPIES OF THIS PLAN SHEET.

MARK THOMAS & CO., INC.
3000 OAK RD, SUITE 650
WALNUT CREEK, CA 94597

TRANSPORTATION AUTHORITY OF MARIN
750 LINDARO ST, SUITE 200
SAN RAFAEL, CA 94901

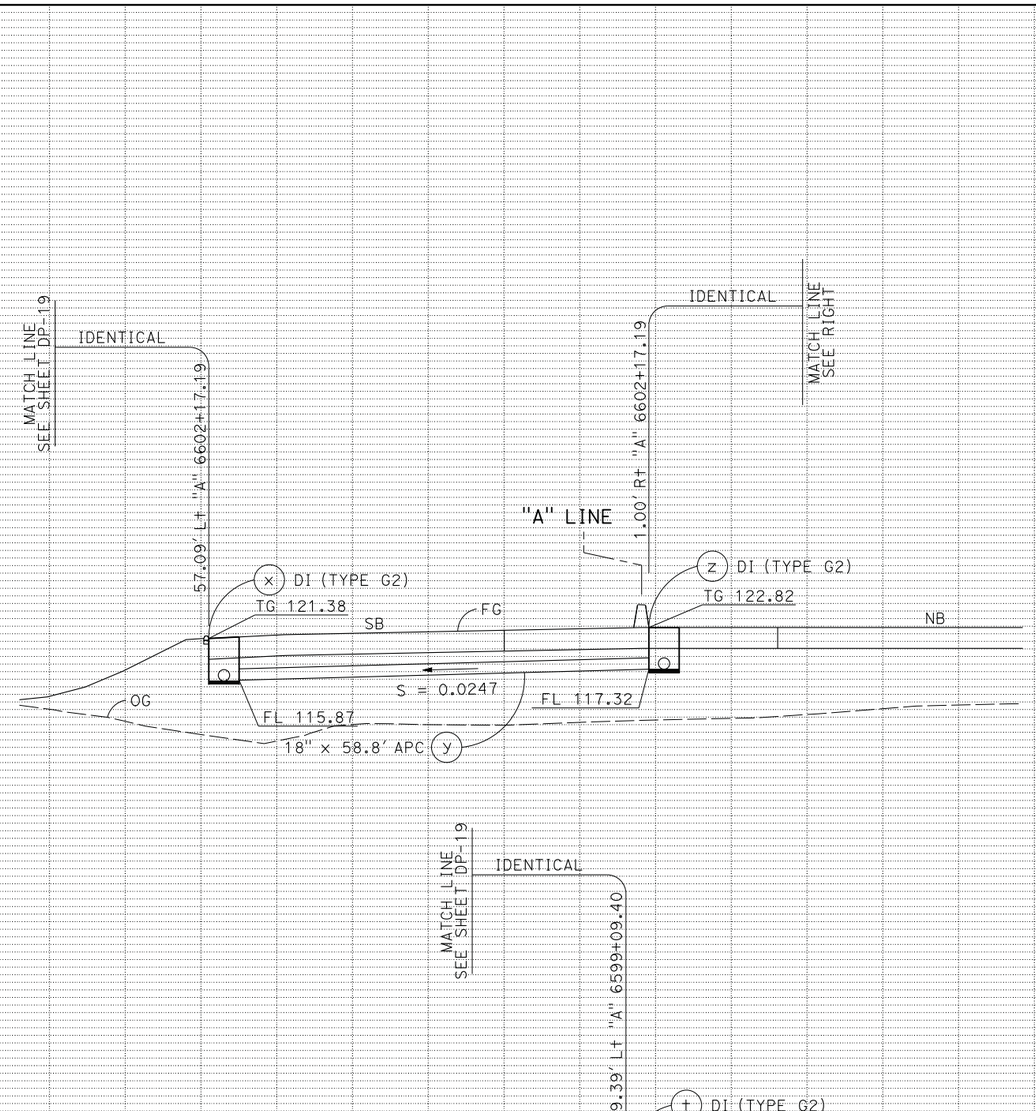

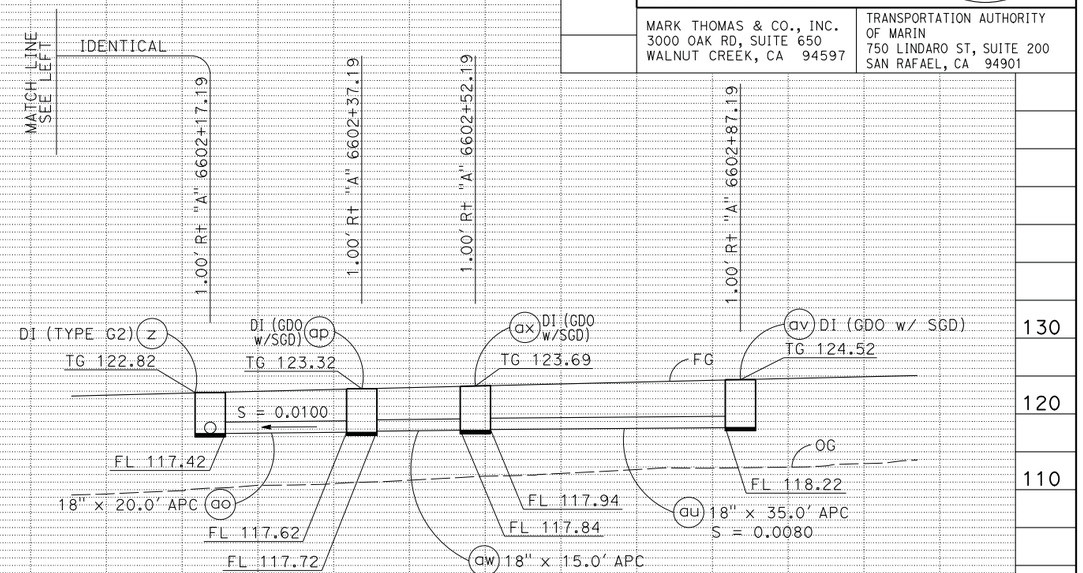

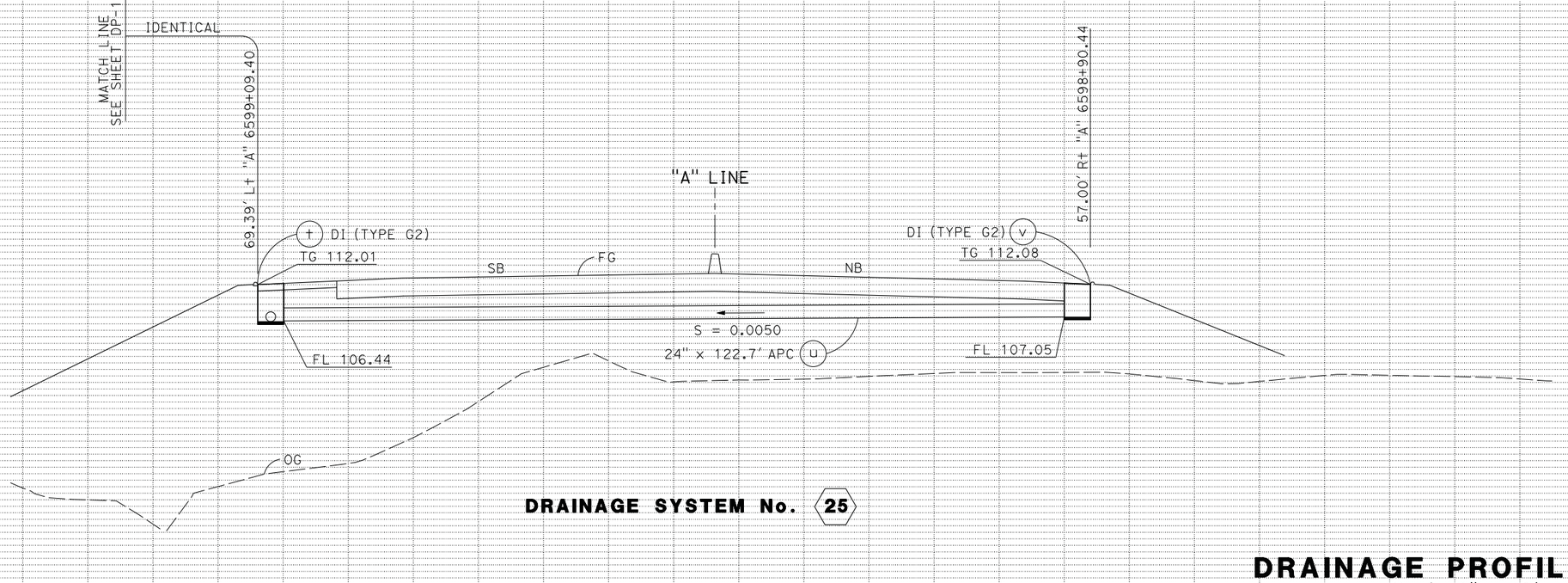

DRAINAGE SYSTEM No. 25

DRAINAGE PROFILES

SCALE: Horiz 1" = 10'
Vert 1" = 10'

DP-23

REVISED BY	DATE REVISED
CB	4/30/12
CB	2/7/14
CB	5/13/14

CALCULATED-DESIGNED BY
CHECKED BY

CHRIS BRIANA
TOM CONNELL

CONSULTANT FUNCTIONAL SUPERVISOR
MICHAEL LOHMAN

STATE OF CALIFORNIA - DEPARTMENT OF TRANSPORTATION
Caltrans

LAST REVISION 00-00-00
DATE PLOTTED => 30-SEP-2014
TIME PLOTTED => 14:14

BORDER LAST REVISED 7/2/2010
USERNAME => acroskey
DGN FILE => 04000007351b023.dgn
RELATIVE BORDER SCALE IS IN INCHES 0 1 2 3
UNIT 0716
PROJECT NUMBER & PHASE 04000007351

Dist	COUNTY	ROUTE	POST MILES TOTAL PROJECT	SHEET No.	TOTAL SHEETS
04	Mrn, Son	101	26.8/27.6, 0.0/2.0	154	710

REGISTERED CIVIL ENGINEER — DATE 06/30/14

8-18-14
PLANS APPROVAL DATE

REGISTERED PROFESSIONAL ENGINEER — S. D. DANSKY — No. 60220 — Exp. 6/30/16 — CIVIL — STATE OF CALIFORNIA

THE STATE OF CALIFORNIA OR ITS OFFICERS OR AGENTS SHALL NOT BE RESPONSIBLE FOR THE ACCURACY OR COMPLETENESS OF SCANNED COPIES OF THIS PLAN SHEET.

MARK THOMAS & CO., INC.
3000 OAK RD, SUITE 650
WALNUT CREEK, CA 94597

TRANSPORTATION AUTHORITY OF MARIN
750 LINDARO ST, SUITE 200
SAN RAFAEL, CA 94901

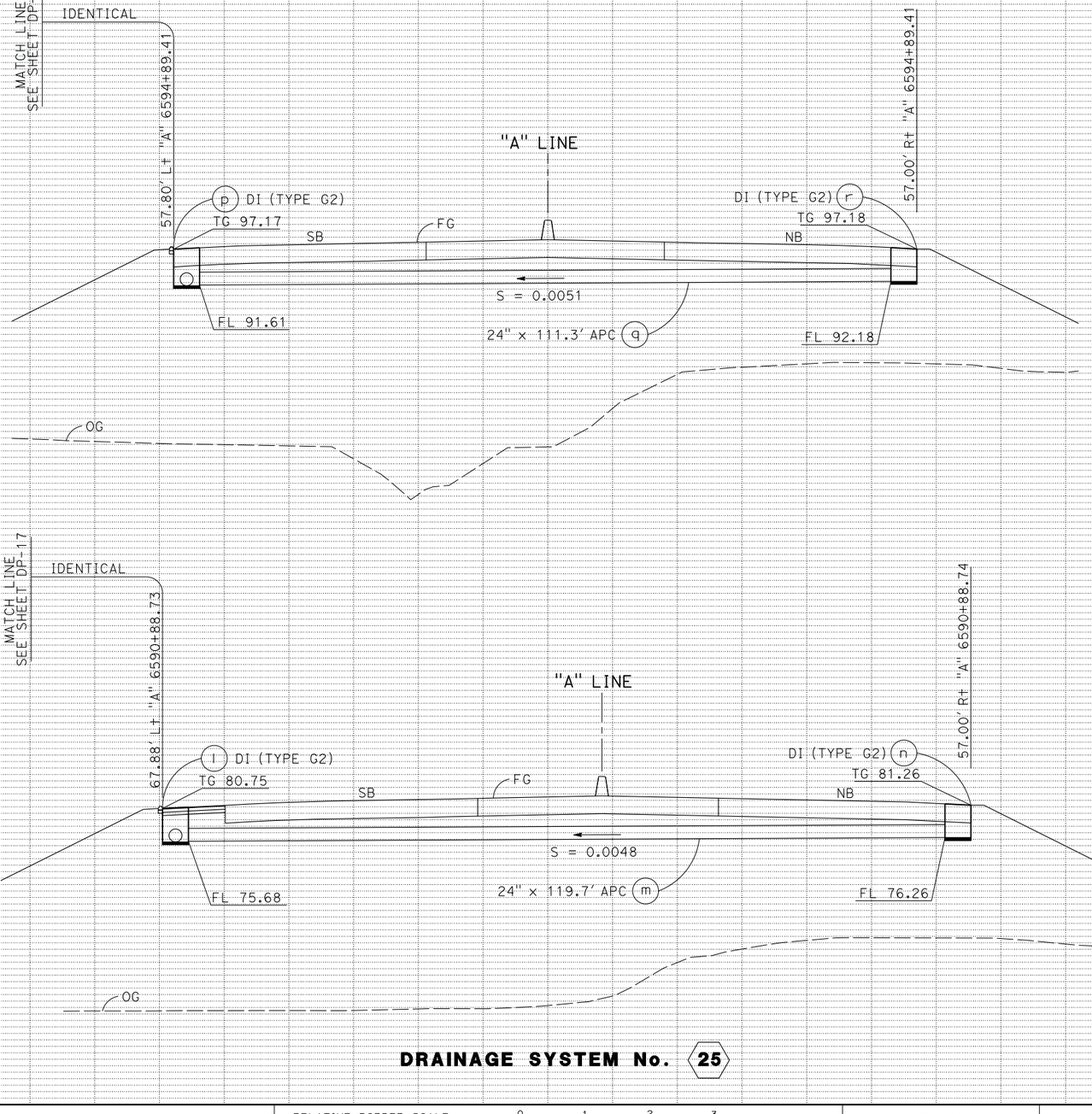

DRAINAGE SYSTEM No. 25

DRAINAGE PROFILES

SCALE: Horiz 1" = 10'
Vert 1" = 10'

DP-24

STATE OF CALIFORNIA - DEPARTMENT OF TRANSPORTATION
Caltrans

CONSULTANT FUNCTIONAL SUPERVISOR: MICHAEL LOHMAN
CALCULATED-DESIGNED BY: CHRIS BRIANA
CHECKED BY: TOM CONNELL

REVISED BY	DATE REVISED
CB	4/30/12
CB	2/7/14
CB	5/13/14

LAST REVISION 00-00-00
DATE PLOTTED => 30-SEP-2014
TIME PLOTTED => 14:14

BORDER LAST REVISED 7/2/2010
USERNAME => acroskey
DGN FILE => 04000007351b024.dgn
RELATIVE BORDER SCALE IS IN INCHES 0 1 2 3
UNIT 0716
PROJECT NUMBER & PHASE 04000007351

Dist	COUNTY	ROUTE	POST MILES TOTAL PROJECT	SHEET No.	TOTAL SHEETS
04	Mrn, Son	101	26.8/27.6, 0.0/2.0	155	710

REGISTERED CIVIL ENGINEER — 06/30/14 DATE

8-18-14
PLANS APPROVAL DATE

REGISTERED PROFESSIONAL ENGINEER
S. D. DANSKY
No. 60220
Exp. 6/30/16
CIVIL
STATE OF CALIFORNIA

THE STATE OF CALIFORNIA OR ITS OFFICERS OR AGENTS SHALL NOT BE RESPONSIBLE FOR THE ACCURACY OR COMPLETENESS OF SCANNED COPIES OF THIS PLAN SHEET.

MARK THOMAS & CO., INC.
3000 OAK RD, SUITE 650
WALNUT CREEK, CA 94597

TRANSPORTATION AUTHORITY OF MARIN
750 LINDARO ST, SUITE 200
SAN RAFAEL, CA 94901

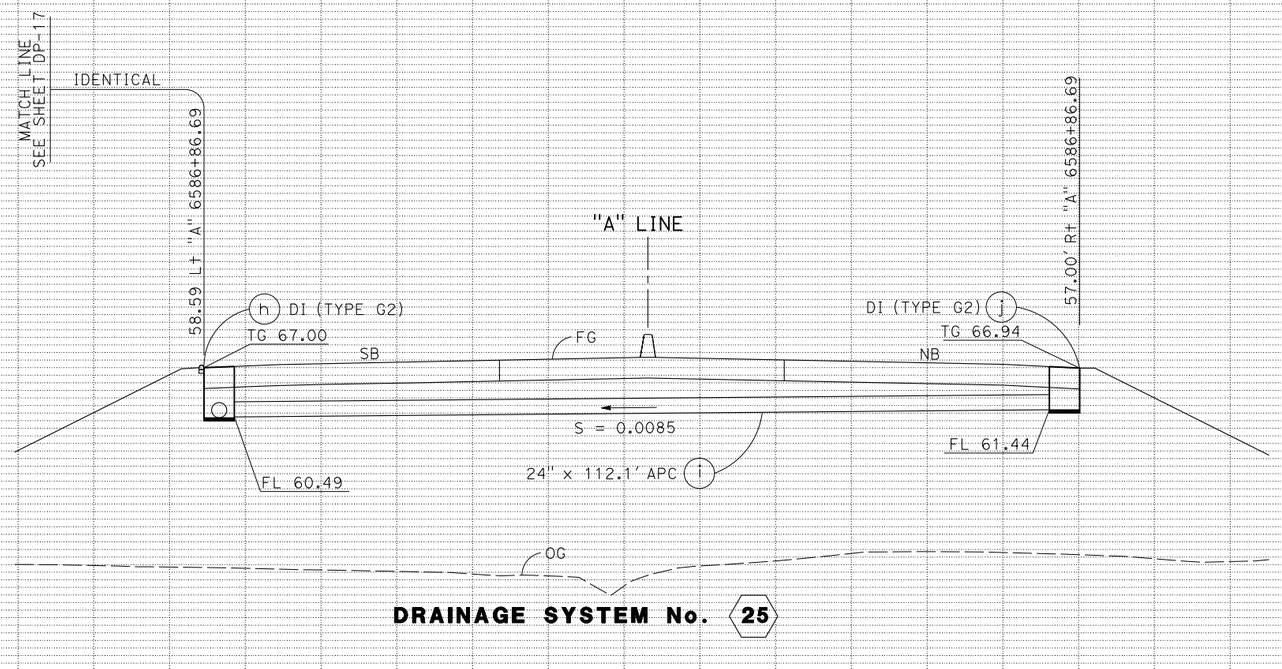

DRAINAGE SYSTEM No. 25

DRAINAGE PROFILES

SCALE: Horiz 1" = 10'
Vert 1" = 10'

DP-25

REVISED BY	DATE REVISED
CB	4/30/12
CB	2/7/14
CB	5/13/14

CHRIS BRIANA
TOM CONNELL
CALCULATED-DESIGNED BY
CHECKED BY
CONSULTANT FUNCTIONAL SUPERVISOR
MICHAEL LOHMAN

STATE OF CALIFORNIA - DEPARTMENT OF TRANSPORTATION
Caltrans

LAST REVISION 00-00-00
DATE PLOTTED => 30-SEP-2014
TIME PLOTTED => 14:14

BORDER LAST REVISED 7/2/2010
USERNAME => acroskey
DGN FILE => 0400000735ib025.dgn
RELATIVE BORDER SCALE IS IN INCHES 0 1 2 3
UNIT 0716
PROJECT NUMBER & PHASE 04000007351

Dist	COUNTY	ROUTE	POST MILES TOTAL PROJECT	SHEET No.	TOTAL SHEETS
04	Mrn, Son	101	26.8/27.6, 0.0/2.0	156	710

REGISTERED CIVIL ENGINEER — 06/30/14 DATE

8-18-14
PLANS APPROVAL DATE

REGISTERED PROFESSIONAL ENGINEER — S. D. DANSKY No. 60220 Exp. 6/30/16 CIVIL — STATE OF CALIFORNIA

THE STATE OF CALIFORNIA OR ITS OFFICERS OR AGENTS SHALL NOT BE RESPONSIBLE FOR THE ACCURACY OR COMPLETENESS OF SCANNED COPIES OF THIS PLAN SHEET.

MARK THOMAS & CO., INC.
3000 OAK RD, SUITE 650
WALNUT CREEK, CA 94597

TRANSPORTATION AUTHORITY OF MARIN
750 LINDARO ST, SUITE 200
SAN RAFAEL, CA 94901

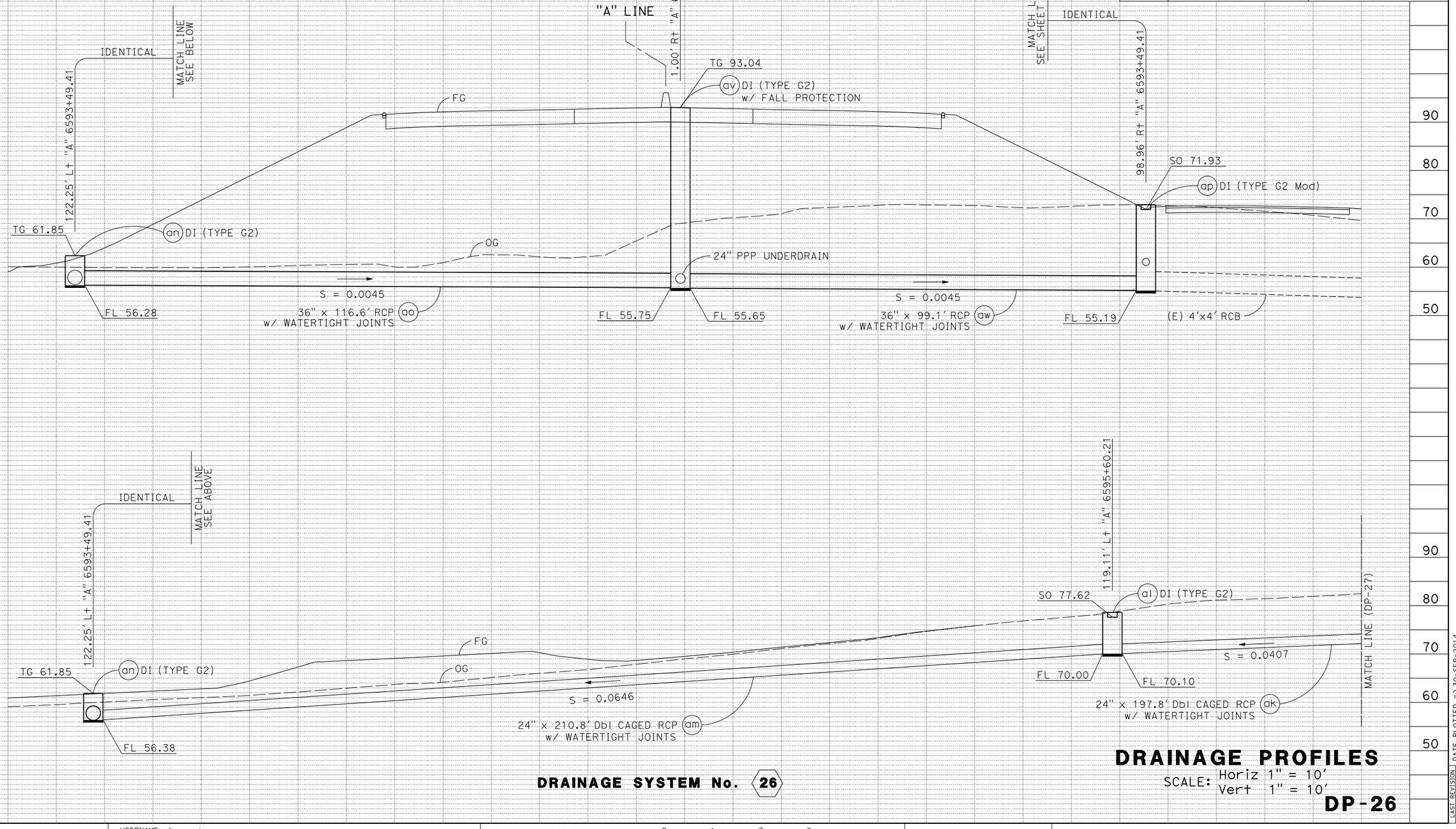

DRAINAGE SYSTEM No. 26

DRAINAGE PROFILES

SCALE: Horiz 1" = 10'
Vert 1" = 10'

DP-26

REVISED BY	DATE REVISED
CB	4/30/12
CB	2/7/14
CB	5/13/14

CALCULATED-DESIGNED BY: CHRIS BRIANA
CHECKED BY: TOM CONNELL

CONSULTANT FUNCTIONAL SUPERVISOR - DEPARTMENT OF TRANSPORTATION
MICHAEL LOHMAN
STATE OF CALIFORNIA - Caltrans

LAST REVISION 00-00-00
DATE PLOTTED => 30-SEP-2014
TIME PLOTTED => 14:14

BORDER LAST REVISED 7/2/2010 | USERNAME => acroskey | DGN FILE => 04000007351b026.dgn | RELATIVE BORDER SCALE IS IN INCHES 0 1 2 3 | UNIT 0716 | PROJECT NUMBER & PHASE 04000007351

Dist	COUNTY	ROUTE	POST MILES TOTAL PROJECT	SHEET No.	TOTAL SHEETS
04	Mrn, Son	101	26.8/27.6, 0.0/2.0	157	710

REGISTERED CIVIL ENGINEER — DATE 06/30/14

8-18-14
PLANS APPROVAL DATE

REGISTERED PROFESSIONAL ENGINEER — S. D. DANSKY — No. 60220 — Exp. 6/30/16 — CIVIL — STATE OF CALIFORNIA

THE STATE OF CALIFORNIA OR ITS OFFICERS OR AGENTS SHALL NOT BE RESPONSIBLE FOR THE ACCURACY OR COMPLETENESS OF SCANNED COPIES OF THIS PLAN SHEET.

MARK THOMAS & CO., INC.
3000 OAK RD, SUITE 650
WALNUT CREEK, CA 94597

TRANSPORTATION AUTHORITY OF MARIN
750 LINDARO ST, SUITE 200
SAN RAFAEL, CA 94901

REVISED BY	DATE REVISED
CB	4/30/12
CB	2/7/14
CB	5/13/14

CALCULATED-DESIGNED BY: CHRIS BRIANA
CHECKED BY: TOM CONNELL

CONSULTANT FUNCTIONAL SUPERVISOR: MICHAEL LOHMAN

STATE OF CALIFORNIA - DEPARTMENT OF TRANSPORTATION
Caltrans

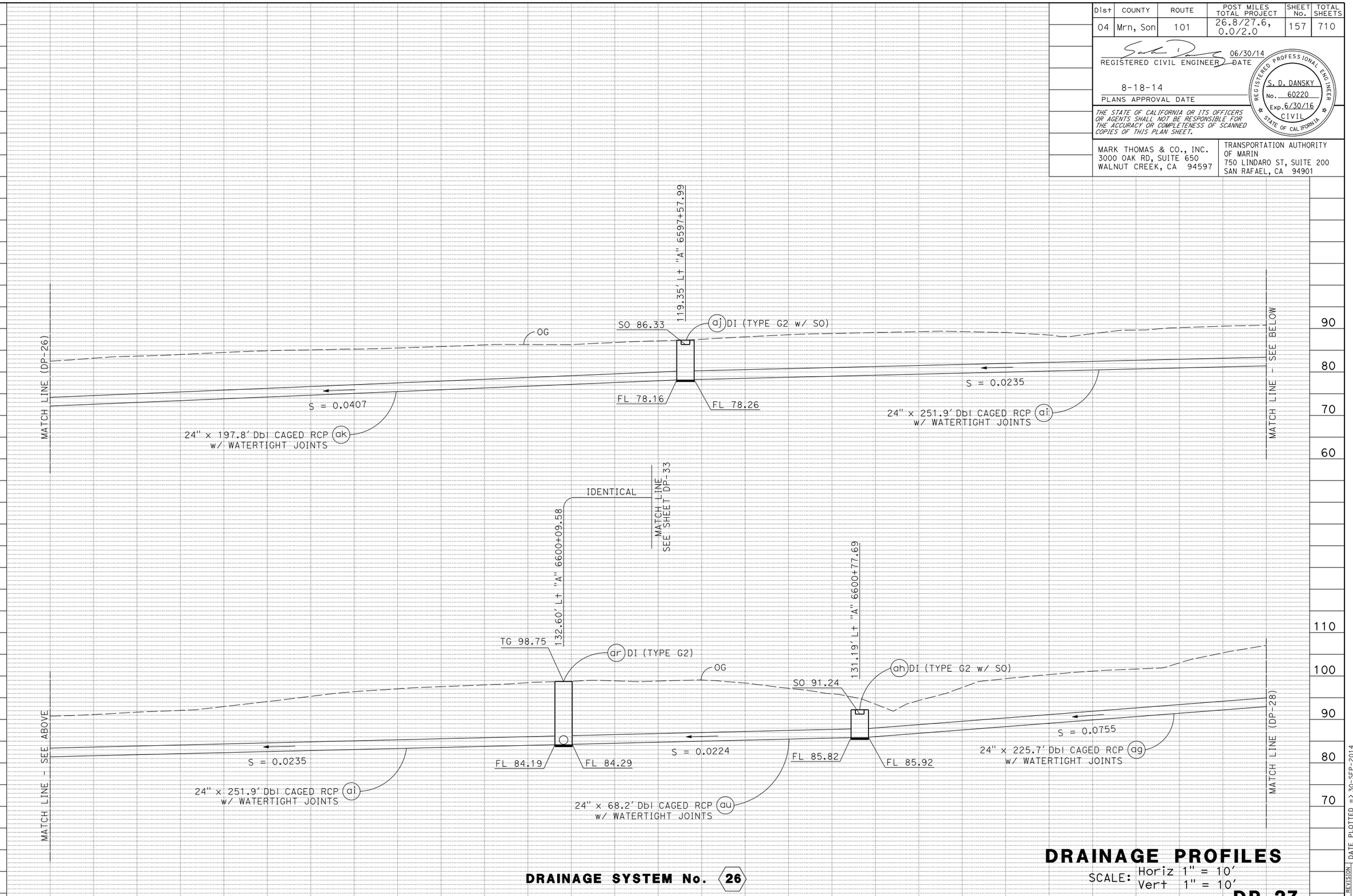

DRAINAGE SYSTEM No. 26

DRAINAGE PROFILES

SCALE: Horiz 1" = 10'
Vert 1" = 10'

DP-27

LAST REVISION 00-00-00 | DATE PLOTTED => 30-SEP-2014 | TIME PLOTTED => 14:14

BORDER LAST REVISED 7/2/2010 | USERNAME => acroskey | DGN FILE => 04000007351b027.dgn | RELATIVE BORDER SCALE IS IN INCHES 0 1 2 3 | UNIT 0716 | PROJECT NUMBER & PHASE 04000007351

Dist	COUNTY	ROUTE	POST MILES TOTAL PROJECT	SHEET No.	TOTAL SHEETS
04	Mrn, Son	101	26.8/27.6, 0.0/2.0	158	710

REGISTERED CIVIL ENGINEER — DATE 06/30/14

8-18-14
PLANS APPROVAL DATE

REGISTERED PROFESSIONAL ENGINEER — S. D. DANSKY — No. 60220 — Exp. 6/30/16 — CIVIL — STATE OF CALIFORNIA

THE STATE OF CALIFORNIA OR ITS OFFICERS OR AGENTS SHALL NOT BE RESPONSIBLE FOR THE ACCURACY OR COMPLETENESS OF SCANNED COPIES OF THIS PLAN SHEET.

MARK THOMAS & CO., INC.
3000 OAK RD, SUITE 650
WALNUT CREEK, CA 94597

TRANSPORTATION AUTHORITY OF MARIN
750 LINDARO ST, SUITE 200
SAN RAFAEL, CA 94901

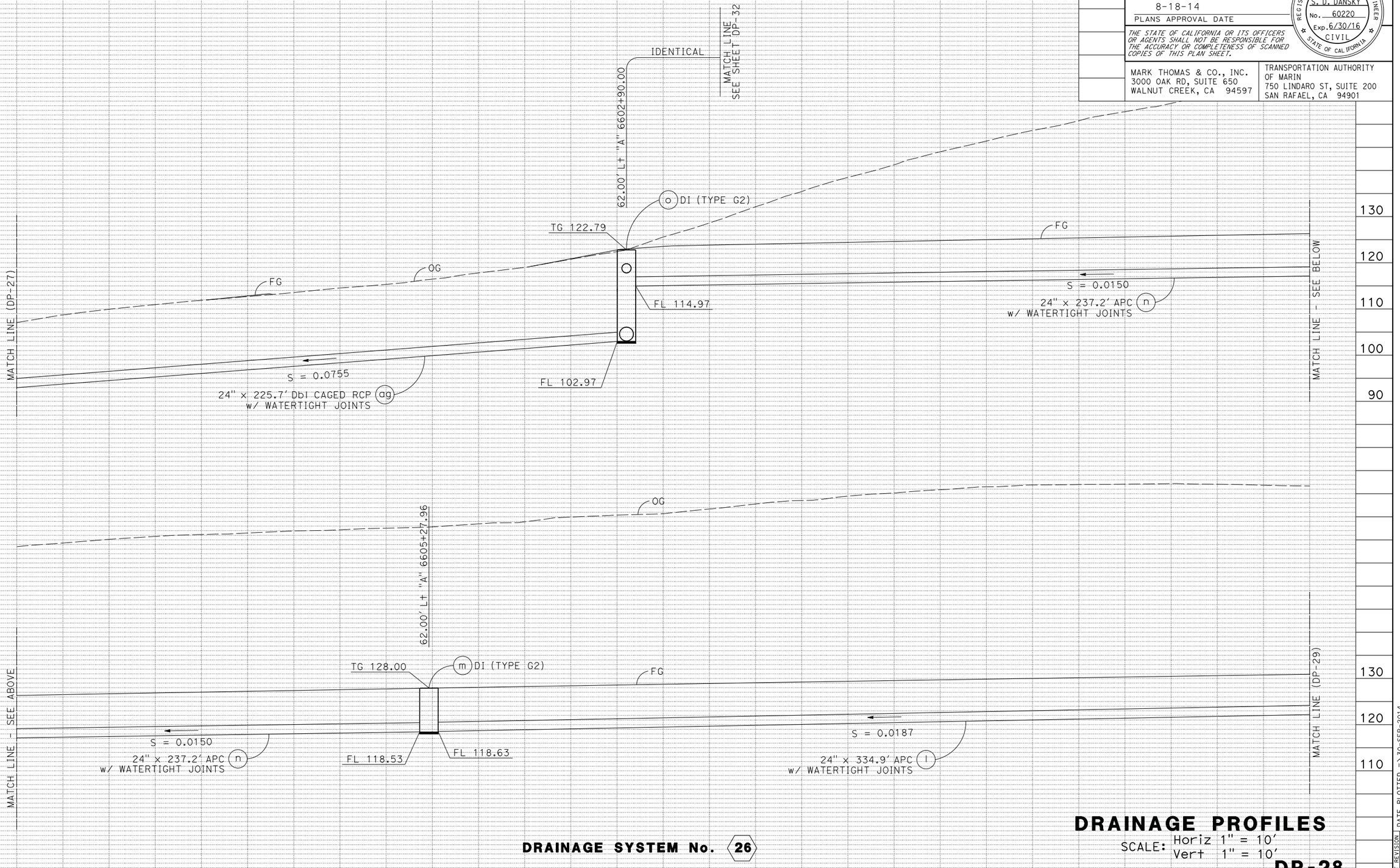

DRAINAGE SYSTEM No. 26

DRAINAGE PROFILES

SCALE: Horiz 1" = 10'
Vert 1" = 10'

DP-28

REVISED BY	CB	CB	CB
DATE REVISED	4/30/12	2/7/14	5/13/14

CHRIS BRIANA
TOM CONNELL

CALCULATED-DESIGNED BY
CHECKED BY

CONSULTANT FUNCTIONAL SUPERVISOR
MICHAEL LOHMAN

STATE OF CALIFORNIA - DEPARTMENT OF TRANSPORTATION
Caltrans

LAST REVISION 00-00-00
DATE PLOTTED => 30-SEP-2014
TIME PLOTTED => 14:14

BORDER LAST REVISED 7/2/2010
USERNAME => acroskey
DGN FILE => 04000007351b028.dgn
RELATIVE BORDER SCALE IS IN INCHES 0 1 2 3
UNIT 0716
PROJECT NUMBER & PHASE 04000007351

Dist	COUNTY	ROUTE	POST MILES TOTAL PROJECT	SHEET No.	TOTAL SHEETS
04	Mrn, Son	101	26.8/27.6, 0.0/2.0	159	710

REGISTERED CIVIL ENGINEER — 06/30/14 DATE

8-18-14
PLANS APPROVAL DATE

REGISTERED PROFESSIONAL ENGINEER — S. D. DANSKY — No. 60220 — Exp. 6/30/16 — CIVIL — STATE OF CALIFORNIA

THE STATE OF CALIFORNIA OR ITS OFFICERS OR AGENTS SHALL NOT BE RESPONSIBLE FOR THE ACCURACY OR COMPLETENESS OF SCANNED COPIES OF THIS PLAN SHEET.

MARK THOMAS & CO., INC.
3000 OAK RD, SUITE 650
WALNUT CREEK, CA 94597

TRANSPORTATION AUTHORITY OF MARIN
750 LINDARO ST, SUITE 200
SAN RAFAEL, CA 94901

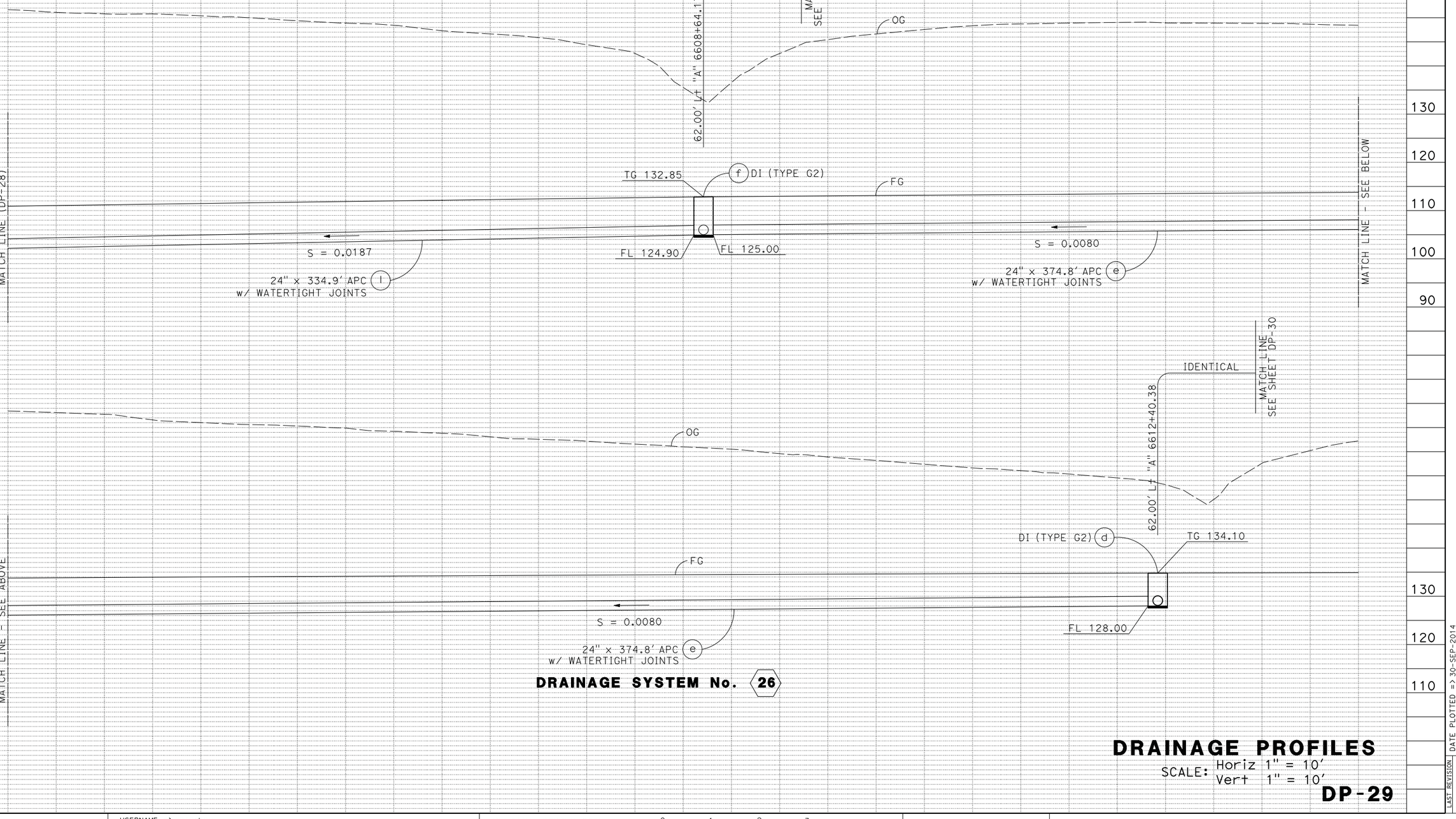

DRAINAGE SYSTEM No. 26

DRAINAGE PROFILES

SCALE: Horiz 1" = 10'
Vert 1" = 10'

DP-29

REVISED BY	DATE REVISED
CB	4/30/12
CB	2/7/14
CB	5/13/14

CHRIS BRIANA — CALCULATED-DESIGNED BY
TOM CONNELL — CHECKED BY
MICHAEL LOHMAN — CONSULTANT FUNCTIONAL SUPERVISOR
STATE OF CALIFORNIA - DEPARTMENT OF TRANSPORTATION
Caltrans

LAST REVISION 00-00-00
DATE PLOTTED => 30-SEP-2014
TIME PLOTTED => 14:14

BORDER LAST REVISED 7/2/2010
USERNAME => acroskey
DGN FILE => 0400000735ib029.dgn
RELATIVE BORDER SCALE IS IN INCHES 0 1 2 3
UNIT 0716
PROJECT NUMBER & PHASE 04000007351

Dist	COUNTY	ROUTE	POST MILES TOTAL PROJECT	SHEET No.	TOTAL SHEETS
04	Mrn, Son	101	26.8/27.6, 0.0/2.0	160	710

REGISTERED CIVIL ENGINEER — 06/30/14 DATE

8-18-14
PLANS APPROVAL DATE

REGISTERED PROFESSIONAL ENGINEER
S. D. DANSKY
No. 60220
Exp. 6/30/16
CIVIL
STATE OF CALIFORNIA

THE STATE OF CALIFORNIA OR ITS OFFICERS OR AGENTS SHALL NOT BE RESPONSIBLE FOR THE ACCURACY OR COMPLETENESS OF SCANNED COPIES OF THIS PLAN SHEET.

MARK THOMAS & CO., INC.
3000 OAK RD, SUITE 650
WALNUT CREEK, CA 94597

TRANSPORTATION AUTHORITY OF MARIN
750 LINDARO ST, SUITE 200
SAN RAFAEL, CA 94901

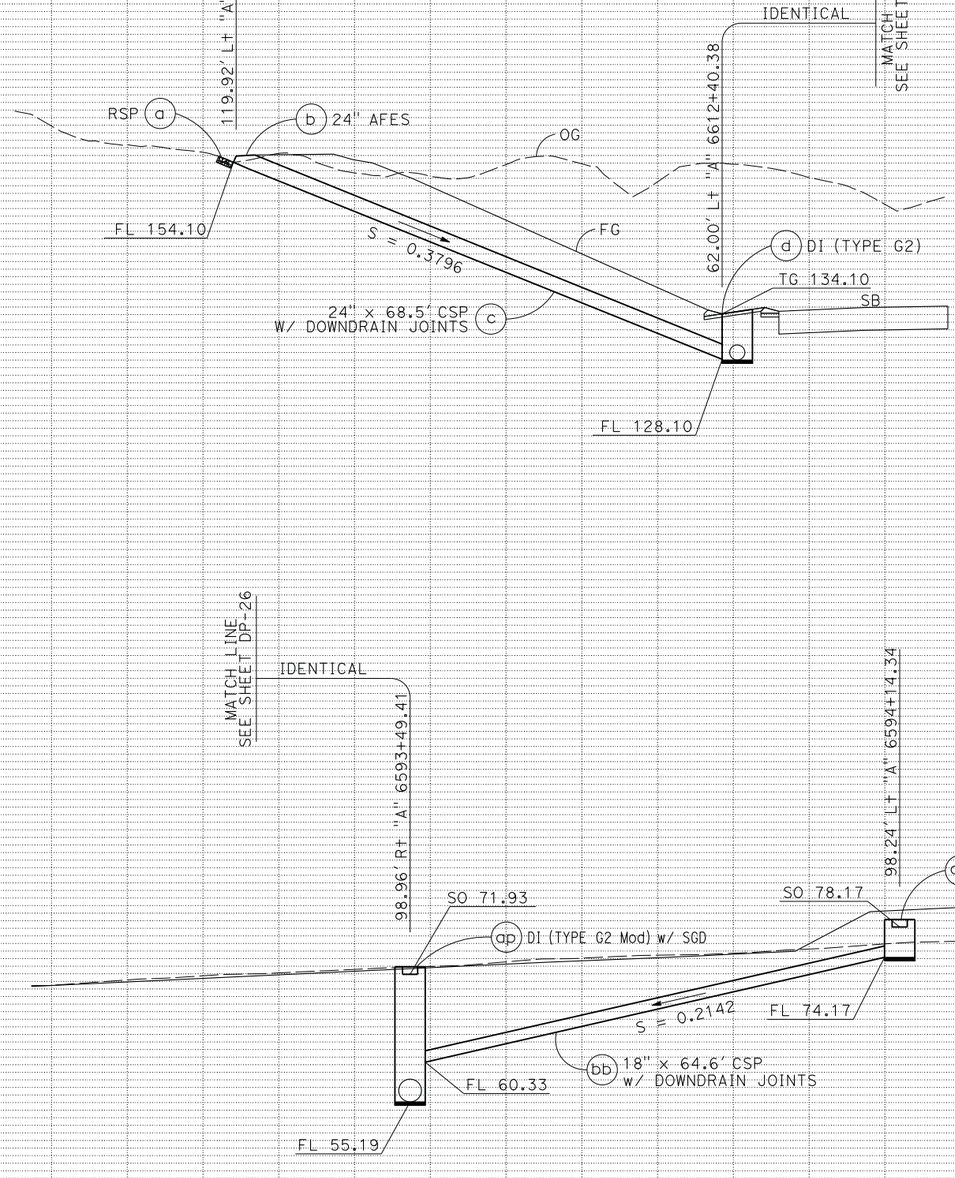

DRAINAGE SYSTEM No. 26

DRAINAGE PROFILES

SCALE: Horiz 1" = 10'
Vert 1" = 10'

DP-30

REVISED BY	DATE REVISED
CB	4/30/12
CB	2/7/14
CB	5/13/14

CALCULATED-DESIGNED BY: CHRIS BRIANA
CHECKED BY: TOM CONNELL
CONSULTANT FUNCTIONAL SUPERVISOR: MICHAEL LOHMAN
STATE OF CALIFORNIA - DEPARTMENT OF TRANSPORTATION

LAST REVISION 00-00-00
DATE PLOTTED => 30-SEP-2014
TIME PLOTTED => 14:14

BORDER LAST REVISED 7/2/2010
USERNAME => acroskey
DGN FILE => 04000007351ib030.dgn
RELATIVE BORDER SCALE IS IN INCHES 0 1 2 3
UNIT 0716
PROJECT NUMBER & PHASE 04000007351

Dist	COUNTY	ROUTE	POST MILES TOTAL PROJECT	SHEET No.	TOTAL SHEETS
04	Mrn, Son	101	26.8/27.6, 0.0/2.0	161	710

REGISTERED CIVIL ENGINEER — DATE 06/30/14

8-18-14
PLANS APPROVAL DATE

REGISTERED PROFESSIONAL ENGINEER — S. D. DANSKY — No. 60220 — Exp. 6/30/16 — CIVIL — STATE OF CALIFORNIA

THE STATE OF CALIFORNIA OR ITS OFFICERS OR AGENTS SHALL NOT BE RESPONSIBLE FOR THE ACCURACY OR COMPLETENESS OF SCANNED COPIES OF THIS PLAN SHEET.

MARK THOMAS & CO., INC.
3000 OAK RD, SUITE 650
WALNUT CREEK, CA 94597

TRANSPORTATION AUTHORITY OF MARIN
750 LINDARO ST, SUITE 200
SAN RAFAEL, CA 94901

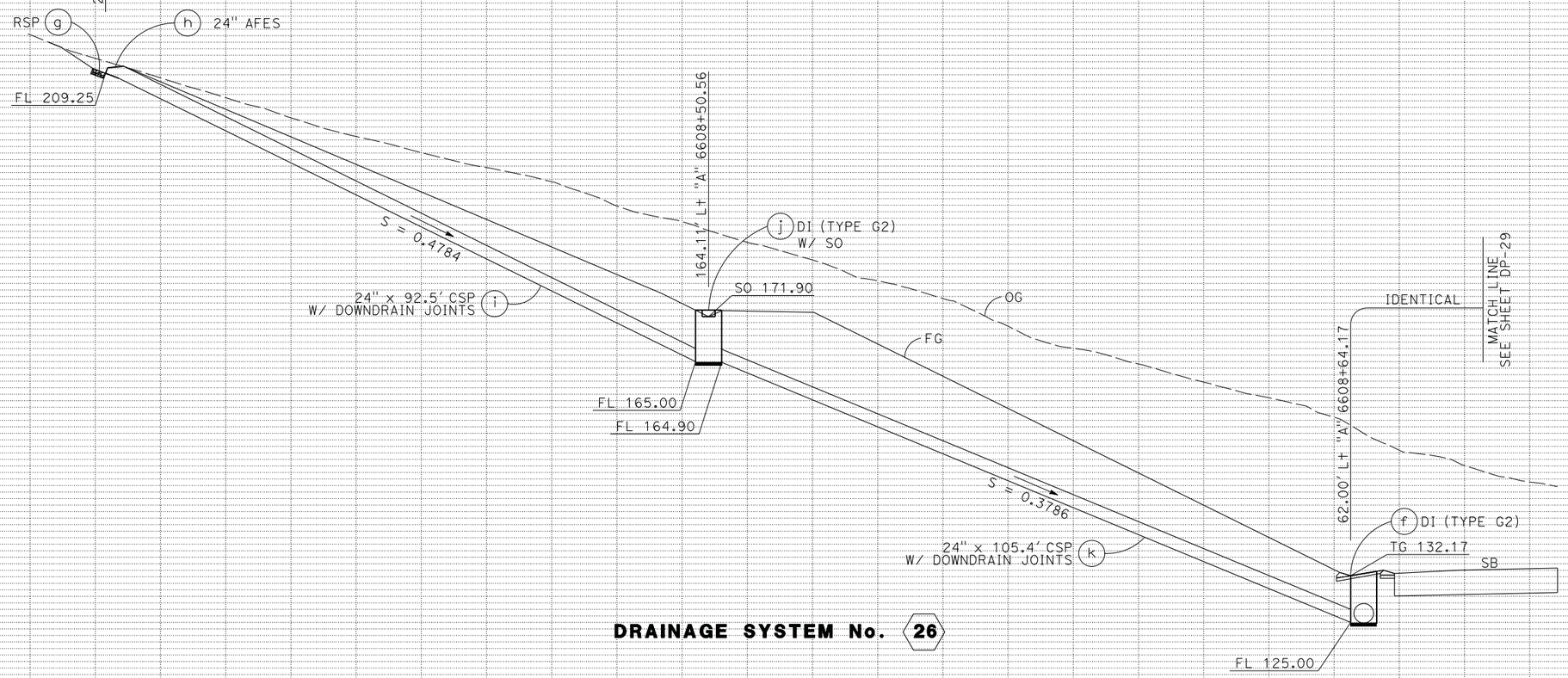

DRAINAGE SYSTEM No. 26

DRAINAGE PROFILES

SCALE: Horiz 1" = 10'
Vert 1" = 10'

DP-31

CB 5/13/14
CB 2/7/14
CB 4/30/12
REVISED BY / DATE REVISED
CHRIS BRIANA
TOM CONNELL
CALCULATED-DESIGNED BY
CHECKED BY
CONSULTANT FUNCTIONAL SUPERVISOR
MICHAEL LOHMAN
STATE OF CALIFORNIA - DEPARTMENT OF TRANSPORTATION
Caltrans

LAST REVISION 00-00-00
DATE PLOTTED => 30-SEP-2014
TIME PLOTTED => 14:14

BORDER LAST REVISED 7/2/2010
USERNAME => acroskey
DGN FILE => 04000007351ib031.dgn
RELATIVE BORDER SCALE IS IN INCHES 0 1 2 3
UNIT 0716
PROJECT NUMBER & PHASE 04000007351

Dist	COUNTY	ROUTE	POST MILES TOTAL PROJECT	SHEET No.	TOTAL SHEETS
04	Mrn, Son	101	26.8/27.6, 0.0/2.0	162	710

REGISTERED CIVIL ENGINEER — DATE: 06/30/14

8-18-14
PLANS APPROVAL DATE

REGISTERED PROFESSIONAL ENGINEER — S. D. DANSKY — No. 60220 — Exp. 6/30/16 — CIVIL — STATE OF CALIFORNIA

THE STATE OF CALIFORNIA OR ITS OFFICERS OR AGENTS SHALL NOT BE RESPONSIBLE FOR THE ACCURACY OR COMPLETENESS OF SCANNED COPIES OF THIS PLAN SHEET.

MARK THOMAS & CO., INC.
3000 OAK RD, SUITE 650
WALNUT CREEK, CA 94597

TRANSPORTATION AUTHORITY OF MARIN
750 LINDARO ST, SUITE 200
SAN RAFAEL, CA 94901

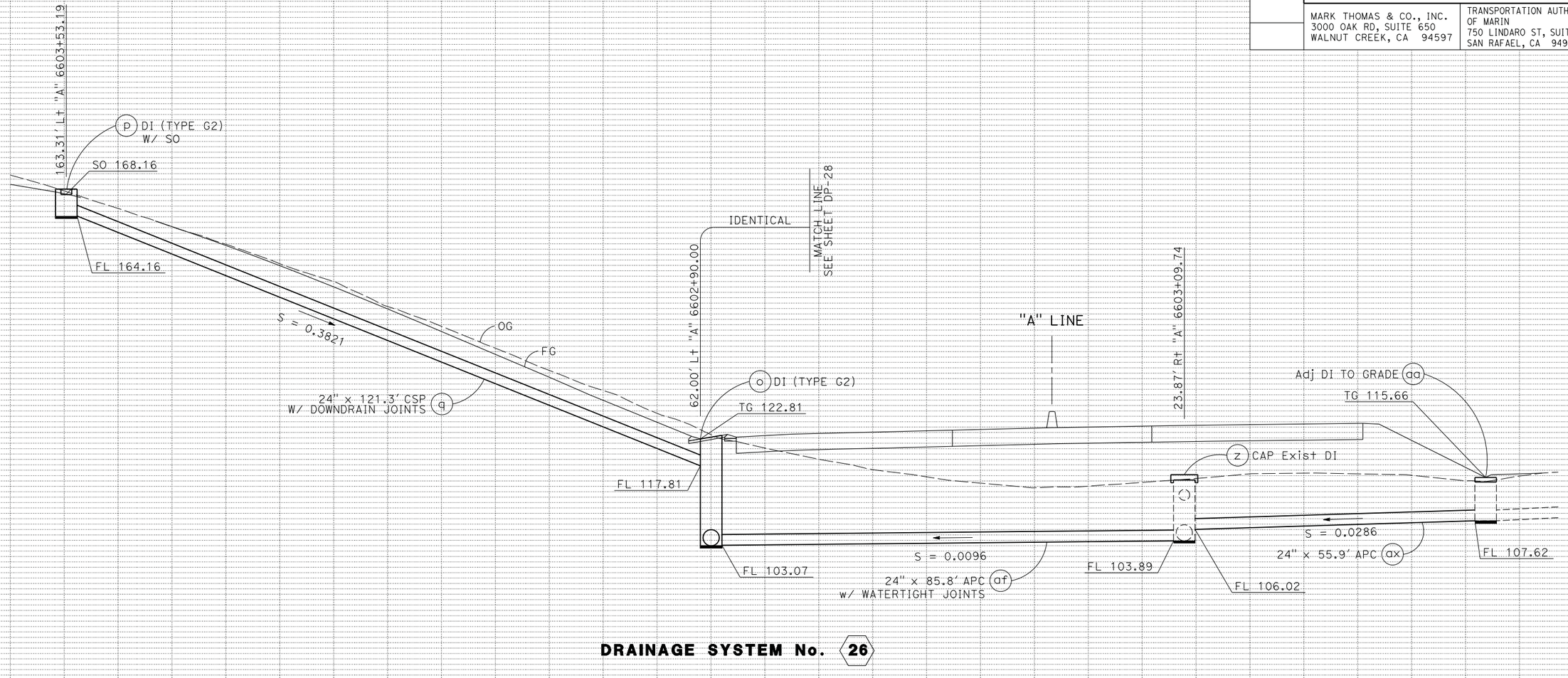

DRAINAGE SYSTEM No. 26

DRAINAGE PROFILES

SCALE: Horiz 1" = 10'
Vert 1" = 10'

DP-32

REVISED BY	DATE REVISED
CB	4/30/12
CB	2/7/14
CB	5/13/14

CALCULATED-DESIGNED BY: CHRIS BRIANA
CHECKED BY: TOM CONNELL
CONSULTANT FUNCTIONAL SUPERVISOR: MICHAEL LOHMAN
STATE OF CALIFORNIA - DEPARTMENT OF TRANSPORTATION
Caltrans

LAST REVISION 00-00-00
DATE PLOTTED => 30-SEP-2014
TIME PLOTTED => 14:14

BORDER LAST REVISED 7/2/2010
USERNAME => acroskey
DGN FILE => 04000007351b032.dgn
RELATIVE BORDER SCALE IS IN INCHES 0 1 2 3
UNIT 0716
PROJECT NUMBER & PHASE 04000007351

Dist	COUNTY	ROUTE	POST MILES TOTAL PROJECT	SHEET No.	TOTAL SHEETS
04	Mrn, Son	101	26.8/27.6, 0.0/2.0	163	710

REGISTERED CIVIL ENGINEER — 06/30/14 DATE

8-18-14
PLANS APPROVAL DATE

REGISTERED PROFESSIONAL ENGINEER
S. D. DANSKY
No. 60220
Exp. 6/30/16
CIVIL
STATE OF CALIFORNIA

THE STATE OF CALIFORNIA OR ITS OFFICERS OR AGENTS SHALL NOT BE RESPONSIBLE FOR THE ACCURACY OR COMPLETENESS OF SCANNED COPIES OF THIS PLAN SHEET.

MARK THOMAS & CO., INC.
3000 OAK RD, SUITE 650
WALNUT CREEK, CA 94597

TRANSPORTATION AUTHORITY OF MARIN
750 LINDARO ST, SUITE 200
SAN RAFAEL, CA 94901

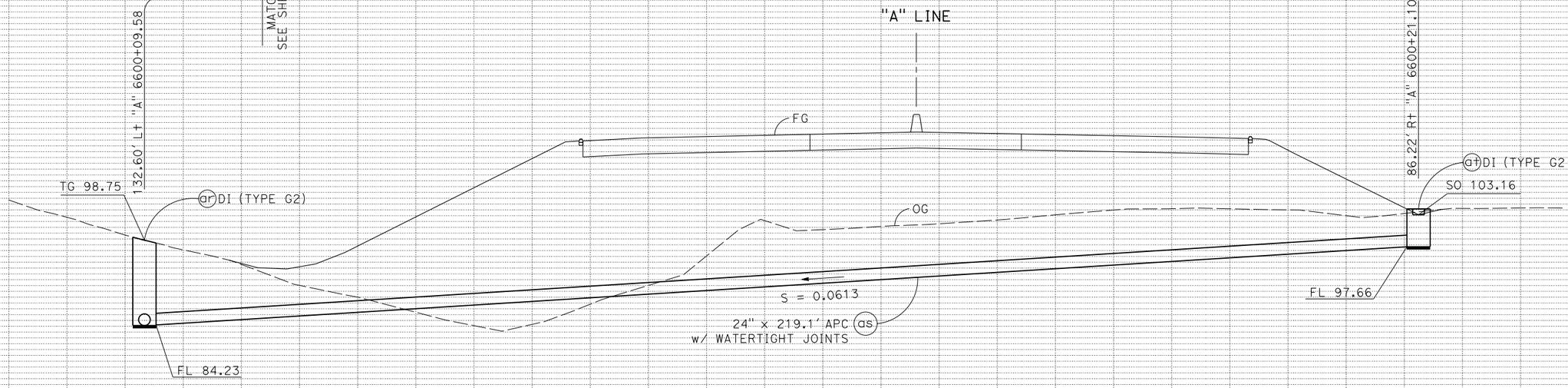

DRAINAGE SYSTEM No. 26

DRAINAGE PROFILES

SCALE: Horiz 1" = 10'
Vert 1" = 10'

DP-33

CHRIS BRIANA — CALCULATED-DESIGNED BY
TOM CONNELL — CHECKED BY
MICHAEL LOHMAN — CONSULTANT FUNCTIONAL SUPERVISOR

REVISED BY	DATE REVISED
CB	4/30/12
CB	2/7/14
CB	5/13/14

STATE OF CALIFORNIA - DEPARTMENT OF TRANSPORTATION
Caltrans

LAST REVISION 00-00-00
DATE PLOTTED => 30-SEP-2014
TIME PLOTTED => 14:14

BORDER LAST REVISED 7/2/2010
USERNAME => acroskey
DGN FILE => 04000007351b033.dgn
RELATIVE BORDER SCALE IS IN INCHES 0 1 2 3
UNIT 0716
PROJECT NUMBER & PHASE 04000007351

Dist	COUNTY	ROUTE	POST MILES TOTAL PROJECT	SHEET No.	TOTAL SHEETS
04	Mrn, Son	101	26.8/27.6, 0.0/2.0	164	710

REGISTERED CIVIL ENGINEER — 06/30/14 DATE

8-18-14
PLANS APPROVAL DATE

REGISTERED PROFESSIONAL ENGINEER — S. D. DANSKY — No. 60220 — Exp. 6/30/16 — CIVIL — STATE OF CALIFORNIA

THE STATE OF CALIFORNIA OR ITS OFFICERS OR AGENTS SHALL NOT BE RESPONSIBLE FOR THE ACCURACY OR COMPLETENESS OF SCANNED COPIES OF THIS PLAN SHEET.

MARK THOMAS & CO., INC.
3000 OAK RD, SUITE 650
WALNUT CREEK, CA 94597

TRANSPORTATION AUTHORITY OF MARIN
750 LINDARO ST, SUITE 200
SAN RAFAEL, CA 94901

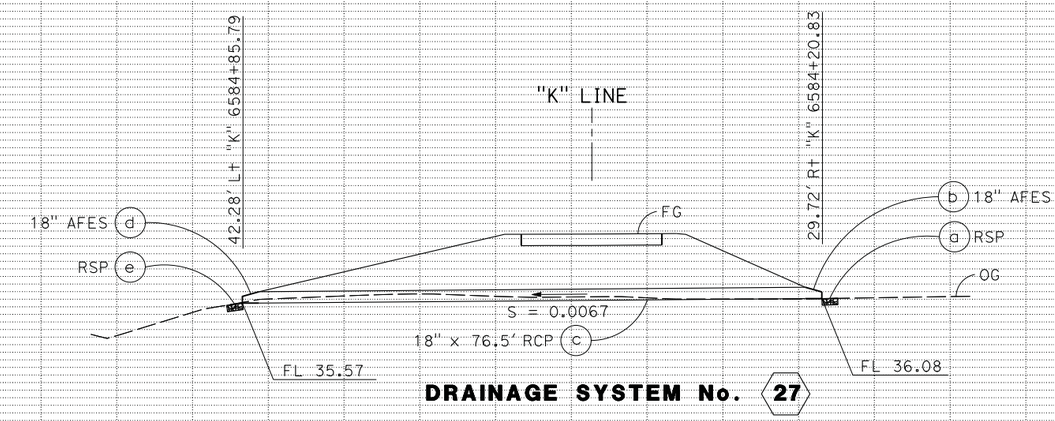

DRAINAGE SYSTEM No. 27

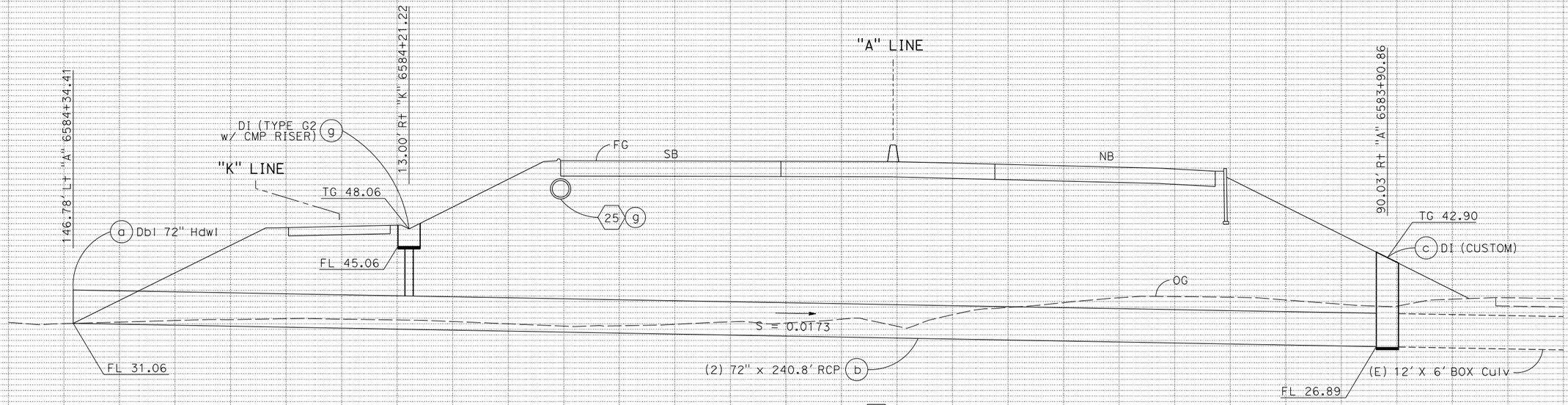

DRAINAGE SYSTEM No. 28

DRAINAGE PROFILES

SCALE: Horiz 1" = 10'
Vert 1" = 10'

DP-34

REVISED BY	DATE REVISED
CB	4/30/12
CB	2/7/14
CB	5/13/14

CHRIS BRIANA — CALCULATED-DESIGNED BY
TOM CONNELL — CHECKED BY
MICHAEL LOHMAN — CONSULTANT FUNCTIONAL SUPERVISOR

STATE OF CALIFORNIA - DEPARTMENT OF TRANSPORTATION — Caltrans

LAST REVISION 00-00-00 | DATE PLOTTED => 30-SEP-2014 | TIME PLOTTED => 14:14

BORDER LAST REVISED 7/2/2010 | USERNAME => acroskey | DGN FILE => 04000007351b034.dgn | RELATIVE BORDER SCALE IS IN INCHES 0 1 2 3 | UNIT 0716 | PROJECT NUMBER & PHASE 04000007351

Dist	COUNTY	ROUTE	POST MILES TOTAL PROJECT	SHEET No.	TOTAL SHEETS
04	Mrn, Son	101	26.8/27.6, 0.0/2.0	165	710

REGISTERED CIVIL ENGINEER — DATE 06/30/14

8-18-14
PLANS APPROVAL DATE

REGISTERED PROFESSIONAL ENGINEER
S. D. DANSKY
No. 60220
Exp. 6/30/16
CIVIL
STATE OF CALIFORNIA

THE STATE OF CALIFORNIA OR ITS OFFICERS OR AGENTS SHALL NOT BE RESPONSIBLE FOR THE ACCURACY OR COMPLETENESS OF SCANNED COPIES OF THIS PLAN SHEET.

MARK THOMAS & CO., INC.
3000 OAK RD, SUITE 650
WALNUT CREEK, CA 94597

TRANSPORTATION AUTHORITY OF MARIN
750 LINDARO ST, SUITE 200
SAN RAFAEL, CA 94901

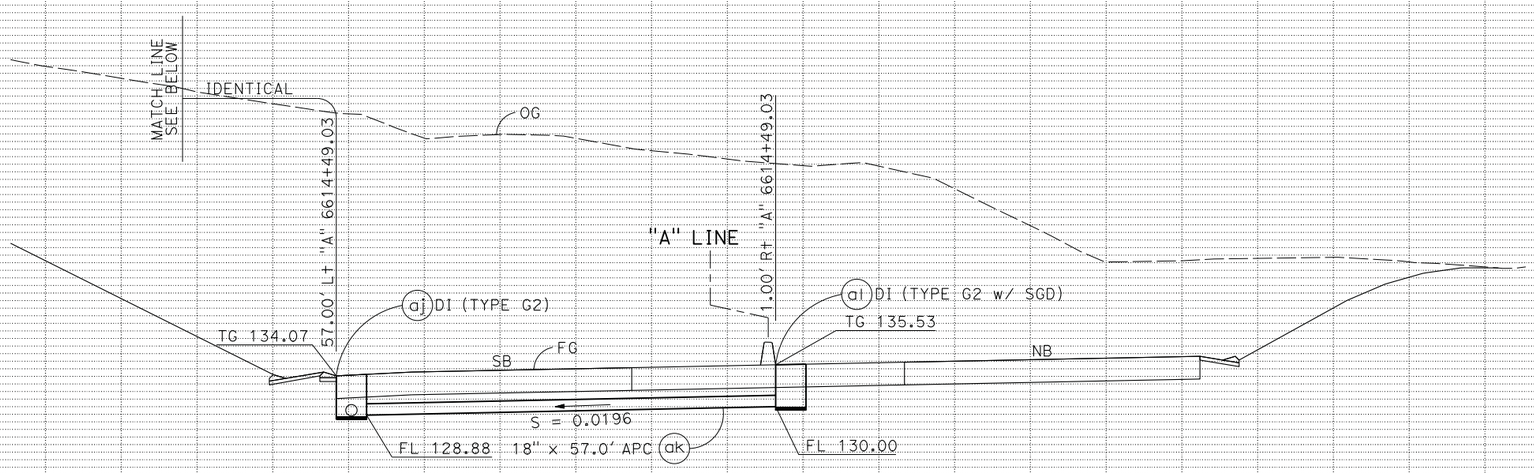

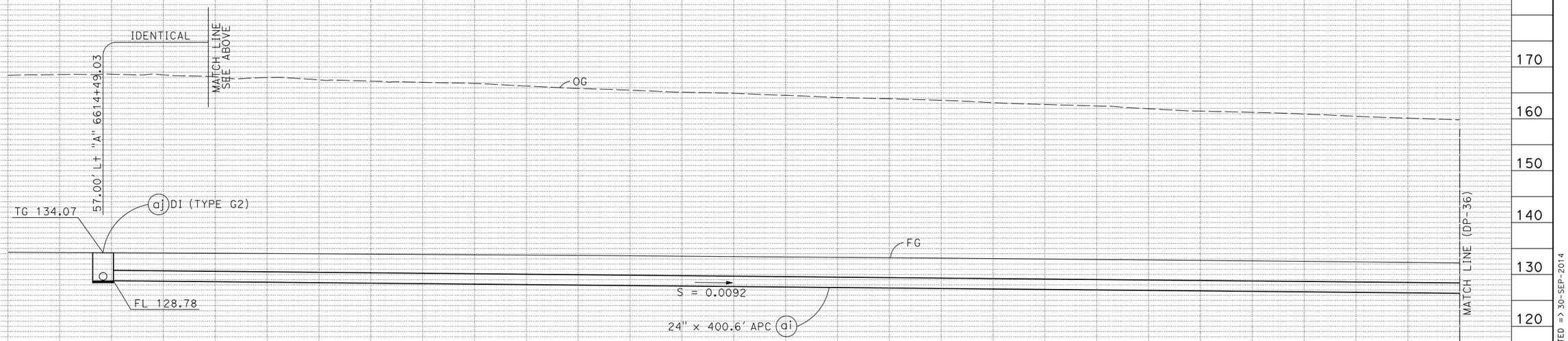

DRAINAGE SYSTEM No. 30

DRAINAGE PROFILES

SCALE: Horiz 1" = 10'
Vert 1" = 10'

DP-35

REVISED BY	DATE REVISED
CB	4/30/12
CB	2/7/14
CB	5/13/14

CHRIS BRIANA
TOM CONNELL
CALCULATED-DESIGNED BY
CHECKED BY
CONSULTANT FUNCTIONAL SUPERVISOR
MICHAEL LOHMAN

STATE OF CALIFORNIA - DEPARTMENT OF TRANSPORTATION
Caltrans

LAST REVISION 00-00-00
DATE PLOTTED => 30-SEP-2014
TIME PLOTTED => 14:14

BORDER LAST REVISED 7/2/2010
USERNAME => acroskey
DGN FILE => 04000007351b035.dgn
RELATIVE BORDER SCALE IS IN INCHES 0 1 2 3
UNIT 0716
PROJECT NUMBER & PHASE 04000007351

Dist	COUNTY	ROUTE	POST MILES TOTAL PROJECT	SHEET No.	TOTAL SHEETS
04	Mrn, Son	101	26.8/27.6, 0.0/2.0	166	710

REGISTERED CIVIL ENGINEER — DATE 06/30/14

8-18-14
PLANS APPROVAL DATE

REGISTERED PROFESSIONAL ENGINEER
S. D. DANSKY
No. 60220
Exp. 6/30/16
CIVIL
STATE OF CALIFORNIA

THE STATE OF CALIFORNIA OR ITS OFFICERS OR AGENTS SHALL NOT BE RESPONSIBLE FOR THE ACCURACY OR COMPLETENESS OF SCANNED COPIES OF THIS PLAN SHEET.

MARK THOMAS & CO., INC.
3000 OAK RD, SUITE 650
WALNUT CREEK, CA 94597

TRANSPORTATION AUTHORITY OF MARIN
750 LINDARO ST, SUITE 200
SAN RAFAEL, CA 94901

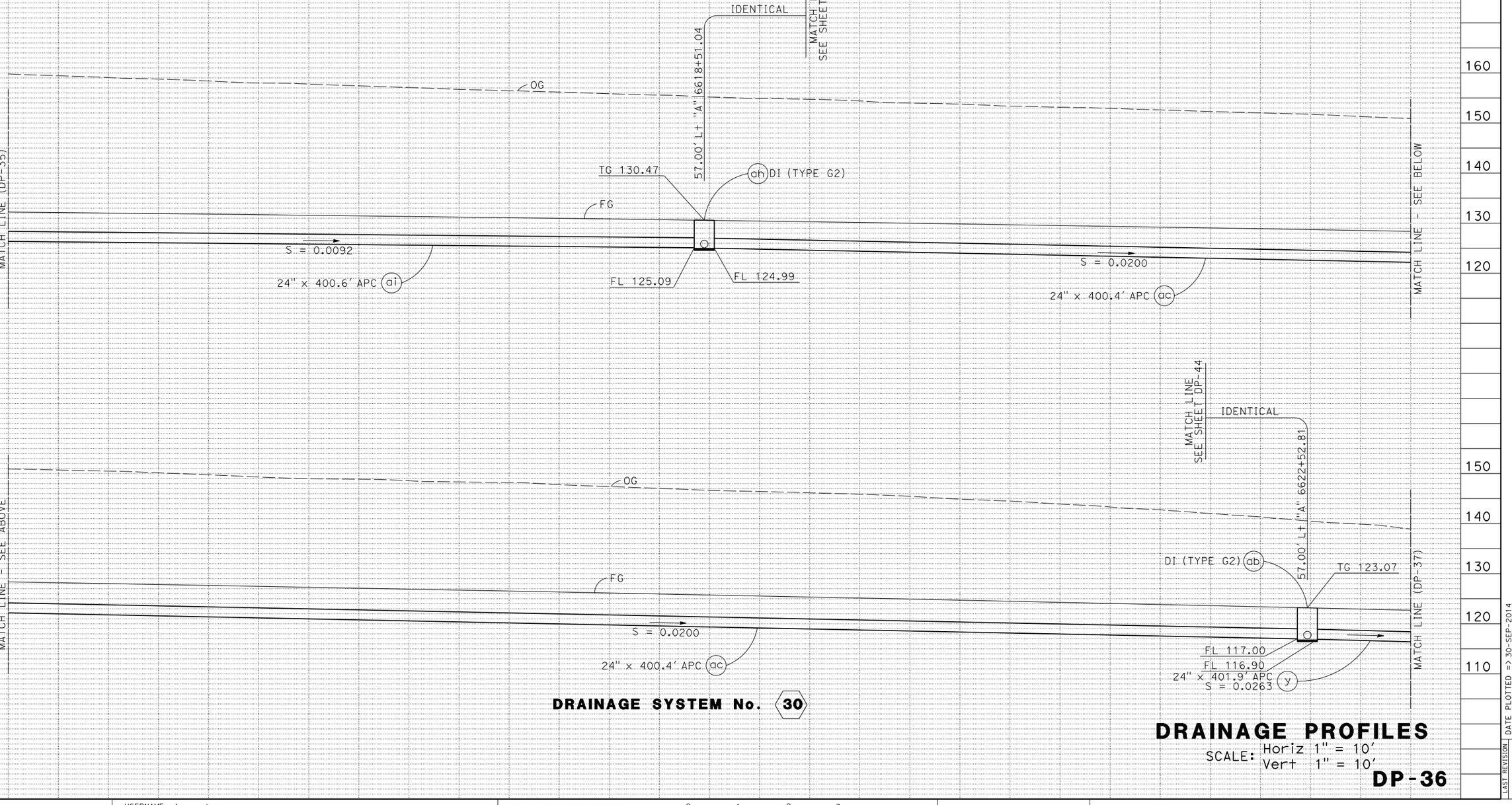

DRAINAGE SYSTEM No. 30

DRAINAGE PROFILES

SCALE: Horiz 1" = 10'
Vert 1" = 10'

DP-36

REVISED BY	DATE REVISED
CB	4/30/12
CB	2/7/14
CB	5/13/14

CHRIS BRIANA
TOM CONNELL

CALCULATED-DESIGNED BY
CHECKED BY

CONSULTANT FUNCTIONAL SUPERVISOR
MICHAEL LOHMAN

STATE OF CALIFORNIA - DEPARTMENT OF TRANSPORTATION
Caltrans

LAST REVISION 00-00-00
DATE PLOTTED => 30-SEP-2014
TIME PLOTTED => 14:14

BORDER LAST REVISED 7/2/2010

USERNAME => acroskey
DGN FILE => 04000007351b036.dgn

RELATIVE BORDER SCALE IS IN INCHES 0 1 2 3

UNIT 0716

PROJECT NUMBER & PHASE 04000007351

Dist	COUNTY	ROUTE	POST MILES TOTAL PROJECT	SHEET No.	TOTAL SHEETS
04	Mrn, Son	101	26.8/27.6, 0.0/2.0	167	710

REGISTERED CIVIL ENGINEER — DATE: 06/30/14

8-18-14
PLANS APPROVAL DATE

REGISTERED PROFESSIONAL ENGINEER
S. D. DANSKY
No. 60220
Exp. 6/30/16
CIVIL
STATE OF CALIFORNIA

THE STATE OF CALIFORNIA OR ITS OFFICERS OR AGENTS SHALL NOT BE RESPONSIBLE FOR THE ACCURACY OR COMPLETENESS OF SCANNED COPIES OF THIS PLAN SHEET.

MARK THOMAS & CO., INC.
3000 OAK RD, SUITE 650
WALNUT CREEK, CA 94597

TRANSPORTATION AUTHORITY OF MARIN
750 LINDARO ST, SUITE 200
SAN RAFAEL, CA 94901

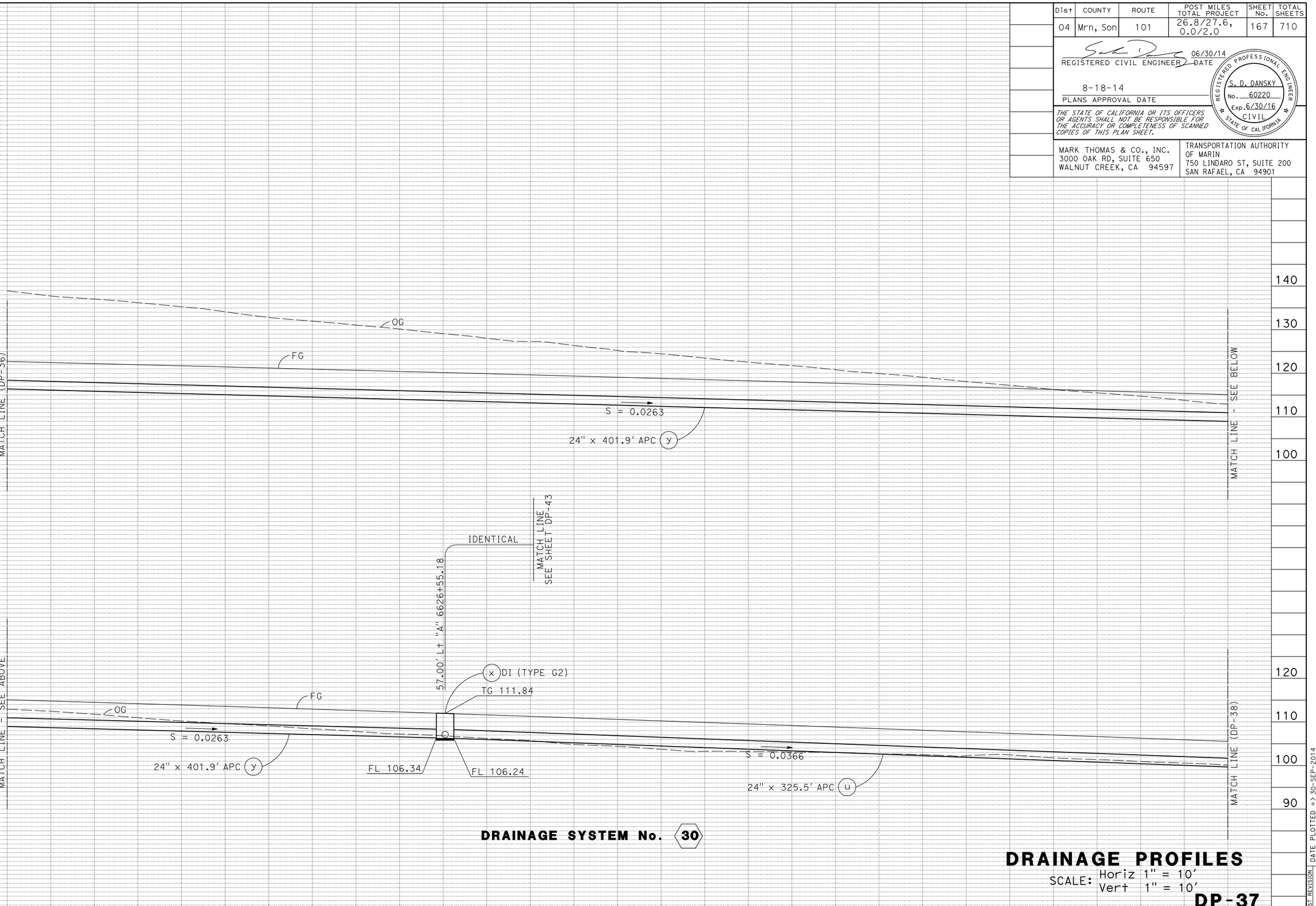

DRAINAGE SYSTEM No. 30

DRAINAGE PROFILES

SCALE: Horiz 1" = 10'
Vert 1" = 10'

DP-37

CB 5/13/14
CB 2/7/14
CB 4/30/12
REVISED BY / DATE REVISED

CHRIS BRIANA
TOM CONNELL
CALCULATED-DESIGNED BY / CHECKED BY

CONSULTANT FUNCTIONAL SUPERVISOR: MICHAEL LOHMAN

STATE OF CALIFORNIA - DEPARTMENT OF TRANSPORTATION
Caltrans

LAST REVISION 00-00-00
DATE PLOTTED => 30-SEP-2014
TIME PLOTTED => 14:14

BORDER LAST REVISED 7/2/2010
USERNAME => acroskey
DGN FILE => 04000007351ib037.dgn
RELATIVE BORDER SCALE IS IN INCHES 0 1 2 3
UNIT 0716
PROJECT NUMBER & PHASE 04000007351

Dist	COUNTY	ROUTE	POST MILES TOTAL PROJECT	SHEET No.	TOTAL SHEETS
04	Mrn, Son	101	26.8/27.6, 0.0/2.0	168	710

REGISTERED CIVIL ENGINEER — DATE 06/30/14

8-18-14
PLANS APPROVAL DATE

REGISTERED PROFESSIONAL ENGINEER
S. D. DANSKY
No. 60220
Exp. 6/30/16
CIVIL
STATE OF CALIFORNIA

THE STATE OF CALIFORNIA OR ITS OFFICERS OR AGENTS SHALL NOT BE RESPONSIBLE FOR THE ACCURACY OR COMPLETENESS OF SCANNED COPIES OF THIS PLAN SHEET.

MARK THOMAS & CO., INC.
3000 OAK RD, SUITE 650
WALNUT CREEK, CA 94597

TRANSPORTATION AUTHORITY OF MARIN
750 LINDARO ST, SUITE 200
SAN RAFAEL, CA 94901

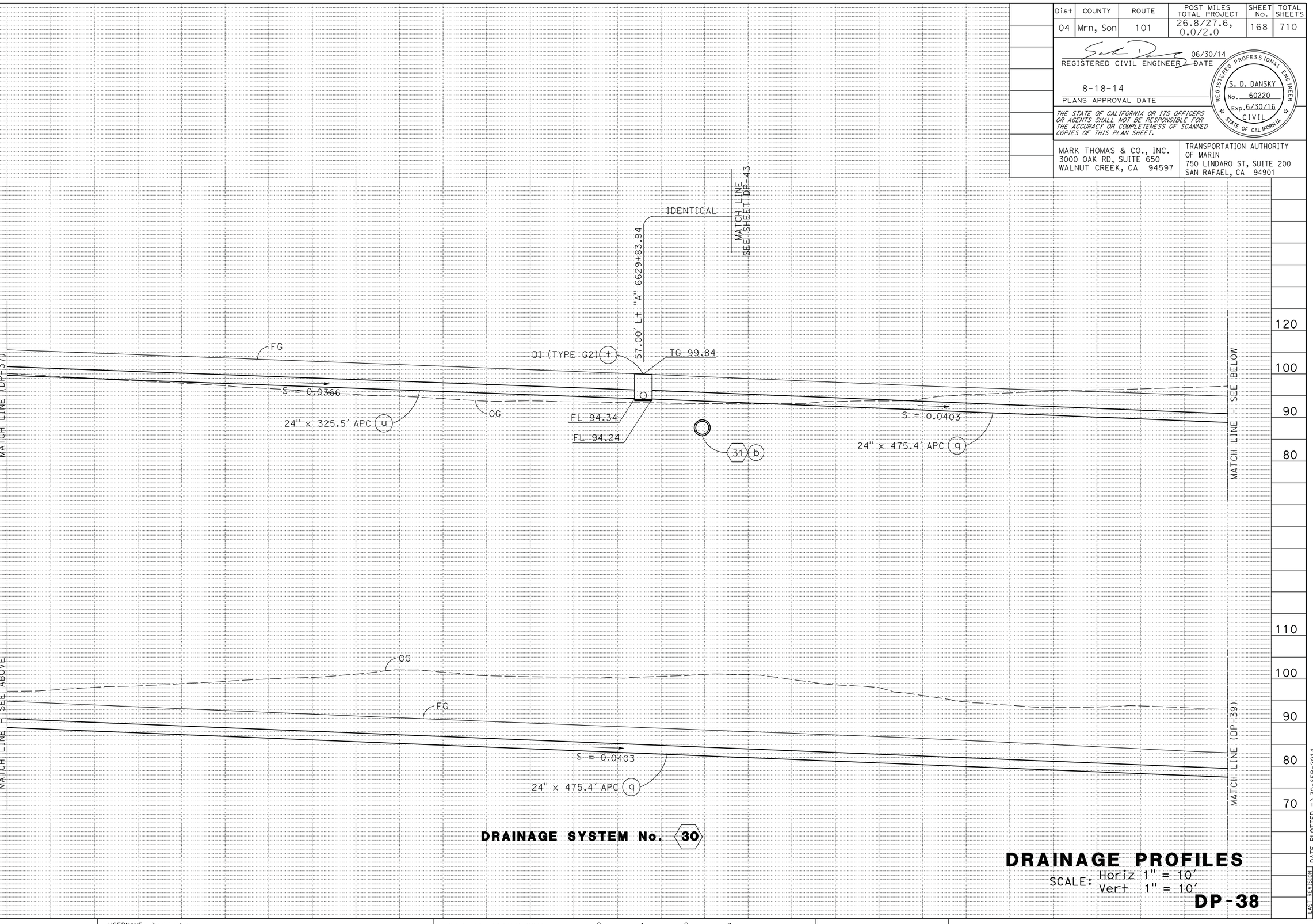

DRAINAGE SYSTEM No. 30

DRAINAGE PROFILES

SCALE: Horiz 1" = 10'
Vert 1" = 10'

DP-38

REVISED BY	DATE REVISED
CB	4/30/12
CB	2/7/14
CB	5/13/14

CHRIS BRIANA
TOM CONNELL
CALCULATED-DESIGNED BY
CHECKED BY

CONSULTANT FUNCTIONAL SUPERVISOR
MICHAEL LOHMAN

STATE OF CALIFORNIA - DEPARTMENT OF TRANSPORTATION
Caltrans

LAST REVISION 00-00-00
DATE PLOTTED => 30-SEP-2014
TIME PLOTTED => 14:14

BORDER LAST REVISED 7/2/2010
USERNAME => acroskey
DGN FILE => 04000007351b038.dgn
RELATIVE BORDER SCALE IS IN INCHES 0 1 2 3
UNIT 0716
PROJECT NUMBER & PHASE 04000007351

Dist	COUNTY	ROUTE	POST MILES TOTAL PROJECT	SHEET No.	TOTAL SHEETS
04	Mrn, Son	101	26.8/27.6, 0.0/2.0	169	710

REGISTERED CIVIL ENGINEER — DATE 06/30/14

8-18-14
PLANS APPROVAL DATE

REGISTERED PROFESSIONAL ENGINEER — S. D. DANSKY — No. 60220 — Exp. 6/30/16 — CIVIL — STATE OF CALIFORNIA

THE STATE OF CALIFORNIA OR ITS OFFICERS OR AGENTS SHALL NOT BE RESPONSIBLE FOR THE ACCURACY OR COMPLETENESS OF SCANNED COPIES OF THIS PLAN SHEET.

MARK THOMAS & CO., INC.
3000 OAK RD, SUITE 650
WALNUT CREEK, CA 94597

TRANSPORTATION AUTHORITY OF MARIN
750 LINDARO ST, SUITE 200
SAN RAFAEL, CA 94901

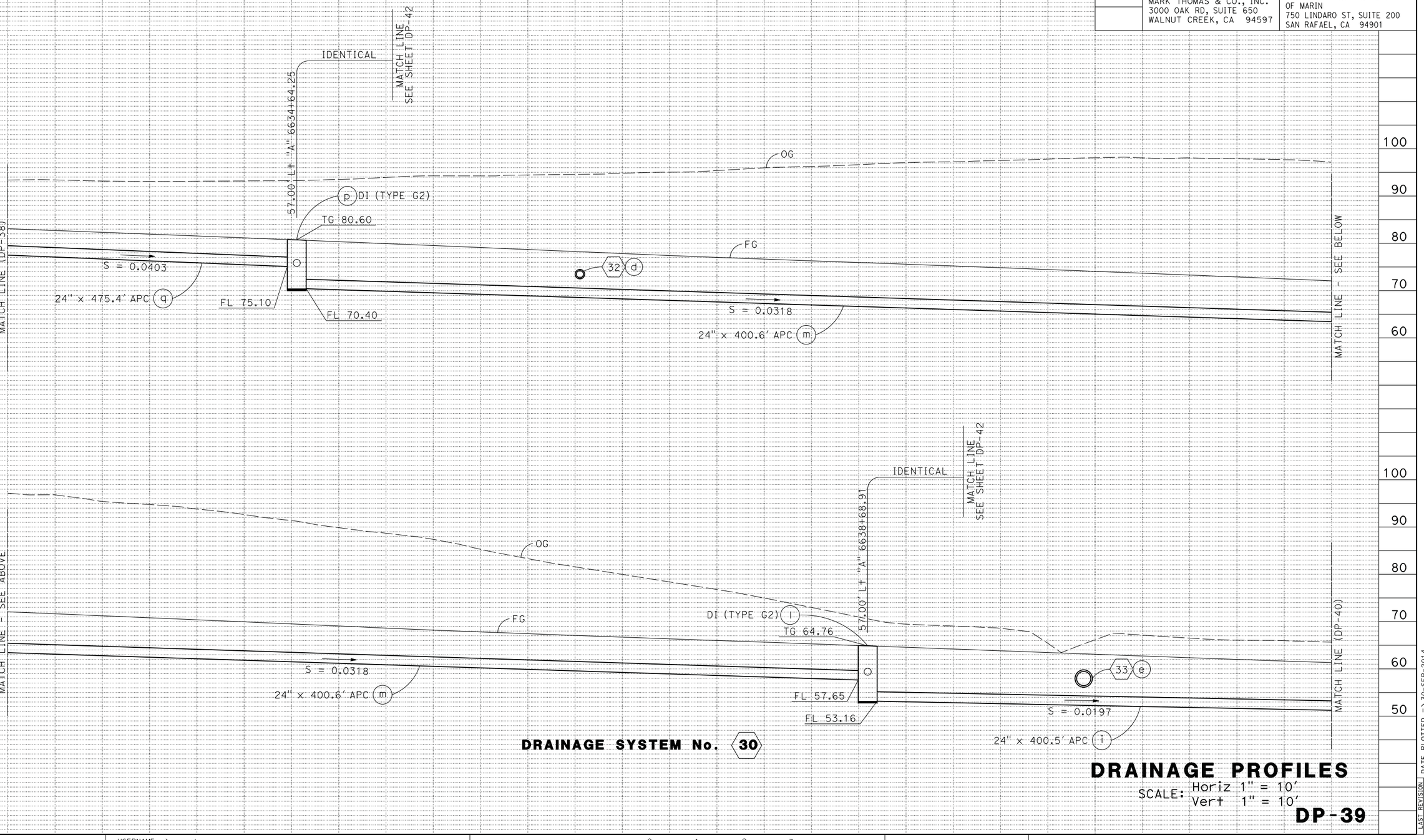

DRAINAGE SYSTEM No. 30

DRAINAGE PROFILES

SCALE: Horiz 1" = 10'
Vert 1" = 10'

DP-39

CB	5/13/14
CB	2/7/14
CB	4/30/12
REVISED BY	DATE REVISED

CHRIS BRIANA — TOM CONNELL — CALCULATED-DESIGNED BY — CHECKED BY

CONSULTANT FUNCTIONAL SUPERVISOR — MICHAEL LOHMAN

STATE OF CALIFORNIA - DEPARTMENT OF TRANSPORTATION — Caltrans

LAST REVISION 00-00-00 — DATE PLOTTED => 30-SEP-2014 — TIME PLOTTED => 14:14

BORDER LAST REVISED 7/2/2010 | USERNAME => acroskey | DGN FILE => 04000007351b039.dgn | RELATIVE BORDER SCALE IS IN INCHES 0 1 2 3 | UNIT 0716 | PROJECT NUMBER & PHASE 04000007351

Dist	COUNTY	ROUTE	POST MILES TOTAL PROJECT	SHEET No.	TOTAL SHEETS
04	Mrn, Son	101	26.8/27.6, 0.0/2.0	170	710

REGISTERED CIVIL ENGINEER — DATE 06/30/14

8-18-14
PLANS APPROVAL DATE

REGISTERED PROFESSIONAL ENGINEER
S. D. DANSKY
No. 60220
Exp. 6/30/16
CIVIL
STATE OF CALIFORNIA

THE STATE OF CALIFORNIA OR ITS OFFICERS OR AGENTS SHALL NOT BE RESPONSIBLE FOR THE ACCURACY OR COMPLETENESS OF SCANNED COPIES OF THIS PLAN SHEET.

MARK THOMAS & CO., INC.
3000 OAK RD, SUITE 650
WALNUT CREEK, CA 94597

TRANSPORTATION AUTHORITY OF MARIN
750 LINDARO ST, SUITE 200
SAN RAFAEL, CA 94901

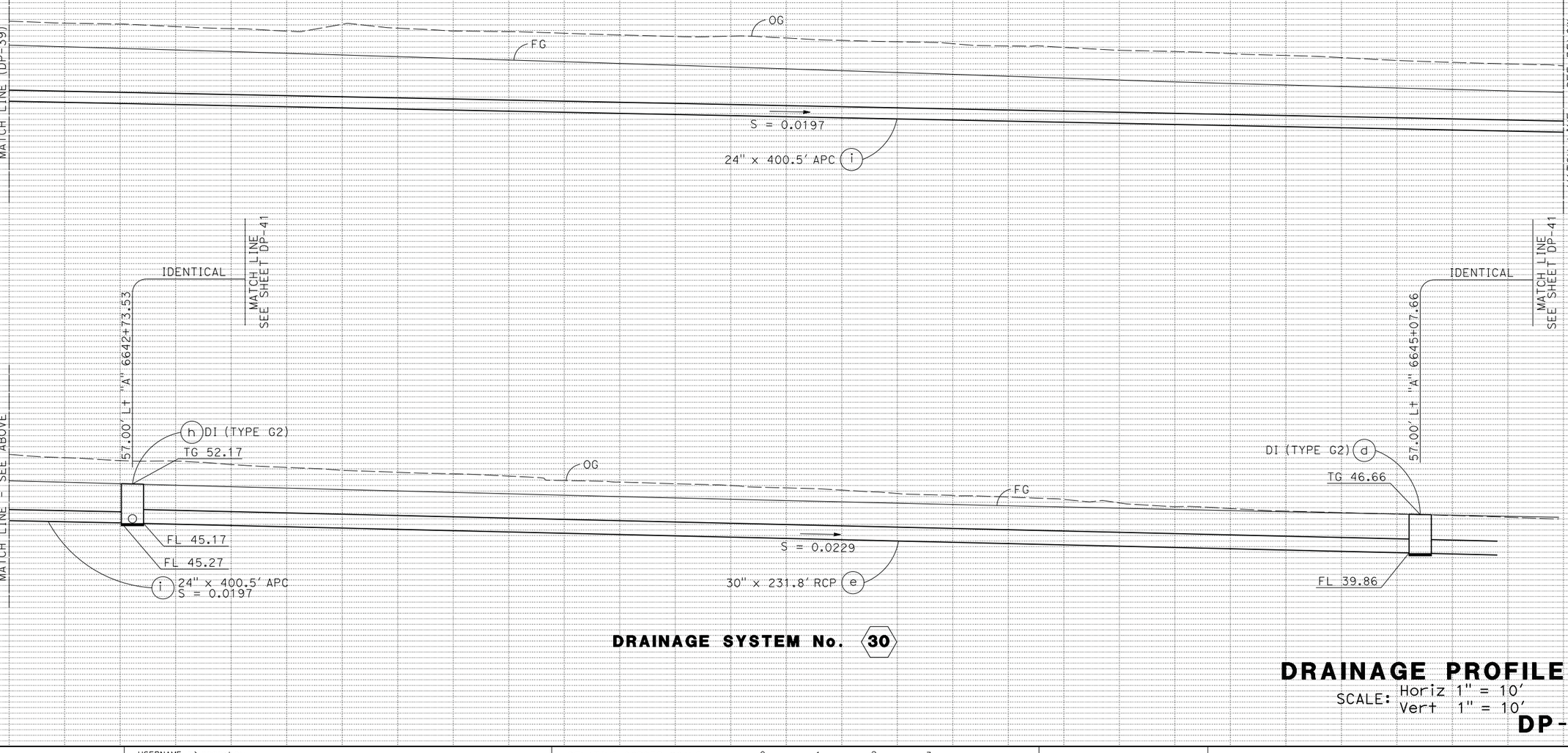

DRAINAGE SYSTEM No. 30

DRAINAGE PROFILES

SCALE: Horiz 1" = 10'
Vert 1" = 10'

DP-40

CB	5/13/14
CB	2/7/14
CB	4/30/12
REVISED BY	DATE REVISED

CHRIS BRIANA
TOM CONNELL
CALCULATED-DESIGNED BY
CHECKED BY

CONSULTANT FUNCTIONAL SUPERVISOR
MICHAEL LOHMAN

STATE OF CALIFORNIA - DEPARTMENT OF TRANSPORTATION
Caltrans

LAST REVISION 00-00-00
DATE PLOTTED => 30-SEP-2014
TIME PLOTTED => 14:14

BORDER LAST REVISED 7/2/2010
USERNAME => acroskey
DGN FILE => 04000007351b040.dgn
RELATIVE BORDER SCALE IS IN INCHES 0 1 2 3
UNIT 0716
PROJECT NUMBER & PHASE 04000007351

Dist	COUNTY	ROUTE	POST MILES TOTAL PROJECT	SHEET No.	TOTAL SHEETS
04	Mrn, Son	101	26.8/27.6, 0.0/2.0	171	710

REGISTERED CIVIL ENGINEER — 06/30/14 DATE

8-18-14
PLANS APPROVAL DATE

REGISTERED PROFESSIONAL ENGINEER
S. D. DANSKY
No. 60220
Exp. 6/30/16
CIVIL
STATE OF CALIFORNIA

THE STATE OF CALIFORNIA OR ITS OFFICERS OR AGENTS SHALL NOT BE RESPONSIBLE FOR THE ACCURACY OR COMPLETENESS OF SCANNED COPIES OF THIS PLAN SHEET.

MARK THOMAS & CO., INC.
3000 OAK RD, SUITE 650
WALNUT CREEK, CA 94597

TRANSPORTATION AUTHORITY OF MARIN
750 LINDARO ST, SUITE 200
SAN RAFAEL, CA 94901

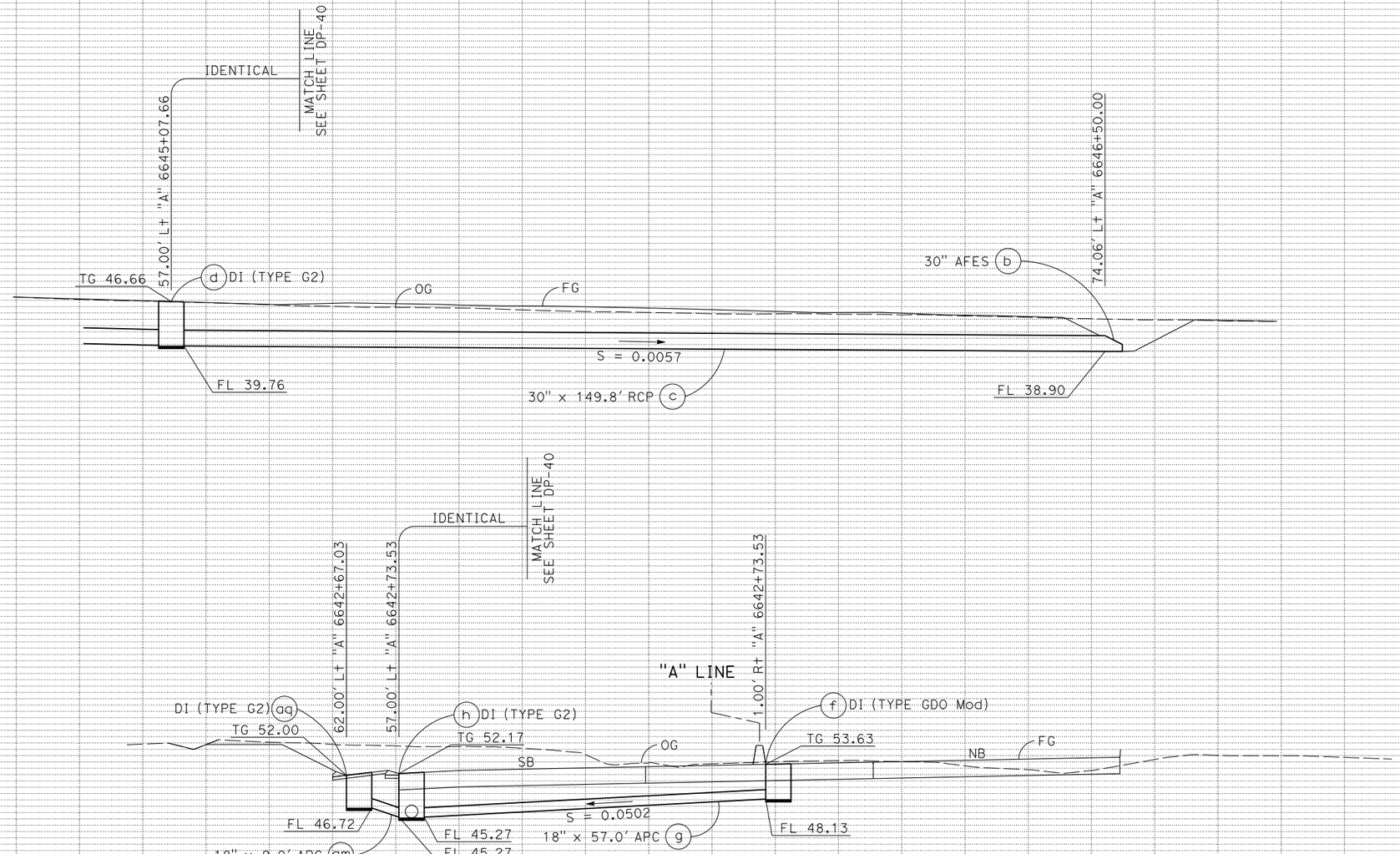

DRAINAGE SYSTEM No. 30

DRAINAGE PROFILES

SCALE: Horiz 1" = 10'
Vert 1" = 10'

DP-41

STATE OF CALIFORNIA - DEPARTMENT OF TRANSPORTATION
Caltrans

CONSULTANT FUNCTIONAL SUPERVISOR: MICHAEL LOHMAN

CALCULATED-DESIGNED BY: CHRIS BRIANA
CHECKED BY: TOM CONNELL

REVISED BY	DATE REVISED
CB	4/30/12
CB	2/7/14
CB	5/13/14

LAST REVISION 00-00-00
DATE PLOTTED => 30-SEP-2014
TIME PLOTTED => 14:14

BORDER LAST REVISED 7/2/2010
USERNAME => acroskey
DGN FILE => 0400000735ib041.dgn
RELATIVE BORDER SCALE IS IN INCHES 0 1 2 3
UNIT 0716
PROJECT NUMBER & PHASE 04000007351

Dist	COUNTY	ROUTE	POST MILES TOTAL PROJECT	SHEET No.	TOTAL SHEETS
04	Mrn, Son	101	26.8/27.6, 0.0/2.0	172	710

REGISTERED CIVIL ENGINEER 06/30/14 DATE

8-18-14
PLANS APPROVAL DATE

REGISTERED PROFESSIONAL ENGINEER S. D. DANSKY No. 60220 Exp. 6/30/16 CIVIL STATE OF CALIFORNIA

THE STATE OF CALIFORNIA OR ITS OFFICERS OR AGENTS SHALL NOT BE RESPONSIBLE FOR THE ACCURACY OR COMPLETENESS OF SCANNED COPIES OF THIS PLAN SHEET.

MARK THOMAS & CO., INC.
3000 OAK RD, SUITE 650
WALNUT CREEK, CA 94597

TRANSPORTATION AUTHORITY OF MARIN
750 LINDARO ST, SUITE 200
SAN RAFAEL, CA 94901

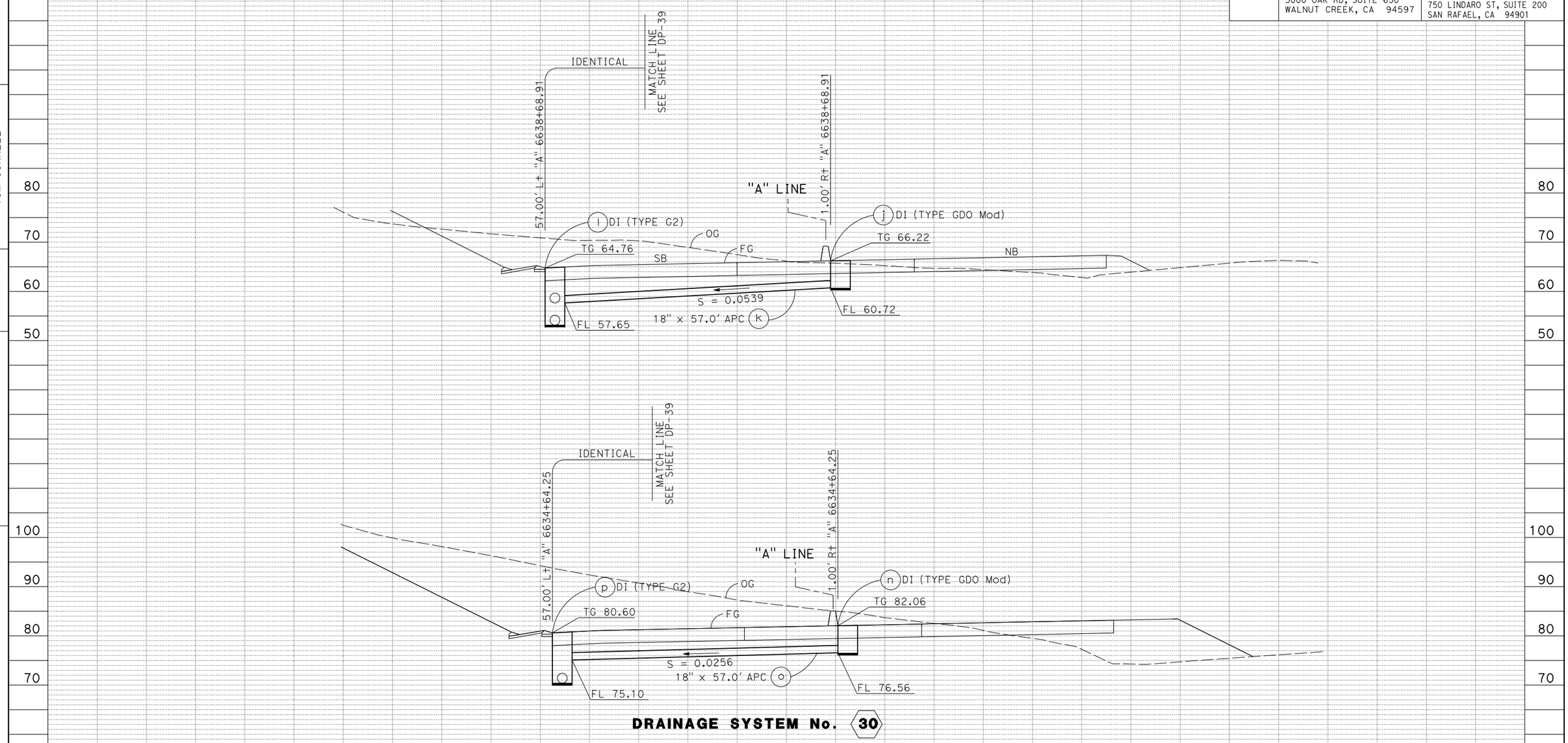

DRAINAGE SYSTEM No. 30

DRAINAGE PROFILES

SCALE: Horiz 1" = 10'
Vert 1" = 10'

DP-42

CB	5/13/14
CB	2/7/14
CB	4/30/12
REVISED BY	DATE REVISED
CHRIS BRIANA	TOM CONNELL
CALCULATED-DESIGNED BY	CHECKED BY
CONSULTANT FUNCTIONAL SUPERVISOR	MICHAEL LOHMAN

STATE OF CALIFORNIA - DEPARTMENT OF TRANSPORTATION
Caltrans

DATE PLOTTED => 30-SEP-2014
TIME PLOTTED => 14:14
LAST REVISION 00-00-00

Dist	COUNTY	ROUTE	POST MILES TOTAL PROJECT	SHEET No.	TOTAL SHEETS
04	Mrn, Son	101	26.8/27.6, 0.0/2.0	173	710

REGISTERED CIVIL ENGINEER — 06/30/14 DATE

8-18-14
PLANS APPROVAL DATE

REGISTERED PROFESSIONAL ENGINEER — S. D. DANSKY — No. 60220 — Exp. 6/30/16 — CIVIL — STATE OF CALIFORNIA

THE STATE OF CALIFORNIA OR ITS OFFICERS OR AGENTS SHALL NOT BE RESPONSIBLE FOR THE ACCURACY OR COMPLETENESS OF SCANNED COPIES OF THIS PLAN SHEET.

MARK THOMAS & CO., INC.
3000 OAK RD, SUITE 650
WALNUT CREEK, CA 94597

TRANSPORTATION AUTHORITY OF MARIN
750 LINDARO ST, SUITE 200
SAN RAFAEL, CA 94901

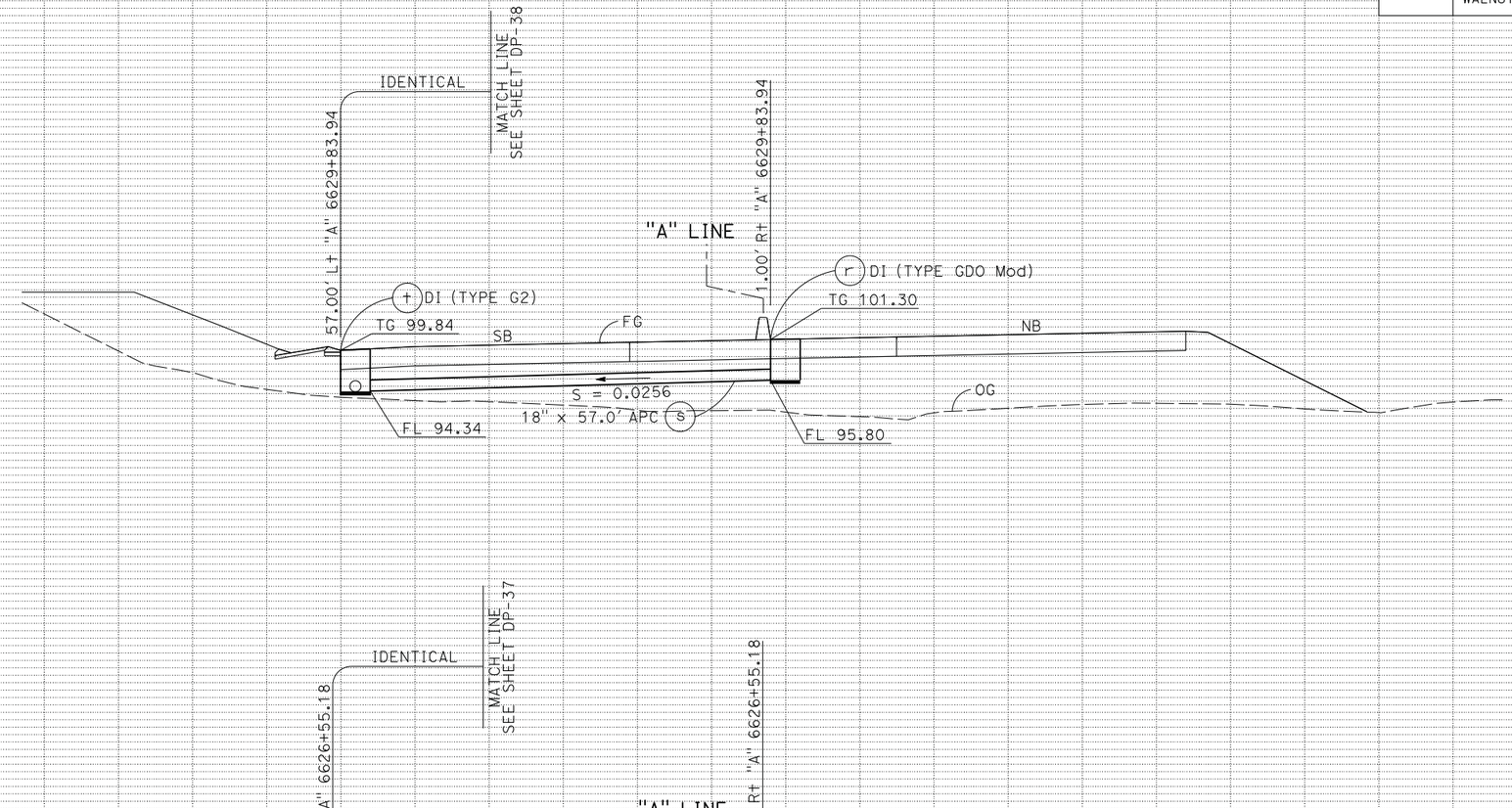

DRAINAGE SYSTEM No. 30

DRAINAGE PROFILES

SCALE: Horiz 1" = 10'
Vert 1" = 10'

DP-43

STATE OF CALIFORNIA - DEPARTMENT OF TRANSPORTATION
Caltrans

CONSULTANT FUNCTIONAL SUPERVISOR: MICHAEL LOHMAN

CALCULATED-DESIGNED BY: CHRIS BRIANA
CHECKED BY: TOM CONNELL

REVISED BY	DATE REVISED
CB	4/30/12
CB	2/7/14
CB	5/13/14

LAST REVISION 00-00-00
DATE PLOTTED => 30-SEP-2014
TIME PLOTTED => 14:14

BORDER LAST REVISED 7/2/2010
USERNAME => acroskey
DGN FILE => 04000007351ib043.dgn
RELATIVE BORDER SCALE IS IN INCHES 0 1 2 3
UNIT 0716
PROJECT NUMBER & PHASE 04000007351

Dist	COUNTY	ROUTE	POST MILES TOTAL PROJECT	SHEET No.	TOTAL SHEETS
04	Mrn, Son	101	26.8/27.6, 0.0/2.0	174	710

REGISTERED CIVIL ENGINEER — DATE 06/30/14

8-18-14
PLANS APPROVAL DATE

REGISTERED PROFESSIONAL ENGINEER — S. D. DANSKY — No. 60220 — Exp. 6/30/16 — CIVIL — STATE OF CALIFORNIA

THE STATE OF CALIFORNIA OR ITS OFFICERS OR AGENTS SHALL NOT BE RESPONSIBLE FOR THE ACCURACY OR COMPLETENESS OF SCANNED COPIES OF THIS PLAN SHEET.

MARK THOMAS & CO., INC.
3000 OAK RD, SUITE 650
WALNUT CREEK, CA 94597

TRANSPORTATION AUTHORITY OF MARIN
750 LINDARO ST, SUITE 200
SAN RAFAEL, CA 94901

REVISED BY	DATE REVISED
CB	4/30/12
CB	2/7/14
CB	5/13/14

CHRIS BRIANA — TOM CONNELL — CALCULATED-DESIGNED BY — CHECKED BY

CONSULTANT FUNCTIONAL SUPERVISOR — MICHAEL LOHMAN

STATE OF CALIFORNIA - DEPARTMENT OF TRANSPORTATION — Caltrans

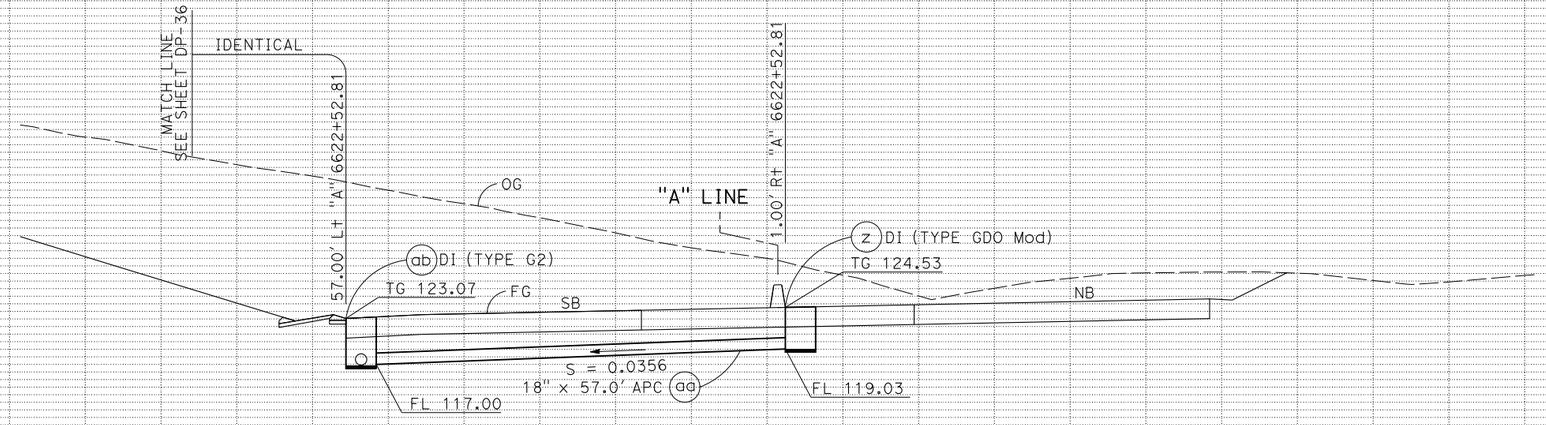

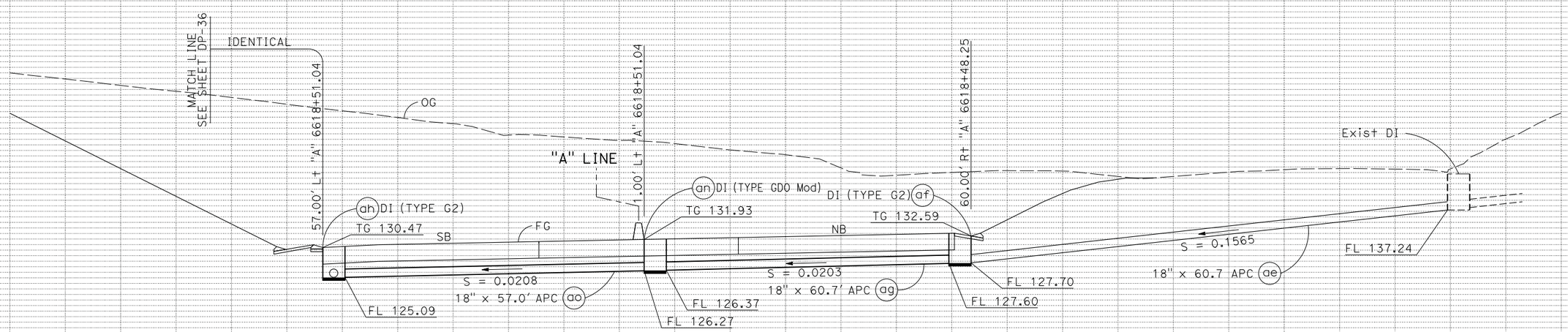

DRAINAGE SYSTEM No. 30

DRAINAGE PROFILES

SCALE: Horiz 1" = 10'
Vert 1" = 10'

DP-44

LAST REVISION 00-00-00 | DATE PLOTTED => 30-SEP-2014 | TIME PLOTTED => 14:14

BORDER LAST REVISED 7/2/2010 | USERNAME => acroskey | DGN FILE => 04000007351b044.dgn | RELATIVE BORDER SCALE IS IN INCHES 0 1 2 3 | UNIT 0716 | PROJECT NUMBER & PHASE 04000007351

Dist	COUNTY	ROUTE	POST MILES TOTAL PROJECT	SHEET No.	TOTAL SHEETS
04	Mrn, Son	101	26.8/27.6, 0.0/2.0	175	710

REGISTERED CIVIL ENGINEER — DATE: 06/30/14

8-18-14
PLANS APPROVAL DATE

REGISTERED PROFESSIONAL ENGINEER
S. D. DANSKY
No. 60220
Exp. 6/30/16
CIVIL
STATE OF CALIFORNIA

THE STATE OF CALIFORNIA OR ITS OFFICERS OR AGENTS SHALL NOT BE RESPONSIBLE FOR THE ACCURACY OR COMPLETENESS OF SCANNED COPIES OF THIS PLAN SHEET.

MARK THOMAS & CO., INC.
3000 OAK RD, SUITE 650
WALNUT CREEK, CA 94597

TRANSPORTATION AUTHORITY OF MARIN
750 LINDARO ST, SUITE 200
SAN RAFAEL, CA 94901

REVISED BY	DATE REVISED
CB	4/30/12
CB	2/7/14
CB	5/13/14

CHRIS BRIANA
TOM CONNELL

CALCULATED-DESIGNED BY
CHECKED BY

CONSULTANT FUNCTIONAL SUPERVISOR
MICHAEL LOHMAN

STATE OF CALIFORNIA - DEPARTMENT OF TRANSPORTATION
Caltrans

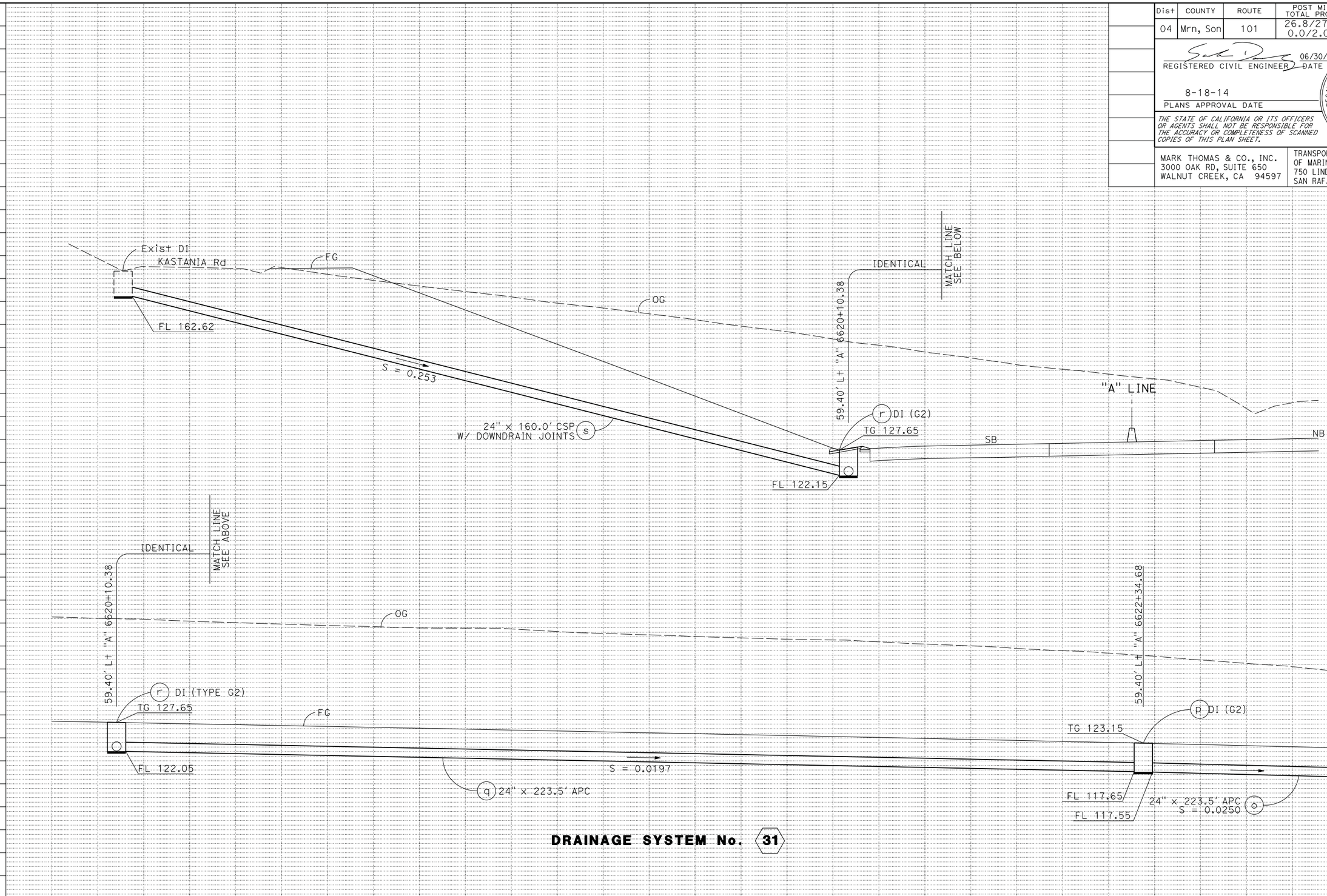

DRAINAGE SYSTEM No. 31

DRAINAGE PROFILES

SCALE: Horiz 1" = 10'
Vert 1" = 10'

DP-45

LAST REVISION 00-00-00
DATE PLOTTED => 30-SEP-2014
TIME PLOTTED => 14:14

BORDER LAST REVISED 7/2/2010
USERNAME => acroskey
DGN FILE => 0400000735ib045.dgn
RELATIVE BORDER SCALE IS IN INCHES 0 1 2 3
UNIT 0716
PROJECT NUMBER & PHASE 04000007351

Dist	COUNTY	ROUTE	POST MILES TOTAL PROJECT	SHEET No.	TOTAL SHEETS
04	Mrn, Son	101	26.8/27.6, 0.0/2.0	176	710

REGISTERED CIVIL ENGINEER — 06/30/14 DATE

8-18-14
PLANS APPROVAL DATE

REGISTERED PROFESSIONAL ENGINEER — S. D. DANSKY No. 60220 Exp. 6/30/16 CIVIL — STATE OF CALIFORNIA

THE STATE OF CALIFORNIA OR ITS OFFICERS OR AGENTS SHALL NOT BE RESPONSIBLE FOR THE ACCURACY OR COMPLETENESS OF SCANNED COPIES OF THIS PLAN SHEET.

MARK THOMAS & CO., INC.
3000 OAK RD, SUITE 650
WALNUT CREEK, CA 94597

TRANSPORTATION AUTHORITY OF MARIN
750 LINDARO ST, SUITE 200
SAN RAFAEL, CA 94901

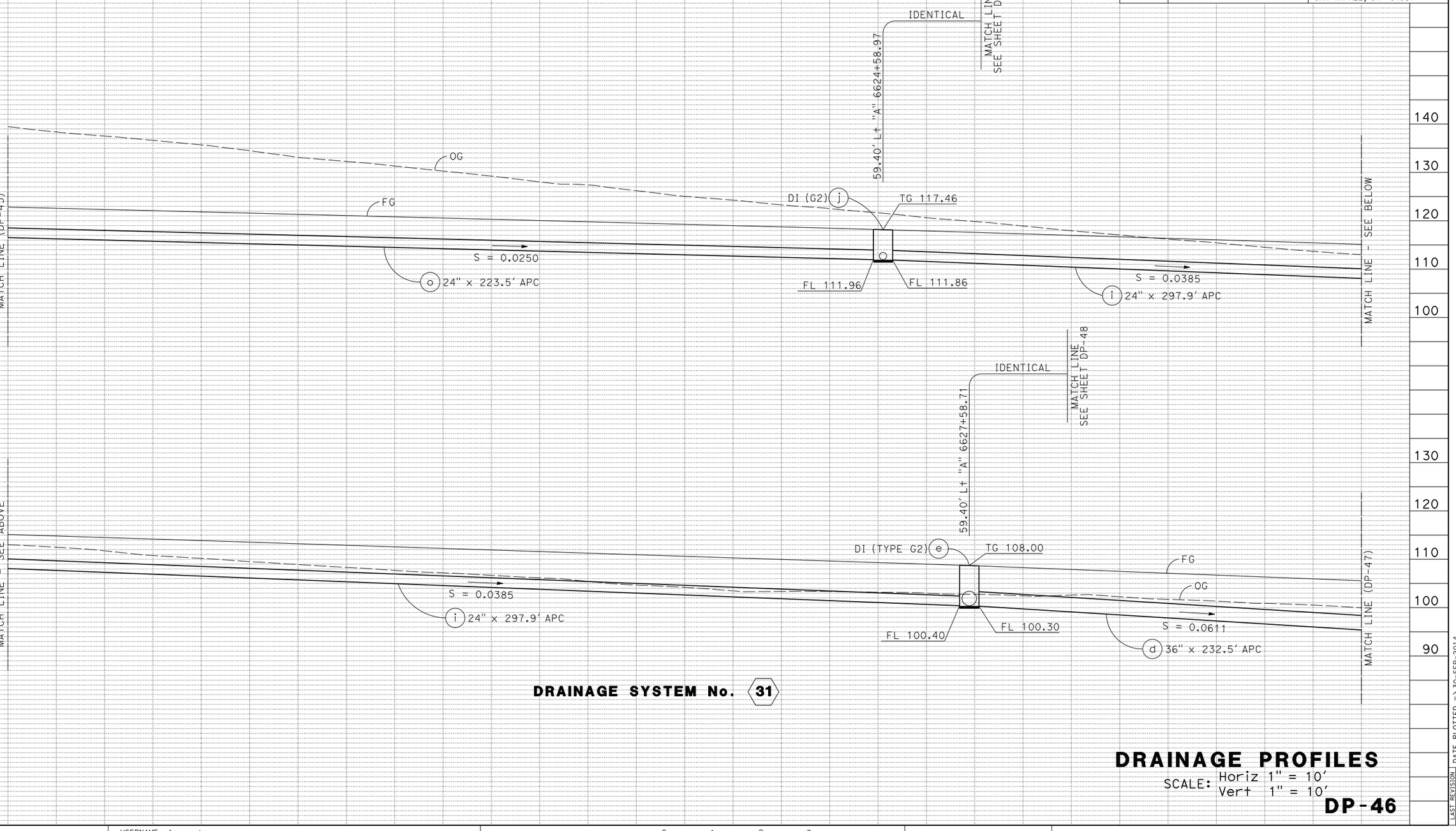

DRAINAGE SYSTEM No. 31

DRAINAGE PROFILES

SCALE: Horiz 1" = 10'
Vert 1" = 10'

DP-46

CB	5/13/14
CB	2/7/14
CB	4/30/12
REVISED BY	DATE REVISED

CHRIS BRIANA — CALCULATED-DESIGNED BY
TOM CONNELL — CHECKED BY

CONSULTANT FUNCTIONAL SUPERVISOR — MICHAEL LOHMAN

STATE OF CALIFORNIA - DEPARTMENT OF TRANSPORTATION — Caltrans

LAST REVISION 00-00-00
DATE PLOTTED => 30-SEP-2014
TIME PLOTTED => 14:15

BORDER LAST REVISED 7/2/2010
USERNAME => acroskey
DGN FILE => 04000007351ib046.dgn
RELATIVE BORDER SCALE IS IN INCHES 0 1 2 3
UNIT 0716
PROJECT NUMBER & PHASE 04000007351

Dist	COUNTY	ROUTE	POST MILES TOTAL PROJECT	SHEET No.	TOTAL SHEETS
04	Mrn, Son	101	26.8/27.6, 0.0/2.0	177	710

REGISTERED CIVIL ENGINEER — 06/30/14 DATE

8-18-14
PLANS APPROVAL DATE

REGISTERED PROFESSIONAL ENGINEER
S. D. DANSKY
No. 60220
Exp. 6/30/16
CIVIL
STATE OF CALIFORNIA

THE STATE OF CALIFORNIA OR ITS OFFICERS OR AGENTS SHALL NOT BE RESPONSIBLE FOR THE ACCURACY OR COMPLETENESS OF SCANNED COPIES OF THIS PLAN SHEET.

MARK THOMAS & CO., INC.
3000 OAK RD, SUITE 650
WALNUT CREEK, CA 94597

TRANSPORTATION AUTHORITY OF MARIN
750 LINDARO ST, SUITE 200
SAN RAFAEL, CA 94901

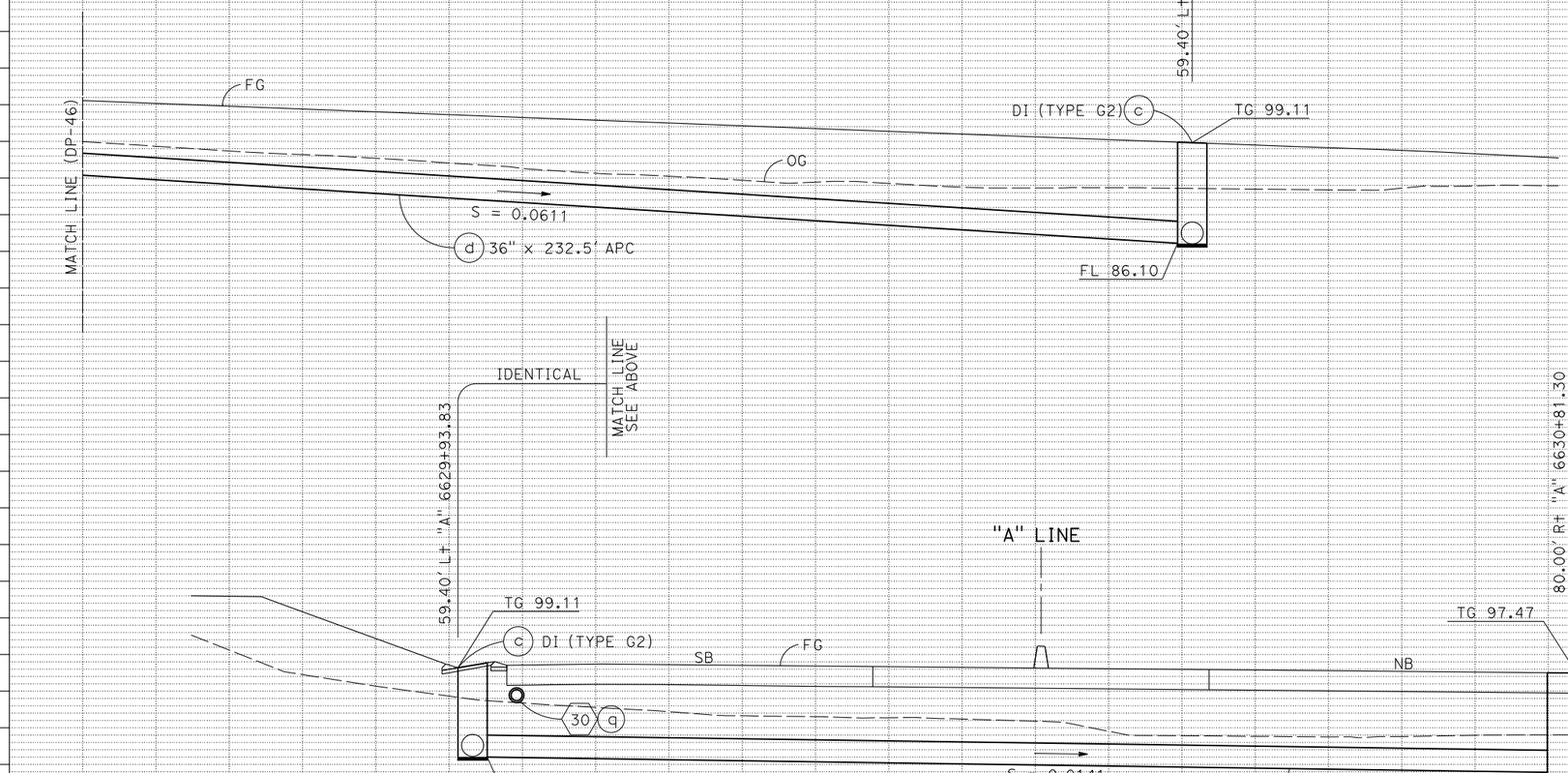

DRAINAGE SYSTEM No. 31

DRAINAGE PROFILES

SCALE: Horiz 1" = 10'
Vert 1" = 10'

DP-47

REVISED BY: CB 5/13/14; CB 2/7/14; CB 4/30/12
DATE REVISED
CALCULATED-DESIGNED BY: CHRIS BRIANA
CHECKED BY: TOM CONNELL
CONSULTANT FUNCTIONAL SUPERVISOR: MICHAEL LOHMAN
STATE OF CALIFORNIA - DEPARTMENT OF TRANSPORTATION
Caltrans

LAST REVISION 00-00-00
DATE PLOTTED => 30-SEP-2014
TIME PLOTTED => 14:15

BORDER LAST REVISED 7/2/2010
USERNAME => acroskey
DGN FILE => 04000007351ib047.dgn
RELATIVE BORDER SCALE IS IN INCHES 0 1 2 3
UNIT 0716
PROJECT NUMBER & PHASE 04000007351

Dist	COUNTY	ROUTE	POST MILES TOTAL PROJECT	SHEET No.	TOTAL SHEETS
04	Mrn, Son	101	26.8/27.6, 0.0/2.0	178	710

REGISTERED CIVIL ENGINEER — DATE 06/30/14

8-18-14
PLANS APPROVAL DATE

REGISTERED PROFESSIONAL ENGINEER — S. D. DANSKY — No. 60220 — Exp. 6/30/16 — CIVIL — STATE OF CALIFORNIA

THE STATE OF CALIFORNIA OR ITS OFFICERS OR AGENTS SHALL NOT BE RESPONSIBLE FOR THE ACCURACY OR COMPLETENESS OF SCANNED COPIES OF THIS PLAN SHEET.

MARK THOMAS & CO., INC.
3000 OAK RD, SUITE 650
WALNUT CREEK, CA 94597

TRANSPORTATION AUTHORITY OF MARIN
750 LINDARO ST, SUITE 200
SAN RAFAEL, CA 94901

REVISED BY	DATE REVISED
CB	4/30/12
CB	2/7/14
CB	5/13/14

CHRIS BRIANA
TOM CONNELL
CALCULATED-DESIGNED BY
CHECKED BY

CONSULTANT FUNCTIONAL SUPERVISOR
MICHAEL LOHMAN

STATE OF CALIFORNIA - DEPARTMENT OF TRANSPORTATION

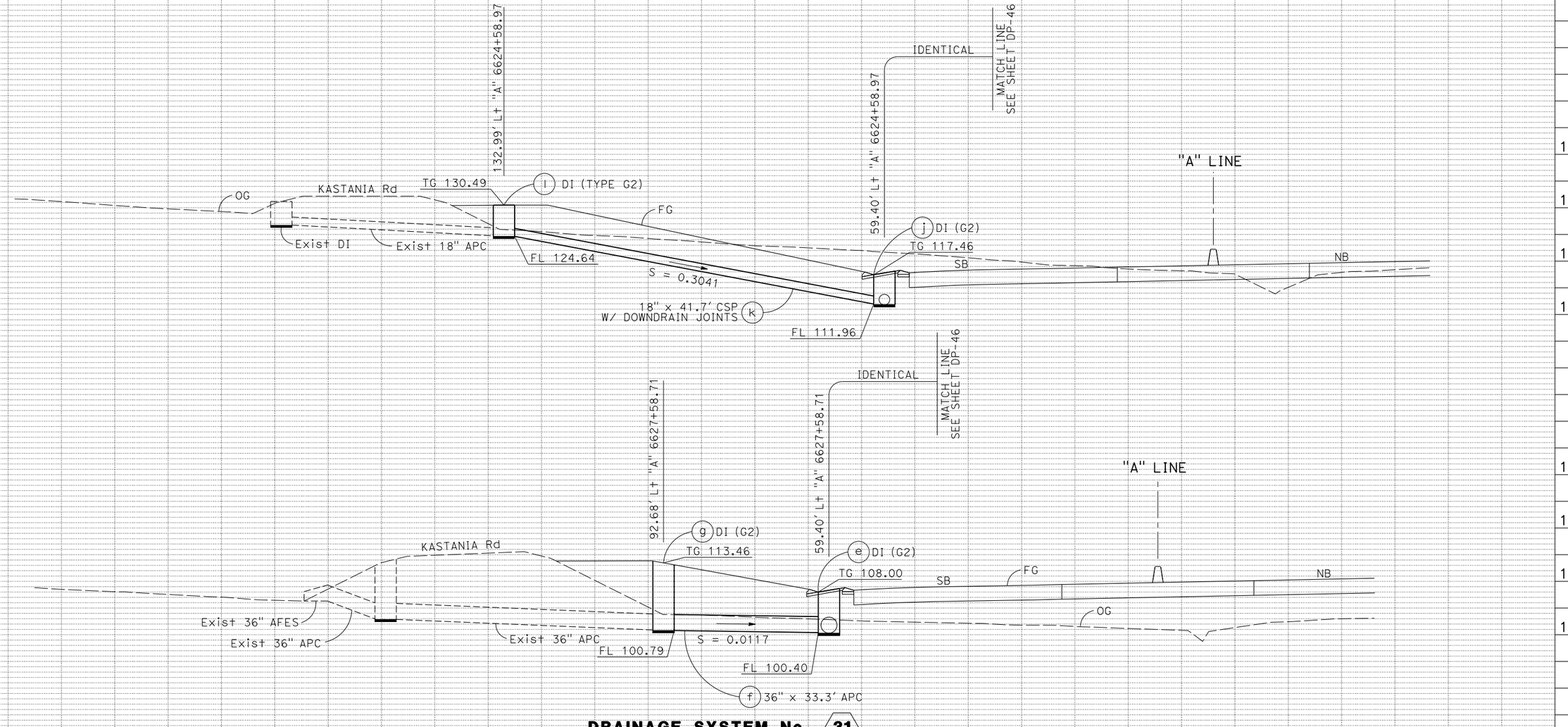

DRAINAGE SYSTEM No. 31

DRAINAGE PROFILES

SCALE: Horiz 1" = 10'
Vert 1" = 10'

DP-48

LAST REVISION 00-00-00
DATE PLOTTED => 30-SEP-2014
TIME PLOTTED => 14:15

BORDER LAST REVISED 7/2/2010
USERNAME => acroskey
DGN FILE => 0400000735ib048.dgn
RELATIVE BORDER SCALE IS IN INCHES 0 1 2 3
UNIT 0716
PROJECT NUMBER & PHASE 04000007351

Dist	COUNTY	ROUTE	POST MILES TOTAL PROJECT	SHEET No.	TOTAL SHEETS
04	Mrn, Son	101	26.8/27.6, 0.0/2.0	179	710

REGISTERED CIVIL ENGINEER — 06/30/14 DATE

8-18-14
PLANS APPROVAL DATE

REGISTERED PROFESSIONAL ENGINEER — S. D. DANSKY — No. 60220 — Exp. 6/30/16 — CIVIL — STATE OF CALIFORNIA

THE STATE OF CALIFORNIA OR ITS OFFICERS OR AGENTS SHALL NOT BE RESPONSIBLE FOR THE ACCURACY OR COMPLETENESS OF SCANNED COPIES OF THIS PLAN SHEET.

MARK THOMAS & CO., INC.
3000 OAK RD, SUITE 650
WALNUT CREEK, CA 94597

TRANSPORTATION AUTHORITY OF MARIN
750 LINDARO ST, SUITE 200
SAN RAFAEL, CA 94901

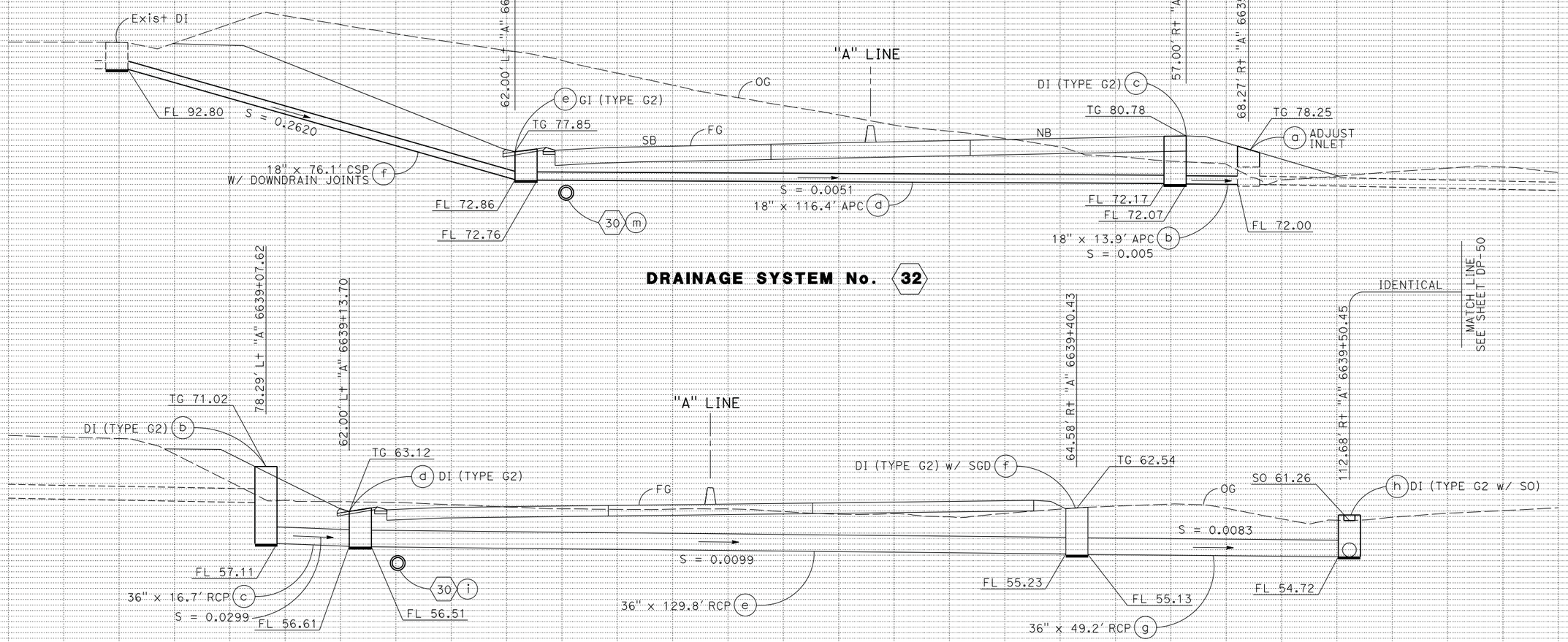

DRAINAGE PROFILES

SCALE: Horiz 1" = 10'
Vert 1" = 10'

DP-49

CHRIS BRIANA — CALCULATED-DESIGNED BY
TOM CONNELL — CHECKED BY
MICHAEL LOHMAN — CONSULTANT FUNCTIONAL SUPERVISOR

REVISED BY	DATE REVISED
CB	4/30/12
CB	2/7/14
CB	5/13/14

STATE OF CALIFORNIA - DEPARTMENT OF TRANSPORTATION — Caltrans

LAST REVISION 00-00-00 — DATE PLOTTED => 30-SEP-2014 — TIME PLOTTED => 14:15

BORDER LAST REVISED 7/2/2010 | USERNAME => acroskey | DGN FILE => 0400000735ib049.dgn | RELATIVE BORDER SCALE IS IN INCHES 0 1 2 3 | UNIT 0716 | PROJECT NUMBER & PHASE 04000007351

Dist	COUNTY	ROUTE	POST MILES TOTAL PROJECT	SHEET No.	TOTAL SHEETS
04	Mrn, Son	101	26.8/27.6, 0.0/2.0	180	710

REGISTERED CIVIL ENGINEER — 06/30/14 DATE

8-18-14
PLANS APPROVAL DATE

S. D. DANSKY
No. 60220
Exp. 6/30/16
CIVIL
REGISTERED PROFESSIONAL ENGINEER
STATE OF CALIFORNIA

THE STATE OF CALIFORNIA OR ITS OFFICERS OR AGENTS SHALL NOT BE RESPONSIBLE FOR THE ACCURACY OR COMPLETENESS OF SCANNED COPIES OF THIS PLAN SHEET.

MARK THOMAS & CO., INC.
3000 OAK RD, SUITE 650
WALNUT CREEK, CA 94597

TRANSPORTATION AUTHORITY OF MARIN
750 LINDARO ST, SUITE 200
SAN RAFAEL, CA 94901

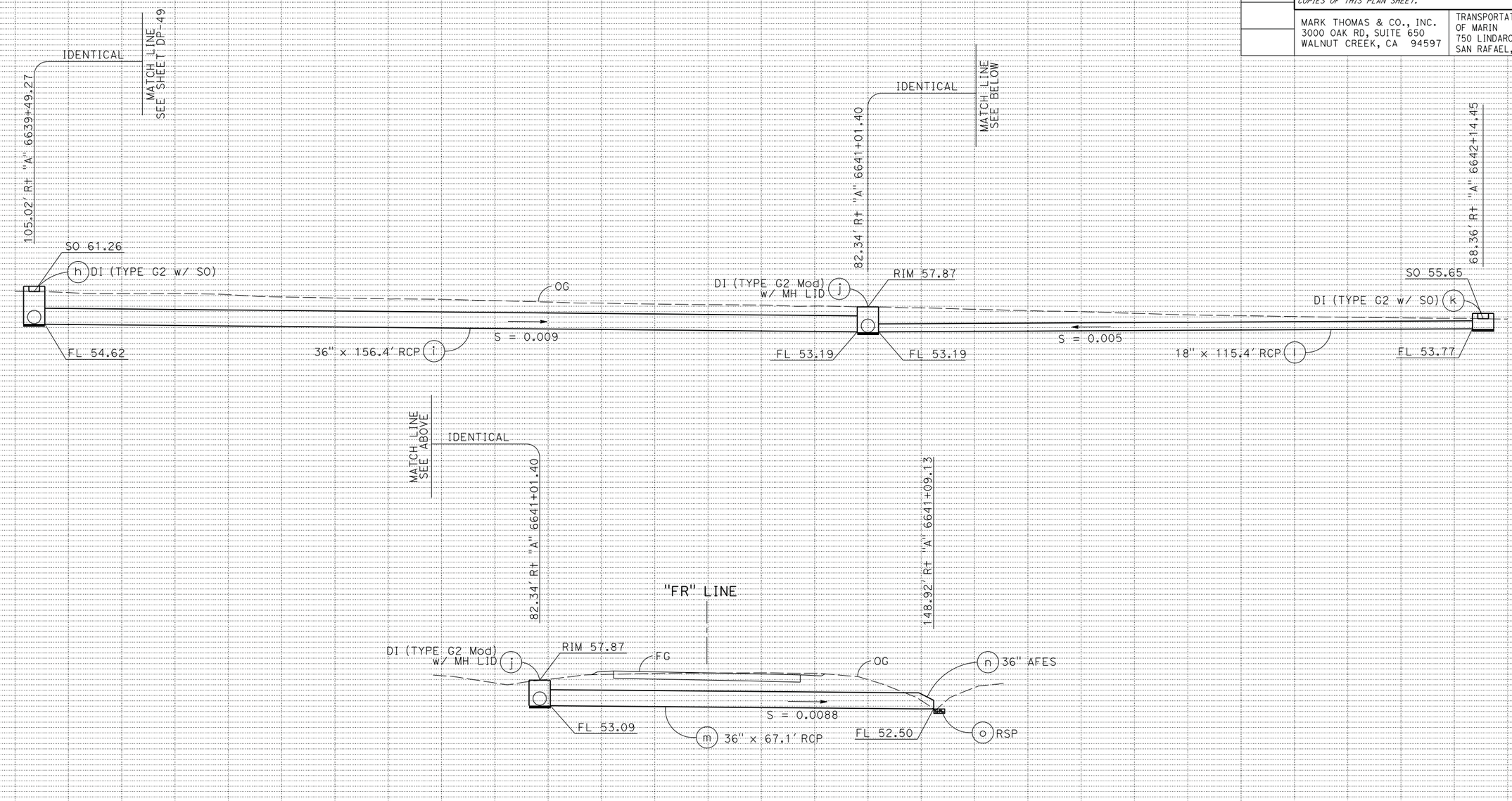

DRAINAGE SYSTEM No. 33

DRAINAGE PROFILES

SCALE: Horiz 1" = 10'
Vert 1" = 10'

DP-50

REVISED BY	DATE REVISED
CB	5/13/14
CB	2/7/14
CB	4/30/12
CHRIS BRIANA	
TOM CONNELL	

CALCULATED-DESIGNED BY
CHECKED BY

CONSULTANT FUNCTIONAL SUPERVISOR
MICHAEL LOHMAN

STATE OF CALIFORNIA - DEPARTMENT OF TRANSPORTATION
Caltrans

LAST REVISION 00-00-00
DATE PLOTTED => 30-SEP-2014
TIME PLOTTED => 14:15

Dist	COUNTY	ROUTE	POST MILES TOTAL PROJECT	SHEET No.	TOTAL SHEETS
04	Mrn, Son	101	26.8/27.6, 0.0/2.0	181	710

REGISTERED CIVIL ENGINEER — 06/30/14 DATE

8-18-14
PLANS APPROVAL DATE

REGISTERED PROFESSIONAL ENGINEER — S. D. DANSKY No. 60220 Exp. 6/30/16 CIVIL — STATE OF CALIFORNIA

THE STATE OF CALIFORNIA OR ITS OFFICERS OR AGENTS SHALL NOT BE RESPONSIBLE FOR THE ACCURACY OR COMPLETENESS OF SCANNED COPIES OF THIS PLAN SHEET.

MARK THOMAS & CO., INC.
3000 OAK RD, SUITE 650
WALNUT CREEK, CA 94597

TRANSPORTATION AUTHORITY OF MARIN
750 LINDARO ST, SUITE 200
SAN RAFAEL, CA 94901

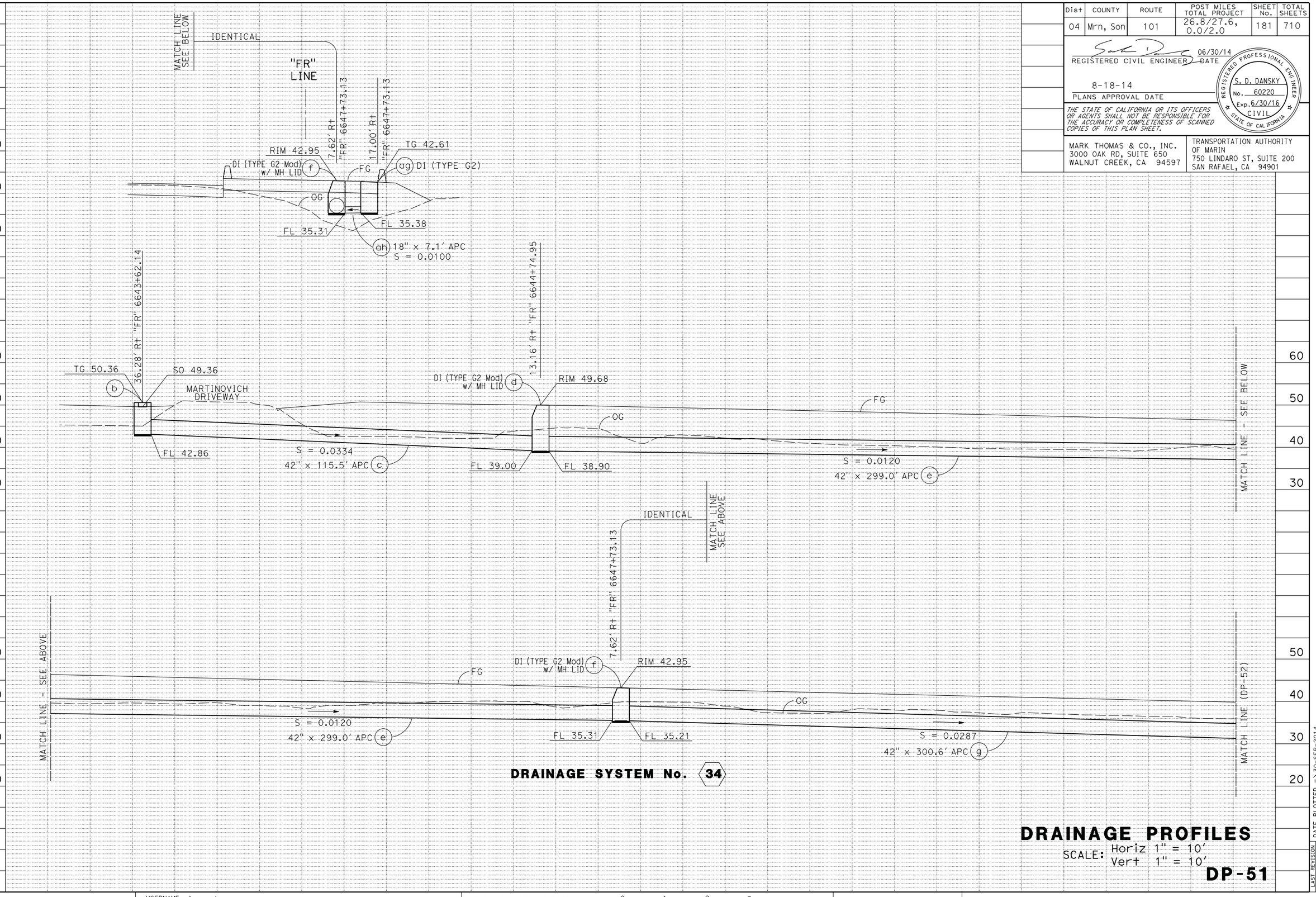

DRAINAGE SYSTEM No. 34

DRAINAGE PROFILES

SCALE: Horiz 1" = 10'
Vert 1" = 10'

DP-51

REVISED BY	DATE REVISED
CB	4/30/12
CB	2/7/14
CB	5/13/14

CHRIS BRIANA
TOM CONNELL

CALCULATED-DESIGNED BY
CHECKED BY

CONSULTANT FUNCTIONAL SUPERVISOR
MICHAEL LOHMAN

STATE OF CALIFORNIA - DEPARTMENT OF TRANSPORTATION
Caltrans

LAST REVISION 00-00-00
DATE PLOTTED => 30-SEP-2014
TIME PLOTTED => 14:15

BORDER LAST REVISED 7/2/2010
USERNAME => acroskey
DGN FILE => 04000007351b051.dgn
RELATIVE BORDER SCALE IS IN INCHES 0 1 2 3
UNIT 0716
PROJECT NUMBER & PHASE 04000007351

Dist	COUNTY	ROUTE	POST MILES TOTAL PROJECT	SHEET No.	TOTAL SHEETS
04	Mrn, Son	101	26.8/27.6, 0.0/2.0	182	710

REGISTERED CIVIL ENGINEER — 06/30/14 DATE

8-18-14
PLANS APPROVAL DATE

REGISTERED PROFESSIONAL ENGINEER — S. D. DANSKY No. 60220 Exp. 6/30/16 CIVIL — STATE OF CALIFORNIA

THE STATE OF CALIFORNIA OR ITS OFFICERS OR AGENTS SHALL NOT BE RESPONSIBLE FOR THE ACCURACY OR COMPLETENESS OF SCANNED COPIES OF THIS PLAN SHEET.

MARK THOMAS & CO., INC.
3000 OAK RD, SUITE 650
WALNUT CREEK, CA 94597

TRANSPORTATION AUTHORITY OF MARIN
750 LINDARO ST, SUITE 200
SAN RAFAEL, CA 94901

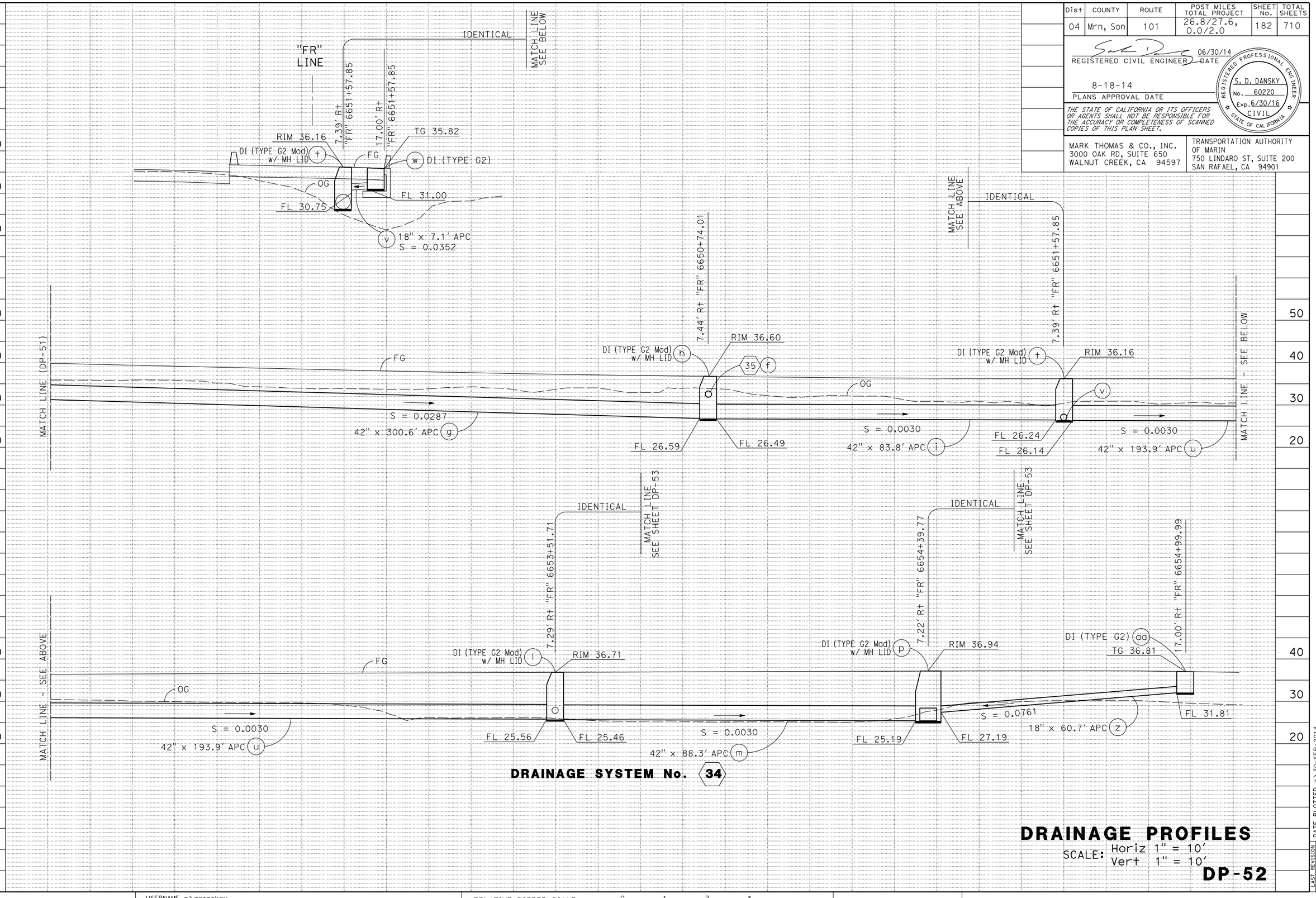

DRAINAGE SYSTEM No. 34

DRAINAGE PROFILES

SCALE: Horiz 1" = 10'
Vert 1" = 10'

DP-52

STATE OF CALIFORNIA - DEPARTMENT OF TRANSPORTATION
Caltrans

CONSULTANT FUNCTIONAL SUPERVISOR: MICHAEL LOHMAN
CALCULATED-DESIGNED BY: CHRIS BRIANA
CHECKED BY: TOM CONNELL

REVISED BY	DATE REVISED
CB	4/30/12
CB	2/7/14
CB	5/13/14

LAST REVISION 00-00-00 | DATE PLOTTED => 30-SEP-2014 | TIME PLOTTED => 14:15

BORDER LAST REVISED 7/2/2010 | USERNAME => acroskey | DGN FILE => 0400000735ib052.dgn | RELATIVE BORDER SCALE IS IN INCHES 0 1 2 3 | UNIT 0716 | PROJECT NUMBER & PHASE 04000007351

Dist	COUNTY	ROUTE	POST MILES TOTAL PROJECT	SHEET No.	TOTAL SHEETS
04	Mrn, Son	101	26.8/27.6, 0.0/2.0	183	710

REGISTERED CIVIL ENGINEER — DATE 06/30/14

8-18-14
PLANS APPROVAL DATE

REGISTERED PROFESSIONAL ENGINEER — S. D. DANSKY No. 60220 Exp. 6/30/16 CIVIL — STATE OF CALIFORNIA

THE STATE OF CALIFORNIA OR ITS OFFICERS OR AGENTS SHALL NOT BE RESPONSIBLE FOR THE ACCURACY OR COMPLETENESS OF SCANNED COPIES OF THIS PLAN SHEET.

MARK THOMAS & CO., INC.
3000 OAK RD, SUITE 650
WALNUT CREEK, CA 94597

TRANSPORTATION AUTHORITY OF MARIN
750 LINDARO ST, SUITE 200
SAN RAFAEL, CA 94901

REVISED BY	DATE REVISED
CB	4/30/12
CB	2/7/14
CB	5/13/14

CHRIS BRIANA
TOM CONNELL
CALCULATED-DESIGNED BY
CHECKED BY
MICHAEL LOHMAN
CONSULTANT FUNCTIONAL SUPERVISOR

STATE OF CALIFORNIA - DEPARTMENT OF TRANSPORTATION

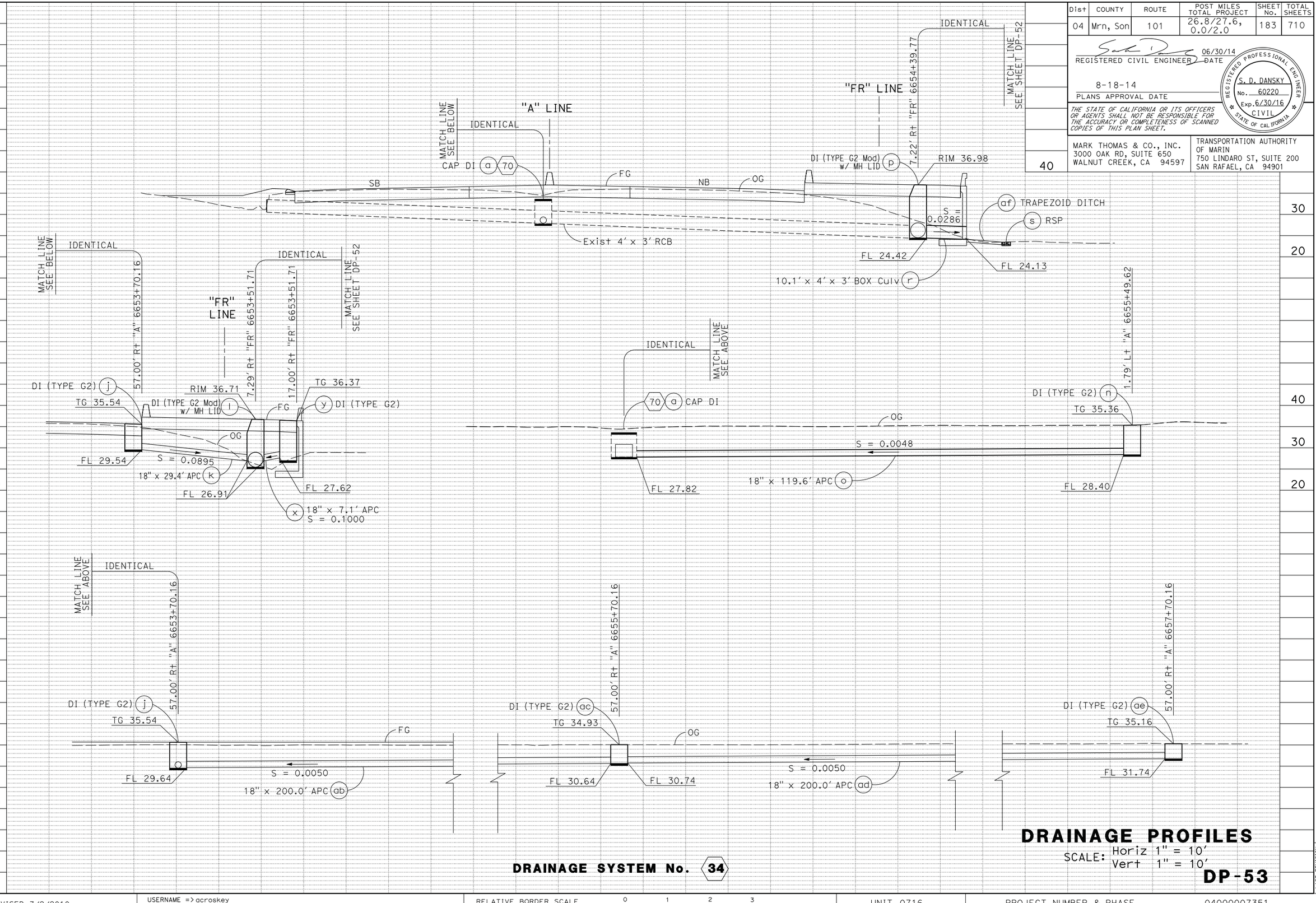

DRAINAGE SYSTEM No. (34)

DRAINAGE PROFILES

SCALE: Horiz 1" = 10'
Vert 1" = 10'

DP-53

LAST REVISION 00-00-00 | DATE PLOTTED => 30-SEP-2014 | TIME PLOTTED => 14:15

BORDER LAST REVISED 7/2/2010 | USERNAME => acroskey | DGN FILE => 04000007351b053.dgn | RELATIVE BORDER SCALE IS IN INCHES 0 1 2 3 | UNIT 0716 | PROJECT NUMBER & PHASE 04000007351

Dist	COUNTY	ROUTE	POST MILES TOTAL PROJECT	SHEET No.	TOTAL SHEETS
04	Mrn, Son	101	26.8/27.6, 0.0/2.0	184	710

REGISTERED CIVIL ENGINEER — DATE: 06/30/14

8-18-14
PLANS APPROVAL DATE

REGISTERED PROFESSIONAL ENGINEER — S. D. DANSKY — No. 60220 — Exp. 6/30/16 — CIVIL — STATE OF CALIFORNIA

THE STATE OF CALIFORNIA OR ITS OFFICERS OR AGENTS SHALL NOT BE RESPONSIBLE FOR THE ACCURACY OR COMPLETENESS OF SCANNED COPIES OF THIS PLAN SHEET.

MARK THOMAS & CO., INC.
3000 OAK RD, SUITE 650
WALNUT CREEK, CA 94597

TRANSPORTATION AUTHORITY OF MARIN
750 LINDARO ST, SUITE 200
SAN RAFAEL, CA 94901

REVISED BY	DATE REVISED
CB	4/30/12
CB	2/7/14
CB	5/13/14

CHRIS BRIANA — CALCULATED-DESIGNED BY
TOM CONNELL — CHECKED BY

MICHAEL LOHMAN — CONSULTANT FUNCTIONAL SUPERVISOR

STATE OF CALIFORNIA - DEPARTMENT OF TRANSPORTATION
Caltrans

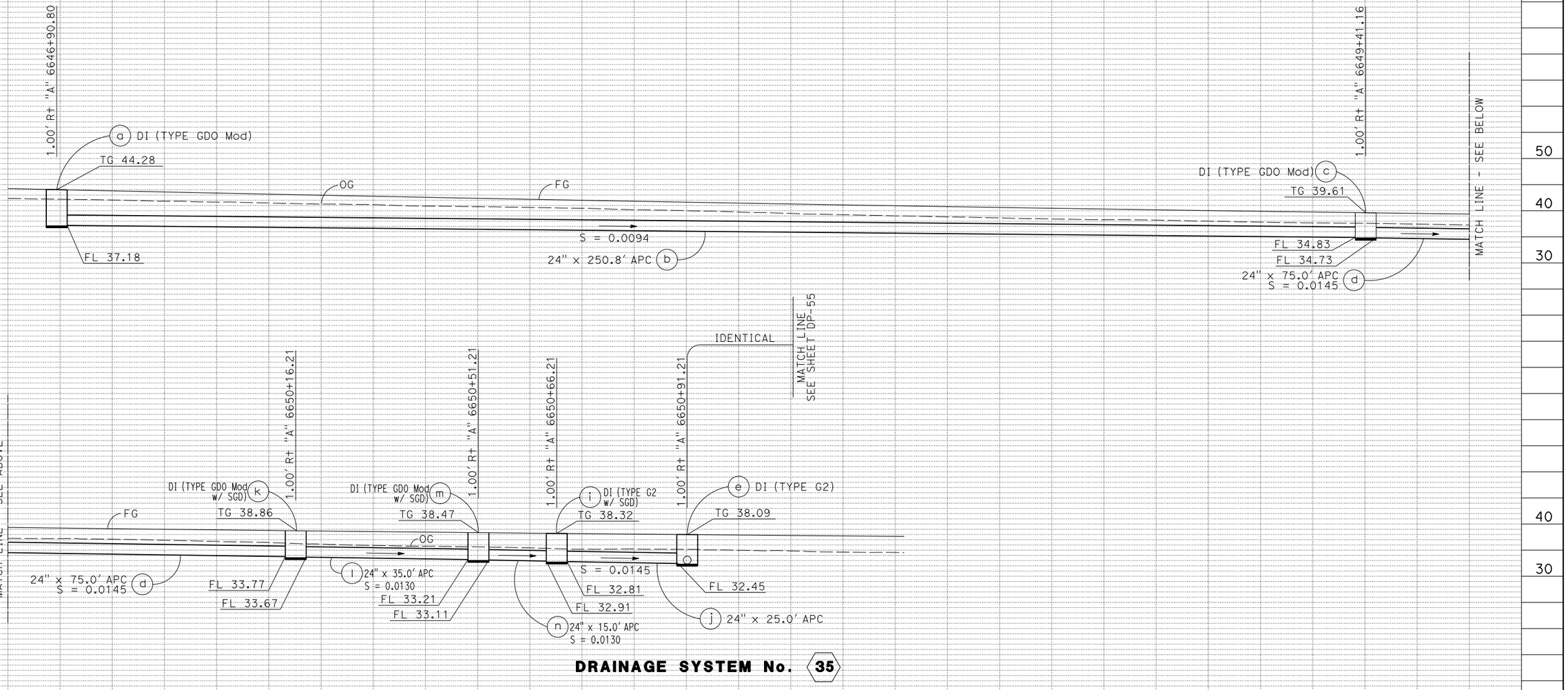

DRAINAGE SYSTEM No. 35

DRAINAGE PROFILES

SCALE: Horiz 1" = 10'
Vert 1" = 10'

DP-54

LAST REVISION 00-00-00
DATE PLOTTED => 30-SEP-2014
TIME PLOTTED => 14:15

BORDER LAST REVISED 7/2/2010 | USERNAME => acroskey | DGN FILE => 04000007351b054.dgn | RELATIVE BORDER SCALE IS IN INCHES 0 1 2 3 | UNIT 0716 | PROJECT NUMBER & PHASE 04000007351

Dist	COUNTY	ROUTE	POST MILES TOTAL PROJECT	SHEET No.	TOTAL SHEETS
04	Mrn, Son	101	26.8/27.6, 0.0/2.0	185	710

REGISTERED CIVIL ENGINEER — 06/30/14 DATE

8-18-14
PLANS APPROVAL DATE

REGISTERED PROFESSIONAL ENGINEER
S. D. DANSKY
No. 60220
Exp. 6/30/16
CIVIL
STATE OF CALIFORNIA

THE STATE OF CALIFORNIA OR ITS OFFICERS OR AGENTS SHALL NOT BE RESPONSIBLE FOR THE ACCURACY OR COMPLETENESS OF SCANNED COPIES OF THIS PLAN SHEET.

MARK THOMAS & CO., INC.
3000 OAK RD, SUITE 650
WALNUT CREEK, CA 94597

TRANSPORTATION AUTHORITY OF MARIN
750 LINDARO ST, SUITE 200
SAN RAFAEL, CA 94901

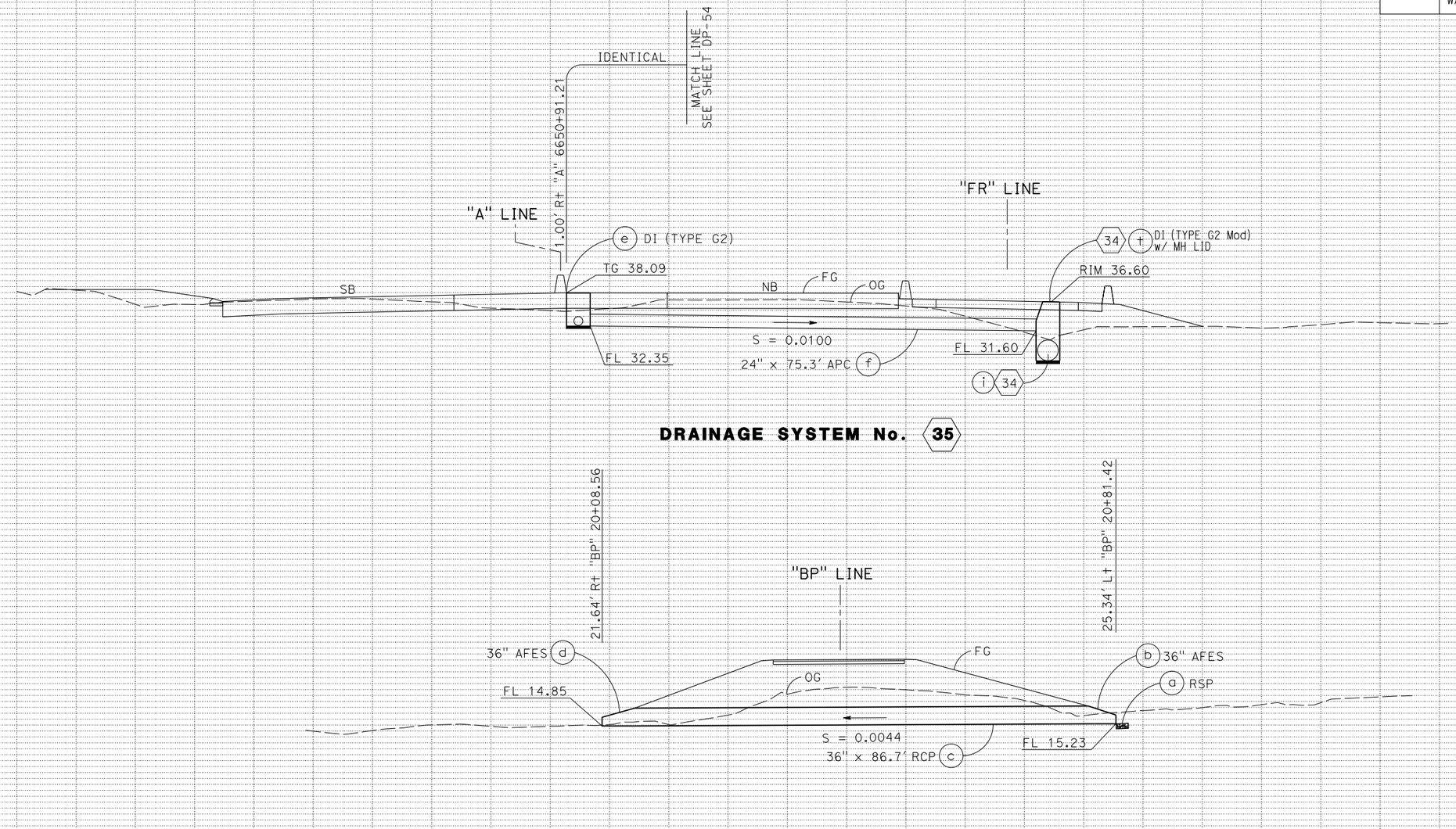

DRAINAGE PROFILES

SCALE: Horiz 1" = 10'
Vert 1" = 10'

DP-55

CB	5/13/14
CB	2/7/14
CB	4/30/12
REVISED BY	DATE REVISED

CHRIS BRIANA
TOM CONNELL
CALCULATED-DESIGNED BY
CHECKED BY

CONSULTANT FUNCTIONAL SUPERVISOR
MICHAEL LOHMAN

STATE OF CALIFORNIA - DEPARTMENT OF TRANSPORTATION
Caltrans

LAST REVISION 00-00-00
DATE PLOTTED => 30-SEP-2014
TIME PLOTTED => 14:15

BORDER LAST REVISED 7/2/2010
USERNAME => acroskey
DGN FILE => 0400000735ib055.dgn
RELATIVE BORDER SCALE IS IN INCHES 0 1 2 3
UNIT 0716
PROJECT NUMBER & PHASE 04000007351

Dist	COUNTY	ROUTE	POST MILES TOTAL PROJECT	SHEET No.	TOTAL SHEETS
04	Mrn, Son	101	26.8/27.6, 0.0/2.0	186	710

REGISTERED CIVIL ENGINEER — 06/30/14 DATE

8-18-14
PLANS APPROVAL DATE

REGISTERED PROFESSIONAL ENGINEER
S. D. DANSKY
No. 60220
Exp. 6/30/16
CIVIL
STATE OF CALIFORNIA

THE STATE OF CALIFORNIA OR ITS OFFICERS OR AGENTS SHALL NOT BE RESPONSIBLE FOR THE ACCURACY OR COMPLETENESS OF SCANNED COPIES OF THIS PLAN SHEET.

MARK THOMAS & CO., INC.
3000 OAK RD, SUITE 650
WALNUT CREEK, CA 94597

TRANSPORTATION AUTHORITY OF MARIN
750 LINDARO ST, SUITE 200
SAN RAFAEL, CA 94901

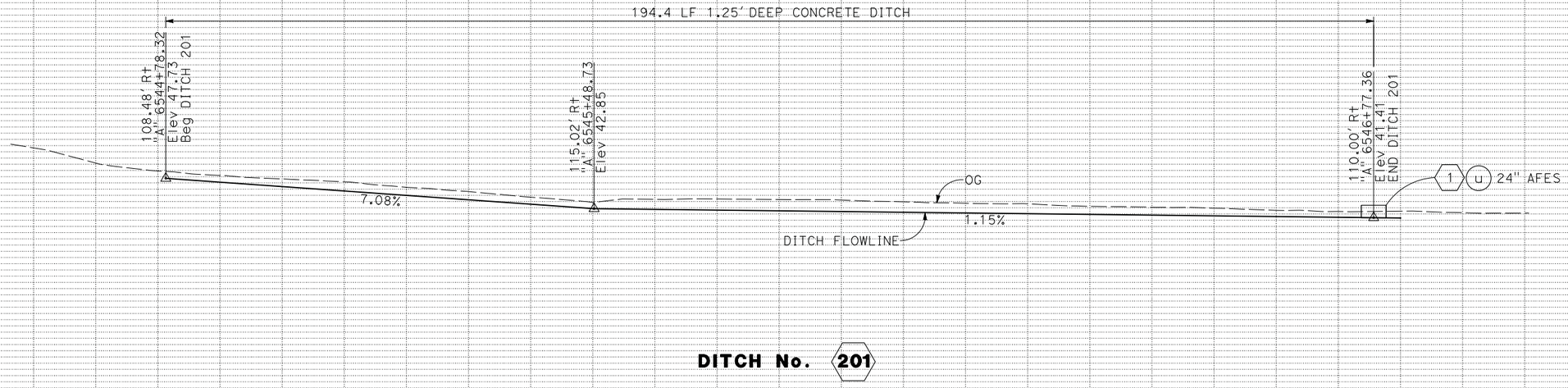

DITCH No. 201

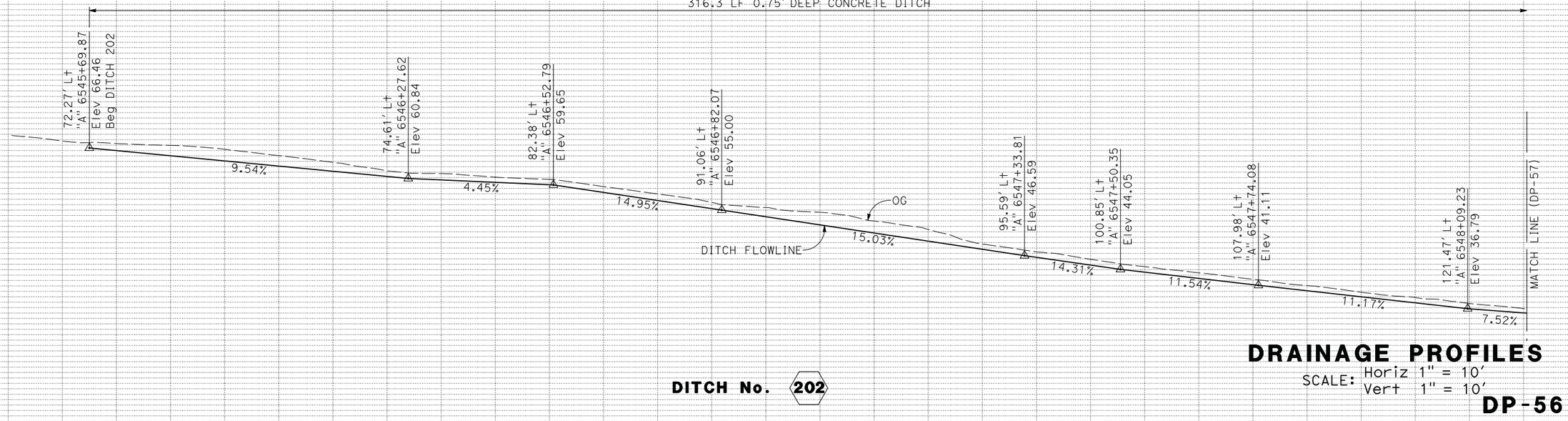

DITCH No. 202

DRAINAGE PROFILES

SCALE: Horiz 1" = 10'
Vert 1" = 10'

DP-56

REVISED BY	DATE REVISED
CB	4/30/12
CB	2/7/14
CB	5/13/14

CHRIS BRIANA
TOM CONNELL
CALCULATED-DESIGNED BY
CHECKED BY

CONSULTANT FUNCTIONAL SUPERVISOR
MICHAEL LOHMAN

STATE OF CALIFORNIA - DEPARTMENT OF TRANSPORTATION
Caltrans

LAST REVISION 00-00-00
DATE PLOTTED => 30-SEP-2014
TIME PLOTTED => 14:15

BORDER LAST REVISED 7/2/2010
USERNAME => acroskey
DGN FILE => 04000007351b056.dgn
RELATIVE BORDER SCALE IS IN INCHES 0 1 2 3
UNIT 0716
PROJECT NUMBER & PHASE 04000007351

Dist	COUNTY	ROUTE	POST MILES TOTAL PROJECT	SHEET No.	TOTAL SHEETS
04	Mrn, Son	101	26.8/27.6, 0.0/2.0	187	710

REGISTERED CIVIL ENGINEER — DATE 06/30/14

8-18-14
PLANS APPROVAL DATE

REGISTERED PROFESSIONAL ENGINEER
S. D. DANSKY
No. 60220
Exp. 6/30/16
CIVIL
STATE OF CALIFORNIA

THE STATE OF CALIFORNIA OR ITS OFFICERS OR AGENTS SHALL NOT BE RESPONSIBLE FOR THE ACCURACY OR COMPLETENESS OF SCANNED COPIES OF THIS PLAN SHEET.

MARK THOMAS & CO., INC.
3000 OAK RD, SUITE 650
WALNUT CREEK, CA 94597

TRANSPORTATION AUTHORITY OF MARIN
750 LINDARO ST, SUITE 200
SAN RAFAEL, CA 94901

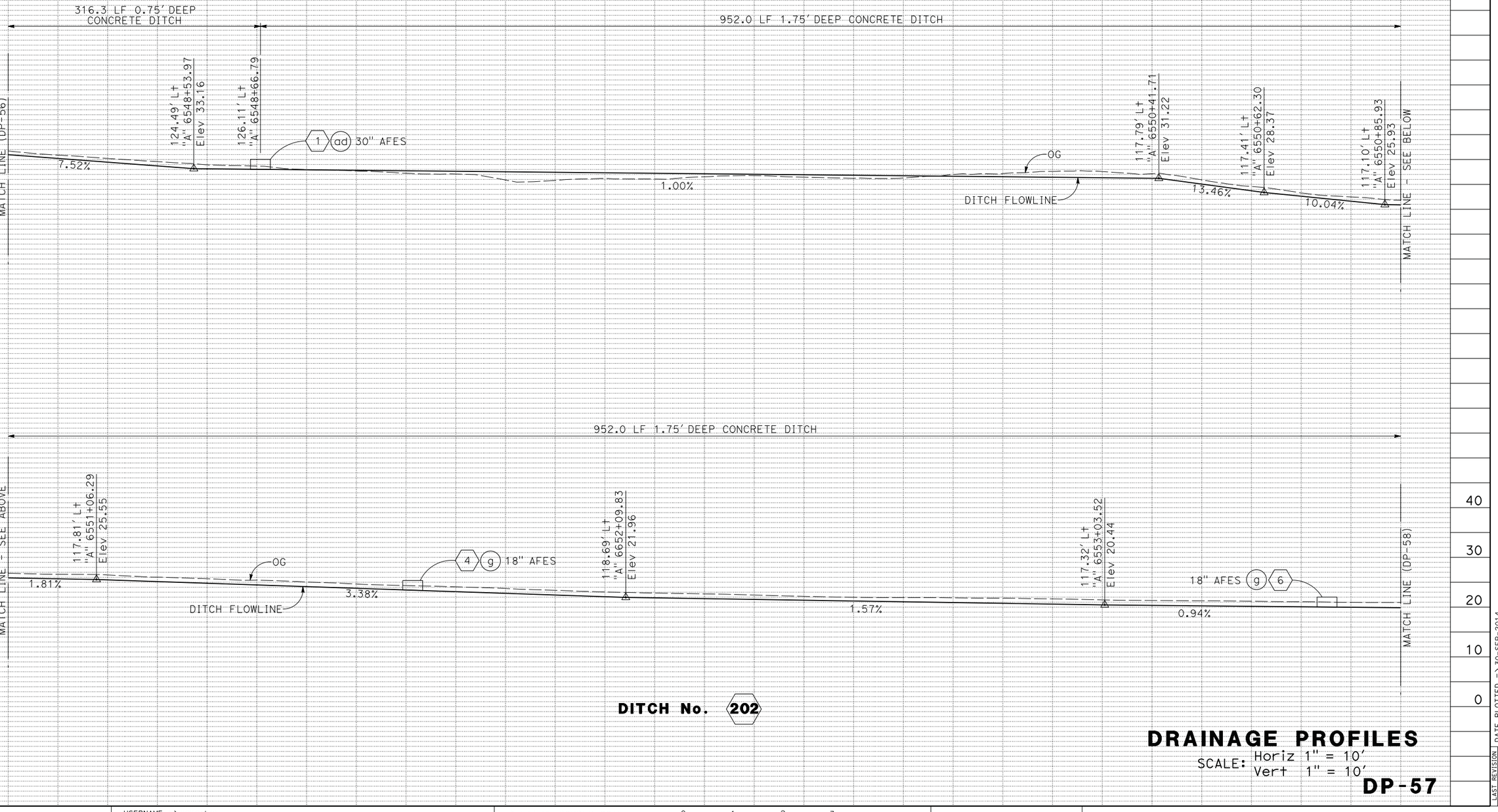

DITCH No. 202

DRAINAGE PROFILES

SCALE: Horiz 1" = 10'
Vert 1" = 10'

DP-57

REVISED BY	DATE REVISED
CB	4/30/12
CB	2/7/14
CB	5/13/14

CHRIS BRIANA
TOM CONNELL
CALCULATED-DESIGNED BY
CHECKED BY

CONSULTANT FUNCTIONAL SUPERVISOR
MICHAEL LOHMAN

STATE OF CALIFORNIA - DEPARTMENT OF TRANSPORTATION
Caltrans

LAST REVISION 00-00-00
DATE PLOTTED => 30-SEP-2014
TIME PLOTTED => 14:15

BORDER LAST REVISED 7/2/2010
USERNAME => acroskey
DGN FILE => 04000007351b057.dgn
RELATIVE BORDER SCALE IS IN INCHES 0 1 2 3
UNIT 0716
PROJECT NUMBER & PHASE 04000007351

Dist	COUNTY	ROUTE	POST MILES TOTAL PROJECT	SHEET No.	TOTAL SHEETS
04	Mrn, Son	101	26.8/27.6, 0.0/2.0	188	710

REGISTERED CIVIL ENGINEER — DATE 06/30/14

8-18-14
PLANS APPROVAL DATE

REGISTERED PROFESSIONAL ENGINEER
S. D. DANSKY
No. 60220
Exp. 6/30/16
CIVIL
STATE OF CALIFORNIA

THE STATE OF CALIFORNIA OR ITS OFFICERS OR AGENTS SHALL NOT BE RESPONSIBLE FOR THE ACCURACY OR COMPLETENESS OF SCANNED COPIES OF THIS PLAN SHEET.

MARK THOMAS & CO., INC.
3000 OAK RD, SUITE 650
WALNUT CREEK, CA 94597

TRANSPORTATION AUTHORITY OF MARIN
750 LINDARO ST, SUITE 200
SAN RAFAEL, CA 94901

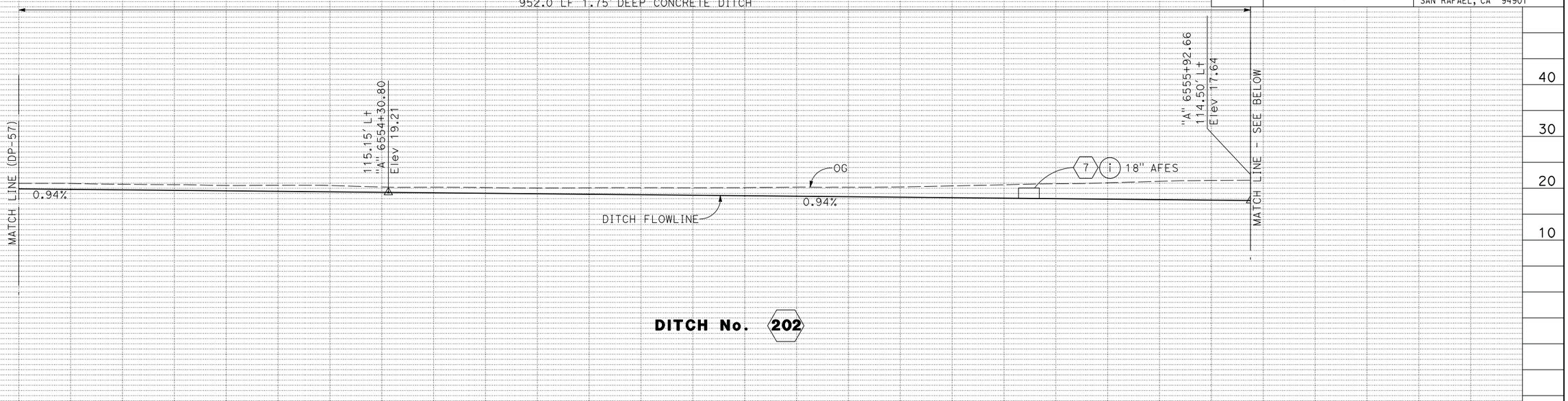

DITCH No. 202

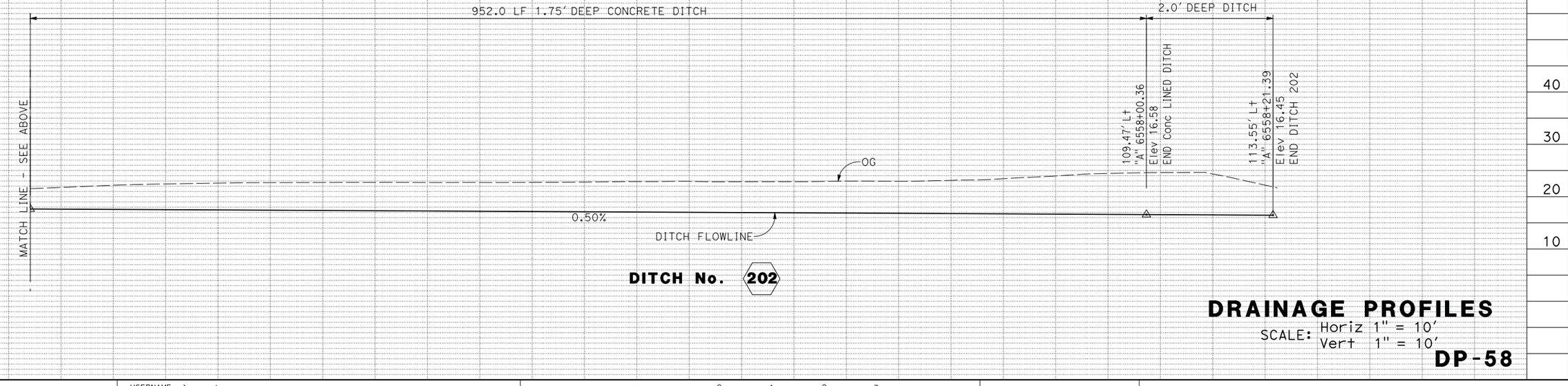

DITCH No. 202

DRAINAGE PROFILES

SCALE: Horiz 1" = 10'
Vert 1" = 10'

DP-58

CALCULATED-DESIGNED BY	CB
CHECKED BY	TOM CONNELL
REVISED BY	CHRIS BRIANA
DATE REVISED	4/30/12
	2/7/14
	5/13/14

CONSULTANT FUNCTIONAL SUPERVISOR: MICHAEL LOHMAN

STATE OF CALIFORNIA - DEPARTMENT OF TRANSPORTATION

Caltrans

LAST REVISION 00-00-00
DATE PLOTTED => 30-SEP-2014
TIME PLOTTED => 14:15

BORDER LAST REVISED 7/2/2010

USERNAME => acroskey
DGN FILE => 04000007351b058.dgn

RELATIVE BORDER SCALE IS IN INCHES 0 1 2 3

UNIT 0716

PROJECT NUMBER & PHASE 04000007351

Dist	COUNTY	ROUTE	POST MILES TOTAL PROJECT	SHEET No.	TOTAL SHEETS
04	Mrn, Son	101	26.8/27.6, 0.0/2.0	189	710

REGISTERED CIVIL ENGINEER — DATE 06/30/14

8-18-14
PLANS APPROVAL DATE

REGISTERED PROFESSIONAL ENGINEER
S. D. DANSKY
No. 60220
Exp. 6/30/16
CIVIL
STATE OF CALIFORNIA

THE STATE OF CALIFORNIA OR ITS OFFICERS OR AGENTS SHALL NOT BE RESPONSIBLE FOR THE ACCURACY OR COMPLETENESS OF SCANNED COPIES OF THIS PLAN SHEET.

MARK THOMAS & CO., INC.
3000 OAK RD, SUITE 650
WALNUT CREEK, CA 94597

TRANSPORTATION AUTHORITY OF MARIN
750 LINDARO ST, SUITE 200
SAN RAFAEL, CA 94901

REVISED BY	DATE REVISED
CB	4/30/12
CB	2/7/14
CB	5/13/14

CHRIS BRIANA
TOM CONNELL
CALCULATED-DESIGNED BY
CHECKED BY

CONSULTANT FUNCTIONAL SUPERVISOR
MICHAEL LOHMAN

STATE OF CALIFORNIA - DEPARTMENT OF TRANSPORTATION
Caltrans

266.1 LF 1.25' DEEP DITCH

110.00' Rt
"A" 6546+77.35
Elev 41.40
END DITCH 203

1 U 24" FES

0.50%

102.90' Rt
"A" 6547+79.63
Elev 41.90

OG

DITCH FLOWLINE

2.49%

126.36 Rt
"A" 6549+12.10
Elev 46.04
Beg DITCH 203

DITCH No. 203

DRAINAGE PROFILES

SCALE: Horiz 1" = 10'
Vert 1" = 10'

DP-59

LAST REVISION 00-00-00
DATE PLOTTED => 30-SEP-2014
TIME PLOTTED => 14:15

Dist	COUNTY	ROUTE	POST MILES TOTAL PROJECT	SHEET No.	TOTAL SHEETS
04	Mrn, Son	101	26.8/27.6, 0.0/2.0	190	710

REGISTERED CIVIL ENGINEER — 06/30/14 DATE

8-18-14
PLANS APPROVAL DATE

REGISTERED PROFESSIONAL ENGINEER — S. D. DANSKY No. 60220 Exp. 6/30/16 CIVIL — STATE OF CALIFORNIA

THE STATE OF CALIFORNIA OR ITS OFFICERS OR AGENTS SHALL NOT BE RESPONSIBLE FOR THE ACCURACY OR COMPLETENESS OF SCANNED COPIES OF THIS PLAN SHEET.

MARK THOMAS & CO., INC.
3000 OAK RD, SUITE 650
WALNUT CREEK, CA 94597

TRANSPORTATION AUTHORITY OF MARIN
750 LINDARO ST, SUITE 200
SAN RAFAEL, CA 94901

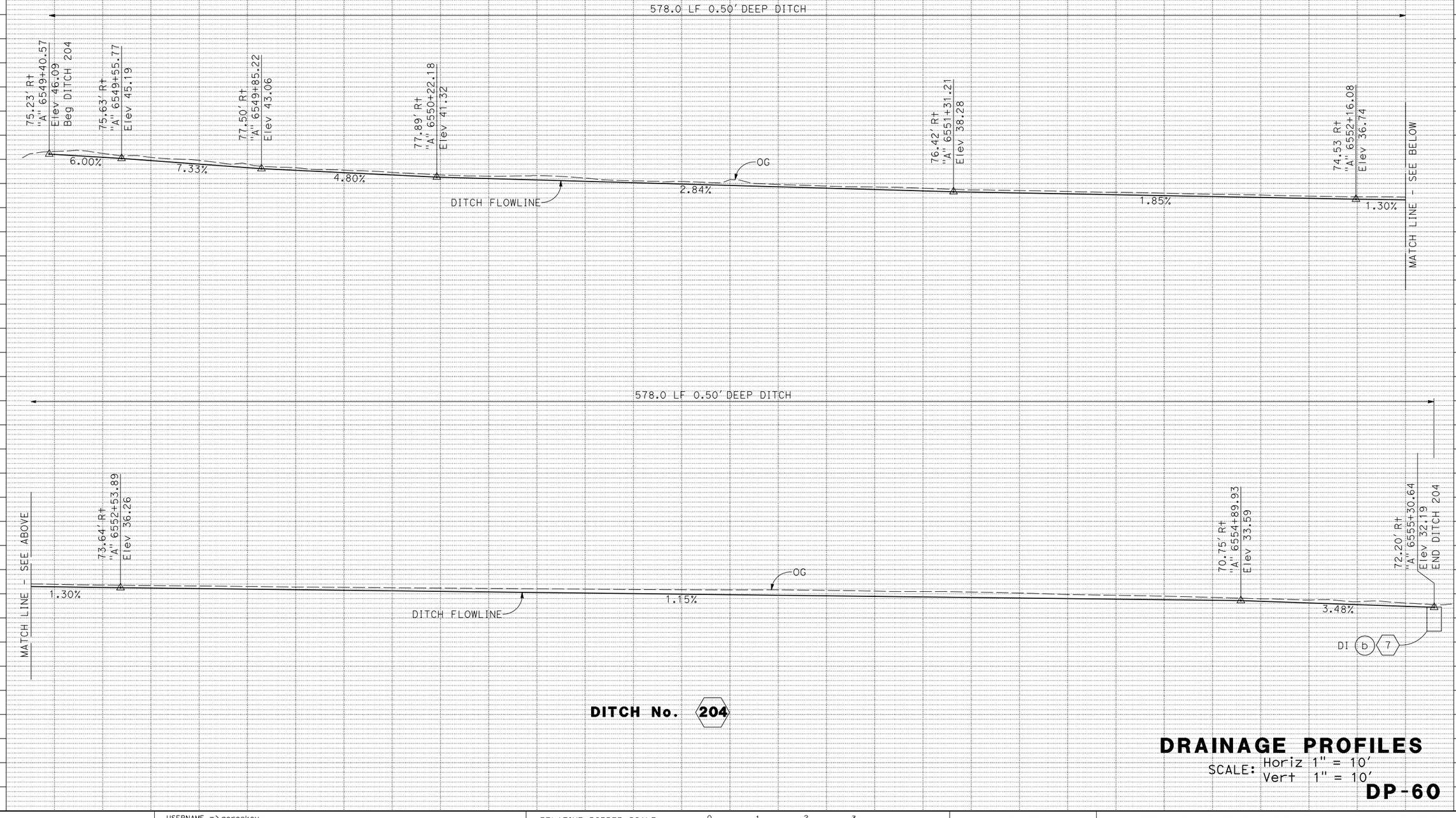

DITCH No. 204

DRAINAGE PROFILES

SCALE: Horiz 1" = 10'
Vert 1" = 10'

DP-60

STATE OF CALIFORNIA - DEPARTMENT OF TRANSPORTATION
Caltrans

CONSULTANT FUNCTIONAL SUPERVISOR: MICHAEL LOHMAN
CALCULATED-DESIGNED BY:
CHECKED BY: TOM CONNELL
CHRIS BRIANA

REVISED BY	DATE REVISED
CB	4/30/12
CB	2/7/14
CB	5/13/14

LAST REVISION 00-00-00
DATE PLOTTED => 30-SEP-2014
TIME PLOTTED => 14:15

BORDER LAST REVISED 7/2/2010
USERNAME => acroskey
DGN FILE => 04000007351b060.dgn
RELATIVE BORDER SCALE IS IN INCHES 0 1 2 3
UNIT 0716
PROJECT NUMBER & PHASE 04000007351

Dist	COUNTY	ROUTE	POST MILES TOTAL PROJECT	SHEET No.	TOTAL SHEETS
04	Mrn, Son	101	26.8/27.6, 0.0/2.0	191	710

REGISTERED CIVIL ENGINEER — 06/30/14 DATE

REGISTERED PROFESSIONAL ENGINEER — S. D. DANSKY No. 60220 Exp. 6/30/16 CIVIL — STATE OF CALIFORNIA

8-18-14
PLANS APPROVAL DATE

THE STATE OF CALIFORNIA OR ITS OFFICERS OR AGENTS SHALL NOT BE RESPONSIBLE FOR THE ACCURACY OR COMPLETENESS OF SCANNED COPIES OF THIS PLAN SHEET.

MARK THOMAS & CO., INC.
3000 OAK RD, SUITE 650
WALNUT CREEK, CA 94597

TRANSPORTATION AUTHORITY OF MARIN
750 LINDARO ST, SUITE 200
SAN RAFAEL, CA 94901

REVISED BY	DATE REVISED
CB	4/30/12
CB	2/7/14
CB	5/13/14

CHRIS BRIANA
TOM CONNELL

CALCULATED-DESIGNED BY
CHECKED BY

CONSULTANT FUNCTIONAL SUPERVISOR
MICHAEL LOHMAN

STATE OF CALIFORNIA - DEPARTMENT OF TRANSPORTATION
Caltrans

DRAINAGE PROFILES

SCALE: Horiz 1" = 10'
Vert 1" = 10'

DP-61

LAST REVISION 00-00-00
DATE PLOTTED => 30-SEP-2014
TIME PLOTTED => 14:15

BORDER LAST REVISED 7/2/2010

USERNAME => acroskey
DGN FILE => 04000007351b061.dgn

RELATIVE BORDER SCALE IS IN INCHES 0 1 2 3

UNIT 0716

PROJECT NUMBER & PHASE 04000007351

Dist	COUNTY	ROUTE	POST MILES TOTAL PROJECT	SHEET No.	TOTAL SHEETS
04	Mrn, Son	101	26.8/27.6, 0.0/2.0	192	710

REGISTERED CIVIL ENGINEER — DATE 06/30/14

8-18-14
PLANS APPROVAL DATE

REGISTERED PROFESSIONAL ENGINEER — S. D. DANSKY — No. 60220 — Exp. 6/30/16 — CIVIL — STATE OF CALIFORNIA

THE STATE OF CALIFORNIA OR ITS OFFICERS OR AGENTS SHALL NOT BE RESPONSIBLE FOR THE ACCURACY OR COMPLETENESS OF SCANNED COPIES OF THIS PLAN SHEET.

MARK THOMAS & CO., INC.
3000 OAK RD, SUITE 650
WALNUT CREEK, CA 94597

TRANSPORTATION AUTHORITY OF MARIN
750 LINDARO ST, SUITE 200
SAN RAFAEL, CA 94901

REVISED BY	DATE REVISED
CB	5/13/14
CB	2/7/14
CB	4/30/12

CHRIS BRIANA — CALCULATED-DESIGNED BY
TOM CONNELL — CHECKED BY

CONSULTANT FUNCTIONAL SUPERVISOR — MICHAEL LOHMAN

STATE OF CALIFORNIA - DEPARTMENT OF TRANSPORTATION — Caltrans

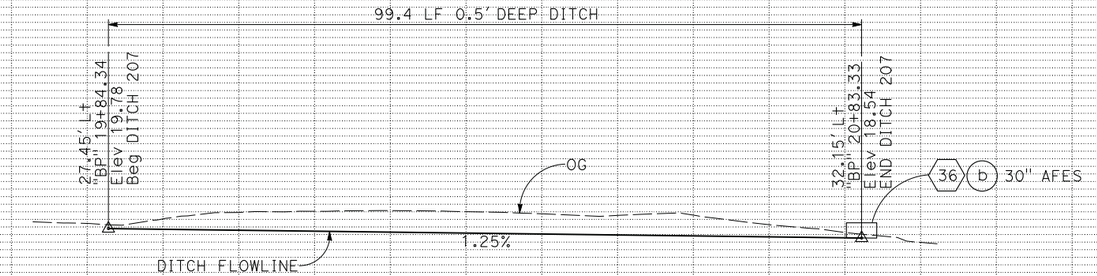

DITCH No. 207

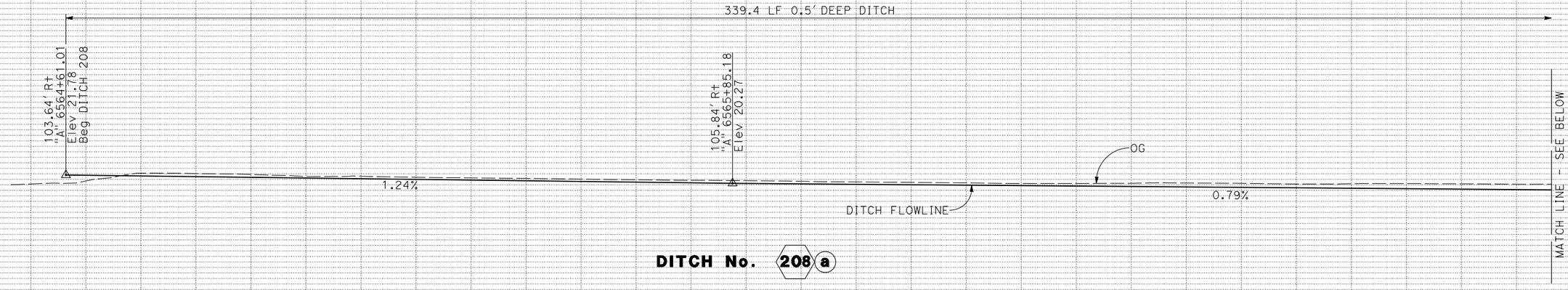

DITCH No. 208 a

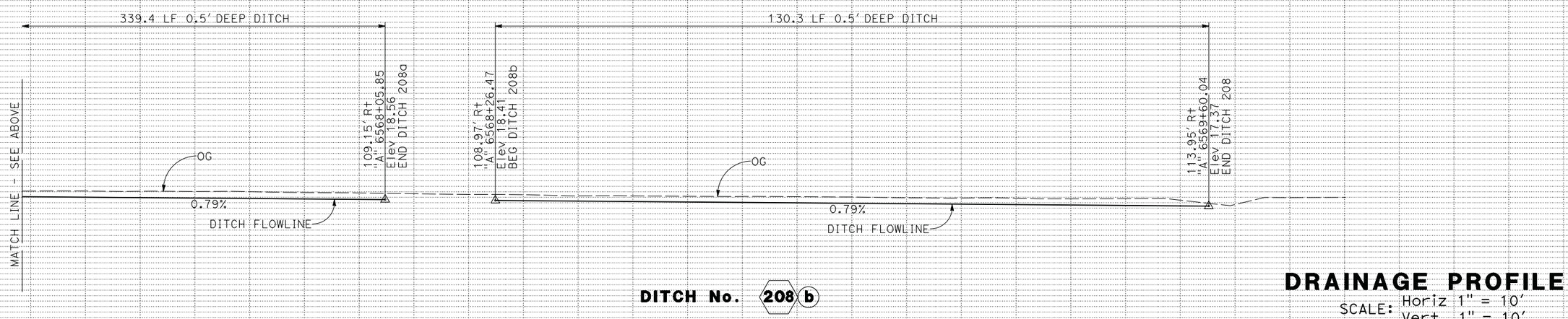

DITCH No. 208 b

DRAINAGE PROFILES

SCALE: Horiz 1" = 10'
Vert 1" = 10'

DP-62

LAST REVISION 00-00-00 | DATE PLOTTED => 30-SEP-2014 | TIME PLOTTED => 14:15

BORDER LAST REVISED 7/2/2010 | USERNAME => acroskey | DGN FILE => 04000007351b062.dgn | RELATIVE BORDER SCALE IS IN INCHES 0 1 2 3 | UNIT 0716 | PROJECT NUMBER & PHASE 04000007351

Dist	COUNTY	ROUTE	POST MILES TOTAL PROJECT	SHEET No.	TOTAL SHEETS
04	Mrn, Son	101	26.8/27.6, 0.0/2.0	193	710

REGISTERED CIVIL ENGINEER — 06/30/14 DATE

8-18-14
PLANS APPROVAL DATE

REGISTERED PROFESSIONAL ENGINEER — S. D. DANSKY No. 60220 Exp. 6/30/16 CIVIL — STATE OF CALIFORNIA

THE STATE OF CALIFORNIA OR ITS OFFICERS OR AGENTS SHALL NOT BE RESPONSIBLE FOR THE ACCURACY OR COMPLETENESS OF SCANNED COPIES OF THIS PLAN SHEET.

MARK THOMAS & CO., INC.
3000 OAK RD, SUITE 650
WALNUT CREEK, CA 94597

TRANSPORTATION AUTHORITY OF MARIN
750 LINDARO ST, SUITE 200
SAN RAFAEL, CA 94901

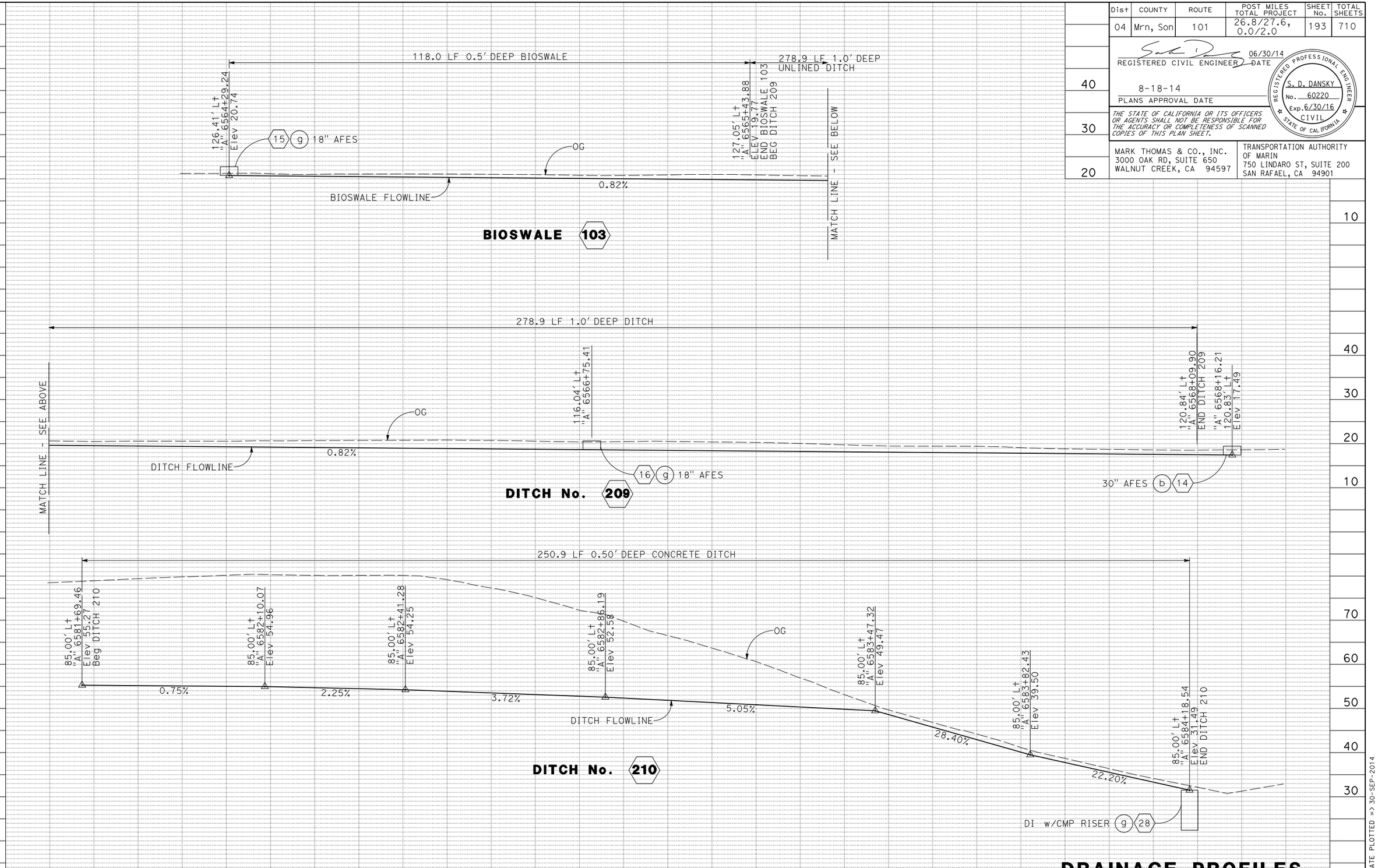

DRAINAGE PROFILES

SCALE: Horiz 1" = 10'
Vert 1" = 10'

DP-63

CB	5/13/14	
CB	2/7/14	
CB	4/30/12	
REVISED BY	DATE REVISED	

CHRIS BRIANA — CALCULATED-DESIGNED BY
TOM CONNELL — CHECKED BY
MICHAEL LOHMAN — CONSULTANT FUNCTIONAL SUPERVISOR
STATE OF CALIFORNIA - DEPARTMENT OF TRANSPORTATION — Caltrans

LAST REVISION 00-00-00
DATE PLOTTED => 30-SEP-2014
TIME PLOTTED => 14:15

BORDER LAST REVISED 7/2/2010
USERNAME => acroskey
DGN FILE => 0400000735ib063.dgn
RELATIVE BORDER SCALE IS IN INCHES 0 1 2 3
UNIT 0716
PROJECT NUMBER & PHASE 04000007351

Dist	COUNTY	ROUTE	POST MILES TOTAL PROJECT	SHEET No.	TOTAL SHEETS
04	Mrn, Son	101	26.8/27.6, 0.0/2.0	194	710

REGISTERED CIVIL ENGINEER — 06/30/14 DATE

8-18-14
PLANS APPROVAL DATE

REGISTERED PROFESSIONAL ENGINEER — S. D. DANSKY — No. 60220 — Exp. 6/30/16 — CIVIL — STATE OF CALIFORNIA

THE STATE OF CALIFORNIA OR ITS OFFICERS OR AGENTS SHALL NOT BE RESPONSIBLE FOR THE ACCURACY OR COMPLETENESS OF SCANNED COPIES OF THIS PLAN SHEET.

MARK THOMAS & CO., INC.
3000 OAK RD, SUITE 650
WALNUT CREEK, CA 94597

TRANSPORTATION AUTHORITY OF MARIN
750 LINDARO ST, SUITE 200
SAN RAFAEL, CA 94901

267.3 LF 0.75' DEEP BIOSWALE

120.83' Lt
"A" 6568+16.21
Elev 17.49

124.19' Lt
"A" 6568+21.04
ELEV 17.63
END BIOSWALE 104

OG

14 b 30" AFES

BIOSWALE FLOWLINE

0.72%

118.61' Lt
"A" 6569+78.12
Elev 18.79

17 g 18" AFES

DITCH FLOWLINE

MATCH LINE - SEE BELOW

BIOSWALE 104

267.3 LF 0.75' DEEP BIOSWALE

201.4' LF 1.0' DEEP CONCRETE DITCH

929.5 LF 0.5' DEEP CONCRETE DITCH

MATCH LINE - SEE ABOVE

118.24' Lt
"A" 6570+80.68
ELEV 20.39
END BIOSWALE 104
Beg DITCH 211

111.73' Lt
"A" 6571+27.80
Elev 21.04

OG

1.46%

DITCH FLOWLINE

5.37%

18" AFES 9 18

101.15' Lt
"A" 6572+77.10
Elev 29.28

MATCH LINE - SEE BELOW

DITCH No. 211

929.5 LF 0.5' DEEP CONCRETE DITCH

MATCH LINE - SEE ABOVE

13.00' Rt
"K" 6573+03.96
Elev 31.78

13.00' Rt
"K" 6573+60.00
Elev 34.74

13.00' Rt
"K" 6574+44.98
Elev 39.23

13.00' Rt
"K" 6575+15.00
Elev 42.86

DITCH FLOWLINE

4.31%

5.28%

5.29%

4.96%

4.54%

OG

MATCH LINE (DP-65)

DITCH No. 211

DRAINAGE PROFILES

SCALE: Horiz 1" = 10'
Vert 1" = 10'

DP-64

REVISED BY	DATE REVISED
CB	5/13/14
CB	2/7/14
CB	4/30/12

CALCULATED-DESIGNED BY: CHRIS BRIANA
CHECKED BY: TOM CONNELL

CONSULTANT FUNCTIONAL SUPERVISOR: MICHAEL LOHMAN

STATE OF CALIFORNIA - DEPARTMENT OF TRANSPORTATION
Caltrans

LAST REVISION 00-00-00
DATE PLOTTED => 30-SEP-2014
TIME PLOTTED => 14:15

BORDER LAST REVISED 7/2/2010
USERNAME => acroskey
DGN FILE => 04000007351ib064.dgn
RELATIVE BORDER SCALE IS IN INCHES 0 1 2 3
UNIT 0716
PROJECT NUMBER & PHASE 04000007351

Dist	COUNTY	ROUTE	POST MILES TOTAL PROJECT	SHEET No.	TOTAL SHEETS
04	Mrn, Son	101	26.8/27.6, 0.0/2.0	195	710

REGISTERED CIVIL ENGINEER — 06/30/14 DATE

8-18-14
PLANS APPROVAL DATE

REGISTERED PROFESSIONAL ENGINEER — S. D. DANSKY — No. 60220 — Exp. 6/30/16 — CIVIL — STATE OF CALIFORNIA

THE STATE OF CALIFORNIA OR ITS OFFICERS OR AGENTS SHALL NOT BE RESPONSIBLE FOR THE ACCURACY OR COMPLETENESS OF SCANNED COPIES OF THIS PLAN SHEET.

MARK THOMAS & CO., INC.
3000 OAK RD, SUITE 650
WALNUT CREEK, CA 94597

TRANSPORTATION AUTHORITY OF MARIN
750 LINDARO ST, SUITE 200
SAN RAFAEL, CA 94901

REVISED BY	DATE REVISED
CB	4/30/12
CB	2/7/14
CB	5/13/14

CALCULATED-DESIGNED BY: CHRIS BRIANA
CHECKED BY: TOM CONNELL

CONSULTANT FUNCTIONAL SUPERVISOR: MICHAEL LOHMAN

STATE OF CALIFORNIA - DEPARTMENT OF TRANSPORTATION
Caltrans

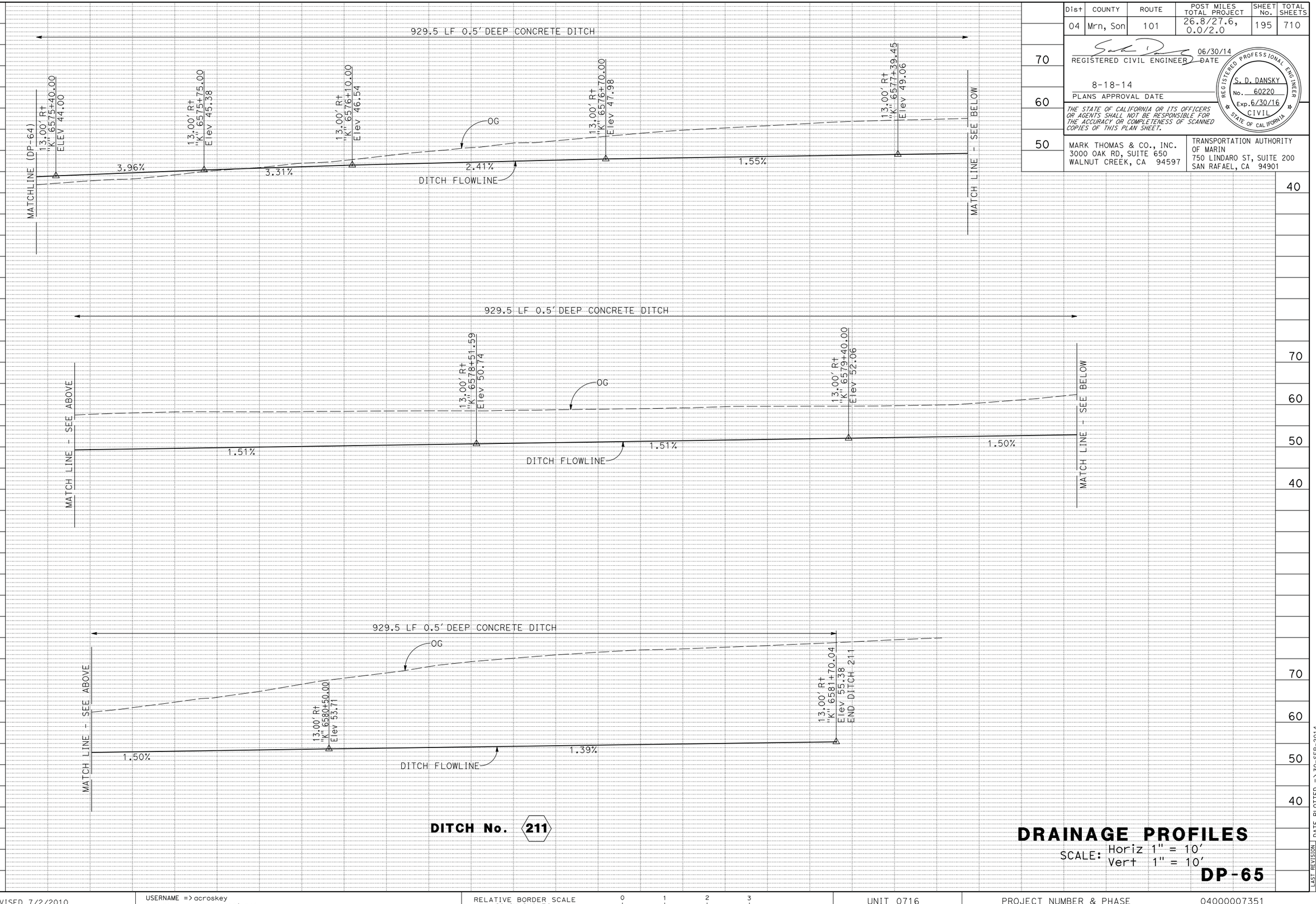

DITCH No. 211

DRAINAGE PROFILES

SCALE: Horiz 1" = 10'
Vert 1" = 10'

DP-65

LAST REVISION 00-00-00
DATE PLOTTED => 30-SEP-2014
TIME PLOTTED => 14:15

BORDER LAST REVISED 7/2/2010

USERNAME => acroskey
DGN FILE => 04000007351ib065.dgn

RELATIVE BORDER SCALE IS IN INCHES 0 1 2 3

UNIT 0716

PROJECT NUMBER & PHASE 04000007351

Dist	COUNTY	ROUTE	POST MILES TOTAL PROJECT	SHEET No.	TOTAL SHEETS
04	Mrn, Son	101	26.8/27.6, 0.0/2.0	196	710

REGISTERED CIVIL ENGINEER — DATE 06/30/14

8-18-14
PLANS APPROVAL DATE

REGISTERED PROFESSIONAL ENGINEER — S. D. DANSKY No. 60220 Exp. 6/30/16 CIVIL — STATE OF CALIFORNIA

THE STATE OF CALIFORNIA OR ITS OFFICERS OR AGENTS SHALL NOT BE RESPONSIBLE FOR THE ACCURACY OR COMPLETENESS OF SCANNED COPIES OF THIS PLAN SHEET.

MARK THOMAS & CO., INC.
3000 OAK RD, SUITE 650
WALNUT CREEK, CA 94597

TRANSPORTATION AUTHORITY OF MARIN
750 LINDARO ST, SUITE 200
SAN RAFAEL, CA 94901

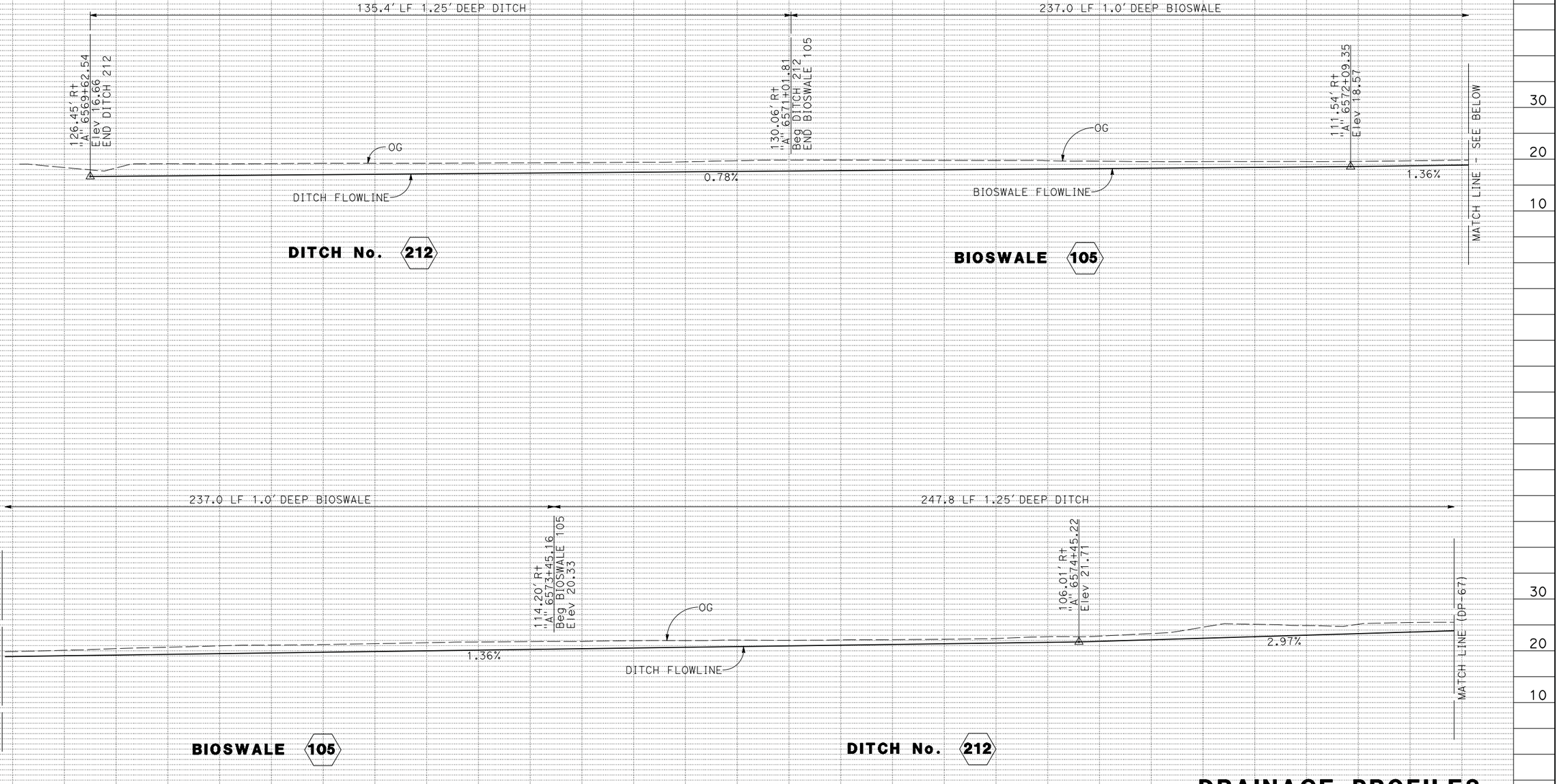

DRAINAGE PROFILES

SCALE: Horiz 1" = 10'
Vert 1" = 10'

DP-66

DATE REVISED	REVISED BY
5/13/14	CB
2/7/14	CB
4/30/12	CB

CALCULATED-DESIGNED BY: CHRIS BRIANA
CHECKED BY: TOM CONNELL

CONSULTANT FUNCTIONAL SUPERVISOR: MICHAEL LOHMAN

STATE OF CALIFORNIA - DEPARTMENT OF TRANSPORTATION
Caltrans

LAST REVISION 00-00-00
DATE PLOTTED => 30-SEP-2014
TIME PLOTTED => 14:15

BORDER LAST REVISED 7/2/2010
USERNAME => acroskey
DGN FILE => 04000007351ib066.dgn
RELATIVE BORDER SCALE IS IN INCHES 0 1 2 3
UNIT 0716
PROJECT NUMBER & PHASE 04000007351

Dist	COUNTY	ROUTE	POST MILES TOTAL PROJECT	SHEET No.	TOTAL SHEETS
04	Mrn, Son	101	26.8/27.6, 0.0/2.0	197	710

REGISTERED CIVIL ENGINEER — DATE: 06/30/14

8-18-14
PLANS APPROVAL DATE

S. D. DANSKY
No. 60220
Exp. 6/30/16
CIVIL
REGISTERED PROFESSIONAL ENGINEER
STATE OF CALIFORNIA

THE STATE OF CALIFORNIA OR ITS OFFICERS OR AGENTS SHALL NOT BE RESPONSIBLE FOR THE ACCURACY OR COMPLETENESS OF SCANNED COPIES OF THIS PLAN SHEET.

MARK THOMAS & CO., INC.
3000 OAK RD, SUITE 650
WALNUT CREEK, CA 94597

TRANSPORTATION AUTHORITY OF MARIN
750 LINDARO ST, SUITE 200
SAN RAFAEL, CA 94901

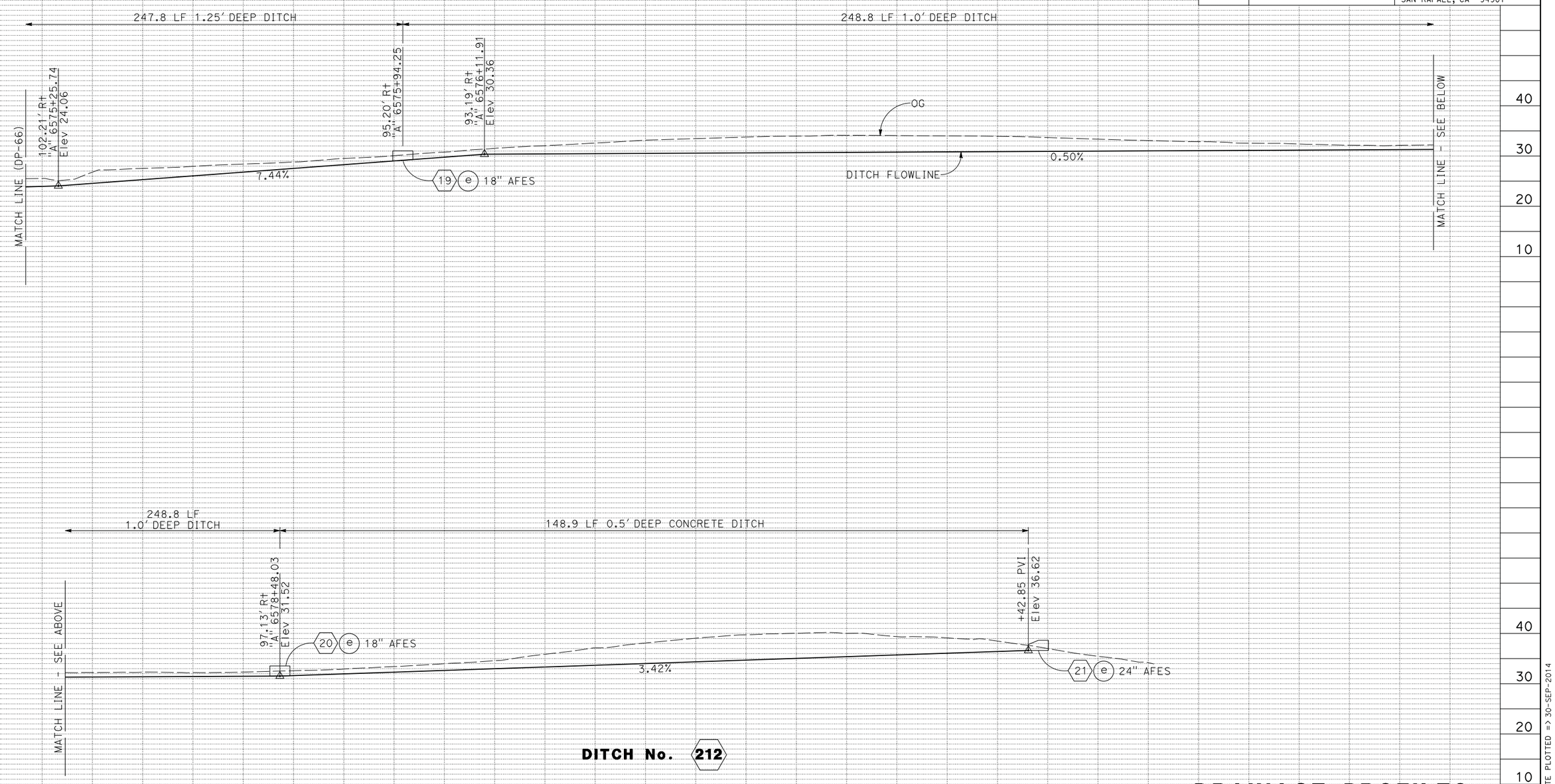

DITCH No. 212

DRAINAGE PROFILES

SCALE: Horiz 1" = 10'
Vert 1" = 10'

DP-67

CB 5/13/14
CB 2/7/14
CB 4/30/12
REVISED BY / DATE REVISED

CHRIS BRIANA
TOM CONNELL
CALCULATED-DESIGNED BY
CHECKED BY

CONSULTANT FUNCTIONAL SUPERVISOR
MICHAEL LOHMAN

STATE OF CALIFORNIA - DEPARTMENT OF TRANSPORTATION
Caltrans

LAST REVISION 00-00-00
DATE PLOTTED => 30-SEP-2014
TIME PLOTTED => 14:15

BORDER LAST REVISED 7/2/2010
USERNAME => acroskey
DGN FILE => 04000007351ib067.dgn
RELATIVE BORDER SCALE IS IN INCHES 0 1 2 3
UNIT 0716
PROJECT NUMBER & PHASE 04000007351

Dist	COUNTY	ROUTE	POST MILES TOTAL PROJECT	SHEET No.	TOTAL SHEETS
04	Mrn, Son	101	26.8/27.6, 0.0/2.0	198	710

REGISTERED CIVIL ENGINEER — 06/30/14 DATE

8-18-14
PLANS APPROVAL DATE

REGISTERED PROFESSIONAL ENGINEER
S. D. DANSKY
No. 60220
Exp. 6/30/16
CIVIL
STATE OF CALIFORNIA

THE STATE OF CALIFORNIA OR ITS OFFICERS OR AGENTS SHALL NOT BE RESPONSIBLE FOR THE ACCURACY OR COMPLETENESS OF SCANNED COPIES OF THIS PLAN SHEET.

MARK THOMAS & CO., INC.
3000 OAK RD, SUITE 650
WALNUT CREEK, CA 94597

TRANSPORTATION AUTHORITY OF MARIN
750 LINDARO ST, SUITE 200
SAN RAFAEL, CA 94901

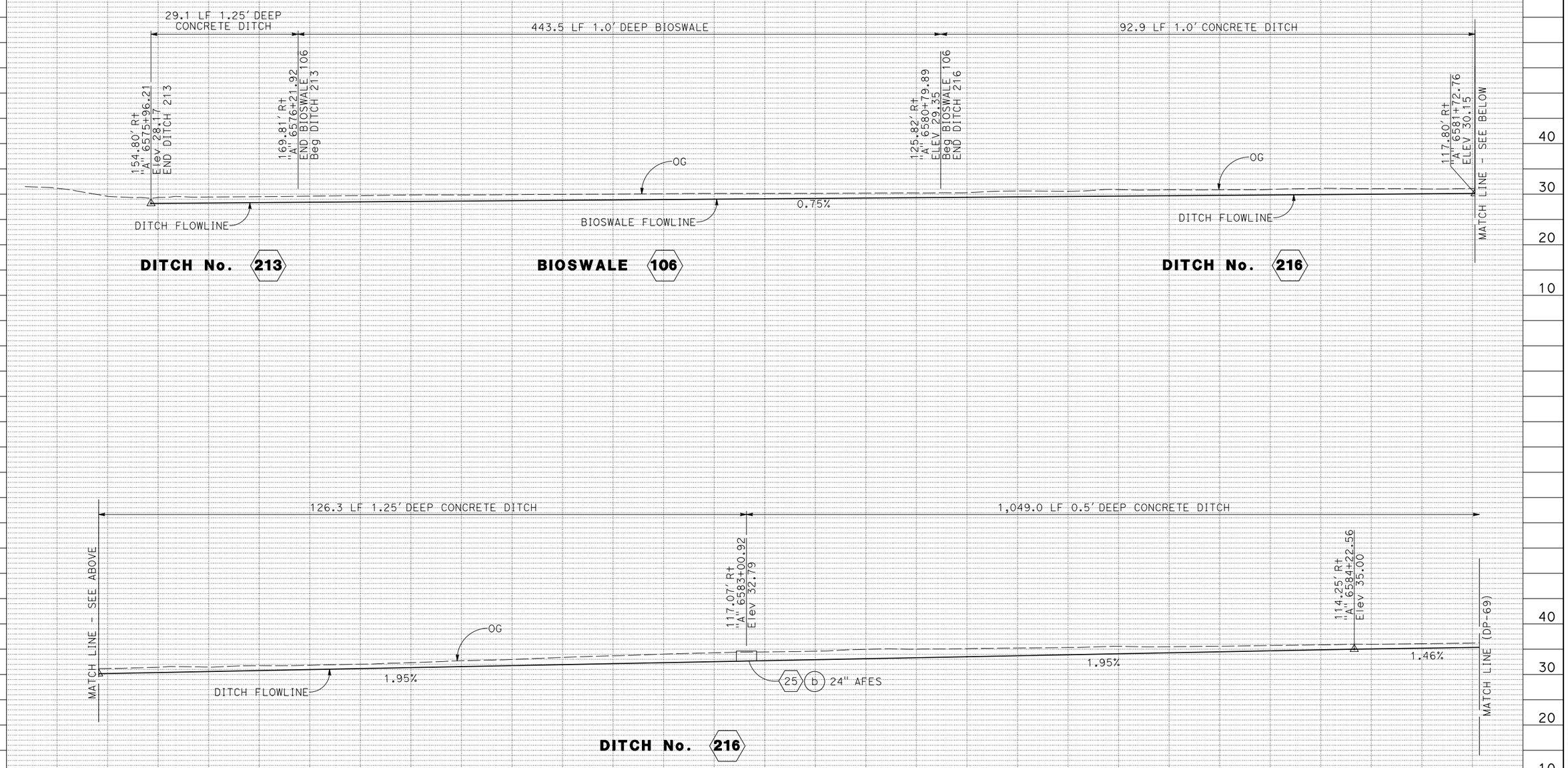

DRAINAGE PROFILES

SCALE: Horiz 1" = 10'
Vert 1" = 10'

DP-68

REVISED BY	DATE REVISED
CB	4/30/12
CB	2/7/14
CB	5/13/14

CHRIS BRIANA
TOM CONNELL
CALCULATED-DESIGNED BY
CHECKED BY
CONSULTANT FUNCTIONAL SUPERVISOR
MICHAEL LOHMAN
STATE OF CALIFORNIA - DEPARTMENT OF TRANSPORTATION
Caltrans

LAST REVISION 00-00-00
DATE PLOTTED => 30-SEP-2014
TIME PLOTTED => 14:15

BORDER LAST REVISED 7/2/2010
USERNAME => acroskey
DGN FILE => 04000007351ib068.dgn
RELATIVE BORDER SCALE IS IN INCHES 0 1 2 3
UNIT 0716
PROJECT NUMBER & PHASE 04000007351

Dist	COUNTY	ROUTE	POST MILES TOTAL PROJECT	SHEET No.	TOTAL SHEETS
04	Mrn, Son	101	26.8/27.6, 0.0/2.0	199	710

REGISTERED CIVIL ENGINEER — 06/30/14 DATE

8-18-14
PLANS APPROVAL DATE

REGISTERED PROFESSIONAL ENGINEER — S. D. DANSKY — No. 60220 — Exp. 6/30/16 — CIVIL — STATE OF CALIFORNIA

THE STATE OF CALIFORNIA OR ITS OFFICERS OR AGENTS SHALL NOT BE RESPONSIBLE FOR THE ACCURACY OR COMPLETENESS OF SCANNED COPIES OF THIS PLAN SHEET.

MARK THOMAS & CO., INC.
3000 OAK RD, SUITE 650
WALNUT CREEK, CA 94597

TRANSPORTATION AUTHORITY OF MARIN
750 LINDARO ST, SUITE 200
SAN RAFAEL, CA 94901

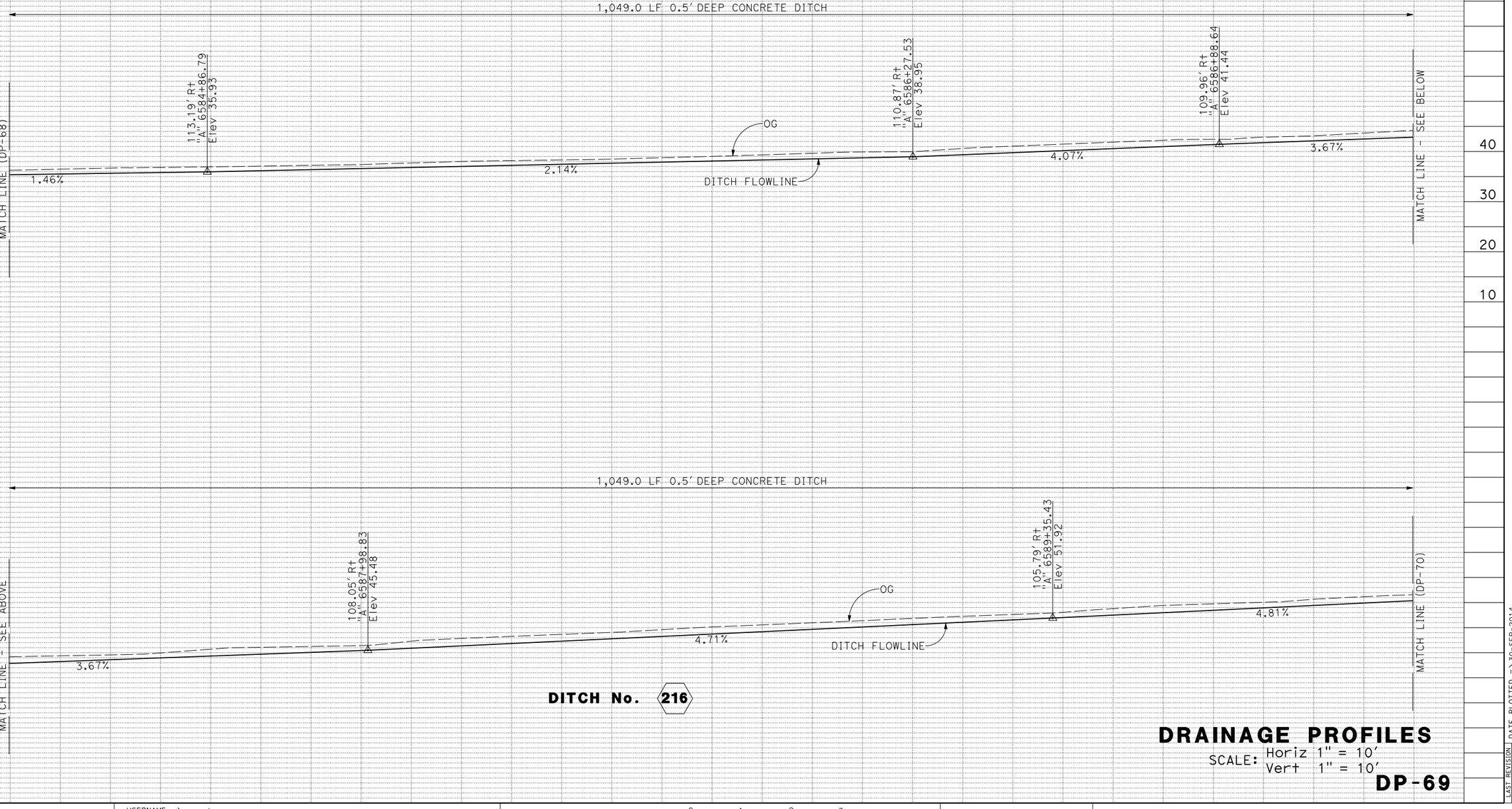

DITCH No. 216

DRAINAGE PROFILES

SCALE: Horiz 1" = 10'
Vert 1" = 10'

DP-69

CB	5/13/14
CB	2/7/14
CB	4/30/12
REVISED BY	DATE REVISED

CHRIS BRIANA — CALCULATED-DESIGNED BY
TOM CONNELL — CHECKED BY

CONSULTANT FUNCTIONAL SUPERVISOR — MICHAEL LOHMAN

STATE OF CALIFORNIA - DEPARTMENT OF TRANSPORTATION — Caltrans

LAST REVISION 00-00-00 | DATE PLOTTED => 30-SEP-2014 | TIME PLOTTED => 14:15

BORDER LAST REVISED 7/2/2010 | USERNAME => acroskey | DGN FILE => 04000007351b069.dgn | RELATIVE BORDER SCALE IS IN INCHES 0 1 2 3 | UNIT 0716 | PROJECT NUMBER & PHASE 04000007351

Dist	COUNTY	ROUTE	POST MILES TOTAL PROJECT	SHEET No.	TOTAL SHEETS
04	Mrn, Son	101	26.8/27.6, 0.0/2.0	200	710

REGISTERED CIVIL ENGINEER 06/30/14 DATE

8-18-14
PLANS APPROVAL DATE

REGISTERED PROFESSIONAL ENGINEER S. D. DANSKY No. 60220 Exp. 6/30/16 CIVIL STATE OF CALIFORNIA

THE STATE OF CALIFORNIA OR ITS OFFICERS OR AGENTS SHALL NOT BE RESPONSIBLE FOR THE ACCURACY OR COMPLETENESS OF SCANNED COPIES OF THIS PLAN SHEET.

MARK THOMAS & CO., INC.
3000 OAK RD, SUITE 650
WALNUT CREEK, CA 94597

TRANSPORTATION AUTHORITY OF MARIN
750 LINDARO ST, SUITE 200
SAN RAFAEL, CA 94901

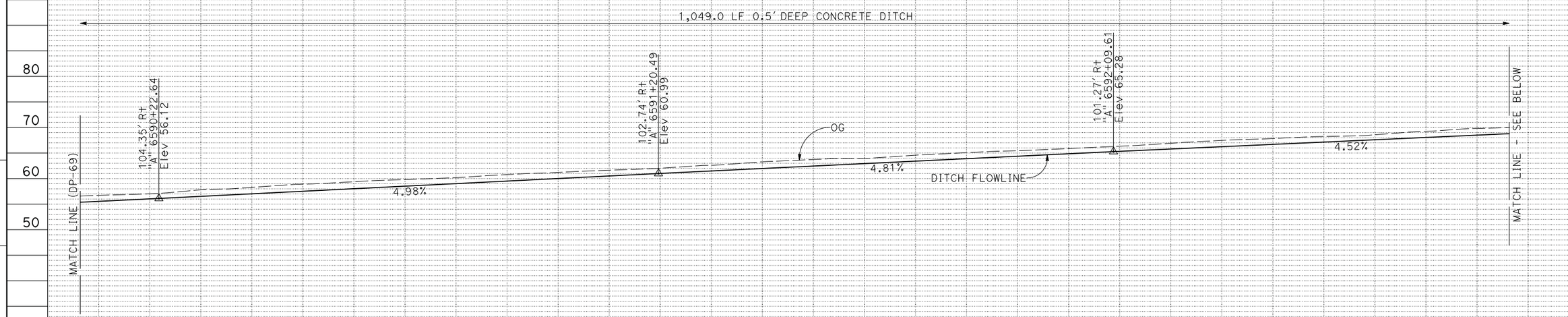

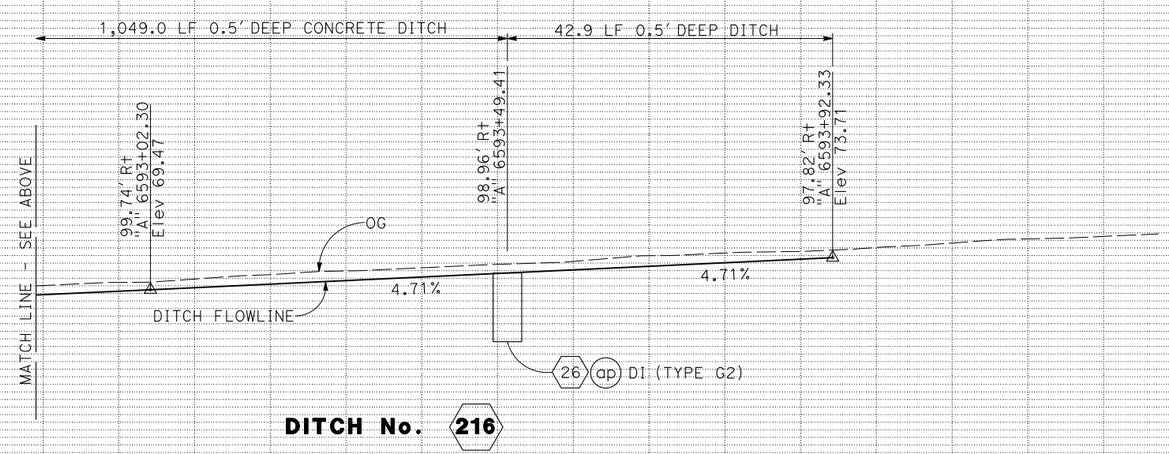

DITCH No. 216

DRAINAGE PROFILES

SCALE: Horiz 1" = 10'
Vert 1" = 10'

DP-70

STATE OF CALIFORNIA - DEPARTMENT OF TRANSPORTATION
Caltrans

CONSULTANT FUNCTIONAL SUPERVISOR: MICHAEL LOHMAN
CALCULATED-DESIGNED BY: CHRIS BRIANA
CHECKED BY: TOM CONNELL
REVISED BY: CB
DATE REVISED: 4/30/12
CB: CB
2/7/14
CB: CB
5/13/14

LAST REVISION 00-00-00
DATE PLOTTED => 30-SEP-2014
TIME PLOTTED => 14:15