Dist	COUNTY	ROUTE	POST MILES TOTAL PROJECT	SHEET No.	TOTAL SHEETS
04	Mrn, Son	101	26.8/27.6, 0.0/2.0	201	710

REGISTERED CIVIL ENGINEER — DATE: 06/30/14

8-18-14
PLANS APPROVAL DATE

REGISTERED PROFESSIONAL ENGINEER
S. D. DANSKY
No. 60220
Exp. 6/30/16
CIVIL
STATE OF CALIFORNIA

THE STATE OF CALIFORNIA OR ITS OFFICERS OR AGENTS SHALL NOT BE RESPONSIBLE FOR THE ACCURACY OR COMPLETENESS OF SCANNED COPIES OF THIS PLAN SHEET.

MARK THOMAS & CO., INC.
3000 OAK RD, SUITE 650
WALNUT CREEK, CA 94597

TRANSPORTATION AUTHORITY OF MARIN
750 LINDARO ST, SUITE 200
SAN RAFAEL, CA 94901

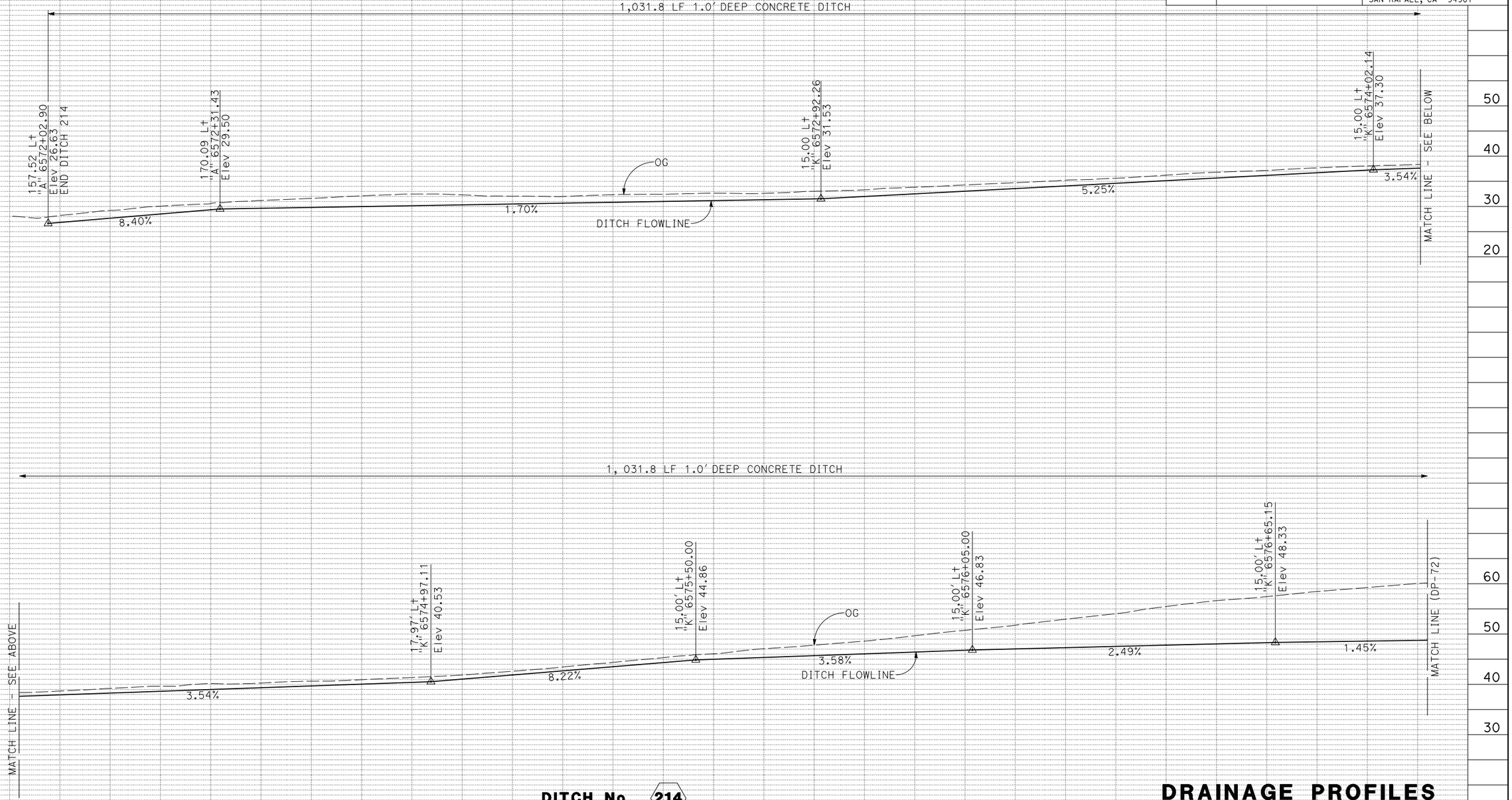

DITCH No. 214

DRAINAGE PROFILES

SCALE: Horiz 1" = 10'
Vert 1" = 10'

DP-71

REVISED BY	DATE REVISED
CB	4/30/12
CB	2/7/14
CB	5/13/14

CHRIS BRIANA — CALCULATED-DESIGNED BY
TOM CONNELL — CHECKED BY
MICHAEL LOHMAN — CONSULTANT FUNCTIONAL SUPERVISOR
STATE OF CALIFORNIA - DEPARTMENT OF TRANSPORTATION — Caltrans

LAST REVISION 00-00-00
DATE PLOTTED => 30-SEP-2014
TIME PLOTTED => 14:15

BORDER LAST REVISED 7/2/2010
USERNAME => acroskey
DGN FILE => 04000007351ib071.dgn
RELATIVE BORDER SCALE IS IN INCHES 0 1 2 3
UNIT 0716
PROJECT NUMBER & PHASE 04000007351

Dist	COUNTY	ROUTE	POST MILES TOTAL PROJECT	SHEET No.	TOTAL SHEETS
04	Mrn, Son	101	26.8/27.6, 0.0/2.0	202	710

REGISTERED CIVIL ENGINEER — DATE: 06/30/14

8-18-14
PLANS APPROVAL DATE

REGISTERED PROFESSIONAL ENGINEER
S. D. DANSKY
No. 60220
Exp. 6/30/16
CIVIL
STATE OF CALIFORNIA

THE STATE OF CALIFORNIA OR ITS OFFICERS OR AGENTS SHALL NOT BE RESPONSIBLE FOR THE ACCURACY OR COMPLETENESS OF SCANNED COPIES OF THIS PLAN SHEET.

MARK THOMAS & CO., INC.
3000 OAK RD, SUITE 650
WALNUT CREEK, CA 94597

TRANSPORTATION AUTHORITY OF MARIN
750 LINDARO ST, SUITE 200
SAN RAFAEL, CA 94901

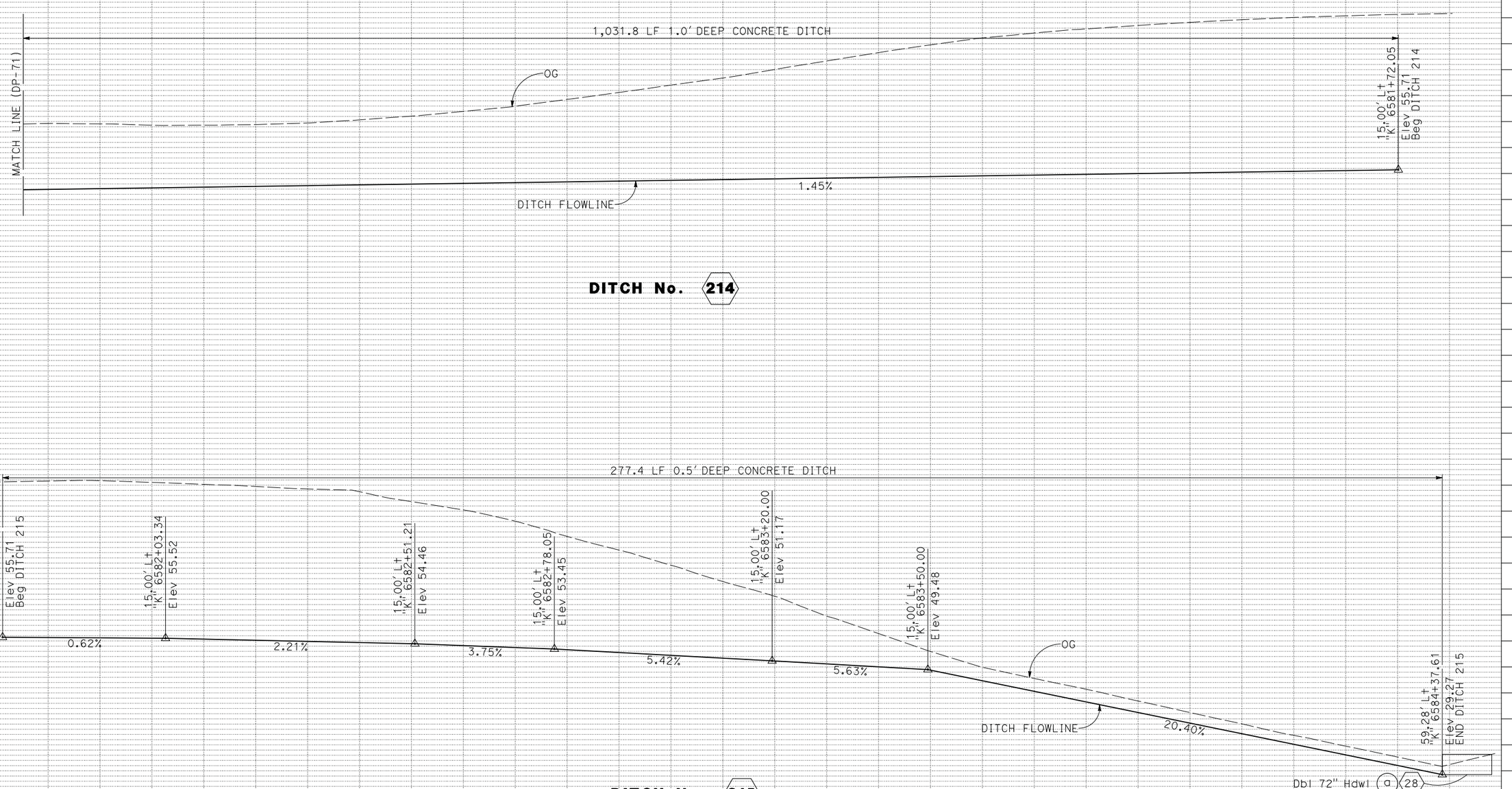

DITCH No. 214

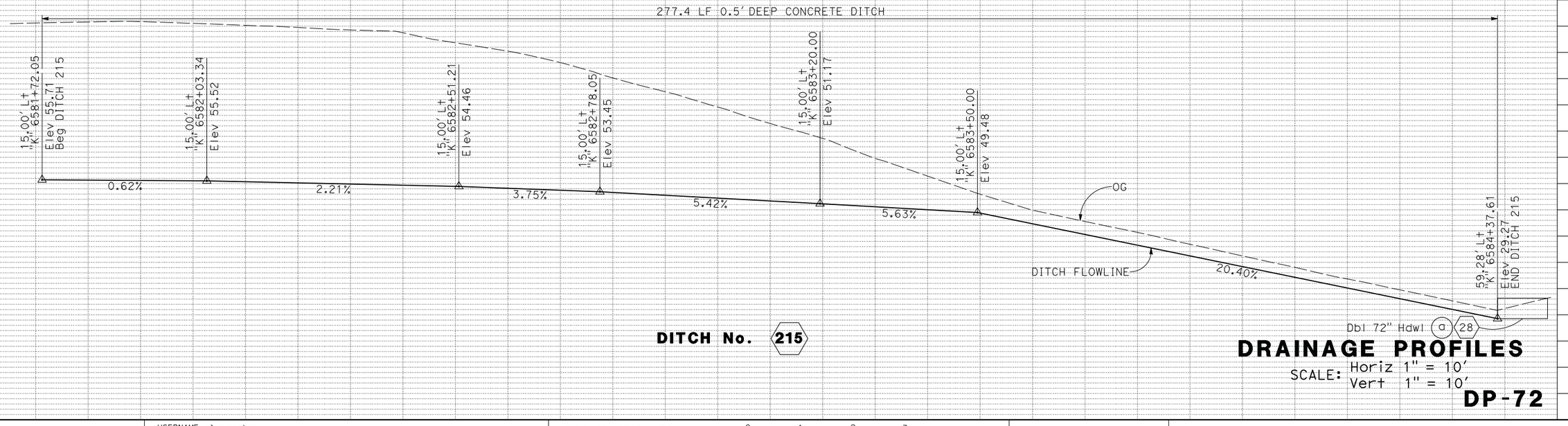

DITCH No. 215

DRAINAGE PROFILES

SCALE: Horiz 1" = 10'
Vert 1" = 10'

DP-72

STATE OF CALIFORNIA - DEPARTMENT OF TRANSPORTATION
Caltrans

CONSULTANT FUNCTIONAL SUPERVISOR: MICHAEL LOHMAN

CALCULATED-DESIGNED BY: CHRIS BRIANA
CHECKED BY: TOM CONNELL

REVISED BY	DATE REVISED
CB	4/30/12
CB	2/7/14
CB	5/13/14

LAST REVISION 00-00-00
DATE PLOTTED => 30-SEP-2014
TIME PLOTTED => 14:15

BORDER LAST REVISED 7/2/2010
USERNAME => acroskey
DGN FILE => 04000007351ib072.dgn
RELATIVE BORDER SCALE IS IN INCHES 0 1 2 3
UNIT 0716
PROJECT NUMBER & PHASE 04000007351

Dist	COUNTY	ROUTE	POST MILES TOTAL PROJECT	SHEET No.	TOTAL SHEETS
04	Mrn, Son	101	26.8/27.6, 0.0/2.0	203	710

REGISTERED CIVIL ENGINEER — DATE: 06/30/14

8-18-14
PLANS APPROVAL DATE

REGISTERED PROFESSIONAL ENGINEER
S. D. DANSKY
No. 60220
Exp. 6/30/16
CIVIL
STATE OF CALIFORNIA

THE STATE OF CALIFORNIA OR ITS OFFICERS OR AGENTS SHALL NOT BE RESPONSIBLE FOR THE ACCURACY OR COMPLETENESS OF SCANNED COPIES OF THIS PLAN SHEET.

MARK THOMAS & CO., INC.
3000 OAK RD, SUITE 650
WALNUT CREEK, CA 94597

TRANSPORTATION AUTHORITY OF MARIN
750 LINDARO ST, SUITE 200
SAN RAFAEL, CA 94901

REVISED BY	DATE REVISED
CB	4/30/12
CB	2/7/14
CB	5/13/14

CHRIS BRIANA — CALCULATED-DESIGNED BY
TOM CONNELL — CHECKED BY
MICHAEL LOHMAN — CONSULTANT FUNCTIONAL SUPERVISOR

STATE OF CALIFORNIA - DEPARTMENT OF TRANSPORTATION
Caltrans

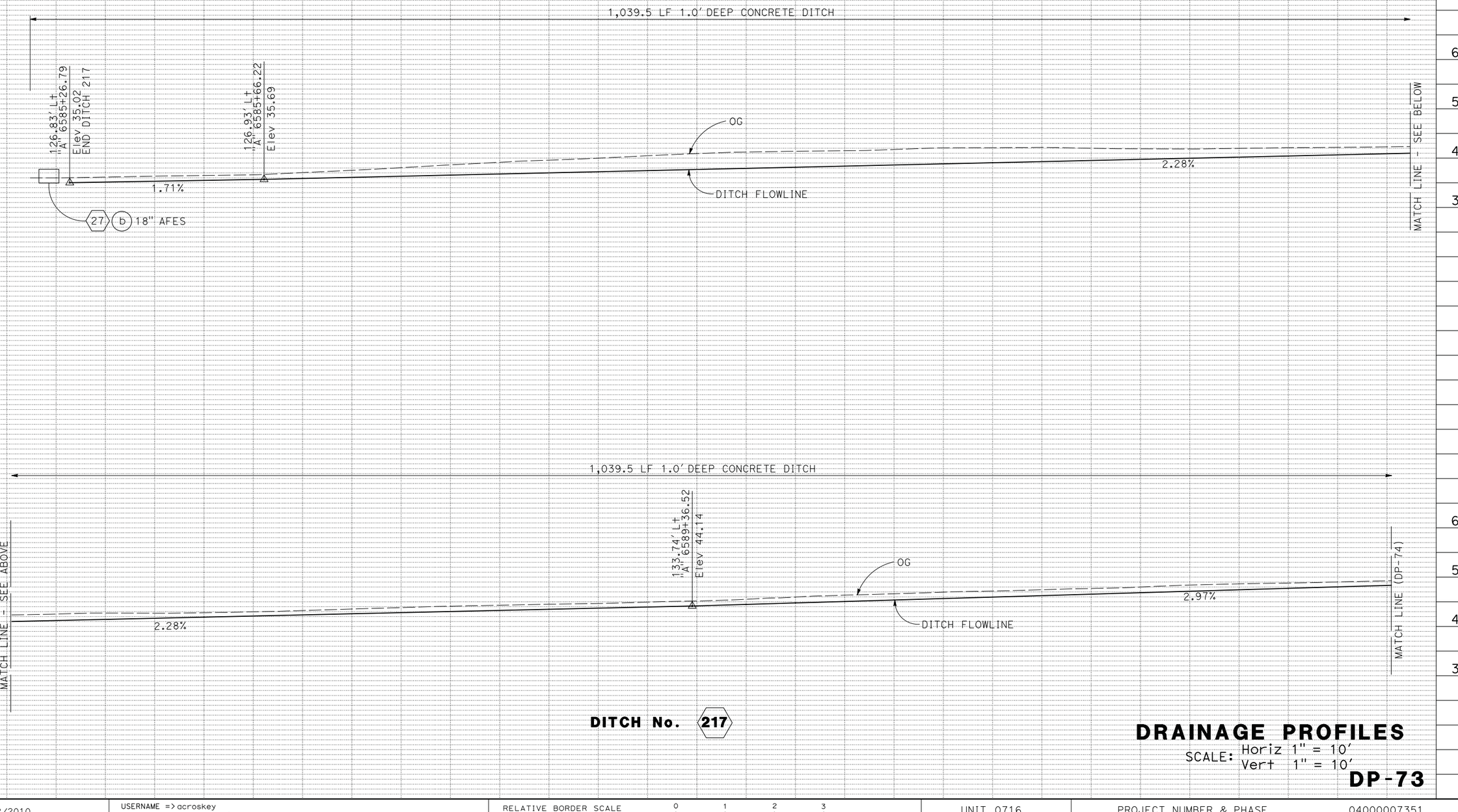

DITCH No. 217

DRAINAGE PROFILES

SCALE: Horiz 1" = 10'
Vert 1" = 10'

DP-73

LAST REVISION 00-00-00
DATE PLOTTED => 30-SEP-2014
TIME PLOTTED => 14:15

BORDER LAST REVISED 7/2/2010 | USERNAME => acroskey | DGN FILE => 04000007351ib073.dgn | RELATIVE BORDER SCALE IS IN INCHES 0 1 2 3 | UNIT 0716 | PROJECT NUMBER & PHASE 04000007351

Dist	COUNTY	ROUTE	POST MILES TOTAL PROJECT	SHEET No.	TOTAL SHEETS
04	Mrn, Son	101	26.8/27.6, 0.0/2.0	204	710

REGISTERED CIVIL ENGINEER — DATE: 06/30/14

8-18-14
PLANS APPROVAL DATE

REGISTERED PROFESSIONAL ENGINEER
S. D. DANSKY
No. 60220
Exp. 6/30/16
CIVIL
STATE OF CALIFORNIA

THE STATE OF CALIFORNIA OR ITS OFFICERS OR AGENTS SHALL NOT BE RESPONSIBLE FOR THE ACCURACY OR COMPLETENESS OF SCANNED COPIES OF THIS PLAN SHEET.

MARK THOMAS & CO., INC.
3000 OAK RD, SUITE 650
WALNUT CREEK, CA 94597

TRANSPORTATION AUTHORITY OF MARIN
750 LINDARO ST, SUITE 200
SAN RAFAEL, CA 94901

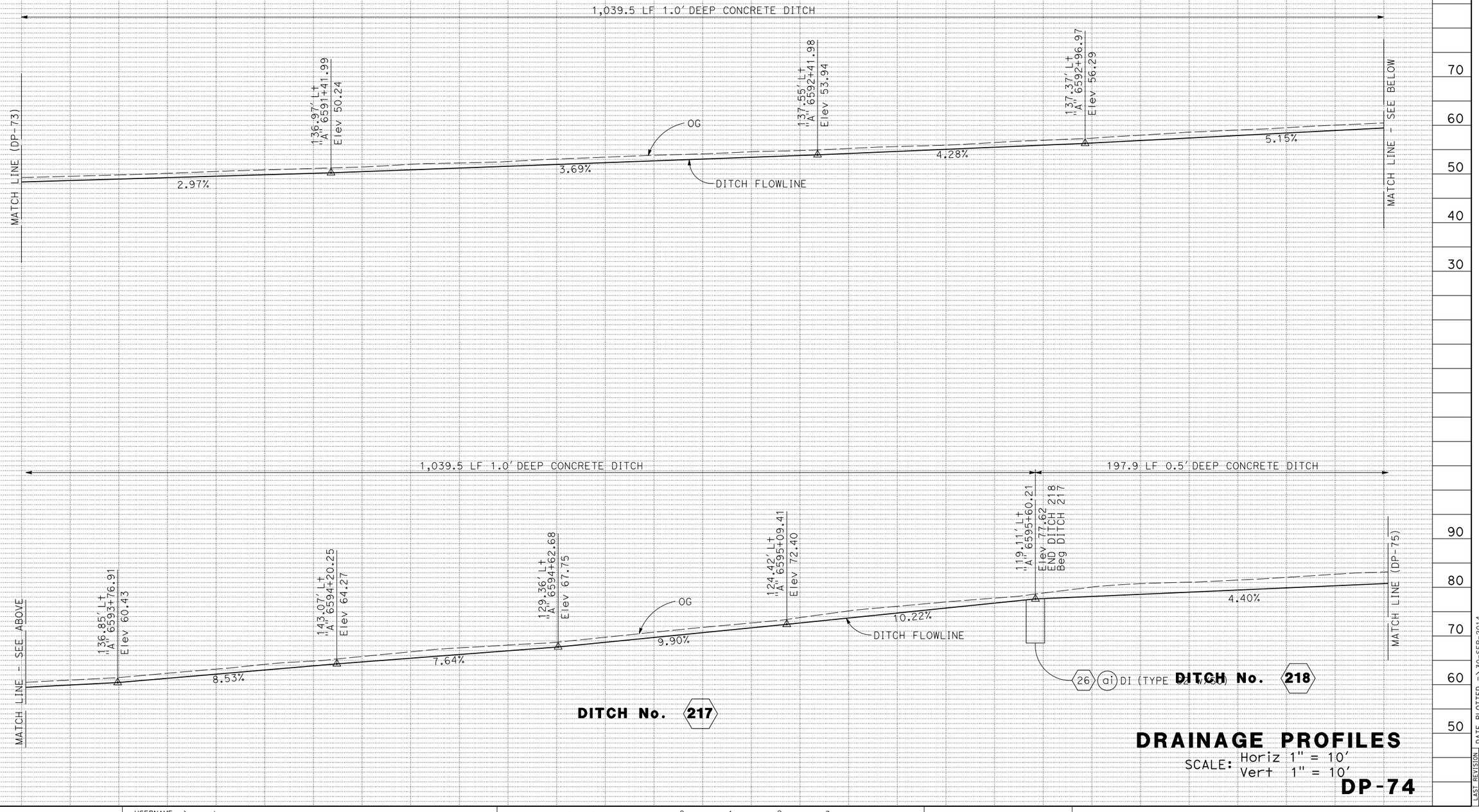

DRAINAGE PROFILES

SCALE: Horiz 1" = 10'
Vert 1" = 10'

DP-74

REVISED BY	DATE REVISED
CB	5/13/14
CB	2/7/14
CB	4/30/12

CHRIS BRIANA
TOM CONNELL
CALCULATED-DESIGNED BY
CHECKED BY

CONSULTANT FUNCTIONAL SUPERVISOR
MICHAEL LOHMAN

STATE OF CALIFORNIA - DEPARTMENT OF TRANSPORTATION
Caltrans

LAST REVISION 00-00-00
DATE PLOTTED => 30-SEP-2014
TIME PLOTTED => 14:15

BORDER LAST REVISED 7/2/2010
USERNAME => acroskey
DGN FILE => 04000007351ib074.dgn
RELATIVE BORDER SCALE IS IN INCHES 0 1 2 3
UNIT 0716
PROJECT NUMBER & PHASE 04000007351

Dist	COUNTY	ROUTE	POST MILES TOTAL PROJECT	SHEET No.	TOTAL SHEETS
04	Mrn, Son	101	26.8/27.6, 0.0/2.0	205	710

REGISTERED CIVIL ENGINEER — 06/30/14 DATE

S. D. DANSKY No. 60220 Exp. 6/30/16 CIVIL — REGISTERED PROFESSIONAL ENGINEER — STATE OF CALIFORNIA

8-18-14
PLANS APPROVAL DATE

THE STATE OF CALIFORNIA OR ITS OFFICERS OR AGENTS SHALL NOT BE RESPONSIBLE FOR THE ACCURACY OR COMPLETENESS OF SCANNED COPIES OF THIS PLAN SHEET.

MARK THOMAS & CO., INC.
3000 OAK RD, SUITE 650
WALNUT CREEK, CA 94597

TRANSPORTATION AUTHORITY OF MARIN
750 LINDARO ST, SUITE 200
SAN RAFAEL, CA 94901

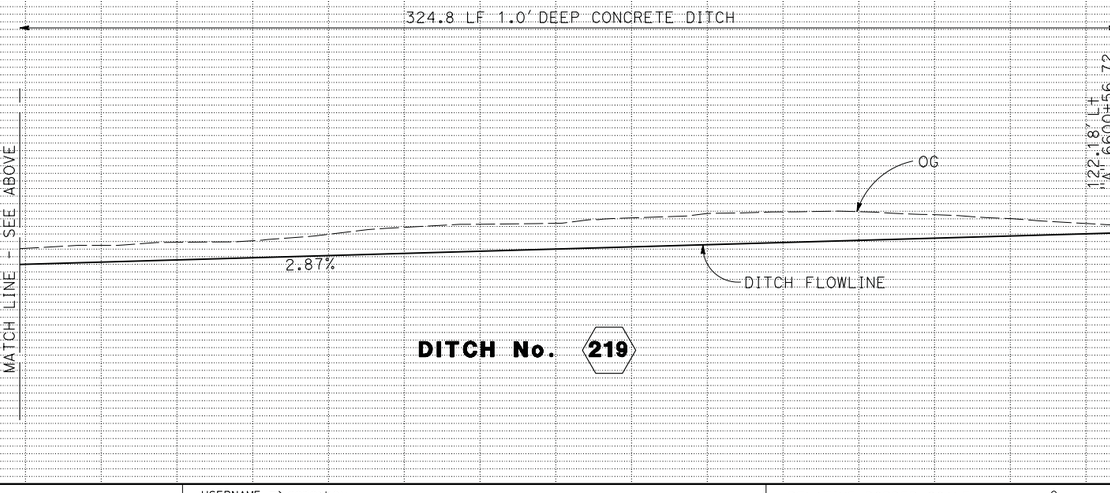

DRAINAGE PROFILES

SCALE: Horiz 1" = 10'
Vert 1" = 10'

DP-75

STATE OF CALIFORNIA - DEPARTMENT OF TRANSPORTATION
Caltrans

CONSULTANT FUNCTIONAL SUPERVISOR: MICHAEL LOHMAN

CALCULATED-DESIGNED BY: CHRIS BRIANA
CHECKED BY: TOM CONNELL

REVISED BY	DATE REVISED
CB	4/30/12
CB	2/7/14
CB	5/13/14

LAST REVISION 00-00-00
DATE PLOTTED => 30-SEP-2014
TIME PLOTTED => 14:15

BORDER LAST REVISED 7/2/2010
USERNAME => acroskey
DGN FILE => 0400000735ib075.dgn
RELATIVE BORDER SCALE IS IN INCHES 0 1 2 3
UNIT 0716
PROJECT NUMBER & PHASE 04000007351

Dist	COUNTY	ROUTE	POST MILES TOTAL PROJECT	SHEET No.	TOTAL SHEETS
04	Mrn, Son	101	26.8/27.6, 0.0/2.0	206	710

REGISTERED CIVIL ENGINEER — 06/30/14 DATE

8-18-14
PLANS APPROVAL DATE

REGISTERED PROFESSIONAL ENGINEER
S. D. DANSKY
No. 60220
Exp. 6/30/16
CIVIL
STATE OF CALIFORNIA

THE STATE OF CALIFORNIA OR ITS OFFICERS OR AGENTS SHALL NOT BE RESPONSIBLE FOR THE ACCURACY OR COMPLETENESS OF SCANNED COPIES OF THIS PLAN SHEET.

MARK THOMAS & CO., INC.
3000 OAK RD, SUITE 650
WALNUT CREEK, CA 94597

TRANSPORTATION AUTHORITY OF MARIN
750 LINDARO ST, SUITE 200
SAN RAFAEL, CA 94901

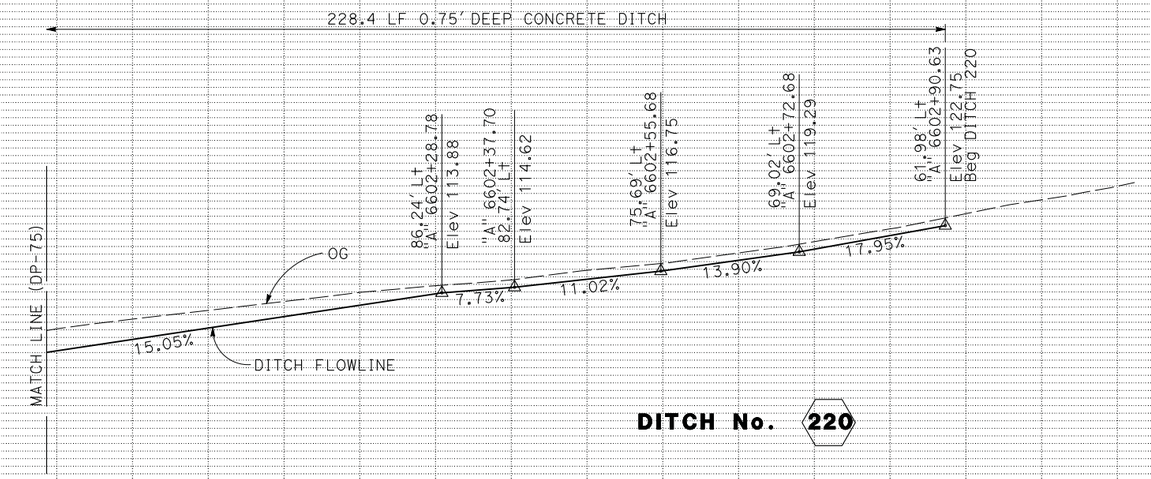

DITCH No. 220

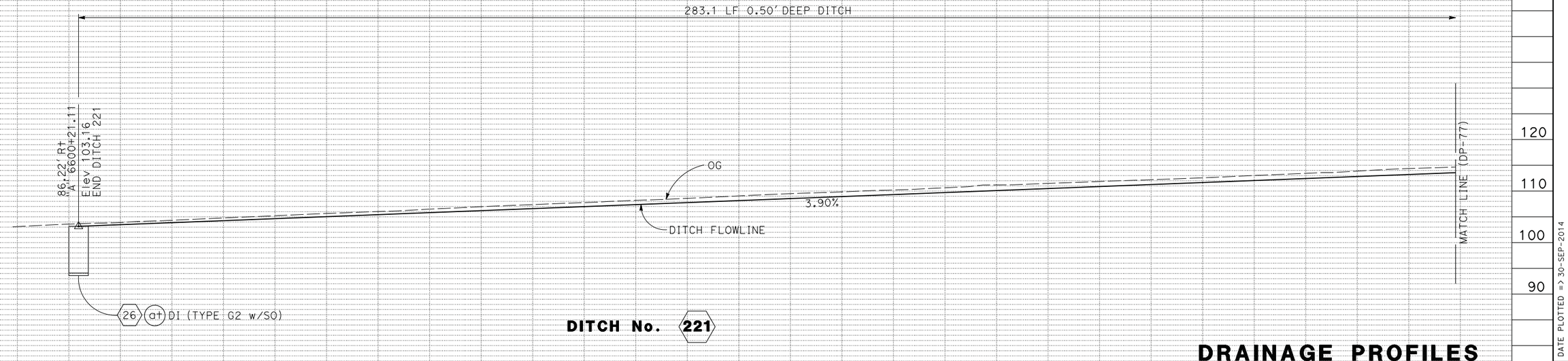

DITCH No. 221

DRAINAGE PROFILES

SCALE: Horiz 1" = 10'
Vert 1" = 10'

DP-76

REVISED BY	DATE REVISED
CB	4/30/12
CB	2/7/14
CB	5/13/14

CALCULATED-DESIGNED BY
CHECKED BY

CONSULTANT FUNCTIONAL SUPERVISOR: MICHAEL LOHMAN

CHRIS BRIANA
TOM CONNELL

STATE OF CALIFORNIA - DEPARTMENT OF TRANSPORTATION
Caltrans

LAST REVISION 00-00-00
DATE PLOTTED => 30-SEP-2014
TIME PLOTTED => 14:15

Dist	COUNTY	ROUTE	POST MILES TOTAL PROJECT	SHEET No.	TOTAL SHEETS
04	Mrn, Son	101	26.8/27.6, 0.0/2.0	207	710

REGISTERED CIVIL ENGINEER — DATE 06/30/14

8-18-14
PLANS APPROVAL DATE

REGISTERED PROFESSIONAL ENGINEER — S. D. DANSKY No. 60220 Exp. 6/30/16 CIVIL — STATE OF CALIFORNIA

THE STATE OF CALIFORNIA OR ITS OFFICERS OR AGENTS SHALL NOT BE RESPONSIBLE FOR THE ACCURACY OR COMPLETENESS OF SCANNED COPIES OF THIS PLAN SHEET.

MARK THOMAS & CO., INC.
3000 OAK RD, SUITE 650
WALNUT CREEK, CA 94597

TRANSPORTATION AUTHORITY OF MARIN
750 LINDARO ST, SUITE 200
SAN RAFAEL, CA 94901

REVISED BY	DATE REVISED
CB	4/30/12
CB	2/7/14
CB	5/13/14

CALCULATED-DESIGNED BY: CHRIS BRIANA
CHECKED BY: TOM CONNELL
CONSULTANT FUNCTIONAL SUPERVISOR: MICHAEL LOHMAN
STATE OF CALIFORNIA - DEPARTMENT OF TRANSPORTATION

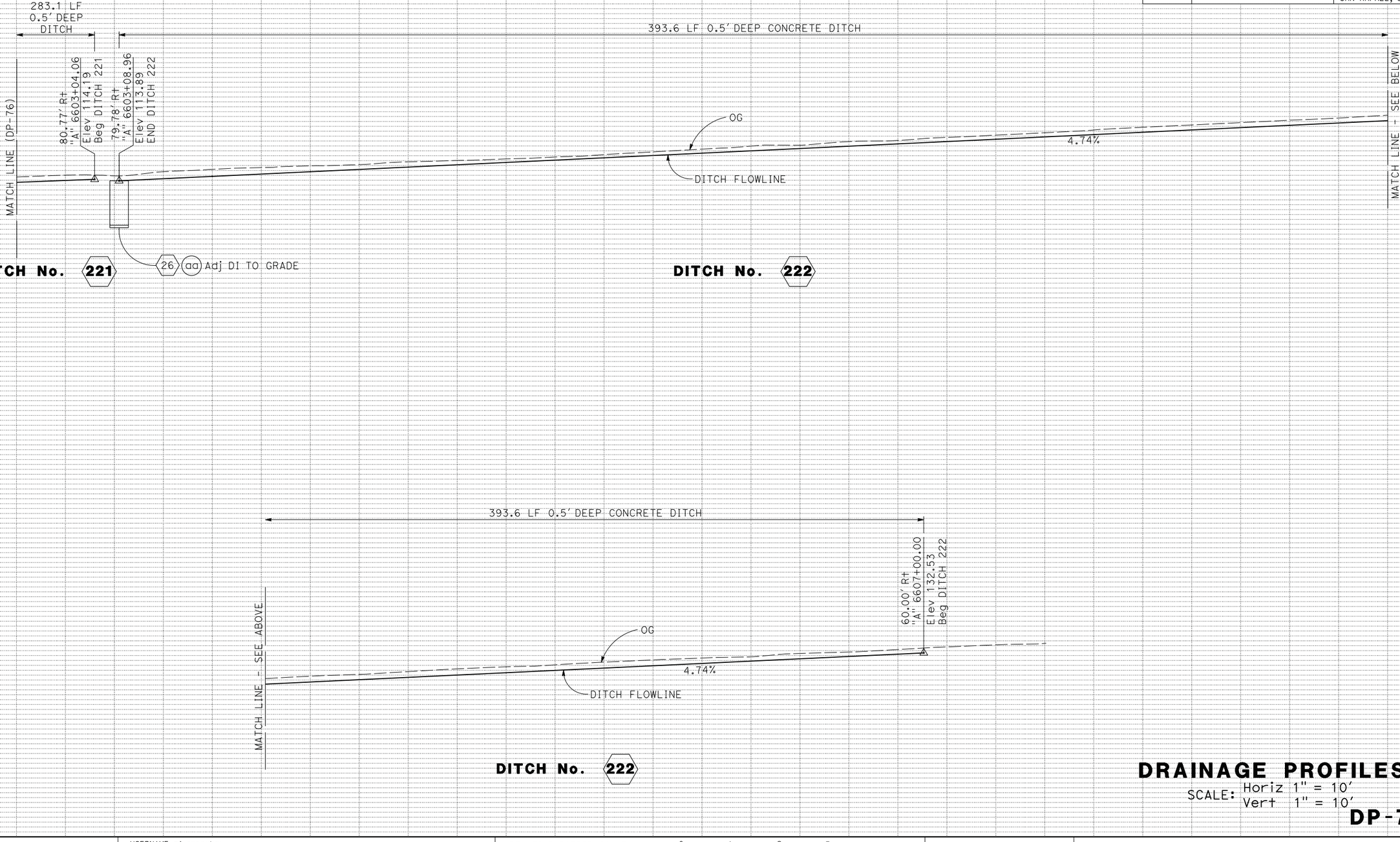

DRAINAGE PROFILES

SCALE: Horiz 1" = 10'
Vert 1" = 10'

DP-77

LAST REVISION 00-00-00
DATE PLOTTED => 30-SEP-2014
TIME PLOTTED => 14:15

BORDER LAST REVISED 7/2/2010
USERNAME => acroskey
DGN FILE => 04000007351ib077.dgn
RELATIVE BORDER SCALE IS IN INCHES 0 1 2 3
UNIT 0716
PROJECT NUMBER & PHASE 04000007351

Dist	COUNTY	ROUTE	POST MILES TOTAL PROJECT	SHEET No.	TOTAL SHEETS
04	Mrn, Son	101	26.8/27.6, 0.0/2.0	208	710

REGISTERED CIVIL ENGINEER — 06/30/14 DATE

8-18-14
PLANS APPROVAL DATE

REGISTERED PROFESSIONAL ENGINEER — S. D. DANSKY No. 60220 Exp. 6/30/16 CIVIL — STATE OF CALIFORNIA

THE STATE OF CALIFORNIA OR ITS OFFICERS OR AGENTS SHALL NOT BE RESPONSIBLE FOR THE ACCURACY OR COMPLETENESS OF SCANNED COPIES OF THIS PLAN SHEET.

MARK THOMAS & CO., INC.
3000 OAK RD, SUITE 650
WALNUT CREEK, CA 94597

TRANSPORTATION AUTHORITY OF MARIN
750 LINDARO ST, SUITE 200
SAN RAFAEL, CA 94901

REVISED BY	DATE REVISED
CB	4/30/12
CB	2/7/14
CB	5/13/14

CHRIS BRIANA — CALCULATED-DESIGNED BY
TOM CONNELL — CHECKED BY

CONSULTANT FUNCTIONAL SUPERVISOR — MICHAEL LOHMAN

STATE OF CALIFORNIA - DEPARTMENT OF TRANSPORTATION — Caltrans

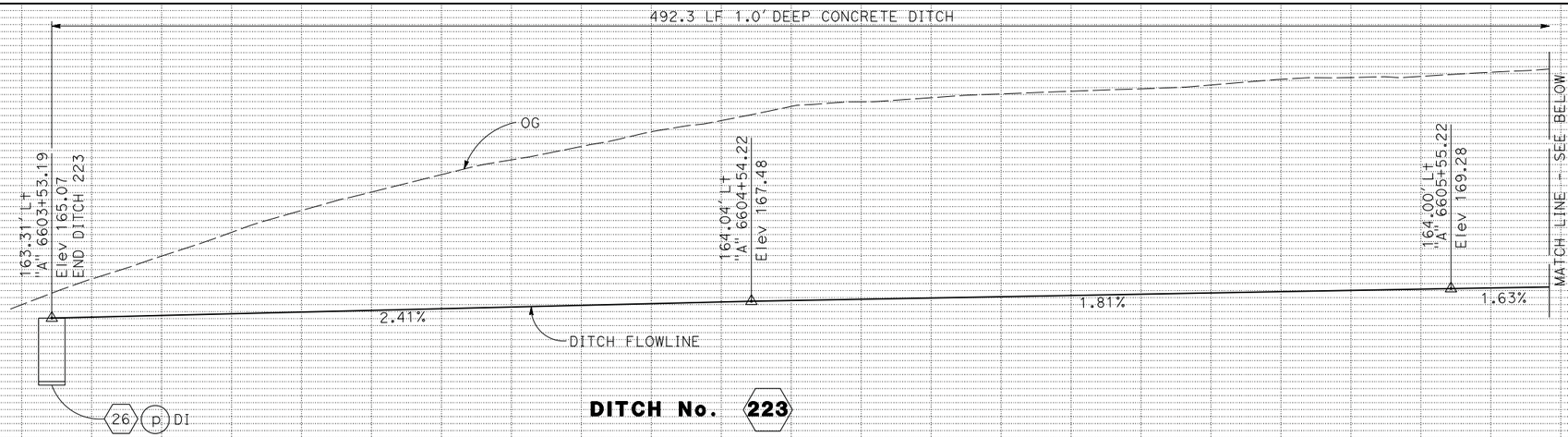

DITCH No. 223

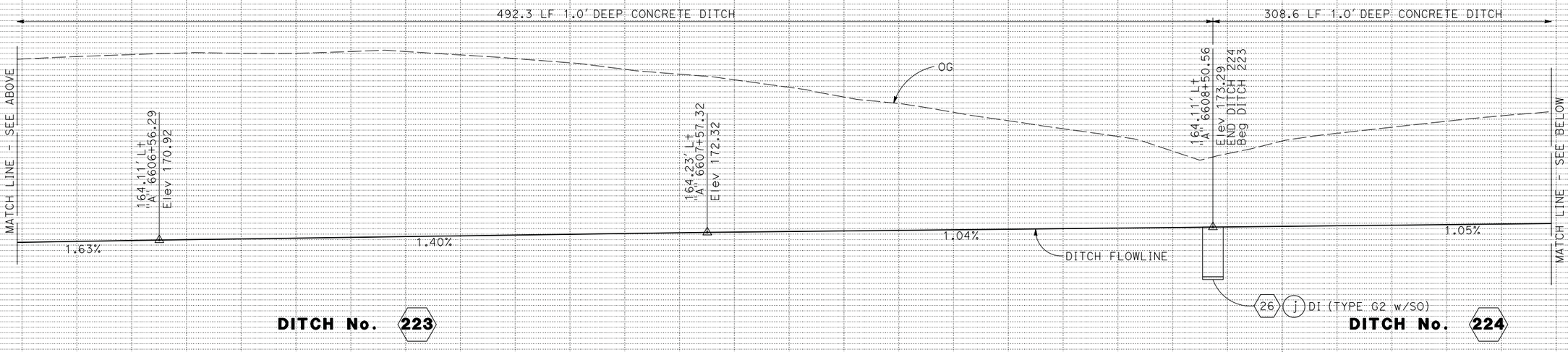

DITCH No. 223 **DITCH No. 224**

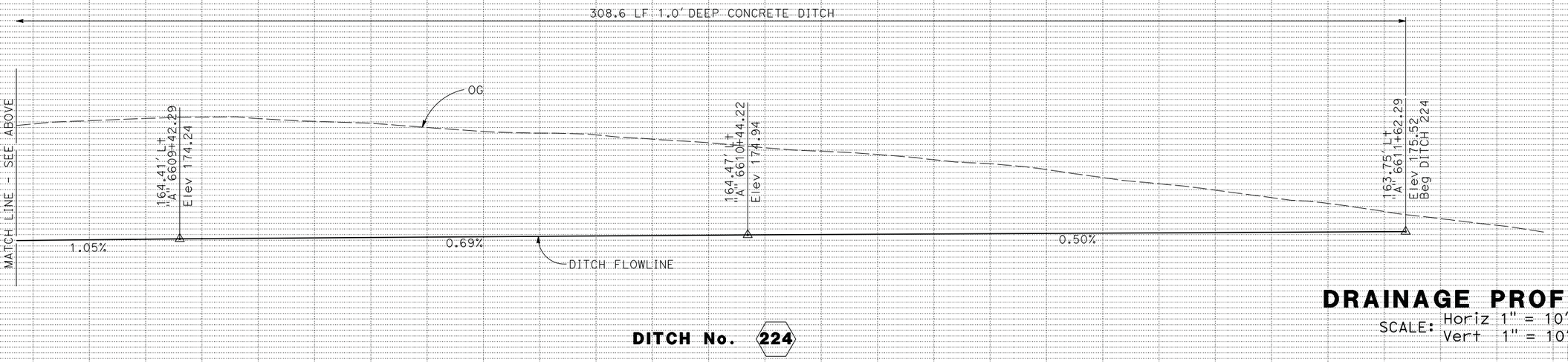

DITCH No. 224

DRAINAGE PROFILES

SCALE: Horiz 1" = 10'
Vert 1" = 10'

DP-78

LAST REVISION 00-00-00 | DATE PLOTTED => 30-SEP-2014 | TIME PLOTTED => 14:15

BORDER LAST REVISED 7/2/2010 | USERNAME => acroskey | DGN FILE => 04000007351b078.dgn | RELATIVE BORDER SCALE IS IN INCHES 0 1 2 3 | UNIT 0716 | PROJECT NUMBER & PHASE 04000007351

Dist	COUNTY	ROUTE	POST MILES TOTAL PROJECT	SHEET No.	TOTAL SHEETS
04	Mrn, Son	101	26.8/27.6, 0.0/2.0	209	710

REGISTERED CIVIL ENGINEER — DATE 06/30/14

8-18-14
PLANS APPROVAL DATE

REGISTERED PROFESSIONAL ENGINEER
S. D. DANSKY
No. 60220
Exp. 6/30/16
CIVIL
STATE OF CALIFORNIA

THE STATE OF CALIFORNIA OR ITS OFFICERS OR AGENTS SHALL NOT BE RESPONSIBLE FOR THE ACCURACY OR COMPLETENESS OF SCANNED COPIES OF THIS PLAN SHEET.

MARK THOMAS & CO., INC.
3000 OAK RD, SUITE 650
WALNUT CREEK, CA 94597

TRANSPORTATION AUTHORITY OF MARIN
750 LINDARO ST, SUITE 200
SAN RAFAEL, CA 94901

615.2 LF 0.5' DEEP CONCRETE DITCH

60.18' Rt
A: 6624+10.00
Elev 120.65
Beg DITCH 225

OG

6.28%

DITCH FLOWLINE

5.29%

70.85' Rt
A: 6625+50.67
Elev 111.75

MATCH LINE - SEE BELOW

615.2 LF 0.5' DEEP CONCRETE DITCH

MATCH LINE - SEE ABOVE

5.29%

75.64' Rt
A: 6626+43.99
Elev 106.78

OG

4.89%

DITCH FLOWLINE

MATCH LINE - SEE BELOW

615.2 LF 0.5' DEEP CONCRETE DITCH

MATCH LINE - SEE ABOVE

4.89%

82.62' Rt
A: 6628+70.76
Elev 95.53

OG

4.69%

DITCH FLOWLINE

82.56' Rt
A: 6630+17.62
Elev 88.53

(E)DI

DITCH No. 225

DRAINAGE PROFILES

SCALE: Horiz 1" = 10'
Vert 1" = 10'

DP-79

STATE OF CALIFORNIA - DEPARTMENT OF TRANSPORTATION
Caltrans

CONSULTANT FUNCTIONAL SUPERVISOR: MICHAEL LOHMAN

CALCULATED-DESIGNED BY: CHRIS BRIANA
CHECKED BY: TOM CONNELL

REVISED BY	DATE REVISED
CB	4/30/12
CB	2/7/14
CB	5/13/14

LAST REVISION 00-00-00
DATE PLOTTED => 30-SEP-2014
TIME PLOTTED => 14:15

BORDER LAST REVISED 7/2/2010
USERNAME => acroskey
DGN FILE => 04000007351ib079.dgn
RELATIVE BORDER SCALE IS IN INCHES 0 1 2 3
UNIT 0716
PROJECT NUMBER & PHASE 04000007351

Dist	COUNTY	ROUTE	POST MILES TOTAL PROJECT	SHEET No.	TOTAL SHEETS
04	Mrn, Son	101	26.8/27.6, 0.0/2.0	210	710

REGISTERED CIVIL ENGINEER — 06/30/14 DATE

8-18-14
PLANS APPROVAL DATE

REGISTERED PROFESSIONAL ENGINEER
S. D. DANSKY
No. 60220
Exp. 6/30/16
CIVIL
STATE OF CALIFORNIA

THE STATE OF CALIFORNIA OR ITS OFFICERS OR AGENTS SHALL NOT BE RESPONSIBLE FOR THE ACCURACY OR COMPLETENESS OF SCANNED COPIES OF THIS PLAN SHEET.

MARK THOMAS & CO., INC.
3000 OAK RD, SUITE 650
WALNUT CREEK, CA 94597

TRANSPORTATION AUTHORITY OF MARIN
750 LINDARO ST, SUITE 200
SAN RAFAEL, CA 94901

908.1 LF 0.5' DEEP CONCRETE DITCH

82.40' Rt
A: 6630+50.02
Elev 88.46
Beg DITCH 226

80.19' Rt
A: 6631+45.66
Elev 85.62

2.92%

OG

3.15%

DITCH FLOWLINE

77.72' Rt
A: 6633+09.30
Elev 80.39

MATCH LINE – SEE BELOW

MATCH LINE – SEE ABOVE

908.1 LF 0.5' DEEP CONCRETE DITCH

3.89%

76.96' Rt
A: 6634+41.57
Elev 75.16

OG

3.47%

DITCH FLOWLINE

77.02' Rt
A: 6635+66.85
Elev 70.57

2.76%

MATCH LINE (DP-81)

DITCH No. 226

DRAINAGE PROFILES

SCALE: Horiz 1" = 10'
Vert 1" = 10'

DP-80

REVISED BY	DATE REVISED
CB	4/30/12
CB	2/7/14
CB	5/13/14

CHRIS BRIANA
TOM CONNELL
CALCULATED-DESIGNED BY
CHECKED BY

CONSULTANT FUNCTIONAL SUPERVISOR
MICHAEL LOHMAN

STATE OF CALIFORNIA - DEPARTMENT OF TRANSPORTATION
Caltrans

LAST REVISION 00-00-00
DATE PLOTTED => 30-SEP-2014
TIME PLOTTED => 14:15

BORDER LAST REVISED 7/2/2010
USERNAME => acroskey
DGN FILE => 0400000735ib080.dgn
RELATIVE BORDER SCALE IS IN INCHES 0 1 2 3
UNIT 0716
PROJECT NUMBER & PHASE 04000007351

Dist	COUNTY	ROUTE	POST MILES TOTAL PROJECT	SHEET No.	TOTAL SHEETS
04	Mrn, Son	101	26.8/27.6, 0.0/2.0	211	710

REGISTERED CIVIL ENGINEER 06/30/14 DATE

8-18-14
PLANS APPROVAL DATE

REGISTERED PROFESSIONAL ENGINEER S. D. DANSKY No. 60220 Exp. 6/30/16 CIVIL STATE OF CALIFORNIA

THE STATE OF CALIFORNIA OR ITS OFFICERS OR AGENTS SHALL NOT BE RESPONSIBLE FOR THE ACCURACY OR COMPLETENESS OF SCANNED COPIES OF THIS PLAN SHEET.

MARK THOMAS & CO., INC.
3000 OAK RD, SUITE 650
WALNUT CREEK, CA 94597

TRANSPORTATION AUTHORITY OF MARIN
750 LINDARO ST, SUITE 200
SAN RAFAEL, CA 94901

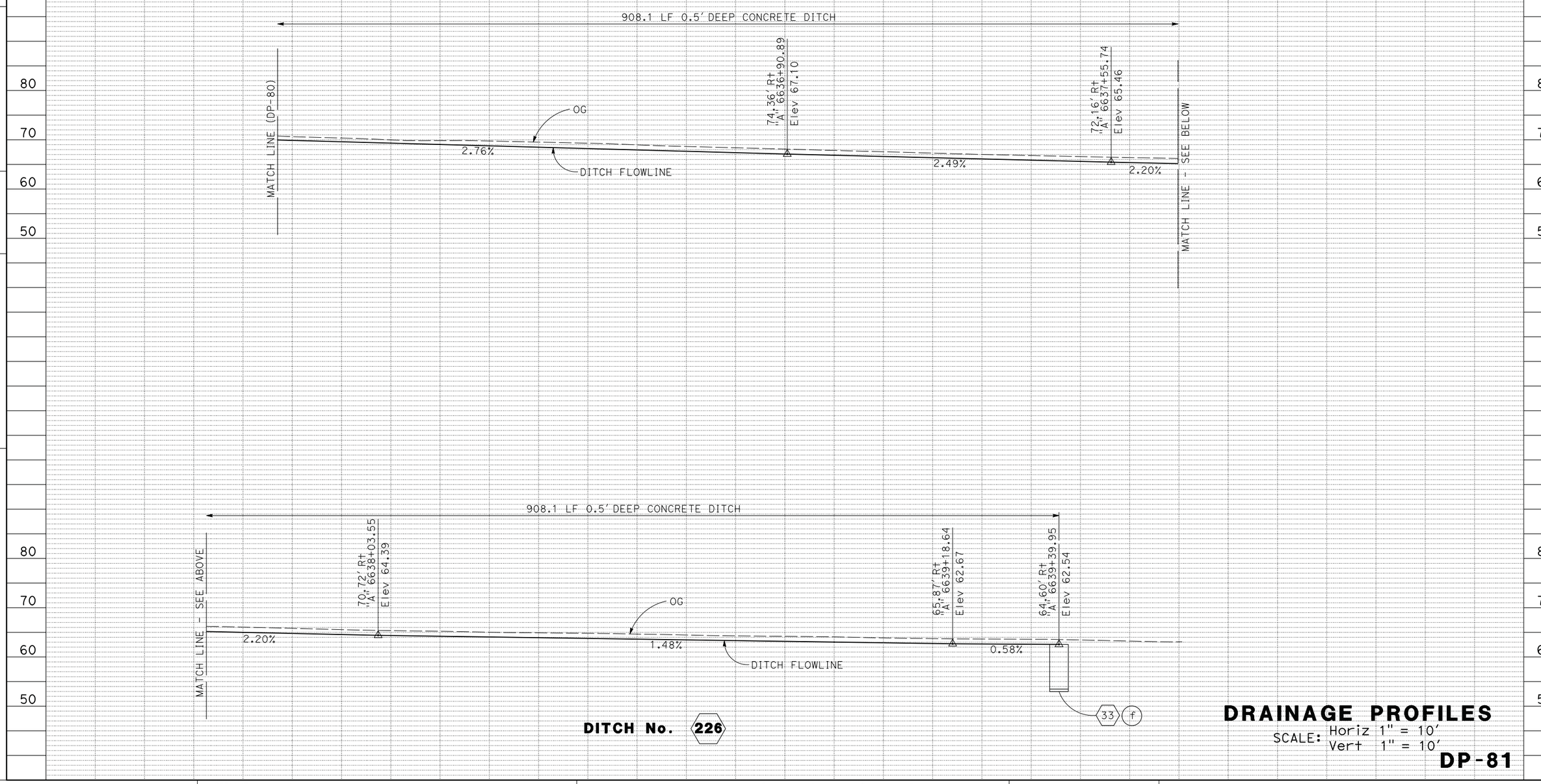

DITCH No. 226

DRAINAGE PROFILES

SCALE: Horiz 1" = 10'
Vert 1" = 10'

DP-81

STATE OF CALIFORNIA - DEPARTMENT OF TRANSPORTATION	Caltrans
CONSULTANT FUNCTIONAL SUPERVISOR	MICHAEL LOHMAN
CALCULATED-DESIGNED BY	CHRIS BRIANA
CHECKED BY	TOM CONNELL
REVISED BY	CB
DATE REVISED	4/30/12
	CB
	2/7/14
	CB
	5/13/14

LAST REVISION 00-00-00
DATE PLOTTED => 30-SEP-2014
TIME PLOTTED => 14:15

Dist	COUNTY	ROUTE	POST MILES TOTAL PROJECT	SHEET No.	TOTAL SHEETS
04	Mrn, Son	101	26.8/27.6, 0.0/2.0	212	710

REGISTERED CIVIL ENGINEER — DATE 06/30/14

8-18-14
PLANS APPROVAL DATE

REGISTERED PROFESSIONAL ENGINEER
S. D. DANSKY
No. 60220
Exp. 6/30/16
CIVIL
STATE OF CALIFORNIA

THE STATE OF CALIFORNIA OR ITS OFFICERS OR AGENTS SHALL NOT BE RESPONSIBLE FOR THE ACCURACY OR COMPLETENESS OF SCANNED COPIES OF THIS PLAN SHEET.

MARK THOMAS & CO., INC.
3000 OAK RD, SUITE 650
WALNUT CREEK, CA 94597

TRANSPORTATION AUTHORITY OF MARIN
750 LINDARO ST, SUITE 200
SAN RAFAEL, CA 94901

409.5 LF 0.5' DEEP DITCH

92.19' Rt
"A" 6630+53.75
Elev 89.49
Beg DITCH 229

OG
DITCH FLOWLINE
3.80%

MATCH LINE - SEE BELOW

MATCH LINE - SEE ABOVE

409.5 LF 0.5' DEEP DITCH

117.42' Rt
"A" 6633+44.83
Elev 78.17

132.36' Rt
"A" 6634+85.18
Elev 75.60

137.98' Rt
"A" 6635+19.39
Elev 73.92
END DITCH 229

3.80%
5.35%
2.64%
OG
DITCH FLOWLINE
(E)DI

DITCH No. 229

DRAINAGE PROFILES

SCALE: Horiz 1" = 10'
Vert 1" = 10'

DP-82

REVISED BY	DATE REVISED
CB	4/30/12
CB	2/7/14
CB	5/13/14

CALCULATED-DESIGNED BY: CHRIS BRIANA
CHECKED BY: TOM CONNELL

CONSULTANT FUNCTIONAL SUPERVISOR: MICHAEL LOHMAN

STATE OF CALIFORNIA - DEPARTMENT OF TRANSPORTATION
Caltrans

LAST REVISION 00-00-00
DATE PLOTTED => 30-SEP-2014
TIME PLOTTED => 14:15

BORDER LAST REVISED 7/2/2010
USERNAME => acroskey
DGN FILE => 04000007351ib082.dgn
RELATIVE BORDER SCALE IS IN INCHES 0 1 2 3
UNIT 0716
PROJECT NUMBER & PHASE 04000007351

Dist	COUNTY	ROUTE	POST MILES TOTAL PROJECT	SHEET No.	TOTAL SHEETS
04	Mrn, Son	101	26.8/27.6, 0.0/2.0	213	710

REGISTERED CIVIL ENGINEER — 06/30/14 DATE

8-18-14
PLANS APPROVAL DATE

REGISTERED PROFESSIONAL ENGINEER — S. D. DANSKY — No. 60220 — Exp. 6/30/16 — CIVIL — STATE OF CALIFORNIA

THE STATE OF CALIFORNIA OR ITS OFFICERS OR AGENTS SHALL NOT BE RESPONSIBLE FOR THE ACCURACY OR COMPLETENESS OF SCANNED COPIES OF THIS PLAN SHEET.

MARK THOMAS & CO., INC.
3000 OAK RD, SUITE 650
WALNUT CREEK, CA 94597

TRANSPORTATION AUTHORITY OF MARIN
750 LINDARO ST, SUITE 200
SAN RAFAEL, CA 94901

442.0 LF 0.5' DEEP DITCH

134.22' Rt
"A" 6635+20.02
Elev 71.55
Beg DITCH 230

OG

DITCH FLOWLINE

2.88%

MATCH LINE - SEE BELOW

442.0 LF 0.5' DEEP DITCH

MATCH LINE - SEE ABOVE

133.36' Rt
"A" 6637+62.17
Elev 64.39

OG

2.88%

DITCH FLOWLINE

2.13%

112.68' Rt
"A" 6639+50.45
Elev 60.26
END DITCH 230

33 (h) DI (TYPE G2 w/SO)

DITCH No. 230

215.7 LF 0.5' DEEP DITCH

52.6 LF 0.5' DEEP BIOSWALE

87.78' Rt
"A" 6639+50.41
Elev 62.79
Beg DITCH 231

OG

4.02%

DITCH FLOWLINE

75.74' Rt
"A" 6641+12.07
Elev 56.18

74.44' Rt
"A" 6641+62.54
ELEV 55.67
END DITCH 231
Beg BIOSWALE 107

DI (TYPE G2 w/SO) (K) 33

0.99%

69.54' Rt
"A" 6642+14.23
Elev 55.15
END BIOSWALE 107

DITCH No. 231

BIOSWALE 107

DRAINAGE PROFILES

SCALE: Horiz 1" = 10'
Vert 1" = 10'

DP-83

REVISED BY	DATE REVISED
CB	4/30/12
CB	2/7/14
CB	5/13/14

CALCULATED-DESIGNED BY: CHRIS BRIANA
CHECKED BY: TOM CONNELL
CONSULTANT FUNCTIONAL SUPERVISOR: MICHAEL LOHMAN

STATE OF CALIFORNIA - DEPARTMENT OF TRANSPORTATION
Caltrans

LAST REVISION 00-00-00 | DATE PLOTTED => 30-SEP-2014 | TIME PLOTTED => 14:15

BORDER LAST REVISED 7/2/2010 | USERNAME => acroskey | DGN FILE => 0400000735ib083.dgn | RELATIVE BORDER SCALE IS IN INCHES 0 1 2 3 | UNIT 0716 | PROJECT NUMBER & PHASE 04000007351

Dist	COUNTY	ROUTE	POST MILES TOTAL PROJECT	SHEET No.	TOTAL SHEETS
04	Mrn, Son	101	26.8/27.6, 0.0/2.0	214	710

REGISTERED CIVIL ENGINEER — DATE 06/30/14

8-18-14
PLANS APPROVAL DATE

REGISTERED PROFESSIONAL ENGINEER
S. D. DANSKY
No. 60220
Exp. 6/30/16
CIVIL
STATE OF CALIFORNIA

THE STATE OF CALIFORNIA OR ITS OFFICERS OR AGENTS SHALL NOT BE RESPONSIBLE FOR THE ACCURACY OR COMPLETENESS OF SCANNED COPIES OF THIS PLAN SHEET.

MARK THOMAS & CO., INC.
3000 OAK RD, SUITE 650
WALNUT CREEK, CA 94597

TRANSPORTATION AUTHORITY OF MARIN
750 LINDARO ST, SUITE 200
SAN RAFAEL, CA 94901

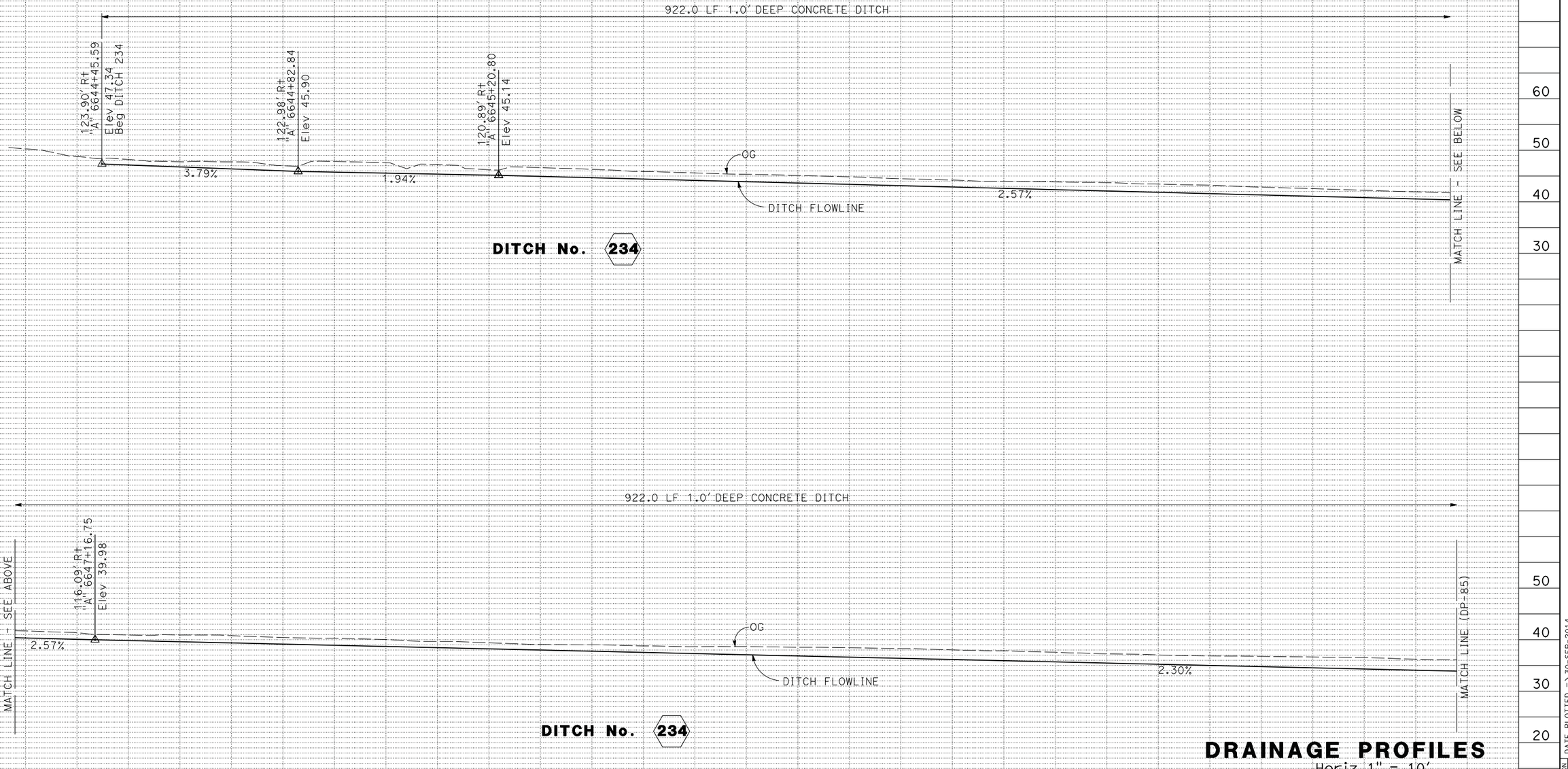

DRAINAGE PROFILES

SCALE: Horiz 1" = 10'
Vert 1" = 10'

DP-84

CB 5/13/14
CB 2/7/14
CB 4/30/12
REVISED BY / DATE REVISED
CHRIS BRIANA / TOM CONNELL
CALCULATED-DESIGNED BY / CHECKED BY
CONSULTANT FUNCTIONAL SUPERVISOR - MICHAEL LOHMAN
STATE OF CALIFORNIA - DEPARTMENT OF TRANSPORTATION

LAST REVISION 00-00-00
DATE PLOTTED => 30-SEP-2014
TIME PLOTTED => 14:15

BORDER LAST REVISED 7/2/2010
USERNAME => acroskey
DGN FILE => 04000007351b084.dgn
RELATIVE BORDER SCALE IS IN INCHES 0 1 2 3
UNIT 0716
PROJECT NUMBER & PHASE 04000007351

Dist	COUNTY	ROUTE	POST MILES TOTAL PROJECT	SHEET No.	TOTAL SHEETS
04	Mrn, Son	101	26.8/27.6, 0.0/2.0	215	710

REGISTERED CIVIL ENGINEER 06/30/14 DATE

8-18-14
PLANS APPROVAL DATE

REGISTERED PROFESSIONAL ENGINEER S. D. DANSKY No. 60220 Exp. 6/30/16 CIVIL STATE OF CALIFORNIA

THE STATE OF CALIFORNIA OR ITS OFFICERS OR AGENTS SHALL NOT BE RESPONSIBLE FOR THE ACCURACY OR COMPLETENESS OF SCANNED COPIES OF THIS PLAN SHEET.

MARK THOMAS & CO., INC.
3000 OAK RD, SUITE 650
WALNUT CREEK, CA 94597

TRANSPORTATION AUTHORITY OF MARIN
750 LINDARO ST, SUITE 200
SAN RAFAEL, CA 94901

DRAINAGE PROFILES

SCALE: Horiz 1" = 10'
Vert 1" = 10'

DP-85

CB	5/13/14
CB	2/7/14
CB	4/30/12
REVISED BY	DATE REVISED
CHRIS BRIANA	TOM CONNELL
CALCULATED-DESIGNED BY	CHECKED BY
CONSULTANT FUNCTIONAL SUPERVISOR	MICHAEL LOHMAN

STATE OF CALIFORNIA - DEPARTMENT OF TRANSPORTATION
Caltrans

DATE PLOTTED => 30-SEP-2014
TIME PLOTTED => 14:15
LAST REVISION 00-00-00

Dist	COUNTY	ROUTE	POST MILES TOTAL PROJECT	SHEET No.	TOTAL SHEETS
04	Mrn, Son	101	26.8/27.6, 0.0/2.0	216	710

REGISTERED CIVIL ENGINEER — 06/30/14 DATE

8-18-14
PLANS APPROVAL DATE

REGISTERED PROFESSIONAL ENGINEER
S. D. DANSKY
No. 60220
Exp. 6/30/16
CIVIL
STATE OF CALIFORNIA

THE STATE OF CALIFORNIA OR ITS OFFICERS OR AGENTS SHALL NOT BE RESPONSIBLE FOR THE ACCURACY OR COMPLETENESS OF SCANNED COPIES OF THIS PLAN SHEET.

MARK THOMAS & CO., INC.
3000 OAK RD, SUITE 650
WALNUT CREEK, CA 94597

TRANSPORTATION AUTHORITY OF MARIN
750 LINDARO ST, SUITE 200
SAN RAFAEL, CA 94901

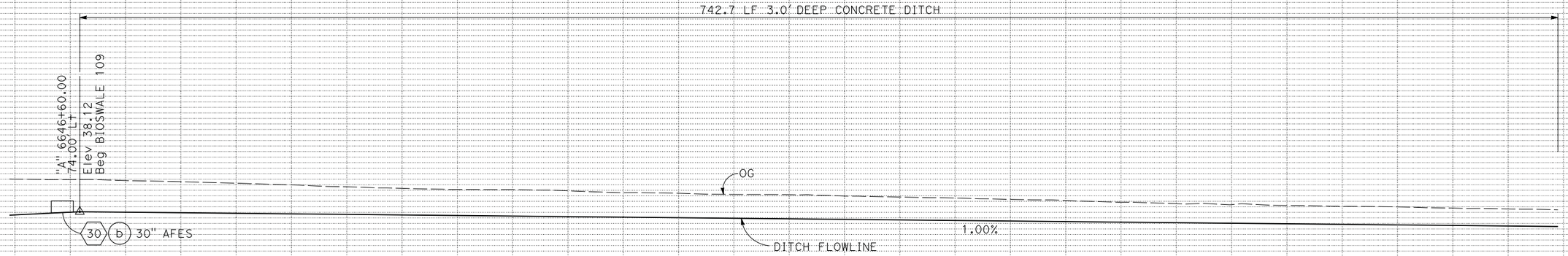

BIOSWALE No. 109

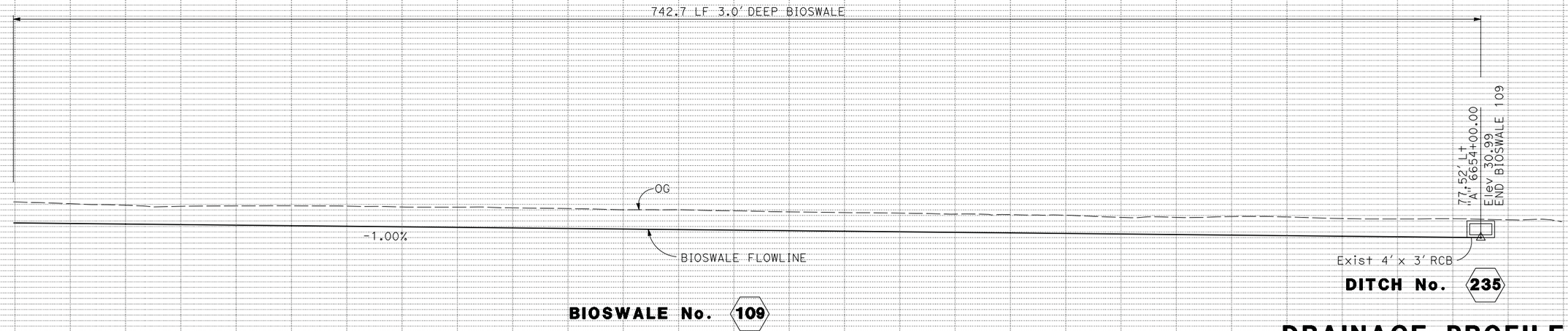

DITCH No. 235

BIOSWALE No. 109

DRAINAGE PROFILES

SCALE: Horiz 1" = 10'
Vert 1" = 10'

DP-86

REVISED BY	DATE REVISED
CB	4/30/12
CB	2/7/14
CB	5/13/14

CHRIS BRIANA — CALCULATED-DESIGNED BY
TOM CONNELL — CHECKED BY
MICHAEL LOHMAN — CONSULTANT FUNCTIONAL SUPERVISOR

STATE OF CALIFORNIA - DEPARTMENT OF TRANSPORTATION
Caltrans

LAST REVISION 00-00-00
DATE PLOTTED => 30-SEP-2014
TIME PLOTTED => 14:15

BORDER LAST REVISED 7/2/2010
USERNAME => acroskey
DGN FILE => 04000007351b086.dgn
RELATIVE BORDER SCALE IS IN INCHES 0 1 2 3
UNIT 0716
PROJECT NUMBER & PHASE 04000007351

Dist	COUNTY	ROUTE	POST MILES TOTAL PROJECT	SHEET No.	TOTAL SHEETS
04	Mrn, Son	101	26.8/27.6, 0.0/2.0	217	710

REGISTERED CIVIL ENGINEER — DATE 06/30/14

8-18-14
PLANS APPROVAL DATE

REGISTERED PROFESSIONAL ENGINEER — S. D. DANSKY — No. 60220 — Exp. 6/30/16 — CIVIL — STATE OF CALIFORNIA

THE STATE OF CALIFORNIA OR ITS OFFICERS OR AGENTS SHALL NOT BE RESPONSIBLE FOR THE ACCURACY OR COMPLETENESS OF SCANNED COPIES OF THIS PLAN SHEET.

MARK THOMAS & CO., INC.
3000 OAK RD, SUITE 650
WALNUT CREEK, CA 94597

TRANSPORTATION AUTHORITY OF MARIN
750 LINDARO ST, SUITE 200
SAN RAFAEL, CA 94901

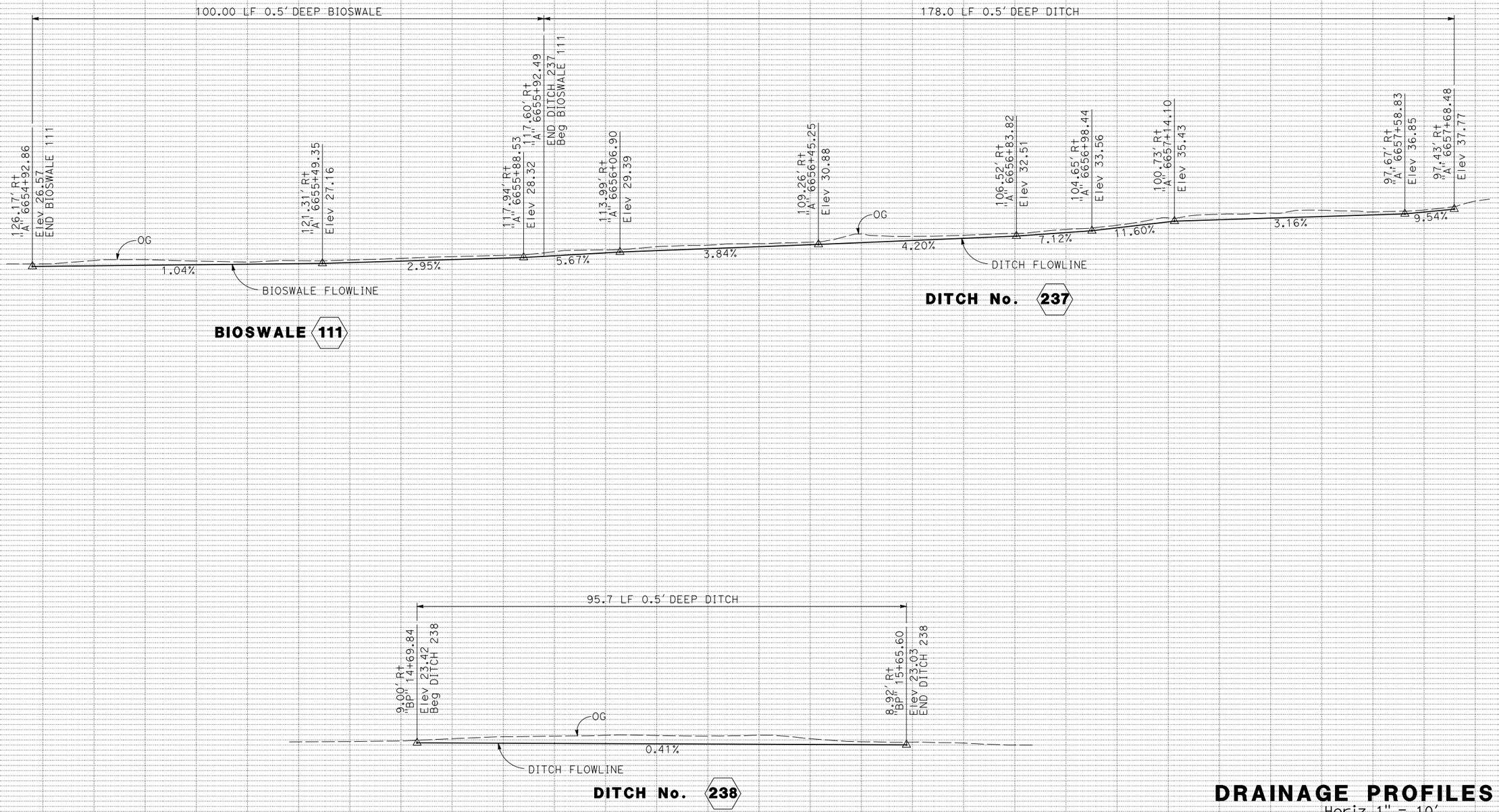

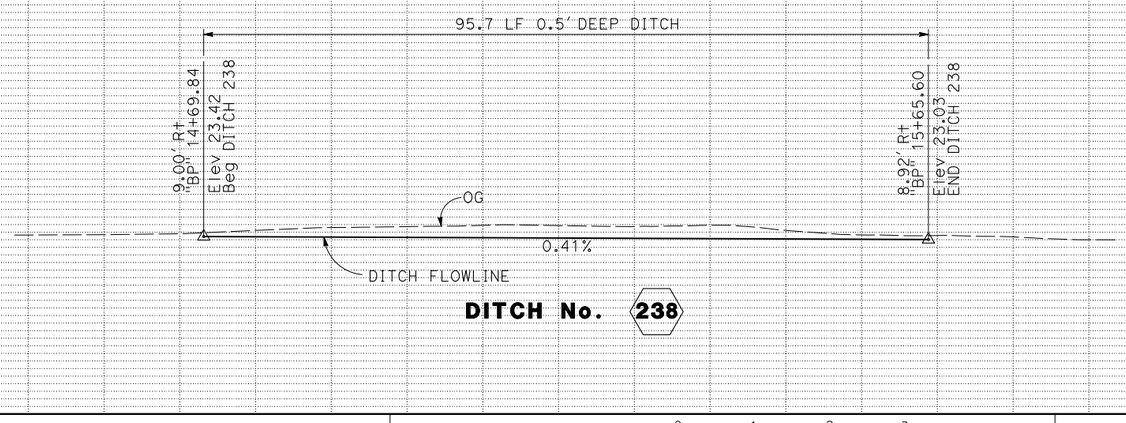

DRAINAGE PROFILES

SCALE: Horiz 1" = 10'
Vert 1" = 10'

DP-87

STATE OF CALIFORNIA - DEPARTMENT OF TRANSPORTATION
Caltrans

CONSULTANT FUNCTIONAL SUPERVISOR: MICHAEL LOHMAN
CALCULATED-DESIGNED BY:
CHECKED BY: TOM CONNELL
CHRIS BRIANA

REVISED BY	DATE REVISED
CB	4/30/12
CB	2/7/14
CB	5/13/14

LAST REVISION 00-00-00
DATE PLOTTED => 30-SEP-2014
TIME PLOTTED => 14:15

BORDER LAST REVISED 7/2/2010
USERNAME => acroskey
DGN FILE => 04000007351b087.dgn
RELATIVE BORDER SCALE IS IN INCHES 0 1 2 3
UNIT 0716
PROJECT NUMBER & PHASE 04000007351

Dist	COUNTY	ROUTE	POST MILES TOTAL PROJECT	SHEET No.	TOTAL SHEETS
04	Mrn, Son	101	26.8/27.6, 0.0/2.0	218	710

REGISTERED CIVIL ENGINEER — DATE: 06/30/14

8-18-14
PLANS APPROVAL DATE

REGISTERED PROFESSIONAL ENGINEER
S. D. DANSKY
No. 60220
Exp. 6/30/16
CIVIL
STATE OF CALIFORNIA

THE STATE OF CALIFORNIA OR ITS OFFICERS OR AGENTS SHALL NOT BE RESPONSIBLE FOR THE ACCURACY OR COMPLETENESS OF SCANNED COPIES OF THIS PLAN SHEET.

MARK THOMAS & CO., INC.
3000 OAK RD, SUITE 650
WALNUT CREEK, CA 94597

TRANSPORTATION AUTHORITY OF MARIN
750 LINDARO ST, SUITE 200
SAN RAFAEL, CA 94901

256.8 LF 2.0' DEEP CONCRETE DITCH

151.27' Rt
"A" 6565+50.60
Elev 15.23
END DITCH 239

177.17' Rt
"A" 6568+16.22
Elev 16.00
Beg DITCH 239

OG

0.30%

DITCH FLOWLINE

30" AFES (f) 14

DITCH No. 239

DRAINAGE PROFILES

SCALE: Horiz 1" = 10'
Vert 1" = 10'

DP-88

REVISED BY	DATE REVISED
CB	4/30/12
CB	2/7/14
CB	5/13/14

CALCULATED-DESIGNED BY: CHRIS BRIANA
CHECKED BY: TOM CONNELL

CONSULTANT FUNCTIONAL SUPERVISOR: MICHAEL LOHMAN

STATE OF CALIFORNIA - DEPARTMENT OF TRANSPORTATION
Caltrans

LAST REVISION 00-00-00
DATE PLOTTED => 30-SEP-2014
TIME PLOTTED => 14:15

BORDER LAST REVISED 7/2/2010
USERNAME => acroskey
DGN FILE => 04000007351b088.dgn
RELATIVE BORDER SCALE IS IN INCHES 0 1 2 3
UNIT 0716
PROJECT NUMBER & PHASE 04000007351

Dist	COUNTY	ROUTE	POST MILES TOTAL PROJECT	SHEET No.	TOTAL SHEETS
04	Mrn, Son	101	26.8/27.6, 0.0/2.0	219	710

REGISTERED CIVIL ENGINEER — DATE 06/30/14

8-18-14
PLANS APPROVAL DATE

REGISTERED PROFESSIONAL ENGINEER — S. D. DANSKY No. 60220 Exp. 6/30/16 CIVIL — STATE OF CALIFORNIA

THE STATE OF CALIFORNIA OR ITS OFFICERS OR AGENTS SHALL NOT BE RESPONSIBLE FOR THE ACCURACY OR COMPLETENESS OF SCANNED COPIES OF THIS PLAN SHEET.

MARK THOMAS & CO., INC.
3000 OAK RD, SUITE 650
WALNUT CREEK, CA 94597

TRANSPORTATION AUTHORITY OF MARIN
750 LINDARO ST, SUITE 200
SAN RAFAEL, CA 94901

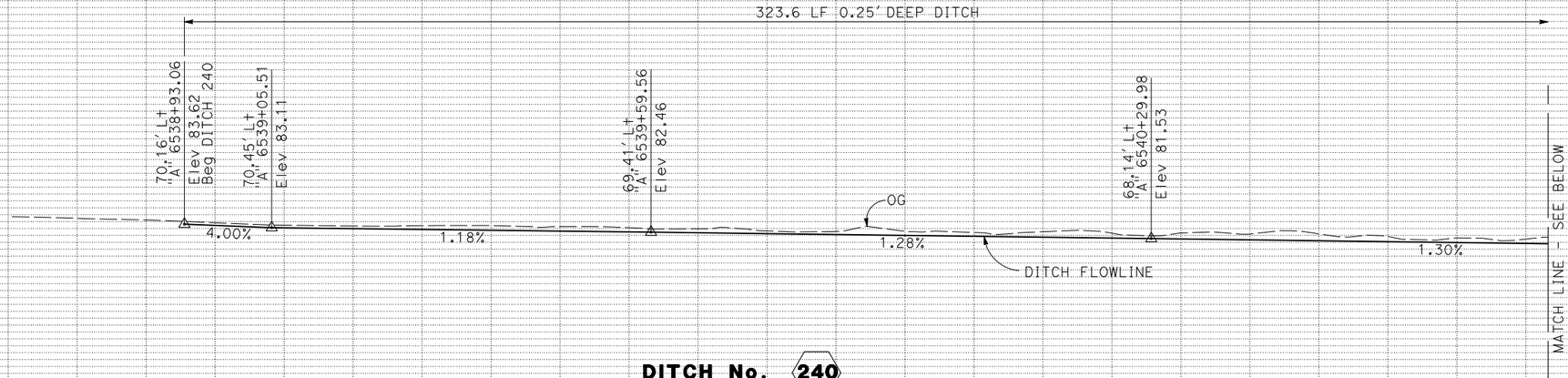

DITCH No. 240

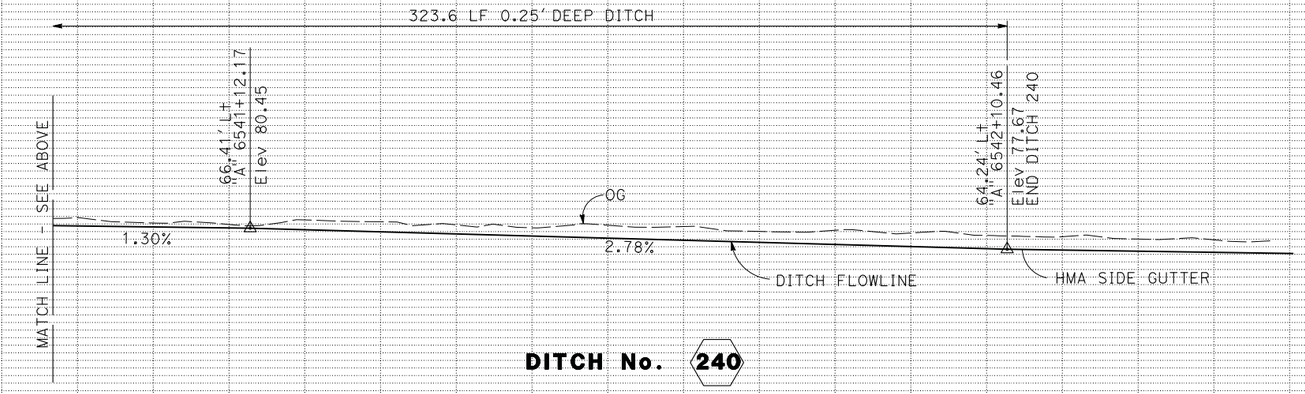

DITCH No. 240

DRAINAGE PROFILES

SCALE: Horiz 1" = 10'
Vert 1" = 10'

DP-89

STATE OF CALIFORNIA - DEPARTMENT OF TRANSPORTATION
Caltrans

CONSULTANT FUNCTIONAL SUPERVISOR: MICHAEL LOHMAN

REVISED BY	DATE REVISED
CB	4/30/12
CB	2/7/14
CB	5/13/14

CALCULATED-DESIGNED BY: CHRIS BRIANA
CHECKED BY: TOM CONNELL

LAST REVISION 00-00-00
DATE PLOTTED => 30-SEP-2014
TIME PLOTTED => 14:15

BORDER LAST REVISED 7/2/2010
USERNAME => acroskey
DGN FILE => 04000007351ib089.dgn
RELATIVE BORDER SCALE IS IN INCHES 0 1 2 3
UNIT 0716
PROJECT NUMBER & PHASE 04000007351

Dist	COUNTY	ROUTE	POST MILES TOTAL PROJECT	SHEET No.	TOTAL SHEETS
04	Mrn, Son	101	26.8/27.6, 0.0/2.0	220	710

REGISTERED CIVIL ENGINEER — DATE 06/30/14

8-18-14
PLANS APPROVAL DATE

REGISTERED PROFESSIONAL ENGINEER
S. D. DANSKY
No. 60220
Exp. 6/30/16
CIVIL
STATE OF CALIFORNIA

THE STATE OF CALIFORNIA OR ITS OFFICERS OR AGENTS SHALL NOT BE RESPONSIBLE FOR THE ACCURACY OR COMPLETENESS OF SCANNED COPIES OF THIS PLAN SHEET.

MARK THOMAS & CO., INC.
3000 OAK RD, SUITE 650
WALNUT CREEK, CA 94597

TRANSPORTATION AUTHORITY OF MARIN
750 LINDARO ST, SUITE 200
SAN RAFAEL, CA 94901

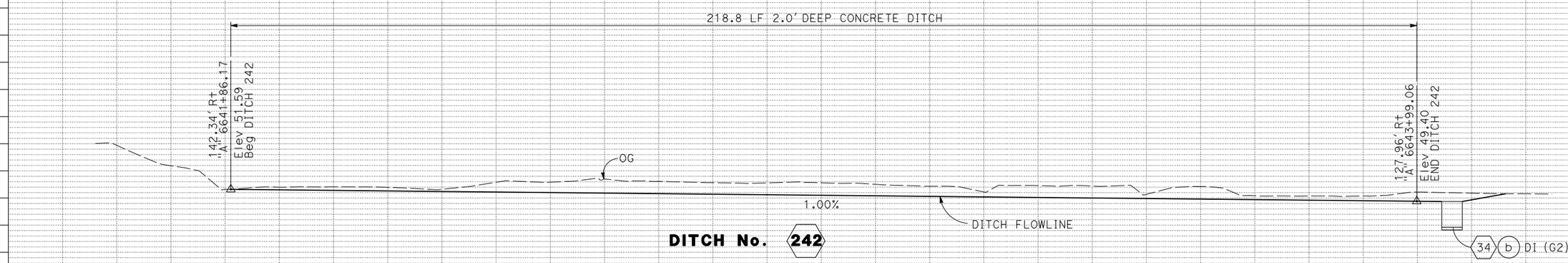

DITCH No. 242

DRAINAGE PROFILES

SCALE: Horiz 1" = 10'
Vert 1" = 10'

DP-90

CB	5/13/14
CB	2/7/14
CB	4/30/12
REVISED BY	DATE REVISED

CHRIS BRIANA
TOM CONNELL
CALCULATED-DESIGNED BY
CHECKED BY

CONSULTANT FUNCTIONAL SUPERVISOR
MICHAEL LOHMAN

STATE OF CALIFORNIA - DEPARTMENT OF TRANSPORTATION
Caltrans

LAST REVISION 00-00-00
DATE PLOTTED => 30-SEP-2014
TIME PLOTTED => 14:16

BORDER LAST REVISED 7/2/2010
USERNAME => acroskey
DGN FILE => 04000007351b090.dgn
RELATIVE BORDER SCALE IS IN INCHES 0 1 2 3
UNIT 0716
PROJECT NUMBER & PHASE 04000007351

Dist	COUNTY	ROUTE	POST MILES TOTAL PROJECT	SHEET No.	TOTAL SHEETS
04	Mrn, Son	101	26.8/27.6, 0.0/2.0	221	710

REGISTERED CIVIL ENGINEER — 06/30/14 DATE

8-18-14
PLANS APPROVAL DATE

REGISTERED PROFESSIONAL ENGINEER — S. D. DANSKY No. 60220 Exp. 6/30/16 CIVIL — STATE OF CALIFORNIA

THE STATE OF CALIFORNIA OR ITS OFFICERS OR AGENTS SHALL NOT BE RESPONSIBLE FOR THE ACCURACY OR COMPLETENESS OF SCANNED COPIES OF THIS PLAN SHEET.

MARK THOMAS & CO., INC.
3000 OAK RD, SUITE 650
WALNUT CREEK, CA 94597

TRANSPORTATION AUTHORITY OF MARIN
750 LINDARO ST, SUITE 200
SAN RAFAEL, CA 94901

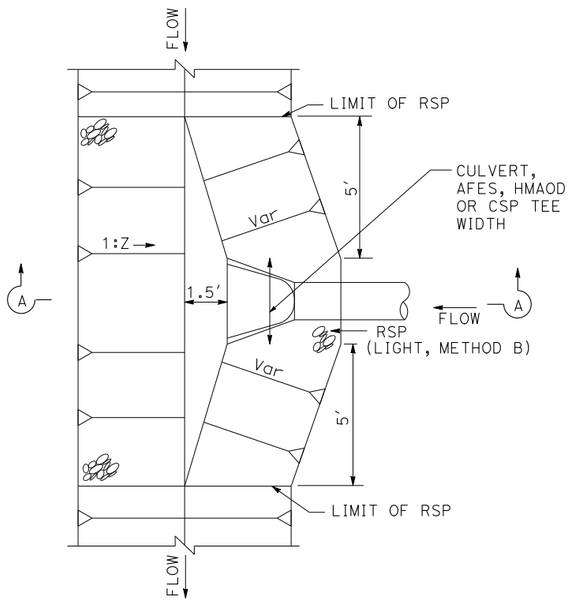

DITCH TRANSITION/ROCK SLOPE PROTECTION

Z=2 UNLESS OTHERWISE SHOWN

65 t, 66 f, 67 f, 1 f, 8 f, 11 f, 13 c, 14 a e, 15 h, 16 h, 17 h, 18 h, 19 f, 20 f, 24 b, 28 h, 33 o, 35 h, 61 a

SECTION A-A

Z=2 UNLESS OTHERWISE SHOWN

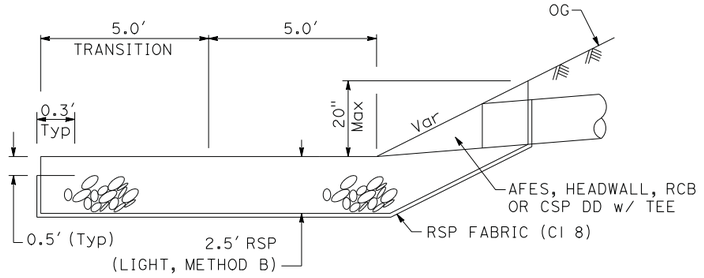

SECTION B-B

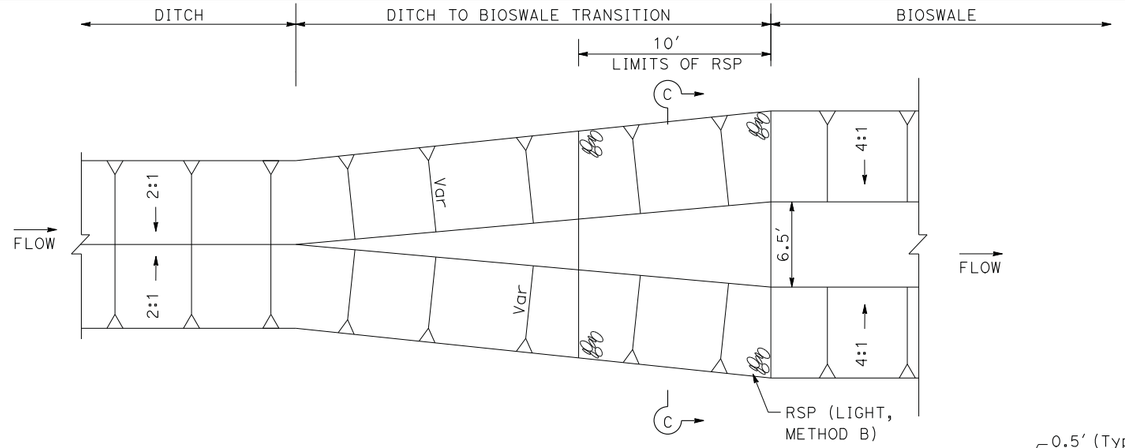

DITCH TRANSITION/ROCK SLOPE ROTECTION

AT DITCH/BIOSWALE TRANSITION

65 a, 66 a, 67 a

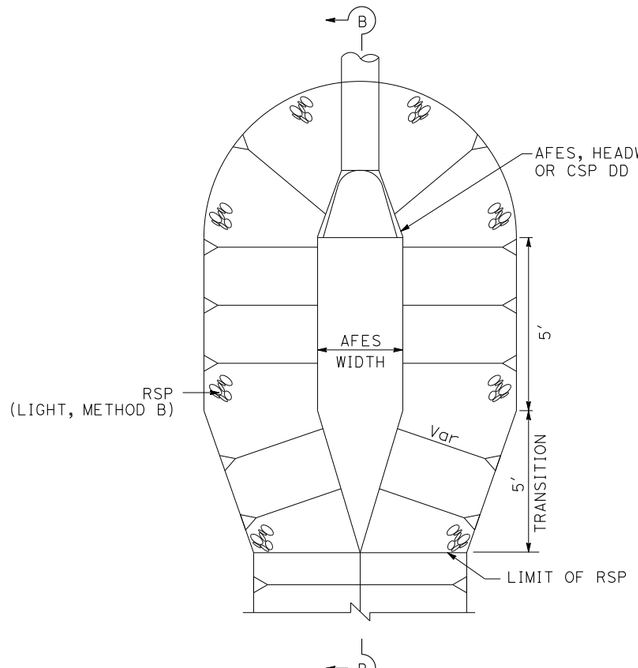

DITCH TRANSITION/ROCK SLOPE PROTECTION

21 f, 22 a e, 25 a, 26 a g, 27 a e, 30 a, 34 a s, 36 a, 37 a, 38 a, 40 b, 53 a

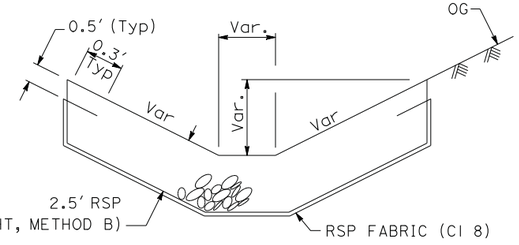

SECTION C-C

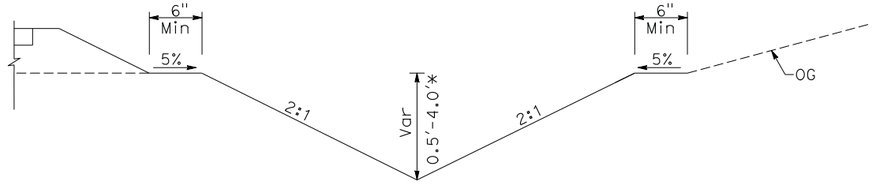

EARTH V-DITCH

203, 204, 205, 206, 207, 208, 209, 212, 221, 229, 230, 231, 234, 237, 238, 240

* FOR DITCH DEPTHS, SEE SHEETS DP-56 THRU DP-91.

DRAINAGE DETAILS

NO SCALE

DD-1

REVISED BY	DATE REVISED
CB	4/30/12
CB	2/7/14
CB	5/13/14

CHRIS BRIANA — CALCULATED-DESIGNED BY
TOM CONNELL — CHECKED BY

CONSULTANT FUNCTIONAL SUPERVISOR — MICHAEL LOHMAN

STATE OF CALIFORNIA - DEPARTMENT OF TRANSPORTATION — Caltrans

LAST REVISION 00-00-00 | DATE PLOTTED => 30-SEP-2014 | TIME PLOTTED => 14:16

BORDER LAST REVISED 7/2/2010 | USERNAME => acroskey | DGN FILE => 0400000735ic001.dgn | RELATIVE BORDER SCALE IS IN INCHES 0 1 2 3 | UNIT 0716 | PROJECT NUMBER & PHASE 04000007351

Dist	COUNTY	ROUTE	POST MILES TOTAL PROJECT	SHEET No.	TOTAL SHEETS
04	Mrn, Son	101	26.8/27.6, 0.0/2.0	222	710

REGISTERED CIVIL ENGINEER — 06/30/14 DATE

8-18-14
PLANS APPROVAL DATE

REGISTERED PROFESSIONAL ENGINEER — S. D. DANSKY — No. 60220 — Exp. 6/30/16 — CIVIL — STATE OF CALIFORNIA

THE STATE OF CALIFORNIA OR ITS OFFICERS OR AGENTS SHALL NOT BE RESPONSIBLE FOR THE ACCURACY OR COMPLETENESS OF SCANNED COPIES OF THIS PLAN SHEET.

MARK THOMAS & CO., INC.
3000 OAK RD, SUITE 650
WALNUT CREEK, CA 94597

TRANSPORTATION AUTHORITY OF MARIN
750 LINDARO ST, SUITE 200
SAN RAFAEL, CA 94901

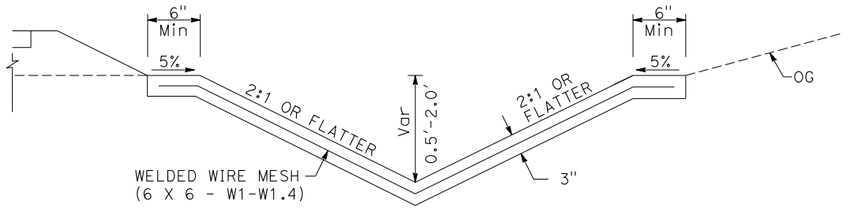

CONCRETE-LINED V-DITCH

201 202 210 211 212 213 214 215 216 217 218
219 220 222 223 224 225 226 234 235 239 242

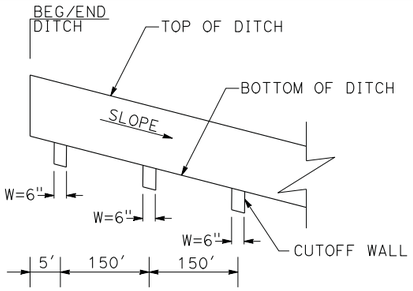

ELEVATION VIEW

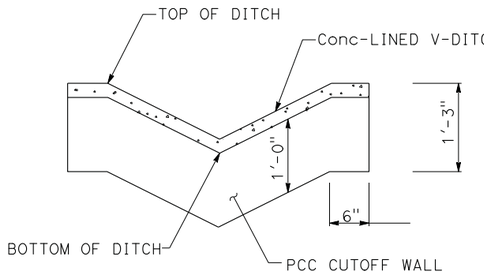

SECTION

CUTOFF WALL DETAIL

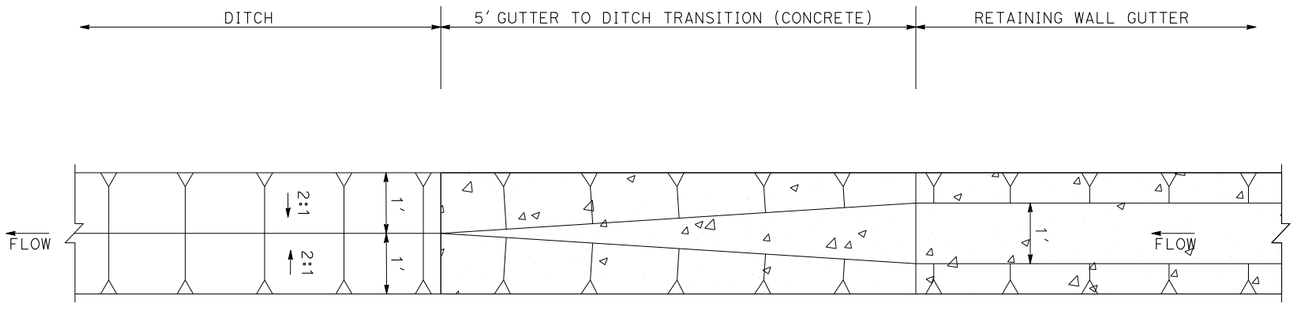

RETAINING WALL GUTTER TO DITCH TRANSITION

216

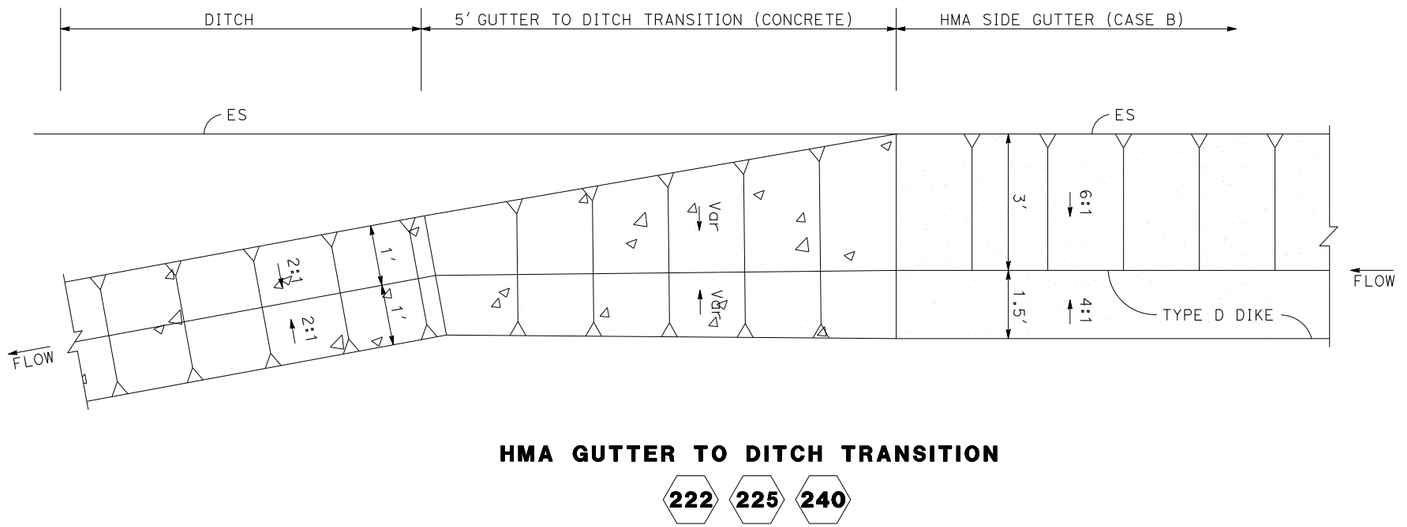

HMA GUTTER TO DITCH TRANSITION

222 225 240

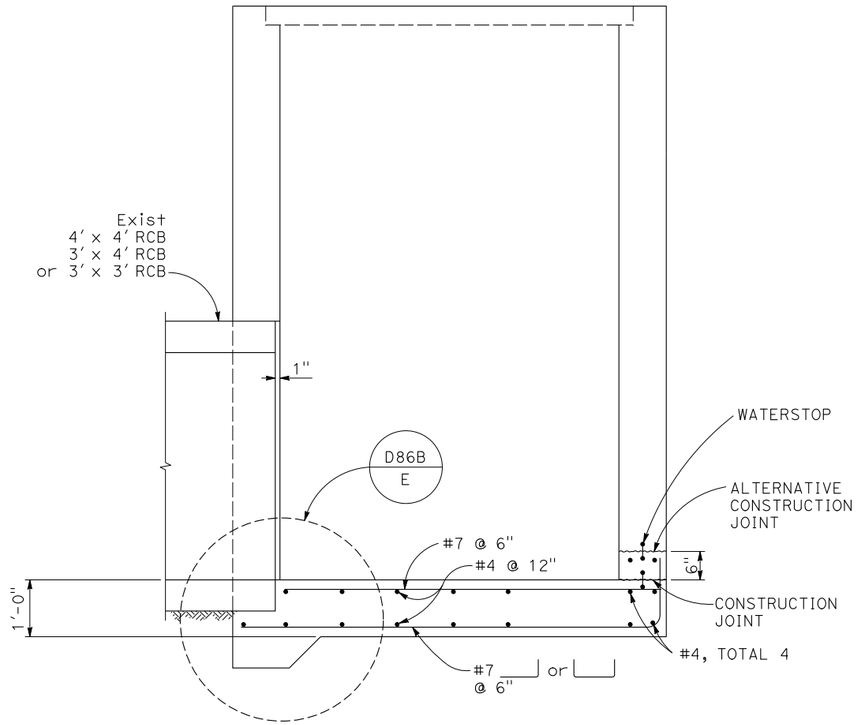

DI G2 Mod

26 ap 31 a

FOR DETAILS NOT SHOWN, SEE STD PLAN D73

DRAINAGE DETAILS

NO SCALE

DD-2

REVISED BY	DATE REVISED
CB	4/30/12
CB	2/7/14
CB	5/13/14

CHRIS BRIANA — TOM CONNELL — CALCULATED-DESIGNED BY — CHECKED BY

MICHAEL LOHMAN — CONSULTANT FUNCTIONAL SUPERVISOR

STATE OF CALIFORNIA - DEPARTMENT OF TRANSPORTATION — Caltrans

LAST REVISION 00-00-00 — DATE PLOTTED => 30-SEP-2014 — TIME PLOTTED => 14:16

BORDER LAST REVISED 7/2/2010 | USERNAME => acroskey | DGN FILE => 04000007351ic002.dgn | RELATIVE BORDER SCALE IS IN INCHES 0 1 2 3 | UNIT 0716 | PROJECT NUMBER & PHASE 04000007351

Dist	COUNTY	ROUTE	POST MILES TOTAL PROJECT	SHEET No.	TOTAL SHEETS
04	Mrn, Son	101	26.8/27.6, 0.0/2.0	223	710

REGISTERED CIVIL ENGINEER — 06/30/14 DATE

8-18-14
PLANS APPROVAL DATE

REGISTERED PROFESSIONAL ENGINEER — S. D. DANSKY No. 60220 Exp. 6/30/16 CIVIL — STATE OF CALIFORNIA

THE STATE OF CALIFORNIA OR ITS OFFICERS OR AGENTS SHALL NOT BE RESPONSIBLE FOR THE ACCURACY OR COMPLETENESS OF SCANNED COPIES OF THIS PLAN SHEET.

MARK THOMAS & CO., INC.
3000 OAK RD, SUITE 650
WALNUT CREEK, CA 94597

TRANSPORTATION AUTHORITY OF MARIN
750 LINDARO ST, SUITE 200
SAN RAFAEL, CA 94901

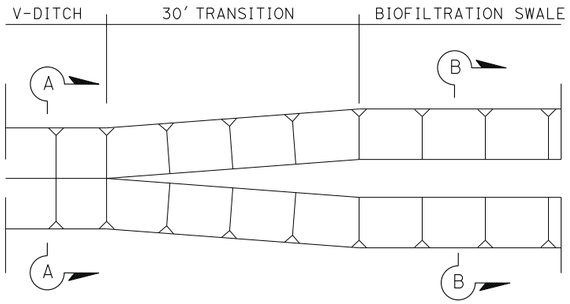

BIOFILTRATION SWALE TRANSITION

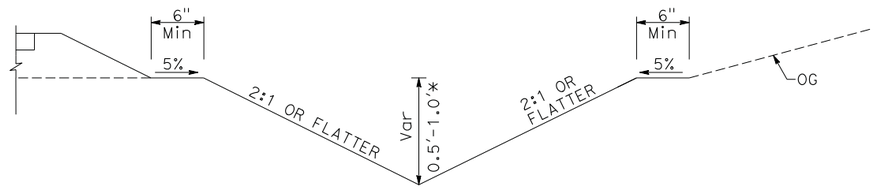

V-DITCH

SECTION A-A

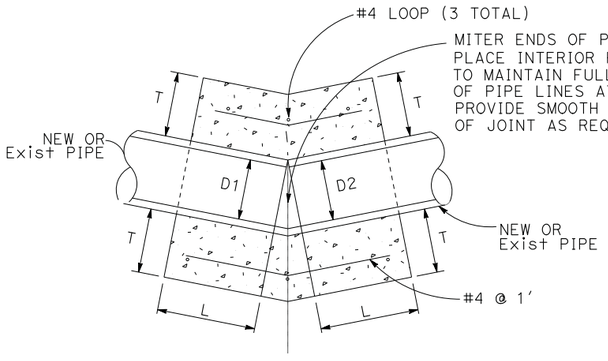

D	L	T
1'	1'	0.5'
1.5'	1'	0.5'
2'	1'	0.5'
3'	1.5'	0.67'

CONCRETE COLLAR DETAIL

1 aq — 13 a — 32 a

NOTES:

1. WHERE PIPES OF DIFFERENT DIAMETER ARE JOINED WITH A CONCRETE COLLAR, L AND T SHALL BE THOSE OF THE LARGER PIPE. D=D1 OR D2, WHICH EVER IS GREATER.
2. WHEN D1 IS EQUAL OR LESS THAN D2 JOIN INVERTS WHEN D1 IS GREATER THAN D2, JOIN SOFFITS.
3. FOR PIPE SIZES NOT LISTED USE NEXT LARGER SIZE.

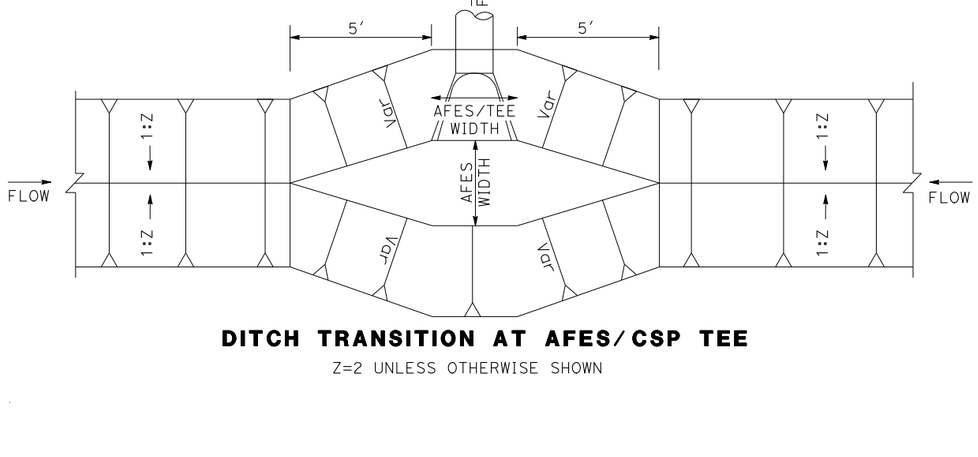

DITCH TRANSITION AT AFES/CSP TEE

Z=2 UNLESS OTHERWISE SHOWN

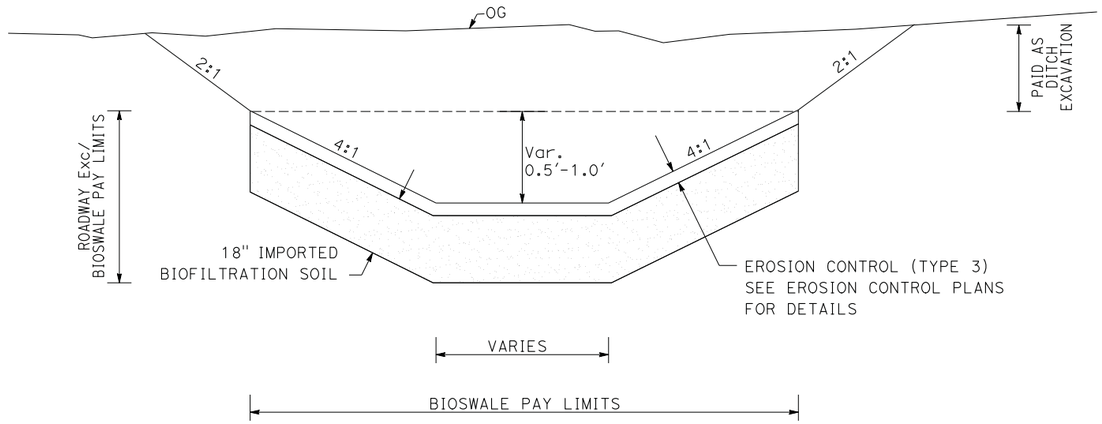

BIOFILTRATION SWALE

SECTION B-B

102 103 104 105 106 107 109 110 111

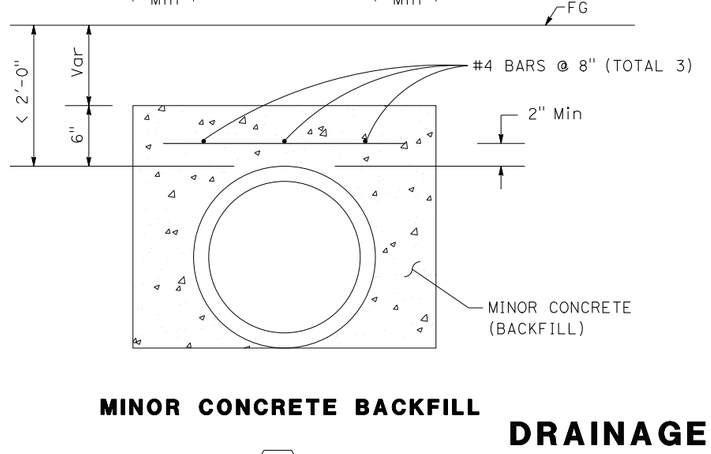

MINOR CONCRETE BACKFILL

14 c

DRAINAGE DETAILS

NO SCALE

DD-3

CALCULATED-DESIGNED BY	CB	CB	CB
CHECKED BY	TOM CONNELL	4/30/12	5/13/14
CONSULTANT FUNCTIONAL SUPERVISOR	MICHAEL LOHMAN	2/7/14	
REVISED BY	CHRIS BRIANA		
DATE REVISED			

STATE OF CALIFORNIA - DEPARTMENT OF TRANSPORTATION

LAST REVISION 00-00-00 | DATE PLOTTED => 30-SEP-2014 | TIME PLOTTED => 14:16

BORDER LAST REVISED 7/2/2010 | USERNAME => acroskey | DGN FILE => 0400000735ic003.dgn | RELATIVE BORDER SCALE IS IN INCHES 0 1 2 3 | UNIT 0716 | PROJECT NUMBER & PHASE 04000007351

Dist	COUNTY	ROUTE	POST MILES TOTAL PROJECT	SHEET No.	TOTAL SHEETS
04	Mrn, Son	101	26.8/27.6, 0.0/2.0	224	710

REGISTERED CIVIL ENGINEER — DATE 06/30/14

8-18-14
PLANS APPROVAL DATE

REGISTERED PROFESSIONAL ENGINEER
S. D. DANSKY
No. 60220
Exp. 6/30/16
CIVIL
STATE OF CALIFORNIA

THE STATE OF CALIFORNIA OR ITS OFFICERS OR AGENTS SHALL NOT BE RESPONSIBLE FOR THE ACCURACY OR COMPLETENESS OF SCANNED COPIES OF THIS PLAN SHEET.

MARK THOMAS & CO., INC.
3000 OAK RD, SUITE 650
WALNUT CREEK, CA 94597

TRANSPORTATION AUTHORITY OF MARIN
750 LINDARO ST, SUITE 200
SAN RAFAEL, CA 94901

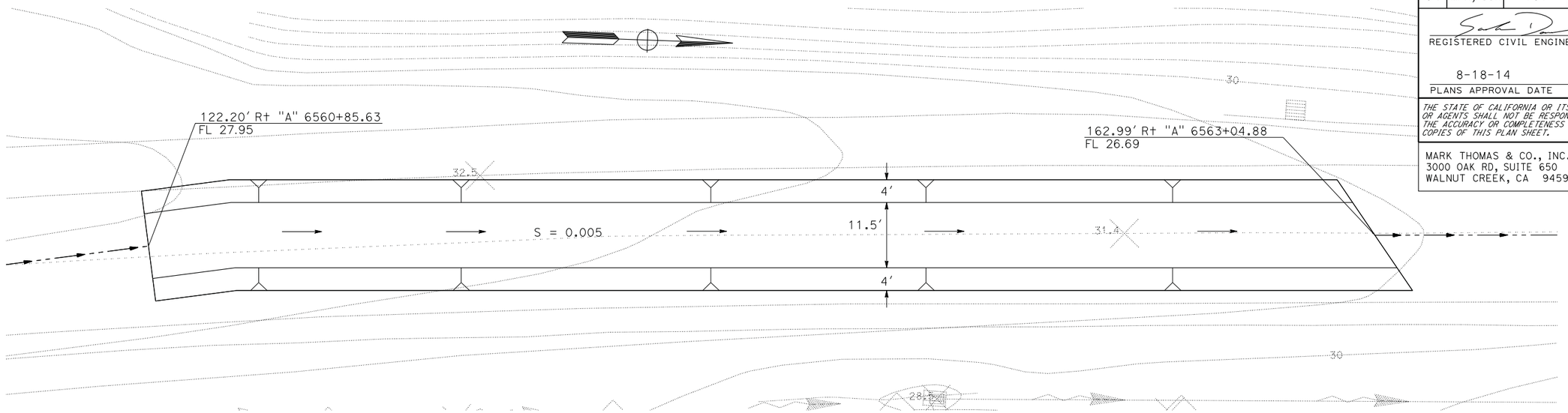

BIOFILTRATION SWALE (102)

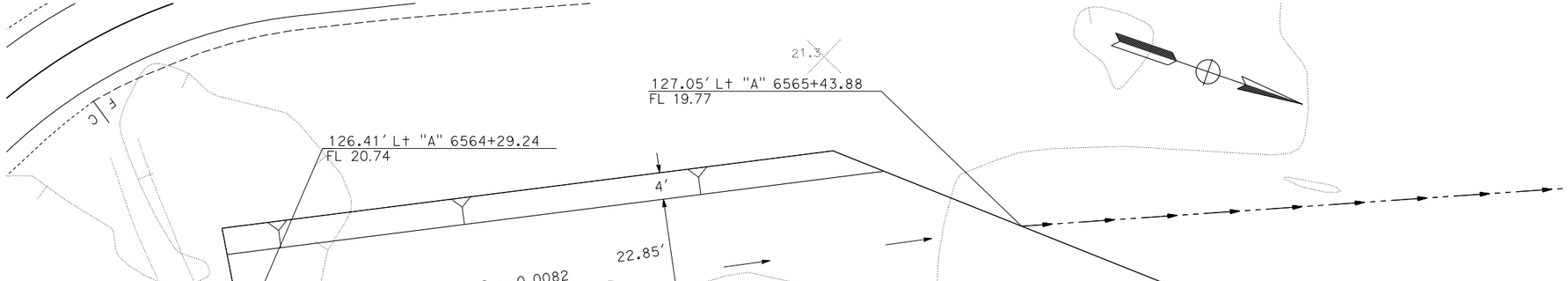

BIOFILTRATION SWALE (103)

DRAINAGE DETAIL

SCALE: 1" = 10'

DD-4

CB 5/13/14
CB 2/7/14
CB 4/30/12
REVISED BY / DATE REVISED

CHRIS BRIANA
TOM CONNELL

CALCULATED-DESIGNED BY
CHECKED BY

CONSULTANT FUNCTIONAL SUPERVISOR
MICHAEL LOHMAN

STATE OF CALIFORNIA - DEPARTMENT OF TRANSPORTATION
Caltrans

LAST REVISION 00-00-00
DATE PLOTTED => 30-SEP-2014
TIME PLOTTED => 14:16

Dist	COUNTY	ROUTE	POST MILES TOTAL PROJECT	SHEET No.	TOTAL SHEETS
04	Mrn, Son	101	26.8/27.6, 0.0/2.0	225	710

REGISTERED CIVIL ENGINEER — 06/30/14 DATE

8-18-14
PLANS APPROVAL DATE

REGISTERED PROFESSIONAL ENGINEER
S. D. DANSKY
No. 60220
Exp. 6/30/16
CIVIL
STATE OF CALIFORNIA

THE STATE OF CALIFORNIA OR ITS OFFICERS OR AGENTS SHALL NOT BE RESPONSIBLE FOR THE ACCURACY OR COMPLETENESS OF SCANNED COPIES OF THIS PLAN SHEET.

MARK THOMAS & CO., INC.
3000 OAK RD, SUITE 650
WALNUT CREEK, CA 94597

TRANSPORTATION AUTHORITY OF MARIN
750 LINDARO ST, SUITE 200
SAN RAFAEL, CA 94901

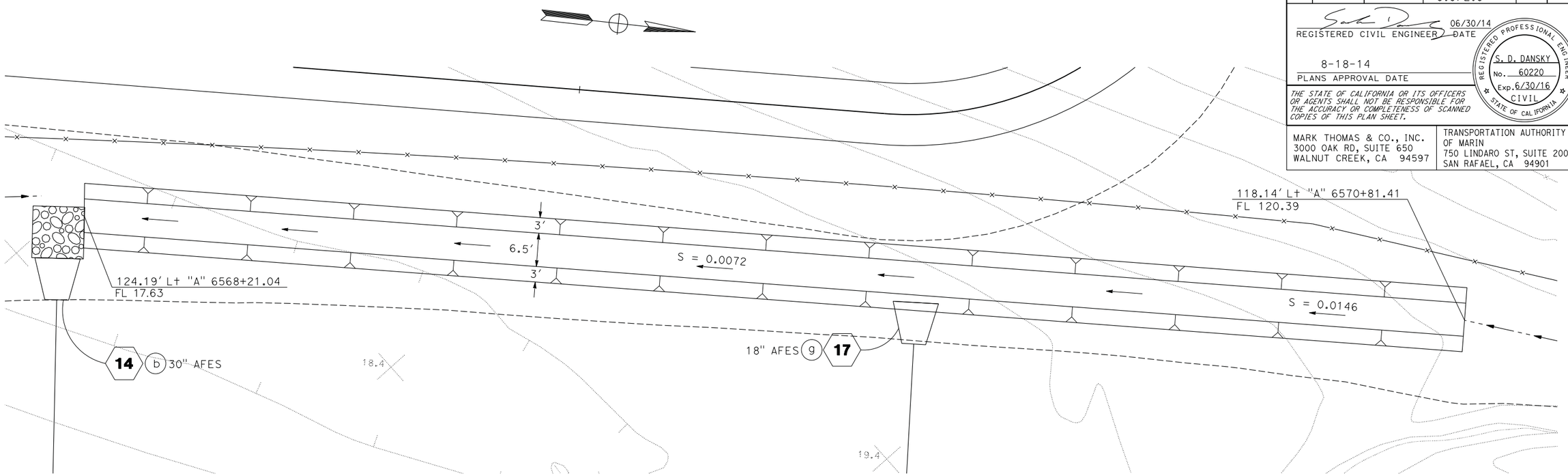

BIOFILTRATION SWALE 104

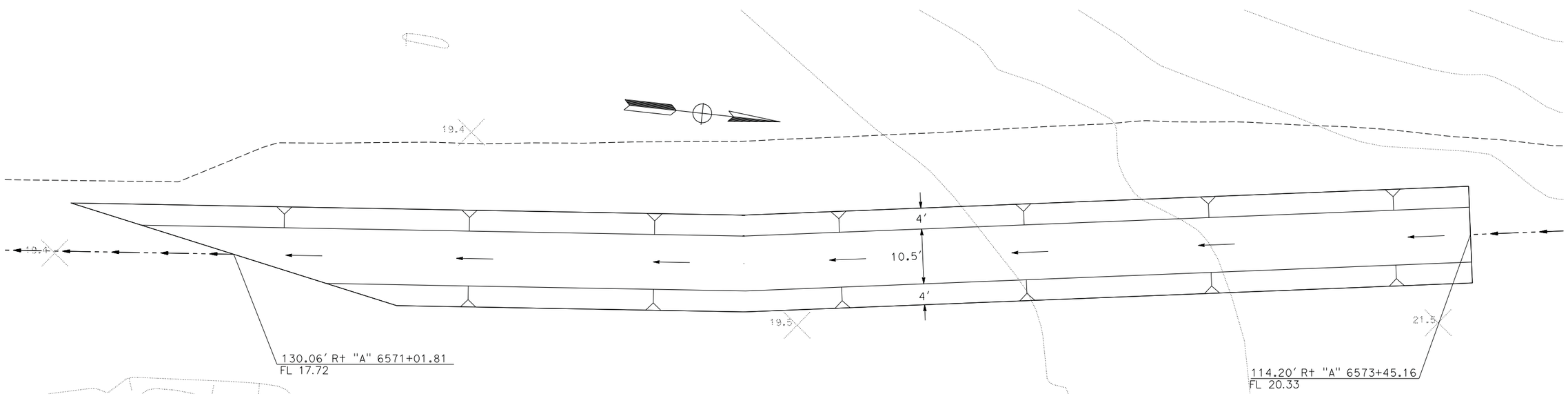

BIOFILTRATION SWALE 105

DRAINAGE DETAIL

SCALE: 1" = 10′

DD-5

CALCULATED-DESIGNED BY	CB
CHECKED BY	TOM CONNELL
REVISED BY	CHRIS BRIANA
DATE REVISED	CB
	4/30/12
	CB
	2/7/14
	CB
	5/13/14

CONSULTANT FUNCTIONAL SUPERVISOR: MICHAEL LOHMAN

STATE OF CALIFORNIA - DEPARTMENT OF TRANSPORTATION
Caltrans

LAST REVISION 00-00-00
DATE PLOTTED => 30-SEP-2014
TIME PLOTTED => 14:16

BORDER LAST REVISED 7/2/2010

USERNAME => acroskey
DGN FILE => 04000007351ic005.dgn

RELATIVE BORDER SCALE IS IN INCHES 0 1 2 3

UNIT 0716

PROJECT NUMBER & PHASE 04000007351

Dist	COUNTY	ROUTE	POST MILES TOTAL PROJECT	SHEET No.	TOTAL SHEETS
04	Mrn, Son	101	26.8/27.6, 0.0/2.0	226	710

REGISTERED CIVIL ENGINEER — DATE 06/30/14

8-18-14
PLANS APPROVAL DATE

REGISTERED PROFESSIONAL ENGINEER
S. D. DANSKY
No. 60220
Exp. 6/30/16
CIVIL
STATE OF CALIFORNIA

THE STATE OF CALIFORNIA OR ITS OFFICERS OR AGENTS SHALL NOT BE RESPONSIBLE FOR THE ACCURACY OR COMPLETENESS OF SCANNED COPIES OF THIS PLAN SHEET.

MARK THOMAS & CO., INC.
3000 OAK RD, SUITE 650
WALNUT CREEK, CA 94597

TRANSPORTATION AUTHORITY OF MARIN
750 LINDARO ST, SUITE 200
SAN RAFAEL, CA 94901

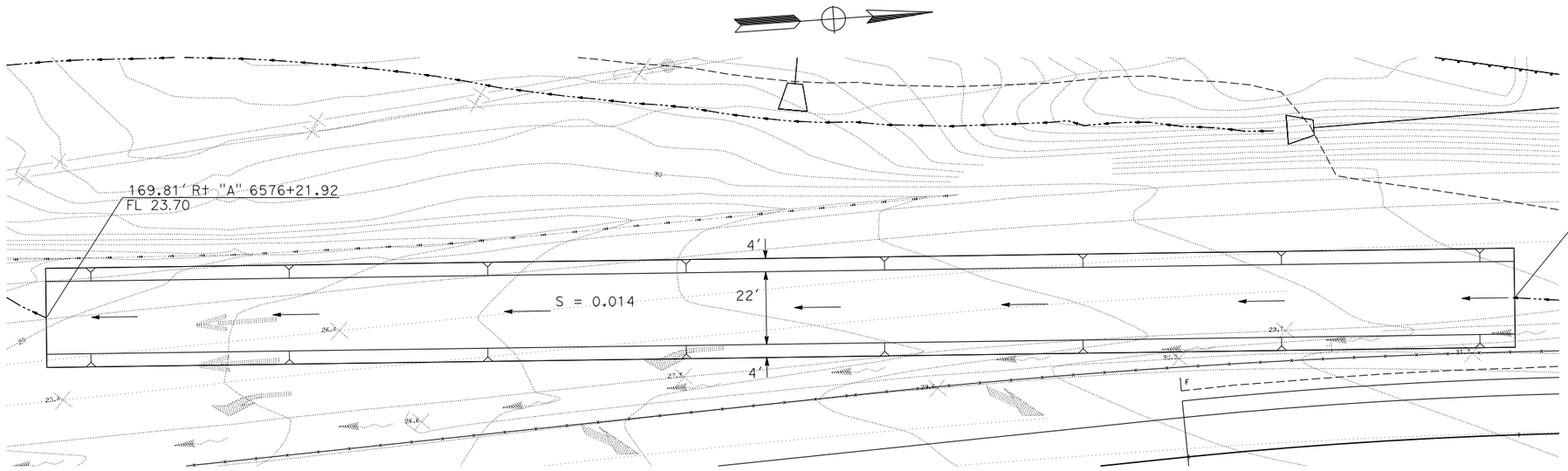

BIOFILTRATION SWALE (106)

SCALE: 1" = 20'

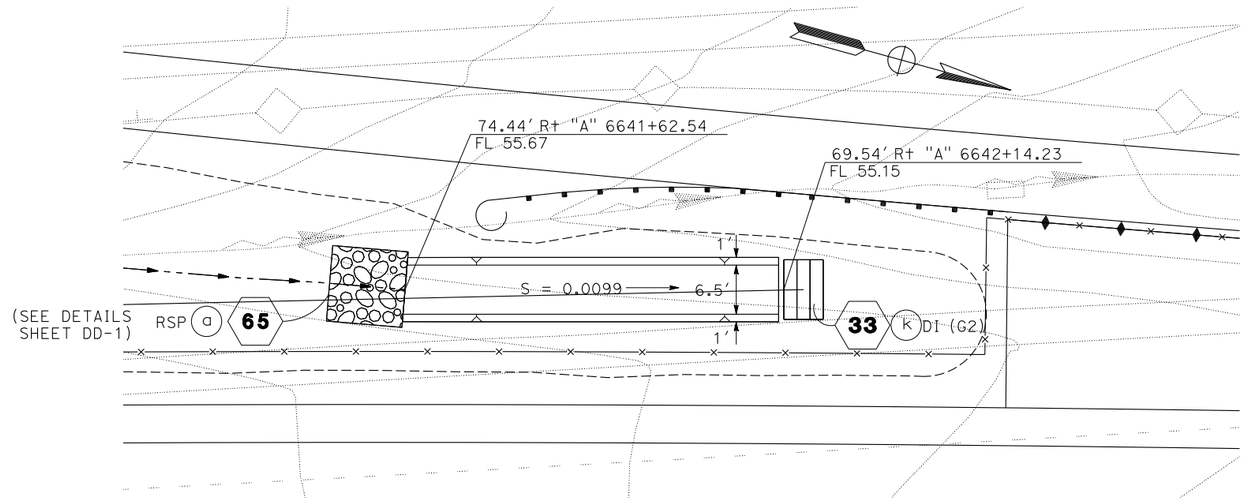

BIOFILTRATION SWALE (107)

SCALE: 1" = 10'

DRAINAGE DETAIL

SCALE: 1" = 10'

DD-6

CB 5/13/14
CB 2/7/14
CB 4/30/12
REVISED BY / DATE REVISED
CHRIS BRIANA / TOM CONNELL — CALCULATED-DESIGNED BY / CHECKED BY
CONSULTANT FUNCTIONAL SUPERVISOR: MICHAEL LOHMAN
STATE OF CALIFORNIA - DEPARTMENT OF TRANSPORTATION — Caltrans

LAST REVISION 00-00-00 | DATE PLOTTED => 30-SEP-2014 | TIME PLOTTED => 14:16

BORDER LAST REVISED 7/2/2010 | USERNAME => acroskey | DGN FILE => 0400000735ic006.dgn | RELATIVE BORDER SCALE IS IN INCHES 0 1 2 3 | UNIT 0716 | PROJECT NUMBER & PHASE 04000007351

Dist	COUNTY	ROUTE	POST MILES TOTAL PROJECT	SHEET No.	TOTAL SHEETS
04	Mrn, Son	101	26.8/27.6, 0.0/2.0	227	710

REGISTERED CIVIL ENGINEER — 06/30/14 DATE

REGISTERED PROFESSIONAL ENGINEER
S. D. DANSKY
No. 60220
Exp. 6/30/16
CIVIL
STATE OF CALIFORNIA

8-18-14
PLANS APPROVAL DATE

THE STATE OF CALIFORNIA OR ITS OFFICERS OR AGENTS SHALL NOT BE RESPONSIBLE FOR THE ACCURACY OR COMPLETENESS OF SCANNED COPIES OF THIS PLAN SHEET.

MARK THOMAS & CO., INC.
3000 OAK RD, SUITE 650
WALNUT CREEK, CA 94597

TRANSPORTATION AUTHORITY OF MARIN
750 LINDARO ST, SUITE 200
SAN RAFAEL, CA 94901

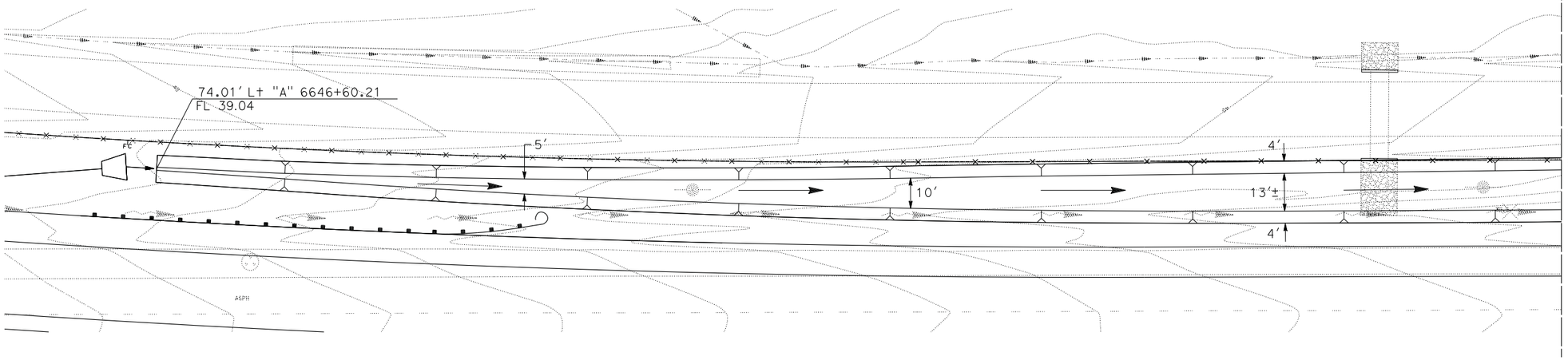

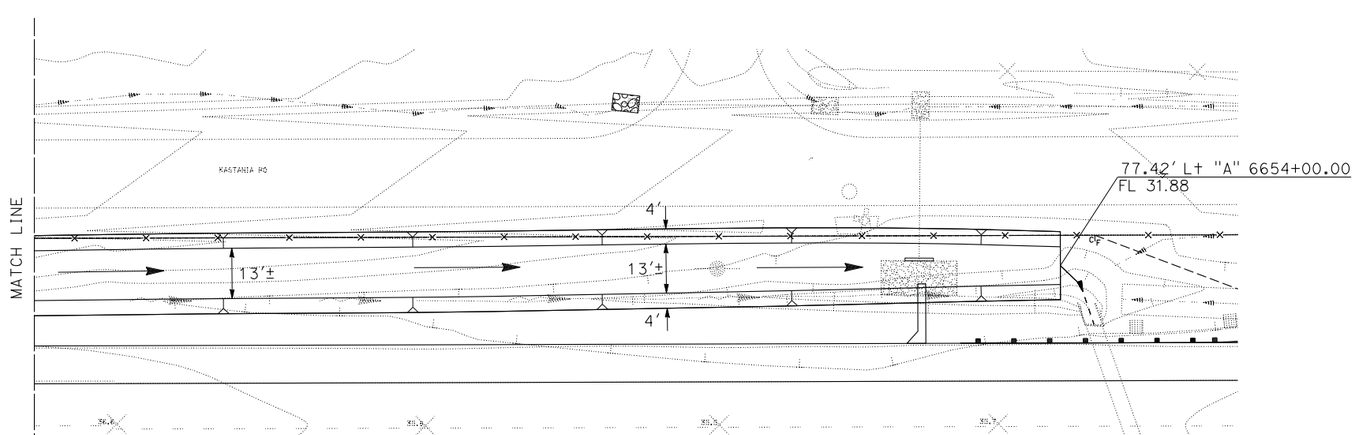

BIOFILTRATION SWALE 109

DRAINAGE DETAIL

SCALE: 1" = 20'

DD-7

REVISED BY	CB	CB	CB	CB
DATE REVISED	4/30/12	2/7/14	5/13/14	
CHRIS BRIANA				
TOM CONNELL				
CALCULATED-DESIGNED BY				
CHECKED BY				
CONSULTANT FUNCTIONAL SUPERVISOR	MICHAEL LOHMAN			

STATE OF CALIFORNIA - DEPARTMENT OF TRANSPORTATION

LAST REVISION 00-00-00
DATE PLOTTED => 30-SEP-2014
TIME PLOTTED => 14:16

BORDER LAST REVISED 7/2/2010

USERNAME => acroskey
DGN FILE => 04000007351ic007.dgn

RELATIVE BORDER SCALE IS IN INCHES 0 1 2 3

UNIT 0716

PROJECT NUMBER & PHASE 04000007351

Dist	COUNTY	ROUTE	POST MILES TOTAL PROJECT	SHEET No.	TOTAL SHEETS
04	Mrn, Son	101	26.8/27.6, 0.0/2.0	228	710

REGISTERED CIVIL ENGINEER — DATE 06/30/14

REGISTERED PROFESSIONAL ENGINEER
S. D. DANSKY
No. 60220
Exp. 6/30/16
CIVIL
STATE OF CALIFORNIA

8-18-14
PLANS APPROVAL DATE

THE STATE OF CALIFORNIA OR ITS OFFICERS OR AGENTS SHALL NOT BE RESPONSIBLE FOR THE ACCURACY OR COMPLETENESS OF SCANNED COPIES OF THIS PLAN SHEET.

MARK THOMAS & CO., INC.
3000 OAK RD, SUITE 650
WALNUT CREEK, CA 94597

TRANSPORTATION AUTHORITY OF MARIN
750 LINDARO ST, SUITE 200
SAN RAFAEL, CA 94901

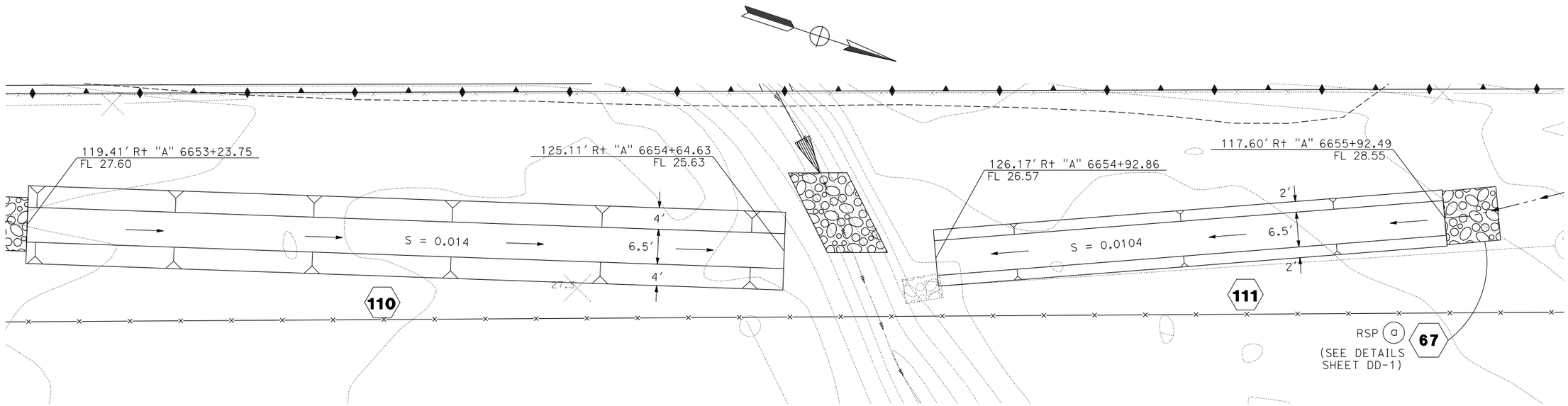

BIOFILTRATION SWALE 110 & 111

DRAINAGE DETAIL

SCALE: 1" = 10′

DD-8

CB 5/13/14
CB 2/7/14
CB 4/30/12
REVISED BY / DATE REVISED

CHRIS BRIANA
TOM CONNELL
CALCULATED-DESIGNED BY / CHECKED BY

CONSULTANT FUNCTIONAL SUPERVISOR
MICHAEL LOHMAN

STATE OF CALIFORNIA - DEPARTMENT OF TRANSPORTATION
Caltrans

LAST REVISION 00-00-00
DATE PLOTTED => 30-SEP-2014
TIME PLOTTED => 14:16

BORDER LAST REVISED 7/2/2010
USERNAME => acroskey
DGN FILE => 0400000735ic008.dgn
RELATIVE BORDER SCALE IS IN INCHES 0 1 2 3
UNIT 0716
PROJECT NUMBER & PHASE 04000007351

Dist	COUNTY	ROUTE	POST MILES TOTAL PROJECT	SHEET No.	TOTAL SHEETS
04	Mrn, Son	101	26.8/27.6, 0.0/2.0	229	710

REGISTERED CIVIL ENGINEER — 06/30/14 DATE

8-18-14
PLANS APPROVAL DATE

REGISTERED PROFESSIONAL ENGINEER — S. D. DANSKY No. 60220 Exp. 6/30/16 CIVIL — STATE OF CALIFORNIA

THE STATE OF CALIFORNIA OR ITS OFFICERS OR AGENTS SHALL NOT BE RESPONSIBLE FOR THE ACCURACY OR COMPLETENESS OF SCANNED COPIES OF THIS PLAN SHEET.

MARK THOMAS & CO., INC.
3000 OAK RD, SUITE 650
WALNUT CREEK, CA 94597

TRANSPORTATION AUTHORITY OF MARIN
750 LINDARO ST, SUITE 200
SAN RAFAEL, CA 94901

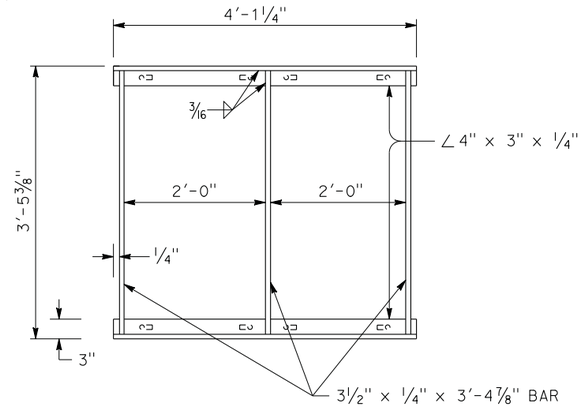

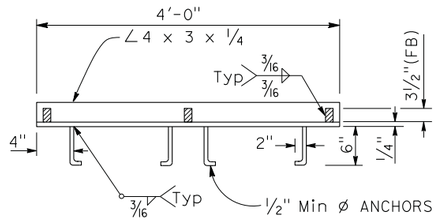

CROSS SECTION
(THRU FRAME)

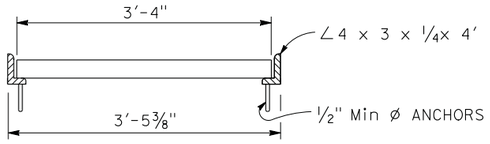

LONGITUDINAL SECTION
(THRU FRAME AND GRATE)

MODIFIED GRATE FRAME DETAILS

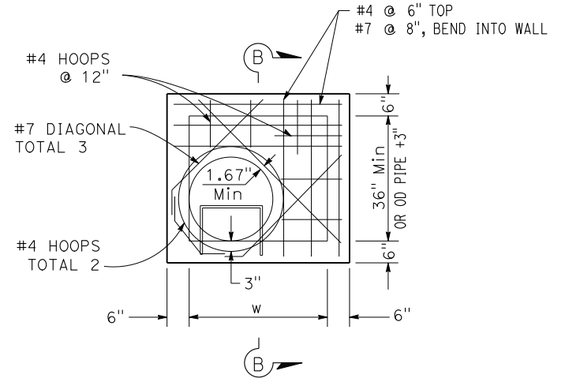

PLAN

RECTANGULAR FRAME DETAILS

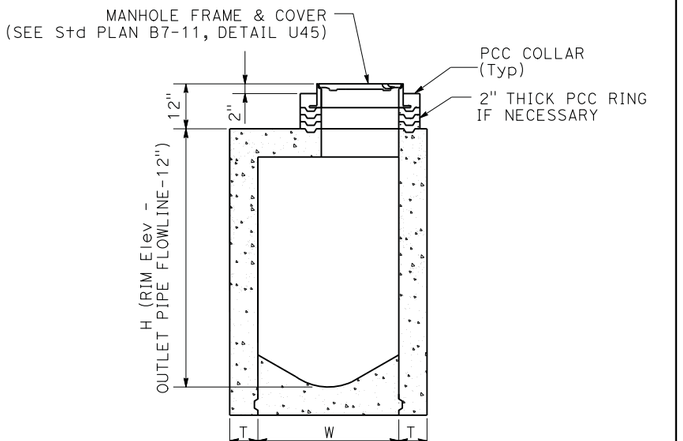

SECTION B-B

NOTES:

1. FOR DETAILS NOT SHOWN, SEE Std PLAN D73.
2. W IS OD PIPE + 3" ±
3. FOR DI'S DEEPER THAN 8', WALLS SHALL BE 8" THICK AND REINFORCED PER NOTE 3 OF STANDARD PLAN D73.

DI (TYPE G2 Mod) w/ MH LID

33 (j) 34 (d)(f)(h)(l)(t)(p)

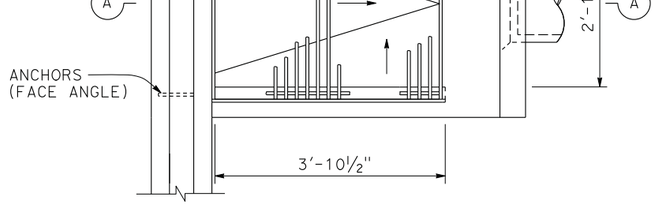

PLAN

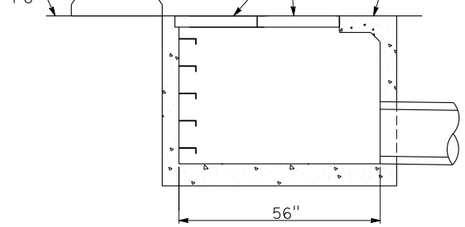

SECTION A-A

NOTES:

1. FOR INLET DETAILS NOT SHOWN, SEE TYPE GDO ON Std PLAN D74B.
2. FOR FRAME AND GRATE DETAILS NOT SHOWN, SEE Std PLAN D77A.

MODIFIED GDO INLET

15 (c) 25 (ae)(ai)(al) 30 (f)(j)(n)(r)(v)(z)(an) 35 (a)(c)(k)(m)

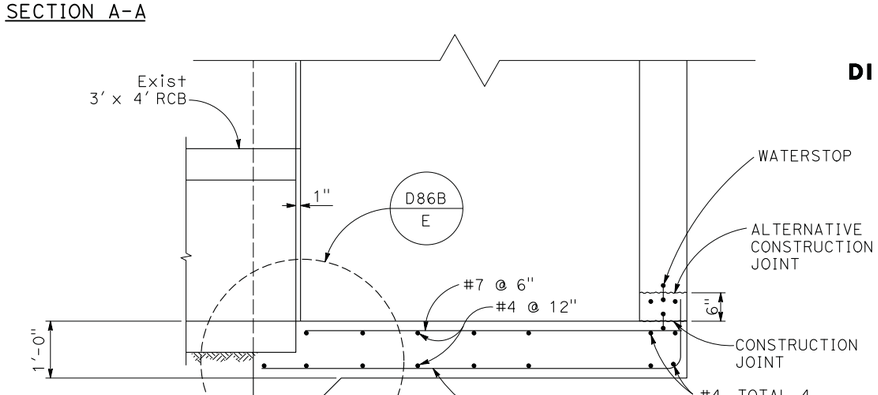

REINFORCED FLOOR DETAIL

34 (p)

DRAINAGE DETAILS

DD-9

STATE OF CALIFORNIA - DEPARTMENT OF TRANSPORTATION
Caltrans

CONSULTANT FUNCTIONAL SUPERVISOR: MICHAEL LOHMAN
CALCULATED-DESIGNED BY:
CHECKED BY:
CHRIS BRIANA
TOM CONNELL

REVISED BY	DATE REVISED
CB	4/30/12
CB	2/7/14
CB	5/13/14

LAST REVISION 00-00-00
DATE PLOTTED => 30-SEP-2014
TIME PLOTTED => 14:16

BORDER LAST REVISED 7/2/2010
USERNAME => acroskey
DGN FILE => 0400000735ic009.dgn
RELATIVE BORDER SCALE IS IN INCHES 0 1 2 3
UNIT 0716
PROJECT NUMBER & PHASE 04000007351

Dist	COUNTY	ROUTE	POST MILES TOTAL PROJECT	SHEET No.	TOTAL SHEETS
04	Mrn, Son	101	26.8/27.6, 0.0/2.0	230	710

REGISTERED CIVIL ENGINEER — 06/30/14 DATE

8-18-14
PLANS APPROVAL DATE

REGISTERED PROFESSIONAL ENGINEER — S. D. DANSKY No. 60220 Exp. 6/30/16 CIVIL — STATE OF CALIFORNIA

THE STATE OF CALIFORNIA OR ITS OFFICERS OR AGENTS SHALL NOT BE RESPONSIBLE FOR THE ACCURACY OR COMPLETENESS OF SCANNED COPIES OF THIS PLAN SHEET.

MARK THOMAS & CO., INC.
3000 OAK RD, SUITE 650
WALNUT CREEK, CA 94597

TRANSPORTATION AUTHORITY OF MARIN
750 LINDARO ST, SUITE 200
SAN RAFAEL, CA 94901

NOTE:

1. FOR INFORMATION NOT SHOWN, SEE Std PLAN D73 THRU RSP D74B SHEETS.

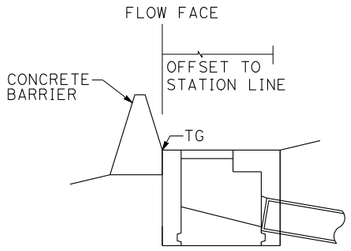

SECTION B-B

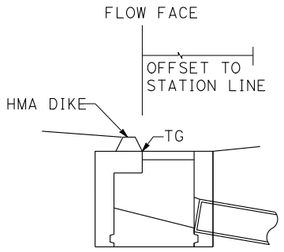

SECTION C-C

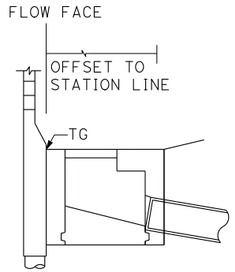

SECTION A-A

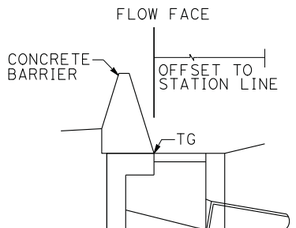

SECTION D-D

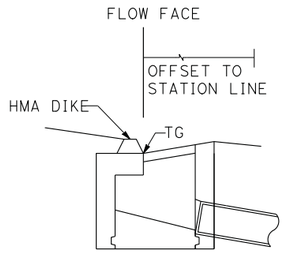

ELEVATION

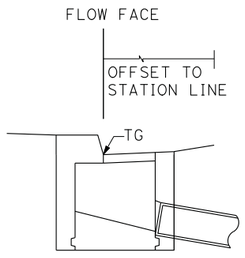

ELEVATION

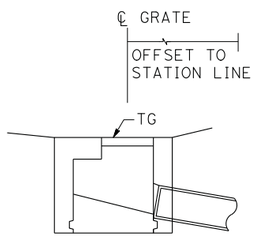

ELEVATION

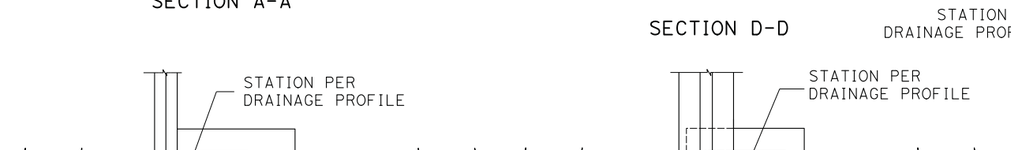

PLAN

INLET ADJACENT TO SOUNDWALL (SECTION A-A)
(TYPES 736 S/SV)
OR CONCRETE BARRIER (SECTION B-B)
(TYPES 60E, 60GE, 60SC, 60SE, OR HIGH SIDE OF TYPES 60C, 60GC)

PLAN

INLET ADJACENT TO HMA DIKE (SECTION C-C)
OR CONCRETE BARRIER (SECTION D-D)
(TYPE 60C SHOWN, TYPES 60, 60G, 60GC SIMILAR)

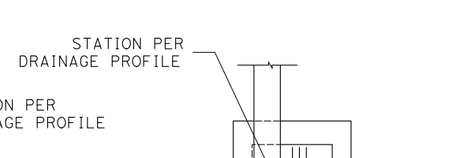

PLAN

INLET WITHIN HMA SIDE GUTTER

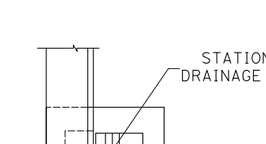

PLAN

INLET ADJACENT TO CURB

PLAN

FIELD INLET

DRAINAGE DETAILS

DD-10

REVISED BY	CB	CB	CB	CHRIS BRIANA	CALCULATED-DESIGNED BY
DATE REVISED	4/30/12	2/7/14	5/13/14	TOM CONNELL	CHECKED BY

CONSULTANT FUNCTIONAL SUPERVISOR: MICHAEL LOHMAN

STATE OF CALIFORNIA - DEPARTMENT OF TRANSPORTATION

Caltrans

LAST REVISION 00-00-00
DATE PLOTTED => 30-SEP-2014
TIME PLOTTED => 14:16

Dist	COUNTY	ROUTE	POST MILES TOTAL PROJECT	SHEET No.	TOTAL SHEETS
04	Mrn, Son	101	26.8/27.6, 0.0/2.0	231	710

REGISTERED CIVIL ENGINEER — 06/30/14 DATE

S. D. DANSKY No. 60220 Exp. 6/30/16 CIVIL — REGISTERED PROFESSIONAL ENGINEER — STATE OF CALIFORNIA

8-18-14
PLANS APPROVAL DATE

THE STATE OF CALIFORNIA OR ITS OFFICERS OR AGENTS SHALL NOT BE RESPONSIBLE FOR THE ACCURACY OR COMPLETENESS OF SCANNED COPIES OF THIS PLAN SHEET.

MARK THOMAS & CO., INC.
3000 OAK RD, SUITE 650
WALNUT CREEK, CA 94597

TRANSPORTATION AUTHORITY OF MARIN
750 LINDARO ST, SUITE 200
SAN RAFAEL, CA 94901

NOTES:

1. IF WALL OF EXISTING DRAINAGE STRUCTURE HAS NO REINFORCING, DRILL AND BOND DOWELS, 1' ON CENTER, 6" INTO WALL AND BEND INTO COLLAR.
2. SQUARE OR CIRCULAR COLLAR OPTIONAL.

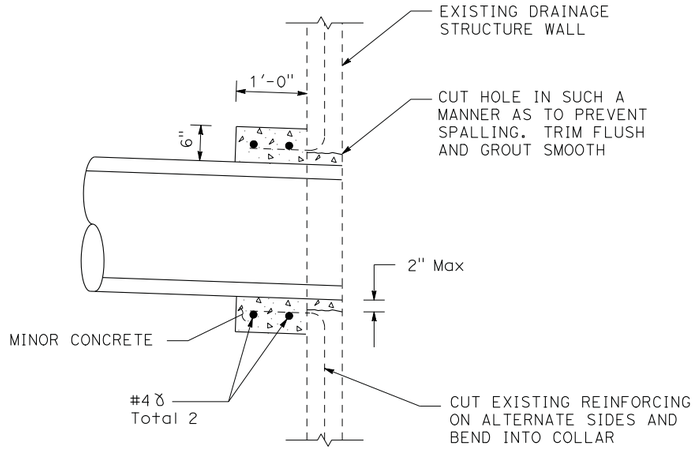

PIPE CONNECTION TO EXISTING DRAINAGE STRUCTURE

26 af 31 s

NOTES:

1. TOP OF CAP TO BE 1'-0" BELOW THE GRADING PLANE.
2. REMOVE EXISTING DRAINAGE STRUCTURE WALLS WHERE REQUIRED.
3. DRAINAGE INLET SHOWN. SIMILAR FOR MANHOLE.

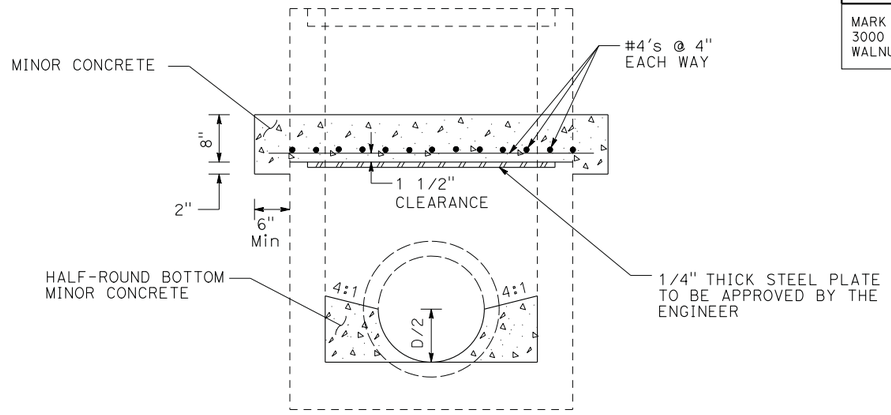

CAP INLET

26 z 70 a

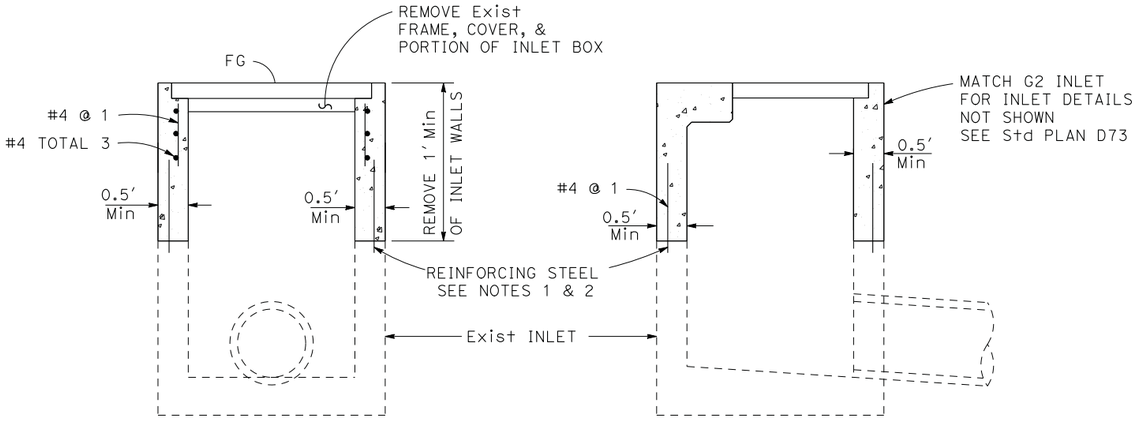

ADJUST DI

1 aj 26 aa 29 a 69 a

NOTES:

1. USE EXISTING REINFORCING STEEL WHEN JOINING NEW CONCRETE TO EXISTING CONCRETE. OTHERWISE USE STEEL DOWELS.
2. ALL DOWELS AT JOINTS BETWEEN EXISTING AND NEW CONCRETE SHALL BE EMBEDDED 0.5' Min INTO EXISTING CONCRETE.

NOTE:

ALL REINFORCING STEEL SHALL BE #4 BARS. ALL VERTICAL AND HORIZONTAL TIE BARS SHALL BE 1'-6" MAXIMUM SPACING.

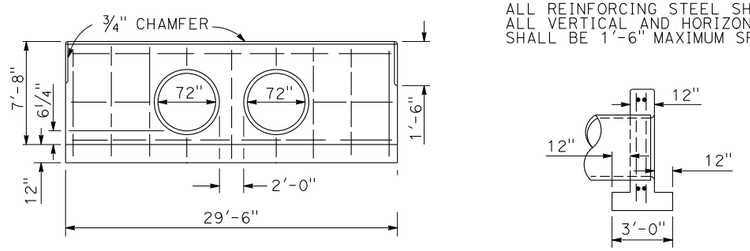

FRONT ELEVATION

SECTION

DOUBLE 72" HEADWALL

28 a

DRAINAGE DETAILS

DD-11

CHECKED BY	CALCULATED-DESIGNED BY	REVISED BY	DATE REVISED
TOM CONNELL	CHRIS BRIANA	CB	4/30/12
		CB	2/7/14
		CB	5/13/14

CONSULTANT FUNCTIONAL SUPERVISOR: MICHAEL LOHMAN

STATE OF CALIFORNIA - DEPARTMENT OF TRANSPORTATION

Caltrans

LAST REVISION 00-00-00 | DATE PLOTTED => 30-SEP-2014 | TIME PLOTTED => 14:16

BORDER LAST REVISED 7/2/2010 | USERNAME => acroskey | DGN FILE => 0400000735ic011.dgn | RELATIVE BORDER SCALE IS IN INCHES 0 1 2 3 | UNIT 0716 | PROJECT NUMBER & PHASE 04000007351

Dist	COUNTY	ROUTE	POST MILES TOTAL PROJECT	SHEET No.	TOTAL SHEETS
04	Mrn, Son	101	26.8/27.6, 0.0/2.0	232	710

REGISTERED CIVIL ENGINEER — 06/30/14 DATE

8-18-14
PLANS APPROVAL DATE

REGISTERED PROFESSIONAL ENGINEER
S. D. DANSKY
No. 60220
Exp. 6/30/16
CIVIL
STATE OF CALIFORNIA

THE STATE OF CALIFORNIA OR ITS OFFICERS OR AGENTS SHALL NOT BE RESPONSIBLE FOR THE ACCURACY OR COMPLETENESS OF SCANNED COPIES OF THIS PLAN SHEET.

MARK THOMAS & CO., INC.
3000 OAK RD, SUITE 650
WALNUT CREEK, CA 94597

TRANSPORTATION AUTHORITY OF MARIN
750 LINDARO ST, SUITE 200
SAN RAFAEL, CA 94901

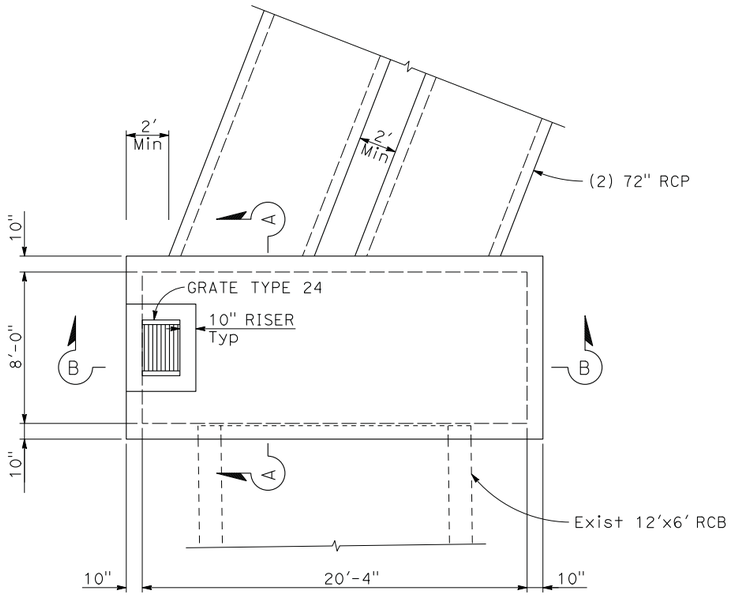

JUNCTION STRUCTURE

PLAN

SEE SECTION A-A AND B-B ON SHEET DD-13

28 (c)

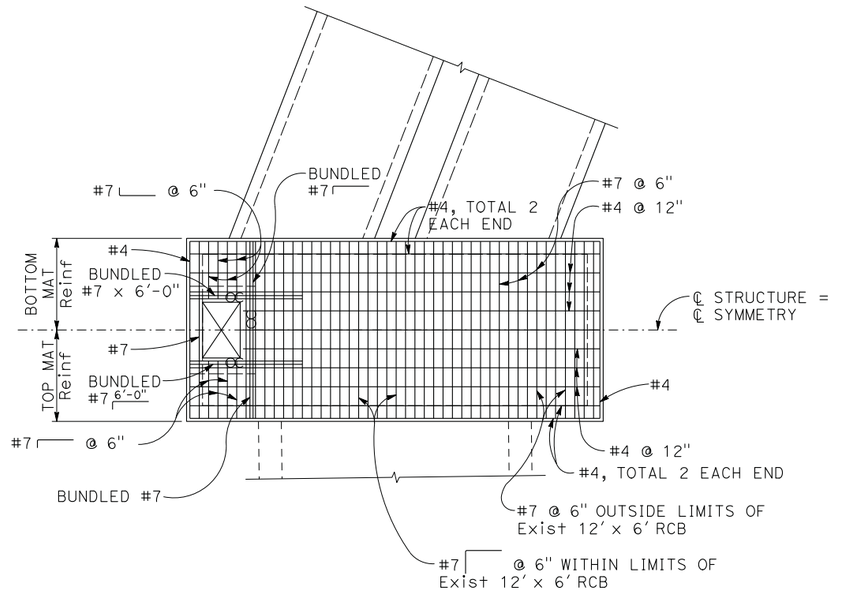

JUNCTION STRUCTURE

ROOF REINFORCING LAYOUT

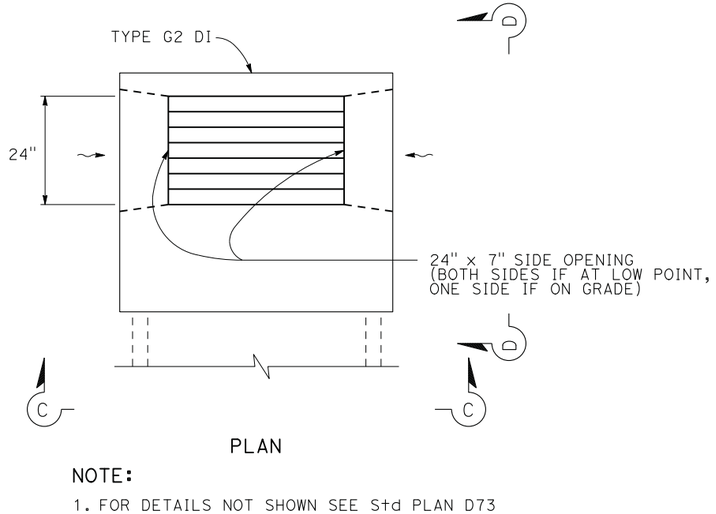

PLAN

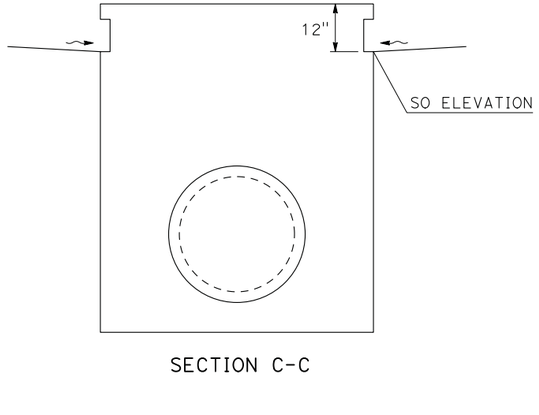

SECTION C-C

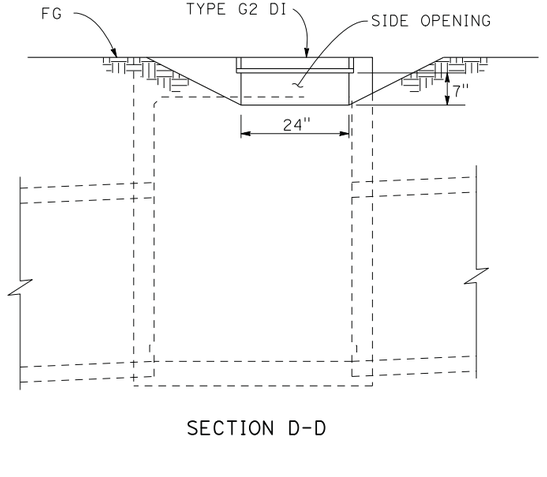

SECTION D-D

NOTE:

1. FOR DETAILS NOT SHOWN SEE Std PLAN D73

G2 DI w/ SIDE OPENINGS

26 (j) (p) (ah) (aj) (al) (at)

13 (d) 33 (h) (k)

DRAINAGE DETAILS

DD-12

STATE OF CALIFORNIA - DEPARTMENT OF TRANSPORTATION
Caltrans

CONSULTANT FUNCTIONAL SUPERVISOR: MICHAEL LOHMAN

DATE REVISED	REVISED BY	CHECKED BY	CALCULATED-DESIGNED BY
4/30/12	CB	TOM CONNELL	CHRIS BRIANA
2/7/14	CB		
5/13/14	CB		

LAST REVISION 00-00-00 | DATE PLOTTED => 30-SEP-2014 | TIME PLOTTED => 14:16

BORDER LAST REVISED 7/2/2010 | USERNAME => acroskey | DGN FILE => 0400000735ic012.dgn | RELATIVE BORDER SCALE IS IN INCHES 0 1 2 3 | UNIT 0716 | PROJECT NUMBER & PHASE 04000007351

Dist	COUNTY	ROUTE	POST MILES TOTAL PROJECT	SHEET No.	TOTAL SHEETS
04	Mrn, Son	101	26.8/27.6, 0.0/2.0	233	710

REGISTERED CIVIL ENGINEER — 06/30/14 DATE

8-18-14
PLANS APPROVAL DATE

REGISTERED PROFESSIONAL ENGINEER — S. D. DANSKY No. 60220 Exp. 6/30/16 CIVIL — STATE OF CALIFORNIA

THE STATE OF CALIFORNIA OR ITS OFFICERS OR AGENTS SHALL NOT BE RESPONSIBLE FOR THE ACCURACY OR COMPLETENESS OF SCANNED COPIES OF THIS PLAN SHEET.

MARK THOMAS & CO., INC.
3000 OAK RD, SUITE 650
WALNUT CREEK, CA 94597

TRANSPORTATION AUTHORITY OF MARIN
750 LINDARO ST, SUITE 200
SAN RAFAEL, CA 94901

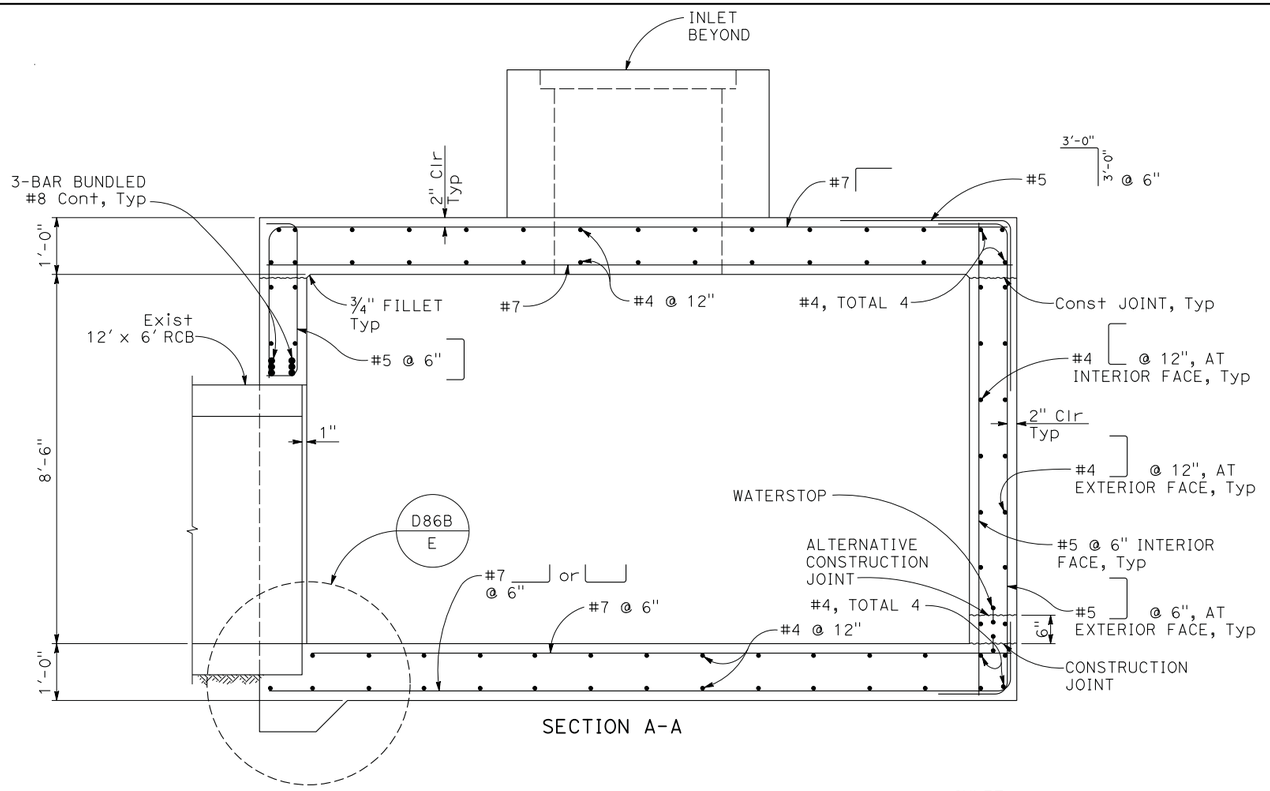

SECTION A-A

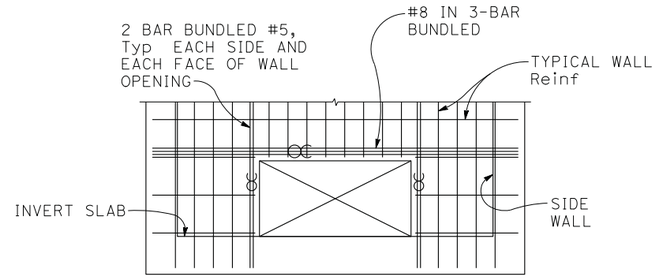

RECTANGULAR OPENING

TYPICAL WALL OPENING DETAIL

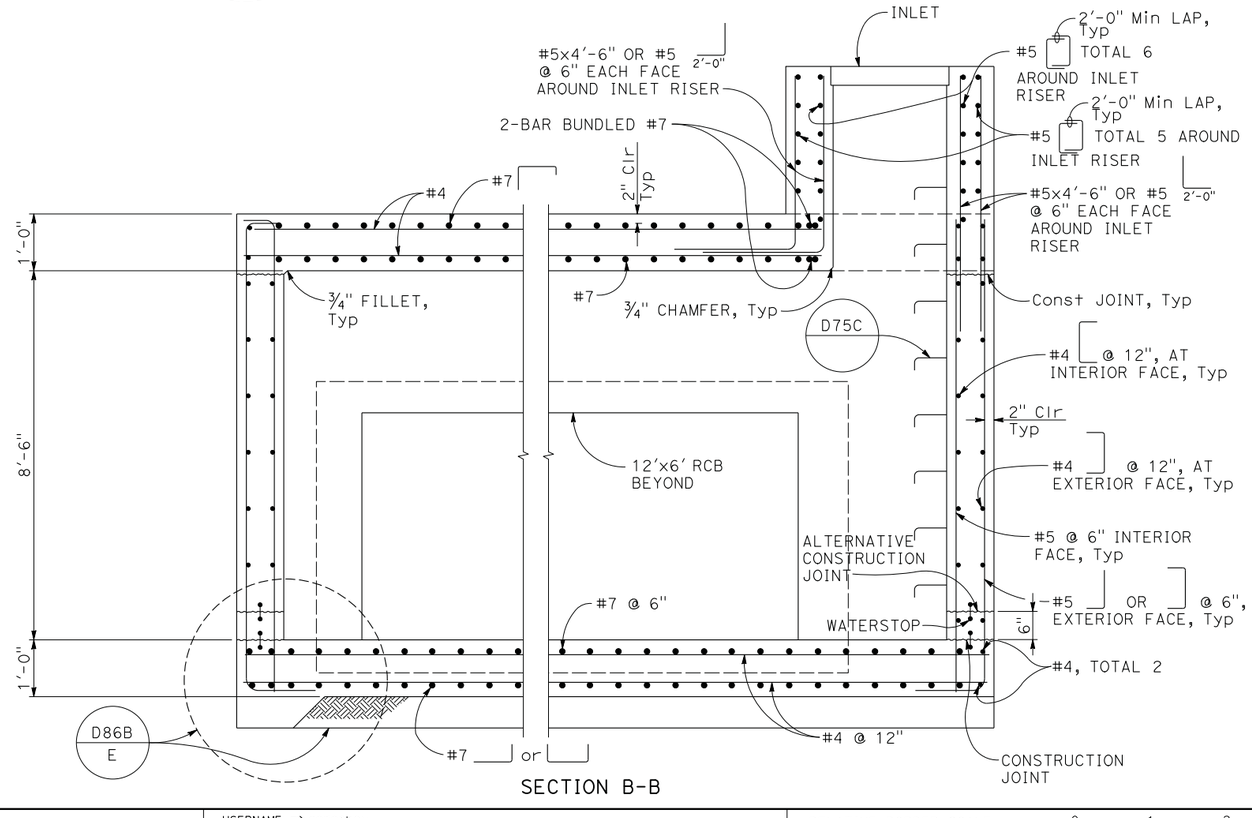

SECTION B-B

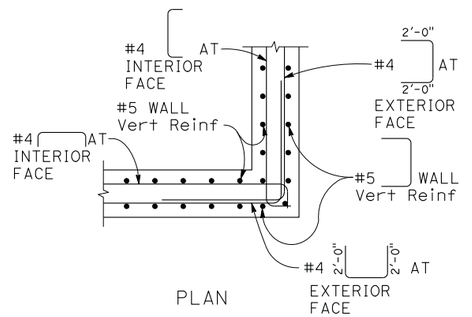

TYPICAL WALL CORNER DETAIL

JUNCTION STRUCTURE 28 C

DRAINAGE DETAILS

DD-13

REVISED BY	DATE REVISED
CB	4/30/12
CB	2/7/14
CB	5/13/14

CHRIS BRIANA — TOM CONNELL — CALCULATED-DESIGNED BY — CHECKED BY

CONSULTANT FUNCTIONAL SUPERVISOR — MICHAEL LOHMAN

STATE OF CALIFORNIA - DEPARTMENT OF TRANSPORTATION

LAST REVISION 00-00-00 — DATE PLOTTED => 30-SEP-2014 — TIME PLOTTED => 14:16

BORDER LAST REVISED 7/2/2010 | USERNAME => acroskey | DGN FILE => 0400000735ic013.dgn | RELATIVE BORDER SCALE IS IN INCHES 0 1 2 3 | UNIT 0716 | PROJECT NUMBER & PHASE 04000007351

Dist	COUNTY	ROUTE	POST MILES TOTAL PROJECT	SHEET No.	TOTAL SHEETS
04	Mrn, Son	101	26.8/27.6, 0.0/2.0	234	710

REGISTERED CIVIL ENGINEER — 06/30/14 DATE

S. D. DANSKY No. 60220 Exp. 6/30/16 CIVIL — REGISTERED PROFESSIONAL ENGINEER — STATE OF CALIFORNIA

8-18-14
PLANS APPROVAL DATE

THE STATE OF CALIFORNIA OR ITS OFFICERS OR AGENTS SHALL NOT BE RESPONSIBLE FOR THE ACCURACY OR COMPLETENESS OF SCANNED COPIES OF THIS PLAN SHEET.

MARK THOMAS & CO., INC.
3000 OAK RD, SUITE 650
WALNUT CREEK, CA 94597

TRANSPORTATION AUTHORITY OF MARIN
750 LINDARO ST, SUITE 200
SAN RAFAEL, CA 94901

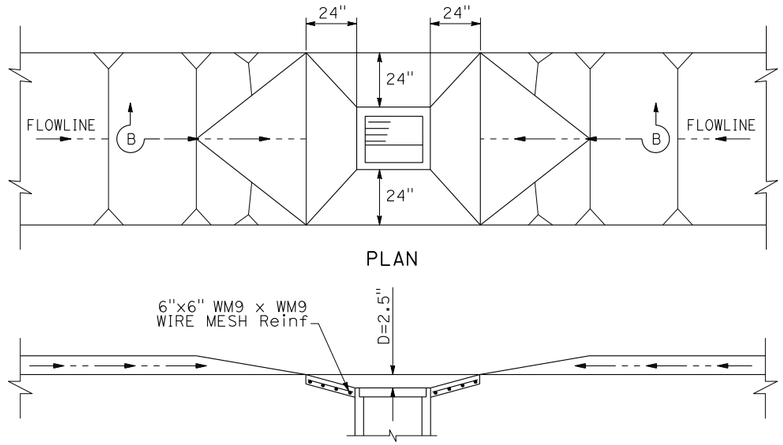

DITCH TRANSITION AT GRATED INLET w/ Conc GUTTER DEPRESSION

NO SCALE

7 (b) 26 (ap) 33 (f)

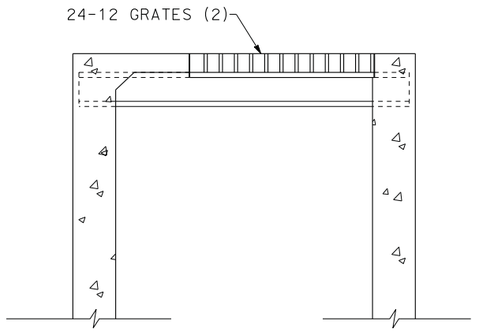

GT4 DI

11 (a) (c)

NOTES FOR GT4 DI:

1. FOR INLET DETAILS NOT SHOWN, SEE STANDARD PLAN D74A.
2. FOR FRAME AND GRATE DETAILS NOT SHOWN, SEE STANDARD PLAN D77A.

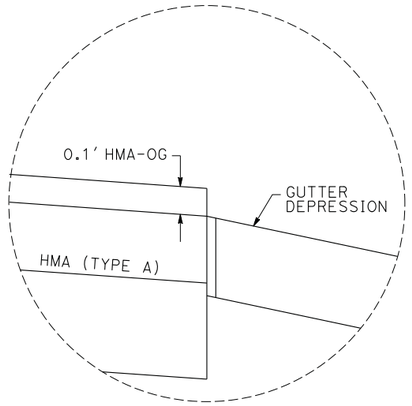

DETAIL A

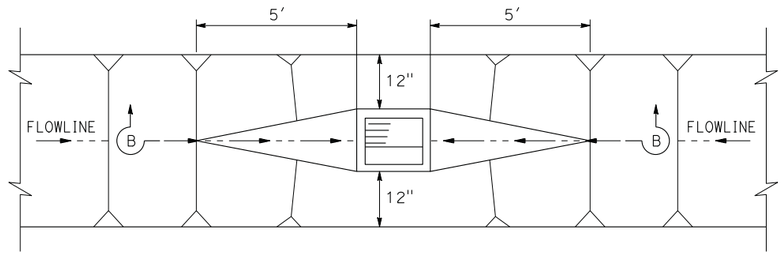

DITCH TRANSITION AT INLET w/ SIDE OPENING

NO SCALE

26 (at) 33 (h)

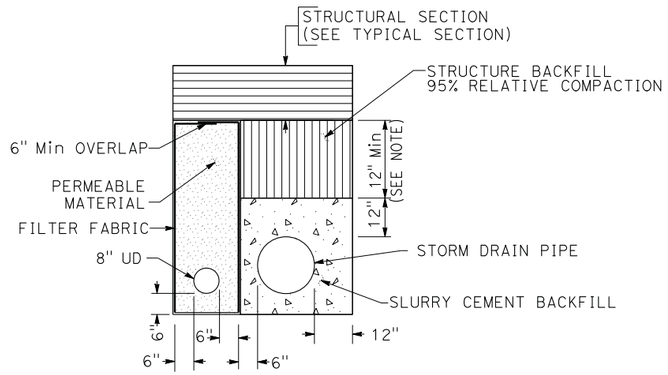

JOINT TRENCH DETAIL

NOTE:
USE SLURRY CEMENT BACKFILL IF THIS DIMENSION IS LESS THAN 12".

25 (aq) (ab) (af)

30 (e) (i) (m) (q) (u) (y) (ac) (ai)

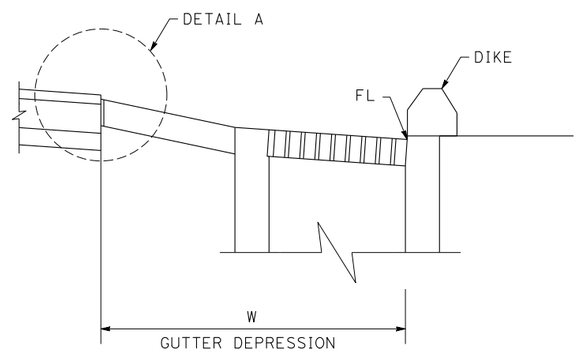

STANDARD GUTTER DEPRESSION ADJACENT TO HMA-OG

NOTE:
FOR DETAILS NOT SHOWN SEE STD PLAN D78C

DRAINAGE DETAILS

DD-14

REVISED BY	DATE REVISED
CB	4/30/12
CB	2/7/14
CB	5/13/14

CHRIS BRIANA — TOM CONNELL

CALCULATED-DESIGNED BY

CHECKED BY

CONSULTANT FUNCTIONAL SUPERVISOR — MICHAEL LOHMAN

STATE OF CALIFORNIA - DEPARTMENT OF TRANSPORTATION — Caltrans

LAST REVISION 00-00-00 | DATE PLOTTED => 30-SEP-2014 | TIME PLOTTED => 14:16

BORDER LAST REVISED 7/2/2010 | USERNAME => acroskey | DGN FILE => 0400000735ic014.dgn | RELATIVE BORDER SCALE IS IN INCHES 0 1 2 3 | UNIT 0716 | PROJECT NUMBER & PHASE 04000007351

Dist	COUNTY	ROUTE	POST MILES TOTAL PROJECT	SHEET No.	TOTAL SHEETS
04	Mrn, Son	101	26.8/27.6, 0.0/2.0	235	710

REGISTERED CIVIL ENGINEER — 06/30/14 DATE

8-18-14
PLANS APPROVAL DATE

REGISTERED PROFESSIONAL ENGINEER — S. D. DANSKY No. 60220 Exp. 6/30/16 CIVIL — STATE OF CALIFORNIA

THE STATE OF CALIFORNIA OR ITS OFFICERS OR AGENTS SHALL NOT BE RESPONSIBLE FOR THE ACCURACY OR COMPLETENESS OF SCANNED COPIES OF THIS PLAN SHEET.

MARK THOMAS & CO., INC.
3000 OAK RD, SUITE 650
WALNUT CREEK, CA 94597

TRANSPORTATION AUTHORITY OF MARIN
750 LINDARO ST, SUITE 200
SAN RAFAEL, CA 94901

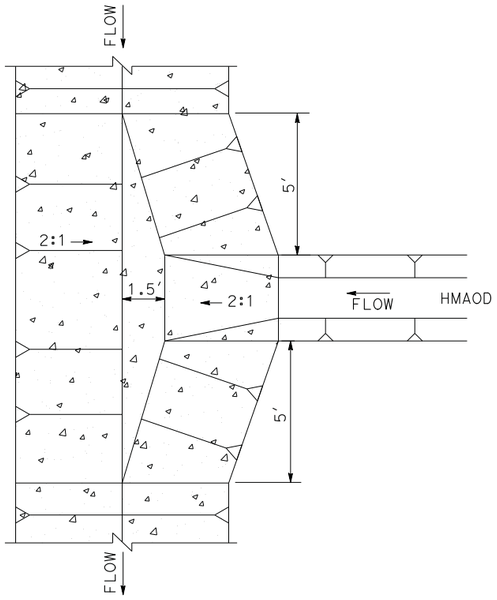

Conc DITCH TRANSITION AT HMAOD

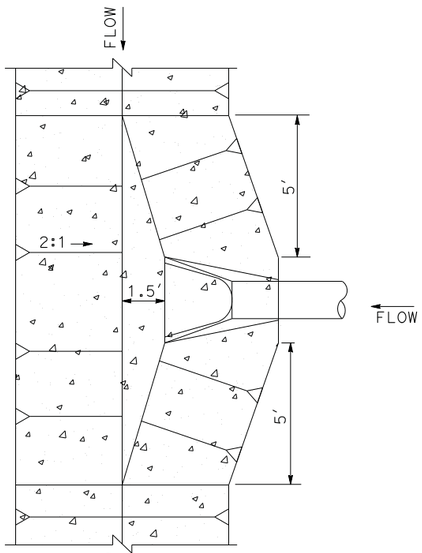

Conc DITCH TRANSITION AT FES

4(g) 6(g) 7(i) 14(f) 21(e) 25(b)

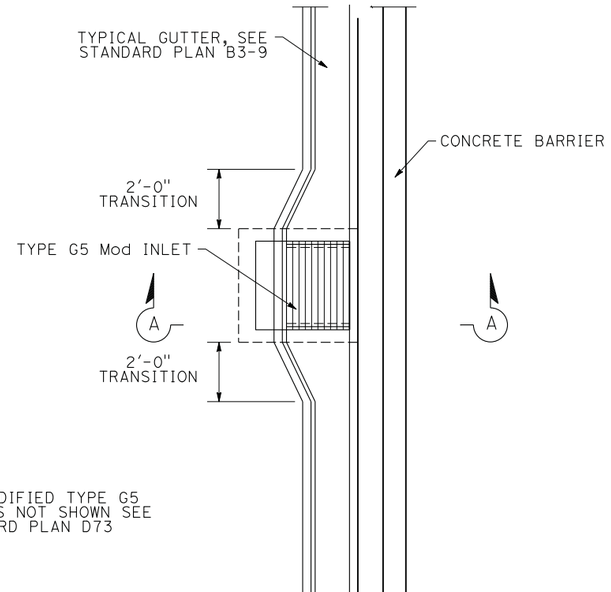

NOTE:
FOR MODIFIED TYPE G5 DETAILS NOT SHOWN SEE STANDARD PLAN D73

PLAN

G5 Mod 26(az)

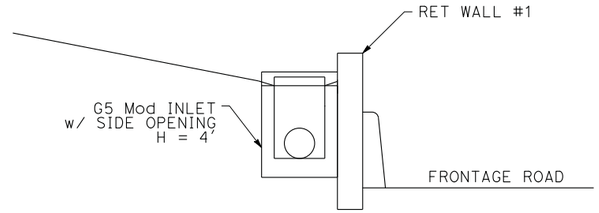

SECTION A-A

DRAINAGE DETAILS

DD-15

REVISED BY	DATE REVISED
CB	4/30/12
CB	2/7/14
CB	5/13/14

CALCULATED-DESIGNED BY: CHRIS BRIANA
CHECKED BY: TOM CONNELL
CONSULTANT FUNCTIONAL SUPERVISOR: MICHAEL LOHMAN
STATE OF CALIFORNIA - DEPARTMENT OF TRANSPORTATION — Caltrans

LAST REVISION 00-00-00 | DATE PLOTTED => 30-SEP-2014 | TIME PLOTTED => 14:16

NOTE:
ALL PIPE JOINTS ARE STANDARD UNLESS OTHERWISE SPECIFIED.

APC ALLOWABLE PIPE MATERIAL

DESIGNATION	RCP	HDPE PIPE TYPE C	HDPE PIPE TYPE S	HDPE PIPE RIBBED	CAP THICKNESS	CSP THICKNESS
18" APC	YES	YES	YES	YES	0.064"	0.064"
24" APC	YES	YES	YES	YES	0.075"	0.064"
30" APC	YES	YES	YES	NO	0.075"	0.064"
36" APC	YES	YES	YES	NO	0.075"	0.064"
42" APC	YES	YES	YES	NO	0.105"	0.064"

Dist	COUNTY	ROUTE	POST MILES TOTAL PROJECT	SHEET No.	TOTAL SHEETS
04	Mrn, Son	101	26.8/27.6, 0.0/2.0	236	710

REGISTERED CIVIL ENGINEER 06/30/14 DATE

8-18-14
PLANS APPROVAL DATE

REGISTERED PROFESSIONAL ENGINEER
S. D. DANSKY
No. 60220
Exp. 6/30/16
CIVIL
STATE OF CALIFORNIA

THE STATE OF CALIFORNIA OR ITS OFFICERS OR AGENTS SHALL NOT BE RESPONSIBLE FOR THE ACCURACY OR COMPLETENESS OF SCANNED COPIES OF THIS PLAN SHEET.

MARK THOMAS & CO., INC.
3000 OAK RD, SUITE 650
WALNUT CREEK, CA 94597

TRANSPORTATION AUTHORITY OF MARIN
750 LINDARO ST, SUITE 200
SAN RAFAEL, CA 94901

DRAINAGE QUANTITIES

DRAINAGE PLAN SHEET No	DRAINAGE SYSTEM No.	DRAINAGE UNIT	MINOR Conc (MINOR Str)	MINOR CONCRETE (GUTTER DEPRESSION)	STRUCTURAL Conc (BOX CULVERT)	STRUCTURAL Conc (HEADWALL)	OVERSIDE DRAINS: HOT MIX ASPHALT (TYPE A) *	OVERSIDE DRAINS: PLACE HOT MIX ASPHALT (Misc AREA) *	BAR REINFORCING STEEL	DI (TYPE G2 Mod) w/ MH LID (N)	DI (TYPE G2) (N)	DI (TYPE GT4) (N)	DI (TYPE GDO) (N)	RIGID RAIL FALL PROTECTION SYSTEM	HEIGHT OF INLET (N)	CONCRETE COLLAR (N)	FRAMES, GRATES (N): TYPE 24-12 (N)	FRAMES, GRATES (N): MANHOLE LID (N)	Misc IRON AND STEEL	ALTERNATIVE FLARED END SECTION: 18" AFES	24" AFES	30" AFES	36" AFES	ALTERNATIVE PIPE CULVERT: 18"	24"	36"	42"	REINFORCED CONCRETE PIPE: 18"	24"	30"	36"	72"	24" DOUBLE CAGED REINFORCED CONCRETE PIPE	18" CORREGATED STEEL PIPE (0.064" THICK)	24" CORREGATED STEEL PIPE (0.064" THICK)	MAX COVER (N)	PIPE JOINT CLASSIFICATION (N)	CAP INLET	ROCK SLOPE PROTECTION: LIGHT, METHOD B	RSP FABRIC (Cl 8)	REMOVE EXISTING (N)	REMOVE MANHOLE	REMOVE INLET	REMOVE CONCRETE (CHANNEL)	REMOVE HEADWALL	REMOVE CONCRETE (WINGWALL)	REMOVE PIPE	ABANDON CULVERT (LF)	REMOVE CULVERT (LF)	REMOVE FLARED END SECTION	ADJUST INLET	REMOVE SACKED Conc SLOPE PROTECTION	DESCRIPTION	STATION	DRAINAGE PLAN SHEET No.	DRAINAGE SYSTEM No.	DRAINAGE UNIT
			CY				TON	SQYD	LB	EA					FT	EA	EA		LB	EA				LF				LF					LF	LF	LF	FT		EA	CY	SQYD	EA	EA		CY	EA	CY	LF	LF	LF	EA							
D-2	1	a	2.1								1				6.0		1		326																																		DI (TYPE G2)	55.59' Rt "A" 6536+63.98	D-2	1	a
D-2	1	b																						57.0												6.4																	18" APC		D-2	1	b
D-2	1	c	2.6								1				8.0		1		326																																		DI (TYPE G2)	1.00' Lt "A" 6536+63.98	D-2	1	c
D-2	1	d	2.4								1				7.4		1		326																																		DI (TYPE G2)	59.33' Lt "A" 6536+63.98	D-2	1	d
D-2	1	e																						56.2												6.4																	18" APC		D-2	1	e
D-2	1	f																							320.1											6.3																	24" APC		D-2	1	f
D-2	1	g	3.6	1.14							1				8.4		1		326																																		DI (TYPE G2 w/ SDG)	1.00' Lt "A" 6539+83.94	D-2	1	g
D-2	1	h	2.0								1				5.5		1		326																																		DI (TYPE G2)	62.20' Rt "A" 6539+84.00	D-2	1	h
D-2	1	i																						5.2												4.4																	18" APC		D-2	1	i
D-2	1	j	2.1								1				6.0		1		326																																		DI (TYPE G2)	57.00' Rt "A" 6539+84.00	D-2	1	j
D-2	1	k																						57.0												6.8																	18" APC		D-2	1	k
D-2	1	l																							219.5											6.4																	24" APC		D-2	1	l
D-2	1	m	2.4	1.14							1				7.5		1		326																																		DI (TYPE G2 w/ SDG)	1.00' Lt "A" 6542+03.33	D-2	1	m
D-2	1	n																							225.2											7.2																	24" APC		D-2	1	n
D-2	1	o	3.9	1.14							1				9.3		1		326																																		DI (TYPE G2 w/ SDG)	1.00' Lt "A" 6544+28.43	D-2	1	o
D-2	1	p	1.6								1				4.2		1		326																																		DI (TYPE G2)	57.00' Rt "A" 6544+06.24	D-2	1	p
D-2	1	q																						61.1												7.7																	18" APC		D-2	1	q
D-2	1	r																							249.3											8.2																	24" APC		D-2	1	r
D-3	1	s	9.1	1.14							1			1	23.7		1		326																																		DI (TYPE G2 w/ SDG)	1.00' Lt "A" 6546+77.62	D-3	1	s
D-3	1	t																																					3.8	12.8													ROCK SLOPE PROTECTION		D-3	1	t
D-3	1	u																			1																																		24" AFES	106.19' Rt "A" 6546+77.36	D-3	1	u
D-3	1	v																											110.0							21.6	WT																	24" RCP w/ WT JOINTS		D-3	1	v
D-3	1	w																												133.7						21.2	WT																	30" RCP w/ WT JOINTS		D-3	1	w
D-3	1	x	8.2	1.14							1			1	21.3		1		326																																		DI (TYPE G2 w/ SDG)	1.00' Lt "A" 6548+11.25	D-3	1	x
D-3	1	y	2.1								1				6.0		1		326																																		DI (TYPE G2)	57.00' Rt "A" 6548+11.00	D-3	1	y
D-3	1	z																						57.0												7.0																	18" APC		D-3	1	z
D-3	1	aa																												63.2						20.7	WT																	30" RCP w/ WT JOINTS		D-3	1	aa
D-3	1	ab	9.0								1			1	23.3		1		326																																		DI (TYPE G2)	59.00' Lt "A" 6548+37.75	D-3	1	ab
D-3	1	ac																												75.2						20.8																	30" RCP		D-3	1	ac
D-3	1	ad																				1																															30" AFES	122.89' Lt "A" 6548+66.85	D-3	1	ad
D-2	1	af	1.5								1				3.9		1		326																																		DI (TYPE G2)	57.03' Rt "A" 6534+45.22	D-2	1	af
D-2	1	ag																						5.0												2.7																	18" APC		D-2	1	ag
D-2	1	ah	1.6								1				4.3		1		326																																		DI (TYPE G2)	52.03' Rt "A" 6534+45.22	D-2	1	ah
D-2	1	ai																																												1								Rem 18" Hdwl		D-2	1	ai
D-2	1	aj																																																		1		Adj DI TO GRADE	5.16' Lt "A" 6534+46.01	D-2	1	aj
D-2	1	ak																																															79					Abn 3'x3' CULVERT		D-2	1	ak
D-2	1	al																																												1								Rem 18" Hdwl		D-2	1	al
D-2	1	am																						54.0												7.1																	18" APC		D-2	1	am
D-2	1	an	3.5								1				8.2		1		326																																		DI (TYPE G2)	5.14' Lt "A" 6535+00.00	D-2	1	an
D-2	1	ao																							164.0											6.2																	24" APC		D-2	1	ao
D-2	1	ap																						52.6												7.0																	18" APC		D-2	1	ap
D-2	1	aq	2.7	1.63									1		6.4		2		634																																		DI (TYPE GDO W/ SGD)	59.33' Lt "A" 6536+35.98	D-2	1	aq
SHEET TOTAL			60.4	7.33							16		1	3			18		5850		1	1		405.1	1178.1				110.0	272.1									3.8	12.8					2			79			1						

(N) - NOT A SEPARATE PAY ITEM, FOR INFORMATION ONLY
* - QUANTITIES INCLUDED IN PLACE HMA (MISCELLANEOUS AREA) QUANTITIES, SEE SHEET Q-3.

DRAINAGE QUANTITIES

DQ-1

REVISED BY	DATE REVISED
CB	5/13/14
CB	2/7/14
CB	4/30/12

CALCULATED-DESIGNED BY: CHRIS BRIANA
CHECKED BY: TOM CONNELL
CONSULTANT FUNCTIONAL SUPERVISOR: MICHAEL LOHMAN
STATE OF CALIFORNIA - DEPARTMENT OF TRANSPORTATION
Caltrans®

LAST REVISION 00-00-00 DATE PLOTTED => 30-SEP-2014 TIME PLOTTED => 14:16

Dist	COUNTY	ROUTE	POST MILES TOTAL PROJECT	SHEET No.	TOTAL SHEETS
04	Mrn, Son	101	26.8/27.6, 0.0/2.0	237	710

REGISTERED CIVIL ENGINEER 06/30/14 DATE

8-18-14
PLANS APPROVAL DATE

REGISTERED PROFESSIONAL ENGINEER S. D. DANSKY No. 60220 Exp. 6/30/16 CIVIL STATE OF CALIFORNIA

THE STATE OF CALIFORNIA OR ITS OFFICERS OR AGENTS SHALL NOT BE RESPONSIBLE FOR THE ACCURACY OR COMPLETENESS OF SCANNED COPIES OF THIS PLAN SHEET.

MARK THOMAS & CO., INC.
3000 OAK RD, SUITE 650
WALNUT CREEK, CA 94597

TRANSPORTATION AUTHORITY OF MARIN
750 LINDARO ST, SUITE 200
SAN RAFAEL, CA 94901

NOTE:
ALL PIPE JOINTS ARE STANDARD UNLESS OTHERWISE SPECIFIED.

DRAINAGE QUANTITIES

DRAINAGE PLAN SHEET No	DRAINAGE SYSTEM No. (hexagon)	DRAINAGE UNIT (circle)	MINOR Conc (MINOR Str)	MINOR CONCRETE (GUTTER DEPRESSION)	STRUCTURAL Conc (BOX CULVERT)	STRUCTURAL Conc (HEADWALL)	OVERSIDE DRAINS: HOT MIX ASPHALT (TYPE A) *	OVERSIDE DRAINS: PLACE HOT MIX ASPHALT (Misc AREA) *	BAR REINFORCING STEEL	DI (TYPE G2 Mod) w/ MH LID (N)	DI (TYPE G2) (N)	DI (TYPE GT4) (N)	DI (TYPE GDO) (N)	RIGID RAIL FALL PROTECTION SYSTEM	HEIGHT OF INLET (N)	CONCRETE COLLAR (N)	FRAMES, GRATES (N): TYPE 24-12 (N)	FRAMES, GRATES (N): MANHOLE LID (N)	Misc IRON AND STEEL	ALTERNATIVE FLARED END SECTION: 18" AFES	24" AFES	30" AFES	36" AFES
			CY				TON	SQYD	LB	EA					FT	EA	EA		LB	EA			
D-2	1	ar																					
D-2	1	as																					
D-2	1	at	2.7	1.63									1		6.4		2		634				
D-2	1	au																					
D-2	1	av																					
D-2	1	aw	2.6	1.63									1		6.3		2		634				
D-2	2	a																					
D-2	2	b																					
D-2	2	c																					
D-3	3	a																					
D-3	3	b																					
D-3	3	c																					
D-3	4	a	2.0								1				5.6		1		326				
D-3	4	b																					
D-3	4	c	3.6	1.14							1				8.2		1		326				
D-3	4	d																					
D-3	4	e	4.4								1				10.6		1		326				
D-3	4	f																					
D-3	4	g																		1			
D-3	5	a																					
D-3	6	a	4.7								1				11.4		1		326				
D-3	6	b	6.5	1.14							1				16.5		1		326				
D-3	6	c																					
D-3	6	d																					
D-3	6	e	7.3								1				18.8		1		326				
D-3	6	f																					
D-3	6	g																		1			
D-3	6	h																					
D-3	7	a																					
D-3	7	b	1.8	0.9							1				4.7		1		326				
D-3	7	c	3.9								1				9.3		1		326				
D-3	7	d	5.9	1.14							1				14.8		1		326				
D-3	7	e																					
D-3	7	f																					
D-3	7	g	7.7								1				19.9		1		326				
D-3	7	h																					
SHEET TOTAL			53.1	7.58							10		2				14		4528	2			

DRAINAGE PLAN SHEET No	DRAINAGE SYSTEM No.	DRAINAGE UNIT	ALTERNATIVE PIPE CULVERT: 18"	24"	36"	42"	REINFORCED CONCRETE PIPE: 18"	24"	30"	36"	72"	24" DOUBLE CAGED REINFORCED CONCRETE PIPE	18" CORREGATED STEEL PIPE (0.064" THICK)	24" CORREGATED STEEL PIPE (0.064" THICK)	MAX COVER (N)	PIPE JOINT CLASSIFICATION (N)	CAP INLET	ROCK SLOPE PROTECTION: LIGHT, METHOD B	ROCK SLOPE PROTECTION: RSP FABRIC (Cl 8)	ROCK SLOPE PROTECTION: REMOVE EXISTING (N)	REMOVE MANHOLE	REMOVE INLET	REMOVE CONCRETE (CHANNEL)	REMOVE HEADWALL	REMOVE CONCRETE (WINGWALL)	REMOVE PIPE	ABANDON CULVERT (LF)	REMOVE CULVERT (LF)	REMOVE FLARED END SECTION	ADJUST INLET	REMOVE SACKED Conc SLOPE PROTECTION	DESCRIPTION	STATION	DRAINAGE PLAN SHEET No.	DRAINAGE SYSTEM No. (hexagon)	DRAINAGE UNIT (circle)
			LF				LF					LF	LF	LF	FT		EA	CY	SQYD	EA	EA		CY	EA	CY	LF	LF	LF	EA							
D-2	1	ar	28.0												5.9																	18" APC		D-2	1	ar
D-2	1	as																								53						REMOVE 18" CMP		D-2	1	as
D-2	1	at																														DI (TYPE GDO w/ SGD)	59.33' Lt "A" 6536+08.98	D-2	1	at
D-2	1	au	27.0												5.8																	18" APC		D-2	1	au
D-2	1	av	82.8												4.6																	18" APC		D-2	1	av
D-2	1	aw																														DI (TYPE GDO w/ SGD)	59.33' Lt "A" 6535+26.16	D-2	1	aw
D-2	2	a																					1							REMOVE 12" hdwl		D-2	2	a
D-2	2	b																								56						REMOVE 12" RCP		D-2	2	b
D-2	2	c																			1											REMOVE DI		D-2	2	c
D-3	3	a																					1							Rem 18" hdwl		D-3	3	a
D-3	3	b																								147						Rem 18" CMP		D-3	3	b
D-3	3	c																					1							Rem 18" hdwl		D-3	3	c
D-3	4	a																														DI (TYPE G2)	57.00' Rt "A" 6551+66.29	D-3	4	a
D-3	4	b	57.0												6.6																	18" APC		D-3	4	b
D-3	4	c																														DI (TYPE G2 w/ SGD)	1.00' Lt "A" 6551+66.70	D-3	4	c
D-3	4	d	58.0												9.0																	18" APC		D-3	4	d
D-3	4	e																														DI (TYPE G2)	58.99' Lt "A" 6551+67.36	D-3	4	e
D-3	4	f											55.8		9.1	DD																18" CSP w/ DD JOINTS		D-3	4	f
D-3	4	g																														18" AFES	114.79' Lt "A" 6551+67.88	D-3	4	g
D-3	5	a																								22						Rem 8" CMP DD		D-3	5	a
D-3	6	a																														DI (TYPE G2)	57.00' Rt "A" 6553+38.34	D-3	6	a
D-3	6	b																														DI (TYPE G2 w/ SGD)	1.00' Lt "A" 6553+46.80	D-3	6	b
D-3	6	c																								98						Rem PORTION 18" CMP		D-3	6	c
D-3	6	d	56.4												17.2																	18" APC		D-3	6	d
D-3	6	e																														DI (TYPE G2)	59.00' Lt "A" 6553+46.80	D-3	6	e
D-3	6	f											55.6		17.3																	18" CSP		D-3	6	f
D-3	6	g																														18" AFES	114.54' Lt "A" 6553+46.80	D-3	6	g
D-3	6	h	57.7												14.9																	18" APC		D-3	6	h
D-3	7	a																			1											Rem DI		D-3	7	a
D-3	7	b																														DI (TYPE G2)	72.32' Rt "A" 6555+32.24	D-3	7	b
D-3	7	c																														DI (TYPE G2)	57.00' Rt "A" 6555+33.62	D-3	7	c
D-3	7	d																														DI (TYPE G2 w/ SGD)	1.00' Lt "A" 6555+47.81	D-3	7	d
D-3	7	e																								93						Rem PORTION 18" CMP		D-3	7	e
D-3	7	f	59.4												18.3																	18" APC		D-3	7	f
D-3	7	g																														DI (TYPE G2)	59.00' Lt "A" 6555+49.38	D-3	7	g
D-3	7	h	50.1												18.4																	18" APC		D-3	7	h
SHEET TOTAL			476.4										111.4									2		3		469										

(N) - NOT A SEPARATE PAY ITEM, FOR INFORMATION ONLY
* - QUANTITIES INCLUDED IN PLACE HMA (MISCELLANEOUS AREA) QUANTITIES, SEE SHEET Q-3.

DRAINAGE QUANTITIES

DQ-2

STATE OF CALIFORNIA - DEPARTMENT OF TRANSPORTATION
Caltrans®

CONSULTANT FUNCTIONAL SUPERVISOR: MICHAEL LOHMAN
CALCULATED-DESIGNED BY: CHRIS BRIANA
CHECKED BY: TOM CONNELL

REVISED BY	DATE REVISED
CB	4/30/12
CB	2/7/14
CB	5/13/14

NOTE:
ALL PIPE JOINTS ARE STANDARD UNLESS OTHERWISE SPECIFIED.

Dist	COUNTY	ROUTE	POST MILES TOTAL PROJECT	SHEET No.	TOTAL SHEETS
04	Mrn, Son	101	26.8/27.6, 0.0/2.0	238	710

REGISTERED CIVIL ENGINEER 06/30/14 DATE

8-18-14
PLANS APPROVAL DATE

REGISTERED PROFESSIONAL ENGINEER S. D. DANSKY No. 60220 Exp. 6/30/16 CIVIL STATE OF CALIFORNIA

THE STATE OF CALIFORNIA OR ITS OFFICERS OR AGENTS SHALL NOT BE RESPONSIBLE FOR THE ACCURACY OR COMPLETENESS OF SCANNED COPIES OF THIS PLAN SHEET.

MARK THOMAS & CO., INC.
3000 OAK RD, SUITE 650
WALNUT CREEK, CA 94597

TRANSPORTATION AUTHORITY OF MARIN
750 LINDARO ST, SUITE 200
SAN RAFAEL, CA 94901

DRAINAGE QUANTITIES

DRAINAGE PLAN SHEET No	DRAINAGE SYSTEM No.	DRAINAGE UNIT	MINOR Conc (MINOR Str)	MINOR CONCRETE (GUTTER DEPRESSION)	STRUCTURAL Conc (BOX CULVERT)	STRUCTURAL Conc (HEADWALL)	OVERSIDE DRAINS: HOT MIX ASPHALT (TYPE A) *	OVERSIDE DRAINS: PLACE HOT MIX ASPHALT (Misc AREA) *	BAR REINFORCING STEEL	DI (TYPE G2 Mod) w/ MH LID (N)	DI (TYPE G2) (N)	DI (TYPE GT4) (N)	DI (TYPE GDO) (N)	RIGID RAIL FALL PROTECTION SYSTEM	HEIGHT OF INLET (N)	CONCRETE COLLAR (N)	FRAMES, GRATES (N): TYPE 24-12 (N)	FRAMES, GRATES (N): MANHOLE LID (N)	Misc IRON AND STEEL	ALTERNATIVE FLARED END SECTION: 18" AFES	24" AFES	30" AFES	36" AFES	ALTERNATIVE PIPE CULVERT: 18"	24"	36"	42"	REINFORCED CONCRETE PIPE: 18"	24"	30"	36"	72"	24" DOUBLE CAGED REINFORCED CONCRETE PIPE	18" CORREGATED STEEL PIPE (0.064" THICK)	24" CORREGATED STEEL PIPE (0.064" THICK)	MAX COVER (N)	PIPE JOINT CLASSIFICATION (N)	CAP INLET	ROCK SLOPE PROTECTION: LIGHT, METHOD B	RSP FABRIC (Cl 8)	REMOVE EXISTING (N)	REMOVE MANHOLE	REMOVE INLET	REMOVE CONCRETE (CHANNEL)	REMOVE HEADWALL	REMOVE CONCRETE (WINGWALL)	REMOVE PIPE	ABANDON CULVERT (LF)	REMOVE CULVERT (LF)	REMOVE FLARED END SECTION	ADJUST INLET	REMOVE SACKED Conc SLOPE PROTECTION	DESCRIPTION	STATION	DRAINAGE PLAN SHEET No.	DRAINAGE SYSTEM No.	DRAINAGE UNIT
			CY				TON	SQYD	LB	EA						FT	EA	EA		LB	EA				LF				LF					LF	LF	LF	FT		EA	CY	SQYD	EA	EA		CY	EA	CY	LF	LF	LF	EA								
D-3	7	i																	1																																					18" AFES	108.76' Lt "A" 6555+50.67	D-3	7	i
D-3	7	j																							59.3													13.2																			18" APC		D-3	7	j
D-3	7	k																							17.9													7.5																			18" APC		D-3	7	k
D-3	8	a	1.9	1.14							1				5.1		1		326																																					DI (TYPE G2 w/ SGD)	1.00' Lt "A" 6557+46.12	D-3	8	a
D-3	8	b																							57.0													3.6																			18" APC		D-3	8	b
D-3	8	c	1.9								1				5.1		1		326																																					DI (TYPE G2)	57.00' Rt "A" 6557+46.12	D-3	8	c
D-3	8	d																							24.9													3.6																			18" APC		D-3	8	d
D-3	8	e																	1																																					18" AFES	81.93' Rt "A" 6557+46.12	D-3	8	e
D-3	8	f																																							3.8	12.8														ROCK SLOPE PROTECTION		D-3	8	f
D-3	11	a	3.0	1.28								1		5.1		2		652																																					DI (TYPE GT4 w/ SDG)	1.00' Lt "A" 6558+49.15	D-3	11	a
D-3	11	b																							57.0													3.6																			18" APC		D-3	11	b
D-3	11	c	3.0									1		5.2		2		652																																					DI (TYPE GT4)	57.00' Rt "A" 6558+48.70	D-3	11	c
D-3	11	d																							30.9													3.7																			18" APC		D-3	11	d
D-3	11	e																	1																																					18" AFES	89.52' Rt "A" 6558+48.49	D-3	11	e
D-3	11	f																																							3.8	12.8														ROCK SLOPE PROTECTION		D-3	11	f
D-4	13	a																											115.0							4.1																			18" APC w/ Conc COLLAR		D-4	13	a
D-4	13	b																	1																																					18" AFES	60.29' Rt "FR" 6563+65.90	D-4	13	b
D-4	13	c																																							3.8	12.8														ROCK SLOPE PROTECTION		D-4	13	c
D-4	13	d	3.6								1				8.5		1		326																																					DI (TYPE G2) w/ SO	40.24' Rt "FR" 6562+53.12	D-4	13	d
D-4	13	e																																													75						Rem 18" CMP		D-4	13	e
D-4	14	a																																							3.8	12.8														ROCK SLOPE PROTECTION		D-4	14	a
D-4	14	b																			1																																			30" AFES	115.84' Lt "A" 6568+16.21	D-4	14	b
D-4	14	c																													56.9							22.1																			30" RCP		D-4	14	c
D-4	14	d	9.4								1			1	24.7		1		326																																					DI (TYPE G2)	59.00' Lt "A" 6568+16	D-4	14	d
D-4	14	e																													227.8							22.2																			30" RCP		D-4	14	e
D-4	14	f																			1																																			30" AFES	172.17' Lt "A" 6568+16	D-4	14	f
D-4	15	a	1.9								1				5.1		1		326																																					DI (TYPE G2)	57.00' Rt "A" 6564+28.65	D-4	15	a
D-4	15	b																							57.0													6.1																			18" APC		D-4	15	b
D-4	15	c	3.1										1		7.7		2		634																																					DI (TYPE GDO Mod)	1.00' Lt "A" 6564+23.80	D-4	15	c
D-4	15	d																							59.0													8.5																			18" APC		D-4	15	d
D-4	15	e	4.2								1				10.1		1		326																																					DI (TYPE G2)	58.99' Lt "A" 6564+23.57	D-4	15	e
D-4	15	f																																	51.4		8.6	DD																	18" CSP w/ DD JOINTS		D-4	15	f
D-4	15	g																	1																																					18" AFES	108.94' Lt "A" 6564+23.51	D-4	15	g
D-4	15	h																																							3.8	12.8														ROCK SLOPE PROTECTION		D-4	15	h
SHEET TOTAL			32.0	2.42							6	2	1	1			12		3894	5		2		363.0				115.0		284.7				51.4					19.0	64.0							75											

(N) - NOT A SEPARATE PAY ITEM, FOR INFORMATION ONLY
* - QUANTITIES INCLUDED IN PLACE HMA (MISCELLANEOUS AREA) QUANTITIES, SEE SHEET Q-3.

DRAINAGE QUANTITIES

DQ-3

REVISED BY	DATE REVISED
CB	5/13/14
CB	2/7/14
CB	4/30/12

CALCULATED-DESIGNED BY: CHRIS BRIANA
CHECKED BY: TOM CONNELL
CONSULTANT FUNCTIONAL SUPERVISOR: MICHAEL LOHMAN
STATE OF CALIFORNIA - DEPARTMENT OF TRANSPORTATION

LAST REVISION 00-00-00
DATE PLOTTED => 30-SEP-2014
TIME PLOTTED => 14:16

NOTE:
ALL PIPE JOINTS ARE STANDARD UNLESS OTHERWISE SPECIFIED.

Dist	COUNTY	ROUTE	POST MILES TOTAL PROJECT	SHEET No.	TOTAL SHEETS
04	Mrn, Son	101	26.8/27.6, 0.0/2.0	239	710

REGISTERED CIVIL ENGINEER 06/30/14 DATE

8-18-14
PLANS APPROVAL DATE

REGISTERED PROFESSIONAL ENGINEER S. D. DANSKY No. 60220 Exp. 6/30/16 CIVIL STATE OF CALIFORNIA

THE STATE OF CALIFORNIA OR ITS OFFICERS OR AGENTS SHALL NOT BE RESPONSIBLE FOR THE ACCURACY OR COMPLETENESS OF SCANNED COPIES OF THIS PLAN SHEET.

MARK THOMAS & CO., INC.
3000 OAK RD, SUITE 650
WALNUT CREEK, CA 94597

TRANSPORTATION AUTHORITY OF MARIN
750 LINDARO ST, SUITE 200
SAN RAFAEL, CA 94901

DRAINAGE QUANTITIES

DRAINAGE PLAN SHEET No	DRAINAGE SYSTEM No.	DRAINAGE UNIT	MINOR Conc (MINOR Str)	MINOR CONCRETE (GUTTER DEPRESSION)	STRUCTURAL Conc (BOX CULVERT)	STRUCTURAL Conc (HEADWALL)	OVERSIDE DRAINS: HOT MIX ASPHALT (TYPE A) *	OVERSIDE DRAINS: PLACE HOT MIX ASPHALT (Misc AREA) *	BAR REINFORCING STEEL	DI (TYPE G2 Mod) w/ MH LID (N)	DI (TYPE G2) (N)	DI (TYPE GT4) (N)	DI (TYPE GDO) (N)	RIGID RAIL FALL PROTECTION SYSTEM	HEIGHT OF INLET (N)	CONCRETE COLLAR (N)	FRAMES, GRATES (N): TYPE 24-12 (N)	FRAMES, GRATES (N): MANHOLE LID (N)	Misc IRON AND STEEL	ALTERNATIVE FLARED END SECTION: 18" AFES	ALTERNATIVE FLARED END SECTION: 24" AFES	ALTERNATIVE FLARED END SECTION: 30" AFES	ALTERNATIVE FLARED END SECTION: 36" AFES	ALTERNATIVE PIPE CULVERT: 18"	ALTERNATIVE PIPE CULVERT: 24"	ALTERNATIVE PIPE CULVERT: 36"	ALTERNATIVE PIPE CULVERT: 42"	REINFORCED CONCRETE PIPE: 18"	REINFORCED CONCRETE PIPE: 24"	REINFORCED CONCRETE PIPE: 30"	REINFORCED CONCRETE PIPE: 36"	REINFORCED CONCRETE PIPE: 72"	24" DOUBLE CAGED REINFORCED CONCRETE PIPE	18" CORREGATED STEEL PIPE (0.064" THICK)	24" CORREGATED STEEL PIPE (0.064" THICK)	MAX COVER (N)	PIPE JOINT CLASSIFICATION (N)	CAP INLET	ROCK SLOPE PROTECTION: LIGHT, METHOD B	ROCK SLOPE PROTECTION: RSP FABRIC (Cl 8)	ROCK SLOPE PROTECTION: REMOVE EXISTING (N)	REMOVE MANHOLE	REMOVE INLET	REMOVE CONCRETE (CHANNEL)	REMOVE HEADWALL	REMOVE CONCRETE (WINGWALL)	REMOVE PIPE	ABANDON CULVERT (LF)	REMOVE CULVERT (LF)	REMOVE FLARED END SECTION	ADJUST INLET	REMOVE SACKED Conc SLOPE PROTECTION	DESCRIPTION	STATION	DRAINAGE PLAN SHEET No.	DRAINAGE SYSTEM No.	DRAINAGE UNIT
			CY				TON	SQYD	LB	EA					FT	EA	EA		LB	EA				LF				LF					LF	LF	LF	FT		EA	CY	SQYD	EA	EA		CY	EA	CY	LF	LF	LF	EA							
D-4	16	a	1.9								1				5.1		1		326																																		DI (TYPE G2)	57.00′ Rt "A" 6566+76.89	D-4	16	a
D-4	16	b																						57.0												6.1																	18" APC		D-4	16	b
D-4	16	c	2.5	1.14							1				7.7		1		326																																		DI (TYPE G2 w/ SGD)	1.00′ Lt "A" 6566+76.55	D-4	16	c
D-4	16	d																						59.0												8.6																	18" APC		D-4	16	d
D-4	16	e	4.2								1				10.2		1		326																																		DI (TYPE G2)	58.99′ Lt "A" 6566+75.97	D-4	16	e
D-4	16	f																																52.7		8.7	DD																18" CSP w/ DD JOINTS		D-4	16	f
D-4	16	g																	1																																		18" AFES	111.73′ Lt "A" 6566+75.41	D-4	16	g
D-4	16	h																																				3.8	12.8														ROCK SLOPE PROTECTION		D-4	16	h
D-5	17	a	1.8								1				4.8		1		326																																		DI (TYPE G2)	63.13′ Rt "A" 6569+78.84	D-5	17	a
D-5	17	b																						63.1												6.1																	18" APC		D-5	17	b
D-5	17	c	2.5	1.14							1				7.7		1		326																																		DI (TYPE G2 w/ SGD)	1.00′ Lt "A" 6569+78.68	D-5	17	c
D-5	17	d																						59.0												8.5																	18" APC		D-5	17	d
D-5	17	e	4.2								1				10.1		1		326																																		DI (TYPE G2)	58.99′ Lt "A" 6569+78.37	D-5	17	e
D-5	17	f																																55.0		8.6	DD																18" CSP w/ DD JOINTS		D-5	17	f
D-5	17	g																	1																																		18" AFES	113.98′ Lt "A" 6569+78.10	D-5	17	g
D-5	18	a	1.8								1				5.0		1		326																																		DI (TYPE G2)	59.25′ Rt "A" 6572+77.57	D-5	18	a
D-5	18	b																						59.2												6.1																	18" APC		D-5	18	b
D-5	18	c	2.5	1.14							1				7.7		1		326																																		DI (TYPE G2 w/ SGD)	1.00′ Lt "A" 6572+77.58	D-5	18	c
D-5	18	d																						53.8												8.5																	18" APC		D-5	18	d
D-5	18	e	4.2								1				10.1		1		326																																		DI (TYPE G2)	58.99′ Lt "A" 6572+77.58	D-5	18	e
D-5	18	f																						40.0												8.6																	18" APC		D-5	18	f
D-5	18	g																	1																																		18" AFES	96.36 Lt "A" 6572+77.58	D-5	18	g
D-5	19	a	1.9	1.14							1				5.1		1		326																																		DI (TYPE G2 w/ SGD)	1.00′ Lt "A" 6575+94.20	D-5	19	a
D-5	19	b																						57.0												3.6																	18" APC		D-5	19	b
D-5	19	c	1.9								1				5.2		1		326																																		DI (TYPE G2)	57.00′ Rt "A" 6575+94.20	D-5	19	c
D-5	19	d																																34.0		3.7	DD																18" CSP w/ DD JOINTS		D-5	19	d
D-5	19	e																	1																																		18" AFES	90.97′ Rt "A" 6575+94.23	D-5	19	e
D-5	20	a	1.9	1.14							1				5.1		1		326																																		DI (TYPE G2 w/ SGD)	1.00′ Lt "A" 6578+50.70	D-5	20	a
D-5	20	b																						57.0												3.6																	18" APC		D-5	20	b
D-5	20	c	1.9								1				5.2		1		326																																		DI (TYPE G2)	57.00′ Rt "A" 6578+50.70	D-5	20	c
D-5	20	d																																36.8		3.7	DD																18" CSP w/ DD JOINTS		D-5	20	d
D-5	20	e																	1																																		18" AFES	93.81′ Rt "A" 6578+50.72	D-5	20	e
D-5	21	a	1.9	1.14							1				5.1		1		326																																		DI (TYPE G2 w/ SGD)	1.00 Lt "A" 6581+40.49	D-5	21	a
D-5	21	b																						57.0												3.6																	18" APC		D-5	21	b
D-5	21	c	1.9								1				5.2		1		326																																		DI (TYPE G2)	57.00 Rt "A" 6581+40.49	D-5	21	c
D-5	21	d																							138.3											3.7																	24" APC		D-5	21	d
D-5	21	e																		1																																	24" AFES	84.31 Rt "A" 6580+03.22	D-5	21	e
SHEET TOTAL			37.0	6.84							15						15		4890	5	1			562.1	138.3									178.5					3.8	12.8																	

(N) - NOT A SEPARATE PAY ITEM, FOR INFORMATION ONLY
* - QUANTITIES INCLUDED IN PLACE HMA (MISCELLANEOUS AREA) QUANTITIES, SEE SHEET Q-3.

DRAINAGE QUANTITIES

DQ-4

STATE OF CALIFORNIA - DEPARTMENT OF TRANSPORTATION
Caltrans

CONSULTANT FUNCTIONAL SUPERVISOR: MICHAEL LOHMAN
CALCULATED-DESIGNED BY: CHRIS BRIANA
CHECKED BY: TOM CONNELL

REVISED BY	DATE REVISED
CB	4/30/12
CB	2/7/14
CB	5/13/14

LAST REVISION 00-00-00
DATE PLOTTED => 30-SEP-2014
TIME PLOTTED => 14:16

NOTE:
ALL PIPE JOINTS ARE STANDARD UNLESS OTHERWISE SPECIFIED.

Dist	COUNTY	ROUTE	POST MILES TOTAL PROJECT	SHEET No.	TOTAL SHEETS
04	Mrn, Son	101	26.8/27.6, 0.0/2.0	240	710

REGISTERED CIVIL ENGINEER 06/30/14 DATE

8-18-14
PLANS APPROVAL DATE

REGISTERED PROFESSIONAL ENGINEER
S. D. DANSKY
No. 60220
Exp. 6/30/16
CIVIL
STATE OF CALIFORNIA

THE STATE OF CALIFORNIA OR ITS OFFICERS OR AGENTS SHALL NOT BE RESPONSIBLE FOR THE ACCURACY OR COMPLETENESS OF SCANNED COPIES OF THIS PLAN SHEET.

MARK THOMAS & CO., INC.
3000 OAK RD, SUITE 650
WALNUT CREEK, CA 94597

TRANSPORTATION AUTHORITY OF MARIN
750 LINDARO ST, SUITE 200
SAN RAFAEL, CA 94901

DRAINAGE QUANTITIES

DRAINAGE PLAN SHEET No	DRAINAGE SYSTEM No. ⬡	DRAINAGE UNIT ○	MINOR Conc (MINOR Str)	MINOR CONCRETE (GUTTER DEPRESSION)	STRUCTURAL Conc (BOX CULVERT)	STRUCTURAL Conc (HEADWALL)	OVERSIDE DRAINS: HOT MIX ASPHALT (TYPE A) *	OVERSIDE DRAINS: PLACE HOT MIX ASPHALT (Misc AREA) *	BAR REINFORCING STEEL	DI (TYPE G2 Mod) w/ MH LID (N)	DI (TYPE G2) (N)	DI (TYPE GT4) (N)	DI (TYPE GDO) (N)	RIGID RAIL FALL PROTECTION SYSTEM	HEIGHT OF INLET (N)	CONCRETE COLLAR (N)	FRAMES, GRATES (N): TYPE 24-12 (N)	FRAMES, GRATES (N): MANHOLE LID (N)	Misc IRON AND STEEL
			CY				TON	SQYD	LB	EA					FT	EA	EA		LB
D-5	23	a					1.3	6.4											
D-5	24	a					2.4	11.6											
D-5	24	b																	
D-5	25	b																	
D-5	25	c																	
D-6	25	d	4.7								1				11.4		1		326
D-6	25	e																	
D-6	25	f	2.3								1				6.7		1		326
D-6	25	g																	
D-6	25	h	2.2								1				6.6		1		326
D-6	25	i																	
D-6	25	j	2.0								1				5.5		1		326
D-6	25	k																	
D-6	25	l	1.9								1				5.2		1		326
D-6	25	m																	
D-6	25	n	1.8								1				5.0		1		326
D-6	25	o																	
D-6	25	p	2.0								1				5.7		1		326
D-6	25	q																	
D-6	25	r	1.8								1				5.0		1		326
D-6	25	s																	
D-7	25	t	2.0								1				5.7		1		326
D-7	25	u																	
D-7	25	v	1.8								1				5.0		1		326
D-7	25	w																	
D-7	25	x	2.0								1				5.6		1		326
D-7	25	y																	
D-7	25	z	2.0								1				5.5		1		326
D-7	25	aa																	
D-7	25	ab																	
D-7	25	ac	2.0								1				5.6		1		326
D-7	25	ad																	
D-7	25	ae	2.4										1		5.5		2		634
D-7	25	af																	
D-7	25	ag	2.0								1				5.6		1		326
D-7	25	ah																	
D-7	25	ai	2.4										1		5.5		2		634
D-7	25	aj	2.1								1				6.1		1		326
D-7	25	ak																	
SHEET TOTAL			37.4				3.7	18.0			15		2				19		6158

DRAINAGE PLAN SHEET No	DRAINAGE SYSTEM No.	DRAINAGE UNIT	ALTERNATIVE FLARED END SECTION: 18" AFES	ALTERNATIVE FLARED END SECTION: 24" AFES	ALTERNATIVE FLARED END SECTION: 30" AFES	ALTERNATIVE FLARED END SECTION: 36" AFES	ALTERNATIVE PIPE CULVERT: 18"	ALTERNATIVE PIPE CULVERT: 24"	ALTERNATIVE PIPE CULVERT: 36"	ALTERNATIVE PIPE CULVERT: 42"	REINFORCED CONCRETE PIPE: 18"	REINFORCED CONCRETE PIPE: 24"	REINFORCED CONCRETE PIPE: 30"	REINFORCED CONCRETE PIPE: 36"	REINFORCED CONCRETE PIPE: 72"	24" DOUBLE CAGED REINFORCED CONCRETE PIPE	18" CORREGATED STEEL PIPE (0.064" THICK)	24" CORREGATED STEEL PIPE (0.064" THICK)	MAX COVER (N)	PIPE JOINT CLASSIFICATION (N)	CAP INLET	ROCK SLOPE PROTECTION: LIGHT, METHOD B	ROCK SLOPE PROTECTION: RSP FABRIC (Cl 8)	ROCK SLOPE PROTECTION: REMOVE EXISTING (N)
			EA				LF				LF					LF	LF	LF	FT		EA	CY	SQYD	EA
D-5	23	a																						
D-5	24	a																						
D-5	24	b																				3.8	12.8	
D-5	25	b		1																				
D-5	25	c																82.9	9.4	DD				
D-6	25	d																						
D-6	25	e						121.6											4.7					
D-6	25	f																						
D-6	25	g						206.6											4.6					
D-6	25	h																						
D-6	25	i						112.1											4.5					
D-6	25	j																						
D-6	25	k						402.1											4.5					
D-6	25	l																						
D-6	25	m						119.7											3.6					
D-6	25	n																						
D-6	25	o						400.7											3.7					
D-6	25	p																						
D-6	25	q						111.3											3.6					
D-6	25	r																						
D-6	25	s						420.2											4.2					
D-7	25	t																						
D-7	25	u						122.7											4.1					
D-7	25	v																						
D-7	25	w						308.0											4.1					
D-7	25	x																						
D-7	25	y					58.8												4.0					
D-7	25	z																						
D-7	25	aa						149.7											4.2					
D-7	25	ab						322.3											4.1					
D-7	25	ac																						
D-7	25	ad					58.7												4.0					
D-7	25	ae																						
D-7	25	af						399.4											3.6					
D-7	25	ag																						
D-7	25	ah					58.7												4.0					
D-7	25	ai																						
D-7	25	aj																						
D-7	25	ak					58.7												4.8					
SHEET TOTAL				1			234.9	3196.4										82.9				3.8	12.8	

REMOVE MANHOLE	REMOVE INLET	REMOVE CONCRETE (CHANNEL)	REMOVE HEADWALL	REMOVE CONCRETE (WINGWALL)	REMOVE PIPE	ABANDON CULVERT (LF)	REMOVE CULVERT (LF)	REMOVE FLARED END SECTION	ADJUST INLET	REMOVE SACKED Conc SLOPE PROTECTION	DESCRIPTION	STATION	DRAINAGE PLAN SHEET No.	DRAINAGE SYSTEM No. ⬡	DRAINAGE UNIT ○
EA		CY	EA	CY	LF	LF	LF		EA						
											HMAOD		D-5	23	a
											HMAOD		D-5	24	a
											ROCK SLOPE PROTECTION		D-5	24	b
											24" AFES	117.07 Rt "A" 6583+09.70	D-5	25	b
											24" CSP w/ DD JOINTS		D-5	25	c
											DI (TYPE G2)	57.00 Rt "A" 6583+64.17	D-6	25	d
											24" APC		D-6	25	e
											DI (TYPE G2)	58.87 Lt "A" 6584+00.95	D-6	25	f
											24" APC		D-6	25	g
											DI (TYPE G2)	58.59 Lt "A" 6586+86.69	D-6	25	h
											24" APC		D-6	25	i
											DI (TYPE G2)	57.00 Rt "A" 6586+86.69	D-6	25	j
											24" APC		D-6	25	k
											DI (TYPE G2)	67.88 Lt "A" 6590+88.73	D-6	25	l
											24" APC		D-6	25	m
											DI (TYPE G2)	57.00 Rt "A" 6590+88.74	D-6	25	n
											24" APC		D-6	25	o
											DI (TYPE G2)	57.80 Lt "A" 6594+89.41	D-6	25	p
											24" APC		D-6	25	q
											DI (TYPE G2)	57.00 Rt "A" 6594+89.41	D-6	25	r
											24" APC		D-6	25	s
											DI (TYPE G2)	69.39 Lt "A" 6599+09.40	D-7	25	t
											24" APC		D-7	25	u
											DI (TYPE G2)	57.00 Rt "A" 6598+90.44	D-7	25	v
											24" APC		D-7	25	w
											DI (TYPE G2)	57.09 Lt "A" 6602+17.19	D-7	25	x
											18" APC		D-7	25	y
											DI (TYPE G2)	1.00 Rt "A" 6602+17.19	D-7	25	z
											24" APC		D-7	25	aa
											24" APC		D-7	25	ab
											DI (TYPE G2)	57.00 Lt "A" 6606+90.45	D-7	25	ac
											18" APC		D-7	25	ad
											DI (TYPE GDO Mod)	1.00 Rt "A" 6609+90.45	D-7	25	ae
											24" APC		D-7	25	af
											DI (TYPE G2)	57.00 Lt "A" 6610+91.29	D-7	25	ag
											18" APC		D-7	25	ah
											DI (TYPE GDO Mod)	1.00 Rt "A" 6610+91.28	D-7	25	ai
											DI (TYPE G2)	57.00 Lt "A" 6603+67.07	D-7	25	aj
											18" APC		D-7	25	ak

(N) - NOT A SEPARATE PAY ITEM, FOR INFORMATION ONLY
* - QUANTITIES INCLUDED IN PLACE HMA (MISCELLANEOUS AREA) QUANTITIES, SEE SHEET Q-3.

DRAINAGE QUANTITIES

DQ-5

REVISED BY: CB 4/30/12; CB 2/7/14; CB 5/13/14 (DATE REVISED)
CHRIS BRIANA — CALCULATED-DESIGNED BY
TOM CONNELL — CHECKED BY
CONSULTANT FUNCTIONAL SUPERVISOR: MICHAEL LOHMAN
STATE OF CALIFORNIA - DEPARTMENT OF TRANSPORTATION
Caltrans®

LAST REVISION 00-00-00 DATE PLOTTED => 30-SEP-2014 TIME PLOTTED => 14:16

Dist	COUNTY	ROUTE	POST MILES TOTAL PROJECT	SHEET No.	TOTAL SHEETS
04	Mrn, Son	101	26.8/27.6, 0.0/2.0	241	710

REGISTERED CIVIL ENGINEER 06/30/14 DATE

8-18-14
PLANS APPROVAL DATE

REGISTERED PROFESSIONAL ENGINEER S. D. DANSKY No. 60220 Exp. 6/30/16 CIVIL STATE OF CALIFORNIA

THE STATE OF CALIFORNIA OR ITS OFFICERS OR AGENTS SHALL NOT BE RESPONSIBLE FOR THE ACCURACY OR COMPLETENESS OF SCANNED COPIES OF THIS PLAN SHEET.

MARK THOMAS & CO., INC.
3000 OAK RD, SUITE 650
WALNUT CREEK, CA 94597

TRANSPORTATION AUTHORITY OF MARIN
750 LINDARO ST, SUITE 200
SAN RAFAEL, CA 94901

NOTE:
ALL PIPE JOINTS ARE STANDARD UNLESS OTHERWISE SPECIFIED.

DRAINAGE QUANTITIES

DRAINAGE PLAN SHEET No	DRAINAGE SYSTEM No. ⬡	DRAINAGE UNIT ○	MINOR Conc (MINOR Str) (CY)	MINOR CONCRETE (GUTTER DEPRESSION) (CY)	STRUCTURAL Conc (BOX CULVERT) (CY)	STRUCTURAL Conc (HEADWALL) (CY)	OVERSIDE DRAINS: HOT MIX ASPHALT (TYPE A) * (TON)	OVERSIDE DRAINS: PLACE HOT MIX ASPHALT (Misc AREA) * (SQYD)	BAR REINFORCING STEEL (LB)	DI (TYPE G2 Mod) w/ MH LID (N) (EA)	DI (TYPE G2) (N) (EA)	DI (TYPE GT4) (N) (EA)	DI (TYPE GDO) (N) (EA)	RIGID RAIL FALL PROTECTION SYSTEM (EA)	HEIGHT OF INLET (N) (FT)	CONCRETE COLLAR (N) (EA)	FRAMES, GRATES (N): TYPE 24-12 (N) (EA)	FRAMES, GRATES (N): MANHOLE LID (N) (EA)	Misc IRON AND STEEL (LB)	ALTERNATIVE FLARED END SECTION: 18" AFES (EA)	ALTERNATIVE FLARED END SECTION: 24" AFES (EA)	ALTERNATIVE FLARED END SECTION: 30" AFES (EA)	ALTERNATIVE FLARED END SECTION: 36" AFES (EA)	ALTERNATIVE PIPE CULVERT: 18" (LF)	ALTERNATIVE PIPE CULVERT: 24" (LF)	ALTERNATIVE PIPE CULVERT: 36" (LF)	ALTERNATIVE PIPE CULVERT: 42" (LF)	REINFORCED CONCRETE PIPE: 18" (LF)	REINFORCED CONCRETE PIPE: 24" (LF)	REINFORCED CONCRETE PIPE: 30" (LF)	REINFORCED CONCRETE PIPE: 36" (LF)	REINFORCED CONCRETE PIPE: 72" (LF)	24" DOUBLE CAGED REINFORCED CONCRETE PIPE (LF)	18" CORREGATED STEEL PIPE (0.064" THICK) (LF)	24" CORREGATED STEEL PIPE (0.064" THICK) (LF)	MAX COVER (N) (FT)	PIPE JOINT CLASSIFICATION (N)	CAP INLET (EA)	ROCK SLOPE PROTECTION: LIGHT, METHOD B (CY)	ROCK SLOPE PROTECTION: RSP FABRIC (Cl 8) (SQYD)	ROCK SLOPE PROTECTION: REMOVE EXISTING (N) (EA)	REMOVE MANHOLE (EA)	REMOVE INLET (EA)	REMOVE CONCRETE (CHANNEL) (CY)	REMOVE HEADWALL (EA)	REMOVE CONCRETE (WINGWALL) (CY)	REMOVE PIPE (LF)	ABANDON CULVERT (LF) (LF)	REMOVE CULVERT (LF) (LF)	REMOVE FLARED END SECTION (EA)	ADJUST INLET (EA)	REMOVE SACKED Conc SLOPE PROTECTION (EA)	DESCRIPTION	STATION	DRAINAGE PLAN SHEET No.	DRAINAGE SYSTEM No. ⬡	DRAINAGE UNIT ○
D-7	25	al	2.7										1		6.3		2		634																																		DI (TYPE GDO Mod)	1.00 Rt "A" 6603+67.19	D-7	25	al
D-6	25	am																							30.0											4.1																	24" APC		D-6	25	am
D-6	25	an	2.7	1.63									1		6.4		2		634																																		DI (TYPE DO w/ SGD)	58.84 Lt "A" 6584+31	D-6	25	an
D-7	25	ao																						20.0												3.9																	18" APC		D-7	25	ao
D-7	25	ap	1.8	1.63									1		5.7		2		634																																DI (TYPE GDO w/ SGD)	1.00 Rt "A" 6602+37	D-7	25	ap
D-6	25	aq	2.5	1.63									1		6.2		2		634																																DI (TYPE GDO w/ SGD)	58.84 Lt "A" 6584+80.95	D-6	25	aq
D-6	25	ar																							35.0											4.2																	24" APC		D-6	25	ar
D-6	25	as																							15.0											4.3																	24" APC		D-6	25	as
D-6	25	at	2.2								1				6.3		1		326																																DI (TYPE G2)	58.84 Lt "A" 6584+45.95	D-6	25	at
D-7	25	au																						35.0												4.1																	18" APC		D-7	25	au
D-7	25	av	2.7	1.63									1		6.3		2		634																																DI (TYPE GDO w/ SGD)	1.00 Rt "A" 6602+87.19	D-7	25	av
D-7	25	aw																						15.0												4.3																	18" APC		D-7	25	aw
D-7	25	ax	2.6	1.63									1		5.9		2		634																																DI (TYPE GDO w/ SGD)	1.00 Rt "A" 6602+52.19	D-7	25	ax
D-8	26	a																																				3.8	12.8														ROCK SLOPE PROTECTION		D-8	26	a
D-8	26	b																		1																																24" AFES	119.92 Lt "A" 6612+72.58	D-8	26	b
D-8	26	c																																68.5	4.0	DD																24" CSP w/ DD JOINTS		D-8	26	c
D-8	26	d	2.3								1				6.8		1		326																																DI (TYPE G2)	62.00 Lt "A" 6612+40.38	D-8	26	d
D-7	26	e																							374.8											5.9	WT																24" APC w/ WT JOINTS		D-7	26	e
D-7	26	f	2.6								1				8.0		1		326																																DI (TYPE G2)	62.00 Lt "A" 6608+64.17	D-7	26	f
D-7	26	g																																				3.8	12.8														ROCK SLOPE PROTECTION		D-7	26	g
D-7	26	h																		1																																24" AFES	256.29 Lt "A" 6608+49.75	D-7	26	h
D-7	26	i																																92.5	4.9	DD																24" CSP w/ DD JOINTS		D-7	26	i
D-7	26	j	2.3								1				7.0		1		326																																DI (TYPE G2 w/ SO)	164.11 Lt "A" 6608+50.56	D-7	26	j
D-7	26	k																																105.4	5.2	DD																24" CSP w/ DD JOINTS		D-7	26	k
D-7	26	l																							334.9											7.4	WT																24" APC w/ WT JOINTS		D-7	26	l
D-7	26	m	4.0								1				9.5		1		326																																DI (TYPE G2)	62.00 Lt "A" 6605+27.96	D-7	26	m
D-7	26	n																							237.2											7.5	WT																24" APC w/ WT JOINTS		D-7	26	n
D-7	26	o	7.7								1				19.8		1		326																																DI (TYPE G2)	62.00 Lt "A" 6602+90.00	D-7	26	o
D-7	26	p	2.3								1				7.0		1		326																																DI (TYPE G2) w/ SO	163.31 Lt "A" 6603+53.19	D-7	26	p
D-7	26	q																																121.3	17.7	DD																24" CSP w/ DD JOINTS		D-7	26	q
D-8	26	r																																										1								Rem 24" hdwl		D-8	26	r
D-8	26	s																																												16						Rem 24" CMP		D-8	26	s
D-8	26	t																																								1										Rem DI		D-8	26	t
D-8	26	u																																												329						Rem 24" CMP		D-8	26	u
D-7	26	v																																								1										Rem DI		D-7	26	v
D-7	26	w																																										1								Rem 24" hdwl		D-7	26	w
D-7	26	x																																												28						Rem 24" CMP		D-7	26	x
D-7	26	y																																												535						Rem 24" CMP		D-7	26	y
D-7	26	z																																			1															CAP DI		D-7	26	z
D-7	26	aa																																																1		ADJUST DI TO GRADE		D-7	26	aa
D-7	26	ab																																																	1	Rem SCSP		D-7	26	ab
SHEET TOTAL			38.4	8.15							7		6				19		6086		2			70.0	1026.9										387.7			1	7.6	25.6			2		2		908				1	1					

(N) - NOT A SEPARATE PAY ITEM, FOR INFORMATION ONLY
* - QUANTITIES INCLUDED IN PLACE HMA (MISCELLANEOUS AREA) QUANTITIES, SEE SHEET Q-3.

DRAINAGE QUANTITIES

DQ-6

REVISED BY: CB, CB, CB
DATE REVISED: 5/13/14, 2/7/14, 4/30/12

CALCULATED-DESIGNED BY: CHRIS BRIANA
CHECKED BY: TOM CONNELL
CONSULTANT FUNCTIONAL SUPERVISOR: MICHAEL LOHMAN

STATE OF CALIFORNIA - DEPARTMENT OF TRANSPORTATION
Caltrans®

LAST REVISION 00-00-00
DATE PLOTTED => 30-SEP-2014
TIME PLOTTED => 14:16

Dist	COUNTY	ROUTE	POST MILES TOTAL PROJECT	SHEET No.	TOTAL SHEETS
04	Mrn, Son	101	26.8/27.6, 0.0/2.0	242	710

REGISTERED CIVIL ENGINEER 06/30/14 DATE

8-18-14
PLANS APPROVAL DATE

THE STATE OF CALIFORNIA OR ITS OFFICERS OR AGENTS SHALL NOT BE RESPONSIBLE FOR THE ACCURACY OR COMPLETENESS OF SCANNED COPIES OF THIS PLAN SHEET.

REGISTERED PROFESSIONAL ENGINEER
S. D. DANSKY
No. 60220
Exp. 6/30/16
CIVIL
STATE OF CALIFORNIA

MARK THOMAS & CO., INC.
3000 OAK RD, SUITE 650
WALNUT CREEK, CA 94597

TRANSPORTATION AUTHORITY OF MARIN
750 LINDARO ST, SUITE 200
SAN RAFAEL, CA 94901

NOTE:
ALL PIPE JOINTS ARE STANDARD UNLESS OTHERWISE SPECIFIED.

DRAINAGE QUANTITIES

DRAINAGE PLAN SHEET No	DRAINAGE SYSTEM No.	DRAINAGE UNIT	MINOR Conc (MINOR Str)	MINOR CONCRETE (GUTTER DEPRESSION)	STRUCTURAL Conc (BOX CULVERT)	STRUCTURAL Conc (HEADWALL)	OVERSIDE DRAINS: HOT MIX ASPHALT (TYPE A) *	OVERSIDE DRAINS: PLACE HOT MIX ASPHALT (Misc AREA) *	BAR REINFORCING STEEL	DI (TYPE G2 Mod) w/ MH LID (N)	DI (TYPE G2) (N)	DI (TYPE GT4) (N)	DI (TYPE GDO) (N)	RIGID RAIL FALL PROTECTION SYSTEM	HEIGHT OF INLET (N)	CONCRETE COLLAR (N)	FRAMES, GRATES (N): TYPE 24-12 (N)	FRAMES, GRATES (N): MANHOLE LID (N)	Misc IRON AND STEEL
			CY				TON	SQYD	LB	EA					FT	EA	EA		LB
D-7	26	ac																	
D-7	26	ad																	
D-7	26	ae																	
D-7	26	af																	
D-7	26	ag																	
D-7	26	ah	1.9								1				5.4		1		326
D-7	26	ai																	
D-7	26	aj	3.5								1				8.2		1		326
D-6	26	ak																	
D-6	26	al	2.5								1				7.6		1		326
D-6	26	am																	
D-6	26	an	1.9								1				5.5		1		326
D-6	26	ao																	
D-6	26	ap	6.6	0.9							1				16.7		1		326
D-6	26	aq																	
D-7	26	ar	5.8								1				14.6		1		326
D-7	26	as																	
D-7	26	at	2.0								1				5.5		1		326
D-7	26	au																	
D-6	26	av	14.0								1			1	37.4		1		326
D-6	26	aw																	
D-6	26	ax																	
D-6	26	ay																	
D-6	26	az	1.3								1				4.0		1		326
D-6	26	bb																	
D-6	27	a																	
D-6	27	b																	
D-6	27	c																	
D-6	27	d																	
D-6	27	e																	
D-6	28	a				9.6			550										
D-6	28	b																	
D-6	28	c	6.3								1				16.0		1		326
D-6	28	d																	
D-6	28	e																	
D-6	28	f																	
D-6	28	g	1.3								1				3.0		1		326
D-11	29	a																	
SHEET TOTAL			47.1	0.9		9.6			550		11			1			11		3586

DRAINAGE PLAN SHEET No	DRAINAGE SYSTEM No.	DRAINAGE UNIT	ALTERNATIVE FLARED END SECTION: 18" AFES	24" AFES	30" AFES	36" AFES	ALTERNATIVE PIPE CULVERT: 18"	24"	36"	42"	REINFORCED CONCRETE PIPE: 18"	24"	30"	36"	72"	24" DOUBLE CAGED REINFORCED CONCRETE PIPE	18" CORREGATED STEEL PIPE (0.064" THICK)	24" CORREGATED STEEL PIPE (0.064" THICK)	MAX COVER (N)	PIPE JOINT CLASSIFICATION (N)	CAP INLET
			EA				LF				LF					LF	LF	LF	FT		EA
D-7	26	ac																			
D-7	26	ad																			
D-7	26	ae																			
D-7	26	af						85.8											17.7	WT	
D-7	26	ag														225.7			17.8	WT	
D-7	26	ah																			
D-7	26	ai														251.9			12.6	WT	
D-7	26	aj																			
D-6	26	ak														197.8			6.2	WT	
D-6	26	al																			
D-6	26	am														210.8			5.6	WT	
D-6	26	an																			
D-6	26	ao												116.6					34.3	WT	
D-6	26	ap																			
D-6	26	aq																			
D-7	26	ar																			
D-7	26	as						219.1											12.5	WT	
D-7	26	at																			
D-7	26	au														68.2			12.5	WT	
D-6	26	av																			
D-6	26	aw												99.1					34.4	WT	
D-6	26	ax						55.9											17.1		
D-6	26	ay																			
D-6	26	az																			
D-6	26	bb															64.6		10.9	DD	
D-6	27	a																			
D-6	27	b	1																		
D-6	27	c									76.5								7.2		
D-6	27	d	1																		
D-6	27	e																			
D-6	28	a																			
D-6	28	b													481.6				25.5		
D-6	28	c																			
D-6	28	d																			
D-6	28	e																			
D-6	28	f																			
D-6	28	g																			
D-11	29	a																			
SHEET TOTAL			2					360.8			76.5			215.7	481.6	954.4	64.6				

ROCK SLOPE PROTECTION: LIGHT, METHOD B	RSP FABRIC (Cl 8)	REMOVE EXISTING (N)	REMOVE MANHOLE	REMOVE INLET	REMOVE CONCRETE (CHANNEL)	REMOVE HEADWALL	REMOVE CONCRETE (WINGWALL)	REMOVE PIPE	ABANDON CULVERT (LF)	REMOVE CULVERT (LF)	REMOVE FLARED END SECTION	ADJUST INLET	REMOVE SACKED Conc SLOPE PROTECTION	DESCRIPTION	STATION	DRAINAGE PLAN SHEET No.	DRAINAGE SYSTEM No.	DRAINAGE UNIT
CY	SQYD	EA	EA		CY	EA	CY	LF	LF	LF	EA							
								83						Rem 36" CMP DD		D-7	26	ac
				1										Rem DI		D-7	26	ad
								117						Rem 24" CMP		D-7	26	ae
														24" RCP w/ WT JOINTS		D-7	26	af
														24" Dbl CAGED RCP w/ WT JOINTS		D-7	26	ag
														DI (TYPE G2)	131.19 Lt "A" 6600+77.69	D-7	26	ah
														24" Dbl CAGED RCP w/ WT JOINTS		D-7	26	ai
														DI (TYPE G2 w/ SO)	119.35 Lt "A" 6597+57.99	D-7	26	aj
														24" Dbl CAGED RCP w/ WT JOINTS		D-6	26	ak
														DI (TYPE G2)	119.11 Lt "A" 6595+60.21	D-6	26	al
														24" Dbl CAGED RCP w/ WT JOINTS		D-6	26	am
														DI (TYPE G2)	122.25 Lt "A" 6593+49.41	D-6	26	an
														36" RCP w/ WT JOINTS		D-6	26	ao
														DI (TYPE G2)	98.96 Rt "A" 6593+49.41	D-6	26	ap
										104				Remove 4' x 4' Culv		D-6	26	aq
														DI (TYPE G2)	132.60 Lt "A" 6600+09.58	D-7	26	ar
														24" APC w/ WT JOINTS		D-7	26	as
														DI (TYPE G2 w/ SO)	86.22 Rt "A" 6600+21.10	D-7	26	at
														24" Dbl CAGED RCP w/ WT JOINTS		D-7	26	au
														DI (TYPE G2)	1.00 Rt "A" 6593+50	D-6	26	av
														36" RCP w/ WT JOINTS		D-6	26	aw
														24" APC		D-6	26	ax
								55.9						Remove 24" CMP		D-6	26	ay
														DI (TYPE G5 Mod)	98.24 Lt "A" 6594+14.34	D-6	26	az
														18" CSP w/ DD JOINTS		D-6	26	bb
3.8	12.8													ROCK SLOPE PROTECTION		D-6	27	a
														18" AFES	29.72 Rt "K" 6584+20.83	D-6	27	b
														18" RCP		D-6	27	c
														18" AFES	42.28 Lt "K" 6584+85.79	D-6	27	d
3.8	12.8													ROCK SLOPE PROTECTION		D-6	27	e
														Dbl 72" Hdwl	146.78' Lt "A" 6584+34.41	D-6	28	a
														(2) 72" RCP		D-6	28	b
														DI (TYPE G2)	90.03' Rt "A" 6583+90.86	D-6	28	c
										60				Rem 12' x 6' Culv		D-6	28	d
				1										Rem DI		D-6	28	e
								204						Rem 18" APC		D-6	28	f
														DI (TYPE G2 w/ CMP RISER)		D-6	28	g
												1		ADJUST DI TO GRADE		D-11	29	a
7.6	25.6			2				460		164		1						

(N) - NOT A SEPARATE PAY ITEM, FOR INFORMATION ONLY
* - QUANTITIES INCLUDED IN PLACE HMA (MISCELLANEOUS AREA) QUANTITIES, SEE SHEET Q-3.

DRAINAGE QUANTITIES

DQ-7

REVISED BY	DATE REVISED
CB	5/13/14
CB	2/7/14
CB	4/30/12

CALCULATED-DESIGNED BY: CHRIS BRIANA
CHECKED BY: TOM CONNELL
CONSULTANT FUNCTIONAL SUPERVISOR: MICHAEL LOHMAN

STATE OF CALIFORNIA - DEPARTMENT OF TRANSPORTATION
Caltrans®

LAST REVISION 00-00-00
DATE PLOTTED => 30-SEP-2014
TIME PLOTTED => 14:16

BORDER LAST REVISED 7/2/2010
USERNAME => acroskey
DGN FILE => 0400000735id007.dgn
RELATIVE BORDER SCALE IS IN INCHES 0 1 2 3
UNIT 0716
PROJECT NUMBER & PHASE 04000007351

REGISTERED CIVIL ENGINEER 06/30/14 DATE

8-18-14
PLANS APPROVAL DATE

REGISTERED PROFESSIONAL ENGINEER S. D. DANSKY No. 60220 Exp. 6/30/16 CIVIL STATE OF CALIFORNIA

THE STATE OF CALIFORNIA OR ITS OFFICERS OR AGENTS SHALL NOT BE RESPONSIBLE FOR THE ACCURACY OR COMPLETENESS OF SCANNED COPIES OF THIS PLAN SHEET.

MARK THOMAS & CO., INC.
3000 OAK RD, SUITE 650
WALNUT CREEK, CA 94597

TRANSPORTATION AUTHORITY OF MARIN
750 LINDARO ST, SUITE 200
SAN RAFAEL, CA 94901

NOTE:
ALL PIPE JOINTS ARE STANDARD UNLESS OTHERWISE SPECIFIED.

DRAINAGE QUANTITIES

DRAINAGE PLAN SHEET No	DRAINAGE SYSTEM No.	DRAINAGE UNIT	MINOR Conc (MINOR Str)	MINOR CONCRETE (GUTTER DEPRESSION)	STRUCTURAL Conc (BOX CULVERT)	STRUCTURAL Conc (HEADWALL)	OVERSIDE DRAINS: HOT MIX ASPHALT (TYPE A) *	OVERSIDE DRAINS: PLACE HOT MIX ASPHALT (Misc AREA) *	BAR REINFORCING STEEL	DI (TYPE G2 Mod) w/ MH LID (N)	DI (TYPE G2) (N)	DI (TYPE GT4) (N)	DI (TYPE GDO) (N)	RIGID RAIL FALL PROTECTION SYSTEM	HEIGHT OF INLET (N)	CONCRETE COLLAR (N)	FRAMES, GRATES (N): TYPE 24-12 (N)	FRAMES, GRATES (N): MANHOLE LID (N)	Misc IRON AND STEEL	ALTERNATIVE FLARED END SECTION: 18" AFES	ALTERNATIVE FLARED END SECTION: 24" AFES	ALTERNATIVE FLARED END SECTION: 30" AFES	ALTERNATIVE FLARED END SECTION: 36" AFES	ALTERNATIVE PIPE CULVERT: 18"	ALTERNATIVE PIPE CULVERT: 24"	ALTERNATIVE PIPE CULVERT: 36"	ALTERNATIVE PIPE CULVERT: 42"	REINFORCED CONCRETE PIPE: 18"	REINFORCED CONCRETE PIPE: 24"	REINFORCED CONCRETE PIPE: 30"	REINFORCED CONCRETE PIPE: 36"	REINFORCED CONCRETE PIPE: 72"	24" DOUBLE CAGED REINFORCED CONCRETE PIPE	18" CORREGATED STEEL PIPE (0.064" THICK)	24" CORREGATED STEEL PIPE (0.064" THICK)	MAX COVER (N)	PIPE JOINT CLASSIFICATION (N)	CAP INLET	ROCK SLOPE PROTECTION: LIGHT, METHOD B	ROCK SLOPE PROTECTION: RSP FABRIC (Cl 8)	ROCK SLOPE PROTECTION: REMOVE EXISTING (N)	REMOVE MANHOLE	REMOVE INLET	REMOVE CONCRETE (CHANNEL)	REMOVE HEADWALL	REMOVE CONCRETE (WINGWALL)	REMOVE PIPE	ABANDON CULVERT (LF)	REMOVE CULVERT (LF)	REMOVE FLARED END SECTION	ADJUST INLET	REMOVE SACKED Conc SLOPE PROTECTION	DESCRIPTION	STATION	DRAINAGE PLAN SHEET No.	DRAINAGE SYSTEM No.	DRAINAGE UNIT
			CY				TON	SQYD	LB	EA					FT	EA	EA		LB	EA				LF				LF					LF	LF	LF	FT		EA	CY	SQYD	EA	EA		CY	EA	CY	LF	LF	LF	EA							
D-10	30	b																				1																															30" AFES	51.97 Lt "A" 6646+45.04	D-10	30	b
D-10	30	c																												149.8						4.4																	30" RCP		D-10	30	c
D-10	30	d	2.1								1				6.9		1		326																																		DI (TYPE G2)	57.00 Lt "A" 6645+07.66	D-10	30	d
D-10	30	e																												231.8						4.5																	30" RCP		D-10	30	e
D-10	30	f	2.4										1		5.5		2		634																																		DI (TYPE GDO Mod)	1.00 Rt "A" 6642+73.53	D-10	30	f
D-10	30	g																						57.0												5.4																	18" APC		D-10	30	g
D-10	30	h	2.1								1				7.0		1		326																																		DI (TYPE G2)	57.00 Lt "A" 6642+73.53	D-10	30	h
D-10	30	i																							400.5											9.6																	24" APC		D-10	30	i
D-10	30	j	2.4										1		5.5		2		634																																		DI (TYPE GDO Mod)	1.00 Rt "A" 6638+68.91	D-10	30	j
D-10	30	k																						57.0												5.6																	18" APC		D-10	30	k
D-10	30	l	4.4								1				11.6		1		326																																		DI (TYPE G2)	57.00 Lt "A" 6638+68.91	D-10	30	l
D-9	30	m																							400.6											8.2																	24" APC		D-9	30	m
D-9	30	n	2.4										1		5.5		2		634																																		DI (TYPE GDO Mod)	1.00′ Rt "A" 6634+64.25	D-9	30	n
D-9	30	o																						57.0												4.0																	18" APC		D-9	30	o
D-9	30	p	3.9								1				10.2		1		326																																		DI (TYPE G2)	57.00′ Lt "A" 6634+64.25	D-9	30	p
D-9	30	q																							475.4											3.6																	24" APC		D-9	30	q
D-9	30	r	2.4										1		5.5		2		634																																		DI (TYPE GDO Mod)	1.00 Rt "A" 6629+83.94	D-9	30	r
D-9	30	s																						57.0												4.0																	18" APC		D-9	30	s
D-9	30	t	2.0								1				5.6		1		326																																		DI (TYPE G2)	57.00′ Lt "A" 6629+83.94	D-9	30	t
D-9	30	u																							325.5											3.6																	24" APC		D-9	30	u
D-9	30	v	2.4										1		5.5		2		634																																		DI (TYPE GDO Mod)	1.00 Rt "A" 6626+55.18	D-9	30	v
D-9	30	w																						57.0												4.0																	18" APC		D-9	30	w
D-9	30	x	2.0								1				5.6		1		326																																		DI (TYPE G2)	57.00′ Lt "A" 6626+55.18	D-9	30	x
D-9	30	y																							401.9											4.2																	24" APC		D-9	30	y
D-8	30	z	2.4										1		5.5		2		634																																		DI (TYPE GDO Mod)	1.00′ Rt "A" 6622+52.81	D-8	30	z
D-8	30	aa																						57.0												4.6																	18" APC		D-8	30	aa
D-8	30	ab	2.1								1				6.2		1		326																																		DI (TYPE G2)	57.00′ Lt "A" 6622+52.81	D-8	30	ab
D-8	30	ac																							400.4											4.1																	24" APC		D-8	30	ac
D-8	30	ad																																													150						Rem 18" CMP		D-8	30	ad
D-8	30	ae																						60.7												10.8																	18" APC		D-8	30	ae
D-8	30	af	1.8								1				5.0		1		326																																		DI (TYPE G2)	60.00 Rt "A" 6618+48.25	D-8	30	af
D-8	30	ag																						60.7												4.1																	18" APC		D-8	30	ag
D-8	30	ah	1.9								1				5.5		1		326																																		DI (TYPE G2)	57.00 Lt "A" 6618+51.04	D-8	30	ah
D-8	30	ai																							400.6											3.4																	24" APC		D-8	30	ai
D-8	30	aj	1.9								1				5.3		1		326																																		DI (TYPE G2)	57.00 Lt "A" 6614+49.03	D-8	30	aj
D-8	30	ak																						57.0												4.0																	18" APC		D-8	30	ak
D-8	30	al	2.0	1.14							1				5.5		1		326																																		DI (TYPE G2 w/ SGD)	1.00 Rt "A" 6614+49.03	D-8	30	al
D-8	30	am																						9.0												5.4																	18" APC		D-8	30	am
D-8	30	an	2.4										1		5.3		2		634																																		DI (TYPE GDO Mod)	1.00 Lt "A" 6618+54.04	D-8	30	an
D-8	30	ao																						57.0												4.2																	18" APC		D-8	30	ao
D-8	30	aq	1.9								1				5.3		1		326																																		DI (TYPE G2)	62.00 Lt "A" 6642+67.03	D-8	30	aq
SHEET TOTAL			44.9	1.14							12		7				26		8350			1		586.4	2804.9					381.6																	150										

(N) - NOT A SEPARATE PAY ITEM, FOR INFORMATION ONLY
* - QUANTITIES INCLUDED IN PLACE HMA (MISCELLANEOUS AREA) QUANTITIES, SEE SHEET Q-3.

DRAINAGE QUANTITIES

DQ-8

Dist	COUNTY	ROUTE	POST MILES TOTAL PROJECT	SHEET No.	TOTAL SHEETS
04	Mrn, Son	101	26.8/27.6, 0.0/2.0	244	710

REGISTERED CIVIL ENGINEER 06/30/14 DATE

8-18-14
PLANS APPROVAL DATE

REGISTERED PROFESSIONAL ENGINEER S. D. DANSKY No. 60220 Exp. 6/30/16 CIVIL STATE OF CALIFORNIA

THE STATE OF CALIFORNIA OR ITS OFFICERS OR AGENTS SHALL NOT BE RESPONSIBLE FOR THE ACCURACY OR COMPLETENESS OF SCANNED COPIES OF THIS PLAN SHEET.

MARK THOMAS & CO., INC.
3000 OAK RD, SUITE 650
WALNUT CREEK, CA 94597

TRANSPORTATION AUTHORITY OF MARIN
750 LINDARO ST, SUITE 200
SAN RAFAEL, CA 94901

NOTE:
ALL PIPE JOINTS ARE STANDARD UNLESS OTHERWISE SPECIFIED.

DRAINAGE QUANTITIES

DRAINAGE PLAN SHEET No	DRAINAGE SYSTEM No.	DRAINAGE UNIT	MINOR Conc (MINOR Str) (CY)	MINOR CONCRETE (GUTTER DEPRESSION) (CY)	STRUCTURAL Conc (BOX CULVERT) (CY)	STRUCTURAL Conc (HEADWALL) (CY)	OVERSIDE DRAINS: HOT MIX ASPHALT (TYPE A) * (TON)	OVERSIDE DRAINS: PLACE HOT MIX ASPHALT (Misc AREA) * (SQYD)	BAR REINFORCING STEEL (LB)	DI (TYPE G2 Mod) w/ MH LID (N) (EA)	DI (TYPE G2) (N) (EA)	DI (TYPE GT4) (N) (EA)	DI (TYPE GDO) (N) (EA)	RIGID RAIL FALL PROTECTION SYSTEM (EA)	HEIGHT OF INLET (N) (FT)	CONCRETE COLLAR (N) (EA)	FRAMES, GRATES (N): TYPE 24-12 (N) (EA)	FRAMES, GRATES (N): MANHOLE LID (N) (EA)	Misc IRON AND STEEL (LB)
D-9	31	a	5.5								1				13.5		1		326
D-9	31	b																	
D-9	31	c	5.0								1				12.3		1		326
D-9	31	d																	
D-9	31	e	2.5								1				7.6		1		326
D-9	31	f																	
D-9	31	g	5.1								1				12.7		1		326
D-9	31	h																	
D-9	31	i																	
D-9	31	j	2.0								1				5.6		1		326
D-8	31	k																	
D-8	31	l	2.0								1				5.9		1		326
D-8	31	m																	
D-9	31	n																	
D-8	31	o																	
D-8	31	p	2.0								1				5.6		1		326
D-8	31	q																	
D-8	31	r	2.1								1				5.6		1		326
D-8	31	s																	
D-8	31	t																	
D-8	31	u																	
D-8	31	v																	
D-8	31	w																	
D-9	31	y																	
D-9	32	a																	
D-9	32	b																	
D-9	32	c	3.7								1				8.7		1		326
D-9	32	d																	
D-9	32	e	1.8								1				5.1		1		326
D-9	32	f																	
D-9	32	g																	
D-9	32	h																	
D-9	32	i																	
D-10	33	a																	
D-10	33	b	5.6								1				13.9		1		326
D-10	33	c																	
D-10	33	d	2.2								1				6.5		1		326
D-10	33	e																	
D-10	33	f	2.5	0.9							1				7.4		1		326
D-10	33	g																	
D-10	33	h	2.2								1				6.6		1		326
SHEET TOTAL			44.2	0.9							14						14		4564

DRAINAGE PLAN SHEET No	DRAINAGE SYSTEM No.	DRAINAGE UNIT	ALTERNATIVE FLARED END SECTION: 18" AFES (EA)	24" AFES (EA)	30" AFES (EA)	36" AFES (EA)	ALTERNATIVE PIPE CULVERT: 18" (LF)	24" (LF)	36" (LF)	42" (LF)	REINFORCED CONCRETE PIPE: 18" (LF)	24" (LF)	30" (LF)	36" (LF)	72" (LF)	24" DOUBLE CAGED REINFORCED CONCRETE PIPE (LF)	18" CORREGATED STEEL PIPE (0.064" THICK) (LF)	24" CORREGATED STEEL PIPE (0.064" THICK) (LF)	MAX COVER (N) (FT)	PIPE JOINT CLASSIFICATION (N)	CAP INLET (EA)
D-9	31	a																			
D-9	31	b												146.7					10.5		
D-9	31	c																			
D-9	31	d							232.5										10.0		
D-9	31	e																			
D-9	31	f							33.3										9.7		
D-9	31	g																			
D-9	31	h																			
D-9	31	i						297.9											5.6		
D-9	31	j																			
D-8	31	k															41.7		4.4	DD	
D-8	31	l																			
D-8	31	m																			
D-9	31	n																			
D-8	31	o						223.5											3.6		
D-8	31	p																			
D-8	31	q						223.5											3.6		
D-8	31	r																			
D-8	31	s																160.0	16.0	DD	
D-8	31	t																			
D-8	31	u																			
D-8	31	v																			
D-8	31	w																			
D-9	31	y																			
D-9	32	a																			
D-9	32	b					13.9												7.2		
D-9	32	c																			
D-9	32	d					116.4												7.1		
D-9	32	e																			
D-9	32	f															76.1		8.8	DD	
D-9	32	g																			
D-9	32	h																			
D-9	32	i																			
D-10	33	a																			
D-10	33	b																			
D-10	33	c												16.7					10.9		
D-10	33	d																			
D-10	33	e												129.8					5.3		
D-10	33	f																			
D-10	33	g												49.2					5.4		
D-10	33	h																			
SHEET TOTAL							130.3	744.9	265.8					342.4			117.8	160.0			

DRAINAGE PLAN SHEET No	DRAINAGE SYSTEM No.	DRAINAGE UNIT	ROCK SLOPE PROTECTION: LIGHT, METHOD B (CY)	RSP FABRIC (Cl 8) (SQYD)	REMOVE EXISTING (N) (EA)	REMOVE MANHOLE (EA)	REMOVE INLET (EA)	REMOVE CONCRETE (CHANNEL) (CY)	REMOVE HEADWALL (EA)	REMOVE CONCRETE (WINGWALL) (CY)	REMOVE PIPE (LF)	ABANDON CULVERT (LF) (LF)	REMOVE CULVERT (LF) (LF)	REMOVE FLARED END SECTION (EA)	ADJUST INLET (EA)	REMOVE SACKED Conc SLOPE PROTECTION (EA)	DESCRIPTION	STATION	DRAINAGE PLAN SHEET No.	DRAINAGE SYSTEM No.	DRAINAGE UNIT
D-9	31	a															DI (TYPE G2)	80.00' Rt "A" 6630+81.30	D-9	31	a
D-9	31	b															36" RCP		D-9	31	b
D-9	31	c															DI (TYPE G2)	39.00' Lt "A" 6629+88.56	D-9	31	c
D-9	31	d															36" APC		D-9	31	d
D-9	31	e															DI (TYPE G2)	59.40' Lt "A" 6627+58.71	D-9	31	e
D-9	31	f															36" APC		D-9	31	f
D-9	31	g															DI (TYPE G2)	92.68' Lt "A" 6627+58.71	D-9	31	g
D-9	31	h												1			Rem 36" AFES		D-9	31	h
D-9	31	i															24" APC		D-9	31	i
D-9	31	j															DI (TYPE G2)	59.40' Lt "A" 6624+58.97	D-9	31	j
D-8	31	k															18" CSP w/ DD JOINTS		D-8	31	k
D-8	31	l															DI (TYPE G2)	132.99' Lt "A" 6624+58.97	D-8	31	l
D-8	31	m												1			Rem 18" AFES		D-8	31	m
D-9	31	n						8.8									Rem Conc (CHANNEL) 142 LF	6624+50 - 6625+00 Lt	D-9	31	n
D-8	31	o															24" APC		D-8	31	o
D-8	31	p															DI (TYPE G2)	59.40' Lt "A" 6622+34.68	D-8	31	p
D-8	31	q															24" APC		D-8	31	q
D-8	31	r															DI (TYPE G2)	59.40' Lt "A" 6620+10.38	D-8	31	r
D-8	31	s															24" CSP w/ DD JOINTS		D-8	31	s
D-8	31	t												1			Rem 24" AFES		D-8	31	t
D-8	31	u									108						Rem 24" APC		D-8	31	u
D-8	31	v						7.2									Rem Conc (CHANNEL) 117 LF	6620+10 - 6620+75 Lt	D-8	31	v
D-8	31	w														1	Rem RSP		D-8	31	w
D-9	31	y											33				Rem 3'x3' Culv		D-9	31	y
D-9	32	a													1		Adj DI TO GRADE	68.27' Rt "A" 6635+24.39	D-9	32	a
D-9	32	b															18" APC		D-9	32	b
D-9	32	c															DI (TYPE G2)	57.00' Rt "A" 6635+24.39	D-9	32	c
D-9	32	d															18" APC		D-9	32	d
D-9	32	e															DI (TYPE G2)	62.00' Lt "A" 6635+24.74	D-9	32	e
D-9	32	f															18" CSP w/ DD JOINTS		D-9	32	f
D-9	32	g												1			Rem 18" AFES		D-9	32	g
D-9	32	h									65						Rem 18" APC		D-9	32	h
D-9	32	i						4.3									Rem Conc (CHANNEL) 70 LF	6634+80 - 6635+00 Lt	D-9	32	i
D-10	33	a												1			REMOVE 36" AFES		D-10	33	a
D-10	33	b															DI (TYPE G2)	78.29' Lt "A" 6639+07.62	D-10	33	b
D-10	33	c															36" RCP		D-10	33	c
D-10	33	d															DI (TYPE G2)	62.00' Lt "A" 6639+13.70	D-10	33	d
D-10	33	e															36" RCP		D-10	33	e
D-10	33	f															DI (TYPE G2)	64.58' Rt "A" 6639+40.43	D-10	33	f
D-10	33	g															36" RCP		D-10	33	g
D-10	33	h															DI (TYPE G2 w/ SO)	105.02' Rt "A" 6639+49.27	D-10	33	h
SHEET TOTAL								20.3			173		33	5	1	1					

(N) - NOT A SEPARATE PAY ITEM, FOR INFORMATION ONLY
* - QUANTITIES INCLUDED IN PLACE HMA (MISCELLANEOUS AREA) QUANTITIES, SEE SHEET Q-3.

DRAINAGE QUANTITIES

DQ-9

STATE OF CALIFORNIA - DEPARTMENT OF TRANSPORTATION Caltrans

CONSULTANT FUNCTIONAL SUPERVISOR: MICHAEL LOHMAN
CALCULATED-DESIGNED BY: CHRIS BRIANA
CHECKED BY: TOM CONNELL

REVISED BY	DATE REVISED
CB	4/30/12
CB	2/7/14
CB	5/13/14

NOTE:
ALL PIPE JOINTS ARE STANDARD UNLESS OTHERWISE SPECIFIED.

Dist	COUNTY	ROUTE	POST MILES TOTAL PROJECT	SHEET No.	TOTAL SHEETS
04	Mrn, Son	101	26.8/27.6, 0.0/2.0	245	710

REGISTERED CIVIL ENGINEER 06/30/14 DATE

8-18-14
PLANS APPROVAL DATE

REGISTERED PROFESSIONAL ENGINEER
S. D. DANSKY
No. 60220
Exp. 6/30/16
CIVIL
STATE OF CALIFORNIA

THE STATE OF CALIFORNIA OR ITS OFFICERS OR AGENTS SHALL NOT BE RESPONSIBLE FOR THE ACCURACY OR COMPLETENESS OF SCANNED COPIES OF THIS PLAN SHEET.

MARK THOMAS & CO., INC.
3000 OAK RD, SUITE 650
WALNUT CREEK, CA 94597

TRANSPORTATION AUTHORITY OF MARIN
750 LINDARO ST, SUITE 200
SAN RAFAEL, CA 94901

DRAINAGE QUANTITIES

DRAINAGE PLAN SHEET No	DRAINAGE SYSTEM No.	DRAINAGE UNIT	MINOR Conc (MINOR Str)	MINOR CONCRETE (GUTTER DEPRESSION)	STRUCTURAL Conc (BOX CULVERT)	STRUCTURAL Conc (HEADWALL)	OVERSIDE DRAINS: HOT MIX ASPHALT (TYPE A) *	OVERSIDE DRAINS: PLACE HOT MIX ASPHALT (Misc AREA) *	BAR REINFORCING STEEL	DI (TYPE G2 Mod) w/ MH LID (N)	DI (TYPE G2) (N)	DI (TYPE GT4) (N)	DI (TYPE GDO) (N)	RIGID RAIL FALL PROTECTION SYSTEM	HEIGHT OF INLET (N)	CONCRETE COLLAR (N)	FRAMES, GRATES (N): TYPE 24-12 (N)	FRAMES, GRATES (N): MANHOLE LID (N)	Misc IRON AND STEEL	ALTERNATIVE FLARED END SECTION: 18" AFES	24" AFES	30" AFES	36" AFES	ALTERNATIVE PIPE CULVERT: 18"	24"	36"	42"	REINFORCED CONCRETE PIPE: 18"	24"	30"	36"	72"	24" DOUBLE CAGED REINFORCED CONCRETE PIPE	18" CORREGATED STEEL PIPE (0.064" THICK)	24" CORREGATED STEEL PIPE (0.064" THICK)	MAX COVER (N)	PIPE JOINT CLASSIFICATION (N)	CAP INLET	ROCK SLOPE PROTECTION: LIGHT, METHOD B	ROCK SLOPE PROTECTION: RSP FABRIC (Cl 8)	ROCK SLOPE PROTECTION: REMOVE EXISTING (N)	REMOVE MANHOLE	REMOVE INLET	REMOVE CONCRETE (CHANNEL)	REMOVE HEADWALL	REMOVE CONCRETE (WINGWALL)	REMOVE PIPE	ABANDON CULVERT (LF)	REMOVE CULVERT (LF)	REMOVE FLARED END SECTION	ADJUST INLET	REMOVE SACKED Conc SLOPE PROTECTION	DESCRIPTION	STATION	DRAINAGE PLAN SHEET No.	DRAINAGE SYSTEM No.	DRAINAGE UNIT
			CY				TON	SQYD	LB	EA					FT	EA	EA		LB	EA				LF				LF					LF	LF	LF	FT		EA	CY	SQYD	EA	EA		CY	EA	CY	LF	LF	LF	EA							
D-10	33	i																													156.4					3.6																	36" RCP		D-10	33	i
D-10	33	j	1.8							1					4.8			1	435																																		SDMH	82.34' Rt "A" 6641+01.40	D-10	33	j
D-10	33	k	1.3								1				1.9		1		326																																		DI (TYPE G2)	68.36' "A" 6642+14.45	D-10	33	k
D-10	33	l																										115.4								3.2																	18" RCP		D-10	33	l
D-10	33	m																													67.1					3.0																	36" RCP		D-10	33	m
D-10	33	n																					1																														36" AFES	148.92' Rt "A" 6641+09.13	D-10	33	n
D-10	33	o																																					3.8	12.8														ROCK SLOPE PROTECTION		D-10	33	o
D-10	34	b	2.5								1				7.5		1		326																																		DI (TYPE G2) w/ SO	36.28' Rt "FR" 6643+62.14	D-10	34	b
D-10	34	c																								115.5										7.2																	42" APC		D-10	34	c
D-10	34	d	4.5							1					10.8			1	435																																SDMH	13.16' Rt "FR" 6644+74.95	D-10	34	d
D-10	34	e																								299.0										7.3																	42" APC		D-10	34	e
D-10	34	f	2.5							1					7.7			1	435																																SDMH	7.62' Rt "FR" 6647+73.13	D-10	34	f
D-10	34	g																								300.6										6.5																	42" APC		D-10	34	g
D-10	34	h	4.2							1					10.1			1	435																																SDMH	7.44' Rt "FR" 6650+74.01	D-10	34	h
D-11	34	i																								83.8										6.6																	42" APC		D-11	34	i
D-11	34	j	2.1								1				6.0		1		326																																DI (TYPE G2)	57.00' Rt "A" 6653+70.16	D-11	34	j
D-11	34	k																					29.4													8.3																	18" APC		D-11	34	k
D-11	34	l	4.6							1					11.3			1	435																																SDMH	7.29' Rt "FR" 6653+51.71	D-11	34	l
D-11	34	m																								88.3										8.3																	42" APC		D-11	34	m
D-10	34	n	1.8								1				5.0		1		326																																DI (TYPE G2)	17.00' Rt "FR" 6647+73.13	D-10	34	n
D-10	34	o																					119.6													5.1																	18" APC		D-10	34	o
D-11	34	p	4.8							1					11.8			1	435																																SDMH	7.22' Rt "FR" 6654+39.77	D-11	34	p
D-11	34	q																																												4							Rem WINGWALL	"A" 6654+50 Rt	D-11	34	q
D-11	34	r			7.4				1437.5																											9.6																	4' x 3' BOX Culv		D-11	34	r
D-11	34	s																																					3.8	12.8														ROCK SLOPE PROTECTION		D-11	34	s
D-11	34	t	4.2							1					10.0			1	435																																SDMH	7.39' Rt "FR" 6651+57.85	D-11	34	t
D-11	34	u																								193.9										7.7																	42" APC		D-11	34	u
D-11	34	v																					7.1													8.4																	18" APC		D-11	34	v
D-11	34	w	1.8								1				5.0		1		326																																DI (TYPE G2)	17.00' Rt "FR" 6651+57.85	D-11	34	w
D-11	34	x																					7.1													8.3																	18" APC		D-11	34	x
D-11	34	y	1.8								1				5.0		1		326																																DI (TYPE G2)	17.00' Rt "FR" 6653+51.71	D-11	34	y
D-11	34	z																					60.7													8.3																	18" APC		D-11	34	z
D-11	34	aa	1.8								1				5.0		1		326																																DI (TYPE G2)	17.00' Rt "FR" 6654+99.99	D-11	34	aa
D-11	34	ab																					200.0													3.6																	18" APC		D-11	34	ab
D-11	34	ac	1.8								1				5.0		1		326																																DI (TYPE G2)	57.00' Rt "A" 6655+70.16	D-11	34	ac
D-11	34	ad																					200.0													3.6																	18" APC		D-11	34	ad
D-11	34	ae	1.8								1				5.0		1		326																																DI (TYPE G2)	57.00' Rt "A" 6657+70.16	D-11	34	ae
D-11	34	af	6.0																																																		TRAPEZOIDAL DITCH		D-11	34	af
D-11	34	ag																																																			DI (TYPE G2)	17.00' Rt "A" 6647+73.13	D-11	34	ag
D-11	34	ah	2.4								1				7.2		1		326					7.1												6.1																	18" APC		D-11	34	ah
SHEET TOTAL			51.7		7.4				1437.5	7	10						10	7	6305				1	631.0			1081.1	115.4			223.5								7.6	25.6						4											

(N) - NOT A SEPARATE PAY ITEM, FOR INFORMATION ONLY
* - QUANTITIES INCLUDED IN PLACE HMA (MISCELLANEOUS AREA) QUANTITIES, SEE SHEET Q-3.

REVISED BY	DATE REVISED
CB	4/30/12
CB	2/7/14
CB	5/13/14

CALCULATED-DESIGNED BY: CHRIS BRIANA
CHECKED BY: TOM CONNELL
CONSULTANT FUNCTIONAL SUPERVISOR: MICHAEL LOHMAN

STATE OF CALIFORNIA - DEPARTMENT OF TRANSPORTATION
Caltrans

DRAINAGE QUANTITIES

DQ-10

LAST REVISION 00-00-00 | DATE PLOTTED => 30-SEP-2014 | TIME PLOTTED => 14:16

NOTE:
ALL PIPE JOINTS ARE STANDARD UNLESS OTHERWISE SPECIFIED.

Dist	COUNTY	ROUTE	POST MILES TOTAL PROJECT	SHEET No.	TOTAL SHEETS
04	Mrn, Son	101	26.8/27.6, 0.0/2.0	246	710

REGISTERED CIVIL ENGINEER 06/30/14 DATE

8-18-14
PLANS APPROVAL DATE

REGISTERED PROFESSIONAL ENGINEER S. D. DANSKY No. 60220 Exp. 6/30/16 CIVIL STATE OF CALIFORNIA

THE STATE OF CALIFORNIA OR ITS OFFICERS OR AGENTS SHALL NOT BE RESPONSIBLE FOR THE ACCURACY OR COMPLETENESS OF SCANNED COPIES OF THIS PLAN SHEET.

MARK THOMAS & CO., INC.
3000 OAK RD, SUITE 650
WALNUT CREEK, CA 94597

TRANSPORTATION AUTHORITY OF MARIN
750 LINDARO ST, SUITE 200
SAN RAFAEL, CA 94901

DRAINAGE QUANTITIES

DRAINAGE PLAN SHEET No	DRAINAGE SYSTEM No.	DRAINAGE UNIT	MINOR Conc (MINOR Str) CY	MINOR CONCRETE (GUTTER DEPRESSION) CY	STRUCTURAL Conc (BOX CULVERT) CY	STRUCTURAL Conc (HEADWALL) CY	OVERSIDE DRAINS: HOT MIX ASPHALT (TYPE A) * TON	OVERSIDE DRAINS: PLACE HOT MIX ASPHALT (Misc AREA) * SQYD	BAR REINFORCING STEEL LB	DI (TYPE G2 Mod) w/ MH LID (N) EA	DI (TYPE G2) (N) EA	DI (TYPE GT4) (N) EA	DI (TYPE GDO) (N) EA	RIGID RAIL FALL PROTECTION SYSTEM EA	HEIGHT OF INLET (N) FT	CONCRETE COLLAR (N) EA	FRAMES, GRATES (N): TYPE 24-12 (N) EA	FRAMES, GRATES (N): MANHOLE LID (N) EA	Misc IRON AND STEEL LB
D-10	35	a	2.9										1		7.1		2		634
D-10	35	b																	
D-10	35	c	2.2										1		4.9		2		634
D-10	35	d																	
D-11	35	e	2.0								1				5.7		1		326
D-11	35	f																	
D-11	35	i	1.6	1.14							1				4.1		1		326
D-11	35	j																	
D-11	35	k	2.3	1.63									1		5.2		2		634
D-11	35	l																	
D-11	35	m	2.4	1.63									1		5.4		2		634
D-11	35	n																	
D-4	36	a																	
D-4	36	b																	
D-4	36	c																	
D-4	36	d																	
D-5	37	a																	
D-5	38	a																	
D-4	39	a																	
D-11	40	a																	
D-11	40	b																	
D-11	40	c					0.8	4.2											
D-2	41	a					0.8	4.0											
D-6	43	a																	
D-6	44	a																	
D-6	45	a																	
D-8	47	a																	
D-8	47	b																	
D-8	47	c																	
D-8	47	d																	
D-8	47	e																	
SHEET TOTAL			13.4	4.40			1.6	8.2			2		4				10		3188

DRAINAGE PLAN SHEET No	DRAINAGE SYSTEM No.	DRAINAGE UNIT	ALTERNATIVE FLARED END SECTION: 18" AFES EA	24" AFES EA	30" AFES EA	36" AFES EA	ALTERNATIVE PIPE CULVERT: 18" LF	24" LF	36" LF	42" LF	REINFORCED CONCRETE PIPE: 18" LF	24" LF	30" LF	36" LF	72" LF	24" DOUBLE CAGED REINFORCED CONCRETE PIPE LF	18" CORREGATED STEEL PIPE (0.064" THICK) LF	24" CORREGATED STEEL PIPE (0.064" THICK) LF	MAX COVER (N) FT	PIPE JOINT CLASSIFICATION (N)	CAP INLET EA
D-10	35	a																			
D-10	35	b						250.8											5.1		
D-10	35	c																			
D-10	35	d						75.0											3.2		
D-11	35	e																			
D-11	35	f						75.3											3.7		
D-11	35	i																			
D-11	35	j						25.0											3.6		
D-11	35	k																			
D-11	35	l						35.0											3.4		
D-11	35	m																			
D-11	35	n						15.0											3.4		
D-4	36	a																			
D-4	36	b				1															
D-4	36	c												86.7					8.0		
D-4	36	d				1															
D-5	37	a																			
D-5	38	a																			
D-4	39	a																			
D-11	40	a																			
D-11	40	b																			
D-11	40	c																			
D-2	41	a																			
D-6	43	a																			
D-6	44	a																			
D-6	45	a																			
D-8	47	a																			
D-8	47	b																			
D-8	47	c																			
D-8	47	d																			
D-8	47	e																			
SHEET TOTAL						2		476.1						86.7							

ROCK SLOPE PROTECTION: LIGHT, METHOD B CY	RSP FABRIC (Cl 8) SQYD	REMOVE EXISTING (N) EA	REMOVE MANHOLE EA	REMOVE INLET EA	REMOVE CONCRETE (CHANNEL) CY	REMOVE HEADWALL EA	REMOVE CONCRETE (WINGWALL) CY	REMOVE PIPE LF	ABANDON CULVERT (LF) LF	REMOVE CULVERT (LF) LF	REMOVE FLARED END SECTION EA	ADJUST INLET EA	REMOVE SACKED Conc SLOPE PROTECTION EA	DESCRIPTION	STATION	DRAINAGE PLAN SHEET No.	DRAINAGE SYSTEM No.	DRAINAGE UNIT
														DI (TYPE GDO Mod)	1.00 Rt "A" 6646+90.80	D-10	35	a
														24" APC		D-10	35	b
														DI (TYPE GDO Mod)	1.00 Rt "A" 6649+41.16	D-10	35	c
														24" APC		D-10	35	d
														DI (TYPE G2)	1.00 Rt "A" 6650+91.21	D-11	35	e
														24" APC		D-11	35	f
														DI (TYPE G2w/ SGD)	1.00 Lt "A" 6650+66.21	D-11	35	i
														24" APC		D-11	35	j
														DI (GDO Mod) w/ SGD	1.00 Lt "A" 6650+16.21	D-11	35	k
														24" APC		D-11	35	l
														DI (GDO Mod) w/ SGD	1.00 Lt "A" 6650+51.21	D-11	35	m
														24" APC		D-11	35	n
3.8	12.8													ROCK SLOPE PROTECTION		D-4	36	a
														36" AFES	29.08′ Lt "BP" 26+50.65	D-4	36	b
														36" RCP		D-4	36	c
														36" AFES	32.21′ Rt "BP" 25+99.25	D-4	36	d
3.8	12.8													ROCK SLOPE PROTECTION		D-5	37	a
3.8	12.8													ROCK SLOPE PROTECTION		D-5	38	a
8.1														ROCK SLOPE PROTECTION		D-4	39	a
													1	Rem RSP		D-11	40	a
3.8	12.8													ROCK SLOPE PROTECTION		D-11	40	b
														HMAOD		D-11	40	c
														HMAOD		D-2	41	a
								48						Rem 12" CMP		D-6	43	a
								21						Rem 12" CMP		D-6	44	a
								62						Rem 12" CMP		D-6	45	a
		1												Rem RSP		D-8	47	a
								56						Rem 18" CMP		D-8	47	b
				1										Rem DI		D-8	47	c
								15						Rem 18" CMP		D-8	47	d
				1										Rem DI		D-8	47	e
23.3	51.2	1		2				202					1					

(N) - NOT A SEPARATE PAY ITEM, FOR INFORMATION ONLY
* - QUANTITIES INCLUDED IN PLACE HMA (MISCELLANEOUS AREA) QUANTITIES, SEE SHEET Q-3.

DRAINAGE QUANTITIES

DQ-11

REVISED BY: CB 4/30/12; CB 2/7/14; CB 5/13/14 (DATE REVISED)
CALCULATED-DESIGNED BY: CHRIS BRIANA
CHECKED BY: TOM CONNELL
CONSULTANT FUNCTIONAL SUPERVISOR: MICHAEL LOHMAN
STATE OF CALIFORNIA - DEPARTMENT OF TRANSPORTATION
Caltrans

LAST REVISION 00-00-00
DATE PLOTTED => 30-SEP-2014
TIME PLOTTED => 14:16

BORDER LAST REVISED 7/2/2010
USERNAME => acroskey
DGN FILE => 0400000735id011.dgn
RELATIVE BORDER SCALE IS IN INCHES 0 1 2 3
UNIT 0716
PROJECT NUMBER & PHASE 04000007351

Dist	COUNTY	ROUTE	POST MILES TOTAL PROJECT	SHEET No.	TOTAL SHEETS
04	Mrn, Son	101	26.8/27.6, 0.0/2.0	247	710

REGISTERED CIVIL ENGINEER 06/30/14 DATE

8-18-14
PLANS APPROVAL DATE

REGISTERED PROFESSIONAL ENGINEER S. D. DANSKY No. 60220 Exp. 6/30/16 CIVIL STATE OF CALIFORNIA

THE STATE OF CALIFORNIA OR ITS OFFICERS OR AGENTS SHALL NOT BE RESPONSIBLE FOR THE ACCURACY OR COMPLETENESS OF SCANNED COPIES OF THIS PLAN SHEET.

MARK THOMAS & CO., INC.
3000 OAK RD, SUITE 650
WALNUT CREEK, CA 94597

TRANSPORTATION AUTHORITY OF MARIN
750 LINDARO ST, SUITE 200
SAN RAFAEL, CA 94901

NOTE:
ALL PIPE JOINTS ARE STANDARD UNLESS OTHERWISE SPECIFIED.

DRAINAGE QUANTITIES

DRAINAGE PLAN SHEET No	DRAINAGE SYSTEM No.	DRAINAGE UNIT	MINOR Conc (MINOR Str)	MINOR CONCRETE (GUTTER DEPRESSION)	STRUCTURAL Conc (BOX CULVERT)	STRUCTURAL Conc (HEADWALL)	OVERSIDE DRAINS: HOT MIX ASPHALT (TYPE A) *	OVERSIDE DRAINS: PLACE HOT MIX ASPHALT (Misc AREA) *	BAR REINFORCING STEEL	DI (TYPE G2 Mod) w/ MH LID (N)	DI (TYPE G2) (N)	DI (TYPE GT4) (N)	DI (TYPE GDO) (N)	RIGID RAIL FALL PROTECTION SYSTEM	HEIGHT OF INLET (N)	CONCRETE COLLAR (N)	FRAMES, GRATES (N): TYPE 24-12 (N)	FRAMES, GRATES (N): MANHOLE LID (N)	Misc IRON AND STEEL	ALTERNATIVE FLARED END SECTION: 18" AFES	ALTERNATIVE FLARED END SECTION: 24" AFES	ALTERNATIVE FLARED END SECTION: 30" AFES	ALTERNATIVE FLARED END SECTION: 36" AFES	ALTERNATIVE PIPE CULVERT: 18"	ALTERNATIVE PIPE CULVERT: 24"	ALTERNATIVE PIPE CULVERT: 36"	ALTERNATIVE PIPE CULVERT: 42"	REINFORCED CONCRETE PIPE: 18"	REINFORCED CONCRETE PIPE: 24"	REINFORCED CONCRETE PIPE: 30"	REINFORCED CONCRETE PIPE: 36"	REINFORCED CONCRETE PIPE: 72"	24" DOUBLE CAGED REINFORCED CONCRETE PIPE	18" CORREGATED STEEL PIPE (0.064" THICK)	24" CORREGATED STEEL PIPE (0.064" THICK)	MAX COVER (N)	PIPE JOINT CLASSIFICATION (N)	CAP INLET	ROCK SLOPE PROTECTION: LIGHT, METHOD B	ROCK SLOPE PROTECTION: RSP FABRIC (Cl 8)	ROCK SLOPE PROTECTION: REMOVE EXISTING (N)	REMOVE MANHOLE	REMOVE INLET	REMOVE CONCRETE (CHANNEL)	REMOVE HEADWALL	REMOVE CONCRETE (WINGWALL)	REMOVE PIPE	ABANDON CULVERT (LF)	REMOVE CULVERT (LF)	REMOVE FLARED END SECTION	ADJUST INLET	REMOVE SACKED Conc SLOPE PROTECTION	DESCRIPTION	STATION	DRAINAGE PLAN SHEET No.	DRAINAGE SYSTEM No.	DRAINAGE UNIT
			CY	CY	CY	CY	TON	SQYD	LB	EA	EA	EA	EA	EA	FT	EA	EA	EA	LB	EA	EA	EA	EA	LF	LF	LF	LF	LF	LF	LF	LF	LF	LF	LF	LF	FT		EA	CY	SQYD	EA	EA	EA	CY	EA	CY	LF	LF	LF	EA	EA	EA					
D-10	48	a																																											1								Rem HEADWALL		D-10	48	a
D-10	48	b																																													54						Rem 24" CMP		D-10	48	b
D-10	48	c																																								1											Rem SDMH		D-10	48	c
D-10	48	d																																													82						Rem 24" CMP		D-10	48	d
D-10	48	e																																											1								Rem HEADWALL		D-10	48	e
D-10	49	a																																													45						Rem 12" CMP		D-10	49	a
D-10	50	a																																											1								Rem HEADWALL		D-10	50	a
D-10	50	b																																													28						Rem 48" RCP		D-10	50	b
D-10	50	c																																											1								Rem HEADWALL		D-10	50	c
D-10	51	a																																											1								Rem HEADWALL		D-10	51	a
D-10	51	b																																													64						Rem 12" RCP		D-10	51	b
D-10	51	c																																											1								Rem HEADWALL		D-10	51	c
D-11	52	a																																									1										Rem DI		D-11	52	a
D-11	52	b																																													70						Rem 12" CMP		D-11	52	b
D-2	55	a																																											1								Rem HEADWALL		D-2	55	a
D-2	55	b																																													78						Rem 12" CMP		D-2	55	b
D-2	55	c																																									1										Rem DI		D-2	55	c
D-8	56	a																																											1								Rem HEADWALL		D-8	56	a
D-8	56	b																																													24						Rem 18" CMP		D-8	56	b
D-8	56	c																																											1								Rem HEADWALL		D-8	56	c
D-2	57	a																																													31						Rem 8" CMP		D-2	57	a
D-10	65	a																																					3.8	12.8													ROCK SLOPE PROTECTION		D-10	65	a
D-11	66	a																																					3.8	12.8													ROCK SLOPE PROTECTION		D-11	66	a
D-11	67	a																																					3.8	12.8													ROCK SLOPE PROTECTION		D-11	67	a
D-4	68	a																																													36						Rem 12" CMP		D-4	68	a
D-1	69	a																																																	1		Adj DI TO GRADE		D-1	69	a
D-2	70	a																																													102						Rem 8" PPP UD		D-2	70	a
SHEET TOTAL																																							11.4	38.4		1	2		9		614				1						

(N) - NOT A SEPARATE PAY ITEM, FOR INFORMATION ONLY
* - QUANTITIES INCLUDED IN PLACE HMA (MISCELLANEOUS AREA) QUANTITIES, SEE SHEET Q-3.

DRAINAGE QUANTITIES

DQ-12

REVISED BY / DATE REVISED: CB 5/13/14; CB 2/7/14; CB 4/30/12
CALCULATED-DESIGNED BY: CHRIS BRIANA
CHECKED BY: TOM CONNELL
CONSULTANT FUNCTIONAL SUPERVISOR: MICHAEL LOHMAN
STATE OF CALIFORNIA - DEPARTMENT OF TRANSPORTATION
Caltrans
LAST REVISION 00-00-00
DATE PLOTTED => 30-SEP-2014
TIME PLOTTED => 14:16

Dist	COUNTY	ROUTE	POST MILES TOTAL PROJECT	SHEET No.	TOTAL SHEETS
04	Mrn, Son	101	26.8/27.6, 0.0/2.0	248	710

REGISTERED CIVIL ENGINEER 06/30/14 DATE

8-18-14
PLANS APPROVAL DATE

REGISTERED PROFESSIONAL ENGINEER — S. D. DANSKY — No. 60220 — Exp. 6/30/16 — CIVIL — STATE OF CALIFORNIA

THE STATE OF CALIFORNIA OR ITS OFFICERS OR AGENTS SHALL NOT BE RESPONSIBLE FOR THE ACCURACY OR COMPLETENESS OF SCANNED COPIES OF THIS PLAN SHEET.

MARK THOMAS & CO., INC.
3000 OAK RD, SUITE 650
WALNUT CREEK, CA 94597

TRANSPORTATION AUTHORITY OF MARIN
750 LINDARO ST, SUITE 200
SAN RAFAEL, CA 94901

DRAINAGE QUANTITIES

SHEET No.	MINOR Conc (MINOR Str)	MINOR CONCRETE (GUTTER DEPRESSION)	STRUCTURAL Conc (BOX CULVERT)	STRUCTURAL Conc (HEADWALL)	OVERSIDE DRAINS: HOT MIX ASPHALT (TYPE A) *	OVERSIDE DRAINS: PLACE HOT MIX ASPHALT (Misc AREA) *	BAR REINFORCING STEEL	DI (TYPE G2 Mod) w/ MH LID (N)	DI (TYPE G2) (N)	DI (TYPE GT4) (N)	DI (TYPE GDO) (N)	RIGID RAIL FALL PROTECTION SYSTEM	HEIGHT OF INLET (N)	CONCRETE COLLAR (N)	FRAMES, GRATES (N): TYPE 24-12 (N)	FRAMES, GRATES (N): MANHOLE LID (N)	Misc IRON AND STEEL
	CY	CY	CY	CY	TON	SQYD	LB	EA	EA	EA	EA	EA	FT	EA	EA	EA	LB
DQ-1	60.4	7.33							16		1	3			18		5850
DQ-2	53.1	7.58							10		2				14		4528
DQ-3	32.0	2.42							6	2	1	1			12		3894
DQ-4	37.0	6.84							15						15		4890
DQ-5	37.4				3.7	18.0			15		2				19		6158
DQ-6	38.4	8.15							7		6				19		6086
DQ-7	47.1	0.9		9.6			550		11			1			11		3586
DQ-8	44.9	1.14							12		7				26		8350
DQ-9	44.2	0.9							14						14		4564
DQ-10	51.7		7.4				1437.5	7	10						10	7	6305
DQ-11	13.4	4.40			1.6	8.2			2		4				10		3188
DQ-12																	
FROM TEMP DRAINAGE	27.1								10						9		2934
FROM Q-5	1.6								1								
GRAND TOTAL	488	40.0	7.4	9.6	5.3	26.2	1988	7	129	2	23	5			177	7	60333

SHEET No.	ALTERNATIVE FLARED END SECTION: 18" AFES	24" AFES	30" AFES	36" AFES	ALTERNATIVE PIPE CULVERT: 18"	24"	36"	42"	REINFORCED CONCRETE PIPE: 18"	24"	30"	36"	72"	24" DOUBLE CAGED REINFORCED CONCRETE PIPE	18" COREGATED STEEL PIPE (0.064" THICK)	24" COREGATED STEEL PIPE (0.064" THICK)
	EA	EA	EA	EA	LF	LF	LF	LF	LF	LF	LF	LF	LF	LF	LF	LF
DQ-1		1	1		405.1	1178.1				110.0	272.1					
DQ-2	2				476.4										111.4	
DQ-3	5		2		363.0				115.0		284.7				51.4	
DQ-4	5	1			562.1	138.3									178.5	
DQ-5		1			234.9	3196.4										82.9
DQ-6		2			70.0	1026.9										387.7
DQ-7	2					360.8			76.5			215.7	481.6	954.4	64.6	
DQ-8			1		586.4	2804.9					381.6					
DQ-9					130.3	744.9	265.8					342.4			117.8	160.0
DQ-10				1	631.0			1081.1	115.4			223.5				
DQ-11				2		476.1						86.7				
DQ-12																
FROM TEMP DRAINAGE	2			2	230.0		115.0								42.0	51.0
FROM Q-5																
GRAND TOTAL	16	5	4	5	3689.2	9926.4	380.8	1081.1	306.9	110.0	938.4	868.3	481.6	954.4	565.7	681.6

SHEET No.	MAX COVER (N)	PIPE JOINT CLASSIFICATION (N)	CAP INLET	ROCK SLOPE PROTECTION: LIGHT, METHOD B	RSP FABRIC (Cl 8)	REMOVE EXISTING (N)	REMOVE MANHOLE	REMOVE INLET	REMOVE CONCRETE (CHANNEL)	REMOVE HEADWALL	REMOVE CONCRETE (WINGWALL)	REMOVE PIPE	ABANDON CULVERT (LF)	REMOVE CULVERT (LF)	REMOVE FLARED END SECTION	ADJUST INLET	REMOVE SACKED Conc SLOPE PROTECTION	72" AFES	18" SLOTTED CORRUGATED STEEL PIPE (0.064" THICK)		ADJUST MANHOLE	
	FT		EA	CY	SQYD	EA	EA	EA	CY	EA	CY	LF	LF	LF	EA	EA	EA	EA	LF		EA	
DQ-1				3.8	12.8					2			79			1						
DQ-2								2		3		469										
DQ-3				19.0	64.0							75										
DQ-4				3.8	12.8																	
DQ-5				3.8	12.8																	
DQ-6			1	7.6	25.6			2		2		908				1	1					
DQ-7				7.6	25.6			2				460		164		1						
DQ-8												150										
DQ-9									20.3			173		33	5	1	1					
DQ-10				7.6	25.6						4											
DQ-11				23.3	51.2	1		2				202					1					
DQ-12				11.4	38.4		1	2		9		614				1						
FROM TEMP DRAINAGE			20	22.8	76.8			11	347			4023			6	15		2	3644		1	
FROM Q-5																						
GRAND TOTAL			21	111	346	1	1	21	367	16	4	7074	79	197	11	20	3	2	3644		1	

(N) - NOT A SEPARATE PAY ITEM, FOR INFORMATION ONLY
* - QUANTITIES INCLUDED IN PLACE HMA (MISCELLANEOUS AREA) QUANTITIES, SEE SHEET Q-3.

CONCRETE (DITCH LINING)

DITCH No.	LOCATION	CONCRETE (DITCH LINING)
		CY
201	"A" 6544+78.32 TO "A" 6546+77.36 Rt	11.9
202	"A" 6545+69.87 TO "A" 6558+00.36 Lt	90.8
210	"A" 6581+69.46 TO "A" 6584+18.54 Lt	7.5
211	"A" 6570+80.68 Lt TO "K" 6581+70.04 Rt	38.2
212	"A" 6578+48.03 TO "A" 6580+03.22 Rt	4.5
213	"A" 6579+04.16 TO "A" 6580+60.39 Rt	1.8
214	"A" 6572+02.90 TO "A" 6581+72.05 Lt	52.6
215	"K" 6581+72.05 TO "K" 6584+37.61 Lt	8.3
216	"A" 6580+79.89 TO "A" 6593+49.41 Rt	43.9
217	"A" 6585+26.79 TO "A" 6595+60.21 Lt	53.0
218	"A" 6595+60.21 TO "A" 6597+58.00 Lt	5.9
219	"A" 6597+58.00 TO "A" 6600+56.72 Lt	16.6
220	"A" 6600+77.68 TO "A" 6602+90.63 Lt	9.1
222	"A" 6603+08.96 TO "A" 6607+00.00 Rt	11.8
223	"A" 6603+53.19 TO "A" 6608+50.56 Lt	25.1
224	"A" 6608+50.56 TO "A" 6611+62.29 Lt	15.7
225	"A" 6624+10.00 TO "A" 6630+17.62 Rt	18.5
226	"A" 6630+50.02 TO "A" 6639+39.95 Rt	27.2
234	"A" 6644+45.59 TO "A" 6653+54.72 Rt	47.0
239	"A" 6565+50.60 TO "A" 6568+16.22 Rt	23.6
242	"A" 6641+86.17 TO "A" 6643+99.06 Rt	20.1
	FROM TEMP DRAINAGE QUANTITIES	115.2
	TOTAL	533.1

DITCH EXCAVATION

DITCH No.	LOCATION	DITCH EXCAVATION *
		CY
205/102	"A" 6555+53.31 TO "A" 6563+04.88 Rt	1395
207	"BP" 19+84.34 TO "BP" 20+83.33 Lt	34
239	"A" 6565+50.60 TO "A" 6568+16.22 Rt	223
213	"A" 6575+96.21 TO "A" 6576+21.92 Rt	19
216/106	"A" 6576+21.92 TO "A" 6583+00.92 Rt	513
231/107	"A" 6639+50.41 TO "A" 6642+14.23 Rt	55
237/111	"A" 6654+92.86 TO "A" 6657+68.48 Rt	69
	TOTAL	2308

* - QUANTITIES INCLUDED IN EARTHWORK QUANTITIES SUMMARY, SEE SHEET Q-1.

IMPORTED BIOFILTRATION SOIL

BIOSWALE No.	LOCATION	BIOSWALE (N)	IMPORTED BIOFILTRATION SOIL
		SQFT	CY
102	"A" 6560+85.83 TO "A" 6563+04.88 Rt	4,209	234
103	"A" 6564+29.24 TO "A" 6565+43.88 Lt	3,660	203
104	"A" 6568+21.04 TO "A" 6570+80.68 Lt	3,341	186
105	"A" 6571+01.81 TO "A" 6573+45.16 Rt	4,384	244
106	"A" 6576+21.92 TO "A" 6580+79.89 Rt	13,322	740
107	"A" 6641+62.54 TO "A" 6642+14.23 Rt	419	23
109	"A" 6551+07.72 TO "A" 6653+57.71 Lt	13,220	734
110	"A" 6653+54.72 TO "A" 6654+64.63 Rt	2,044	114
111	"A" 6654+92.86 TO "A" 6655+92.49 Rt	998	56
	TOTAL	45,597	2,534

(N) - NOT A SEPARATE PAY ITEM, FOR INFORMATION ONLY

DRAINAGE QUANTITIES

DQ-13

STATE OF CALIFORNIA - DEPARTMENT OF TRANSPORTATION
Caltrans

CONSULTANT FUNCTIONAL SUPERVISOR: MICHAEL LOHMAN
CALCULATED-DESIGNED BY: CHRIS BRIANA
CHECKED BY: TOM CONNELL

REVISED BY	DATE REVISED
CB	4/30/12
CB	2/7/14
CB	5/13/14

LAST REVISION 00-00-00 DATE PLOTTED => 30-SEP-2014 TIME PLOTTED => 14:16

Dist	COUNTY	ROUTE	POST MILES TOTAL PROJECT	SHEET No.	TOTAL SHEETS
04	Mrn, Son	101	26.8/27.6, 0.0/2.0	249	710

06/30/14
REGISTERED CIVIL ENGINEER DATE

8-18-14
PLANS APPROVAL DATE

REGISTERED PROFESSIONAL ENGINEER
S. D. DANSKY
No. 60220
Exp. 6/30/16
CIVIL
STATE OF CALIFORNIA

THE STATE OF CALIFORNIA OR ITS OFFICERS OR AGENTS SHALL NOT BE RESPONSIBLE FOR THE ACCURACY OR COMPLETENESS OF SCANNED COPIES OF THIS PLAN SHEET.

MARK THOMAS & CO., INC.
3000 OAK RD, SUITE 650
WALNUT CREEK, CA 94597

TRANSPORTATION AUTHORITY OF MARIN
750 LINDARO ST, SUITE 200
SAN RAFAEL, CA 94901

NOTE:

1. FOR ACCURATE RIGHT OF WAY DATA, CONTACT RIGHT OF WAY ENGINEERING AT THE DISTRICT OFFICE.
2. UNDERDRAIN RISER AND UNDERDRAIN TERMINAL RISER LOCATION AT THE CENTER OF RISER.

LEGEND:

- (No.) DRAINAGE SYSTEM No.
- (a) DRAINAGE ITEM No.
- o UNDERDRAIN RISER
- —— UNDERDRAIN PIPE

ABBREVIATIONS:

UDTR	UNDERDRAIN TERMINAL RISER
UDR	UNDERDRAIN RISER
UDO	UNDERDRAIN OUTLET (SEE SHEET SBD-1)

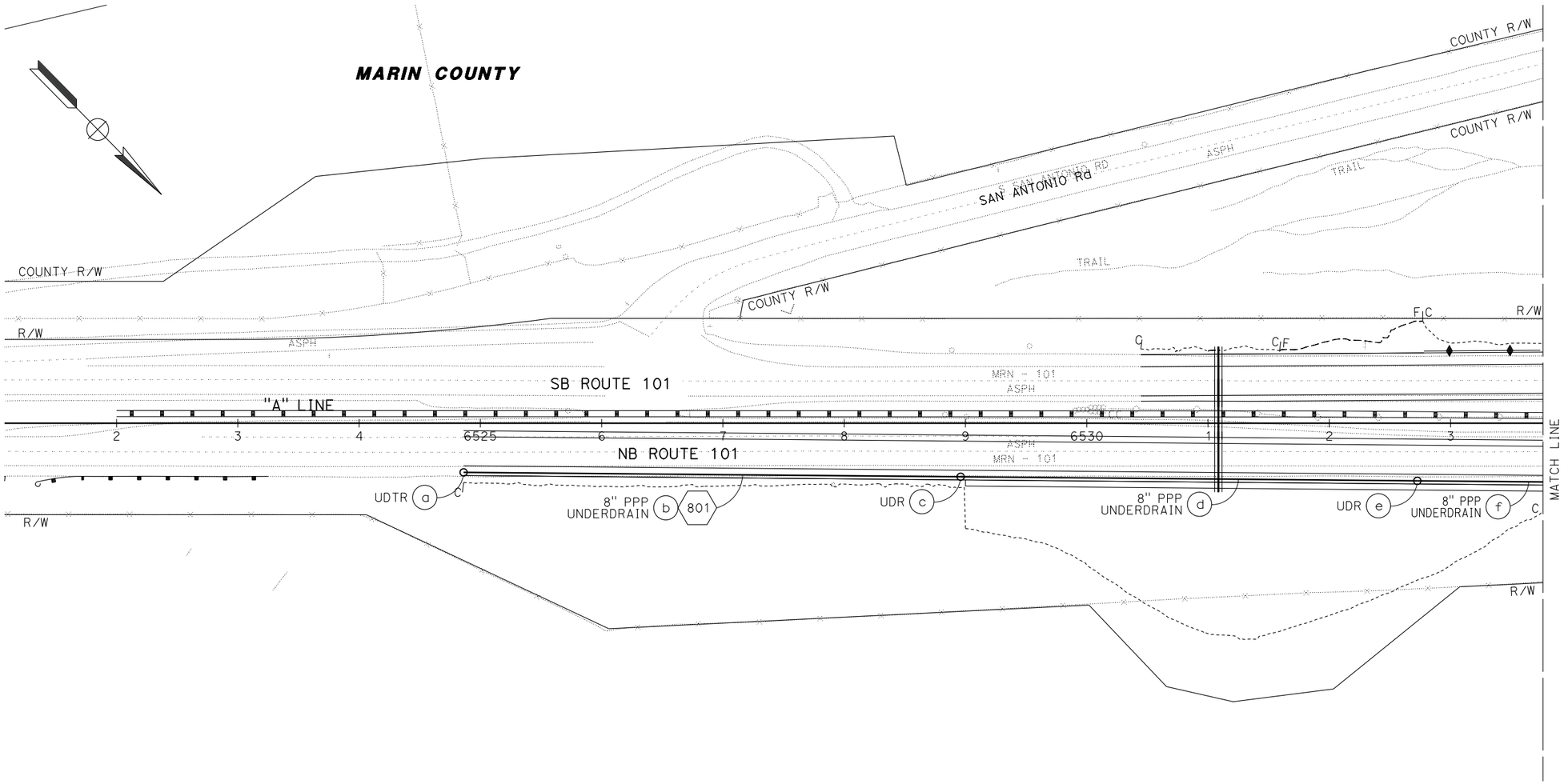

SUBSURFACE DRAINAGE PLAN

SCALE: 1" = 50'

SB-1

APPROVED FOR SUBSURFACE DRAINAGE WORK ONLY

CB	CB	CB	REVISED BY
5/13/14	2/7/14	4/30/12	DATE REVISED

CHRIS BRIANA
TOM CONNELL
CALCULATED-DESIGNED BY
CHECKED BY

CONSULTANT FUNCTIONAL SUPERVISOR
MICHAEL LOHMAN

STATE OF CALIFORNIA - DEPARTMENT OF TRANSPORTATION
Caltrans

LAST REVISION 00-00-00
DATE PLOTTED => 30-SEP-2014
TIME PLOTTED => 14:17

BORDER LAST REVISED 7/2/2010
USERNAME => acroskey
DGN FILE => 0400000735ie001.dgn
RELATIVE BORDER SCALE IS IN INCHES 0 1 2 3
UNIT 0716
PROJECT NUMBER & PHASE 04000007351

Dist	COUNTY	ROUTE	POST MILES TOTAL PROJECT	SHEET No.	TOTAL SHEETS
04	Mrn, Son	101	26.8/27.6, 0.0/2.0	250	710

06/30/14
REGISTERED CIVIL ENGINEER — DATE

8-18-14
PLANS APPROVAL DATE

REGISTERED PROFESSIONAL ENGINEER
S. D. DANSKY
No. 60220
Exp. 6/30/16
CIVIL
STATE OF CALIFORNIA

THE STATE OF CALIFORNIA OR ITS OFFICERS OR AGENTS SHALL NOT BE RESPONSIBLE FOR THE ACCURACY OR COMPLETENESS OF SCANNED COPIES OF THIS PLAN SHEET.

MARK THOMAS & CO., INC.
3000 OAK RD, SUITE 650
WALNUT CREEK, CA 94597

TRANSPORTATION AUTHORITY OF MARIN
750 LINDARO ST, SUITE 200
SAN RAFAEL, CA 94901

NOTE:

FOR ACCURATE RIGHT OF WAY DATA, CONTACT
RIGHT OF WAY ENGINEERING AT THE DISTRICT OFFICE.

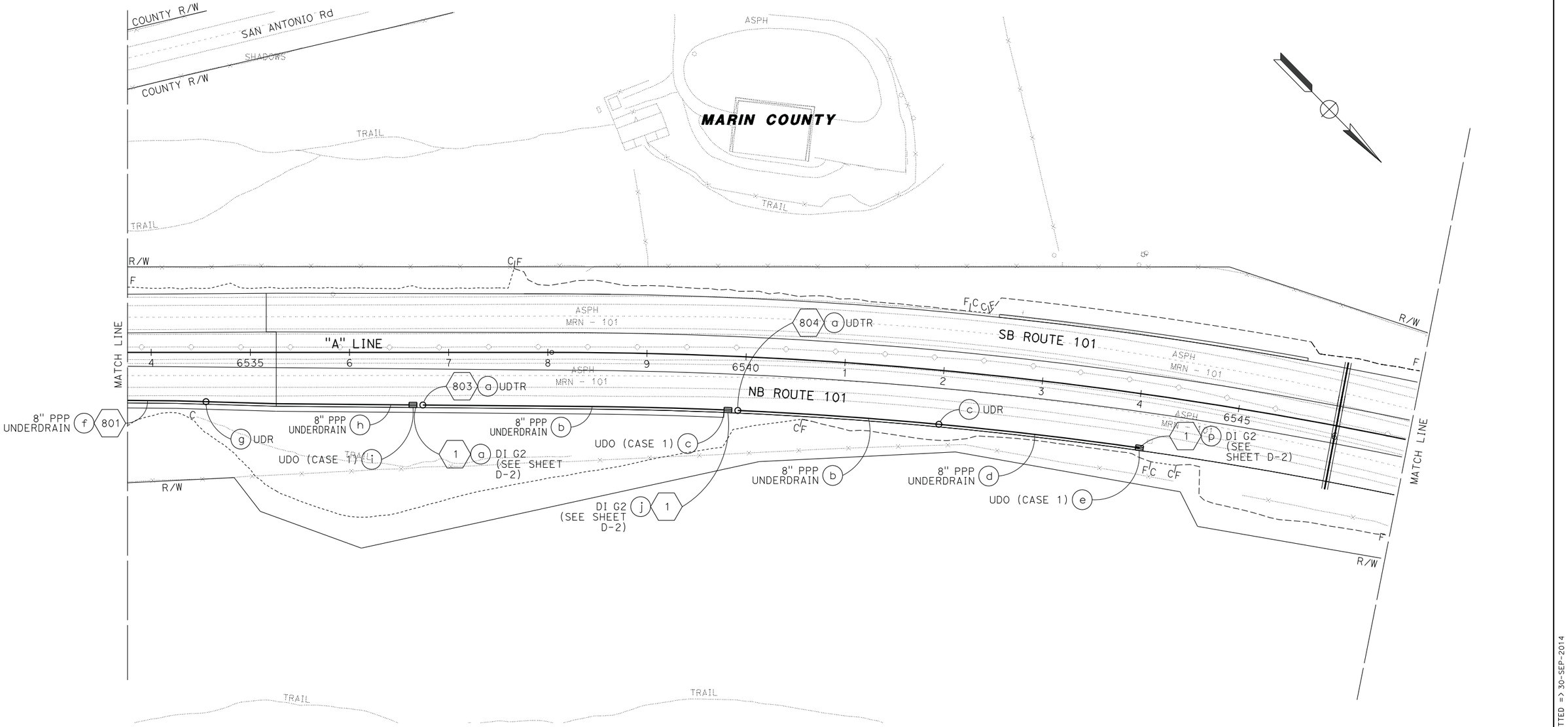

SUBSURFACE DRAINAGE PLAN

SCALE: 1" = 50'

SB-2

APPROVED FOR SUBSURFACE DRAINAGE WORK ONLY

REVISED BY	DATE REVISED
CB	4/30/12
CB	2/7/14
CB	5/13/14

CALCULATED-DESIGNED BY: CHRIS BRIANA
CHECKED BY: TOM CONNELL
CONSULTANT FUNCTIONAL SUPERVISOR: MICHAEL LOHMAN
STATE OF CALIFORNIA - DEPARTMENT OF TRANSPORTATION
Caltrans

LAST REVISION 00-00-00
DATE PLOTTED => 30-SEP-2014
TIME PLOTTED => 14:17

BORDER LAST REVISED 7/2/2010
USERNAME => acroskey
DGN FILE => 04000007351e002.dgn
RELATIVE BORDER SCALE IS IN INCHES 0 1 2 3
UNIT 0716
PROJECT NUMBER & PHASE 04000007351

Dist	COUNTY	ROUTE	POST MILES TOTAL PROJECT	SHEET No.	TOTAL SHEETS
04	Mrn, Son	101	26.8/27.6, 0.0/2.0	251	710

REGISTERED CIVIL ENGINEER — DATE: 06/30/14

REGISTERED PROFESSIONAL ENGINEER — S. D. DANSKY — No. 60220 — Exp. 6/30/16 — CIVIL — STATE OF CALIFORNIA

8-18-14
PLANS APPROVAL DATE

THE STATE OF CALIFORNIA OR ITS OFFICERS OR AGENTS SHALL NOT BE RESPONSIBLE FOR THE ACCURACY OR COMPLETENESS OF SCANNED COPIES OF THIS PLAN SHEET.

MARK THOMAS & CO., INC.
3000 OAK RD, SUITE 650
WALNUT CREEK, CA 94597

TRANSPORTATION AUTHORITY OF MARIN
750 LINDARO ST, SUITE 200
SAN RAFAEL, CA 94901

NOTE:

FOR ACCURATE RIGHT OF WAY DATA, CONTACT
RIGHT OF WAY ENGINEERING AT THE DISTRICT OFFICE.

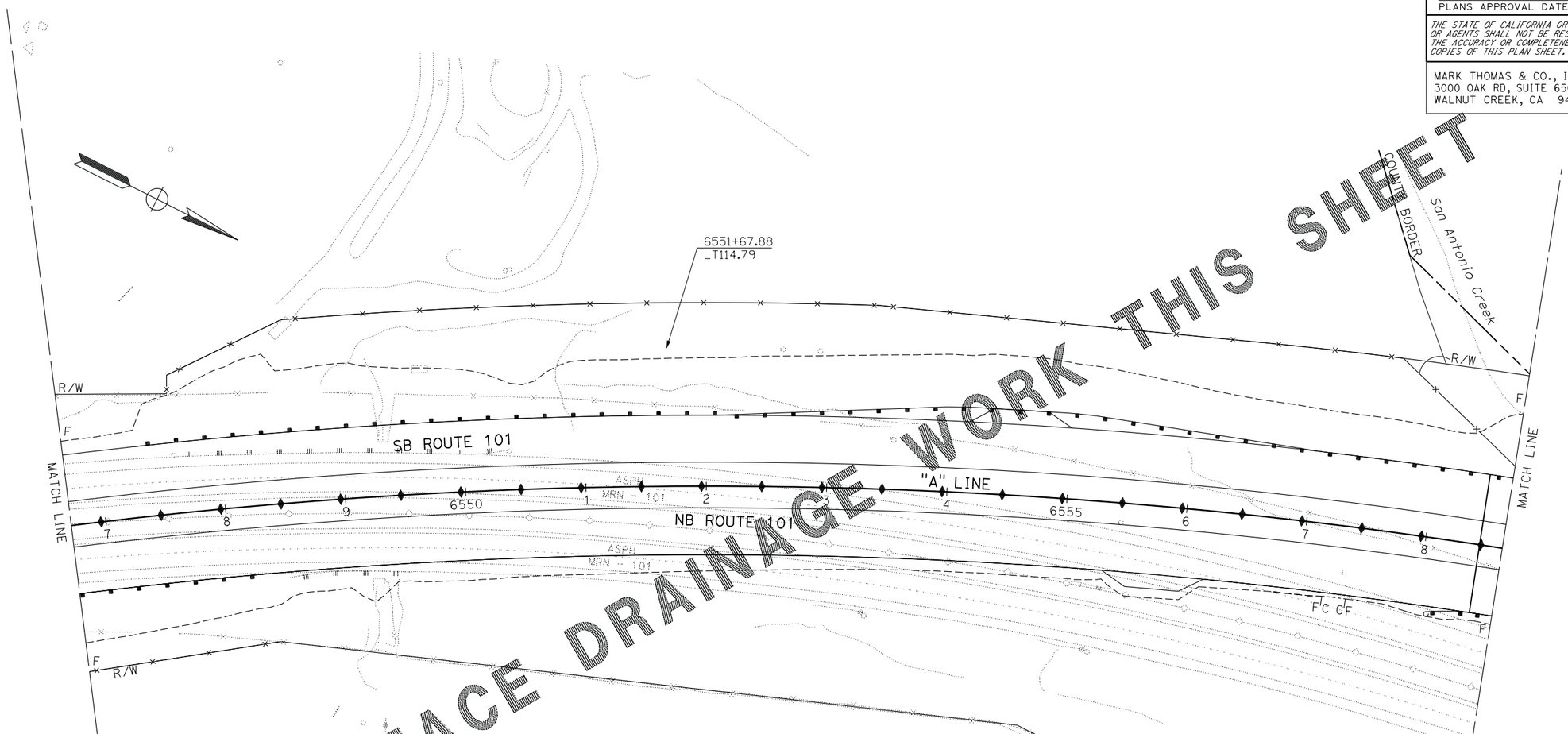

NO SUBSURFACE DRAINAGE WORK THIS SHEET

SUBSURFACE DRAINAGE PLAN

SCALE: 1" = 50'

SB-3

APPROVED FOR SUBSURFACE DRAINAGE WORK ONLY

REVISED BY	DATE REVISED
CB	4/30/12
CB	2/7/14
CB	5/13/14

CALCULATED-DESIGNED BY: CHRIS BRIANA
CHECKED BY: TOM CONNELL
CONSULTANT FUNCTIONAL SUPERVISOR: MICHAEL LOHMAN
STATE OF CALIFORNIA - DEPARTMENT OF TRANSPORTATION

LAST REVISION 00-00-00
DATE PLOTTED => 30-SEP-2014
TIME PLOTTED => 14:17

BORDER LAST REVISED 7/2/2010
USERNAME => acroskey
DGN FILE => 0400000735ie003.dgn
RELATIVE BORDER SCALE IS IN INCHES 0 1 2 3
UNIT 0716
PROJECT NUMBER & PHASE 04000007351

Dist	COUNTY	ROUTE	POST MILES TOTAL PROJECT	SHEET No.	TOTAL SHEETS
04	Mrn, Son	101	26.8/27.6, 0.0/2.0	252	710

REGISTERED CIVIL ENGINEER — 06/30/14 DATE

8-18-14
PLANS APPROVAL DATE

REGISTERED PROFESSIONAL ENGINEER — S. D. DANSKY No. 60220 Exp. 6/30/16 CIVIL — STATE OF CALIFORNIA

THE STATE OF CALIFORNIA OR ITS OFFICERS OR AGENTS SHALL NOT BE RESPONSIBLE FOR THE ACCURACY OR COMPLETENESS OF SCANNED COPIES OF THIS PLAN SHEET.

MARK THOMAS & CO., INC.
3000 OAK RD, SUITE 650
WALNUT CREEK, CA 94597

TRANSPORTATION AUTHORITY OF MARIN
750 LINDARO ST, SUITE 200
SAN RAFAEL, CA 94901

NOTE:

FOR ACCURATE RIGHT OF WAY DATA, CONTACT
RIGHT OF WAY ENGINEERING AT THE DISTRICT OFFICE.

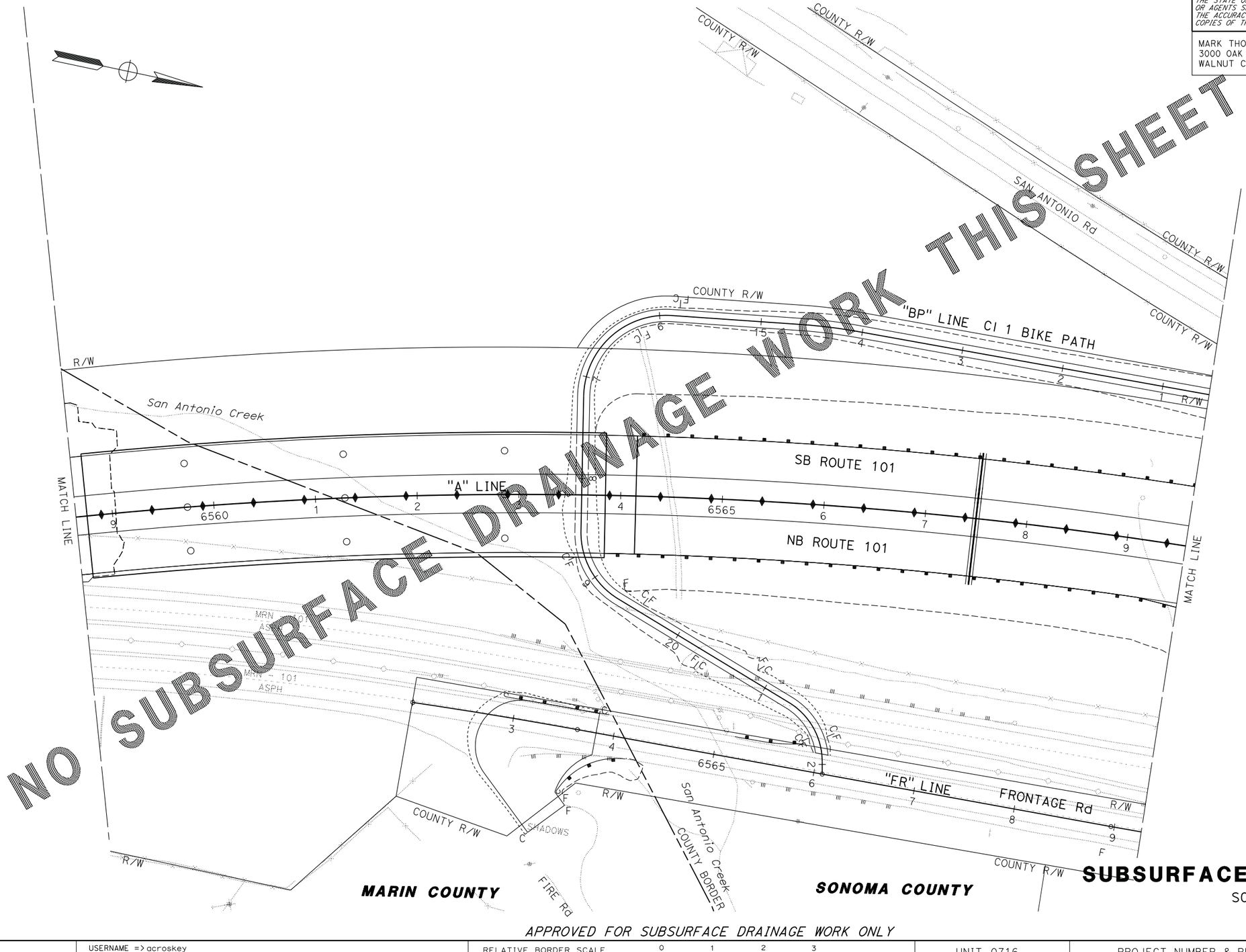

SUBSURFACE DRAINAGE PLAN

SCALE: 1" = 50'

SB-4

APPROVED FOR SUBSURFACE DRAINAGE WORK ONLY

REVISED BY	DATE REVISED
CB	4/30/12
CB	2/7/14
CB	5/13/14

CHRIS BRIANA
TOM CONNELL
CALCULATED-DESIGNED BY
CHECKED BY
CONSULTANT FUNCTIONAL SUPERVISOR
MICHAEL LOHMAN
STATE OF CALIFORNIA - DEPARTMENT OF TRANSPORTATION
Caltrans

LAST REVISION => DATE PLOTTED => 30-SEP-2014
00-00-00 TIME PLOTTED => 14:17

BORDER LAST REVISED 7/2/2010

USERNAME => acroskey
DGN FILE => 04000007351e004.dgn

RELATIVE BORDER SCALE IS IN INCHES 0 1 2 3

UNIT 0716

PROJECT NUMBER & PHASE 04000007351

NOTE:

FOR ACCURATE RIGHT OF WAY DATA, CONTACT
RIGHT OF WAY ENGINEERING AT THE DISTRICT OFFICE.

Dist	COUNTY	ROUTE	POST MILES TOTAL PROJECT	SHEET No.	TOTAL SHEETS
04	Mrn, Son	101	26.8/27.6, 0.0/2.0	253	710

REGISTERED CIVIL ENGINEER — 06/30/14 DATE

8-18-14
PLANS APPROVAL DATE

REGISTERED PROFESSIONAL ENGINEER
S. D. DANSKY
No. 60220
Exp. 6/30/16
CIVIL
STATE OF CALIFORNIA

THE STATE OF CALIFORNIA OR ITS OFFICERS OR AGENTS SHALL NOT BE RESPONSIBLE FOR THE ACCURACY OR COMPLETENESS OF SCANNED COPIES OF THIS PLAN SHEET.

MARK THOMAS & CO., INC.
3000 OAK RD, SUITE 650
WALNUT CREEK, CA 94597

TRANSPORTATION AUTHORITY OF MARIN
750 LINDARO ST, SUITE 200
SAN RAFAEL, CA 94901

REVISED BY	DATE REVISED
CB	4/30/12
CB	2/7/14
CB	5/13/14

CHRIS BRIANA
TOM CONNELL

CALCULATED-DESIGNED BY
CHECKED BY

CONSULTANT FUNCTIONAL SUPERVISOR
MICHAEL LOHMAN

STATE OF CALIFORNIA - DEPARTMENT OF TRANSPORTATION
Caltrans

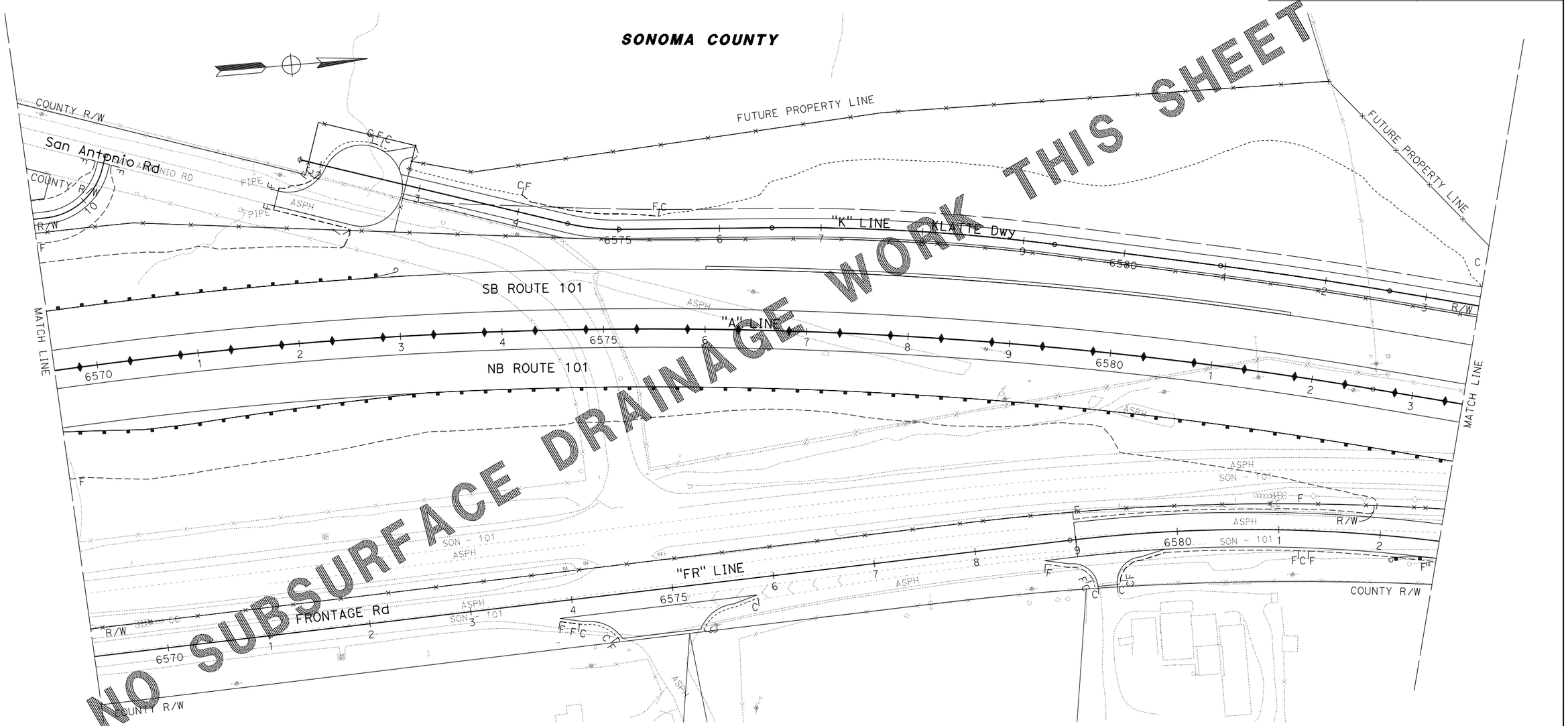

SUBSURFACE DRAINAGE PLAN

SCALE: 1" = 50'

SB-5

APPROVED FOR SUBSURFACE DRAINAGE WORK ONLY

LAST REVISION 00-00-00
DATE PLOTTED => 30-SEP-2014
TIME PLOTTED => 14:17

BORDER LAST REVISED 7/2/2010
USERNAME => acroskey
DGN FILE => 0400000735ie005.dgn
RELATIVE BORDER SCALE IS IN INCHES 0 1 2 3
UNIT 0716
PROJECT NUMBER & PHASE 04000007351

NOTE:

FOR ACCURATE RIGHT OF WAY DATA, CONTACT
RIGHT OF WAY ENGINEERING AT THE DISTRICT OFFICE.

Dist	COUNTY	ROUTE	POST MILES TOTAL PROJECT	SHEET No.	TOTAL SHEETS
04	Mrn, Son	101	26.8/27.6, 0.0/2.0	254	710

REGISTERED CIVIL ENGINEER — DATE 06/30/14

8-18-14
PLANS APPROVAL DATE

REGISTERED PROFESSIONAL ENGINEER
S. D. DANSKY
No. 60220
Exp. 6/30/16
CIVIL
STATE OF CALIFORNIA

THE STATE OF CALIFORNIA OR ITS OFFICERS OR AGENTS SHALL NOT BE RESPONSIBLE FOR THE ACCURACY OR COMPLETENESS OF SCANNED COPIES OF THIS PLAN SHEET.

MARK THOMAS & CO., INC.
3000 OAK RD, SUITE 650
WALNUT CREEK, CA 94597

TRANSPORTATION AUTHORITY OF MARIN
750 LINDARO ST, SUITE 200
SAN RAFAEL, CA 94901

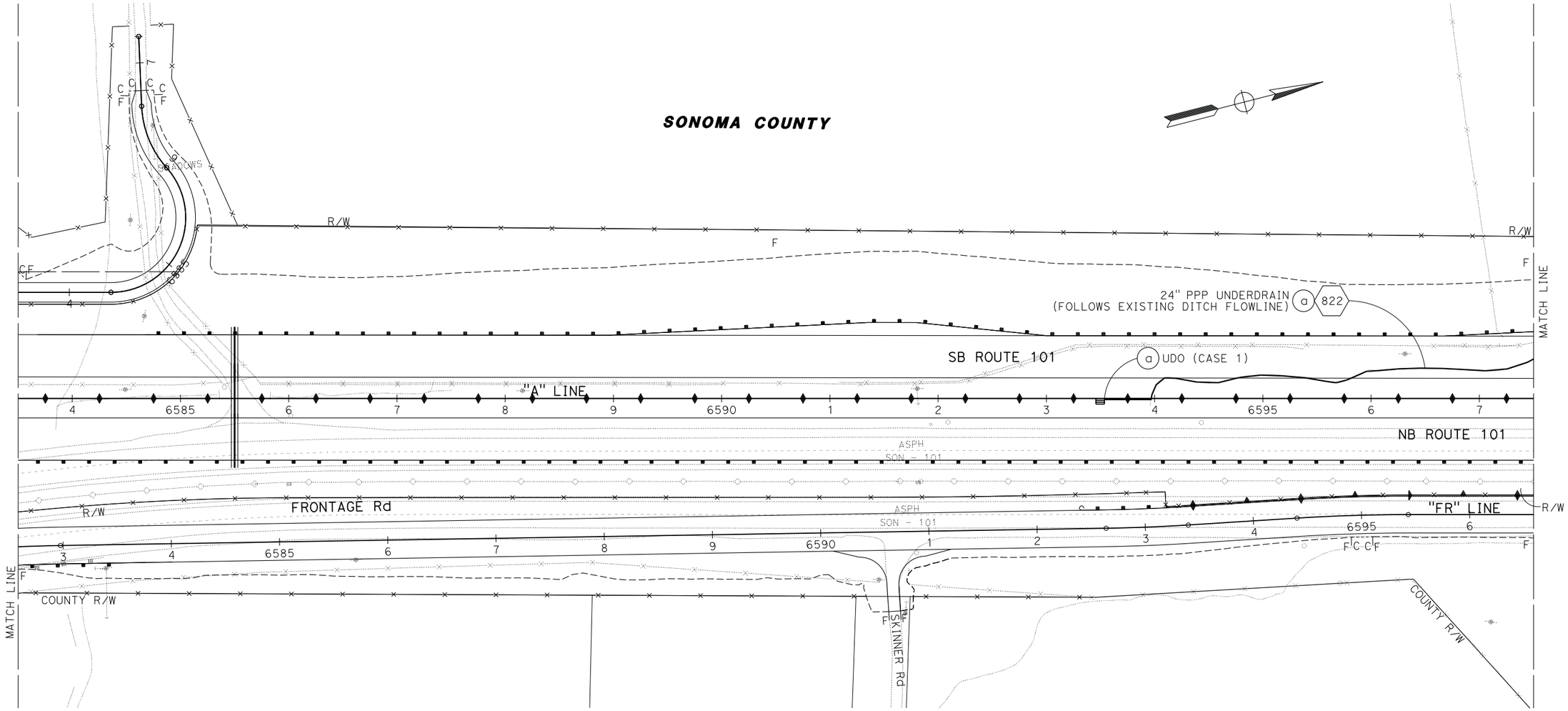

SUBSURFACE DRAINAGE PLAN

SCALE: 1" = 50'

SB-6

APPROVED FOR SUBSURFACE DRAINAGE WORK ONLY

CHRIS BRIANA	CB	5/13/14
TOM CONNELL	CB	2/7/14
	CB	4/30/12
REVISED BY		
DATE REVISED		

CALCULATED-DESIGNED BY
CHECKED BY

CONSULTANT FUNCTIONAL SUPERVISOR
MICHAEL LOHMAN

STATE OF CALIFORNIA - DEPARTMENT OF TRANSPORTATION
Caltrans

LAST REVISION 00-00-00
DATE PLOTTED => 30-SEP-2014
TIME PLOTTED => 14:17

BORDER LAST REVISED 7/2/2010

USERNAME => acroskey
DGN FILE => 04000007351e006.dgn

RELATIVE BORDER SCALE IS IN INCHES 0 1 2 3

UNIT 0716

PROJECT NUMBER & PHASE 04000007351

Dist	COUNTY	ROUTE	POST MILES TOTAL PROJECT	SHEET No.	TOTAL SHEETS
04	Mrn, Son	101	26.8/27.6, 0.0/2.0	255	710

06/30/14
REGISTERED CIVIL ENGINEER — DATE

8-18-14
PLANS APPROVAL DATE

REGISTERED PROFESSIONAL ENGINEER
S. D. DANSKY
No. 60220
Exp. 6/30/16
CIVIL
STATE OF CALIFORNIA

THE STATE OF CALIFORNIA OR ITS OFFICERS OR AGENTS SHALL NOT BE RESPONSIBLE FOR THE ACCURACY OR COMPLETENESS OF SCANNED COPIES OF THIS PLAN SHEET.

MARK THOMAS & CO., INC.
3000 OAK RD, SUITE 650
WALNUT CREEK, CA 94597

TRANSPORTATION AUTHORITY OF MARIN
750 LINDARO ST, SUITE 200
SAN RAFAEL, CA 94901

NOTE:

FOR ACCURATE RIGHT OF WAY DATA, CONTACT RIGHT OF WAY ENGINEERING AT THE DISTRICT OFFICE.

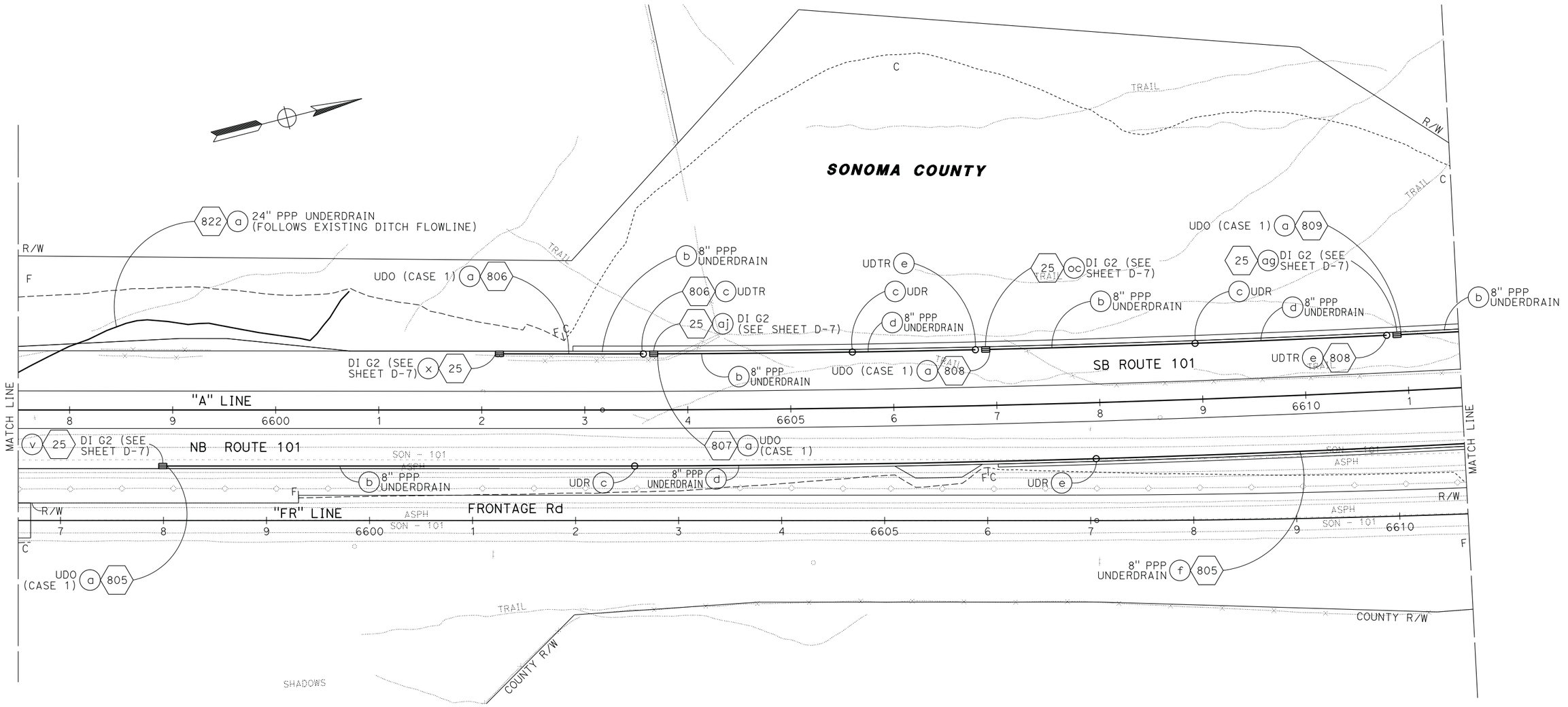

SUBSURFACE DRAINAGE PLAN

SCALE: 1" = 50'

SB-7

APPROVED FOR SUBSURFACE DRAINAGE WORK ONLY

REVISED BY	CB	CB	CB	CHRIS BRIANA	CALCULATED-DESIGNED BY
DATE REVISED	4/30/12	2/7/14	5/13/14	TOM CONNELL	CHECKED BY

CONSULTANT FUNCTIONAL SUPERVISOR: MICHAEL LOHMAN

STATE OF CALIFORNIA - DEPARTMENT OF TRANSPORTATION

Caltrans

LAST REVISION 00-00-00 | DATE PLOTTED => 30-SEP-2014 | TIME PLOTTED => 14:17

BORDER LAST REVISED 7/2/2010 | USERNAME => acroskey | DGN FILE => 0400000735ie007.dgn | RELATIVE BORDER SCALE IS IN INCHES 0 1 2 3 | UNIT 0716 | PROJECT NUMBER & PHASE 04000007351

Dist	COUNTY	ROUTE	POST MILES TOTAL PROJECT	SHEET No.	TOTAL SHEETS
04	Mrn, Son	101	26.8/27.6, 0.0/2.0	256	710

REGISTERED CIVIL ENGINEER — DATE: 06/30/14

S. D. DANSKY No. 60220 Exp. 6/30/16 CIVIL — REGISTERED PROFESSIONAL ENGINEER — STATE OF CALIFORNIA

8-18-14
PLANS APPROVAL DATE

THE STATE OF CALIFORNIA OR ITS OFFICERS OR AGENTS SHALL NOT BE RESPONSIBLE FOR THE ACCURACY OR COMPLETENESS OF SCANNED COPIES OF THIS PLAN SHEET.

MARK THOMAS & CO., INC.
3000 OAK RD, SUITE 650
WALNUT CREEK, CA 94597

TRANSPORTATION AUTHORITY OF MARIN
750 LINDARO ST, SUITE 200
SAN RAFAEL, CA 94901

NOTE:

FOR ACCURATE RIGHT OF WAY DATA, CONTACT
RIGHT OF WAY ENGINEERING AT THE DISTRICT OFFICE.

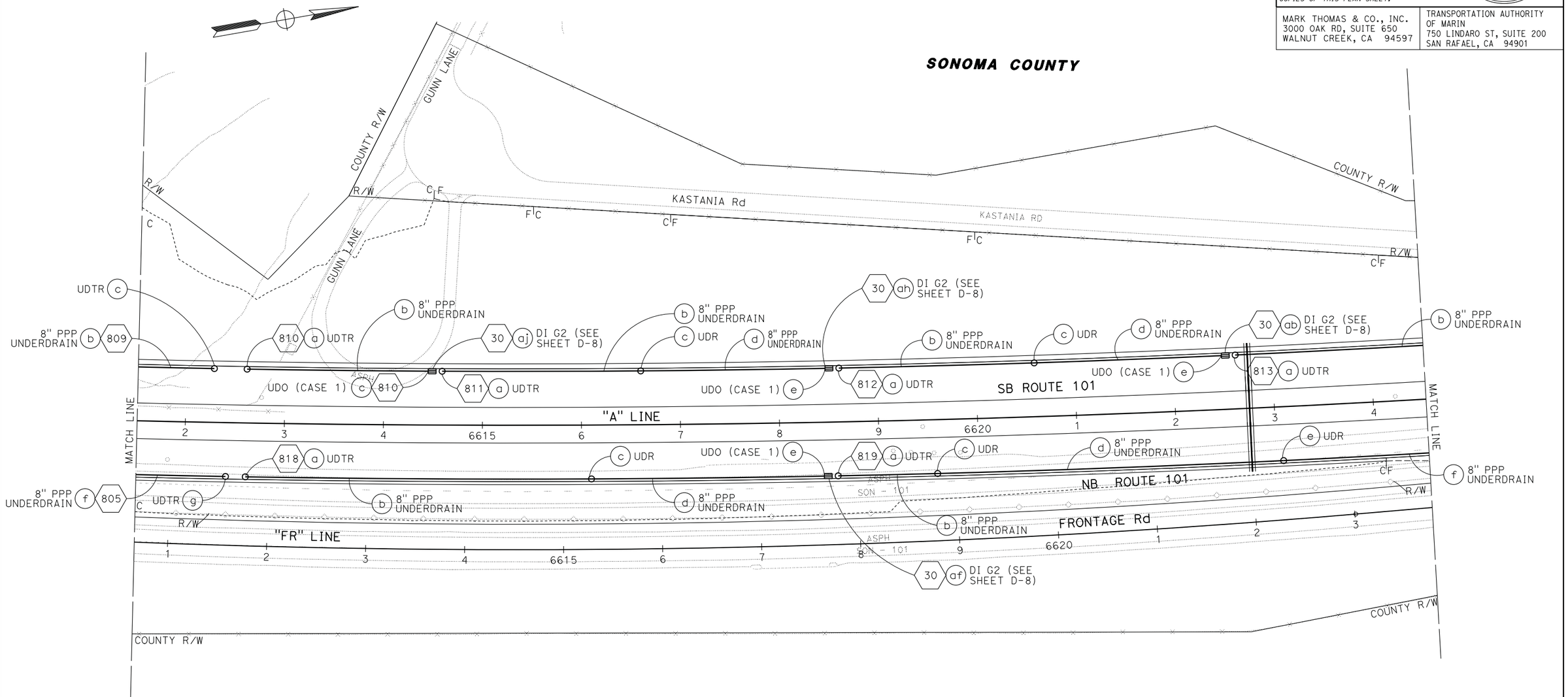

SUBSURFACE DRAINAGE PLAN

SCALE: 1" = 50'

SB-8

APPROVED FOR SUBSURFACE DRAINAGE WORK ONLY

CB 5/13/14
CB 2/7/14
CB 4/30/12
REVISED BY / DATE REVISED
CHRIS BRIANA / TOM CONNELL — CALCULATED-DESIGNED BY / CHECKED BY
CONSULTANT FUNCTIONAL SUPERVISOR: MICHAEL LOHMAN
STATE OF CALIFORNIA - DEPARTMENT OF TRANSPORTATION — Caltrans

LAST REVISION 00-00-00 | DATE PLOTTED => 30-SEP-2014 | TIME PLOTTED => 14:17

BORDER LAST REVISED 7/2/2010 | USERNAME => acroskey | DGN FILE => 0400000735ie008.dgn | RELATIVE BORDER SCALE IS IN INCHES 0 1 2 3 | UNIT 0716 | PROJECT NUMBER & PHASE 04000007351

Dist	COUNTY	ROUTE	POST MILES TOTAL PROJECT	SHEET No.	TOTAL SHEETS
04	Mrn, Son	101	26.8/27.6, 0.0/2.0	257	710

REGISTERED CIVIL ENGINEER 06/30/14 DATE

8-18-14
PLANS APPROVAL DATE

REGISTERED PROFESSIONAL ENGINEER S. D. DANSKY No. 60220 Exp. 6/30/16 CIVIL STATE OF CALIFORNIA

THE STATE OF CALIFORNIA OR ITS OFFICERS OR AGENTS SHALL NOT BE RESPONSIBLE FOR THE ACCURACY OR COMPLETENESS OF SCANNED COPIES OF THIS PLAN SHEET.

MARK THOMAS & CO., INC.
3000 OAK RD, SUITE 650
WALNUT CREEK, CA 94597

TRANSPORTATION AUTHORITY OF MARIN
750 LINDARO ST, SUITE 200
SAN RAFAEL, CA 94901

NOTE:

FOR ACCURATE RIGHT OF WAY DATA, CONTACT RIGHT OF WAY ENGINEERING AT THE DISTRICT OFFICE.

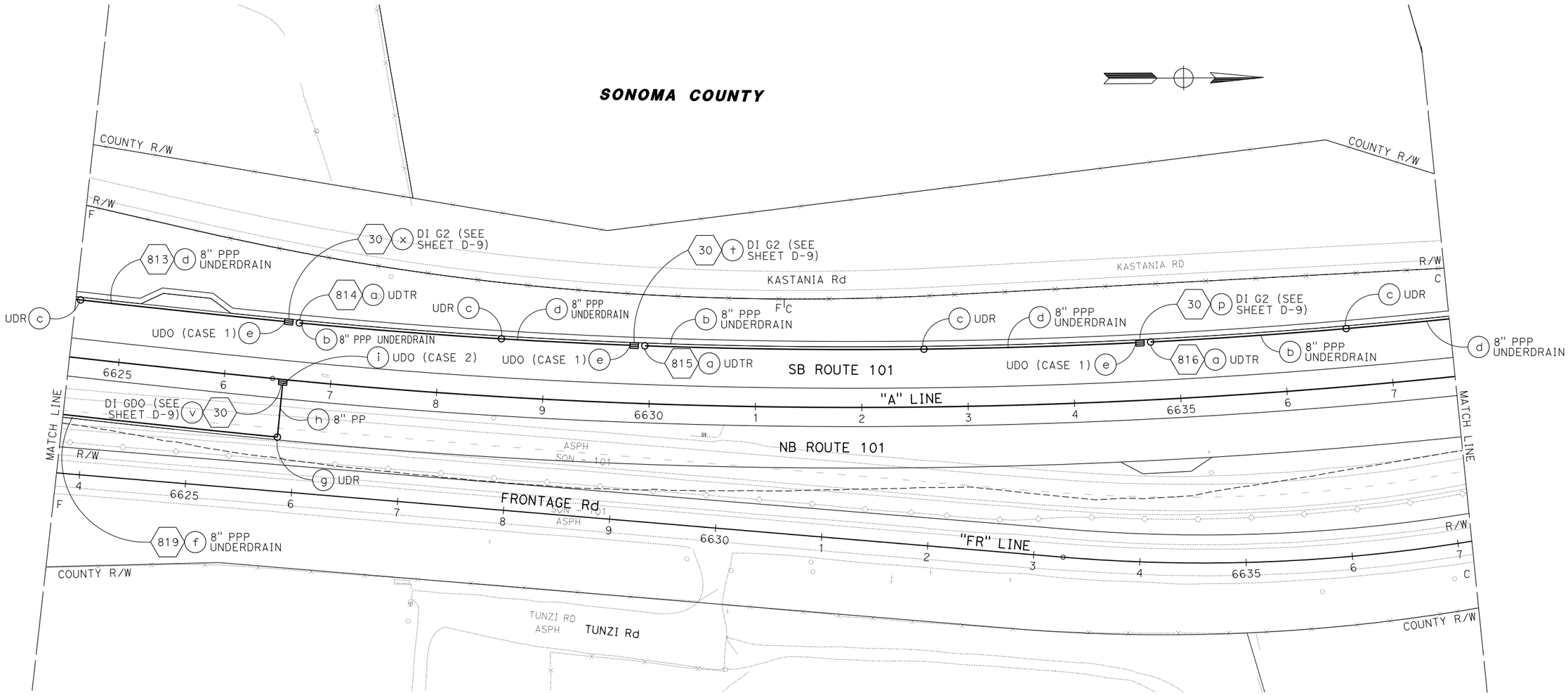

SUBSURFACE DRAINAGE PLAN

SCALE: 1" = 50'

SB-9

APPROVED FOR SUBSURFACE DRAINAGE WORK ONLY

STATE OF CALIFORNIA - DEPARTMENT OF TRANSPORTATION

Caltrans

CONSULTANT FUNCTIONAL SUPERVISOR: MICHAEL LOHMAN

CALCULATED-DESIGNED BY: CHRIS BRIANA

CHECKED BY: TOM CONNELL

REVISED BY: CB | DATE REVISED: 4/30/12

CB | 2/7/14

CB | 5/13/14

LAST REVISION 00-00-00

DATE PLOTTED => 30-SEP-2014
TIME PLOTTED => 14:17

BORDER LAST REVISED 7/2/2010

USERNAME => acroskey
DGN FILE => 04000007351e009.dgn

RELATIVE BORDER SCALE IS IN INCHES 0 1 2 3

UNIT 0716

PROJECT NUMBER & PHASE 04000007351

NOTE:

FOR ACCURATE RIGHT OF WAY DATA, CONTACT
RIGHT OF WAY ENGINEERING AT THE DISTRICT OFFICE.

Dist	COUNTY	ROUTE	POST MILES TOTAL PROJECT	SHEET No.	TOTAL SHEETS
04	Mrn, Son	101	26.8/27.6, 0.0/2.0	258	710

REGISTERED CIVIL ENGINEER — 06/30/14 DATE

8-18-14
PLANS APPROVAL DATE

REGISTERED PROFESSIONAL ENGINEER
S. D. DANSKY
No. 60220
Exp. 6/30/16
CIVIL
STATE OF CALIFORNIA

THE STATE OF CALIFORNIA OR ITS OFFICERS OR AGENTS SHALL NOT BE RESPONSIBLE FOR THE ACCURACY OR COMPLETENESS OF SCANNED COPIES OF THIS PLAN SHEET.

MARK THOMAS & CO., INC.
3000 OAK RD, SUITE 650
WALNUT CREEK, CA 94597

TRANSPORTATION AUTHORITY OF MARIN
750 LINDARO ST, SUITE 200
SAN RAFAEL, CA 94901

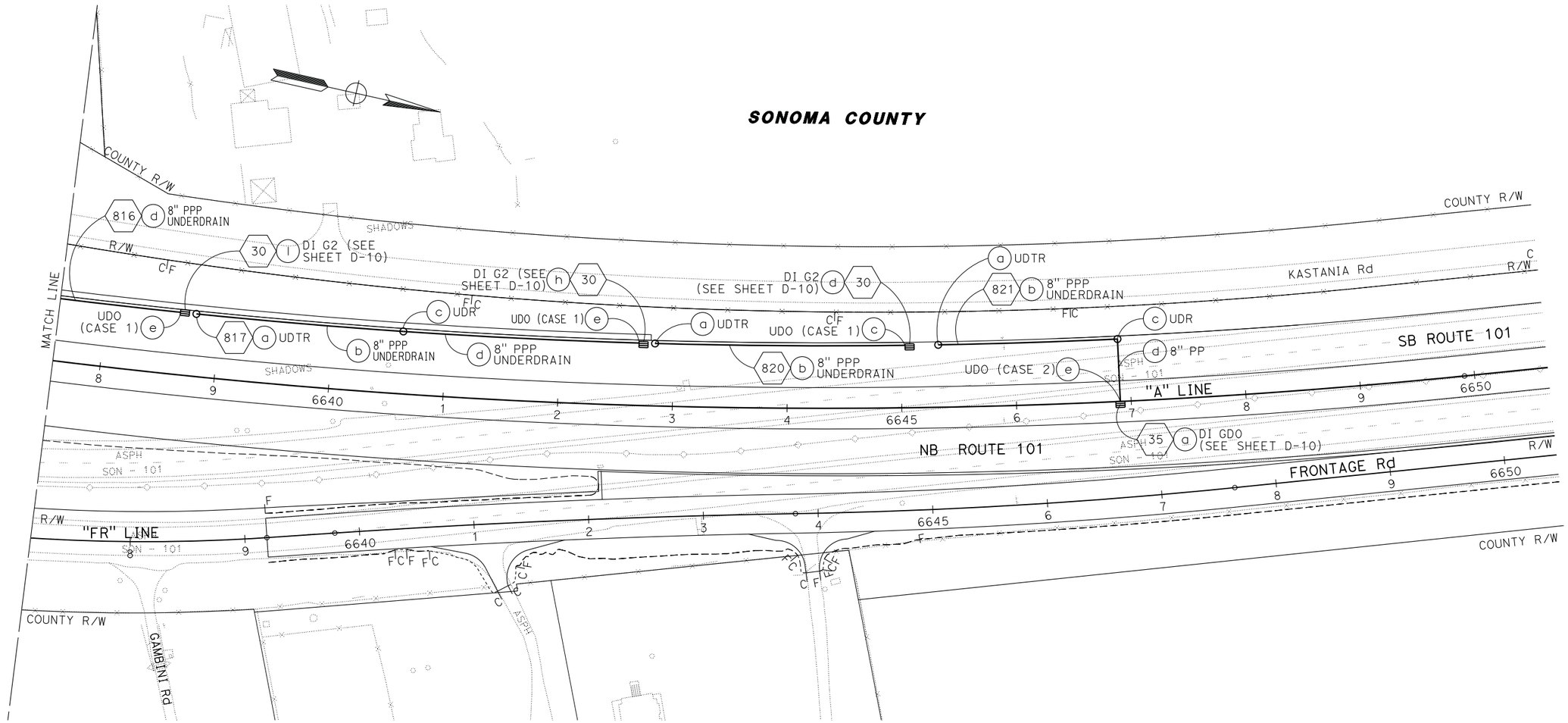

SUBSURFACE DRAINAGE PLAN

SCALE: 1" = 50'

SB-10

APPROVED FOR SUBSURFACE DRAINAGE WORK ONLY

REVISED BY	CB	CB	CB	CHRIS BRIANA	CALCULATED-DESIGNED BY
DATE REVISED	4/30/12	2/7/14	5/13/14	TOM CONNELL	CHECKED BY

CONSULTANT FUNCTIONAL SUPERVISOR: MICHAEL LOHMAN

STATE OF CALIFORNIA - DEPARTMENT OF TRANSPORTATION

Caltrans

LAST REVISION 00-00-00 | DATE PLOTTED => 30-SEP-2014 | TIME PLOTTED => 14:17

BORDER LAST REVISED 7/2/2010 | USERNAME => acroskey | DGN FILE => 0400000735ie010.dgn | RELATIVE BORDER SCALE IS IN INCHES 0 1 2 3 | UNIT 0716 | PROJECT NUMBER & PHASE 04000007351

REVISED BY	DATE REVISED
CB	5/13/14
CB	2/7/14
CB	4/30/12

CHRIS BRIANA
TOM CONNELL

CALCULATED-DESIGNED BY
CHECKED BY

CONSULTANT FUNCTIONAL SUPERVISOR
MICHAEL LOHMAN

STATE OF CALIFORNIA - DEPARTMENT OF TRANSPORTATION
Caltrans

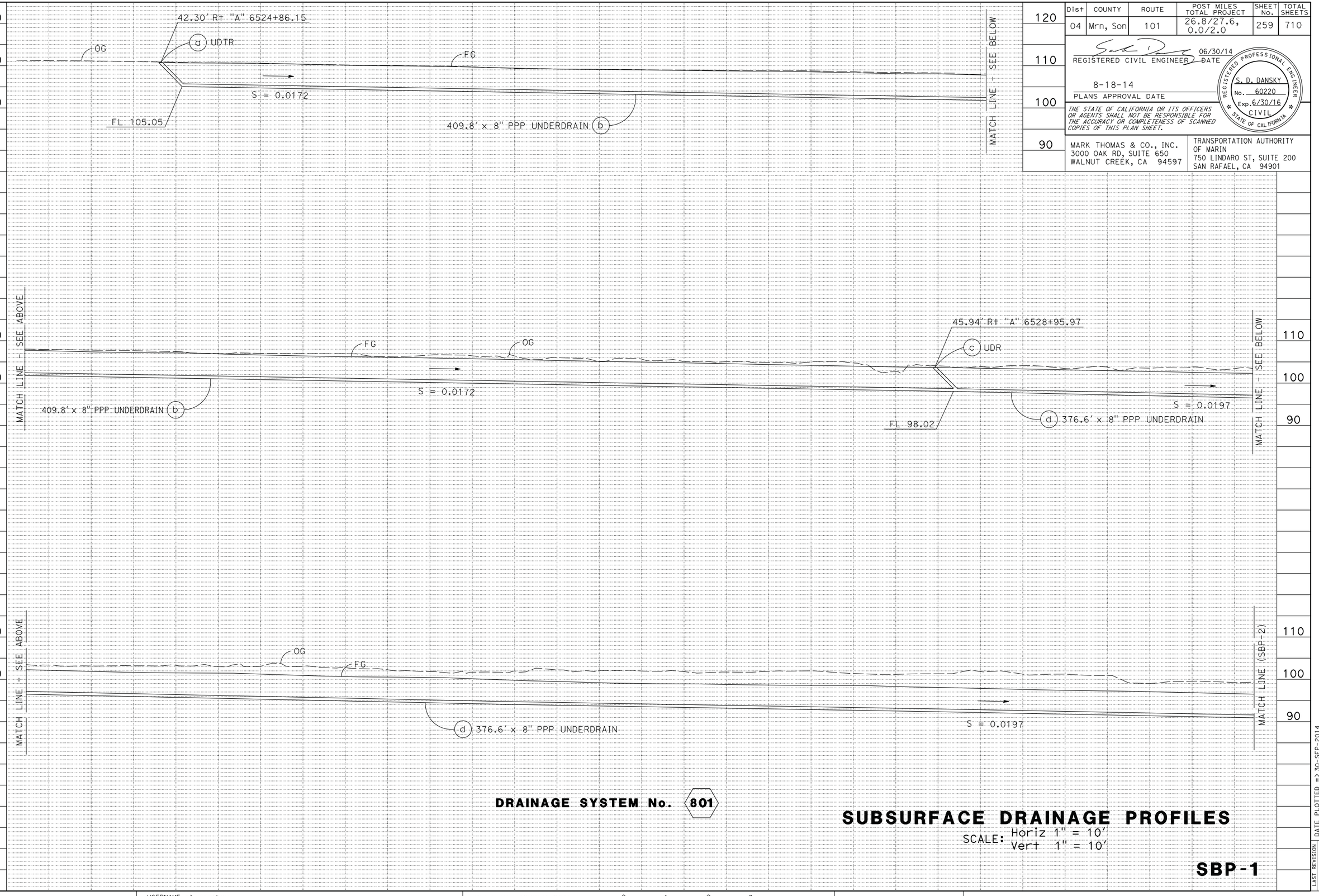

Dist	COUNTY	ROUTE	POST MILES TOTAL PROJECT	SHEET No.	TOTAL SHEETS
04	Mrn, Son	101	26.8/27.6, 0.0/2.0	259	710

REGISTERED CIVIL ENGINEER — 06/30/14 DATE

8-18-14
PLANS APPROVAL DATE

REGISTERED PROFESSIONAL ENGINEER
S. D. DANSKY
No. 60220
Exp. 6/30/16
CIVIL
STATE OF CALIFORNIA

THE STATE OF CALIFORNIA OR ITS OFFICERS OR AGENTS SHALL NOT BE RESPONSIBLE FOR THE ACCURACY OR COMPLETENESS OF SCANNED COPIES OF THIS PLAN SHEET.

MARK THOMAS & CO., INC.
3000 OAK RD, SUITE 650
WALNUT CREEK, CA 94597

TRANSPORTATION AUTHORITY OF MARIN
750 LINDARO ST, SUITE 200
SAN RAFAEL, CA 94901

DRAINAGE SYSTEM No. 801

SUBSURFACE DRAINAGE PROFILES

SCALE: Horiz 1" = 10'
Vert 1" = 10'

SBP-1

LAST REVISION 00-00-00
DATE PLOTTED => 30-SEP-2014
TIME PLOTTED => 14:17

BORDER LAST REVISED 7/2/2010
USERNAME => acroskey
DGN FILE => 04000007351if001.dgn
RELATIVE BORDER SCALE IS IN INCHES 0 1 2 3
UNIT 0716
PROJECT NUMBER & PHASE 04000007351

Dist	COUNTY	ROUTE	POST MILES TOTAL PROJECT	SHEET No.	TOTAL SHEETS
04	Mrn, Son	101	26.8/27.6, 0.0/2.0	260	710

REGISTERED CIVIL ENGINEER — 06/30/14 DATE

8-18-14
PLANS APPROVAL DATE

REGISTERED PROFESSIONAL ENGINEER — S. D. DANSKY — No. 60220 — Exp. 6/30/16 — CIVIL — STATE OF CALIFORNIA

THE STATE OF CALIFORNIA OR ITS OFFICERS OR AGENTS SHALL NOT BE RESPONSIBLE FOR THE ACCURACY OR COMPLETENESS OF SCANNED COPIES OF THIS PLAN SHEET.

MARK THOMAS & CO., INC.
3000 OAK RD, SUITE 650
WALNUT CREEK, CA 94597

TRANSPORTATION AUTHORITY OF MARIN
750 LINDARO ST, SUITE 200
SAN RAFAEL, CA 94901

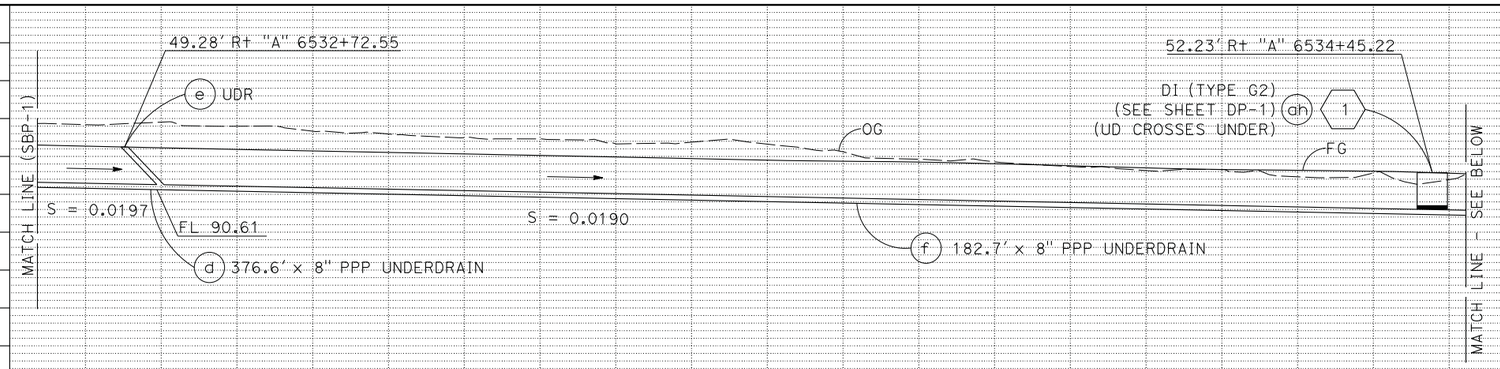

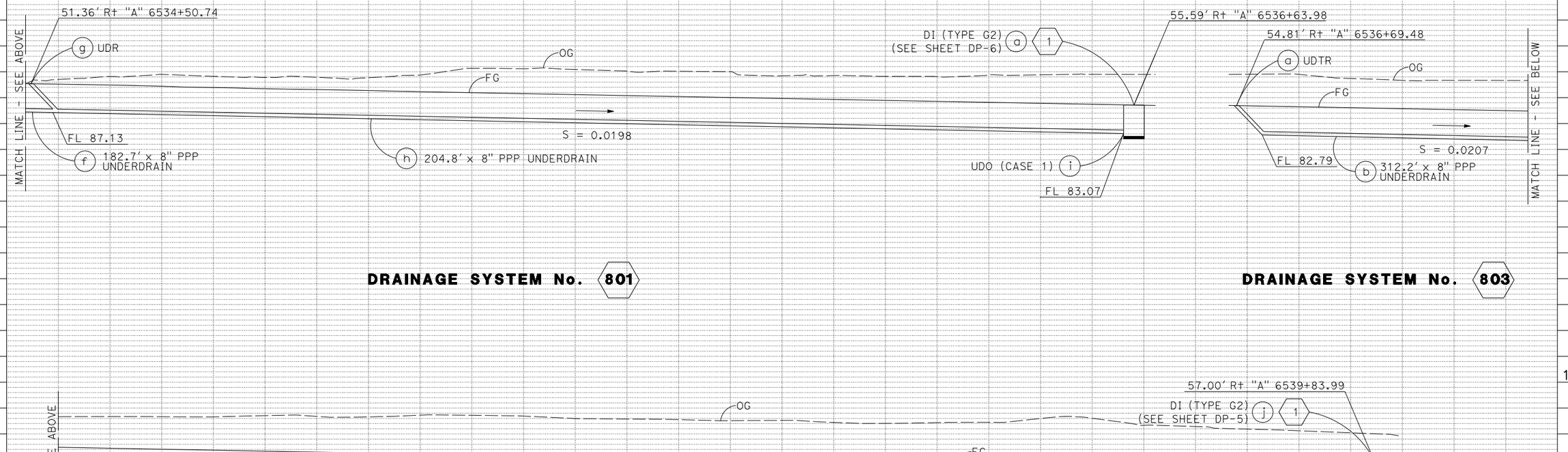

DRAINAGE SYSTEM No. 801

DRAINAGE SYSTEM No. 803

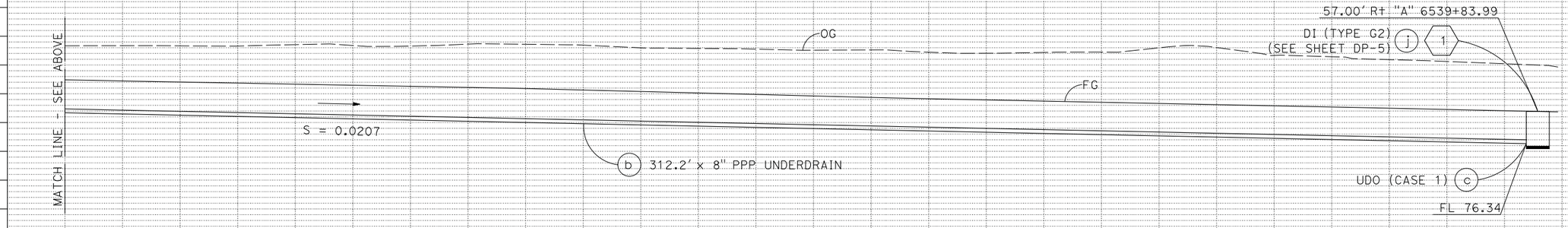

DRAINAGE SYSTEM No. 803

SUBSURFACE DRAINAGE PROFILES

SCALE: Horiz 1" = 10'
Vert 1" = 10'

SBP-2

REVISED BY	DATE REVISED
CB	5/13/14
CB	2/7/14
CB	4/30/12

CALCULATED-DESIGNED BY: CHRIS BRIANA
CHECKED BY: TOM CONNELL

CONSULTANT FUNCTIONAL SUPERVISOR: MICHAEL LOHMAN

STATE OF CALIFORNIA - DEPARTMENT OF TRANSPORTATION

LAST REVISION 00-00-00 | DATE PLOTTED => 30-SEP-2014 | TIME PLOTTED => 14:17

Dist	COUNTY	ROUTE	POST MILES TOTAL PROJECT	SHEET No.	TOTAL SHEETS
04	Mrn, Son	101	26.8/27.6, 0.0/2.0	261	710

REGISTERED CIVIL ENGINEER — 06/30/14 DATE

8-18-14
PLANS APPROVAL DATE

REGISTERED PROFESSIONAL ENGINEER — S. D. DANSKY No. 60220 Exp. 6/30/16 CIVIL — STATE OF CALIFORNIA

THE STATE OF CALIFORNIA OR ITS OFFICERS OR AGENTS SHALL NOT BE RESPONSIBLE FOR THE ACCURACY OR COMPLETENESS OF SCANNED COPIES OF THIS PLAN SHEET.

MARK THOMAS & CO., INC.
3000 OAK RD, SUITE 650
WALNUT CREEK, CA 94597

TRANSPORTATION AUTHORITY OF MARIN
750 LINDARO ST, SUITE 200
SAN RAFAEL, CA 94901

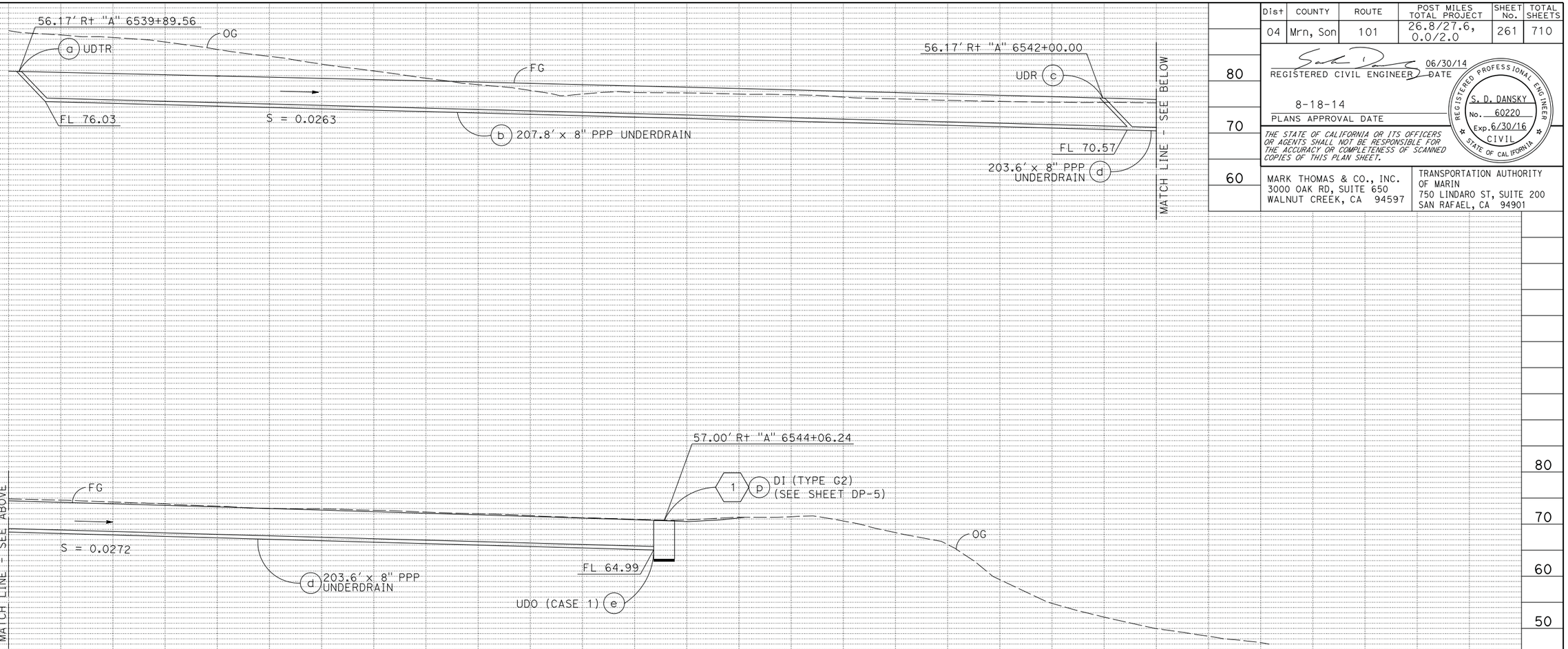

DRAINAGE SYSTEM No. 804

SUBSURFACE DRAIANGE PROFILES

SCALE: Horiz 1" = 10'
Vert 1" = 10'

SBP-3

CB 5/13/14
CB 2/7/14
CB 4/30/12
REVISED BY / DATE REVISED

CHRIS BRIANA
TOM CONNELL
CALCULATED-DESIGNED BY / CHECKED BY

CONSULTANT FUNCTIONAL SUPERVISOR: MICHAEL LOHMAN

STATE OF CALIFORNIA - DEPARTMENT OF TRANSPORTATION
Caltrans

LAST REVISION 00-00-00 | DATE PLOTTED => 30-SEP-2014 | TIME PLOTTED => 14:17

BORDER LAST REVISED 7/2/2010 | USERNAME => acroskey | DGN FILE => 04000007351if003.dgn | RELATIVE BORDER SCALE IS IN INCHES 0 1 2 3 | UNIT 0716 | PROJECT NUMBER & PHASE 04000007351

Dist	COUNTY	ROUTE	POST MILES TOTAL PROJECT	SHEET No.	TOTAL SHEETS
04	Mrn, Son	101	26.8/27.6, 0.0/2.0	262	710

REGISTERED CIVIL ENGINEER — 06/30/14 DATE

8-18-14
PLANS APPROVAL DATE

REGISTERED PROFESSIONAL ENGINEER — S. D. DANSKY No. 60220 Exp. 6/30/16 CIVIL — STATE OF CALIFORNIA

THE STATE OF CALIFORNIA OR ITS OFFICERS OR AGENTS SHALL NOT BE RESPONSIBLE FOR THE ACCURACY OR COMPLETENESS OF SCANNED COPIES OF THIS PLAN SHEET.

MARK THOMAS & CO., INC.
3000 OAK RD, SUITE 650
WALNUT CREEK, CA 94597

TRANSPORTATION AUTHORITY OF MARIN
750 LINDARO ST, SUITE 200
SAN RAFAEL, CA 94901

REVISED BY	DATE REVISED
CB	4/30/12
CB	2/7/14
CB	5/13/14

CALCULATED-DESIGNED BY: CHRIS BRIANA
CHECKED BY: TOM CONNELL

CONSULTANT FUNCTIONAL SUPERVISOR: MICHAEL LOHMAN

STATE OF CALIFORNIA - DEPARTMENT OF TRANSPORTATION
Caltrans

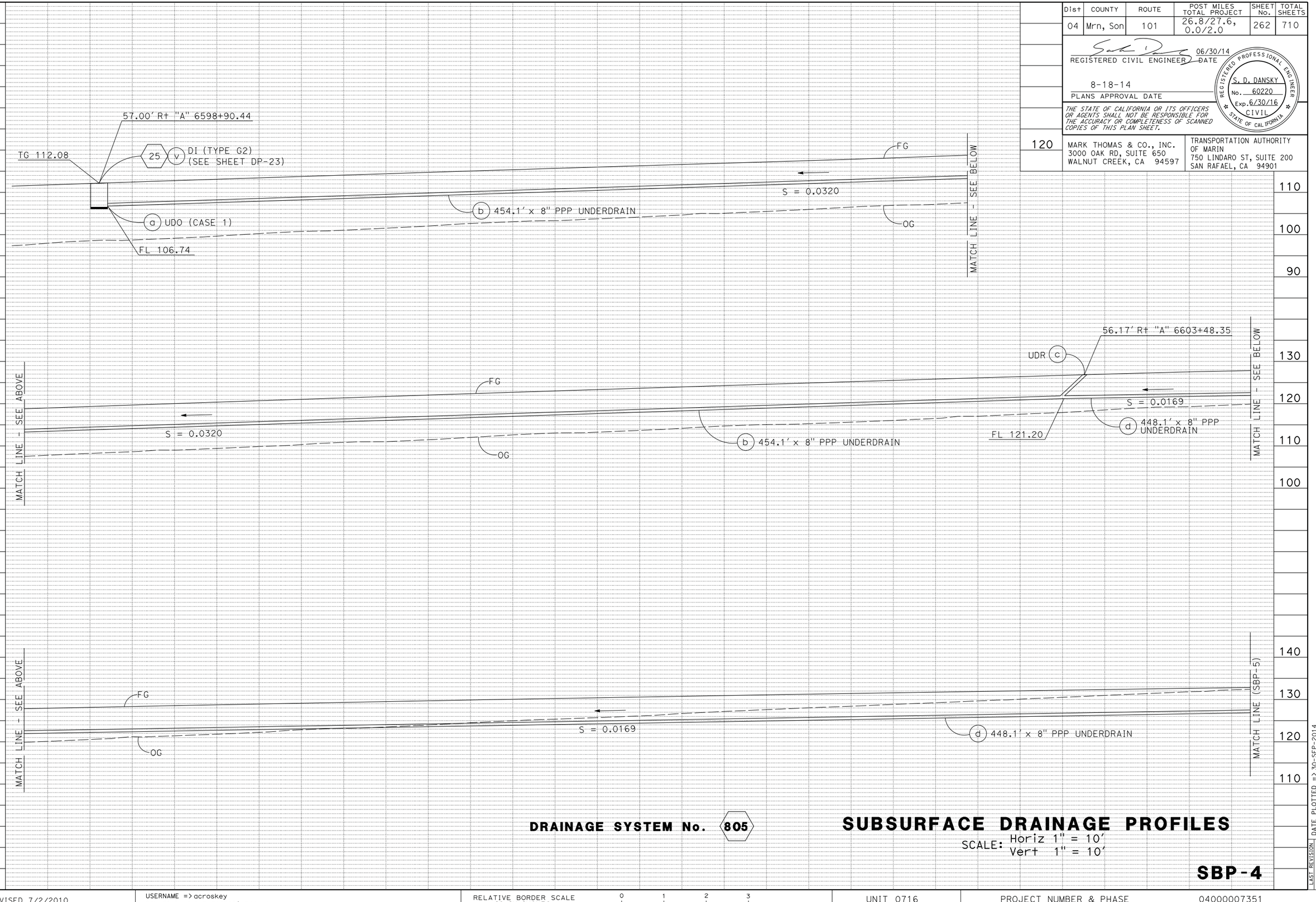

DRAINAGE SYSTEM No. 805

SUBSURFACE DRAINAGE PROFILES

SCALE: Horiz 1" = 10'
Vert 1" = 10'

SBP-4

LAST REVISION 00-00-00 | DATE PLOTTED => 30-SEP-2014 | TIME PLOTTED => 14:17

BORDER LAST REVISED 7/2/2010 | USERNAME => acroskey | DGN FILE => 04000000735if004.dgn | RELATIVE BORDER SCALE IS IN INCHES 0 1 2 3 | UNIT 0716 | PROJECT NUMBER & PHASE 04000007351

Dist	COUNTY	ROUTE	POST MILES TOTAL PROJECT	SHEET No.	TOTAL SHEETS
04	Mrn, Son	101	26.8/27.6, 0.0/2.0	263	710

REGISTERED CIVIL ENGINEER — 06/30/14 DATE

8-18-14
PLANS APPROVAL DATE

REGISTERED PROFESSIONAL ENGINEER
S. D. DANSKY
No. 60220
Exp. 6/30/16
CIVIL
STATE OF CALIFORNIA

THE STATE OF CALIFORNIA OR ITS OFFICERS OR AGENTS SHALL NOT BE RESPONSIBLE FOR THE ACCURACY OR COMPLETENESS OF SCANNED COPIES OF THIS PLAN SHEET.

MARK THOMAS & CO., INC.
3000 OAK RD, SUITE 650
WALNUT CREEK, CA 94597

TRANSPORTATION AUTHORITY OF MARIN
750 LINDARO ST, SUITE 200
SAN RAFAEL, CA 94901

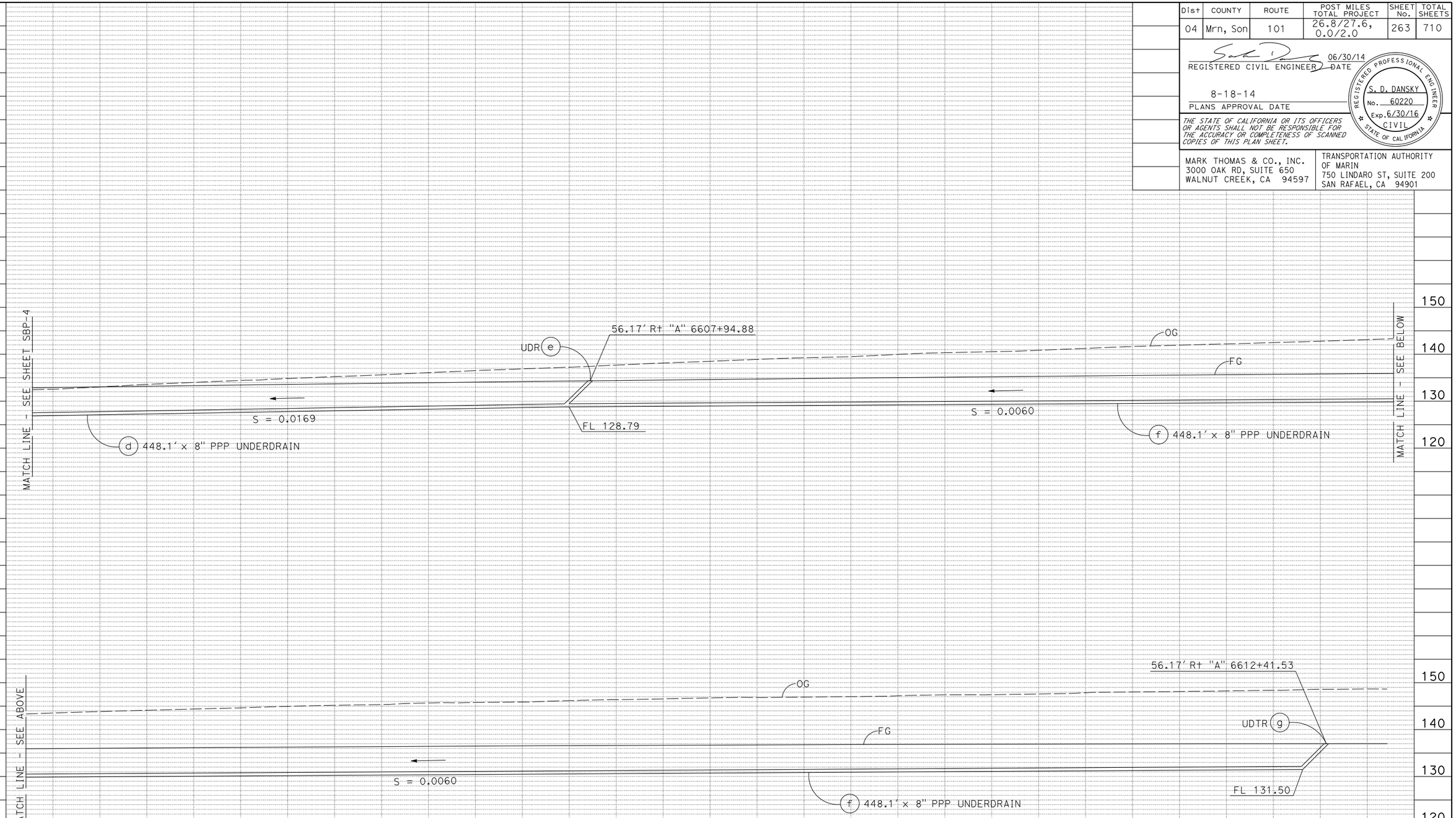

DRAINAGE SYSTEM No. 805

SUBSURFACE DRAINAGE PROFILES

SCALE: Horiz 1" = 10'
Vert 1" = 10'

SBP-5

CB 5/13/14
CB 2/7/14
CB 4/30/12
REVISED BY / DATE REVISED
CHRIS BRIANA
TOM CONNELL
CALCULATED-DESIGNED BY
CHECKED BY
CONSULTANT FUNCTIONAL SUPERVISOR
MICHAEL LOHMAN
STATE OF CALIFORNIA - DEPARTMENT OF TRANSPORTATION
Caltrans

LAST REVISION 00-00-00
DATE PLOTTED => 30-SEP-2014
TIME PLOTTED => 14:17

BORDER LAST REVISED 7/2/2010
USERNAME => acroskey
DGN FILE => 04000007351f005.dgn
RELATIVE BORDER SCALE IS IN INCHES 0 1 2 3
UNIT 0716
PROJECT NUMBER & PHASE 04000007351

Dist	COUNTY	ROUTE	POST MILES TOTAL PROJECT	SHEET No.	TOTAL SHEETS
04	Mrn, Son	101	26.8/27.6, 0.0/2.0	264	710

REGISTERED CIVIL ENGINEER — 06/30/14 DATE

8-18-14
PLANS APPROVAL DATE

S. D. DANSKY No. 60220 Exp. 6/30/16 CIVIL — REGISTERED PROFESSIONAL ENGINEER — STATE OF CALIFORNIA

THE STATE OF CALIFORNIA OR ITS OFFICERS OR AGENTS SHALL NOT BE RESPONSIBLE FOR THE ACCURACY OR COMPLETENESS OF SCANNED COPIES OF THIS PLAN SHEET.

MARK THOMAS & CO., INC.
3000 OAK RD, SUITE 650
WALNUT CREEK, CA 94597

TRANSPORTATION AUTHORITY OF MARIN
750 LINDARO ST, SUITE 200
SAN RAFAEL, CA 94901

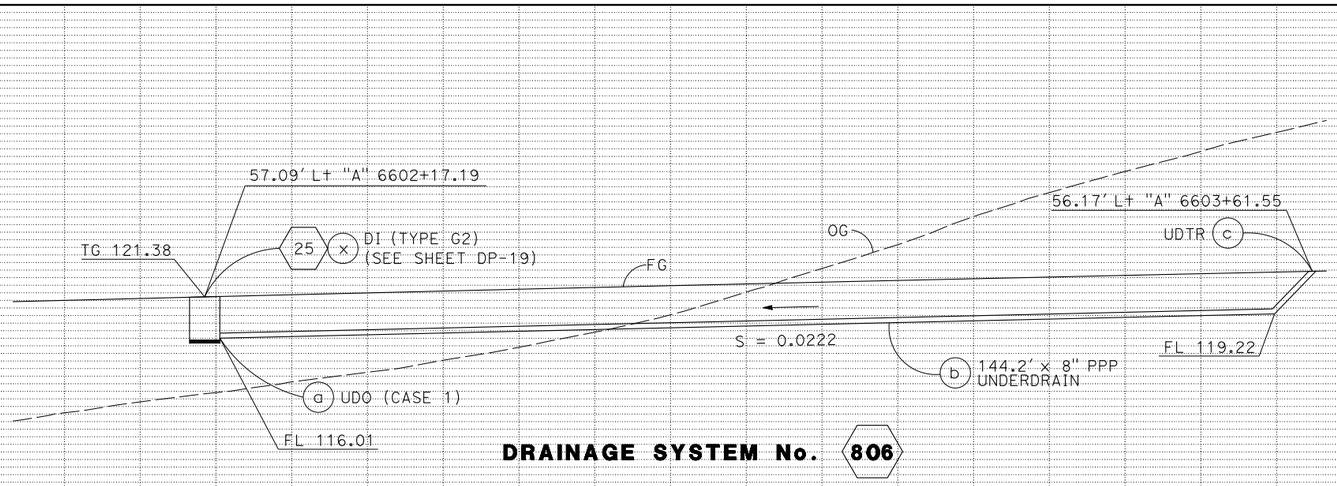

DRAINAGE SYSTEM No. 806

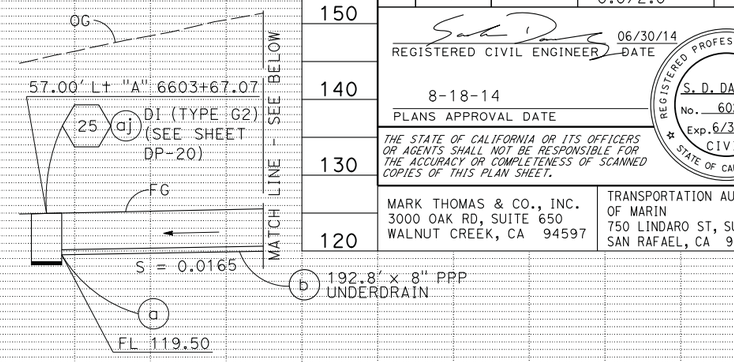

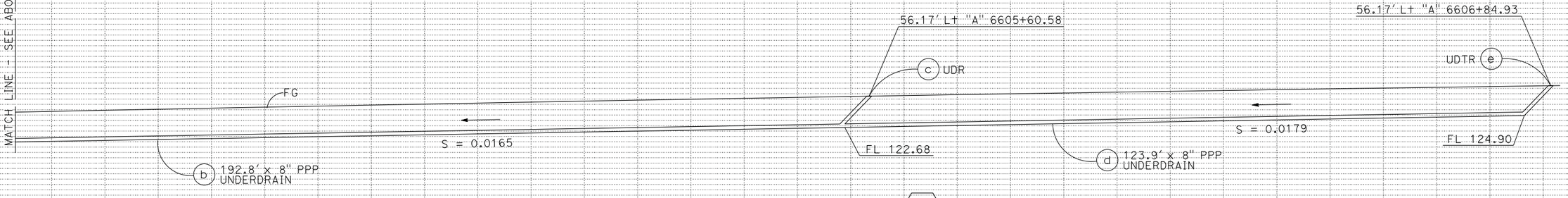

DRAINAGE SYSTEM No. 807

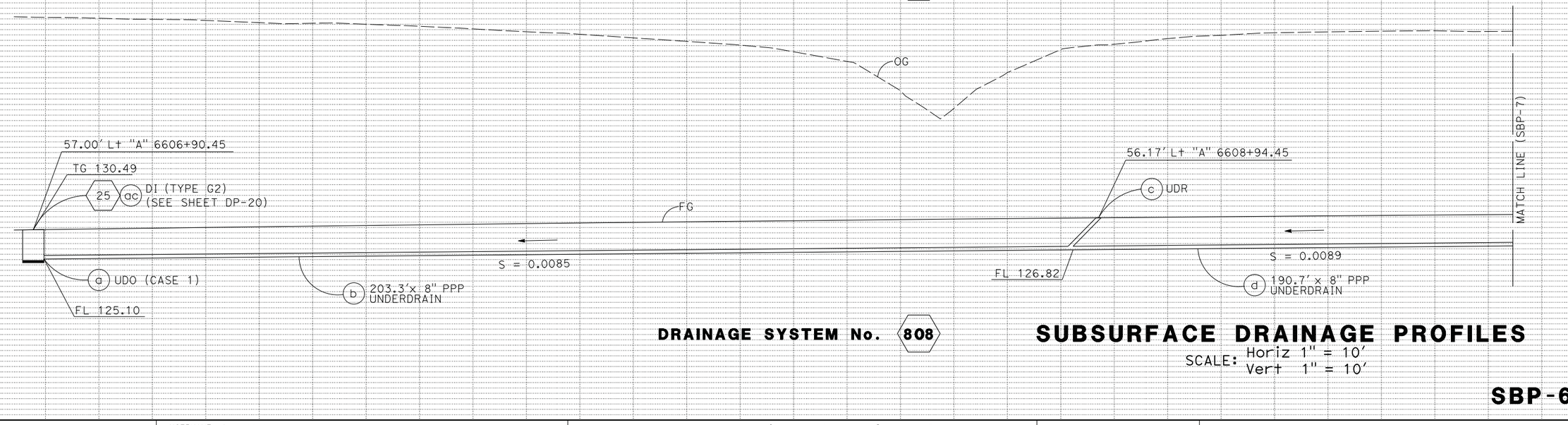

DRAINAGE SYSTEM No. 808

SUBSURFACE DRAINAGE PROFILES

SCALE: Horiz 1" = 10'
Vert 1" = 10'

SBP-6

REVISED BY	DATE REVISED
CB	5/13/14
CB	2/7/14
CB	4/30/12

CALCULATED-DESIGNED BY: CHRIS BRIANA
CHECKED BY: TOM CONNELL
CONSULTANT FUNCTIONAL SUPERVISOR: MICHAEL LOHMAN
STATE OF CALIFORNIA - DEPARTMENT OF TRANSPORTATION
Caltrans

LAST REVISION 00-00-00 | DATE PLOTTED => 30-SEP-2014 | TIME PLOTTED => 14:17

BORDER LAST REVISED 7/2/2010 | USERNAME => acroskey | DGN FILE => 04000007351f006.dgn | RELATIVE BORDER SCALE IS IN INCHES 0 1 2 3 | UNIT 0716 | PROJECT NUMBER & PHASE 04000007351

Dist	COUNTY	ROUTE	POST MILES TOTAL PROJECT	SHEET No.	TOTAL SHEETS
04	Mrn, Son	101	26.8/27.6, 0.0/2.0	265	710

REGISTERED CIVIL ENGINEER — DATE 06/30/14

8-18-14
PLANS APPROVAL DATE

REGISTERED PROFESSIONAL ENGINEER — S. D. DANSKY No. 60220 Exp. 6/30/16 CIVIL — STATE OF CALIFORNIA

THE STATE OF CALIFORNIA OR ITS OFFICERS OR AGENTS SHALL NOT BE RESPONSIBLE FOR THE ACCURACY OR COMPLETENESS OF SCANNED COPIES OF THIS PLAN SHEET.

MARK THOMAS & CO., INC.
3000 OAK RD, SUITE 650
WALNUT CREEK, CA 94597

TRANSPORTATION AUTHORITY OF MARIN
750 LINDARO ST, SUITE 200
SAN RAFAEL, CA 94901

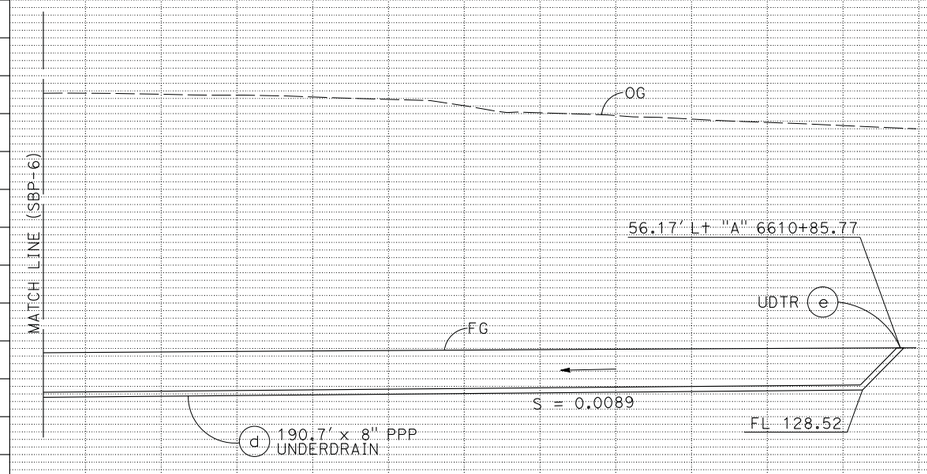

DRAINAGE SYSTEM No. 808

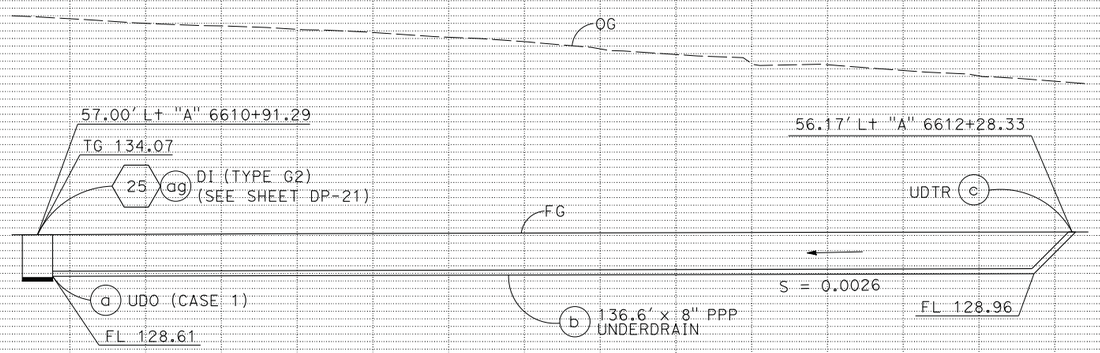

DRAINAGE SYSTEM No. 809

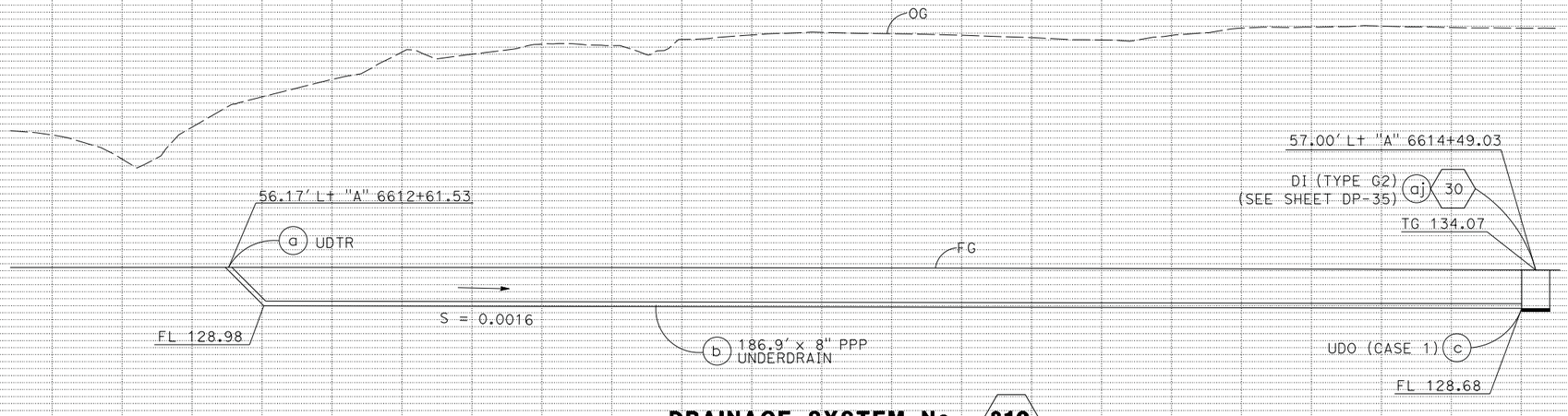

DRAINAGE SYSTEM No. 810

SUBSURFACE DRAINAGE PROFILES

SCALE: Horiz 1" = 10'
Vert 1" = 10'

SBP-7

CB 5/13/14
CB 2/7/14
CB 4/30/12
REVISED BY / DATE REVISED

CHRIS BRIANA
TOM CONNELL
CALCULATED-DESIGNED BY
CHECKED BY

CONSULTANT FUNCTIONAL SUPERVISOR
MICHAEL LOHMAN

STATE OF CALIFORNIA - DEPARTMENT OF TRANSPORTATION
Caltrans

LAST REVISION 00-00-00
DATE PLOTTED => 30-SEP-2014
TIME PLOTTED => 14:17

REVISED BY	DATE REVISED
CB	5/13/14
CB	2/7/14
CB	4/30/12

CHRIS BRIANA
TOM CONNELL

CALCULATED-DESIGNED BY
CHECKED BY

CONSULTANT FUNCTIONAL SUPERVISOR
MICHAEL LOHMAN

STATE OF CALIFORNIA - DEPARTMENT OF TRANSPORTATION
Caltrans

Dist	COUNTY	ROUTE	POST MILES TOTAL PROJECT	SHEET No.	TOTAL SHEETS
04	Mrn, Son	101	26.8/27.6, 0.0/2.0	266	710

REGISTERED CIVIL ENGINEER — DATE 06/30/14

8-18-14
PLANS APPROVAL DATE

REGISTERED PROFESSIONAL ENGINEER
S. D. DANSKY
No. 60220
Exp. 6/30/16
CIVIL
STATE OF CALIFORNIA

THE STATE OF CALIFORNIA OR ITS OFFICERS OR AGENTS SHALL NOT BE RESPONSIBLE FOR THE ACCURACY OR COMPLETENESS OF SCANNED COPIES OF THIS PLAN SHEET.

MARK THOMAS & CO., INC.
3000 OAK RD, SUITE 650
WALNUT CREEK, CA 94597

TRANSPORTATION AUTHORITY OF MARIN
750 LINDARO ST, SUITE 200
SAN RAFAEL, CA 94901

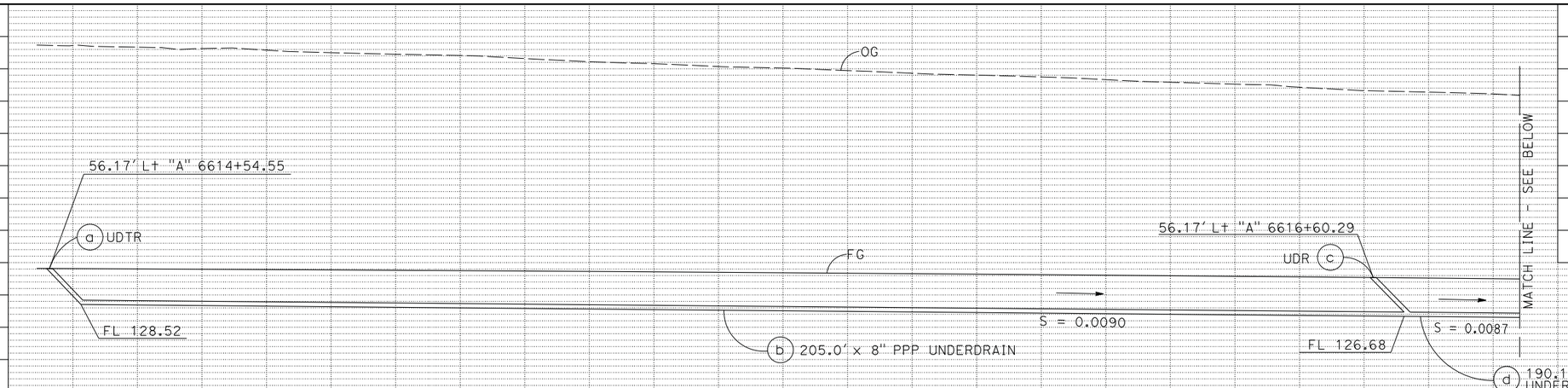

DRAINAGE SYSTEM No. 811

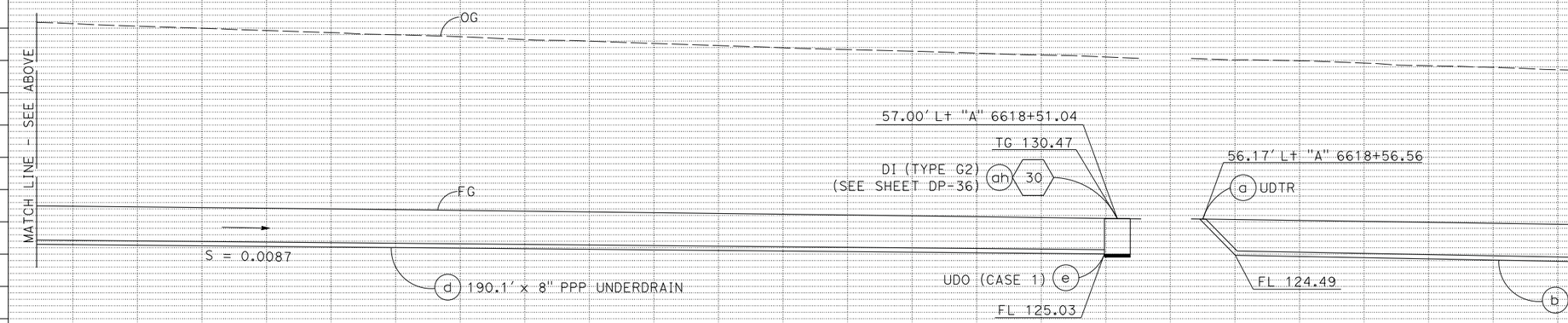

DRAINAGE SYSTEM No. 811 **DRAINAGE SYSTEM No. 812**

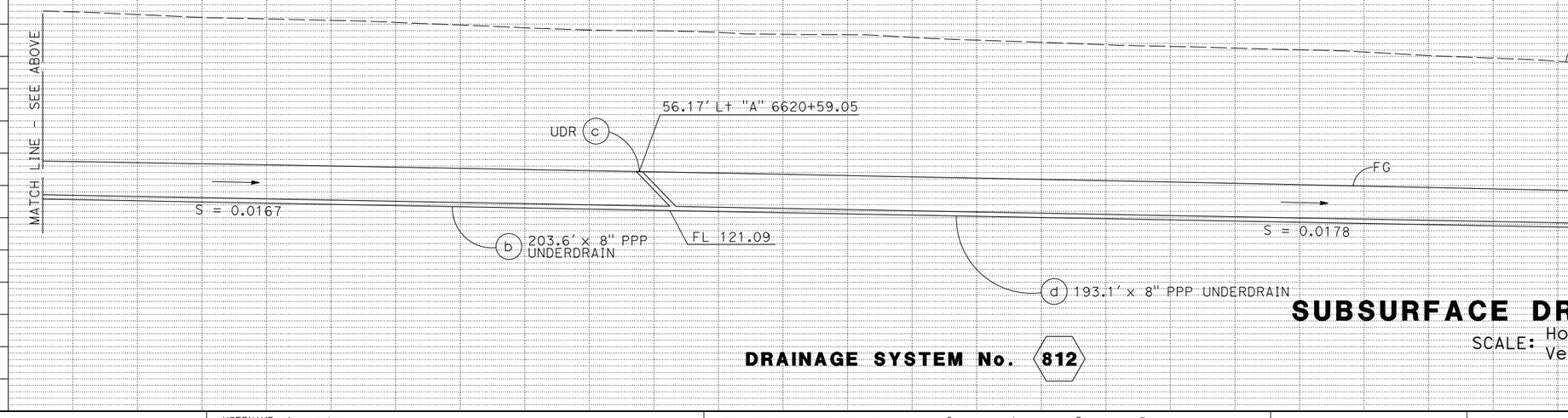

DRAINAGE SYSTEM No. 812

SUBSURFACE DRAINAGE PROFILES

SCALE: Horiz 1" = 10′
Vert 1" = 10′

SBP-8

LAST REVISION DATE PLOTTED => 30-SEP-2014
00-00-00 TIME PLOTTED => 14:17

BORDER LAST REVISED 7/2/2010 | USERNAME => acroskey | DGN FILE => 0400000735if008.dgn | RELATIVE BORDER SCALE IS IN INCHES 0 1 2 3 | UNIT 0716 | PROJECT NUMBER & PHASE 04000007351

Dist	COUNTY	ROUTE	POST MILES TOTAL PROJECT	SHEET No.	TOTAL SHEETS
04	Mrn, Son	101	26.8/27.6, 0.0/2.0	267	710

REGISTERED CIVIL ENGINEER — 06/30/14 DATE

8-18-14
PLANS APPROVAL DATE

REGISTERED PROFESSIONAL ENGINEER — S. D. DANSKY No. 60220 Exp. 6/30/16 CIVIL — STATE OF CALIFORNIA

THE STATE OF CALIFORNIA OR ITS OFFICERS OR AGENTS SHALL NOT BE RESPONSIBLE FOR THE ACCURACY OR COMPLETENESS OF SCANNED COPIES OF THIS PLAN SHEET.

MARK THOMAS & CO., INC.
3000 OAK RD, SUITE 650
WALNUT CREEK, CA 94597

TRANSPORTATION AUTHORITY OF MARIN
750 LINDARO ST, SUITE 200
SAN RAFAEL, CA 94901

REVISED BY	DATE REVISED
CB	4/30/12
CB	2/7/14
CB	5/13/14

CHRIS BRIANA — CALCULATED-DESIGNED BY
TOM CONNELL — CHECKED BY
MICHAEL LOHMAN — CONSULTANT FUNCTIONAL SUPERVISOR

STATE OF CALIFORNIA - DEPARTMENT OF TRANSPORTATION

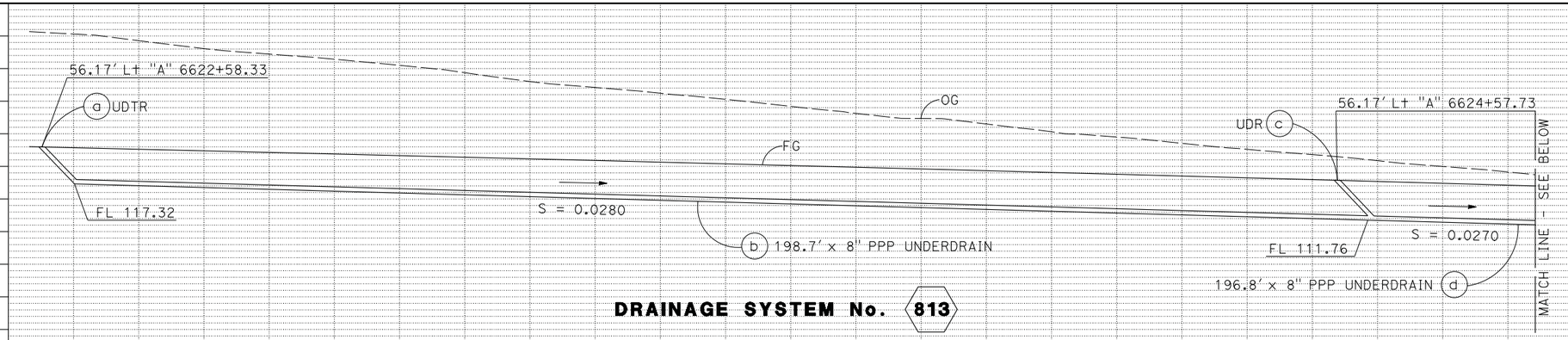

DRAINAGE SYSTEM No. 813

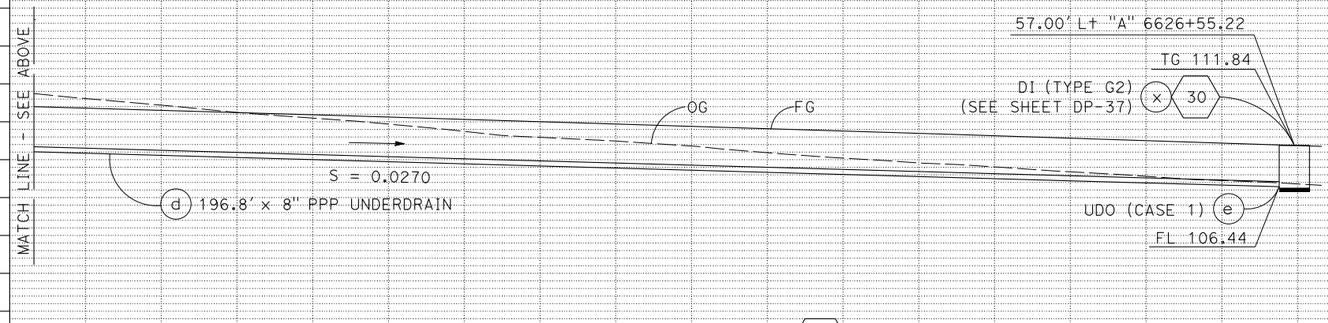

DRAINAGE SYSTEM No. 813

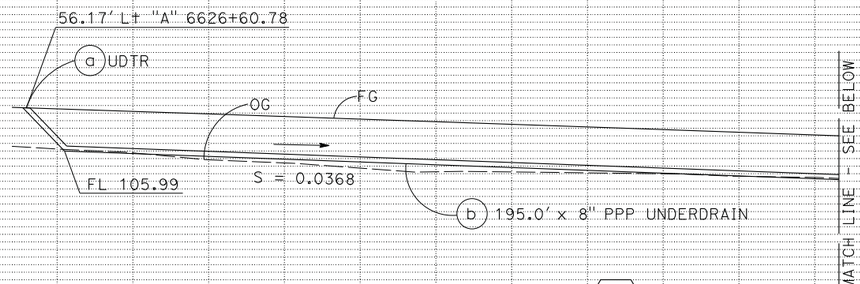

DRAINAGE SYSTEM No. 814

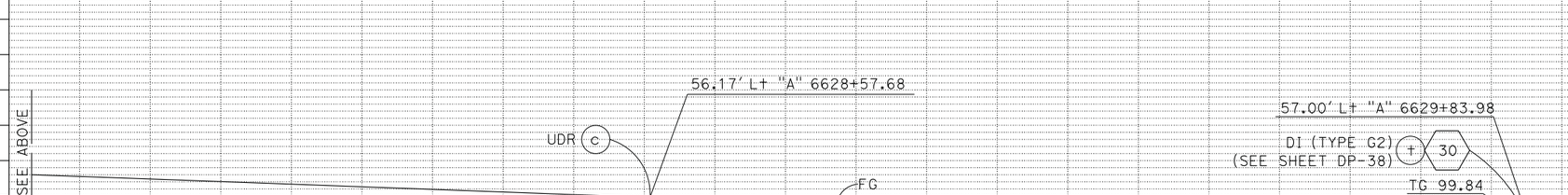

DRAINAGE SYSTEM No. 814

SUBSURFACE DRAINAGE PROFILES

SCALE: Horiz 1" = 10'
Vert 1" = 10'

SBP-9

LAST REVISION 00-00-00 | DATE PLOTTED => 30-SEP-2014 | TIME PLOTTED => 14:17

BORDER LAST REVISED 7/2/2010 | USERNAME => acroskey | DGN FILE => 04000007351f009.dgn | RELATIVE BORDER SCALE IS IN INCHES 0 1 2 3 | UNIT 0716 | PROJECT NUMBER & PHASE 04000007351

Dist	COUNTY	ROUTE	POST MILES TOTAL PROJECT	SHEET No.	TOTAL SHEETS
04	Mrn, Son	101	26.8/27.6, 0.0/2.0	268	710

REGISTERED CIVIL ENGINEER — 06/30/14 DATE

8-18-14
PLANS APPROVAL DATE

REGISTERED PROFESSIONAL ENGINEER — S. D. DANSKY No. 60220 Exp. 6/30/16 CIVIL — STATE OF CALIFORNIA

THE STATE OF CALIFORNIA OR ITS OFFICERS OR AGENTS SHALL NOT BE RESPONSIBLE FOR THE ACCURACY OR COMPLETENESS OF SCANNED COPIES OF THIS PLAN SHEET.

MARK THOMAS & CO., INC.
3000 OAK RD, SUITE 650
WALNUT CREEK, CA 94597

TRANSPORTATION AUTHORITY OF MARIN
750 LINDARO ST, SUITE 200
SAN RAFAEL, CA 94901

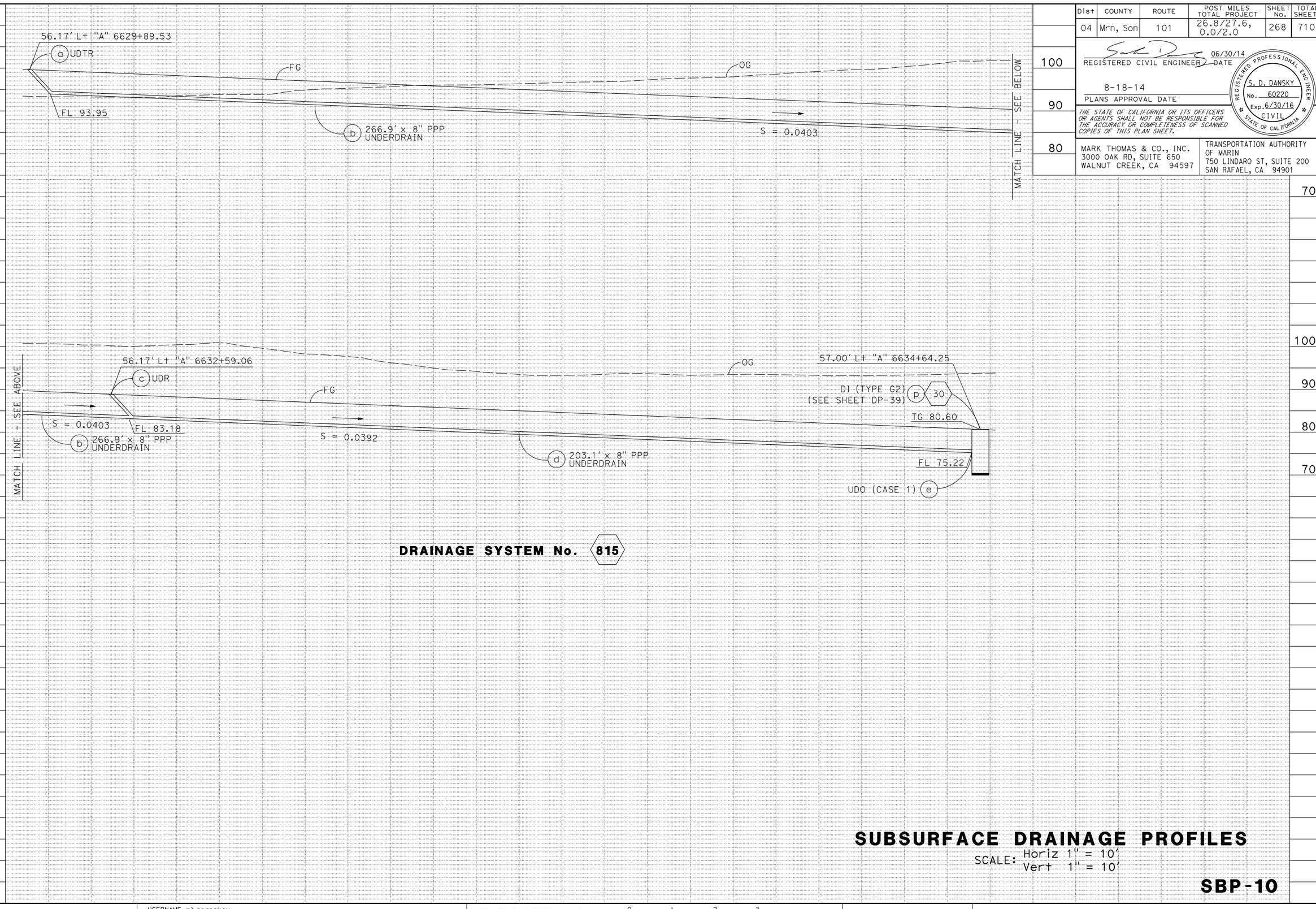

DRAINAGE SYSTEM No. 815

SUBSURFACE DRAINAGE PROFILES

SCALE: Horiz 1" = 10'
Vert 1" = 10'

SBP-10

REVISED BY	DATE REVISED
CB	5/13/14
CB	2/7/14
CB	4/30/12

CHRIS BRIANA — TOM CONNELL — CALCULATED-DESIGNED BY — CHECKED BY

CONSULTANT FUNCTIONAL SUPERVISOR — MICHAEL LOHMAN

STATE OF CALIFORNIA - DEPARTMENT OF TRANSPORTATION

LAST REVISION 00-00-00 — DATE PLOTTED => 30-SEP-2014 — TIME PLOTTED => 14:17

BORDER LAST REVISED 7/2/2010 — USERNAME => acroskey — DGN FILE => 0400000735if010.dgn — RELATIVE BORDER SCALE IS IN INCHES 0 1 2 3 — UNIT 0716 — PROJECT NUMBER & PHASE 04000007351

Dist	COUNTY	ROUTE	POST MILES TOTAL PROJECT	SHEET No.	TOTAL SHEETS
04	Mrn, Son	101	26.8/27.6, 0.0/2.0	269	710

REGISTERED CIVIL ENGINEER — 06/30/14 DATE

8-18-14
PLANS APPROVAL DATE

REGISTERED PROFESSIONAL ENGINEER — S. D. DANSKY No. 60220 Exp. 6/30/16 CIVIL — STATE OF CALIFORNIA

THE STATE OF CALIFORNIA OR ITS OFFICERS OR AGENTS SHALL NOT BE RESPONSIBLE FOR THE ACCURACY OR COMPLETENESS OF SCANNED COPIES OF THIS PLAN SHEET.

MARK THOMAS & CO., INC.
3000 OAK RD, SUITE 650
WALNUT CREEK, CA 94597

TRANSPORTATION AUTHORITY OF MARIN
750 LINDARO ST, SUITE 200
SAN RAFAEL, CA 94901

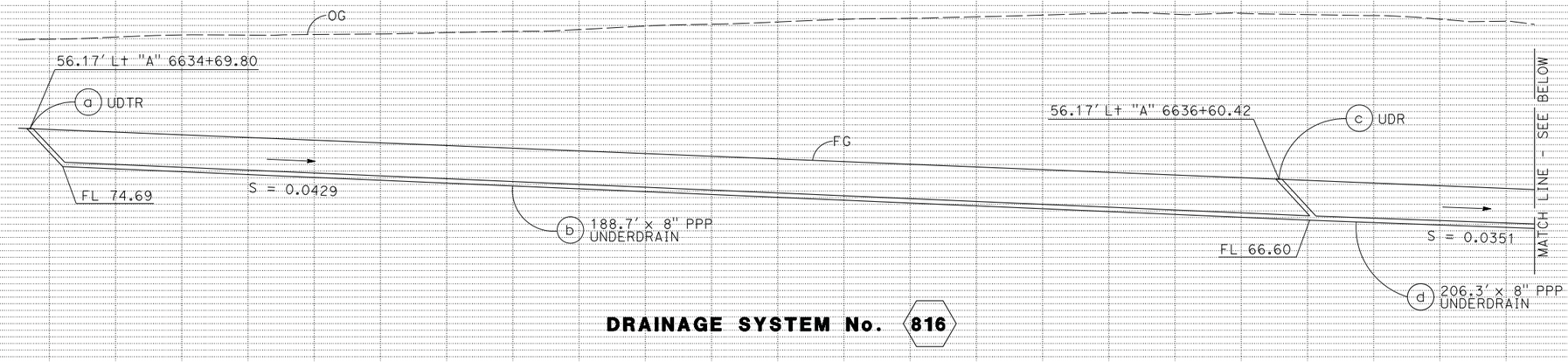

DRAINAGE SYSTEM No. 816

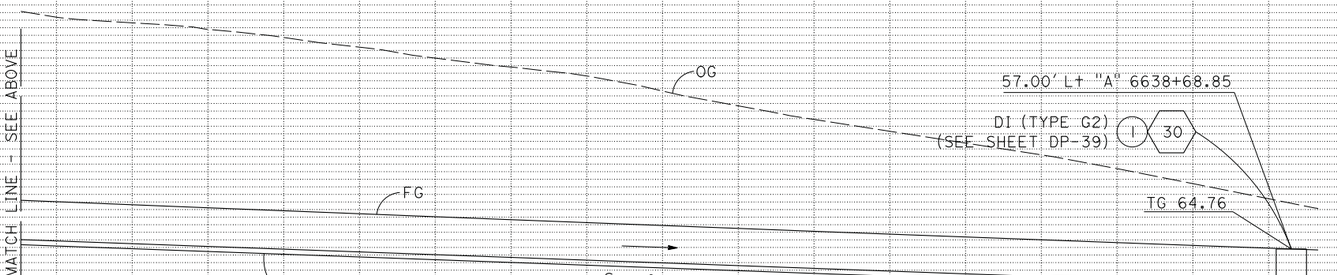

DRAINAGE SYSTEM No. 816

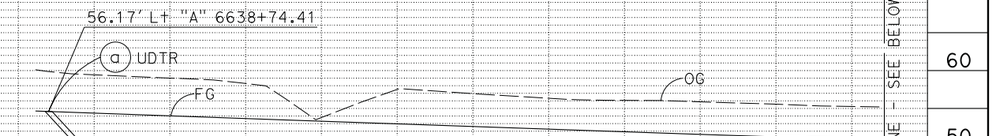

DRAINAGE SYSTEM No. 817

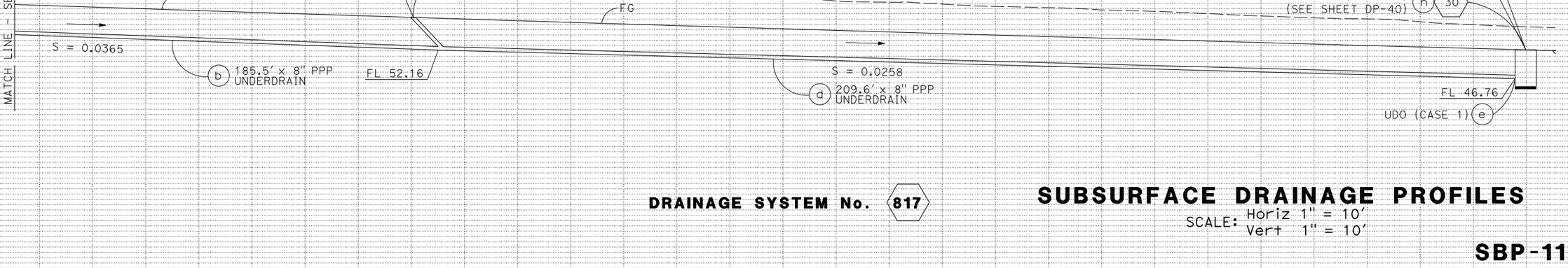

DRAINAGE SYSTEM No. 817

SUBSURFACE DRAINAGE PROFILES

SCALE: Horiz 1" = 10'
Vert 1" = 10'

SBP-11

REVISED BY	DATE REVISED
CB	5/13/14
CB	2/7/14
CB	4/30/12

CALCULATED-DESIGNED BY: CHRIS BRIANA
CHECKED BY: TOM CONNELL
CONSULTANT FUNCTIONAL SUPERVISOR: MICHAEL LOHMAN
STATE OF CALIFORNIA - DEPARTMENT OF TRANSPORTATION

LAST REVISION 00-00-00 | DATE PLOTTED => 30-SEP-2014 | TIME PLOTTED => 14:17

BORDER LAST REVISED 7/2/2010 | USERNAME => acroskey | DGN FILE => 0400000735if011.dgn | RELATIVE BORDER SCALE IS IN INCHES 0 1 2 3 | UNIT 0716 | PROJECT NUMBER & PHASE 04000007351

Dist	COUNTY	ROUTE	POST MILES TOTAL PROJECT	SHEET No.	TOTAL SHEETS
04	Mrn, Son	101	26.8/27.6, 0.0/2.0	270	710

REGISTERED CIVIL ENGINEER — 06/30/14 DATE

8-18-14
PLANS APPROVAL DATE

REGISTERED PROFESSIONAL ENGINEER — S. D. DANSKY — No. 60220 — Exp. 6/30/16 — CIVIL — STATE OF CALIFORNIA

THE STATE OF CALIFORNIA OR ITS OFFICERS OR AGENTS SHALL NOT BE RESPONSIBLE FOR THE ACCURACY OR COMPLETENESS OF SCANNED COPIES OF THIS PLAN SHEET.

MARK THOMAS & CO., INC.
3000 OAK RD, SUITE 650
WALNUT CREEK, CA 94597

TRANSPORTATION AUTHORITY OF MARIN
750 LINDARO ST, SUITE 200
SAN RAFAEL, CA 94901

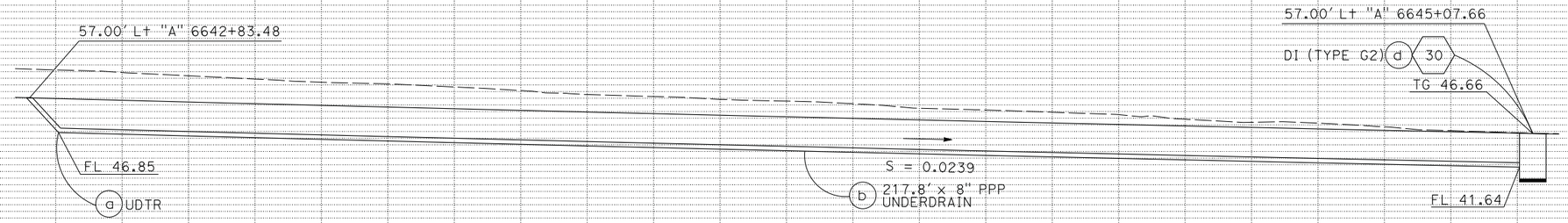

DRAINAGE SYSTEM No. 820

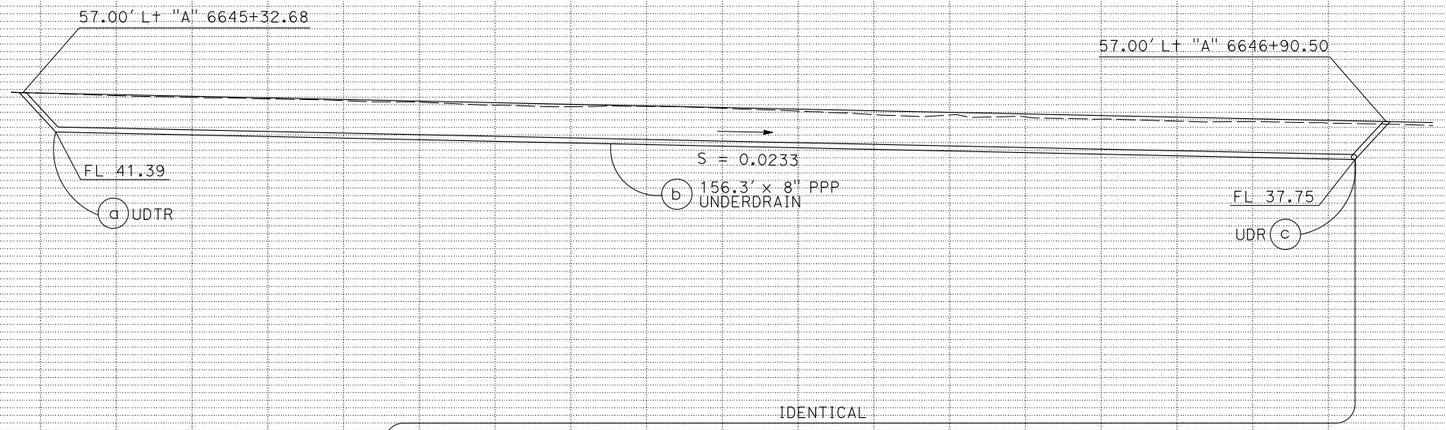

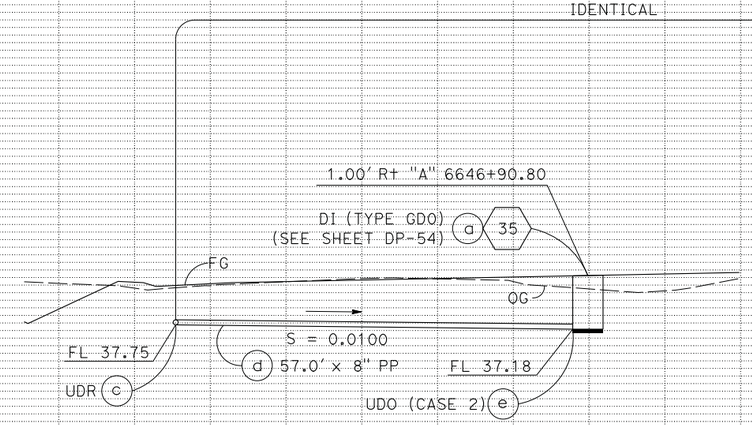

DRAINAGE SYSTEM No. 821

SUBSURFACE DRAINAGE PROFILES

SCALE: Horiz 1" = 10'
Vert 1" = 10'

SBP-12

CB 5/13/14
CB 2/7/14
CB 4/30/12
REVISED BY / DATE REVISED

CHRIS BRIANA — TOM CONNELL
CALCULATED-DESIGNED BY / CHECKED BY

CONSULTANT FUNCTIONAL SUPERVISOR — MICHAEL LOHMAN

STATE OF CALIFORNIA - DEPARTMENT OF TRANSPORTATION — Caltrans

LAST REVISION 00-00-00 | DATE PLOTTED => 30-SEP-2014 | TIME PLOTTED => 14:17

BORDER LAST REVISED 7/2/2010 | USERNAME => acroskey | DGN FILE => 04000007351sf012.dgn | RELATIVE BORDER SCALE IS IN INCHES 0 1 2 3 | UNIT 0716 | PROJECT NUMBER & PHASE 04000007351

Dist	COUNTY	ROUTE	POST MILES TOTAL PROJECT	SHEET No.	TOTAL SHEETS
04	Mrn, Son	101	26.8/27.6, 0.0/2.0	271	710

REGISTERED CIVIL ENGINEER — DATE 06/30/14

8-18-14
PLANS APPROVAL DATE

REGISTERED PROFESSIONAL ENGINEER
S. D. DANSKY
No. 60220
Exp. 6/30/16
CIVIL
STATE OF CALIFORNIA

THE STATE OF CALIFORNIA OR ITS OFFICERS OR AGENTS SHALL NOT BE RESPONSIBLE FOR THE ACCURACY OR COMPLETENESS OF SCANNED COPIES OF THIS PLAN SHEET.

MARK THOMAS & CO., INC.
3000 OAK RD, SUITE 650
WALNUT CREEK, CA 94597

TRANSPORTATION AUTHORITY OF MARIN
750 LINDARO ST, SUITE 200
SAN RAFAEL, CA 94901

REVISED BY	DATE REVISED
CB	5/13/14
CB	2/7/14
CB	4/30/12

CALCULATED-DESIGNED BY: CHRIS BRIANA
CHECKED BY: TOM CONNELL

CONSULTANT FUNCTIONAL SUPERVISOR: MICHAEL LOHMAN

STATE OF CALIFORNIA - DEPARTMENT OF TRANSPORTATION
Caltrans

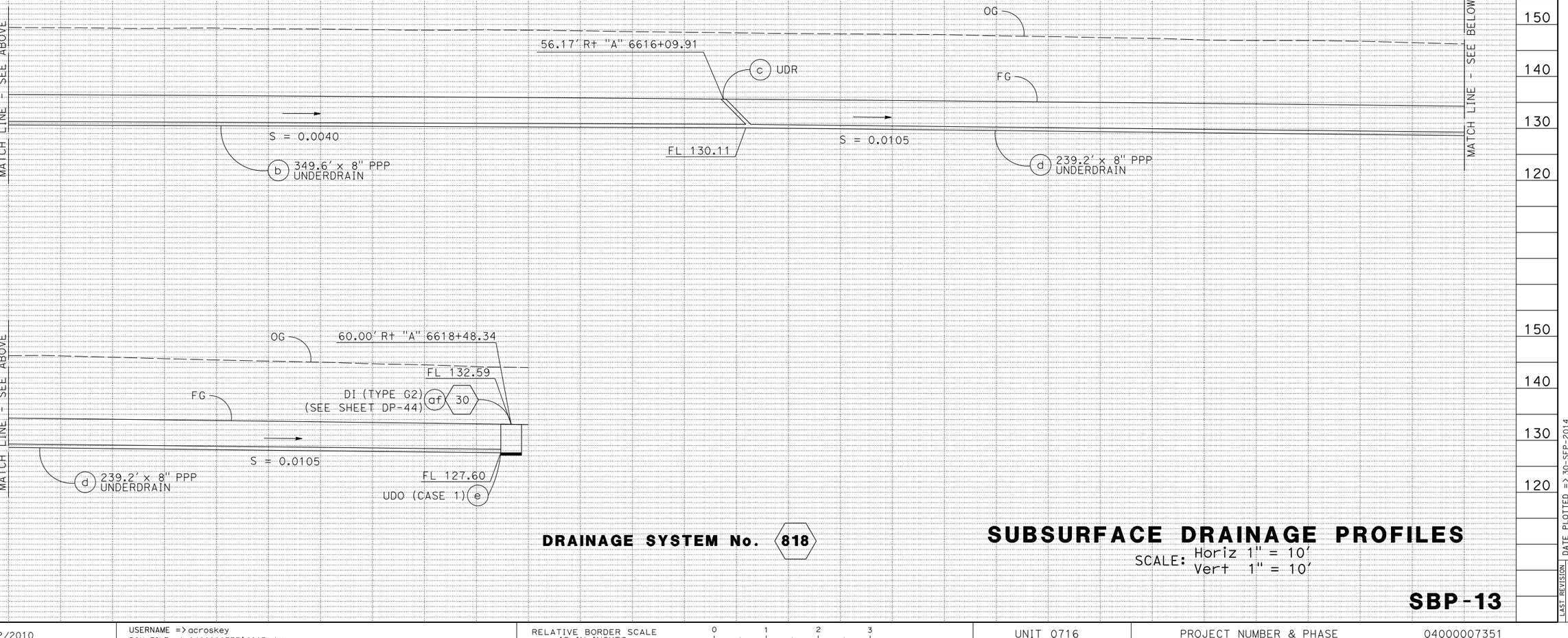

DRAINAGE SYSTEM No. 818

SUBSURFACE DRAINAGE PROFILES

SCALE: Horiz 1" = 10'
Vert 1" = 10'

SBP-13

LAST REVISION 00-00-00
DATE PLOTTED => 30-SEP-2014
TIME PLOTTED => 14:17

BORDER LAST REVISED 7/2/2010
USERNAME => acroskey
DGN FILE => 0400000735if013.dgn
RELATIVE BORDER SCALE IS IN INCHES 0 1 2 3
UNIT 0716
PROJECT NUMBER & PHASE 04000007351

Dist	COUNTY	ROUTE	POST MILES TOTAL PROJECT	SHEET No.	TOTAL SHEETS
04	Mrn, Son	101	26.8/27.6, 0.0/2.0	272	710

REGISTERED CIVIL ENGINEER — DATE 06/30/14

8-18-14
PLANS APPROVAL DATE

REGISTERED PROFESSIONAL ENGINEER
S. D. DANSKY
No. 60220
Exp. 6/30/16
CIVIL
STATE OF CALIFORNIA

THE STATE OF CALIFORNIA OR ITS OFFICERS OR AGENTS SHALL NOT BE RESPONSIBLE FOR THE ACCURACY OR COMPLETENESS OF SCANNED COPIES OF THIS PLAN SHEET.

MARK THOMAS & CO., INC.
3000 OAK RD, SUITE 650
WALNUT CREEK, CA 94597

TRANSPORTATION AUTHORITY OF MARIN
750 LINDARO ST, SUITE 200
SAN RAFAEL, CA 94901

REVISED BY	DATE REVISED
CB	5/13/14
CB	2/7/14
CB	4/30/12

CALCULATED-DESIGNED BY: CHRIS BRIANA
CHECKED BY: TOM CONNELL

CONSULTANT FUNCTIONAL SUPERVISOR: MICHAEL LOHMAN

STATE OF CALIFORNIA - DEPARTMENT OF TRANSPORTATION
Caltrans

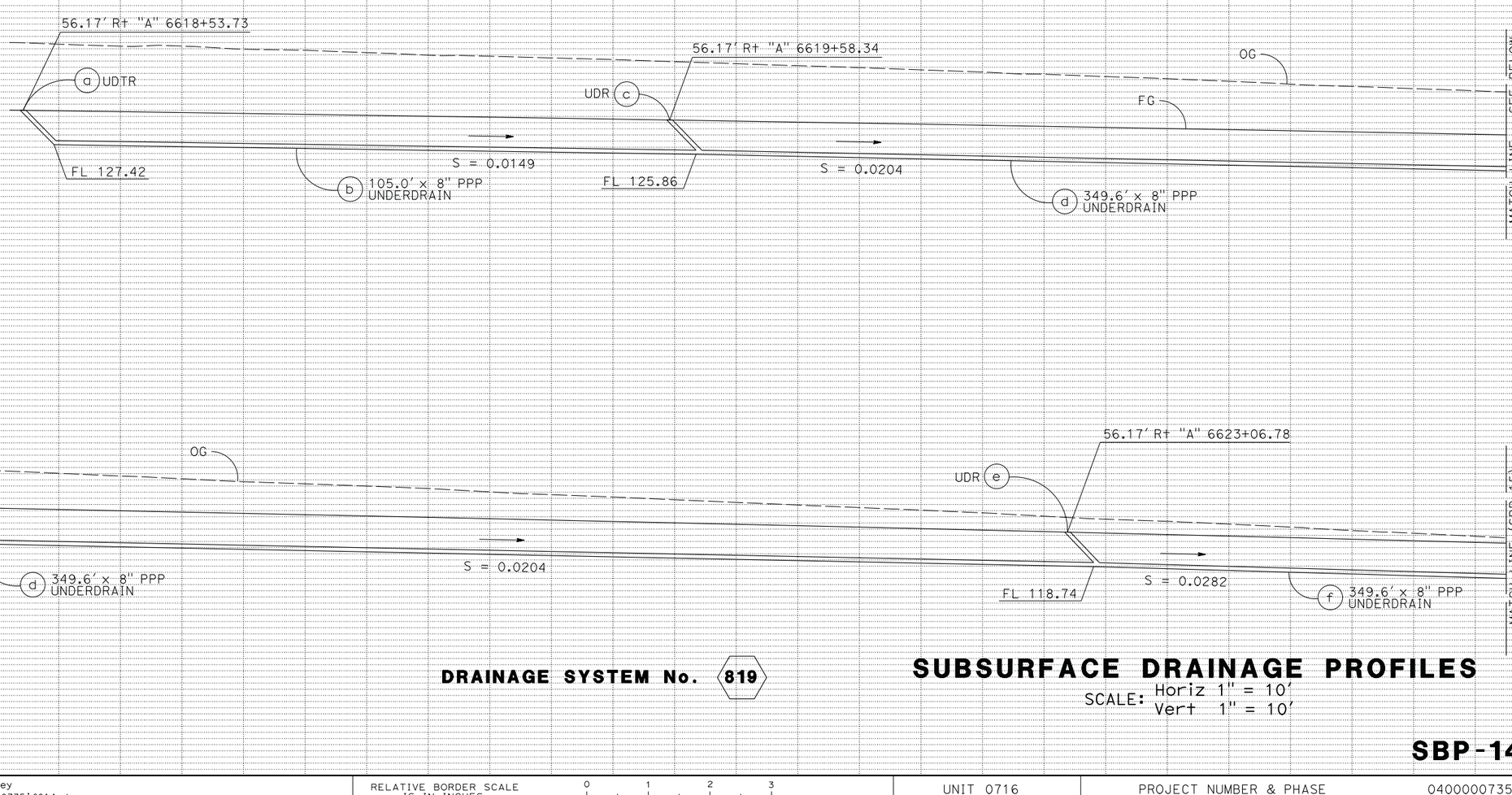

DRAINAGE SYSTEM No. 819

SUBSURFACE DRAINAGE PROFILES

SCALE: Horiz 1" = 10'
Vert 1" = 10'

SBP-14

LAST REVISION 00-00-00
DATE PLOTTED => 30-SEP-2014
TIME PLOTTED => 14:17

BORDER LAST REVISED 7/2/2010
USERNAME => acroskey
DGN FILE => 0400000735if014.dgn
RELATIVE BORDER SCALE IS IN INCHES 0 1 2 3
UNIT 0716
PROJECT NUMBER & PHASE 04000007351

Dist	COUNTY	ROUTE	POST MILES TOTAL PROJECT	SHEET No.	TOTAL SHEETS
04	Mrn, Son	101	26.8/27.6, 0.0/2.0	273	710

REGISTERED CIVIL ENGINEER — DATE 06/30/14

S. D. DANSKY No. 60220 Exp. 6/30/16 CIVIL — REGISTERED PROFESSIONAL ENGINEER — STATE OF CALIFORNIA

8-18-14
PLANS APPROVAL DATE

THE STATE OF CALIFORNIA OR ITS OFFICERS OR AGENTS SHALL NOT BE RESPONSIBLE FOR THE ACCURACY OR COMPLETENESS OF SCANNED COPIES OF THIS PLAN SHEET.

MARK THOMAS & CO., INC.
3000 OAK RD, SUITE 650
WALNUT CREEK, CA 94597

TRANSPORTATION AUTHORITY OF MARIN
750 LINDARO ST, SUITE 200
SAN RAFAEL, CA 94901

REVISED BY	DATE REVISED
CB	5/13/14
CB	2/7/14
CB	4/30/12

CALCULATED-DESIGNED BY: CHRIS BRIANA
CHECKED BY: TOM CONNELL

CONSULTANT FUNCTIONAL SUPERVISOR: MICHAEL LOHMAN

STATE OF CALIFORNIA - DEPARTMENT OF TRANSPORTATION

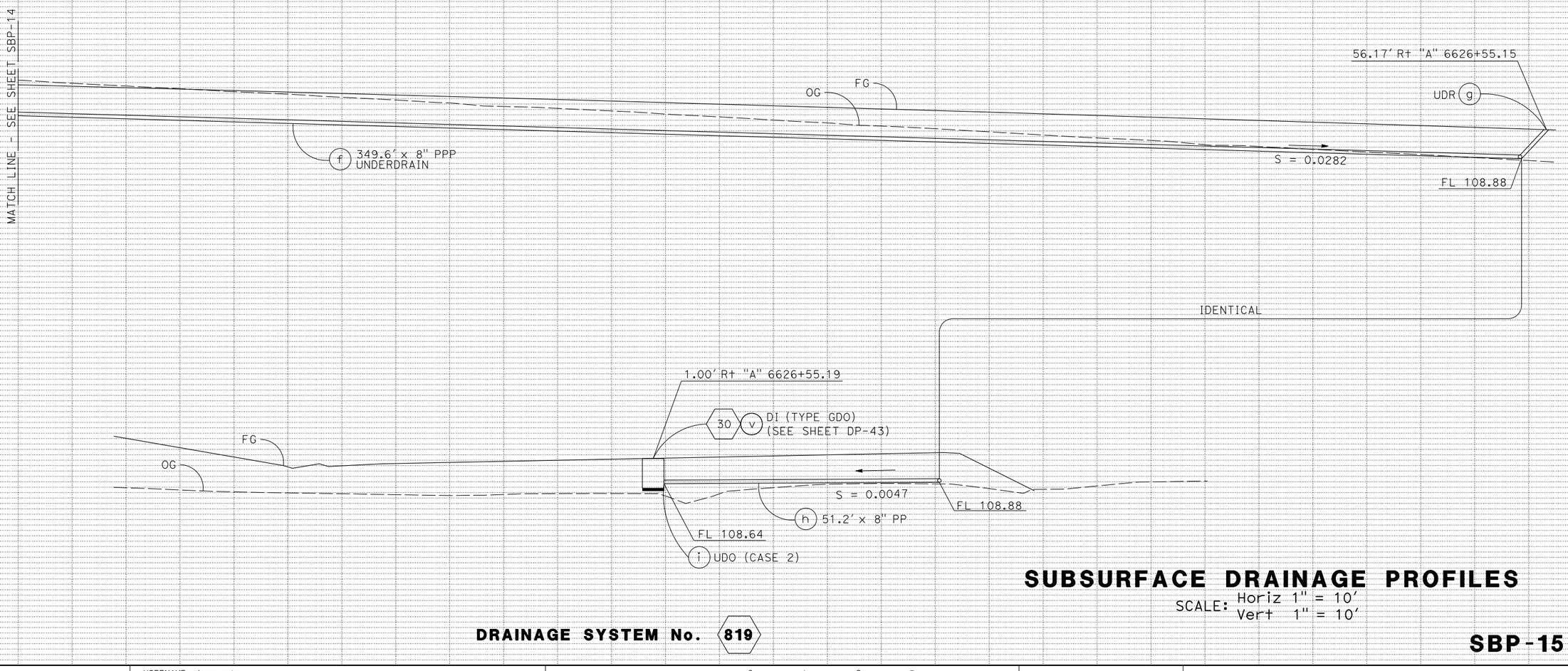

SUBSURFACE DRAINAGE PROFILES

SCALE: Horiz 1" = 10′
Vert 1" = 10′

DRAINAGE SYSTEM No. 819

SBP-15

LAST REVISION 00-00-00 | DATE PLOTTED => 30-SEP-2014 | TIME PLOTTED => 14:17

BORDER LAST REVISED 7/2/2010 | USERNAME => acroskey | DGN FILE => 04000007351if015.dgn | RELATIVE BORDER SCALE IS IN INCHES 0 1 2 3 | UNIT 0716 | PROJECT NUMBER & PHASE 04000007351

Dist	COUNTY	ROUTE	POST MILES TOTAL PROJECT	SHEET No.	TOTAL SHEETS
04	Mrn, Son	101	26.8/27.6, 0.0/2.0	274	710

REGISTERED CIVIL ENGINEER — 06/30/14 DATE

8-18-14
PLANS APPROVAL DATE

REGISTERED PROFESSIONAL ENGINEER
S. D. DANSKY
No. 60220
Exp. 6/30/16
CIVIL
STATE OF CALIFORNIA

THE STATE OF CALIFORNIA OR ITS OFFICERS OR AGENTS SHALL NOT BE RESPONSIBLE FOR THE ACCURACY OR COMPLETENESS OF SCANNED COPIES OF THIS PLAN SHEET.

MARK THOMAS & CO., INC.
3000 OAK RD, SUITE 650
WALNUT CREEK, CA 94597

TRANSPORTATION AUTHORITY OF MARIN
750 LINDARO ST, SUITE 200
SAN RAFAEL, CA 94901

REVISED BY	DATE REVISED
CB	4/30/12
CB	2/7/14
CB	5/13/14

CHRIS BRIANA
TOM CONNELL

CALCULATED-DESIGNED BY
CHECKED BY

CONSULTANT FUNCTIONAL SUPERVISOR
MICHAEL LOHMAN

STATE OF CALIFORNIA - DEPARTMENT OF TRANSPORTATION
Caltrans

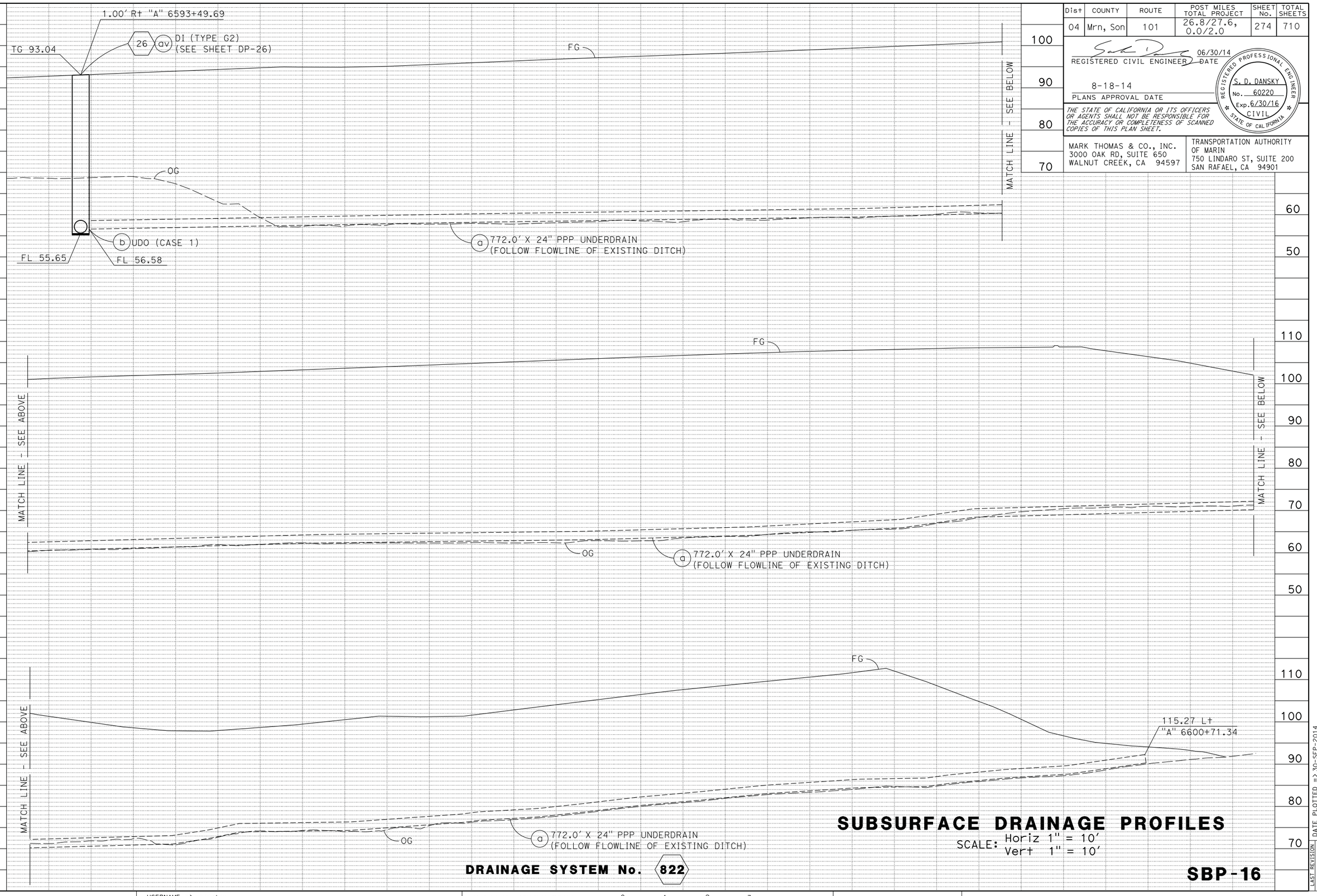

DRAINAGE SYSTEM No. 822

SUBSURFACE DRAINAGE PROFILES

SCALE: Horiz 1" = 10'
Vert 1" = 10'

SBP-16

LAST REVISION 00-00-00
DATE PLOTTED => 30-SEP-2014
TIME PLOTTED => 14:17

BORDER LAST REVISED 7/2/2010
USERNAME => acroskey
DGN FILE => 0400000735if016.dgn
RELATIVE BORDER SCALE IS IN INCHES 0 1 2 3
UNIT 0716
PROJECT NUMBER & PHASE 04000007351

FOR GENERAL NOTES, LEGEND, AND ABBREVIATIONS, SEE SHEET D-1.

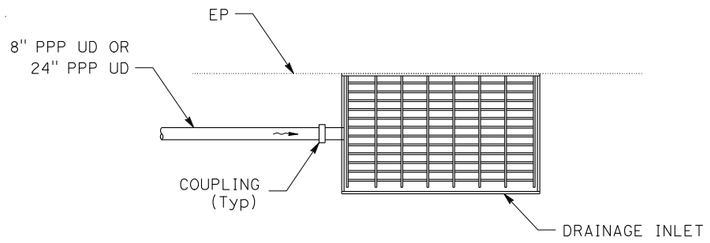

PLAN
UNDERDRAIN OUTLET (CASE 1)

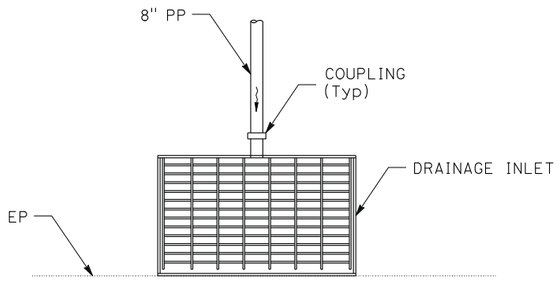

PLAN
UNDERDRAIN OUTLET (CASE 2)

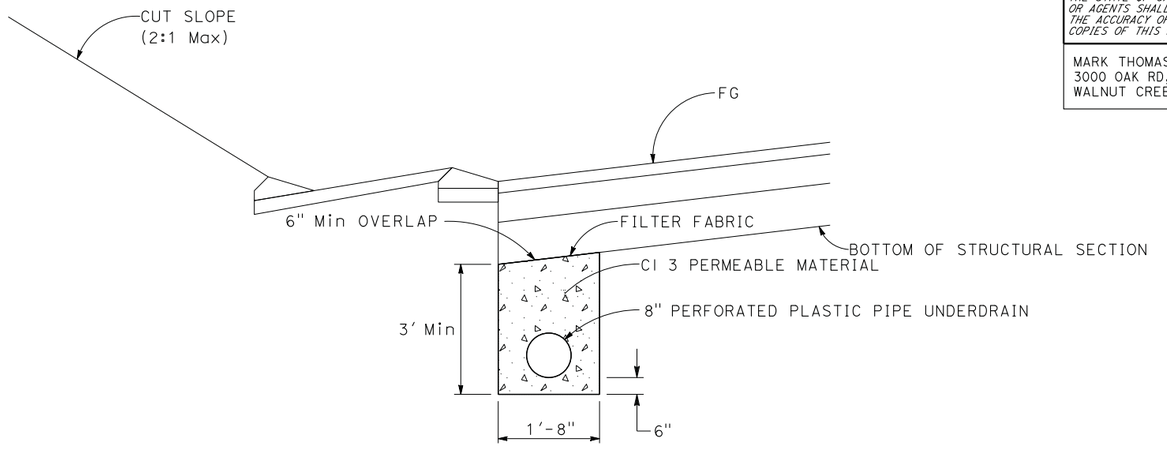

UNDERDRAIN TRENCH DETAIL
FOR DETAILS NOT SHOWN, SEE STD PLAN D102

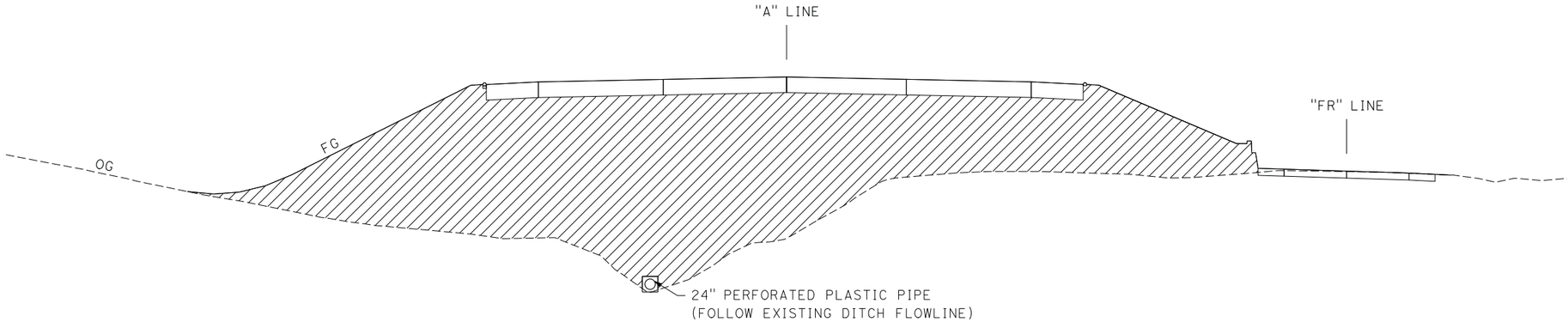

SYSTEM 822

EXISTING DITCH UNDERDRAIN DETAIL
"A" 6593+49.69 - 6600+71.34

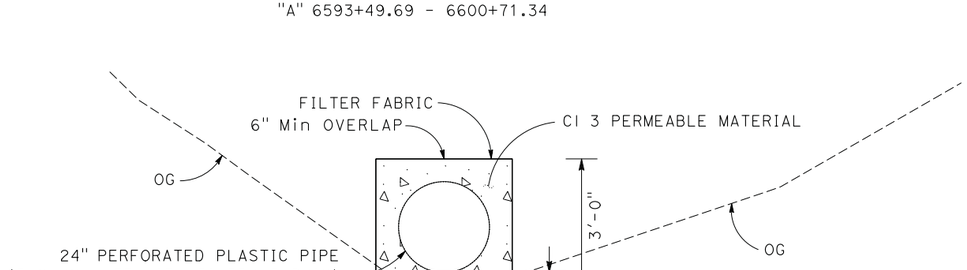

SUBSURFACE DRAINAGE DETAILS

NO SCALE

SBD-1

Dist	COUNTY	ROUTE	POST MILES TOTAL PROJECT	SHEET No.	TOTAL SHEETS
04	Mrn, Son	101	26.8/27.6, 0.0/2.0	275	710

REGISTERED CIVIL ENGINEER — 06/30/14 DATE

8-18-14
PLANS APPROVAL DATE

REGISTERED PROFESSIONAL ENGINEER — S. D. DANSKY No. 60220 Exp. 6/30/16 CIVIL — STATE OF CALIFORNIA

THE STATE OF CALIFORNIA OR ITS OFFICERS OR AGENTS SHALL NOT BE RESPONSIBLE FOR THE ACCURACY OR COMPLETENESS OF SCANNED COPIES OF THIS PLAN SHEET.

MARK THOMAS & CO., INC.
3000 OAK RD, SUITE 650
WALNUT CREEK, CA 94597

TRANSPORTATION AUTHORITY OF MARIN
750 LINDARO ST, SUITE 200
SAN RAFAEL, CA 94901

REVISED BY	DATE REVISED
CB	4/30/12
CB	2/7/14
CB	5/13/14

CHRIS BRIANA
TOM CONNELL

CALCULATED-DESIGNED BY
CHECKED BY

CONSULTANT FUNCTIONAL SUPERVISOR
MICHAEL LOHMAN

STATE OF CALIFORNIA - DEPARTMENT OF TRANSPORTATION
Caltrans

LAST REVISION 00-00-00
DATE PLOTTED => 30-SEP-2014
TIME PLOTTED => 14:17

Dist	COUNTY	ROUTE	POST MILES TOTAL PROJECT	SHEET No.	TOTAL SHEETS
04	Mrn, Son	101	26.8/27.6, 0.0/2.0	276	710

REGISTERED CIVIL ENGINEER — 06/30/14 DATE

8-18-14
PLANS APPROVAL DATE

REGISTERED PROFESSIONAL ENGINEER — S. D. DANSKY No. 60220 Exp. 6/30/16 CIVIL — STATE OF CALIFORNIA

THE STATE OF CALIFORNIA OR ITS OFFICERS OR AGENTS SHALL NOT BE RESPONSIBLE FOR THE ACCURACY OR COMPLETENESS OF SCANNED COPIES OF THIS PLAN SHEET.

MARK THOMAS & CO., INC.
3000 OAK RD, SUITE 650
WALNUT CREEK, CA 94597

TRANSPORTATION AUTHORITY OF MARIN
750 LINDARO ST, SUITE 200
SAN RAFAEL, CA 94901

UNDERDRAIN QUANTITIES

UNDERDRAIN SHEET No.	UNDERDRAIN SYSTEM No. ⬡	UNDERDRAIN UNIT ◯	CLASS 3 PERMEABLE (N) MATERIAL	FILTER FABRIC (N)	8" PERFORATED PLASTIC PIPE UNDERDRAIN	8" NON-PERFORATED PLASTIC PIPE UNDERDRAIN	24" PERFORATED PLASTIC PIPE UNDERDRAIN	8" PLASTIC PIPE TERMINAL UNDERDRAIN RISER (N)	8" PLASTIC PIPE RISER UNDERDRAIN	UNDERDRAIN OUTLET (CASE 1) (N)	UNDERDRAIN OUTLET (CASE 2) (N)	DESCRIPTION	STATION	UNDERDRAIN SHEET No.	UNDERDRAIN SYSTEM No. ⬡	UNDERDRAIN UNIT ◯
			CY	SQYD	LF			EA		EA						
SB-1	801	a						1				UDTR	42.30' R+ "A" 6524+86.15	SB-1	801	a
SB-1	801	b	71.6	451.7	409.8							8" PPP		SB-1	801	b
SB-1	801	c							1			UDR	45.95' R+ "A" 6528+95.97	SB-1	801	c
SB-1	801	d	65.8	415.1	376.6							8" PPP		SB-1	801	d
SB-1	801	e							1			UDR	49.28' R+ "A" 6532+72.55	SB-1	801	e
SB-1,2	801	f	31.9	201.4	182.7							8" PPP		SB-1,2	801	f
SB-2	801	g							1			UDR	51.36' R+ "A" 6534+50.74	SB-2	801	g
SB-2	801	h	35.8	225.7	204.8							8" PPP		SB-2	801	h
SB-2	801	i								1		UDO (Case 1)	55.59' R+ "A" 6536+63.98	SB-2	801	i
SB-2	803	a						1				UDTR	54.81' R+ "A" 6536+69.48	SB-2	803	a
SB-2	803	b	54.6	344.1	312.2							8" PPP		SB-2	803	b
SB-2	803	c								1		UDO (Case 1)	57.00' R+ "A" 6539+83.99	SB-2	803	c
SB-2	804	a						1				UDTR	56.17' R+ "A" 6539+89.56	SB-2	804	a
SB-2	804	b	36.3	229.0	207.8							8" PPP		SB-2	804	b
SB-2	804	c							1			UDR	56.17' R+ "A" 6542+00.00	SB-2	804	c
SB-2	804	d	35.6	224.4	203.6							8" PPP		SB-2	804	d
SB-2	804	e								1		UDO (Case 1)	57.00' R+ "A" 6544+28.43	SB-2	804	e
SB-7	805	a								1		UDO (Case 1)	57.00' R+ "A" 6598+90.44	SB-7	805	a
SB-7	805	b	79.4	500.5	454.1							8" PPP		SB-7	805	b
SB-7	805	c							1			UDR	56.17' R+ "A" 6603+48.35	SB-7	805	c
SB-7	805	d	78.3	493.9	448.1							8" PPP		SB-7	805	d
SB-7	805	e							1			UDR	56.17' R+ "A" 6607+94.88	SB-7	805	e
SB-7,8	805	f	78.3	493.9	448.1							8" PPP		SB-7,8	805	f
SB-8	805	g						1				UDTR	56.17' R+ "A" 6612+41.53	SB-8	805	g
SB-7	806	a								1		UDO (Case 1)	57.09' L+ "A" 6602+17.19	SB-7	806	a
SB-7	806	b	25.2	158.9	144.2							8" PPP		SB-7	806	b
SB-7	806	c						1				UDTR	56.17' L+ "A" 6603+61.55	SB-7	806	c
SHEET TOTAL			592.8	3738.6	3392.0			5	6	5						

(N) - NOT A SEPARATE PAY ITEM, FOR INFORMATION ONLY

SUBSURFACE DRAINAGE QUANTITIES

SBQ-1

CB	5/13/14	CHRIS BRIANA	CALCULATED-DESIGNED BY
CB	2/7/14	TOM CONNELL	CHECKED BY
CB	4/30/12	MICHAEL LOHMAN	CONSULTANT FUNCTIONAL SUPERVISOR
REVISED BY	DATE REVISED		

STATE OF CALIFORNIA - DEPARTMENT OF TRANSPORTATION

LAST REVISION 00-00-00
DATE PLOTTED => 30-SEP-2014
TIME PLOTTED => 14:17

Dist	COUNTY	ROUTE	POST MILES TOTAL PROJECT	SHEET No.	TOTAL SHEETS
04	Mrn, Son	101	26.8/27.6, 0.0/2.0	277	710

REGISTERED CIVIL ENGINEER — 06/30/14 DATE

S. D. DANSKY No. 60220 Exp. 6/30/16 CIVIL — REGISTERED PROFESSIONAL ENGINEER — STATE OF CALIFORNIA

8-18-14
PLANS APPROVAL DATE

THE STATE OF CALIFORNIA OR ITS OFFICERS OR AGENTS SHALL NOT BE RESPONSIBLE FOR THE ACCURACY OR COMPLETENESS OF SCANNED COPIES OF THIS PLAN SHEET.

MARK THOMAS & CO., INC.
3000 OAK RD, SUITE 650
WALNUT CREEK, CA 94597

TRANSPORTATION AUTHORITY OF MARIN
750 LINDARO ST, SUITE 200
SAN RAFAEL, CA 94901

UNDERDRAIN QUANTITIES

UNDERDRAIN SHEET No.	UNDERDRAIN SYSTEM No. ⬡	UNDERDRAIN UNIT ◯	CLASS 3 PERMEABLE (N) MATERIAL	FILTER FABRIC (N)	8" PERFORATED PLASTIC PIPE UNDERDRAIN	8" NON-PERFORATED PLASTIC PIPE UNDERDRAIN	24" PERFORATED PLASTIC PIPE UNDERDRAIN	8" PLASTIC PIPE TERMINAL RISER UNDERDRAIN (N)	8" PLASTIC PIPE UNDERDRAIN RISER	UNDERDRAIN OUTLET (CASE 1) (N)	UNDERDRAIN OUTLET (CASE 2) (N)	DESCRIPTION	STATION	UNDERDRAIN SHEET No.	UNDERDRAIN SYSTEM No. ⬡	UNDERDRAIN UNIT ◯
			CY	SQYD	LF			EA		EA						
SB-7	807	a								1		UDO (Case 1)	57.00′ L+ "A" 6603+67.07	SB-7	807	a
SB-7	807	b	33.7	212.5	192.8							8" PPP		SB-7	807	b
SB-7	807	c							1			UDR	56.17′ L+ "A" 6605+60.58	SB-7	807	c
SB-7	807	d	21.7	136.6	123.9							8" PPP		SB-7	807	d
SB-7	807	e						1				UDTR	56.17′ L+ "A" 6606+84.93	SB-7	807	e
SB-7	808	a								1		UDO (Case 1)	57.00′ L+ "A" 6606+90.45	SB-7	808	a
SB-7	808	b	35.5	224.1	203.3							8" PPP		SB-7	808	b
SB-7	808	c							1			UDR	56.17′ L+ "A" 6608+94.45	SB-7	808	c
SB-7	808	d	33.3	210.2	190.7							8" PPP		SB-7	808	d
SB-7	808	e						1				UDTR	56.17′ L+ "A" 6610+85.77	SB-7	808	e
SB-7	809	a								1		UDO (Case 1)	57.00′ L+ "A" 6610+91.29	SB-7	809	a
SB-7,8	809	b	23.9	150.6	136.6							8" PPP		SB-7,8	809	b
SB-8	809	c						1				UDTR	56.17′ L+ "A" 6612+28.33	SB-8	809	c
SB-8	810	a						1				UDTR	56.17′ L+ "A" 6612+61.53	SB-8	810	a
SB-8	810	b	32.7	206.0	186.9							8" PPP		SB-8	810	b
SB-8	810	c								1		UDO (Case 1)	57.00′ L+ "A" 6614+49.03	SB-8	810	c
SB-8	811	a						1				UDTR	56.17′ L+ "A" 6614+54.55	SB-8	811	a
SB-8	811	b	35.8	226.0	205.0							8" PPP		SB-8	811	b
SB-8	811	c							1			UDR	56.17′ L+ "A" 6616+60.29	SB-8	811	c
SB-8	811	d	33.2	209.5	190.1							8" PPP		SB-8	811	d
SB-8	811	e								1		UDO (Case 1)	57.00′ L+ "A" 6618+51.04	SB-8	811	e
SB-8	812	a						1				UDTR	56.17′ L+ "A" 6618+56.56	SB-8	812	a
SB-8	812	b	35.6	224.4	203.6							8" PPP		SB-8	812	b
SB-8	812	c							1			UDR	56.17′ L+ "A" 6620+59.05	SB-8	812	c
SB-8	812	d	33.8	212.8	193.1							8" PPP		SB-8	812	d
SB-8	812	e								1		UDO (Case 1)	57.00′ L+ "A" 6622+52.81	SB-8	812	e
SHEET TOTAL			319.2	2012.7	1826.0			6	4	6						

(N) - NOT A SEPARATE PAY ITEM, FOR INFORMATION ONLY

CB	CB	CB
5/13/14	2/7/14	4/30/12
DATE REVISED		
CHRIS BRIANA		
TOM CONNELL		
CALCULATED-DESIGNED BY		
CHECKED BY		
CONSULTANT FUNCTIONAL SUPERVISOR		
MICHAEL LOHMAN		

STATE OF CALIFORNIA - DEPARTMENT OF TRANSPORTATION

Caltrans

SUBSURFACE DRAINAGE QUANTITIES

SBQ-2

LAST REVISION 00-00-00 DATE PLOTTED => 30-SEP-2014 TIME PLOTTED => 14:17

BORDER LAST REVISED 7/2/2010 | USERNAME => acroskey | DGN FILE => 0400000735ih002.dgn | RELATIVE BORDER SCALE IS IN INCHES 0 1 2 3 | UNIT 0716 | PROJECT NUMBER & PHASE 04000007351

Dist	COUNTY	ROUTE	POST MILES TOTAL PROJECT	SHEET No.	TOTAL SHEETS
04	Mrn, Son	101	26.8/27.6, 0.0/2.0	278	710

REGISTERED CIVIL ENGINEER — 06/30/14 DATE

8-18-14
PLANS APPROVAL DATE

REGISTERED PROFESSIONAL ENGINEER — S. D. DANSKY — No. 60220 — Exp. 6/30/16 — CIVIL — STATE OF CALIFORNIA

THE STATE OF CALIFORNIA OR ITS OFFICERS OR AGENTS SHALL NOT BE RESPONSIBLE FOR THE ACCURACY OR COMPLETENESS OF SCANNED COPIES OF THIS PLAN SHEET.

MARK THOMAS & CO., INC.
3000 OAK RD, SUITE 650
WALNUT CREEK, CA 94597

TRANSPORTATION AUTHORITY OF MARIN
750 LINDARO ST, SUITE 200
SAN RAFAEL, CA 94901

UNDERDRAIN QUANTITIES

UNDERDRAIN SHEET No.	UNDERDRAIN SYSTEM No. ⬡	UNDERDRAIN UNIT ◯	CLASS 3 PERMEABLE (N) MATERIAL	FILTER FABRIC (N)	8" PERFORATED PLASTIC PIPE UNDERDRAIN	8" NON-PERFORATED PLASTIC PIPE UNDERDRAIN	24" PERFORATED PLASTIC PIPE UNDERDRAIN	8" PLASTIC PIPE TERMINAL RISER UNDERDRAIN (N)	8" PLASTIC PIPE UNDERDRAIN RISER	UNDERDRAIN OUTLET (CASE 1) (N)	UNDERDRAIN OUTLET (CASE 2) (N)	DESCRIPTION	STATION	UNDERDRAIN SHEET No.	UNDERDRAIN SYSTEM No. ⬡	UNDERDRAIN UNIT ◯
			CY	SQYD	LF			EA		EA						
SB-8	813	a						1				UDTR	56.17′ Lt "A" 6629+58.33	SB-8	813	a
SB-8	813	b	34.7	219.0	198.7							8" PPP		SB-8	813	b
SB-9	813	c							1			UDR	56.17′ Lt "A" 6624+57.73	SB-9	813	c
SB-9	813	d	34.4	216.9	196.8							8" PPP		SB-9	813	d
SB-9	813	e								1		UDO (Case 1)	57.00′ Lt "A" 6626+55.22	SB-9	813	e
SB-9	814	a						1				UDTR	56.17′ Lt "A" 6626+60.78	SB-9	814	a
SB-9	814	b	34.1	214.9	195.0							8" PPP		SB-9	814	b
SB-9	814	c							1			UDR	56.17′ Lt "A" 6628+57.68	SB-9	814	c
SB-9	814	d	21.9	137.8	125.0							8" PPP		SB-9	814	d
SB-9	814	e								1		UDO (Case 1)	57.00′ Lt "A" 6629+83.98	SB-9	814	e
SB-9	815	a						1				UDTR	56.17′ Lt "A" 6629+89.53	SB-9	815	a
SB-9	815	b	46.7	294.2	266.9							8" PPP		SB-9	815	b
SB-9	815	c							1			UDR	56.17′ Lt "A" 6632+59.06	SB-9	815	c
SB-9	815	d	35.5	223.9	203.1							8" PPP		SB-9	815	d
SB-9	815	e								1		UDO (Case 1)	57.00′ Lt "A" 6634+64.25	SB-9	815	e
SB-9	816	a						1				UDTR	56.17′ Lt "A" 6634+69.80	SB-9	816	a
SB-9	816	b	33.0	208.0	188.7							8" PPP		SB-9	816	b
SB-9	816	c							1			UDR	56.17′ Lt "A" 6636+60.42	SB-9	816	c
SB-9,10	816	d	36.1	227.4	206.3							8" PPP		SB-9,10	816	d
SB-10	816	e								1		UDO (Case 1)	57.00′ Lt "A" 6638+68.85	SB-10	816	e
SB-10	817	a						1				UDTR	56.17′ Lt "A" 6638+74.41	SB-10	817	a
SB-10	817	b	32.4	204.5	185.5							8" PPP		SB-10	817	b
SB-10	817	c							1			UDR	56.17′ Lt "A" 6640+61.73	SB-10	817	c
SB-10	817	d	36.6	231.0	209.6							8" PPP		SB-10	817	d
SB-10	817	e								1		UDO (Case 1)	57.00′ Lt "A" 6642+73.38	SB-10	817	e
SHEET TOTAL			345.4	2177.6	1975.6			5	5	5						

(N) - NOT A SEPARATE PAY ITEM, FOR INFORMATION ONLY

CB	5/13/14	CHRIS BRIANA	CALCULATED-DESIGNED BY
CB	2/7/14	TOM CONNELL	CHECKED BY
CB	4/30/12	MICHAEL LOHMAN	CONSULTANT FUNCTIONAL SUPERVISOR
REVISED BY	DATE REVISED		

STATE OF CALIFORNIA - DEPARTMENT OF TRANSPORTATION

Caltrans

SUBSURFACE DRAINAGE QUANTITIES

SBQ-3

LAST REVISION 00-00-00 — DATE PLOTTED => 30-SEP-2014 — TIME PLOTTED => 14:17

UNDERDRAIN QUANTITIES

UNDERDRAIN SHEET No.	UNDERDRAIN SYSTEM No. ⬡	UNDERDRAIN UNIT ◯	CLASS 3 PERMEABLE MATERIAL (N)	FILTER FABRIC (N)	8" PERFORATED PLASTIC PIPE UNDERDRAIN	8" NON-PERFORATED PLASTIC PIPE UNDERDRAIN	24" PERFORATED PLASTIC PIPE UNDERDRAIN	8" PLASTIC PIPE UNDERDRAIN TERMINAL RISER (N)	8" PLASTIC PIPE UNDERDRAIN RISER	UNDERDRAIN OUTLET (CASE 1) (N)	UNDERDRAIN OUTLET (CASE 2) (N)	DESCRIPTION	STATION	UNDERDRAIN SHEET No.	UNDERDRAIN SYSTEM No. ⬡	UNDERDRAIN UNIT ◯
			CY	SQYD	LF			EA		EA						
SB-8	818	a						1				UDTR	56.17′ Rt "A" 6612+61.47	SB-8	818	a
SB-8	818	b	61.1	385.3	349.6							8" PPP		SB-8	818	b
SB-8	818	c							1			UDR	56.17′ Rt "A" 6616+09.91	SB-8	818	c
SB-8	818	d	41.8	263.6	239.2							8" PPP		SB-8	818	d
SB-8	818	e								1		UDO (Case 1)	60.00′ Rt "A" 6618+48.34	SB-8	818	e
SB-8	819	a						1				UDTR	56.17′ Rt "A" 6618+53.73	SB-8	819	a
SB-8	819	b	18.4	115.7	105.0							8" PPP		SB-8	819	b
SB-8	819	c							1			UDR	56.17′ Rt "A" 6619+58.34	SB-8	819	c
SB-8	819	d	61.1	385.3	349.6							8" PPP		SB-8	819	d
SB-8	819	e							1			UDR	56.17′ Rt "A" 6623+06.78	SB-8	819	e
SB-8,9	819	f	61.1	385.3	349.6							8" PPP		SB-8,9	819	f
SB-9	819	g							1			UDR	56.17′ Rt "A" 6626+55.15	SB-9	819	g
SB-9	819	h				51.2						8" PP		SB-9	819	h
SB-9	819	i									1	UDO (Case 2)	1.00′ Rt "A" 6626+55.19	SB-9	819	i
SB-10	820	a						1				UDTR	57.00′ Lt "A" 6642+83.48	SB-10	820	a
SB-10	820	b	38.1	240.1	217.8							8" PPP		SB-10	820	b
SB-10	820	c								1		UDO (Case 1)	57.00′ Lt "A" 6645+07.66	SB-10	820	c
SB-10	821	a						1				UDTR	57.00′ Lt "A" 6645+32.68	SB-10	821	a
SB-10	821	b	27.3	172.3	156.3							8" PPP		SB-10	821	b
SB-10	821	c							1			UDR	57.00′ Lt "A" 6646+90.50	SB-10	821	c
SB-10	821	d				57.0						8" PPP		SB-10	821	d
SB-10	821	e									1	UDO (Case 2)	1.00′ Rt "A" 6646+90.80	SB-10	821	e
SB-7	822	a	167.6	1072.2			772.0					24" PPP		SB-7	822	a
	822									1		UDO (Case 1)	1.00′ Rt "A" 6593+49.69		822	

SHEET	TOTAL	476.5	3019.8	1767.1	108.2	772.0	4	5	3	2
SBQ-1	TOTAL	592.8	3738.6	3392.0			5	6	5	
SBQ-2	TOTAL	319.2	2012.7	1826.0			6	4	6	
SBQ-3	TOTAL	345.4	2177.6	1975.6			5	5	5	
FROM KLATTE SPRING		9	53	50						
GRAND	TOTAL	1904.0	11001.7	9010.7	108.2	772.0	20	20	19	2

(N) - NOT A SEPARATE PAY ITEM, FOR INFORMATION ONLY

Dist	COUNTY	ROUTE	POST MILES TOTAL PROJECT	SHEET No.	TOTAL SHEETS
04	Mrn, Son	101	26.8/27.6, 0.0/2.0	279	710

REGISTERED CIVIL ENGINEER — 06/30/14 DATE

8-18-14
PLANS APPROVAL DATE

REGISTERED PROFESSIONAL ENGINEER — S. D. DANSKY No. 60220 Exp. 6/30/16 CIVIL — STATE OF CALIFORNIA

THE STATE OF CALIFORNIA OR ITS OFFICERS OR AGENTS SHALL NOT BE RESPONSIBLE FOR THE ACCURACY OR COMPLETENESS OF SCANNED COPIES OF THIS PLAN SHEET.

MARK THOMAS & CO., INC.
3000 OAK RD, SUITE 650
WALNUT CREEK, CA 94597

TRANSPORTATION AUTHORITY OF MARIN
750 LINDARO ST, SUITE 200
SAN RAFAEL, CA 94901

REVISED BY	DATE REVISED
CB	4/30/12
CB	2/7/14
CB	5/13/14

CALCULATED-DESIGNED BY: CHRIS BRIANA
CHECKED BY: TOM CONNELL

CONSULTANT FUNCTIONAL SUPERVISOR: MICHAEL LOHMAN

STATE OF CALIFORNIA - DEPARTMENT OF TRANSPORTATION

Caltrans

SUBSURFACE DRAINAGE QUANTITIES

SBQ-4

LAST REVISION 00-00-00
DATE PLOTTED => 30-SEP-2014
TIME PLOTTED => 14:17

BORDER LAST REVISED 7/2/2010
USERNAME => acroskey
DGN FILE => 0400000735ih004.dgn
RELATIVE BORDER SCALE IS IN INCHES 0 1 2 3
UNIT 0716
PROJECT NUMBER & PHASE 04000007351

REVISED BY	DATE REVISED
BL	4/30/12
BL	2/7/14
BL	5/13/14

CALCULATED-DESIGNED BY: SETH LEIDY
CHECKED BY: TOM CONNELL
CONSULTANT FUNCTIONAL SUPERVISOR: MICHAEL LOHMAN

STATE OF CALIFORNIA - DEPARTMENT OF TRANSPORTATION
Caltrans

NOTES:

1. Exist DRAINAGE LOCATIONS ARE Approx ONLY. VERIFY LOCATION AND Elev BEFORE MODIFYING Exist DRAINAGE FACILITIES.
2. FOR INLETS ADJACENT TO DIKE OR CURBS, TG IS AT THE FLOW LINE OF THE GUTTER. FOR FIELD INLETS OUTSIDE OF ROADBED, TG IS AT THE CENTER OF GRATE.
3. FOR ACCURATE RIGHT OF WAY DATA, CONTACT RIGHT OF WAY ENGINEERING AT THE DISTRICT OFFICE.
4. PROVIDE ALL TEMPORARY DRAINAGE FACILITIES TO CONTROL STORM WATER AS SPECIFIED. THE TEMPORARY DRAINAGE FACILITIES SHOWN ARE SUBJECT TO MODIFICATION WITH ENGINEER APPROVAL AND ARE NOT COMPLETE.

LEGEND:

- (No.) Temp DRAINAGE SYSTEM NUMBER
- (a) DRAINAGE ITEM
- ALTERNATIVE FLARED END SECTION
- ROCK SLOPE PROTECTION (RSP)
- DITCH FLOW LINE
- GRADE TO DRAIN
- (No.) PROPOSED DRAINAGE SYSTEM OR UNIT TO BE BUILT THIS STAGE-SEE DRAINAGE PLANS
- Exist DITCH FLOW LINE

ABBREVIATIONS:

Rem	REMOVE
SDMH	STORM DRAIN MANHOLE
JB	JUNCTION BOX

Dist	COUNTY	ROUTE	POST MILES TOTAL PROJECT	SHEET No.	TOTAL SHEETS
04	Mrn, Son	101	26.8/27.6, 0.0/2.0	280	710

REGISTERED CIVIL ENGINEER — 06/30/14 DATE

8-18-14
PLANS APPROVAL DATE

REGISTERED PROFESSIONAL ENGINEER — S. D. DANSKY — No. 60220 — Exp. 6/30/16 — CIVIL — STATE OF CALIFORNIA

THE STATE OF CALIFORNIA OR ITS OFFICERS OR AGENTS SHALL NOT BE RESPONSIBLE FOR THE ACCURACY OR COMPLETENESS OF SCANNED COPIES OF THIS PLAN SHEET.

MARK THOMAS & CO., INC.
3000 OAK RD, SUITE 650
WALNUT CREEK, CA 94597

TRANSPORTATION AUTHORITY OF MARIN
750 LINDARO ST, SUITE 200
SAN RAFAEL, CA 94901

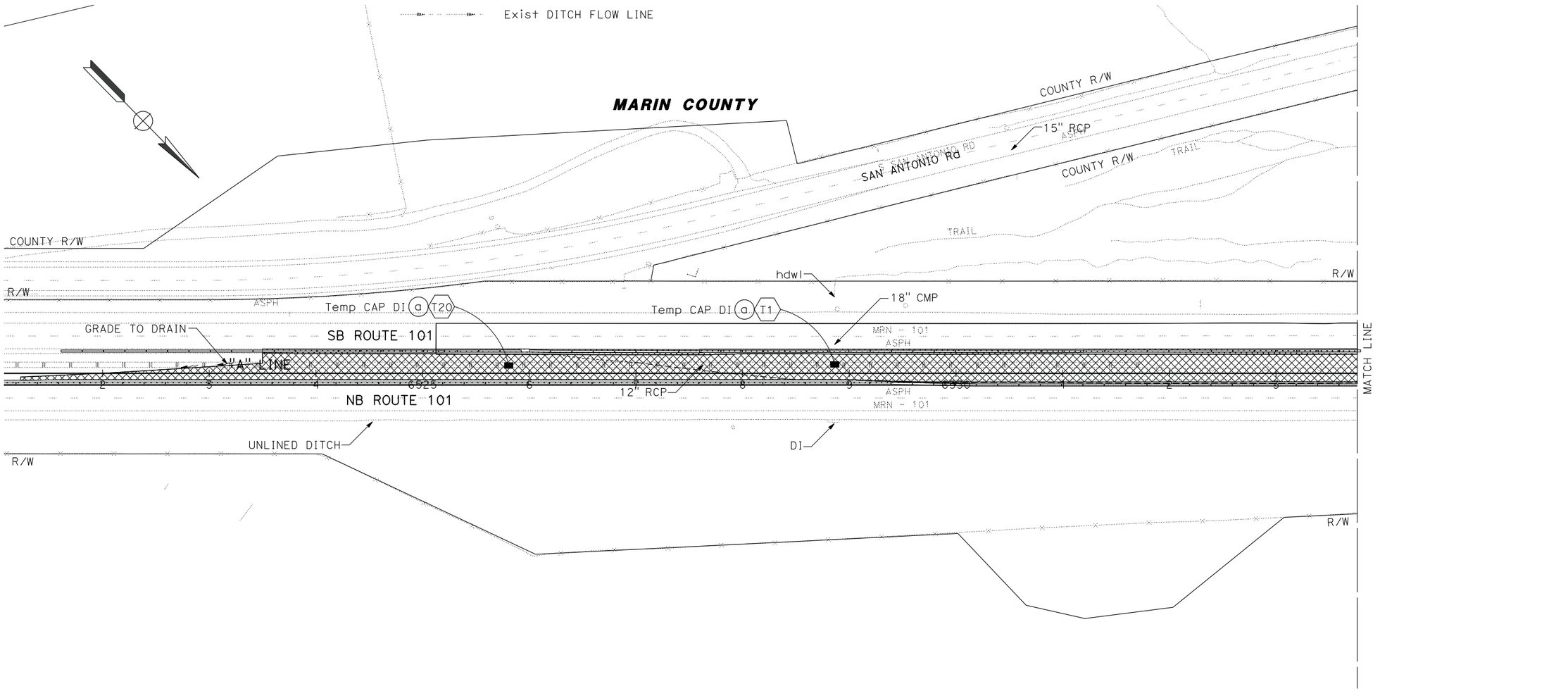

TEMPORARY DRAINAGE PLAN
STAGE 1A
SCALE: 1" = 50'

APPROVED FOR TEMPORARY DRAINAGE WORK ONLY

TD-1

LAST REVISION 00-00-00
DATE PLOTTED => 30-SEP-2014
TIME PLOTTED => 14:17

BORDER LAST REVISED 7/2/2010
USERNAME => acroskey
DGN FILE => 0400000735ik001.dgn
RELATIVE BORDER SCALE IS IN INCHES 0 1 2 3
UNIT 0716
PROJECT NUMBER & PHASE 04000007351

NOTE:

FOR ACCURATE RIGHT OF WAY DATA, CONTACT
RIGHT OF WAY ENGINEERING AT THE DISTRICT OFFICE.

Dist	COUNTY	ROUTE	POST MILES TOTAL PROJECT	SHEET No.	TOTAL SHEETS
04	Mrn, Son	101	26.8/27.6, 0.0/2.0	281	710

REGISTERED CIVIL ENGINEER — 06/30/14 DATE

8-18-14
PLANS APPROVAL DATE

REGISTERED PROFESSIONAL ENGINEER
S. D. DANSKY
No. 60220
Exp. 6/30/16
CIVIL
STATE OF CALIFORNIA

THE STATE OF CALIFORNIA OR ITS OFFICERS OR AGENTS SHALL NOT BE RESPONSIBLE FOR THE ACCURACY OR COMPLETENESS OF SCANNED COPIES OF THIS PLAN SHEET.

MARK THOMAS & CO., INC.
3000 OAK RD, SUITE 650
WALNUT CREEK, CA 94597

TRANSPORTATION AUTHORITY OF MARIN
750 LINDARO ST, SUITE 200
SAN RAFAEL, CA 94901

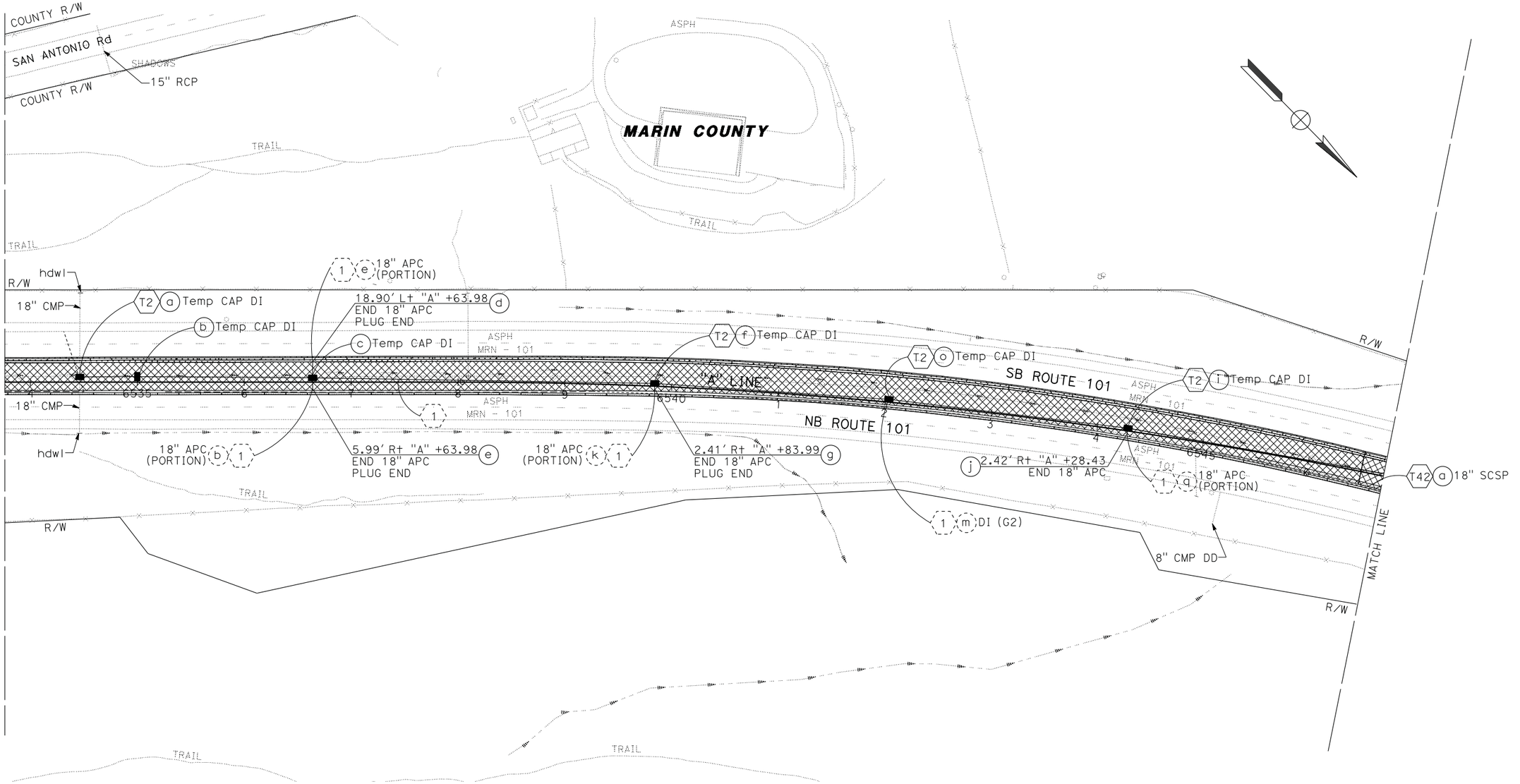

FOR NOTES, ABBREVIATIONS, AND LEGEND, SEE SHEET TD-1

APPROVED FOR TEMPORARY DRAINAGE WORK ONLY

TEMPORARY DRAINAGE PLAN
STAGE 1A
SCALE: 1" = 50'

TD-2

BL	5/13/14	
BL	2/7/14	
BL	4/30/12	
REVISED BY	DATE REVISED	
SETH LEIDY	TOM CONNELL	
CALCULATED-DESIGNED BY	CHECKED BY	
CONSULTANT FUNCTIONAL SUPERVISOR		
MICHAEL LOHMAN		

STATE OF CALIFORNIA - DEPARTMENT OF TRANSPORTATION
Caltrans

LAST REVISION 00-00-00
DATE PLOTTED => 30-SEP-2014
TIME PLOTTED => 14:17

BORDER LAST REVISED 7/2/2010
USERNAME => acroskey
DGN FILE => 04000007351k002.dgn
RELATIVE BORDER SCALE IS IN INCHES 0 1 2 3
UNIT 0716
PROJECT NUMBER & PHASE 04000007351

NOTE:

FOR ACCURATE RIGHT OF WAY DATA, CONTACT
RIGHT OF WAY ENGINEERING AT THE DISTRICT OFFICE.

Dist	COUNTY	ROUTE	POST MILES TOTAL PROJECT	SHEET No.	TOTAL SHEETS
04	Mrn, Son	101	26.8/27.6, 0.0/2.0	282	710

06/30/14
REGISTERED CIVIL ENGINEER DATE

REGISTERED PROFESSIONAL ENGINEER
S. D. DANSKY
No. 60220
Exp. 6/30/16
CIVIL
STATE OF CALIFORNIA

8-18-14
PLANS APPROVAL DATE

THE STATE OF CALIFORNIA OR ITS OFFICERS OR AGENTS SHALL NOT BE RESPONSIBLE FOR THE ACCURACY OR COMPLETENESS OF SCANNED COPIES OF THIS PLAN SHEET.

MARK THOMAS & CO., INC.
3000 OAK RD, SUITE 650
WALNUT CREEK, CA 94597

TRANSPORTATION AUTHORITY OF MARIN
750 LINDARO ST, SUITE 200
SAN RAFAEL, CA 94901

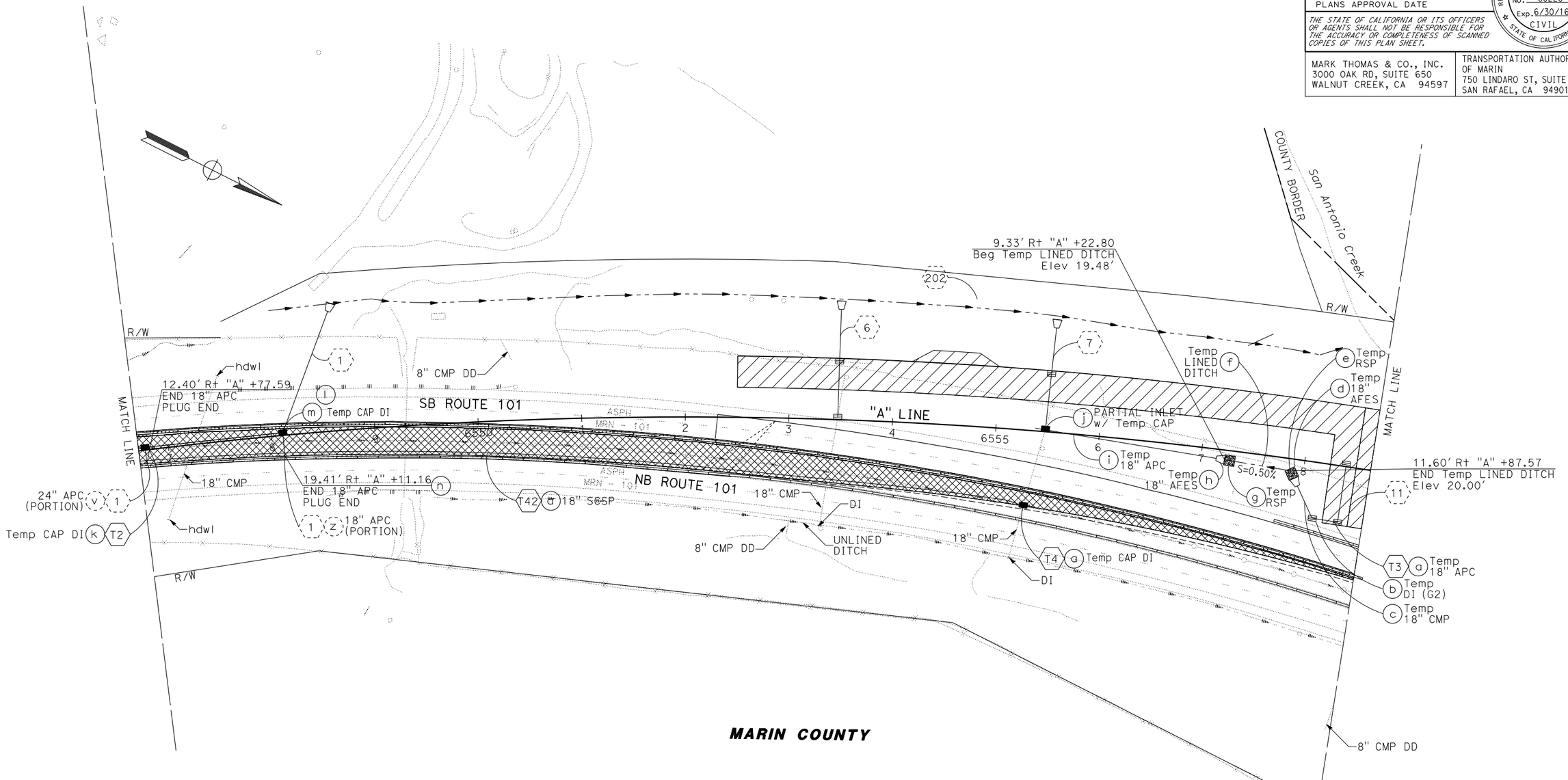

MARIN COUNTY

FOR NOTES, ABBREVIATIONS, AND LEGEND, SEE SHEET TD-1

APPROVED FOR TEMPORARY DRAINAGE WORK ONLY

TEMPORARY DRAINAGE PLAN
STAGE 1A
SCALE: 1" = 50'

TD-3

REVISED BY	DATE REVISED
BL	4/30/12
BL	2/7/14
BL	5/13/14

CALCULATED-DESIGNED BY: SETH LEIDY
CHECKED BY: TOM CONNELL
CONSULTANT FUNCTIONAL SUPERVISOR: MICHAEL LOHMAN

STATE OF CALIFORNIA - DEPARTMENT OF TRANSPORTATION
Caltrans

LAST REVISION 00-00-00
DATE PLOTTED => 30-SEP-2014
TIME PLOTTED => 14:17

BORDER LAST REVISED 7/2/2010
USERNAME => acroskey
DGN FILE => 04000007351ik003.dgn
RELATIVE BORDER SCALE IS IN INCHES 0 1 2 3
UNIT 0716
PROJECT NUMBER & PHASE 04000007351

NOTE:

FOR ACCURATE RIGHT OF WAY DATA, CONTACT
RIGHT OF WAY ENGINEERING AT THE DISTRICT OFFICE.

Dist	COUNTY	ROUTE	POST MILES TOTAL PROJECT	SHEET No.	TOTAL SHEETS
04	Mrn, Son	101	26.8/27.6, 0.0/2.0	283	710

REGISTERED CIVIL ENGINEER — 06/30/14 DATE

8-18-14
PLANS APPROVAL DATE

REGISTERED PROFESSIONAL ENGINEER
S. D. DANSKY
No. 60220
Exp. 6/30/16
CIVIL
STATE OF CALIFORNIA

THE STATE OF CALIFORNIA OR ITS OFFICERS OR AGENTS SHALL NOT BE RESPONSIBLE FOR THE ACCURACY OR COMPLETENESS OF SCANNED COPIES OF THIS PLAN SHEET.

MARK THOMAS & CO., INC.
3000 OAK RD, SUITE 650
WALNUT CREEK, CA 94597

TRANSPORTATION AUTHORITY OF MARIN
750 LINDARO ST, SUITE 200
SAN RAFAEL, CA 94901

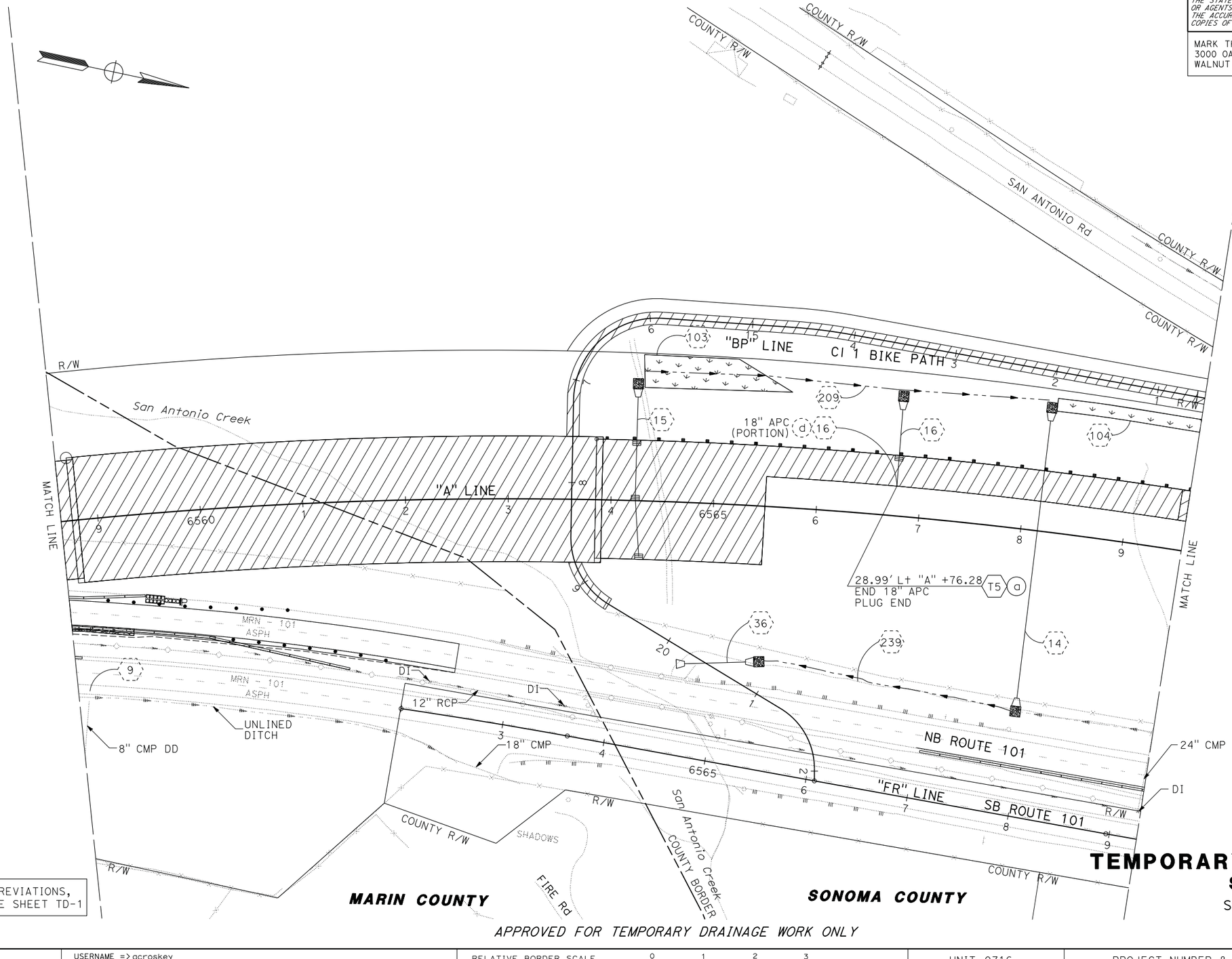

FOR NOTES, ABBREVIATIONS, AND LEGEND, SEE SHEET TD-1

APPROVED FOR TEMPORARY DRAINAGE WORK ONLY

TEMPORARY DRAINAGE PLAN
STAGE 1A
SCALE: 1" = 50'

TD-4

REVISED BY	DATE REVISED
BL	4/30/12
BL	2/7/14
BL	5/13/14

SETH LEIDY
TOM CONNELL

CALCULATED-DESIGNED BY
CHECKED BY

CONSULTANT FUNCTIONAL SUPERVISOR
MICHAEL LOHMAN

STATE OF CALIFORNIA - DEPARTMENT OF TRANSPORTATION
Caltrans

LAST REVISION 00-00-00
DATE PLOTTED => 30-SEP-2014
TIME PLOTTED => 14:17

BORDER LAST REVISED 7/2/2010
USERNAME => acroskey
DGN FILE => 0400000735ik004.dgn
RELATIVE BORDER SCALE IS IN INCHES 0 1 2 3
UNIT 0716
PROJECT NUMBER & PHASE 04000007351

NOTE:

FOR ACCURATE RIGHT OF WAY DATA, CONTACT
RIGHT OF WAY ENGINEERING AT THE DISTRICT OFFICE.

Dist	COUNTY	ROUTE	POST MILES TOTAL PROJECT	SHEET No.	TOTAL SHEETS
04	Mrn, Son	101	26.8/27.6, 0.0/2.0	284	710

REGISTERED CIVIL ENGINEER — 06/30/14 DATE

REGISTERED PROFESSIONAL ENGINEER
S. D. DANSKY
No. 60220
Exp. 6/30/16
CIVIL
STATE OF CALIFORNIA

8-18-14
PLANS APPROVAL DATE

THE STATE OF CALIFORNIA OR ITS OFFICERS OR AGENTS SHALL NOT BE RESPONSIBLE FOR THE ACCURACY OR COMPLETENESS OF SCANNED COPIES OF THIS PLAN SHEET.

MARK THOMAS & CO., INC.
3000 OAK RD, SUITE 650
WALNUT CREEK, CA 94597

TRANSPORTATION AUTHORITY OF MARIN
750 LINDARO ST, SUITE 200
SAN RAFAEL, CA 94901

SONOMA COUNTY

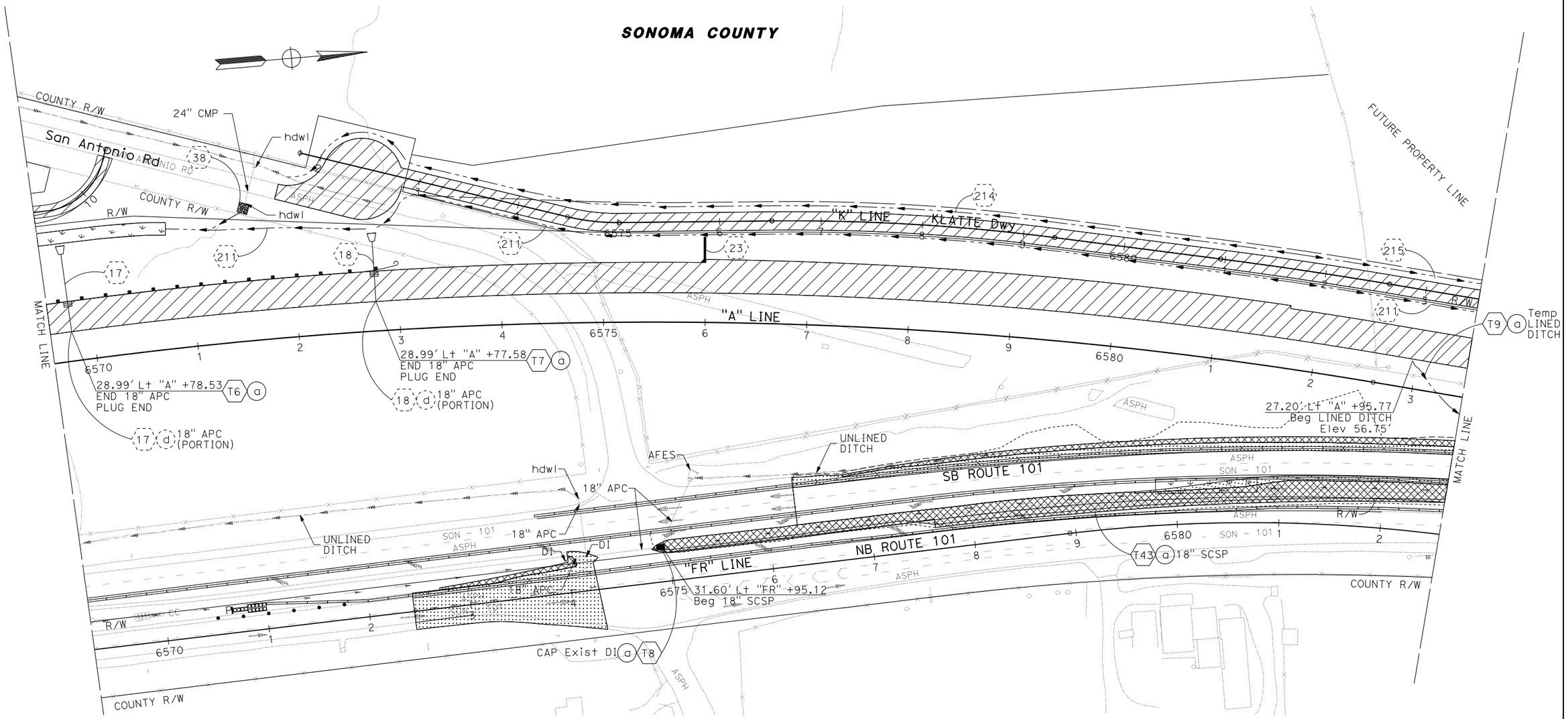

FOR NOTES, ABBREVIATIONS, AND LEGEND, SEE SHEET TD-1

TEMPORARY DRAINAGE PLAN
STAGE 1A

SCALE: 1" = 50'

APPROVED FOR TEMPORARY DRAINAGE WORK ONLY

TD-5

REVISED BY	DATE REVISED
BL	4/30/12
BL	2/7/14
BL	5/13/14

SETH LEIDY — CALCULATED-DESIGNED BY
TOM CONNELL — CHECKED BY

CONSULTANT FUNCTIONAL SUPERVISOR
MICHAEL LOHMAN

STATE OF CALIFORNIA - DEPARTMENT OF TRANSPORTATION
Caltrans

LAST REVISION
DATE PLOTTED => 30-SEP-2014
TIME PLOTTED => 14:17
00-00-00

BORDER LAST REVISED 7/2/2010 | USERNAME => acroskey | DGN FILE => 04000007351ik005.dgn | RELATIVE BORDER SCALE IS IN INCHES 0 1 2 3 | UNIT 0716 | PROJECT NUMBER & PHASE 04000007351

Dist	COUNTY	ROUTE	POST MILES TOTAL PROJECT	SHEET No.	TOTAL SHEETS
04	Mrn, Son	101	26.8/27.6, 0.0/2.0	285	710

REGISTERED CIVIL ENGINEER — 06/30/14 DATE

REGISTERED PROFESSIONAL ENGINEER — S. D. DANSKY No. 60220 Exp. 6/30/16 CIVIL — STATE OF CALIFORNIA

8-18-14
PLANS APPROVAL DATE

THE STATE OF CALIFORNIA OR ITS OFFICERS OR AGENTS SHALL NOT BE RESPONSIBLE FOR THE ACCURACY OR COMPLETENESS OF SCANNED COPIES OF THIS PLAN SHEET.

MARK THOMAS & CO., INC.
3000 OAK RD, SUITE 650
WALNUT CREEK, CA 94597

TRANSPORTATION AUTHORITY OF MARIN
750 LINDARO ST, SUITE 200
SAN RAFAEL, CA 94901

NOTE:

FOR ACCURATE RIGHT OF WAY DATA, CONTACT RIGHT OF WAY ENGINEERING AT THE DISTRICT OFFICE.

SONOMA COUNTY

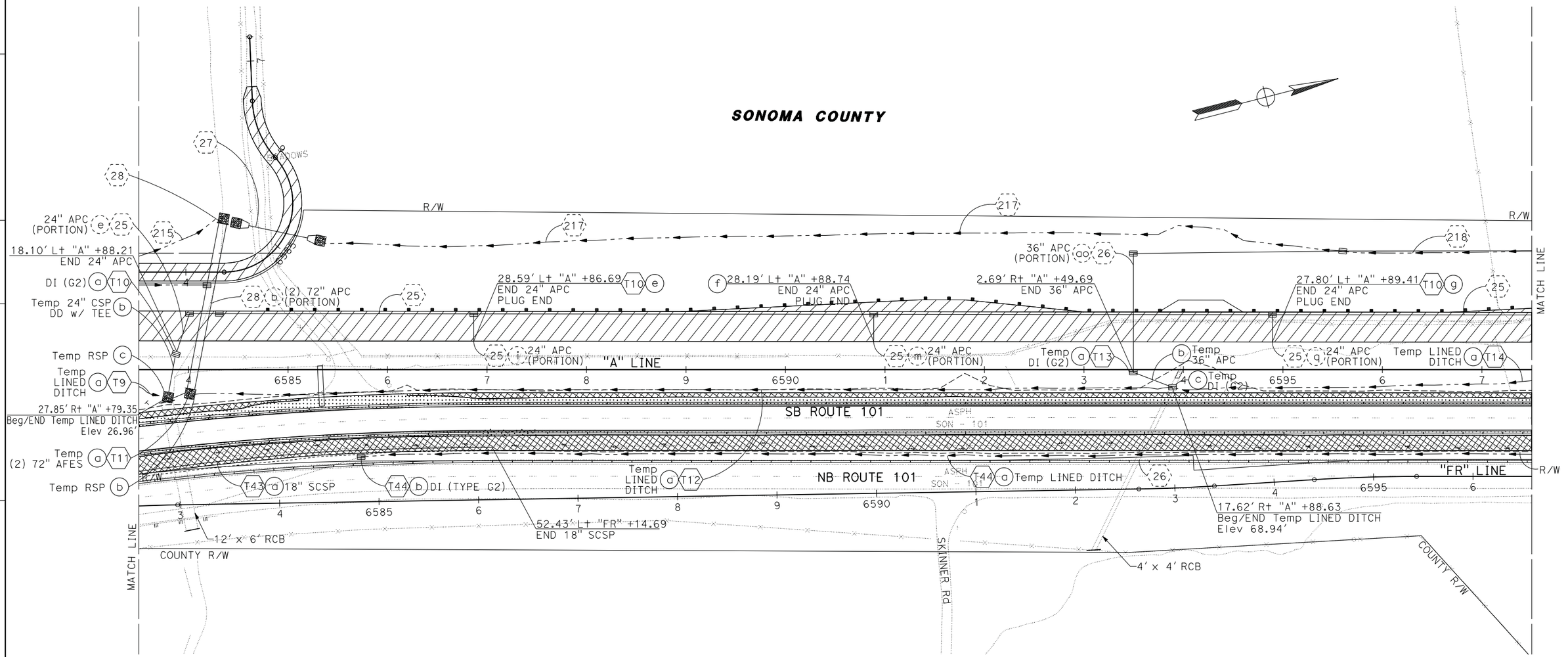

FOR NOTES, ABBREVIATIONS, AND LEGEND, SEE SHEET TD-1

APPROVED FOR TEMPORARY DRAINAGE WORK ONLY

TEMPORARY DRAINAGE PLAN
STAGE 1A

SCALE: 1" = 50'

TD-6

CALCULATED-DESIGNED BY	BL
CHECKED BY	BL
REVISED BY	BL
DATE REVISED	4/30/12
	2/7/14
	5/13/14

SETH LEIDY
TOM CONNELL
MICHAEL LOHMAN
CONSULTANT FUNCTIONAL SUPERVISOR

STATE OF CALIFORNIA - DEPARTMENT OF TRANSPORTATION
Caltrans

LAST REVISION 00-00-00
DATE PLOTTED => 30-SEP-2014
TIME PLOTTED => 14:17

BORDER LAST REVISED 7/2/2010
USERNAME => acroskey
DGN FILE => 0400000735ik006.dgn
RELATIVE BORDER SCALE IS IN INCHES 0 1 2 3
UNIT 0716
PROJECT NUMBER & PHASE 04000007351

Dist	COUNTY	ROUTE	POST MILES TOTAL PROJECT	SHEET No.	TOTAL SHEETS
04	Mrn, Son	101	26.8/27.6, 0.0/2.0	286	710

REGISTERED CIVIL ENGINEER — 06/30/14 DATE

REGISTERED PROFESSIONAL ENGINEER — S. D. DANSKY No. 60220 Exp. 6/30/16 CIVIL — STATE OF CALIFORNIA

8-18-14
PLANS APPROVAL DATE

THE STATE OF CALIFORNIA OR ITS OFFICERS OR AGENTS SHALL NOT BE RESPONSIBLE FOR THE ACCURACY OR COMPLETENESS OF SCANNED COPIES OF THIS PLAN SHEET.

MARK THOMAS & CO., INC.
3000 OAK RD, SUITE 650
WALNUT CREEK, CA 94597

TRANSPORTATION AUTHORITY OF MARIN
750 LINDARO ST, SUITE 200
SAN RAFAEL, CA 94901

NOTE:

FOR ACCURATE RIGHT OF WAY DATA, CONTACT RIGHT OF WAY ENGINEERING AT THE DISTRICT OFFICE.

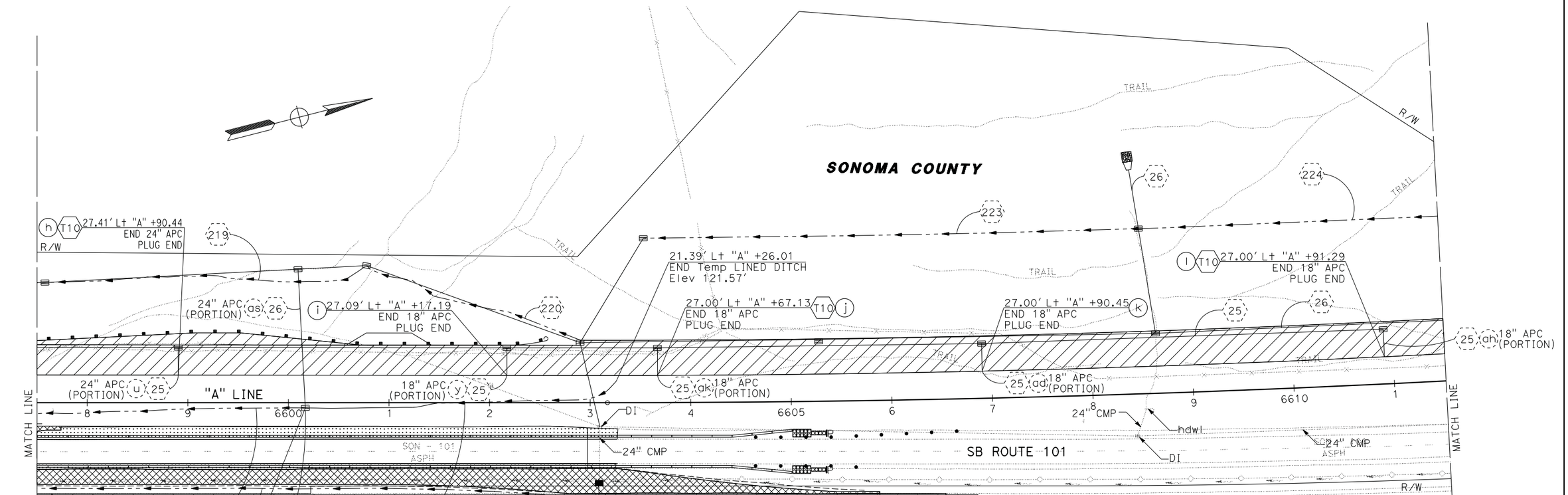

FOR NOTES, ABBREVIATIONS, AND LEGEND, SEE SHEET TD-1

APPROVED FOR TEMPORARY DRAINAGE WORK ONLY

TEMPORARY DRAINAGE PLAN
STAGE 1A

SCALE: 1" = 50'

TD-7

BL	5/13/14	CALCULATED-DESIGNED BY
BL	2/7/14	CHECKED BY
BL	4/30/12	REVISED BY
		DATE REVISED
SETH LEIDY		TOM CONNELL

CONSULTANT FUNCTIONAL SUPERVISOR: MICHAEL LOHMAN

STATE OF CALIFORNIA - DEPARTMENT OF TRANSPORTATION

Caltrans

LAST REVISION 00-00-00 | DATE PLOTTED => 30-SEP-2014 | TIME PLOTTED => 14:18

BORDER LAST REVISED 7/2/2010 | USERNAME => acroskey | DGN FILE => 04000007351k007.dgn | RELATIVE BORDER SCALE IS IN INCHES 0 1 2 3 | UNIT 0716 | PROJECT NUMBER & PHASE 04000007351

NOTE:

FOR ACCURATE RIGHT OF WAY DATA, CONTACT
RIGHT OF WAY ENGINEERING AT THE DISTRICT OFFICE.

Dist	COUNTY	ROUTE	POST MILES TOTAL PROJECT	SHEET No.	TOTAL SHEETS
04	Mrn, Son	101	26.8/27.6, 0.0/2.0	287	710

06/30/14
REGISTERED CIVIL ENGINEER — DATE

REGISTERED PROFESSIONAL ENGINEER
S. D. DANSKY
No. 60220
Exp. 6/30/16
CIVIL
STATE OF CALIFORNIA

8-18-14
PLANS APPROVAL DATE

THE STATE OF CALIFORNIA OR ITS OFFICERS OR AGENTS SHALL NOT BE RESPONSIBLE FOR THE ACCURACY OR COMPLETENESS OF SCANNED COPIES OF THIS PLAN SHEET.

MARK THOMAS & CO., INC.
3000 OAK RD, SUITE 650
WALNUT CREEK, CA 94597

TRANSPORTATION AUTHORITY OF MARIN
750 LINDARO ST, SUITE 200
SAN RAFAEL, CA 94901

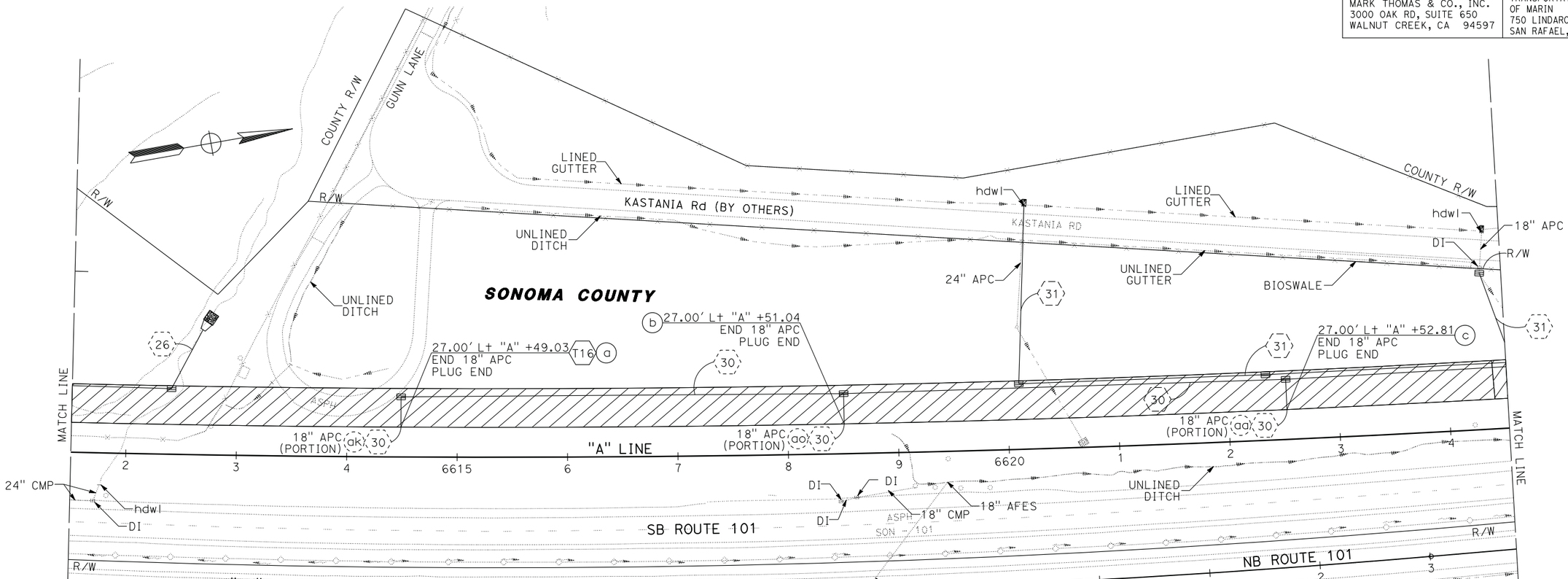

FOR NOTES, ABBREVIATIONS, AND LEGEND, SEE SHEET TD-1

APPROVED FOR TEMPORARY DRAINAGE WORK ONLY

TEMPORARY DRAINAGE PLAN
STAGE 1A
SCALE: 1" = 50'

TD-8

BL	5/13/14	CALCULATED-DESIGNED BY	
BL	2/7/14	CHECKED BY	
BL	4/30/12	SETH LEIDY	
REVISED BY	DATE REVISED	TOM CONNELL	
		CONSULTANT FUNCTIONAL SUPERVISOR	
		MICHAEL LOHMAN	

STATE OF CALIFORNIA - DEPARTMENT OF TRANSPORTATION
Caltrans®

LAST REVISION 00-00-00 | DATE PLOTTED => 30-SEP-2014 | TIME PLOTTED => 14:18

BORDER LAST REVISED 7/2/2010 | USERNAME => acroskey | DGN FILE => 04000007351k008.dgn | RELATIVE BORDER SCALE IS IN INCHES 0 1 2 3 | UNIT 0716 | PROJECT NUMBER & PHASE 04000007351

NOTE:

FOR ACCURATE RIGHT OF WAY DATA, CONTACT
RIGHT OF WAY ENGINEERING AT THE DISTRICT OFFICE.

Dist	COUNTY	ROUTE	POST MILES TOTAL PROJECT	SHEET No.	TOTAL SHEETS
04	Mrn, Son	101	26.8/27.6, 0.0/2.0	288	710

REGISTERED CIVIL ENGINEER — 06/30/14 DATE

8-18-14
PLANS APPROVAL DATE

REGISTERED PROFESSIONAL ENGINEER
S. D. DANSKY
No. 60220
Exp. 6/30/16
CIVIL
STATE OF CALIFORNIA

THE STATE OF CALIFORNIA OR ITS OFFICERS OR AGENTS SHALL NOT BE RESPONSIBLE FOR THE ACCURACY OR COMPLETENESS OF SCANNED COPIES OF THIS PLAN SHEET.

MARK THOMAS & CO., INC.
3000 OAK RD, SUITE 650
WALNUT CREEK, CA 94597

TRANSPORTATION AUTHORITY OF MARIN
750 LINDARO ST, SUITE 200
SAN RAFAEL, CA 94901

SONOMA COUNTY

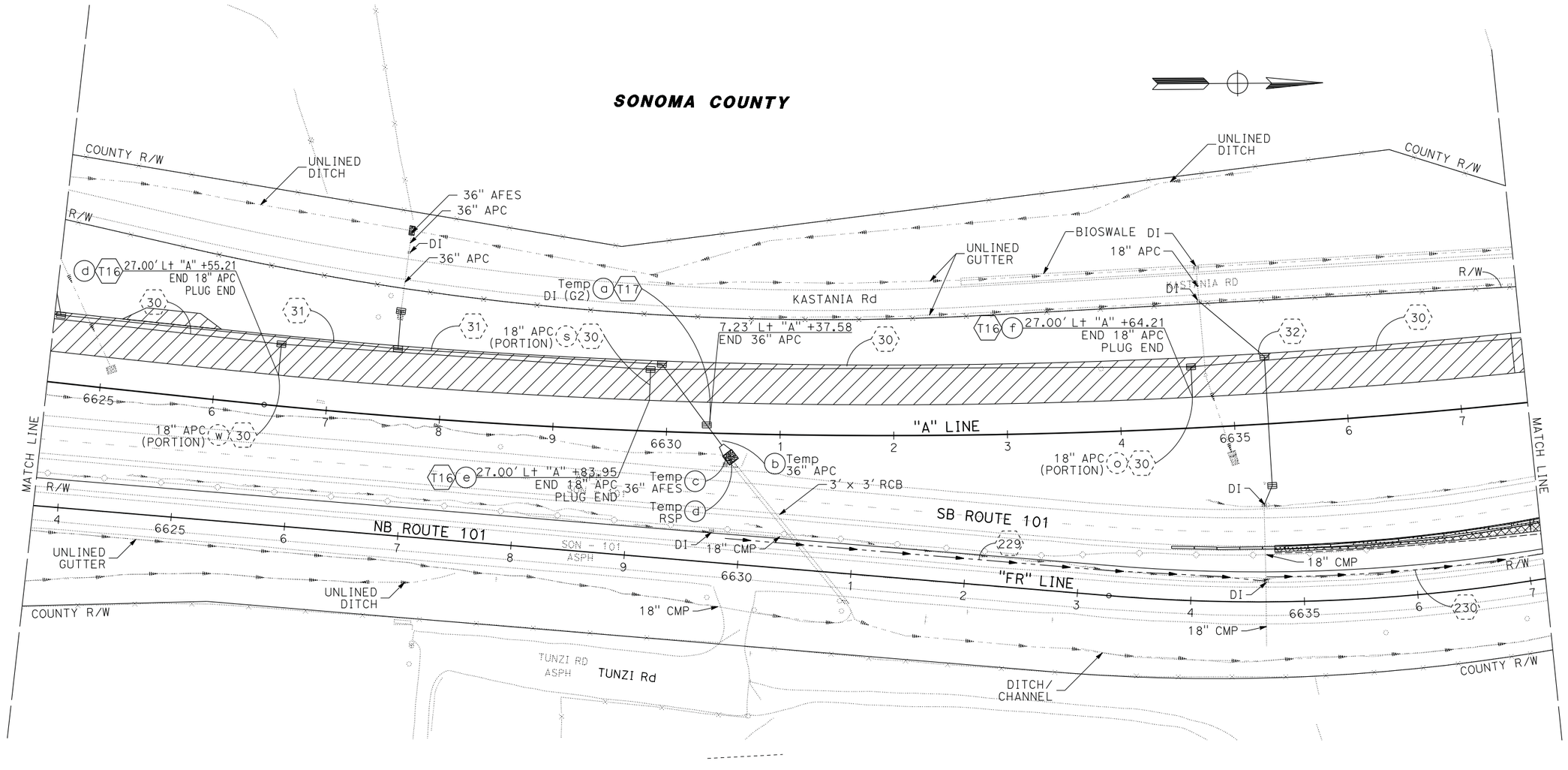

FOR NOTES, ABBREVIATIONS, AND LEGEND, SEE SHEET TD-1

APPROVED FOR TEMPORARY DRAINAGE WORK ONLY

TEMPORARY DRAINAGE PLAN
STAGE 1A

SCALE: 1" = 50'

TD-9

REVISED BY	BL	BL	BL	BL
DATE REVISED	4/30/12	2/7/14	5/13/14	

CALCULATED-DESIGNED BY: SETH LEIDY
CHECKED BY: TOM CONNELL
CONSULTANT FUNCTIONAL SUPERVISOR: MICHAEL LOHMAN

STATE OF CALIFORNIA - DEPARTMENT OF TRANSPORTATION
Caltrans

LAST REVISION — DATE PLOTTED => 30-SEP-2014
00-00-00 — TIME PLOTTED => 14:18

BORDER LAST REVISED 7/2/2010

USERNAME => acroskey
DGN FILE => 0400000735ik009.dgn

RELATIVE BORDER SCALE IS IN INCHES 0 1 2 3

UNIT 0716

PROJECT NUMBER & PHASE 04000007351

NOTE:

FOR ACCURATE RIGHT OF WAY DATA, CONTACT
RIGHT OF WAY ENGINEERING AT THE DISTRICT OFFICE.

Dist	COUNTY	ROUTE	POST MILES TOTAL PROJECT	SHEET No.	TOTAL SHEETS
04	Mrn, Son	101	26.8/27.6, 0.0/2.0	289	710

REGISTERED CIVIL ENGINEER — 06/30/14 DATE

8-18-14
PLANS APPROVAL DATE

REGISTERED PROFESSIONAL ENGINEER
S. D. DANSKY
No. 60220
Exp. 6/30/16
CIVIL
STATE OF CALIFORNIA

THE STATE OF CALIFORNIA OR ITS OFFICERS OR AGENTS SHALL NOT BE RESPONSIBLE FOR THE ACCURACY OR COMPLETENESS OF SCANNED COPIES OF THIS PLAN SHEET.

MARK THOMAS & CO., INC.
3000 OAK RD, SUITE 650
WALNUT CREEK, CA 94597

TRANSPORTATION AUTHORITY OF MARIN
750 LINDARO ST, SUITE 200
SAN RAFAEL, CA 94901

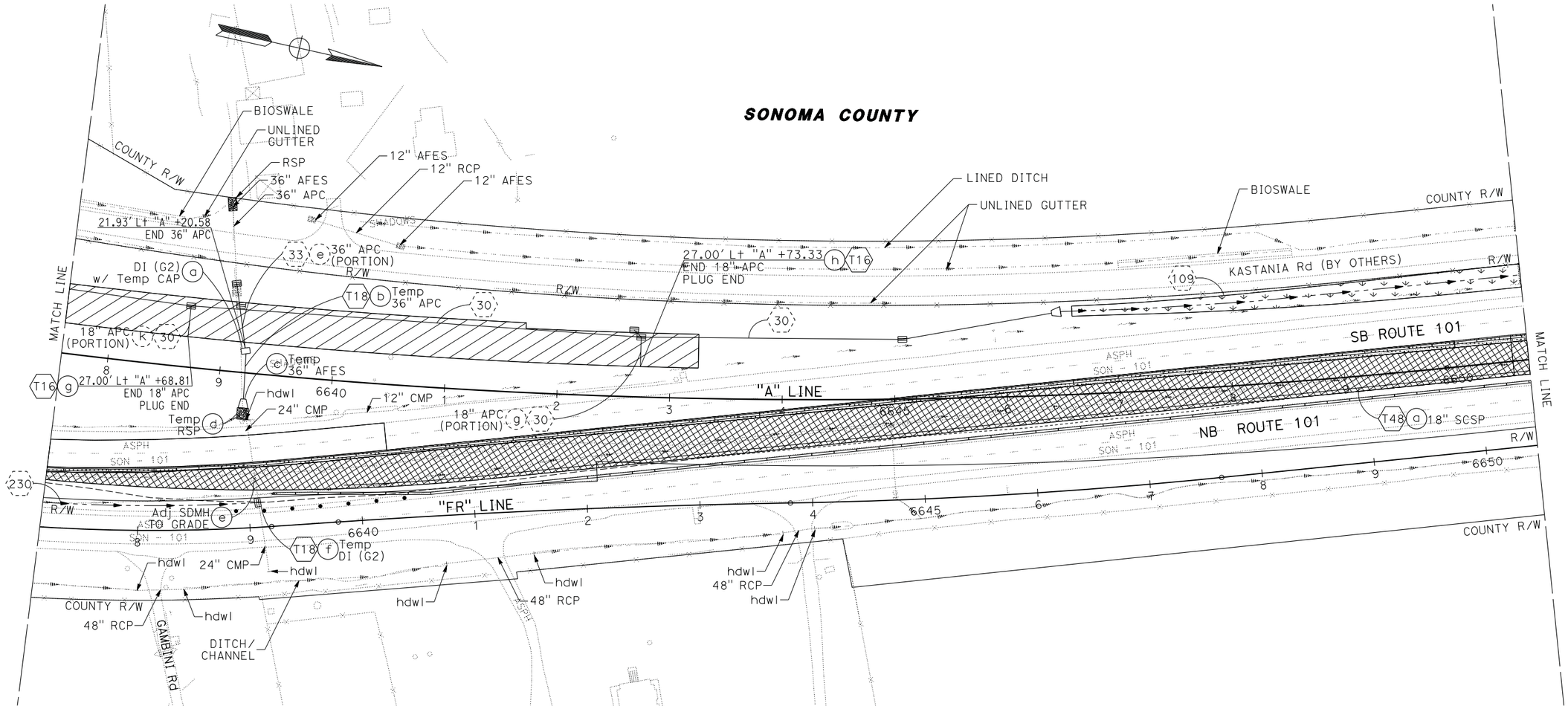

FOR NOTES, ABBREVIATIONS, AND LEGEND, SEE SHEET TD-1

APPROVED FOR TEMPORARY DRAINAGE WORK ONLY

TEMPORARY DRAINAGE PLAN
STAGE 1A

SCALE: 1" = 50'

TD-10

REVISED BY	DATE REVISED
BL	4/30/12
BL	2/7/14
BL	5/13/14

CALCULATED-DESIGNED BY: SETH LEIDY
CHECKED BY: TOM CONNELL
CONSULTANT FUNCTIONAL SUPERVISOR: MICHAEL LOHMAN
STATE OF CALIFORNIA - DEPARTMENT OF TRANSPORTATION

LAST REVISION 00-00-00
DATE PLOTTED => 30-SEP-2014
TIME PLOTTED => 14:18

BORDER LAST REVISED 7/2/2010
USERNAME => acroskey
DGN FILE => 0400000735ik010.dgn
RELATIVE BORDER SCALE IS IN INCHES 0 1 2 3
UNIT 0716
PROJECT NUMBER & PHASE 04000007351

Dist	COUNTY	ROUTE	POST MILES TOTAL PROJECT	SHEET No.	TOTAL SHEETS
04	Mrn, Son	101	26.8/27.6, 0.0/2.0	290	710

REGISTERED CIVIL ENGINEER — 06/30/14 DATE

8-18-14
PLANS APPROVAL DATE

REGISTERED PROFESSIONAL ENGINEER — S. D. DANSKY No. 60220 Exp. 6/30/16 CIVIL — STATE OF CALIFORNIA

THE STATE OF CALIFORNIA OR ITS OFFICERS OR AGENTS SHALL NOT BE RESPONSIBLE FOR THE ACCURACY OR COMPLETENESS OF SCANNED COPIES OF THIS PLAN SHEET.

MARK THOMAS & CO., INC.
3000 OAK RD, SUITE 650
WALNUT CREEK, CA 94597

TRANSPORTATION AUTHORITY OF MARIN
750 LINDARO ST, SUITE 200
SAN RAFAEL, CA 94901

NOTE:

FOR ACCURATE RIGHT OF WAY DATA, CONTACT RIGHT OF WAY ENGINEERING AT THE DISTRICT OFFICE.

SONOMA COUNTY

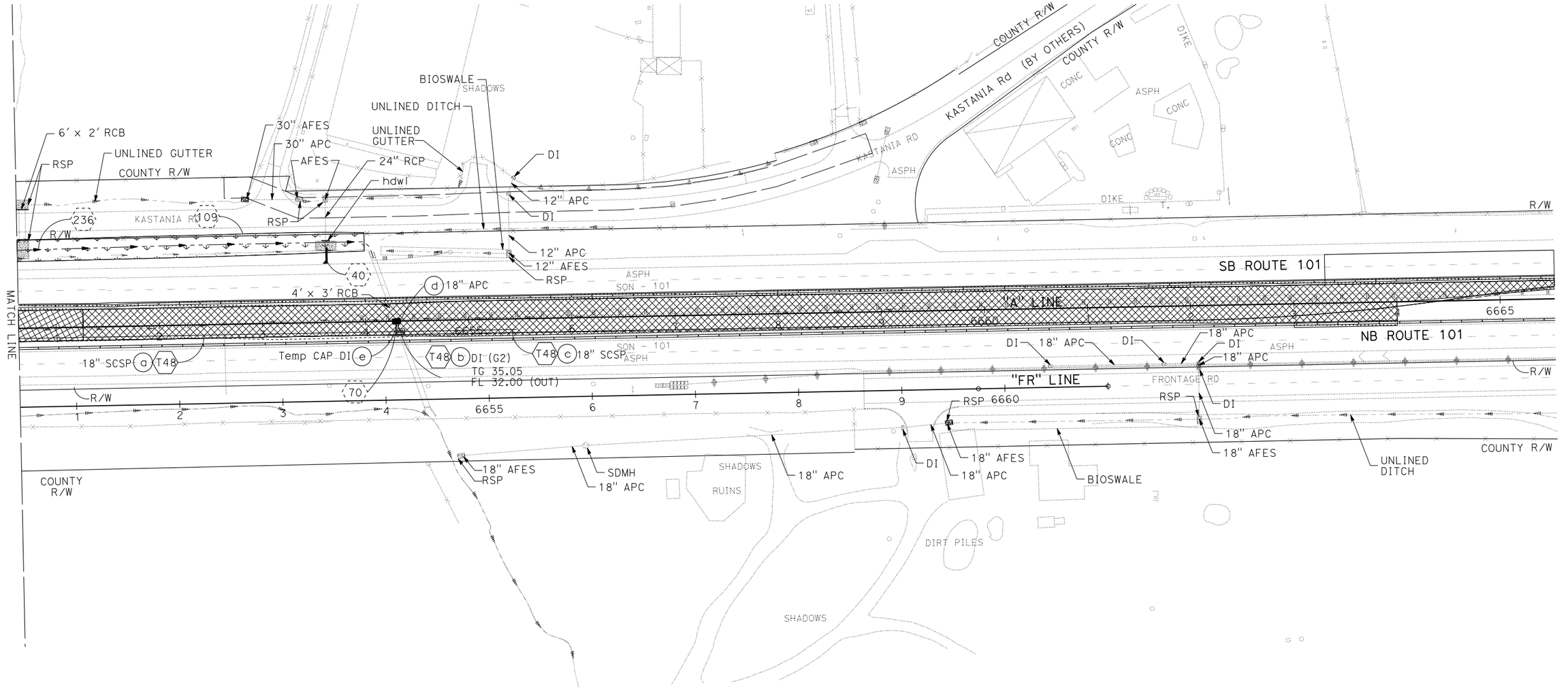

FOR NOTES, ABBREVIATIONS, AND LEGEND, SEE SHEET TD-1

APPROVED FOR TEMPORARY DRAINAGE WORK ONLY

TEMPORARY DRAINAGE PLAN
STAGE 1A
SCALE: 1" = 50'

TD-11

REVISED BY	DATE REVISED
BL	5/13/14
BL	2/7/14
BL	4/30/12

CALCULATED-DESIGNED BY: SETH LEIDY
CHECKED BY: TOM CONNELL
CONSULTANT FUNCTIONAL SUPERVISOR: MICHAEL LOHMAN
STATE OF CALIFORNIA - DEPARTMENT OF TRANSPORTATION
Caltrans

LAST REVISION 00-00-00
DATE PLOTTED => 30-SEP-2014
TIME PLOTTED => 14:18

BORDER LAST REVISED 7/2/2010
USERNAME => acroskey
DGN FILE => 04000007351ik011.dgn
RELATIVE BORDER SCALE IS IN INCHES 0 1 2 3
UNIT 0716
PROJECT NUMBER & PHASE 04000007351

REVISED BY	DATE REVISED
BL	4/30/12
BL	2/7/14
BL	5/13/14

CALCULATED-DESIGNED BY: SETH LEIDY
CHECKED BY: TOM CONNELL
CONSULTANT FUNCTIONAL SUPERVISOR: MICHAEL LOHMAN
STATE OF CALIFORNIA - DEPARTMENT OF TRANSPORTATION
Caltrans

NOTES:

1. Exist DRAINAGE LOCATIONS ARE Approx ONLY. VERIFY LOCATION AND Elev BEFORE MODIFYING Exist DRAINAGE FACILITIES.
2. FOR INLETS ADJACENT TO DIKE OR CURBS, TG IS AT THE FLOW LINE OF THE GUTTER. FOR FIELD INLETS OUTSIDE OF ROADBED, TG IS AT THE CENTER OF GRATE.
3. FOR ACCURATE RIGHT OF WAY DATA, CONTACT RIGHT OF WAY ENGINEERING AT THE DISTRICT OFFICE.
4. PROVIDE ALL TEMPORARY DRAINAGE FACILITIES TO CONTROL STORM WATER AS SPECIFIED. THE TEMPORARY DRAINAGE FACILITIES SHOWN ARE SUBJECT TO MODIFICATION WITH ENGINEER APPROVAL AND ARE NOT COMPLETE.

LEGEND:

- (No.) Temp DRAINAGE SYSTEM NUMBER
- (a) DRAINAGE SYSTEM UNIT
- ALTERNATIVE FLARED END SECTION
- ROCK SLOPE PROTECTION (RSP)
- DITCH FLOW LINE
- GRADE TO DRAIN
- (No.) PROPOSED DRAINAGE SYSTEM OR UNIT TO BE BUILT THIS STAGE-SEE DRAINAGE PLANS
- Exist DITCH FLOW LINE

ABBREVIATIONS:

Rem REMOVE

Dist	COUNTY	ROUTE	POST MILES TOTAL PROJECT	SHEET No.	TOTAL SHEETS
04	Mrn, Son	101	26.8/27.6, 0.0/2.0	291	710

Sarah Dansky 06/30/14
REGISTERED CIVIL ENGINEER DATE

8-18-14
PLANS APPROVAL DATE

REGISTERED PROFESSIONAL ENGINEER — S. D. DANSKY No. 60220 Exp. 6/30/16 CIVIL — STATE OF CALIFORNIA

THE STATE OF CALIFORNIA OR ITS OFFICERS OR AGENTS SHALL NOT BE RESPONSIBLE FOR THE ACCURACY OR COMPLETENESS OF SCANNED COPIES OF THIS PLAN SHEET.

MARK THOMAS & CO., INC.
3000 OAK RD, SUITE 650
WALNUT CREEK, CA 94597

TRANSPORTATION AUTHORITY OF MARIN
750 LINDARO ST, SUITE 200
SAN RAFAEL, CA 94901

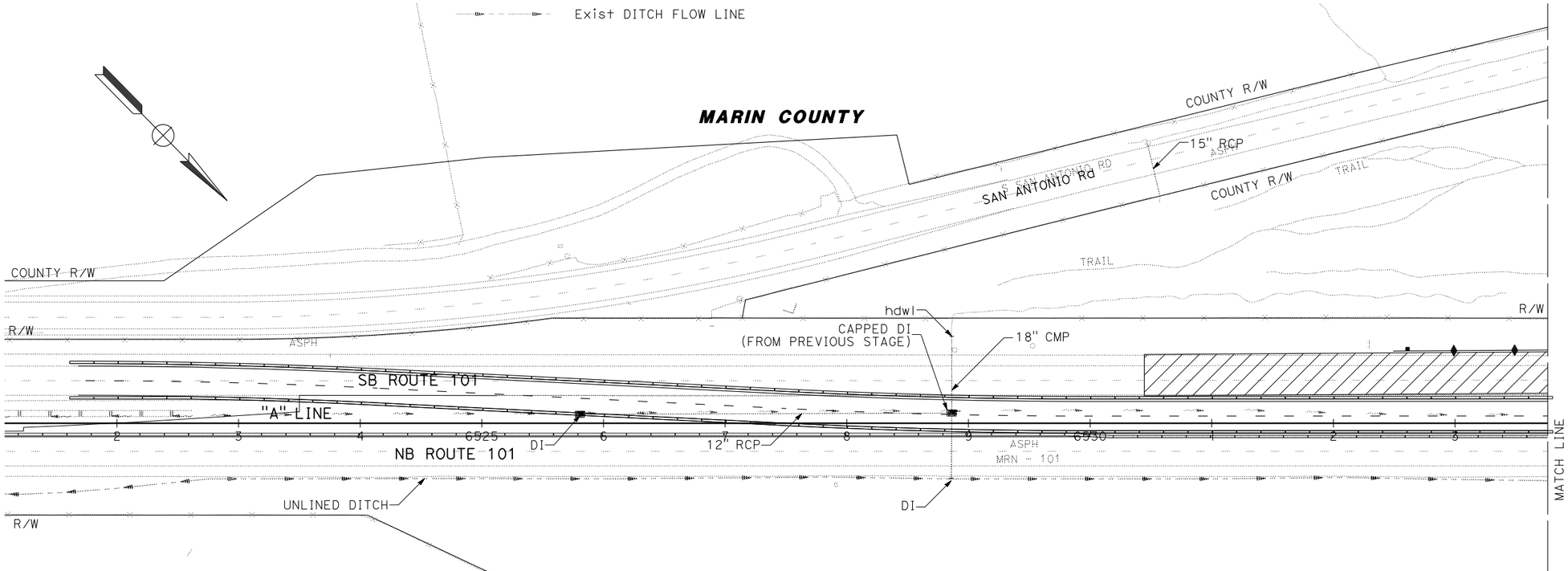

TEMPORARY DRAINAGE PLAN
STAGE 1B

SCALE: 1" = 50'

APPROVED FOR TEMPORARY DRAINAGE WORK ONLY

TD-12

LAST REVISION 00-00-00
DATE PLOTTED => 30-SEP-2014
TIME PLOTTED => 14:18

BORDER LAST REVISED 7/2/2010
USERNAME => acroskey
DGN FILE => 0400000735ik012.dgn
RELATIVE BORDER SCALE IS IN INCHES 0 1 2 3
UNIT 0716
PROJECT NUMBER & PHASE 04000007351

NOTE:

FOR ACCURATE RIGHT OF WAY DATA, CONTACT
RIGHT OF WAY ENGINEERING AT THE DISTRICT OFFICE.

Dist	COUNTY	ROUTE	POST MILES TOTAL PROJECT	SHEET No.	TOTAL SHEETS
04	Mrn, Son	101	26.8/27.6, 0.0/2.0	292	710

REGISTERED CIVIL ENGINEER — 06/30/14 DATE

8-18-14
PLANS APPROVAL DATE

REGISTERED PROFESSIONAL ENGINEER
S. D. DANSKY
No. 60220
Exp. 6/30/16
CIVIL
STATE OF CALIFORNIA

THE STATE OF CALIFORNIA OR ITS OFFICERS OR AGENTS SHALL NOT BE RESPONSIBLE FOR THE ACCURACY OR COMPLETENESS OF SCANNED COPIES OF THIS PLAN SHEET.

MARK THOMAS & CO., INC.
3000 OAK RD, SUITE 650
WALNUT CREEK, CA 94597

TRANSPORTATION AUTHORITY
OF MARIN
750 LINDARO ST, SUITE 200
SAN RAFAEL, CA 94901

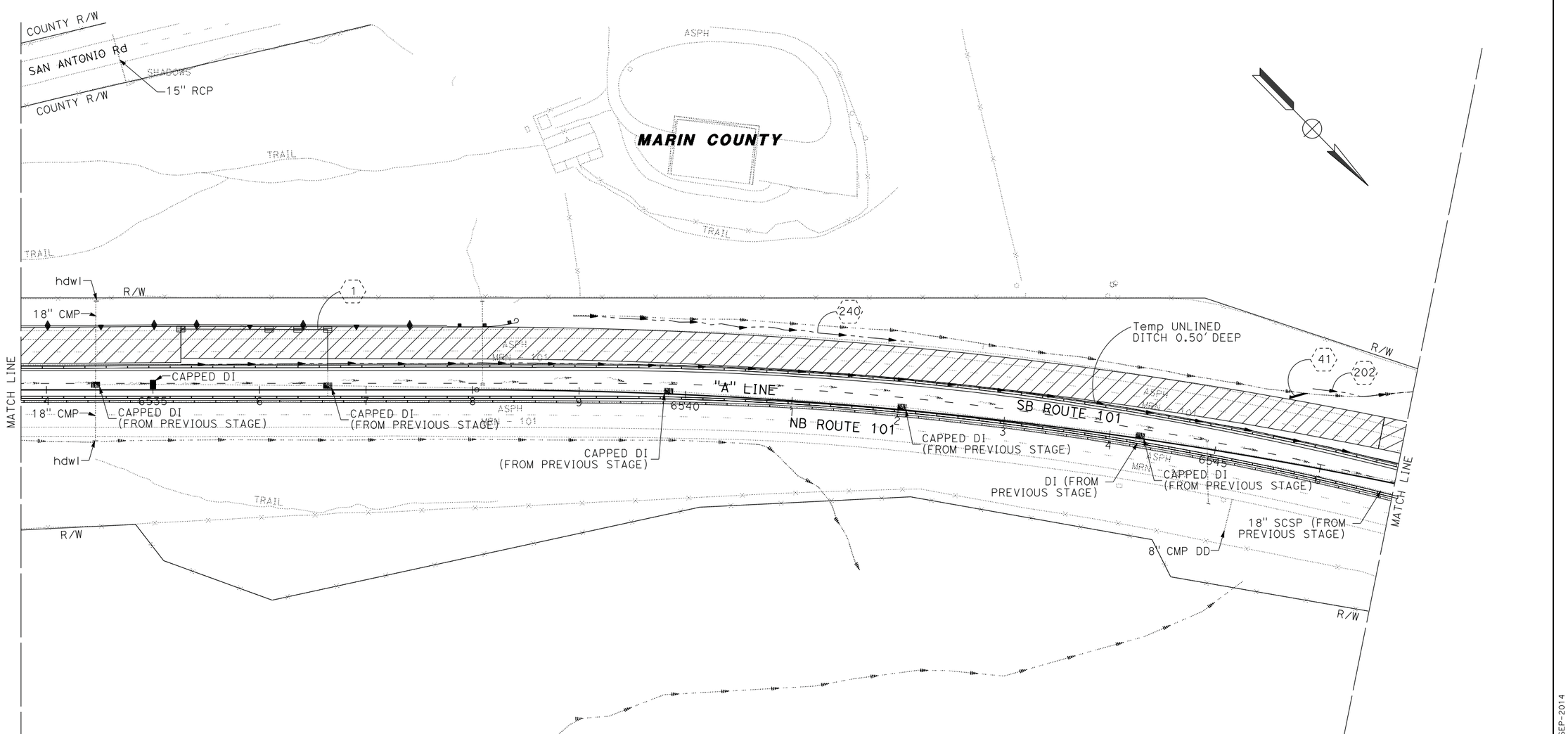

FOR NOTES, ABBREVIATIONS,
AND LEGEND, SEE SHEET TD-12

APPROVED FOR TEMPORARY DRAINAGE WORK ONLY

TEMPORARY DRAINAGE PLAN
STAGE 1B

SCALE: 1" = 50'

TD-13

REVISED BY	DATE REVISED
BL	4/30/12
BL	2/7/14
BL	5/13/14

CALCULATED-DESIGNED BY: SETH LEIDY
CHECKED BY: TOM CONNELL
CONSULTANT FUNCTIONAL SUPERVISOR: MICHAEL LOHMAN
STATE OF CALIFORNIA - DEPARTMENT OF TRANSPORTATION
Caltrans

LAST REVISION 00-00-00
DATE PLOTTED => 30-SEP-2014
TIME PLOTTED => 14:18

Dist	COUNTY	ROUTE	POST MILES TOTAL PROJECT	SHEET No.	TOTAL SHEETS
04	Mrn, Son	101	26.8/27.6, 0.0/2.0	293	710

REGISTERED CIVIL ENGINEER — 06/30/14 DATE

8-18-14
PLANS APPROVAL DATE

REGISTERED PROFESSIONAL ENGINEER — S. D. DANSKY No. 60220 Exp. 6/30/16 CIVIL — STATE OF CALIFORNIA

THE STATE OF CALIFORNIA OR ITS OFFICERS OR AGENTS SHALL NOT BE RESPONSIBLE FOR THE ACCURACY OR COMPLETENESS OF SCANNED COPIES OF THIS PLAN SHEET.

MARK THOMAS & CO., INC.
3000 OAK RD, SUITE 650
WALNUT CREEK, CA 94597

TRANSPORTATION AUTHORITY OF MARIN
750 LINDARO ST, SUITE 200
SAN RAFAEL, CA 94901

NOTE:

FOR ACCURATE RIGHT OF WAY DATA, CONTACT RIGHT OF WAY ENGINEERING AT THE DISTRICT OFFICE.

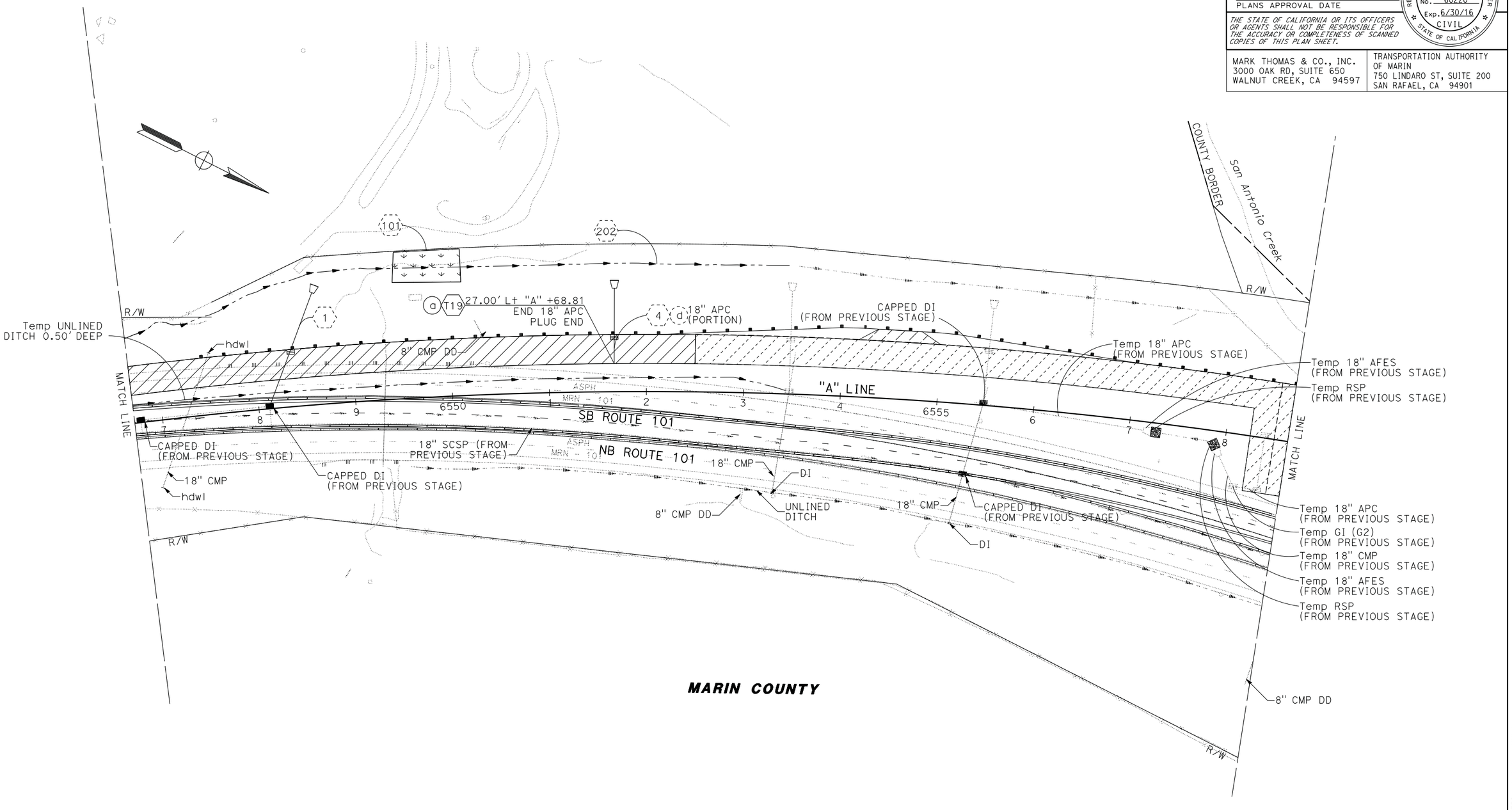

FOR NOTES, ABBREVIATIONS, AND LEGEND, SEE SHEET TD-12

APPROVED FOR TEMPORARY DRAINAGE WORK ONLY

TEMPORARY DRAINAGE PLAN
STAGE 1B

SCALE: 1" = 50'

TD-14

REVISED BY	DATE REVISED
BL	4/30/12
BL	2/7/14
BL	5/13/14

CALCULATED-DESIGNED BY: SETH LEIDY
CHECKED BY: TOM CONNELL
CONSULTANT FUNCTIONAL SUPERVISOR: MICHAEL LOHMAN

STATE OF CALIFORNIA - DEPARTMENT OF TRANSPORTATION

LAST REVISION 00-00-00 | DATE PLOTTED => 30-SEP-2014 | TIME PLOTTED => 14:18

Dist	COUNTY	ROUTE	POST MILES TOTAL PROJECT	SHEET No.	TOTAL SHEETS
04	Mrn, Son	101	26.8/27.6, 0.0/2.0	294	710

REGISTERED CIVIL ENGINEER — 06/30/14 DATE

8-18-14
PLANS APPROVAL DATE

REGISTERED PROFESSIONAL ENGINEER
S. D. DANSKY
No. 60220
Exp. 6/30/16
CIVIL
STATE OF CALIFORNIA

THE STATE OF CALIFORNIA OR ITS OFFICERS OR AGENTS SHALL NOT BE RESPONSIBLE FOR THE ACCURACY OR COMPLETENESS OF SCANNED COPIES OF THIS PLAN SHEET.

MARK THOMAS & CO., INC.
3000 OAK RD, SUITE 650
WALNUT CREEK, CA 94597

TRANSPORTATION AUTHORITY OF MARIN
750 LINDARO ST, SUITE 200
SAN RAFAEL, CA 94901

NOTE:

FOR ACCURATE RIGHT OF WAY DATA, CONTACT RIGHT OF WAY ENGINEERING AT THE DISTRICT OFFICE.

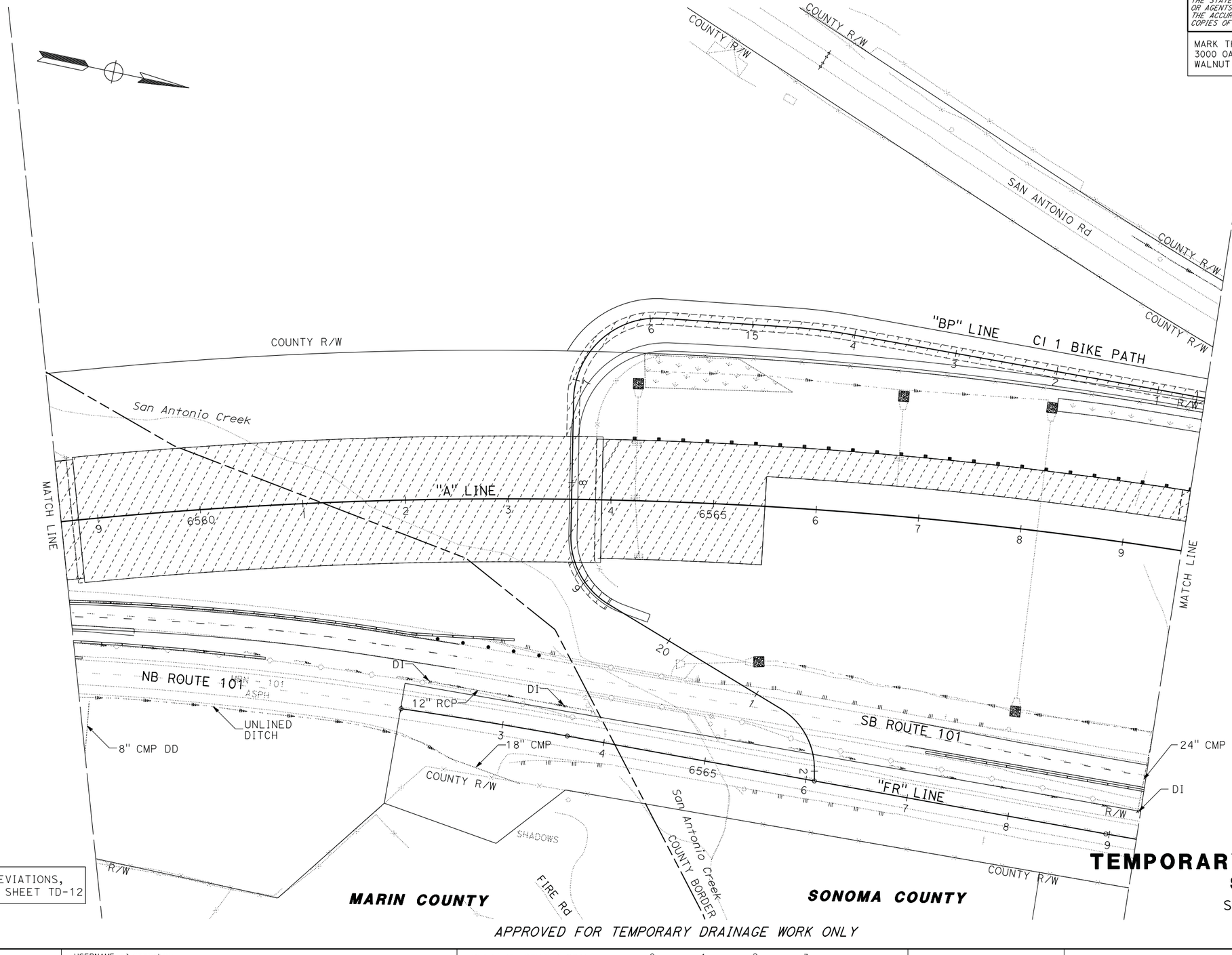

FOR NOTES, ABBREVIATIONS, AND LEGEND, SEE SHEET TD-12

TEMPORARY DRAINAGE PLAN
STAGE 1B
SCALE: 1" = 50'

APPROVED FOR TEMPORARY DRAINAGE WORK ONLY

TD-15

REVISED BY	DATE REVISED
BL	4/30/12
BL	2/7/14
BL	5/13/14

SETH LEIDY — CALCULATED-DESIGNED BY
TOM CONNELL — CHECKED BY
MICHAEL LOHMAN — CONSULTANT FUNCTIONAL SUPERVISOR

STATE OF CALIFORNIA - DEPARTMENT OF TRANSPORTATION
Caltrans

LAST REVISION: DATE PLOTTED => 30-SEP-2014
00-00-00 TIME PLOTTED => 14:18

BORDER LAST REVISED 7/2/2010 | USERNAME => acroskey | DGN FILE => 04000007351ik015.dgn | RELATIVE BORDER SCALE IS IN INCHES 0 1 2 3 | UNIT 0716 | PROJECT NUMBER & PHASE 04000007351

Dist	COUNTY	ROUTE	POST MILES TOTAL PROJECT	SHEET No.	TOTAL SHEETS
04	Mrn, Son	101	26.8/27.6, 0.0/2.0	295	710

REGISTERED CIVIL ENGINEER — DATE: 06/30/14

S. D. DANSKY No. 60220 Exp. 6/30/16 CIVIL — REGISTERED PROFESSIONAL ENGINEER — STATE OF CALIFORNIA

8-18-14
PLANS APPROVAL DATE

THE STATE OF CALIFORNIA OR ITS OFFICERS OR AGENTS SHALL NOT BE RESPONSIBLE FOR THE ACCURACY OR COMPLETENESS OF SCANNED COPIES OF THIS PLAN SHEET.

MARK THOMAS & CO., INC.
3000 OAK RD, SUITE 650
WALNUT CREEK, CA 94597

TRANSPORTATION AUTHORITY OF MARIN
750 LINDARO ST, SUITE 200
SAN RAFAEL, CA 94901

NOTE:

FOR ACCURATE RIGHT OF WAY DATA, CONTACT RIGHT OF WAY ENGINEERING AT THE DISTRICT OFFICE.

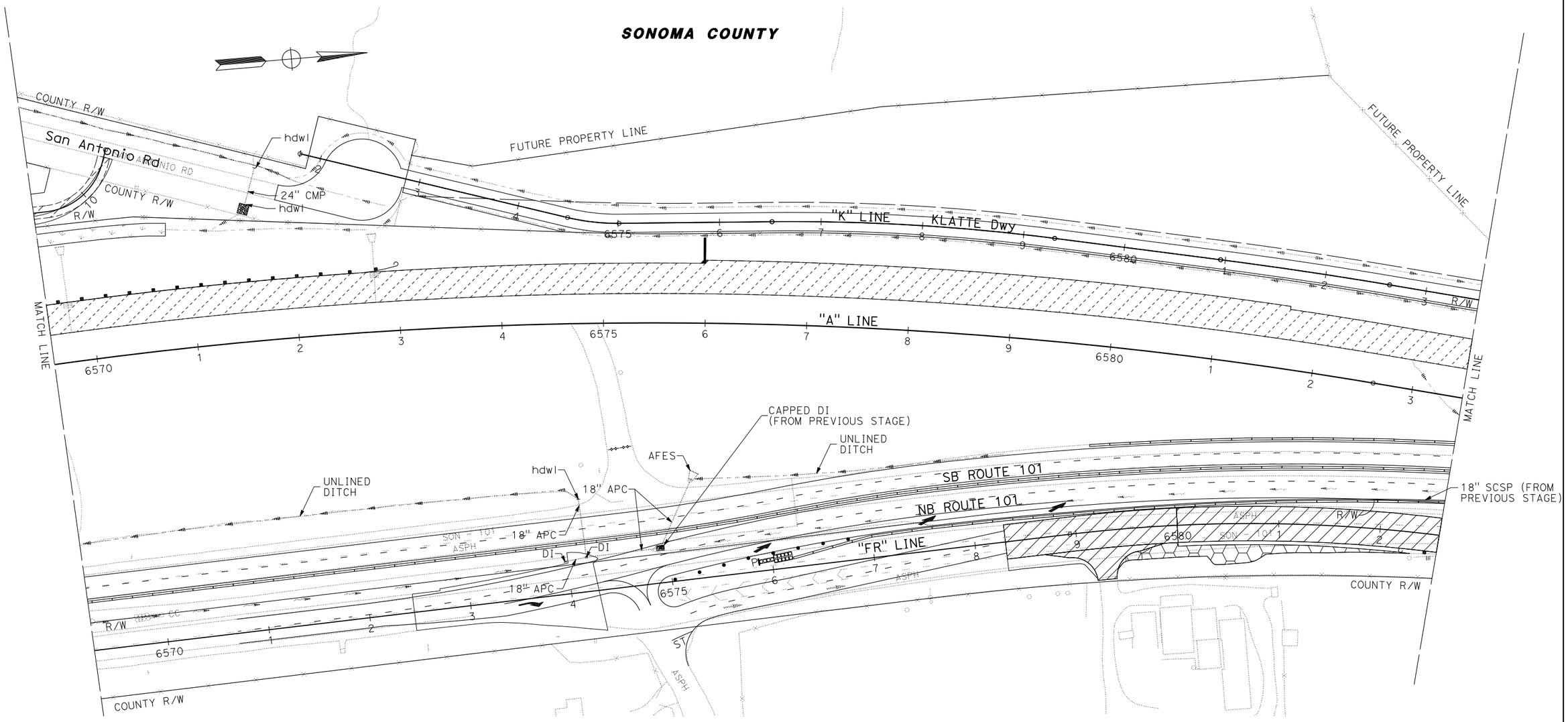

FOR NOTES, ABBREVIATIONS, AND LEGEND, SEE SHEET TD-12

TEMPORARY DRAINAGE PLAN

STAGE 1B

SCALE: 1" = 50'

APPROVED FOR TEMPORARY DRAINAGE WORK ONLY

TD-16

REVISED BY	DATE REVISED
BL	4/30/12
BL	2/7/14
BL	5/13/14

SETH LEIDY — CALCULATED-DESIGNED BY
TOM CONNELL — CHECKED BY

CONSULTANT FUNCTIONAL SUPERVISOR — MICHAEL LOHMAN

STATE OF CALIFORNIA - DEPARTMENT OF TRANSPORTATION — Caltrans

LAST REVISION 00-00-00
DATE PLOTTED => 30-SEP-2014
TIME PLOTTED => 14:18

NOTE:

FOR ACCURATE RIGHT OF WAY DATA, CONTACT
RIGHT OF WAY ENGINEERING AT THE DISTRICT OFFICE.

Dist	COUNTY	ROUTE	POST MILES TOTAL PROJECT	SHEET No.	TOTAL SHEETS
04	Mrn, Son	101	26.8/27.6, 0.0/2.0	296	710

REGISTERED CIVIL ENGINEER — DATE 06/30/14

PLANS APPROVAL DATE 8-18-14

REGISTERED PROFESSIONAL ENGINEER
S. D. DANSKY
No. 60220
Exp. 6/30/16
CIVIL
STATE OF CALIFORNIA

THE STATE OF CALIFORNIA OR ITS OFFICERS OR AGENTS SHALL NOT BE RESPONSIBLE FOR THE ACCURACY OR COMPLETENESS OF SCANNED COPIES OF THIS PLAN SHEET.

MARK THOMAS & CO., INC.
3000 OAK RD, SUITE 650
WALNUT CREEK, CA 94597

TRANSPORTATION AUTHORITY OF MARIN
750 LINDARO ST, SUITE 200
SAN RAFAEL, CA 94901

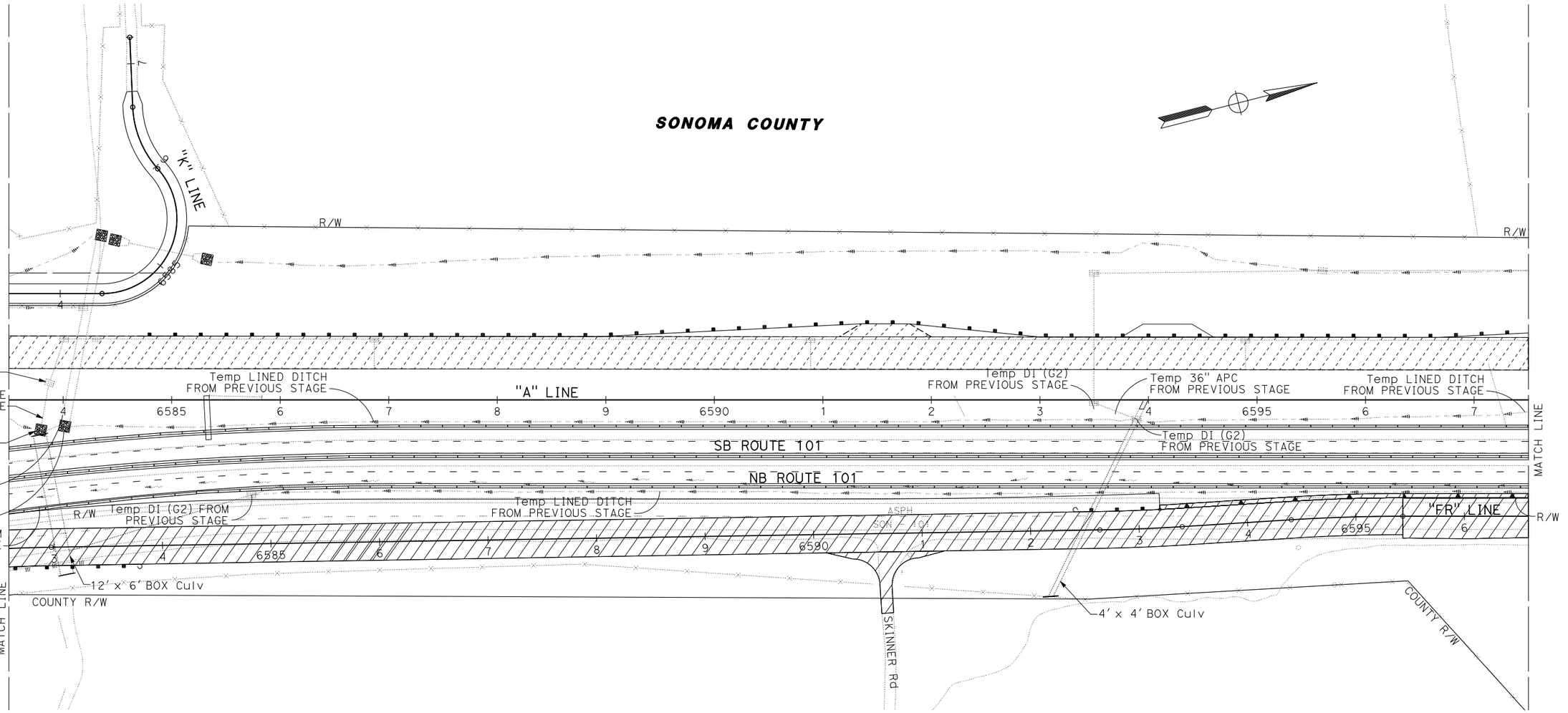

FOR NOTES, ABBREVIATIONS, AND LEGEND, SEE SHEET TD-12

APPROVED FOR TEMPORARY DRAINAGE WORK ONLY

TEMPORARY DRAINAGE PLAN
STAGE 1B

SCALE: 1" = 50'

TD-17

REVISED BY	DATE REVISED
BL	5/13/14
BL	2/7/14
BL	4/30/12

CALCULATED-DESIGNED BY: SETH LEIDY
CHECKED BY: TOM CONNELL
CONSULTANT FUNCTIONAL SUPERVISOR: MICHAEL LOHMAN
STATE OF CALIFORNIA - DEPARTMENT OF TRANSPORTATION
Caltrans

LAST REVISION 00-00-00
DATE PLOTTED => 30-SEP-2014
TIME PLOTTED => 14:18

BORDER LAST REVISED 7/2/2010
USERNAME => acroskey
DGN FILE => 0400000735ik017.dgn
RELATIVE BORDER SCALE IS IN INCHES 0 1 2 3
UNIT 0716
PROJECT NUMBER & PHASE 04000007351

NOTE:

FOR ACCURATE RIGHT OF WAY DATA, CONTACT
RIGHT OF WAY ENGINEERING AT THE DISTRICT OFFICE.

Dist	COUNTY	ROUTE	POST MILES TOTAL PROJECT	SHEET No.	TOTAL SHEETS
04	Mrn, Son	101	26.8/27.6, 0.0/2.0	297	710

REGISTERED CIVIL ENGINEER — 06/30/14 DATE

8-18-14
PLANS APPROVAL DATE

REGISTERED PROFESSIONAL ENGINEER
S. D. DANSKY
No. 60220
Exp. 6/30/16
CIVIL
STATE OF CALIFORNIA

THE STATE OF CALIFORNIA OR ITS OFFICERS OR AGENTS SHALL NOT BE RESPONSIBLE FOR THE ACCURACY OR COMPLETENESS OF SCANNED COPIES OF THIS PLAN SHEET.

MARK THOMAS & CO., INC.
3000 OAK RD, SUITE 650
WALNUT CREEK, CA 94597

TRANSPORTATION AUTHORITY OF MARIN
750 LINDARO ST, SUITE 200
SAN RAFAEL, CA 94901

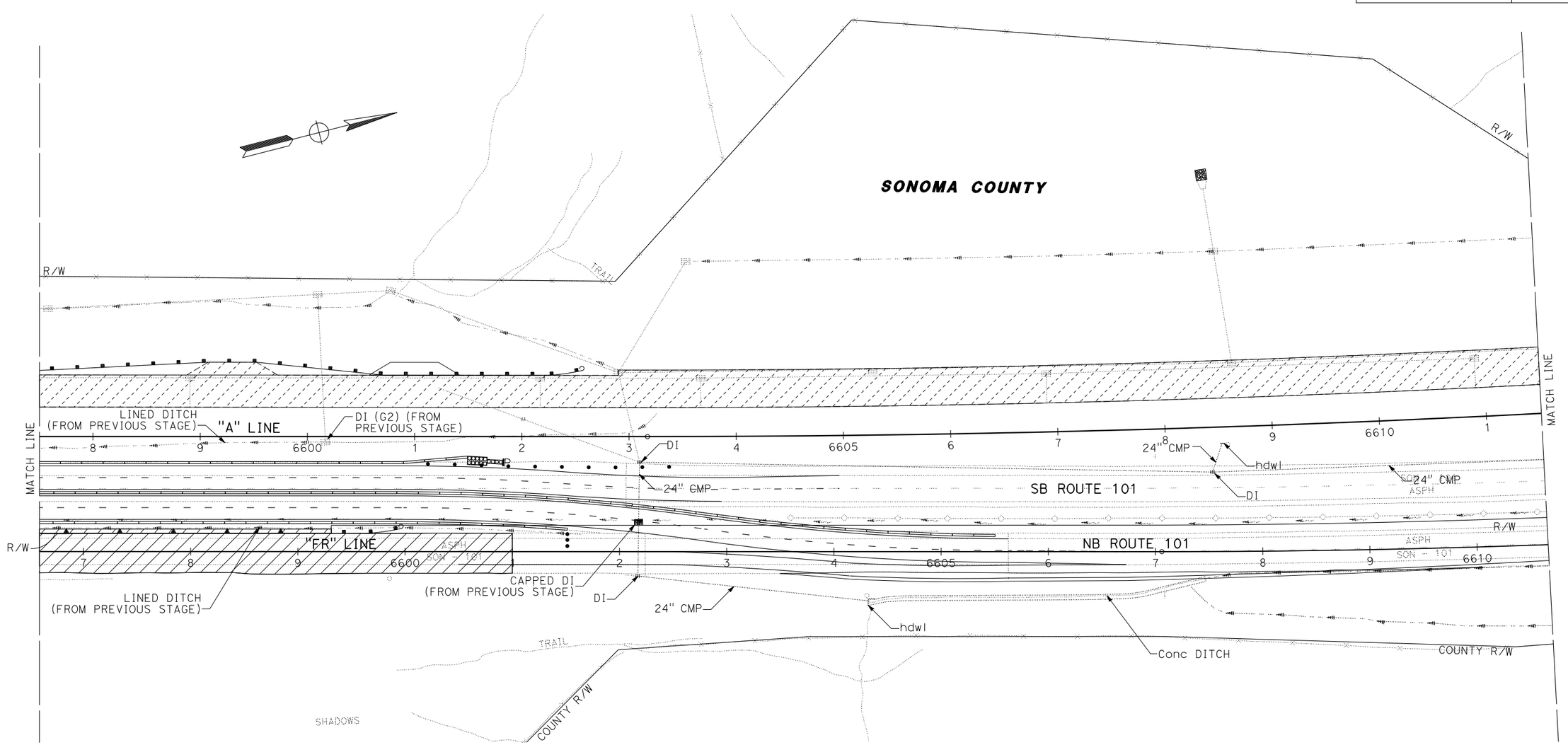

FOR NOTES, ABBREVIATIONS, AND LEGEND, SEE SHEET TD-12

APPROVED FOR TEMPORARY DRAINAGE WORK ONLY

TEMPORARY DRAINAGE PLAN
STAGE 1B
SCALE: 1" = 50'

TD-18

REVISED BY	DATE REVISED
BL	5/13/14
BL	2/7/14
BL	4/30/12

CALCULATED-DESIGNED BY: SETH LEIDY
CHECKED BY: TOM CONNELL

CONSULTANT FUNCTIONAL SUPERVISOR: MICHAEL LOHMAN

STATE OF CALIFORNIA - DEPARTMENT OF TRANSPORTATION
Caltrans

LAST REVISION 00-00-00
DATE PLOTTED => 30-SEP-2014
TIME PLOTTED => 14:18

BORDER LAST REVISED 7/2/2010
USERNAME => acroskey
DGN FILE => 04000007351k018.dgn
RELATIVE BORDER SCALE IS IN INCHES 0 1 2 3
UNIT 0716
PROJECT NUMBER & PHASE 04000007351

Dist	COUNTY	ROUTE	POST MILES TOTAL PROJECT	SHEET No.	TOTAL SHEETS
04	Mrn, Son	101	26.8/27.6, 0.0/2.0	298	710

06/30/14
REGISTERED CIVIL ENGINEER — DATE

8-18-14
PLANS APPROVAL DATE

REGISTERED PROFESSIONAL ENGINEER
S. D. DANSKY
No. 60220
Exp. 6/30/16
CIVIL
STATE OF CALIFORNIA

THE STATE OF CALIFORNIA OR ITS OFFICERS OR AGENTS SHALL NOT BE RESPONSIBLE FOR THE ACCURACY OR COMPLETENESS OF SCANNED COPIES OF THIS PLAN SHEET.

MARK THOMAS & CO., INC.
3000 OAK RD, SUITE 650
WALNUT CREEK, CA 94597

TRANSPORTATION AUTHORITY OF MARIN
750 LINDARO ST, SUITE 200
SAN RAFAEL, CA 94901

NOTE:

FOR ACCURATE RIGHT OF WAY DATA, CONTACT RIGHT OF WAY ENGINEERING AT THE DISTRICT OFFICE.

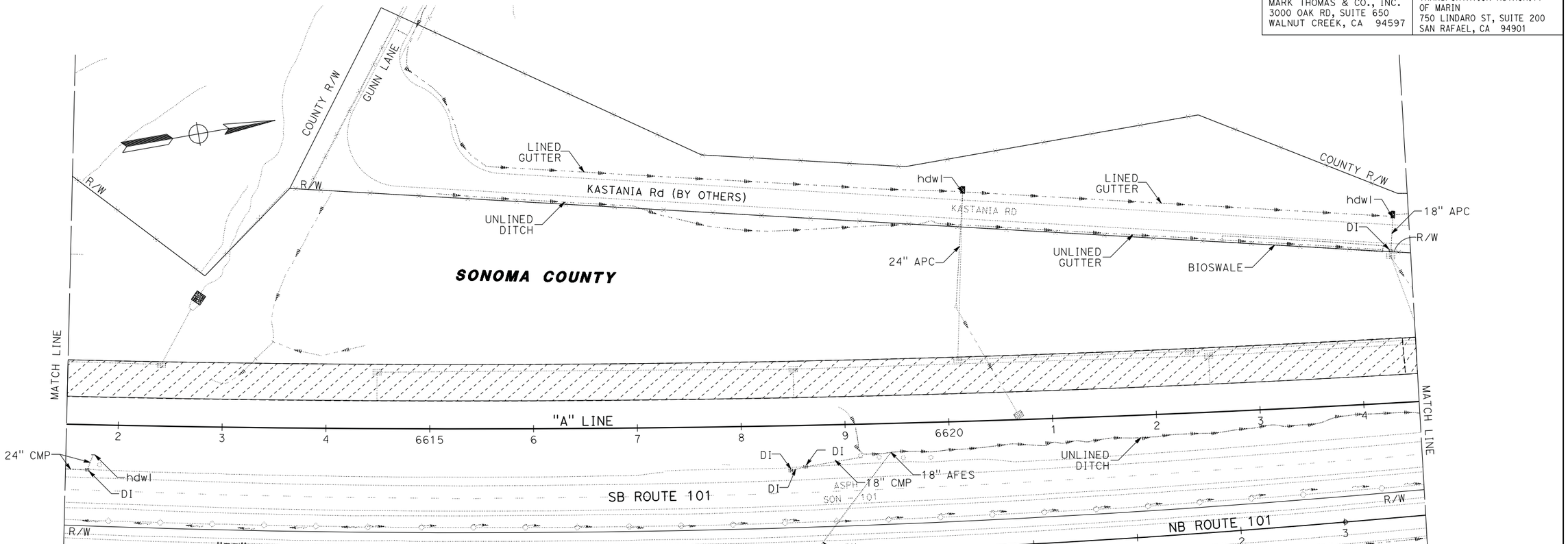

FOR NOTES, ABBREVIATIONS, AND LEGEND, SEE SHEET TD-12

APPROVED FOR TEMPORARY DRAINAGE WORK ONLY

TEMPORARY DRAINAGE PLAN
STAGE 1B
SCALE: 1" = 50'

TD-19

REVISED BY	BL	BL	BL	BL
DATE REVISED	4/30/12	2/7/14	5/13/14	

CALCULATED-DESIGNED BY
CHECKED BY
SETH LEIDY
TOM CONNELL
CONSULTANT FUNCTIONAL SUPERVISOR
MICHAEL LOHMAN

STATE OF CALIFORNIA - DEPARTMENT OF TRANSPORTATION
Caltrans

LAST REVISION 00-00-00
DATE PLOTTED => 30-SEP-2014
TIME PLOTTED => 14:18

BORDER LAST REVISED 7/2/2010
USERNAME => acroskey
DGN FILE => 04000007351ik019.dgn
RELATIVE BORDER SCALE IS IN INCHES 0 1 2 3
UNIT 0716
PROJECT NUMBER & PHASE 04000007351

Dist	COUNTY	ROUTE	POST MILES TOTAL PROJECT	SHEET No.	TOTAL SHEETS
04	Mrn, Son	101	26.8/27.6, 0.0/2.0	299	710

REGISTERED CIVIL ENGINEER — 06/30/14 DATE

8-18-14
PLANS APPROVAL DATE

REGISTERED PROFESSIONAL ENGINEER
S. D. DANSKY
No. 60220
Exp. 6/30/16
CIVIL
STATE OF CALIFORNIA

THE STATE OF CALIFORNIA OR ITS OFFICERS OR AGENTS SHALL NOT BE RESPONSIBLE FOR THE ACCURACY OR COMPLETENESS OF SCANNED COPIES OF THIS PLAN SHEET.

MARK THOMAS & CO., INC.
3000 OAK RD, SUITE 650
WALNUT CREEK, CA 94597

TRANSPORTATION AUTHORITY OF MARIN
750 LINDARO ST, SUITE 200
SAN RAFAEL, CA 94901

NOTE:

FOR ACCURATE RIGHT OF WAY DATA, CONTACT RIGHT OF WAY ENGINEERING AT THE DISTRICT OFFICE.

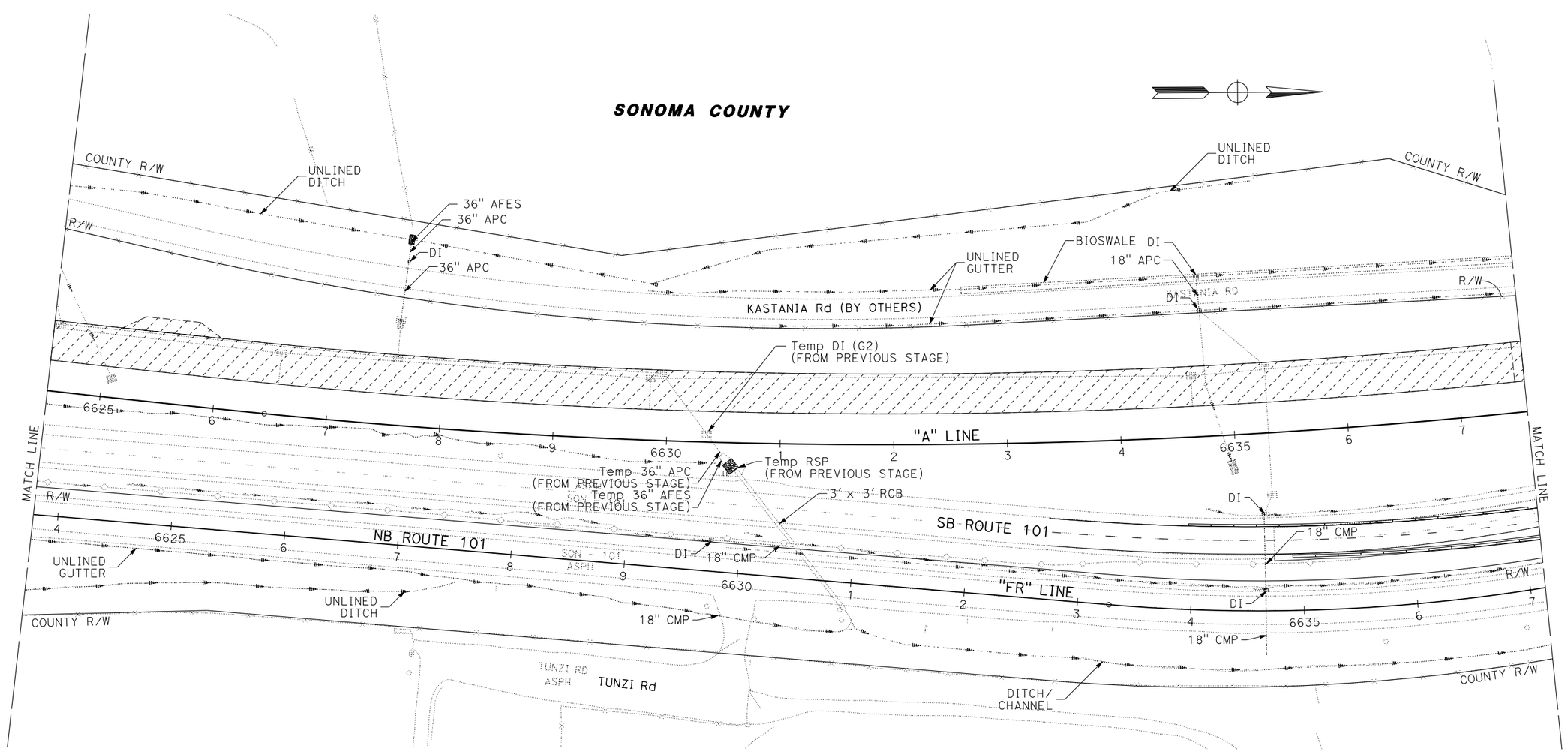

FOR NOTES, ABBREVIATIONS, AND LEGEND, SEE SHEET TD-12

APPROVED FOR TEMPORARY DRAINAGE WORK ONLY

TEMPORARY DRAINAGE PLAN
STAGE 1B

SCALE: 1" = 50'

TD-20

REVISED BY	DATE REVISED
BL	4/30/12
BL	2/7/14
BL	5/13/14

SETH LEIDY — CALCULATED-DESIGNED BY
TOM CONNELL — CHECKED BY
MICHAEL LOHMAN — CONSULTANT FUNCTIONAL SUPERVISOR

STATE OF CALIFORNIA - DEPARTMENT OF TRANSPORTATION

LAST REVISION 00-00-00
DATE PLOTTED => 30-SEP-2014
TIME PLOTTED => 14:18

BORDER LAST REVISED 7/2/2010
USERNAME => acroskey
DGN FILE => 0400000735ik020.dgn
RELATIVE BORDER SCALE IS IN INCHES 0 1 2 3
UNIT 0716
PROJECT NUMBER & PHASE 04000007351

Dist	COUNTY	ROUTE	POST MILES TOTAL PROJECT	SHEET No.	TOTAL SHEETS
04	Mrn, Son	101	26.8/27.6, 0.0/2.0	300	710

REGISTERED CIVIL ENGINEER — DATE 06/30/14

8-18-14
PLANS APPROVAL DATE

REGISTERED PROFESSIONAL ENGINEER
S. D. DANSKY
No. 60220
Exp. 6/30/16
CIVIL
STATE OF CALIFORNIA

THE STATE OF CALIFORNIA OR ITS OFFICERS OR AGENTS SHALL NOT BE RESPONSIBLE FOR THE ACCURACY OR COMPLETENESS OF SCANNED COPIES OF THIS PLAN SHEET.

MARK THOMAS & CO., INC.
3000 OAK RD, SUITE 650
WALNUT CREEK, CA 94597

TRANSPORTATION AUTHORITY OF MARIN
750 LINDARO ST, SUITE 200
SAN RAFAEL, CA 94901

NOTE:

FOR ACCURATE RIGHT OF WAY DATA, CONTACT RIGHT OF WAY ENGINEERING AT THE DISTRICT OFFICE.

REVISED BY	DATE REVISED
BL	5/13/14
BL	2/7/14
BL	4/30/12

CALCULATED-DESIGNED BY: SETH LEIDY
CHECKED BY: TOM CONNELL
CONSULTANT FUNCTIONAL SUPERVISOR: MICHAEL LOHMAN
STATE OF CALIFORNIA - DEPARTMENT OF TRANSPORTATION

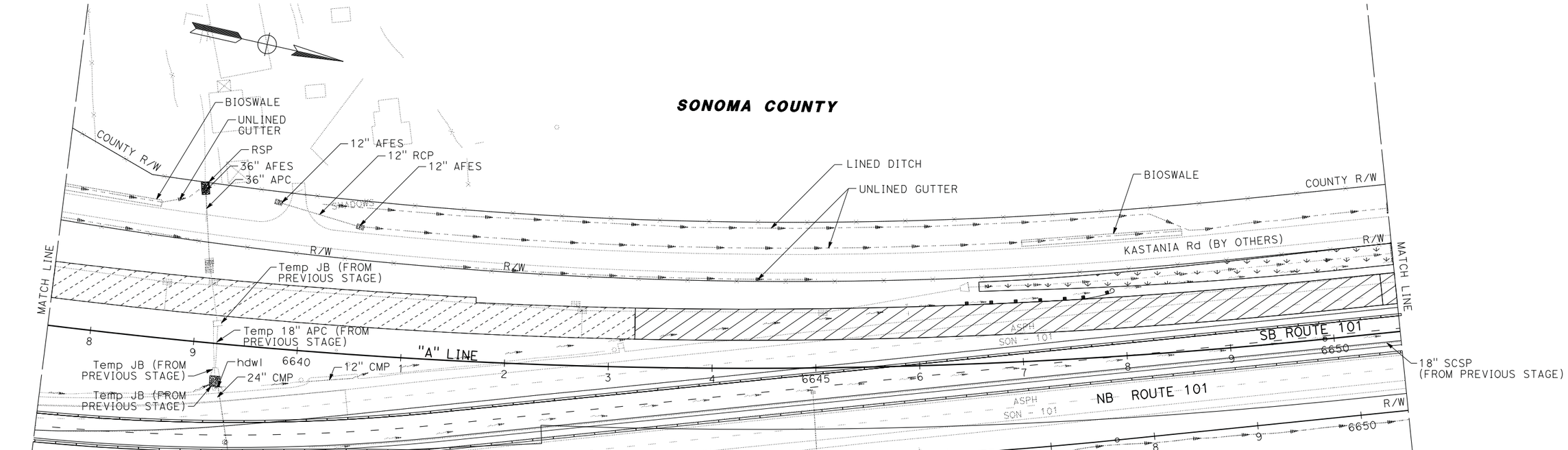

FOR NOTES, ABBREVIATIONS, AND LEGEND, SEE SHEET TD-12

APPROVED FOR TEMPORARY DRAINAGE WORK ONLY

TEMPORARY DRAINAGE PLAN
STAGE 1B
SCALE: 1" = 50'

TD-21

LAST REVISION — DATE PLOTTED => 30-SEP-2014
00-00-00 — TIME PLOTTED => 14:18