DIST	COUNTY	ROUTE	POST MILES TOTAL PROJECT	SHEET No	TOTAL SHEETS
04	Mrn	101	R22.2/24.3	201	223

REGISTERED CIVIL ENGINEER 5/31/12 DATE

6-18-12
PLANS APPROVAL DATE

REGISTERED PROFESSIONAL ENGINEER INES S. LI No. C51561 Exp.6/30/14 CIVIL STATE OF CALIFORNIA

The State of California or its officers or agents shall not be responsible for the accuracy or completeness of scanned copies of this plan sheet.

TAM
750 LINDARO STREET, SUITE 200
SAN RAFAEL, CA 94901

BIGGS CARDOSA ASSOCIATES INC.
865 THE ALAMEDA
SAN JOSE, CALIFORNIA 95126

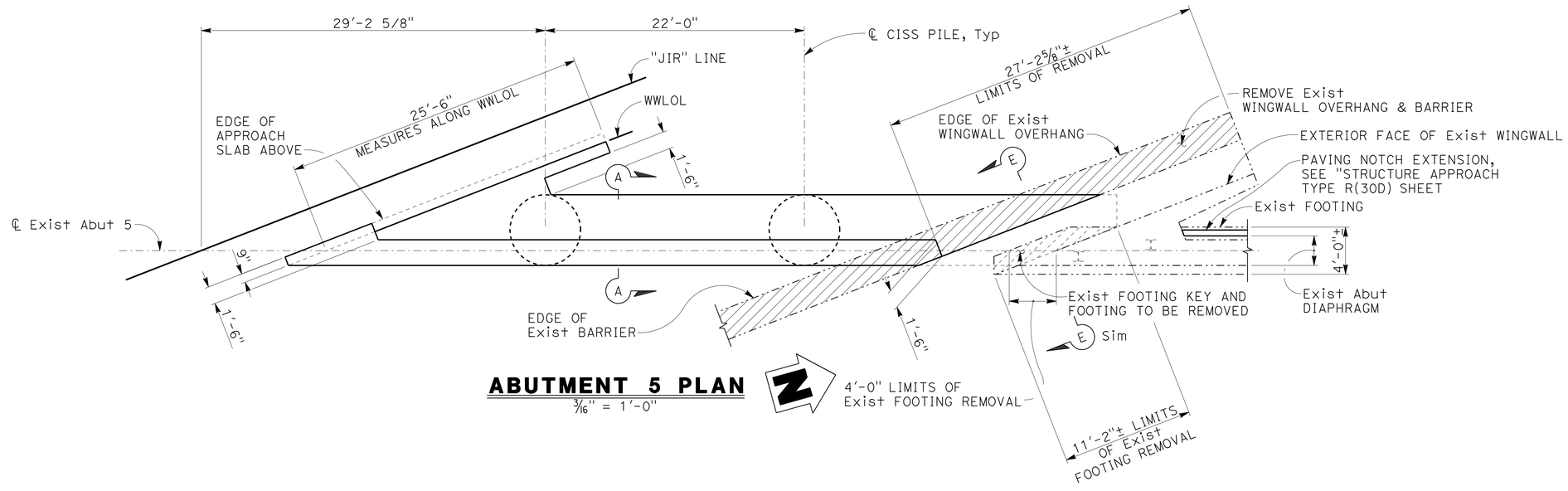

ABUTMENT 5 PLAN

3/16" = 1'-0"

LEGEND:

—·—·—	Indicates Existing Structure
	Indicates Concrete to be Removed
	Indicates Existing Piles
	Indicates New Piles

NOTES:
1. For "SECTION A-A", see "ABUTMENT DETAILS No. 1" sheet
2. For "SECTION E-E", see "ABUTMENT DETAILS No. 2" sheet
3. For "SECTION J-J", "SECTION K-K" and "SECTION L-L" see "ABUTMENT DETAILS No. 3" sheet

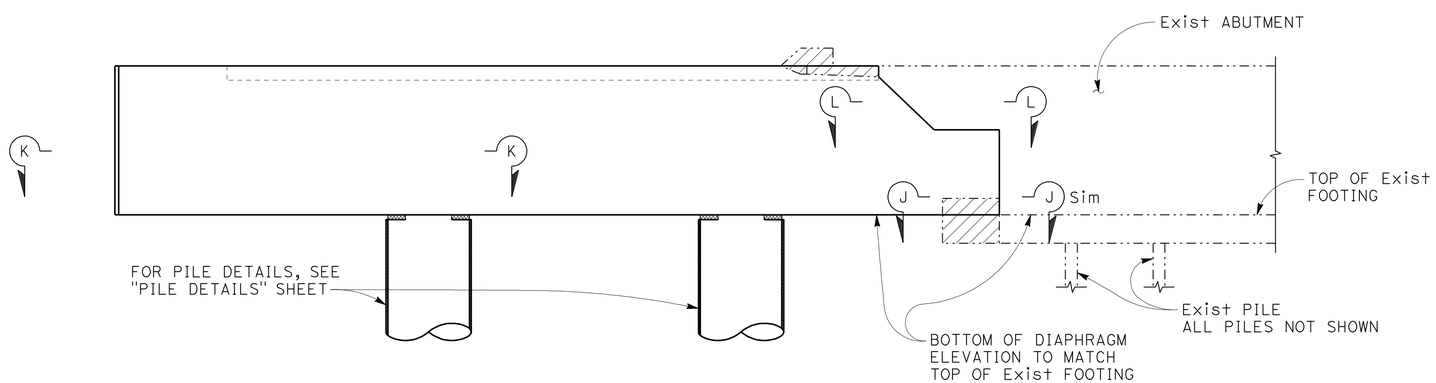

ABUTMENT 5 ELEVATION

3/16" = 1'-0"

NOTE:
THE CONTRACTOR MUST VERIFY ALL CONTROLLING FIELD DIMENSIONS BEFORE ORDERING OR FABRICATING ANY MATERIAL

DESIGN OVERSIGHT Tracy L Bertram
6-8-12
SIGN OFF DATE

	BY	CHECKED
DESIGN	P. GONGIDI	S. KOTAMALA
DETAILS	R. RIVAS	S. OGHUMU
QUANTITIES	P. GONGIDI	S. OGHUMU

PREPARED FOR THE STATE OF CALIFORNIA DEPARTMENT OF TRANSPORTATION

INES LI
PROJECT ENGINEER

BRIDGE NO. 27-0094R
POST MILES R22.3

NORTH NOVATO OVERHEAD (WIDEN)
ABUTMENT 5 LAYOUT

DESIGN GENERAL PLAN SHEET (ENGLISH) (REV. 7/16/10)

ORIGINAL SCALE IN INCHES FOR REDUCED PLANS 0 1 2 3

UNIT: 0716
PROJECT NUMBER & PHASE: 04120003371 CONTRACT NO.: 04-2640L4

DISREGARD PRINTS BEARING EARLIER REVISION DATES → REVISION DATES 11/28/11 4/16/12 5/31/12

SHEET 6 OF 28

FILE => 27-0094r-h-a06-lo1.dgn

USERNAME => s124496 DATE PLOTTED => 22-JUN-2012 TIME PLOTTED => 14:18

2011265 (2011265S6)

DIST	COUNTY	ROUTE	POST MILES TOTAL PROJECT	SHEET No	TOTAL SHEETS
04	Mrn	101	R22.2/24.3	202	223

REGISTERED CIVIL ENGINEER 5/31/12 DATE

6-18-12
PLANS APPROVAL DATE

REGISTERED PROFESSIONAL ENGINEER INES S. LI No. C51561 Exp.6/30/14 CIVIL STATE OF CALIFORNIA

The State of California or its officers or agents shall not be responsible for the accuracy or completeness of scanned copies of this plan sheet.

TAM
750 LINDARO STREET, SUITE 200
SAN RAFAEL, CALIFORNIA 94901

BIGGS CARDOSA ASSOCIATES INC.
865 THE ALAMEDA
SAN JOSE, CALIFORNIA 95126

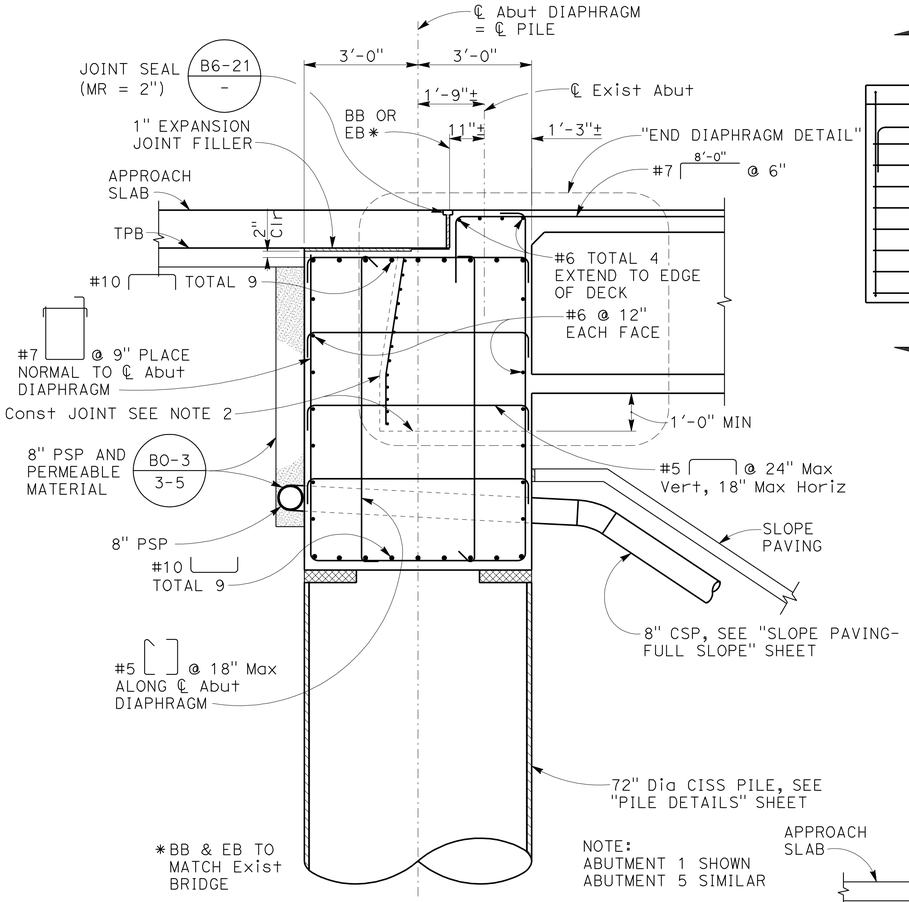

SECTION A-A
1/2" = 1'-0"

NOTE:
ABUTMENT 1 SHOWN
ABUTMENT 5 SIMILAR

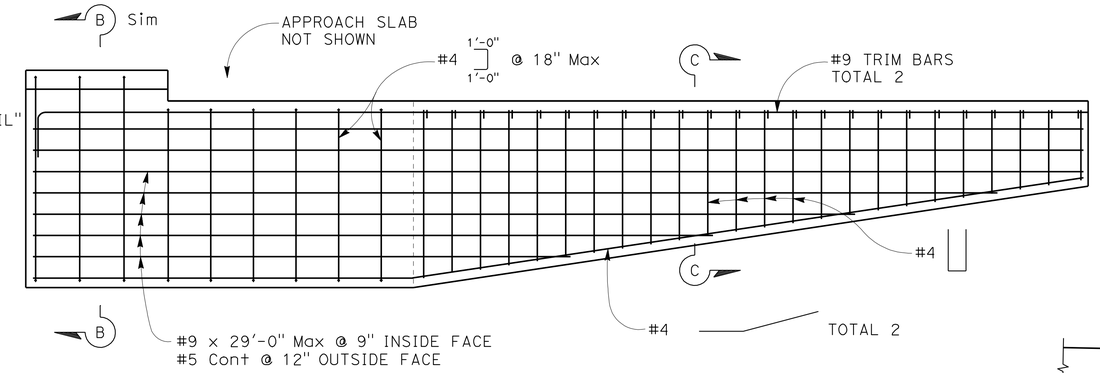

NOTE: OUTSIDE FACE REINFORCEMENT SHOWN

ABUTMENT 1 WINGWALL ELEVATION
3/8" = 1'-0"

NOTES:
1. For "END DIAPHRAGM DETAIL" see "GIRDER LAYOUT No. 2" sheet
2. Place abutment diaphragm after prestressing is completed

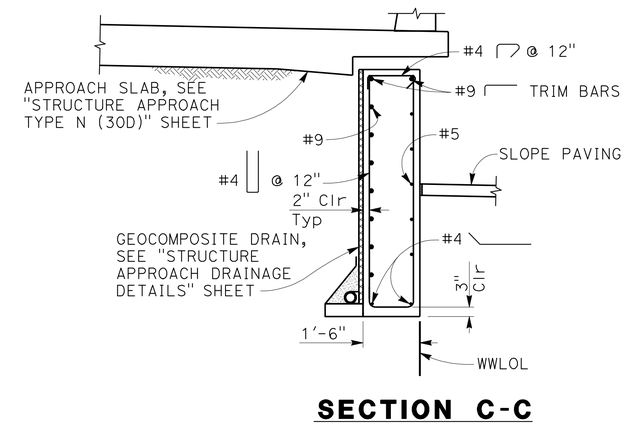

SECTION C-C
1/2" = 1'-0"

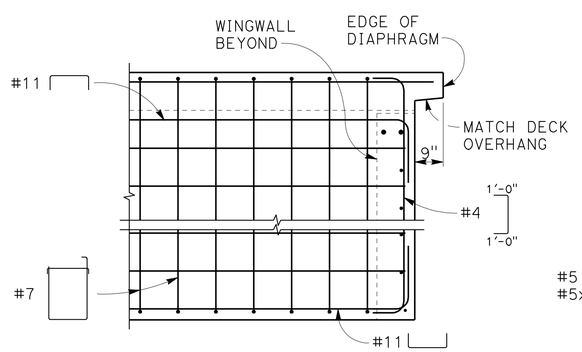

SECTION B-B
1/2" = 1'-0"

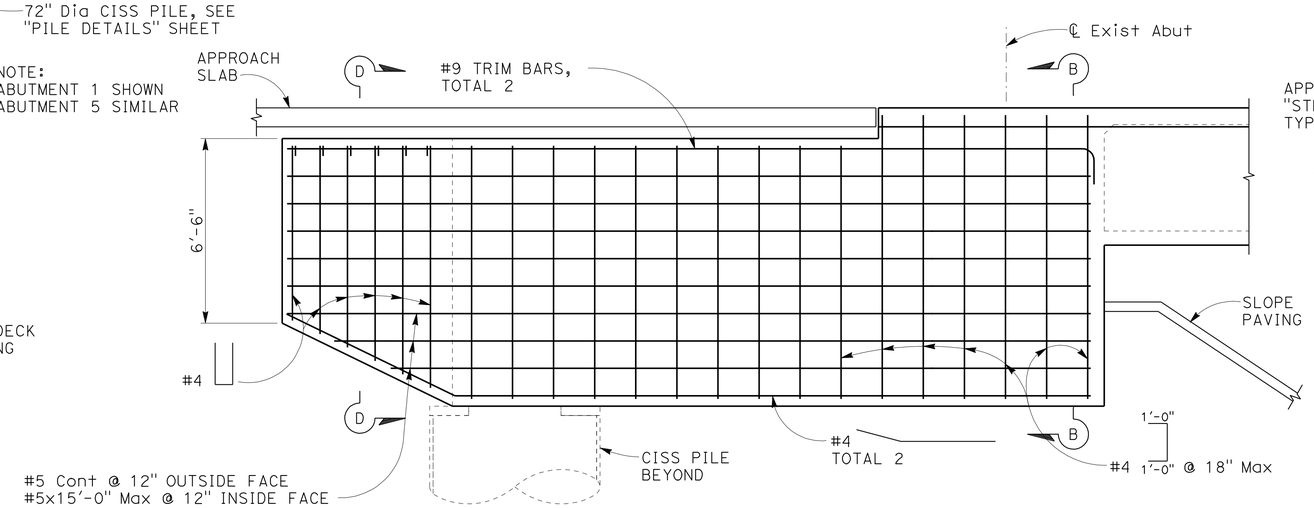

NOTE: OUTSIDE FACE REINFORCEMENT SHOWN

ABUTMENT 5 WINGWALL ELEVATION
3/8" = 1'-0"

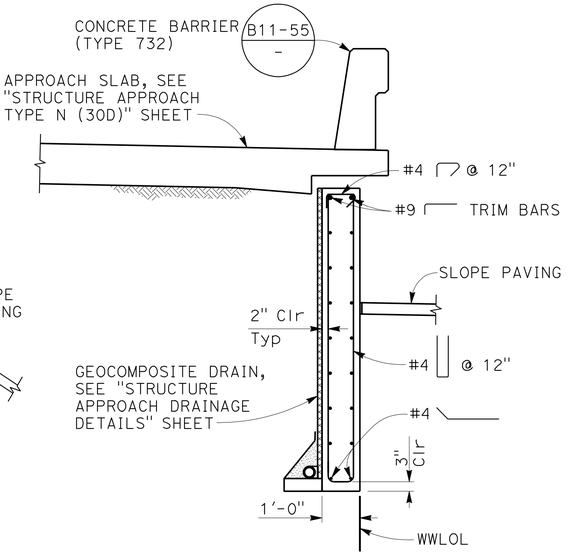

SECTION D-D
1/2" = 1'-0"

NOTE:
THE CONTRACTOR MUST VERIFY ALL CONTROLLING FIELD DIMENSIONS BEFORE ORDERING OR FABRICATING ANY MATERIAL

DESIGN OVERSIGHT Tracy L Bertram
6-8-12
SIGN OFF DATE

	BY	CHECKED
DESIGN	P. GONGIDI	S. KOTAMALA
DETAILS	R. RIVAS	S. OGHUMU
QUANTITIES	P. GONGIDI	S. OGHUMU

PREPARED FOR THE STATE OF CALIFORNIA DEPARTMENT OF TRANSPORTATION

INES LI
PROJECT ENGINEER

BRIDGE NO. 27-0094R
POST MILES R22.3

NORTH NOVATO OVERHEAD (WIDEN)
ABUTMENT DETAILS No. 1

DESIGN GENERAL PLAN SHEET (ENGLISH) (REV. 7/16/10)

ORIGINAL SCALE IN INCHES FOR REDUCED PLANS 0 1 2 3

UNIT: 0716
PROJECT NUMBER & PHASE: 04120003371 CONTRACT NO.: 04-2640L4

DISREGARD PRINTS BEARING EARLIER REVISION DATES → REVISION DATES 11/08/11 4/16/12 5/31/12

SHEET 7 OF 28

FILE => 27-0094r-h-a07d1.dgn

USERNAME => s124196 DATE PLOTTED => 22-JUN-2012 TIME PLOTTED => 14:18
2011265 (2011265S7)

DIST	COUNTY	ROUTE	POST MILES TOTAL PROJECT	SHEET No	TOTAL SHEETS
04	Mrn	101	R22.2/24.3	203	223

REGISTERED CIVIL ENGINEER 5/31/12 DATE

6-18-12
PLANS APPROVAL DATE

REGISTERED PROFESSIONAL ENGINEER INES S. LI No. C51561 Exp.6/30/14 CIVIL STATE OF CALIFORNIA

The State of California or its officers or agents shall not be responsible for the accuracy or completeness of scanned copies of this plan sheet.

TAM
750 LINDARO STREET, SUITE 200
SAN RAFAEL, CALIFORNIA 94901

BIGGS CARDOSA ASSOCIATES INC.
865 THE ALAMEDA
SAN JOSE, CALIFORNIA 95126

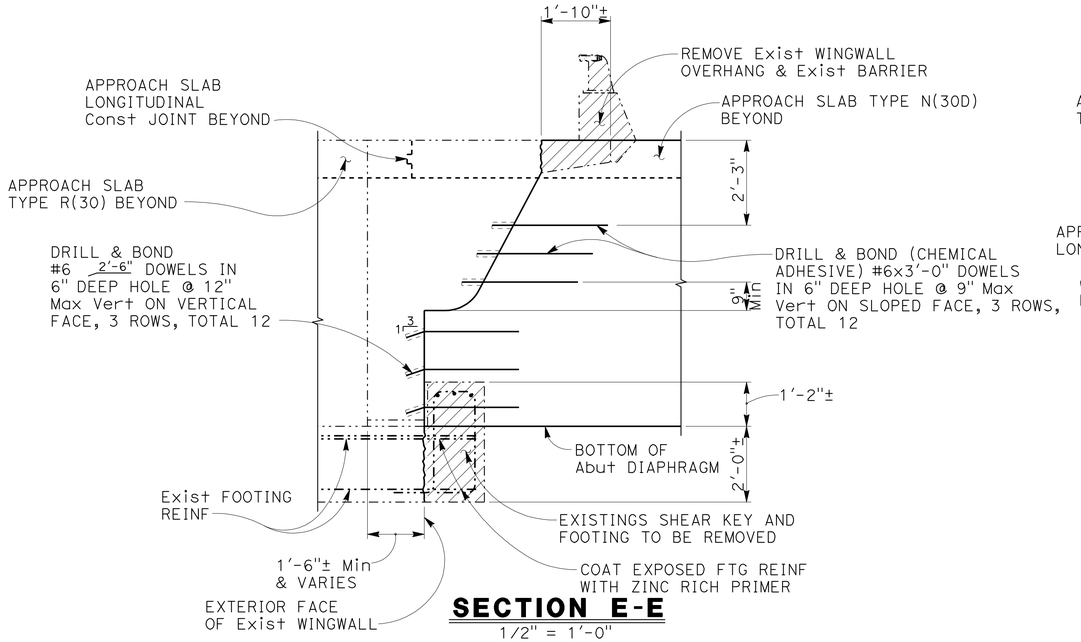

SECTION E-E
1/2" = 1'-0"

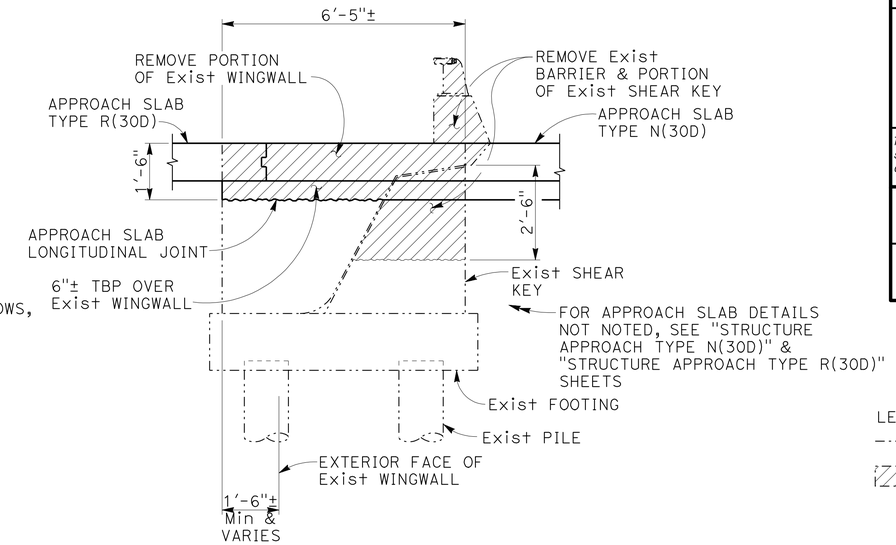

SECTION F-F
1/2" = 1'-0"

LEGEND:

Indicates Existing Structure

Indicates Concrete to be Removed

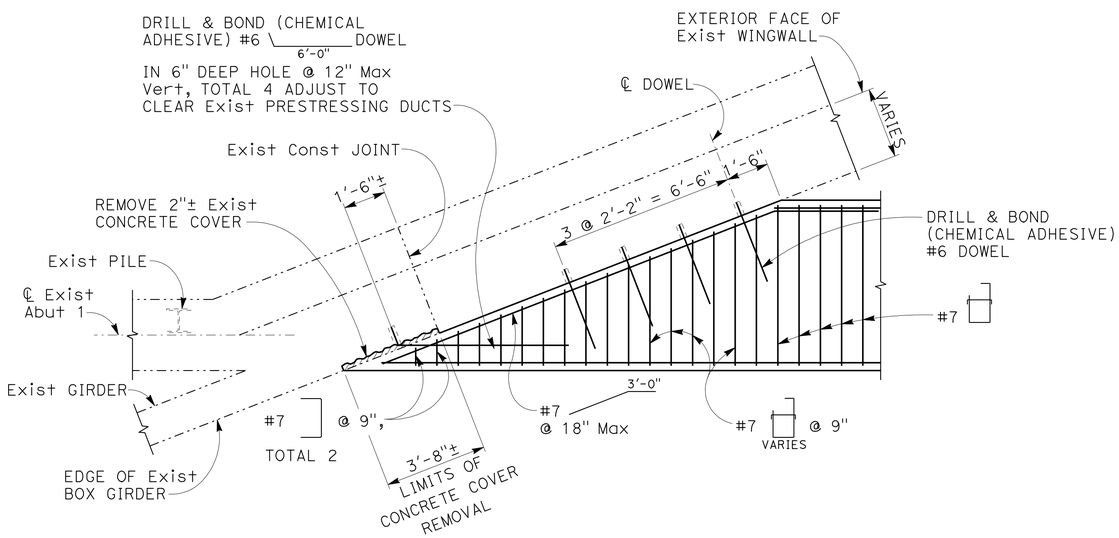

SECTION G-G
3/8" = 1'-0"

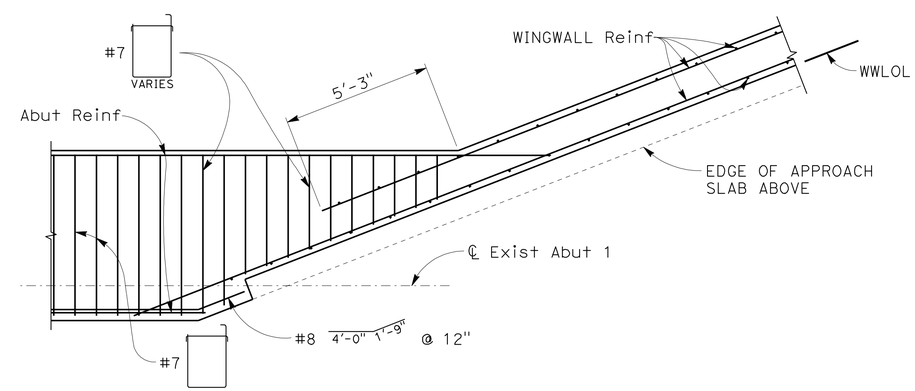

SECTION H-H
3/8" = 1'-0"

NOTE:
THE CONTRACTOR MUST VERIFY ALL CONTROLLING FIELD DIMENSIONS BEFORE ORDERING OR FABRICATING ANY MATERIAL

DESIGN OVERSIGHT Tracy L Bertram
6-8-12
SIGN OFF DATE

	BY	CHECKED
DESIGN	P. GONGIDI	S. KOTAMALA
DETAILS	R. RIVAS	S. OGHUMU
QUANTITIES	P. GONGIDI	S. OGHUMU

PREPARED FOR THE STATE OF CALIFORNIA DEPARTMENT OF TRANSPORTATION

INES LI
PROJECT ENGINEER

BRIDGE NO. 27-0094R
POST MILES R22.3

NORTH NOVATO OVERHEAD (WIDEN)
ABUTMENT DETAILS No. 2

DESIGN GENERAL PLAN SHEET (ENGLISH) (REV. 7/16/10)

ORIGINAL SCALE IN INCHES FOR REDUCED PLANS 0 1 2 3

UNIT: 0716
PROJECT NUMBER & PHASE: 04120003371 CONTRACT NO.: 04-2640L4

DISREGARD PRINTS BEARING EARLIER REVISION DATES 11/28/11 4/16/12 5/31/12

SHEET 8 OF 28

FILE => 27-0094r-h-a08d2.dgn

USERNAME => S13244496 DATE PLOTTED => 22-JUN-2012 TIME PLOTTED => 14:18

2011265 (2011265S8)

DIST	COUNTY	ROUTE	POST MILES TOTAL PROJECT	SHEET No	TOTAL SHEETS
04	Mrn	101	R22.2/24.3	204	223

REGISTERED CIVIL ENGINEER 5/31/12 DATE

6-18-12
PLANS APPROVAL DATE

REGISTERED PROFESSIONAL ENGINEER INES S. LI No. C51561 Exp.6/30/14 CIVIL STATE OF CALIFORNIA

The State of California or its officers or agents shall not be responsible for the accuracy or completeness of scanned copies of this plan sheet.

TAM
750 LINDARO STREET, SUITE 200
SAN RAFAEL, CALIFORNIA 94901

BIGGS CARDOSA ASSOCIATES INC.
865 THE ALAMEDA
SAN JOSE, CALIFORNIA 95126

NOTE:
For "SECTION G-G", see "ABUTMENT DETAILS No. 2" sheet

LEGEND:
—··—··— Indicates Existing Structure
Indicates Concrete to be Removed

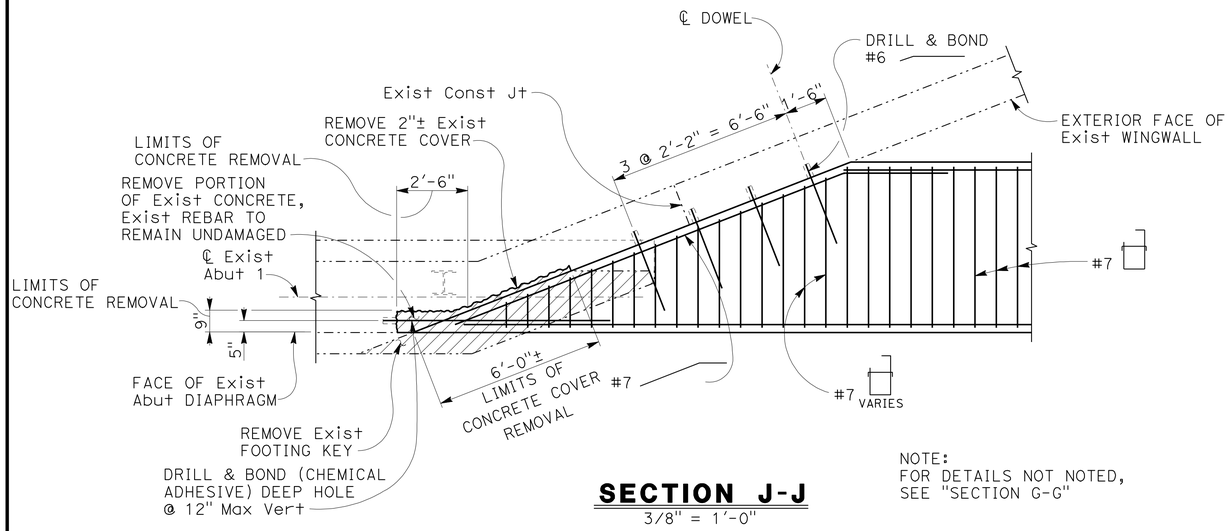

SECTION J-J
3/8" = 1'-0"

NOTE:
FOR DETAILS NOT NOTED, SEE "SECTION G-G"

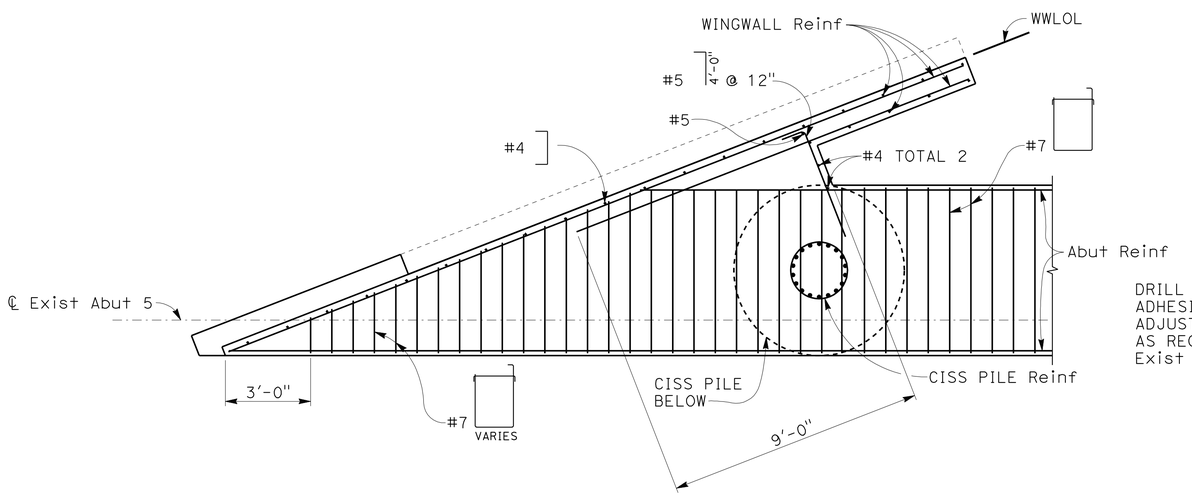

SECTION K-K
3/8" = 1'-0"

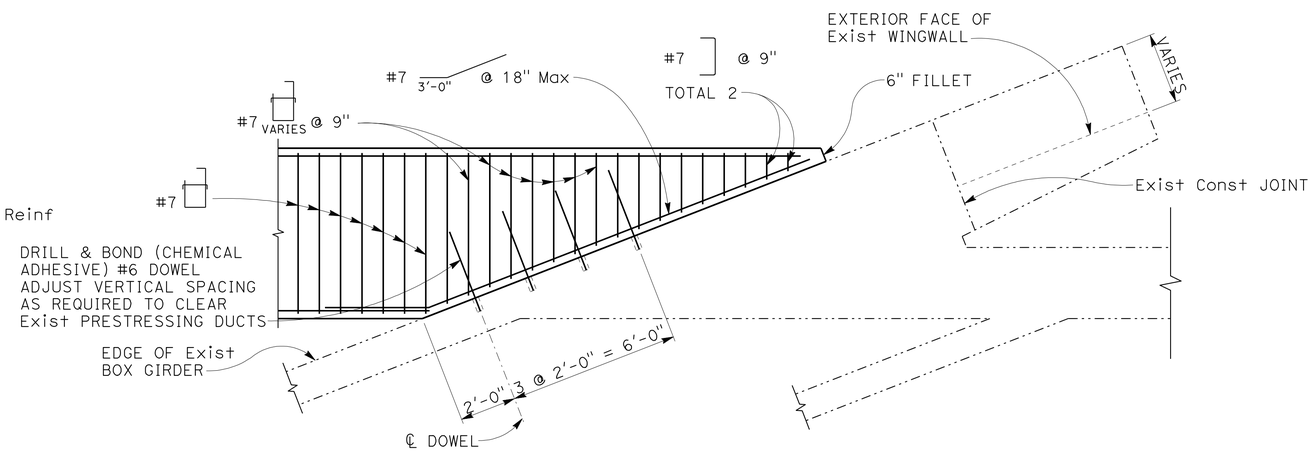

SECTION L-L
3/8" = 1'-0"

NOTE:
THE CONTRACTOR MUST VERIFY ALL CONTROLLING FIELD DIMENSIONS BEFORE ORDERING OR FABRICATING ANY MATERIAL

DESIGN OVERSIGHT Tracy L Bertram
6-8-12
SIGN OFF DATE

	BY	CHECKED
DESIGN	P. GONGIDI	S. KOTAMALA
DETAILS	R. RIVAS	S. OGHUMU
QUANTITIES	P. GONGIDI	S. OGHUMU

PREPARED FOR THE STATE OF CALIFORNIA DEPARTMENT OF TRANSPORTATION

INES LI
PROJECT ENGINEER

BRIDGE NO. 27-0094R
POST MILES R22.3

NORTH NOVATO OVERHEAD (WIDEN)
ABUTMENT DETAILS No. 3

DESIGN GENERAL PLAN SHEET (ENGLISH) (REV. 7/16/10)

ORIGINAL SCALE IN INCHES FOR REDUCED PLANS 0 1 2 3

UNIT: 0716
PROJECT NUMBER & PHASE: 04120003371 CONTRACT NO.: 04-2640L4

DISREGARD PRINTS BEARING EARLIER REVISION DATES → REVISION DATES 11/28/11 4/16/12 5/31/12

SHEET 9 OF 28

FILE => 27-0094r-h-a09d3.dgn

USERNAME => s124196 DATE PLOTTED => 22-JUN-2012 TIME PLOTTED => 14:18 2011265 (2011265S9)

DIST	COUNTY	ROUTE	POST MILES TOTAL PROJECT	SHEET No	TOTAL SHEETS
04	Mrn	101	R22.2/24.3	205	223

REGISTERED CIVIL ENGINEER 5/31/12 DATE

6-18-12
PLANS APPROVAL DATE

The State of California or its officers or agents shall not be responsible for the accuracy or completeness of scanned copies of this plan sheet.

REGISTERED PROFESSIONAL ENGINEER INES S. LI No. C51561 Exp.6/30/14 CIVIL STATE OF CALIFORNIA

TAM
750 LINDARO STREET, SUITE 200
SAN RAFAEL, CALIFORNIA 94901

BIGGS CARDOSA ASSOCIATES INC.
865 THE ALAMEDA
SAN JOSE, CALIFORNIA 95126

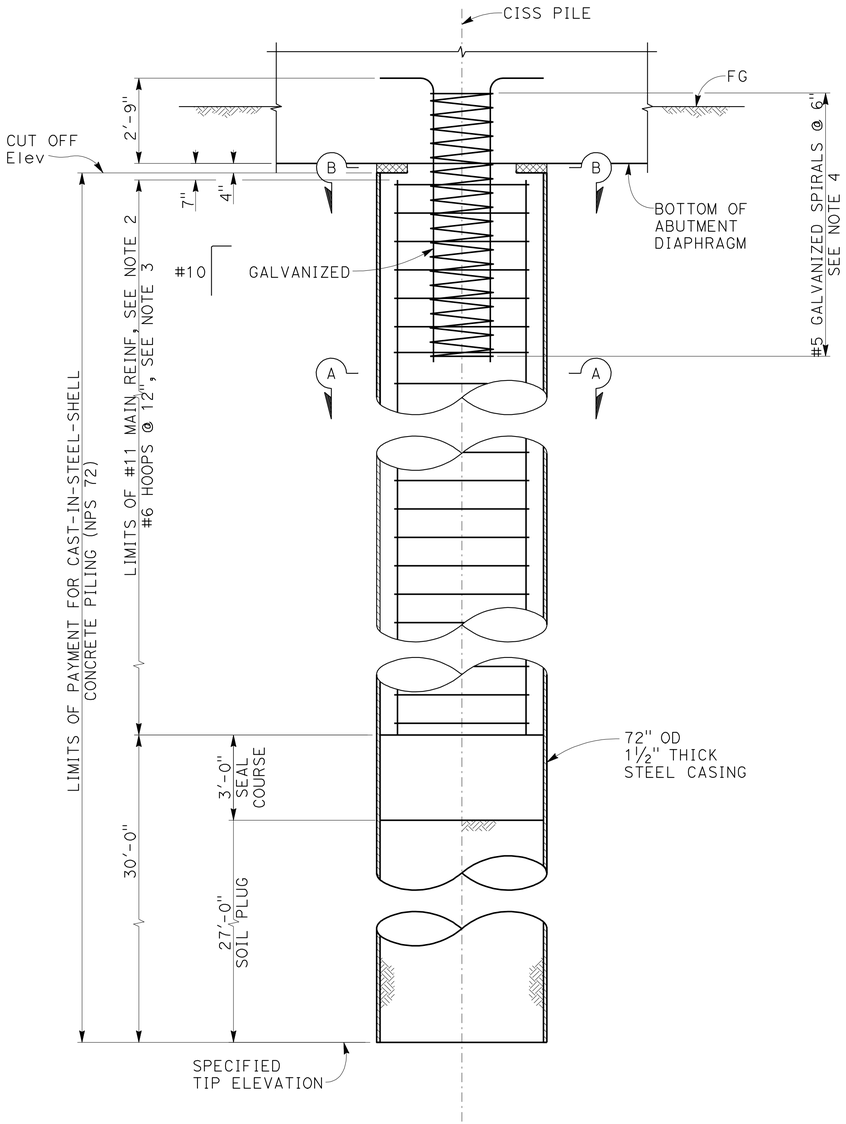

72" DIA CISS PILE ELEVATION

3/8" = 1'-0"

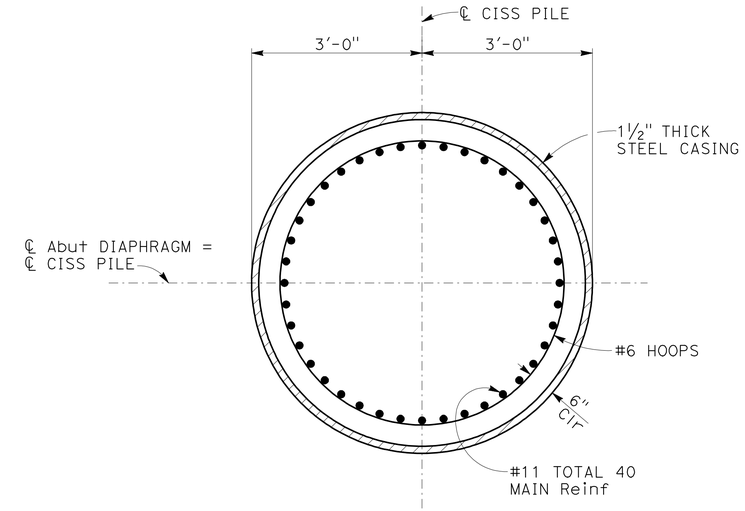

SECTION A-A

3/4" = 1'-0"

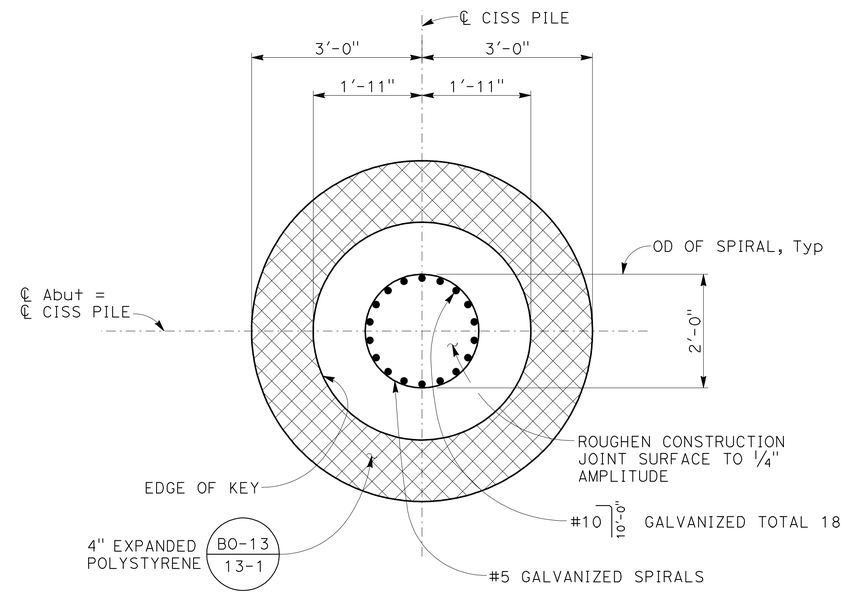

SECTION B-B

3/4" = 1'-0"

NOTES:

1. For specified tip elevations, see "PILE DATA TABLE" on "FOUNDATION PLAN" sheet.
2. Main reinforcing must utilize ultimate butt splices.
3. Hoops must utilize ultimate butt splices.
4. Spirals must be spliced using ultimate butt splices. Spiral reinforcement at end must be terminated by a 135° hook with 6" long tail, hooked around a main reinforcing bar.

NOTE:
THE CONTRACTOR MUST VERIFY ALL CONTROLLING FIELD DIMENSIONS BEFORE ORDERING OR FABRICATING ANY MATERIAL

DESIGN OVERSIGHT Tracy L Bertram
6-8-12
SIGN OFF DATE

	BY	CHECKED
DESIGN	P. GONGIDI	S. KOTAMALA
DETAILS	R. RIVAS	S. OGHUMU
QUANTITIES	P. GONGIDI	S. OGHUMU

PREPARED FOR THE STATE OF CALIFORNIA DEPARTMENT OF TRANSPORTATION

INES LI
PROJECT ENGINEER

BRIDGE NO. 27-0094R
POST MILES R22.3

NORTH NOVATO OVERHEAD (WIDEN)
PILE DETAILS

DESIGN GENERAL PLAN SHEET (ENGLISH) (REV. 7/16/10)

ORIGINAL SCALE IN INCHES FOR REDUCED PLANS 0 1 2 3

UNIT: 0716
PROJECT NUMBER & PHASE: 04120003371 CONTRACT NO.: 04-2640L4

DISREGARD PRINTS BEARING EARLIER REVISION DATES

REVISION DATES 11/28/11 4/16/12 5/31/12

SHEET 10 OF 28

FILE => 27-0094r-i-pd01.dgn

USERNAME => s124496 DATE PLOTTED => 22-JUN-2012 TIME PLOTTED => 14:18

2011265 (2011265S10)

DIST	COUNTY	ROUTE	POST MILES TOTAL PROJECT	SHEET No	TOTAL SHEETS
04	Mrn	101	R22.2/24.3	206	223

REGISTERED CIVIL ENGINEER 5/31/12 DATE

6-18-12
PLANS APPROVAL DATE

REGISTERED PROFESSIONAL ENGINEER INES S. LI No. C51561 Exp.6/30/14 CIVIL STATE OF CALIFORNIA

The State of California or its officers or agents shall not be responsible for the accuracy or completeness of scanned copies of this plan sheet.

TAM
750 LINDARO STREET, SUITE 200
SAN RAFAEL, CALIFORNIA 94901

BIGGS CARDOSA ASSOCIATES INC.
865 THE ALAMEDA
SAN JOSE, CALIFORNIA 95126

NOTES:

1. Column hoops must utilize ultimate butt splices.
2. Place stirrups normal to ℄ Bent and space along ℄ Bent
3. Splices not permitted in column main reinf.
4. For "SECTION A-A", "SECTION B-B" and "SECTION C-C", see "BENT DETAILS No. 1" sheet.
5. For "DETAIL 1", "DETAIL 2", "SECTION D-D" & "SECTION E-E", SEE "BENT DETAILS No. 2" sheet.
6. See "BENT CAP PLAN" ON "BENT DETAILS No. 2" sheet.
7. Bent 3 shown, bents 2 & 4 similar.

LEGEND:

Indicates Closure Pour

Indicates Expanded Polystyrene

Indicates Bundled Bars

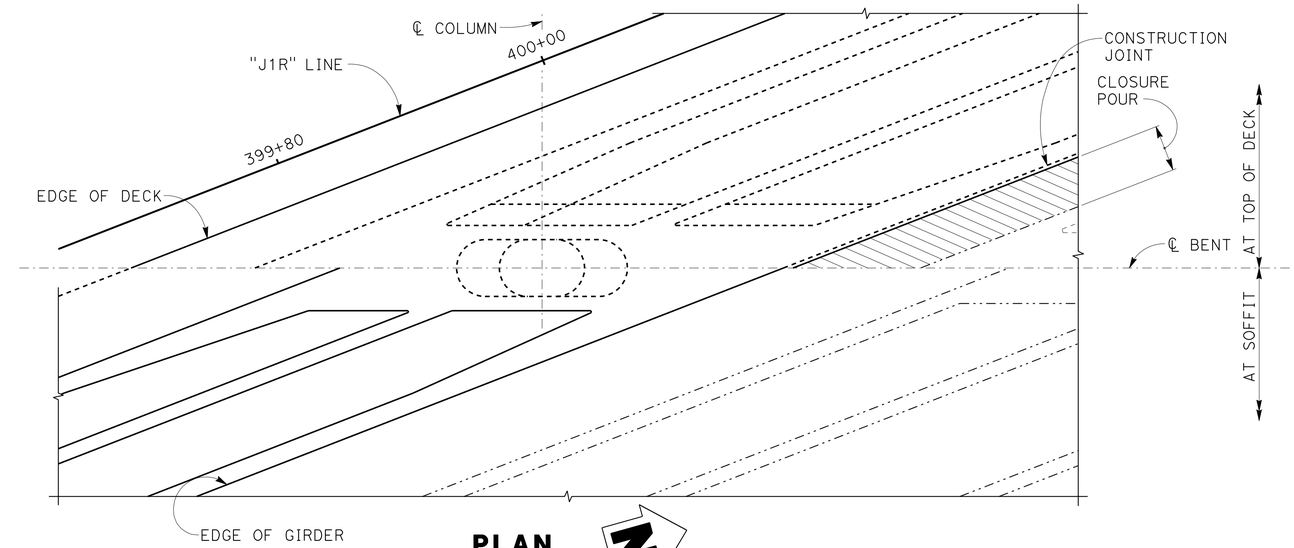

PLAN
3/16" = 1'-0"

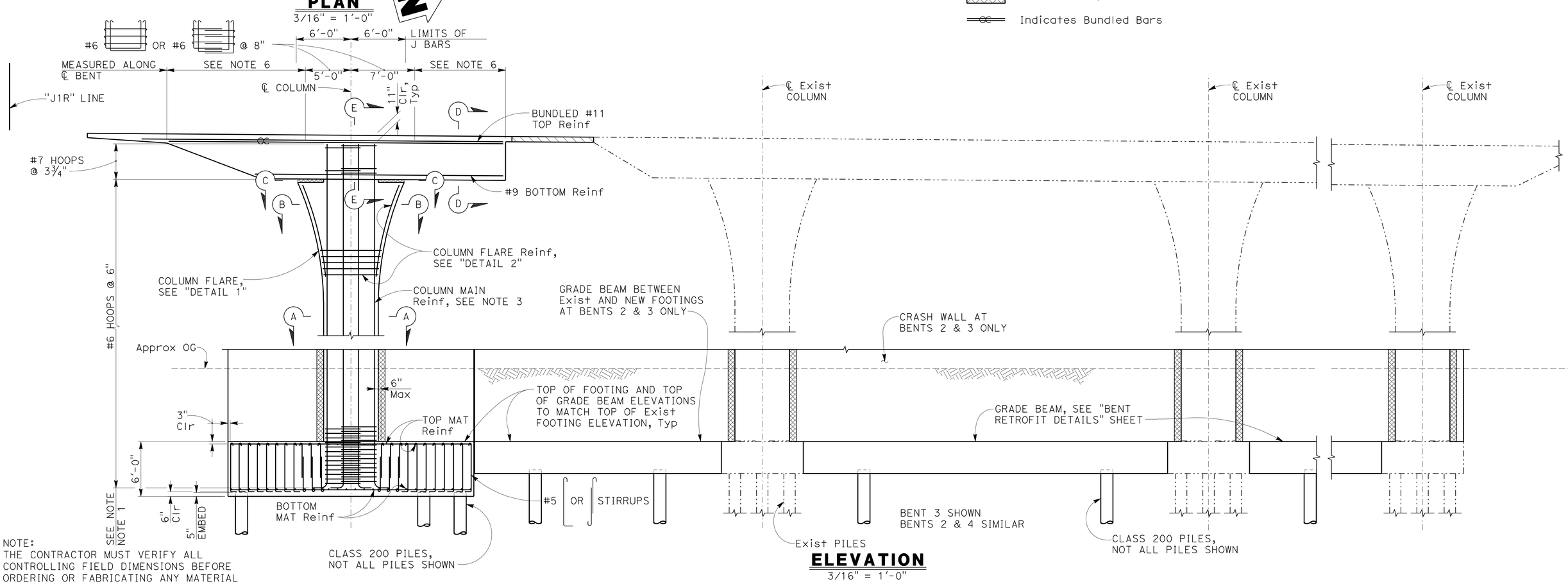

ELEVATION
3/16" = 1'-0"

NOTE:
THE CONTRACTOR MUST VERIFY ALL CONTROLLING FIELD DIMENSIONS BEFORE ORDERING OR FABRICATING ANY MATERIAL

Tracy L Bertram
DESIGN OVERSIGHT
6-8-12
SIGN OFF DATE

	BY	CHECKED
DESIGN	P. GONGIDI	S. KOTAMALA
DETAILS	R. RIVAS	S. OGHUMU
QUANTITIES	P. GONGIDI	S. OGHUMU

PREPARED FOR THE STATE OF CALIFORNIA DEPARTMENT OF TRANSPORTATION

INES LI
PROJECT ENGINEER

BRIDGE NO. 27-0094R
POST MILES R22.3

NORTH NOVATO OVERHEAD (WIDEN)
BENT LAYOUT

DESIGN GENERAL PLAN SHEET (ENGLISH) (REV. 7/16/10)

ORIGINAL SCALE IN INCHES FOR REDUCED PLANS 0 1 2 3

UNIT: 0716
PROJECT NUMBER & PHASE: 04120003371 CONTRACT NO.: 04-2640L4

DISREGARD PRINTS BEARING EARLIER REVISION DATES → REVISION DATES 11/28/11 4/16/12 5/31/12

SHEET 11 OF 28

FILE => 27-0094r-j-b11-lo1.dgn

USERNAME => S13244496 DATE PLOTTED => 22-JUN-2012 TIME PLOTTED => 14:19

2011265 (20112655111)

DIST	COUNTY	ROUTE	POST MILES TOTAL PROJECT	SHEET No	TOTAL SHEETS
04	Mrn	101	R22.2/24.3	207	223

REGISTERED CIVIL ENGINEER 5/31/12 DATE

6-18-12
PLANS APPROVAL DATE

REGISTERED PROFESSIONAL ENGINEER INES S. LI No. C51561 Exp.6/30/14 CIVIL STATE OF CALIFORNIA

The State of California or its officers or agents shall not be responsible for the accuracy or completeness of scanned copies of this plan sheet.

TAM
750 LINDARO STREET, SUITE 200
SAN RAFAEL, CALIFORNIA 94901

BIGGS CARDOSA ASSOCIATES INC.
865 THE ALAMEDA
SAN JOSE, CALIFORNIA 95126

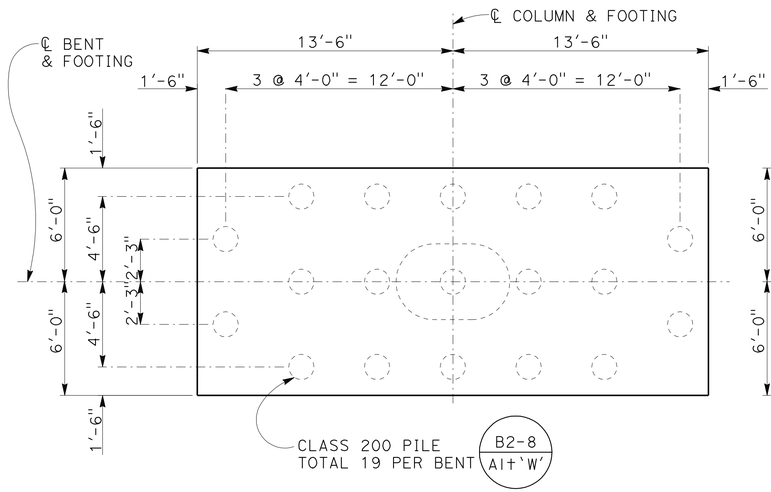

FOOTING PLAN
1/4" = 1'-0"

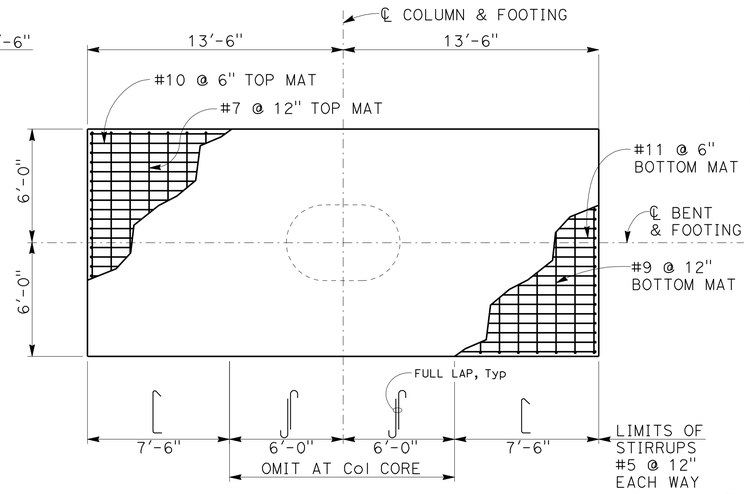

FOOTING REINFORCEMENT PLAN
1/4" = 1'-0"

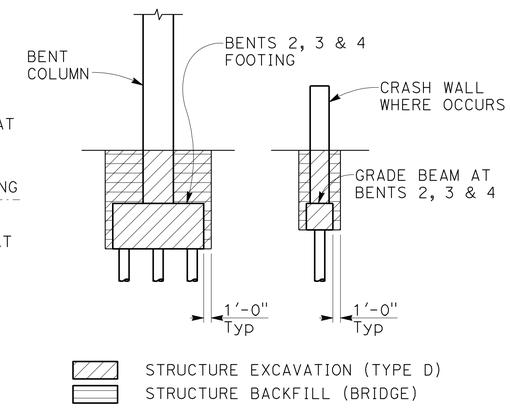

LIMITS OF PAYMENT FOR BENT EXCAVATION & BACKFILL
NO SCALE

NOTES:

1. Splices not permitted in footing top and bottom mat reinforcement
2. Contractor must submit to Engineer for approval pile spacings that differ to those shown on plans
3. Bundle #10 column main reinf in 2-bar bundles as required to clear girder reinforcement

LEGEND:

- Indicates Expanded Polystyrene
- Indicates Pile
- Indicates Service Level Mechanical Splice

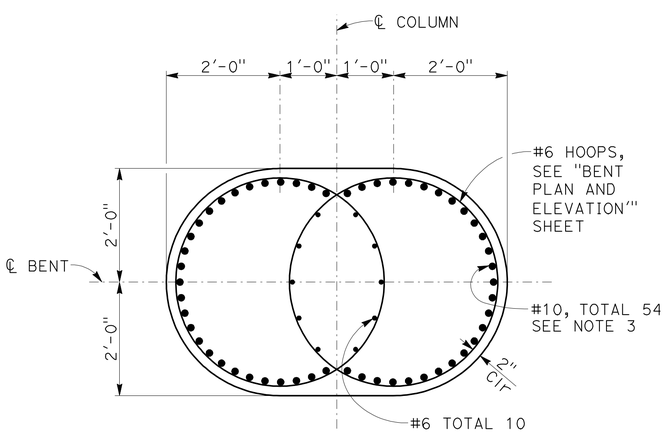

SECTION A-A
3/4" = 1'-0"

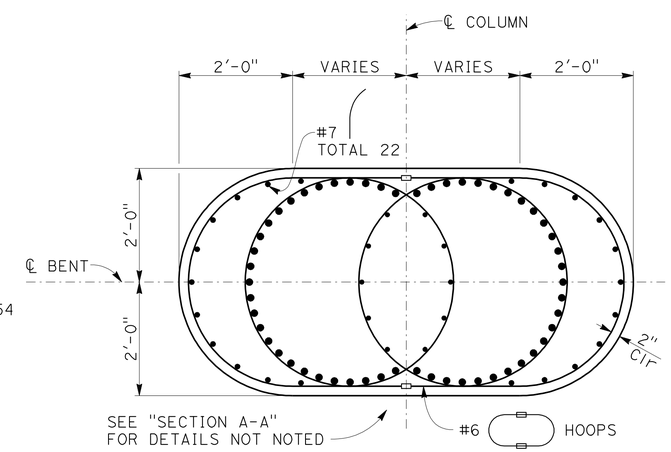

SECTION B-B
3/4" = 1'-0"

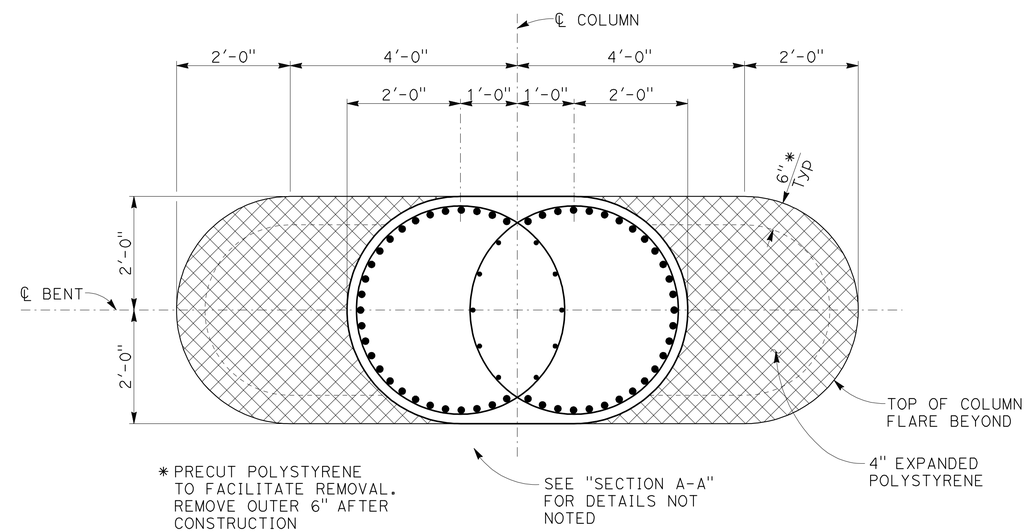

SECTION C-C
3/4" = 1'-0"

NOTE:
THE CONTRACTOR MUST VERIFY ALL CONTROLLING FIELD DIMENSIONS BEFORE ORDERING OR FABRICATING ANY MATERIAL

DESIGN OVERSIGHT Tracy L Bertram
6-8-12
SIGN OFF DATE

	BY	CHECKED
DESIGN	P. GONGIDI	S. KOTAMALA
DETAILS	R. RIVAS	S. OGHUMU
QUANTITIES	P. GONGIDI	S. OGHUMU

PREPARED FOR THE STATE OF CALIFORNIA DEPARTMENT OF TRANSPORTATION

INES LI
PROJECT ENGINEER

BRIDGE NO. 27-0094R
POST MILES R22.3

NORTH NOVATO OVERHEAD (WIDEN)
BENT DETAILS No. 1

DESIGN GENERAL PLAN SHEET (ENGLISH) (REV. 7/16/10)

ORIGINAL SCALE IN INCHES FOR REDUCED PLANS 0 1 2 3

UNIT: 0716
PROJECT NUMBER & PHASE: 04120003371 CONTRACT NO.: 04-2640L4

DISREGARD PRINTS BEARING EARLIER REVISION DATES → REVISION DATES 11/28/11 4/16/12 5/31/12

SHEET 12 OF 28

FILE => 27-0094r-j-b12d1.dgn

USERNAME => S124496 DATE PLOTTED => 22-JUN-2012 TIME PLOTTED => 14:19

2011265 (2011265S12)

DIST	COUNTY	ROUTE	POST MILES TOTAL PROJECT	SHEET No	TOTAL SHEETS
04	Mrn	101	R22.2/24.3	208	223

REGISTERED CIVIL ENGINEER 5/31/12 DATE

6-18-12
PLANS APPROVAL DATE

REGISTERED PROFESSIONAL ENGINEER INES S. LI No. C51561 Exp.6/30/14 CIVIL STATE OF CALIFORNIA

The State of California or its officers or agents shall not be responsible for the accuracy or completeness of scanned copies of this plan sheet.

TAM
750 LINDARO STREET, SUITE 200
SAN RAFAEL, CALIFORNIA 94901

BIGGS CARDOSA ASSOCIATES INC.
865 THE ALAMEDA
SAN JOSE, CALIFORNIA 95126

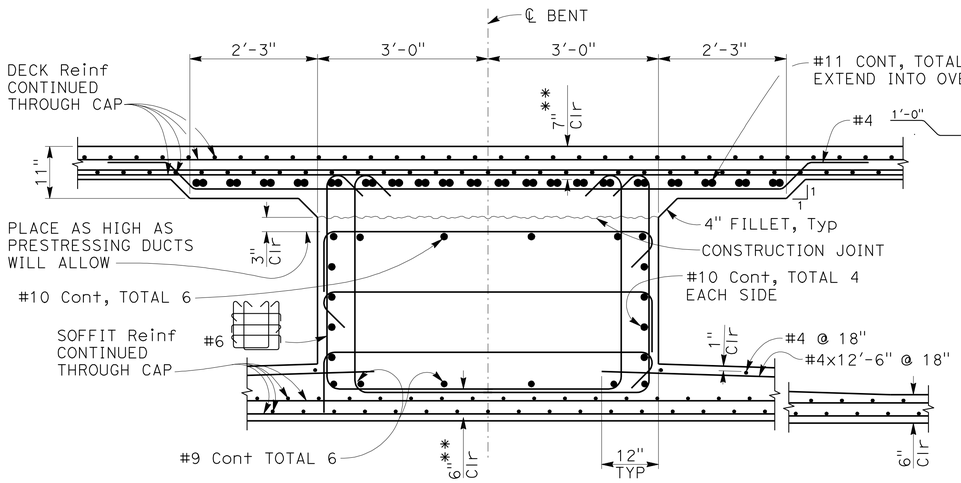

** Clearance to main cap reinforcing
* Place construction reinforcing as required to clear prestress tendons

SECTION D-D
3/4" = 1'-0"

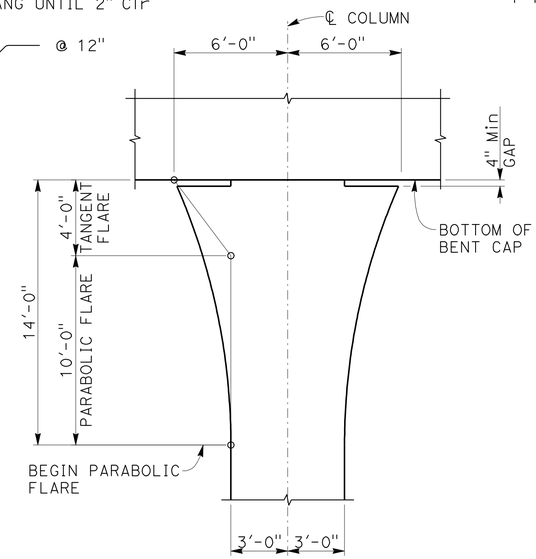

COLUMN FLARE - DETAIL 1
NO SCALE

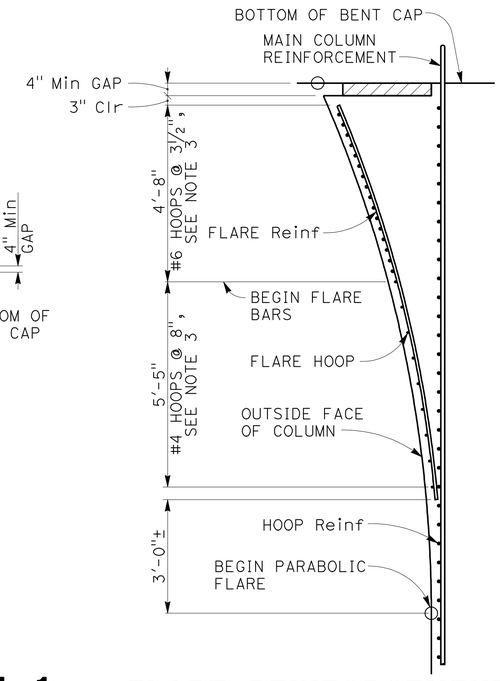

FLARE REINFORCEMENT - DETAIL 2
NO SCALE

NOTES:
1. Field adjust bent cap bottom bars as needed to clear column reinf.
2. Place column hoops to clear bent cap bottom reinf and soffit reinf.
3. Column flare hoops must utilize service level mechanical couplers.

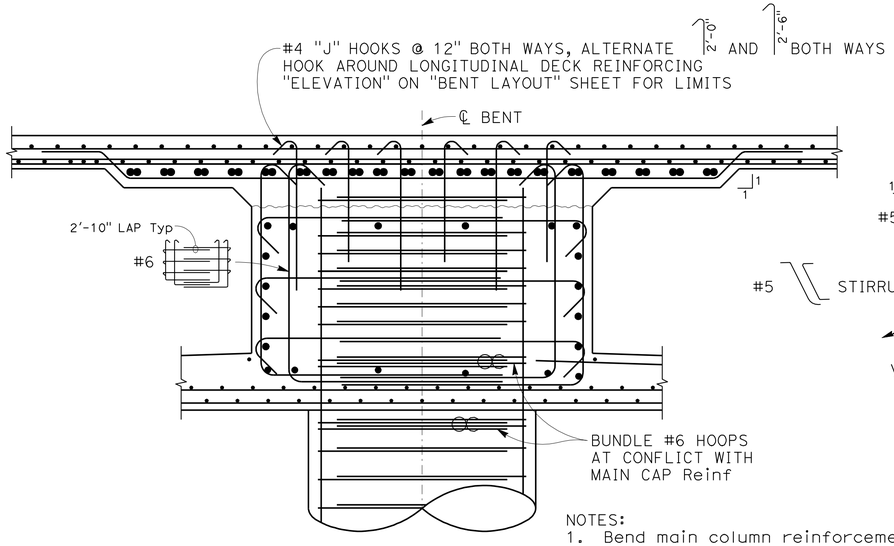

SECTION E-E
3/4" = 1'-0"

NOTES:
1. Bend main column reinforcement bars 1:6 Max as necessary to clear prestressing ducts
2. For details not shown see "SECTION D-D"

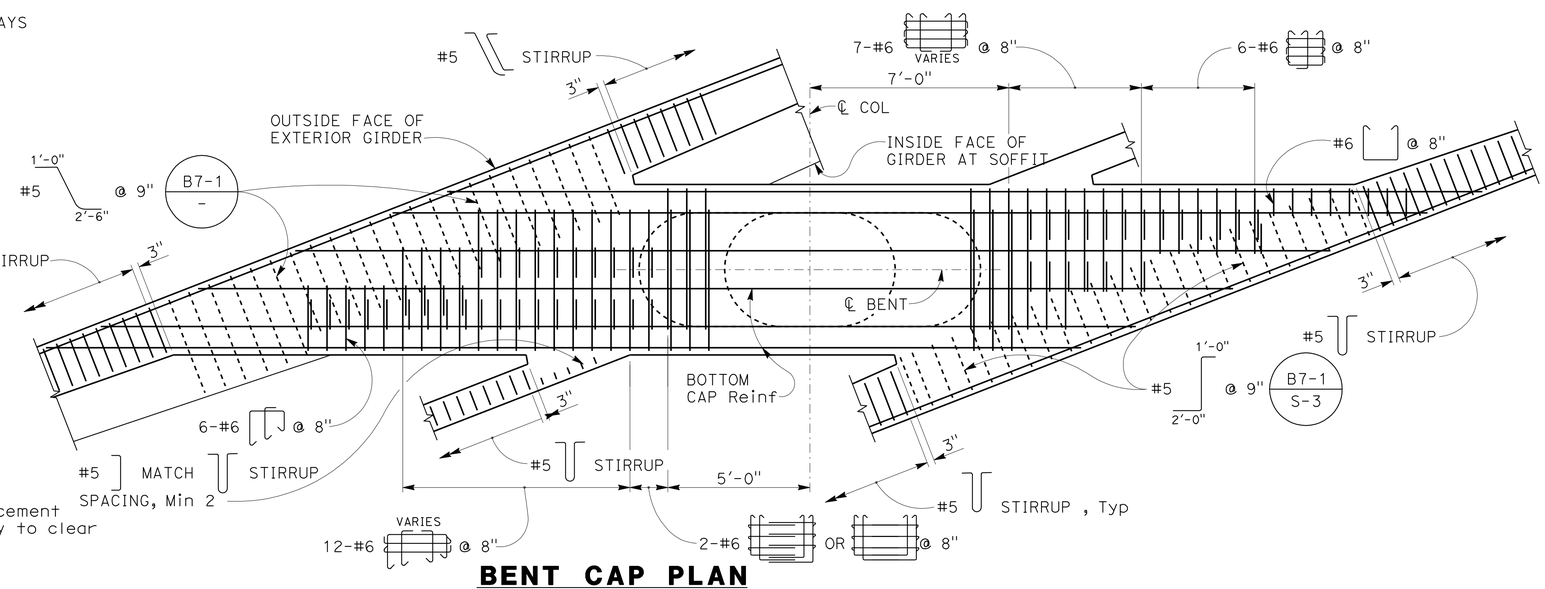

BENT CAP PLAN
3/8" = 1'-0"

NOTE:
THE CONTRACTOR MUST VERIFY ALL CONTROLLING FIELD DIMENSIONS BEFORE ORDERING OR FABRICATING ANY MATERIAL

DESIGN OVERSIGHT Tracy L Bertram 6-8-12 SIGN OFF DATE	DESIGN	BY P. GONGIDI	CHECKED S. KOTAMALA	PREPARED FOR THE STATE OF CALIFORNIA DEPARTMENT OF TRANSPORTATION
	DETAILS	BY R. RIVAS	CHECKED S. OGHUMU	
	QUANTITIES	BY P. GONGIDI	CHECKED S. OGHUMU	

INES LI
PROJECT ENGINEER

BRIDGE NO. 27-0094R
POST MILES R22.3

NORTH NOVATO OVERHEAD (WIDEN)
BENT DETAILS No. 2

DESIGN GENERAL PLAN SHEET (ENGLISH) (REV. 7/16/10)

ORIGINAL SCALE IN INCHES FOR REDUCED PLANS 0 1 2 3

UNIT: 0716
PROJECT NUMBER & PHASE: 04120003371 CONTRACT NO.: 04-2640L4

DISREGARD PRINTS BEARING EARLIER REVISION DATES → REVISION DATES 11/28/11 4/16/12 5/31/12

SHEET 13 OF 28

FILE => 27-0094r-j-b13d2.dgn

USERNAME => s124396 DATE PLOTTED => 22-JUN-2012 TIME PLOTTED => 14:19

2011265 (20112665513)

DIST	COUNTY	ROUTE	POST MILES TOTAL PROJECT	SHEET No	TOTAL SHEETS
04	Mrn	101	R22.2/24.3	209	223

REGISTERED CIVIL ENGINEER 5/31/12 DATE

6-18-12
PLANS APPROVAL DATE

REGISTERED PROFESSIONAL ENGINEER INES S. LI No. C51561 Exp.6/30/14 CIVIL STATE OF CALIFORNIA

The State of California or its officers or agents shall not be responsible for the accuracy or completeness of scanned copies of this plan sheet.

TAM
750 LINDARO STREET, SUITE 200
SAN RAFAEL, CALIFORNIA 94901

BIGGS CARDOSA ASSOCIATES INC.
865 THE ALAMEDA
SAN JOSE, CALIFORNIA 95126

NOTES:
1. Contractor must submit to Engineer for approval pile spacings that differ to those shown on plans
2. Avoid conflict with existing reinforcement and vertical ties.
3. For crash wall details see "CRASH WALL DETAILS" sheet

LEGEND:
- Indicates Existing Structure
- Indicates New Pile
- Indicates Existing Pile

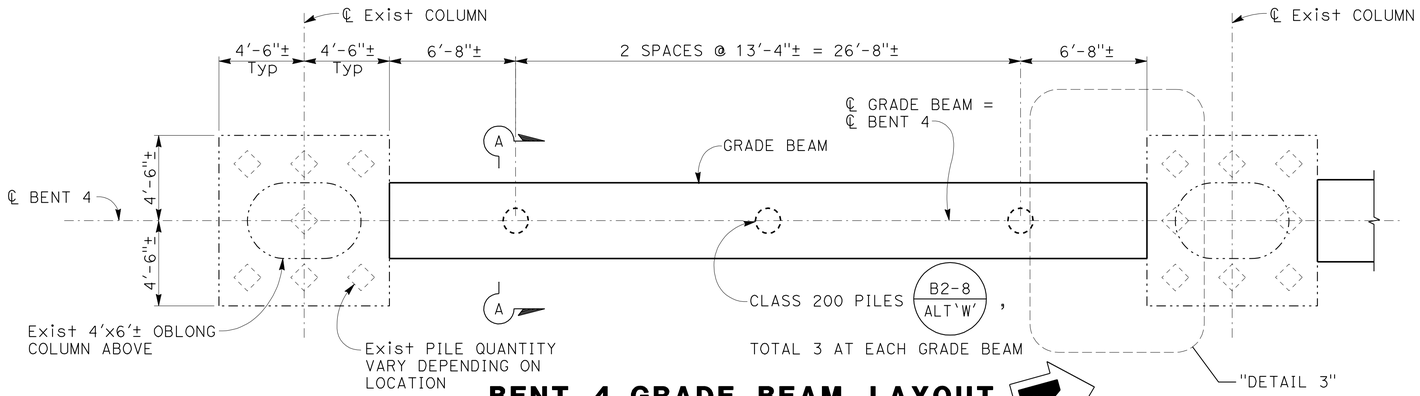

BENT 4 GRADE BEAM LAYOUT
1/4" = 1'-0"

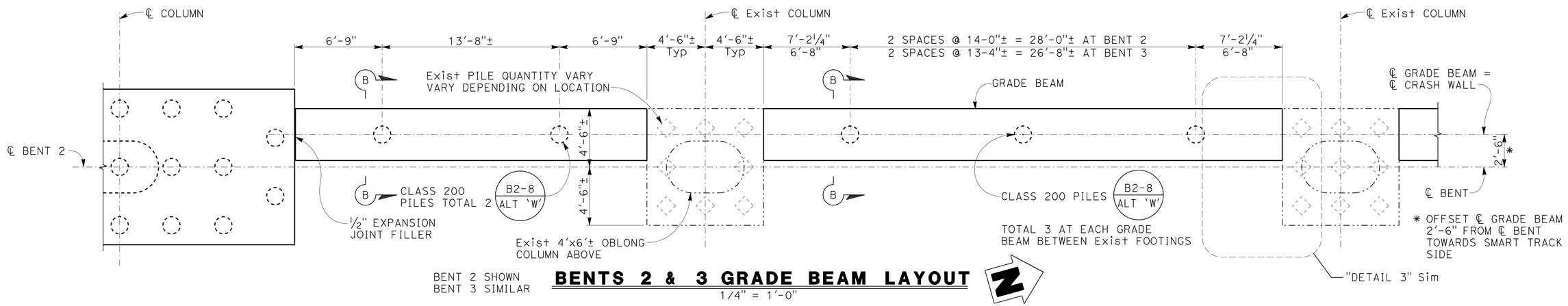

BENT 2 SHOWN
BENT 3 SIMILAR

BENTS 2 & 3 GRADE BEAM LAYOUT
1/4" = 1'-0"

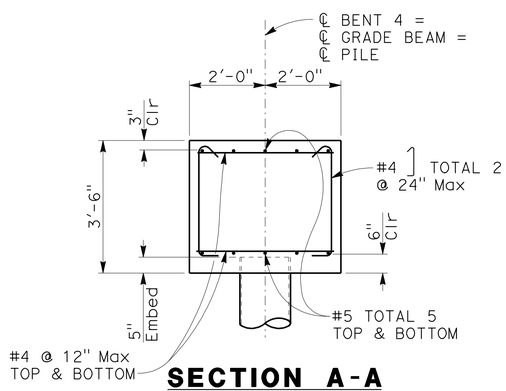

SECTION A-A
1/2" = 1'-0"

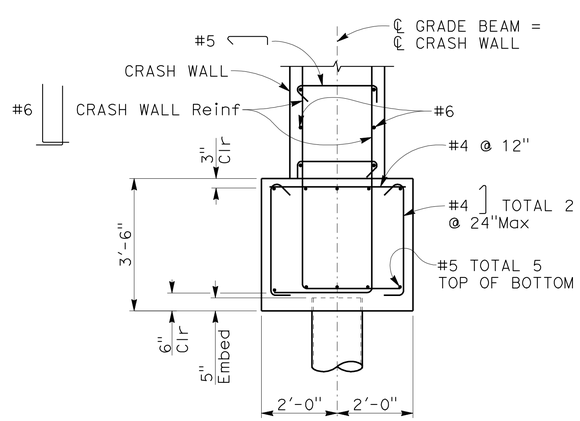

SECTION B-B
1/2" = 1'-0"

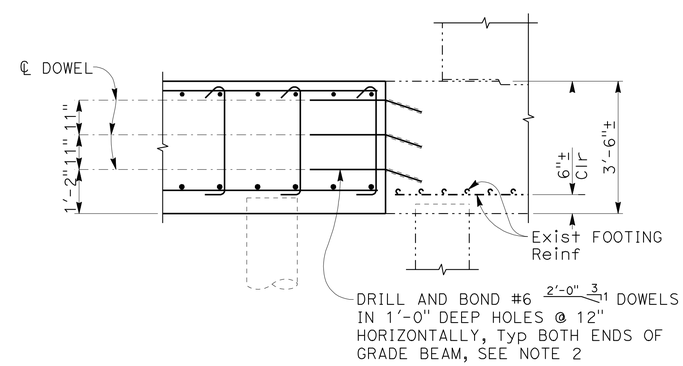

SECTION C-C
1/2" = 1'-0"

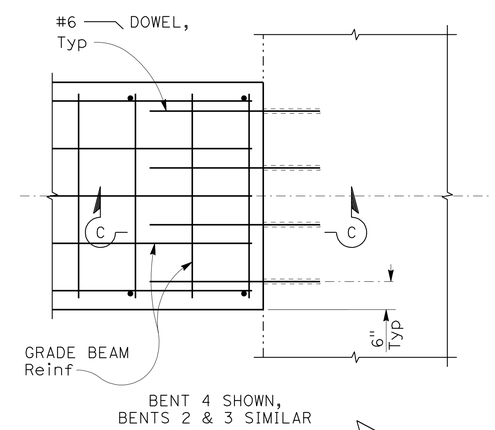

DETAIL 3
3/4" = 1'-0"

NOTE:
THE CONTRACTOR MUST VERIFY ALL CONTROLLING FIELD DIMENSIONS BEFORE ORDERING OR FABRICATING ANY MATERIAL

DESIGN OVERSIGHT Tracy L Bertram
6-8-12
SIGN OFF DATE

	BY	CHECKED
DESIGN	P. GONGIDI	S. KOTAMALA
DETAILS	R. RIVAS	S. OGHUMU
QUANTITIES	P. GONGIDI	S. OGHUMU

PREPARED FOR THE STATE OF CALIFORNIA DEPARTMENT OF TRANSPORTATION

INES LI
PROJECT ENGINEER

BRIDGE NO. 27-0094R
POST MILES R22.3

NORTH NOVATO OVERHEAD (WIDEN)
BENT RETROFIT DETAILS

DESIGN GENERAL PLAN SHEET (ENGLISH) (REV. 7/16/10)

ORIGINAL SCALE IN INCHES FOR REDUCED PLANS 0 1 2 3

UNIT: 0716
PROJECT NUMBER & PHASE: 04120003371 CONTRACT NO.: 04-2640L4

DISREGARD PRINTS BEARING EARLIER REVISION DATES 11/28/11 11/15/12 5/31/12

REVISION DATES | SHEET 14 | OF 28

FILE => 27-0094r-j-b14d1.dgn

USERNAME => S13124496 DATE PLOTTED => 22-JUN-2012 TIME PLOTTED => 14:19

2011265 (20112665514)

DIST	COUNTY	ROUTE	POST MILES TOTAL PROJECT	SHEET No	TOTAL SHEETS
04	Mrn	101	R22.2/24.3	210	223

REGISTERED CIVIL ENGINEER 5/31/12 DATE

6-18-12
PLANS APPROVAL DATE

REGISTERED PROFESSIONAL ENGINEER INES S. LI No. C51561 Exp.6/30/14 CIVIL STATE OF CALIFORNIA

The State of California or its officers or agents shall not be responsible for the accuracy or completeness of scanned copies of this plan sheet.

TAM
750 LINDARO STREET, SUITE 200
SAN RAFAEL, CALIFORNIA 94901

BIGGS CARDOSA ASSOCIATES INC.
865 THE ALAMEDA
SAN JOSE, CALIFORNIA 95126

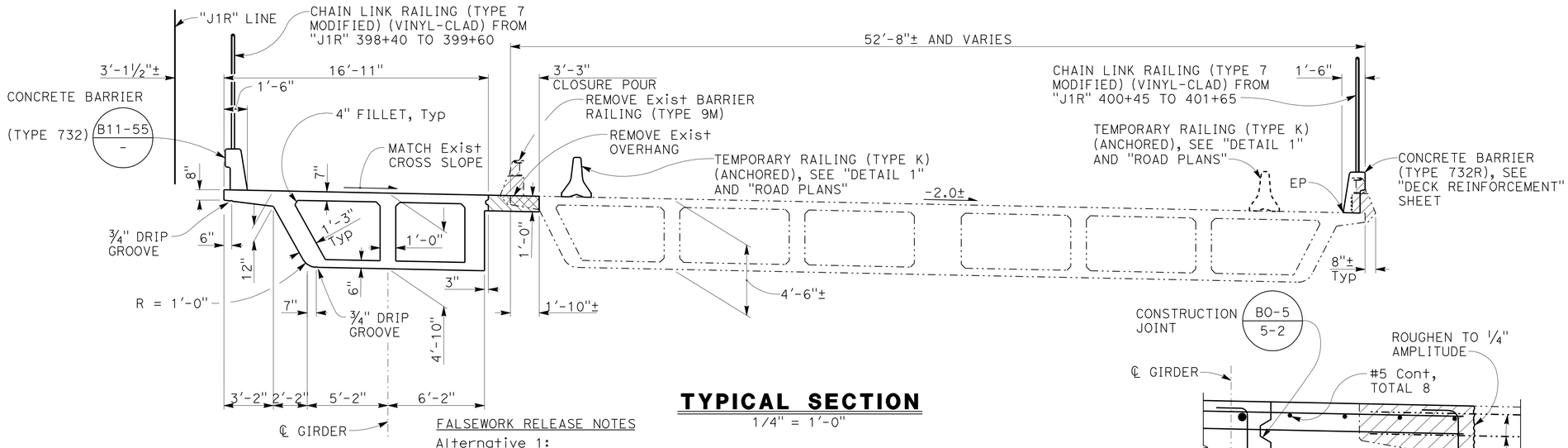

TYPICAL SECTION

1/4" = 1'-0"

FALSEWORK RELEASE NOTES

Alternative 1:
Falsework must be released as soon as permitted by the specifications. Closure pour and intermediate diaphragms must not be placed sooner than 60 days after the falsework has been released.

Alternative 2:
Falsework must not be released less than 28 days after the last concrete has been placed. Closure pour and intermediate diaphragms must not be placed sooner than 14 days after the falsework has been released.

When falsework release alternative 2 is used, camber values are 0.75 times those shown

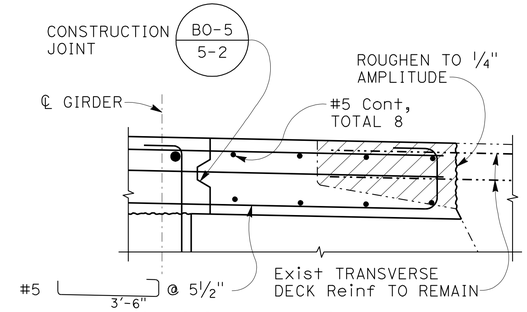

CLOSURE POUR DETAIL

1" = 1'-0"

NOTES:
1. All dimensions are measured normal to "J1R" line
2. Place and space transverse deck and soffit reinforcement normal to ℄ girder
3. All reinf in concrete barrier (Type 732) shall be epoxy coated
4. For details of Chain Link Railing (Type 7 Modified) (Vinyl-Clad), see "SOFFIT REINFORCEMENT" sheet
5. #11 Cont must be spliced with service level splices. Service splices must not be permitted within ⅓ of span and ⅙ of span from ℄ Bent

LEGEND:
- Indicates Exist Structure
- Indicates Concrete to be Removed
- Indicates Closure Pour

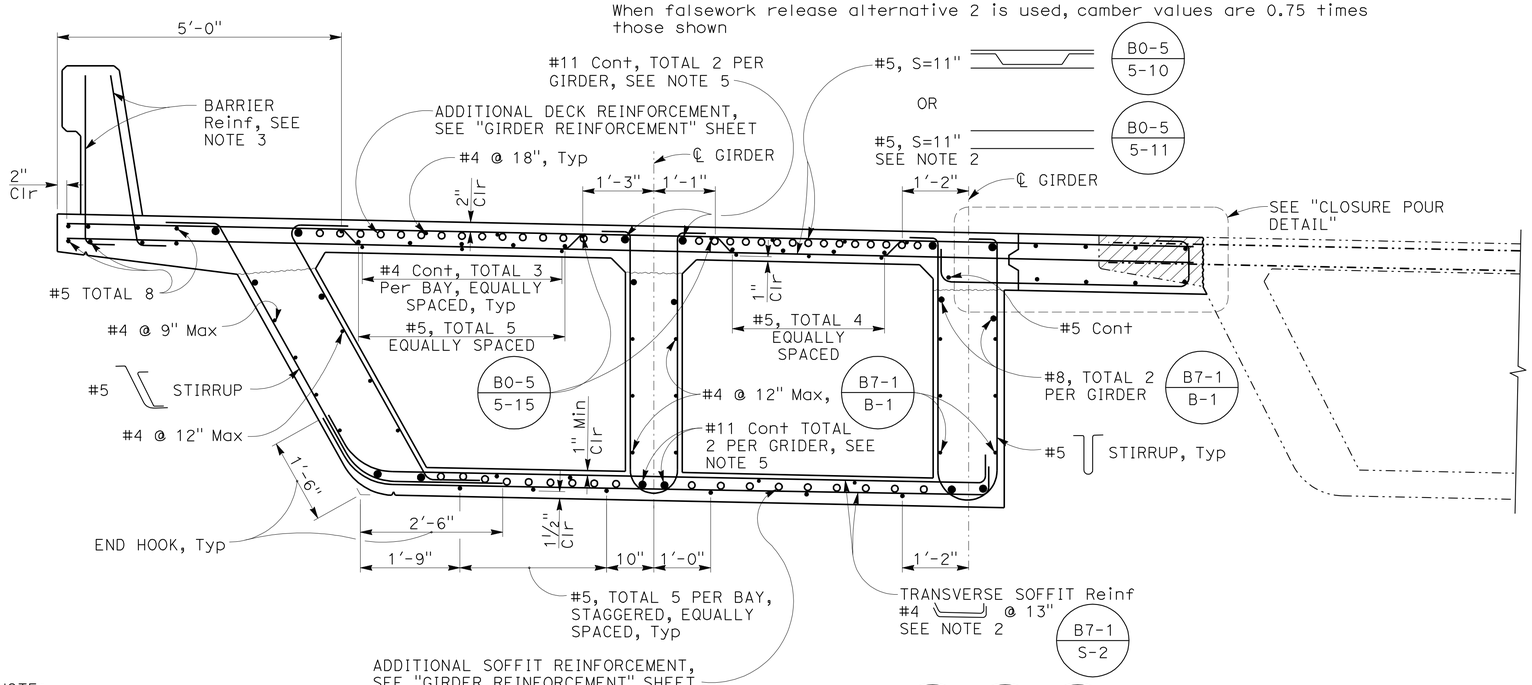

PART TYPICAL SECTION

3/4" = 1'-0"

B0-5 - | B7-1 - | B8-5 -

NOTE:
THE CONTRACTOR MUST VERIFY ALL CONTROLLING FIELD DIMENSIONS BEFORE ORDERING OR FABRICATING ANY MATERIAL

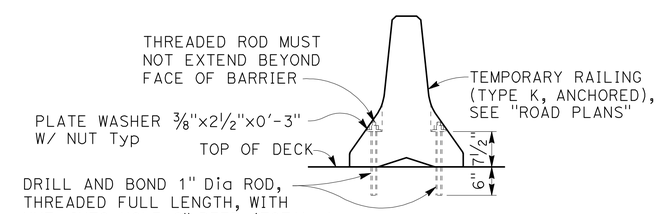

NOTE:
AFTER RAILING REMOVAL, REMOVE THREADED ROD TO A MINIMUM DEPTH OF 1" BELOW CONCRETE DECK SURFACE AND FILL HOLE WITH RAPID SETTING CONCRETE

DETAIL 1

NO SCALE

DESIGN OVERSIGHT Tracy L Bertram
6-8-12
SIGN OFF DATE

	BY	CHECKED
DESIGN	P. GONGIDI	S. KOTAMALA
DETAILS	R. RIVAS	S. OGHUMU
QUANTITIES	P. GONGIDI	S. OGHUMU

PREPARED FOR THE STATE OF CALIFORNIA DEPARTMENT OF TRANSPORTATION

INES LI
PROJECT ENGINEER

BRIDGE NO. 27-0094R
POST MILES R22.3

NORTH NOVATO OVERHEAD (WIDEN)
TYPICAL SECTION

DESIGN GENERAL PLAN SHEET (ENGLISH) (REV. 7/16/10)

ORIGINAL SCALE IN INCHES FOR REDUCED PLANS 0 1 2 3

UNIT: 0716
PROJECT NUMBER & PHASE: 04120003371 CONTRACT NO.: 04-2640L4

DISREGARD PRINTS BEARING EARLIER REVISION DATES → REVISION DATES 11/08/11 4/16/12 5/31/12

SHEET 15 OF 28

FILE => 27-0094r-m-ts1.dgn

USERNAME => s124196 DATE PLOTTED => 22-JUN-2012 TIME PLOTTED => 14:19

2011265 (2011265S15)

DIST	COUNTY	ROUTE	POST MILES TOTAL PROJECT	SHEET No	TOTAL SHEETS
04	Mrn	101	R22.2/24.3	211	223

REGISTERED CIVIL ENGINEER 5/31/12 DATE

6-18-12
PLANS APPROVAL DATE

REGISTERED PROFESSIONAL ENGINEER INES S. LI No. C51561 Exp.6/30/14 CIVIL STATE OF CALIFORNIA

The State of California or its officers or agents shall not be responsible for the accuracy or completeness of scanned copies of this plan sheet.

TAM
750 LINDARO STREET, SUITE 200
SAN RAFAEL, CALIFORNIA 94901

BIGGS CARDOSA ASSOCIATES INC.
865 THE ALAMEDA
SAN JOSE, CALIFORNIA 95126

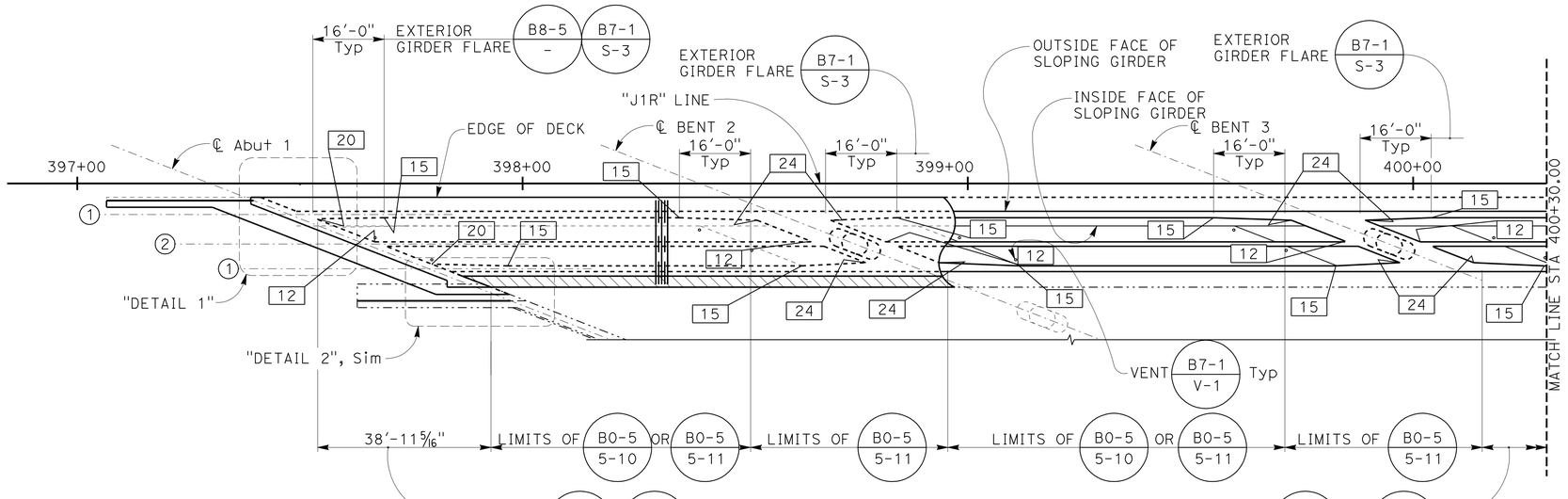

GIRDER LAYOUT
1/16" = 1'-0"

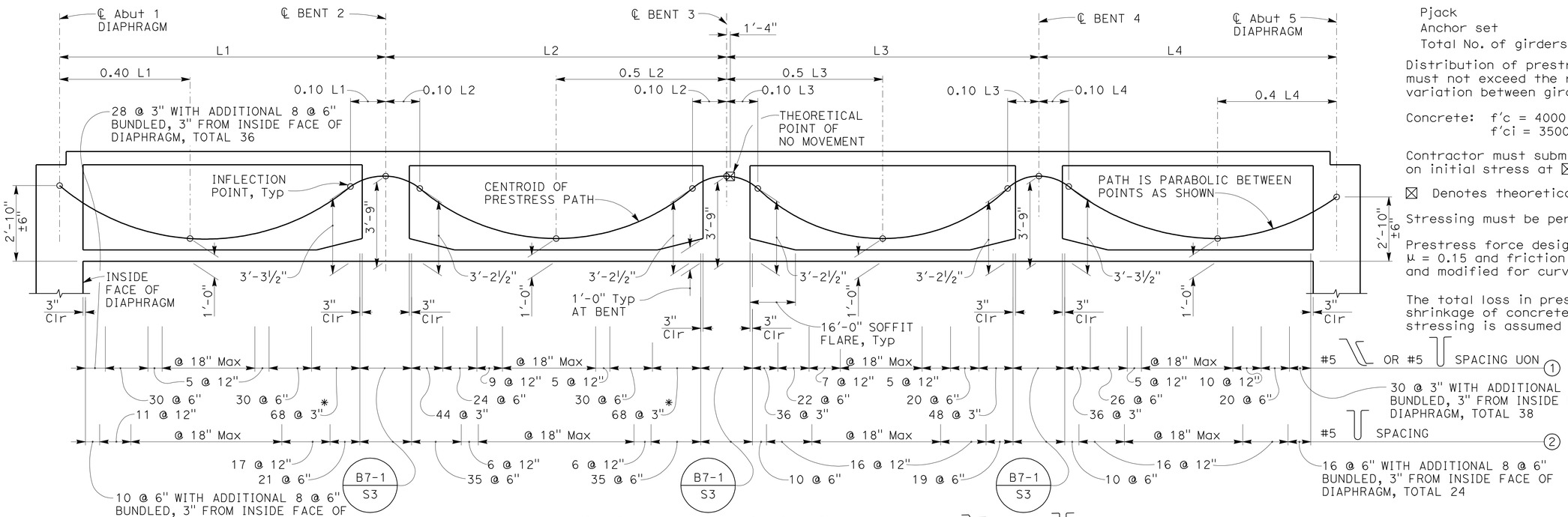

LONGITUDINAL SECTION
NO SCALE

NOTE:
THE CONTRACTOR MUST VERIFY ALL CONTROLLING FIELD DIMENSIONS BEFORE ORDERING OR FABRICATING ANY MATERIAL

NOTES:
1. For "CAMBER DIAGRAM" and "CONCRETE STRENGTH AND TYPE LIMITS", see "INDEX TO PLANS" sheet
2. L1, L2, L3 and L4 are measured along the ℄ of each girder
3. For "DETAIL 1", see "GIRDER LAYOUT No. 2" sheet

LEGEND:
- 18 — Indicates Girder Stem Width in Inches
- (1) — Indicates Stirrup Designation
- Indicates Closure Pour

PRESTRESSING NOTES

270 ksi Low Relaxation Strand:
- Pjack = 3950 kips
- Anchor set = ⅜ in
- Total No. of girders = 3

Distribution of prestress force (Pjack) between girders must not exceed the ratio of 3:2. Maximum final force variation between girders must not exceed 725k

Concrete: f'c = 4000 psi at 28 days
f'ci = 3500 psi at time of stressing

Contractor must submit elongation calculations based on initial stress at ⊠ = 0.871 times jacking stress

⊠ Denotes theoretical point of no movement

Stressing must be performed from both ends

Prestress force design is based on friction coefficient μ = 0.15 and friction wobble coefficient k=0.0002/ft and modified for curvature

The total loss in prestressing force due to creep and shrinkage of concrete, creep of steel, and sequence of stressing is assumed to be 25 ksi

Tracy L Bertram
DESIGN OVERSIGHT
6-8-12
SIGN OFF DATE

	BY	CHECKED
DESIGN	P. GONGIDI	S. KOTAMALA
DETAILS	R. RIVAS	S. OGHUMU
QUANTITIES	P. GONGIDI	S. OGHUMU

PREPARED FOR THE STATE OF CALIFORNIA DEPARTMENT OF TRANSPORTATION

INES LI
PROJECT ENGINEER

BRIDGE NO. 27-0094R
POST MILES R22.3

NORTH NOVATO OVERHEAD (WIDEN)
GIRDER LAYOUT No. 1

DESIGN GENERAL PLAN SHEET (ENGLISH) (REV. 7/16/10)

ORIGINAL SCALE IN INCHES FOR REDUCED PLANS 0 1 2 3

UNIT: 0716
PROJECT NUMBER & PHASE: 04120003371
CONTRACT NO.: 04-2640L4

DISREGARD PRINTS BEARING EARLIER REVISION DATES
REVISION DATES 11/28/11 11/6/12 5/31/12

SHEET 16 OF 28

FILE => 27-0094r-n-g-lo01.dgn

USERNAME => s812614 DATE PLOTTED => 25-JUN-2012 TIME PLOTTED => 10:53
2011265 (2011265516)

DIST	COUNTY	ROUTE	POST MILES TOTAL PROJECT	SHEET No	TOTAL SHEETS
04	Mrn	101	R22.2/24.3	212	223

REGISTERED CIVIL ENGINEER 5/31/12 DATE

6-18-12
PLANS APPROVAL DATE

REGISTERED PROFESSIONAL ENGINEER INES S. LI No. C51561 Exp.6/30/14 CIVIL STATE OF CALIFORNIA

The State of California or its officers or agents shall not be responsible for the accuracy or completeness of scanned copies of this plan sheet.

TAM
750 LINDARO STREET, SUITE 200
SAN RAFAEL, CALIFORNIA 94901

BIGGS CARDOSA ASSOCIATES INC.
865 THE ALAMEDA
SAN JOSE, CALIFORNIA 95126

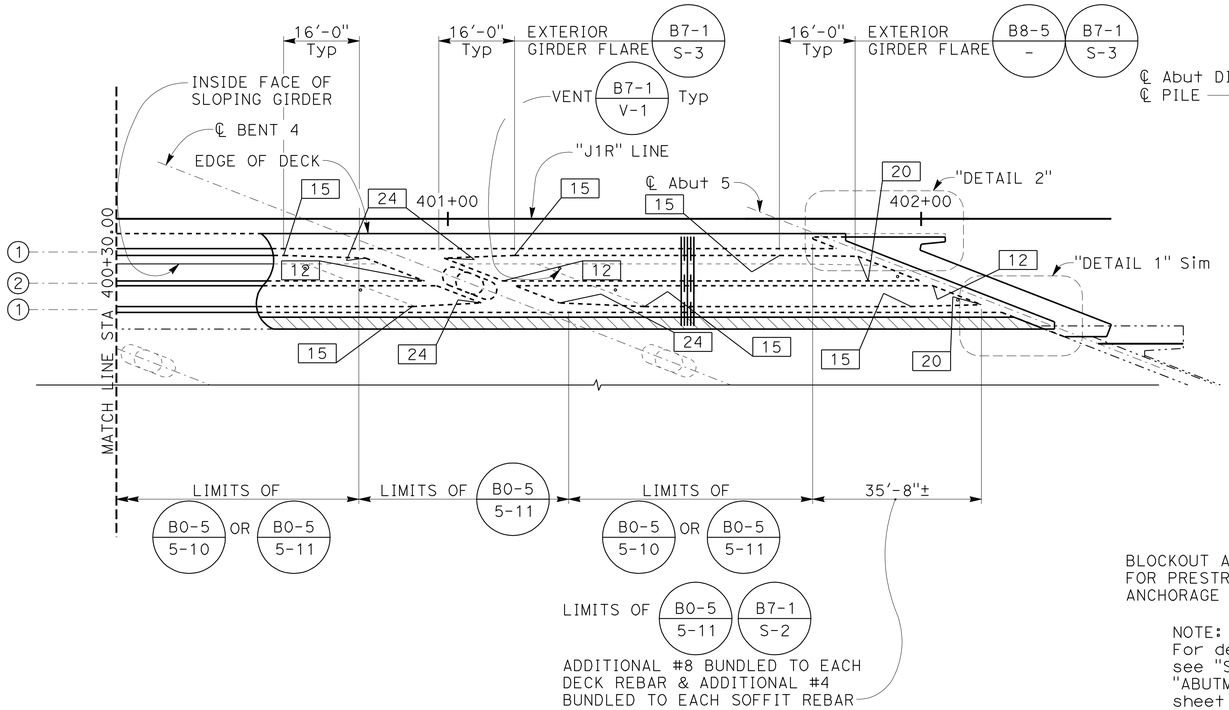

GIRDER LAYOUT
1/16" = 1'-0"

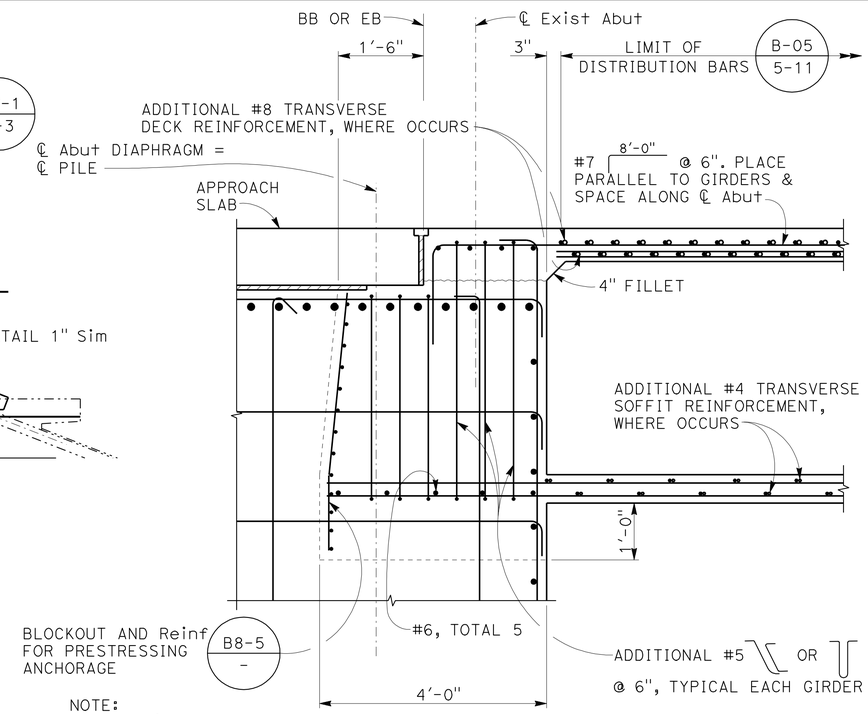

NOTE:
For details not noted, see "SECTION A-A" on "ABUTMENT DETAILS No. 1" sheet

END DIAPHRAGM DETAIL
3/4" = 1'-0"

NOTE:
For "CAMBER DIAGRAM" and "CONCRETE STRENGTH AND TYPE LIMITS", see "INDEX TO PLANS" sheet

LEGEND:

- 18 — Indicates Girder Stem Width in Inches
- (1) — Indicates Stirrup Designation
- Indicates Closure Pour

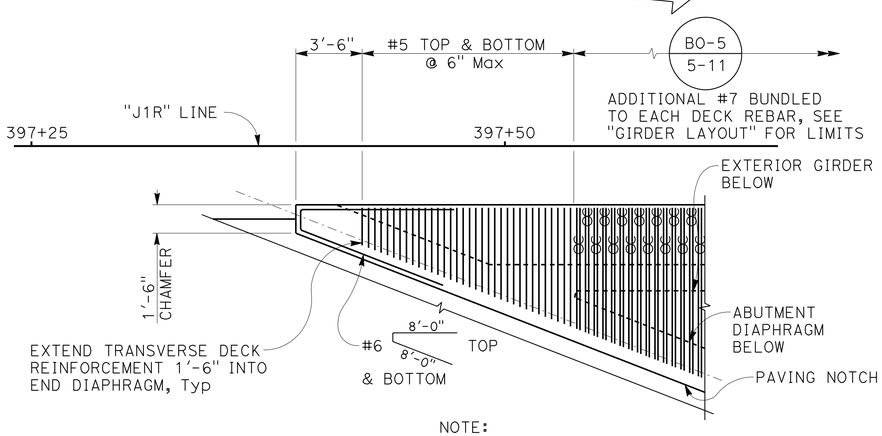

NOTE:
NOT ALL DECK REINF SHOWN

ACUTE CORNER DECK REINFORCING DETAIL 1
1/4" = 1'-0"

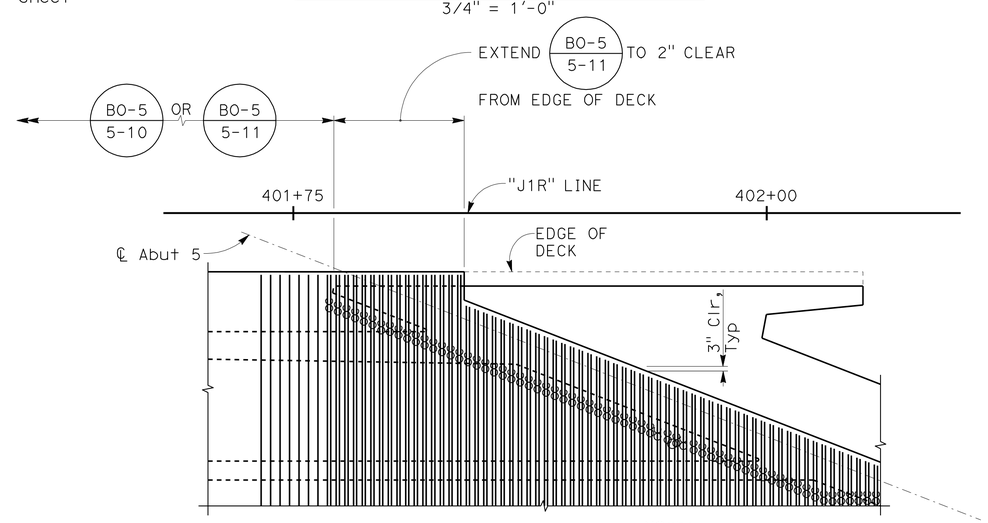

NOTE:
Not all deck reinf shown

OBTUSE CORNER DECK REINFORCING DETAIL
1/4" = 1'-0"

NOTE:
THE CONTRACTOR MUST VERIFY ALL CONTROLLING FIELD DIMENSIONS BEFORE ORDERING OR FABRICATING ANY MATERIAL

DESIGN OVERSIGHT Tracy L Bertram
6-8-12
SIGN OFF DATE

	BY	CHECKED
DESIGN	P. GONGIDI	S. KOTAMALA
DETAILS	R. RIVAS	S. OGHUMU
QUANTITIES	P. GONGIDI	S. OGHUMU

PREPARED FOR THE STATE OF CALIFORNIA DEPARTMENT OF TRANSPORTATION

INES LI
PROJECT ENGINEER

BRIDGE NO. 27-0094R
POST MILES R22.3

NORTH NOVATO OVERHEAD (WIDEN)
GIRDER LAYOUT No. 2

DESIGN GENERAL PLAN SHEET (ENGLISH) (REV. 7/16/10)

ORIGINAL SCALE IN INCHES FOR REDUCED PLANS 0 1 2 3

UNIT: 0716
PROJECT NUMBER & PHASE: 04120003371 CONTRACT NO.: 04-2640L4

DISREGARD PRINTS BEARING EARLIER REVISION DATES 11/28/11 4/16/12 5/31/12

SHEET 17 OF 28

FILE => 27-0094r-n-g-lo02.dgn

USERNAME => s8124196 DATE PLOTTED => 22-JUN-2012 TIME PLOTTED => 14:19
2011265 (2011265517)

DIST	COUNTY	ROUTE	POST MILES TOTAL PROJECT	SHEET No	TOTAL SHEETS
04	Mrn	101	R22.2/24.3	213	223

REGISTERED CIVIL ENGINEER 5/31/12 DATE

6-18-12
PLANS APPROVAL DATE

REGISTERED PROFESSIONAL ENGINEER INES S. LI No. C51561 Exp.6/30/14 CIVIL STATE OF CALIFORNIA

The State of California or its officers or agents shall not be responsible for the accuracy or completeness of scanned copies of this plan sheet.

TAM
750 LINDARO STREET, SUITE 200
SAN RAFAEL, CALIFORNIA 94901

BIGGS CARDOSA ASSOCIATES INC.
865 THE ALAMEDA
SAN JOSE, CALIFORNIA 95126

LEGEND:
—·—·— Indicates Exist Structure

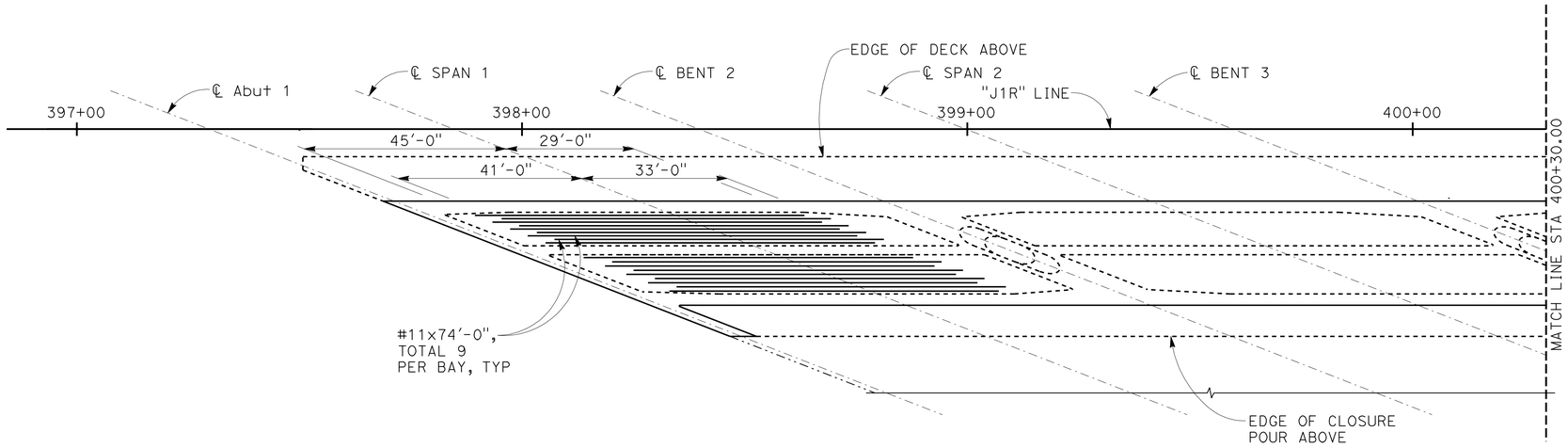

ADDITIONAL SOFFIT REINFORCEMENT

NO SCALE

NOTES:
1. Space bars approximately equally within the bay. Arrange to avoid column reinforcement.
2. Additional deck and soffit reinforcement must be spliced with service level splices as needed and staggered 5'-0" min.
3. Additional deck and soffit reinforcement service level splices must not be permitted within middle ⅓ of span and ⅙ of span from ℄ bent.
4. Reinforcing must be placed parallel with ℄ bridge.
5. Additional reinforcement is in addition to reinforcement detailed on other sheets.

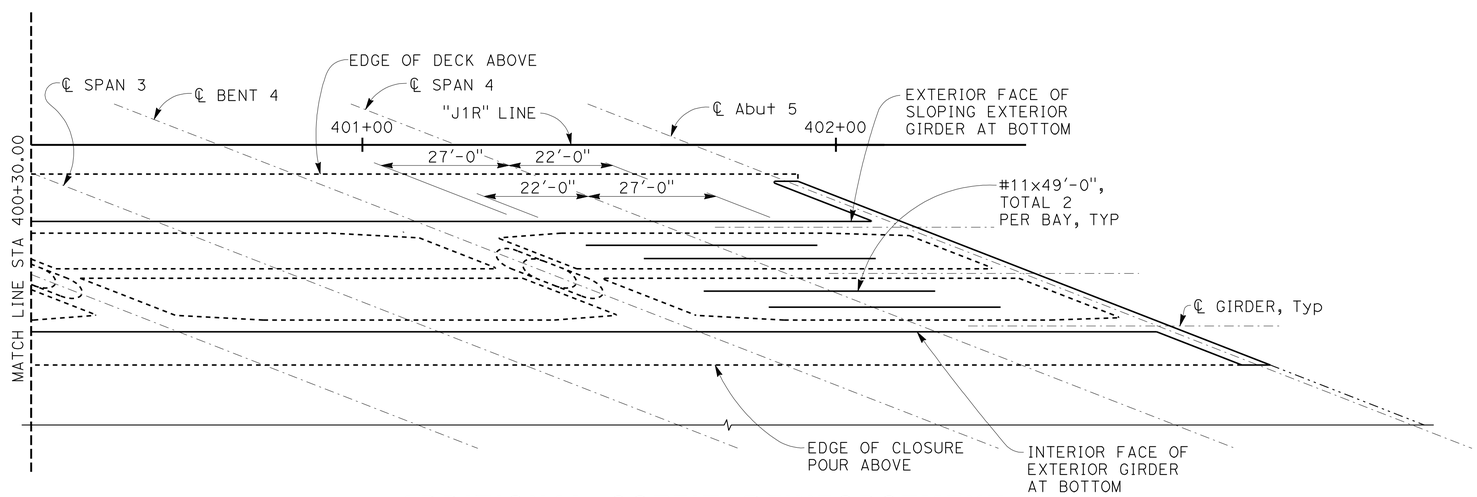

ADDITIONAL SOFFIT REINFORCEMENT

NO SCALE

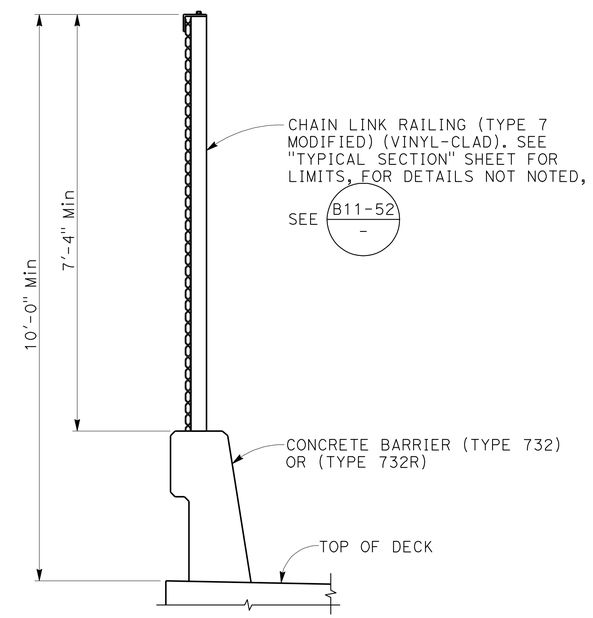

CHAIN LINK RAILING (TYPE 7 MODIFIED)

3/4" = 1'-0"

NOTE:
THE CONTRACTOR MUST VERIFY ALL CONTROLLING FIELD DIMENSIONS BEFORE ORDERING OR FABRICATING ANY MATERIAL

DESIGN OVERSIGHT Tracy L Bertram
6-8-12
SIGN OFF DATE

	BY	CHECKED
DESIGN	P. GONGIDI	S. KOTAMALA
DETAILS	R. RIVAS	S. OGHUMU
QUANTITIES	P. GONGIDI	S. OGHUMU

PREPARED FOR THE STATE OF CALIFORNIA DEPARTMENT OF TRANSPORTATION

INES LI
PROJECT ENGINEER

BRIDGE NO. 27-0094R
POST MILES R22.3

NORTH NOVATO OVERHEAD (WIDEN)
SOFFIT REINFORCEMENT

DESIGN GENERAL PLAN SHEET (ENGLISH) (REV. 7/16/10)

ORIGINAL SCALE IN INCHES FOR REDUCED PLANS 0 1 2 3

UNIT: 0716
PROJECT NUMBER & PHASE: 04120003371 CONTRACT NO.: 04-2640L4

DISREGARD PRINTS BEARING EARLIER REVISION DATES → 11/28/11 4/16/12 5/31/12

SHEET 18 OF 28

FILE => 27-0094r-q-g-rf01.dgn

USERNAME => s124936 DATE PLOTTED => 22-JUN-2012 TIME PLOTTED => 14:19 2011265 (20112655 18)

DIST	COUNTY	ROUTE	POST MILES TOTAL PROJECT	SHEET No	TOTAL SHEETS
04	Mrn	101	R22.2/24.3	214	223

REGISTERED CIVIL ENGINEER 5/31/12 DATE

6-18-12
PLANS APPROVAL DATE

REGISTERED PROFESSIONAL ENGINEER INES S. LI No. C51561 Exp.6/30/14 CIVIL STATE OF CALIFORNIA

The State of California or its officers or agents shall not be responsible for the accuracy or completeness of scanned copies of this plan sheet.

TAM
750 LINDARO STREET, SUITE 200
SAN RAFAEL, CALIFORNIA 94901

BIGGS CARDOSA ASSOCIATES INC.
865 THE ALAMEDA
SAN JOSE, CALIFORNIA 95126

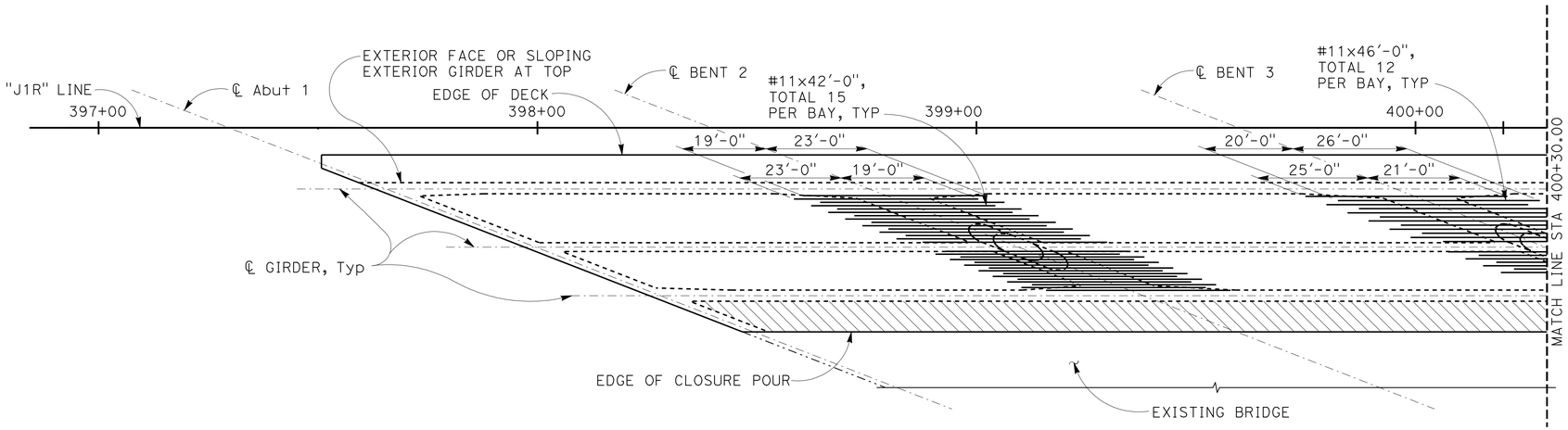

ADDITIONAL DECK REINFORCEMENT

NO SCALE

NOTES:

1. For Notes, see "SOFFIT REINFORCEMENT sheet
2. All reinforcement in Conrete Barrier (Type 732R) shall be epoxy coated

LEGEND:

- Indicates Exist Structure
- Indicates Concrete to be Removed
- Indicates Closure Pour

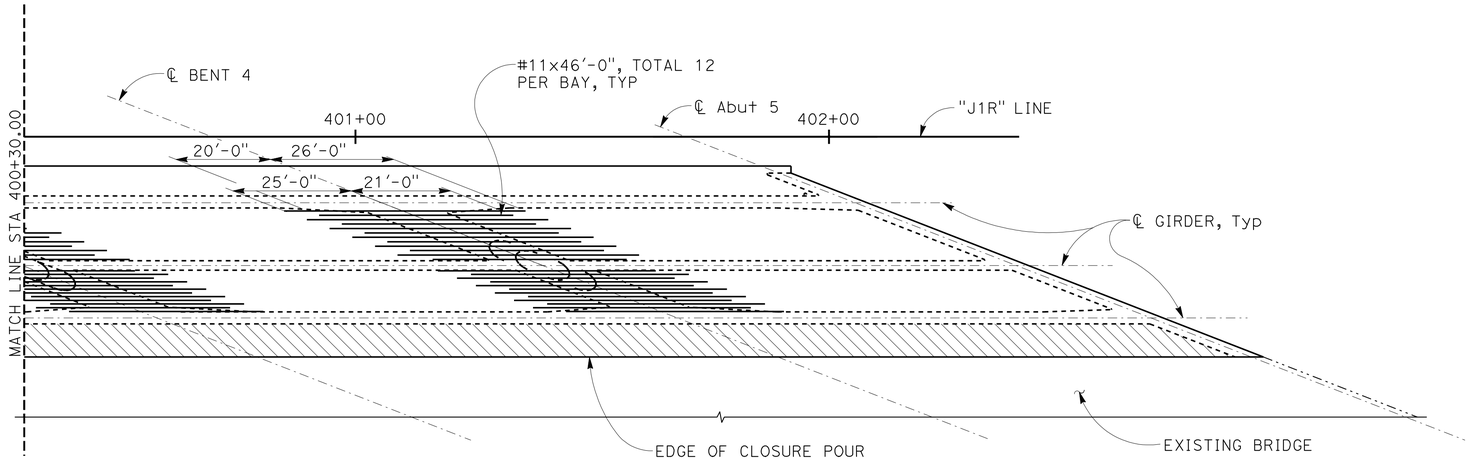

ADDITIONAL DECK REINFORCEMENT

NO SCALE

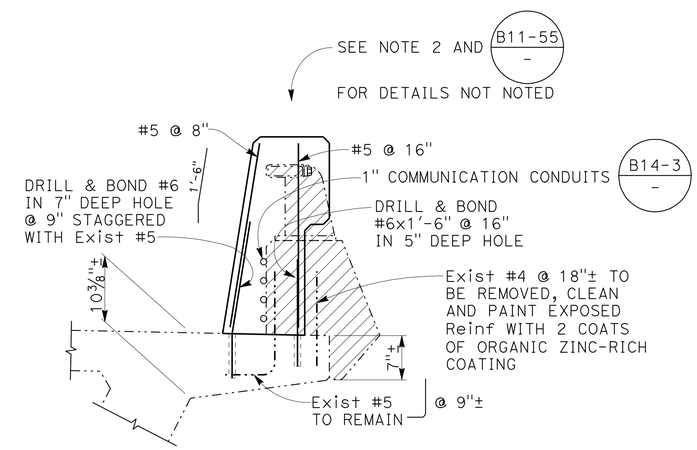

CONCRETE BARRIER (TYPE 732R)

1" = 1'-0"

NOTE:
THE CONTRACTOR MUST VERIFY ALL CONTROLLING FIELD DIMENSIONS BEFORE ORDERING OR FABRICATING ANY MATERIAL

DESIGN OVERSIGHT Tracy L Bertram
6-8-12
SIGN OFF DATE

	BY	CHECKED
DESIGN	P. GONGIDI	S. KOTAMALA
DETAILS	R. RIVAS	S. OGHUMU
QUANTITIES	P. GONGIDI	S. OGHUMU

PREPARED FOR THE STATE OF CALIFORNIA DEPARTMENT OF TRANSPORTATION

INES LI
PROJECT ENGINEER

BRIDGE NO. 27-0094R
POST MILES R22.3

NORTH NOVATO OVERHEAD (WIDEN)
DECK REINFORCEMENT

DESIGN GENERAL PLAN SHEET (ENGLISH) (REV. 7/16/10)

ORIGINAL SCALE IN INCHES FOR REDUCED PLANS 0 1 2 3

UNIT: 0716
PROJECT NUMBER & PHASE: 04120003371 CONTRACT NO.: 04-2640L4

DISREGARD PRINTS BEARING EARLIER REVISION DATES → REVISION DATES 11/08/11 4/16/12 5/31/12

SHEET 19 OF 28

FILE => 27-0094r-q-g-rf02.dgn

USERNAME => s124496 DATE PLOTTED => 22-JUN-2012 TIME PLOTTED => 14:19

2011265 (20112265519)

DIST	COUNTY	ROUTE	POST MILES TOTAL PROJECT	SHEET No	TOTAL SHEETS
04	Mrn	101	R22.2/24.3	215	223

REGISTERED CIVIL ENGINEER 5/31/12 DATE

6-18-12
PLANS APPROVAL DATE

REGISTERED PROFESSIONAL ENGINEER INES S. LI No. C51561 Exp.6/30/14 CIVIL STATE OF CALIFORNIA

The State of California or its officers or agents shall not be responsible for the accuracy or completeness of scanned copies of this plan sheet.

TAM
750 LINDARO STREET, SUITE 200
SAN RAFAEL, CALIFORNIA 94901

BIGGS CARDOSA ASSOCIATES INC.
865 THE ALAMEDA
SAN JOSE, CALIFORNIA 95126

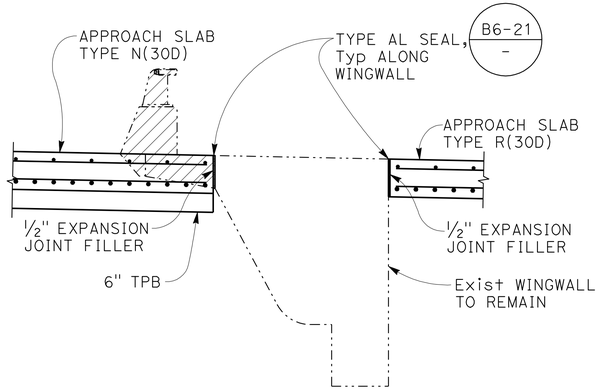

SECTION F-F
1/2" = 1'-0"

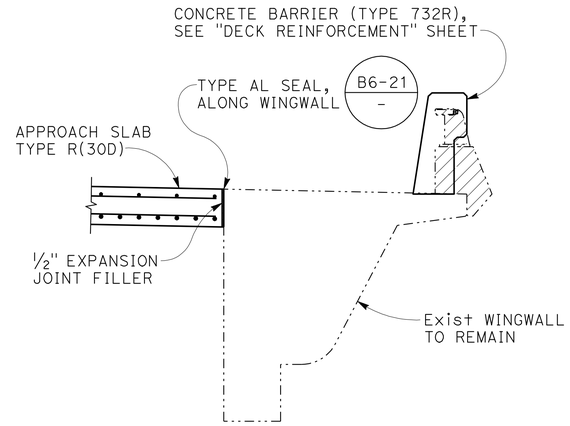

SECTION G-G
1/2" = 1'-0"

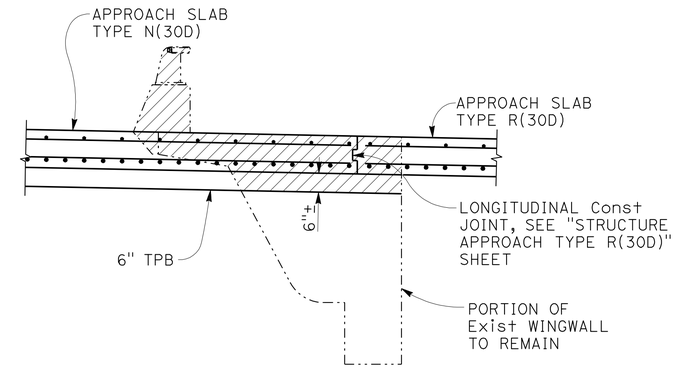

SECTION H-H
1/2" = 1'-0"

NOTES:
1. For details not noted or shown, see Structure Plans
2. For drainage details, see "STRUCTURE APPROACH DRAINAGE DETAILS" sheet
3. Longitudinal construction joints, when permitted by the Engineer, must be located on lane lines
4. For "SECTION A-A" and "SECTION C-C" see "STRUCTURE APPORACH TYPE N(30D)" sheet
5. For "SECTION D-D", see "STRUCTURE APPROACH TYPE R(30D)" sheet
6. For details not noted, see "STRUCTURE APPROACH TYPE N(30D)" and "STRUCTURE APPROACH TYPE R(30D)" sheets
7. At end of existing wingwall, install joint seal (MR = 2") B6-21 / -

LEGEND:
-·-·-·- Indicates Existing Structure
Indicates Concrete to be Removed

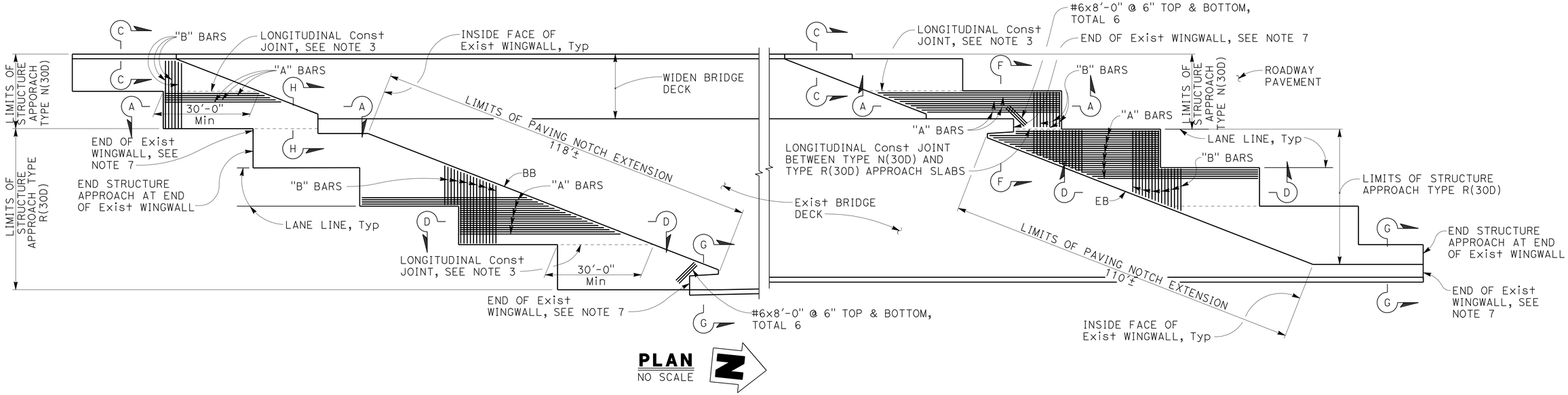

PLAN
NO SCALE

NOTE:
THE CONTRACTOR MUST VERIFY ALL CONTROLLING FIELD DIMENSIONS BEFORE ORDERING OR FABRICATING ANY MATERIAL

DESIGN OVERSIGHT Tracy L Bertram
6-8-12
SIGN OFF DATE

	BY	CHECKED
DESIGN	P. GONGIDI	S. KOTAMALA
DETAILS	R. RIVAS	S. OGHUMU
QUANTITIES	P. GONGIDI	S. OGHUMU

PREPARED FOR THE STATE OF CALIFORNIA DEPARTMENT OF TRANSPORTATION

INES LI
PROJECT ENGINEER

BRIDGE NO. 27-0094R
POST MILES R22.3

NORTH NOVATO OVERHEAD (WIDEN)
STRUCTURE APPROACH DETAILS

DESIGN GENERAL PLAN SHEET (ENGLISH) (REV. 7/16/10)

ORIGINAL SCALE IN INCHES FOR REDUCED PLANS 0 1 2 3

UNIT: 0716
PROJECT NUMBER & PHASE: 04120003371 CONTRACT NO.: 04-2640L4

DISREGARD PRINTS BEARING EARLIER REVISION DATES

REVISION DATES 11/28/11 4/16/12 5/31/12 SHEET 20 OF 28

FILE => 27-0094r-t-sad01.dgn

USERNAME => s124496 DATE PLOTTED => 22-JUN-2012 TIME PLOTTED => 14:19 2011265 (20112655S20)

DIST.	COUNTY	ROUTE	MILE POST TOTAL PROJECT	SHEET NO.	TOTAL SHEETS
04	Mrn	101	R22.2/24.3	216	223

REGISTERED CIVIL ENGINEER 5/31/12 DATE

6-18-12
PLANS APPROVAL DATE

REGISTERED PROFESSIONAL ENGINEER INES S. LI No. C51561 Exp.6/30/14 CIVIL STATE OF CALIFORNIA

The State of California or its officers or agents shall not be responsible for the accuracy or completeness of electronic copies of this plan sheet.

TAM
750 LINDARO STREET, SUITE 200
SAN RAFAEL, CA 94901

BIGGS CARDOSA ASSOCIATES INC.
865 THE ALAMEDA
SAN JOSE, CALIFORNIA 95126

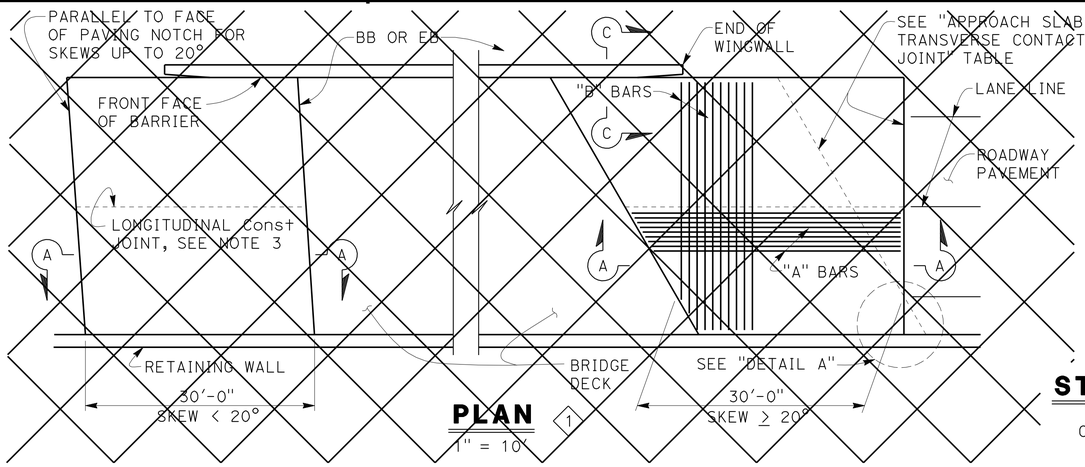

PLAN 1
1" = 10'

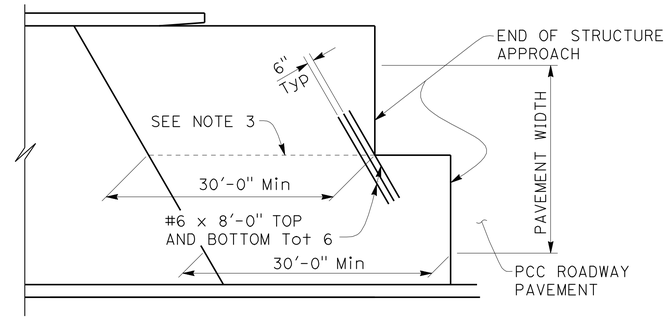

STRUCTURE APPROACH - END STAGGER DETAIL
NO SCALE

APPROACH SLAB TRANSVERSE CONTACT JOINT		
APPROACH SKEW	WITH AC ROADWAY PAVEMENT	WITH PCC ROADWAY PAVEMENT
< 20°	PARALLEL TO FACE OF PN	PARALLEL TO FACE OF PN
20° - 45°	PARALLEL TO FACE OF PN USE "DETAIL A"	STAGGER LINES 24' TO 36' APART
> 45°	PARALLEL TO FACE OF PN USE "DETAIL A"	STAGGER AT EACH LANE LINE

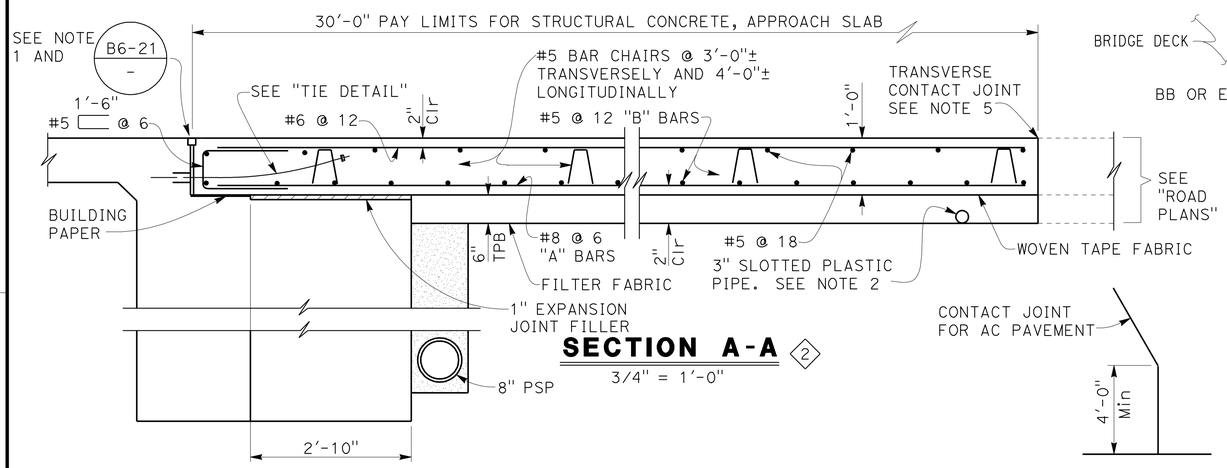

SECTION A-A 2
3/4" = 1'-0"

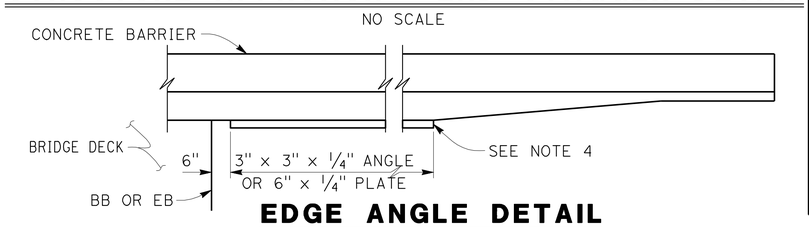

EDGE ANGLE DETAIL
1/2" = 1'-0"

DETAIL A
NO SCALE

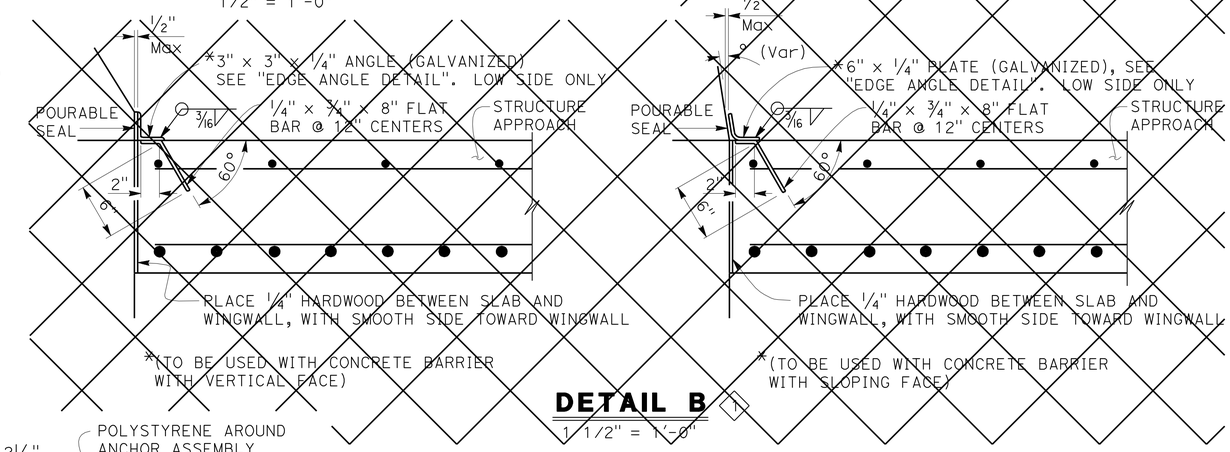

DETAIL B 1
1 1/2" = 1'-0"

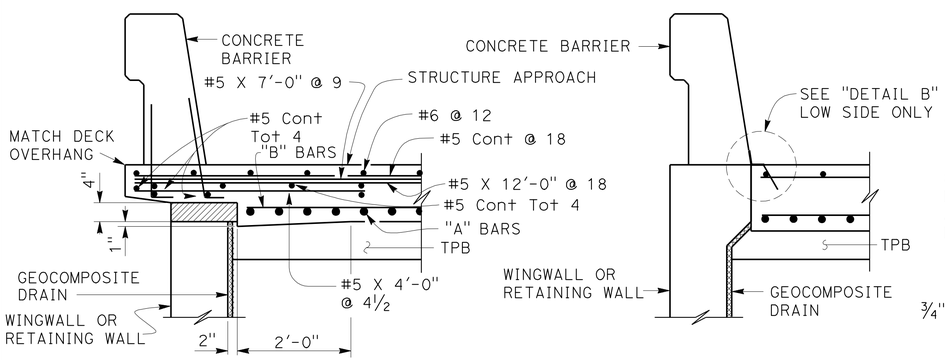

TYPE E-1 Polystyrene to be removed TYPE E-2

SECTION C-C
3/4" = 1'-0"
(Type E-1 to be used, unless otherwise shown on plans)

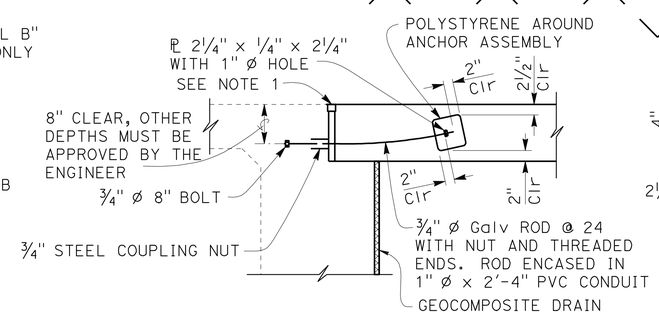

TIE DETAIL
3/4" = 1'-0"

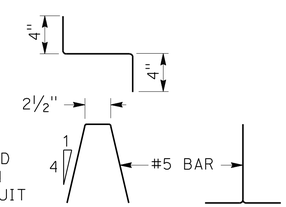

BAR CHAIR DETAIL
1 1/2" = 1'-0"

NOTES:
1. For details not noted or shown, see Structure Plans
2. For drainage details, see "STRUCTURE APPROACH DRAINAGE DETAILS" sheet
3. Longitudinal construction joints, when permitted by the Engineer, shall be located on lane lines
4. End angle or plate at beginning of barrier transition, end of wingwall or end of structure approach, as applicable
5. For transverse contact joint with new PCC paving, refer to Standard Plan P10
6. At the contractor's option, approach slab transverse reinforcement may be placed parallel to paving notch. Spacing of transverse reinforcement is measured along ℄ roadway

SPECIAL DETAILS

REVISED STANDARD DRAWING
FILE NO. xs3-140
APPROVAL DATE July 2011

1 DETAIL NOT APPLICABLE
2 DETAIL MODIFIED

STATE OF CALIFORNIA
DEPARTMENT OF TRANSPORTATION

DIVISION OF ENGINEERING SERVICES

BRIDGE NO. 27-0094R
MILE POST R22.3

NORTH NOVATO OVERHEAD (WIDEN)
STRUCTURE APPROACH TYPE N(30D)

DS OSD 2147A (ENGLISH STANDARD DRAWING "XS" BORDER REV. (02-02-11)

ORIGINAL SCALE IN INCHES FOR REDUCED PLANS 0 1 2 3

UNIT: 0716
PROJECT NUMBER & PHASE: 04120003371
CONTRACT NO.: 04-2640L4

DISREGARD PRINTS BEARING EARLIER REVISION DATES
REVISION DATES 11/28/11 4/16/12 5/31/12
SHEET 21 OF 28

FILE => 2T-0094r-t-sad02.dgn

USERNAME => s124496 DATE PLOTTED => 22-JUN-2012 TIME PLOTTED => 14:20
(20112655211)

DIST.	COUNTY	ROUTE	MILE POST TOTAL PROJECT	SHEET NO.	TOTAL SHEETS
04	Mrn	101	R22.2/24.3	217	223

REGISTERED CIVIL ENGINEER 5/31/12 DATE

6-18-12
PLANS APPROVAL DATE

REGISTERED PROFESSIONAL ENGINEER INES S. LI No. C51561 Exp.6/30/14 CIVIL STATE OF CALIFORNIA

The State of California or its officers or agents shall not be responsible for the accuracy or completeness of electronic copies of this plan sheet.

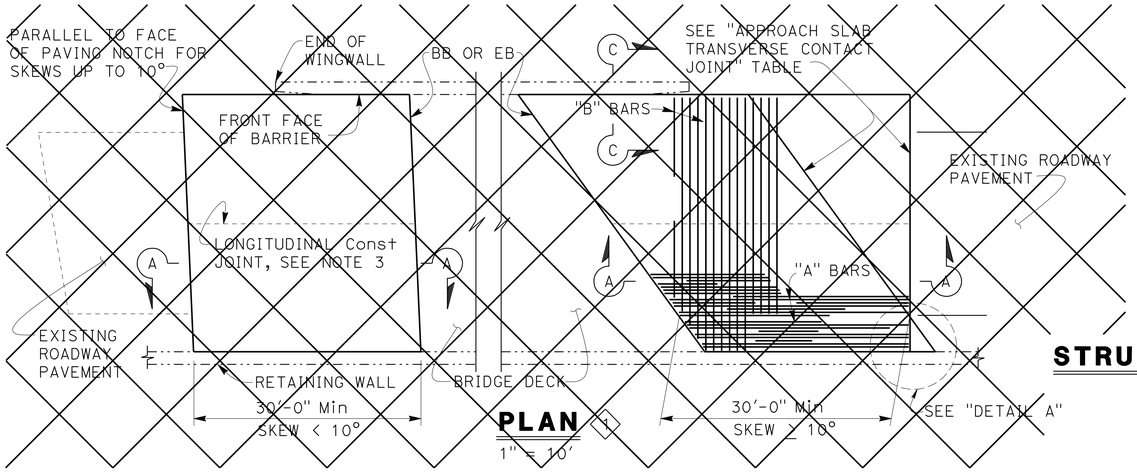

PLAN (1)

1" = 10'

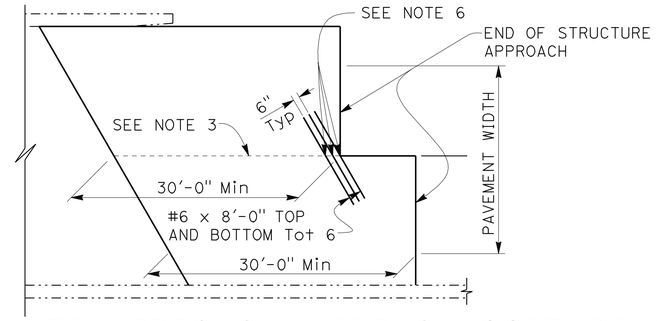

STRUCTURE APPROACH - END STAGGER DETAIL

NO SCALE

APPROACH SLAB TRANSVERSE CONTACT JOINT		
APPROACH SKEW	WITH AC ROADWAY PAVEMENT	WITH PCC ROADWAY PAVEMENT
< 10°	PARALLEL TO FACE OF PN	PARALLEL TO FACE OF PAVING NOTCH
10° - 45°	PARALLEL TO FACE OF PN USE "DETAIL A"	STAGGER LINES 24' TO 36' APART
> 45°	PARALLEL TO FACE OF PN USE "DETAIL A"	STAGGER AT EACH LANE LINE

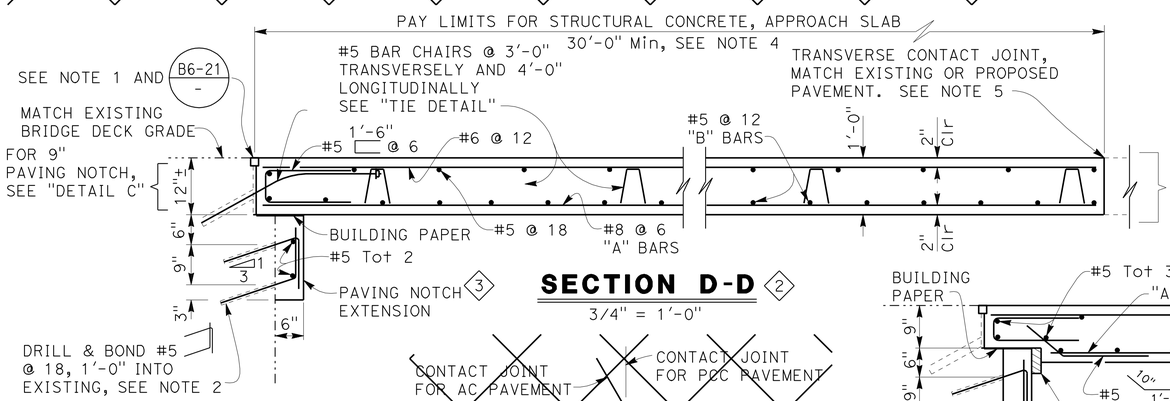

SECTION D-D (2)

3/4" = 1'-0"

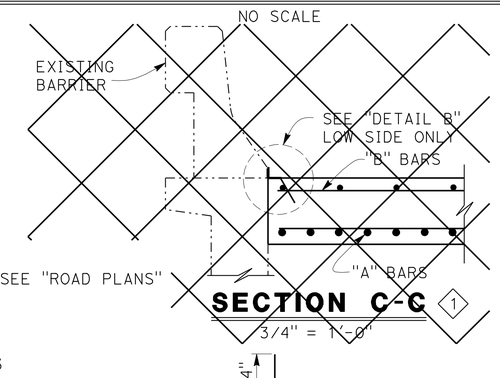

SECTION C-C (1)

3/4" = 1'-0"

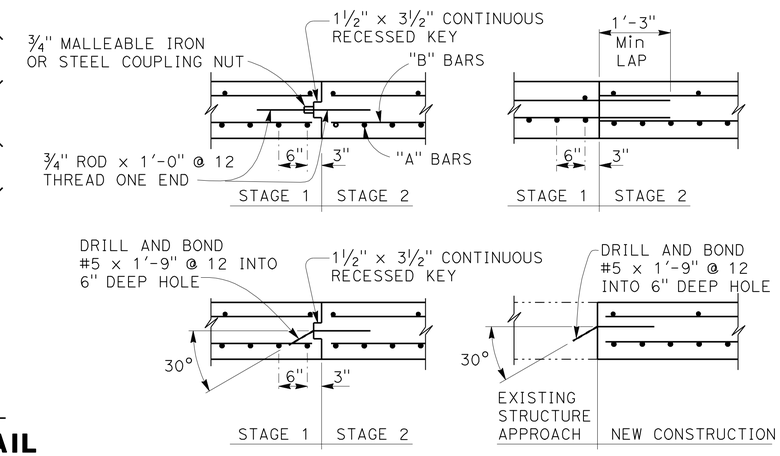

LONGITUDINAL CONSTRUCTION JOINT ALTERNATIVES

3/4" = 1'-0"

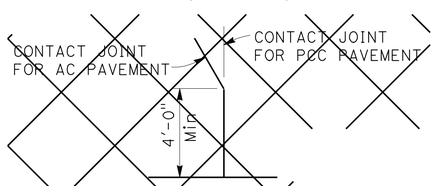

DETAIL A (1)

No Scale

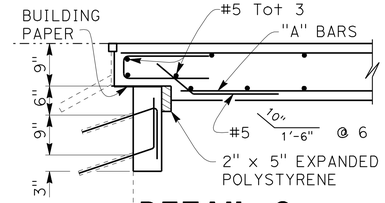

DETAIL C

3/4" = 1'-0"

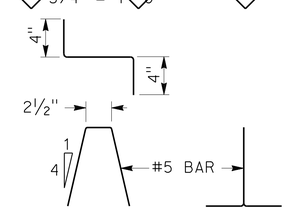

BAR CHAIR DETAIL

1 1/2" = 1'-0"

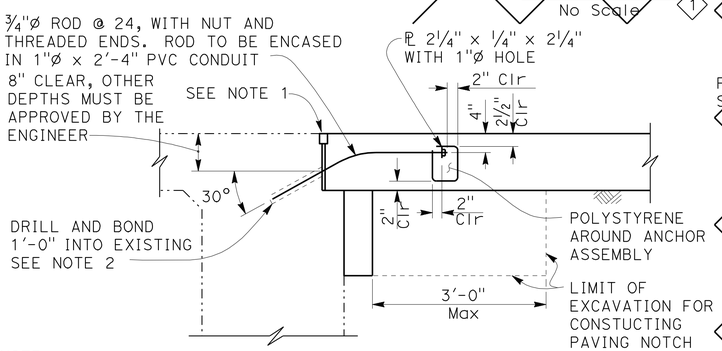

TIE DETAIL

3/4" = 1'-0"

NOTE:
THE CONTRACTOR SHALL VERIFY ALL CONTROLLING FIELD DIMENSIONS BEFORE ORDERING OR FABRICATING ANY MATERIAL.

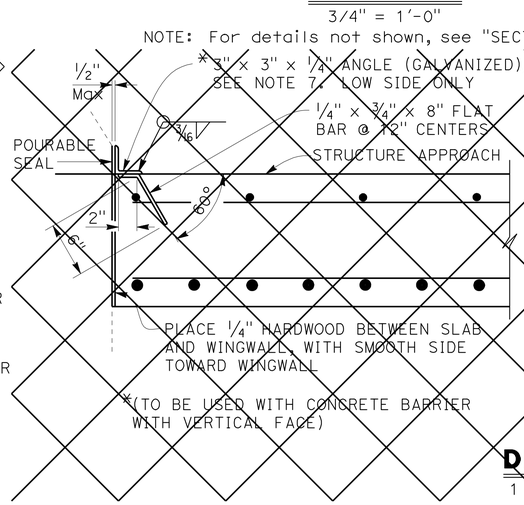

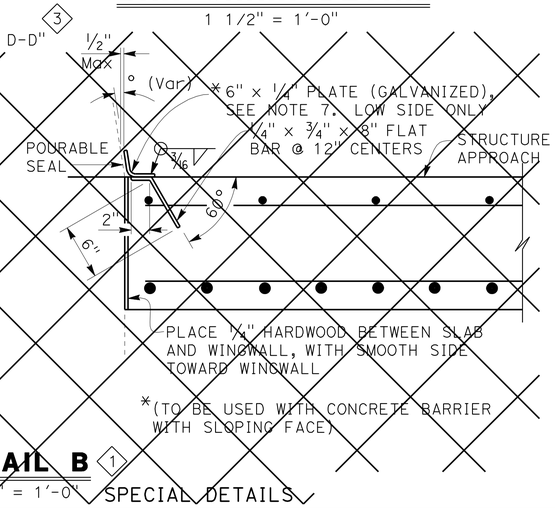

DETAIL B (1)

1 1/2" = 1'-0"

SPECIAL DETAILS

NOTES:

1. For details not shown or noted, see Structure Plans. Adjust bar reinforcement to clear a sawcut for sealed joint, when required
2. Space to avoid existing prestress anchorages and main reinforcement
3. Longitudinal construction joints, when permitted by the Engineer, shall be located on lane lines
4. Transverse contact joint shall be a minimum of 5'-0" from an existing or constructed weakened plane joint
5. For transverse contact joint with new PCC paving. refer to Standard Plan P10
6. Couplers are required for stage construction
7. End angle or plate at beginning of barrier transition, end of wingwall or end of structure approach as applicable

REVISED STANDARD DRAWING

FILE NO. **xs3-150**

APPROVAL DATE July 2011

(1) DETAIL NOT APPLICABLE (3) NOTE REVISED
(2) TITLE REVISED

STATE OF **CALIFORNIA** DEPARTMENT OF TRANSPORTATION

DIVISION OF ENGINEERING SERVICES

BRIDGE NO. 27-0094R
MILE POST R22.3

NORTH NOVATO OVERHEAD (WIDEN)
STRUCTURE APPROACH TYPE R(30D)

DS OSD 2147A (ENGLISH STANDARD DRAWING "XS" BORDER REV. (02-02-11)

ORIGINAL SCALE IN INCHES FOR REDUCED PLANS 0 1 2 3

UNIT: 0716
PROJECT NUMBER & PHASE: 04120003371
CONTRACT NO.: 04-2640L4

DISREGARD PRINTS BEARING EARLIER REVISION DATES

REVISION DATES: 11/28/11 4/16/12 5/31/12

SHEET 22 OF 28

FILE => 27-0094r-t-sad03.dgn

USERNAME => s124196 DATE PLOTTED => 22-JUN-2012 TIME PLOTTED => 14:20 2011265 (20112655S2)

DIST	COUNTY	ROUTE	POST MILES TOTAL PROJECT	SHEET No	TOTAL SHEETS
04	Mrn	101	R22.2/24.3	218	223

REGISTERED CIVIL ENGINEER 5/31/12 DATE

6-18-12
PLANS APPROVAL DATE

REGISTERED PROFESSIONAL ENGINEER INES S. LI No. C51561 Exp.6/30/14 CIVIL STATE OF CALIFORNIA

The State of California or its officers or agents shall not be responsible for the accuracy or completeness of scanned copies of this plan sheet.

TAM
750 LINDARO STREET, SUITE 200
SAN RAFAEL, CALIFORNIA 94901

BIGGS CARDOSA ASSOCIATES INC.
865 THE ALAMEDA
SAN JOSE, CALIFORNIA 95126

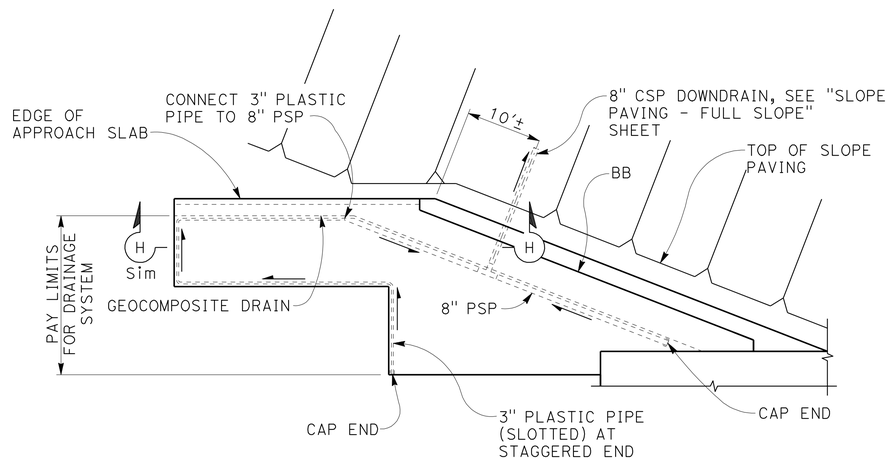

ABUTMENT 1

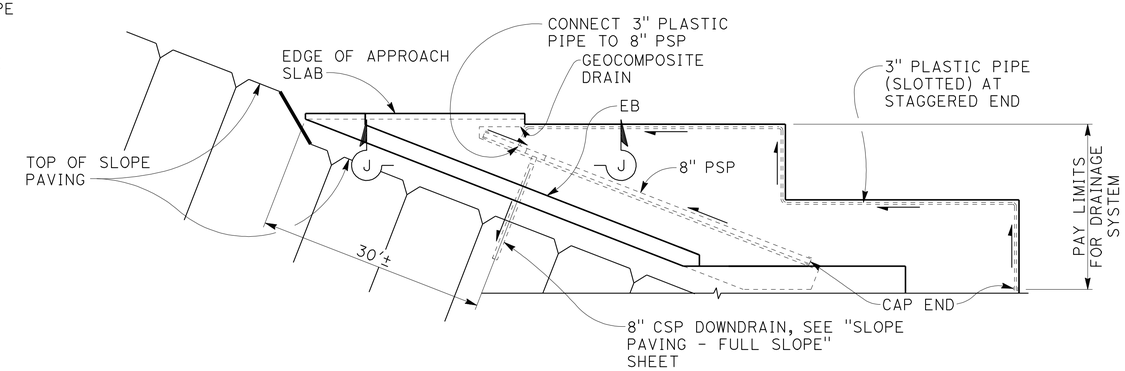

ABUTMENT 5

LEGEND:
← Indicates Flow Direction

PLAN
1" = 10'

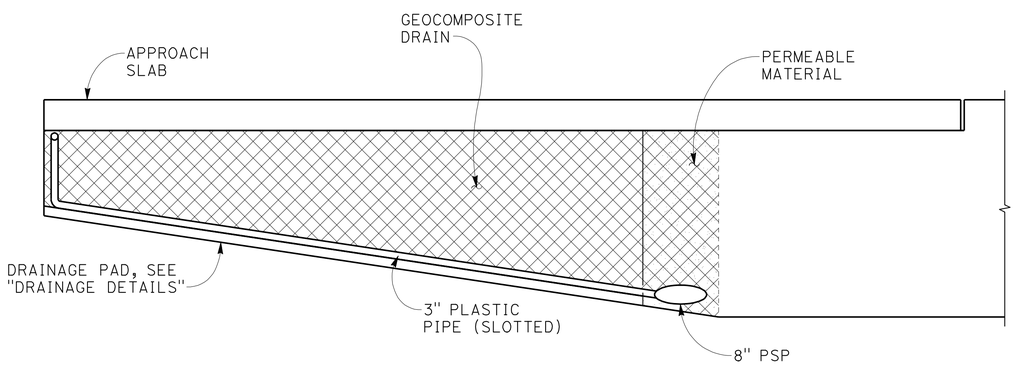

SECTION H-H
3/8" = 1'-0"

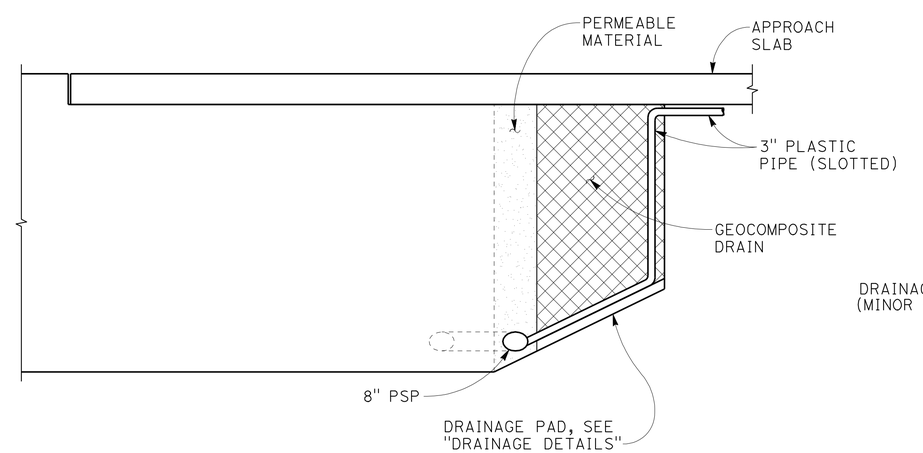

SECTION J-J
3/8" = 1'-0"

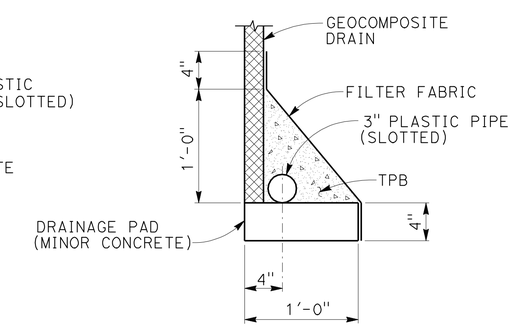

DRAINAGE DETAILS
1 1/2" = 1'-0"

NOTE:
THE CONTRACTOR MUST VERIFY ALL CONTROLLING FIELD DIMENSIONS BEFORE ORDERING OR FABRICATING ANY MATERIAL

DESIGN OVERSIGHT Tracy L Bertram
6-8-12
SIGN OFF DATE

	BY	CHECKED
DESIGN	P. GONGIDI	S. KOTAMALA
DETAILS	R. RIVAS	S. OGHUMU
QUANTITIES	P. GONGIDI	S. OGHUMU

PREPARED FOR THE STATE OF CALIFORNIA DEPARTMENT OF TRANSPORTATION

INES LI
PROJECT ENGINEER

BRIDGE NO. 27-0094R
POST MILES R22.3

NORTH NOVATO OVERHEAD (WIDEN)
STRUCTURE APPROACH DRAINAGE DETAILS

DESIGN GENERAL PLAN SHEET (ENGLISH) (REV. 7/16/10)

ORIGINAL SCALE IN INCHES FOR REDUCED PLANS 0 1 2 3

UNIT: 0716
PROJECT NUMBER & PHASE: 04120003371 CONTRACT NO.: 04-2640L4

DISREGARD PRINTS BEARING EARLIER REVISION DATES

REVISION DATES 11/28/11 4/16/12 5/31/12

SHEET 23 OF 28

FILE => 27-0094r-t-sadd01.dgn

USERNAME => s124996 DATE PLOTTED => 22-JUN-2012 TIME PLOTTED => 14:20

2011265 (20112655523)

DIST	COUNTY	ROUTE	POST MILES TOTAL PROJECT	SHEET No	TOTAL SHEETS
04	Mrn	101	R22.2/24.3	219	223

REGISTERED CIVIL ENGINEER 5/31/12 DATE

6-18-12
PLANS APPROVAL DATE

REGISTERED PROFESSIONAL ENGINEER INES S. LI No. C51561 Exp.6/30/14 CIVIL STATE OF CALIFORNIA

The State of California or its officers or agents shall not be responsible for the accuracy or completeness of scanned copies of this plan sheet.

TAM
750 LINDARO STREET, SUITE 200
SAN RAFAEL, CALIFORNIA 94901

BIGGS CARDOSA ASSOCIATES INC.
865 THE ALAMEDA
SAN JOSE, CALIFORNIA 95126

NOTES:
1. Bent 3 shown, bent 2 similar
2. Top of wall elevation is linear between points shown
3. See "DETAIL 1" for crash wall section at slope paving

LEGEND:
Indicates Existing Structure
Indicates Expanded Polystyrene

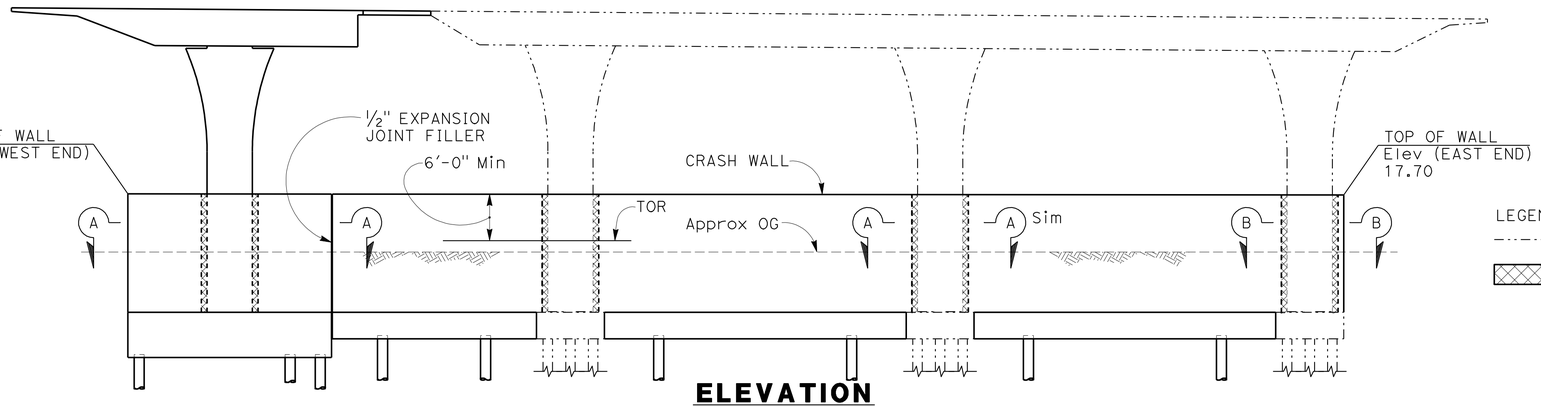

ELEVATION
1" = 10'

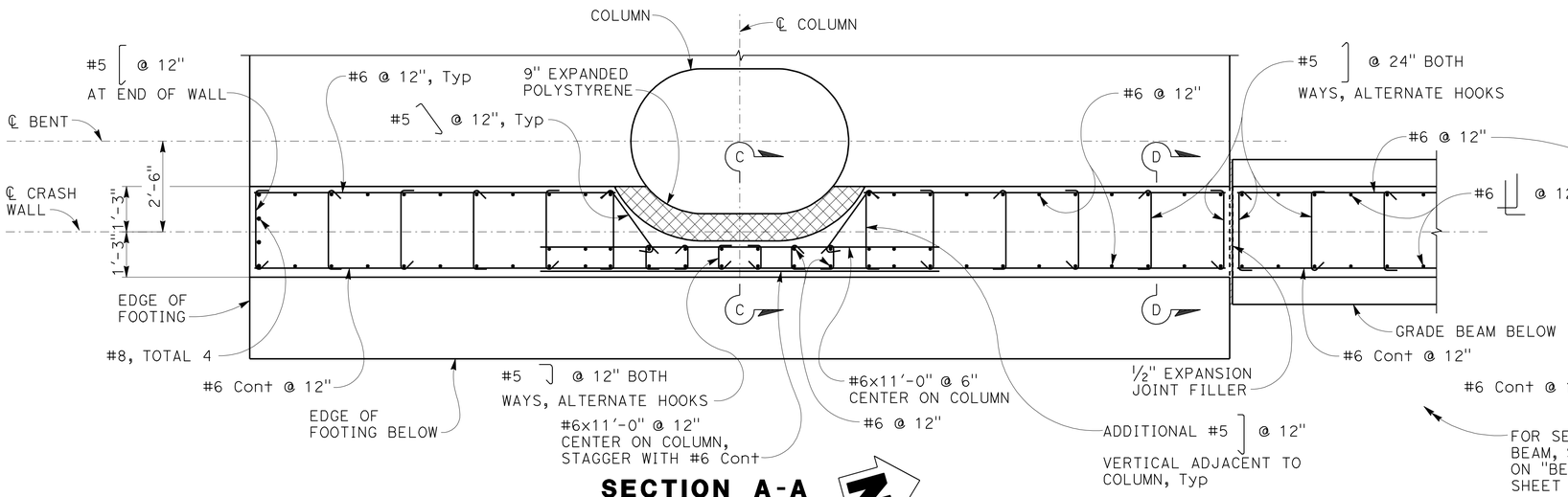

SECTION A-A
1/2" = 1'-0"

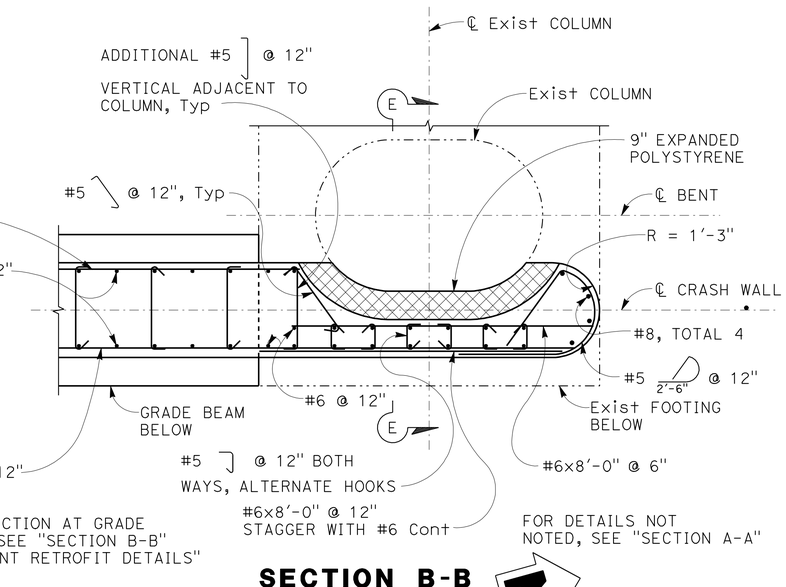

SECTION B-B
1/2" = 1'-0"

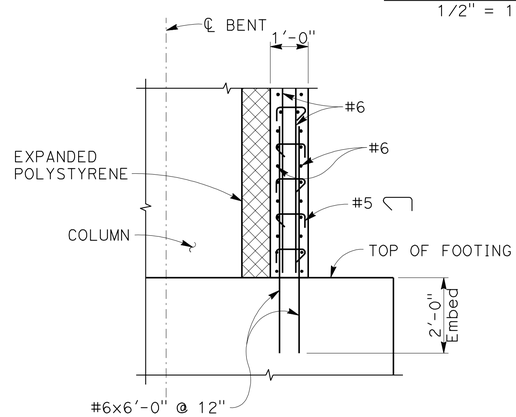

SECTION C-C
1/2" = 1'-0"

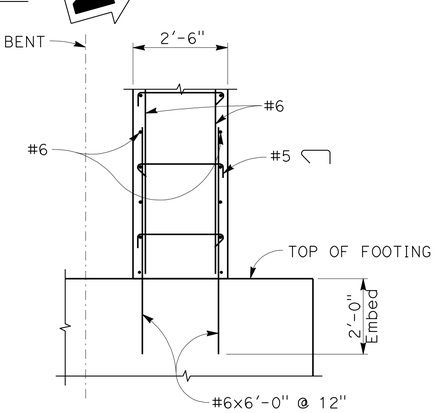

SECTION D-D
1/2" = 1'-0"

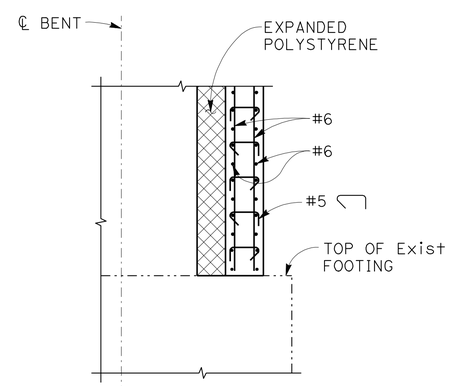

SECTION E-E
1/2" = 1'-0"

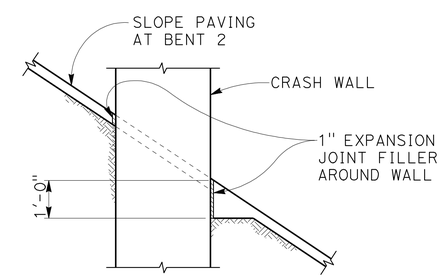

DETAIL 1
1/2" = 1'-0"

NOTE:
THE CONTRACTOR MUST VERIFY ALL CONTROLLING FIELD DIMENSIONS BEFORE ORDERING OR FABRICATING ANY MATERIAL

DESIGN OVERSIGHT Tracy L Bertram
6-8-12
SIGN OFF DATE

	BY	CHECKED
DESIGN	P. GONGIDI	S. KOTAMALA
DETAILS	R. RIVAS	S. OGHUMU
QUANTITIES	P. GONGIDI	S. OGHUMU

PREPARED FOR THE STATE OF CALIFORNIA DEPARTMENT OF TRANSPORTATION

INES LI
PROJECT ENGINEER

BRIDGE NO. 27-0094R
POST MILES R22.3

NORTH NOVATO OVERHEAD (WIDEN)
CRASH WALL DETAILS

DESIGN GENERAL PLAN SHEET (ENGLISH) (REV. 7/16/10)

ORIGINAL SCALE IN INCHES FOR REDUCED PLANS 0 1 2 3

UNIT: 0716
PROJECT NUMBER & PHASE: 04120003371 CONTRACT NO.: 04-2640L4

DISREGARD PRINTS BEARING EARLIER REVISION DATES 11/28/11 4/16/12 5/31/12

SHEET 24 OF 28

FILE => 27-0094r-u-cwd01.dgn

USERNAME => S13224496 DATE PLOTTED => 22-JUN-2012 TIME PLOTTED => 14:20

2011265 (20112655 24)

DIST.	COUNTY	ROUTE	MILE POST TOTAL PROJECT	SHEET NO.	TOTAL SHEETS
04	Mrn	101	R22.2/24.3	220	223

REGISTERED CIVIL ENGINEER — DATE 5/31/12

REGISTERED PROFESSIONAL ENGINEER — INES S. LI — No. C51561 — Exp. 6/30/14 — CIVIL — STATE OF CALIFORNIA

6-18-12
PLANS APPROVAL DATE

The State of California or its officers or agents shall not be responsible for the accuracy or completeness of electronic copies of this plan sheet.

TAM
750 LINDARO STREET, SUITE 200
SAN RAFAEL, CA 94901

BIGGS CARDOSA ASSOCIATES INC.
865 THE ALAMEDA
SAN JOSE, CALIFORNIA 95126

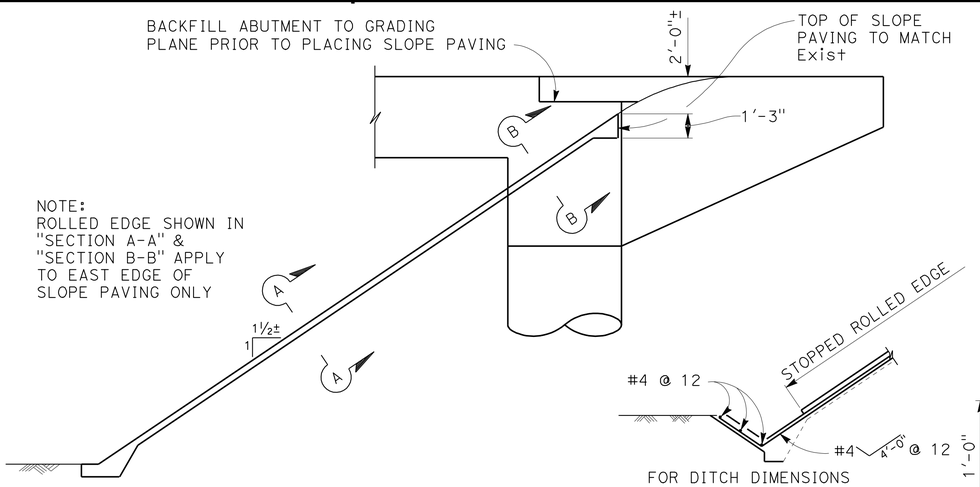

1 WINGWALL ELEVATION

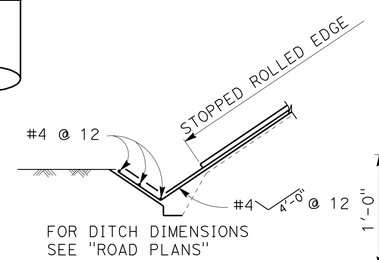

WITH DITCH

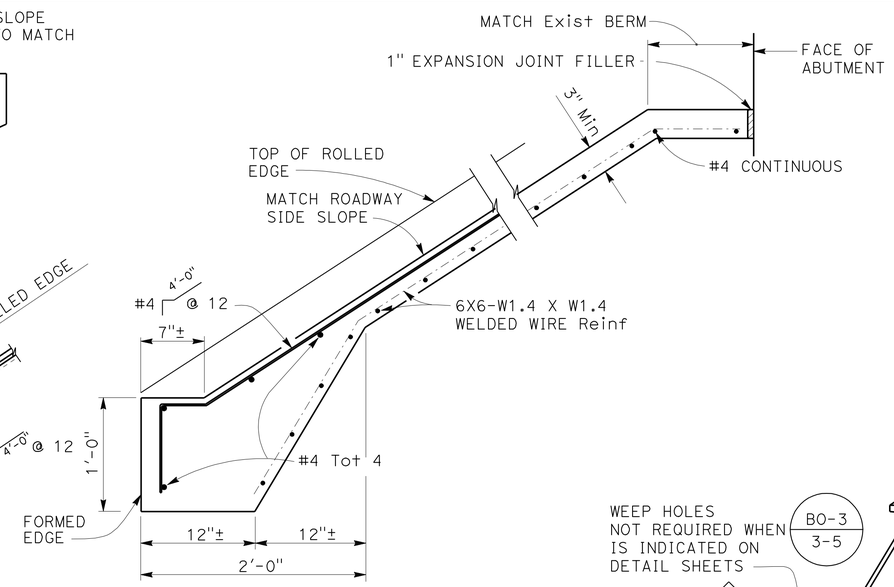

TYPICAL SECTION - CONCRETE PAVING 1

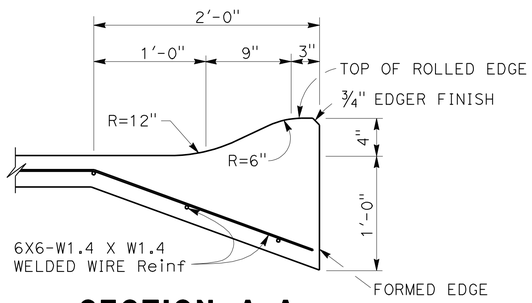

SECTION A-A

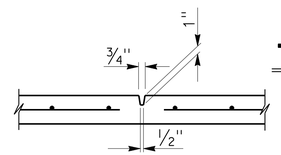

PREFORMED GROOVE

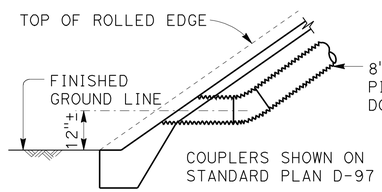

TYPICAL - NO CURB

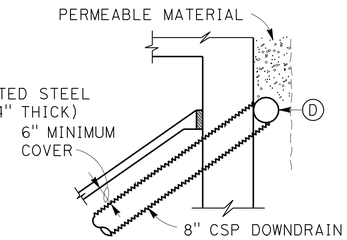

TYPICAL - DRAIN CONNECTION

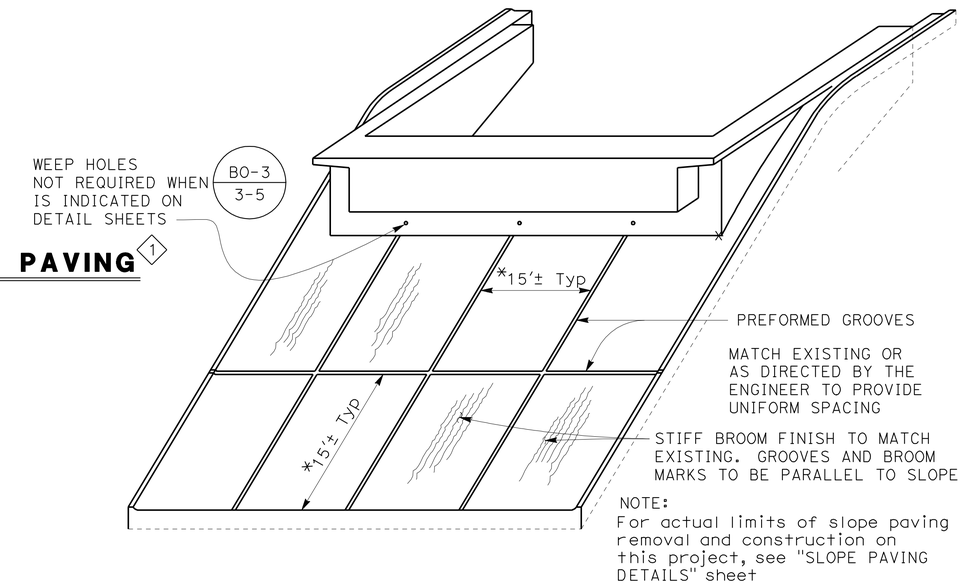

NOTE:
For actual limits of slope paving removal and construction on this project, see "SLOPE PAVING DETAILS" sheet

PICTORIAL VIEW OF TYPICAL INSTALLATION 1

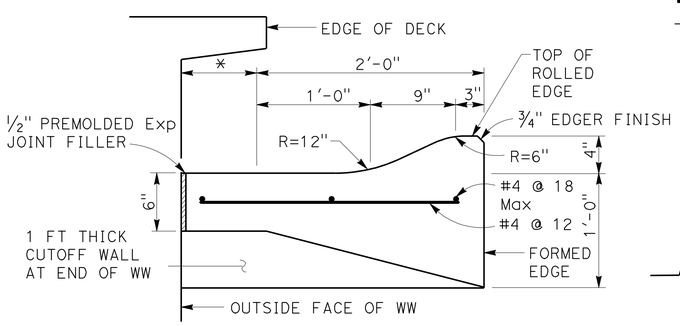

SECTION B-B

* THIS DIMENSION BECOMES ZERO WHEN EDGE OF DECK IS AT OUTSIDE FACE OF WW

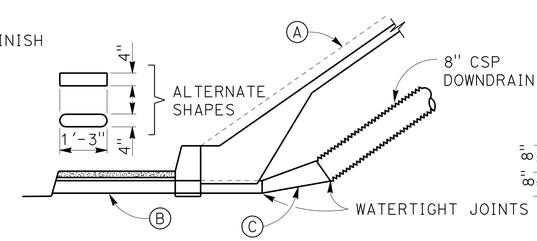

TYPICAL - WITH SIDEWALK

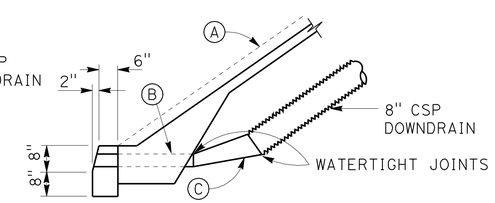

TYPICAL - WITH CURB

DRAINAGE DETAILS

NOTE:
Drainage details are only applicable when is indicated on detail sheets. BO-3 / 3-5

(A) Top of rolled edge

(B) Conduit:
0.064" galv corrugated steel or 0.109" smooth galv steel

(C) Taper: { 0.064" galv corrugated steel or 0.109" smooth galv steel

(D) 8" perforated steel pipe (0.064" thick) underdrain behind abutment. Connect to downdrain as shown on limits of Slope Paving & Drainage layout.

NO SCALE

STANDARD DRAWING
FILE NO. xs4-210
APPROVAL DATE July 2011

1 DETAIL MODIFIED

STATE OF CALIFORNIA
DEPARTMENT OF TRANSPORTATION

DIVISION OF ENGINEERING SERVICES

BRIDGE NO. 27-0094R
MILE POST R22.3

NORTH NOVATO OVERHEAD (WIDEN)
SLOPE PAVING-FULL SLOPE

DS OSD 2147A (ENGLISH STANDARD DRAWING "XS" BORDER REV. (02-02-11)

ORIGINAL SCALE IN INCHES FOR REDUCED PLANS 0 1 2 3

UNIT: 0716
PROJECT NUMBER & PHASE: 04120003371
CONTRACT NO.: 04-2640L4

DISREGARD PRINTS BEARING EARLIER REVISION DATES
REVISION DATES 11/28/12 12/6/12 5/31/12

SHEET 25 OF 28

FILE => 27-0094r-v-sp.dgn

USERNAME => s124496 DATE PLOTTED => 22-JUN-2012 TIME PLOTTED => 14:20

(20112635525)

DIST	COUNTY	ROUTE	POST MILES TOTAL PROJECT	SHEET No	TOTAL SHEETS
04	Mrn	101	R22.2/24.3	221	223

REGISTERED CIVIL ENGINEER 5/31/12 DATE

6-18-12
PLANS APPROVAL DATE

REGISTERED PROFESSIONAL ENGINEER INES S. LI No. C51561 Exp.6/30/14 CIVIL STATE OF CALIFORNIA

The State of California or its officers or agents shall not be responsible for the accuracy or completeness of scanned copies of this plan sheet.

TAM
750 LINDARO STREET, SUITE 200
SAN RAFAEL, CALIFORNIA 94901

BIGGS CARDOSA ASSOCIATES INC.
865 THE ALAMEDA
SAN JOSE, CALIFORNIA 95126

NOTES:
1. Exact location of slope paving removal as directed by the Engineer
2. Remove existing slope paving in full panels between grooves. Do not remove partial slope paving panels
3. For slope paving drainage layout see "STRUCTURE APPROACH DRAINAGE DETAILS" sheet
4. Limits of slope paving construction to match limits of removal unless otherwise directed by the Engineer

LEGEND:
Indicates Existing Structure
Indicates Limits of Removal & Construction of Slope Paving

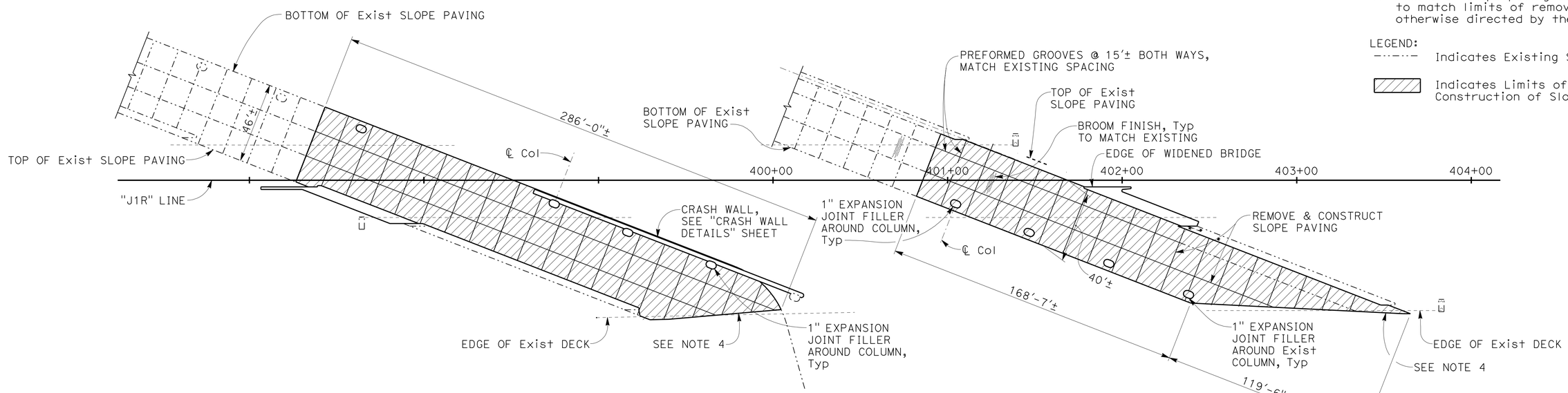

LIMITS OF SLOPE PAVING
1" = 30'

NOTE:
THE CONTRACTOR MUST VERIFY ALL CONTROLLING FIELD DIMENSIONS BEFORE ORDERING OR FABRICATING ANY MATERIAL

DESIGN OVERSIGHT Tracy L Bertram
6-8-12
SIGN OFF DATE

	BY	CHECKED
DESIGN	P. GONGIDI	S. KOTAMALA
DETAILS	R. RIVAS	S. OGHUMU
QUANTITIES	P. GONGIDI	S. OGHUMU

PREPARED FOR THE STATE OF CALIFORNIA DEPARTMENT OF TRANSPORTATION

INES LI
PROJECT ENGINEER

BRIDGE NO. 27-0094R
POST MILES R22.3

NORTH NOVATO OVERHEAD (WIDEN)
SLOPE PAVING DETAILS

DESIGN GENERAL PLAN SHEET (ENGLISH) (REV. 7/16/10)

ORIGINAL SCALE IN INCHES FOR REDUCED PLANS 0 1 2 3

UNIT: 0716
PROJECT NUMBER & PHASE: 04120003371 CONTRACT NO.: 04-2640L4

DISREGARD PRINTS BEARING EARLIER REVISION DATES 11/28/11 4/16/12 5/31/12

SHEET 26 OF 28

FILE => 27-0094r-v-spd.dgn

USERNAME => s124496 DATE PLOTTED => 22-JUN-2012 TIME PLOTTED => 14:20 2011265 (2011265S26)

DIST	COUNTY	ROUTE	POST MILES TOTAL PROJECT	SHEET No	TOTAL SHEETS
04	Mrn	101	R22.2/24.3	222	223

GEOTECHNICAL PROFESSIONAL — DATE 5/31/12

6-18-12
PLANS APPROVAL DATE

REGISTERED PROFESSIONAL ENGINEER — GARY PARIKH No. G.E. 666 Exp. 12/31/13 GEOTECHNICAL — STATE OF CALIFORNIA

The State of California or its officers or agents shall not be responsible for the accuracy or completeness of electronic copies of this plan sheet.

TAM
750 LINDARO STREET, SUITE 200
SAN RAFAEL, CA 94901

PARIKH CONSULTANTS, INC.
2360 QUME DRIVE, SUITE A
SAN JOSE, CA 95131

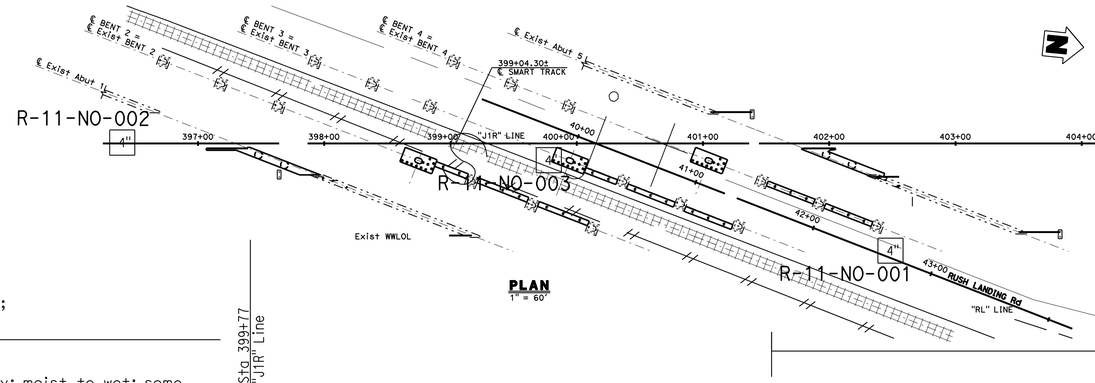

PLAN
1" = 60'

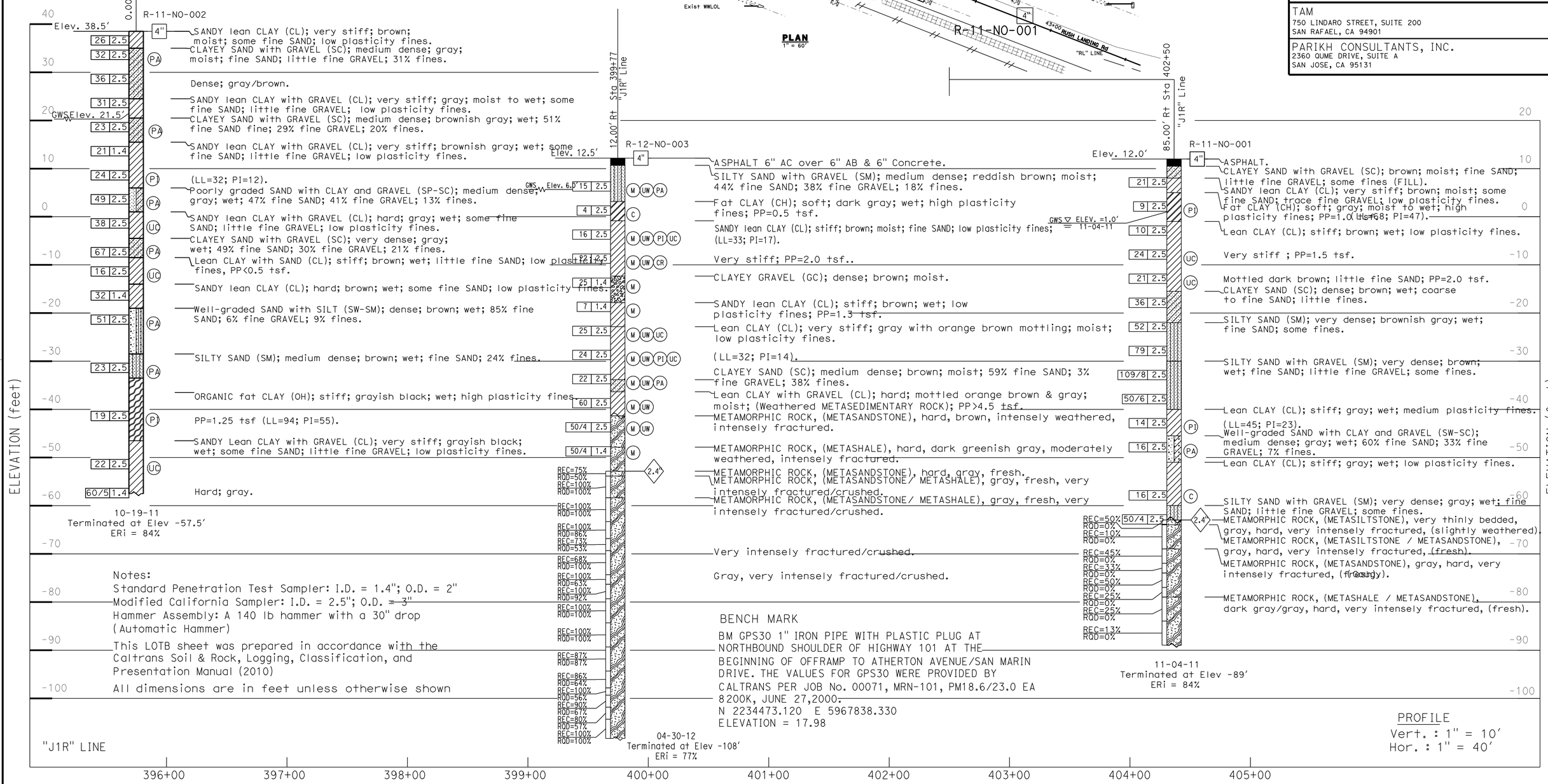

SANDY lean CLAY (CL); very stiff; brown; moist; some fine SAND; low plasticity fines.
CLAYEY SAND with GRAVEL (SC); medium dense; gray; moist; fine SAND; little fine GRAVEL; 31% fines.
Dense; gray/brown.
SANDY lean CLAY with GRAVEL (CL); very stiff; gray; moist to wet; some fine SAND; little fine GRAVEL; low plasticity fines.
CLAYEY SAND with GRAVEL (SC); medium dense; brownish gray; wet; 51% fine SAND fine; 29% fine GRAVEL; 20% fines.
SANDY lean CLAY with GRAVEL (CL); very stiff; brownish gray; wet; some fine SAND; little fine GRAVEL; low plasticity fines.
(LL=32; PI=12).
Poorly graded SAND with CLAY and GRAVEL (SP-SC); medium dense; gray; wet; 47% fine SAND; 41% fine GRAVEL; 13% fines.
SANDY lean CLAY with GRAVEL (CL); hard; gray; wet; some fine SAND; little fine GRAVEL; low plasticity fines.
CLAYEY SAND with GRAVEL (SC); very dense; gray; wet; 49% fine SAND; 30% fine GRAVEL; 21% fines.
Lean CLAY with SAND (CL); stiff; brown; wet; little fine SAND; low plasticity fines, PP<0.5 tsf.
SANDY lean CLAY (CL); hard; brown; wet; some fine SAND; low plasticity fines.
Well-graded SAND with SILT (SW-SM); dense; brown; wet; 85% fine SAND; 6% fine GRAVEL; 9% fines.
SILTY SAND (SM); medium dense; brown; wet; fine SAND; 24% fines.
ORGANIC fat CLAY (OH); stiff; grayish black; wet; high plasticity fines.
PP=1.25 tsf (LL=94; PI=55).
SANDY Lean CLAY with GRAVEL (CL); very stiff; grayish black; wet; some fine SAND; little fine GRAVEL; low plasticity fines.
Hard; gray.

ASPHALT 6" AC over 6" AB & 6" Concrete.
SILTY SAND with GRAVEL (SM); medium dense; reddish brown; moist; 44% fine SAND; 38% fine GRAVEL; 18% fines.
Fat CLAY (CH); soft; dark gray; wet; high plasticity fines; PP=0.5 tsf.
SANDY lean CLAY (CL); stiff; brown; moist; fine SAND; low plasticity fines; (LL=33; PI=17).
Very stiff; PP=2.0 tsf..
CLAYEY GRAVEL (GC); dense; brown; moist.
SANDY lean CLAY (CL); stiff; brown; wet; low plasticity fines; PP=1.3 tsf.
Lean CLAY (CL); very stiff; gray with orange brown mottling; moist; low plasticity fines.
(LL=32; PI=14).
CLAYEY SAND (SC); medium dense; brown; moist; 59% fine SAND; 3% fine GRAVEL; 38% fines.
Lean CLAY with GRAVEL (CL); hard; mottled orange brown & gray; moist; (Weathered METASEDIMENTARY ROCK); PP>4.5 tsf.
METAMORPHIC ROCK, (METASANDSTONE), hard, brown, intensely weathered, intensely fractured.
METAMORPHIC ROCK, (METASHALE), hard, dark greenish gray, moderately weathered, intensely fractured.
METAMORPHIC ROCK, (METASANDSTONE), hard, gray, fresh.
METAMORPHIC ROCK, (METASANDSTONE/ METASHALE), gray, fresh, very intensely fractured/crushed.
METAMORPHIC ROCK, (METASANDSTONE/ METASHALE), gray, fresh, very intensely fractured/crushed.
Very intensely fractured/crushed.
Gray, very intensely fractured/crushed.

ASPHALT.
CLAYEY SAND with GRAVEL (SC); brown; moist; fine SAND; little fine GRAVEL; some fines (FILL).
SANDY lean CLAY (CL); very stiff; brown; moist; some fine SAND; trace fine GRAVEL; low plasticity fines.
Fat CLAY (CH); soft; gray; moist to wet; high plasticity fines; PP=1.0 tsf; (LL=68; PI=47).
Lean CLAY (CL); stiff; brown; wet; low plasticity fines.
Very stiff ; PP=1.5 tsf.
Mottled dark brown; little fine SAND; PP=2.0 tsf.
CLAYEY SAND (SC); dense; brown; wet; coarse to fine SAND; little fines.
SILTY SAND (SM); very dense; brownish gray; wet; fine SAND; some fines.
SILTY SAND with GRAVEL (SM); very dense; brown; wet; fine SAND; little fine GRAVEL; some fines.
Lean CLAY (CL); stiff; gray; wet; medium plasticity fines.
(LL=45; PI=23).
Well-graded SAND with CLAY and GRAVEL (SW-SC); medium dense; gray; wet; 60% fine SAND; 33% fine GRAVEL; 7% fines.
Lean CLAY (CL); stiff; gray; wet; low plasticity fines.
SILTY SAND with GRAVEL (SM); very dense; gray; wet; fine SAND; little fine GRAVEL; some fines.
METAMORPHIC ROCK, (METASILTSTONE), very thinly bedded, gray, hard, very intensely fractured, (slightly weathered).
METAMORPHIC ROCK, (METASILTSTONE / METASANDSTONE), gray, hard, very intensely fractured, (fresh).
METAMORPHIC ROCK, (METASANDSTONE), gray, hard, very intensely fractured, (fresh).
METAMORPHIC ROCK, (METASHALE / METASANDSTONE), dark gray/gray, hard, very intensely fractured, (fresh).

Notes:
Standard Penetration Test Sampler: I.D. = 1.4"; O.D. = 2"
Modified California Sampler: I.D. = 2.5"; O.D. = 3"
Hammer Assembly: A 140 lb hammer with a 30" drop (Automatic Hammer)
This LOTB sheet was prepared in accordance with the Caltrans Soil & Rock, Logging, Classification, and Presentation Manual (2010)
All dimensions are in feet unless otherwise shown

BENCH MARK
BM GPS30 1" IRON PIPE WITH PLASTIC PLUG AT NORTHBOUND SHOULDER OF HIGHWAY 101 AT THE BEGINNING OF OFFRAMP TO ATHERTON AVENUE/SAN MARIN DRIVE. THE VALUES FOR GPS30 WERE PROVIDED BY CALTRANS PER JOB No. 00071, MRN-101, PM18.6/23.0 EA 8200K, JUNE 27,2000.
N 2234473.120 E 5967838.330
ELEVATION = 17.98

PROFILE
Vert. : 1" = 10'
Hor. : 1" = 40'

DESIGN OVERSIGHT Tracy L Bertram
6-8-12
SIGN OFF DATE

DRAWN BY E. ORTAKCI
CHECKED BY A. LAM

L.S. BHANGOO
FIELD INVESTIGATION BY:
DATE: OCTOBER & NOVEMBER, 2011

PREPARED FOR THE STATE OF CALIFORNIA DEPARTMENT OF TRANSPORTATION

ALSTON LAM
PROJECT ENGINEER

BRIDGE NO. 27-0094R
POST MILES R22.3

NORTH NOVATO OVERHEAD (WIDEN)
LOG OF TEST BORINGS 1 OF 2

GS GEOTECHNICAL LOG OF TEST BORINGS SHEET (ENGLISH) (REV. 7/16/10)

ORIGINAL SCALE IN INCHES FOR REDUCED PLANS 0 1 2 3

UNIT: 0716
PROJECT NUMBER & PHASE: 04120003371

DISREGARD PRINTS BEARING EARLIER REVISION DATES

REVISION DATES

SHEET 27 OF 28

DGN FILE=X270094rzltb01.dgn

CONTRACT NO.: 04-2640L4 PROJECT ID: 0412000337

USERNAME => s124496 DATE PLOTTED => 22-JUN-2012 TIME PLOTTED => 14:20

DIVISION OF ENGINEERING SERVICES – GEOTECHNICAL SERVICES

As-Built Log of Test Borings sheet is considered an informational document only. As such, the State of California registration seal with signature, license number and registration certificate expiration date confirm that this is a true and accurate copy of the original document. This drawing is available and presented only for the convenience of any bidder, contractor or other interested party.

DIST.	COUNTY	ROUTE	POST MILES–TOTAL PROJECT	Sheet No.	Total Sheets
04	Mrn	101	R22.2/24.3	223	223

REGISTERED CIVIL ENGINEER — DATE 5/31/12

REGISTERED PROFESSIONAL ENGINEER — GARY PARIKH — No. C.E. 866 — Exp. 12/31/13 — GEOTECHNICAL — STATE OF CALIFORNIA

NORTH NOVATO OVERHEAD (WIDEN)

LOG OF TEST BORINGS 2 OF 2

AVAILABLE AT OFFICE OF STRUCTURE MAINTENANCE AND INVESTIGATIONS, SACRAMENTO, CALIFORNIA

UNIT: 0716
PROJECT NUMBER & PHASE: 04000007371

TO ACCOMPANY PLANS DATED 6-18-12

BRIDGE No.	Sheet	of
27-0094R	2B	2B

DIST.	COUNTY	ROUTE	POST MILES–TOTAL PROJECT	SHEET No.	TOTAL SHEETS
04	Mrn	101	10.2/23.3	312	912

DESIGN ENGINEER-CHIEF PLANNER — REGISTERED CIVIL ENGINEER No. 21186

DATE CERTIFIED November 8, 1971

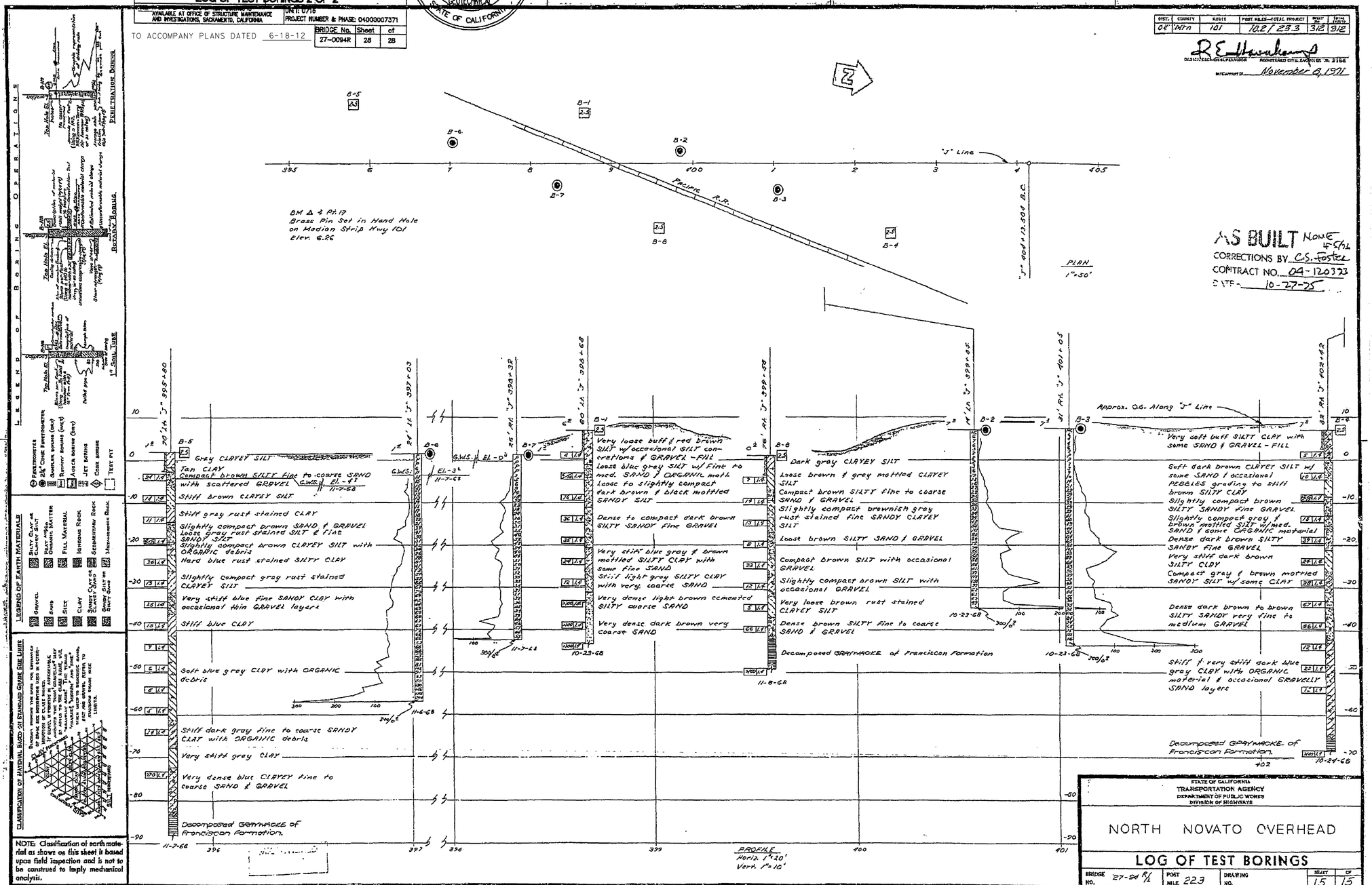

AS BUILT None
CORRECTIONS BY C.S. Foster
CONTRACT NO. 04-120373
DATE 10-27-75

LEGEND OF BORING OPERATIONS

PENETROMETER — 2½" CONE PENETROMETER — DYNAMIC CONE (DCP) — REPORT BOUNDS (DCP) — AUGER BORING (DCP) — JET BORING — CORE BORING — TEST PIT

LEGEND OF EARTH MATERIALS

GRAVEL — SAND — SILT — CLAY — SILTY CLAY OR CLAYEY SILT — DEEP HIGH ORGANIC MATTER — FILL MATERIAL — IGNEOUS ROCK — SEDIMENTARY ROCK — METAMORPHIC ROCK — SILTY CLAY OR CLAYEY SILT — DEEP SILT OR SILTY SAND

CLASSIFICATION OF MATERIAL BASED ON STANDARD GRADE EDGE LIMITS

NOTE: Classification of earth material as shown on this sheet is based upon field inspection and is not to be construed to imply mechanical analysis.

BRIDGE DEPARTMENT
ENGINEERING GEOLOGY SECTION

FIELD STUDY — DRAWN — CHECKED — Approval Recommended

STATE OF CALIFORNIA
TRANSPORTATION AGENCY
DEPARTMENT OF PUBLIC WORKS
DIVISION OF HIGHWAYS

NORTH NOVATO OVERHEAD

LOG OF TEST BORINGS

BRIDGE NO.	POST MILE	DRAWING NO.	SHEET	OF
27-94 R/L	223		15	15

REVISION DATES (PRELIMINARY STAGE ONLY) — Disregard prints bearing earlier revision dates

WO 120371
CU 04213
PR-2794-2

AS BUILT PLANS
Contract No. 04-120374
Date Completed –
Document No. 4/100 81047

I HEREBY CERTIFY THAT THIS IS A TRUE AND ACCURATE COPY OF THE ABOVE DOCUMENT TAKEN UNDER MY DIRECTION AND CONTROL ON THIS DATE IN SACRAMENTO, CALIFORNIA PURSUANT TO AUTHORIZATION BY THE DIRECTOR OF TRANSPORTATION.

DATE 6/28/76 — SIGNED — TITLE Project Supervisor

FILENAME => 27-0094r-z-1tb02.tif

ClibPDF - www.fastio.com