INDEX OF PLANS

SHEET No.	DESCRIPTION
1	TITLE AND LOCATION MAP
2	TYPICAL CROSS SECTION
3	CONSTRUCTION DETAILS
4	CONSTRUCTION AREA SIGNS
5 - 8	PAVEMENT DELINEATION PLAN AND QUANTITIES
9 - 10	SUMMARY OF QUANTITIES
11 - 16	ELECTRICAL PLANS
17 - 31	REVISED AND NEW STANDARD PLANS

THE STANDARD PLANS LIST APPLICABLE TO THIS CONTRACT IS INCLUDED IN THE NOTICE TO BIDDERS AND SPECIAL PROVISIONS BOOK.

STATE OF CALIFORNIA

DEPARTMENT OF TRANSPORTATION

ACSTP-P082(021)E

Dist	COUNTY	ROUTE	POST MILES TOTAL PROJECT	SHEET No.	TOTAL SHEETS
04	SM	82	0.0/2.7	1	31

PROJECT PLANS FOR CONSTRUCTION ON STATE HIGHWAY

IN SAN MATEO COUNTY IN MENLO PARK AND ATHERTON FROM SAN MATEO COUNTY LINE TO BERKSHIRE AVENUE

TO BE SUPPLEMENTED BY STANDARD PLANS DATED MAY 2006

LOCATION MAP

SANTA CLARA COUNTY

SAN MATEO COUNTY

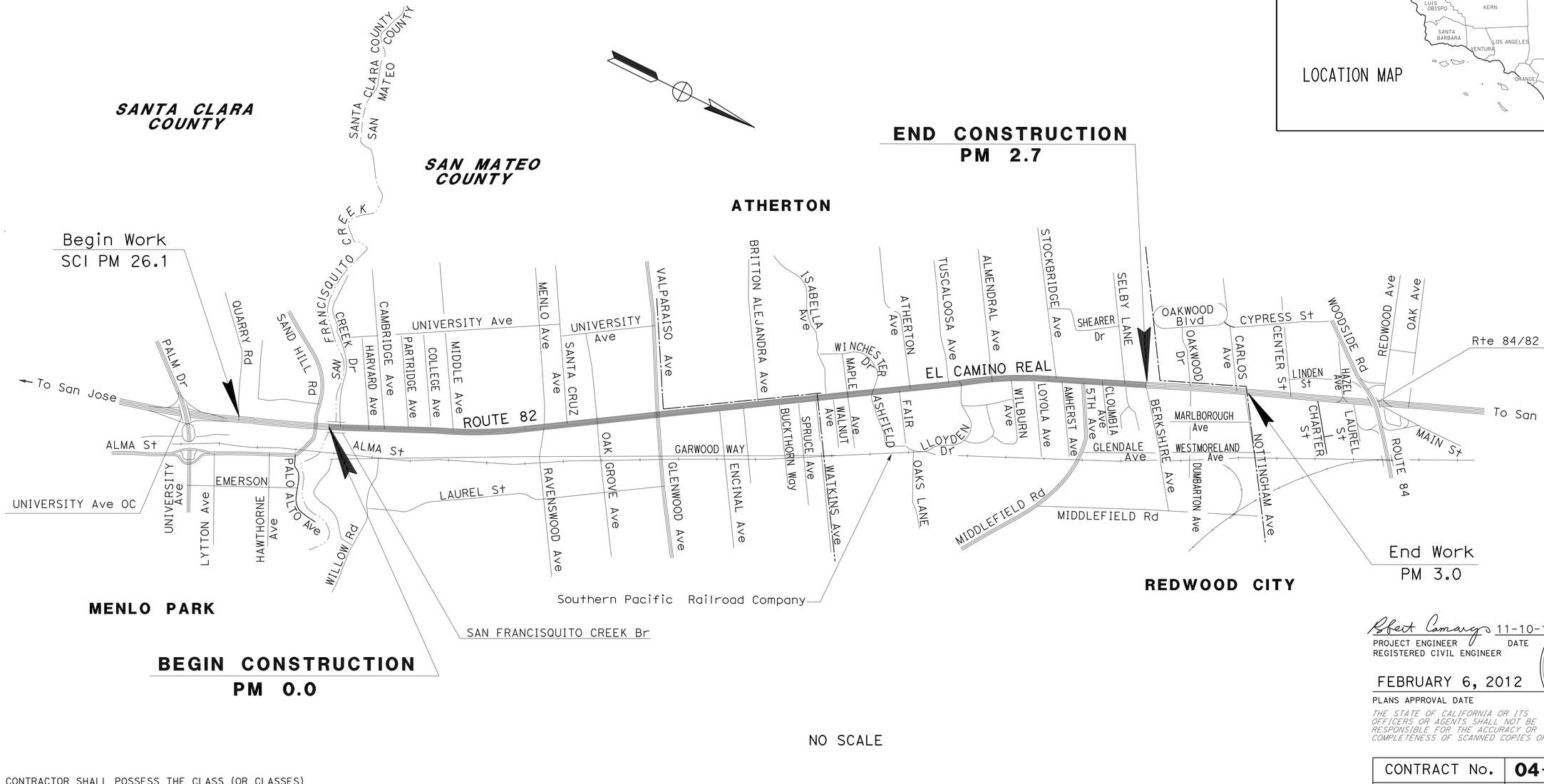

THE CONTRACTOR SHALL POSSESS THE CLASS (OR CLASSES) OF LICENSE AS SPECIFIED IN THE "NOTICE TO BIDDERS."

Robert Camargo 11-10-11
PROJECT ENGINEER DATE
REGISTERED CIVIL ENGINEER

FEBRUARY 6, 2012
PLANS APPROVAL DATE

REGISTERED PROFESSIONAL ENGINEER — Robert Camargo — No. 34402 — Exp. 9-30-13 — CIVIL — STATE OF CALIFORNIA

THE STATE OF CALIFORNIA OR ITS OFFICERS OR AGENTS SHALL NOT BE RESPONSIBLE FOR THE ACCURACY OR COMPLETENESS OF SCANNED COPIES OF THIS PLAN SHEET.

CONTRACT No.	04-2E5404
PROJECT ID	0400021061

PROJECT MANAGER: RAMSES SARGISS
DESIGN ENGINEER: RAMSES SARGISS

LAST REVISION: DATE PLOTTED => 07-MAR-2012; TIME PLOTTED => 14:09; 04-25-11

BORDER LAST REVISED 7/2/2010 | CALTRANS WEB SITE IS: HTTP//WWW.DOT.CA.GOV/ | RELATIVE BORDER SCALE IS IN INCHES 0 1 2 3 | USERNAME => s132175 DGN FILE => 0400021061ab001.dgn | UNIT 0976 | PROJECT NUMBER & PHASE 04000210611

Dist	COUNTY	ROUTE	POST MILES TOTAL PROJECT	SHEET No.	TOTAL SHEETS
04	SM	82	0.0/2.7	2	31

Robert Camargo 11-10-11
REGISTERED CIVIL ENGINEER DATE

2-6-12
PLANS APPROVAL DATE

REGISTERED PROFESSIONAL ENGINEER
Robert Camargo
No. 34402
Exp 9-30-13
CIVIL
STATE OF CALIFORNIA

THE STATE OF CALIFORNIA OR ITS OFFICERS OR AGENTS SHALL NOT BE RESPONSIBLE FOR THE ACCURACY OR COMPLETENESS OF SCANNED COPIES OF THIS PLAN SHEET.

NOTES:

1. DIMENSIONS OF PAVEMENT STRUCTURES (STRUCTURAL SECTIONS) ARE SUBJECT TO TOLERANCES SPECIFIED IN THE STANDARD SPECIFICATIONS.
2. EXISTING UTILITY FACILITIES HAVE NOT BEEN PLOTTED ON THESE PLANS.
3. EXACT LIMITS OF COLD PLANE ASPHALT CONCRETE PAVEMENT, HMA(BWC-G), HMA(TYPE A), CRACK TREATMENT AND SHOULDER BACKING TO BE DETERMINED BY THE ENGINEER.
4. FOR ACCURATE RIGHT OF WAY AND ACCESS DATA, CONTACT RIGHT OF WAY ENGINEERING AT THE DISTRICT OFFICE.
5. COLD PLANING SHOULD BE LIMITED WITHIN ASPHALT CONCRETE, AND Max 0.5'
6. THE EXISTING PAVEMENT DELINEATION WILL BE REPLACED AT THE SAME LOCATION IN KIND.
7. SUPERELEVATION AS SHOWN OR AS DIRECTED BY THE ENGINEER.
8. SEE SHEET Q-1 AND Q-2 FOR LOCATIONS AND QUANTITIES.

ABBREVIATION:

HMA (BWC-G) -- HOT MIX ASPHALT (BONDED WEARING COURSE - GAP GRADED)

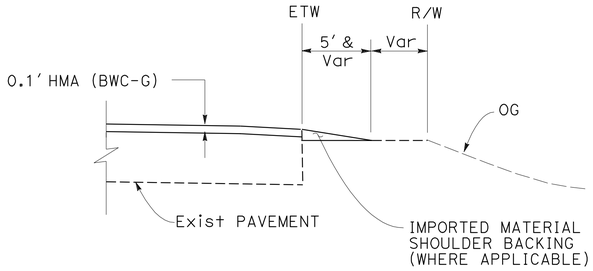

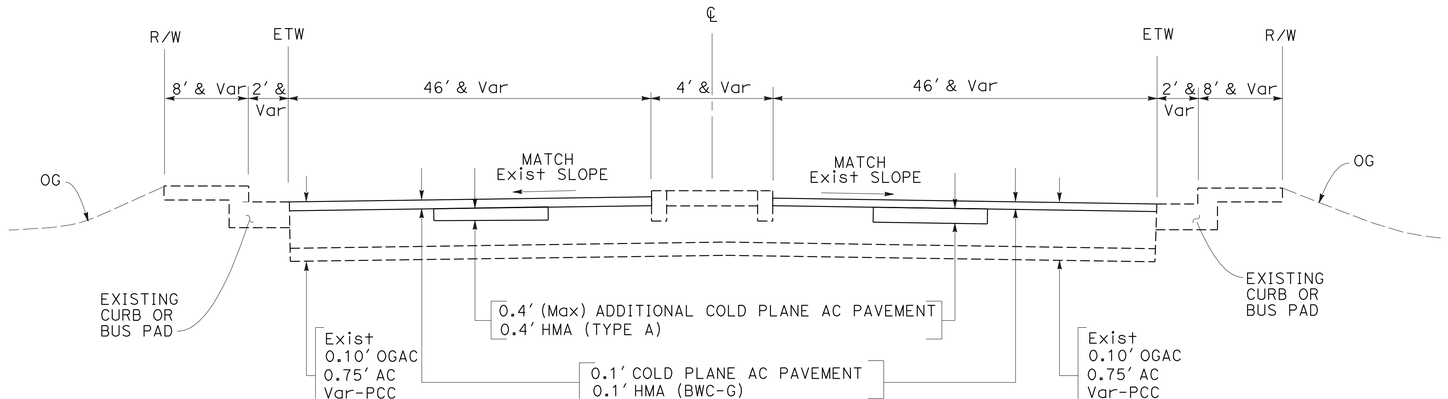

SOUTHBOUND NORTHBOUND

ROUTE 82
PM 0.0/2.7

TYPICAL CROSS SECTIONS

NO SCALE

X-1

REVISED BY	DATE REVISED

CALCULATED-DESIGNED BY
AMARJIT BRAR

CHECKED BY
ROBERT CAMARGO

FUNCTIONAL SUPERVISOR
RAMSES SARGISS

STATE OF CALIFORNIA - DEPARTMENT OF TRANSPORTATION
Caltrans
MAINTENANCE

LAST REVISION | DATE PLOTTED => 07-MAR-2012
08-22-11 | TIME PLOTTED => 14:09

BORDER LAST REVISED 7/2/2010

USERNAME => s132175
DGN FILE => 0400021061ca001.dgn

RELATIVE BORDER SCALE IS IN INCHES 0 1 2 3

UNIT 0976

PROJECT NUMBER & PHASE 04000210611

Dist	COUNTY	ROUTE	POST MILES TOTAL PROJECT	SHEET No.	TOTAL SHEETS
04	SM	82	0.0/2.7	3	31

Robert Camargo 11-10-11
REGISTERED CIVIL ENGINEER DATE

2-6-12
PLANS APPROVAL DATE

Registered Professional Engineer — Robert Camargo — No. 34402 — Exp 9-30-13 — CIVIL — State of California

THE STATE OF CALIFORNIA OR ITS OFFICERS OR AGENTS SHALL NOT BE RESPONSIBLE FOR THE ACCURACY OR COMPLETENESS OF SCANNED COPIES OF THIS PLAN SHEET.

LEGEND:

COLD PLANE EXISTING PAVEMENT
PLACE HMA (BWC-G)

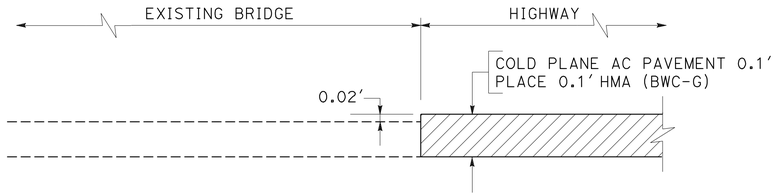

DETAIL A

CONFORM DETAIL BETWEEN HIGHTWAY AND BRIDGE

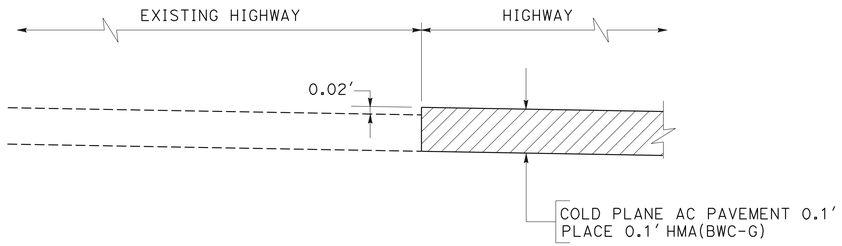

DETAIL B

CONFORM DETAIL AT END OF PROJECT LIMIT

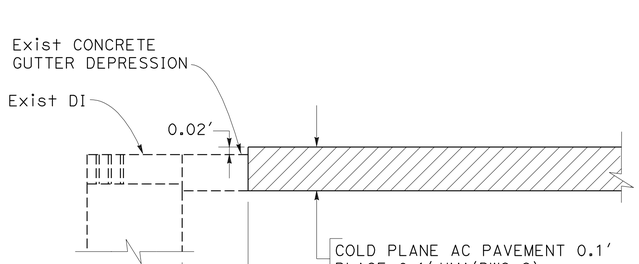

DETAIL C

PAVING CONFORM AT DRAINAGE INLETS

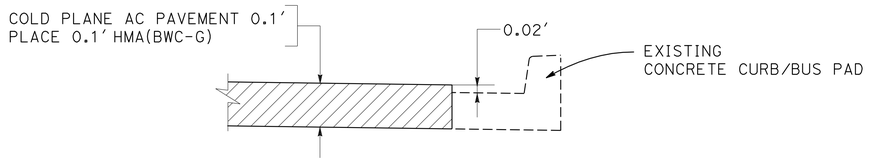

DETAIL D

CONFORM DETAIL AT CONCRETE CURB AND GUTTER

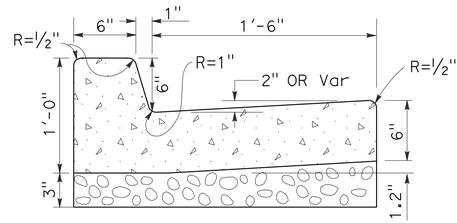

TYPE A2 MODIFIED CURBS

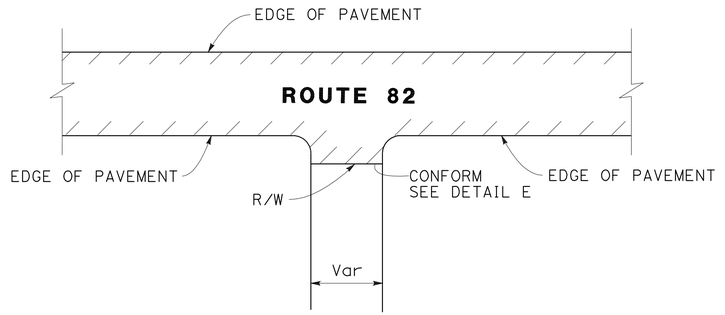

LIMIT OF PAVING CONFORM AT INTERSECTION

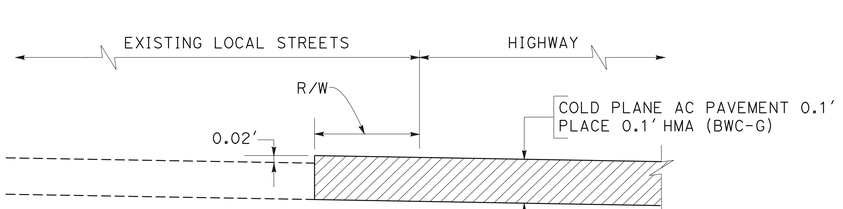

DETAIL E

CONFORM DETAIL BETWEEN HIGHWAY AND LOCAL STREETS

CONSTRUCTION DETAILS

NO SCALE

C-1

STATE OF CALIFORNIA - DEPARTMENT OF TRANSPORTATION
MAINTENANCE
Caltrans
FUNCTIONAL SUPERVISOR: RAMSES SARGISS
CALCULATED-DESIGNED BY: AMARJIT BRAR
CHECKED BY: ROBERT CAMARGO
REVISED BY | DATE REVISED

LAST REVISION | DATE PLOTTED => 07-MAR-2012
10-04-11 | TIME PLOTTED => 14:09

BORDER LAST REVISED 7/2/2010 | USERNAME => s132175 | DGN FILE => 04000210611ga001.dgn | RELATIVE BORDER SCALE IS IN INCHES 0 1 2 3 | UNIT 0976 | PROJECT NUMBER & PHASE 04000210611

Dist	COUNTY	ROUTE	POST MILES TOTAL PROJECT	SHEET No.	TOTAL SHEETS
04	SM	82	0.0/2.7	4	31

REGISTERED CIVIL ENGINEER — 11-10-11 DATE

2-6-12
PLANS APPROVAL DATE

Jerilyn L. Struven
No. 49964
Exp. 12-31-12
CIVIL
REGISTERED PROFESSIONAL ENGINEER
STATE OF CALIFORNIA

THE STATE OF CALIFORNIA OR ITS OFFICERS OR AGENTS SHALL NOT BE RESPONSIBLE FOR THE ACCURACY OR COMPLETENESS OF SCANNED COPIES OF THIS PLAN SHEET.

NOTES:

1. EXACT LOCATION AND POSITION OF SIGN TO BE DETERMINED BY THE ENGINEER.
2. DIMENSION FOR SIGN PANEL, LETTERING AND POST ARE IN INCHES.

LEGEND:

A — CONSTRUCTION AREA SIGNS

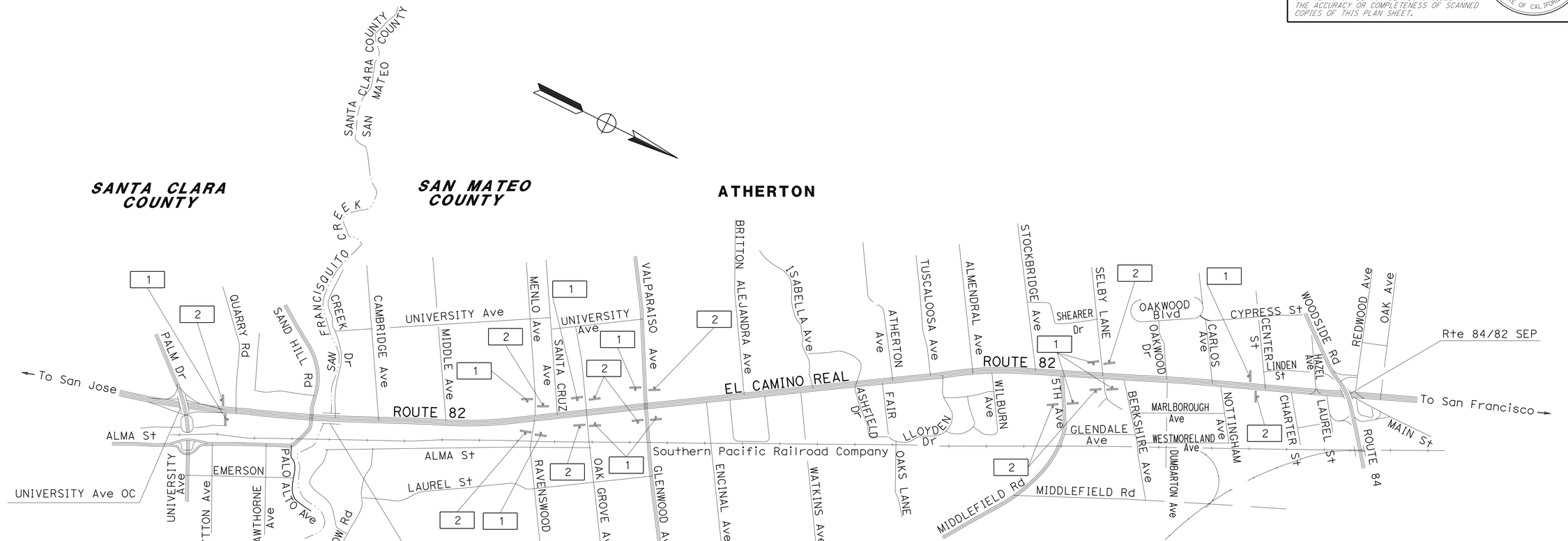

STATIONARY MOUNTED CONSTRUCTION AREA SIGNS

SIGN	MUTCD CODE	MESSAGE	PANEL SIZE	NUMBER OF POST AND SIZE	QUANTITY (EA)
1	W20-1	ROAD WORK AHEAD	48''x 48''	1- 4''x 4''	11
2	G20-2	END ROAD WORK	36''x 18''	1- 4''x 4''	11

CONSTRUCTION AREA SIGNS

NO SCALE

APPROVED FOR CONSTRUCTION AREA SIGN WORK ONLY

CS-1

REVISED BY	DATE REVISED
SL	JS

CALCULATED-DESIGNED BY
CHECKED BY
FUNCTIONAL SUPERVISOR: ROLAND AU-YEUNG

STATE OF CALIFORNIA - DEPARTMENT OF TRANSPORTATION
TRAFFIC
Caltrans

LAST REVISION 06-10-11
DATE PLOTTED => 07-MAR-2012
TIME PLOTTED => 14:09

BORDER LAST REVISED 7/2/2010
USERNAME => s132175
DGN FILE => 04000210611a001.dgn
RELATIVE BORDER SCALE IS IN INCHES 0 1 2 3
UNIT 0704
PROJECT NUMBER & PHASE 04000210611

Dist	COUNTY	ROUTE	POST MILES TOTAL PROJECT	SHEET No.	TOTAL SHEETS
04	SM	82	0.0/2.7	5	31

Robert Camargo 11-10-11
REGISTERED CIVIL ENGINEER DATE

2-6-12
PLANS APPROVAL DATE

REGISTERED PROFESSIONAL ENGINEER
Robert Camargo
No. 34402
Exp 9-30-13
CIVIL
STATE OF CALIFORNIA

THE STATE OF CALIFORNIA OR ITS OFFICERS OR AGENTS SHALL NOT BE RESPONSIBLE FOR THE ACCURACY OR COMPLETENESS OF SCANNED COPIES OF THIS PLAN SHEET.

NOTE:

ALL PAVEMENT DELINEATION SHALL BE REPLACED IN KIND AND PLACED ON THE SAME ALIGNMENT AND LOCATIONS AS EXISTING PAVEMENT DELINEATION.

LEGEND:

- No. — PAVEMENT DELINEATION DETAIL
- CHANGE OF PAVEMENT DELINEATION DETAILS
- DIRECTION OF TRAFFIC

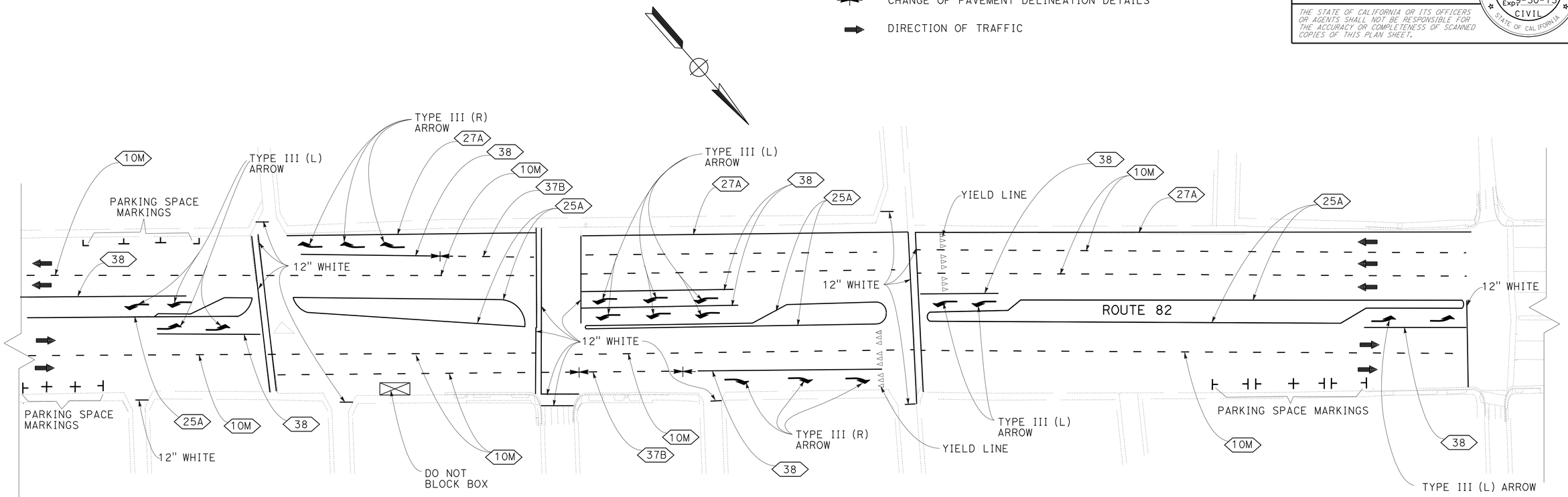

TYPICAL STRIPING (HIGHWAY)

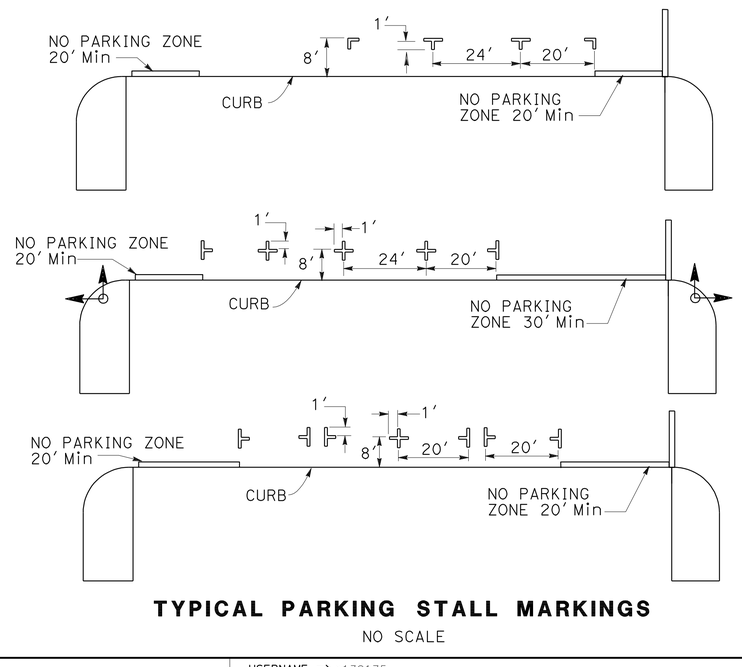

TYPICAL PARKING STALL MARKINGS

NO SCALE

NOTES:

1. FOR PARKING STALLS ALONG THE LEFT SIDE CURB ON ON-WAY STREETS, MARKING MAY BE PLACED ON THE CURB DELINEATING THE END OF THE INDIVIDUAL STALLS.
2. ALL STALL MARKINGS ARE MADE WITH 4 INCH WIDE WHITE LINES. THE SHAPE IS OPTIONAL.
3. THE PARKING STALL CROSS LINE, 8 Ft FROM THE CURB, MAY BE CONTINUOUS LONGITUDINALLY.

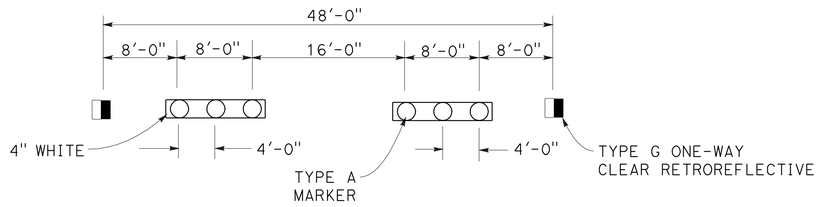

DETAIL 10M

APPROVED FOR PAVEMENT DELINEATION WORK ONLY

PAVEMENT DELINEATION PLAN

NO SCALE

PD-1

STATE OF CALIFORNIA - DEPARTMENT OF TRANSPORTATION
Caltrans® MAINTENANCE

FUNCTIONAL SUPERVISOR: RAMSES SARGISS

REVISED BY	DATE REVISED
AMARJIT BRAR	ROBERT CAMARGO

CALCULATED-DESIGNED BY | CHECKED BY

LAST REVISION | DATE PLOTTED => 07-MAR-2012
09-21-11 | TIME PLOTTED => 14:09

BORDER LAST REVISED 7/2/2010 | USERNAME => s132175 | DGN FILE => 0400021061na001.dgn | RELATIVE BORDER SCALE IS IN INCHES 0 1 2 3 | UNIT 0976 | PROJECT NUMBER & PHASE 04000210611

Dist	COUNTY	ROUTE	POST MILES TOTAL PROJECT	SHEET No.	TOTAL SHEETS
04	SM	82	0.0/2.7	6	31

Robert Camargo 11-10-11
REGISTERED CIVIL ENGINEER DATE

2-6-12
PLANS APPROVAL DATE

REGISTERED PROFESSIONAL ENGINEER — Robert Camargo — No. 34402 — Exp 9-30-13 — CIVIL — STATE OF CALIFORNIA

THE STATE OF CALIFORNIA OR ITS OFFICERS OR AGENTS SHALL NOT BE RESPONSIBLE FOR THE ACCURACY OR COMPLETENESS OF SCANNED COPIES OF THIS PLAN SHEET.

NORTHBOUND

LOCATION (PM)	DETAIL No. OR PAVEMENT MARKING	REMOVE PAVEMENT MARKER	PAVEMENT MARKER				THERMOPLASTIC PAVEMENT MARKING		THERMOPLASTIC TRAFFIC STRIPE				
			NON REFLECTIVE	RETROREFLECTIVE					WHITE	YELLOW	WHITE		
									4 INCH		4 INCH	8 INCH	8 INCH
			TYPE A	TYPE D	TYPE G	TYPE H	YELLOW	WHITE	SOLID		(BROKEN 36-12)	(BROKEN 12-3)	SOLID
		EA	EA				SQFT		LF				
SM COUNTY LINE TO MIDDLE Ave (0.0/0.4)	10M	560	480		80						3780		
	22	26		26						610			
	25A	67				67				1595			
	38	28			28								640
	LIMIT LINE							96					
	CROSSWALK							172					
	TYPE III(L) ARROW							252					
	PARKING SPACE MARKINGS								44				
	DO NOT BLOCK BOX								440				
MIDDLE Ave TO RAVENSWOOD Ave (0.4/0.7)	10M	343	294		49						2310		
	25A	63				63				1455			
	37B	22			22							312	
	38	50			50								1164
	LIMIT LINE							56					
	CROSSWALK							320					
	TYPE III(L) ARROW							210					
	TYPE III(R) ARROW							210					
	PARKING SPACE MARKINGS								46				
	DO NOT BLOCK BOX								376				
RAVENSWOOD Ave TO GLENWOOD Ave (0.7/1.1)	10M	259	222		37						1720		
	25A	73				73				1720			
	37B	16			16							192	
	38	34			34								780
	CROSSWALK							674					
	TYPE III(L) ARROW							252					
	TYPE III(R) ARROW							168					
	NO LEFT TURN							57					
	PARKING SPACE MARKINGS								38				
	DO NOT BLOCK BOX								500				
GLENWOOD Ave TO WATKINS Ave (1.1/1.6)	10M	287	246		41						1880		
	25A	61				61				1432			
	27B								1303				
	38	10			10								210
	LIMIT LINE							31					
	CROSSWALK							296					
	TYPE III(L) ARROW							42					
	TYPE III(R) ARROW							42					
	TYPE III(V) ARROW							66					
	SLOW SCHOOL XING						160						
	ONLY							22					
	YIELD LINE							24					
	PARKING SPACE MARKINGS								35				
	DO NOT BLOCK BOX								200				
SUBTOTAL		1899	1242	26	367	264	160	2990	2982	6812	9690	504	2794

REVISED BY | DATE REVISED
AMARJIT BRAR | ROBERT CAMARGO
CALCULATED-DESIGNED BY | CHECKED BY
FUNCTIONAL SUPERVISOR: RAMSES SARGISS

STATE OF CALIFORNIA - DEPARTMENT OF TRANSPORTATION
Caltrans®
MAINTENANCE

PAVEMENT DELINEATION QUANTITIES

PDQ-1

LAST REVISION | DATE PLOTTED => 07-MAR-2012
09-22-11 | TIME PLOTTED => 14:09

BORDER LAST REVISED 7/2/2010 | USERNAME => s132175 | DGN FILE => 0400021061nc001.dgn | RELATIVE BORDER SCALE IS IN INCHES 0 1 2 3 | UNIT 0976 | PROJECT NUMBER & PHASE 04000210611

Dist	COUNTY	ROUTE	POST MILES TOTAL PROJECT	SHEET No.	TOTAL SHEETS
04	SM	82	0.0/2.7	7	31

Robert Camargo 11-10-11
REGISTERED CIVIL ENGINEER DATE

2-6-12
PLANS APPROVAL DATE

Robert Camargo No. 34402 Exp 9-30-13 CIVIL — REGISTERED PROFESSIONAL ENGINEER — STATE OF CALIFORNIA

THE STATE OF CALIFORNIA OR ITS OFFICERS OR AGENTS SHALL NOT BE RESPONSIBLE FOR THE ACCURACY OR COMPLETENESS OF SCANNED COPIES OF THIS PLAN SHEET.

NORTHBOUND

LOCATION (PM)	DETAIL No. OR PAVEMENT MARKING	REMOVE PAVEMENT MARKER	PAVEMENT MARKER				THERMOPLASTIC PAVEMENT MARKING		THERMOPLASTIC TRAFFIC STRIPE				
			NON REFLECTIVE	RETROREFLECTIVE					WHITE	YELLOW	WHITE		
									4 INCH		4 INCH	8 INCH	8 INCH
			TYPE A	TYPE D	TYPE G	TYPE H	YELLOW	WHITE	SOLID		(BROKEN 36-12)	(BROKEN 12-3)	SOLID
		EA	EA				SQFT		LF				
WATKINS Ave TO FAIR OAKS LANE (1.6/1.9)	10M	343	294		49						2266		
	25A	54				54				1272			
	27B								1332				
	38	17			17								382
	LIMIT LINE							140					
	CROSSWALK							240					
	TYPE III(L) ARROW							210					
	YIELD LINE							30					
FAIR OAKS LANE TO WIBURN Ave (1.9/2.2)	10M	497	426		71						3326		
	25A	71				71				1663			
	27B								1783				
	38	12			12								250
	LIMIT LINE							124					
	CROSSWALK							236					
	TYPE III(L) ARROW							126					
	YIELD LINE							33					
WIBURN Ave TO BERKSHIRE Ave (2.2/2.7)	10M	609	522		87						4085		
	25A	90				90				2136			
	27B								162				
	38	10			10								200
	LIMIT LINE							54					
	CROSSWALK							814					
	TYPE III(L) ARROW							126					
	YIELD LINE							75					
SUBTOTAL		1703	1242		246	215		2208	3277	5071	9677		832

SOUTHBOUND

LOCATION (PM)	DETAIL No. OR PAVEMENT MARKING	REMOVE PAVEMENT MARKER	PAVEMENT MARKER				THERMOPLASTIC PAVEMENT MARKING		THERMOPLASTIC TRAFFIC STRIPE				
			NON REFLECTIVE	RETROREFLECTIVE					WHITE	YELLOW	WHITE		
									4 INCH		4 INCH	8 INCH	8 INCH
			TYPE A	TYPE D	TYPE G	TYPE H	YELLOW	WHITE	SOLID		(BROKEN 36-12)	(BROKEN 12-3)	SOLID
		EA	EA				SQFT		LF				
SM COUNTY LINE TO MIDDLE Ave (0.0/0.4)	10M	560	480		80						3750		
	25A	61				61				1420			
	37B	16			16							202	
	38	18			18								404
	CROSSWALK							164					
	TYPE III(L) ARROW							126					
	PARKING SPACE MARKINGS								36				
	DO NOT BLOCK BOX								92				
MIDDLE Ave TO MENLO Ave (0.4/0.7)	10M	371	318		53						2472		
	25A	61				61				1420			
	38	6			6								120
	CROSSWALK							412					
	LIMIT LINE							63					
	TYPE III(L) ARROW							84					
MENLO Ave TO VALPARAISO Ave (0.7/1.1)	10M	273	234		39						1798		
	25A	72				72				1698			
	38	32			32								742
	38A												90
	CROSSWALK							666					
	TYPE III(L) ARROW							210					
	TYPE III(R) ARROW							294					
	PARKING SPACE MARKINGS								66				
	DO NOT BLOCK BOX								400				
SUBTOTAL		1470	1032		244	194		2019	594	4538	8020	202	1356

PAVEMENT DELINEATION QUANTITIES PDQ-2

LAST REVISION | DATE PLOTTED => 07-MAR-2012
08-11-11 | TIME PLOTTED => 14:09

CALCULATED-DESIGNED BY | CHECKED BY
AMARJIT BRAR | ROBERT CAMARGO
REVISED BY | DATE REVISED
FUNCTIONAL SUPERVISOR: RAMSES SARGISS
STATE OF CALIFORNIA - DEPARTMENT OF TRANSPORTATION
Caltrans® MAINTENANCE

BORDER LAST REVISED 7/2/2010 | USERNAME => s132175 | DGN FILE => 0400021061nc002.dgn | RELATIVE BORDER SCALE IS IN INCHES 0 1 2 3 | UNIT 0976 | PROJECT NUMBER & PHASE 04000210611

Dist	COUNTY	ROUTE	POST MILES TOTAL PROJECT	SHEET No.	TOTAL SHEETS
04	SM	82	0.0/2.7	8	31

Robert Camargo 11-10-11
REGISTERED CIVIL ENGINEER DATE

2-6-12
PLANS APPROVAL DATE

Robert Camargo No. 34402 Exp 9-30-13 CIVIL
REGISTERED PROFESSIONAL ENGINEER STATE OF CALIFORNIA

THE STATE OF CALIFORNIA OR ITS OFFICERS OR AGENTS SHALL NOT BE RESPONSIBLE FOR THE ACCURACY OR COMPLETENESS OF SCANNED COPIES OF THIS PLAN SHEET.

SOUTHBOUND

LOCATION (PM)	DETAIL No. OR PAVEMENT MARKING	REMOVE PAVEMENT MARKER	PAVEMENT MARKER				THERMOPLASTIC PAVEMENT MARKING		THERMOPLASTIC TRAFFIC STRIPE				
			NON REFLECTIVE	RETROREFLECTIVE					WHITE 4 INCH	YELLOW 4 INCH	WHITE 4 INCH	WHITE 8 INCH	WHITE 8 INCH
			TYPE A	TYPE D	TYPE G	TYPE H	YELLOW	WHITE	SOLID	SOLID	(BROKEN 36-12)	(BROKEN 12-3)	SOLID
		EA	EA				SQFT		LF				
VALPARAISO Ave TO ISABELLA Ave (1.1/1.6)	10M	672	576		96						4520		
	25A	113				113				2676			
	27B								2541				
	37B	50			50							707	
	38	41			41								937
	LIMIT LINE							17					
	CROSSWALK						76	414					
	TYPE III(L) ARROW							378					
	TYPE III(R) ARROW							84					
	KEEP CLEAR							102					
	YIELD LINE							30					
ISABELLA Ave TO TUSCALOOSA Ave (1.6/2.0)	10M	469	402		67						3128		
	25A	71				71				1663			
	27B								1829				
	38	26			26								577
	CROSSWALK							248					
	TYPE III(L) ARROW							294					
	YIELD LINE							30					
TUSCALOOSA Ave TO STOCKBRIDGE Ave (2.0/2.4)	10M	406	348		58						2730		
	25A	74				74				1730			
	27B								1730				
	38	12			12								260
	LIMIT LINE							75					
	CROSSWALK							546					
	TYPE III(L) ARROW							84					
	YIELD LINE							33					
	STOP							44					
STOCKBRIDGE Ave TO BERKSHIRE Ave (2.4/2.7)	10M	448	384		64						2980		
	25A	64				64				1490			
	27B								1568				
	38	32			32								725
	LIMIT LINE							65					
	CROSSWALK							416					
	TYPE III(L) ARROW							336					
	YIELD LINE							24					
SUBTOTAL PDQ-3 (SB)		2478	1710	--	446	322	76	3220	7668	7559	13358	707	2499
SUBTOTAL PDQ-2 (SB)		1470	1032	--	244	194	--	2019	594	4538	8020	202	1356
SUBTOTAL PDQ-2 (NB)		1703	1242	--	246	215	--	2208	3277	5071	9677	--	832
SUBTOTAL PDQ-1 (NB)		1899	1242	26	367	264	160	2990	2982	6812	9690	504	2794
TOTAL (NB+SB)		7550	5226		2324		10673		38501		40745	1413	7481

PAVEMENT DELINEATION QUANTITIES

PDQ-3

CALCULATED-DESIGNED BY
CHECKED BY
REVISED BY
DATE REVISED
AMARJIT BRAR
ROBERT CAMARGO
FUNCTIONAL SUPERVISOR
RAMSES SARGISS
STATE OF CALIFORNIA - DEPARTMENT OF TRANSPORTATION
MAINTENANCE
Caltrans

LAST REVISION DATE PLOTTED => 07-MAR-2012
09-22-11 TIME PLOTTED => 14:09

Dist	COUNTY	ROUTE	POST MILES TOTAL PROJECT	SHEET No.	TOTAL SHEETS
04	SM	82	0.0/2.7	9	31

Robert Camargo 11-10-11
REGISTERED CIVIL ENGINEER DATE

2-6-12
PLANS APPROVAL DATE

REGISTERED PROFESSIONAL ENGINEER
Robert Camargo
No. 34402
Exp 9-30-13
CIVIL
STATE OF CALIFORNIA

THE STATE OF CALIFORNIA OR ITS OFFICERS OR AGENTS SHALL NOT BE RESPONSIBLE FOR THE ACCURACY OR COMPLETENESS OF SCANNED COPIES OF THIS PLAN SHEET.

ADDITIONAL COLD PLANE AC PAVEMENT AND HMA(TYPE A) AT HIGHWAY

LOCATION (PM)	DIRECTION	WIDTH(N)	LENGTH(N)	DEPTH(N)	ADDITIONAL COLD PLANE AC PAVEMENT	HMA (TYPE A)	TACK COAT	LANE No./LOCATIONS
		LF			SQYD	TON		
SM COUNTY LINE TO MIDDLE Ave (0.0/0.4)	NB	12	20	0.4	27	7.2	0.02	2
		12	50	0.4	67	18.0	0.06	3
RAVENSWOOD Ave TO OAK GROVEM Ave (0.7/0.8)		10	25	0.4	28	7.5	0.02	2 & SHOULDER
		11	20	0.4	24	6.6	0.02	1
ENCINAL Ave TO WATKINS Ave (1.3/1.6)		20	50	0.4	111	30.0	0.09	INTERSECTION
WIBURN Ave TO 5TH Ave (2.2/2.5)		11	200	0.4	244	66.0	0.20	SHOULDER
		11	70	0.4	86	23.1	0.07	SHOULDER
		10	80	0.4	89	24.0	0.07	3
5TH Ave TO BERKSHIRE A (2.5/2.7)		10	100	0.4	111	30.0	0.09	INTERSECTION
		40	70	0.4	311	84.0	0.26	2,3 & SHOULDER
SUB TOTAL					1098	296	0.90	
SM COUNTY LINE TO MIDDLE Ave (0.0/0.4)	SB	10	90	0.4	100	27.0	0.08	SHOULDER
		10	60	0.4	67	18.0	0.06	3
		11	60	0.4	73	19.8	0.06	2
MIDDLE Ave TO MENLO Ave (0.4/0.7)		12	70	0.4	93	25.2	0.08	1
		12	75	0.4	100	27.0	0.08	3
		12	30	0.4	40	10.8	0.03	3
		12	20	0.4	27	7.2	0.02	3
		12	60	0.4	80	21.6	0.07	3
		10	170	0.4	189	51.0	0.16	3
MENLO Ave TO VALPARAISO Ave (0.7/1.0)		27	80	0.4	240	64.8	0.20	1,2 & SHOULDER
		11	75	0.4	92	24.8	0.08	NEAR BY CONCRETE SLABS
		20	80	0.4	178	48.0	0.15	OAK GROVE INTERSECTION
VALPARAISO Ave TO BRITTON ALEJANDRA Ave (1.0/1.4)		11	20	0.4	24	6.6	0.02	2
		11	30	0.4	37	9.9	0.03	3
		11	110	0.4	134	36.3	0.11	2
		20	100	0.4	222	60.0	0.19	INTERSECTION
BRITTON ALEJANDRA Ave TO ATHERTON Ave (1.4/01.9)		11	120	0.4	147	39.6	0.12	2
TUSCALOOSA Ave TO ALMENDRAL Ave (2.0/2.2)		11	60	0.4	73	19.8	0.06	3
		11	50	0.4	61	16.5	0.05	3
		11	100	0.4	122	33.0	0.10	2
		11	15	0.4	18	5.0	0.02	2
		11	110	0.4	134	36.3	0.11	2
ALMENDRAL Ave TO STOCKBRIDGE Ave (2.2/2.4)		11	60	0.4	73	19.8	0.06	3
		10	120	0.4	133	36.0	0.11	3
STOCKBRIDGE Ave TO BERKSHIRE Ave (2.4/2.7)		11	100	0.4	122	33.0	0.10	3
		20	110	0.4	244	66.0	0.20	3 & SHOULDER
		15	20	0.4	33	9.0	0.03	3 & SHOULDER BEFORE 5TH Ave
SUBTOTAL SB					2856	772	2.38	
SUBTOTAL NB					1098	296	0.90	
TOTAL (SB+NB)					3954	1068	3.28	

(N) = NOT A SEPARATE PAY ITEM, FOR INFORMATION ONLY

SUMMARY OF QUANTITIES

Q-1

REVISED BY | DATE REVISED
AMARJIT BRAR | ROBERT CAMARGO
CALCULATED-DESIGNED BY | CHECKED BY
FUNCTIONAL SUPERVISOR: RAMSES SARGISS
STATE OF CALIFORNIA - DEPARTMENT OF TRANSPORTATION
Caltrans® MAINTENANCE

LAST REVISION | DATE PLOTTED => 07-MAR-2012
11-07-11 | TIME PLOTTED => 14:09

BORDER LAST REVISED 7/2/2010 | USERNAME => s132175 | DGN FILE => 0400021061pa001.dgn | RELATIVE BORDER SCALE IS IN INCHES 0 1 2 3 | UNIT 0976 | PROJECT NUMBER & PHASE 04000210611

Dist	COUNTY	ROUTE	POST MILES TOTAL PROJECT	SHEET No.	TOTAL SHEETS
04	SM	82	0.0/2.7	10	31

Robert Camargo 11-10-11
REGISTERED CIVIL ENGINEER DATE

2-6-12
PLANS APPROVAL DATE

REGISTERED PROFESSIONAL ENGINEER
Robert Camargo
No. 34402
Exp 9-30-13
CIVIL
STATE OF CALIFORNIA

THE STATE OF CALIFORNIA OR ITS OFFICERS OR AGENTS SHALL NOT BE RESPONSIBLE FOR THE ACCURACY OR COMPLETENESS OF SCANNED COPIES OF THIS PLAN SHEET.

ADJUST FRAME AND COVER TO GRADE

DIRECTION	LOCATION Approx (PM)	LANE No.	No. OF UTILITY COVERS	REMARKS
NB	AT BEGINNING OF PROJECT (0.0)	3	2	RCN
	NORTH OF MIDDLE Ave (0.39)	SHOULDER	1	WATER VALVE
	SOUTH OF LOYOLA Ave (2.30)	3	1	MANHOLE
SB	NORTH OF MIDDLE Ave (0.39)	3	3	WATER VALVE
	SANTA CRUZ Ave (0.77)	2	1	PACIFIC BELL VALVE
TOTAL			8	

QUANTITIES FOR REPLACE BUS PADS, SLABS AND CURBS

DIRECTION	LOCATION Approx (PM)	SLAB WIDTH(N)	SLAB LENGTH(N)	SLAB DEPTH(N)	CURB TYPE A2 MODIFIED	CURB TYPE A1	AGGREGATE BASE	MINOR CONCRETE (CURB)	INDIVIDUAL SLAB REPLACEMENT (RAPID STRENGTH CONCRETE)	REMARKS
		LF					CY			
NB	BETWEEN MIDDLE Ave AND ROBLE Ave (0.4/0.6)	12	85	0.833					31.5	BUS PAD
					170		5.2	10.0		SOUTH OF BUS PAD
					25		0.6	1.5		NORTH OF BUS PAD
	BETWEEN LIVE OAK Ave AND RAVENSWOOD Ave (0.6/0.7)	6.5	110	0.833					22.1	CONCRETE PAD
	BETWEEN RAVENSWOOD Ave AND SANTA CRUZ Ave (0.7/0.8)	8	20	0.833					4.9	NARROW SLABS
		3	300	0.833					27.8	NEXT TO BUS PAD
		7	60	0.833					13.0	NEAR CROSSWALK
	SOUTH OF AMHERST Ave (2.4)	10	85	0.833					26.2	BUS PAD
						85	0.7	2.2		BESIDE THE BUS PAD
SB	BETWEEN SANTA CRUZ Ave TO OAK GROVE Ave (0.8/0.9)	6	415	0.833					76.8	PARKING PAD
TOTAL							6.5	13.7	202.3	

(N) = NOT A SEPARATE PAY ITEM, FOR INFORMATION ONLY.

SUMMARY OF ROADWAY QUANTITIES

LOCATION	COLD PLANE ASPHALT CONCRETE PAVEMENT MAIN LINE 0.1′	COLD PLANE ASPHALT CONCRETE PAVEMENT ADDITIONAL AREA 0.4′	COLD PLANE ASPHALT CONCRETE PAVEMENT CONFORM AT INTERSECTIONS 0.1′	HMA (TYPE A)	TACK COAT	HOT MIX ASPHALT (BONDED WEARING COURSE-GAP GRADED)	ASPHALT EMLUSION MEMBRANE (BONDED WEARING COURSE)	IMPORTED MATERIAL (SHOULDER BACKING)	CRACK TREATMENT
	SQYD			TON					LNMI
NORTHBOUND HIGHWAY	63505	1098	1110	296	0.9	4361.5	53.8	76	2
SOUTHBOUND HIGHWAY	63505	2856	1027	722	2.38	4355.9	53.8	117	2
TOTAL	133101			1068	3.28	8717.4	107.6	193	4

REVISED BY | DATE REVISED
AMARJIT BRAR | ROBERT CAMARGO
CALCULATED-DESIGNED BY | CHECKED BY
FUNCTIONAL SUPERVISOR: RAMSES SARGISS
STATE OF CALIFORNIA - DEPARTMENT OF TRANSPORTATION
Caltrans® MAINTENANCE

LAST REVISION | DATE PLOTTED => 07-MAR-2012
01-31-12 | TIME PLOTTED => 14:10

SUMMARY OF QUANTITIES

Q-2

Dist	COUNTY	ROUTE	POST MILES TOTAL PROJECT	SHEET No.	TOTAL SHEETS
04	SM	82	0.0/2.7	11	31

Ramona M Taitano Loughran 11-16-11
REGISTERED ELECTRICAL ENGINEER DATE

2-6-12
PLANS APPROVAL DATE

REGISTERED PROFESSIONAL ENGINEER
R.M. Taitano Loughran
No. 16344
Exp 3-31-13
ELECT
STATE OF CALIFORNIA

THE STATE OF CALIFORNIA OR ITS OFFICERS OR AGENTS SHALL NOT BE RESPONSIBLE FOR THE ACCURACY OR COMPLETENESS OF SCANNED COPIES OF THIS PLAN SHEET.

ELECTRICAL INDEX

E-1	ELECTRICAL INDEX AND NOTES
E-2 - E-6	MODIFY INDUCTIVE LOOP DETECTORS

GENERAL NOTES:

1. NO ABOVE GROUND ELECTRICAL WORK SHALL BE PERFORMED ON ANY SYSTEM WITHIN THE PROJECT SITE UNTIL ALL CONTRACTOR-FURNISHED ELECTRICAL MATERIALS FOR THAT INDIVIDUAL SYSTEM HAVE BEEN TESTED AND DELIVERED TO CONTRACTOR.

2. ABANDON EXISTING LOOPS IN PLACE WHEN CUTTING NEW REPLACEMENT LOOPS. SPLICE NEW DETECTOR CONDUCTORS TO CORRESPONDING dlc IN TERMINATION PULL BOX. VERIFY IDENTIFICATION OF dlc BEFORE CONNECTING TO THE CORRESPONDING LOOP DETECTORS.

3. WHERE ONE OR MORE TRAFFIC SIGNAL DETECTOR(S) CONSIST OF A SEQUENCE OF 4 LOOPS IN A SINGLE LANE, THE FRONT LOOP CLOSEST TO THE LIMIT LINE OR CROSSWALK SHALL BE LOCATED 1 FOOT FROM THE LINE. THE SET OF 3 LOOPS OR 4 LOOPS ASSIGNED TO THE SAME LOOP DETECTOR LEAD-IN CABLE (DLC) SHALL BE CONNECTED IN SERIES FOR TRAFFIC SIGNAL SYSTEM ONLY AND NOT FOR RAMP METERING SYSTEM.

4. THE CONTRACTOR SHALL VERIFY THE LOCATION OF THE LOOP DETECTORS TO BE REPLACED PRIOR TO REPAVING.

5 . ALL LOOP DETECTORS AT EACH LOCATION SHALL BE REPLACED AND TESTED WITHIN THE TIME ALLOTTED FOR TRAFFIC SIGNAL SYSTEM SHUTDOWN AT THAT LOCATION.

6. THE CONTRACTOR SHALL PROVIDE TWO REPORTS PER LOCATION ON THE STATUS OF EACH DETECTOR LOOP REPLACEMENT SHOWING CONTINUITY AND INSULATION RESISTANCE READINGS. THE REPORTS SHALL BE SUBMITTED TO THE ENGINEER, ONE BEFORE STARTING WORK AND THE OTHER AFTER WORK HAS BEEN COMPLETED AT EACH LOCATION.

7. INSTALL LOCKING GRADE RING FOR EXISTING DETECTOR HANDHOLE AS NEEDED.

[1] RAISE DETECTOR HANDHOLE TO GRADE

INDUCTIVE LOOP DETECTOR
(REPLACE)

APPROVED FOR ELECTRICAL WORK ONLY

E-1

REVISED BY | DATE REVISED
RAMONA TAITANO LOUGHRAN | KENNETH XU
CALCULATED-DESIGNED BY | CHECKED BY
FUNCTIONAL SUPERVISOR: LAI HONG CHIU
STATE OF CALIFORNIA - DEPARTMENT OF TRANSPORTATION
Caltrans® ELECTRICAL

LAST REVISION 08-04-11 | DATE PLOTTED => 07-MAR-2012 | TIME PLOTTED => 14:10

BORDER LAST REVISED 7/2/2010 | USERNAME => s132175 | DGN FILE => 0400021061ua001.dgn | RELATIVE BORDER SCALE IS IN INCHES 0 1 2 3 | UNIT 0976 | PROJECT NUMBER & PHASE 04000210611

Dist	COUNTY	ROUTE	POST MILES TOTAL PROJECT	SHEET No.	TOTAL SHEETS
04	SM	82	0.0/2.7	12	31

Ramona M Taitano Loughran 11-16-11
REGISTERED ELECTRICAL ENGINEER DATE

R.M. Taitano Loughran
No. 16344
Exp 3-31-13
ELECT
REGISTERED PROFESSIONAL ENGINEER
STATE OF CALIFORNIA

PLANS APPROVAL DATE

THE STATE OF CALIFORNIA OR ITS OFFICERS OR AGENTS SHALL NOT BE RESPONSIBLE FOR THE ACCURACY OR COMPLETENESS OF SCANNED COPIES OF THIS PLAN SHEET.

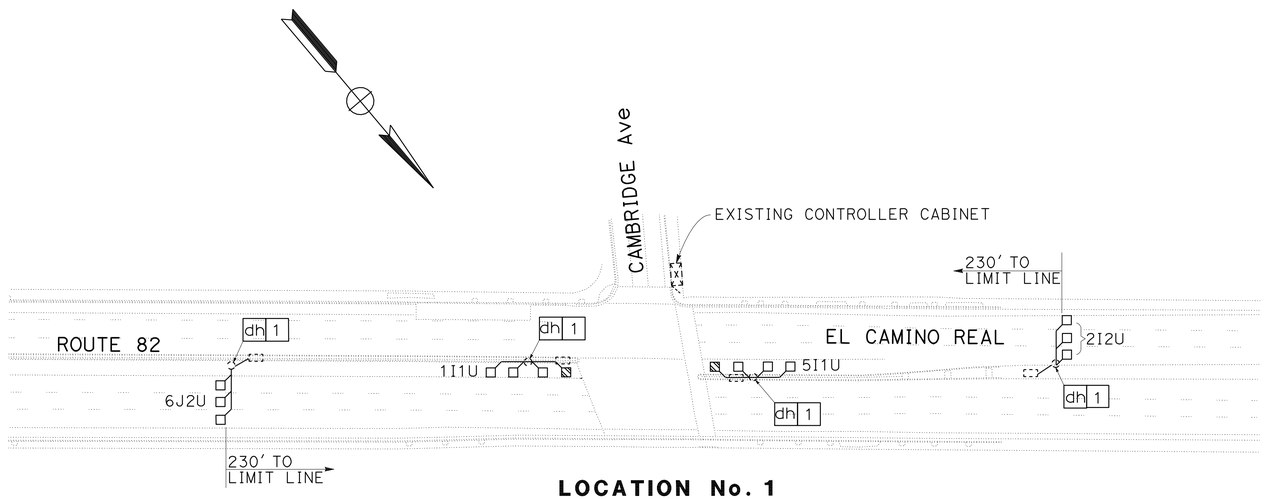

LOCATION No. 1

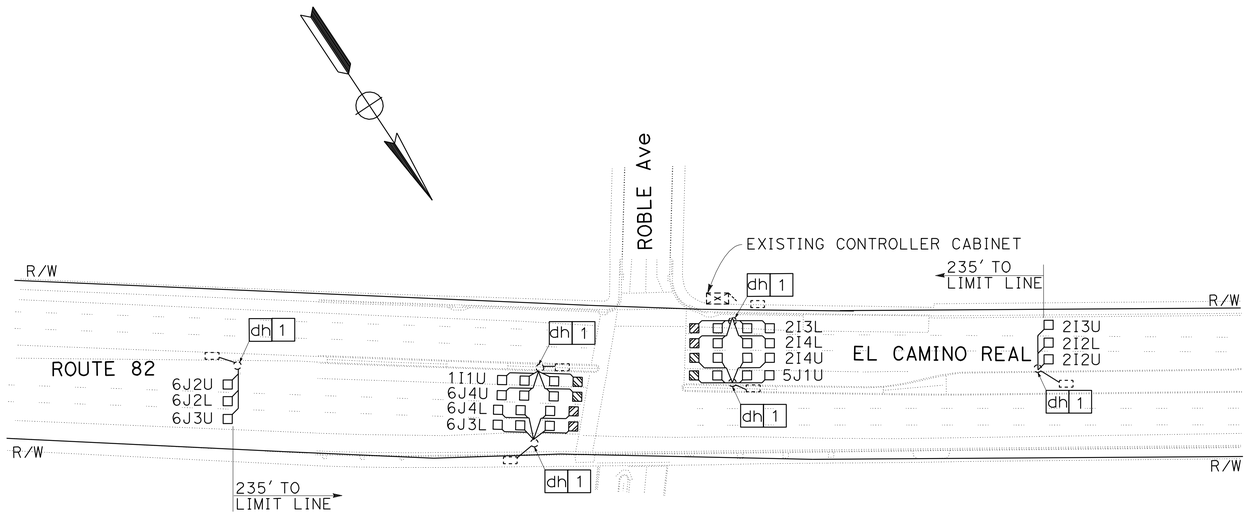

LOCATION No. 2

INDUCTIVE LOOP DETECTOR
(REPLACE)

SCALE: 1'' = 50'

APPROVED FOR ELECTRICAL WORK ONLY

FOR NOTES, SEE SHEET E-1

E-2

STATE OF CALIFORNIA - DEPARTMENT OF TRANSPORTATION
ELECTRICAL
Caltrans

FUNCTIONAL SUPERVISOR: LAI HONG CHIU
CALCULATED-DESIGNED BY: RAMONA TAITANO LOUGHRAN
CHECKED BY: KENNETH XU

REVISED BY	DATE REVISED

LAST REVISION | DATE PLOTTED => 07-MAR-2012
08-04-11 | TIME PLOTTED => 14:10

Dist	COUNTY	ROUTE	POST MILES TOTAL PROJECT	SHEET No.	TOTAL SHEETS
04	SM	82	0.0/2.7	13	31

Ramona M Taitano Loughran 11-16-11
REGISTERED ELECTRICAL ENGINEER DATE

R.M. Taitano Loughran
No. 16344
Exp 3-31-13
ELECT
REGISTERED PROFESSIONAL ENGINEER
STATE OF CALIFORNIA

PLANS APPROVAL DATE

THE STATE OF CALIFORNIA OR ITS OFFICERS OR AGENTS SHALL NOT BE RESPONSIBLE FOR THE ACCURACY OR COMPLETENESS OF SCANNED COPIES OF THIS PLAN SHEET.

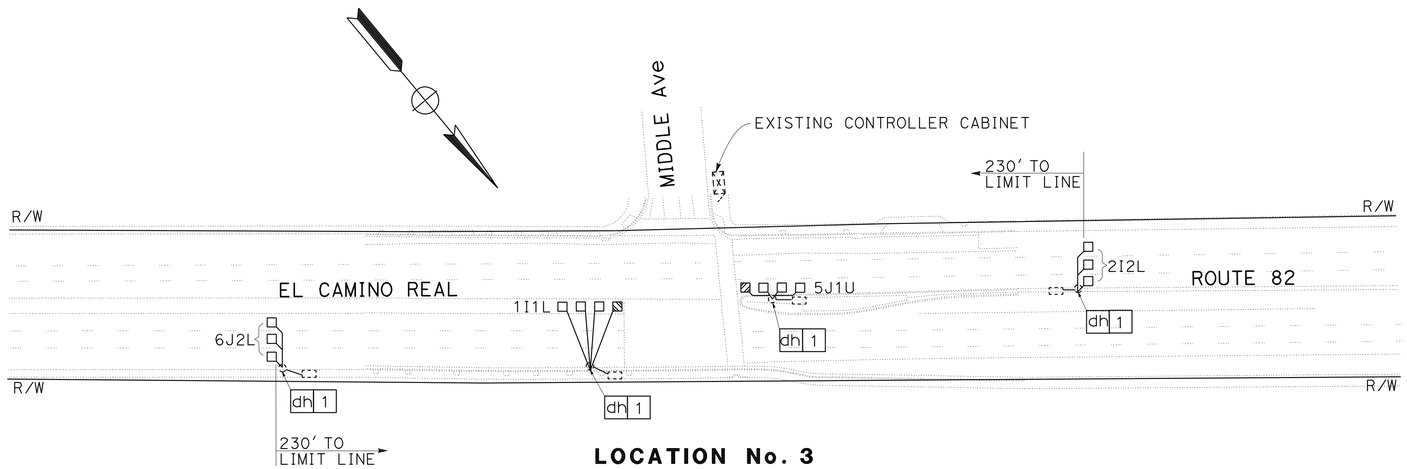

LOCATION No. 3

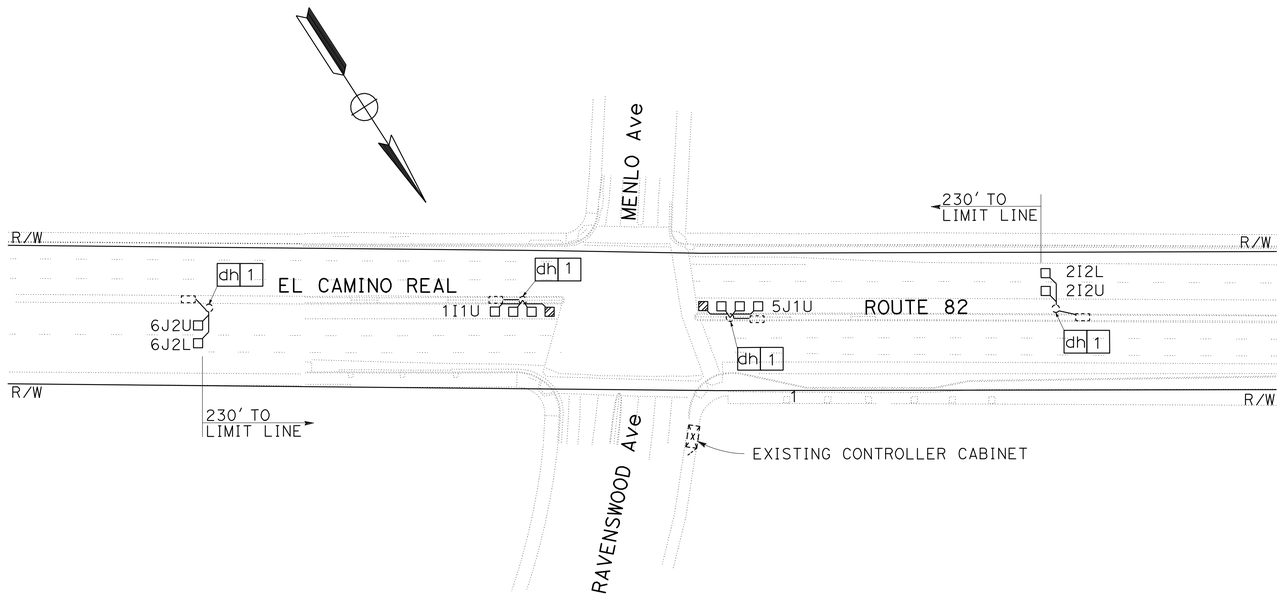

LOCATION No. 4

INDUCTIVE LOOP DETECTOR
(REPLACE)

SCALE: 1'' = 50'

APPROVED FOR ELECTRICAL WORK ONLY

FOR NOTES, SEE SHEET E-1

E-3

STATE OF CALIFORNIA - DEPARTMENT OF TRANSPORTATION
ELECTRICAL
Caltrans
FUNCTIONAL SUPERVISOR: LAI HONG CHIU
CALCULATED-DESIGNED BY: RAMONA TAITANO LOUGHRAN
CHECKED BY: KENNETH XU
REVISED BY
DATE REVISED

LAST REVISION | DATE PLOTTED => 07-MAR-2012
08-08-11 | TIME PLOTTED => 14:10

BORDER LAST REVISED 7/2/2010
USERNAME => s132175
DGN FILE => 0400021061ua003.dgn
RELATIVE BORDER SCALE IS IN INCHES 0 1 2 3
UNIT 0976
PROJECT NUMBER & PHASE 04000210611

Dist	COUNTY	ROUTE	POST MILES TOTAL PROJECT	SHEET No.	TOTAL SHEETS
04	SM	82	0.0/2.7	14	31

Ramona M Taitano Loughran 11-16-11
REGISTERED ELECTRICAL ENGINEER DATE

2-6-12
PLANS APPROVAL DATE

REGISTERED PROFESSIONAL ENGINEER
R.M. Taitano Loughran
No. 16344
Exp 3-31-13
ELECT
STATE OF CALIFORNIA

THE STATE OF CALIFORNIA OR ITS OFFICERS OR AGENTS SHALL NOT BE RESPONSIBLE FOR THE ACCURACY OR COMPLETENESS OF SCANNED COPIES OF THIS PLAN SHEET.

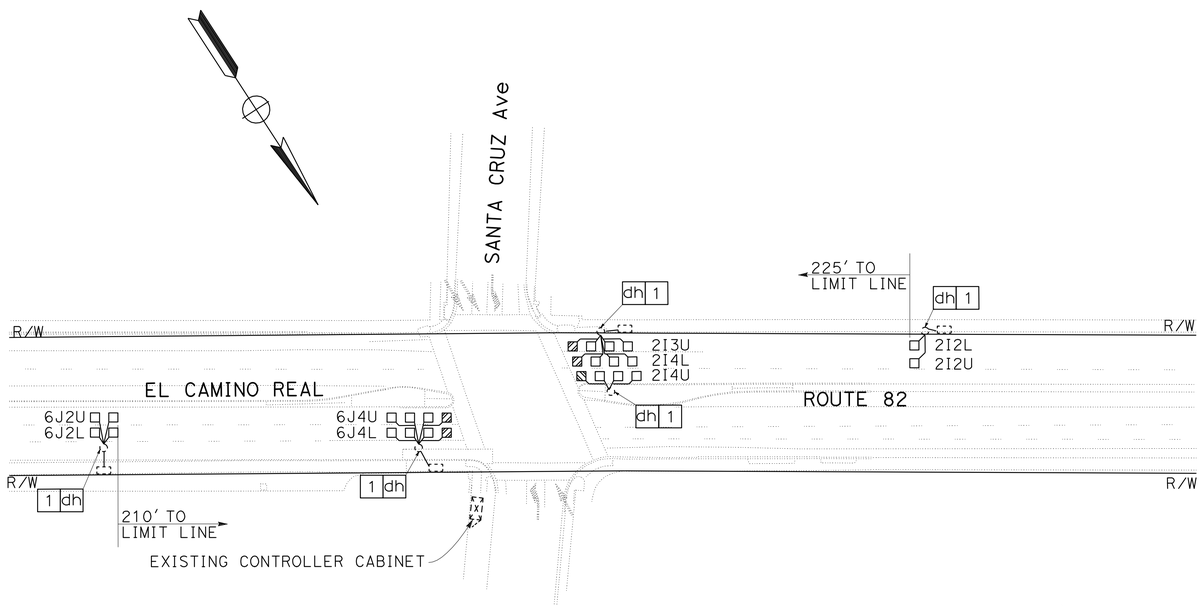

LOCATION No. 5

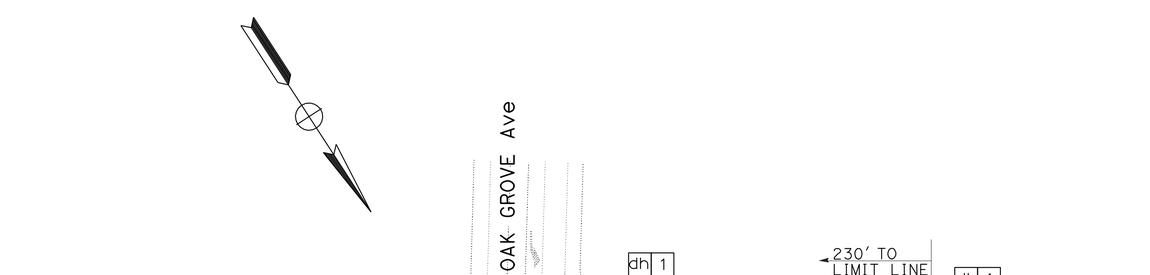

LOCATION No. 6

INDUCTIVE LOOP DETECTOR
(REPLACE)

SCALE: 1'' = 50'

APPROVED FOR ELECTRICAL WORK ONLY

FOR NOTES, SEE SHEET E-1

E-4

STATE OF CALIFORNIA - DEPARTMENT OF TRANSPORTATION
Caltrans®
ELECTRICAL
FUNCTIONAL SUPERVISOR: LAI HONG CHIU
KENNETH XU
RAMONA TAITANO LOUGHRAN
CALCULATED-DESIGNED BY
CHECKED BY
REVISED BY
DATE REVISED

LAST REVISION 10-07-11
DATE PLOTTED => 07-MAR-2012
TIME PLOTTED => 14:10

BORDER LAST REVISED 7/2/2010
USERNAME => s132175
DGN FILE => 0400021061ua004.dgn
RELATIVE BORDER SCALE IS IN INCHES 0 1 2 3
UNIT 0976
PROJECT NUMBER & PHASE 04000210611

Dist	COUNTY	ROUTE	POST MILES TOTAL PROJECT	SHEET No.	TOTAL SHEETS
04	SM	82	0.0/2.7	15	31

Ramona M Taitano Loughran 11-16-11
REGISTERED ELECTRICAL ENGINEER DATE

2-6-12
PLANS APPROVAL DATE

R.M. Taitano Loughran
No. 16344
Exp 3-31-13
ELECT
REGISTERED PROFESSIONAL ENGINEER
STATE OF CALIFORNIA

THE STATE OF CALIFORNIA OR ITS OFFICERS OR AGENTS SHALL NOT BE RESPONSIBLE FOR THE ACCURACY OR COMPLETENESS OF SCANNED COPIES OF THIS PLAN SHEET.

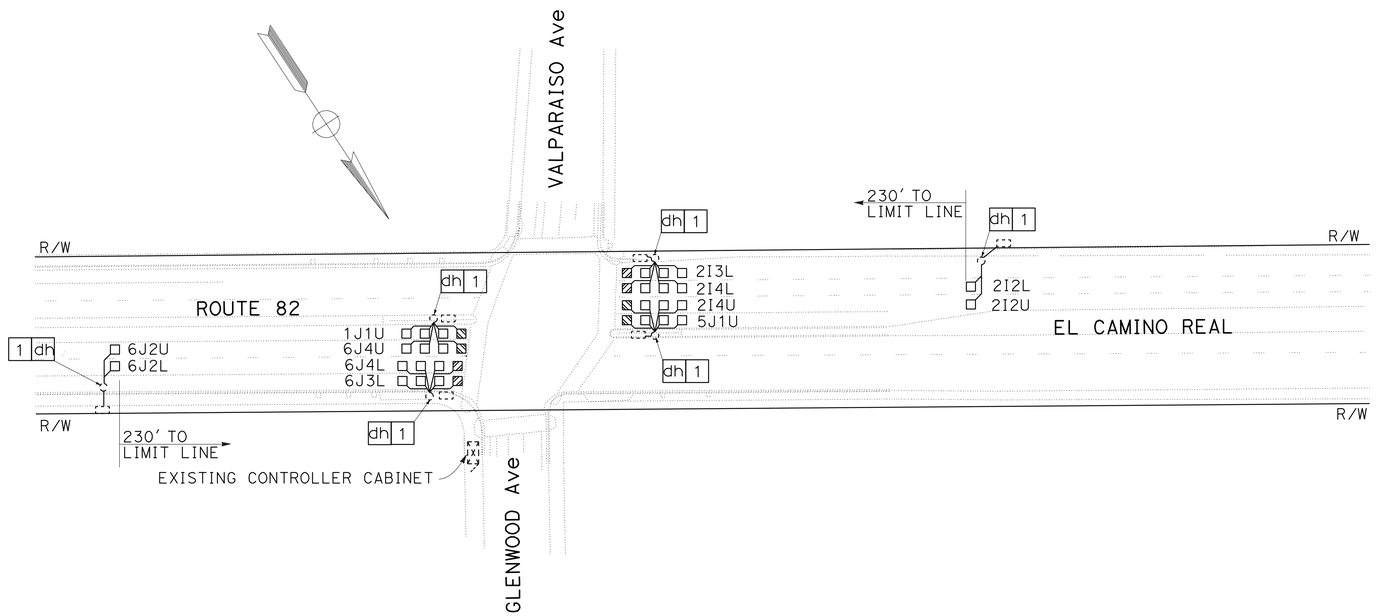

LOCATION No. 7

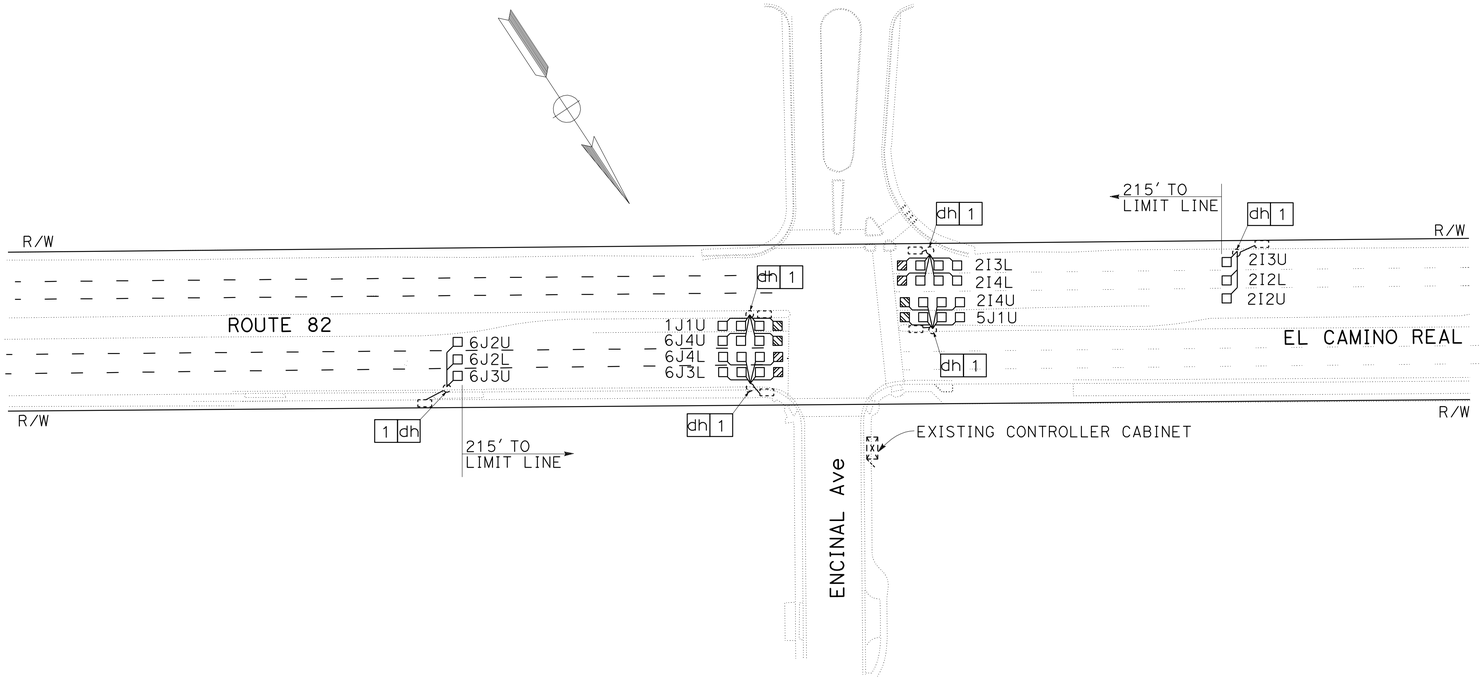

LOCATION No. 8

INDUCTIVE LOOP DETECTOR
(REPLACE)

SCALE: 1'' = 50'

APPROVED FOR ELECTRICAL WORK ONLY

FOR NOTES, SEE SHEET E-1

E-5

STATE OF CALIFORNIA - DEPARTMENT OF TRANSPORTATION
ELECTRICAL
Caltrans
FUNCTIONAL SUPERVISOR: LAI HONG CHIU
CALCULATED-DESIGNED BY: RAMONA TAITANO LOUGHRAN
CHECKED BY: KENNETH XU
REVISED BY
DATE REVISED

LAST REVISION
DATE PLOTTED => 07-MAR-2012
TIME PLOTTED => 14:10
08-10-11

BORDER LAST REVISED 7/2/2010
USERNAME => s132175
DGN FILE => 0400021061ua005.dgn
RELATIVE BORDER SCALE IS IN INCHES 0 1 2 3
UNIT 0976
PROJECT NUMBER & PHASE 04000210611

Dist	COUNTY	ROUTE	POST MILES TOTAL PROJECT	SHEET No.	TOTAL SHEETS
04	SM	82	0.0/2.7	16	31

Ramona M Taitano Loughran 11-16-11
REGISTERED ELECTRICAL ENGINEER DATE

2-6-12
PLANS APPROVAL DATE

R.M. Taitano Loughran
No. 16344
Exp 3-31-13
ELECT
REGISTERED PROFESSIONAL ENGINEER
STATE OF CALIFORNIA

THE STATE OF CALIFORNIA OR ITS OFFICERS OR AGENTS SHALL NOT BE RESPONSIBLE FOR THE ACCURACY OR COMPLETENESS OF SCANNED COPIES OF THIS PLAN SHEET.

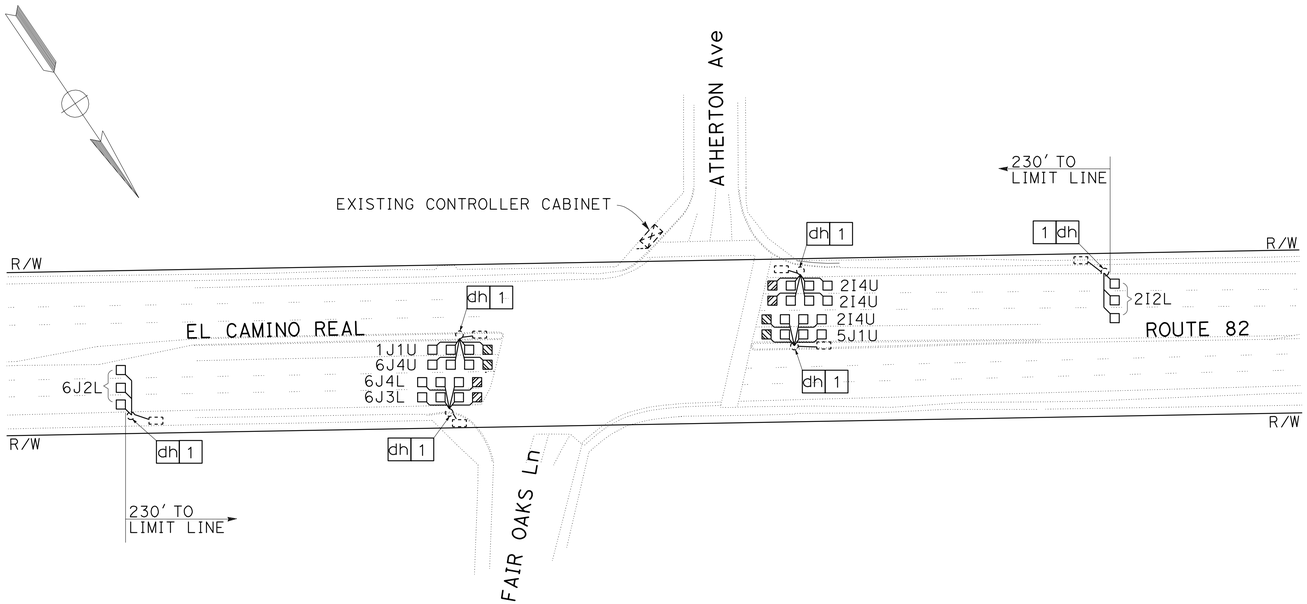

LOCATION No. 9

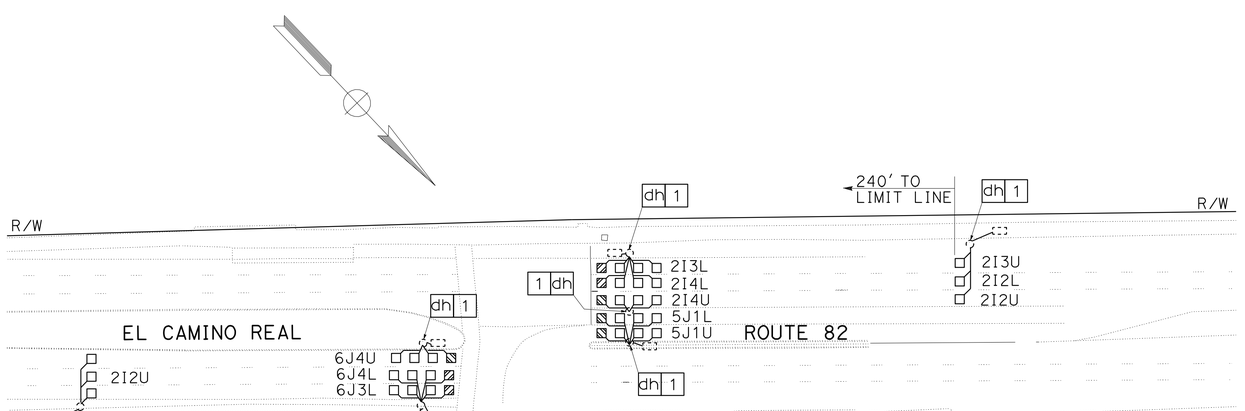

LOCATION No. 10

INDUCTIVE LOOP DETECTOR
(REPLACE)

SCALE: 1'' = 50'

APPROVED FOR ELECTRICAL WORK ONLY

FOR NOTES, SEE SHEET E-1

E-6

STATE OF CALIFORNIA - DEPARTMENT OF TRANSPORTATION
ELECTRICAL
FUNCTIONAL SUPERVISOR: LAI HONG CHIU
CALCULATED-DESIGNED BY: RAMONA TAITANO LOUGHRAN
CHECKED BY: KENNETH XU
REVISED BY
DATE REVISED

LAST REVISION 08-12-11
DATE PLOTTED => 07-MAR-2012
TIME PLOTTED => 14:10

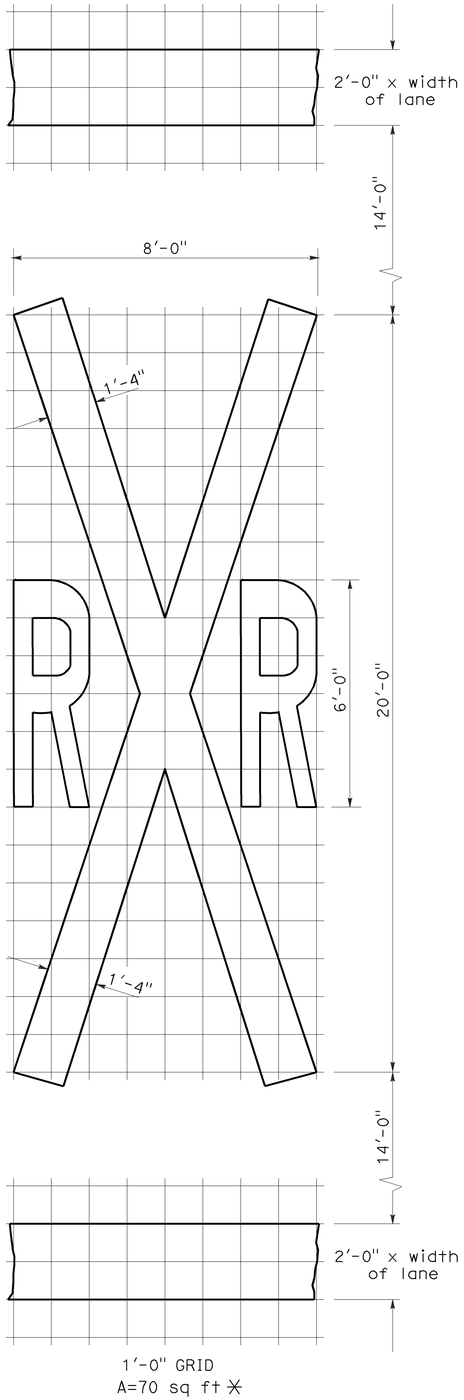

RAILROAD CROSSING SYMBOL

✳70 sq ft DOES NOT INCLUDE THE 2'-0" x VARIABLE WIDTH TRANSVERSE LINES.

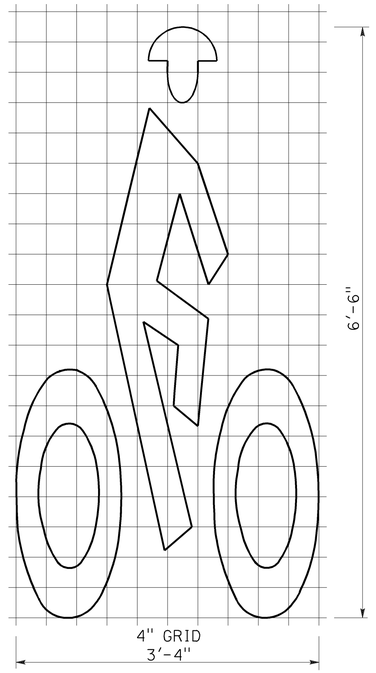

A=7 sq ft

BIKE LANE SYMBOL

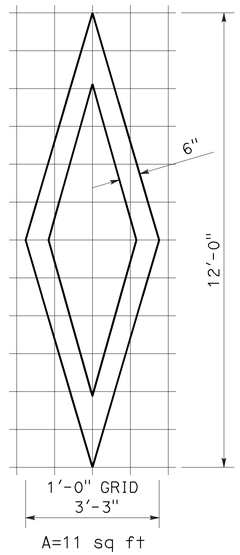

A=11 sq ft

DIAMOND SYMBOL

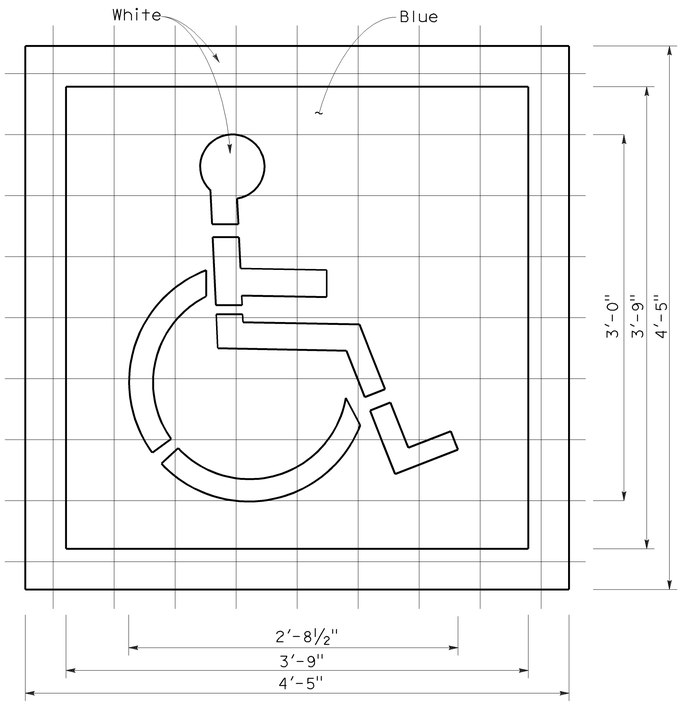

6" GRID
A (White) =9 sq ft
A (Blue) =14 sq ft

INTERNATIONAL SYMBOL OF ACCESSIBILITY MARKING

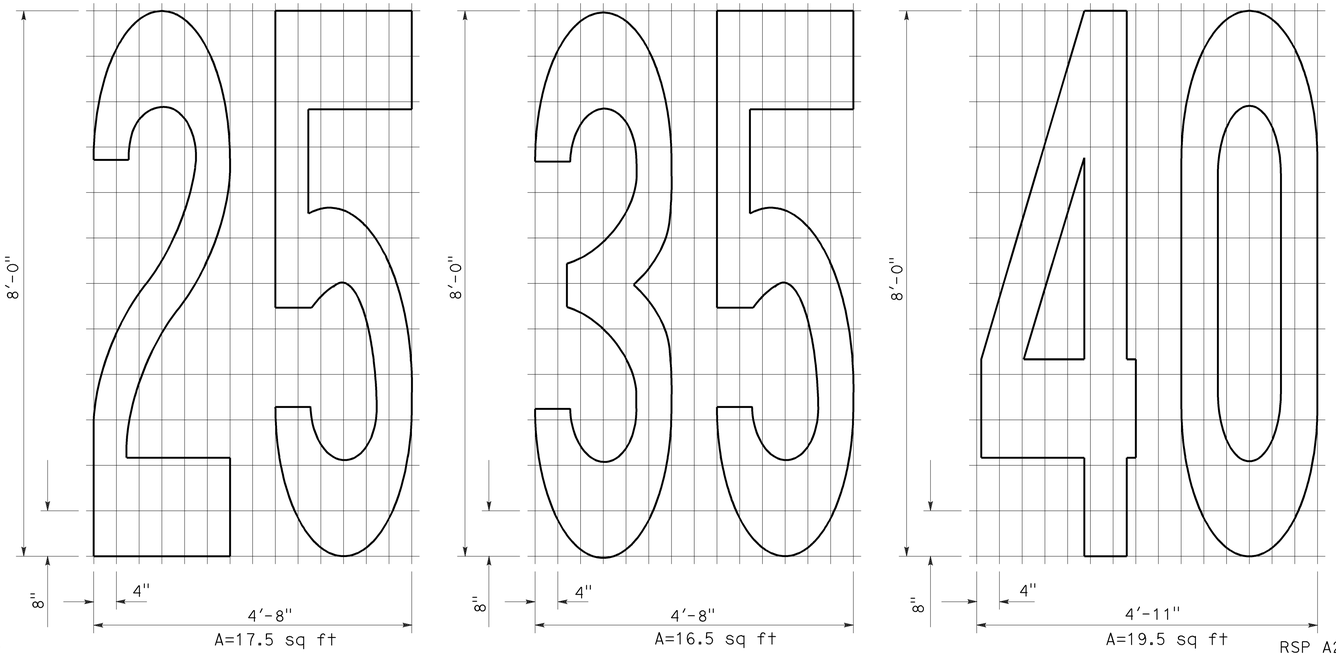

A=17.5 sq ft | A=16.5 sq ft | A=19.5 sq ft

NUMERALS

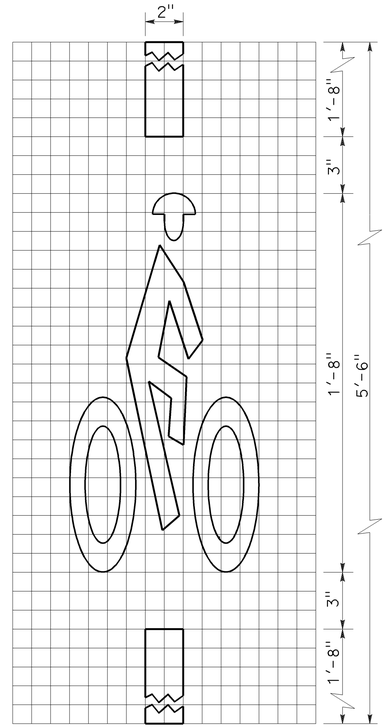

A=2 sq ft

BICYCLE LOOP DETECTOR SYMBOL

NOTE:

1. Minor variations in dimensions may be accepted by the Engineer.

DIST	COUNTY	ROUTE	POST MILES TOTAL PROJECT	SHEET NO.	TOTAL SHEETS
04	SM	82	0.0/2.7	17	31

Donald E. Howe
REGISTERED CIVIL ENGINEER

June 6, 2008
PLANS APPROVAL DATE

REGISTERED PROFESSIONAL ENGINEER — Donald E. Howe — No. C46402 — Exp. 3-31-09 — CIVIL — STATE OF CALIFORNIA

The State of California or its officers or agents shall not be responsible for the accuracy or completeness of electronic copies of this plan sheet.

To accompany plans dated 2-6-12

STATE OF CALIFORNIA
DEPARTMENT OF TRANSPORTATION

PAVEMENT MARKINGS SYMBOLS AND NUMERALS

NO SCALE

RSP A24C DATED JUNE 6, 2008 SUPERSEDES STANDARD PLAN A24C DATED MAY 1, 2006 - PAGE 11 OF THE STANDARD PLANS BOOK DATED MAY 2006.

REVISED STANDARD PLAN RSP A24C

2006 REVISED STANDARD PLAN RSP A24C

5-27-08

DIST	COUNTY	ROUTE	POST MILES TOTAL PROJECT	SHEET NO.	TOTAL SHEETS
04	SM	82	0.0/2.7	18	31

William K. Farnbach
REGISTERED CIVIL ENGINEER

May 15, 2009
PLANS APPROVAL DATE

REGISTERED PROFESSIONAL ENGINEER — William K. Farnbach — No. C49042 — Exp. 9-30-10 — CIVIL — STATE OF CALIFORNIA

The State of California or its officers or agents shall not be responsible for the accuracy or completeness of electronic copies of this plan sheet.

To accompany plans dated 2-6-12

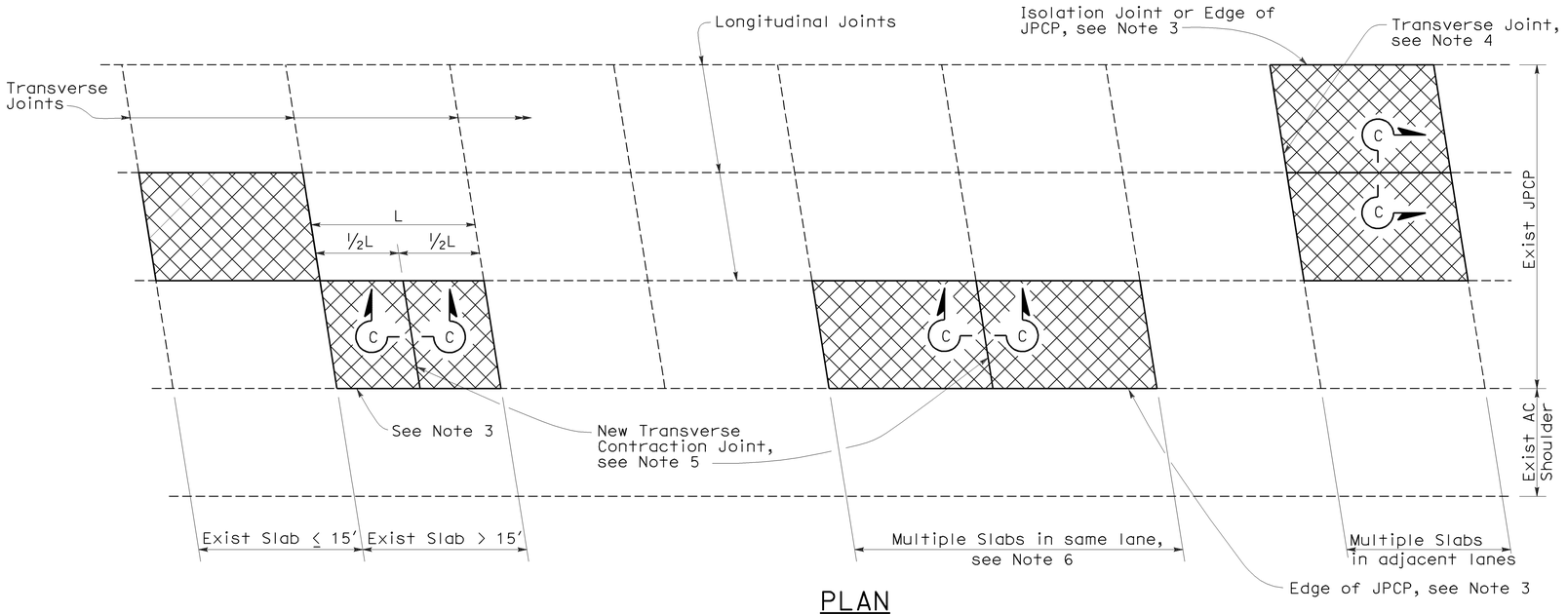

PLAN

NOTES:

1. For details not shown, see Revised Standard Plan RSP P10.
2. Where the existing outer shoulder pavement is asphalt concrete pavement, the "a" dimension shall be 1′-0" and the "b" dimension shall be 2′-0".
3. Side forms shall be used where edge of pavement is adjacent to asphalt concrete.
4. For detail, see Transverse Construction Joint for existing concrete pavement detail on Revised Standard Plan RSP P10.
5. Transverse joint to match skew of existing joint. Omit dowel bars.
6. This Standard Plan only applicable when replacing multiple slabs in the same lane is less than 100′.

LEGEND

Replace Concrete Pavement (See Slab Layout Detail)

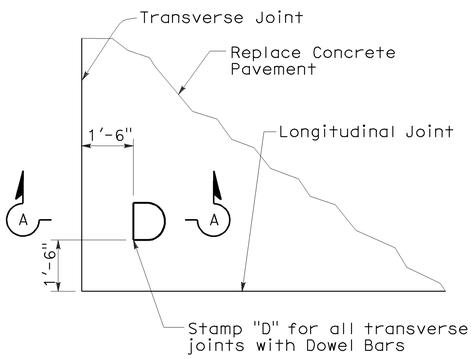

DOWEL STAMP DETAIL

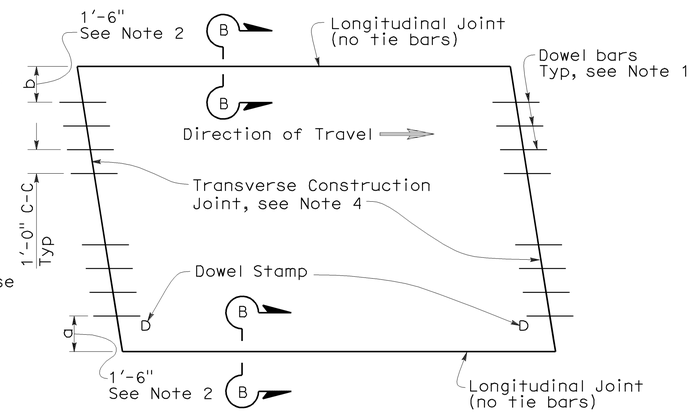

TYPE I
(traffic lane lines match longitudinal joints)

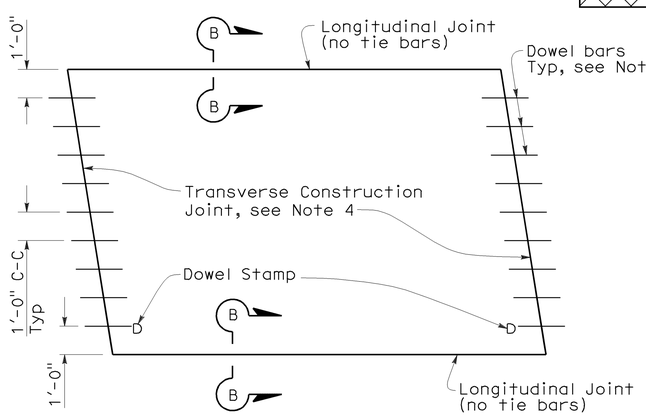

TYPE II
(traffic lane lines do not match longitudinal joints)

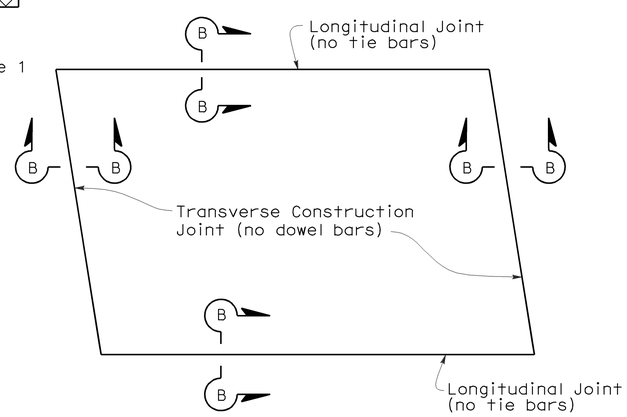

TYPE III
(for short term repairs < 5 yrs design life or for slab replacements with a cracking and seating operation)

SLAB LAYOUT

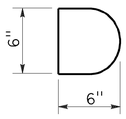

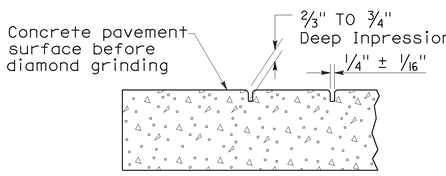

SECTION A-A

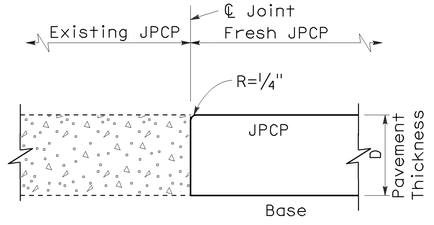

SECTION B-B

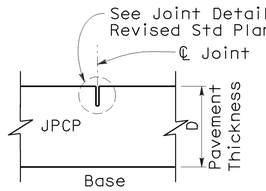

SECTION C-C

STATE OF CALIFORNIA
DEPARTMENT OF TRANSPORTATION

JOINTED PLAIN CONCRETE PAVEMENT-INDIVIDUAL SLAB REPLACEMENT

NO SCALE

RSP P8 DATED MAY 15, 2009 SUPERSEDES RSP P8 DATED SEPTEMBER 1, 2006 AND STANDARD PLAN P8 DATED MAY 1, 2006 - PAGE 123 OF THE STANDARD PLANS BOOK DATED MAY 2006.

REVISED STANDARD PLAN RSP P8

2006 REVISED STANDARD PLAN RSP P8

5-8-09

NOTE:

1. Tie bars, dowel bars, and reinforcement are not shown in joint seal details, see Revised Standard Plans RSP P1, RSP P3, RSP P10, RSP P35, RSP P45, or RSP P46 as applicable.

DIST	COUNTY	ROUTE	POST MILES TOTAL PROJECT	SHEET NO.	TOTAL SHEETS
04	SM	82	0.0/2.7	19	31

William K. Farnbach
REGISTERED CIVIL ENGINEER

May 15, 2009
PLANS APPROVAL DATE

REGISTERED PROFESSIONAL ENGINEER
William K. Farnbach
No. C49042
Exp. 9-30-10
CIVIL
STATE OF CALIFORNIA

The State of California or its officers or agents shall not be responsible for the accuracy or completeness of electronic copies of this plan sheet.

To accompany plans dated 2-6-12

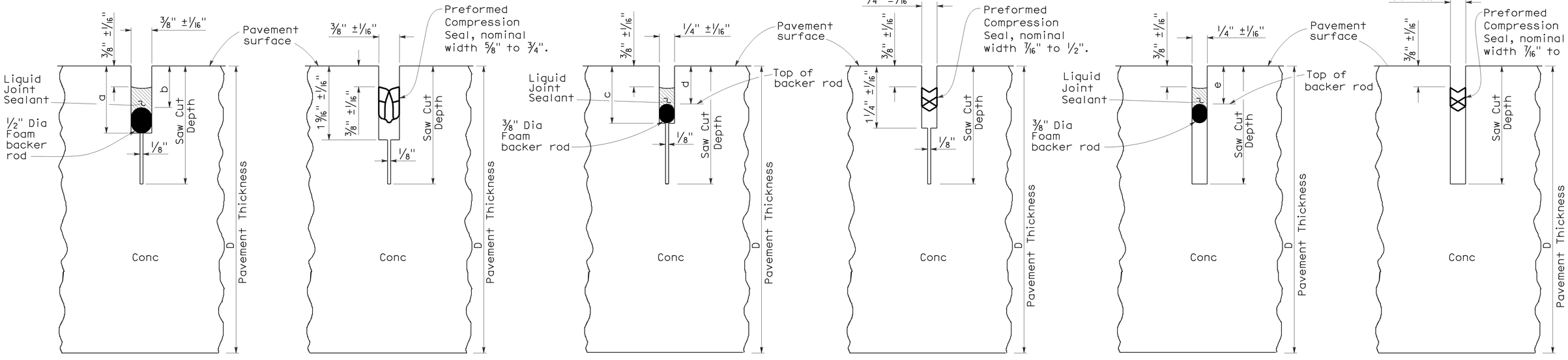

LIQUID SEALANT | COMPRESSION SEAL | LIQUID SEALANT | COMPRESSION SEAL | LIQUID SEALANT | COMPRESSION SEAL

TYPE A1
Transverse Contraction Joints

TYPE A2
Longitudinal Contraction Joints

TYPE B
Longitudinal or Transverse Contraction Joint

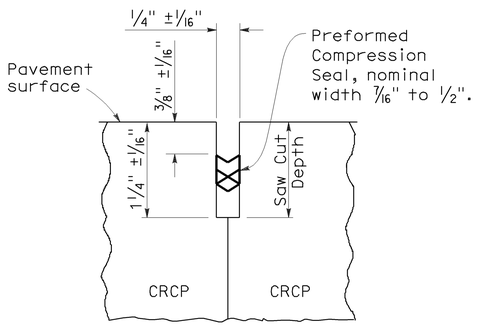

COMPRESSION SEAL

TYPE C
Transverse and Longitudinal Construction Joints (For CRCP)

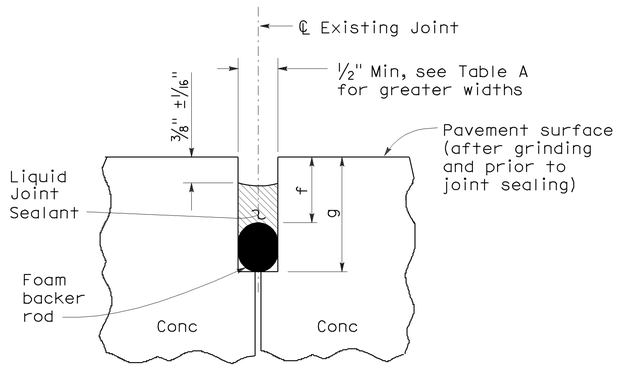

LIQUID SEALANT

TYPE R
Retrofit Transverse and Longitudinal Joints

LIQUID SEALANT RESERVOIR DEPTH

LIQUID SEALANT MATERIAL	3/8" Joint Width Type A1		1/4" Joint Width Type A2		1/4" Joint Width Type B
	DIMENSION		DIMENSION		DIMENSION
	a	b	c	d	e
SILCONE	1" ±1/16"	5/8" ±1/16"	15/16" ±1/16"	9/16" ±1/16"	9/16" ±1/16"
ASPHALT RUBBER	1 3/16" ±1/16"	3/4" ±1/16"	1 1/16" ±1/16"	11/16" ±1/16"	11/16" ±1/16"

TABLE A (TYPE R JOINT)

Sawn Joint Width	Backer Rod Diameter ± 1/16"	DIMENSION "f"	DIMENSION "g"
1"	1 5/16"	7/8"	2 1/4"
7/8"	1 3/16"	13/16"	2"
3/4"	1"	3/4"	1 3/4"
5/8"	7/8"	11/16"	1 1/2"
1/2"	11/16"	5/8"	1 1/4"

STATE OF CALIFORNIA
DEPARTMENT OF TRANSPORTATION

CONCRETE PAVEMENT-JOINT DETAILS

NO SCALE

RSP P20 DATED MAY 15, 2009 SUPERSEDES STANDARD PLAN P20 DATED MAY 1, 2006 - PAGE 128 OF THE STANDARD PLANS BOOK DATED MAY 2006.

REVISED STANDARD PLAN RSP P20

2006 REVISED STANDARD PLAN RSP P20

5-8-09

DIST	COUNTY	ROUTE	POST MILES TOTAL PROJECT	SHEET NO.	TOTAL SHEETS
04	SM	82	0.0/2.7	20	31

Randell D. Hiatt
REGISTERED CIVIL ENGINEER

June 6, 2008
PLANS APPROVAL DATE

Randell D. Hiatt
No. C50200
Exp. 6-30-09
CIVIL
REGISTERED PROFESSIONAL ENGINEER
STATE OF CALIFORNIA

The State of California or its officers or agents shall not be responsible for the accuracy or completeness of electronic copies of this plan sheet.

To accompany plans dated 2-6-12

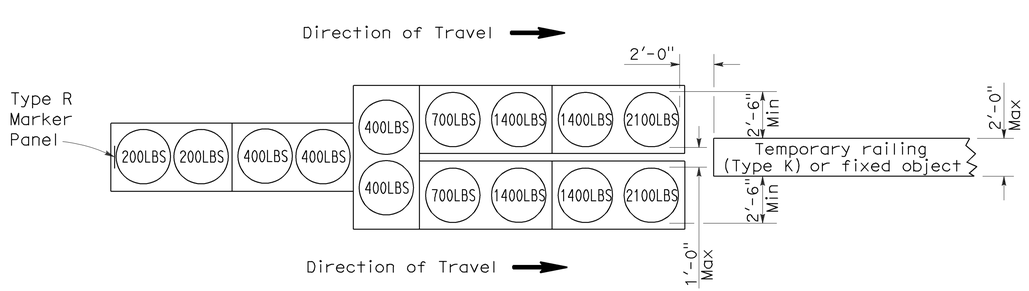

ARRAY 'TU14'

Approach speed 45 mph or more

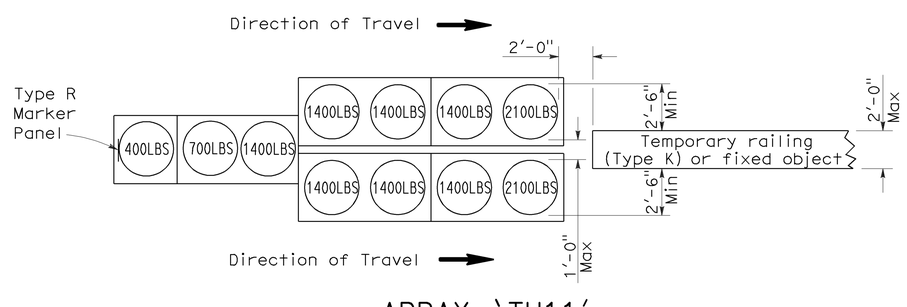

ARRAY 'TU11'

Approach speed less than 45 mph

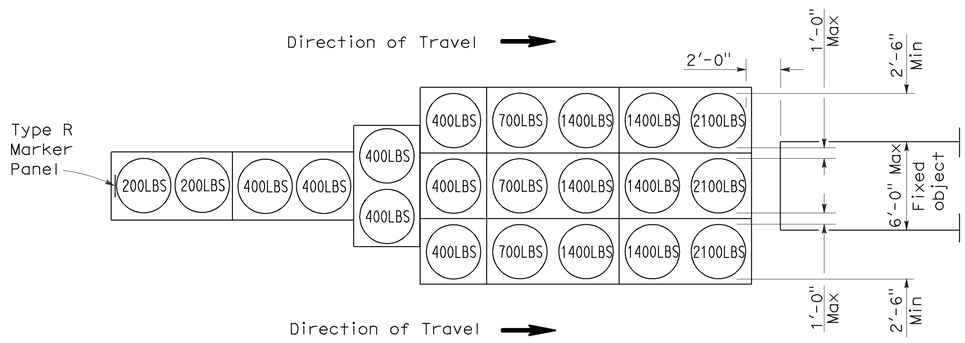

ARRAY 'TU21'

Approach speed 45 mph or more

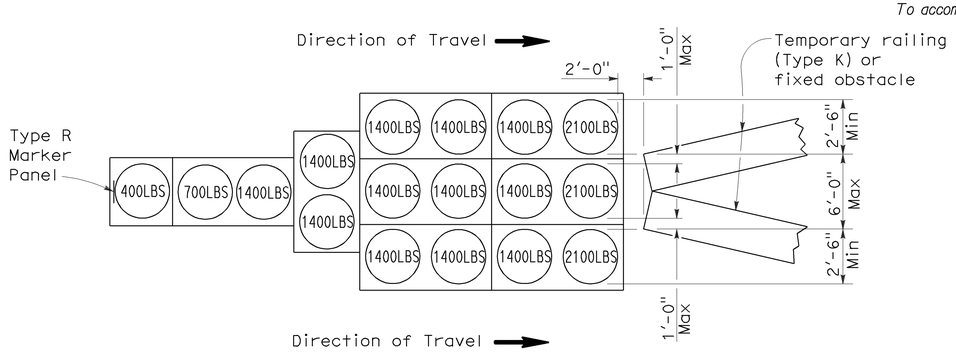

ARRAY 'TU17'

Approach speed less than 45 mph

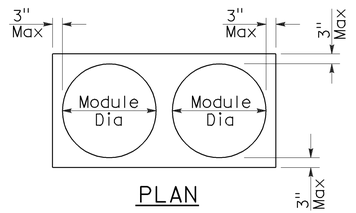

PLAN

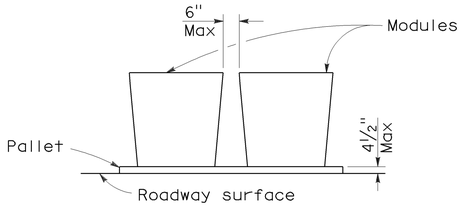

ELEVATION

CRASH CUSHION PALLET DETAIL

See Note 7

NOTES:

1. (XXX) Indicates sand filled module location and weight of sand in pounds for each module. Module spacing is based on the greater diameter of the module.
2. All sand weights are nominal.
3. Temporary crash cushion arrays shall not encroach on the traveled way.
4. Place the top of Type R marker panel 1" below the module lid.
5. Refer to Standard Plan A73B for marker details.
6. Approach speeds indicated conform to NCHRP 350 Report criteria.
7. Use of pallets is optional.

STATE OF CALIFORNIA
DEPARTMENT OF TRANSPORTATION

TEMPORARY CRASH CUSHION, SAND FILLED (UNIDIRECTIONAL)

NO SCALE

RSP T1A DATED JUNE 6, 2008 SUPERSEDES STANDARD PLAN T1A
DATED MAY 1, 2006 - PAGE 211 OF THE STANDARD PLANS BOOK DATED MAY 2006.

REVISED STANDARD PLAN RSP T1A

2006 REVISED STANDARD PLAN RSP T1A

5-15-08

DIST	COUNTY	ROUTE	POST MILES TOTAL PROJECT	SHEET NO.	TOTAL SHEETS
04	SM	82	0.0/2.7	21	31

Randell D. Hiatt
REGISTERED CIVIL ENGINEER

June 6, 2008
PLANS APPROVAL DATE

REGISTERED PROFESSIONAL ENGINEER
Randell D. Hiatt
No. C50200
Exp. 6-30-09
CIVIL
STATE OF CALIFORNIA

The State of California or its officers or agents shall not be responsible for the accuracy or completeness of electronic copies of this plan sheet.

To accompany plans dated 2-6-12

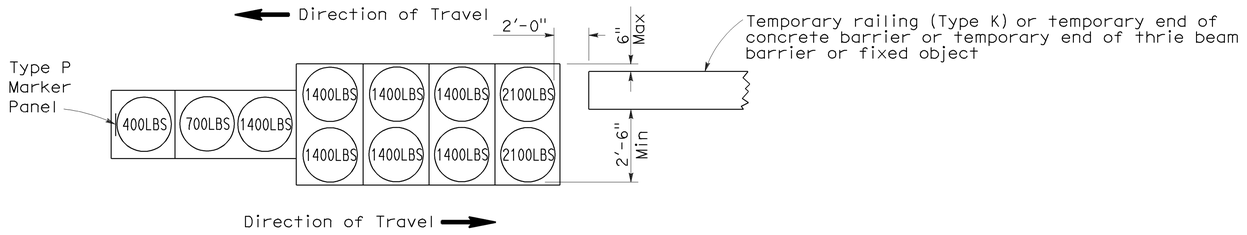

ARRAY 'TB11'

Approach speed less than 45 mph

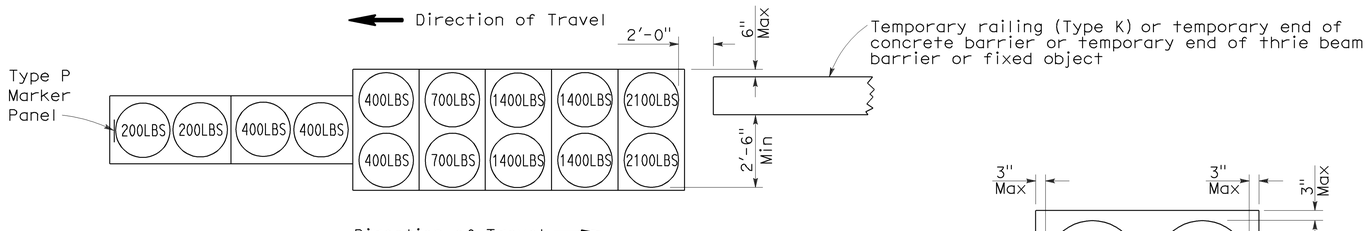

ARRAY 'TB14'

Approach speed 45 mph or more

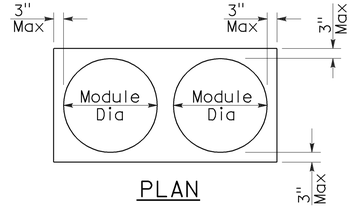

PLAN

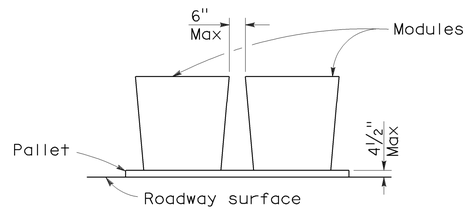

ELEVATION

CRASH CUSHION PALLET DETAIL

See Note 7

NOTES:

1. (XXX) Indicates sand filled module location and weight of sand in pounds for each module. Module spacing is based on the greater diameter of the module.
2. All sand weights are nominal.
3. Temporary crash cushion arrays shall not encroach on the traveled way.
4. Place the Type P marker panel so that the bottom of the panel rests upon the pallet.
5. Refer to Standard Plan A73B for marker details.
6. Approach speeds indicated conform to NCHRP 350 Report criteria.
7. Use of pallets is optional.

STATE OF CALIFORNIA
DEPARTMENT OF TRANSPORTATION

TEMPORARY CRASH CUSHION, SAND FILLED (BIDIRECTIONAL)

NO SCALE

RSP T1B DATED JUNE 6, 2008 SUPERSEDES STANDARD PLAN T1B
DATED MAY 1, 2006 - PAGE 212 OF THE STANDARD PLANS BOOK DATED MAY 2006.

REVISED STANDARD PLAN RSP T1B

2006 REVISED STANDARD PLAN RSP T1B

5-15-08

DIST	COUNTY	ROUTE	POST MILES TOTAL PROJECT	SHEET NO.	TOTAL SHEETS
04	SM	82	0.0/2.7	22	31

Randell D. Hiatt
REGISTERED CIVIL ENGINEER

June 6, 2008
PLANS APPROVAL DATE

REGISTERED PROFESSIONAL ENGINEER
Randell D. Hiatt
No. C50200
Exp. 6-30-09
CIVIL
STATE OF CALIFORNIA

The State of California or its officers or agents shall not be responsible for the accuracy or completeness of electronic copies of this plan sheet.

To accompany plans dated 2-6-12

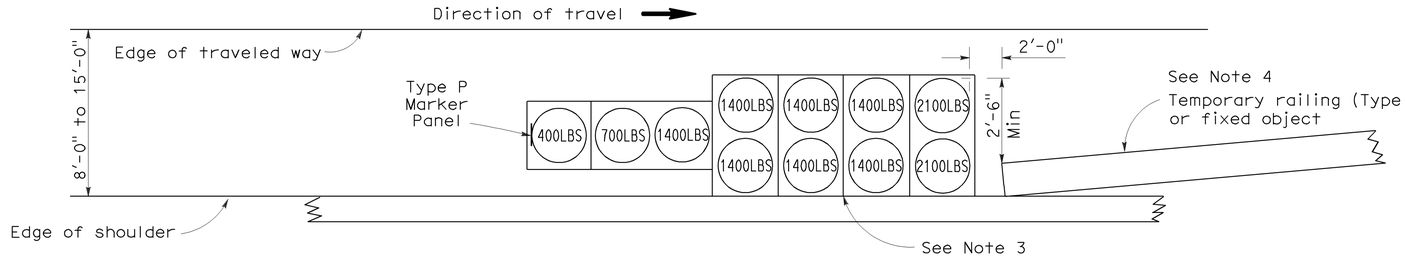

ARRAY 'TS11'

Approach speed less than 45 mph
See Note 9

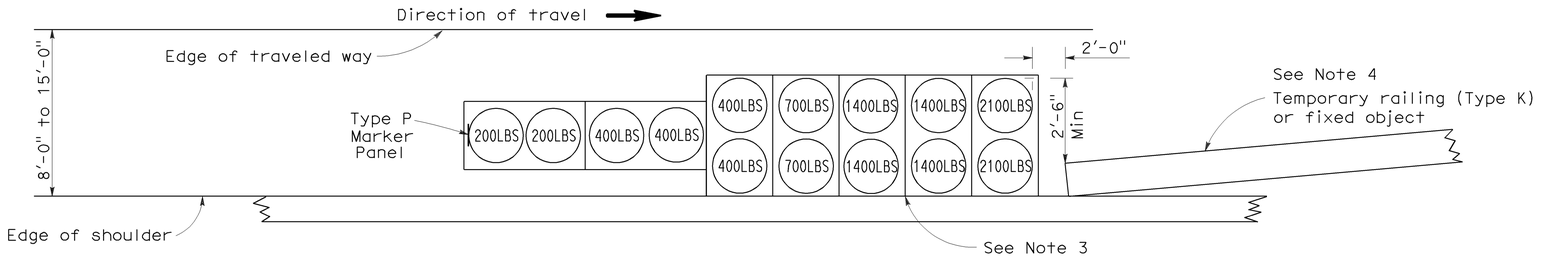

ARRAY 'TS14'

Approach speed 45 mph or more
See Note 9

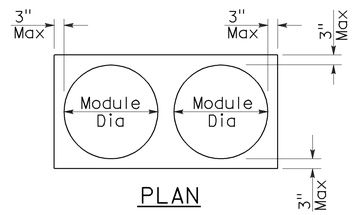

PLAN

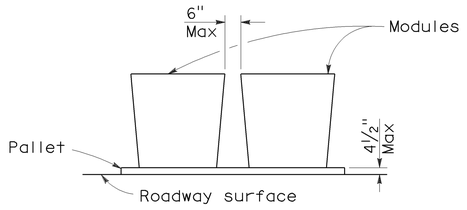

ELEVATION

CRASH CUSHION PALLET DETAIL

See Note 11

NOTES:

1. (XXX) Indicates sand filled module location and weight of sand in pounds for each module. Module spacing is based on the greater diameter of the module.
2. All sand weights are nominal.
3. The temporary crash cushion arrays shown on this plan shall be used only in locations where there will be traffic on one side of the temporary crash cushion array.
4. If the fixed object or approach end of the temporary railing is less than 15'-0" from the edge of traveled way, a temporary crash cushion is required in a construction or work zone.
5. Temporary crash cushion arrays shall not encroach on the traveled way.
6. Arrays for median shoulders shall conform to details shown on this plan for outside shoulders.
7. Place the Type P marker panel so that the bottom of the panel rests upon the pallet and faces traffic.
8. Refer to Standard Plan A73B for marker details.
9. For shoulder widths less than 8'-0", appropriate approved crash cushion protection, other than sand filled modules, shall be provided at fixed objects and at approach ends of temporary railing. The specific type of crash cushion shall be as shown on the project plans or as specified in the Special Provisions, or if not shown on the project plans or specified in the Special Provisions, shall be as approved by the Engineer.
10. Approach speeds indicated conform to NCHRP 350 Report criteria.
11. Use of pallets is optional.

STATE OF CALIFORNIA
DEPARTMENT OF TRANSPORTATION

TEMPORARY CRASH CUSHION, SAND FILLED (SHOULDER INSTALLATIONS)

NO SCALE

RSP T2 DATED JUNE 6, 2008 SUPERSEDES STANDARD PLAN T2
DATED MAY 1, 2006 - PAGE 213 OF THE STANDARD PLANS BOOK DATED MAY 2006.

REVISED STANDARD PLAN RSP T2

2006 REVISED STANDARD PLAN RSP T2

5-15-08

Dist	COUNTY	ROUTE	POST MILES TOTAL PROJECT	SHEET No.	TOTAL SHEETS
04	SM	82	0.0/2.7	23	31

Randell D. Hiatt
REGISTERED CIVIL ENGINEER

May 20, 2011
PLANS APPROVAL DATE

REGISTERED PROFESSIONAL ENGINEER
Randell D. Hiatt
No. C50200
Exp. 6-30-11
CIVIL
STATE OF CALIFORNIA

The State of California or its officers or agents shall not be responsible for the accuracy or completeness of electronic copies of this plan sheet.

To accompany plans dated 2-6-12

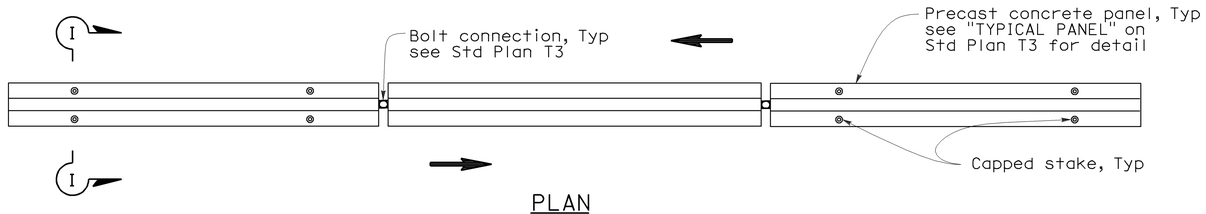

PLAN

RAILING STAKING CONFIGURATION FOR TWO-WAY TRAFFIC

See Note 1

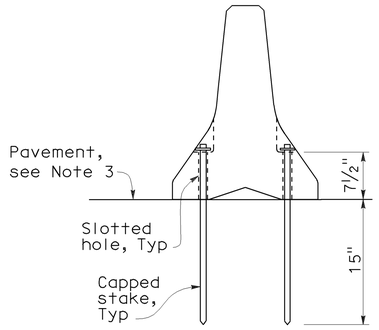

SECTION I-I

NOTES:

1. Where Type K Temporary Railing is placed as a temporary or long term barrier in two-way traffic on highways with less than 24" from the edge of traveled way, use four capped stakes per every other panel with end panels staked.
2. Where Type K Temporary Railing is placed 3" to 24" from the edge of an excavation on highways, use two capped stakes per panel along the traffic side.
3. Staked Type K Temporary Railing must be supported by at least 4" thick concrete, hot mix asphalt or existing asphalt concrete pavement.
4. The minimum yield strength for the washer must be 60,000 psi.
5. Direction of adjacent traffic indicated by ⟹.

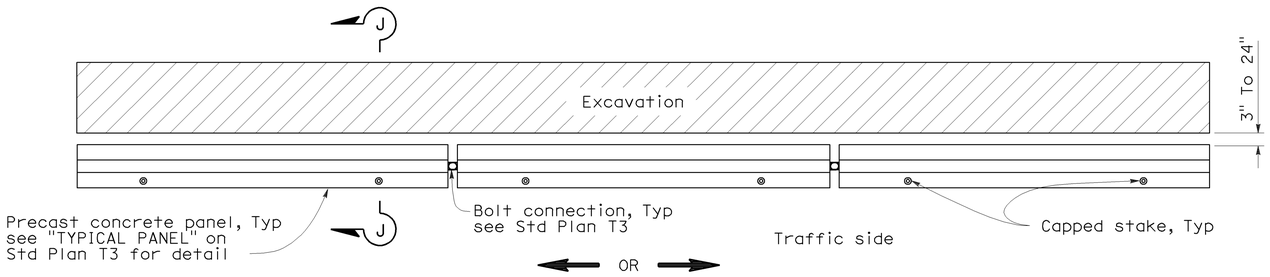

PLAN

RAILING STAKING CONFIGURATION ADJACENT TO AN EXCAVATION

See Note 2

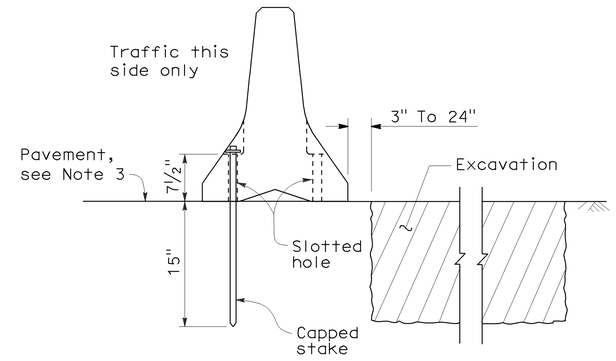

SECTION J-J

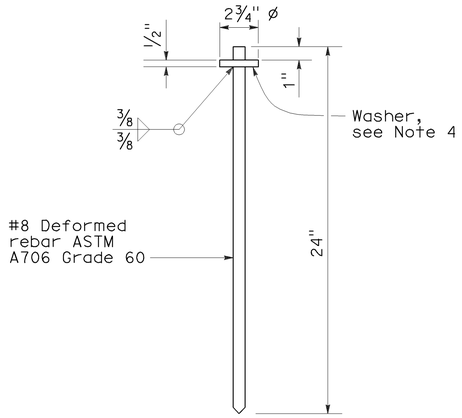

CAPPED STAKE DETAIL

STATE OF CALIFORNIA
DEPARTMENT OF TRANSPORTATION

TEMPORARY RAILING (TYPE K)

NO SCALE

NSP T3A DATED MAY 20, 2011 SUPPLEMENTS
THE STANDARD PLANS BOOK DATED MAY 2006.

NEW STANDARD PLAN NSP T3A

2006 NEW STANDARD PLAN NSP T3A

8-31-10

DIST	COUNTY	ROUTE	POST MILES TOTAL PROJECT	SHEET NO.	TOTAL SHEETS
04	SM	82	0.0/2.7	24	31

Robert B Schott
LICENSED LANDSCAPE ARCHITECT

August 15, 2008
PLANS Approval DATE

LICENSED LANDSCAPE ARCHITECT
Robert B. Schott 3695
Signature
11-04-08
Renewal Date
08-11-08
Date
STATE OF CALIFORNIA

The State of California or its officers or agents shall not be responsible for the accuracy or completeness of electronic copies of this plan sheet.

To accompany plans dated 2-6-12

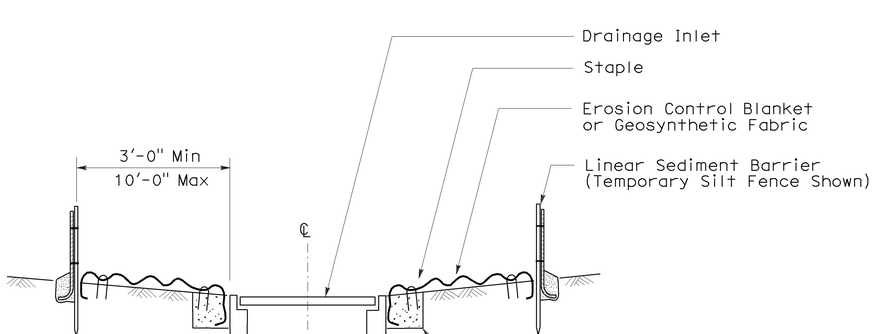

SECTION A-A

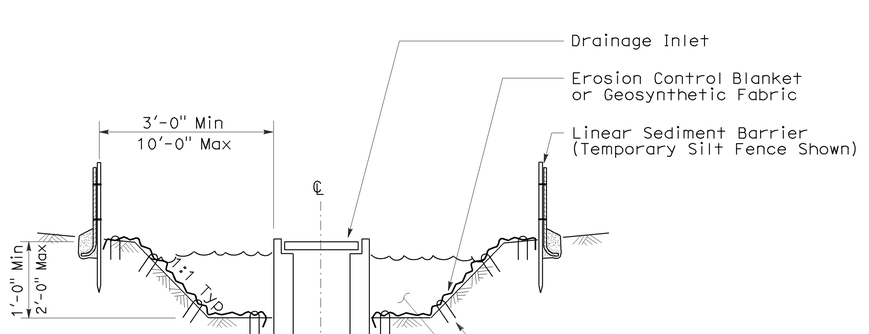

SECTION B-B

NOTES:

1. See Standard Plan T51 for Temporary Silt Fence.
2. Dimensions may vary to fit field conditions.

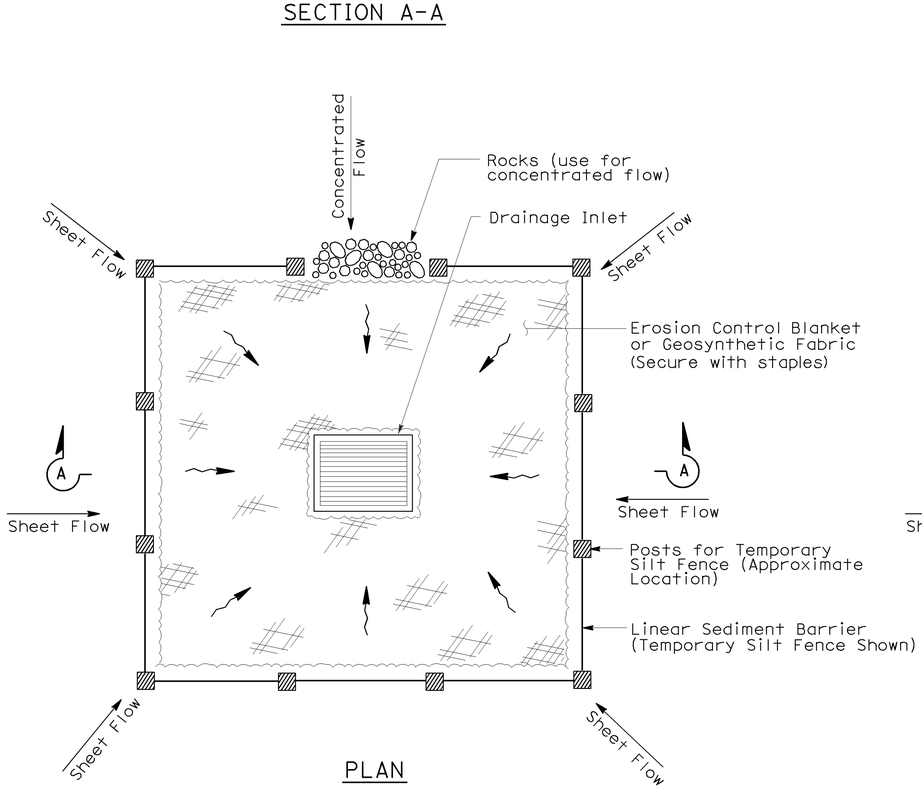

PLAN

TEMPORARY DRAINAGE INLET PROTECTION (TYPE 1)

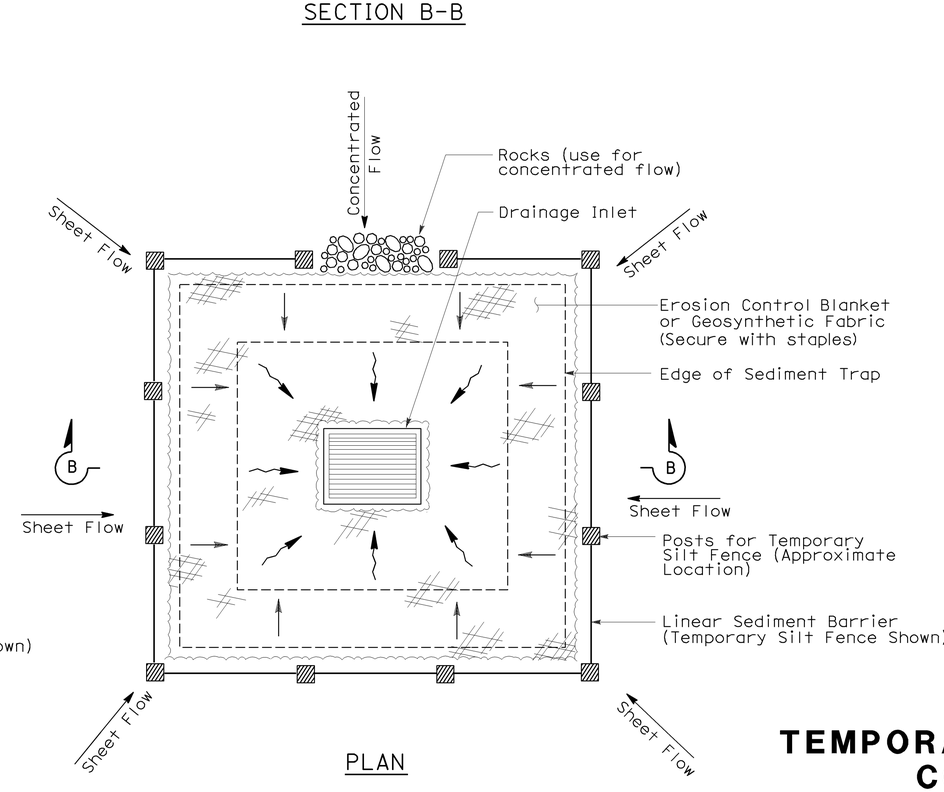

PLAN

TEMPORARY DRAINAGE INLET PROTECTION (TYPE 2) (EXCAVATED SEDIMENT TRAP)

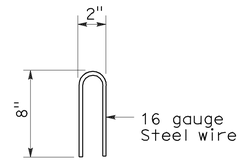

STAPLE DETAIL

STATE OF CALIFORNIA
DEPARTMENT OF TRANSPORTATION

TEMPORARY WATER POLLUTION CONTROL DETAILS (TEMPORARY DRAINAGE INLET PROTECTION)

NO SCALE

Nsp t61 dated august 15, 2008 supplements the standard plans book dated may 2006.

NEW STANDARD PLAN NSP T61

2006 NEW STANDARD PLAN NSP T61

7-11-08

DIST	COUNTY	ROUTE	POST MILES TOTAL PROJECT	SHEET NO.	TOTAL SHEETS
04	SM	82	0.0/2.7	25	31

Robert B Schott
LICENSED LANDSCAPE ARCHITECT

August 15, 2008
PLANS APPROVAL DATE

LICENSED LANDSCAPE ARCHITECT Robert B. Schott 3695 Signature 11-04-08 Renewal Date 08-11-08 Date STATE OF CALIFORNIA

The State of California or its officers or agents shall not be responsible for the accuracy or completeness of electronic copies of this plan sheet.

To accompany plans dated 2-6-12

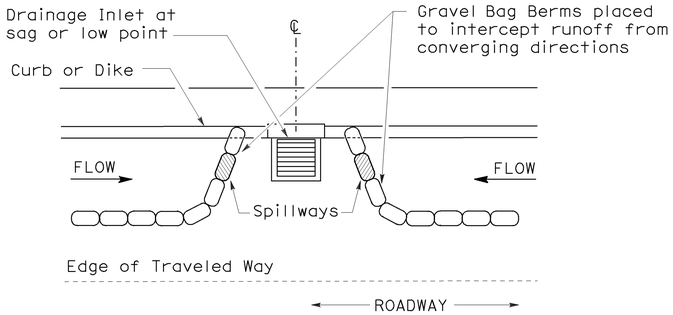

PLAN

CONFIGURATION FOR SAG POINT INLET (GRAVEL BAG BERM)

GRAVEL BAG BERM (TYPE 3A) SPACING TABLE

SLOPE OF ROADWAY (PERCENT)	1 to 3.9	4 to 5.9	6 to 7.9	8 to 10	10+
INTERVAL BETWEEN BERM	100′	75′	50′	25′	12′

For slope of less than 1%, install barriers only if erosion/sediment is prevalent

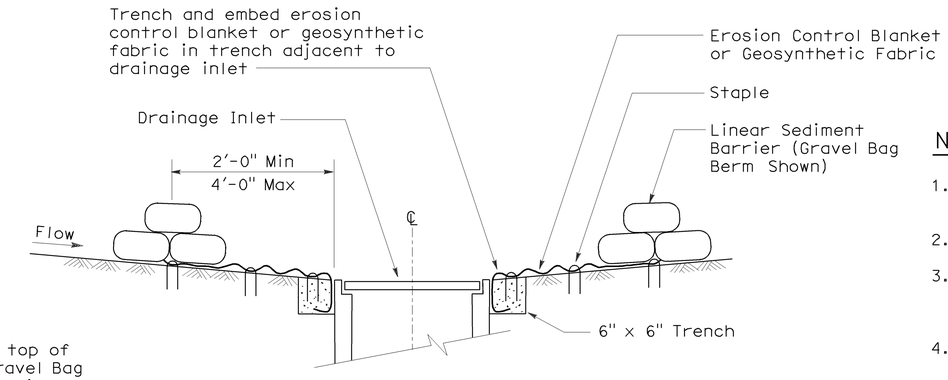

SECTION A-A

NOTES:

1. Place safety cones adjacent to drainage inlet protection.
2. Dimensions may vary to fit field conditions.
3. Install a minimum of 3 gravel bag berms upstream of each drainage inlet to be protected.
4. Position erosion control blanket or geosynthetic fabric at edge of concrete apron and secure in trench.
5. Erosion control blanket or geosynthetic fabric is not required if the area adjacent to the drainage inlet is vegetated or paved.

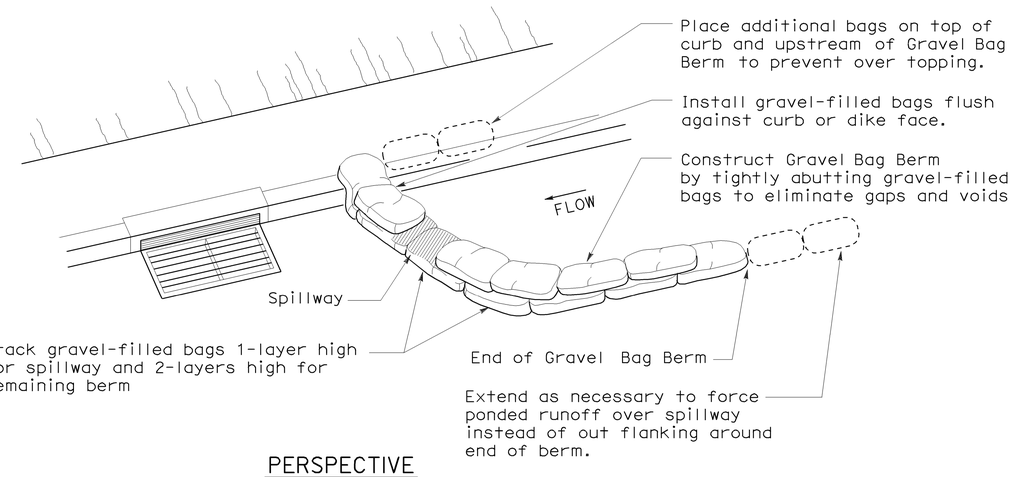

PERSPECTIVE

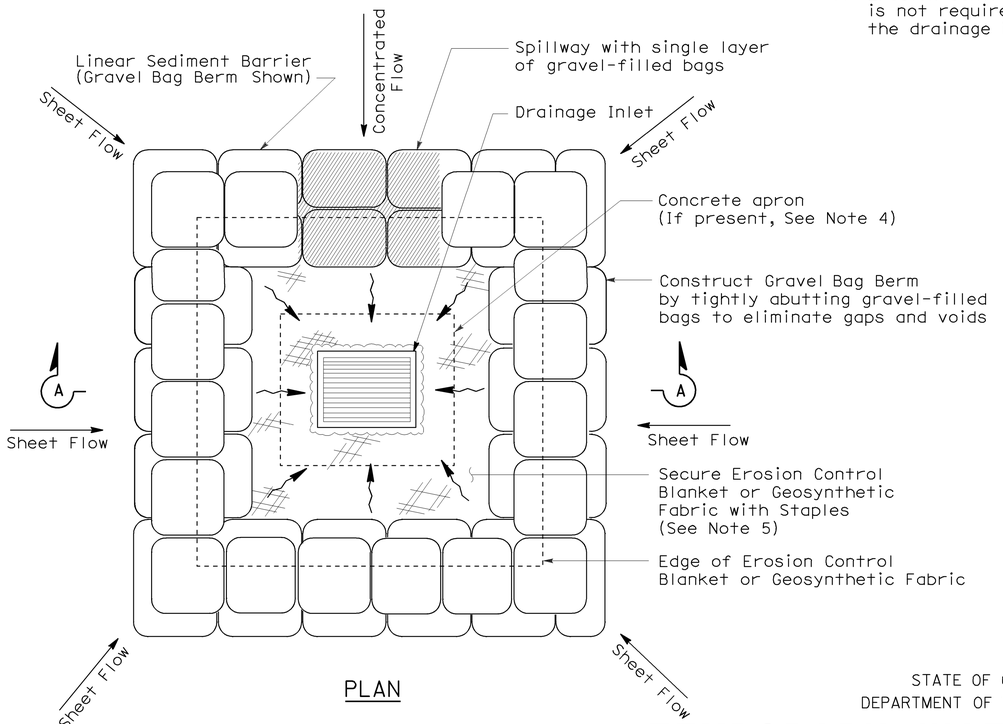

PLAN

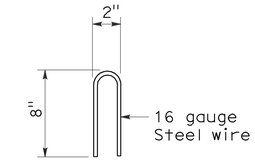

STAPLE DETAIL

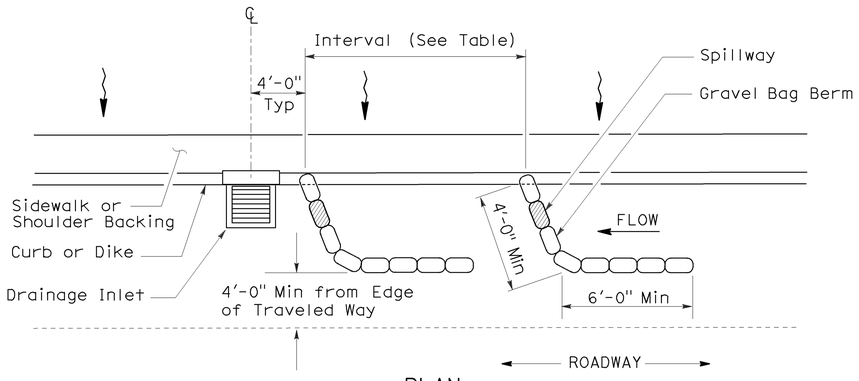

PLAN

TEMPORARY DRAINAGE INLET PROTECTION (TYPE 3A) (GRAVEL BAG BERM)

TEMPORARY DRAINAGE INLET PROTECTION (TYPE 3B)

STATE OF CALIFORNIA
DEPARTMENT OF TRANSPORTATION

TEMPORARY WATER POLLUTION CONTROL DETAILS (TEMPORARY DRAINAGE INLET PROTECTION)

NO SCALE

NSP T62 DATED AUGUST 15, 2008 SUPPLEMENTS
THE STANDARD PLANS BOOK DATED MAY 2006.

NEW STANDARD PLAN NSP T62

2006 NEW STANDARD PLAN NSP T62

7-11-08

DIST	COUNTY	ROUTE	POST MILES TOTAL PROJECT	SHEET NO.	TOTAL SHEETS
04	SM	82	0.0/2.7	26	31

Robert B Schott
LICENSED LANDSCAPE ARCHITECT

August 15, 2008
PLANS APPROVAL DATE

LICENSED LANDSCAPE ARCHITECT
Robert B. Schott 3695
Robert B Schott
Signature
11-04-08
Renewal Date
08-11-08
Date
STATE OF CALIFORNIA

The State of California or its officers or agents shall not be responsible for the accuracy or completeness of electronic copies of this plan sheet.

To accompany plans dated 2-6-12

FLEXIBLE SEDIMENT BARRIER SPACING TABLE

SLOPE OF ROADWAY (PERCENT)	0 to 0.9	1 to 1.9	2 to 2.9	3 to 4	5+
INTERVAL BETWEEN BARRIERS	50′	35′	30′	25′	20′
ANGLE FROM FACE OF CURB	70°	70°	70°	45°	45°
SUGGESTED BARRIER LENGTH	6′	6′	6′	6′	6′

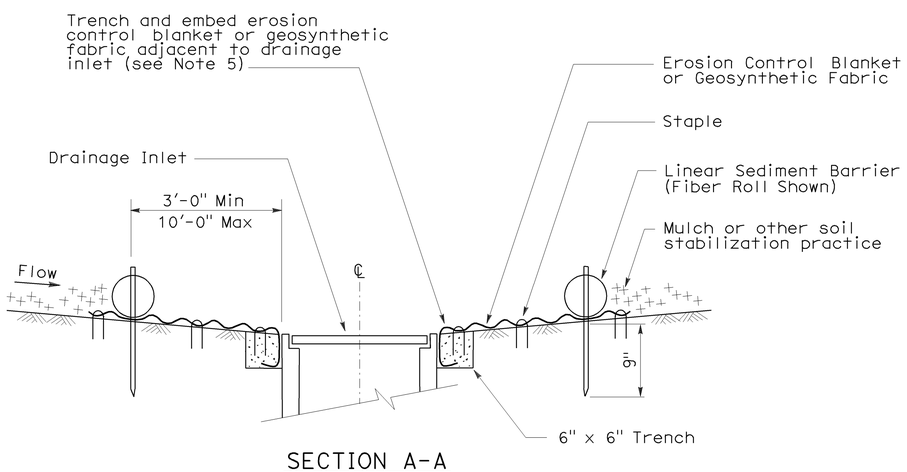

SECTION A-A

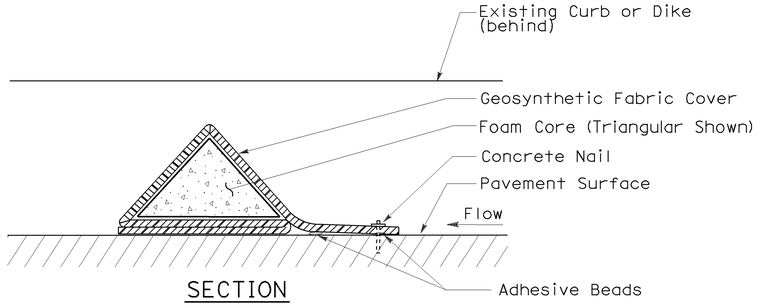

SECTION

FLEXIBLE SEDIMENT BARRIER DETAIL (FOAM BARRIER SHOWN)

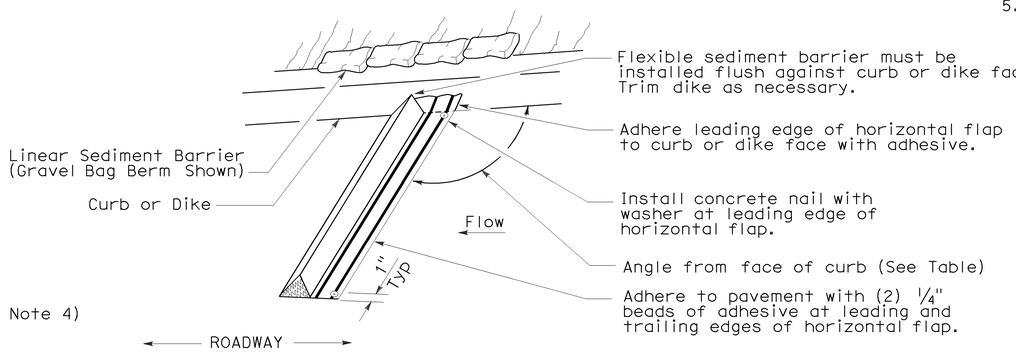

PERSPECTIVE

NOTES:

1. See Standard Plan T51 for Temporary Silt Fence.
2. Dimensions may vary to fit field conditions.
3. Install a minimum of 3 flexible sediment barriers upstream of each drainage inlet to be protected.
4. Position erosion control blanket or geosynthetic fabric at edge of concrete apron and secure in trench.
5. Erosion control blanket or geosynthetic fabric is not required if the area adjacent to the drainage inlet is vegetated.

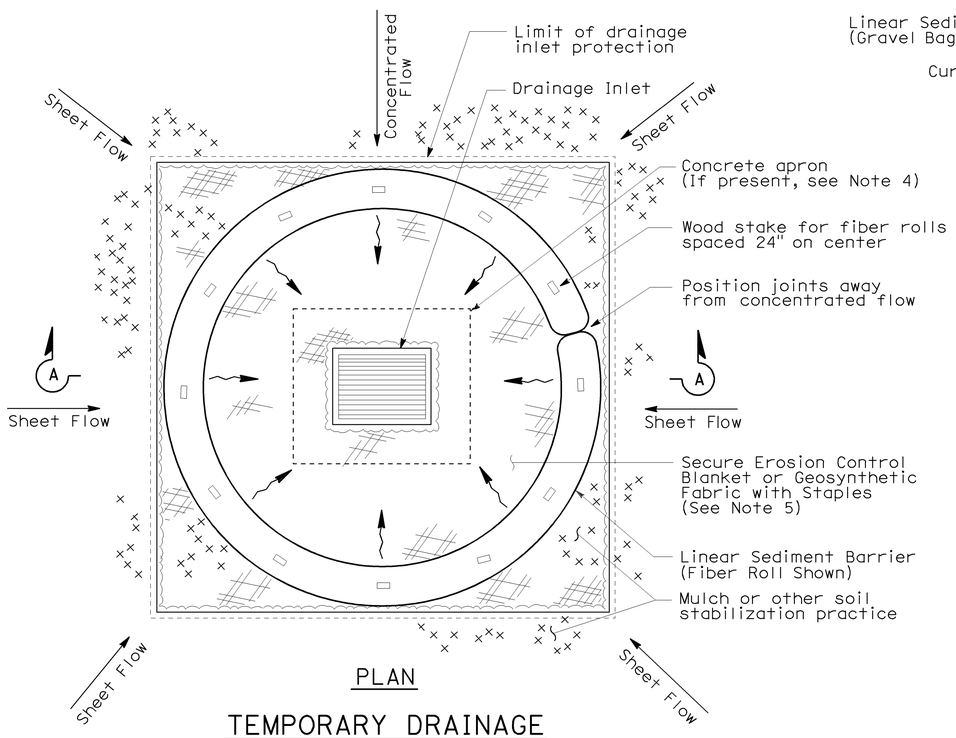

PLAN

TEMPORARY DRAINAGE INLET PROTECTION (TYPE 4A)

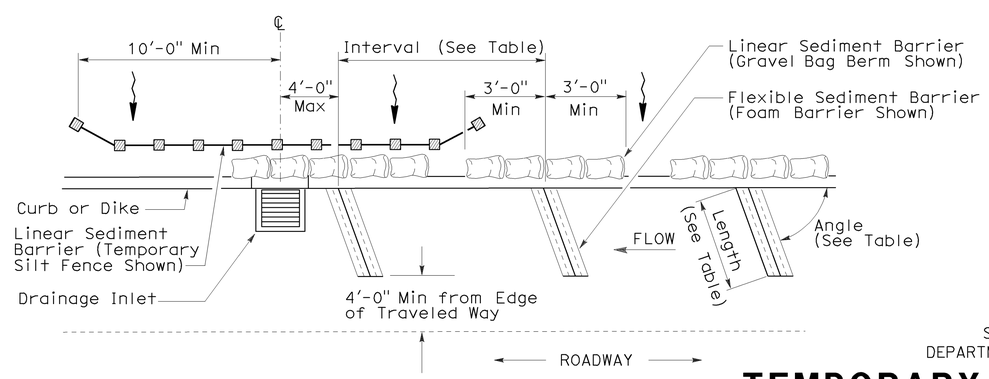

PLAN

TEMPORARY DRAINAGE INLET PROTECTION (TYPE 4B) FLEXIBLE SEDIMENT BARRIER

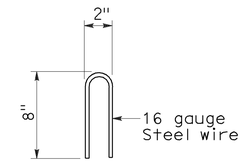

STAPLE DETAIL

STATE OF CALIFORNIA
DEPARTMENT OF TRANSPORTATION

TEMPORARY WATER POLLUTION CONTROL DETAILS (TEMPORARY DRAINAGE INLET PROTECTION)

NO SCALE

NSP T63 DATED AUGUST 15, 2008 SUPPLEMENTS
THE STANDARD PLANS BOOK DATED MAY 2006.

NEW STANDARD PLAN NSP T63

2006 NEW STANDARD PLAN NSP T63

7-11-08

DIST	COUNTY	ROUTE	POST MILES TOTAL PROJECT	SHEET NO.	TOTAL SHEETS
04	SM	82	0.0/2.7	27	31

Robert B Schott
LICENSED LANDSCAPE ARCHITECT

August 15, 2008
PLANS APPROVAL DATE

LICENSED LANDSCAPE ARCHITECT
Robert B. Schott 3695
Robert B Schott
Signature
11-04-08
Renewal Date
08-11-08
Date
STATE OF CALIFORNIA

The State of California or its officers or agents shall not be responsible for the accuracy or completeness of electronic copies of this plan sheet.

To accompany plans dated 2-6-12

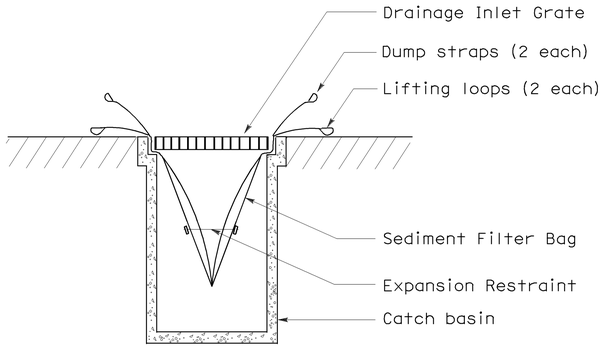

SECTION B-B

SEDIMENT FILTER BAG DETAIL

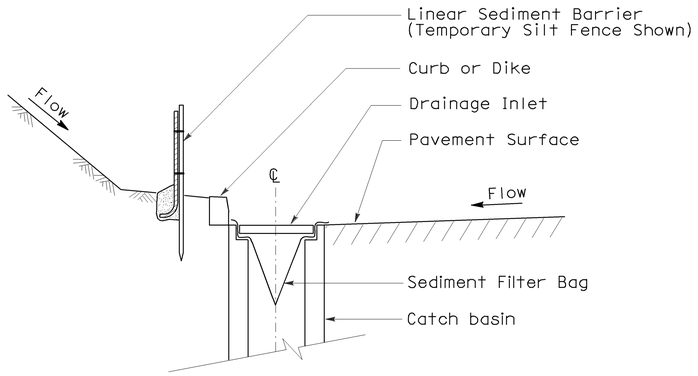

SECTION A-A

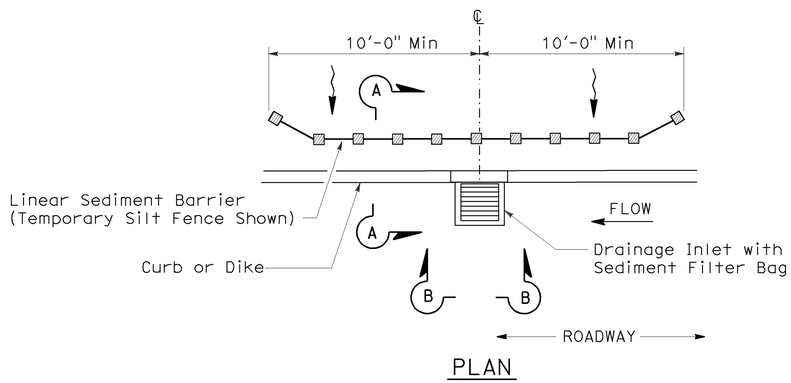

PLAN

TEMPORARY DRAINAGE INLET PROTECTION (TYPE 5) (SEDIMENT FILTER BAG)

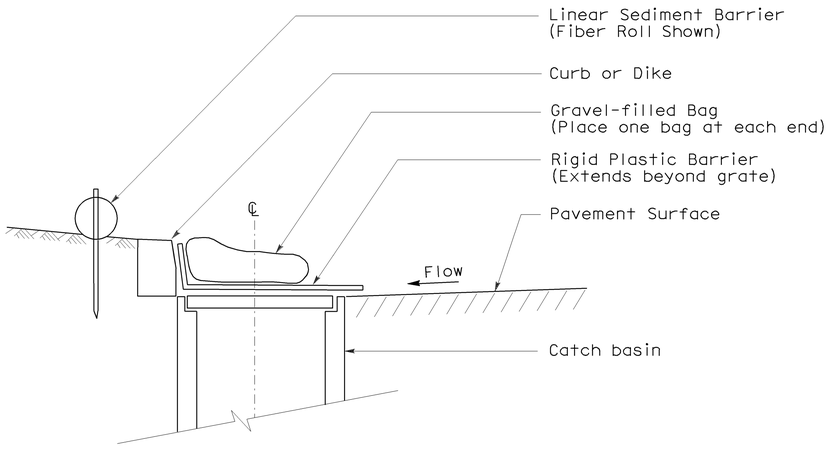

SECTION

TEMPORARY DRAINAGE INLET PROTECTION (TYPE 6A) (CATCH BASIN WITH GRATE)

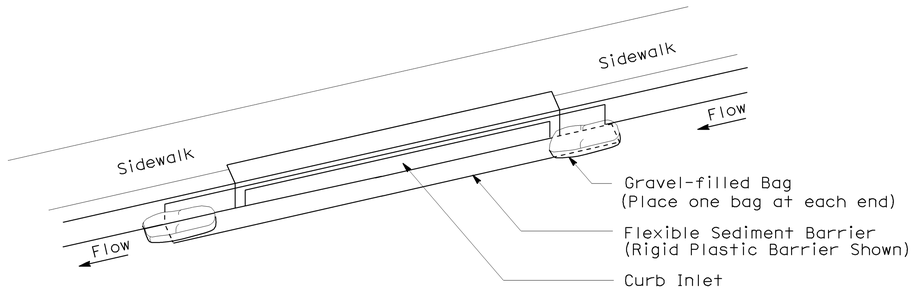

PERSPECTIVE

TEMPORARY DRAINAGE INLET PROTECTION (TYPE 6B) (CURB INLET WITHOUT GRATE)

NOTES:

1. See Standard Plan T51 for Temporary Silt Fence.
2. Dimensions may vary to fit field conditions.

STATE OF CALIFORNIA
DEPARTMENT OF TRANSPORTATION

TEMPORARY WATER POLLUTION CONTROL DETAILS (TEMPORARY DRAINAGE INLET PROTECTION)

NO SCALE

NSP T64 DATED AUGUST 15, 2008 SUPPLEMENTS
THE STANDARD PLANS BOOK DATED MAY 2006.

NEW STANDARD PLAN NSP T64

2006 NEW STANDARD PLAN NSP T64

7-11-08

ELECTROLIERS

STANDARD TYPES
15, 15D
15 STRUCTURE
21, 21D STRUCTURE
30
31
32
35
36-20A

High mast light pole

Double Arm lighting standard

Existing electrolier

Electrolier foundation (Future installation)

NOTES:

1. Luminaires shall be 310 W HPS when installed on Type 21, 21D, 30, 31, 32, 35 and 36-20A Standards, unless otherwise specified. Luminaires shall be 200 W HPS when installed on other type standards or poles, unless otherwise specified.
2. Luminaires shall be the cutoff type, ANSI Type III medium cutoff lighting distribution, unless otherwise specified.
3. Variations noted adjacent to symbol on project plans.

Electrolier (see project notes or project plans)

Luminaire on wood pole

STANDARD NOTES:

- AB Abandon. If applied to conduit, remove conductors.
- BC Install pull box in existing conduit run.
- BP Pedestrian barricade, type as indicated on plan.
- CB Install conduit into existing pull box.
- CC Connect new and existing conduit. Remove existing conductors and install conductors as indicated.
- CF Conduit to remain for future use. Remove conductors. Install pull wire or rope.
- DH Detector handhole.
- FA Foundation to be abandoned.
- IS Install sign on signal mast arm.
- NS No slip base on standard.
- PEC Photoelectric control.
- PEU Photoelectric unit.
- RC Equipment or material to be removed and become the property of the Contractor.
- RE Remove electrolier, fuses and ballast. Tape ends of conductors.
- RL Relocate equipment.
- RR Remove and reuse equipment.
- RS Remove and salvage equipment.
- SC Splice new to existing conductors.
- SD Service disconnect.
- SF Standard to remain for future use. Remove luminaire, pole conductors, fuses and ballast.
- TSP Telephone service point.

ABBREVIATIONS AND EQUIPMENT DESIGNATIONS

PROPOSED	EXISTING	
BBS	bbs	Battery backup system
BC	bc	Bolt circle
C	C	Conduit
CCTV	cctv	Closed circuit television
CKT	ckt	Circuit
CMS	cms	Changeable message sign
DLC	dlc	Loop detector lead-in cable
EMS	ems	Extinguishable message sign
EVC	evc	Emergency vehicle cable
EVD	evd	Emergency vehicle detector
FB	fb	Flashing beacon
FBCA	fbca	Flashing beacon control assembly
FBS	fbs	Flashing beacon with slip base
FO	fo	Fiber optic
G	G	Ground (Equipment Grounding Conductor)
GFCI	GFCI	Ground fault circuit interrupt
HAR	har	Highway advisory radio
HEX	hex	Hexagonal
HPS	hps	High pressure sodium
IISNS	iisns	Internally illuminated street name sign
ISL	isl	Induction sign lighting
LED	led	Light emitting diode
LMA	lma	Luminaire mast arm
LPS	lps	Low pressure sodium
LTG	ltg	Lighting
LUM	lum	Luminaire
MAT	mat	Mast arm mounting vehicle signal faces, top attachment
MAS	mas	Mast arm mounting vehicle signal faces, side attachment
MAS-4A	mas-4A	Mast arm mounting vehicle signal faces,
MAS-4B	mas-4B	side attachment - 4 signal section
MAS-4C	mas-4C	
MAS-5A	mas-5A	Mast arm mounting vehicle signal faces,
MAS-5B	mas-5B	side attachment - 5 signal section
MC	mc	Mercury contactor
M/M	m/m	Multiple to multiple transformer
MT	mt	Conduit with pull wire or rope only
MTG	mtg	Mounting
	mv	Mercury vapor lighting fixture
N	N	Neutral (Grounded Conductor)
NC	NC	Normally closed
NO	NO	Normally open
PB	pb	Pull box
PEC	pec	Photoelectric control (Type I, II, III, IV or V as shown)
PED	ped	Pedestrian
PEU	peu	Photoelectric unit
PPB	ppb	Pedestrian push button
RL		Relocated equipment
RM	rm	Ramp metering
SB	sb	Slip base
SIC	sic	Signal interconnect cable
SIG	sig	Signal
SMA	sma	Signal mast arm
SNS	sns	Street name sign
SP	sp	Service point
TDC	tdc	Telephone demarcation cabinet
TMS	tms	Traffic monitoring station
TOS	tos	Traffic Operations System
VEH	veh	Vehicle
XFMR	xfmr	Transformer
COMM	comm	Communication
RWIS	rwis	Roadway weather information system

DIST	COUNTY	ROUTE	POST MILES TOTAL PROJECT	SHEET NO.	TOTAL SHEETS
04	SM	82	0.0/2.7	28	31

Jeffery G. McRae
REGISTERED ELECTRICAL ENGINEER

REGISTERED PROFESSIONAL ENGINEER
Jeffery G. McRae
No. E14512
Exp. 6-30-08
ELECTRICAL
STATE OF CALIFORNIA

October 5, 2007
PLANS APPROVAL DATE

The State of California or its officers or agents shall not be responsible for the accuracy or completeness of electronic copies of this plan sheet.

To accompany plans dated 2-6-12

SOFFIT AND WALL MOUNTED LUMINAIRES

- Pendant, 70 W HPS unless otherwise specified.
- Flush, 70 W HPS unless otherwise specified.
- Wall surface, 70 W HPS unless otherwise specified.
- Existing soffit or wall luminaire to remain unmodified.
- (M) Existing soffit or wall luminaire to be modified as specified.

NOTE:
Arrow indicates "street side" of luminaire.

STATE OF CALIFORNIA
DEPARTMENT OF TRANSPORTATION

ELECTRICAL SYSTEMS (SYMBOLS AND ABBREVIATIONS)

NO SCALE

RSP ES-1A DATED OCTOBER 5, 2007 SUPERSEDES STANDARD PLAN ES-1A
DATED MAY 1, 2006 - PAGE 400 OF THE STANDARD PLANS BOOK DATED MAY 2006.

REVISED STANDARD PLAN RSP ES-1A

2006 REVISED STANDARD PLAN RSP ES-1A

7-10-07

CONDUIT

PROPOSED	EXISTING	
— — —	— — —	Lighting Conduit, unless otherwise indicated or noted
— - — - —	— - — - —	Traffic signal conduit
—C— —	—c— —	Communication conduit
—T— —	—t— —	Telephone conduit
—F— —	—f— —	Fire alarm conduit
—FO— —	—fo— —	Fiber optic conduit
— — —]	— — —]	Conduit termination (RSP ES-9A C)
R	r	Conduit riser in/on structure or service pole

SERVICE EQUIPMENT

PROPOSED	EXISTING	
—OH—	—oh—	Overhead lines
U	U	Wood pole "U" indicates utility owned
		Pole guy with anchor
		Utility transformer - ground mounted
III		Service equipment enclosure type
		Service equipment enclosure door indicates front of enclosure
T	t	Telephone demarcation cabinet

POLE-MOUNTED SERVICE DESIGNATION

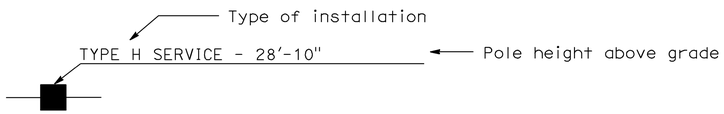

ILLUMINATED OVERHEAD SIGN

PROPOSED	EXISTING	
		Overhead sign - Single post
		Overhead sign - Two post
		Overhead sign - Mounted on structure
		Overhead sign with electrolier

SIGNAL EQUIPMENT

PROPOSED	EXISTING	
		Pedestrian signal face
		Pedestrian push button post
		Pedestrian barricade
		Vehicle signal face (with backplate, 3-Section: red, yellow and green)
		Vehicle signal face with angle visors
PV	PV	Modifications of basic symbols: "L" Indicates all non-arrow sections louvered "LG" Indicates louvered green section only "PV" indicates 12" programmed visibility sections "8" indicates all 8" sections (only when specified)
		Type 15TS and Vehicle signal face
		Vehicle signal face with red, yellow and green left arrow sections
		Vehicle signal face with red and yellow sections and up green arrow
		Vehicle signal face (5 Section) with red, yellow and green sections and yellow and green right arrows
		Type 1 Standard and attached vehicle signal faces
		Standard with signal mast arm only and attached vehicle signal faces and internally illuminated street name sign
		Type 33 Standard, Left-turn vehicle signal face and sign
		Standard with luminaire and signal mast arms and attached vehicle signal faces
		Cantilever flashing beacon Type 9 Frame, with a sign unless otherwise specified or indicated
		Type 15-FBS Standard with two vehicle signal face sections with lens, backplate and visor with a sign
R	Y	Flashing beacon. One vehicle signal face section with lens, backplate and visor. "R" indicates red indication, "Y" indicates yellow indication
		Controller assembly. Door indicates front of cabinet

SIGNAL EQUIPMENT Cont

PROPOSED	EXISTING	
		Guard post
		Type 1 Standard with "Meter On" sign
		Emergency Vehicle detector

NOTES:

1. All signal sections shall be 12" unless shown otherwise.
2. Signal heads shall be provided with backplates unless shown otherwise.
3. Signal indication shall be LED.

DIST	COUNTY	ROUTE	POST MILES TOTAL PROJECT	SHEET NO.	TOTAL SHEETS
04	SM	82	0.0/2.7	29	31

Jeffery G. McRae
REGISTERED ELECTRICAL ENGINEER

October 5, 2007
PLANS APPROVAL DATE

REGISTERED PROFESSIONAL ENGINEER
Jeffery G. McRae
No. E14512
Exp. 6-30-08
ELECTRICAL
STATE OF CALIFORNIA

The State of California or its officers or agents shall not be responsible for the accuracy or completeness of electronic copies of this plan sheet.

To accompany plans dated 2-6-12

STATE OF CALIFORNIA
DEPARTMENT OF TRANSPORTATION

ELECTRICAL SYSTEMS (SYMBOLS AND ABBREVIATIONS)

NO SCALE

RSP ES-1B DATED OCTOBER 5, 2007 SUPERCEDES STANDARD PLAN ES-1B DATED MAY 1, 2006 - PAGE 401 OF THE STANDARD PLANS BOOK DATED MAY 2006.

REVISED STANDARD PLAN RSP ES-1B

2006 REVISED STANDARD PLAN RSP ES-1B

7-10-07

DIST	COUNTY	ROUTE	POST MILES TOTAL PROJECT	SHEET NO.	TOTAL SHEETS
04	SM	82	0.0/2.7	30	31

Jeffery G. McRae
REGISTERED ELECTRICAL ENGINEER

October 5, 2007
PLANS APPROVAL DATE

REGISTERED PROFESSIONAL ENGINEER
Jeffery G. McRae
No. E14512
Exp. 6-30-08
ELECTRICAL
STATE OF CALIFORNIA

The State of California or its officers or agents shall not be responsible for the accuracy or completeness of electronic copies of this plan sheet.

To accompany plans dated 2-6-12

EQUIPMENT IDENTIFICATION

ILLUMINATED SIGN IDENTIFICATION NUMBER:

Sign No. 12345 — Sign number - Place on post or structure

10 ISL SCI 1.0
- 1.0 — Transformer rating (kVA)
- SCI — Lighting control type
- ISL — Number and type of fixtures

Do NOT place on standard or structure

ELECTROLIER OR EQUIPMENT IDENTIFICATION NUMBER:

12345 - 15'-0"
- 15'-0" — Mast arm length, if shown. Do not place on standard or structure.
- 12345 — Equipment number - Place on standard or structure. Existing equipment numbers are shown in parenthesis

CONDUIT AND CONDUCTOR IDENTIFICATION:

1½"C, 2#10, 15#14, 2 DLC
- 2#10, 15#14, 2 DLC — Number and size of conductors and cables
- 1½"C, — Size of conduit in inches

ø1, ø2, ø2P, etc. — Traffic phase identification for signal faces, detectors and phase diagrams

[1] [2] [3] — Project note numbers

(A) (B) (C) — Equipment description, installation or item numbers

△1 △2 △3 — Conduit run numbers

SIGNAL AND LIGHTING STANDARD (TYPICAL DESIGNATION):

19A - 3 - 100
- 100 — Wind velocity = 100 mph
- 3 — Case 3 arm loading
- 19A — Standard type
- Standard Plan sheet number
- Detail number or letter

MISCELLANEOUS EQUIPMENT

PROPOSED	EXISTING	
CMS	cms	Changeable message sign
		Closed circuit television camera
		Highway advisory radio pole and antenna
EMS	ems	Extinguishable message sign
M V	m v	Detection device M = Microwave sensor V = Video image sensor

WIRING DIAGRAM LEGEND

P	Pole
CB	Circuit breaker
A	Ampere
V	Volt
M	Metered
UM	Unmetered
NB	Neutral bus
GB	Ground bus
G	Equipment grounding conductor
N	Grounded conductor (Neutral)

- External conductor
- Conductor or bus
- Tie point
- Contactor coil
- Contactor, Contact NO
- Terminal blocks
- Contactor, Contact NC
- Enclosure bond
- Grounding electrode
- Circuit breaker
- Receptacle

PULL BOXES

PROPOSED	EXISTING
3	9A(21)

Pull box-No. 5 unless otherwise indicated or noted.

Pull box-Additional designations or descriptions

- (C) = Communications pull box
- (E) = Pull box with extension
- (S) = Sprinkler control pull box
- (21) = Anchor bolts and conduit for future installation of Type 21 Standard
- (T) = Traffic pull box

- 3 = No. 3½ pull box
- 5 = No. 5 pull box
- 6 = No. 6 pull box
- 7 = No. 7 (Ceiling pull box)
- 8 = No. 8 (Pendant soffit pull box)
- 9 = No. 9 pull box
- 9A = No. 9A pull box

VEHICLE DETECTORS

5 J 9 U
- 9 — Vehicle detector designation
- U — U = Upper, L = Lower
- 5 — Slot number in input file
- J — Input file (I or J)
- 5 J 9 U — Phase

PROPOSED	EXISTING	
		Type A detector loop. Outline of sawcut shown.
		Type B detector loop. Outline of sawcut shown.
		Type C detector loop. Outline of sawcut shown.
		Type D detector loop. Outline of sawcut shown.
		Type E detector loop. Outline of sawcut shown.
		Type Q detector loop. Outline of sawcut shown.
		Magnetic detector
DH	dh	Detector handhole
		Microwave or video detection zone

STATE OF CALIFORNIA
DEPARTMENT OF TRANSPORTATION

ELECTRICAL SYSTEMS (SYMBOLS AND ABBREVIATIONS)

NO SCALE

RSP ES-1C DATED OCTOBER 5, 2007 SUPERCEDES STANDARD PLAN ES-1C
DATED MAY 1, 2006 - PAGE 402 OF THE STANDARD PLANS BOOK DATED MAY 2006.

REVISED STANDARD PLAN RSP ES-1C

2006 REVISED STANDARD PLAN RSP ES-1C

7-10-07

DIST	COUNTY	ROUTE	POST MILES TOTAL PROJECT	SHEET NO.	TOTAL SHEETS
04	SM	82	0.0/2.7	31	31

Jeffery G. McRae
REGISTERED ELECTRICAL ENGINEER

REGISTERED PROFESSIONAL ENGINEER
Jeffery G. McRae
No. E14512
Exp. 6-30-08
ELECTRICAL
STATE OF CALIFORNIA

October 5, 2007
PLANS APPROVAL DATE

The State of California or its officers or agents shall not be responsible for the accuracy or completeness of electronic copies of this plan sheet.

To accompany plans dated 2-6-12

LOOP INSTALLATION PROCEDURE

1. Loops shall be centered in lanes.
2. Saw slots in pavement for loop conductors as shown in details.
3. Distance between side of loop and a lead-in saw cut from adjacent detectors shall be 2'-0" minimum. Distance between lead-in saw cuts shall be 6" minimum.
4. Bottom of saw slot shall be smooth with no sharp edges.
5. Slots shall be washed until clean, blown out and thoroughly dried before installing loop conductors.
6. Adjacent loops on the same sensor unit channel shall be wound in opposite directions.
7. Identify and tag loop circuit pairs in the pull box with loop number, start (S) and finish (F) of conductor. Identify and tag lead-in-cable with sensor number and phase.
8. Install loop conductor in slot using a 3/16" to 1/4" thick wood paddle. Hold loop conductors with wood paddles (at the bottom of the sawed slot) during sealant placement.
9. No more than 2 twisted pairs shall be installed in one sawed slot.
10. Allow additional 5'-0" of slack length of conductor for the lead-in run to pull box.
11. The additional length of each conductor for each loop shall be twisted together into a pair (6 turns per 3'-4" minimum) before being placed in the slot and conduit leading to pull box.
12. Test each loop circuit for continuity, circuit resistance and insulation resistance at the pull box before filling slots.
13. Fill slots as shown in details.
14. Splice loop conductors to lead-in-cable. Splices shall be soldered.
15. End of lead-in-cable and Type 2 loop conductor shall be waterproofed prior to installing in conduit to prevent moisture from entering the cable.
16. Lead-in-cable shall not be spliced between the pull box and the controller cabinet terminals.
17. Test each loop circuit for continuity, circuit resistance and insulation resistance at the controller cabinet location.
18. Where loop conductors are not to be spliced to a lead-in-cable, the ends of the conductors shall be taped and waterproofed with electrical insulating coating.

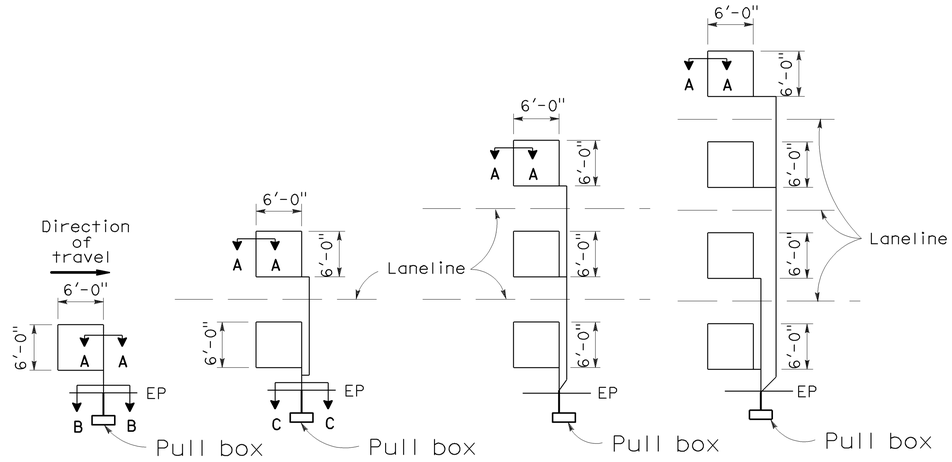

TYPE 1A INSTALLATION | TYPE 2A INSTALLATION | TYPE 3A INSTALLATION | TYPE 4A INSTALLATION

SAWCUT DETAILS

(Type A loop detector configurations illustrated)

1. 1A thru 4A = 1 Type A loop configuration in each lane.
2. 1B thru 4B = 1 Type B loop configuration in each lane.
3. 1C = 1 Type C loop configuration entering lanes as required.
4. 1D thru 4D = 1 Type D loop configuration in each lane.
5. 1E thru 4E = 1 Type E loop configuration in each lane.
6. 1Q thru 4Q = 1 Type Q loop configuration in each lane. (Use Type A, B, C, D, E or Q loop detector configurations only when specified or shown on plans)

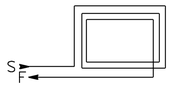

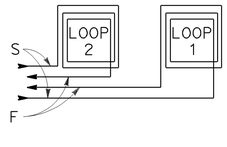

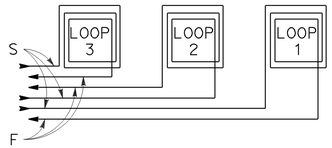

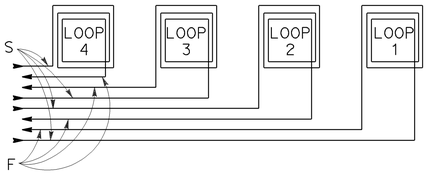

WINDING DETAILS

See Notes 6 and 7

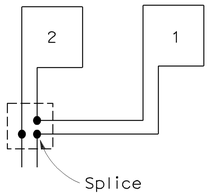

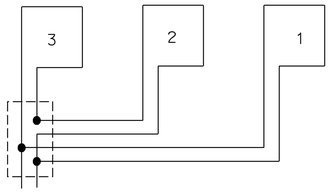

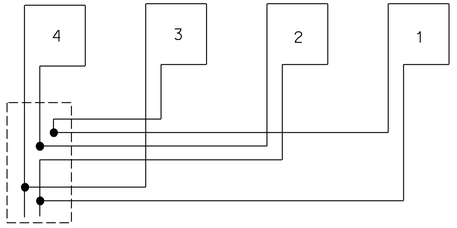

TYPICAL LOOP CONNECTIONS

(Dashed lines represent the pull box)

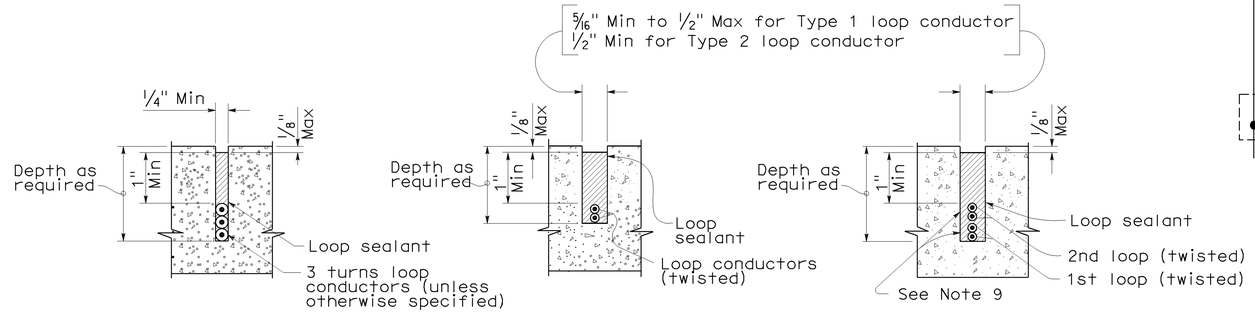

SECTION A-A | SECTION B-B | SECTION C-C

SLOT DETAILS - TYPE 1 AND TYPE 2 LOOP CONDUCTOR

STATE OF CALIFORNIA
DEPARTMENT OF TRANSPORTATION

ELECTRICAL SYSTEMS (DETECTORS)

NO SCALE

RSP ES-5A DATED OCTOBER 5, 2007 SUPERCEDES STANDARD PLAN ES-5A
DATED MAY 1, 2006 - PAGE 423 OF THE STANDARD PLANS BOOK DATED MAY 2006.

REVISED STANDARD PLAN RSP ES-5A

2006 REVISED STANDARD PLAN RSP ES-5A

8-17-07