Dist	COUNTY	ROUTE	POST MILES TOTAL PROJECT	SHEET No.	TOTAL SHEETS
04	SCI,SM	35	0.0/21.0	1	20

INDEX OF PLANS

SHEET No.	DESCRIPTION
1	TITLE SHEET AND LOCATION MAP
2	TYPICAL CROSS SECTIONS
3 & 4	CONSTRUCTION DETAILS
5	EROSION CONTROL PLAN
6	CONSTRUCTION AREA SIGNS
7	PAVEMENT DELINEATION QUANTITIES
8 - 10	SUMMARY OF QUANTITIES
11 - 20	REVISED AND NEW STANDARD PLANS

THE STANDARD PLANS LIST APPLICABLE TO THIS CONTRACT IS INCLUDED IN THE NOTICE TO BIDDERS AND SPECIAL PROVISIONS BOOK.

STATE OF CALIFORNIA

DEPARTMENT OF TRANSPORTATION

PROJECT PLANS FOR CONSTRUCTION ON

STATE HIGHWAY

IN SAN MATEO AND SANTA CLARA COUNTIES IN AND NEAR PALO ALTO AND WOODSIDE FROM SANTA CLARA COUNTY LINE TO 2 MILES SOUTH OF SOUTH JUNCTION ROUTE 92

TO BE SUPPLEMENTED BY STANDARD PLANS DATED MAY 2006

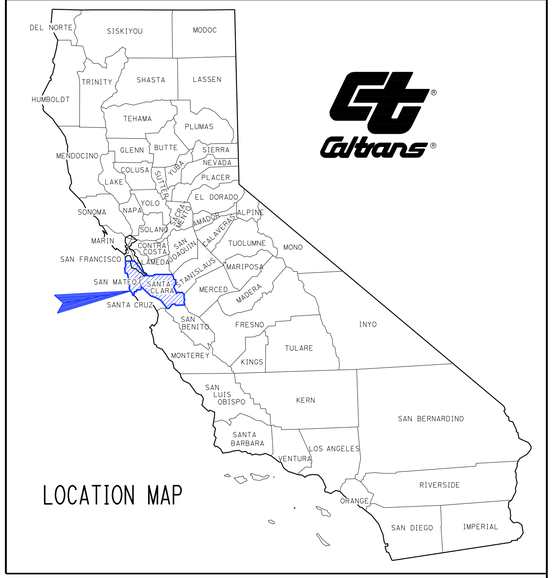

LOCATION MAP

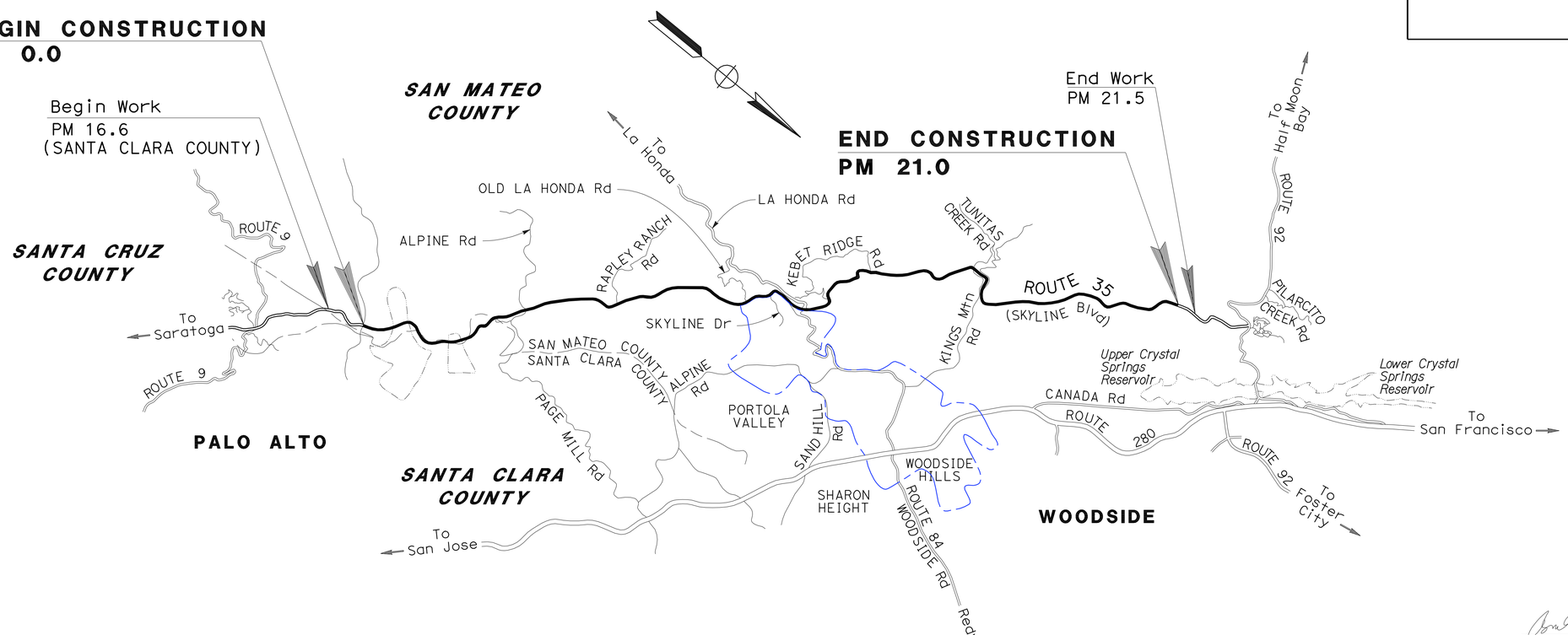

NO SCALE

PROJECT MANAGER: RAMSES SARGISS

DESIGN ENGINEER: VIJITH THILAKARATNE

PROJECT ENGINEER REGISTERED CIVIL ENGINEER — DATE 9/13/11

REGISTERED PROFESSIONAL ENGINEER — Binh V. Hong — No. 63850 — Exp. 9-30-12 — CIVIL — STATE OF CALIFORNIA

January 9, 2012
PLANS APPROVAL DATE

THE STATE OF CALIFORNIA OR ITS OFFICERS OR AGENTS SHALL NOT BE RESPONSIBLE FOR THE ACCURACY OR COMPLETENESS OF SCANNED COPIES OF THIS PLAN SHEET.

THE CONTRACTOR SHALL POSSESS THE CLASS (OR CLASSES) OF LICENSE AS SPECIFIED IN THE "NOTICE TO BIDDERS."

CONTRACT No.	04-2E5504
PROJECT ID	0400021090

LAST REVISION 01-09-12 — DATE PLOTTED => 13-JAN-2012 — TIME PLOTTED => 09:09

Dist	COUNTY	ROUTE	POST MILES TOTAL PROJECT	SHEET No.	TOTAL SHEETS
04	SM,SCI	35	0.0/21.0	2	20

REGISTERED CIVIL ENGINEER 9/13/11 DATE

1-9-12
PLANS APPROVAL DATE

REGISTERED PROFESSIONAL ENGINEER Binh V. Hong No. 63850 Exp. 9-30-12 CIVIL STATE OF CALIFORNIA

THE STATE OF CALIFORNIA OR ITS OFFICERS OR AGENTS SHALL NOT BE RESPONSIBLE FOR THE ACCURACY OR COMPLETENESS OF SCANNED COPIES OF THIS PLAN SHEET.

NOTES

1. FOR ACCURATE RIGHT OF WAY DATA, CONTACT RIGHT OF WAY ENGINEERING AT THE DISTRICT OFFICE.
2. DIMENSIONS OF THE PAVEMENT STRUCTURES (STRUCTURAL SECTIONS) ARE SUBJECT TO TOLERANCES SPECIFIED IN THE STANDARD SPECIFICATIONS.

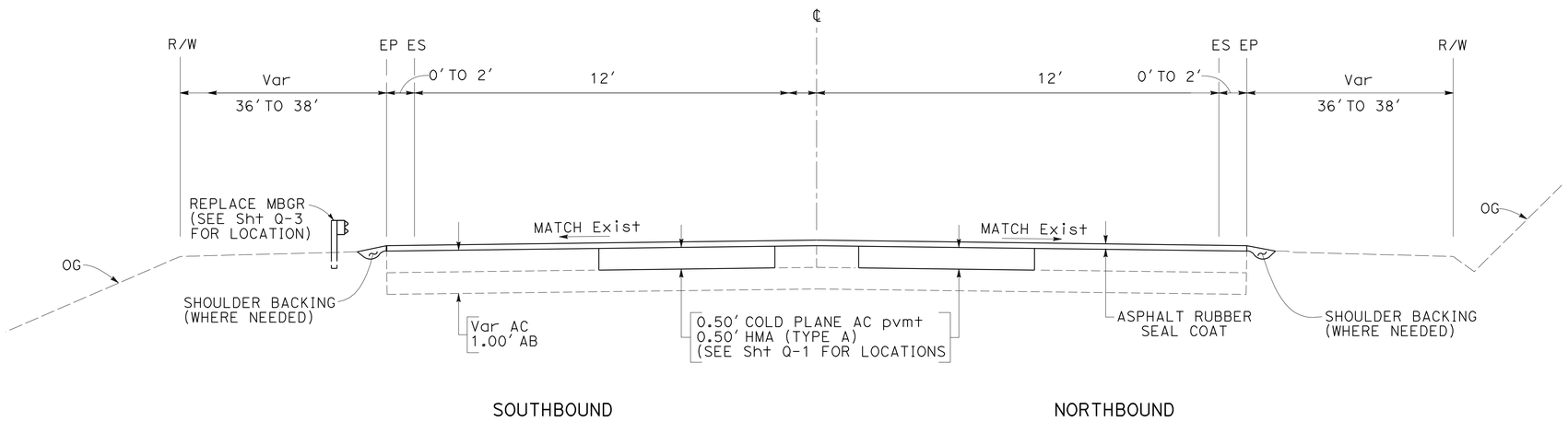

ROUTE 35

TYPICAL CROSS SECTIONS

NO SCALE

X-1

STATE OF CALIFORNIA - DEPARTMENT OF TRANSPORTATION
Caltrans® **DESIGN**

FUNCTIONAL SUPERVISOR: VIJITH THILAKARATNE

CALCULATED-DESIGNED BY: BINH HONG
CHECKED BY: ATSEDE AYALEW

REVISED BY: BH
DATE REVISED: 10/4/11

LAST REVISION 01-09-12 | DATE PLOTTED => 13-JAN-2012 | TIME PLOTTED => 09:09

Dist	COUNTY	ROUTE	POST MILES TOTAL PROJECT	SHEET No.	TOTAL SHEETS
04	SM,SCI	35	0.0/21.0	3	20

REGISTERED CIVIL ENGINEER 9/13/11 DATE

1-9-12
PLANS APPROVAL DATE

REGISTERED PROFESSIONAL ENGINEER Binh V. Hong No. 63850 Exp. 9-30-12 CIVIL STATE OF CALIFORNIA

THE STATE OF CALIFORNIA OR ITS OFFICERS OR AGENTS SHALL NOT BE RESPONSIBLE FOR THE ACCURACY OR COMPLETENESS OF SCANNED COPIES OF THIS PLAN SHEET.

LEGEND

- ASPHALT RUBBER SEAL COAT
- COLD PLANE AC pvmt AND ASPHALT RUBBER SEAL COAT
- DIRECTION OF TRAFFIC

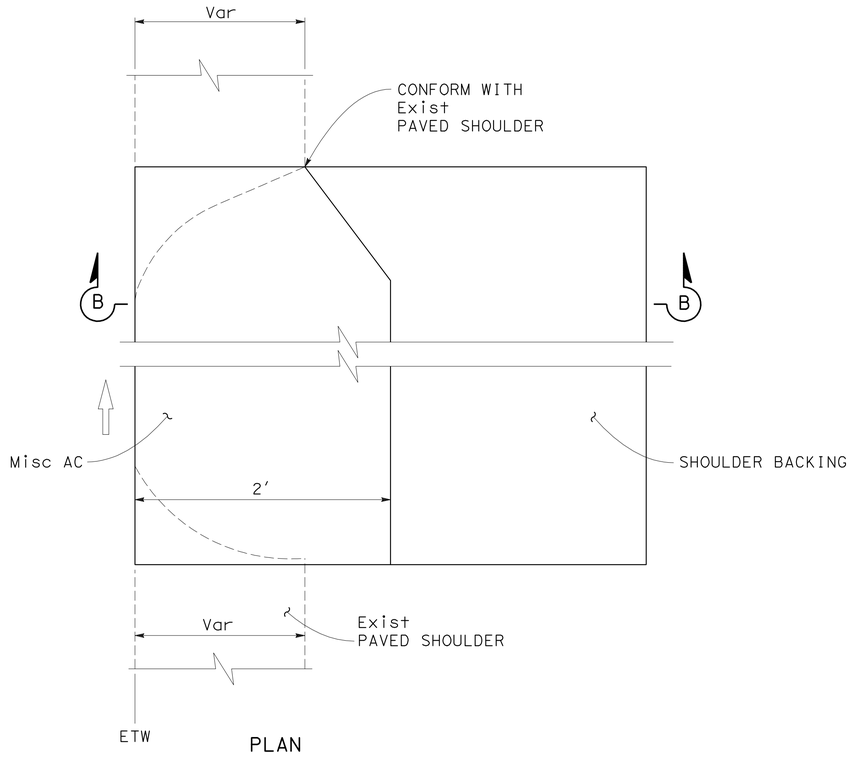

PLAN

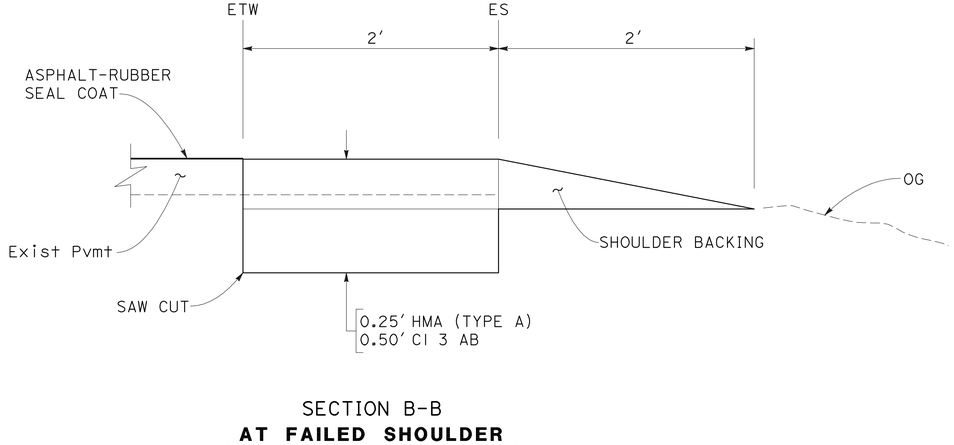

SECTION B-B
AT FAILED SHOULDER
(SEE SHEET Q-3 FOR LOCATIONS)

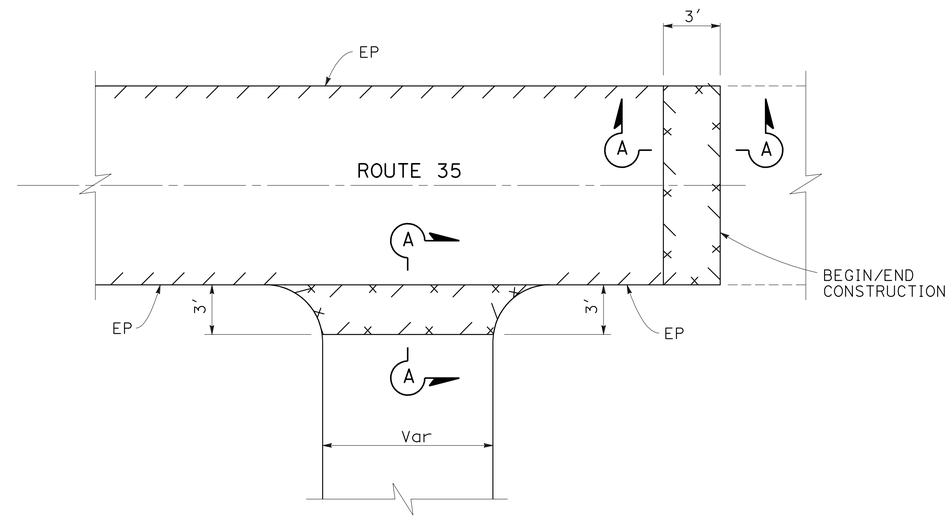

CONFORM AT INTERSECTION AT BEGIN/END CONSTRUCTION

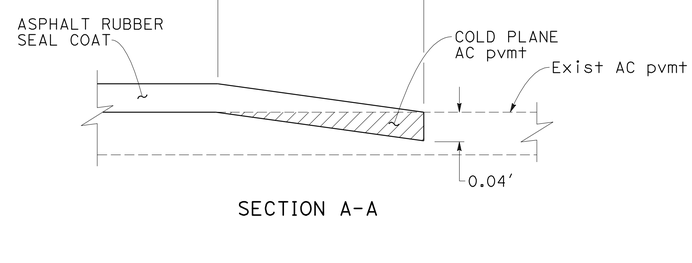

SECTION A-A

CONSTRUCTION DETAILS

NO SCALE

C-1

STATE OF CALIFORNIA - DEPARTMENT OF TRANSPORTATION
Caltrans
DESIGN

FUNCTIONAL SUPERVISOR: VIJITH THILAKARATNE
CALCULATED-DESIGNED BY: BINH HONG
CHECKED BY: ATSEDE AYALEW
REVISED BY: BH
DATE REVISED: 10/4/11

LAST REVISION 01-09-12
DATE PLOTTED => 13-JAN-2012
TIME PLOTTED => 09:09

Dist	COUNTY	ROUTE	POST MILES TOTAL PROJECT	SHEET No.	TOTAL SHEETS
04	SM,SCI	35	0.0/21.0	4	20

REGISTERED CIVIL ENGINEER 9/13/11 DATE

1-9-12
PLANS APPROVAL DATE

REGISTERED PROFESSIONAL ENGINEER Binh V. Hong No. 63850 Exp. 9-30-12 CIVIL STATE OF CALIFORNIA

THE STATE OF CALIFORNIA OR ITS OFFICERS OR AGENTS SHALL NOT BE RESPONSIBLE FOR THE ACCURACY OR COMPLETENESS OF SCANNED COPIES OF THIS PLAN SHEET.

NOTE

SEE SHEET Q-3 FOR QUANTITIES.

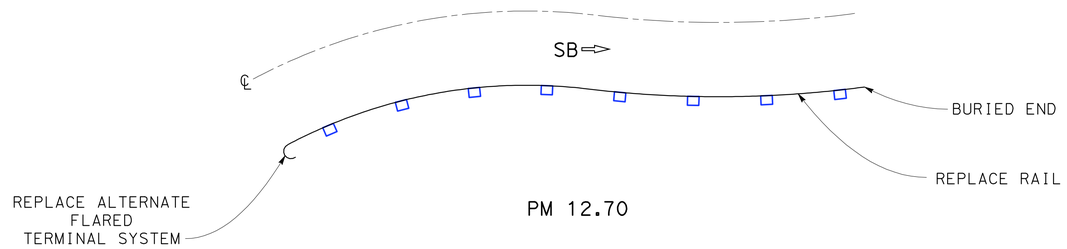

PM 12.70

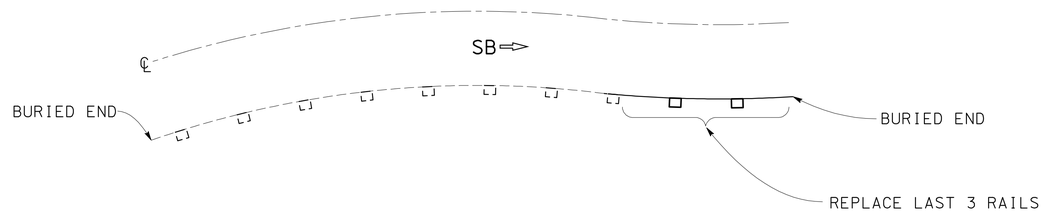

PM 12.67

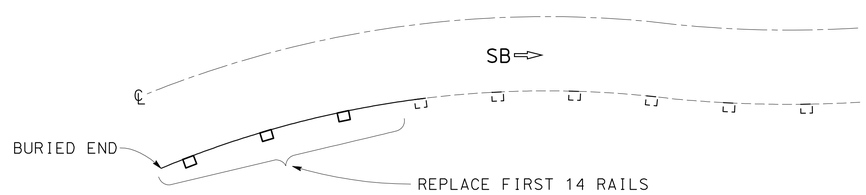

PM 12.50

CONSTRUCTION DETAILS

NO SCALE

C-2

REVISED BY	BH
DATE REVISED	10/4/11
CALCULATED-DESIGNED BY	BINH HONG
CHECKED BY	ATSEDE AYALEW
FUNCTIONAL SUPERVISOR	VIJITH THILAKARATNE

STATE OF CALIFORNIA - DEPARTMENT OF TRANSPORTATION

Caltrans

DESIGN

LAST REVISION 01-09-12 DATE PLOTTED => 13-JAN-2012 TIME PLOTTED => 09:09

Dist	COUNTY	ROUTE	POST MILES TOTAL PROJECT	SHEET No.	TOTAL SHEETS
04	SM,SCI	35	0.0/21.0	5	20

LICENSED LANDSCAPE ARCHITECT

1-9-12
PLANS APPROVAL DATE

LICENSED LANDSCAPE ARCHITECT
LAURIE J. SMITH NO. 5986
Signature
8-31-12
Renewal Date
Date
STATE OF CALIFORNIA

THE STATE OF CALIFORNIA OR ITS OFFICERS OR AGENTS SHALL NOT BE RESPONSIBLE FOR THE ACCURACY OR COMPLETENESS OF SCANNED COPIES OF THIS PLAN SHEET.

EROSION CONTROL QUANTITIES

PM	DIRECTION	MULCH	FIBER ROLLS
		CY	LF
12.70	SB	0.85	135
12.67		0.25	40
12.50		1.20	190
	TOTAL	2.30	365

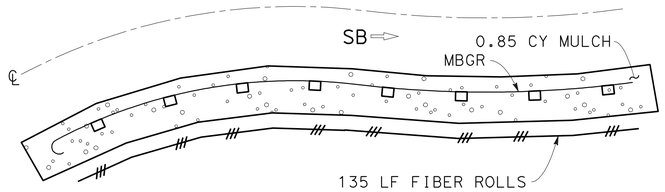

PM 12.70

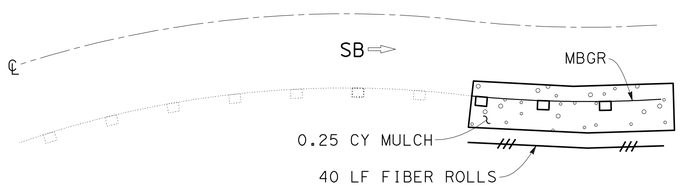

PM 12.67

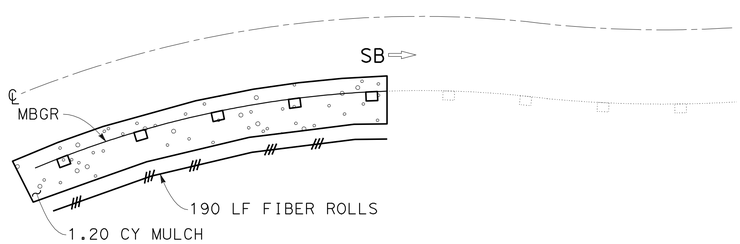

PM 12.50

PLAN

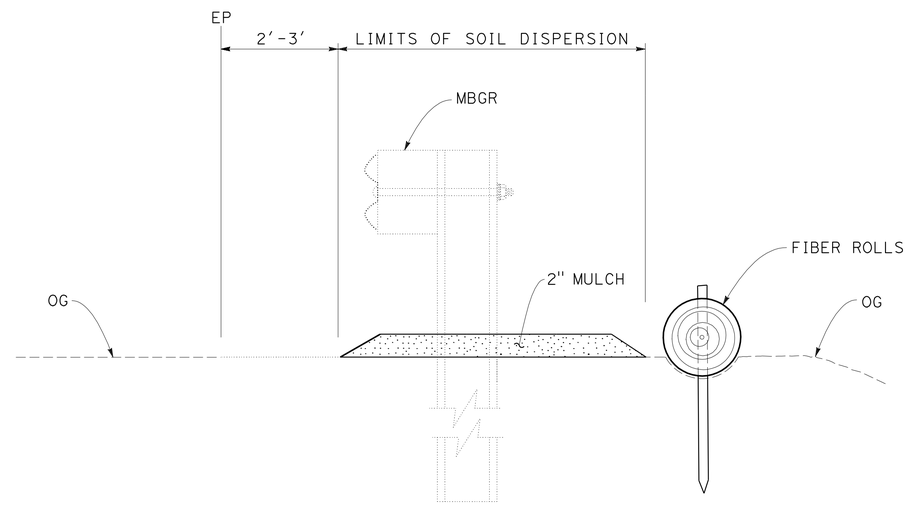

TYPICAL SECTION

EROSION CONTROL PLAN

NO SCALE

EC-1

LAST REVISION 01-09-12
DATE PLOTTED => 13-JAN-2012
TIME PLOTTED => 09:09

STATE OF CALIFORNIA - DEPARTMENT OF TRANSPORTATION
Caltrans®
WATER QUALITY

SENIOR LANDSCAPE ARCHITECT: DAVID YAM

CALCULATED-DESIGNED BY: ANGELA KWAN
CHECKED BY: LAURIE J. SMITH

REVISED BY: BH
DATE REVISED: 10/4/11

Dist	COUNTY	ROUTE	POST MILES TOTAL PROJECT	SHEET No.	TOTAL SHEETS
04	SM,SCI	35	0.0/21.0	6	20

REGISTERED CIVIL ENGINEER 9/20/11 DATE

1-9-12
PLANS APPROVAL DATE

REGISTERED PROFESSIONAL ENGINEER Jerilyn L. Struven No. 49964 Exp. 12-31-12 CIVIL STATE OF CALIFORNIA

THE STATE OF CALIFORNIA OR ITS OFFICERS OR AGENTS SHALL NOT BE RESPONSIBLE FOR THE ACCURACY OR COMPLETENESS OF SCANNED COPIES OF THIS PLAN SHEET.

STATIONARY MOUNTED CONSTRUCTION AREA SIGNS

SIGN No.	SIGN CODE	PANEL SIZE	SIGN MESSAGE	NUMBER OF POSTS AND SIZE	No. OF SIGNS
1	W20-1	48" x 48"	ROAD WORK AHEAD	1 - 4" x 4"	8
2	G20-2	36" x 18"	END ROAD WORK	1 - 4" x 4"	8

NOTE

EXACT LOCATION AND POSITION OF CONSTRUCTION AREA SIGNS TO BE DETERMINED BY THE ENGINEER.

LEGEND

No. CONSTRUCTION AREA SIGN NUMBER

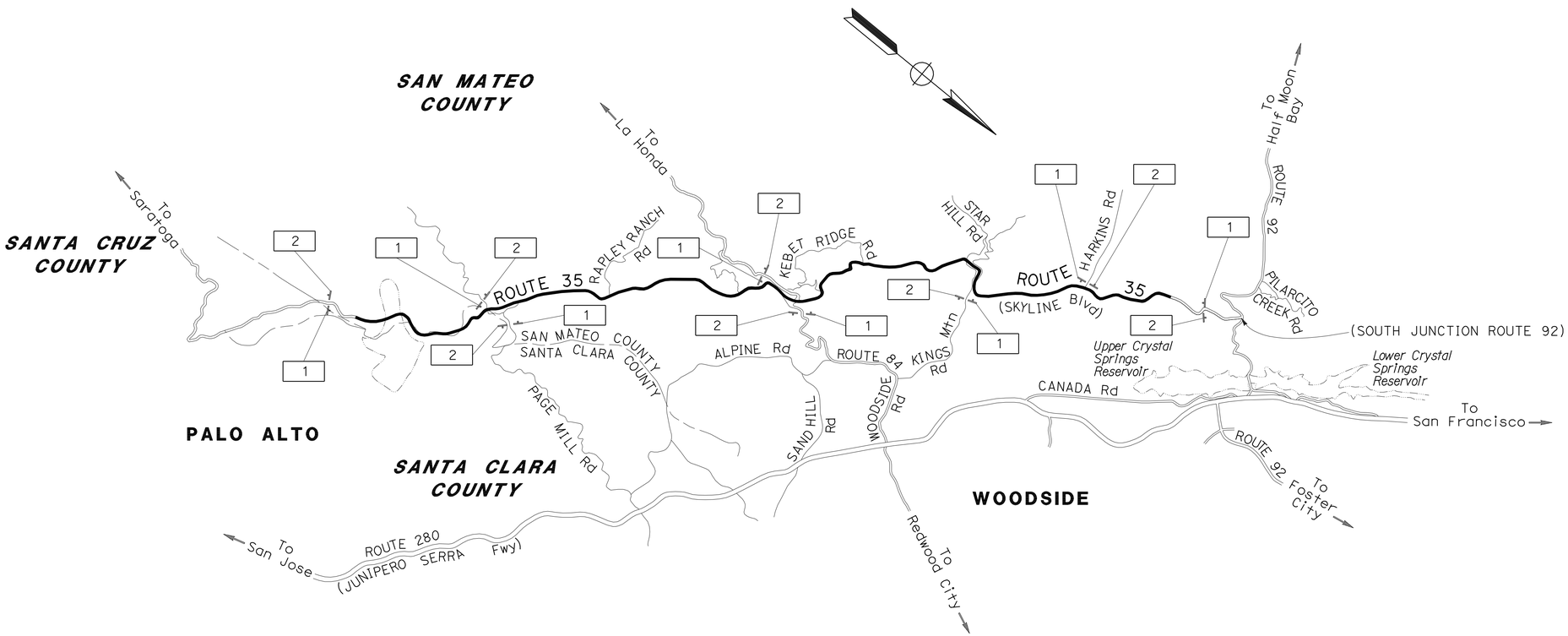

CONSTRUCTION AREA SIGNS

NO SCALE

THIS PLAN ACCURATE FOR CONSTRUCTION AREA SIGN WORK ONLY

CS-1

STATE OF CALIFORNIA - DEPARTMENT OF TRANSPORTATION
Caltrans
TRAFFIC

FUNCTIONAL SUPERVISOR: ROLAND AU-YEUNG
CALCULATED-DESIGNED BY: STEVEN LAU
CHECKED BY: JERILYN L. STRUVEN
REVISED BY: BH
DATE REVISED: 10/4/11

LAST REVISION 01-09-12 | DATE PLOTTED => 13-JAN-2012 | TIME PLOTTED => 09:09

Dist	COUNTY	ROUTE	POST MILES TOTAL PROJECT	SHEET No.	TOTAL SHEETS
04	SM,SCI	35	0.0/21.0	7	20

REGISTERED CIVIL ENGINEER 9/13/11 DATE

1-9-12
PLANS APPROVAL DATE

REGISTERED PROFESSIONAL ENGINEER Binh V. Hong No. 63850 Exp. 9-30-12 CIVIL STATE OF CALIFORNIA

THE STATE OF CALIFORNIA OR ITS OFFICERS OR AGENTS SHALL NOT BE RESPONSIBLE FOR THE ACCURACY OR COMPLETENESS OF SCANNED COPIES OF THIS PLAN SHEET.

TRAFFIC STRIPES, PAVEMENT MARKING AND PAVEMENT MARKERS

PM	DETAIL No. OR PAVEMENT MARKING	PAVEMENT MARKER (RETROREFLECTIVE)			TRAFFIC STRIPE (THERMOPLASTIC)					PAVEMENT MARKING (THERMOPLASTIC)	REMOVE TRAFFIC STRIPE (THERMOPLASTIC)			REMOVE PAVEMENT MARKING	REMOVE PAVEMENT MARKER
		TYPE D	TYPE G	TYPE H	4" YELLOW	4" WHITE	8" WHITE	4" YELLOW (BROKEN 36'-12')	4" YELLOW (BROKEN 17'-7')		4" YELLOW	4" WHITE	8" WHITE		
		EA			LF					SQFT	LF			SQFT	EA
0.0 TO 21.0	6	55						2571			643				55
	16	216		648	10333				10333		13347				864
	22	7988			191717						191717				7988
	27B					221760						221760			
	27C					400						80			
	29	20			240						960				20
	38		14				300						300		14
	TYPE IV (L) ARROW									84				84	
	CROSSWALK (1'-0")									109				109	
SUBTOTAL		8279	14	648	202290	222160	300	2571	10333	193	206667	221840	300	193	8940
TOTAL		8940			424450		300	2571	10333	193	206667	222440		193	8940

PAVEMENT DELINEATION QUANTITIES

PDQ-1

STATE OF CALIFORNIA - DEPARTMENT OF TRANSPORTATION
Caltrans® DESIGN

FUNCTIONAL SUPERVISOR: VIJITH THILAKARATNE
CALCULATED-DESIGNED BY: BINH HONG
CHECKED BY: ATSEDE AYALEW
REVISED BY: BH
DATE REVISED: 10/4/11

LAST REVISION 01-09-12
DATE PLOTTED => 13-JAN-2012
TIME PLOTTED => 09:09

Dist	COUNTY	ROUTE	POST MILES TOTAL PROJECT	SHEET No.	TOTAL SHEETS
04	SM,SCI	35	0.0/21.0	8	20

REGISTERED CIVIL ENGINEER 9/13/11 DATE

1-9-12
PLANS APPROVAL DATE

REGISTERED PROFESSIONAL ENGINEER Binh V. Hong No. 63850 Exp. 9-30-12 CIVIL STATE OF CALIFORNIA

THE STATE OF CALIFORNIA OR ITS OFFICERS OR AGENTS SHALL NOT BE RESPONSIBLE FOR THE ACCURACY OR COMPLETENESS OF SCANNED COPIES OF THIS PLAN SHEET.

ROADWAY QUANTITIES

PM	DIRECTION	LENGTH (N)	WIDTH (N)	AREA (N)	COLD PLANE AC Pvmt	* HMA (TYPE A)	* TACK COAT
		LF		SQFT	SQYD	TON	
0.6	NB	20	12	240	27	9.0	0.001
0.9		20	12	240	27	9.0	0.001
1.2		60	12	720	80	26.9	0.003
2.1		40	12	480	53	18.0	0.002
2.1		20	12	240	27	9.0	0.001
2.7		30	12	360	40	13.5	0.002
2.9		10	12	120	13	4.5	0.001
3.0		30	12	360	40	13.5	0.002
3.6		30	12	360	40	13.5	0.002
3.8		20	12	240	27	9.0	0.001
4.2		20	12	240	27	9.0	0.001
4.8		10	12	120	13	4.5	0.001
4.9		20	12	240	27	9.0	0.001
5.3		10	12	120	13	4.5	0.001
5.5		10	12	120	13	4.5	0.001
5.6		10	12	120	13	4.5	0.001
6.1		10	12	120	13	4.5	0.001
6.6		20	12	240	27	9.0	0.001
6.6		30	12	360	40	13.5	0.002
6.9		20	12	240	27	9.0	0.001
7.0		10	12	120	13	4.5	0.001
7.0		20	12	240	27	9.0	0.001
7.2		30	12	360	40	13.5	0.002
9.0		50	12	600	67	22.4	0.003
9.7		30	12	360	40	13.5	0.002
11.3		10	12	120	13	4.5	0.001
11.6		20	12	240	27	9.0	0.001
11.7		20	12	240	27	9.0	0.001
12.1		20	12	240	27	9.0	0.001
12.2		20	12	240	27	9.0	0.001
12.2		30	12	360	40	13.5	0.002
12.3		30	12	360	40	13.5	0.002
12.4		50	12	600	67	22.4	0.003
12.4		20	12	240	27	9.0	0.001
12.4		20	12	240	27	9.0	0.001
12.5		20	12	240	27	9.0	0.001
12.7		30	12	360	40	13.5	0.002
12.8		10	12	120	13	4.5	0.001
12.8		20	12	240	27	9.0	0.001
13.0		20	12	240	27	9.0	0.001
13.7		10	12	120	13	4.5	0.001
13.7		20	12	240	27	9.0	0.001

(N) = NOT A SEPARATE PAY ITEM, FOR INFORMATION ONLY.

ROADWAY QUANTITIES (CONTINUED)

PM	DIRECTION	LENGTH (N)	WIDTH (N)	AREA (N)	COLD PLANE AC Pvmt	* HMA (TYPE A)	* TACK COAT
		LF		SQFT	SQYD	TON	
14.2	NB	40	12	480	53	18.0	0.002
14.7		40	12	480	53	18.0	0.002
14.8		30	12	360	40	13.5	0.002
14.8		50	12	600	67	22.4	0.003
15.0		20	12	240	27	9.0	0.001
15.8		30	12	360	40	13.5	0.002
16.1		30	12	360	40	13.5	0.002
16.2		150	12	1800	200	67.3	0.008
17.4		20	12	240	27	9.0	0.001
17.4		30	12	360	40	13.5	0.002
17.9		20	12	240	27	9.0	0.001
18.6		10	12	120	13	4.5	0.001
18.6		10	12	120	13	4.5	0.001
18.8		20	12	240	27	9.0	0.001
18.9		20	12	240	27	9.0	0.001
19.1		10	12	120	13	4.5	0.001
19.1		20	12	240	27	9.0	0.001
19.2		30	12	360	40	13.5	0.002
19.3		20	12	240	27	9.0	0.001
19.3		10	12	120	13	4.5	0.001
19.7		50	12	600	67	22.4	0.003
19.8		10	12	120	13	4.5	0.001
19.9		20	12	240	27	9.0	0.001
19.9		50	12	600	67	22.4	0.003
20.1		20	12	240	27	9.0	0.001
20.2		40	12	480	53	18.0	0.002
20.4		40	12	480	53	18.0	0.002
20.5		20	12	240	27	9.0	0.001
20.6		20	12	240	27	9.0	0.001
SUBTOTAL (NB)					2440	821.5	0.100

(N) = NOT A SEPARATE PAY ITEM, FOR INFORMATION ONLY.
* QUANTITIES ARE INCLUDED IN THE "PAVEMENT STRUCTURE QUANTITIES" TABLE.

SUMMARY OF QUANTITIES

Q-1

REVISED BY	DATE REVISED
BH	10/4/11

BINH HONG — ATSEDE AYALEW — CALCULATED-DESIGNED BY — CHECKED BY

FUNCTIONAL SUPERVISOR: VIJITH THILAKARATNE

STATE OF CALIFORNIA - DEPARTMENT OF TRANSPORTATION — DESIGN — Caltrans

LAST REVISION 01-09-12 — DATE PLOTTED => 13-JAN-2012 — TIME PLOTTED => 09:09

Dist	COUNTY	ROUTE	POST MILES TOTAL PROJECT	SHEET No.	TOTAL SHEETS
04	SM,SCI	35	0.0/21.0	9	20

REGISTERED CIVIL ENGINEER 9/13/11 DATE

1-9-12
PLANS APPROVAL DATE

REGISTERED PROFESSIONAL ENGINEER Binh V. Hong No. 63850 Exp. 9-30-12 CIVIL STATE OF CALIFORNIA

THE STATE OF CALIFORNIA OR ITS OFFICERS OR AGENTS SHALL NOT BE RESPONSIBLE FOR THE ACCURACY OR COMPLETENESS OF SCANNED COPIES OF THIS PLAN SHEET.

ROADWAY QUANTITIES

PM	DIRECTION	LENGTH (N)	WIDTH (N)	AREA (N)	COLD PLANE AC Pvmt	* HMA (TYPE A)	* TACK COAT
		LF		SQFT	SQYD	TON	
21.0	SB	10	12	120	13	4.5	0.001
20.3		20	12	240	27	9.0	0.001
20.2		20	12	240	27	9.0	0.001
20.2		40	12	480	53	18.0	0.002
20.1		100	12	1200	133	44.9	0.005
20.0		20	12	240	27	9.0	0.001
20.0		20	12	240	27	9.0	0.001
20.0		20	12	240	27	9.0	0.001
19.9		30	12	360	40	13.5	0.002
19.9		20	12	240	27	9.0	0.001
19.8		20	12	240	27	9.0	0.001
19.7		20	12	240	27	9.0	0.001
19.6		200	12	2400	267	89.8	0.010
19.3		20	12	240	27	9.0	0.001
19.2		100	12	1200	133	44.9	0.005
19.2		50	12	600	67	22.4	0.003
19.1		50	12	600	67	22.4	0.003
19.1		200	12	2400	267	89.8	0.010
18.9		20	12	240	27	9.0	0.001
18.9		20	12	240	27	9.0	0.001
18.8		30	12	360	40	13.5	0.002
18.8		10	12	120	13	4.5	0.001
18.7		20	12	240	27	9.0	0.001
18.6		30	12	360	40	13.5	0.002
18.6		20	12	240	27	9.0	0.001
18.5		100	12	1200	133	44.9	0.005
18.4		50	12	600	67	22.4	0.003
18.3		30	12	360	40	13.5	0.002
18.2		100	12	1200	133	44.9	0.005
17.5		30	12	360	40	13.5	0.002
17.5		150	12	1800	200	67.3	0.008
14.8		100	12	1200	133	44.9	0.005
14.6		100	12	1200	133	44.9	0.005
14.4		50	12	600	67	22.4	0.003
13.7		20	12	240	27	9.0	0.001
13.1		20	12	240	27	9.0	0.001
13.0		50	12	600	67	22.4	0.003
13.0		20	12	240	27	9.0	0.001
12.9		50	12	600	67	22.4	0.003
12.8		100	12	1200	133	44.9	0.005
12.4		30	12	360	40	13.5	0.002
12.3		20	12	240	27	9.0	0.001
12.0		10	12	120	13	4.5	0.001
11.8		20	12	240	27	9.0	0.001
11.7		20	12	240	27	9.0	0.001
11.5		100	12	1200	133	44.9	0.005
11.4		40	12	480	53	18.0	0.002
11.4		40	12	480	53	18.0	0.002
11.4		50	12	600	67	22.4	0.003
11.3		20	12	240	27	9.0	0.001
11.1		50	12	600	67	22.4	0.003
11.1		50	12	600	67	22.4	0.003
10.3		50	12	600	67	22.4	0.003
10.0		20	12	240	27	9.0	0.001
10.0		20	12	240	27	9.0	0.001
10.0		30	12	360	27	13.5	0.002
9.9		30	12	360	27	13.5	0.002
9.6		20	12	240	27	9.0	0.001

(N) = NOT A SEPARATE PAY ITEM, FOR INFORMATION ONLY.

ROADWAY QUANTITIES (CONTINUED)

PM	DIRECTION	LENGTH (N)	WIDTH (N)	AREA (N)	COLD PLANE AC Pvmt	* HMA (TYPE A)	* TACK COAT
		LF		SQFT	SQYD	TON	
8.9	SB	30	12	360	27	13.5	0.002
7.7		30	12	360	27	13.5	0.002
6.8		30	12	360	27	13.5	0.002
6.7		30	12	360	27	13.5	0.002
5.9		20	12	240	27	9.0	0.001
5.7		10	12	120	13	4.5	0.001
5.5		50	12	600	67	22.4	0.003
5.5		20	12	240	27	9.0	0.001
5.4		10	12	120	13	4.5	0.001
5.3		50	12	600	67	22.4	0.003
5.3		10	12	120	13	4.5	0.001
5.2		10	12	120	13	4.5	0.001
5.2		20	12	240	27	9.0	0.001
4.7		20	12	240	27	9.0	0.001
4.7		20	12	240	27	9.0	0.001
4.6		10	12	120	13	4.5	0.001
4.2		20	12	240	27	9.0	0.001
4.0		20	12	240	27	9.0	0.001
3.8		50	12	600	67	22.4	0.003
3.4		150	12	1800	200	67.3	0.008
2.4		20	12	240	27	9.0	0.001
2.4		50	12	600	67	22.4	0.003
2.2		20	12	240	27	9.0	0.001
2.2		20	12	240	27	9.0	0.001
2.2		80	12	960	107	35.9	0.004
2.0		20	12	240	27	9.0	0.001
1.8		20	12	240	27	9.0	0.001
1.6		30	12	360	27	13.5	0.002
1.2		40	12	480	53	18.0	0.002
0.8		20	12	240	27	9.0	0.001
SUBTOTAL (SB)					4840	1629.0	0.200
SUBTOTAL (NB) (FROM Q-1)					2440	821.5	0.100
TOTAL (NB+SB)					7280	2450.5	0.300

(N) = NOT A SEPARATE PAY ITEM, FOR INFORMATION ONLY.
* QUANTITIES ARE INCLUDED IN THE "PAVEMENT STRUCTURE QUANTITIES" TABLE.

SUMMARY OF QUANTITIES

Q-2

REVISED BY	DATE REVISED
BH	10/4/11

CALCULATED-DESIGNED BY: BINH HONG
CHECKED BY: ATSEDE AYALEW
FUNCTIONAL SUPERVISOR: VIJITH THILAKARATNE

STATE OF CALIFORNIA - DEPARTMENT OF TRANSPORTATION
Caltrans DESIGN

LAST REVISION 01-09-12 | DATE PLOTTED => 13-JAN-2012 | TIME PLOTTED => 09:09

Dist	COUNTY	ROUTE	POST MILES TOTAL PROJECT	SHEET No.	TOTAL SHEETS
04	SM,SCI	35	0.0/21.0	10	20

REGISTERED CIVIL ENGINEER 9/13/11 DATE

1-9-12
PLANS APPROVAL DATE

REGISTERED PROFESSIONAL ENGINEER Binh V. Hong No. 63850 Exp. 9-30-12 CIVIL STATE OF CALIFORNIA

THE STATE OF CALIFORNIA OR ITS OFFICERS OR AGENTS SHALL NOT BE RESPONSIBLE FOR THE ACCURACY OR COMPLETENESS OF SCANNED COPIES OF THIS PLAN SHEET.

METAL BEAM GUARD RAILING

PM	DIRECTION	REMOVE	INSTALL	ALTERNATE FLARED TERMINAL SYSTEM	REMARKS
		LF		EA	
12.70	SB	125.0	87.5	1	REPLACE ALL 10 RAILS AND 1 TERMINAL SYSTEM INCLUDING BURIED END
12.67	SB	37.5	37.5		REPLACE LAST 3 RAILS INCLUDING 1 BURIED END
12.50	SB	175.0	175.0		REPLACE FIRST 14 RAILS INCLUDING 1 BURIED END
TOTAL		337.5	300.0	1	

PAVEMENT STRUCTURE QUANTITIES

PM	ASPHALT RUBBER BINDER	SCREENINGS	ASPHALT EMULSION (FOG SEAL COAT)	SAND COVER	HMA (TYPE A) (COLD PLANE AC Pvmt)	HMA (TYPE A) (Misc AREA)	TACK COAT (COLD PLANE AC Pvmt)	TACK COAT (Misc AREA)	IMPORTED MATERIAL (SHOULDER BACKING)	CRACK TREATMENT
	TON									LNMI
0.0 TO 21.0	981	7244	45	1087	2450.5	242	0.3	0.1	1000	15
TOTAL	981	7244	45	1087	2692.5		0.4		1000	15

PLACE ASPHALT CONCRETE MISCELLANEOUS AREA

PM	DIRECTION	AREA	* HMA (TYPE A)	* TACK COAT	CLASS 3 AGGREGATE BASE	REMARKS
		SQYD	TON		CY	
0.5	NB	7	1.1	0.003	1.0	FAILED SHOULDER
0.6		20	3.2	0.008	2.8	
0.8		5	0.8	0.002	0.7	
0.8		13	2.1	0.005	1.8	
0.8		9	1.5	0.004	1.3	
0.8		2	0.4	0.001	0.3	
0.8		2	0.4	0.001	0.3	
0.9		7	1.1	0.003	1.0	
0.9		9	1.5	0.004	1.3	
0.9		5	0.8	0.002	0.7	
1.0		2	0.4	0.001	0.3	
1.0		9	1.5	0.004	1.3	
1.0		4	0.6	0.001	0.5	
1.85		5	0.8	0.002	0.7	
2.0		35	5.7	0.015	4.9	
2.1		23	3.8	0.010	3.3	
2.1		4	0.6	0.001	0.5	
3.3		2	0.4	0.001	0.3	
3.3		5	0.8	0.002	0.7	
3.6		8	1.4	0.004	1.2	
3.6	SB	4	0.6	0.001	0.5	
3.3		6	0.9	0.002	0.8	
2.2		6	0.9	0.002	0.8	
0.6		5	0.8	0.002	0.7	
TOTAL		197	32.1	0.1	27.7	

* QUANTITIES ARE INCLUDED IN THE "PAVEMENT STRUCTURE QUANTITIES" TABLE.

SUMMARY OF QUANTITIES

Q-3

STATE OF CALIFORNIA - DEPARTMENT OF TRANSPORTATION
Caltrans DESIGN

FUNCTIONAL SUPERVISOR: VIJITH THILAKARATNE
CALCULATED-DESIGNED BY: BINH HONG
CHECKED BY: ATSEDE AYALEW
REVISED BY: BH
DATE REVISED: 10/4/11

LAST REVISION 01-09-12 | DATE PLOTTED => 13-JAN-2012 | TIME PLOTTED => 09:09

Dist	COUNTY	ROUTE	POST MILES TOTAL PROJECT	SHEET No.	TOTAL SHEETS
04	SCl,SM	35	0.0/21.0	11	20

Randell D. Hiatt
REGISTERED CIVIL ENGINEER

May 20, 2011
PLANS APPROVAL DATE

REGISTERED PROFESSIONAL ENGINEER
Randell D. Hiatt
No. C50200
Exp. 6-30-11
CIVIL
STATE OF CALIFORNIA

The State of California or its officers or agents shall not be responsible for the accuracy or completeness of electronic copies of this plan sheet.

To accompany plans dated 1-9-12

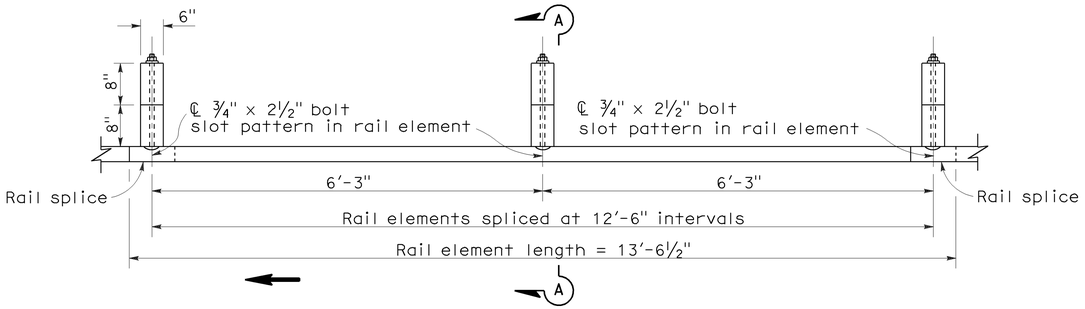

PLAN

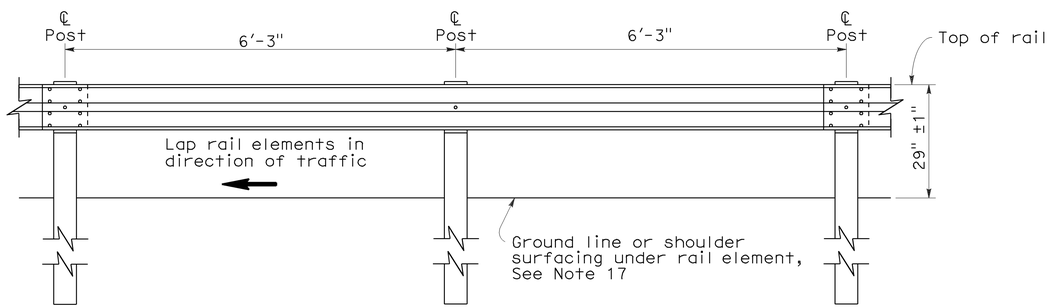

ELEVATION

METAL BEAM GUARD RAILING WITH WOOD POST AND BLOCKS

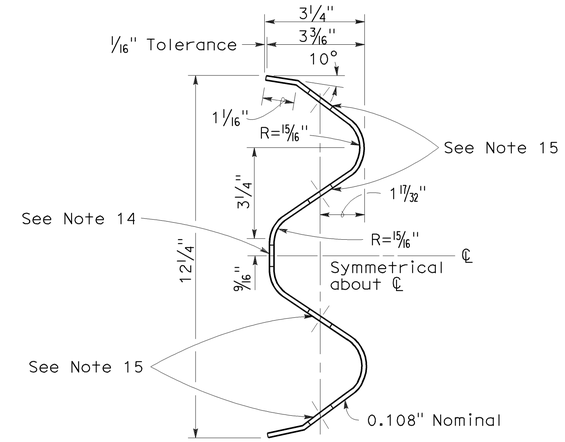

SECTION THRU
RAIL ELEMENT

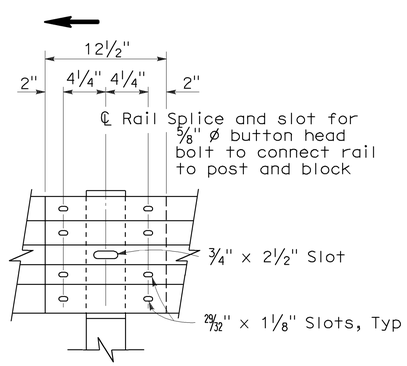

ELEVATION

RAIL ELEMENT SPLICE DETAIL

a) Connect the over lapped end of the rail elements with ⅝" ø x 1⅜" button head oval shoulder splice bolts inserted into the 29⁄32" x 1⅛" slots and bolted together with ⅝" ø recessed hex nuts. Recess of hex nut points toward rail element. A total of 8 bolts and nuts are to be used at each rail splice connection.

b) The ends of the rail elements are to be overlapped in the direction of traffic (see details).

c) Where end cap is to be attached to the end of a rail element, a total of 4 of the above described splice bolts and nuts are to be used.

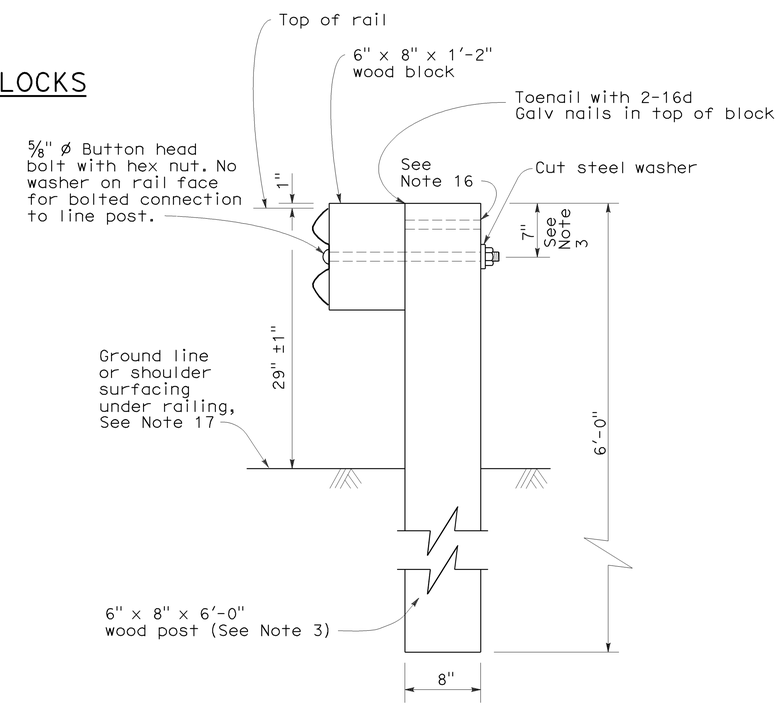

SECTION A-A
TYPICAL WOOD LINE
POST INSTALLATION
See Note 4

NOTES:

1. For details of steel post installations, see Standard Plan A77A2.
2. For details of standard hardware used to construct guard railing, see Standard Plan A77B1.
3. For details of wood posts and wood blocks used to construct guard railing, see Standard Plan A77C1.
4. For additional installation details, see Standard Plan A77C3.
5. Guard railing post spacing to be 6'-3" center to center, except as otherwise noted.
6. For guard railing typical layouts, see the A77E, A77F and A77G Series of Standard Plans.
7. For terminal system end treatment details, see the A77L Series of Standard Plans. To connect railing to terminal system end treatment, transition the top of railing height at a ratio of 120:1 to terminal system end treatment height plus one 12'-6" standard railing section at the transitioned height for a horizontal connection to the end treatment.
8. For guard railing end anchor details, see Standard Plans A77H1 and A77I2.
9. For details of guard railing transition to bridge railing, see Standard Plan A77J4.
10. For additional details of guard railing connection to bridge railings, see Standard Plans A77J1, A77J2 and A77K1.
11. For guard railing connection details to abutments and walls, see Standard Plan A77J3.
12. Direction of adjacent traffic indicated by ➡.
13. For typical guard railing delineation and dike positioning details, see Standard Plan A77C4.
14. Slotted hole for bolted connection of rail element to block and post. See "Section Thru Rail Element".
15. Slotted holes for splice bolts to overlap ends of rail element. See "Section Thru Rail Element".
16. Additional hole in uppermost portion of line post is for potential future adjustments of railing height. See Standard Plan A77C1.
17. Install posts in soil.

STATE OF CALIFORNIA
DEPARTMENT OF TRANSPORTATION

METAL BEAM GUARD RAILING STANDARD RAILING SECTION (WOOD POST WITH WOOD BLOCK)

NO SCALE

RSP A77A1 DATED MAY 20, 2011 SUPERSEDES STANDARD PLAN A77A1
DATED MAY 1, 2006 - PAGE 41 OF THE STANDARD PLANS BOOK DATED MAY 2006.

REVISED STANDARD PLAN RSP A77A1

2006 REVISED STANDARD PLAN RSP A77A1

3-10-11

DIST	COUNTY	ROUTE	POST MILES TOTAL PROJECT	SHEET NO.	TOTAL SHEETS
04	SCI,SM	35	0.0/21.0	12	20

LICENSED LANDSCAPE ARCHITECT

April 3, 2009
PLANS APPROVAL DATE

The State of California or its officers or agents shall not be responsible for the accuracy or completeness of electronic copies of this plan sheet.

LICENSED LANDSCAPE ARCHITECT
Gregory A. Balzer 2576
02-28-11
Renewal Date
03-04-09
Date
STATE OF CALIFORNIA

To accompany plans dated 1-9-12

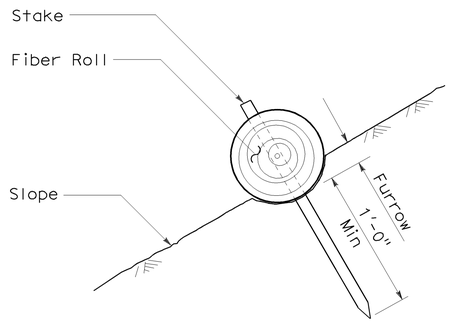

SECTION

FIBER ROLL
(TYPE 1)

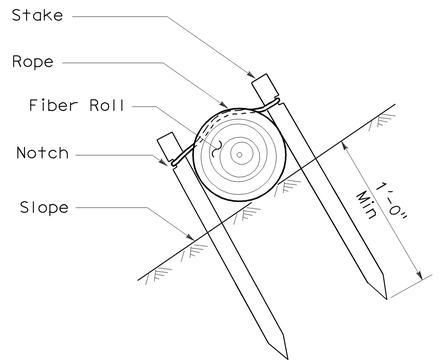

SECTION

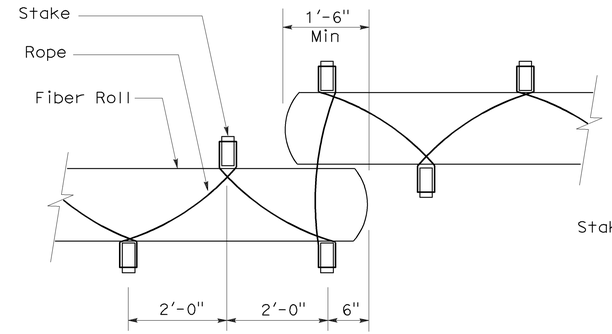

PLAN

FIBER ROLL
(TYPE 2)

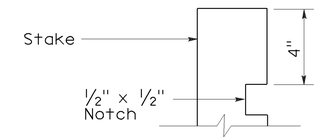

ELEVATION

STAKE NOTCH DETAIL

NOTES:

1. Fiber roll spacing varies depending upon slope inclination.
2. Installations shown in the perspectives are for slope inclination of 10:1 and steeper.

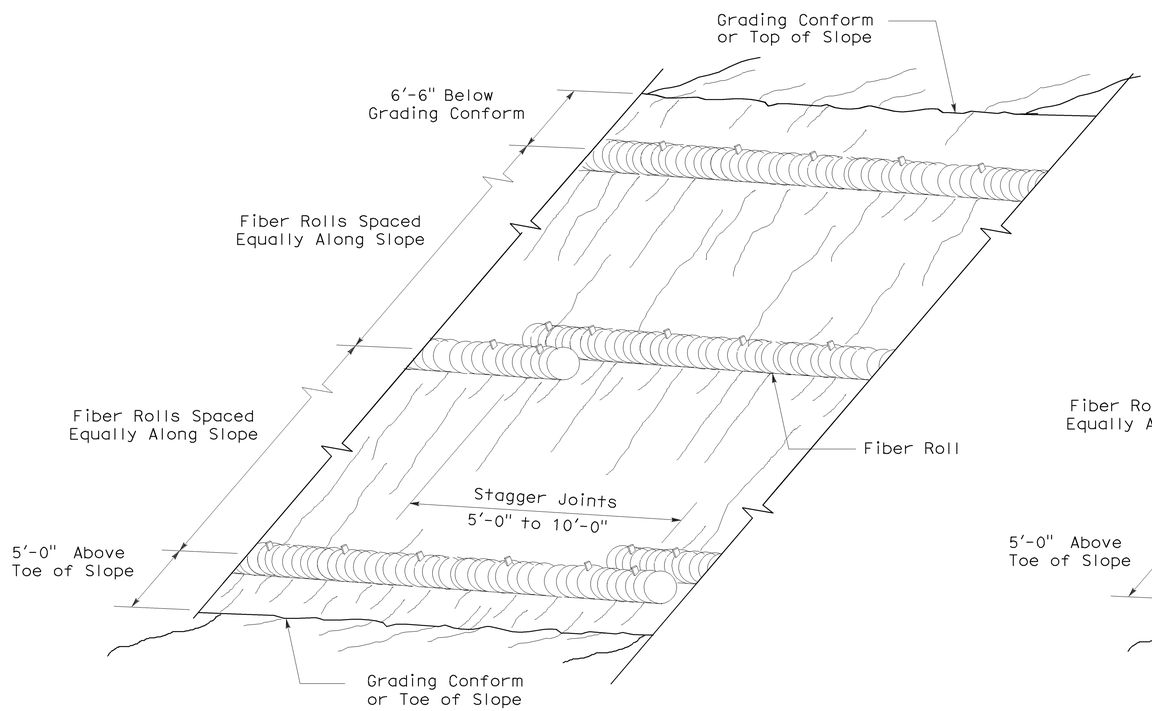

PERSPECTIVE

FIBER ROLL (TYPE 1)

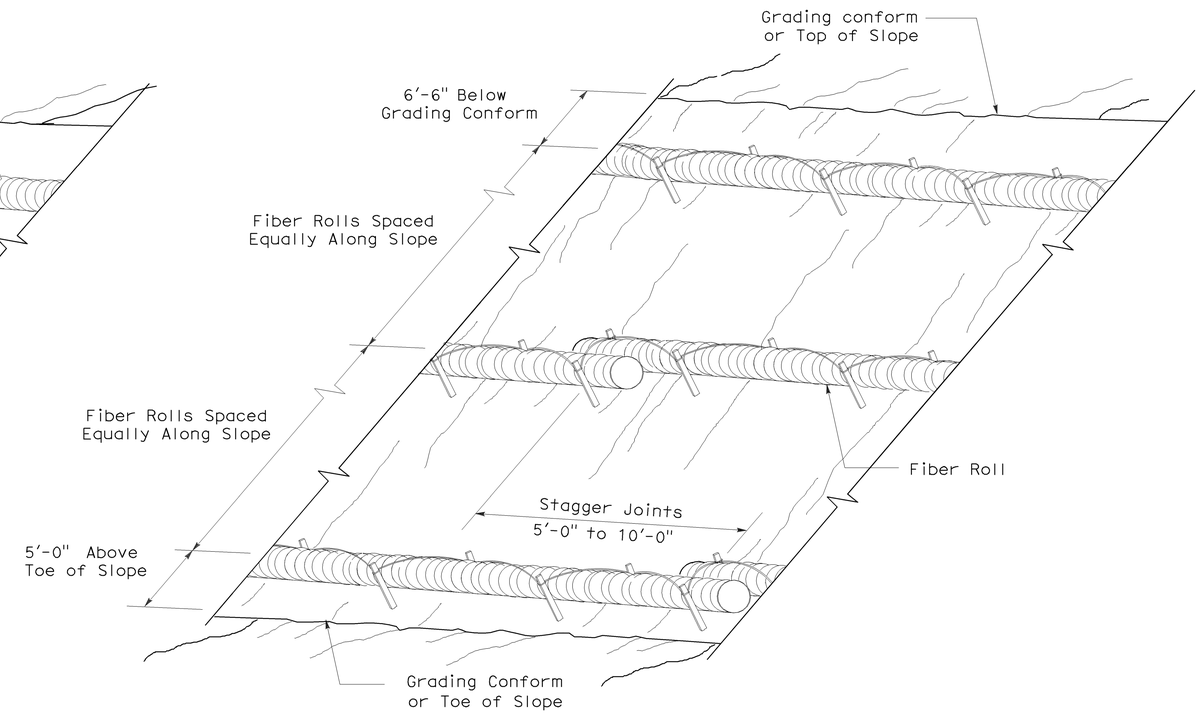

PERSPECTIVE

FIBER ROLL (TYPE 2)

STATE OF CALIFORNIA
DEPARTMENT OF TRANSPORTATION

EROSION CONTROL DETAILS (FIBER ROLL)

NO SCALE

RNSP H51 DATED APRIL 3, 2009 SUPERSEDES NSP H51 DATED DECEMBER 1, 2006 THAT SUPPLEMENTS THE STANDARD PLANS BOOK DATED MAY 2006.

REVISED NEW STANDARD PLAN RNSP H51

2006 REVISED NEW STANDARD PLAN RNSP H51

3-4-09

DIST	COUNTY	ROUTE	POST MILES TOTAL PROJECT	SHEET NO.	TOTAL SHEETS
04	SCI,SM	35	0.0/21.0	13	20

Randell D. Hiatt
REGISTERED CIVIL ENGINEER

June 6, 2008
PLANS APPROVAL DATE

REGISTERED PROFESSIONAL ENGINEER
Randell D. Hiatt
No. C50200
Exp. 6-30-09
CIVIL
STATE OF CALIFORNIA

The State of California or its officers or agents shall not be responsible for the accuracy or completeness of electronic copies of this plan sheet.

To accompany plans dated 1-9-12

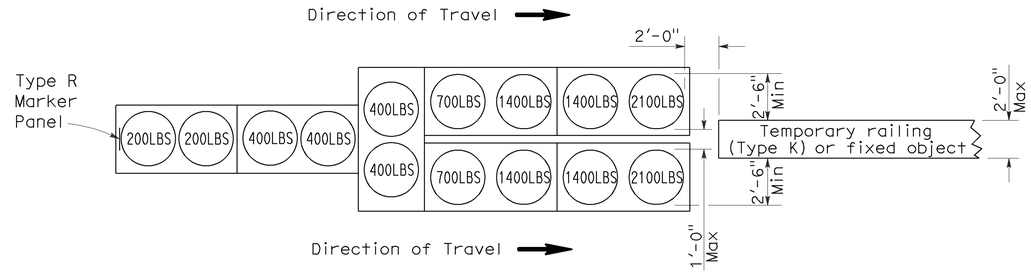

ARRAY 'TU14'

Approach speed 45 mph or more

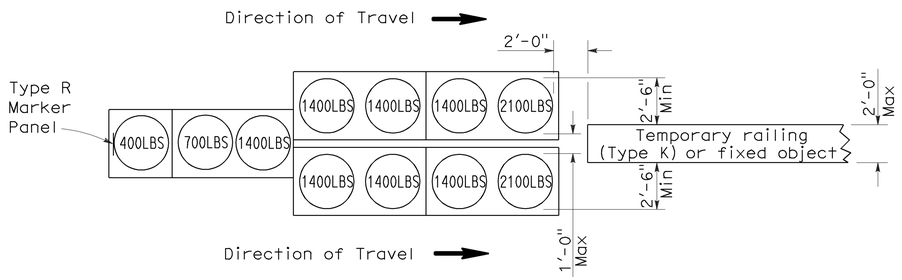

ARRAY 'TU11'

Approach speed less than 45 mph

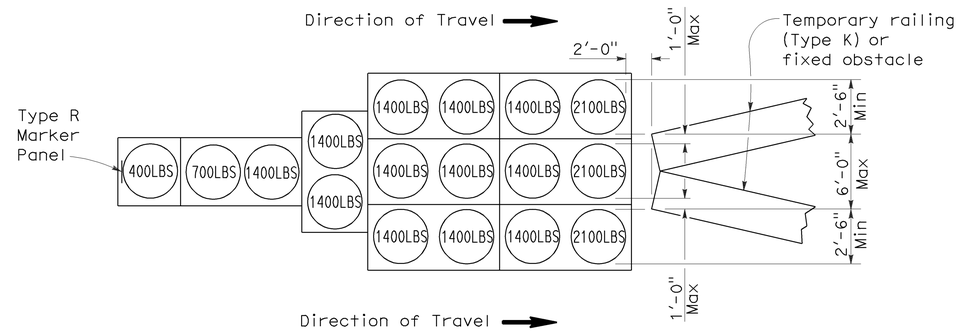

ARRAY 'TU17'

Approach speed less than 45 mph

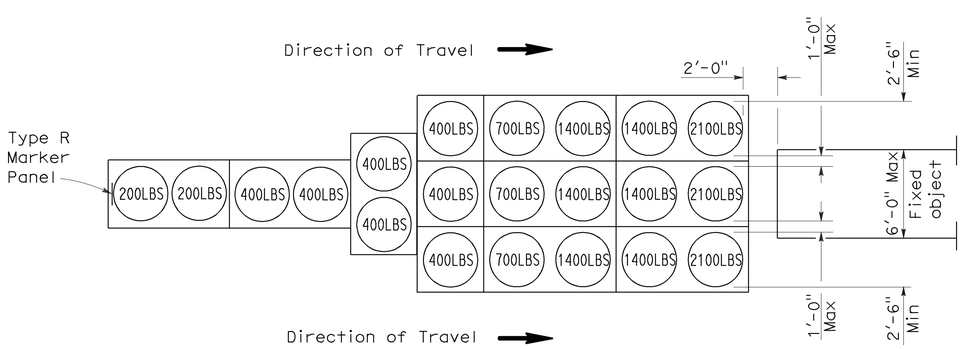

ARRAY 'TU21'

Approach speed 45 mph or more

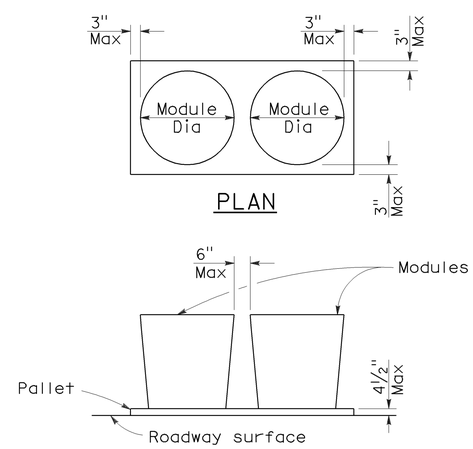

CRASH CUSHION PALLET DETAIL

See Note 7

NOTES:

1. (XXX) Indicates sand filled module location and weight of sand in pounds for each module. Module spacing is based on the greater diameter of the module.
2. All sand weights are nominal.
3. Temporary crash cushion arrays shall not encroach on the traveled way.
4. Place the top of Type R marker panel 1" below the module lid.
5. Refer to Standard Plan A73B for marker details.
6. Approach speeds indicated conform to NCHRP 350 Report criteria.
7. Use of pallets is optional.

STATE OF CALIFORNIA
DEPARTMENT OF TRANSPORTATION

TEMPORARY CRASH CUSHION, SAND FILLED (UNIDIRECTIONAL)

NO SCALE

RSP T1A DATED JUNE 6, 2008 SUPERSEDES STANDARD PLAN T1A
DATED MAY 1, 2006 - PAGE 211 OF THE STANDARD PLANS BOOK DATED MAY 2006.

REVISED STANDARD PLAN RSP T1A

2006 REVISED STANDARD PLAN RSP T1A

DIST	COUNTY	ROUTE	POST MILES TOTAL PROJECT	SHEET NO.	TOTAL SHEETS
04	SCI,SM	35	0.0/21.0	14	20

Randell D. Hiatt
REGISTERED CIVIL ENGINEER

June 6, 2008
PLANS APPROVAL DATE

REGISTERED PROFESSIONAL ENGINEER
Randell D. Hiatt
No. C50200
Exp. 6-30-09
CIVIL
STATE OF CALIFORNIA

The State of California or its officers or agents shall not be responsible for the accuracy or completeness of electronic copies of this plan sheet.

To accompany plans dated 1-9-12

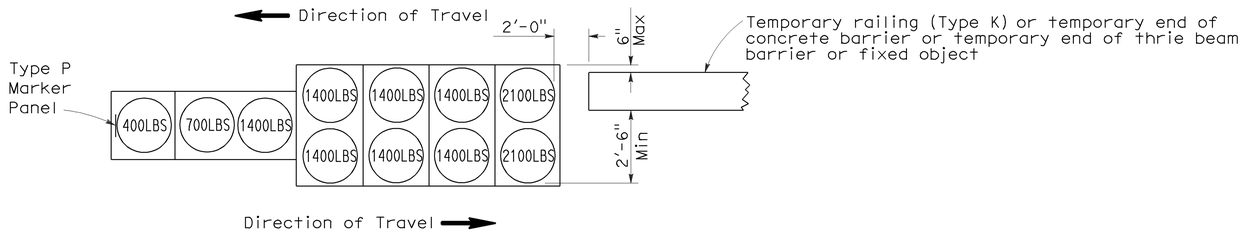

ARRAY 'TB11'

Approach speed less than 45 mph

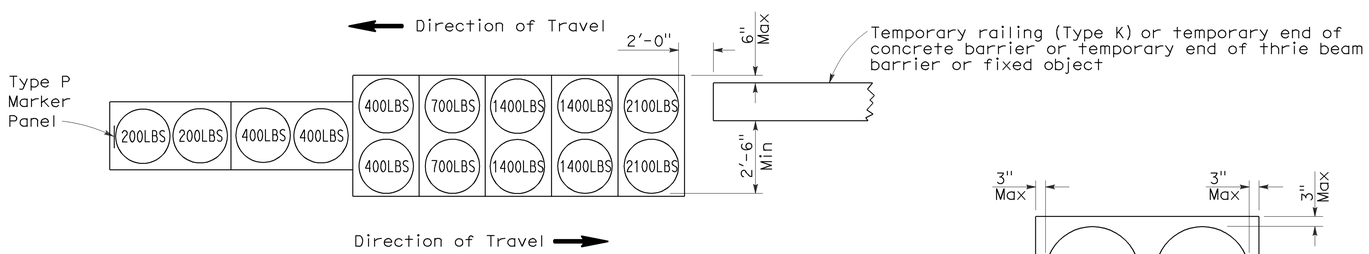

ARRAY 'TB14'

Approach speed 45 mph or more

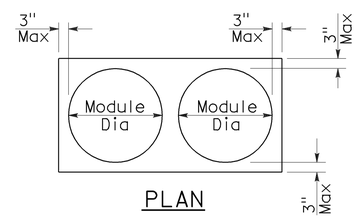

PLAN

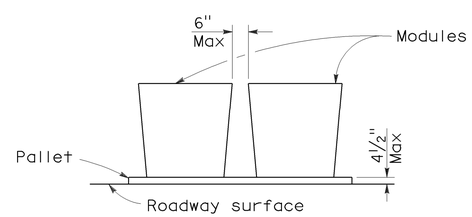

ELEVATION

CRASH CUSHION PALLET DETAIL

See Note 7

NOTES:

1. (XXX) Indicates sand filled module location and weight of sand in pounds for each module. Module spacing is based on the greater diameter of the module.
2. All sand weights are nominal.
3. Temporary crash cushion arrays shall not encroach on the traveled way.
4. Place the Type P marker panel so that the bottom of the panel rests upon the pallet.
5. Refer to Standard Plan A73B for marker details.
6. Approach speeds indicated conform to NCHRP 350 Report criteria.
7. Use of pallets is optional.

STATE OF CALIFORNIA
DEPARTMENT OF TRANSPORTATION

TEMPORARY CRASH CUSHION, SAND FILLED (BIDIRECTIONAL)

NO SCALE

RSP T1B DATED JUNE 6, 2008 SUPERSEDES STANDARD PLAN T1B
DATED MAY 1, 2006 - PAGE 212 OF THE STANDARD PLANS BOOK DATED MAY 2006.

REVISED STANDARD PLAN RSP T1B

2006 REVISED STANDARD PLAN RSP T1B

5-15-08

DIST	COUNTY	ROUTE	POST MILES TOTAL PROJECT	SHEET NO.	TOTAL SHEETS
04	SCI,SM	35	0.0/21.0	15	20

Randell D. Hiatt
REGISTERED CIVIL ENGINEER

June 6, 2008
PLANS APPROVAL DATE

REGISTERED PROFESSIONAL ENGINEER
Randell D. Hiatt
No. C50200
Exp. 6-30-09
CIVIL
STATE OF CALIFORNIA

The State of California or its officers or agents shall not be responsible for the accuracy or completeness of electronic copies of this plan sheet.

To accompany plans dated 1-9-12

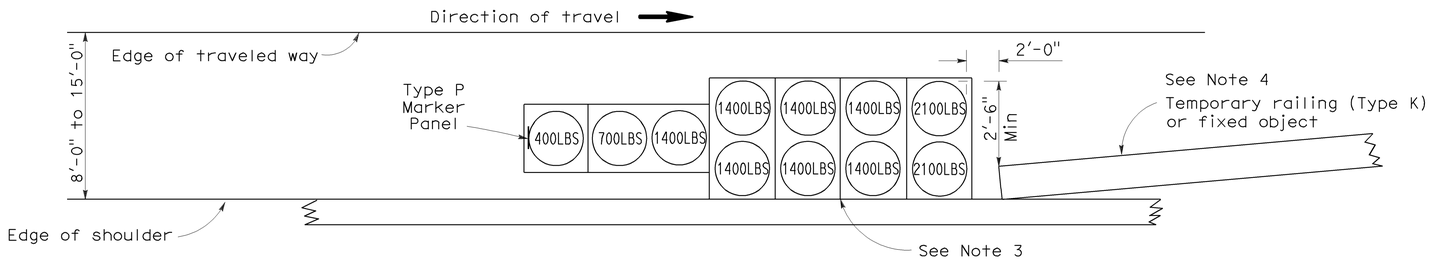

ARRAY 'TS11'

Approach speed less than 45 mph
See Note 9

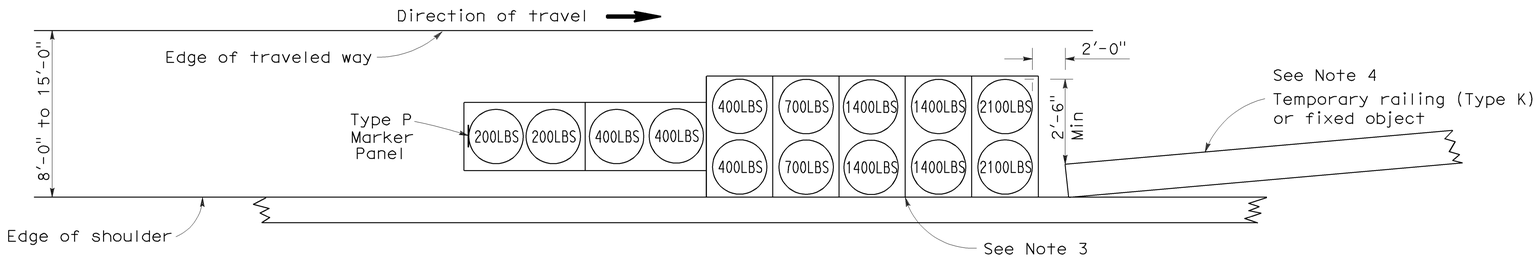

ARRAY 'TS14'

Approach speed 45 mph or more
See Note 9

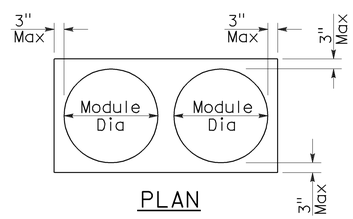

PLAN

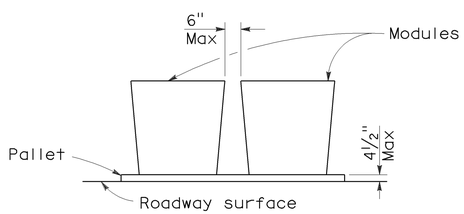

ELEVATION

CRASH CUSHION PALLET DETAIL

See Note 11

NOTES:

1. (XXX) Indicates sand filled module location and weight of sand in pounds for each module. Module spacing is based on the greater diameter of the module.
2. All sand weights are nominal.
3. The temporary crash cushion arrays shown on this plan shall be used only in locations where there will be traffic on one side of the temporary crash cushion array.
4. If the fixed object or approach end of the temporary railing is less than 15'-0" from the edge of traveled way, a temporary crash cushion is required in a construction or work zone.
5. Temporary crash cushion arrays shall not encroach on the traveled way.
6. Arrays for median shoulders shall conform to details shown on this plan for outside shoulders.
7. Place the Type P marker panel so that the bottom of the panel rests upon the pallet and faces traffic.
8. Refer to Standard Plan A73B for marker details.
9. For shoulder widths less than 8'-0", appropriate approved crash cushion protection, other than sand filled modules, shall be provided at fixed objects and at approach ends of temporary railing. The specific type of crash cushion shall be as shown on the project plans or as specified in the Special Provisions, or if not shown on the project plans or specified in the Special Provisions, shall be as approved by the Engineer.
10. Approach speeds indicated conform to NCHRP 350 Report criteria.
11. Use of pallets is optional.

STATE OF CALIFORNIA
DEPARTMENT OF TRANSPORTATION

TEMPORARY CRASH CUSHION, SAND FILLED (SHOULDER INSTALLATIONS)

NO SCALE

RSP T2 DATED JUNE 6, 2008 SUPERSEDES STANDARD PLAN T2
DATED MAY 1, 2006 - PAGE 213 OF THE STANDARD PLANS BOOK DATED MAY 2006.

REVISED STANDARD PLAN RSP T2

2006 REVISED STANDARD PLAN RSP T2

5-15-08

Dist	COUNTY	ROUTE	POST MILES TOTAL PROJECT	SHEET No.	TOTAL SHEETS
04	SCI,SM	35	0.0/21.0	16	20

Randell D. Hiatt
REGISTERED CIVIL ENGINEER

May 20, 2011
PLANS APPROVAL DATE

REGISTERED PROFESSIONAL ENGINEER
Randell D. Hiatt
No. C50200
Exp. 6-30-11
CIVIL
STATE OF CALIFORNIA

The State of California or its officers or agents shall not be responsible for the accuracy or completeness of electronic copies of this plan sheet.

To accompany plans dated 1-9-12

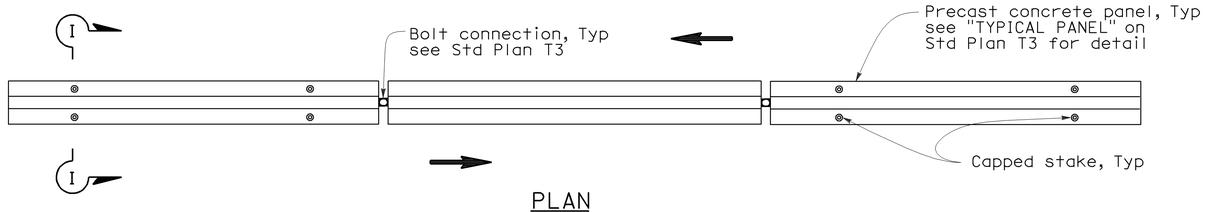

PLAN

RAILING STAKING CONFIGURATION FOR TWO-WAY TRAFFIC

See Note 1

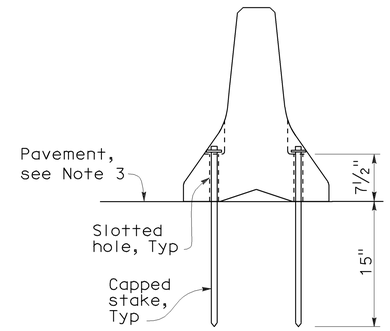

SECTION I-I

NOTES:

1. Where Type K Temporary Railing is placed as a temporary or long term barrier in two-way traffic on highways with less than 24" from the edge of traveled way, use four capped stakes per every other panel with end panels staked.
2. Where Type K Temporary Railing is placed 3" to 24" from the edge of an excavation on highways, use two capped stakes per panel along the traffic side.
3. Staked Type K Temporary Railing must be supported by at least 4" thick concrete, hot mix asphalt or existing asphalt concrete pavement.
4. The minimum yield strength for the washer must be 60,000 psi.
5. Direction of adjacent traffic indicated by ⟹.

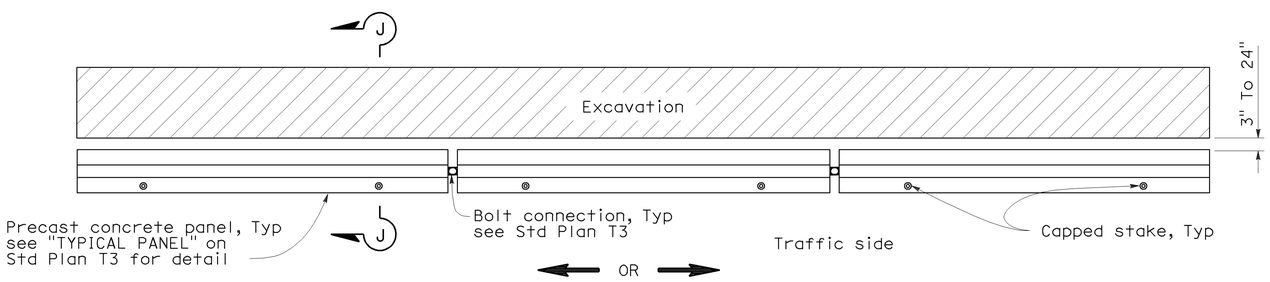

PLAN

RAILING STAKING CONFIGURATION ADJACENT TO AN EXCAVATION

See Note 2

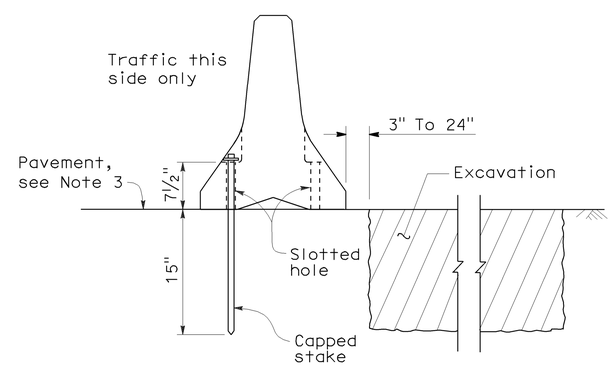

SECTION J-J

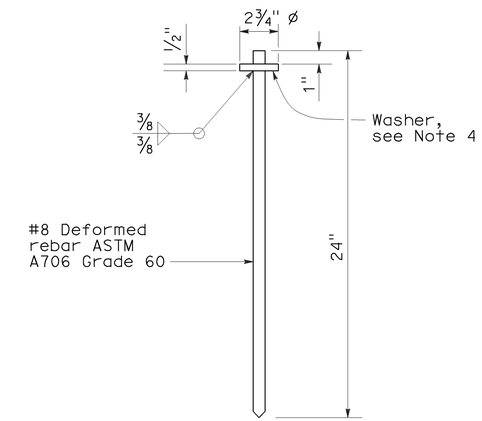

CAPPED STAKE DETAIL

STATE OF CALIFORNIA
DEPARTMENT OF TRANSPORTATION

TEMPORARY RAILING (TYPE K)

NO SCALE

NSP T3A DATED MAY 20, 2011 SUPPLEMENTS
THE STANDARD PLANS BOOK DATED MAY 2006.

NEW STANDARD PLAN NSP T3A

2006 NEW STANDARD PLAN NSP T3A

DIST	COUNTY	ROUTE	POST MILES TOTAL PROJECT	SHEET NO.	TOTAL SHEETS
04	SCI,SM	35	0.0/21.0	17	20

LICENSED LANDSCAPE ARCHITECT

August 15, 2008
PLANS Approval DATE

LICENSED LANDSCAPE ARCHITECT
Robert B. Schott 3635
Signature
11-04-08
Renewal Date
08-11-08
Date
STATE OF CALIFORNIA

The State of California or its officers or agents shall not be responsible for the accuracy or completeness of electronic copies of this plan sheet.

To accompany plans dated 1-9-12

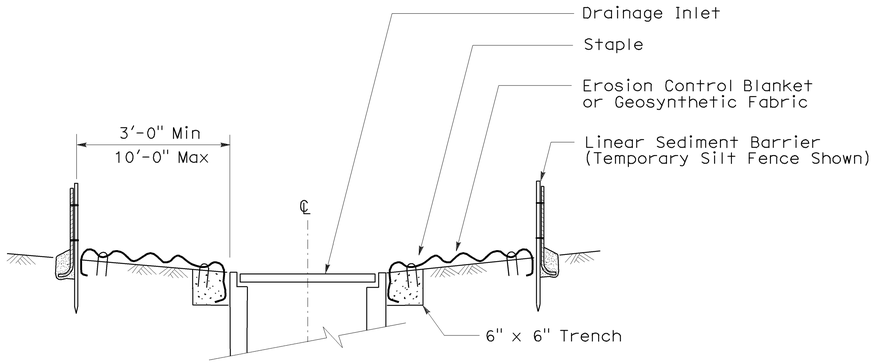

SECTION A-A

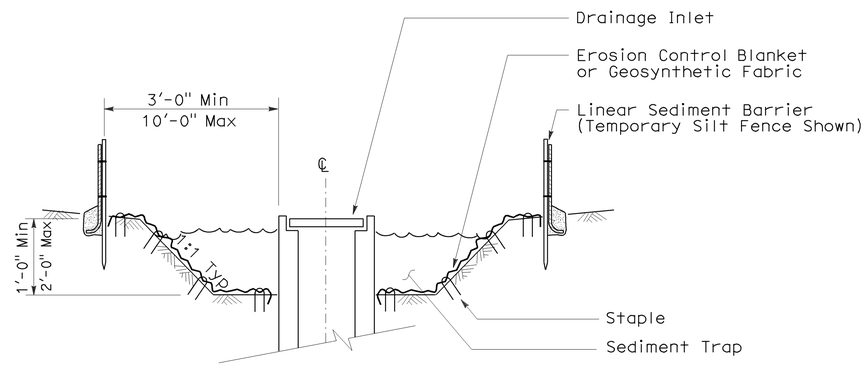

SECTION B-B

NOTES:

1. See Standard Plan T51 for Temporary Silt Fence.
2. Dimensions may vary to fit field conditions.

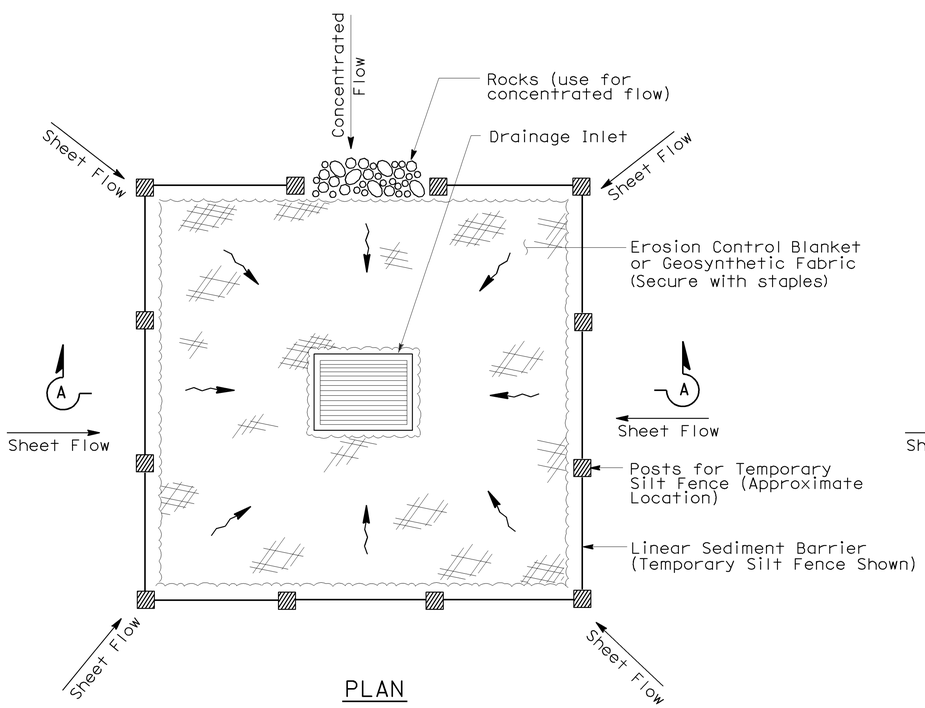

PLAN

TEMPORARY DRAINAGE
INLET PROTECTION (TYPE 1)

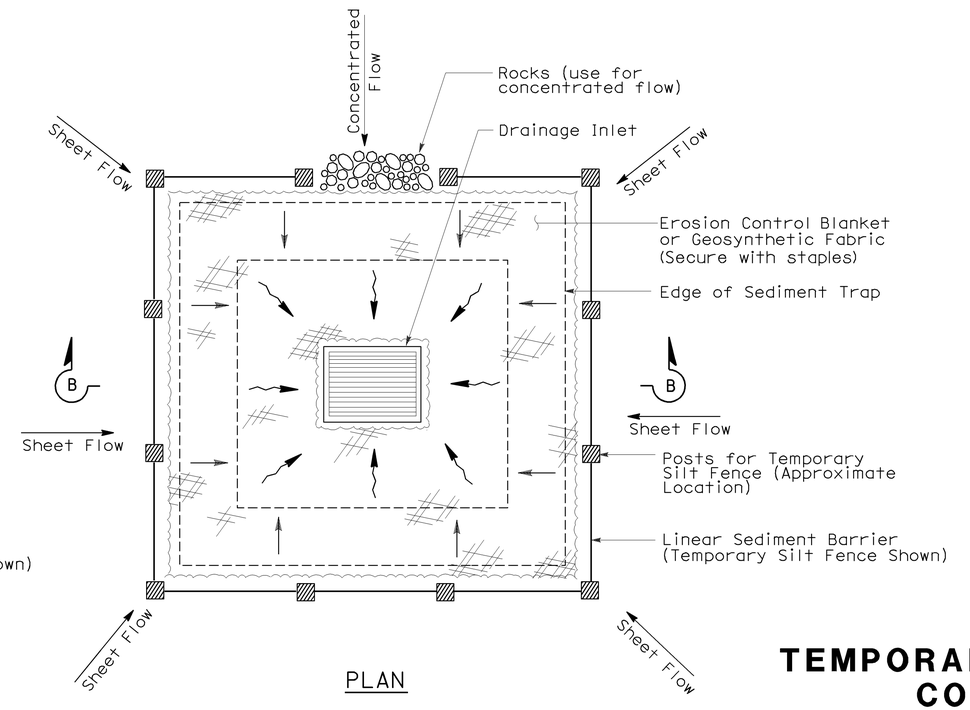

PLAN

TEMPORARY DRAINAGE
INLET PROTECTION (TYPE 2)
(EXCAVATED SEDIMENT TRAP)

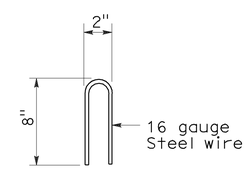

STAPLE DETAIL

STATE OF CALIFORNIA
DEPARTMENT OF TRANSPORTATION

TEMPORARY WATER POLLUTION CONTROL DETAILS (TEMPORARY DRAINAGE INLET PROTECTION)

NO SCALE

Nsp t61 dated august 15, 2008 supplements
the standard plans book dated may 2006.

NEW STANDARD PLAN NSP T61

2006 NEW STANDARD PLAN NSP T61

7-11-08

DIST	COUNTY	ROUTE	POST MILES TOTAL PROJECT	SHEET NO.	TOTAL SHEETS
04	SCI,SM	35	0.0/21.0	18	20

LICENSED LANDSCAPE ARCHITECT

August 15, 2008
PLANS APPROVAL DATE

The State of California or its officers or agents shall not be responsible for the accuracy or completeness of electronic copies of this plan sheet.

LICENSED LANDSCAPE ARCHITECT Robert B. Schott 3635 Signature 11-04-08 Renewal Date 08-11-08 Date STATE OF CALIFORNIA

To accompany plans dated 1-9-12

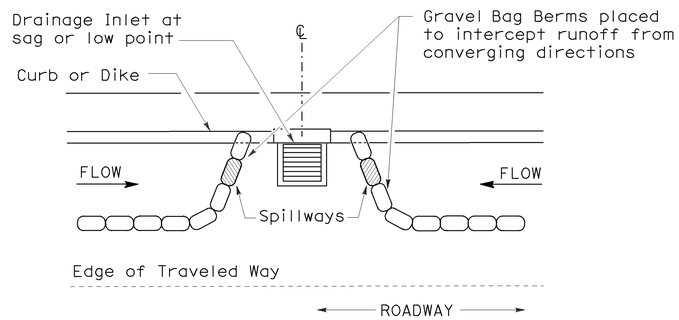

PLAN

CONFIGURATION FOR SAG POINT INLET (GRAVEL BAG BERM)

GRAVEL BAG BERM (TYPE 3A) SPACING TABLE

SLOPE OF ROADWAY (PERCENT)	1 to 3.9	4 to 5.9	6 to 7.9	8 to 10	10+
INTERVAL BETWEEN BERM	100′	75′	50′	25′	12′

For slope of less than 1%, install barriers only if erosion/sediment is prevalent

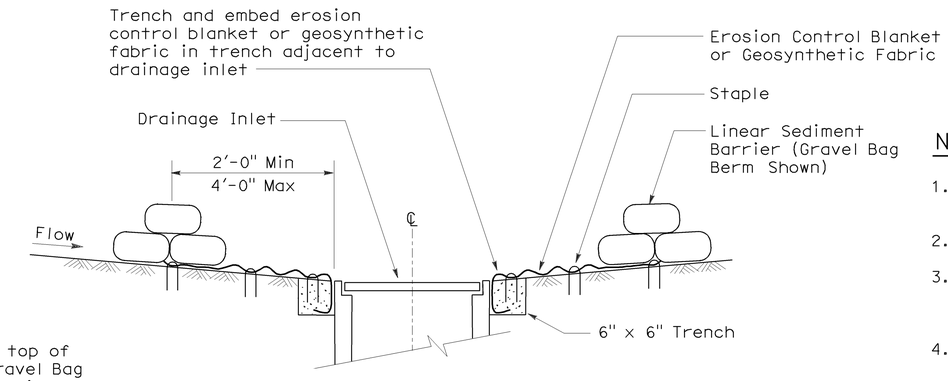

SECTION A-A

NOTES:

1. Place safety cones adjacent to drainage inlet protection.
2. Dimensions may vary to fit field conditions.
3. Install a minimum of 3 gravel bag berms upstream of each drainage inlet to be protected.
4. Position erosion control blanket or geosynthetic fabric at edge of concrete apron and secure in trench.
5. Erosion control blanket or geosynthetic fabric is not required if the area adjacent to the drainage inlet is vegetated or paved.

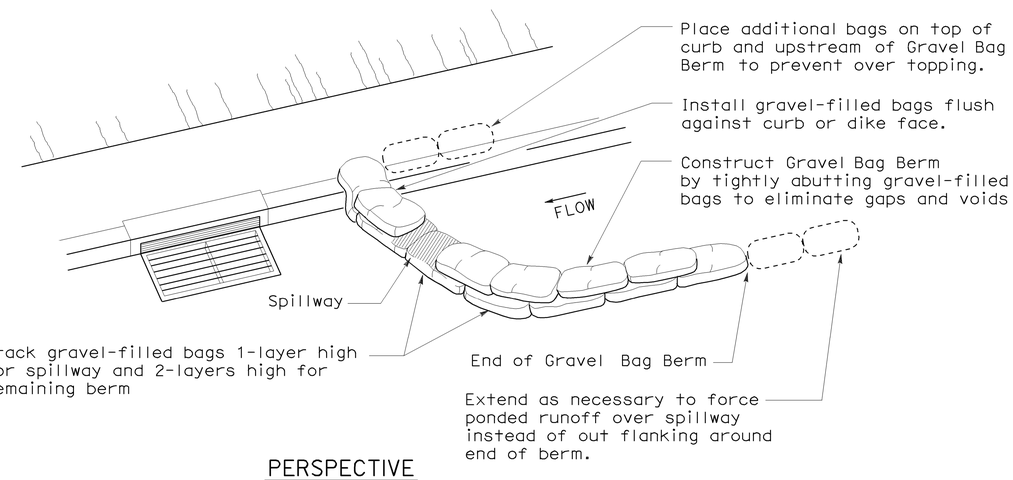

PERSPECTIVE

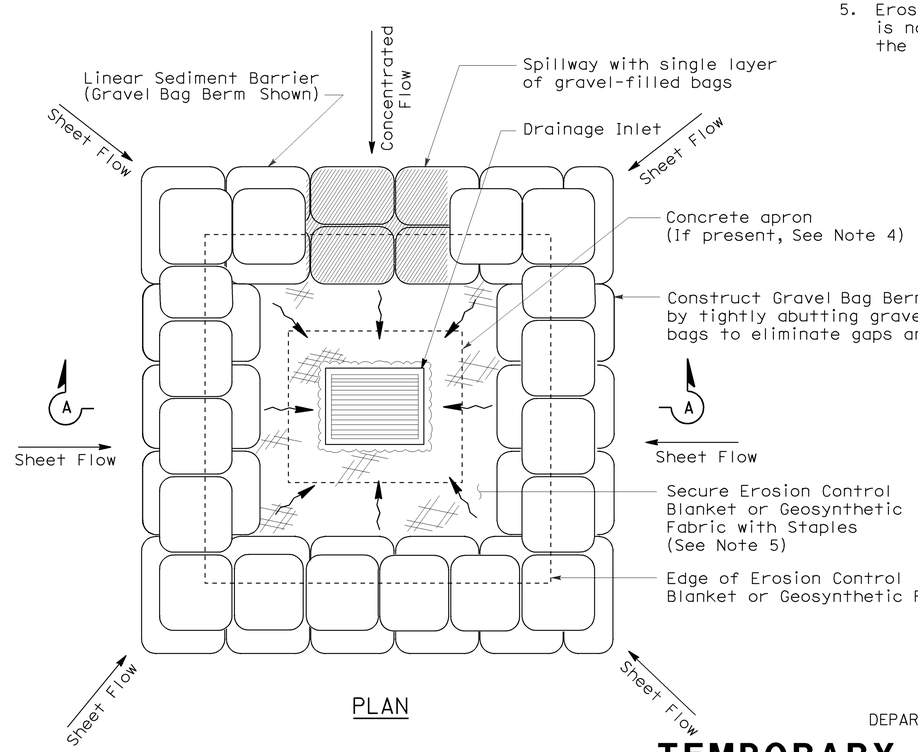

PLAN

TEMPORARY DRAINAGE INLET PROTECTION (TYPE 3B)

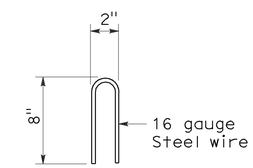

STAPLE DETAIL

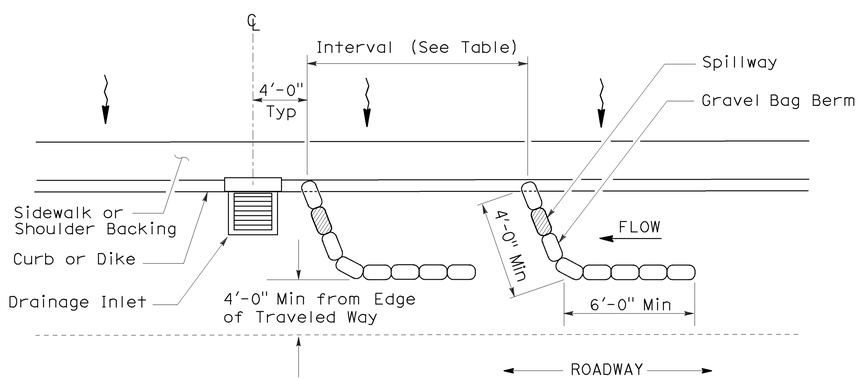

PLAN

TEMPORARY DRAINAGE INLET PROTECTION (TYPE 3A) (GRAVEL BAG BERM)

STATE OF CALIFORNIA
DEPARTMENT OF TRANSPORTATION

TEMPORARY WATER POLLUTION CONTROL DETAILS (TEMPORARY DRAINAGE INLET PROTECTION)

NO SCALE

NSP T62 DATED AUGUST 15, 2008 SUPPLEMENTS THE STANDARD PLANS BOOK DATED MAY 2006.

NEW STANDARD PLAN NSP T62

2006 NEW STANDARD PLAN NSP T62

7-11-08

DIST	COUNTY	ROUTE	POST MILES TOTAL PROJECT	SHEET NO.	TOTAL SHEETS
04	SCI,SM	35	0.0/21.0	19	20

LICENSED LANDSCAPE ARCHITECT

August 15, 2008
PLANS APPROVAL DATE

LICENSED LANDSCAPE ARCHITECT Robert B. Schott 3635 Signature 11-04-08 Renewal Date 08-11-08 Date STATE OF CALIFORNIA

The State of California or its officers or agents shall not be responsible for the accuracy or completeness of electronic copies of this plan sheet.

To accompany plans dated 1-9-12

FLEXIBLE SEDIMENT BARRIER SPACING TABLE

SLOPE OF ROADWAY (PERCENT)	0 to 0.9	1 to 1.9	2 to 2.9	3 to 4	5+
INTERVAL BETWEEN BARRIERS	50′	35′	30′	25′	20′
ANGLE FROM FACE OF CURB	70°	70°	70°	45°	45°
SUGGESTED BARRIER LENGTH	6′	6′	6′	6′	6′

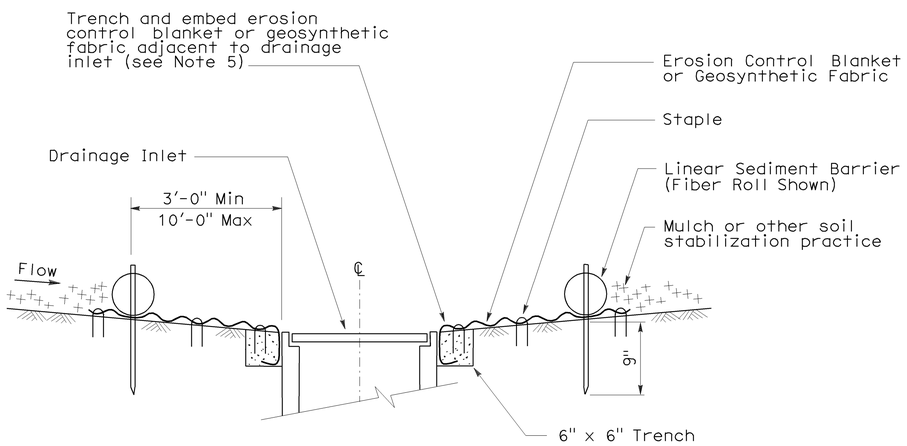

SECTION A-A

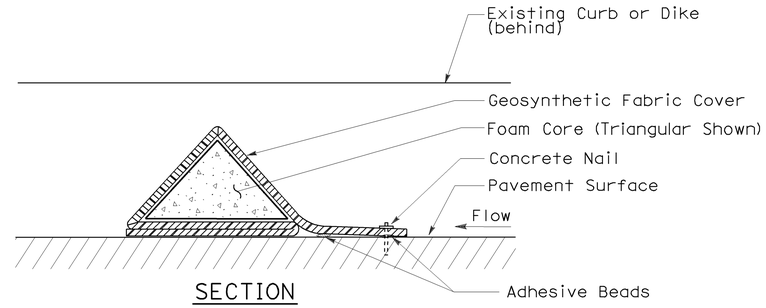

SECTION

FLEXIBLE SEDIMENT BARRIER DETAIL (FOAM BARRIER SHOWN)

NOTES:

1. See Standard Plan T51 for Temporary Silt Fence.
2. Dimensions may vary to fit field conditions.
3. Install a minimum of 3 flexible sediment barriers upstream of each drainage inlet to be protected.
4. Position erosion control blanket or geosynthetic fabric at edge of concrete apron and secure in trench.
5. Erosion control blanket or geosynthetic fabric is not required if the area adjacent to the drainage inlet is vegetated.

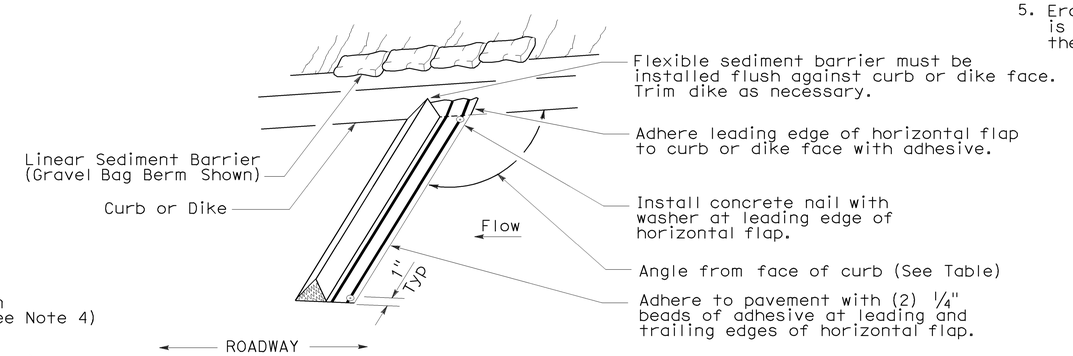

PERSPECTIVE

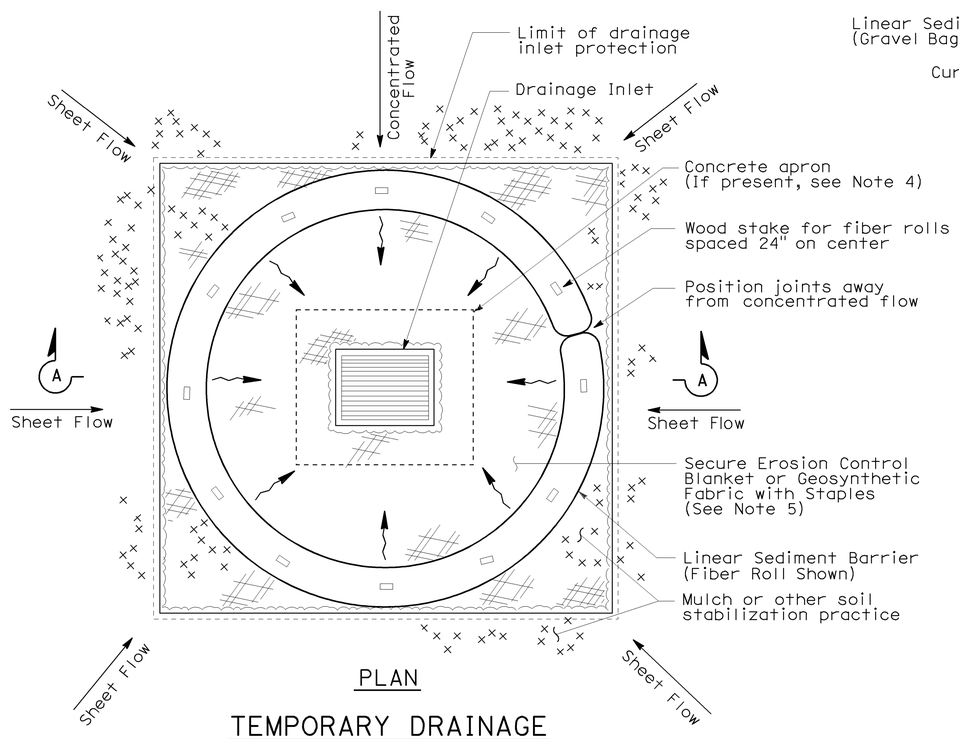

PLAN

TEMPORARY DRAINAGE INLET PROTECTION (TYPE 4A)

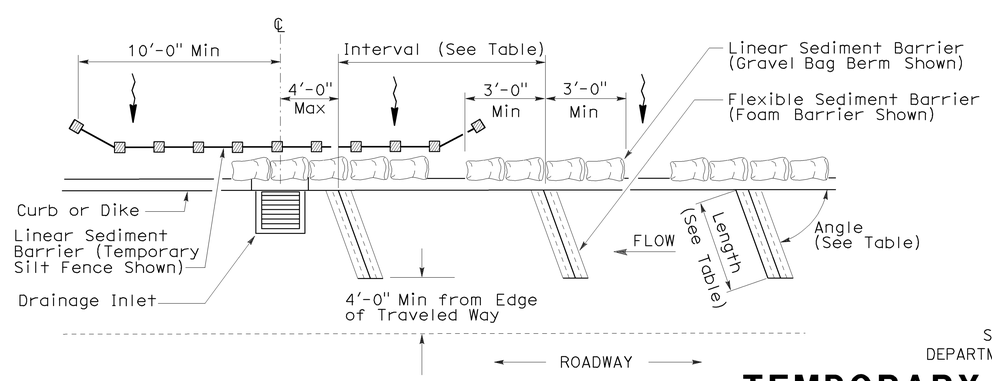

PLAN

TEMPORARY DRAINAGE INLET PROTECTION (TYPE 4B) FLEXIBLE SEDIMENT BARRIER

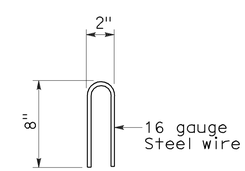

STAPLE DETAIL

STATE OF CALIFORNIA
DEPARTMENT OF TRANSPORTATION

TEMPORARY WATER POLLUTION CONTROL DETAILS (TEMPORARY DRAINAGE INLET PROTECTION)

NO SCALE

NSP T63 DATED AUGUST 15, 2008 SUPPLEMENTS THE STANDARD PLANS BOOK DATED MAY 2006.

NEW STANDARD PLAN NSP T63

2006 NEW STANDARD PLAN NSP T63

7-11-08

DIST	COUNTY	ROUTE	POST MILES TOTAL PROJECT	SHEET NO.	TOTAL SHEETS
04	SCI,SM	35	0.0/21.0	20	20

LICENSED LANDSCAPE ARCHITECT

August 15, 2008
PLANS APPROVAL DATE

LICENSED LANDSCAPE ARCHITECT
Robert B. Schott 3635
Signature
11-04-08
Renewal Date
08-11-08
Date
STATE OF CALIFORNIA

The State of California or its officers or agents shall not be responsible for the accuracy or completeness of electronic copies of this plan sheet.

To accompany plans dated 1-9-12

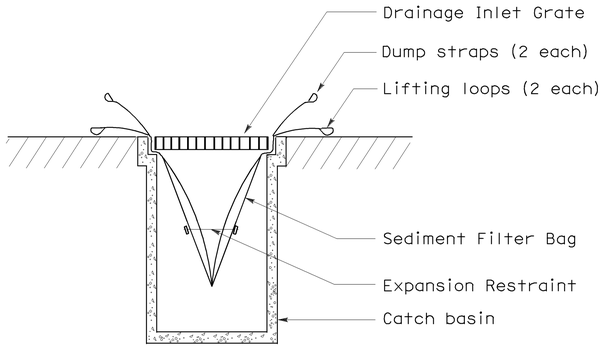

SECTION B-B

SEDIMENT FILTER BAG DETAIL

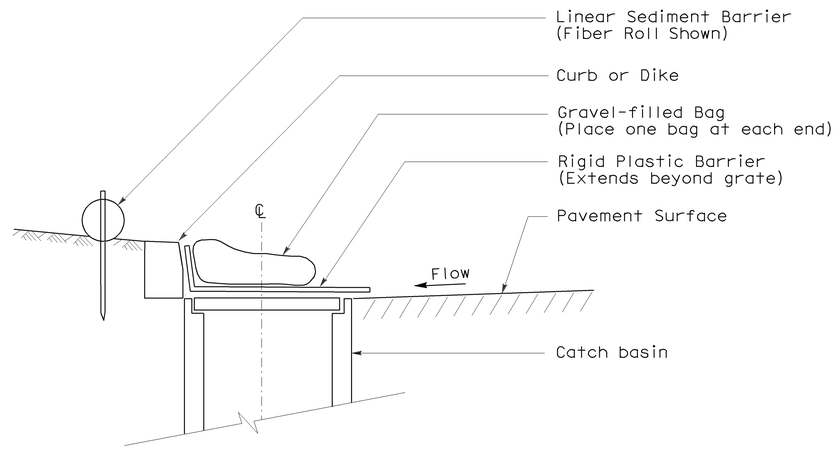

SECTION

TEMPORARY DRAINAGE INLET PROTECTION (TYPE 6A) (CATCH BASIN WITH GRATE)

NOTES:

1. See Standard Plan T51 for Temporary Silt Fence.
2. Dimensions may vary to fit field conditions.

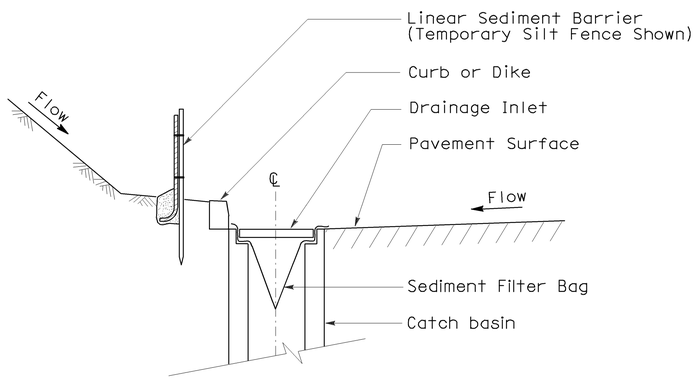

SECTION A-A

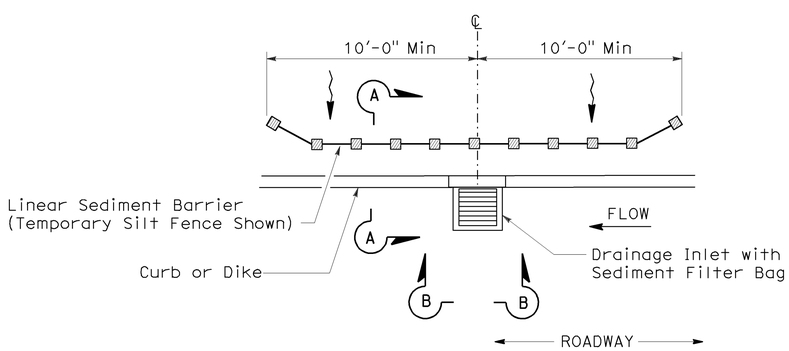

PLAN

TEMPORARY DRAINAGE INLET PROTECTION (TYPE 5) (SEDIMENT FILTER BAG)

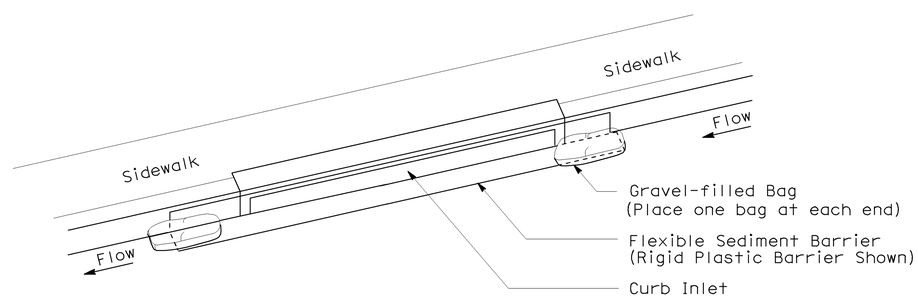

PERSPECTIVE

TEMPORARY DRAINAGE INLET PROTECTION (TYPE 6B) (CURB INLET WITHOUT GRATE)

STATE OF CALIFORNIA
DEPARTMENT OF TRANSPORTATION

TEMPORARY WATER POLLUTION CONTROL DETAILS (TEMPORARY DRAINAGE INLET PROTECTION)

NO SCALE

NSP T64 DATED AUGUST 15, 2008 SUPPLEMENTS
THE STANDARD PLANS BOOK DATED MAY 2006.

NEW STANDARD PLAN NSP T64

2006 NEW STANDARD PLAN NSP T64

7-11-08