DIST	COUNTY	ROUTE	POST MILES TOTAL PROJECT	SHEET No.	TOTAL SHEETS
04	SCI	82,85,87,101 152,237	Var	1	38

STATE OF CALIFORNIA

DEPARTMENT OF TRANSPORTATION

PROJECT PLANS FOR CONSTRUCTION ON

STATE HIGHWAY

IN SANTA CLARA COUNTY

AT VARIOUS LOCATIONS

TO BE SUPPLEMENTED BY STANDARD PLANS DATED 2010

INDEX OF PLANS

SHEET No.	DESCRIPTION
1	TITLE AND LOCATION MAP
2	LOCATIONS OF CONSTRUCTION
3 - 5	CONSTRUCTION DETAILS
6 - 16	CONSRUCTION AREA SIGNS
17	PAVEMENT DELINEATION QUANTITIES
18	SUMMARY OF QUANTITIES
19 & 20	REVISED STANDARD PLANS

STRUCTURE PLANS

21 - 31	GENERAL PLANS
32	TEMPORARY DECKING AND SUPPORT DETAILS
33	EXPANSION JOINT DETAILS AND DECK REPAIR DETAILS
34	JOINT SEAL AND JOINT SEAL ASSEMBLY TABLE AND DETAILS
35	STRUCTURE APPROACH TYPE R(30D)
36 - 38	SPECIAL DESIGN SIGNS

LOCATION MAP

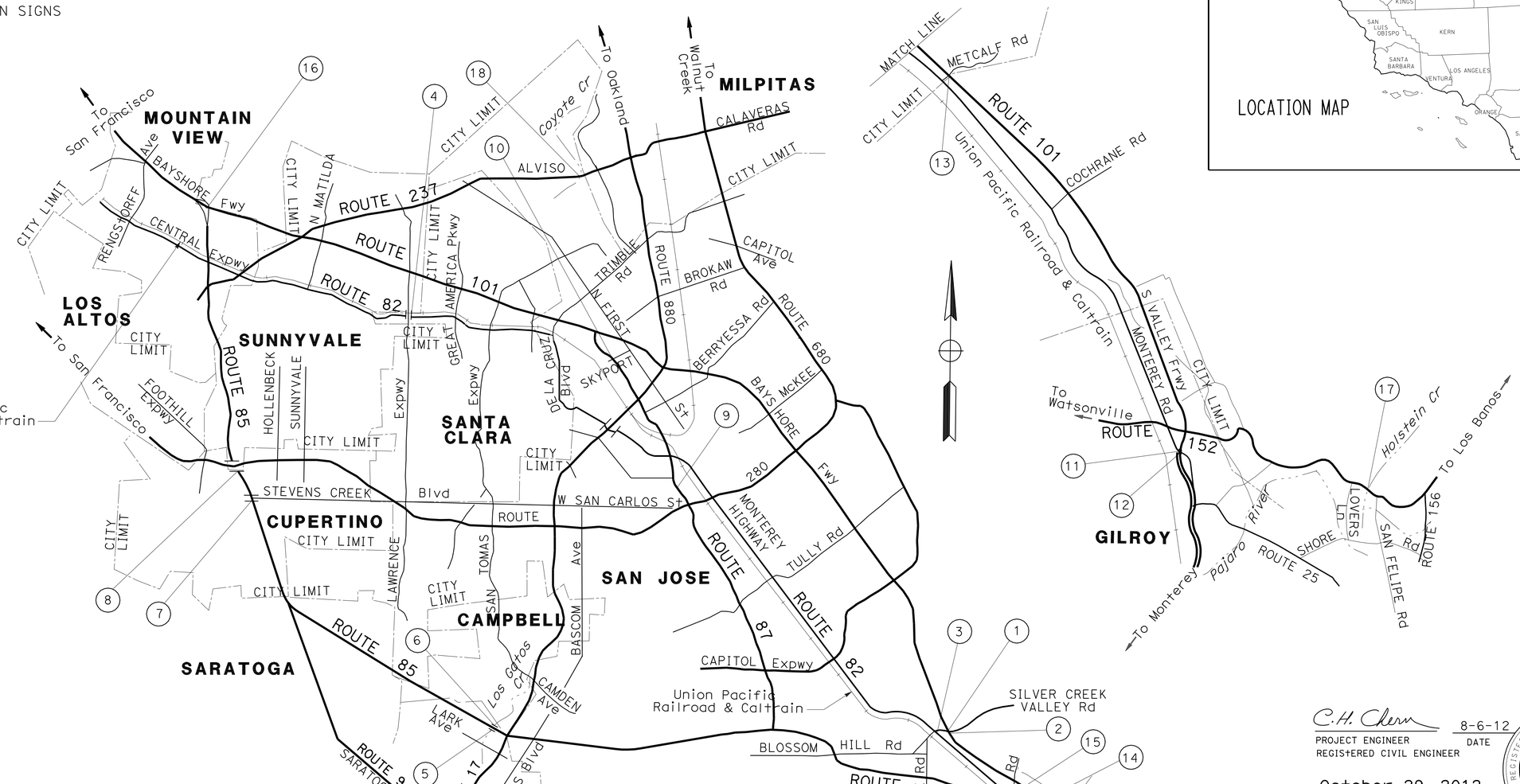

NOTE:
THE TABLE OF LOCATIONS OF CONSTRUCTION IS SHOWN ON THE LOCATIONS OF CONSTRUCTION SHEET.

THE CONTRACTOR SHALL POSSESS THE CLASS (OR CLASSES) OF LICENSE AS SPECIFIED IN THE "NOTICE TO BIDDERS."

NO SCALE

C.H. Chern 8-6-12
PROJECT ENGINEER DATE
REGISTERED CIVIL ENGINEER

October 29, 2012
PLANS APPROVAL DATE

REGISTERED PROFESSIONAL ENGINEER Chuen-Hsiung Chern No. 48187 Exp. 6-30-14 CIVIL STATE OF CALIFORNIA

THE STATE OF CALIFORNIA OR ITS OFFICERS OR AGENTS SHALL NOT BE RESPONSIBLE FOR THE ACCURACY OR COMPLETENESS OF SCANNED COPIES OF THIS PLAN SHEET.

CONTRACT No.	04-2E7104
PROJECT ID	0400021093

PROJECT MANAGER RAMSES SARGISS
DESIGN ENGINEER CHUEN-HSIUNG CHERN

LAST REVISION 09-17-12 DATE PLOTTED => 16-NOV-2012 TIME PLOTTED => 12:52

Dist	COUNTY	ROUTE	POST MILES TOTAL PROJECT	SHEET No.	TOTAL SHEETS
04	SCI	82,85,87,101 152,237	Var	2	38

C.H. Chern 8-6-12
REGISTERED CIVIL ENGINEER DATE

10-29-12
PLANS APPROVAL DATE

REGISTERED PROFESSIONAL ENGINEER Chuen-Hsiung Chern No. 48187 Exp. 6-30-14 CIVIL STATE OF CALIFORNIA

THE STATE OF CALIFORNIA OR ITS OFFICERS OR AGENTS SHALL NOT BE RESPONSIBLE FOR THE ACCURACY OR COMPLETENESS OF SCANNED COPIES OF THIS PLAN SHEET.

LOCATIONS OF CONSTRUCTION

LOCATION	ROUTE	PM	BRIDGE No.	BRIDGE NAME
1	82	R0.01	37-0348R	ROUTE 82/101 SEPARATION
2	82	R0.01	37-0348L	ROUTE 82/101 SEPARATION
3	82	R0.35	37-0345	BLOSSOM HILL ROAD OC
4	82	14.34	37-0337	LAWRENCE EXPRESSWAY OC
5	85	R10.8	37-0491L	LOS GATOS CREEK
6	85	R10.8	37-0491R	LOS GATOS CREEK
7	85	R17.7	37-0466	STEVENS CREEK Blvd OC
8	85	R18.41	37-0227	ROUTE 85/280 SEPARATION
9	87	5.67	37-0308	GUADALUPE RIVER VIADUCT
10	87	8.25	37-0605	SKYPORT DRIVE UC
11	101	R4.94	37-0304L	MONTEREY ROAD UC
12	101	R4.94	37-0304R	MONTEREY ROAD UC
13	101	R25.31	37-0339	METCALF ROAD OC
14	101	R26.6	37-0346G	COYOTE CREEK
15	101	R26.78	37-0548G	N101-N85/101 CONNECTOR SEPARATION
16	101	48.28	37-0547K	SB 101 ON-RAMP/S101-S85 SEPARATION
17	152	R19.32	37-0028	HOLSTEIN CREEK
18	237	8.72	37-0084K	COYOTE CREEK

LOCATIONS OF CONSTRUCTION

LC-1

STATE OF CALIFORNIA - DEPARTMENT OF TRANSPORTATION
Caltrans DESIGN
FUNCTIONAL SUPERVISOR NGOC TRAN
CALCULATED-DESIGNED BY CHUEN-HSIUNG CHERN
CHECKED BY NGOC TRAN
REVISED BY
DATE REVISED

LAST REVISION 06-25-12
DATE PLOTTED => 16-NOV-2012
TIME PLOTTED => 12:52

Dist	COUNTY	ROUTE	POST MILES TOTAL PROJECT	SHEET No.	TOTAL SHEETS
04	SCI	82,85,87,101 152,237	Var	3	36

C.H. Chern 8-6-12
REGISTERED CIVIL ENGINEER DATE

10-29-12
PLANS APPROVAL DATE

REGISTERED PROFESSIONAL ENGINEER Chuen-Hsiung Chern No. 48187 Exp. 6-30-14 CIVIL STATE OF CALIFORNIA

THE STATE OF CALIFORNIA OR ITS OFFICERS OR AGENTS SHALL NOT BE RESPONSIBLE FOR THE ACCURACY OR COMPLETENESS OF SCANNED COPIES OF THIS PLAN SHEET.

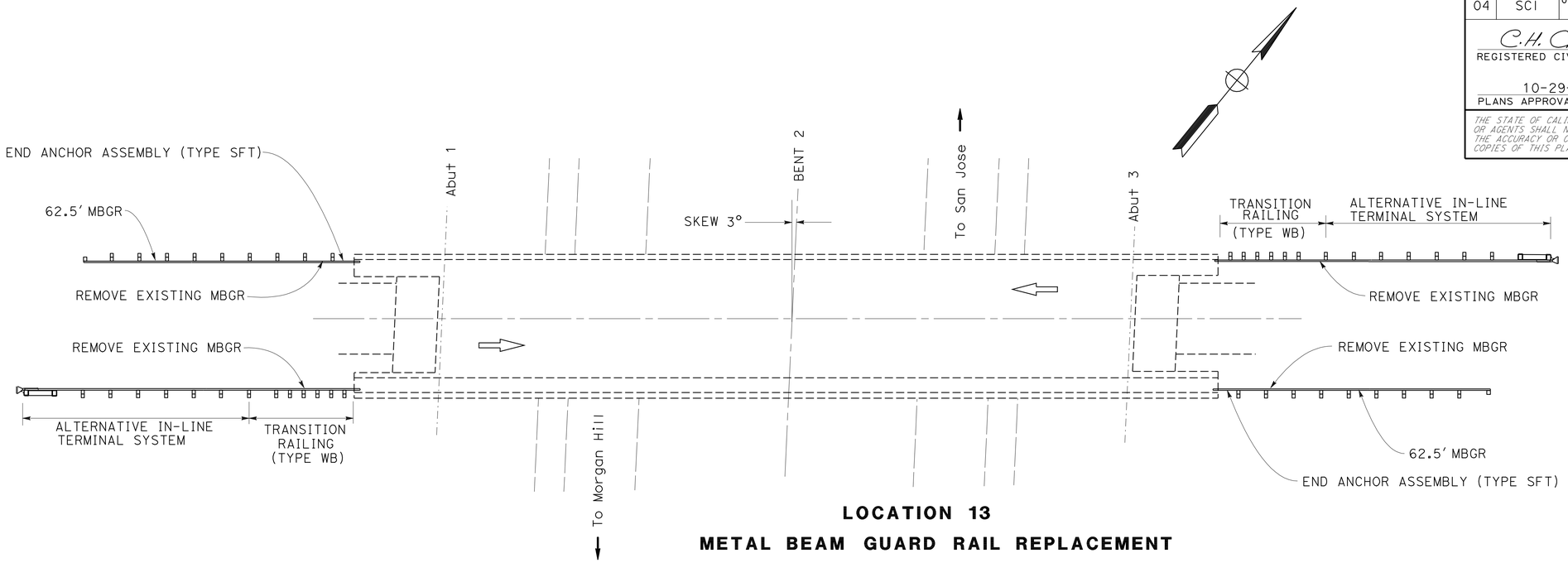

LOCATION 13

METAL BEAM GUARD RAIL REPLACEMENT

AT METCALF ROAD OVERCROSSING

BRIDGE No. 37-0339, ROUTE 101, PM R25.31

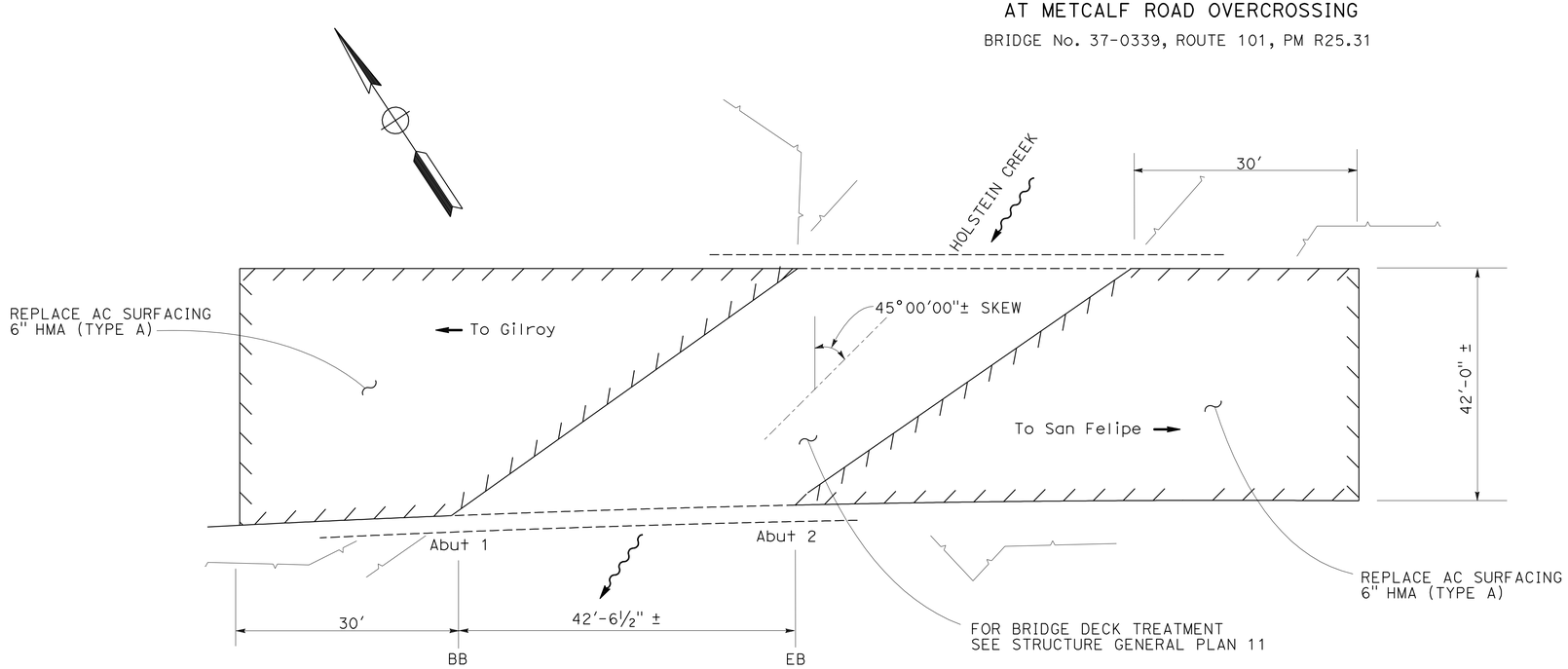

LOCATION 17

PAVING DETAILS

AT HOLSTEIN CREEK

BRIDGE No. 37-0028, ROUTE 152, PM R19.32

LEGEND:

- REPLACE AC SURFACING
- EXISTING STRUCTURE
- TRAFFIC FLOW DIRECTION

CONSTRUCTION DETAILS

NO SCALE

C-1

STATE OF CALIFORNIA - DEPARTMENT OF TRANSPORTATION
Caltrans
DESIGN

FUNCTIONAL SUPERVISOR: NGOC TRAN
CALCULATED-DESIGNED BY: CHUEN-HSIUNG CHERN
CHECKED BY: NGOC TRAN
REVISED BY
DATE REVISED

LAST REVISION 09-26-12
DATE PLOTTED => 16-NOV-2012
TIME PLOTTED => 12:52

Dist	COUNTY	ROUTE	POST MILES TOTAL PROJECT	SHEET No.	TOTAL SHEETS
04	SCI	82,85,87,101 152,237	Var	4	36

C.H. Chern 8-6-12
REGISTERED CIVIL ENGINEER DATE

10-29-12
PLANS APPROVAL DATE

REGISTERED PROFESSIONAL ENGINEER Chuen-Hsiung Chern No. 48187 Exp. 6-30-14 CIVIL STATE OF CALIFORNIA

THE STATE OF CALIFORNIA OR ITS OFFICERS OR AGENTS SHALL NOT BE RESPONSIBLE FOR THE ACCURACY OR COMPLETENESS OF SCANNED COPIES OF THIS PLAN SHEET.

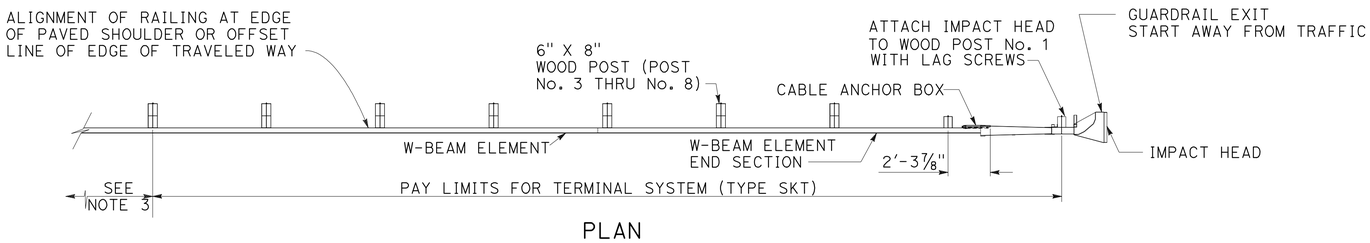

PLAN

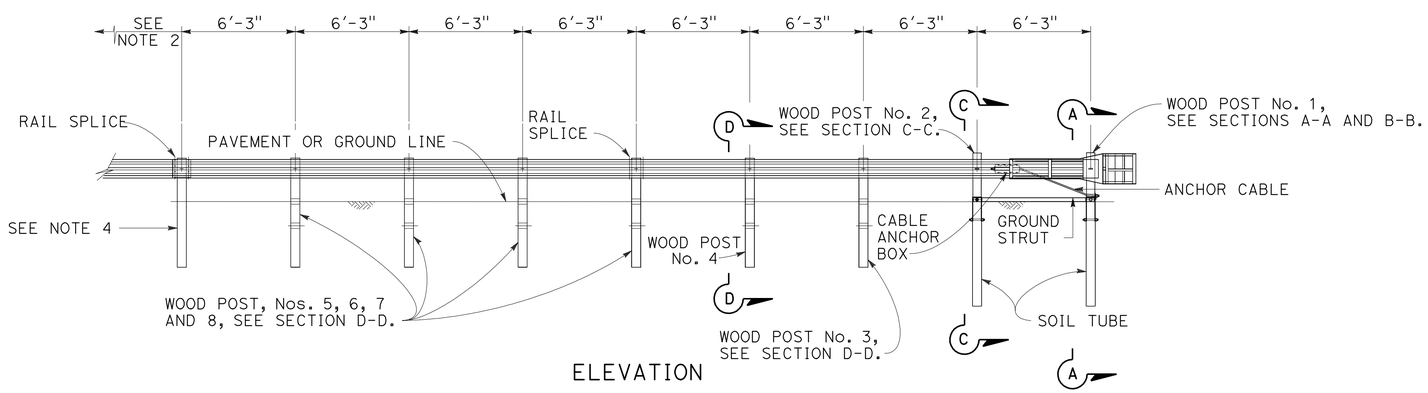

ELEVATION

TERMINAL SYSTEM (TYPE SKT)

NOTES:

1. FOR ADDITIONAL DETAILS OF TERMINAL SYSTEM (TYPE SKT), REFER TO THE MANUFACTURER'S INSTALLATION INSTRUCTIONS.
2. TERMINAL SYSTEM (TYPE SKT) MUST BE CONSTRUCTED SO THAT THE FULL LENGTH OF THE TERMINAL SYSTEM GUARD RAILING IS IN STRAIGHT ALIGNMENT.
3. FOR THE LENGTH AND TYPE OF METAL BEAM GUARD RAILING, THE TERMINAL SYSTEM IS ATTACHED TO, SEE PROJECT PLANS. FOR TYPICAL USE OF THIS TERMINAL SYSTEM WITH GUARD RAILING, SEE STANDARD PLAN A77F1.
4. ATTACH RAIL ELEMENT TO THIS POST AND BLOCK. PAYMENT FOR THIS POST, BLOCK AND HARDWARE IS INCLUDED IN PAYMENT FOR THE TYPE OF RAILING THE TERMINAL SYSTEM IS ATTACHED TO, NOT PART OF PAYMENT FOR TERMINAL SYSTEM (TYPE SKT).

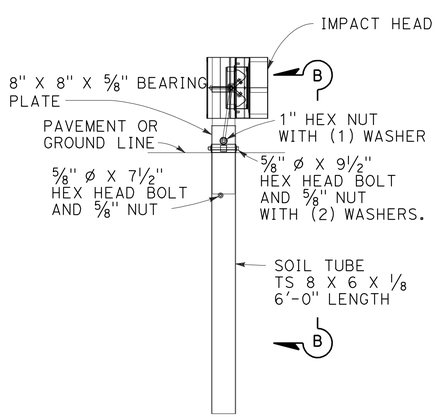

SECTION A-A
AT POST No. 1

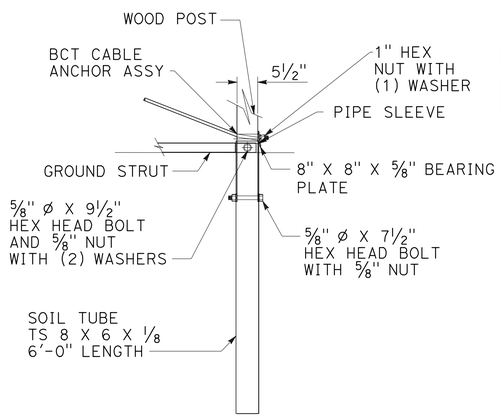

SECTION B-B
PARTIAL VIEW POST No. 1

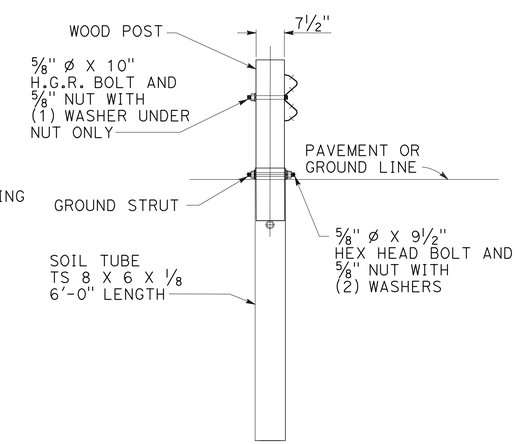

SECTION C-C
AT POST No. 2

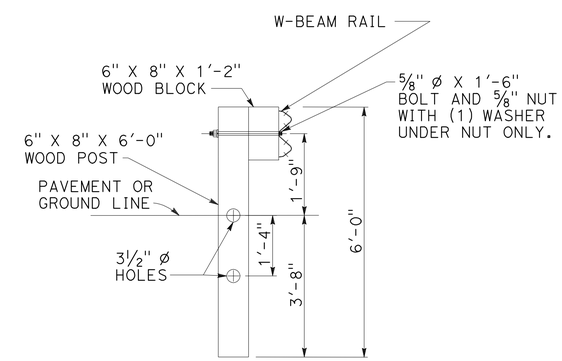

SECTION D-D
POST No. 3 THROUGH No. 8

CONSTRUCTION DETAILS
METAL BEAM RAILING TERMINAL SYSTEM (TYPE SKT)

NO SCALE

C-2

STATE OF CALIFORNIA - DEPARTMENT OF TRANSPORTATION
Caltrans® DESIGN

FUNCTIONAL SUPERVISOR: NGOC TRAN
CALCULATED-DESIGNED BY: CHUEN-HSIUNG CHERN
CHECKED BY: NGOC TRAN
REVISED BY
DATE REVISED

LAST REVISION 09-19-12
DATE PLOTTED => 16-NOV-2012
TIME PLOTTED => 12:52

Dist	COUNTY	ROUTE	POST MILES TOTAL PROJECT	SHEET No.	TOTAL SHEETS
04	SCI	82,85,87,101 152,237	Var	5	38

C.H. Chern 8-6-12
REGISTERED CIVIL ENGINEER DATE

10-29-12
PLANS APPROVAL DATE

REGISTERED PROFESSIONAL ENGINEER Chuen-Hsiung Chern No. 48187 Exp. 6-30-14 CIVIL STATE OF CALIFORNIA

THE STATE OF CALIFORNIA OR ITS OFFICERS OR AGENTS SHALL NOT BE RESPONSIBLE FOR THE ACCURACY OR COMPLETENESS OF SCANNED COPIES OF THIS PLAN SHEET.

NOTES:

1. FOR ADDITIONAL DETAILS OF TERMINAL SYSTEM (TYPE ET), REFER TO THE MANUFACTURER'S INSTALLATION INSTRUCTIONS.
2. TERMINAL SYSTEM (TYPE ET) MUST BE CONSTRUCTED SO THAT THE FULL LENGTH OF THE TERMINAL SYSTEM GUARD RAILING IS IN STRAIGHT ALIGNMENT. THE GUARD RAIL EXTRUDER HEAD OF THE TERMINAL SYSTEM SHALL NOT ENCROACH UPON THE ADJACENT PAVED SHOULDER OR LANE.
3. SLIDE GUARD RAIL EXTRUDER OVER THE END OF THE RAIL ELEMENT AND ATTACH TO POST No. 1 WITH LAG SCREWS. DO NOT BOLT RAIL ELEMENT TO POST. GUARD RAIL EXTRUDER ATTACHMENT BRACKETS HAVE 3 HOLES IN EACH BRACKET TO PROVIDE TOLERANCE ADJUSTMENT. USE THE HOLES IN THE BRACKET CLOSEST TO CENTER OF POST No.1. DRILL 1/4" PILOT HOLES TO ACCOMMODATE LAG SCREWS.
4. ATTACH STRUT TO POST Nos. 1 AND 2 FOUNDATION TUBES WITH HEX HEAD BOLTS, WASHERS AND HEX NUTS. BOLTS EXTEND THROUGH THE STRUT, STEEL FOUNDATION TUBE, AND WOOD POSTS. CHANNEL SIDE OF STRUT TO FACE DOWNWARD.
5. FOR LENGTH AND TYPE OF METAL BEAM GUARD RAILING THE TERMINAL SYSTEM IS ATTACHED TO, SEE PROJECT PLANS. FOR TYPICAL USE OF THIS TERMINAL SYSTEM, SEE THE STANDARD PLAN A77F1.
6. ATTACH RAIL ELEMENT TO THIS POST AND BLOCK, PAYMENT FOR THIS POST, BLOCK AND HARDWARE INCLUDED IN PAYMENT FOR THE TYPE OF RAILING THE TERMINAL SYSTEM IS ATTACHED TO, NOT PART OF THE PAYMENT FOR TERMINAL SYSTEM (TYPE ET).
7. YELLOW RETROREFLECTIVE SHEETING, AS PROVIDED BY TERMINAL SYSTEM (TYPE ET) MANUFACTURER, SHALL BE ADHERED TO THE FACE OF EXTRUDER HEAD. THE SHEETING SHALL BE CONSISTENT WITH THE DESIGN PATTERN AND COLORS OF A TYPE P OBJECT MARKER PANEL.
8. ATTACH RAIL TO POST No.2 (NO WOOD BLOCK) IN SAME MANNER SHOWN IN SECTION A-A. DO NOT BOLT RAIL TO POST No. 1, SEE NOTE 3.
9. A CONTINUOUS RAIL ELEMENT SECTION BETWEEN POST Nos. 1 TO 5 (NO INTERMEDIATE RAIL SPLICES) MAY CONTINUE TO BE USED IN EXISTING INSTALLATIONS. NEW INSTALLATIONS SHALL BE CONSTRUCTED AS SHOWN WITH TWO RAIL ELEMENT SECTIONS BETWEEN POST Nos. 1 AND 5.
10. A 6'-0" LENGTH STEEL FOUNDATION TUBE, TS 8 x 6 x 3/16", WITHOUT SOIL PLATE, MAY BE USED IN PLACE OF THE 4'-6" LENGTH STEEL FOUNDATION TUBE AND SOIL PLATE SHOWN. MINIMUM EMBEDMENT OF THE 6'-0" LENGTH TUBE SHALL BE 5'-9". A 5/8 Ø HEX HEAD BOLT AND NUTS SHALL BE INSTALLED IN THE HOLE IN THE 6'-0" LENGTH TUBE TO KEEP THE WOOD POST FROM DROPPING INTO THE TUBE.

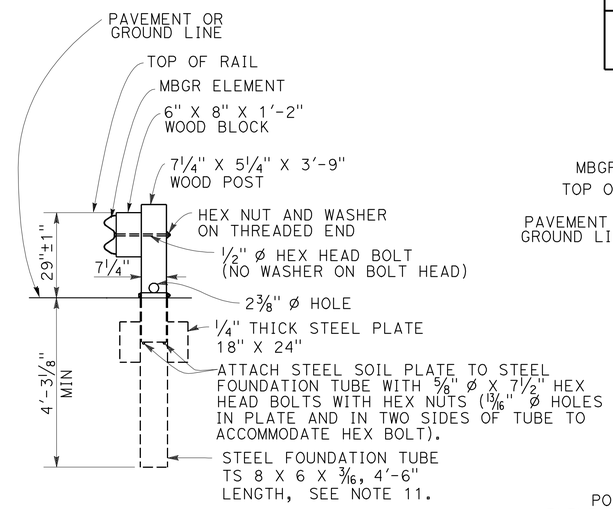

SECTION A-A

SOIL PLATE AND WOOD POST ATTACHMENT TO STEEL FOUNDATION TUBE SIMILAR FOR POST Nos. 1, 2 AND 4. WOOD BLOCKS NOT USED WITH POST Nos. 1 AND 2. SEE NOTE 8.

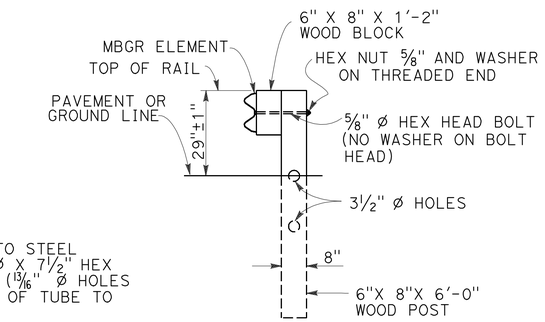

SECTION B-B

POST Nos. 5, 7 AND 8 SIMILAR EXCEPT RAIL ELEMENTS ARE NOT ATTACHED TO POST Nos. 5 AND 7

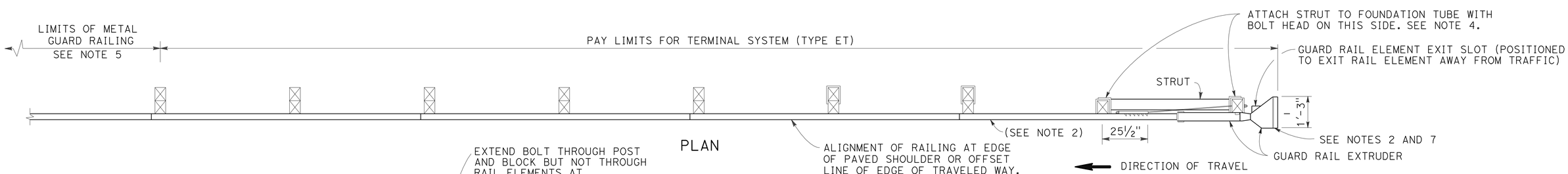

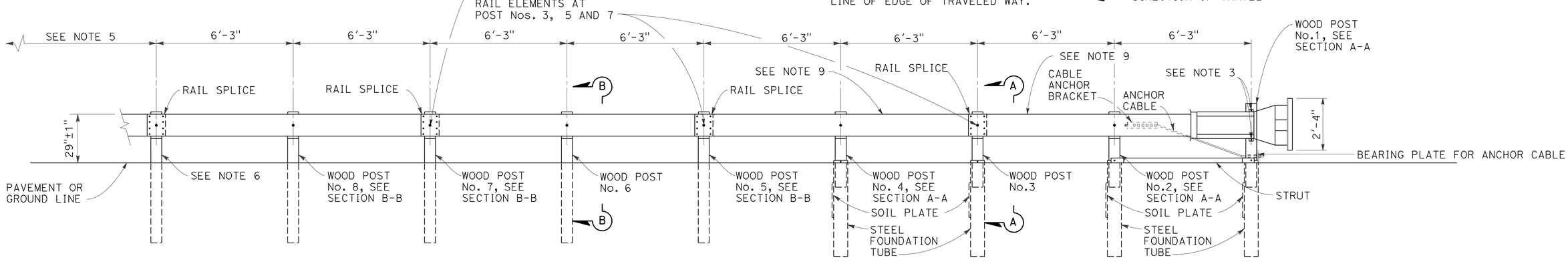

ELEVATION

TERMINAL SYSTEM (TYPE ET)

(TYPE ET PLUS SHOWN)
SEE NOTES 9 AND 10

CONSTRUCTION DETAILS

METAL BEAM RAILING TERMINAL SYSTEM (TYPE ET)

NO SCALE

C-3

STATE OF CALIFORNIA - DEPARTMENT OF TRANSPORTATION
Caltrans® DESIGN
FUNCTIONAL SUPERVISOR: NGOC TRAN
CALCULATED-DESIGNED BY: CHUEN-HSIUNG CHERN
CHECKED BY: NGOC TRAN
REVISED BY
DATE REVISED

LAST REVISION 10-16-12
DATE PLOTTED => 16-NOV-2012
TIME PLOTTED => 12:52

Dist	COUNTY	ROUTE	POST MILES TOTAL PROJECT	SHEET No.	TOTAL SHEETS
04	SCI	82,85,87,101 152,237	Var	6	38

REGISTERED CIVIL ENGINEER 8-6-12 DATE

10-29-12
PLANS APPROVAL DATE

REGISTERED PROFESSIONAL ENGINEER Jerilyn L. Struven No. 49964 Exp. 12-31-12 CIVIL STATE OF CALIFORNIA

THE STATE OF CALIFORNIA OR ITS OFFICERS OR AGENTS SHALL NOT BE RESPONSIBLE FOR THE ACCURACY OR COMPLETENESS OF SCANNED COPIES OF THIS PLAN SHEET.

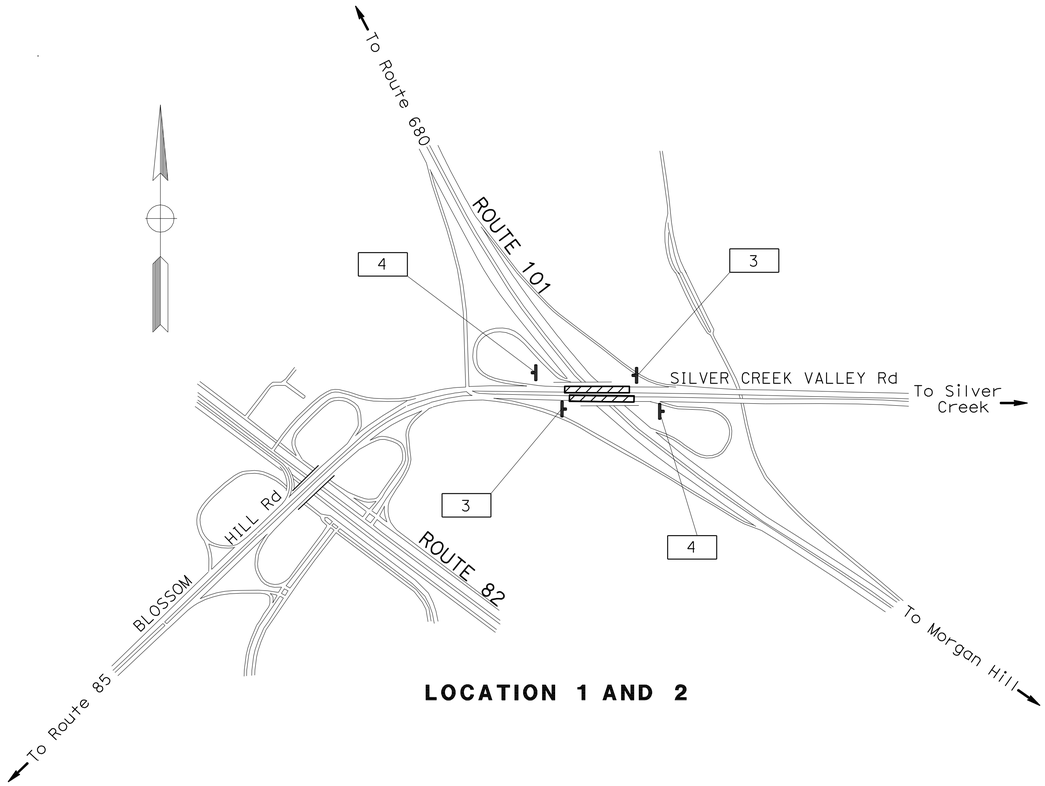

LOCATION 1 AND 2

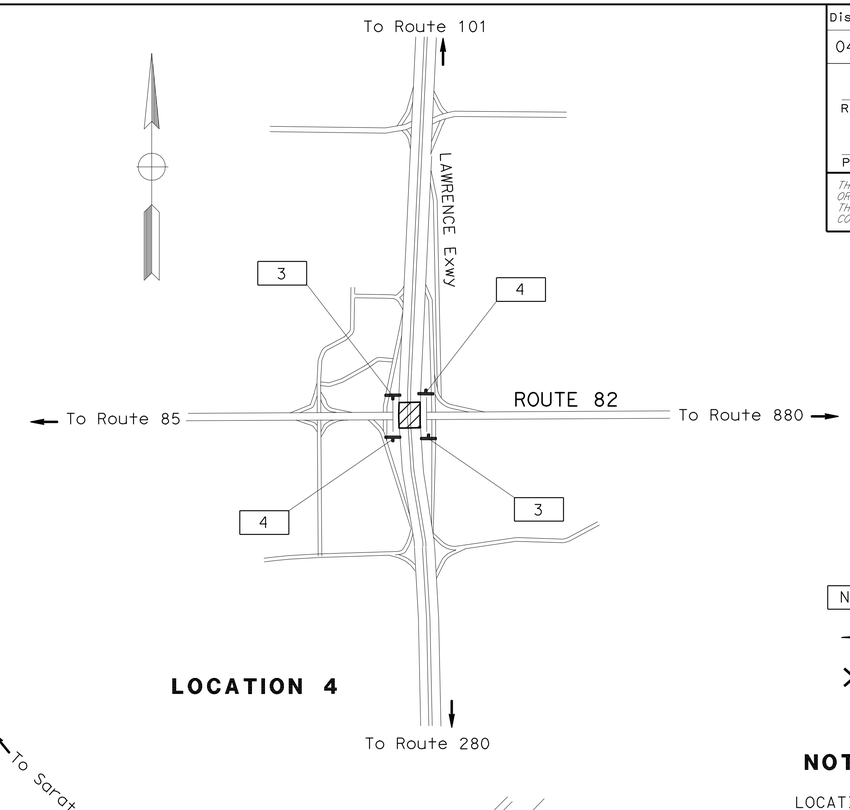

LOCATION 4

LEGEND:

No.	CONSTRUCTION AREA SIGN NUMBER
→	TRAFFIC DIRECTION
✕	RAMP CLOSED

NOTE:

LOCATION OF CONSTRUCTION AREA SIGNS ARE APPROXIMATE. EXACT LOCATION AND POSITION OF SIGN TO BE DETERMINED BY THE ENGINEER.

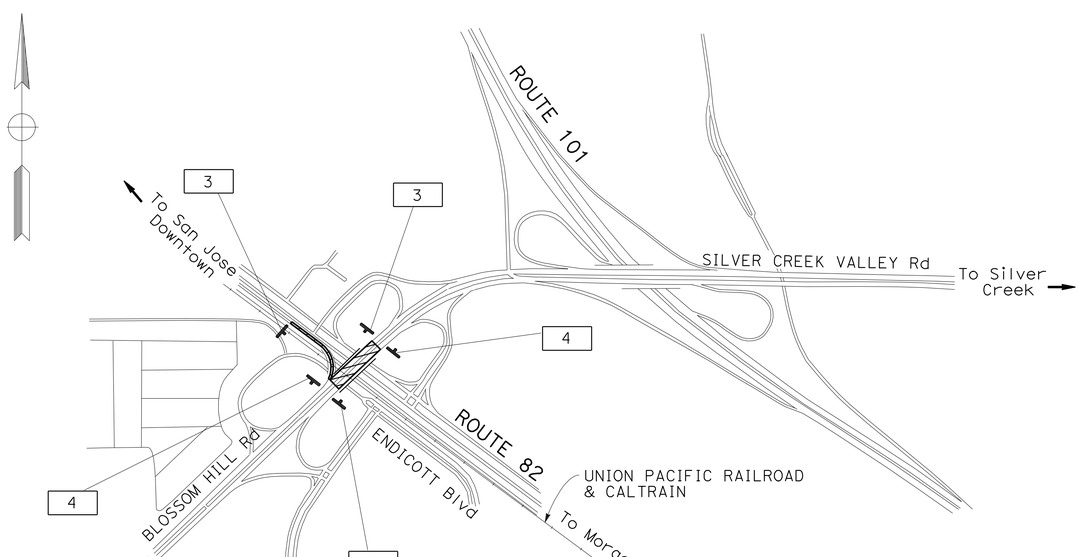

LOCATION 3

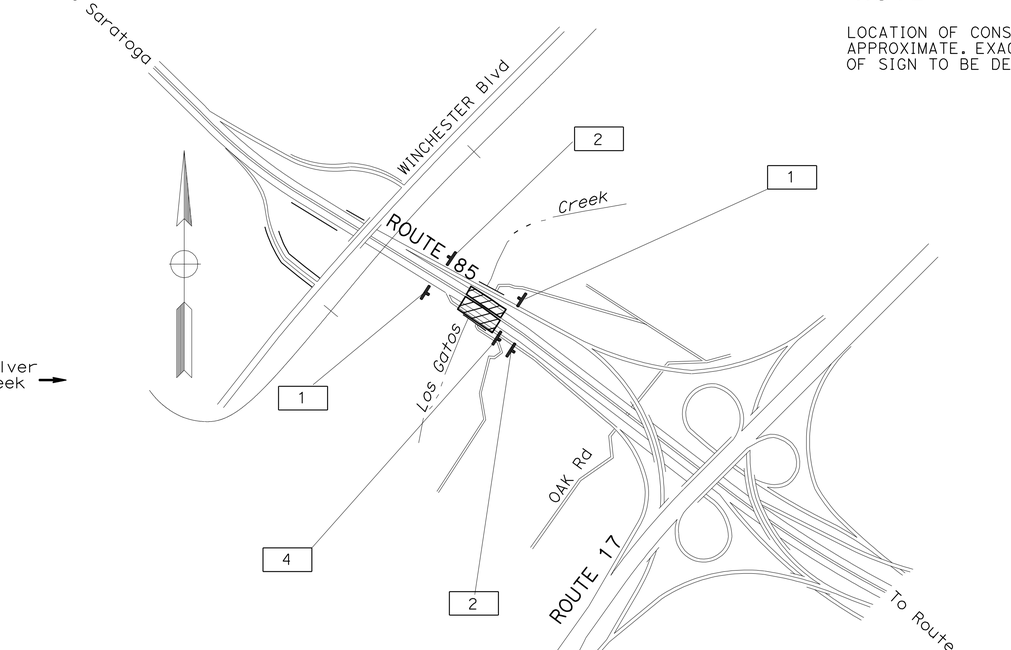

LOCATION 5 AND 6

CONSTRUCTION AREA SIGNS

NO SCALE

APPROVED FOR CONSTRUCTION AREA SIGN WORK ONLY

CS-1

STATE OF CALIFORNIA - DEPARTMENT OF TRANSPORTATION

Caltrans

TRAFFIC

FUNCTIONAL SUPERVISOR: ROLAND AU-YEUNG

CALCULATED-DESIGNED BY: ROY YUAN

CHECKED BY: JERILYN STRUVEN

REVISED BY: RY

DATE REVISED:

LAST REVISION 09-26-12

DATE PLOTTED => 16-NOV-2012
TIME PLOTTED => 12:52

Dist	COUNTY	ROUTE	POST MILES TOTAL PROJECT	SHEET No.	TOTAL SHEETS
04	SCI	82,85,87,101 152,237	Var	7	38

REGISTERED CIVIL ENGINEER 8-6-12 DATE

10-29-12
PLANS APPROVAL DATE

REGISTERED PROFESSIONAL ENGINEER Jerilyn L. Struven No. 49964 Exp. 12-31-12 CIVIL STATE OF CALIFORNIA

THE STATE OF CALIFORNIA OR ITS OFFICERS OR AGENTS SHALL NOT BE RESPONSIBLE FOR THE ACCURACY OR COMPLETENESS OF SCANNED COPIES OF THIS PLAN SHEET.

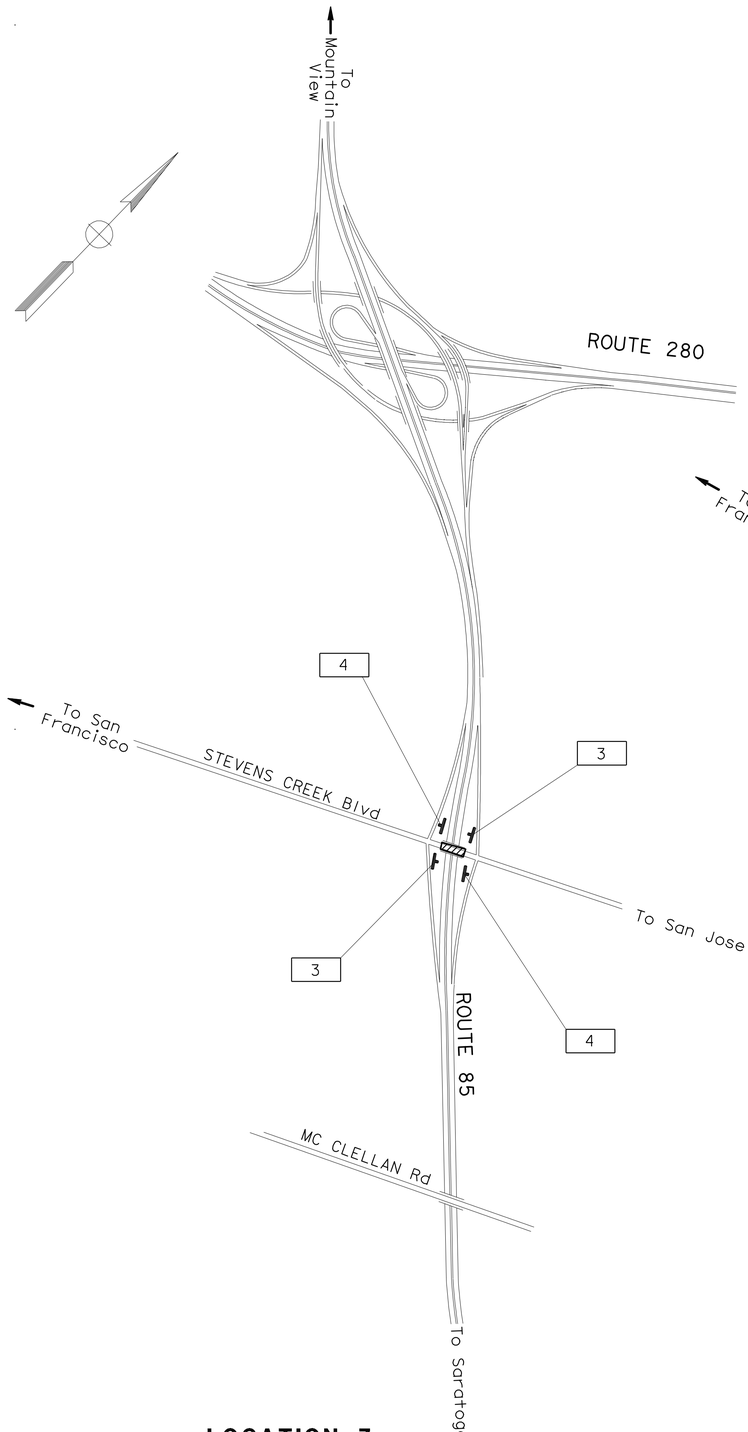

LOCATION 7

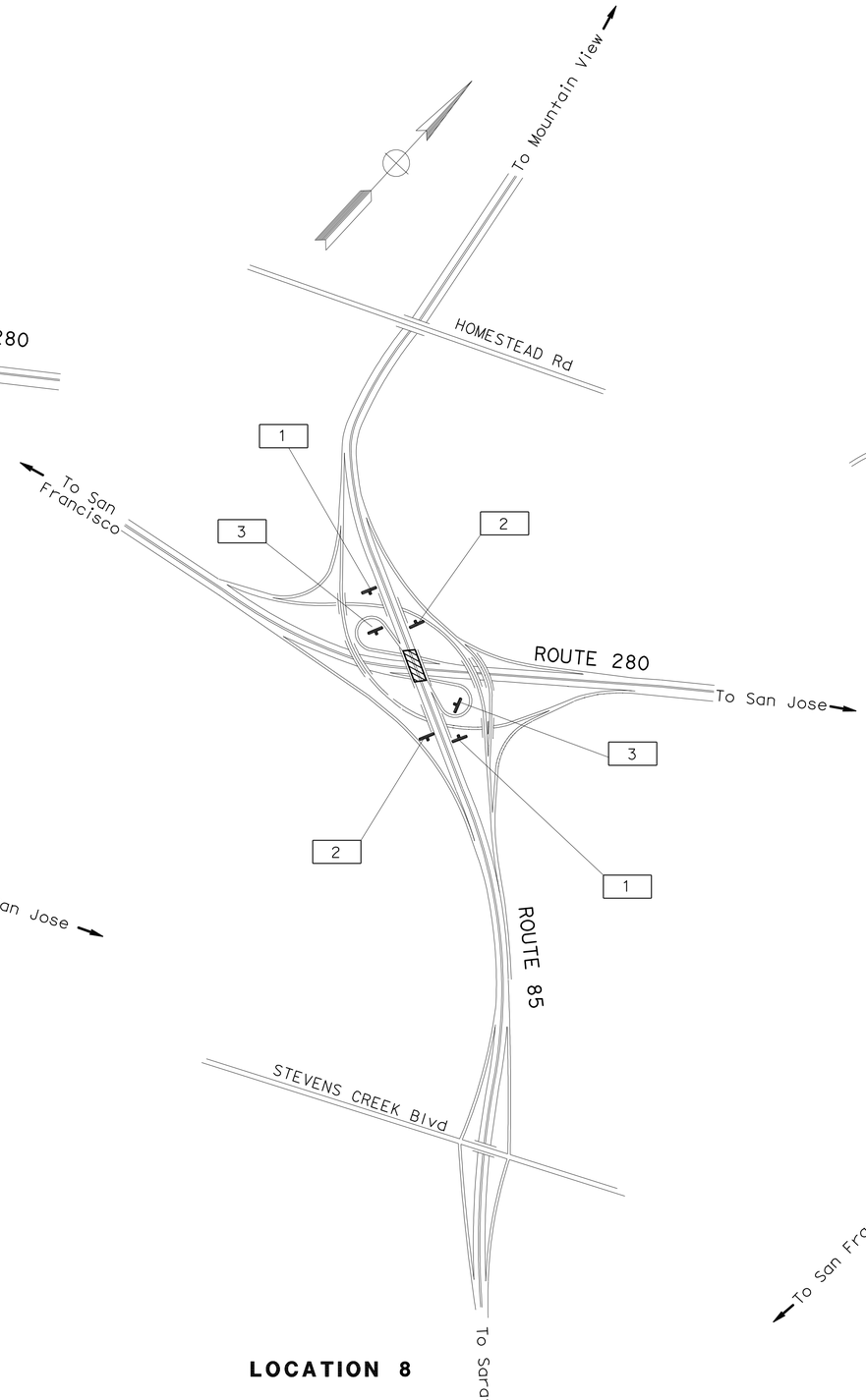

LOCATION 8

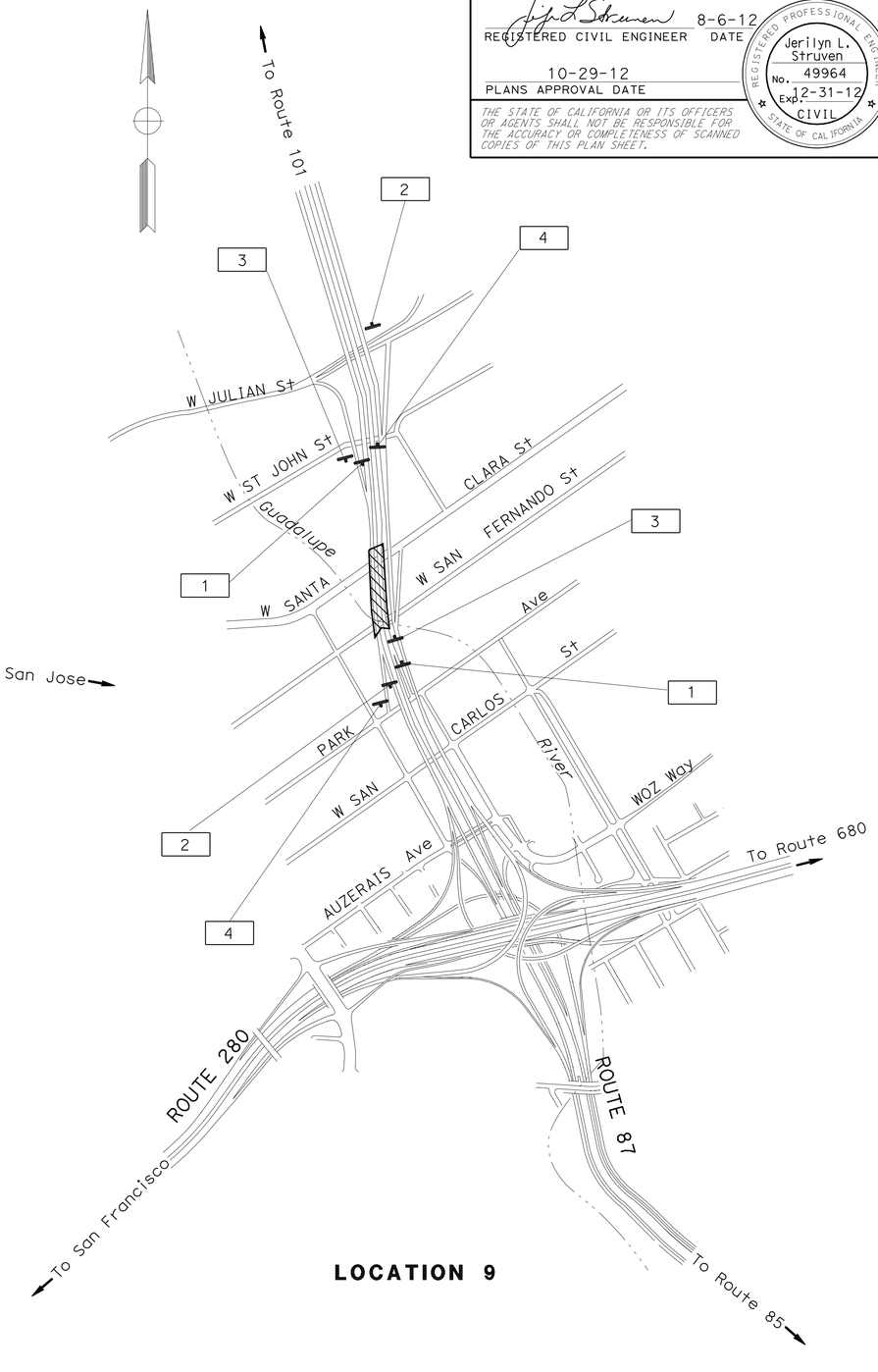

LOCATION 9

APPROVED FOR CONSTRUCTION AREA SIGN WORK ONLY

FOR NOTE AND LEGEND, SEE SHEET CS-1

CONSTRUCTION AREA SIGNS

NO SCALE

CS-2

STATE OF CALIFORNIA - DEPARTMENT OF TRANSPORTATION
Caltrans
TRAFFIC

FUNCTIONAL SUPERVISOR: ROLAND AU-YEUNG
CALCULATED-DESIGNED BY: ROY YUAN
CHECKED BY: JERILYN STRUVEN
REVISED BY: RY
DATE REVISED:

LAST REVISION 04-10-12
DATE PLOTTED => 16-NOV-2012
TIME PLOTTED => 12:52

Dist	COUNTY	ROUTE	POST MILES TOTAL PROJECT	SHEET No.	TOTAL SHEETS
04	SCI	82,85,87,101 152,237	Var	8	38

REGISTERED CIVIL ENGINEER 8-6-12 DATE

10-29-12
PLANS APPROVAL DATE

REGISTERED PROFESSIONAL ENGINEER Jerilyn L. Struven No. 49964 Exp. 12-31-12 CIVIL STATE OF CALIFORNIA

THE STATE OF CALIFORNIA OR ITS OFFICERS OR AGENTS SHALL NOT BE RESPONSIBLE FOR THE ACCURACY OR COMPLETENESS OF SCANNED COPIES OF THIS PLAN SHEET.

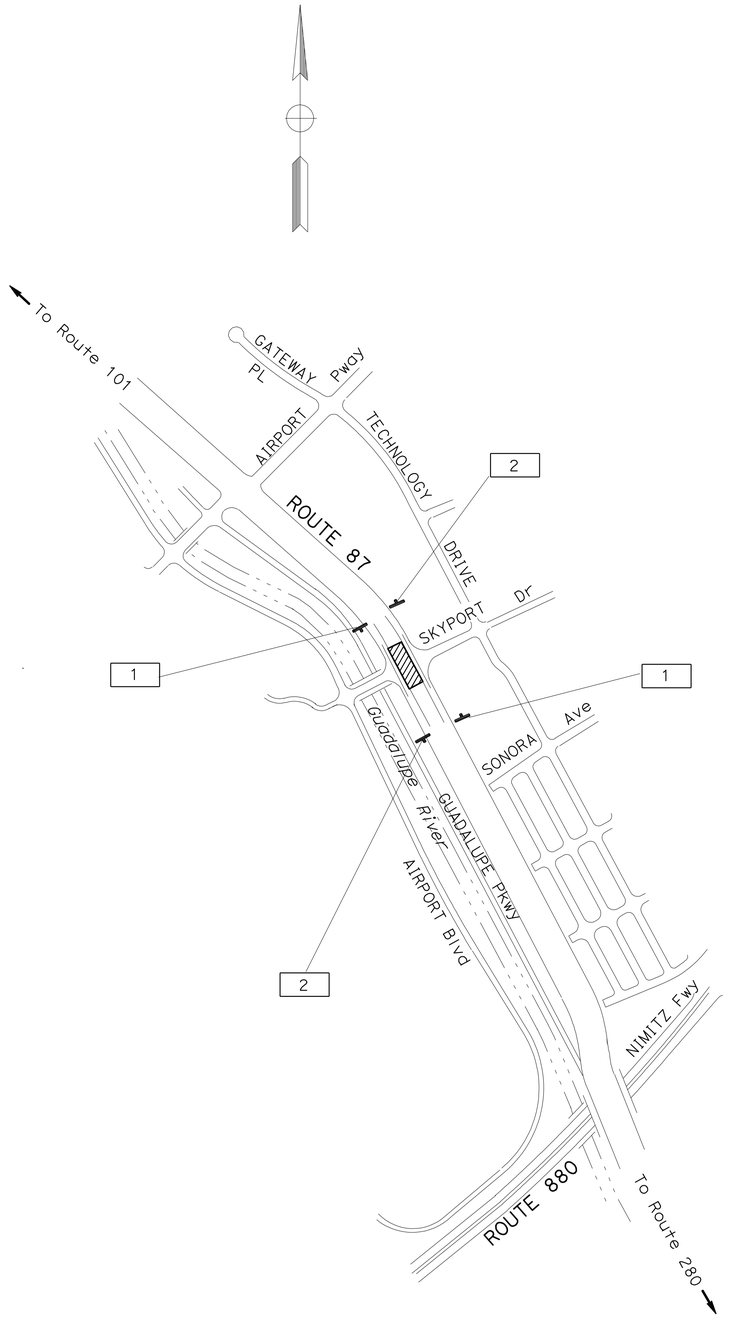

LOCATION 10

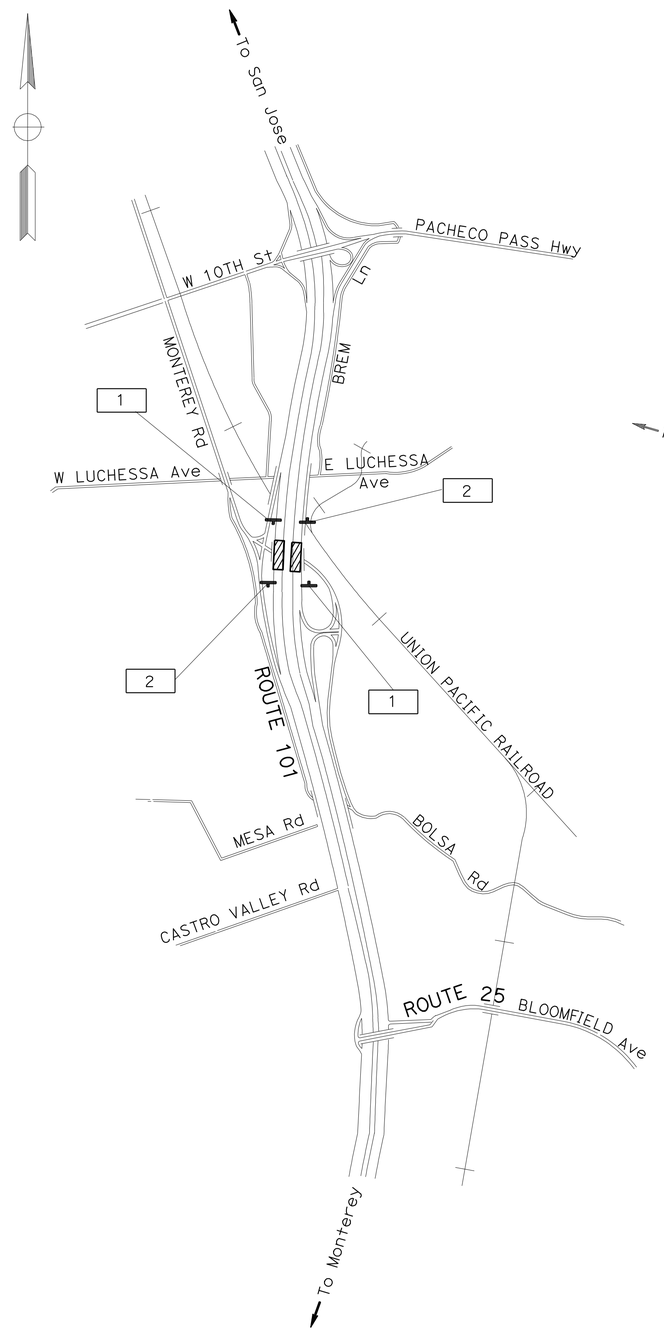

LOCATION 11 AND 12

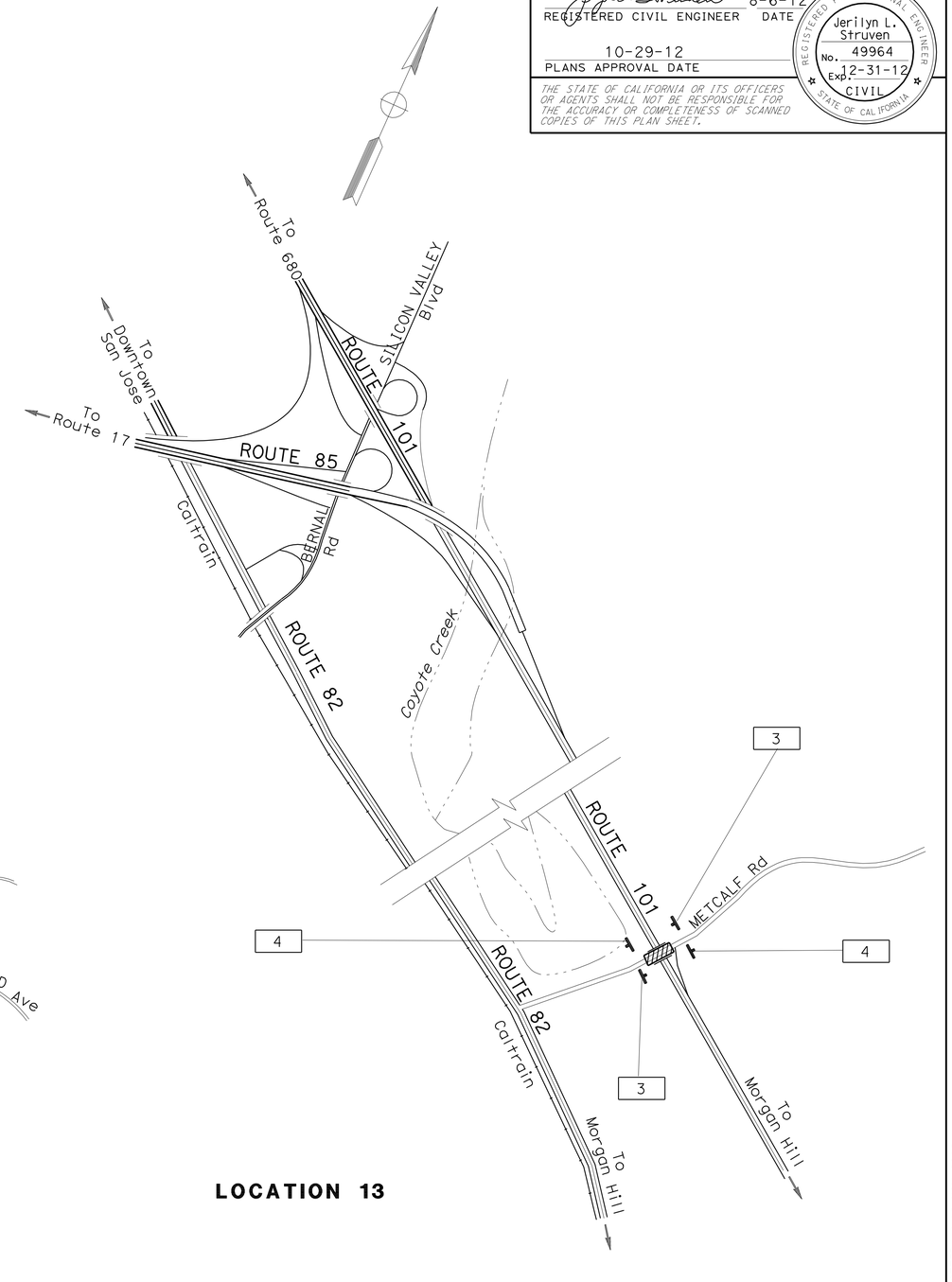

LOCATION 13

CONSTRUCTION AREA SIGNS

NO SCALE

APPROVED FOR CONSTRUCTION AREA SIGN WORK ONLY

FOR NOTE AND LEGEND, SEE SHEET CS-1

CS-3

FUNCTIONAL SUPERVISOR	ROLAND AU-YEUNG	REVISED BY	RY
CALCULATED-DESIGNED BY	ROY YUAN	DATE REVISED	
CHECKED BY	JERILYN STRUVEN		

STATE OF CALIFORNIA - DEPARTMENT OF TRANSPORTATION
Caltrans
TRAFFIC

LAST REVISION 07-05-12 | DATE PLOTTED => 16-NOV-2012 | TIME PLOTTED => 12:52

Dist	COUNTY	ROUTE	POST MILES TOTAL PROJECT	SHEET No.	TOTAL SHEETS
04	SCI	82,85,87,101 152,237	Var	9	38

REGISTERED CIVIL ENGINEER 8-6-12 DATE

10-29-12
PLANS APPROVAL DATE

REGISTERED PROFESSIONAL ENGINEER Jerilyn L. Struven No. 49964 Exp. 12-31-12 CIVIL STATE OF CALIFORNIA

THE STATE OF CALIFORNIA OR ITS OFFICERS OR AGENTS SHALL NOT BE RESPONSIBLE FOR THE ACCURACY OR COMPLETENESS OF SCANNED COPIES OF THIS PLAN SHEET.

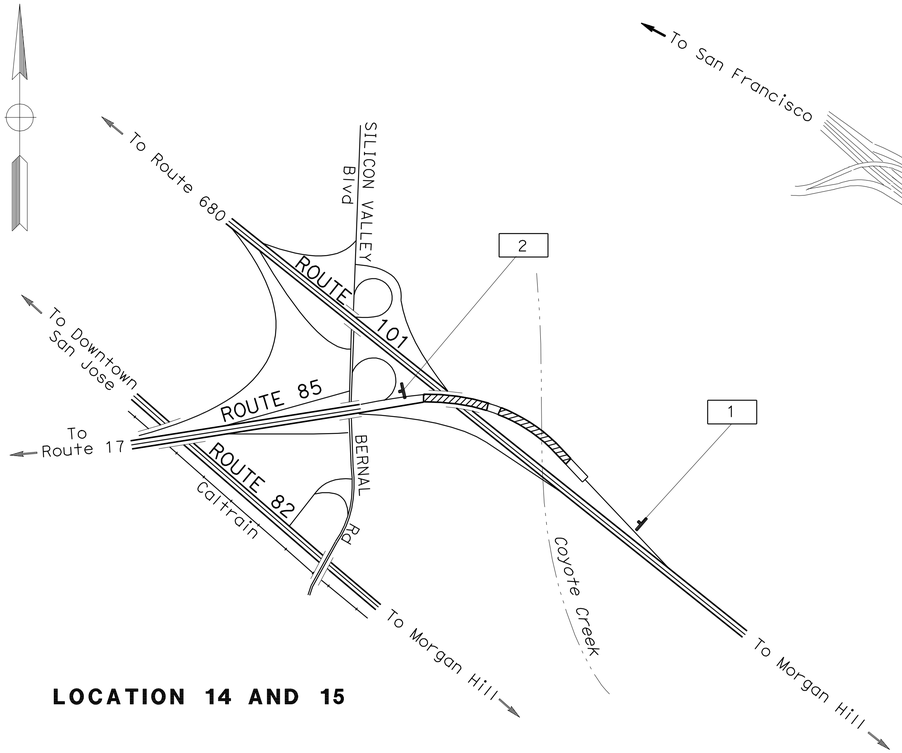

LOCATION 14 AND 15

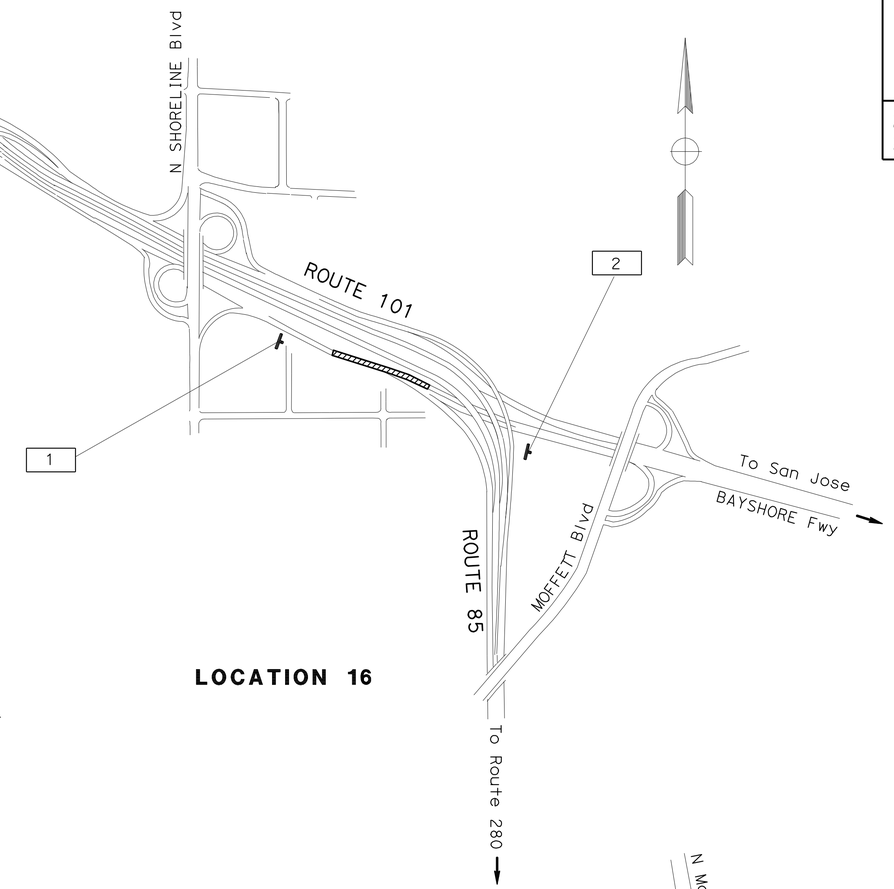

LOCATION 16

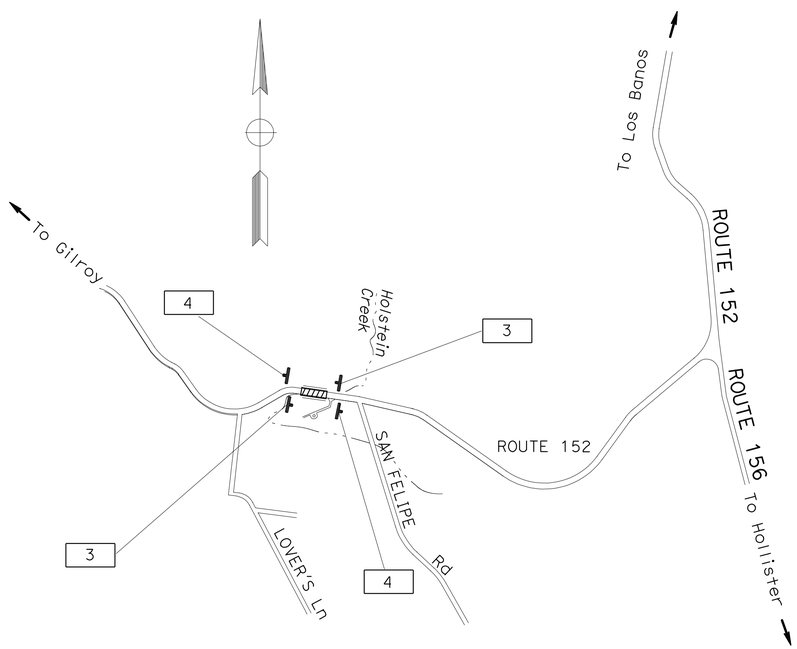

LOCATION 17

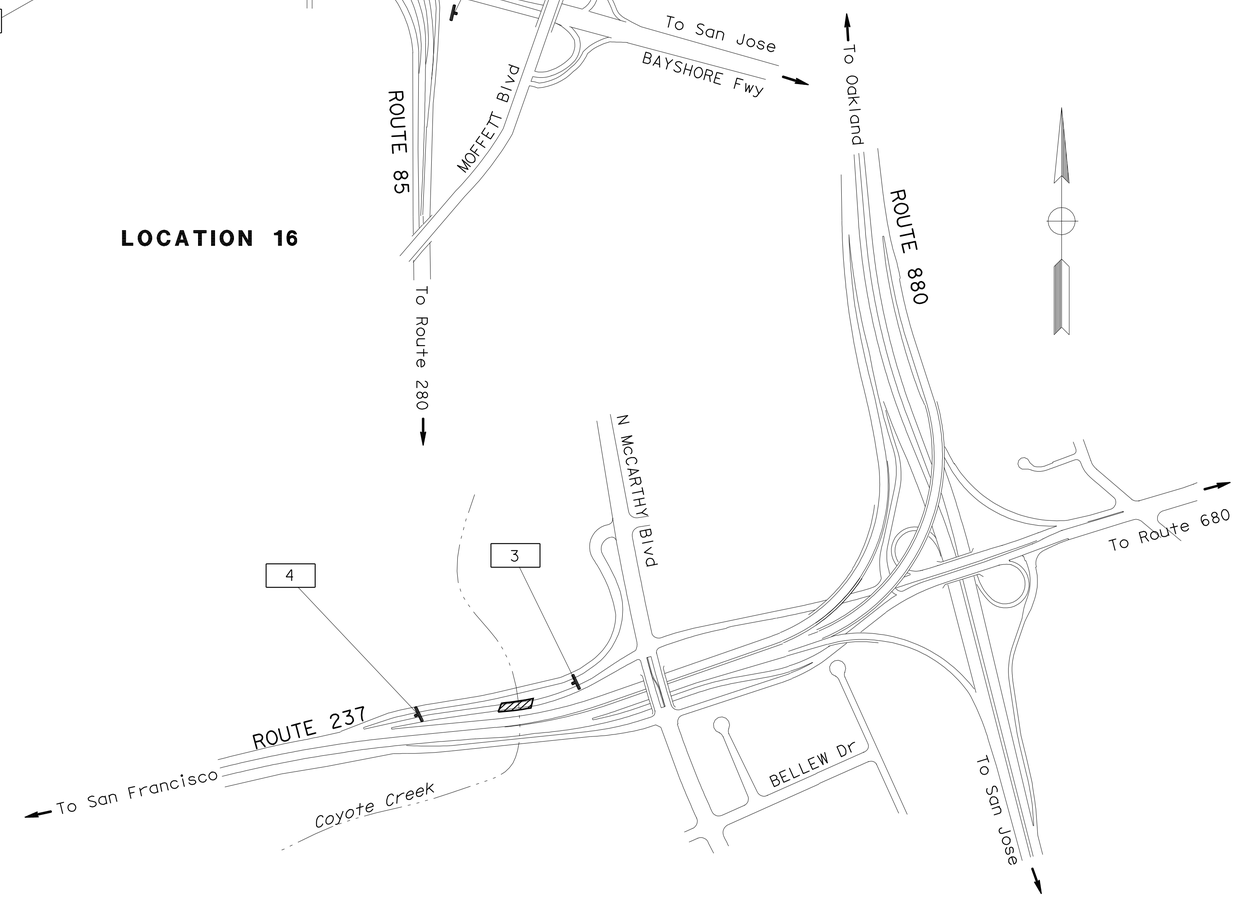

LOCATION 18

CONSTRUCTION AREA SIGNS

NO SCALE

APPROVED FOR CONSTRUCTION AREA SIGN WORK ONLY

FOR NOTE AND LEGEND, SEE SHEET CS-1

CS-4

STATE OF CALIFORNIA - DEPARTMENT OF TRANSPORTATION
Caltrans
TRAFFIC

FUNCTIONAL SUPERVISOR: ROLAND AU-YEUNG
CALCULATED-DESIGNED BY: ROY YUAN
CHECKED BY: JERILYN STRUVEN
REVISED BY: RY
DATE REVISED:

LAST REVISION 06-27-12
DATE PLOTTED => 16-NOV-2012
TIME PLOTTED => 12:52

Dist	COUNTY	ROUTE	POST MILES TOTAL PROJECT	SHEET No.	TOTAL SHEETS
04	SCI	82,85,87,101 152,237	Var	10	38

REGISTERED CIVIL ENGINEER 8-6-12 DATE

10-29-12
PLANS APPROVAL DATE

REGISTERED PROFESSIONAL ENGINEER Jerilyn L. Struven No. 49964 Exp. 12-31-12 CIVIL STATE OF CALIFORNIA

THE STATE OF CALIFORNIA OR ITS OFFICERS OR AGENTS SHALL NOT BE RESPONSIBLE FOR THE ACCURACY OR COMPLETENESS OF SCANNED COPIES OF THIS PLAN SHEET.

SB ROUTE 82 OFF-RAMP TO WB BLOSSOM HILL Rd CLOSED

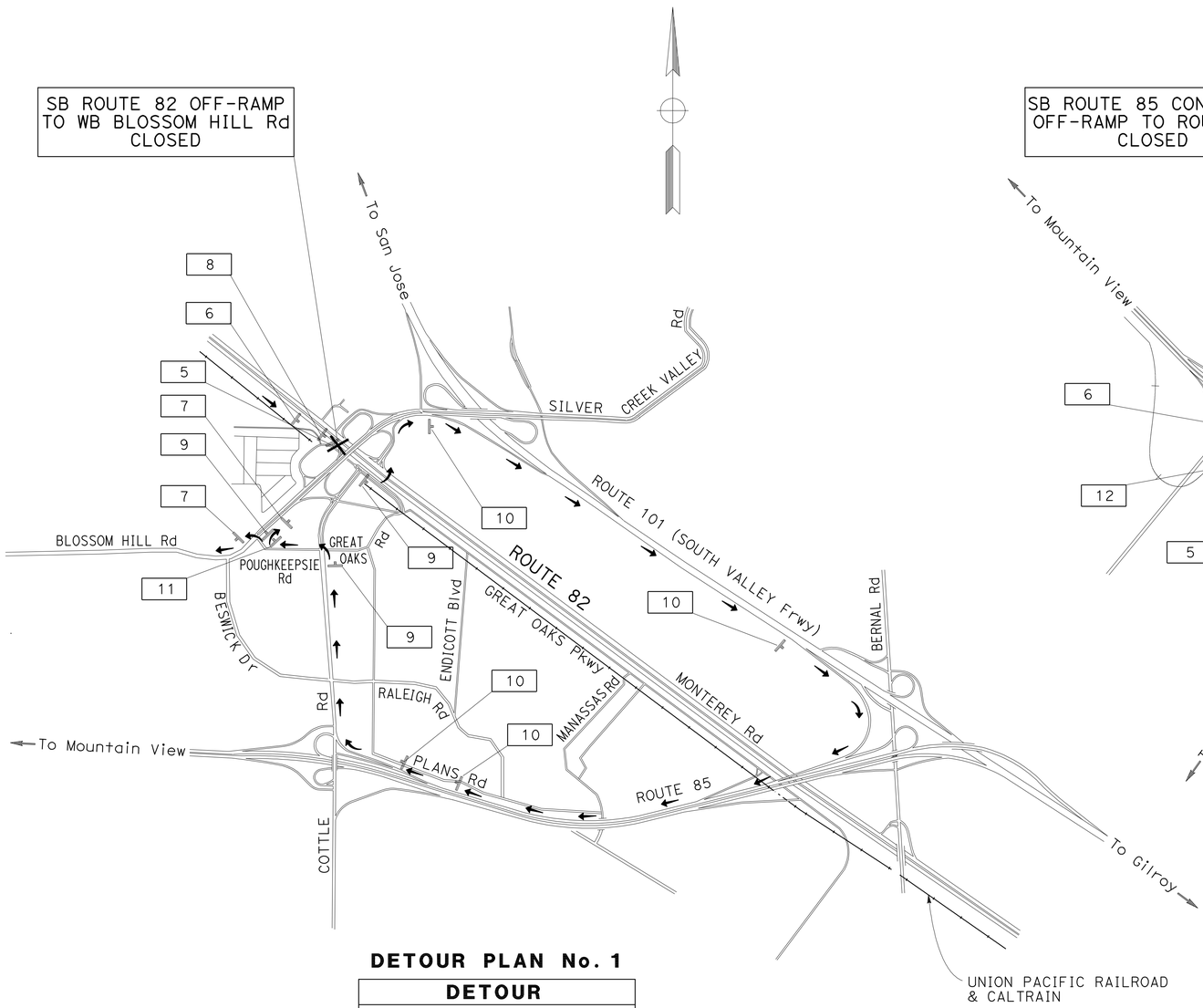

DETOUR PLAN No. 1

DETOUR
VIA
SB MONTEREY Rd; ON-RAMP TO SB ROUTE 82; SB ROUTE 82 TO CONNECTOR OFF-RAMP TO SB ROUTE 101; SB ROUTE 101 TO CONNECTOR OFF-RAMP TO NB ROUTE 85; NB ROUTE 85 TO OFF-RAMP TO COTTLE Rd; NB COTTLE Rd; WB POUGHKEEPSIE Rd TO ROUTE 82/BLOSSOM HILL Rd.

SB ROUTE 85 CONNECTOR OFF-RAMP TO ROUTE 17 CLOSED

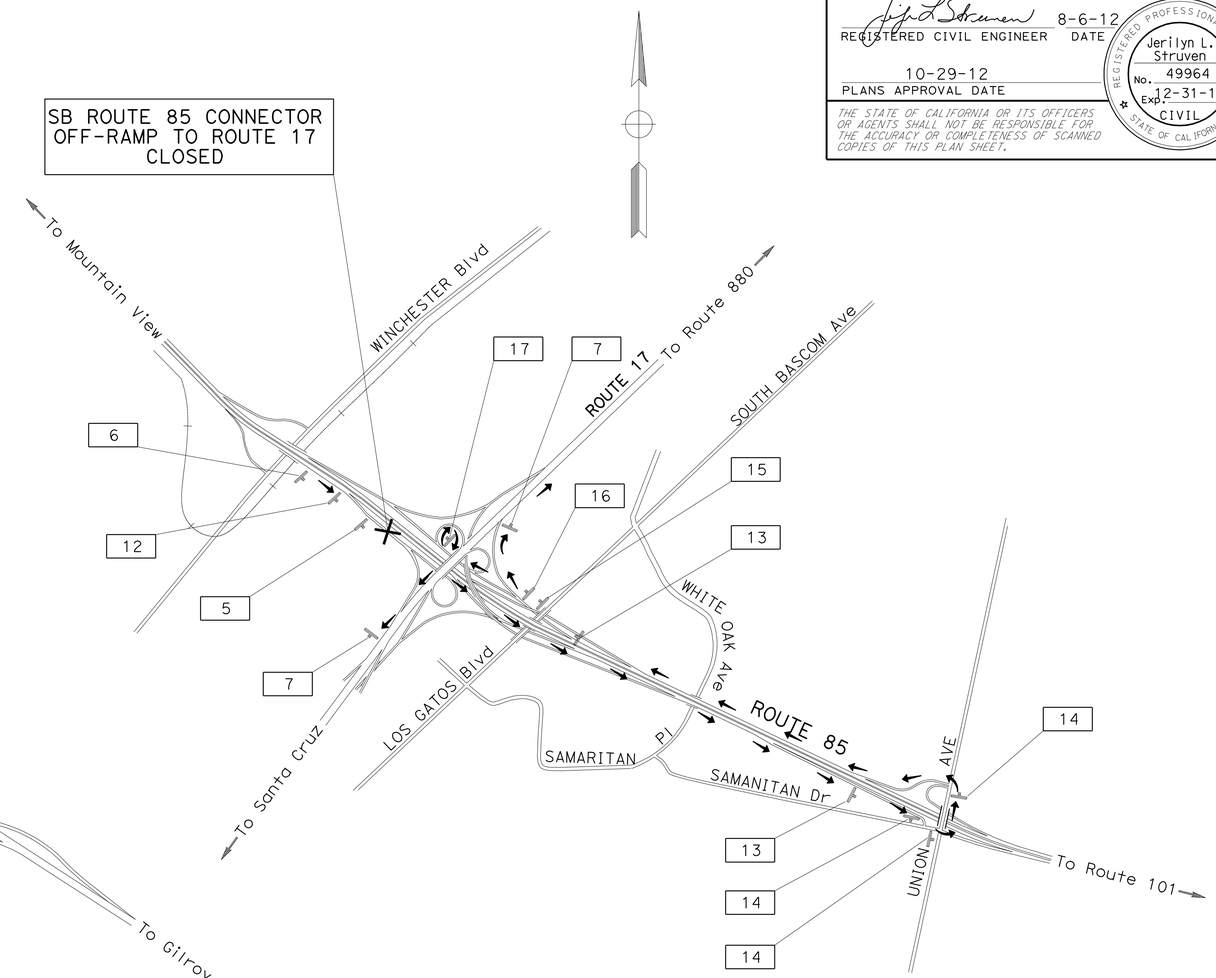

DETOUR PLAN No. 2

DETOUR
VIA
SB ROUTE 85; OFF-RAMP TO SAMARITAN Dr /UNION Ave; EB SAMARITAN Dr; NB UNION Ave TO ON-RAMP TO NB ROUTE85; NB ROUTE 85 TO CONNECTOR OFF-RAMPS TO ROUTE 17

CONSTRUCTION AREA SIGNS

NO SCALE

APPROVED FOR CONSTRUCTION AREA SIGN WORK ONLY

FOR NOTE AND LEGEND, SEE SHEET CS-1

CS-5

STATE OF CALIFORNIA - DEPARTMENT OF TRANSPORTATION
Caltrans
TRAFFIC

FUNCTIONAL SUPERVISOR: ROLAND AU-YEUNG
CALCULATED-DESIGNED BY: ROY YUAN
CHECKED BY: JERILYN STRUVEN
REVISED BY: RY
DATE REVISED:

LAST REVISION 05-14-12
DATE PLOTTED => 16-NOV-2012
TIME PLOTTED => 12:52

Dist	COUNTY	ROUTE	POST MILES TOTAL PROJECT	SHEET No.	TOTAL SHEETS
04	SCI	82,85,87,101 152,237	Var	11	38

REGISTERED CIVIL ENGINEER 8-6-12 DATE

10-29-12
PLANS APPROVAL DATE

REGISTERED PROFESSIONAL ENGINEER Jerilyn L. Struven No. 49964 Exp. 12-31-12 CIVIL STATE OF CALIFORNIA

THE STATE OF CALIFORNIA OR ITS OFFICERS OR AGENTS SHALL NOT BE RESPONSIBLE FOR THE ACCURACY OR COMPLETENESS OF SCANNED COPIES OF THIS PLAN SHEET.

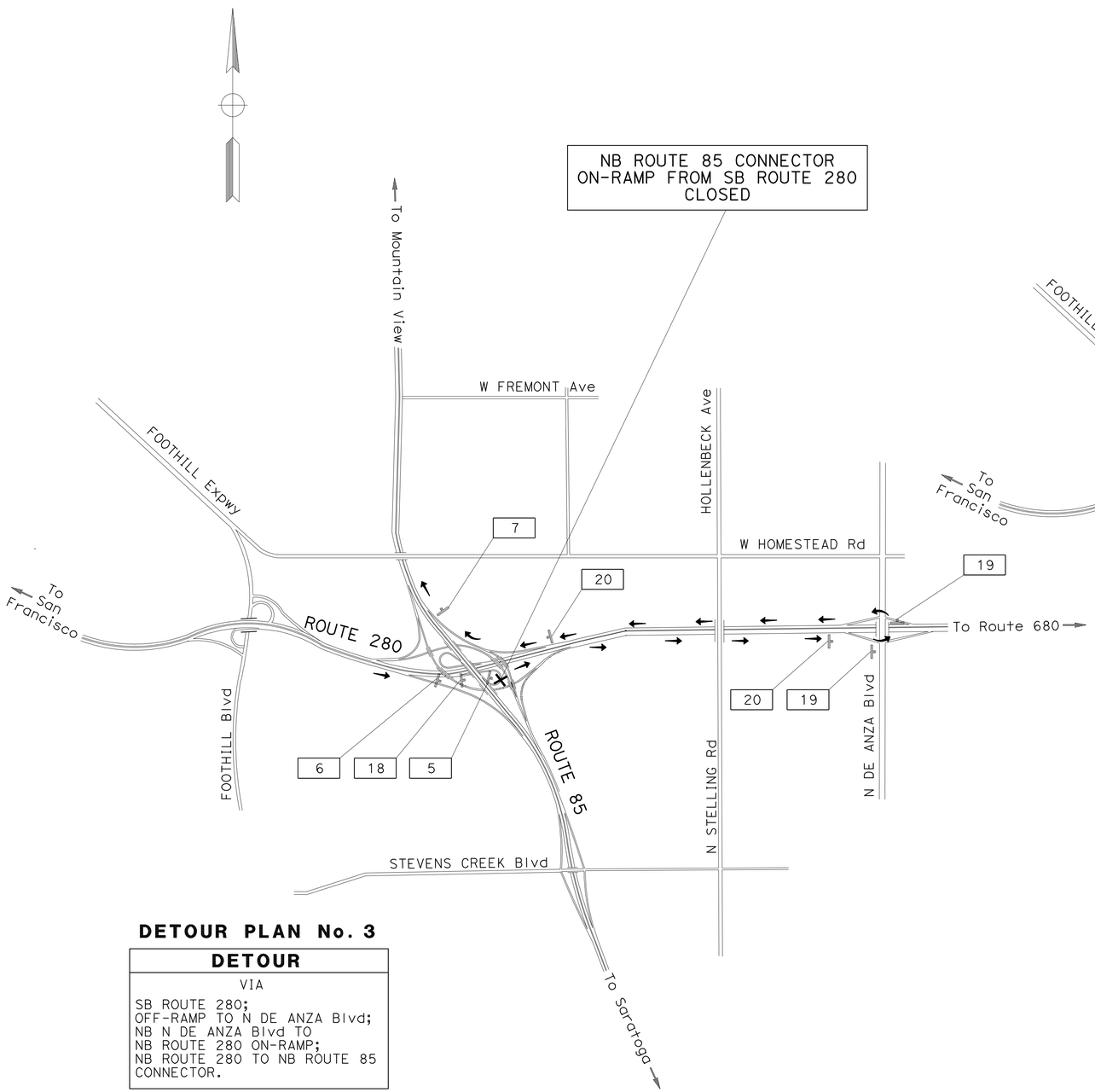

DETOUR PLAN No. 3

DETOUR
VIA SB ROUTE 280; OFF-RAMP TO N DE ANZA Blvd; NB N DE ANZA Blvd TO NB ROUTE 280 ON-RAMP; NB ROUTE 280 TO NB ROUTE 85 CONNECTOR.

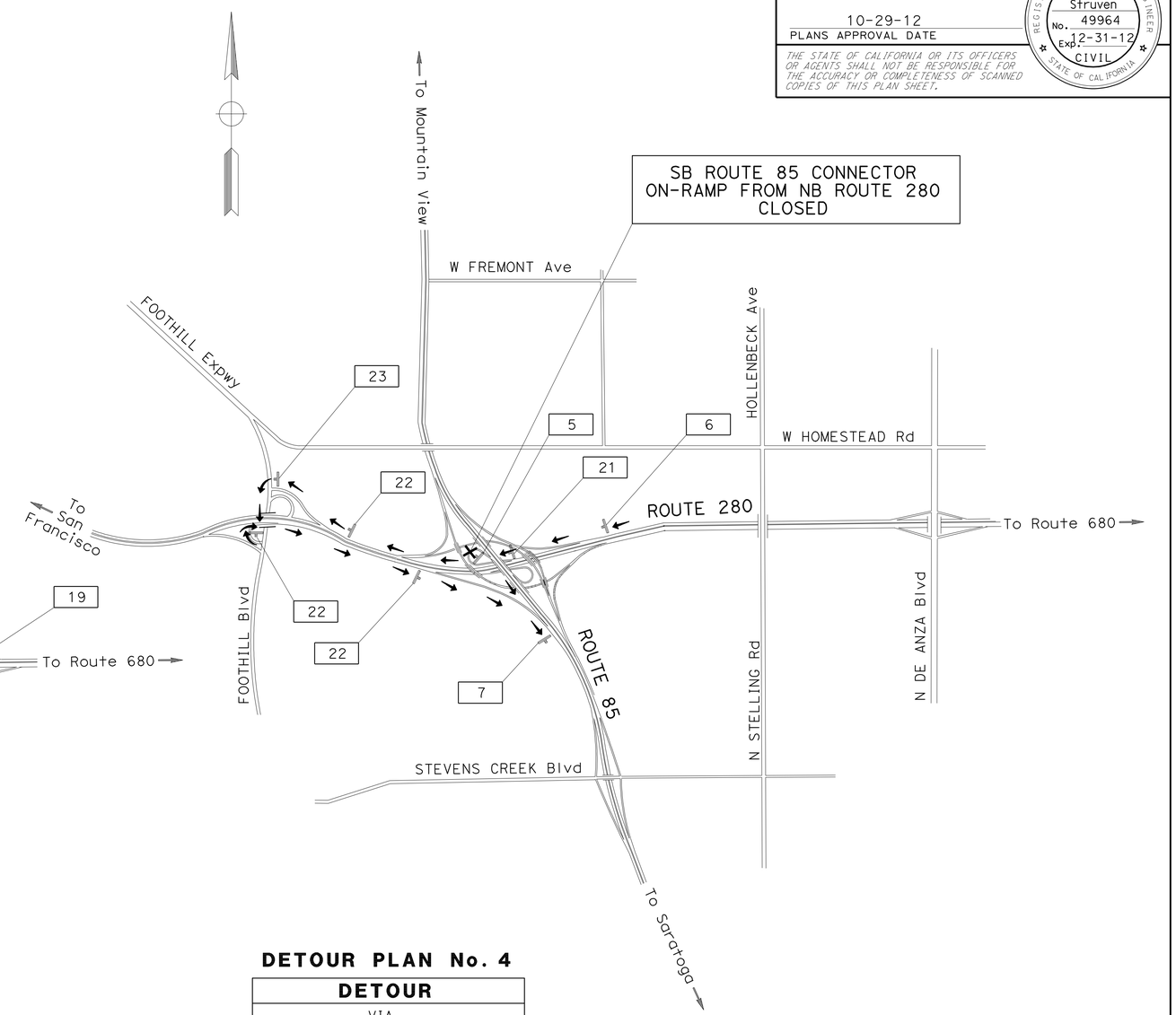

DETOUR PLAN No. 4

DETOUR
VIA NB ROUTE 280; OFF-RAMP TO FOOTHILL Expwy; SB FOOTHILL Expwy TO SB ROUTE 280 ON-RAMP; SB ROUTE 280 TO SB ROUTE 85 CONNECTOR.

CONSTRUCTION AREA SIGNS

NO SCALE

APPROVED FOR CONSTRUCTION AREA SIGN WORK ONLY

FOR NOTE AND LEGEND, SEE SHEET CS-1

CS-6

STATE OF CALIFORNIA - DEPARTMENT OF TRANSPORTATION
Caltrans
TRAFFIC

FUNCTIONAL SUPERVISOR: ROLAND AU-YEUNG
CALCULATED-DESIGNED BY: ROY YUAN
CHECKED BY: JERILYN STRUVEN
REVISED BY: RY
DATE REVISED:

LAST REVISION 04-10-12
DATE PLOTTED => 16-NOV-2012
TIME PLOTTED => 12:53

Dist	COUNTY	ROUTE	POST MILES TOTAL PROJECT	SHEET No.	TOTAL SHEETS
04	SCI	82,85,87,101 152,237	Var	12	38

REGISTERED CIVIL ENGINEER 8-6-12 DATE

10-29-12
PLANS APPROVAL DATE

REGISTERED PROFESSIONAL ENGINEER Jerilyn L. Struven No. 49964 Exp. 12-31-12 CIVIL STATE OF CALIFORNIA

THE STATE OF CALIFORNIA OR ITS OFFICERS OR AGENTS SHALL NOT BE RESPONSIBLE FOR THE ACCURACY OR COMPLETENESS OF SCANNED COPIES OF THIS PLAN SHEET.

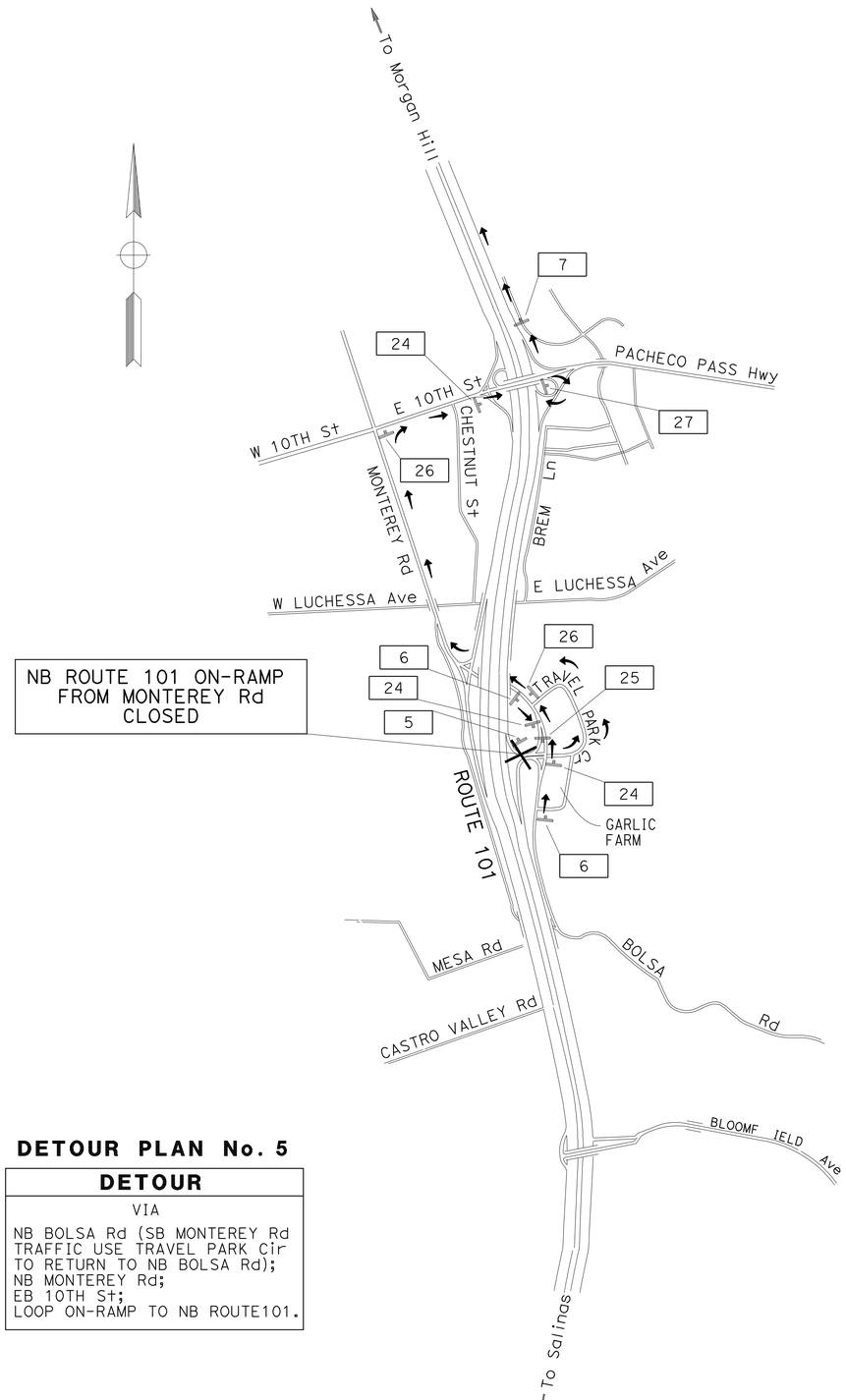

NB ROUTE 101 ON-RAMP FROM MONTEREY Rd CLOSED

DETOUR PLAN No. 5

DETOUR
VIA NB BOLSA Rd (SB MONTEREY Rd TRAFFIC USE TRAVEL PARK Cir TO RETURN TO NB BOLSA Rd); NB MONTEREY Rd; EB 10TH St; LOOP ON-RAMP TO NB ROUTE101.

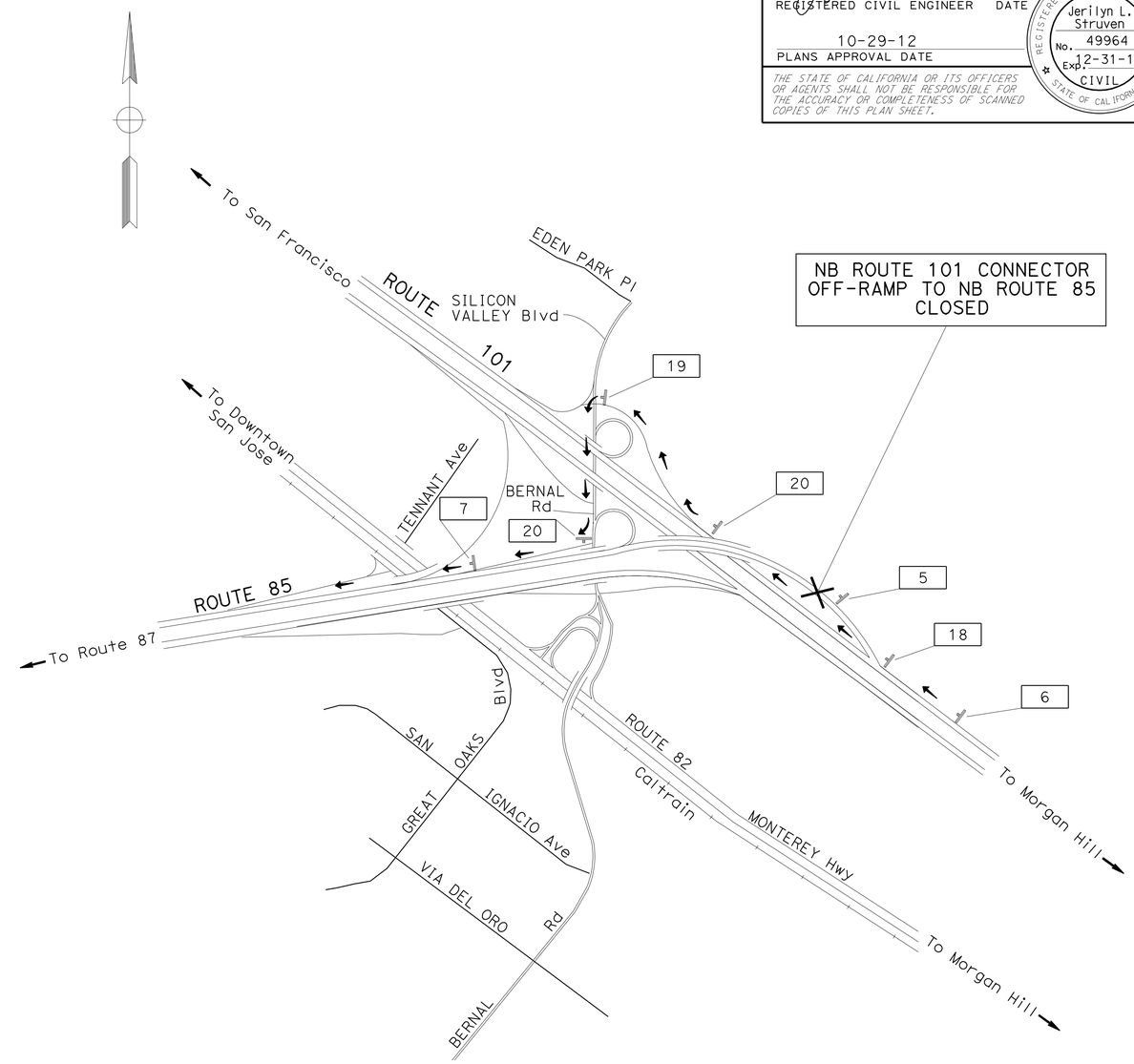

NB ROUTE 101 CONNECTOR OFF-RAMP TO NB ROUTE 85 CLOSED

DETOUR PLAN No. 6

DETOUR
VIA NB ROUTE101; OFF-RAMP TO BERNAL Rd; SB BERNAL Rd TO ON-RAMP TO NB ROUTE 85

CONSTRUCTION AREA SIGNS

NO SCALE

APPROVED FOR CONSTRUCTION AREA SIGN WORK ONLY

FOR NOTE AND LEGEND, SEE SHEET CS-1

CS-7

STATE OF CALIFORNIA - DEPARTMENT OF TRANSPORTATION
Caltrans
TRAFFIC

FUNCTIONAL SUPERVISOR: ROLAND AU-YEUNG
CALCULATED-DESIGNED BY: JERILYN STRUVEN
CHECKED BY: ROY YUAN
REVISED BY: RY
DATE REVISED:

LAST REVISION 04-04-12 | DATE PLOTTED => 16-NOV-2012 | TIME PLOTTED => 12:53

Dist	COUNTY	ROUTE	POST MILES TOTAL PROJECT	SHEET No.	TOTAL SHEETS
04	SCI	82,85,87,101 152,237	Var	13	38

REGISTERED CIVIL ENGINEER 8-6-12 DATE

10-29-12
PLANS APPROVAL DATE

REGISTERED PROFESSIONAL ENGINEER Jerilyn L. Struven No. 49964 Exp. 12-31-12 CIVIL STATE OF CALIFORNIA

THE STATE OF CALIFORNIA OR ITS OFFICERS OR AGENTS SHALL NOT BE RESPONSIBLE FOR THE ACCURACY OR COMPLETENESS OF SCANNED COPIES OF THIS PLAN SHEET.

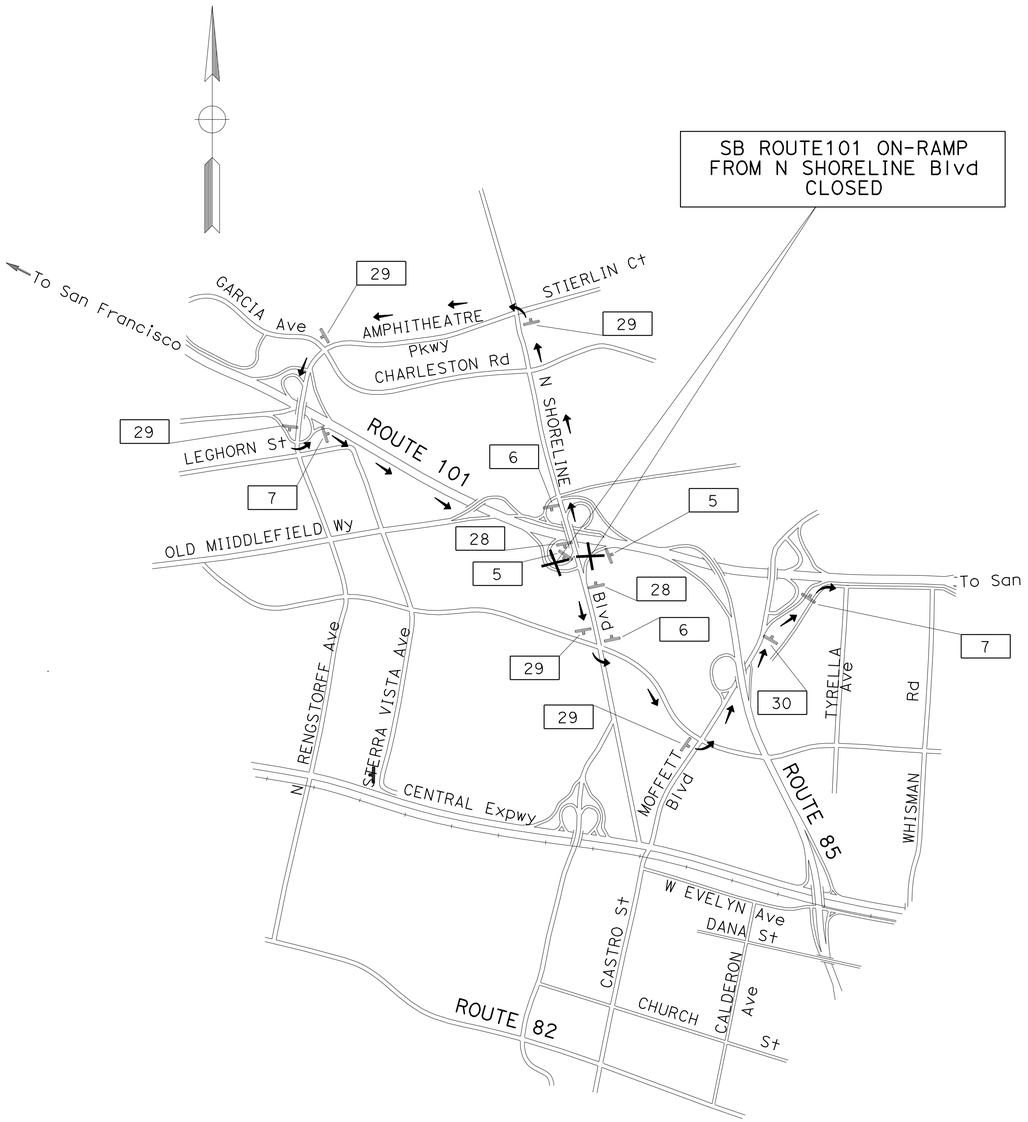

DETOUR PLAN No. 7

DETOUR
VIA
NB → NB N SHORELINE Blvd; WB AMPHITHEATRE Pkwy; SB RENGSTORFF Ave TO SB ROUTE 101 ON-RAMP
SB → SB N SHORELINE Blvd; SB MIDDLEFIELD Rd; NB MOFFETT Blvd TO SB ROUTE 101 ON-RAMP

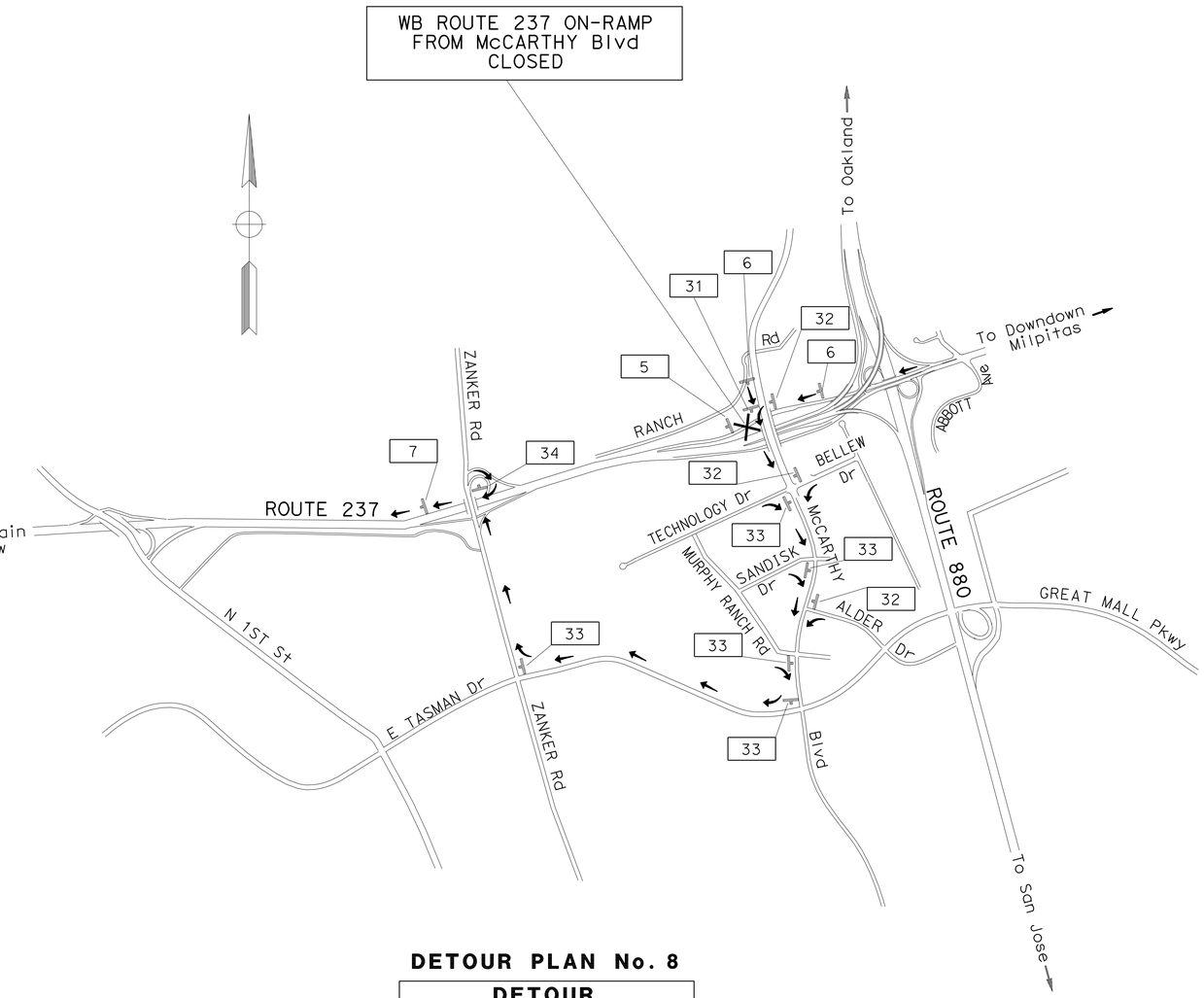

DETOUR PLAN No. 8

DETOUR
VIA
SB McCARTHY Blvd; WB TASMAN Dr; NB ZANKER Rd; LOOP ON-RAMP TO WB ROUTE 237

CONSTRUCTION AREA SIGNS

NO SCALE

APPROVED FOR CONSTRUCTION AREA SIGN WORK ONLY

FOR NOTE AND LEGEND, SEE SHEET CS-1

CS-8

STATE OF CALIFORNIA - DEPARTMENT OF TRANSPORTATION
Caltrans
TRAFFIC

FUNCTIONAL SUPERVISOR: ROLAND AU-YEUNG
CALCULATED-DESIGNED BY: ROY YUAN
CHECKED BY: JERILYN STRUVEN
REVISED BY: RY
DATE REVISED:

LAST REVISION 04-04-12
DATE PLOTTED => 16-NOV-2012
TIME PLOTTED => 12:53

Dist	COUNTY	ROUTE	POST MILES TOTAL PROJECT	SHEET No.	TOTAL SHEETS
04	SCI	82,85,87,101 152,237	Var	14	38

REGISTERED CIVIL ENGINEER 8-6-12 DATE

10-29-12
PLANS APPROVAL DATE

REGISTERED PROFESSIONAL ENGINEER Jerilyn L. Struven No. 49964 Exp. 12-31-12 CIVIL STATE OF CALIFORNIA

THE STATE OF CALIFORNIA OR ITS OFFICERS OR AGENTS SHALL NOT BE RESPONSIBLE FOR THE ACCURACY OR COMPLETENESS OF SCANNED COPIES OF THIS PLAN SHEET.

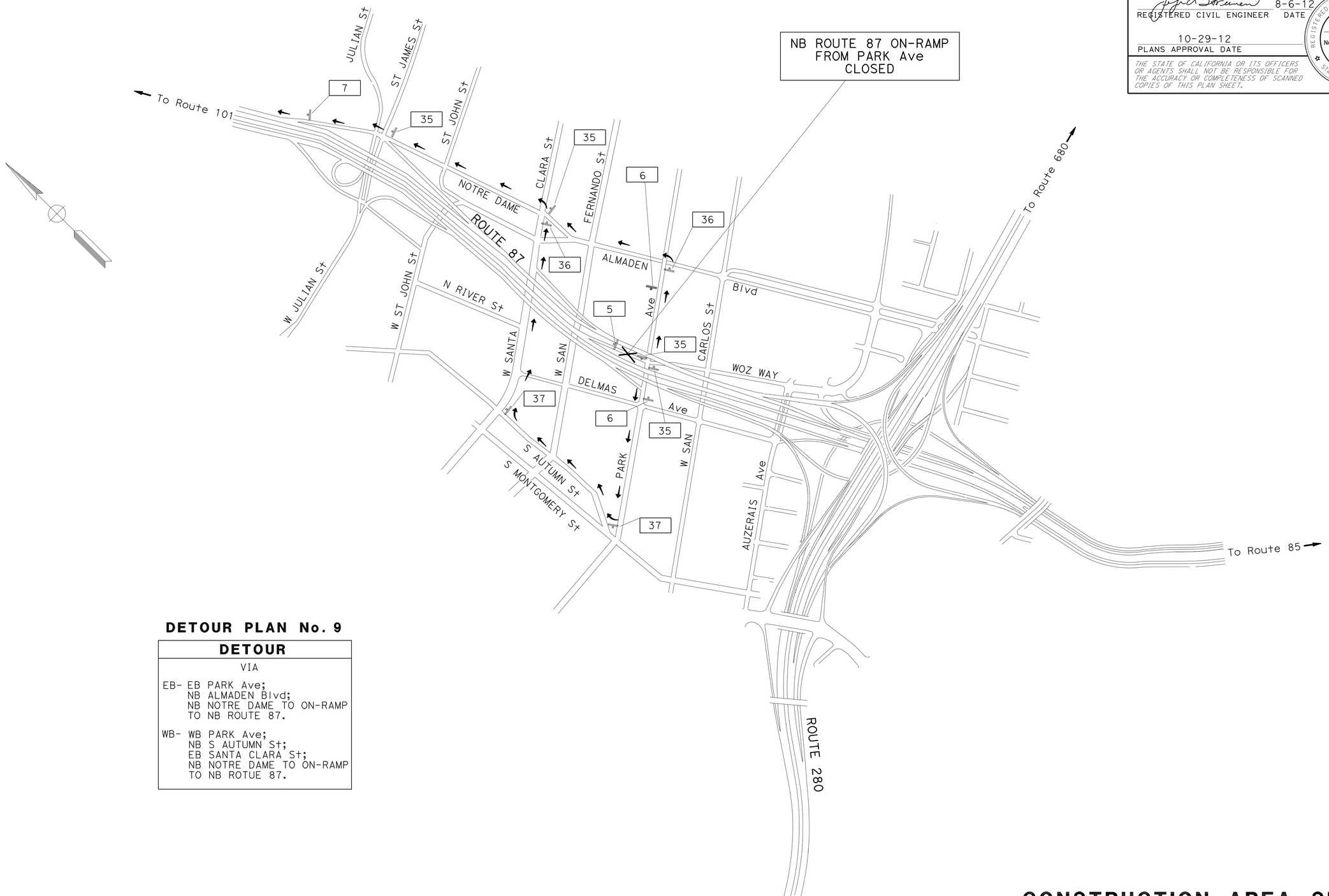

DETOUR PLAN No. 9

DETOUR
VIA
EB- EB PARK Ave; NB ALMADEN Blvd; NB NOTRE DAME TO ON-RAMP TO NB ROUTE 87.
WB- WB PARK Ave; NB S AUTUMN St; EB SANTA CLARA St; NB NOTRE DAME TO ON-RAMP TO NB ROTUE 87.

APPROVED FOR CONSTRUCTION AREA SIGN WORK ONLY

FOR NOTE AND LEGEND, SEE SHEET CS-1

CONSTRUCTION AREA SIGNS

NO SCALE

CS-9

STATE OF CALIFORNIA - DEPARTMENT OF TRANSPORTATION
Caltrans®
TRAFFIC

FUNCTIONAL SUPERVISOR: ROLAND AU-YEUNG
CALCULATED-DESIGNED BY: ROY YUAN
CHECKED BY: JERILYN STRUVEN
REVISED BY: RY
DATE REVISED:

LAST REVISION 04-10-12 | DATE PLOTTED => 16-NOV-2012 | TIME PLOTTED => 12:53

Dist	COUNTY	ROUTE	POST MILES TOTAL PROJECT	SHEET No.	TOTAL SHEETS
04	SCI	82,85,87,101 152,237	Var	15	38

REGISTERED CIVIL ENGINEER 8-6-12 DATE

10-29-12
PLANS APPROVAL DATE

REGISTERED PROFESSIONAL ENGINEER Jerilyn L. Struven No. 49964 Exp. 12-31-12 CIVIL STATE OF CALIFORNIA

THE STATE OF CALIFORNIA OR ITS OFFICERS OR AGENTS SHALL NOT BE RESPONSIBLE FOR THE ACCURACY OR COMPLETENESS OF SCANNED COPIES OF THIS PLAN SHEET.

STATIONARY MOUNTED CONSTRUCTION AREA SIGNS

SIGN No.	SIGN CODE FEDERAL	SIGN CODE CALIFORNIA	PANEL SIZE (INCH X INCH)	SIGN MESSAGE	No. OF POSTS & SIZE (EA-INCHxINCH)	NUMBER OF SIGNS
1	W20-1		48 x 48	ROAD WORK AHEAD	(ONE) - 4 x 6	12
2	G20-2		48 x 24	END ROADWORK	(ONE) - 4 x 4	12
3	W20-1		48 x 36	ROAD WORK AHEAD	(ONE) - 4 x 6	18
4	G20-2		36 x 18	END ROADWORK	(ONE) - 4 x 4	16
5		SC6-4	48 x 60	RAMP CLOSED (DATE & TIME)	(ONE) - 6 x 6	10
6	W20-2		48 x 48	DETOUR AHEAD	(ONE) - 4 x 6	13
7	M4-8a		24 x 18	END DETOUR	(ONE) - 4 x 4	12
8		SC-3 (↑)	48 x 18	DETOUR (STRAIGHT AHEAD ARROW)	(TWO) - 4 x 6	1
		SPECIAL	72 x 42	SEE SPECIAL 1		
9	M4-10(L+)		48 x 18	DETOUR (LEFT)	(TWO) - 4 x 6	3
		SPECIAL	72 x 42	SEE SPECIAL 1		
10		SPECIAL	72 x 42	SEE SPECIAL 1	(TWO) - 4 x 6	4
	M6-2 (↗)		21 x 15	DETOUR (DIAGONAL ARROW)		
11	M4-10(R+)		48 x 18	DETOUR (RIGHT)	(ONE) - 4 x 6	1
		G28-2(82)	24 x 25	ROUTE SHIELD		
12		SC-3 (↑)	48 x 18	DETOUR (STRAIGHT AHEAD ARROW)	(ONE) - 4 x 6	1
		G28-2(17)	24 x 25	ROUTE SHIELD		
13		G28-2(17)	24 x 25	ROUTE SHIELD	(ONE) - 4 x 6	2
	M6-2 (↗)		21 x 15	DETOUR (DIAGONAL ARROW)		
14	M4-10(L+)		48 x 18	DETOUR (LEFT)	(ONE) - 4 x 6	3
		G28-2(17)	24 x 25	ROUTE SHIELD		
15	M4-8		21 x 9	DETOUR	(ONE) - 4 x 6	1
		G28-2(17)	24 x 25	ROUTE SHIELD		
	M3-1		21 x 9	NORTH		
	M6-2 (↗)		21 x 15	DETOUR (DIAGONAL ARROW)		
16		SC-3 (↑)	48 x 18	DETOUR (STRAIGHT AHEAD ARROW)	(ONE) - 4 x 6	1
		G28-2(17)	24 x 25	ROUTE SHIELD		
	M3-3		21 x 9	SOUTH		
17	M4-8		21 x 9	DETOUR	(ONE) - 4 x 6	1
		G28-2(17)	24 x 25	ROUTE SHIELD		
	M3-3		21 x 9	SOUTH		
	M6-2 (↗)		21 x 15	DETOUR (DIAGONAL ARROW)		
18		SC-3 (↑)	48 x 18	DETOUR (STRAIGHT AHEAD ARROW)	(ONE) - 4 x 6	2
		G28-2(85)	24 x 25	ROUTE SHIELD		
	M3-1		21 x 9	NORTH		
19	M4-10(L+)		48 x 18	DETOUR (LEFT)	(ONE) - 4 x 6	3
		G28-2(85)	24 x 25	ROUTE SHIELD		
	M3-1		21 x 9	NORTH		
20	M4-8		21 x 9	DETOUR	(ONE) - 4 x 6	4
		G28-2(85)	24 x 25	ROUTE SHIELD		
	M3-1		21 x 9	NORTH		
	M6-2 (↗)		21 x 15	DETOUR (DIAGONAL ARROW)		
21		SC-3 (↑)	48 x 18	DETOUR (STRAIGHT AHEAD ARROW)	(ONE) - 4 x 6	1
		G28-2(85)	24 x 25	ROUTE SHIELD		
	M3-3		21 x 9	SOUTH		
22	M4-8		21 x 9	DETOUR	(ONE) - 4 x 6	3
		G28-2(85)	24 x 25	ROUTE SHIELD		
	M3-3		21 x 9	SOUTH		
	M6-2 (↗)		21 x 15	DETOUR (DIAGONAL ARROW)		

72" x 42"

DETOUR
Blossom Hill
Road

6" CAPS

6" & 4½"

BLACK/ORANGE

SPECIAL

APPROVED FOR CONSTRUCTION AREA SIGN WORK ONLY

FOR NOTE AND LEGEND, SEE SHEET CS-1

CONSTRUCTION AREA SIGNS

NO SCALE

CS-10

STATE OF CALIFORNIA - DEPARTMENT OF TRANSPORTATION
Caltrans
TRAFFIC

FUNCTIONAL SUPERVISOR: ROLAND AU-YEUNG
CALCULATED-DESIGNED BY: JERILYN STRUVEN
CHECKED BY
REVISED BY: ROY YUAN
DATE REVISED
RY

LAST REVISION 09-12-12
DATE PLOTTED => 16-NOV-2012
TIME PLOTTED => 12:53

Dist	COUNTY	ROUTE	POST MILES TOTAL PROJECT	SHEET No.	TOTAL SHEETS
04	SCI	82,85,87,101 152,237	Var	16	38

REGISTERED CIVIL ENGINEER 8-6-12 DATE

10-29-12
PLANS APPROVAL DATE

REGISTERED PROFESSIONAL ENGINEER Jerilyn L. Struven No. 49964 Exp. 12-31-12 CIVIL STATE OF CALIFORNIA

THE STATE OF CALIFORNIA OR ITS OFFICERS OR AGENTS SHALL NOT BE RESPONSIBLE FOR THE ACCURACY OR COMPLETENESS OF SCANNED COPIES OF THIS PLAN SHEET.

STATIONARY MOUNTED CONSTRUCTION AREA SIGNS

SIGN No.	SIGN CODE FEDERAL	SIGN CODE CALIFORNIA	PANEL SIZE (INCH X INCH)	SIGN MESSAGE	No. OF POSTS & SIZE (EA-INCHxINCH)	NUMBER OF SIGNS
23	M4-10(L†)		48 x 18	DETOUR (LEFT)	(ONE) - 4 x 6	1
		G28-2(85)	24 x 25	ROUTE SHIELD		
	M3-3		21 x 9	SOUTH		
24		SC-3 (↑)	48 x 18	DETOUR (STRAIGHT AHEAD ARROW)	(ONE) - 4 x 6	3
		G26-2(101)	28 x 24	ROUTE SHIELD		
	M3-1		21 x 9	NORTH		
25	M4-10(L†)		48 x 18	DETOUR (LEFT)	(ONE) - 4 x 6	1
		G26-2(101)	28 x 24	ROUTE SHIELD		
	M3-1		21 x 9	NORTH		
26	M4-10(R†)		48 x 18	DETOUR (RIGHT)	(ONE) - 4 x 6	2
		G26-2(101)	28 x 24	ROUTE SHIELD		
	M3-1		21 x 9	NORTH		
27	M4-8		21 x 9	DETOUR	(ONE) - 4 x 6	1
		G26-2(101)	28 x 24	ROUTE SHIELD		
	M3-1		21 x 9	NORTH		
	M6-2 (↗)		21 x 15	DETOUR (DIAGONAL ARROW)		
28		SC-3 (↑)	48 x 18	DETOUR (STRAIGHT AHEAD ARROW)	(ONE) - 4 x 6	2
		G26-2(101)	28 x 24	ROUTE SHIELD		
	M3-3		21 x 9	SOUTH		
29	M4-10(L†)		48 x 18	DETOUR (LEFT)	(ONE) - 4 x 6	5
		G26-2(101)	28 x 24	ROUTE SHIELD		
	M3-3		21 x 9	SOUTH		
30	M4-8		21 x 9	DETOUR	(ONE) - 4 x 6	1
		G26-2(101)	28 x 24	ROUTE SHIELD		
	M3-3		21 x 9	SOUTH		
	M6-2 (↗)		21 x 15	DETOUR (DIAGONAL ARROW)		
31		SC-3 (↑)	48 x 18	DETOUR (STRAIGHT AHEAD ARROW)	(ONE) - 4 x 6	1
		G28-2(237)	28 x 25	ROUTE SHIELD		
	M3-4		21 x 9	WEST		
32	M4-10(L†)		48 x 18	DETOUR (LEFT)	(ONE) - 4 x 6	3
		G28-2(237)	28 x 25	ROUTE SHIELD		
	M3-4		21 x 9	WEST		
33	M4-10(R†)		48 x 18	DETOUR (RIGHT)	(ONE) - 4 x 6	5
		G28-2(237)	28 x 25	ROUTE SHIELD		
	M3-4		21 x 9	WEST		
34	M4-8		21 x 9	DETOUR	(ONE) - 4 x 6	1
		G28-2(237)	28 x 25	ROUTE SHIELD		
	M3-4		21 x 9	WEST		
	M6-2 (↗)		21 x 15	DETOUR (DIAGONAL ARROW)		
35		SC-3 (↑)	48 x 18	DETOUR (STRAIGHT AHEAD ARROW)	(ONE) - 4 x 6	4
		G28-2(87)	24 x 25	ROUTE SHIELD		
	M3-1		21 x 9	NORTH		
36	M4-10(L†)		48 x 18	DETOUR (LEFT)	(ONE) - 4 x 6	2
		G28-2(87)	24 x 25	ROUTE SHIELD		
	M3-1		21 x 9	NORTH		
37	M4-10(R†)		48 x 18	DETOUR (RIGHT)	(ONE) - 4 x 6	2
		G28-2(87)	24 x 25	ROUTE SHIELD		
	M3-1		21 x 9	NORTH		

APPROVED FOR CONSTRUCTION AREA SIGN WORK ONLY

FOR NOTE AND LEGEND, SEE SHEET CS-1

CONSTRUCTION AREA SIGNS
NO SCALE

CS-11

STATE OF CALIFORNIA - DEPARTMENT OF TRANSPORTATION
Caltrans
TRAFFIC

FUNCTIONAL SUPERVISOR: ROLAND AU-YEUNG
CALCULATED-DESIGNED BY: JERILYN STRUVEN
CHECKED BY
REVISED BY: RY
DATE REVISED

LAST REVISION 04-10-12
DATE PLOTTED => 16-NOV-2012
TIME PLOTTED => 12:53

Dist	COUNTY	ROUTE	POST MILES TOTAL PROJECT	SHEET No.	TOTAL SHEETS
04	SCI	82,85,87,101 152,237	Var	17	36

C.H. Chern 8-6-12
REGISTERED CIVIL ENGINEER DATE

10-29-12
PLANS APPROVAL DATE

REGISTERED PROFESSIONAL ENGINEER Chuen-Hsiung Chern No. 48187 Exp. 6-30-14 CIVIL STATE OF CALIFORNIA

THE STATE OF CALIFORNIA OR ITS OFFICERS OR AGENTS SHALL NOT BE RESPONSIBLE FOR THE ACCURACY OR COMPLETENESS OF SCANNED COPIES OF THIS PLAN SHEET.

NOTES:

1. INSTALL 4" WHITE STRIPE AFTER INSTALLATION OF PAVEMENT MARKER.
2. ALL EXISTING PAVEMENT DELINEATION SHALL BE REMOVED AND REPLACED AT THE SAME LOCATION AS EXISTING.
3. THE CONTRACTOR SHALL NOT HAVE PAVEMENT DELINEATION (TRAFFIC STRIPES, PAVEMENT MARKINGS, AND PAVEMENT MARKERS) REMOVED AT MORE THAN 2 PROJECT LOCATIONS AT THE SAME TIME. TEMPORARY PAVEMENT DELINEATION FOR THIS REQUIREMENT SHALL BE PAINTED TRAFFIC STRIPE OR PERMANENT PAVEMENT DELINEATION.

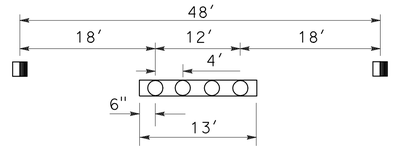

DETAIL 13M (SEE NOTE 1)

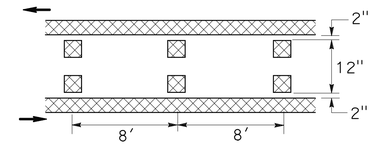

DETAIL 22M

PAVEMENT DELINEATION DETAIL
NO SCALE

LEGEND:

- DIRECTION OF TRAVEL
- TYPE A WHITE NON-REFLECTIVE MARKER
- TYPE G ONE-WAY CLEAR RETROREFLECTIVE MARKER
- TYPE D TWO-WAY YELLOW RETROREFLECTIVE MARKER
- 4" WHITE
- 4" YELLOW

TRAFFIC STRIPES, PAVEMENT MARKING AND PAVEMENT MARKERS

LOCATION	BRIDGE NAME	BRIDGE No.	DETAIL No.	THERMOPLASTIC TRAFFIC STRIPE						PAVEMENT MARKER				THERMOPLASTIC PAVEMENT MARKING	REMOVE			
				4" WHITE	4" YELLOW	6" WHITE	8" WHITE	4" WHITE (BROKEN 35-13)	4" WHITE (BROKEN 17-7)	NON-REFLECTIVE TYPE A	RETRO-REFLECTIVE TYPE D	RETRO-REFLECTIVE TYPE G	RETRO-REFLECTIVE TYPE H	TYPE III (L) ARROW	THERMOPLASTIC TRAFFIC STRIPE (WHITE)	THERMOPLASTIC TRAFFIC STRIPE (YELLOW)	PAVEMENT MARKER	THERMOPLASTIC PAVEMENT MARKING
				LF						EA				SQFT	LF		EA	SQFT
1	ROUTE 82/101 SEPARATION	37-0348R	25A		96								3			96	3	
			13M					96		8					26		8	
			27B	96											96			
2	ROUTE 82/101 SEPARATION	37-0348L	25A		96								3			96	3	
			13M					96		8					26		8	
			27B	96											96			
3	BLOSSOM HILL ROAD OC	37-0345	25A		1516								64			1516	64	
			9						2128			48			56		48	
			27B	1516											1516			
5	LOS GATOS CREEK	37-0491L	25		208								7			208	7	
			13M					356		32					104		32	
			27B	208											208			
			9						178			5			56		5	
			36				298					14			596		14	
6	LOS GATOS CREEK	37-0491R	25		178								5			178	5	
			13M					356		32					104		32	
			27B	178											178			
7	STEVENS CREEK Blvd OC	37-0466	25A		486								22			486	22	
			10							90		18			210		108	
			38				972					44			1944		44	
			39			486									729			
			ARROW (12 ea)											504				504
8	ROUTE 85/280 SEPARATION	37-0227	8						64						14			
			27B	105														
9	GUADALUPE RIVER VIADUCT	37-0308	25		2040								44			2040	44	
			13M					2040		168					546		168	
			27B	1020											1020			
			36A	350			360					16			1070		16	
			8						370						112			
11	MONTEREY ROAD UC	37-0304L	13M					228		24					78		24	
			27B	76														
15	SB 101 ON-RAMP/ S 101-S 85 SEPARATION	37-0547K	25A		538								23			538	23	
			27B	538											538			
16	HOLSTEIN CREEK	37-0028	27B	290											290			
			22M		290						38					290	38	
17	COYOTE CREEK	37-0084K	25A		417								18			417	18	
			38A				417								834			
			27B	417											417			
SUBTOTAL				4890	5865	486	2047	3172	2740	362	38	145	189	504	10864	5865	734	504
TOTAL				10755		486	2047	3172	2740	362	372			504	10864	5865	734	504

PAVEMENT DELINEATION QUANTITIES

PDQ-1

STATE OF CALIFORNIA - DEPARTMENT OF TRANSPORTATION
Caltrans
DESIGN

FUNCTIONAL SUPERVISOR: NGOC TRAN
CALCULATED-DESIGNED BY: CHUEN-HSIUNG CHERN
CHECKED BY: NGOC TRAN
REVISED BY
DATE REVISED

LAST REVISION 05-23-12
DATE PLOTTED => 16-NOV-2012
TIME PLOTTED => 12:53

Dist	COUNTY	ROUTE	POST MILES TOTAL PROJECT	SHEET No.	TOTAL SHEETS
04	SCI	82,85,87,101 152,237	Var	18	38

C.H. Chern 8-6-12
REGISTERED CIVIL ENGINEER DATE

10-29-12
PLANS APPROVAL DATE

REGISTERED PROFESSIONAL ENGINEER Chuen-Hsiung Chern No. 48187 Exp. 6-30-14 CIVIL STATE OF CALIFORNIA

THE STATE OF CALIFORNIA OR ITS OFFICERS OR AGENTS SHALL NOT BE RESPONSIBLE FOR THE ACCURACY OR COMPLETENESS OF SCANNED COPIES OF THIS PLAN SHEET.

SIGN STRUCTURE (BRIDGE MOUNTED WITH WALKWAY) *

SIGN LOCATION	UNIT	FURNISH SIGN STRUCTURE (BRIDGE MOUNTED WITH WALKWAY)	INSTALL SIGN STRUCTURE (BRIDGE MOUNTED WITH WALKWAY)
SIGN A	LB	2941	2941
SIGN B	LB	3050	3050
TOTAL		5991	5991

* SEE STRUCTURE PLANS SHEETS SDS-1 THRN SDS-3 FOR DETAILS

ROADWAY QUANTITY SUMMARY

ITEM	UNIT	QUANTITY
REPLACE ASPHALT CONCRETE SURFACING	CY	80

MBGR QUANTITIES

LOCATION No.	TRANSITION RAILING (TYPE WB)	ALTERNATIVE IN-LINE TERMINAL SYSTEM	METAL BEAM GUARD RAILING (WOOD POST)	END ANCHOR ASSEMBLY (TYPE SFT)	REMOVE METAL BEAM GUARD RAILING	VEGETATION CONTROL (MINOR CONCRETE)
	EA	EA	LF	EA	LF	SQYD
13	1	1			62.5	30
			62.5	1	62.5	26
	1	1			62.5	30
			62.5	1	62.5	26
TOTAL	2	2	125.0	2	250.0	112

SUMMARY OF QUANTITIES

Q-1

STATE OF CALIFORNIA - DEPARTMENT OF TRANSPORTATION
Caltrans DESIGN

FUNCTIONAL SUPERVISOR: NGOC TRAN
CALCULATED-DESIGNED BY: CHUEN-HSIUNG CHERN
CHECKED BY: NGOC TRAN
REVISED BY
DATE REVISED

LAST REVISION 10/26/12 | DATE PLOTTED => 16-NOV-2012 | TIME PLOTTED => 12:53

Dist	COUNTY	ROUTE	POST MILES TOTAL PROJECT	SHEET No.	TOTAL SHEETS
04	SCI	82,85,87,101, 152,237	Var	19	38

Randell D. Hiatt
REGISTERED CIVIL ENGINEER

October 19, 2012
PLANS APPROVAL DATE

REGISTERED PROFESSIONAL ENGINEER
Randell D. Hiatt
No. C50200
Exp. 6-30-13
CIVIL
STATE OF CALIFORNIA

THE STATE OF CALIFORNIA OR ITS OFFICERS OR AGENTS SHALL NOT BE RESPONSIBLE FOR THE ACCURACY OR COMPLETENESS OF SCANNED COPIES OF THIS PLAN SHEET.

TO ACCOMPANY PLANS DATED 10-29-12

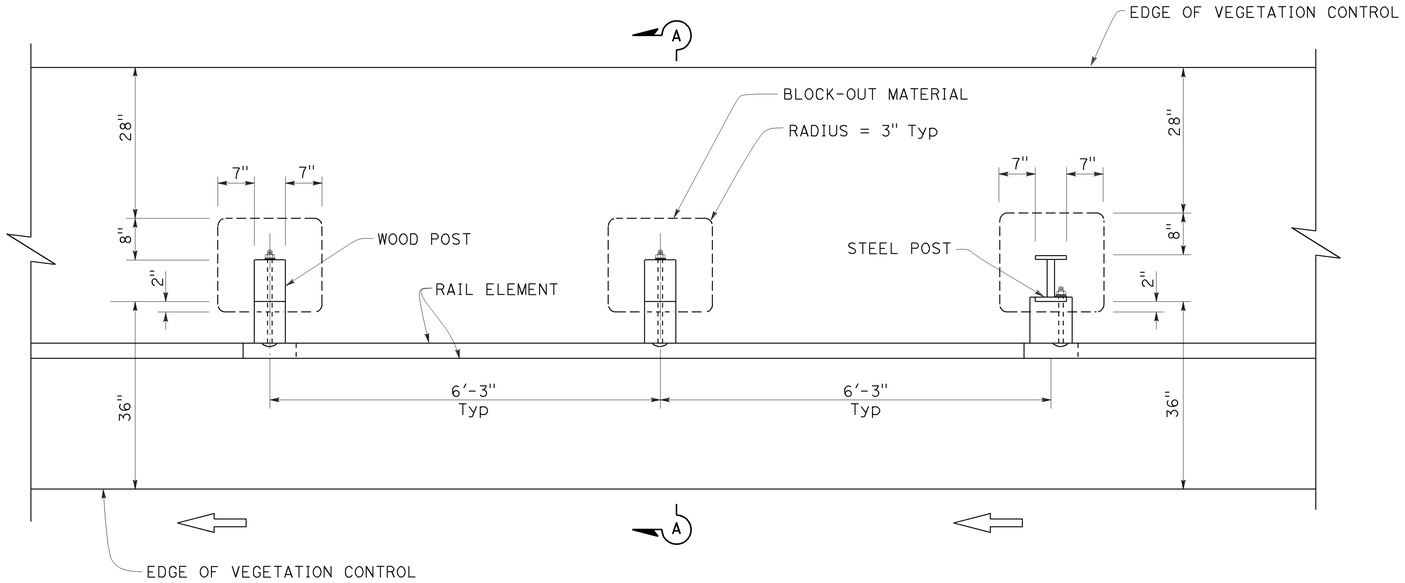

PLAN

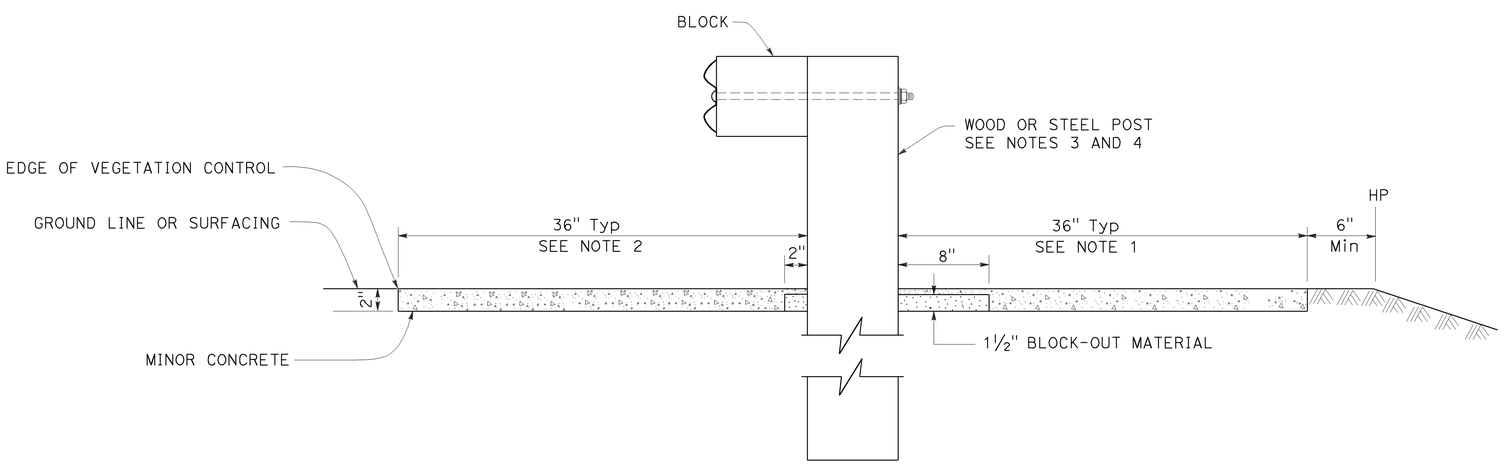

SECTION A-A

NOTES:

1. Where the distance between back of post and hinge point is less than 42", construct vegetation control to 6" from hinge point while maintaining the 8" block-out at back of post. If the 8" block-out at back of post can not be maintained, construct vegetation control flush with the back edge of post.
2. Where dike is constructed under railing, construct vegetation control to back edge of dike. Where paved shoulder is constructed within 36" in front of the post, construct vegetation control to the edge of paved shoulder.
3. For wood post sizes, see Standard Plan A77C1.
4. For steel post sizes, see Standard Plan A77C2.
5. For details not shown, see Standard Plans A77A1 and A77A2.

STATE OF CALIFORNIA
DEPARTMENT OF TRANSPORTATION

METAL BEAM GUARD RAILING TYPICAL VEGETATION CONTROL STANDARD RAILING SECTION

NO SCALE

RSP A77C5 DATED OCTOBER 19, 2012 SUPERSEDES STANDARD PLAN A77C5 DATED MAY 20, 2011 - PAGE 53 OF THE STANDARD PLANS BOOK DATED 2010.

REVISED STANDARD PLAN RSP A77C5

2010 REVISED STANDARD PLAN RSP A77C5

9-26-12

Dist	COUNTY	ROUTE	POST MILES TOTAL PROJECT	SHEET No.	TOTAL SHEETS
04	SCl	82,85,87,101, 152,237	Var	20	38

Randell D. Hiatt
REGISTERED CIVIL ENGINEER

October 19, 2012
PLANS APPROVAL DATE

REGISTERED PROFESSIONAL ENGINEER
Randell D. Hiatt
No. C50200
Exp. 6-30-13
CIVIL
STATE OF CALIFORNIA

THE STATE OF CALIFORNIA OR ITS OFFICERS OR AGENTS SHALL NOT BE RESPONSIBLE FOR THE ACCURACY OR COMPLETENESS OF SCANNED COPIES OF THIS PLAN SHEET.

TO ACCOMPANY PLANS DATED 10-29-12

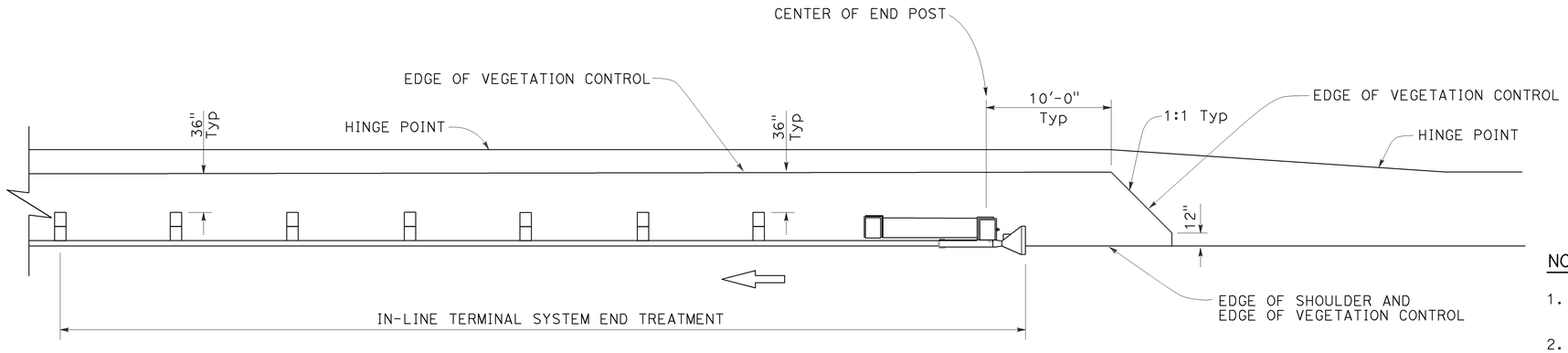

PLAN

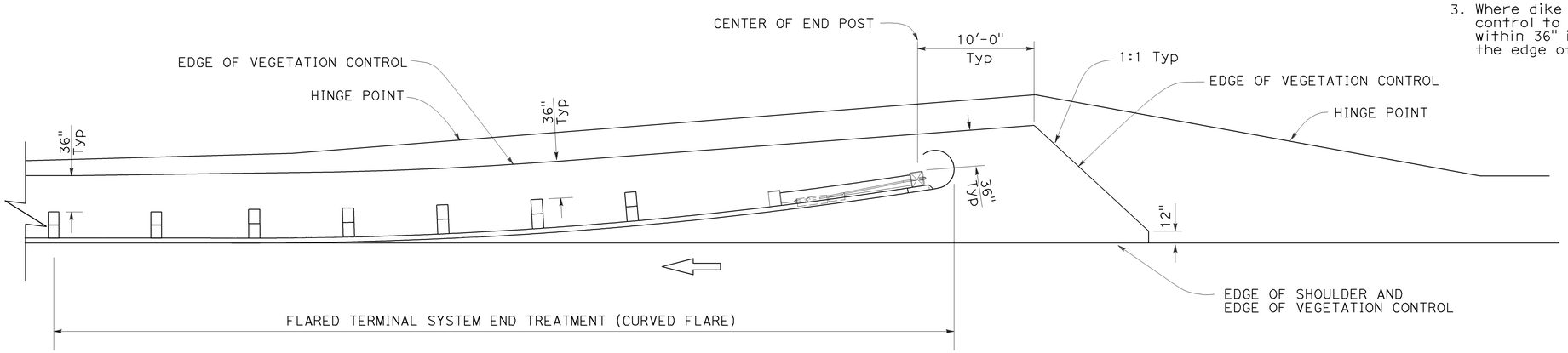

PLAN

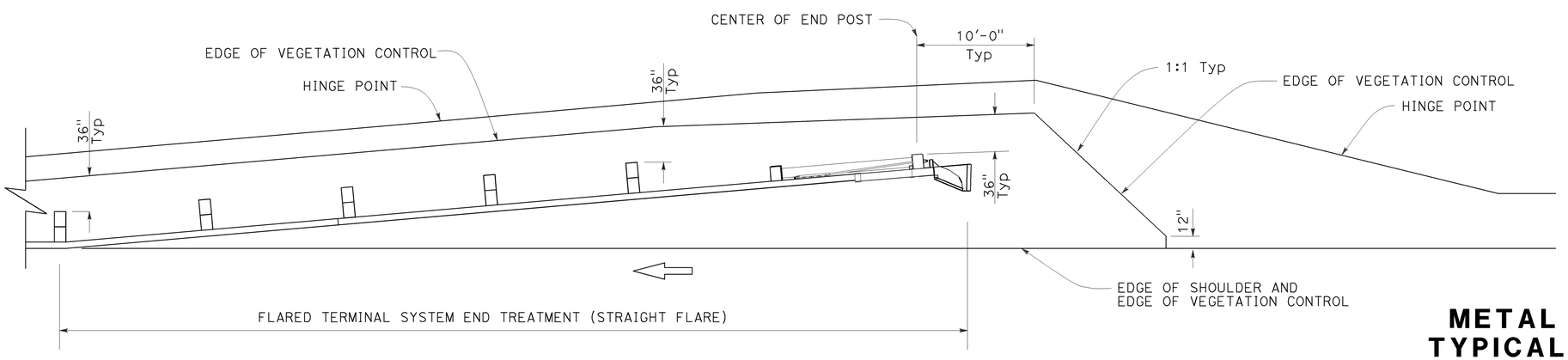

PLAN

NOTES:

1. See Revised Standard Plan RSP A77C5 for additional vegetation control details.
2. Where the distance between back of post and hinge point is less than 42", construct vegetation control to 6" from hinge point while maintaining the 8" block-out at back of post. If the 8" block-out at back of post can not be maintained, construct vegetation control flush with the back edge of post.
3. Where dike is constructed under railing, construct vegetation control to back edge of dike. Where paved shoulder is constructed within 36" in front of the post, construct vegetation control to the edge of paved shoulder.

STATE OF CALIFORNIA
DEPARTMENT OF TRANSPORTATION

METAL BEAM GUARD RAILING TYPICAL VEGETATION CONTROL FOR TERMINAL SYSTEM END TREATMENTS

NO SCALE

RSP A77C6 DATED OCTOBER 19, 2012 SUPERSEDES STANDARD PLAN A77C6 DATED MAY 20, 2011 - PAGE 54 OF THE STANDARD PLANS BOOK DATED 2010.

REVISED STANDARD PLAN RSP A77C6

2010 REVISED STANDARD PLAN RSP A77C6

DIST	COUNTY	ROUTE	POST MILES TOTAL PROJECT	SHEET No	TOTAL SHEETS
04	SCI	82,85,87,101, 152,237	Var	21	38

REGISTERED CIVIL ENGINEER 6-08-12 DATE

10-29-12
PLANS APPROVAL DATE

REGISTERED PROFESSIONAL ENGINEER LINA G. ELLIS No. C65260 Exp. 9-30-13 CIVIL STATE OF CALIFORNIA

The State of California or its officers or agents shall not be responsible for the accuracy or completeness of electronic copies of this plan sheet.

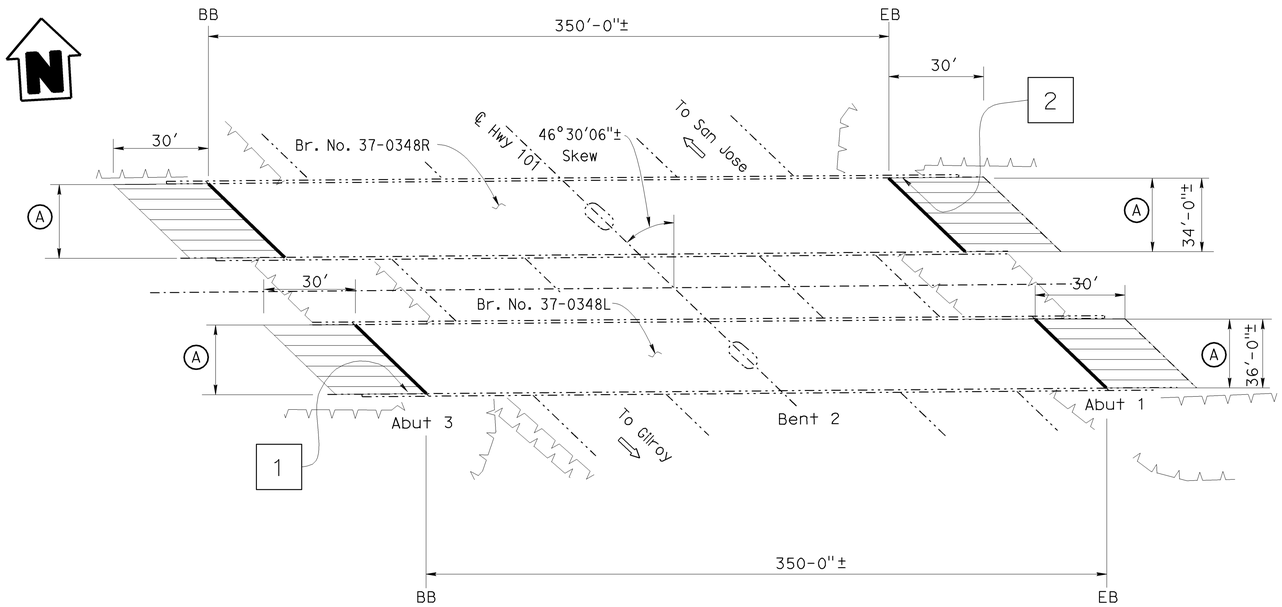

1 2 ROUTE 82/101 SEPARATION

BR. No. 37-0348R/L, Rte 82, PM R0.01
NO SCALE

1 - ROUTE 82/101 SEPARATION BRIDGE NO 34-0348R

QUANTITIES

AGGREGATE BASE (APPROACH SLAB)	8	CY
STRUCTURAL CONCRETE, APPROACH SLAB (TYPE R)	76	CY
PAVING NOTCH EXTENSION	74	CF
PAINT BRIDGE IDENTIFICATION	1	EA
JOINT SEAL (MR 1 1/2")	104	LF

2 - ROUTE 82/101 SEPARATION BRIDGE NO 34-0348L

QUANTITIES

AGGREGATE BASE (APPROACH SLAB)	8	CY
STRUCTURAL CONCRETE, APPROACH SLAB (TYPE R)	80	CY
PAVING NOTCH EXTENSION	80	CF
PAINT BRIDGE IDENTIFICATION	1	EA
JOINT SEAL (MR 1 1/2")	110	LF

THE CONTRACTOR SHALL VERIFY ALL CONTROLLING FIELD DIMENSIONS BEFORE ORDERING OR FABRICATING ANY MATERIAL.

INDEX TO PLANS

SHEET No.	TITLE
1	GENERAL PLAN 1
2	GENERAL PLAN 2
3	GENERAL PLAN 3
4	GENERAL PLAN 4
5	GENERAL PLAN 5
6	GENERAL PLAN 6
7	GENERAL PLAN 7
8	GENERAL PLAN 8
9	GENERAL PLAN 9
10	GENERAL PLAN 10
11	GENERAL PLAN 11
12	TEMPORARY AND DECKING AND SUPPORT DETAILS
13	EXPANSION JOINT DETAILS AND DECK REPAIR DETAILS
14	JOINT SEAL AND JOINT SEAL ASSEMBLY TABLE & DETAILS
15	STRUCTURE APPROACH, TYPE R(30D)

STANDARD PLANS DATED 2010

SHEET No.	TITLE
A10A	ABBREVIATIONS (SHEET 1 OF 2)
A10B	ABBREVIATIONS (SHEET 2 OF 2)
B6-21	JOINT SEALS (MAXIMUM MR=2")

LEGEND:

INDICATES EXISTING STRUCTURE

INDICATE LIMITS OF REMOVAL OF EXISTING APPROACH SLABS AND PLACEMENT OF NEW STRUCTURE APPROACH SEE "STRUCTURE APPROACH, TYPE R(30D)" SHEET FOR DETAILS.

INDICATES BRIDGE LOCATION, SEE TITLE SHEET.

INDICATES LIMITS OF INSTALL NEW JOINT SEAL. FOR DETAILS SEE "JOINT SEAL AND JOINT SEAL ASSEMBLY TABLE AND DETAILS" SHEET.

1 INDICATES PAINT BRIDGE IDENTIFICATION AS FOLLOWS:
ROUTE 82/101 SEPARATION
Br. No. 37-0348L RTE 82 PM R0.01 1982.

2 INDICATES PAINT BRIDGE IDENTIFICATION AS FOLLOWS:
ROUTE 82/101 SEPARATION
Br. No. 37-0348R RTE 82 PM R0.01 1982.

NOTE:

A PAVING NOTCH EXTENSION REQUIRED

REPLACE JOINT SEALS, REPLACE APPROACH SLABS AND TREAT BRIDGE DECKS

ROUTE 82/101 SEPARATION

GENERAL PLAN 1

Hongyuan Su
DESIGN ENGINEER 06-08-12

	BY	CHECKED	LOAD FACTOR DESIGN	LIVE LOADING: HS20-44 AND ALTERNATIVE AND PERMIT DESIGN LOAD	
DESIGN	L. Ellis	C. Lee			
DETAILS	M. Yu	L. Ellis	LAYOUT	M. Yu	H. Su
QUANTITIES	L. Ellis	C. Lee	SPECIFICATIONS	D. Klein	PLANS AND SPECS COMPARED D. Klein

STATE OF CALIFORNIA
DEPARTMENT OF TRANSPORTATION

DIVISION OF MAINTENANCE
STRUCTURE MAINTENANCE AND INVESTIGATIONS

BRIDGE NO. 37-0348R/L
POST MILE R0.01

STRUCTURES DESIGN GENERAL PLAN SHEET (ENGLISH) (REV. 10/25/05)

ORIGINAL SCALE IN INCHES FOR REDUCED PLANS 0 1 2 3

UNIT: 04609
PROJECT NUMBER & PHASE: 0400021093
CONTRACT NO.: 04-2E7101

DISREGARD PRINTS BEARING EARLIER REVISION DATES

REVISION DATES 03-14-12 04-18-12 04-25-12 07-23-12

SHEET 1 OF 15

FILE => 04-2E7101gp001.dgn

USERNAME => s130817 DATE PLOTTED => 19-SEP-2012 TIME PLOTTED => 13:58

DIST	COUNTY	ROUTE	POST MILES TOTAL PROJECT	SHEET No	TOTAL SHEETS
04	SCI	82,85,87,101, 152,237	Var	22	38

REGISTERED CIVIL ENGINEER 6-08-12 DATE

10-29-12
PLANS APPROVAL DATE

REGISTERED PROFESSIONAL ENGINEER LINA G. ELLIS No. C65260 Exp. 9-30-13 CIVIL STATE OF CALIFORNIA

The State of California or its officers or agents shall not be responsible for the accuracy or completeness of electronic copies of this plan sheet.

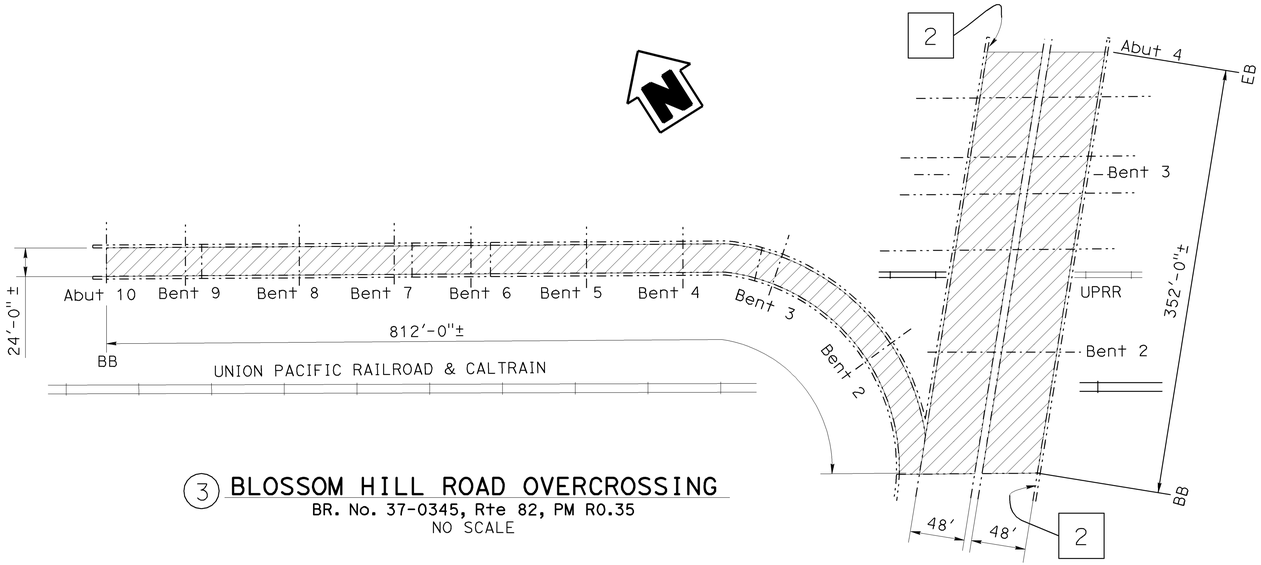

3 BLOSSOM HILL ROAD OVERCROSSING

BR. No. 37-0345, Rte 82, PM R0.35
NO SCALE

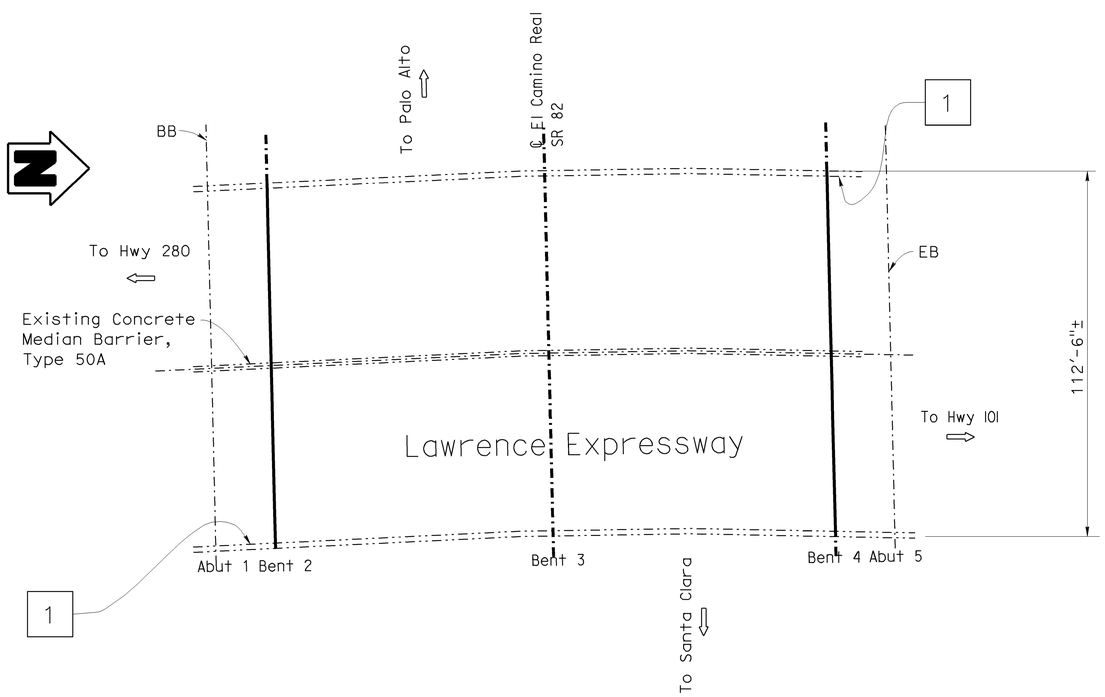

4 LAWRENCE EXPRESSWAY OVERCROSSING

BR. No. 37-0337, Rte 82, PM 14.34
NO SCALE

LEGEND:

-·-·-·- INDICATES EXISTING STRUCTURE

INDICATE LIMITS OF PREPARE CONCRETE BRIDGE DECK SURFACE AND TREAT BRIDGE DECK WITH METHACRYLATE

INDICATES LOCATION OF CLEAN EXPANSION JOINT AND INSTALL NEW JOINT SEAL. FOR DETAILS SEE "JOINT SEAL AND JOINT SEAL ASSEMBLY TABLE AND DETAILS" SHEET.

(–) INDICATES BRIDGE LOCATION, SEE TITLE SHEET.

1 INDICATES PAINT BRIDGE IDENTIFICATION AS FOLLOWS:
LAWRENCE EXPRESSWAY O.C.
Br. No. 37-0337 RTE 82 PM 14.34
1970 & 1996.

2 INDICATES PAINT BRIDGE IDENTIFICATION AS FOLLOWS:
BLOSSOM HILL ROAD O.C.
Br. No. 37-0345 RTE 82 PM R0.35
1974.

3 - BLOSSOM HILL ROAD OC — BRIDGE NO 37-0345

QUANTITIES

PREPARE CONCRETE BRIDGE DECK SURFACE	53,280	SQFT
PAINT BRIDGE IDENTIFICATION	2	EA
TREAT BRIDGE DECK	53,280	SQFT
FURNISH BRIDGE DECK TREATMENT MATERIAL	592	GAL
PUBLIC SAFETY PLAN	LUMP SUM	

4 - LAWRENCE EXPRESSWAY OC — BRIDGE NO 37-0337

QUANTITIES

PAINT BRIDGE IDENTIFICATION	2	EA
CLEAN EXPANSION JOINT	230	LF
JOINT SEAL (MR 1 1/2")	230	LF

THE CONTRACTOR SHALL VERIFY ALL CONTROLLING FIELD DIMENSIONS BEFORE ORDERING OR FABRICATING ANY MATERIAL.

REPLACE JOINT SEALS, REPLACE APPROACH SLABS AND TREAT BRIDGE DECKS

BLOSSOM HILL ROAD & LAWRENCE EXPRESSWAY OC

GENERAL PLAN 2

Hongyuan Su
DESIGN ENGINEER 06-08-12

	BY	CHECKED			
DESIGN	L. Ellis	C. Lee	LOAD FACTOR DESIGN	LIVE LOADING: HS20-44 AND ALTERNATIVE AND PERMIT DESIGN LOAD	
DETAILS	M. Yu	L. Ellis	LAYOUT	M. Yu	H. Su
QUANTITIES	L. Ellis	C. Lee	SPECIFICATIONS	D. Klein	PLANS AND SPECS COMPARED D. Klein

STATE OF CALIFORNIA
DEPARTMENT OF TRANSPORTATION

DIVISION OF MAINTENANCE
STRUCTURE MAINTENANCE AND INVESTIGATIONS

BRIDGE NO. 37-0345 37-0337
POST MILE Var

STRUCTURES DESIGN GENERAL PLAN SHEET (ENGLISH) (REV. 10/25/05)

ORIGINAL SCALE IN INCHES FOR REDUCED PLANS 0 1 2 3

UNIT: 04609
PROJECT NUMBER & PHASE: 0400021093
CONTRACT NO.: 04-2E7101

DISREGARD PRINTS BEARING EARLIER REVISION DATES

REVISION DATES 03-14-12 04-18-12 04-25-12 07-23-12

SHEET 2 OF 15

FILE => 04-2E7101gp002.dgn

USERNAME => s130817 DATE PLOTTED => 19-SEP-2012 TIME PLOTTED => 13:58

DIST	COUNTY	ROUTE	POST MILES TOTAL PROJECT	SHEET No	TOTAL SHEETS
04	SCI	82,85,87,101, 152,237	Var	23	38

REGISTERED CIVIL ENGINEER 6-08-12 DATE

10-29-12
PLANS APPROVAL DATE

REGISTERED PROFESSIONAL ENGINEER LINA G. ELLIS No. C65260 Exp. 9-30-13 CIVIL STATE OF CALIFORNIA

The State of California or its officers or agents shall not be responsible for the accuracy or completeness of electronic copies of this plan sheet.

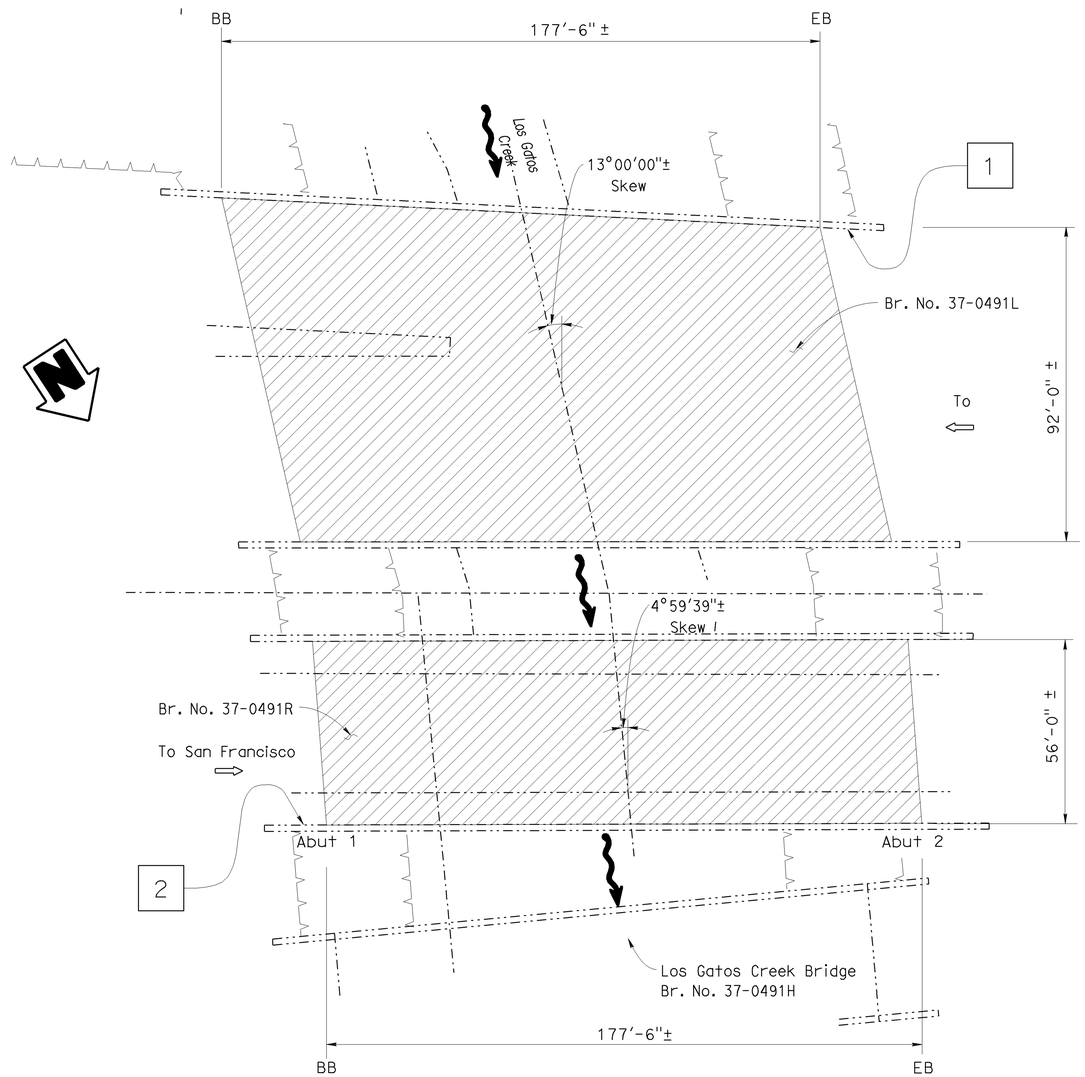

(5) (6) LOS GATOS CREEK
BR. No. 37-0491L/R, Rte 85, PM R10.8
NO SCALE

LEGEND:

-·-·-·- INDICATES EXISTING STRUCTURE

INDICATE LIMITS OF PREPARE CONCRETE BRIDGE DECK SURFACE AND TREAT BRIDGE DECK WITH METHACRYLATE

(–) INDICATES BRIDGE LOCATION, SEE TITLE SHEET.

1 INDICATES PAINT BRIDGE IDENTIFICATION AS FOLLOWS:
LOS GATOS CREEK BR
Br. No. 37-0491L RTE 82 PM R10.80 1994.

2 INDICATES PAINT BRIDGE IDENTIFICATION AS FOLLOWS:
LOS GATOS CREEK BR
Br. No. 37-0491R RTE 82 PM R10.80 1994.

5 - LOS GATOS CREEK BRIDGE NO 37-0491L

QUANTITIES

PREPARE CONCRETE BRIDGE DECK SURFACE	16,330	SQFT
PAINT BRIDGE IDENTIFICATION	1	EA
TREAT BRIDGE DECK	16,330	SQFT
FURNISH BRIDGE DECK TREATMENT MATERIAL	181	GAL
PUBLIC SAFETY PLAN	LUMP SUM	

6 - LOS GATOS CREEK BRIDGE NO 37-0491R

QUANTITIES

PREPARE CONCRETE BRIDGE DECK SURFACE	9,940	SQFT
PAINT BRIDGE IDENTIFICATION	1	EA
TREAT BRIDGE DECK	9,940	SQFT
FURNISH BRIDGE DECK TREATMENT MATERIAL	110	GAL
PUBLIC SAFETY PLAN	LUMP SUM	

THE CONTRACTOR SHALL VERIFY ALL CONTROLLING FIELD DIMENSIONS BEFORE ORDERING OR FABRICATING ANY MATERIAL.

REPLACE JOINT SEALS, REPLACE APPROACH SLABS AND TREAT BRIDGE DECKS

LOS GATOS CREEK

GENERAL PLAN 3

	BY	CHECKED			
DESIGN	L. Ellis	C. Lee	LOAD FACTOR DESIGN	LIVE LOADING: HS20-44 AND ALTERNATIVE AND PERMIT DESIGN LOAD	
DETAILS	M. Yu	L. Ellis	LAYOUT	M. Yu	H. Su
QUANTITIES	L. Ellis	C. Lee	SPECIFICATIONS	D. Klein	PLANS AND SPECS COMPARED D. Klein

DESIGN ENGINEER 06-08-12

STATE OF CALIFORNIA
DEPARTMENT OF TRANSPORTATION

DIVISION OF MAINTENANCE
STRUCTURE MAINTENANCE AND INVESTIGATIONS

BRIDGE NO. 37-0491R/L
POST MILE R10.8

STRUCTURES DESIGN GENERAL PLAN SHEET (ENGLISH) (REV. 10/25/05)

ORIGINAL SCALE IN INCHES FOR REDUCED PLANS 0 1 2 3

UNIT: 0989
PROJECT NUMBER & PHASE: 0400021093
CONTRACT NO.: 04-2E7101

DISREGARD PRINTS BEARING EARLIER REVISION DATES

REVISION DATES 03-14-12 04-18-12 04-25-12 07-23-12

SHEET 3 OF 15

FILE => 04-2E7101gp003.dgn

USERNAME => s130817 DATE PLOTTED => 19-SEP-2012 TIME PLOTTED => 13:58

DIST	COUNTY	ROUTE	POST MILES TOTAL PROJECT	SHEET No	TOTAL SHEETS
04	SCI	82,85,87,101, 152,237	Var	24	38

REGISTERED CIVIL ENGINEER 6-08-12 DATE

10-29-12
PLANS APPROVAL DATE

REGISTERED PROFESSIONAL ENGINEER LINA G. ELLIS No. C65260 Exp. 9-30-13 CIVIL STATE OF CALIFORNIA

The State of California or its officers or agents shall not be responsible for the accuracy or completeness of electronic copies of this plan sheet.

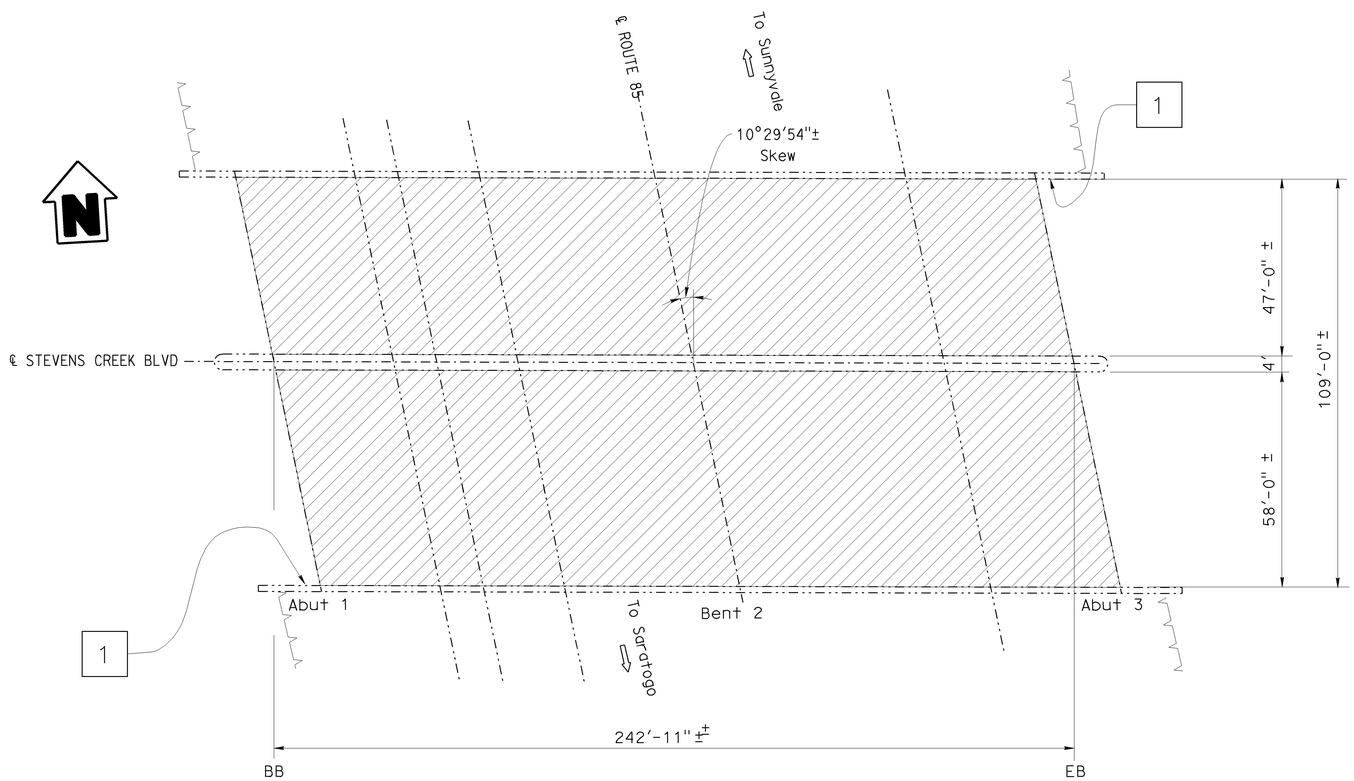

(7) STEVENS CREEK BLVD OVERCROSSING

BR. No. 37-0466, Rte 85, PM R17.7
NO SCALE

LEGEND:

INDICATES EXISTING STRUCTURE

INDICATE LIMITS OF PREPARE CONCRETE BRIDGE DECK SURFACE AND TREAT BRIDGE DECK WITH METHACRYLATE

(–) INDICATES BRIDGE LOCATION, SEE TITLE SHEET.

[1] INDICATES PAINT BRIDGE IDENTIFICATION AS FOLLOWS:
STEVENS CREEK BLVD OC
Br. No. 37-0466 PM R17.7 1990.

7 - STEVENS CREEK BLVD OC BRIDGE NO 37-0466

QUANTITIES

PREPARE CONCRETE BRIDGE DECK SURFACE	25,515	SQFT
PAINT BRIDGE IDENTIFICATION	2	EA
TREAT BRIDGE DECK	25,515	SQFT
FURNISH BRIDGE DECK TREATMENT MATERIAL	284	GAL
PUBLIC SAFETY PLAN	LUMP SUM	

THE CONTRACTOR SHALL VERIFY ALL CONTROLLING FIELD DIMENSIONS BEFORE ORDERING OR FABRICATING ANY MATERIAL.

REPLACE JOINT SEALS, REPLACE APPROACH SLABS AND TREAT BRIDGE DECKS

STEVENS CREEK BLVD OVERCROSSING

GENERAL PLAN 4

Hongyuan Su
DESIGN ENGINEER 06-08-12

	BY	CHECKED
DESIGN	L. Ellis	C. Lee
DETAILS	M. Yu	L. Ellis
QUANTITIES	L. Ellis	C. Lee

LOAD FACTOR DESIGN — LIVE LOADING: HS20-44 AND ALTERNATIVE AND PERMIT DESIGN LOAD

	BY	CHECKED
LAYOUT	M. Yu	H. Su
SPECIFICATIONS	D. Klein	PLANS AND SPECS COMPARED D. Klein

STATE OF CALIFORNIA
DEPARTMENT OF TRANSPORTATION

DIVISION OF MAINTENANCE
STRUCTURE MAINTENANCE AND INVESTIGATIONS

BRIDGE NO. 37-0466
POST MILE R17.7

STRUCTURES DESIGN GENERAL PLAN SHEET (ENGLISH) (REV. 10/25/05)

ORIGINAL SCALE IN INCHES FOR REDUCED PLANS 0 1 2 3

UNIT: 0989
PROJECT NUMBER & PHASE: 0400021093
CONTRACT NO.: 04-2E7101

DISREGARD PRINTS BEARING EARLIER REVISION DATES

REVISION DATES 03-14-12 04-18-12 07-23-12

SHEET 4 OF 15

FILE => 04-2E7101gp004.dgn

USERNAME = s130817 DATE PLOTTED => 19-SEP-2012 TIME PLOTTED => 13:58

DIST	COUNTY	ROUTE	POST MILES TOTAL PROJECT	SHEET No	TOTAL SHEETS
04	SCI	82,85,87,101, 152,237	Var	25	38

REGISTERED CIVIL ENGINEER 6-08-12 DATE

10-29-12
PLANS APPROVAL DATE

REGISTERED PROFESSIONAL ENGINEER LINA G. ELLIS No. C65260 Exp. 9-30-13 CIVIL STATE OF CALIFORNIA

The State of California or its officers or agents shall not be responsible for the accuracy or completeness of electronic copies of this plan sheet.

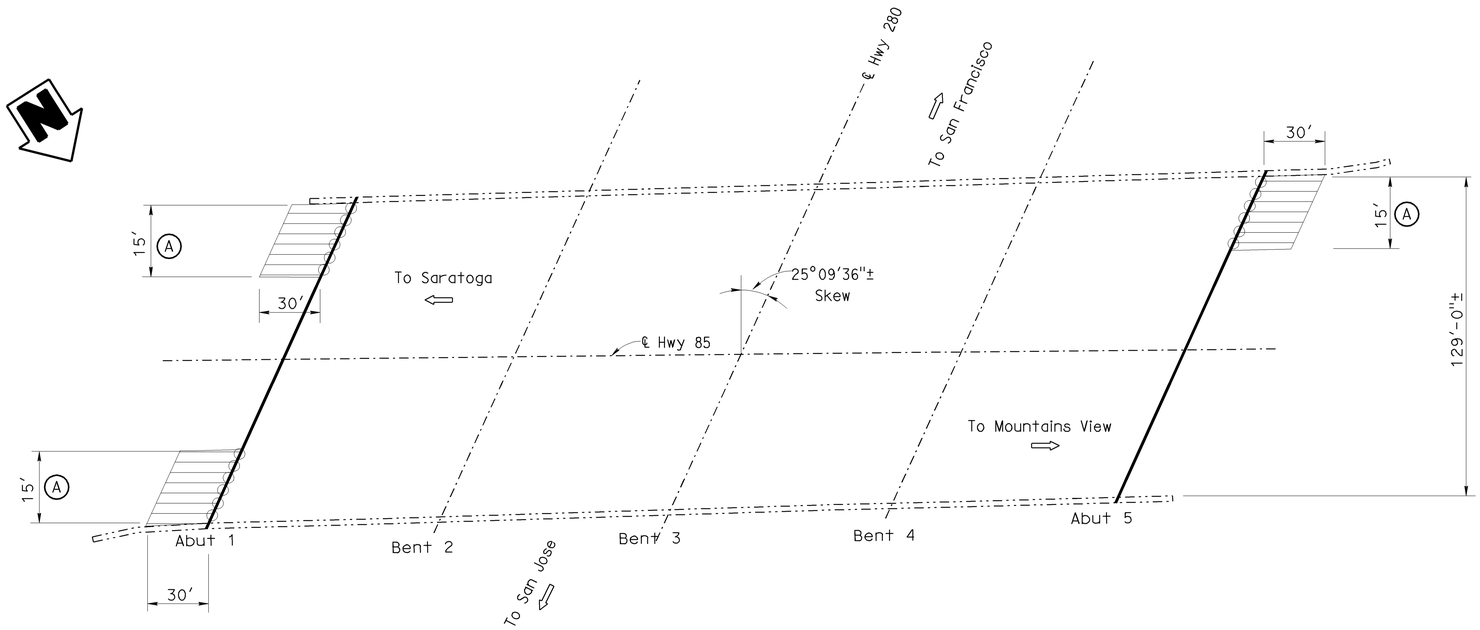

8 ROUTE 85/280 SEPARATION

BR. No. 37-0227, Rte 85, PM R18.41
NO SCALE

LEGEND:

INDICATES EXISTING STRUCTURE

INDICATES LIMITS OF INSTALL NEW JOINT SEAL AND CLEAN EXPANSION JOINTS. FOR DETAILS SEE "JOINT SEAL AND JOINT SEAL ASSEMBLY TABLE AND DETAILS" SHEET.

INDICATES LIMITS OF INSTALL NEW JOINT SEAL. FOR DETAILS SEE "JOINT SEAL AND JOINT SEAL ASSEMBLY TABLE AND DETAILS" SHEET.

INDICATE LIMITS OF REMOVAL OF EXISTING APPROACH SLABS AND PLACEMENT OF NEW STRUCTURE APPROACH SEE "STRUCTURE APPROACH, TYPE R(30D)" SHEET FOR DETAILS.

(–) INDICATES BRIDGE LOCATION, SEE TITLE SHEET.

NOTE:

(A) PAVING NOTCH EXTENSION REQUIRED

8 - ROUTE 85/280 SEPARATION BRIDGE NO 37-0227

QUANTITIES

AGGREGATE BASE (APPROACH SLAB)	5	CY
STRUCTURAL CONCRETE, APPROACH SLAB (TYPE R)	50	CY
PAVING NOTCH EXTENSION	38	CF
CLEAN EXPANSION JOINT	240	LF
JOINT SEAL (MR 1½")	290	LF

THE CONTRACTOR SHALL VERIFY ALL CONTROLLING FIELD DIMENSIONS BEFORE ORDERING OR FABRICATING ANY MATERIAL.

REPLACE JOINT SEALS, REPLACE APPROACH SLABS AND TREAT BRIDGE DECKS

ROUTE 85/280 SEPARATION

GENERAL PLAN 5

	BY	CHECKED			
DESIGN	L. Ellis	C. Lee	LOAD FACTOR DESIGN	LIVE LOADING: HS20-44 AND ALTERNATIVE AND PERMIT DESIGN LOAD	
DETAILS	M. Yu	L. Ellis	LAYOUT	M. Yu	H. Su
QUANTITIES	L. Ellis	C. Lee	SPECIFICATIONS	D. Klein	D. Klein

Hongyuan Su
DESIGN ENGINEER 06-08-12

STATE OF CALIFORNIA DEPARTMENT OF TRANSPORTATION

DIVISION OF MAINTENANCE STRUCTURE MAINTENANCE AND INVESTIGATIONS

BRIDGE NO. 37-0227
POST MILE R18.41

STRUCTURES DESIGN GENERAL PLAN SHEET (ENGLISH) (REV. 10/25/05)

ORIGINAL SCALE IN INCHES FOR REDUCED PLANS 0 1 2 3

UNIT: 0989
PROJECT NUMBER & PHASE: 0400021093
CONTRACT NO.: 04-2E7101

DISREGARD PRINTS BEARING EARLIER REVISION DATES

REVISION DATES 03-14-12 04-18-12

SHEET 5 OF 15

FILE => 04-2E7101gp005.dgn

USERNAME => s130817 DATE PLOTTED => 19-SEP-2012 TIME PLOTTED => 13:58

DIST	COUNTY	ROUTE	POST MILES TOTAL PROJECT	SHEET No	TOTAL SHEETS
04	SCI	82,85,87,101, 152,237	Var	26	38

REGISTERED CIVIL ENGINEER 6-08-12 DATE

10-29-12
PLANS APPROVAL DATE

REGISTERED PROFESSIONAL ENGINEER LINA G. ELLIS No. C65260 Exp. 9-30-13 CIVIL STATE OF CALIFORNIA

The State of California or its officers or agents shall not be responsible for the accuracy or completeness of electronic copies of this plan sheet.

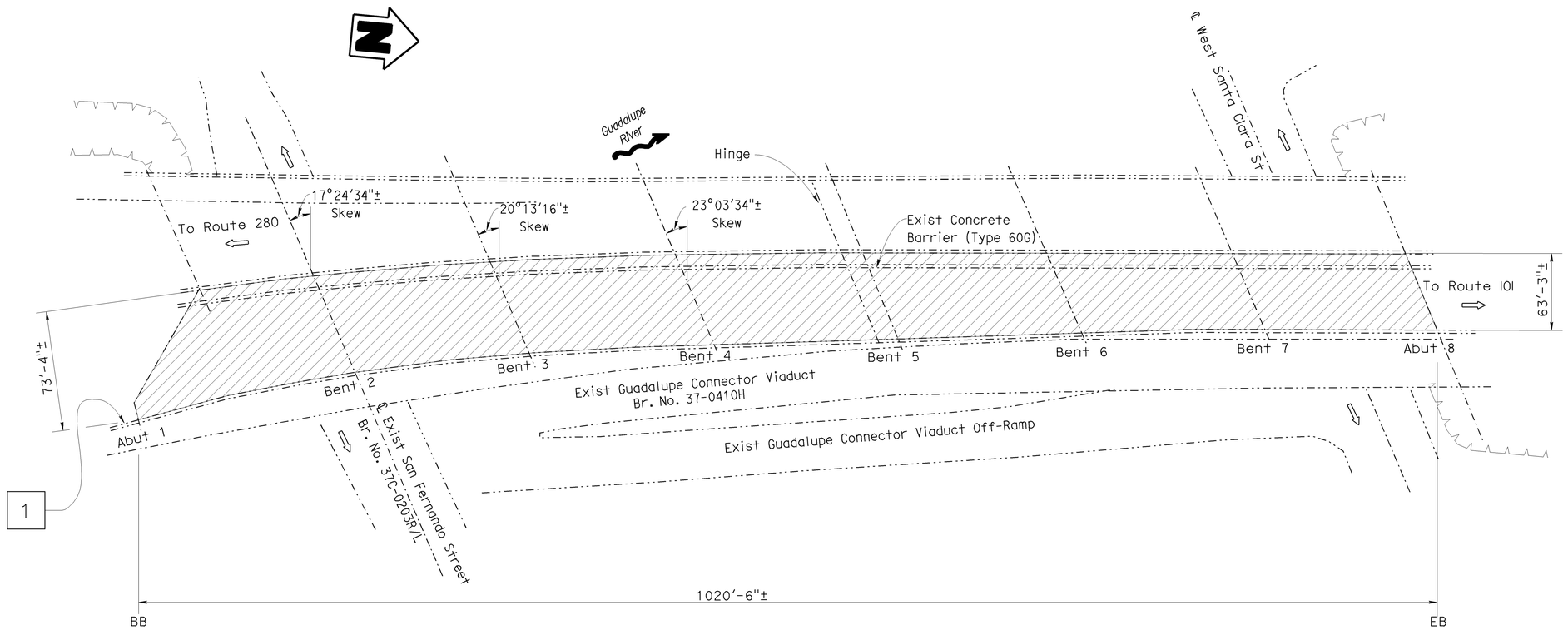

(9) GUADALUPE RIVER VIADUCT

BR. No. 37-0308, Rte 87, PM 5.67
NO SCALE

LEGEND:

-·-·-·- INDICATES EXISTING STRUCTURE

INDICATE LIMITS OF PREPARE CONCRETE BRIDGE DECK SURFACE AND TREAT BRIDGE DECK WITH METHACRYLATE

(–) INDICATES BRIDGE LOCATION, SEE TITLE SHEET.

[1] INDICATES PAINT BRIDGE IDENTIFICATION AS FOLLOWS: GUADALUPE RIVER VIADUCT Br. No. 37-0308 RTE 87 PM 5.67 1978 &1988.

9 - GUADALUPE RIVER VIADUCT BRIDGE NO 37-0308

QUANTITIES

PREPARE CONCRETE BRIDGE DECK SURFACE	69,360	SQFT
PAINT BRIDGE IDENTIFICATION	1	EA
TREAT BRIDGE DECK	69,360	SQFT
FURNISH BRIDGE DECK TREATMENT MATERIAL	771	GAL
PUBLIC SAFETY PLAN	LUMP SUM	

THE CONTRACTOR SHALL VERIFY ALL CONTROLLING FIELD DIMENSIONS BEFORE ORDERING OR FABRICATING ANY MATERIAL.

REPLACE JOINT SEALS, REPLACE APPROACH SLABS AND TREAT BRIDGE DECKS

GUADALUPE RIVER VIADUCT

GENERAL PLAN 6

Hongyuan Su
DESIGN ENGINEER 06-08-12

	BY	CHECKED			
DESIGN	L. Ellis	C. Lee	LOAD FACTOR DESIGN	LIVE LOADING: HS20-44 AND ALTERNATIVE AND PERMIT DESIGN LOAD	
DETAILS	M. Yu	L. Ellis	LAYOUT	M. Yu	H. Su
QUANTITIES	L. Ellis	C. Lee	SPECIFICATIONS	D. Klein	PLANS AND SPECS COMPARED D. Klein

STATE OF CALIFORNIA DEPARTMENT OF TRANSPORTATION

DIVISION OF MAINTENANCE STRUCTURE MAINTENANCE AND INVESTIGATIONS

BRIDGE NO. 37-0605
POST MILE 8.25

STRUCTURES DESIGN GENERAL PLAN SHEET (ENGLISH) (REV. 10/25/05)

ORIGINAL SCALE IN INCHES FOR REDUCED PLANS 0 1 2 3

UNIT: 0989
PROJECT NUMBER & PHASE: 0400021093
CONTRACT NO.: 04-2E7101

DISREGARD PRINTS BEARING EARLIER REVISION DATES

REVISION DATES 03-14-12 04-18-12 04-25-12 07-23-12

SHEET 6 OF 15

FILE => 04-2E7101gp006.dgn

USERNAME => s13308ff DATE PLOTTED => 19-SEP-2012 TIME PLOTTED => 13:58

DIST	COUNTY	ROUTE	POST MILES TOTAL PROJECT	SHEET No	TOTAL SHEETS
04	SCI	82,85,87,101, 152,237	Var	27	38

REGISTERED CIVIL ENGINEER 6-08-12 DATE

10-29-12
PLANS APPROVAL DATE

REGISTERED PROFESSIONAL ENGINEER LINA G. ELLIS No. C65260 Exp. 9-30-13 CIVIL STATE OF CALIFORNIA

The State of California or its officers or agents shall not be responsible for the accuracy or completeness of electronic copies of this plan sheet.

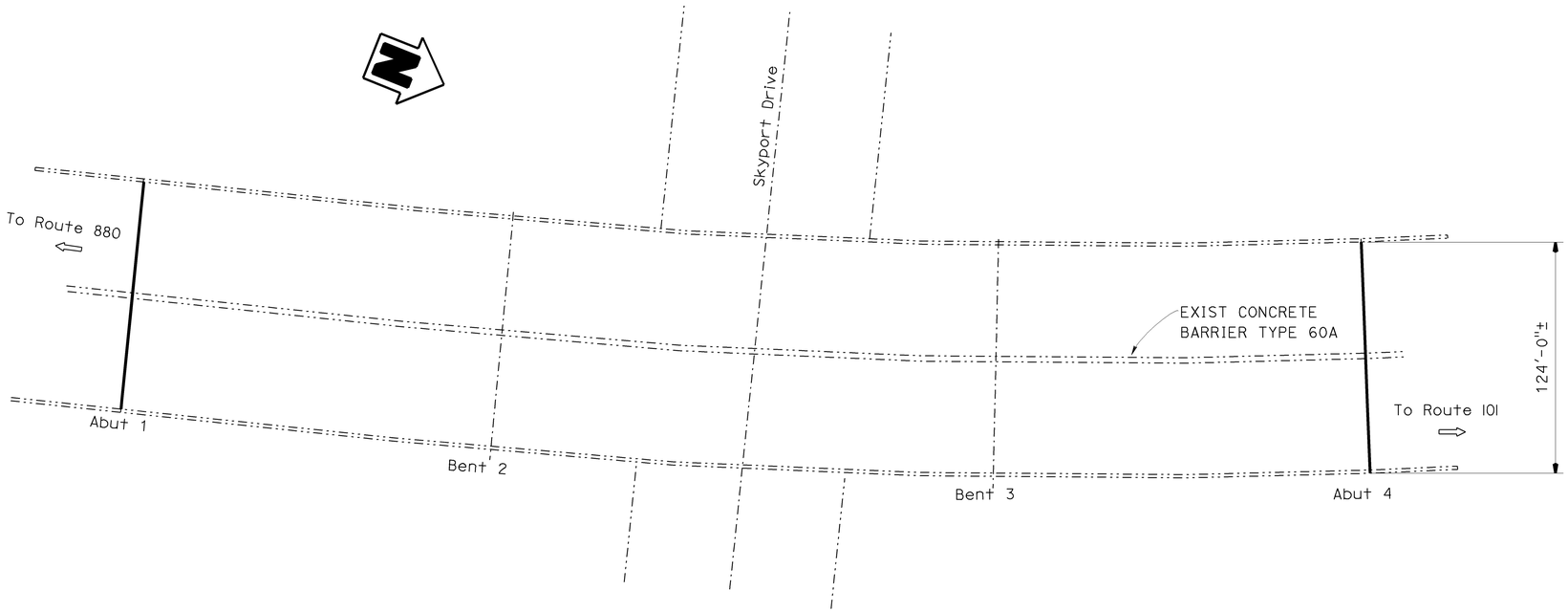

LEGEND:

INDICATES EXISTING STRUCTURE

INDICATES LIMITS OF INTALL NEW JOINT SEAL.

INDICATES BRIDGE LOCATION, SEE TITLE SHEET.

INDICATES LIMITS OF REMOVE EXISTING CONCRETE AND JOINT SEAL ASSEMBLY

INDICATES LIMITS OF PLACE NEW CONCRETE, AND REINFORCING STEEL.

(10) SKYPORT DRIVE UNDERCROSSING

BR. No. 37-0605, Rte 87, PM 8.25
NO SCALE

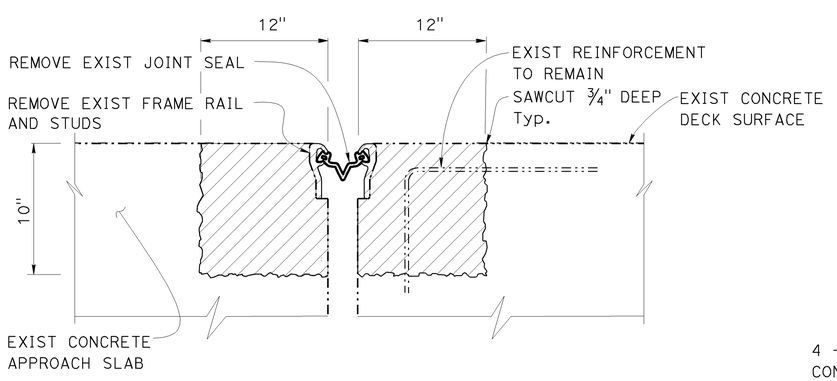

EXISTING
No scale
ABUTMENT 1 & 4 EXISTING (LOCATION A)
EXISTING EXPANSION JOINT DETAIL

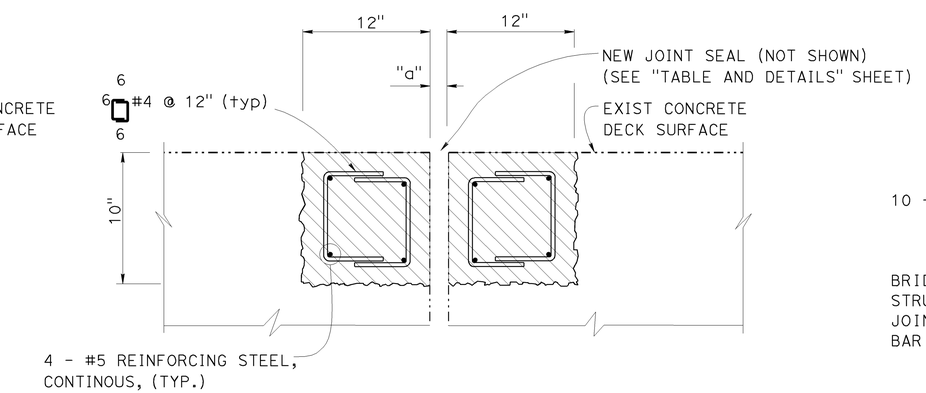

RECONSTRUCTION
No scale
ABUTMENT 1 & 4 NEW (LOCATION A)
NEW EXPANSION JOINT DETAIL

10 - SKYPORT DRIVE UC BRIDGE NO 37-0605

QUANTITIES

BRIDGE REMOVAL (PORTION) LOCATION A	LUMP	SUM
STRUCTURAL CONCRETE, BRIDGE	16	CY
JOINT SEAL (MR 1 1/2")	248	LF
BAR REINFORCING STEEL (BRIDGE)	1,066	LB

THE CONTRACTOR SHALL VERIFY ALL CONTROLLING FIELD DIMENSIONS BEFORE ORDERING OR FABRICATING ANY MATERIAL.

REPLACE JOINT SEALS, REPLACE APPROACH SLABS AND TREAT BRIDGE DECKS

SKYPORT DRIVE UNDERCROSSING

GENERAL PLAN 7

	BY	CHECKED			
DESIGN	L. Ellis	C. Lee	LOAD FACTOR DESIGN	LIVE LOADING: HS20-44 AND ALTERNATIVE AND PERMIT DESIGN LOAD	
DETAILS	M. Yu	L. Ellis	LAYOUT	M. Yu	H. Su
QUANTITIES	L. Ellis	C. Lee	SPECIFICATIONS	D. Klein	D. Klein

Hongyuan Su
DESIGN ENGINEER 06-08-12

STATE OF CALIFORNIA DEPARTMENT OF TRANSPORTATION

DIVISION OF MAINTENANCE STRUCTURE MAINTENANCE AND INVESTIGATIONS

BRIDGE NO. 37-0605
POST MILE 8.25

STRUCTURES DESIGN GENERAL PLAN SHEET (ENGLISH) (REV. 10/25/05)

ORIGINAL SCALE IN INCHES FOR REDUCED PLANS 0 1 2 3

UNIT: 0989
PROJECT NUMBER & PHASE: 0400021093
CONTRACT NO.: 04-2E7101

DISREGARD PRINTS BEARING EARLIER REVISION DATES

REVISION DATES 03-14-12 04-18-12 04-25-12

SHEET 7 OF 15

FILE => 04-2E7101gp007.dgn

USERNAME => s130817 DATE PLOTTED => 19-SEP-2012 TIME PLOTTED => 13:58

DIST	COUNTY	ROUTE	POST MILES TOTAL PROJECT	SHEET No	TOTAL SHEETS
04	SCI	82,85,87,101, 152,237	Var	28	38

REGISTERED CIVIL ENGINEER 6-08-12 DATE

10-29-12
PLANS APPROVAL DATE

REGISTERED PROFESSIONAL ENGINEER LINA G. ELLIS No. C65260 Exp. 9-30-13 CIVIL STATE OF CALIFORNIA

The State of California or its officers or agents shall not be responsible for the accuracy or completeness of electronic copies of this plan sheet.

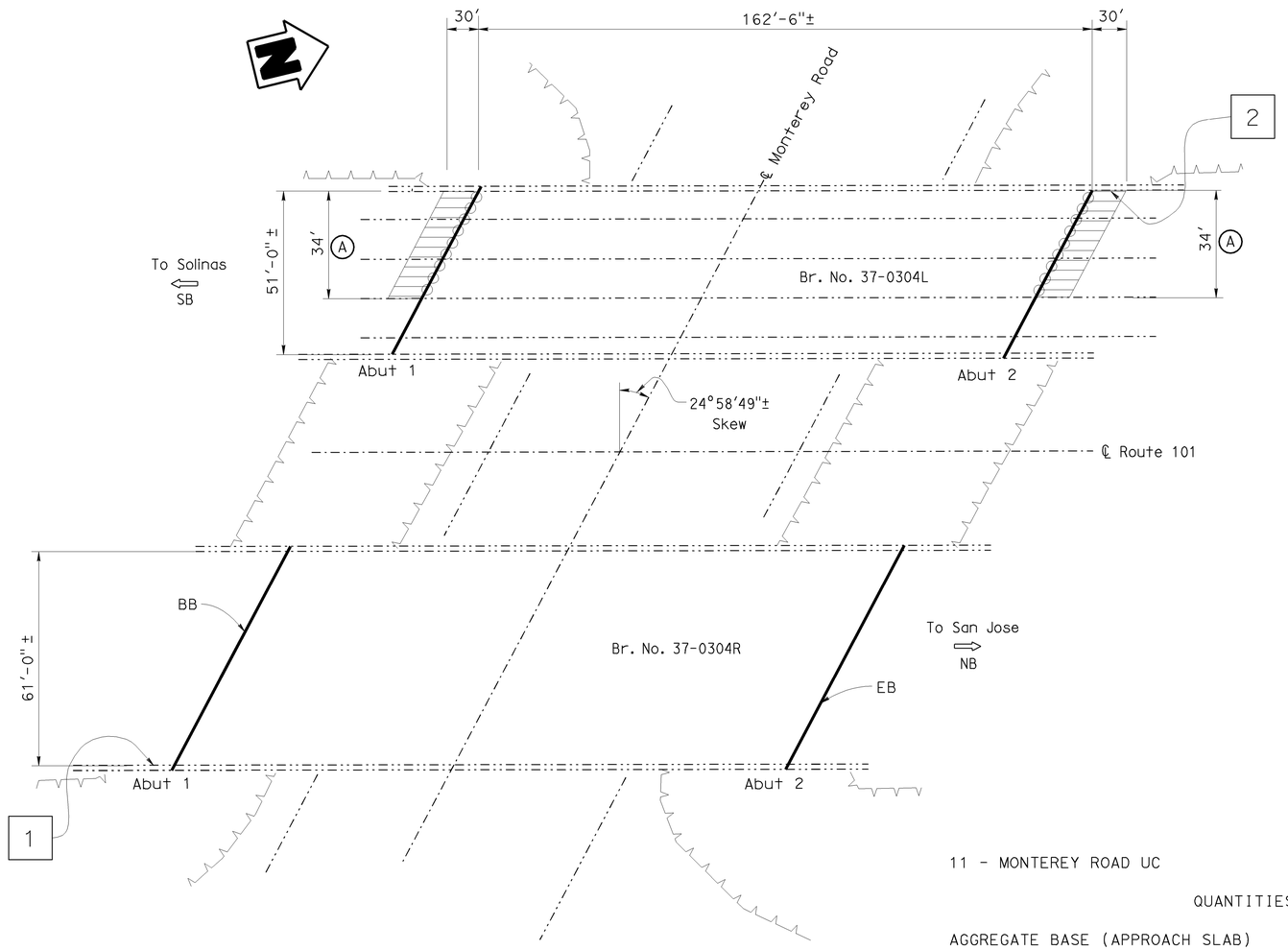

(11) (12) MONTEREY ROAD UNDERCROSSING
BR. No. 37-0304L/R, Rte 101, PM R4.94
NO SCALE

LEGEND:

-·-·-·- INDICATES EXISTING STRUCTURE

INDICATES LIMITS OF INSTALL NEW JOINT SEAL AND CLEAN EXPANSION JOINTS. FOR DETAILS SEE "JOINT SEAL AND JOINT SEAL ASSEMBLY TABLE AND DETAILS" SHEET.

INDICATES LIMITS OF INSTALL NEW JOINT SEAL. FOR DETAILS SEE "JOINT SEAL AND JOINT SEAL ASSEMBLY TABLE AND DETAILS" SHEET.

INDICATE LIMITS OF REMOVAL OF EXISTING APPROACH SLABS AND PLACEMENT OF NEW STRUCTURE APPROACH SEE "STRUCTURE APPROACH, TYPE R(30D)" SHEET FOR DETAILS.

(–) INDICATES BRIDGE LOCATION, SEE TITLE SHEET.

[1] INDICATES PAINT BRIDGE IDENTIFICATION AS FOLLOWS:
MONTEREY ROAD UC
Br. No. 37-0304R PM R4.94 1973.

[2] INDICATES PAINT BRIDGE IDENTIFICATION AS FOLLOWS:
MONTEREY ROAD UC
Br. No. 37-0304L PM R4.94 1973.

NOTE:

(A) PAVING NOTCH EXTENSION REQUIRED

11 - MONTEREY ROAD UC BRIDGE NO 37-0304L

QUANTITIES

AGGREGATE BASE (APPROACH SLAB)	8	CY
STRUCTURAL CONCRETE, APPROACH SLAB (TYPE R)	76	CY
PAVING NOTCH EXTENSION	58	CF
PAINT BRIDGE IDENTIFICATION	1	EA
CLEAN EXPANSION JOINT	43	LF
JOINT SEAL (MR 1 1/2")	118	LF

12 - MONTEREY ROAD UC BRIDGE NO 37-0304R

QUANTITIES

PAINT BRIDGE IDENTIFICATION	1	EA
CLEAN EXPANSION JOINT	140	LF
JOINT SEAL (MR 1 1/2")	140	LF

THE CONTRACTOR SHALL VERIFY ALL CONTROLLING FIELD DIMENSIONS BEFORE ORDERING OR FABRICATING ANY MATERIAL.

REPLACE JOINT SEALS, REPLACE APPROACH SLABS AND TREAT BRIDGE DECKS

MONTEREY ROAD UNDERCROSSING

GENERAL PLAN 8

Hongyuan Su DESIGN ENGINEER 06-08-12	DESIGN	BY L. Ellis	CHECKED C. Lee	LOAD FACTOR DESIGN	LIVE LOADING: HS20-44 AND ALTERNATIVE AND PERMIT DESIGN LOAD
	DETAILS	BY M. Yu	CHECKED L. Ellis	LAYOUT	BY M. Yu / CHECKED H. Su
	QUANTITIES	BY L. Ellis	CHECKED C. Lee	SPECIFICATIONS	BY D. Klein / PLANS AND SPECS COMPARED D. Klein

STATE OF CALIFORNIA DEPARTMENT OF TRANSPORTATION

DIVISION OF MAINTENANCE STRUCTURE MAINTENANCE AND INVESTIGATIONS

BRIDGE NO. 37-0304L/R
POST MILE R4.94

STRUCTURES DESIGN GENERAL PLAN SHEET (ENGLISH) (REV. 10/25/05)

ORIGINAL SCALE IN INCHES FOR REDUCED PLANS 0 1 2 3

UNIT: 0989
PROJECT NUMBER & PHASE: 0400021093
CONTRACT NO.: 04-2E7101

DISREGARD PRINTS BEARING EARLIER REVISION DATES

REVISION DATES 03-14-12 04-18-12

SHEET 8 OF 15

FILE => 04-2E7101gp008.dgn

USERNAME => s130617 DATE PLOTTED => 19-SEP-2012 TIME PLOTTED => 13:58

DIST	COUNTY	ROUTE	POST MILES TOTAL PROJECT	SHEET No	TOTAL SHEETS
04	SCI	82,85,87,101, 152,237	Var	29	38

REGISTERED CIVIL ENGINEER 6-08-12 DATE

10-29-12
PLANS APPROVAL DATE

REGISTERED PROFESSIONAL ENGINEER LINA G. ELLIS No. C65260 Exp. 9-30-13 CIVIL STATE OF CALIFORNIA

The State of California or its officers or agents shall not be responsible for the accuracy or completeness of electronic copies of this plan sheet.

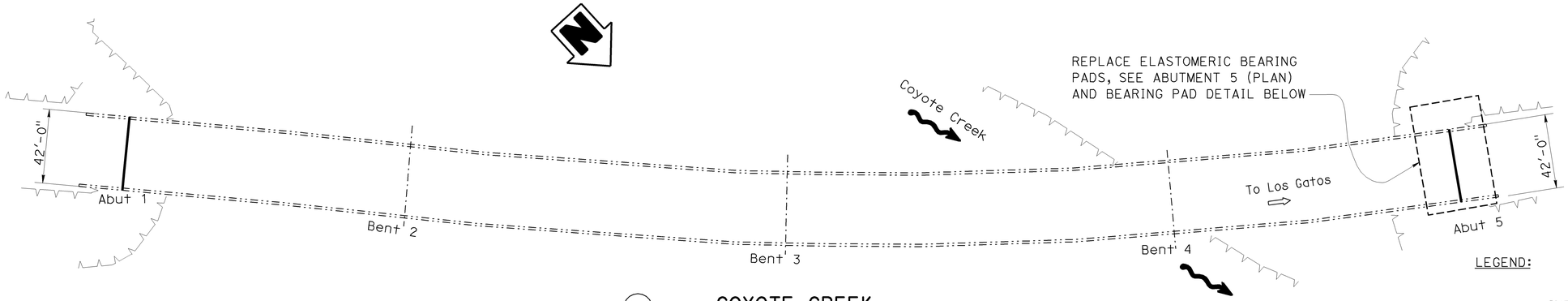

(14) COYOTE CREEK
BR. No. 37-0346G, Rte 101, PM R26.6
NO SCALE

LEGEND:

- INDICATES EXISTING STRUCTURE
- INDICATES LIMITS OF INSTALL NEW JOINT SEAL. FOR DETAILS, SEE "EXPANSION JOINT DETAILS SHEET" AND " JOINT SEAL TABLE AND DETAILS" SHEET.
- (–) INDICATES BRIDGE LOCATION, SEE TITLE SHEET.
- REMOVE AND REPLACE ELASTOMERIC BEARING PAD
- X JACKING LOCATION.

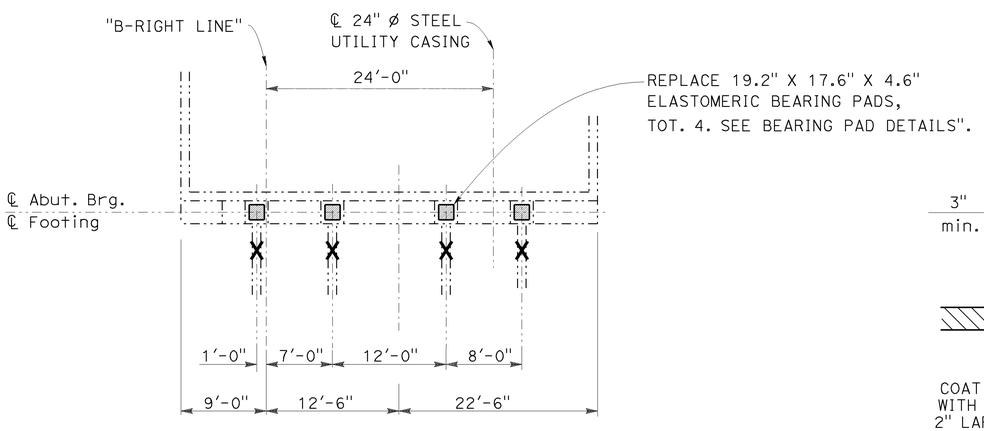

BEARING PAD REPLACEMENT
ABUTMENT 5 (PLAN)
1/8" = 1'-0"

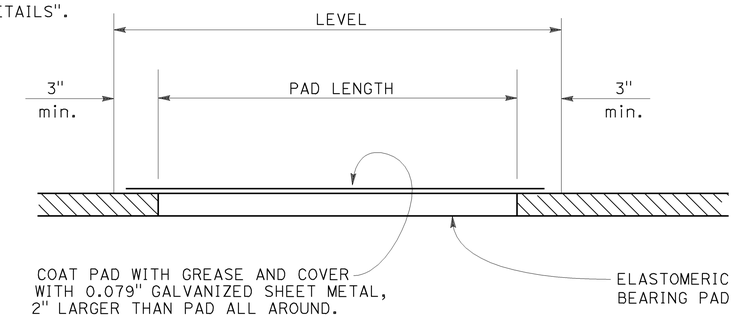

BEARING PAD DETAIL (ABUTMENT 5)
NO SCALE

14 - COYOTE CREEK BRIDGE NO 37-0346G

QUANTITIES

TEMPORARY SUPPORT	LUMP	SUM
BRIDGE REMOVAL (PORTION) LOCATION B	LUMP	SUM
STRUCTURAL CONCRETE, BRIDGE	6	CY
REPLACE BEARING PAD	4	EA
JOINT SEAL (MR 1½")	88	LF
BAR REINFORCING STEEL (BRIDGE)	1062	LB

THE CONTRACTOR SHALL VERIFY ALL CONTROLLING FIELD DIMENSIONS BEFORE ORDERING OR FABRICATING ANY MATERIAL.

REPLACE JOINT SEALS, REPLACE APPROACH SLABS AND TREAT BRIDGE DECKS
COYOTE CREEK
GENERAL PLAN 9

Hongyuan Su
DESIGN ENGINEER 06-08-12

	BY	CHECKED
DESIGN	L. Ellis	C. Lee
DETAILS	M. Yu	L. Ellis
QUANTITIES	L. Ellis	C. Lee

LOAD FACTOR DESIGN — LIVE LOADING: HS20-44 AND ALTERNATIVE AND PERMIT DESIGN LOAD
LAYOUT — BY M. Yu — CHECKED H. Su
SPECIFICATIONS — BY D. Klein — PLANS AND SPECS COMPARED D. Klein

STATE OF CALIFORNIA
DEPARTMENT OF TRANSPORTATION

DIVISION OF MAINTENANCE
STRUCTURE MAINTENANCE AND INVESTIGATIONS

BRIDGE NO. 37-0346G
POST MILE R26.6

STRUCTURES DESIGN GENERAL PLAN SHEET (ENGLISH) (REV. 10/25/05)

ORIGINAL SCALE IN INCHES FOR REDUCED PLANS 0 1 2 3

UNIT: 0989
PROJECT NUMBER & PHASE: 0400021093
CONTRACT NO.: 04-2E7101

DISREGARD PRINTS BEARING EARLIER REVISION DATES
REVISION DATES 03-14-12 04-18-12 04-25-12 07-23-12
SHEET 9 OF 15

FILE => 04-2E7101gp009.dgn

USERNAME => s130817 DATE PLOTTED => 19-SEP-2012 TIME PLOTTED => 13:58

DIST	COUNTY	ROUTE	POST MILES TOTAL PROJECT	SHEET No	TOTAL SHEETS
04	SCI	82,85,87,101, 152,237	Var	30	38

REGISTERED CIVIL ENGINEER 6-08-12 DATE

10-29-12
PLANS APPROVAL DATE

REGISTERED PROFESSIONAL ENGINEER LINA G. ELLIS No. C65260 Exp. 9-30-13 CIVIL STATE OF CALIFORNIA

The State of California or its officers or agents shall not be responsible for the accuracy or completeness of electronic copies of this plan sheet.

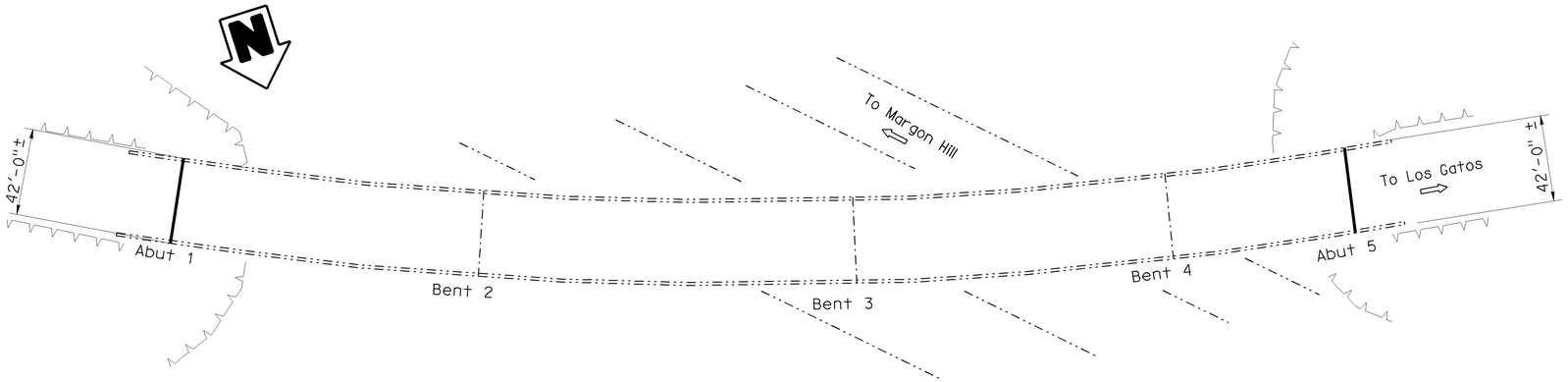

(15) N101-N85/101 CONNECTOR SEPARATION

BR. No. 37-0548G, Rte 101, PM R26.78
NO SCALE

LEGEND:

INDICATES EXISTING STRUCTURE

INDICATE LIMITS OF PREPARE CONCRETE BRIDGE DECK SURFACE AND TREAT BRIDGE DECK WITH METHACRYLATE

(–) INDICATES BRIDGE LOCATION, SEE TITLE SHEET.

INDICATES LIMITS OF INSTALL NEW JOINT SEAL. FOR DETAILS, SEE "EXPANSION JOINT DETAILS SHEET" AND " JOINT SEAL TABLE AND DETAILS" SHEET.

15 - N101-N85/101 CONNECTOR SEPARATION	BRIDGE NO 37-0548G	
BRIDGE REMOVAL (PORTION) LOCATION C	LUMP	SUM
STRUCTURAL CONCRETE, BRIDGE	6	CY
JOINT SEAL (MR 1½")	88	LF
BAR REINFORCING STEEL (BRIDGE)	1062	LB

16 - S101 ON-RAMP/S101-S85 SEPARATION QUANTITIES	BRIDGE NO 37-0547K	
PREPARE CONCRETE BRIDGE DECK SURFACE	12,697	SQFT
TREAT BRIDGE DECK	12,697	SQFT
FURNISH BRIDGE DECK TREATMENT MATERIAL	141	GAL
PUBLIC SAFETY PLAN	LUMP	SUM

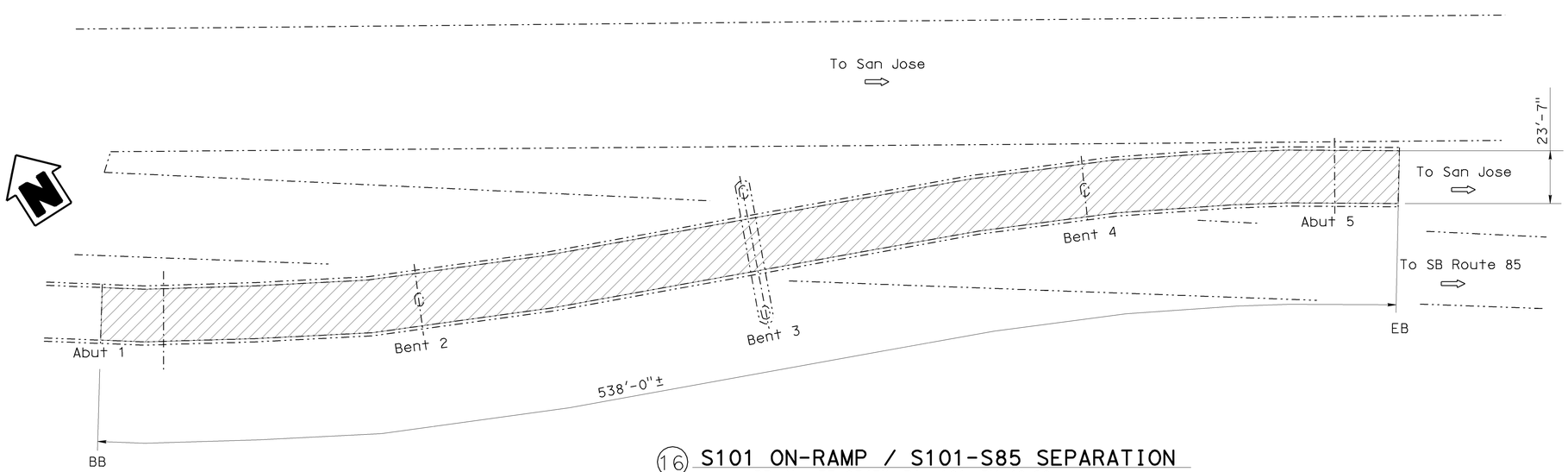

(16) S101 ON-RAMP / S101-S85 SEPARATION

BR. No. 37-0547K, Rte 101, PM 48.28
NO SCALE

THE CONTRACTOR SHALL VERIFY ALL CONTROLLING FIELD DIMENSIONS BEFORE ORDERING OR FABRICATING ANY MATERIAL.

REPLACE JOINT SEALS, REPLACE APPROACH SLABS AND TREAT BRIDGE DECKS

N101-N85/101 CONNECTOR SEPARATION, S101 ON RAMP/S101-S85 SEPARATION

GENERAL PLAN 10

Hongyuan Su
DESIGN ENGINEER 06-08-12

	BY	CHECKED			
DESIGN	L. Ellis	C. Lee	LOAD FACTOR DESIGN	LIVE LOADING: HS20-44 AND ALTERNATIVE AND PERMIT DESIGN LOAD	
DETAILS	M. Yu	L. Ellis	LAYOUT	M. Yu	H. Su
QUANTITIES	L. Ellis	C. Lee	SPECIFICATIONS	D. Klein	PLANS AND SPECS COMPARED D. Klein

STATE OF CALIFORNIA DEPARTMENT OF TRANSPORTATION

DIVISION OF MAINTENANCE STRUCTURE MAINTENANCE AND INVESTIGATIONS

BRIDGE NO. 37-0548G 37-0547K
POST MILE R26.78 48.28

STRUCTURES DESIGN GENERAL PLAN SHEET (ENGLISH) (REV. 10/25/05)

ORIGINAL SCALE IN INCHES FOR REDUCED PLANS 0 1 2 3

UNIT: 0989
PROJECT NUMBER & PHASE: 0400021093
CONTRACT NO.: 04-2E7101

DISREGARD PRINTS BEARING EARLIER REVISION DATES

REVISION DATES 03-14-12 04-18-12 07-23-12 09-18-12

SHEET 10 OF 15

FILE => 04-2E7101gp010.dgn

USERNAME => s130817 DATE PLOTTED => 19-SEP-2012 TIME PLOTTED => 13:58

DIST	COUNTY	ROUTE	POST MILES TOTAL PROJECT	SHEET No	TOTAL SHEETS
04	SCI	82,85,87,101, 152,237	Var	31	38

REGISTERED CIVIL ENGINEER 6-08-12 DATE

10-29-12
PLANS APPROVAL DATE

REGISTERED PROFESSIONAL ENGINEER LINA G. ELLIS No. C65260 Exp. 9-30-13 CIVIL STATE OF CALIFORNIA

The State of California or its officers or agents shall not be responsible for the accuracy or completeness of electronic copies of this plan sheet.

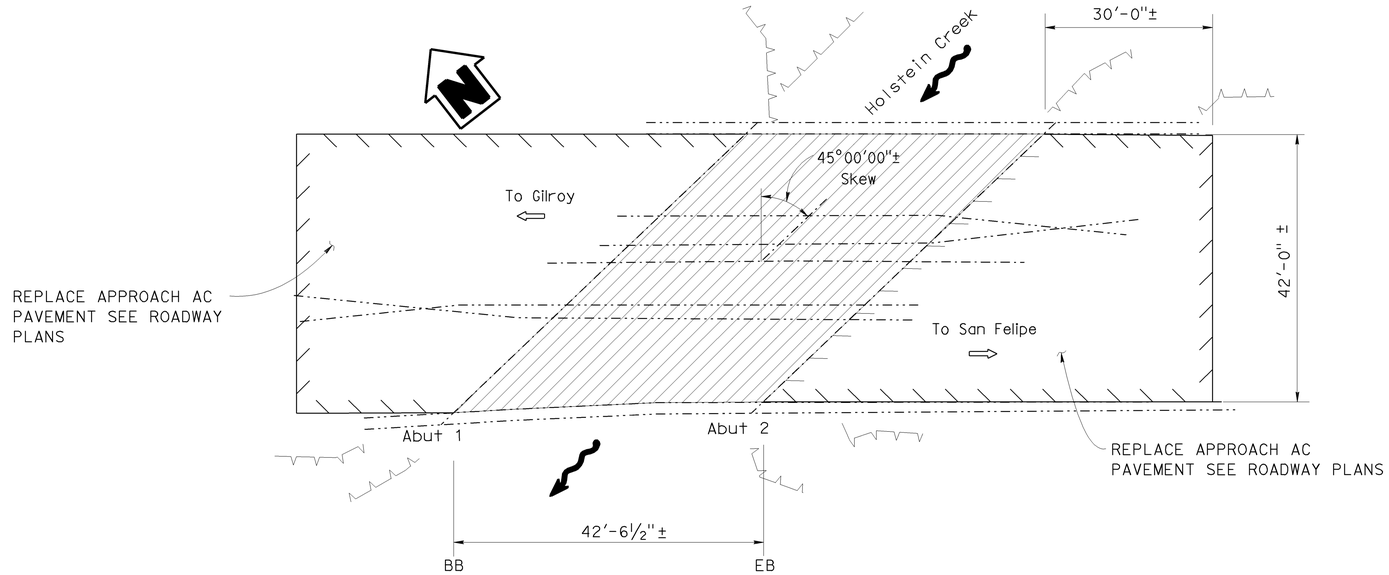

(17) HOLSTEIN CREEK

BR. No. 37-0028, Rte 152, PM R19.32
NO SCALE

LEGEND:

INDICATES EXISTING STRUCTURE

INDICATE LIMITS OF PREPARE CONCRETE BRIDGE DECK SURFACE AND TREAT BRIDGE DECK WITH METHACRYLATE.

(–) INDICATES BRIDGE LOCATION, SEE TITLE SHEET.

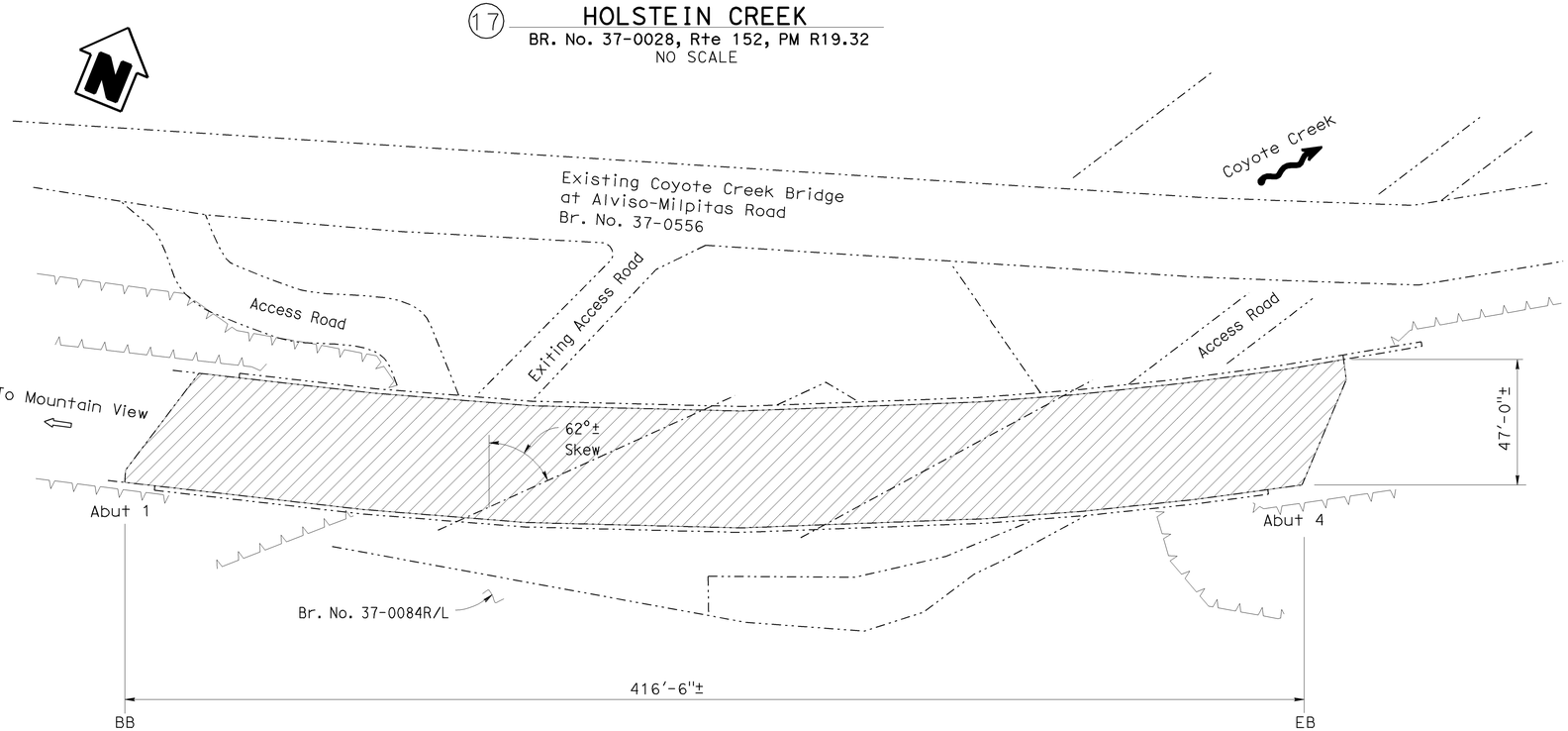

(18) COYOTE CREEK

BR. No. 37-0084K, Rte 237, PM 8.72
NO SCALE

17 - HOLSTEIN CREEK BRIDGE NO 37-0028

QUANTITIES

PREPARE CONCRETE BRIDGE DECK SURFACE	1,785	SQFT
TREAT BRIDGE DECK	1,785	SQFT
FURNISH BRIDGE DECK TREATMENT MATERIAL	20	GAL
PUBLIC SAFETY PLAN	LUMP	SUM

18 - COYOTE CREEK BRIDGE NO 37-0084K

QUANTITIES

PREPARE CONCRETE BRIDGE DECK SURFACE	19,576	SQFT
TREAT BRIDGE DECK	19,576	SQFT
FURNISH BRIDGE DECK TREATMENT MATERIAL	218	GAL
PUBLIC SAFETY PLAN	LUMP	SUM

THE CONTRACTOR SHALL VERIFY ALL CONTROLLING FIELD DIMENSIONS BEFORE ORDERING OR FABRICATING ANY MATERIAL.

REPLACE JOINT SEALS, REPLACE APPROACH SLABS AND TREAT BRIDGE DECKS

HOLSTEIN CREEK & COYOTE CREEK

GENERAL PLAN 11

DESIGN ENGINEER 06-08-12	DESIGN	L. Ellis	C. Lee	LOAD FACTOR DESIGN	LIVE LOADING: HS20-44 AND ALTERNATIVE AND PERMIT DESIGN LOAD
	DETAILS	BY M. Yu	CHECKED L. Ellis	LAYOUT	BY M. Yu / CHECKED H. Su
	QUANTITIES	BY L. Ellis	CHECKED C. Lee	SPECIFICATIONS	BY D. Klein / PLANS AND SPECS COMPARED D. Klein

STATE OF CALIFORNIA
DEPARTMENT OF TRANSPORTATION

DIVISION OF MAINTENANCE
STRUCTURE MAINTENANCE AND INVESTIGATIONS

BRIDGE NO. 37-0028 37-0084K
POST MILE R19.32 8.72

STRUCTURES DESIGN GENERAL PLAN SHEET (ENGLISH) (REV. 10/25/05)

ORIGINAL SCALE IN INCHES FOR REDUCED PLANS 0 1 2 3

UNIT: 0989
PROJECT NUMBER & PHASE: 0400021093
CONTRACT NO.: 04-2E7101

DISREGARD PRINTS BEARING EARLIER REVISION DATES

REVISION DATES 03-14-12 04-18-12 07-23-12

SHEET 11 OF 15

FILE => 04-2E7101gp011.dgn

USERNAME => s130817 DATE PLOTTED => 19-SEP-2012 TIME PLOTTED => 13:58

DIST	COUNTY	ROUTE	POST MILES TOTAL PROJECT	SHEET No	TOTAL SHEETS
04	SCI	82,85,87,101, 152,237	Var	32	38

REGISTERED CIVIL ENGINEER 6-08-12 DATE

10-29-12
PLANS APPROVAL DATE

REGISTERED PROFESSIONAL ENGINEER LINA G. ELLIS No. C65260 Exp. 9-30-13 CIVIL STATE OF CALIFORNIA

The State of California or its officers or agents shall not be responsible for the accuracy or completeness of electronic copies of this plan sheet.

INITIAL JACKING LOADS AND MINIMUM TEMPORARY SUPPORT DESIGN LOADS

BR. NO.	LOCATION	INITIAL JACKING LOAD	TEMPORARY SUPPORT DEAD LOAD + LIVE LOAD + IMPACT	HORIZONTAL LOAD
37-0346G	Abutment 5	1400 kips	2500 kips	170 kips

TEMPORARY DECKING DESIGN LOAD

MOMENT DEMAND / FOOT (Kip-ft / ft)	BOLT SHEAR / FOOT (Kip / ft)	BOLT TENSION (Kip)
3.1	2.2	4.8

Note:
Plate thickness shall be > 7/8".
Maximum spacing of anchorage shall not exceed 18".
Anchorage washer shall be neoprene or similar.
Plate deflection shall not be greater than s/300 (s=span)

General Temporary Support Notes

1. The initial jacking load and minimum temporary support load requirements shown are only applicable with the construction sequence shown.

General Construction Sequence

1. Install temporary support system at location as listed in the above table.
2. Apply initial jacking load in the designated jacking location under the girder to achieve zero load condition at the bearings.
3. Remove existing bearing pad between the girder and abutment.
4. Install new bearing pad as shown in details.
5. After the bearing pads are installed, remove the temporary support system.

Temporary Support Design Notes

The allowable concrete bearing pressure for temporary support at the abutment seat is 1.3 ksi.
Assumed for existing abutment: f'c = 3.5 ksi; fy = 36 ksi and n = 9
Assumed for existing steel girder: Fs = 33 ksi

Support members shall evenly distribute jacking forces to superstructure jacking location.
Jacking locations as shown are for reference only.

NOTE:
THE CONTRACTOR SHALL VERIFY ALL CONTROLLING FIELD DIMENSIONS BEFORE ORDERING OR FABRICATING ANY MATERIAL.

REPLACE JOINT SEALS, REPLACE APPROACH SLABS

	BY	CHECKED
DESIGN	L. Ellis	C. Lee
DETAILS	M.Yu	L. Ellis
QUANTITIES	L. Ellis	C. Lee

STATE OF CALIFORNIA
DEPARTMENT OF TRANSPORTATION

DIVISION OF MAINTENANCE
STRUCTURE MAINTENANCE AND INVESTIGATIONS

BRIDGE NO. Various
POST MILE Various

Br. No. 37-0346G, COYOTE CREEK
TEMPORARY DECKING & SUPPORT DETAILS

STRUCTURES DESIGN DETAIL SHEET (ENGLISH) (REV. 10/25/05)

ORIGINAL SCALE IN INCHES FOR REDUCED PLANS 0 1 2 3

UNIT: 0989
PROJECT NUMBER & PHASE: 0400021091
CONTRACT NO.: 04-2E7101

DISREGARD PRINTS BEARING EARLIER REVISION DATES 3-14-12 04-18-12 07-23-12

SHEET 12 OF 15

FILE => 04-2E71010jst001.dgn

USERNAME => s130817 DATE PLOTTED => 19-SEP-2012 TIME PLOTTED => 13:58

DIST	COUNTY	ROUTE	POST MILES TOTAL PROJECT	SHEET No.	TOTAL SHEETS
04	SCI	82,85,87,101, 152,237	Var	33	38

REGISTERED CIVIL ENGINEER 6-08-12 DATE

10-29-12
PLANS APPROVAL DATE

REGISTERED PROFESSIONAL ENGINEER LINA G. ELLIS No. C65260 Exp. 9-30-11 CIVIL STATE OF CALIFORNIA

The State of California or its officers or agents shall not be responsible for the accuracy or completeness of electronic copies of this plan sheet.

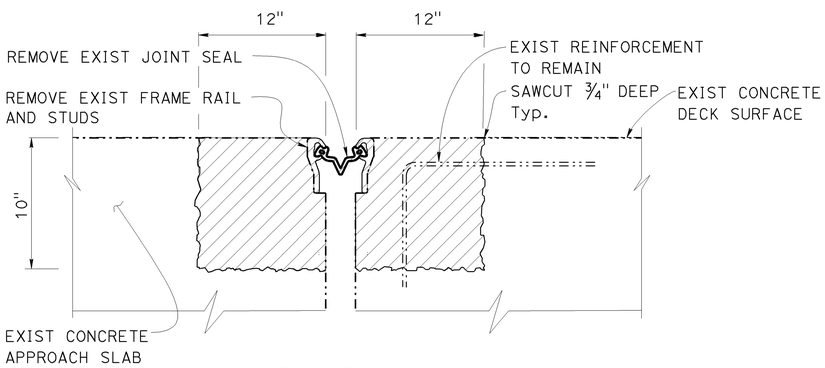

EXISTING
No scale

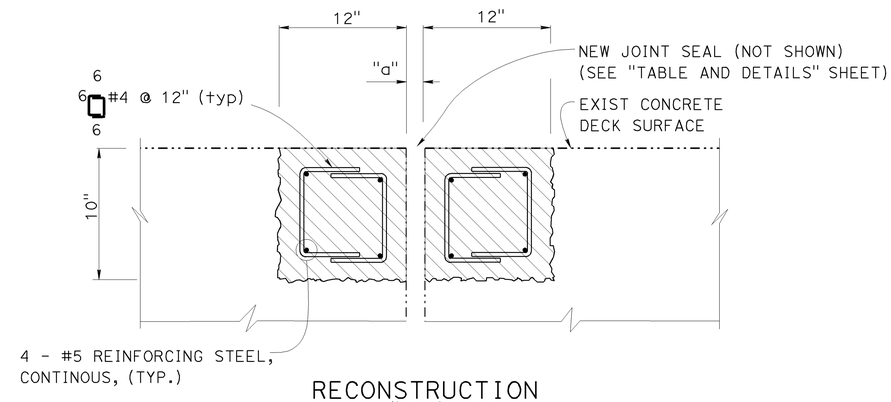

RECONSTRUCTION
No scale

EXISTING EXPANSION JOINT DETAIL
@ ABUTMENT 1 AND ABUTMENT 5

LOCATION B, BR NO. 37-0346G, RTE 101, PM R26.6
LOCATION C, BR NO. 37-0548G, RTE 101, PM R26.78

NEW EXPANSION JOINT DETAIL
@ ABUTMENT 1 AND ABUTMENT 5

LOCATION B, BR NO. 37-0346G, RTE 101, PM R26.6
LOCATION C, BR NO. 37-0548G, RTE 101, PM R26.78

LEGEND:

INDICATES LIMIT OF REMOVE EXISTING CONCRETE AND JOINT SEAL ASSEMBLY

INDICATES LIMIT OF PLACE NEW CONCRETE, AND REINFORCING STEEL.

GENERAL NOTES:

Reinforced Concrete: fy = 60,000 psi
f'c = 4,000 psi
Structural Steel: fy = 36,000 psi

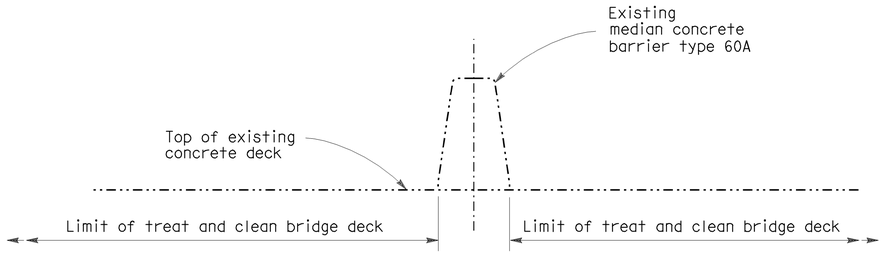

MEDIAN BARRIER

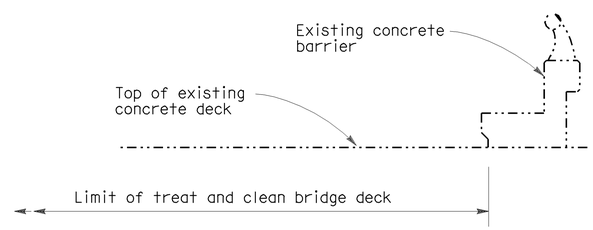

SIDEWALK BARRIER TYPE 2

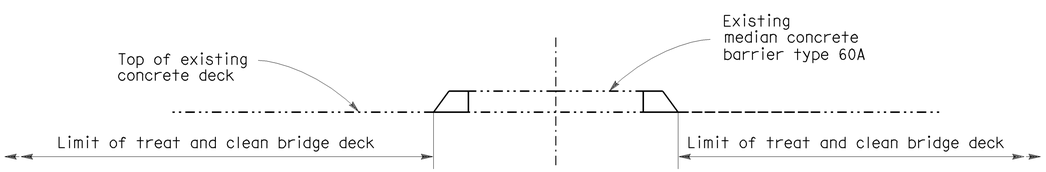

RAISED MEDIAN

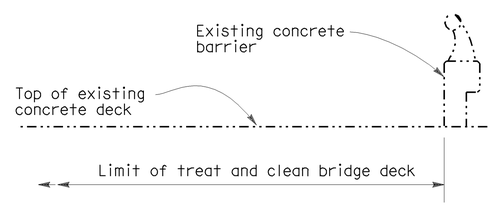

SIDEWALK BARRIER TYPE 1

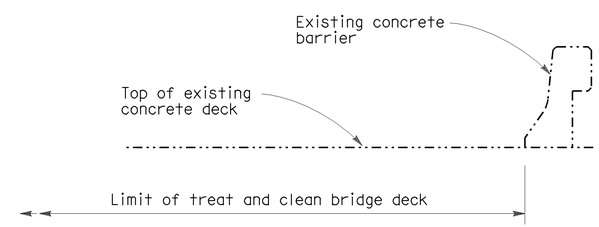

EOD BARRIER

NOTE:

THE CONTRACTOR SHALL VERIFY ALL CONTROLLING FIELD DIMENSIONS BEFORE ORDERING OR FABRICATING ANY MATERIAL.

TYPICAL LIMITS OF DECK WORK
NO SCALE

REPLACE JOINT SEALS, REPLACE APPROACH SLABS

VARIOUS BRIDGES

EXPANSION JOINT DETAILS & DECK REPAIR DETAILS

	BY	CHECKED
DESIGN	L. Ellis	C. Lee
DETAILS	M. Yu	L. Ellis
QUANTITIES	L. Ellis	C. Lee

STATE OF CALIFORNIA
DEPARTMENT OF TRANSPORTATION

DIVISION OF MAINTENANCE
STRUCTURE MAINTENANCE DESIGN

BRIDGE NO. Various
POST MILE Var

STRUCTURES MAINTENANCE DETAIL SHEET (ENGLISH) (REV. 09-01-10)

ORIGINAL SCALE IN INCHES FOR REDUCED PLANS 0 1 2 3

UNIT: 0989
PROJECT NUMBER & PHASE: 0400021093
CONTRACT NO.: 04-2E7101

DISREGARD PRINTS BEARING EARLIER REVISION DATES

REVISION DATES 3-14-12 04-18-12 04-25-12 07-23-12

SHEET 13 OF 15

FILE => 04-2E71010jst002.dgn

USERNAME => s133817 DATE PLOTTED => 19-SEP-2012 TIME PLOTTED => 13:58

DIST	COUNTY	ROUTE	POST MILES TOTAL PROJECT	SHEET No.	TOTAL SHEETS
04	SCI	82,85,87,101, 152,237	Var	34	38

REGISTERED CIVIL ENGINEER 6-08-12 DATE

10-29-12
PLANS APPROVAL DATE

REGISTERED PROFESSIONAL ENGINEER LINA G. ELLIS No. C65260 Exp. 9-30-11 CIVIL STATE OF CALIFORNIA

The State of California or its officers or agents shall not be responsible for the accuracy or completeness of electronic copies of this plan sheet.

JOINT SEAL AND JOINT SEAL ASSEMBLY TABLE

BRIDGE LOCATION NO.	BRIDGE NUMBER	BRIDGE NAME	LOCATION	Min. "MR" (in)	APPROX. LENGTH (ft)	EXISTING WATERSTOP	APPROX. DEPTH TO CLEAN EXPANSION JOINTS
1	37-0348R	Route 82 / 101 Sep.	Abut 1	1-½"	52	No	6"
			Abut 3	1-½"	52	No	6"
2	37-0348L	Route 82 / 101 Sep.	Abut 1	1-½"	55	No	6"
			Abut 3	1-½"	55	No	6"
4	37-0337	Lawrence Expwy OC	Bent 2	1-½"	115	No	8"
			Bent 4	1-½"	115	No	8"
8	37-0227	Route 85 / 280 Sep.	Abut 1	1-½"	145	No	8"
			Abut 5	1-½"	145	No	8"
10	37-0605	Skyport Drive	Abut 1	1-½"	63	No	10"
			Abut 4	1-½"	63	No	10"
11	37-0304L	Monterey Road UC	Abut 1	1-½"	59	No	6"
			Abut 2	1-½"	59	No	6"
12	37-0304R	Monterey Road UC	Abut 1	1-½"	70	No	6"
			Abut 2	1-½"	70	No	6"
14	37-0346G	Coyote Creek	Abut 1	1-½"	44	No	8"
			Abut 5	1-½"	44	No	8"
15	37-0548G	N101-N85/101 CONN SEP	Abut 1	1-½"	44	No	8"
			Abut 5	1-½"	44	No	8"

The following notes apply to JOINT SEAL TYPE A:

Install Type A joint seal 3" up into curb or rail on the low side of the deck where joint matches curb or rail joint. For details not shown see Sheet 11.

The following notes apply to JOINT SEAL TYPE B:

1) Seal must satisfy both minimum Movement Rating (MR) and minimum W1 requirements.

2) Minimum W1 is the calculated maximum width of the joint based on field measurements. After the joints have been cleaned, minimum W1 is to be calculated by the Engineer.

3) W1 shall be the smaller of the values determined as follows:

   A) 0.85 times the manufacturer's designed minimum uncompressed width of the seal.

   B) The width of the seal on the third succesive test cycle of the pressure deflection test, when compressed to an average pressure of 3 psi.

4) Bend Type B joint seal 6" up into curb or rail on the low side of the deck where deck joint matches curb or rail joint.

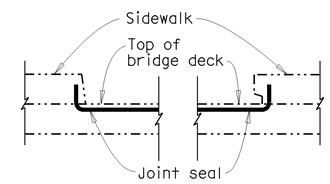

SIDEWALK

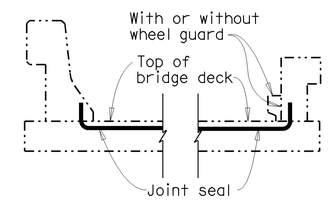

BARRIER RAIL

JOINT SEAL AT LOW SIDE OF DECK

Details shown for illustration purposes only.
For use only where deck joint matches sidewalk, curb or barrier rail joint.
NO SCALE

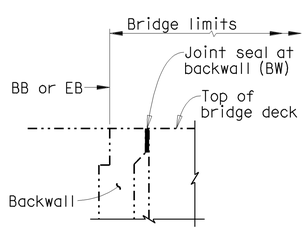

ABUTMENT WITH BACKWALL

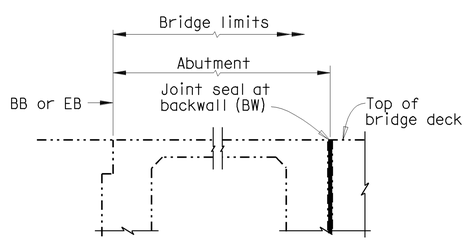

BIN TYPE ABUTMENT

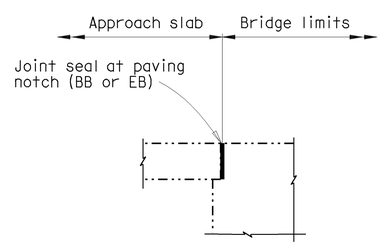

DIAPHRAGM ABUTMENT

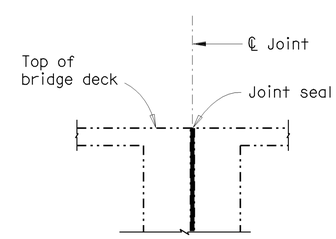

BENT

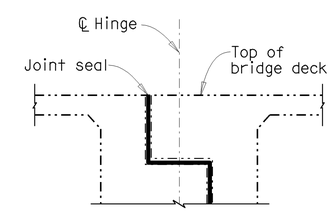

HINGE

NOTE:

THE CONTRACTOR SHALL VERIFY ALL CONTROLLING FIELD DIMENSIONS BEFORE ORDERING OR FABRICATING ANY MATERIAL.

JOINT SEAL LOCATION

NO SCALE

	BY	CHECKED
DESIGN	L. Ellis	C. Lee
DETAILS	M. Yu	L. Ellis
QUANTITIES	L. Ellis	C. Lee

STATE OF CALIFORNIA
DEPARTMENT OF TRANSPORTATION

DIVISION OF MAINTENANCE
STRUCTURE MAINTENANCE DESIGN

BRIDGE NO.: Various
POST MILE: Var

REPLACE JOINT SEALS, REPLACE APPROACH SLABS

VARIOUS BRIDGES

JOINT SEAL AND JOINT SEAL ASSEMBLY TABLE & DETAILS

STRUCTURES MAINTENANCE DETAIL SHEET (ENGLISH) (REV. 09-01-10)

ORIGINAL SCALE IN INCHES FOR REDUCED PLANS 0 1 2 3

UNIT: 0989
PROJECT NUMBER & PHASE: 0400021093
CONTRACT NO.: 04-2E7101

DISREGARD PRINTS BEARING EARLIER REVISION DATES

REVISION DATES: 3-14-12 04-18-12 04-25-12 07-23-12

SHEET 14 OF 15

FILE => 04-2E71010jst003.dgn

USERNAME => s130817 DATE PLOTTED => 19-SEP-2012 TIME PLOTTED => 13:58

DIST.	COUNTY	ROUTE	MILE POST TOTAL PROJECT	SHEET NO.	TOTAL SHEETS
04	SCI	82,85,87,101, 152,237	Var	35	38

REGISTERED ENGINEER - CIVIL 6-08-12

10-29-12
PLANS APPROVAL DATE

REGISTERED PROFESSIONAL ENGINEER LINA G. ELLIS No. C65260 Exp. 9-30-13 CIVIL STATE OF CALIFORNIA

The State of California or its officers or agents shall not be responsible for the accuracy or completeness of electronic copies of this plan sheet.

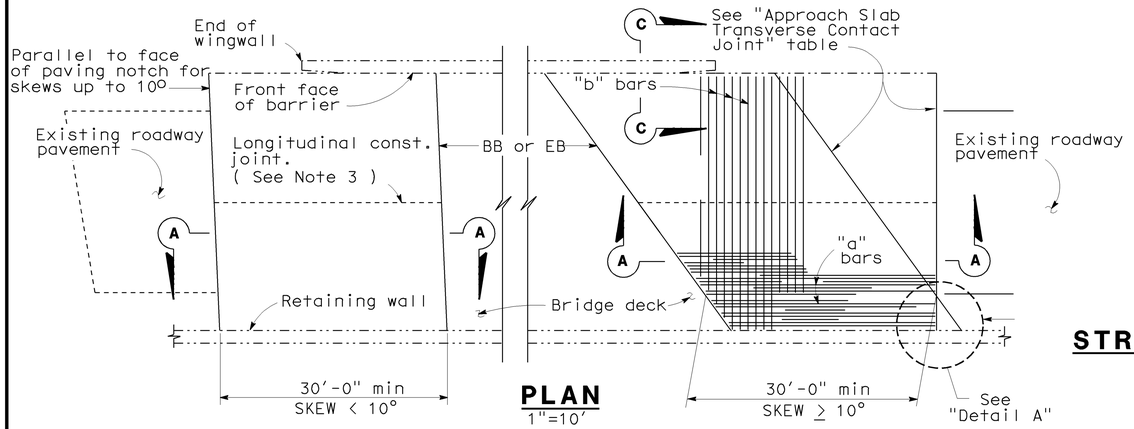

PLAN
1"=10'

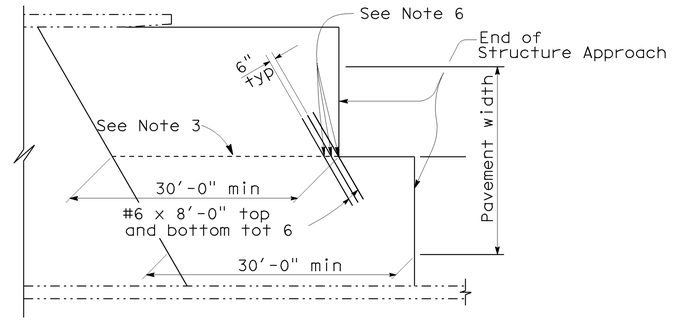

STRUCTURE APPROACH - END STAGGER DETAIL
No Scale

APPROACH SLAB TRANSVERSE CONTACT JOINT		
APPROACH SKEW	WITH AC ROADWAY PAVEMENT	WITH PCC ROADWAY PAVEMENT
< 10°	Parallel to face of paving notch	Parallel to face of paving notch
10° - 45°	Parallel to face of P N use (Detail A)	Stagger lines 24' to 36' apart
> 45°	Parallel to face of P N use (Detail A)	Stagger at each lane line

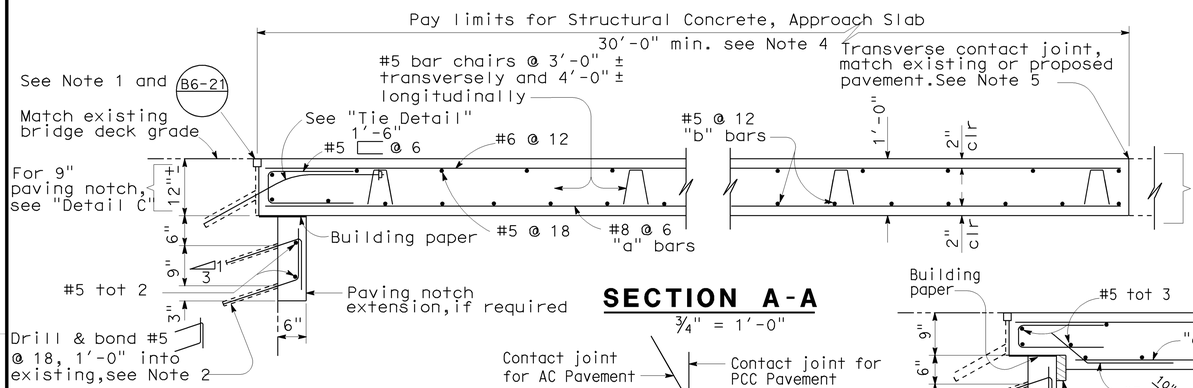

SECTION A-A
¾" = 1'-0"

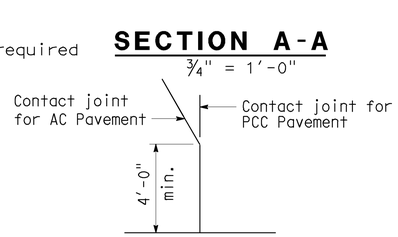

DETAIL A
No Scale

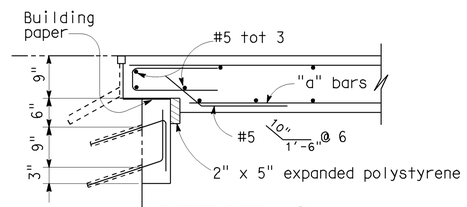

DETAIL C
¾" = 1'-0"

NOTE: For details not shown, see "Section A-A".

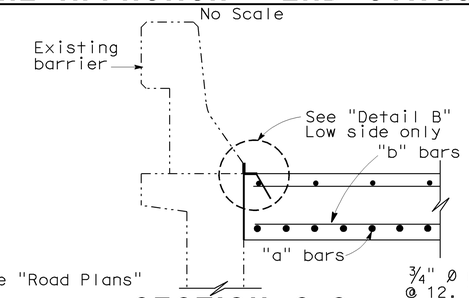

SECTION C-C
¾" = 1'-0"

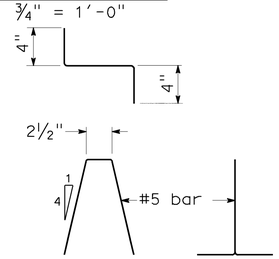

BAR CHAIR DETAIL
1½" = 1'-0"

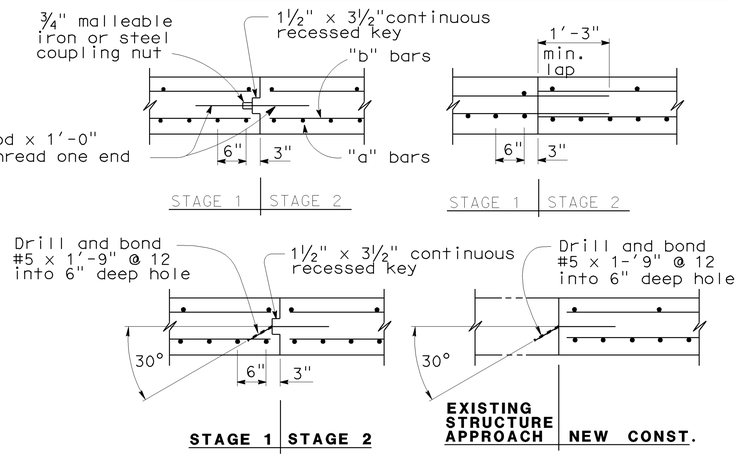

LONGITUDINAL CONSTRUCTION JOINT ALTERNATIVES
¾" = 1'-0"

NOTES:

1. For details not shown or noted, see Structure Plans. Adjust bar reinforcement to clear a sawcut for sealed joint, when required.
2. Space to avoid existing prestress anchorages and main reinforcement.
3. Longitudinal construction joints, when permitted by the Engineer, shall be located on lane lines.
4. Transverse contact joint shall be a minimum of 5'-0" from an existing or constructed weakened plane joint.
5. For transverse contact joint with new PCC paving. refer to Standard Plan P10.
6. Couplers are required for stage construction.
7. End angle or plate at beginning of barrier transition, end of wingwall or end of structure approach as applicable.

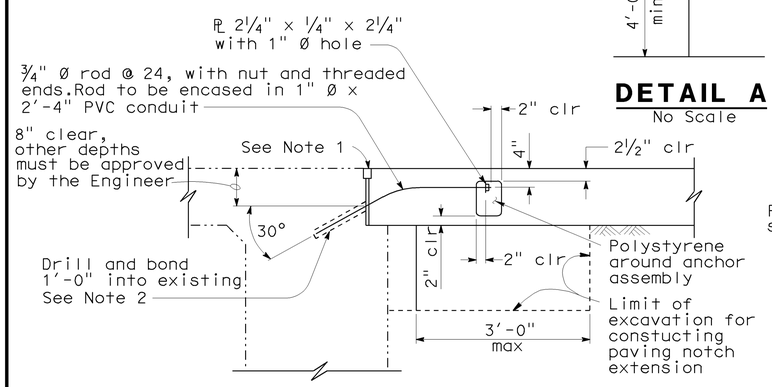

TIE DETAIL
¾" = 1'-0"

NOTE:
THE CONTRACTOR SHALL VERIFY ALL CONTROLLING FIELD DIMENSIONS BEFORE ORDERING OR FABRICATING ANY MATERIAL.

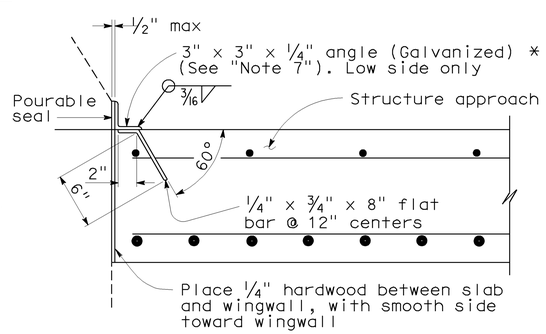

*(TO BE USED WITH TYPE 25 OR TYPE 27 CONCRETE BARRIER)

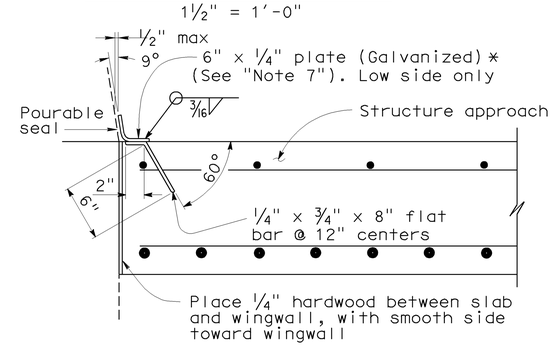

*(TO BE USED WITH TYPE 732 OR TYPE 736 CONCRETE BARRIER)

DETAIL B
1½" = 1'-0"

STANDARD DRAWING				
RELEASE DATE 3/14/05	DESIGN	BY M.TRAFFALIS	CHECKED E.THORKILDSEN	RELEASED BY
FILE NO. xs3-140e	DETAILS	BY R.YEE	CHECKED E.THORKILDSEN	
	SUBMITTED	BY M.HA	DRAWING DATE 8/92	SERVICE CHIEF

STATE OF CALIFORNIA DEPARTMENT OF TRANSPORTATION

DIVISION OF ENGINEERING SERVICES

BRIDGE NO. Various
MILE POST Various

ROUTE 82/101 SEPARATION &
ROUTE 85/280 SEPARATION, MONTEREY ROAD UC
STRUCTURE APPROACH TYPE R(30D)

DS OSD 2147A (ENGLISH) (REV. X/XX/XX)

ORIGINAL SCALE IN INCHES FOR REDUCED PLANS 0 1 2 3

UNIT: 04609
PROJECT NUMBER & PHASE: 0400021093

CONTRACT NO.: 04-2E7101

DISREGARD PRINTS BEARING EARLIER REVISION DATES

SHEET 15 OF 15

FILE => xs3-140e.dgn

DATE PLOTTED => 19-SEP-2012 TIME PLOTTED => 13:58

DIST	COUNTY	ROUTE	POST MILES TOTAL PROJECT	SHEET No	TOTAL SHEETS
04	SCI	82,85,87,101, 152,237	Var	36	38

Devang K. Vora 10/02/12
REGISTERED CIVIL ENGINEER DATE

10-29-12
PLANS APPROVAL DATE

REGISTERED PROFESSIONAL ENGINEER DEVANG VORA No. C76546 Exp. 12/31/12 CIVIL STATE OF CALIFORNIA

The State of California or its officers or agents shall not be responsible for the accuracy or completeness of electronic copies of this plan sheet.

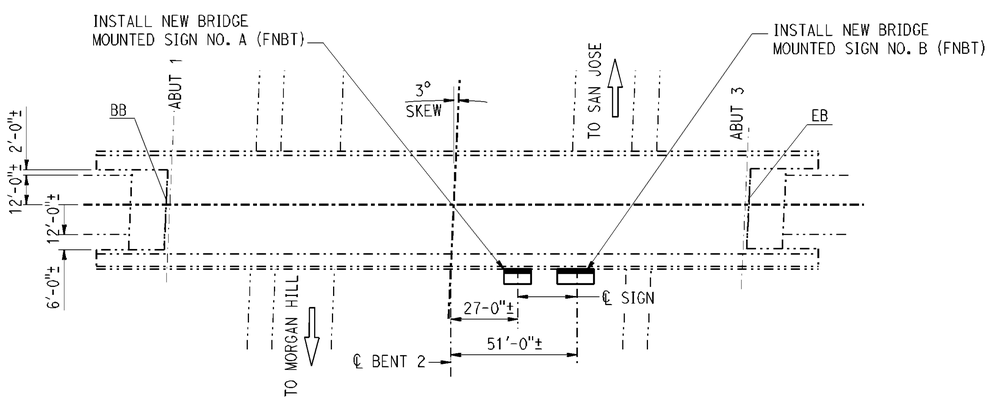

LOCATION PLAN

NO SCALE

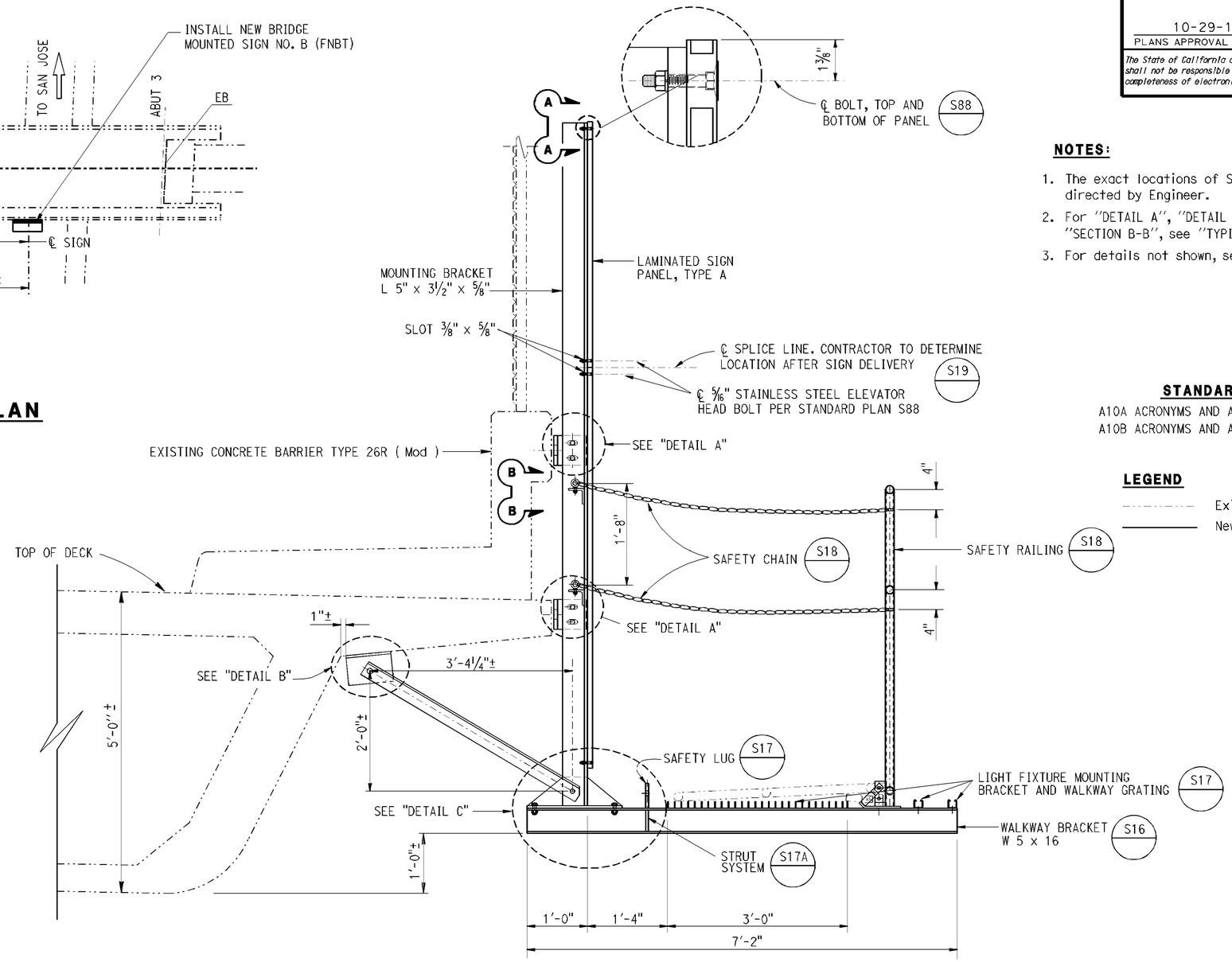

SIGNS "A" AND "B" (FNBT)

Scale: 1" = 1'-0"

NOTES:

1. The exact locations of Sign A and B shall be directed by Engineer.
2. For "DETAIL A", "DETAIL B", "DETAIL C", SECTION A-A" and "SECTION B-B", see "TYPICAL DETAILS NO. 1" sheet.
3. For details not shown, see "2010 STANDARD PLANS".

STANDARD PLANS 2010

A10A ACRONYMS AND ABBREVIATIONS (SHEET 1 OF 2)
A10B ACRONYMS AND ABBREVIATIONS (SHEET 2 OF 2)

LEGEND

Existing structure
New structure

STANDARD PLAN SHEET NO.
DETAIL NO.

NOTE:
THE CONTRACTOR SHALL VERIFY ALL CONTROLLING FIELD DIMENSIONS BEFORE ORDERING OR FABRICATING ANY MATERIAL.

BRANCH CHIEF JEFF WOODY

	BY	CHECKED
DESIGN	JOHN DATILES	DEVANG VORA
DETAILS	T. NGUYEN	JOHN DATILES
QUANTITIES	JOHN DATILES	DEVANG VORA

STATE OF CALIFORNIA
DEPARTMENT OF TRANSPORTATION

DIVISION OF ENGINEERING SERVICES
DESIGN AND TECHNICAL SERVICES
SPECIAL DESIGNS BRANCH A

BRIDGE NO. 37-0339
POST MILE R25.31

METCALF ROAD OVERCROSSING

BRIDGE MOUNTED SIGN - LOCATION AND TYPICAL SECTION

SDS-1

(ENGLISH) SPECIAL DESIGNS BRANCH BORDER SHEET (REV. 7-1-09)

ORIGINAL SCALE IN INCHES FOR REDUCED PLANS 0 1 2 3

UNIT: 3619
PROJECT NUMBER & PHASE: 0400021093-1
CONTRACT NO.: 04-2E7101

DISREGARD PRINTS BEARING EARLIER REVISION DATES
REVISION DATES 7/10/12 9/28/12 7/23/12 9/18/12
SHEET OF

FILE => /2011sd/04-2E7101/sds-1.dgn

USERNAME => s129055 DATE PLOTTED => 02-OCT-2012 TIME PLOTTED => 14:33

DIST	COUNTY	ROUTE	POST MILES TOTAL PROJECT	SHEET No	TOTAL SHEETS
04	SCI	82,85,87,101, 152,237	Var	37	38

Devang K. Vora 10/02/12
REGISTERED CIVIL ENGINEER DATE

10-29-12
PLANS APPROVAL DATE

REGISTERED PROFESSIONAL ENGINEER DEVANG VORA No. C76546 Exp. 12/31/12 CIVIL STATE OF CALIFORNIA

The State of California or its officers or agents shall not be responsible for the accuracy or completeness of electronic copies of this plan sheet.

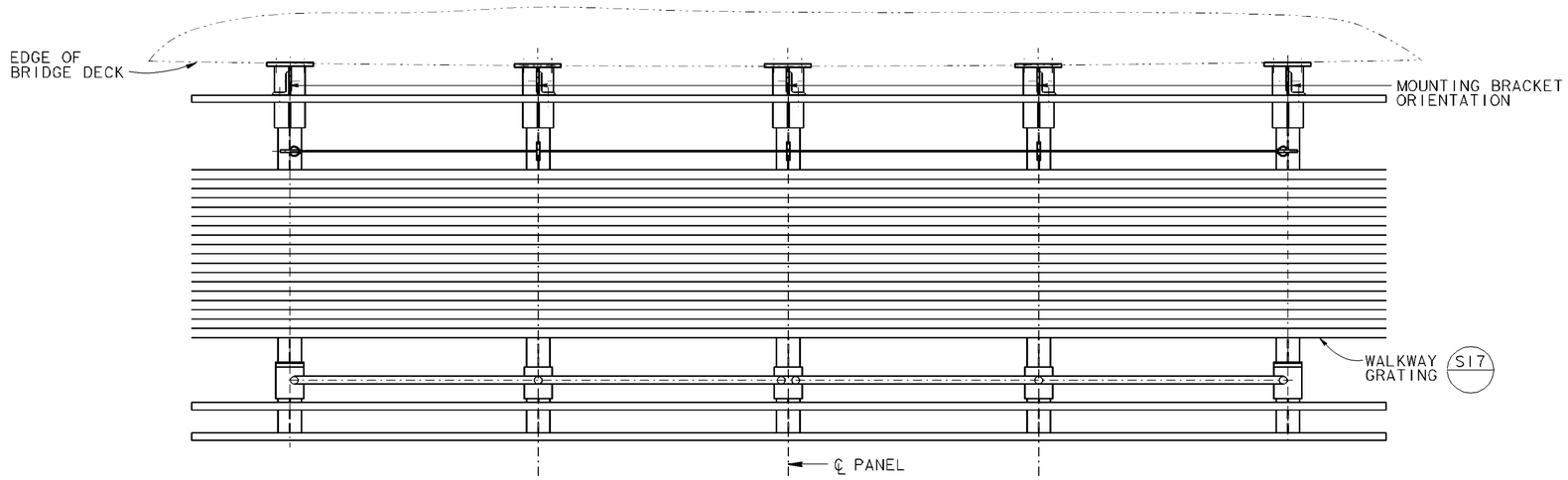

PLAN VIEW

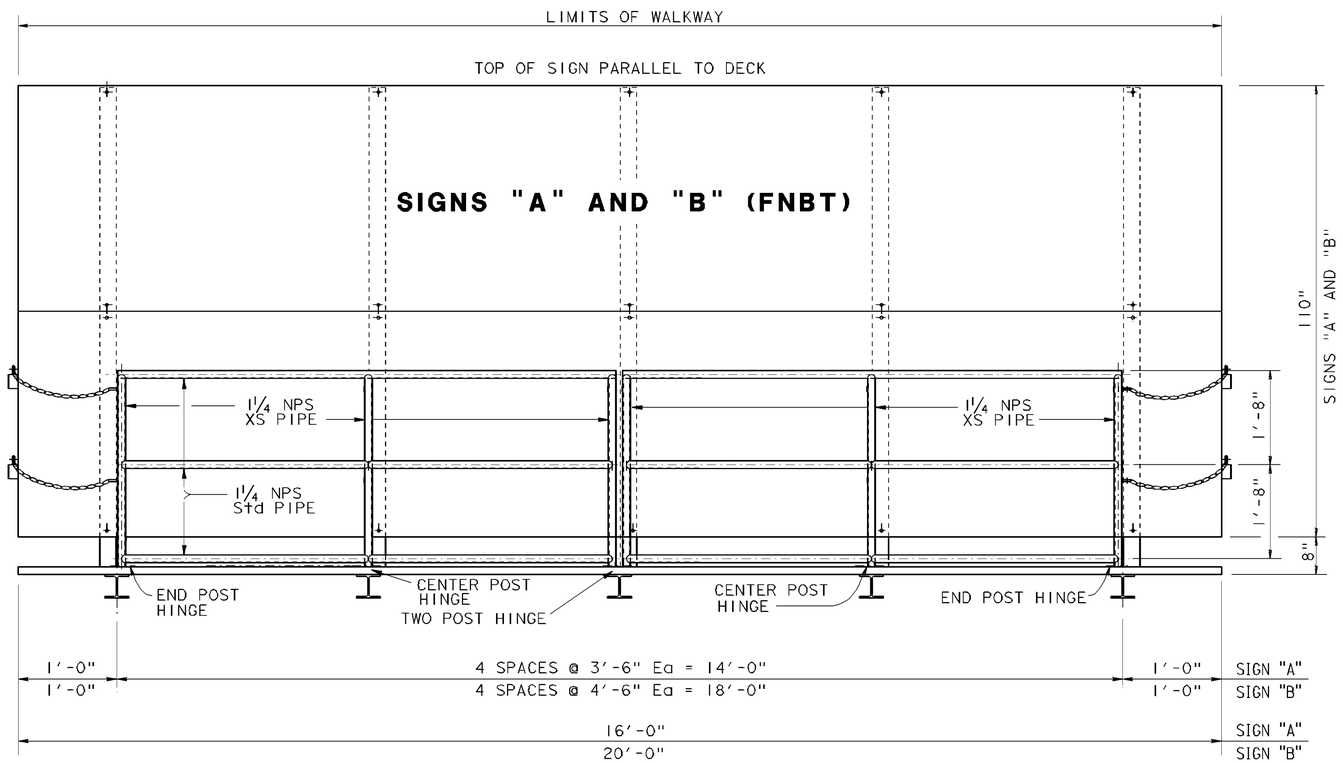

FRONT VIEW

NOTE: STRUT SYSTEM NOT SHOWN

NOTES:

1. For details not shown, see "TYPICAL DETAILS NO. 1".
2. For details not shown, see "STANDARD PLANS 2010".
3. All high strength (HS) bolts shall be snug tightened.
4. Min size fillet weld is ¼" or thickness of thinner part unless noted otherwise.
5. Structure shall be galvanized after fabrication.
6. Contractor to provide anchor bolt layout before anchor bolts are placed.

NOTE:
THE CONTRACTOR SHALL VERIFY ALL CONTROLLING FIELD DIMENSIONS BEFORE ORDERING OR FABRICATING ANY MATERIAL.

STANDARD PLAN SHEET NO.
DETAIL NO.

NO SCALE

BRANCH CHIEF	JEFF WOODY		
DESIGN	BY JOHN DATILES	CHECKED DEVANG VORA	
DETAILS	BY T. NGUYEN	CHECKED JOHN DATILES	
QUANTITIES	BY JOHN DATILES	CHECKED DEVANG VORA	

STATE OF CALIFORNIA
DEPARTMENT OF TRANSPORTATION

DIVISION OF ENGINEERING SERVICES
DESIGN AND TECHNICAL SERVICES
SPECIAL DESIGNS BRANCH
A

BRIDGE NO. 37-0339
POST MILE R25.31

METCALF ROAD OVERCROSSING
BRIDGE MOUNTED SIGN - SIGN ELEVATION

SDS-2

(ENGLISH) SPECIAL DESIGNS BRANCH BORDER SHEET (REV. 7-1-09)

ORIGINAL SCALE IN INCHES FOR REDUCED PLANS 0 1 2 3

UNIT: 3619
PROJECT NUMBER & PHASE: 0400021093-1
CONTRACT NO.: 04-2E7101

DISREGARD PRINTS BEARING EARLIER REVISION DATES

REVISION DATES 7/18/12 9/28/12 10/2/12

SHEET OF

FILE => /2011sd/04-2E7101/sds-2.dgn

USERNAME => s129055 DATE PLOTTED => 02-OCT-2012 TIME PLOTTED => 14:33

DIST	COUNTY	ROUTE	POST MILES TOTAL PROJECT	SHEET No	TOTAL SHEETS
04	SCI	82,85,87,101, 152,237	Var	38	38

REGISTERED CIVIL ENGINEER 10/02/12 DATE

10-29-12
PLANS APPROVAL DATE

REGISTERED PROFESSIONAL ENGINEER DEVANG VORA No. C76546 Exp. 12/31/12 CIVIL STATE OF CALIFORNIA

The State of California or its officers or agents shall not be responsible for the accuracy or completeness of electronic copies of this plan sheet.

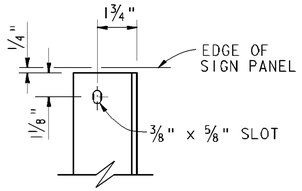

SECTION A-A

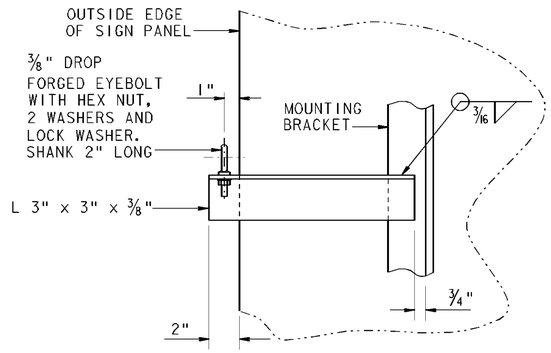

SECTION B-B

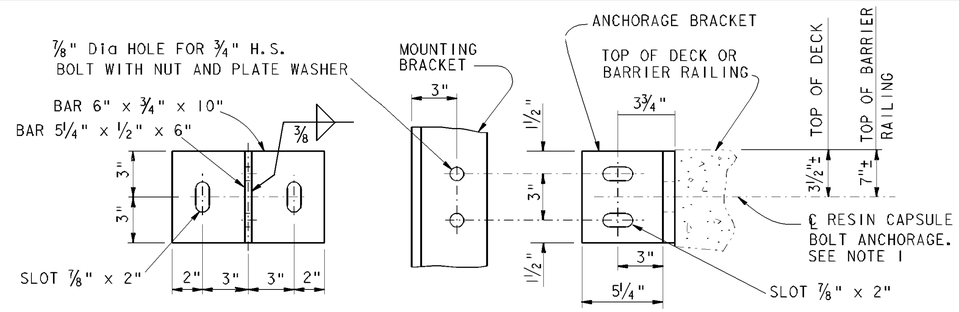

DETAIL A

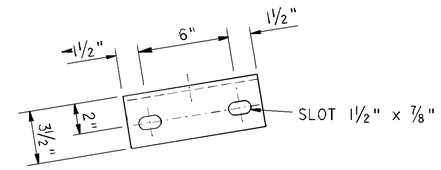

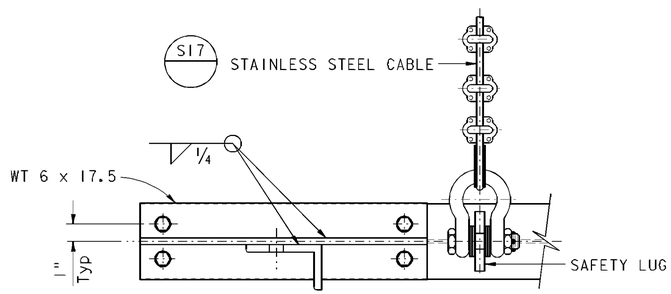

SECTION C-C

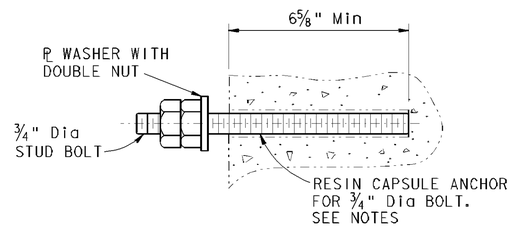

RESIN CAPSULE BOLT ANCHORAGE

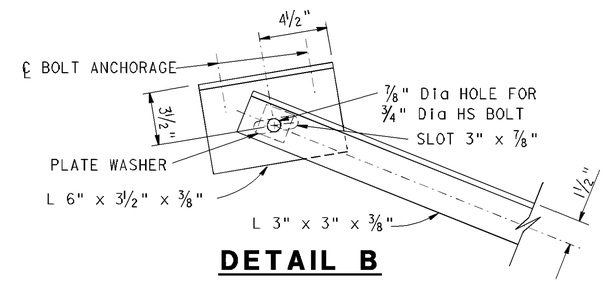

DETAIL B

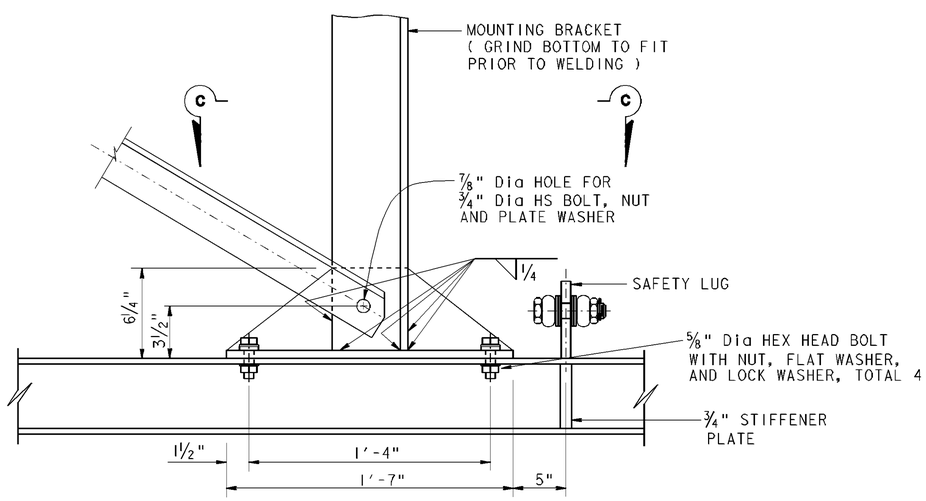

DETAIL C

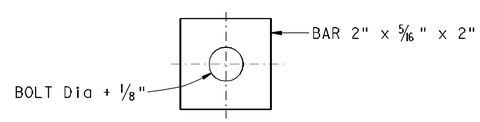

PLATE WASHER

FOR ALL SLOTTED HOLES

NOTES:

1. Resin capsule bolt shall not interfere with existing railing anchorages.
2. Resin capsule anchorage is subject to approval of Engineer. Installation procedure shall comply with manufacturer's instructions.
3. Where new resin capsule bolt anchorage coincides with fence post or existing bridge mounted sign anchorage, adjust new mounting bracket to create a minimum distance of 6" measured from the centerline of nearest resin capsule bolt anchorage to the centerline fence post or centerline existing bridge mounted sign anchorage, or as approved by the Engineer.
4. Existing bridge mounted sign anchors shall be cut flush with edge of deck by mechanical means. Damage to concrete surface resulting from cut shall repaired at the Contractor's expense to the Engineers satisfaction. Cut ends of anchors shall be coated with 2 coats of zinc rich primer.
5. Resin capsule bolt anchors shall be installed in sound concrete free of cracks or delamination.

NOTE:
THE CONTRACTOR SHALL VERIFY ALL CONTROLLING FIELD DIMENSIONS BEFORE ORDERING OR FABRICATING ANY MATERIAL.

STANDARD PLAN SHEET NO.
DETAIL NO.

NO SCALE

BRANCH CHIEF	JEFF WOODY			
DESIGN	BY JOHN DATILES	CHECKED DEVANG VORA		
DETAILS	BY T. NGUYEN	CHECKED JOHN DATILES		
QUANTITIES	BY JOHN DATILES	CHECKED DEVANG VORA		

STATE OF CALIFORNIA
DEPARTMENT OF TRANSPORTATION

DIVISION OF ENGINEERING SERVICES
DESIGN AND TECHNICAL SERVICES
SPECIAL DESIGNS BRANCH
A

BRIDGE NO. 37-0339
POST MILE R25.31

METCALF ROAD OVERCROSSING
TYPICAL DETAILS NO. 1

SDS-3

(ENGLISH) SPECIAL DESIGNS BRANCH BORDER SHEET (REV. 7-1-09)

ORIGINAL SCALE IN INCHES FOR REDUCED PLANS 0 1 2 3

UNIT: 3619
PROJECT NUMBER & PHASE: 0400021093-1
CONTRACT NO.: 04-2E7101

DISREGARD PRINTS BEARING EARLIER REVISION DATES
REVISION DATES 7/19/12 7/26/12 9/28/12
SHEET OF

FILE => /2011sd/04-2E7101/sds-3.dgn

USERNAME => s129055 DATE PLOTTED => 04-OCT-2012 TIME PLOTTED => 11:20