Dist	COUNTY	ROUTE	POST MILES TOTAL PROJECT	SHEET No.	TOTAL SHEETS
04	SM	84	8.3/19.4	1	12

STATE OF CALIFORNIA
DEPARTMENT OF TRANSPORTATION

ACHSSTP-P084(040)E

PROJECT PLANS FOR CONSTRUCTION ON
STATE HIGHWAY
IN SAN MATEO COUNTY
NEAR LA HONDA, SKYLONDA AND IN WOODSIDE
FROM PESCADERO ROAD TO TRIPP ROAD

TO BE SUPPLEMENTED BY STANDARD PLANS DATED MAY 2006

INDEX OF PLANS

SHEET No.	DESCRIPTION
1	TITLE SHEET AND LOCATION MAP
2 - 4	CONSTRUCTION DETAILS
5	CONSTRUCTION AREA SIGNS
6 - 7	SIGN PLAN AND QUANTITIES
8	SUMMARY OF QUANTITIES
9 - 12	REVISED AND NEW STANDARD PLANS

THE STANDARD PLANS LIST APPLICABLE TO THIS CONTRACT IS INCLUDED IN THE NOTICE TO BIDDERS AND SPECIAL PROVISIONS BOOK.

LOCATION MAP

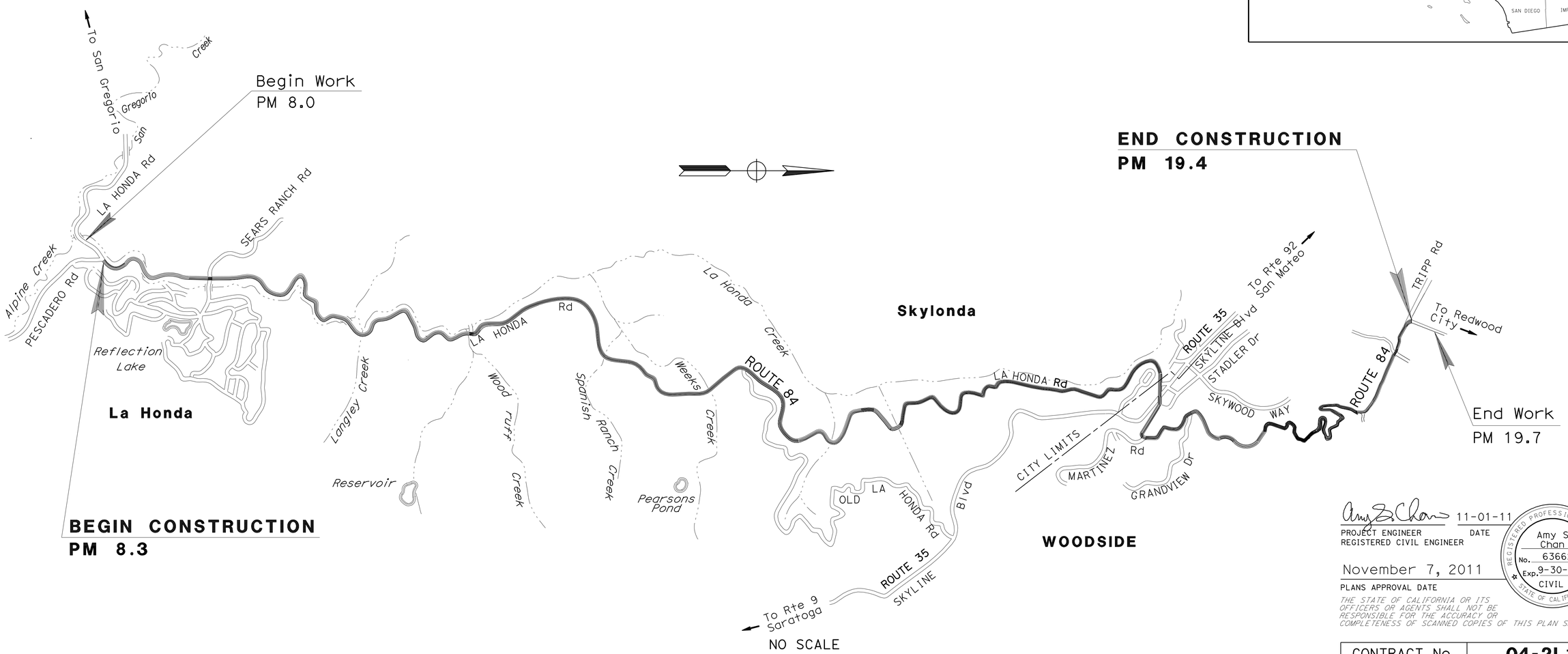

THE CONTRACTOR SHALL POSSESS THE CLASS (OR CLASSES) OF LICENSE AS SPECIFIED IN THE "NOTICE TO BIDDERS."

PROJECT MANAGER MOHAMMAD SULEIMAN

DESIGN ENGINEER AMY CHAN

Amy S. Chan 11-01-11
PROJECT ENGINEER DATE
REGISTERED CIVIL ENGINEER

November 7, 2011
PLANS APPROVAL DATE

REGISTERED PROFESSIONAL ENGINEER Amy S. Chan No. 63662 Exp. 9-30-12 CIVIL STATE OF CALIFORNIA

THE STATE OF CALIFORNIA OR ITS OFFICERS OR AGENTS SHALL NOT BE RESPONSIBLE FOR THE ACCURACY OR COMPLETENESS OF SCANNED COPIES OF THIS PLAN SHEET.

CONTRACT No.	04-2L1404
PROJECT ID	0400000856

LAST REVISION 11-06-11 DATE PLOTTED => 13-FEB-2012 TIME PLOTTED => 13:17

Dist	COUNTY	ROUTE	POST MILES TOTAL PROJECT	SHEET No.	TOTAL SHEETS
04	SM	84	8.3/19.4	2	12

REGISTERED CIVIL ENGINEER 11-01-11 DATE

11-07-11
PLANS APPROVAL DATE

REGISTERED PROFESSIONAL ENGINEER Amy S. Chan No. 63662 Exp. 9-30-12 CIVIL STATE OF CALIFORNIA

THE STATE OF CALIFORNIA OR ITS OFFICERS OR AGENTS SHALL NOT BE RESPONSIBLE FOR THE ACCURACY OR COMPLETENESS OF SCANNED COPIES OF THIS PLAN SHEET.

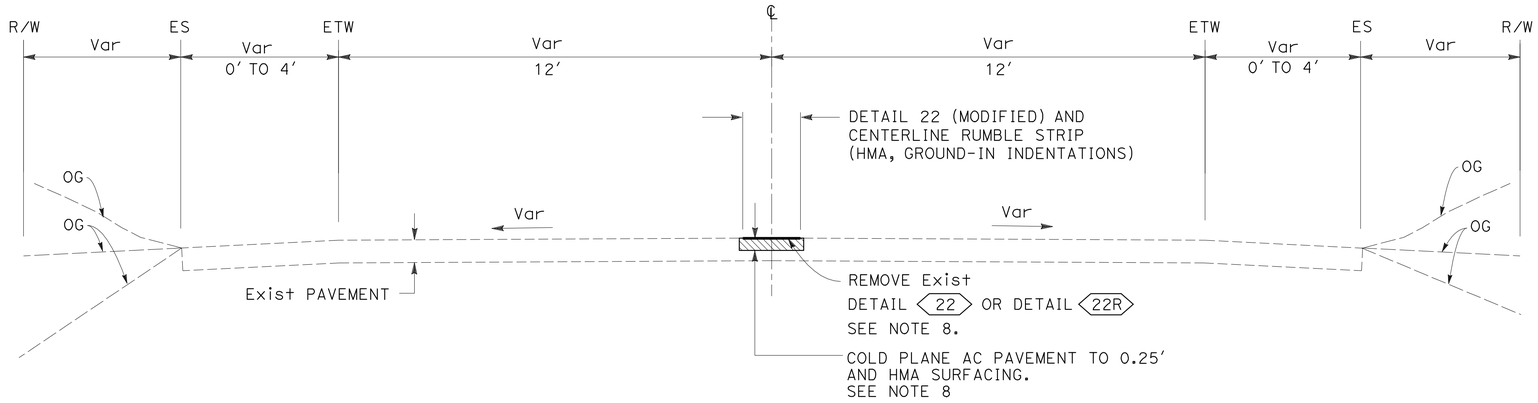

TYPICAL CROSS SECTION

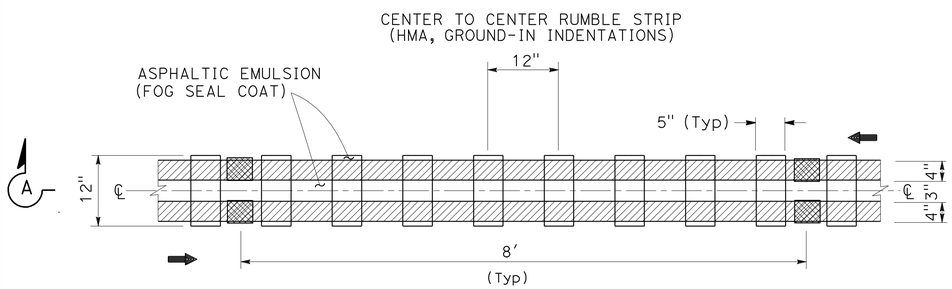

DETAIL 22M
DETAIL 22 (MODIFIED) AND CENTERLINE RUMBLE STRIP (HMA, GROUND-IN INDENTATIONS)

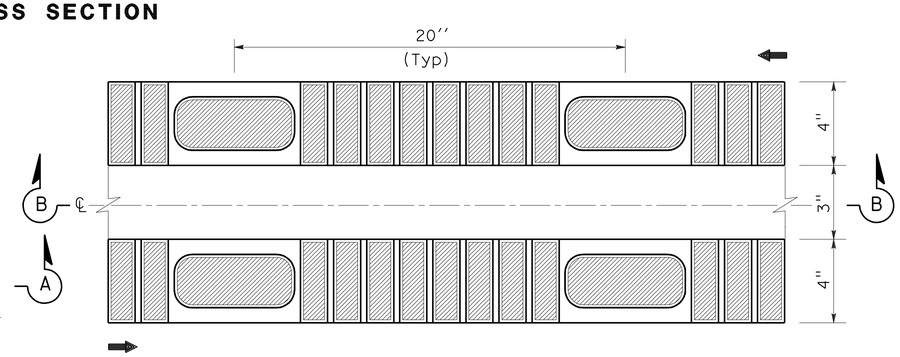

DETAIL 22R
EXISTING RAISED AND INVERTED PROFILE YELLOW THERMOPLASTIC TRAFFIC STRIPE FOR CENTERLINE

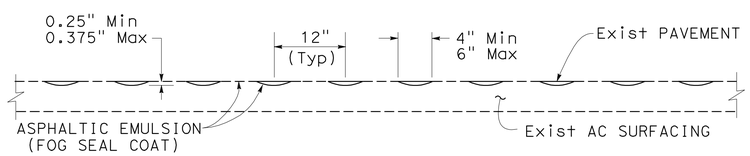

SECTION A-A

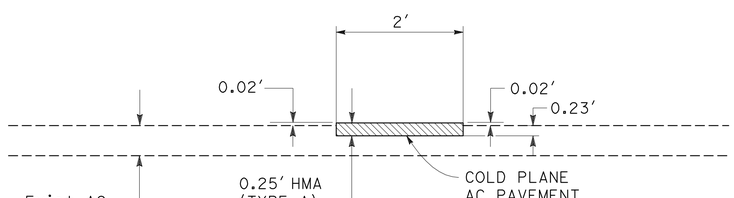

COLD PLANE AC PAVEMENT TO 0.25' AND HMA SURFACING DETAIL

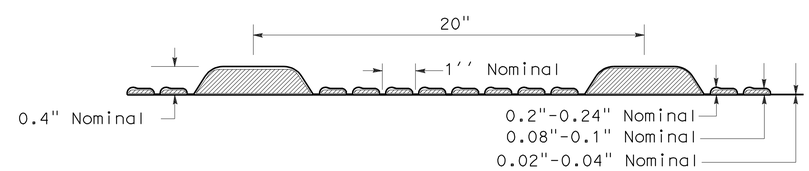

SECTION B-B

LEGEND:

- DIRECTION OF TRAFFIC
- RUMBLE STRIP
- 4" THERMOPLASTIC YELLOW TRAFFIC STRIPE
- PAVEMENT MARKER TYPE D
- 22M — DETAIL 22 (MODIFIED) AND CENTERLINE RUMBLE STRIP (HMA, GROUND-IN INDENTATIONS)
- 22R — Exist DETAIL 22 RAISED AND INVERTED PROFILE YELLOW THERMOPLASTIC TRAFFIC STRIPE FOR CENTERLINE

NOTES

1. FOR ACCURATE RIGHT OF WAY DATA, CONTACT RIGHT OF WAY ENGINEERING AT THE DISTRICT OFFICE.
2. EXISTING UTILITY FACILITIES ARE NOT PLOTTED ON THESE PLANS.
3. REMOVE EXISTING THERMOPLASTIC TRAFFIC STRIPE PRIOR TO PLACING THE RUMBLE STRIP OR 4" THERMOPLASTIC TRAFFIC STRIPE.
4. PLACE FOG SEAL COAT AFTER CONSTRUCTING RUMBLE STRIP AND PRIOR TO RESTRIPING.
5. EXACT LIMITS OF RUMBLE STRIP, FOG SEAL COAT AND COLD PLANE AC PAVEMENT AND HMA SURFACING TO BE DETERMINED BY THE ENGINEER.
6. DO NOT CONSTRUCT RUMBLE STRIPS ON STRUCTURES OR APPROACH SLABS.
7. CENTERLINE RUMBLE STRIPS TO BE INSTALLED AT "PASSING PROHIBITED BOTH WAYS" ZONES ONLY.
8. SEE SUMMARY OF QUANTITIES SHEET FOR STATION LIMITS AND LOCATION.

CONSTRUCTION DETAILS
NO SCALE

C-1

STATE OF CALIFORNIA - DEPARTMENT OF TRANSPORTATION
Caltrans
DESIGN

FUNCTIONAL SUPERVISOR: PATRICK NG
CALCULATED-DESIGNED BY: AMY CHAN
CHECKED BY: GAMINI RANDENI
REVISED BY
DATE REVISED

LAST REVISION 11-06-11
DATE PLOTTED => 13-FEB-2012
TIME PLOTTED => 13:17

Dist	COUNTY	ROUTE	POST MILES TOTAL PROJECT	SHEET No.	TOTAL SHEETS
04	SM	84	8.3/19.4	3	12

REGISTERED CIVIL ENGINEER 11-01-11 DATE

11-07-11
PLANS APPROVAL DATE

REGISTERED PROFESSIONAL ENGINEER Amy S. Chan No. 63662 Exp. 9-30-12 CIVIL STATE OF CALIFORNIA

THE STATE OF CALIFORNIA OR ITS OFFICERS OR AGENTS SHALL NOT BE RESPONSIBLE FOR THE ACCURACY OR COMPLETENESS OF SCANNED COPIES OF THIS PLAN SHEET.

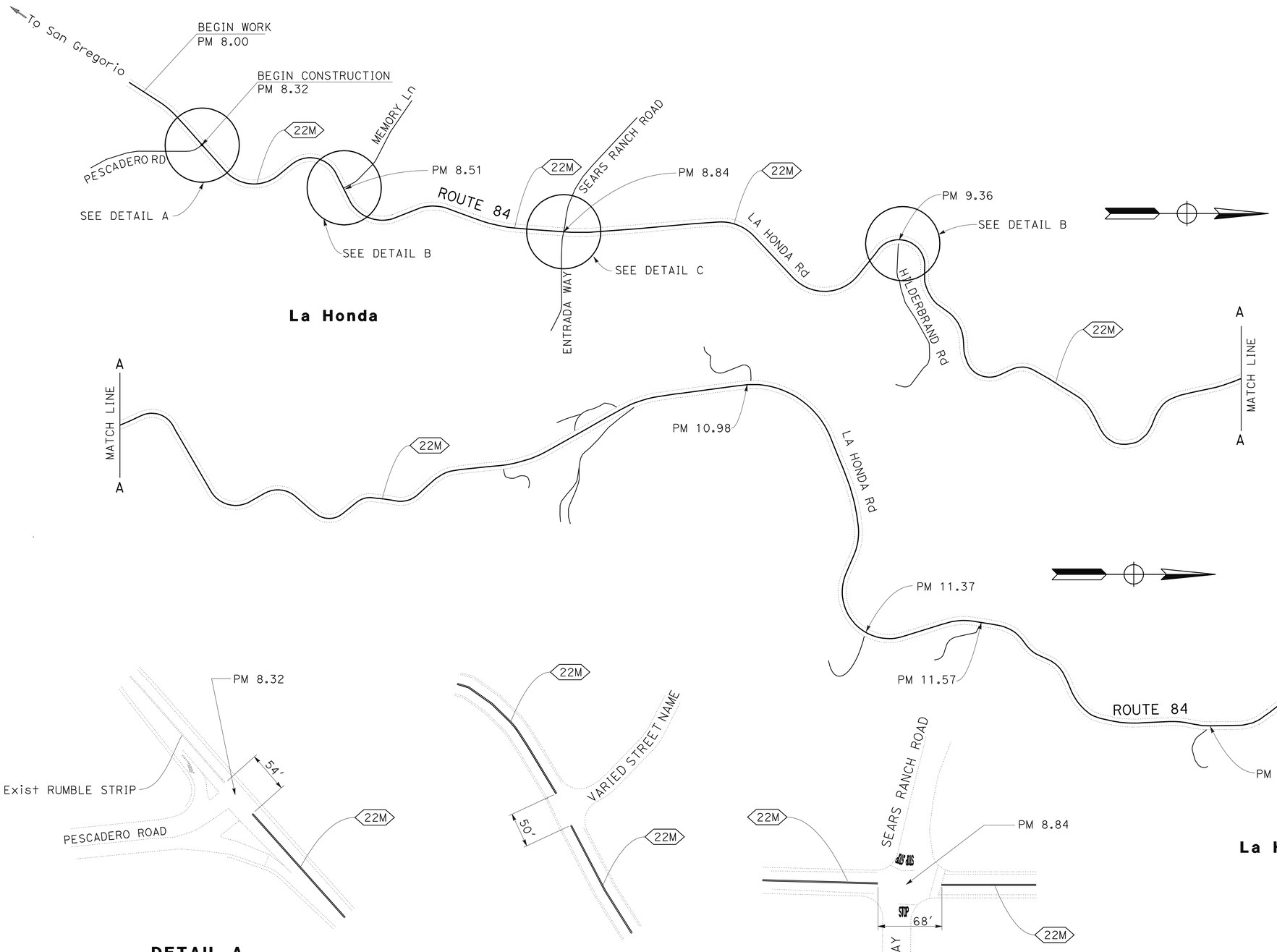

DETAIL A

DETAIL B
(TYPICAL)

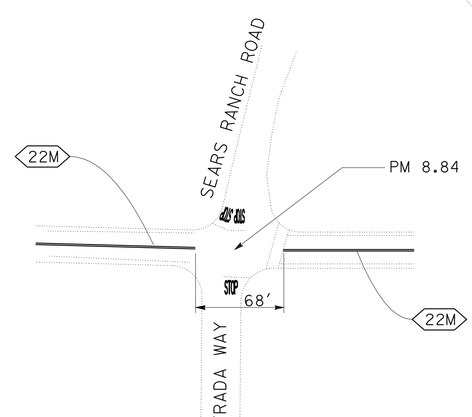

DETAIL C

FOR NOTES, ABBREVIATIONS AND LEGEND, SEE SHEET C-1

CONSTRUCTION DETAILS
NO SCALE

C-2

STATE OF CALIFORNIA - DEPARTMENT OF TRANSPORTATION
Caltrans
DESIGN
FUNCTIONAL SUPERVISOR: PATRICK NG
CALCULATED-DESIGNED BY: AMY CHAN
CHECKED BY: LEIANN MORITA
REVISED BY
DATE REVISED

LAST REVISION 11-06-11
DATE PLOTTED => 13-FEB-2012
TIME PLOTTED => 13:17

Dist	COUNTY	ROUTE	POST MILES TOTAL PROJECT	SHEET No.	TOTAL SHEETS
04	SM	84	8.3/19.4	4	12

REGISTERED CIVIL ENGINEER 11-01-11 DATE

11-07-11
PLANS APPROVAL DATE

REGISTERED PROFESSIONAL ENGINEER Amy S. Chan No. 63662 Exp 9-30-12 CIVIL STATE OF CALIFORNIA

THE STATE OF CALIFORNIA OR ITS OFFICERS OR AGENTS SHALL NOT BE RESPONSIBLE FOR THE ACCURACY OR COMPLETENESS OF SCANNED COPIES OF THIS PLAN SHEET.

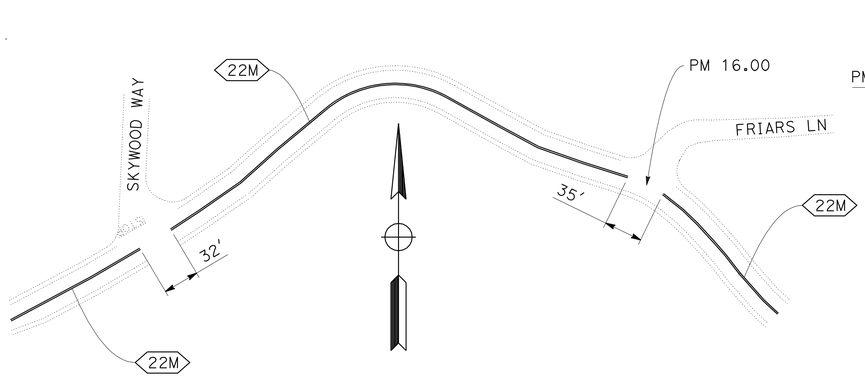

DETAIL E

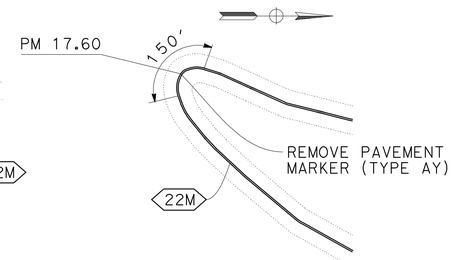

DETAIL F

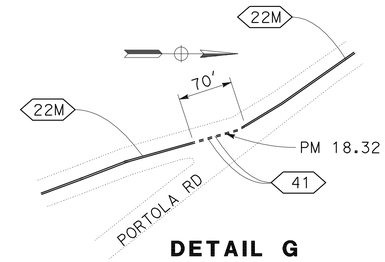

DETAIL G

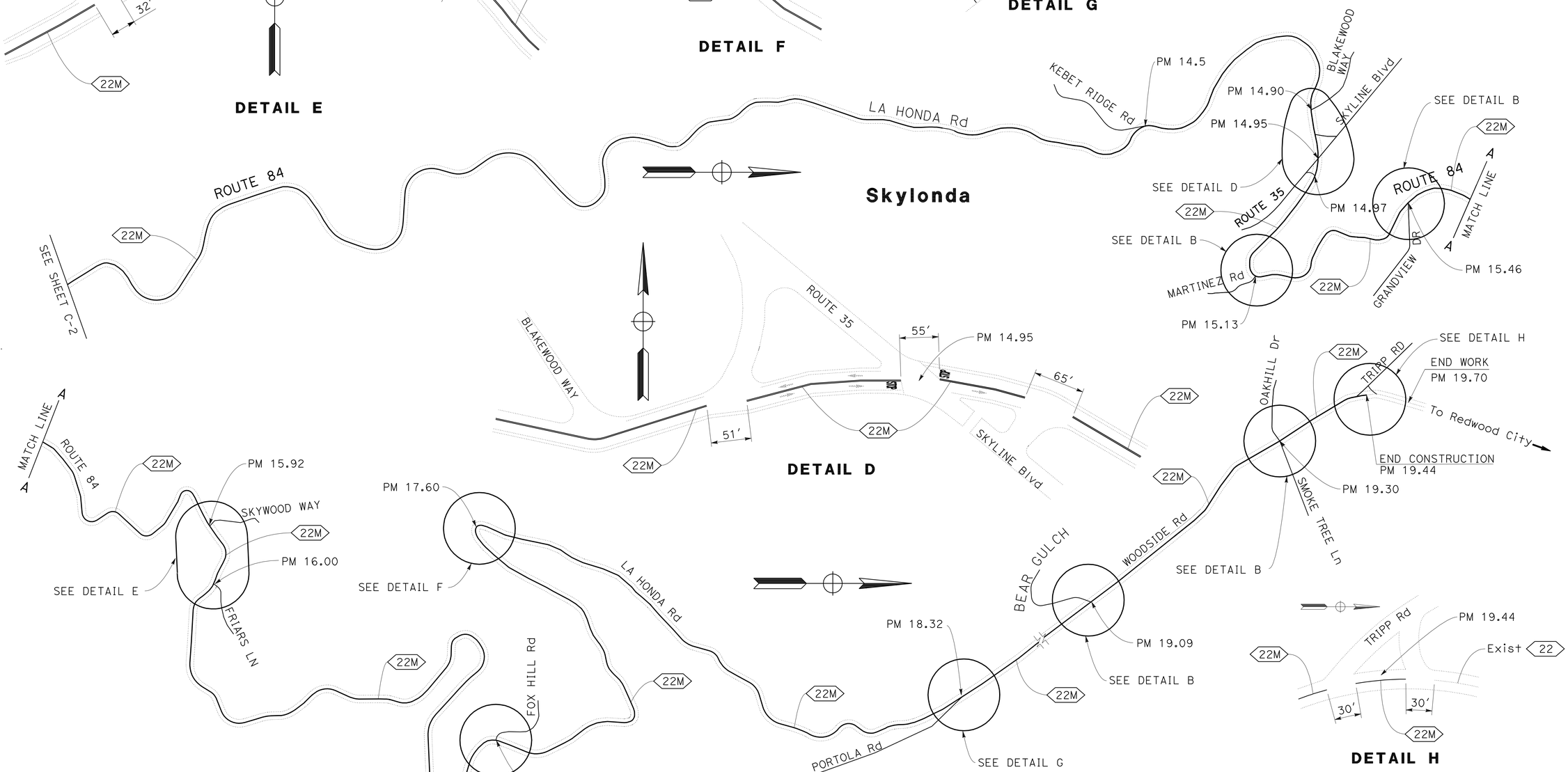

NOTE:

FOR DETAIL B SEE SHEET C-2.

FOR NOTES, ABBREVIATIONS AND LEGEND, SEE SHEET C-1

CONSTRUCTION DETAILS

NO SCALE

C-3

STATE OF CALIFORNIA - DEPARTMENT OF TRANSPORTATION

DESIGN

FUNCTIONAL SUPERVISOR: PATRICK NG

CALCULATED-DESIGNED BY: AMY CHAN

CHECKED BY: LEIANN MORITA

REVISED BY

DATE REVISED

LAST REVISION 11-06-11

DATE PLOTTED => 13-FEB-2012

TIME PLOTTED => 13:17

Dist	COUNTY	ROUTE	POST MILES TOTAL PROJECT	SHEET No.	TOTAL SHEETS
04	SM	84	8.3/19.4	5	12

11-01-11
REGISTERED CIVIL ENGINEER DATE

11-07-11
PLANS APPROVAL DATE

REGISTERED PROFESSIONAL ENGINEER Jerilyn L. Struven No. 49964 Exp. 12-31-12 CIVIL STATE OF CALIFORNIA

THE STATE OF CALIFORNIA OR ITS OFFICERS OR AGENTS SHALL NOT BE RESPONSIBLE FOR THE ACCURACY OR COMPLETENESS OF SCANNED COPIES OF THIS PLAN SHEET.

STATIONARY MOUNTED CONSTRUCTION AREA SIGNS

SIGN No.	MUTCD CODE	MESSAGE	PANEL SIZE (INCH x INCH)	NUMBER OF POST AND SIZE (EA - INCH x INCH)	No. OF SIGNS
1	W20-1	ROAD WORK AHEAD	48'' x 48''	(ONE) 4'' x 4'	12
2	G20-2	END ROAD WORK	36'' x 18''	(ONE) 4'' x 4''	12

NOTES:

1. EXACT LOCATION AND POSITION OF SIGN TO BE DETERMINED BY THE ENGINEER.
2. DIMENSION FOR SIGN PANEL, LETTERING AND POST ARE IN INCHES.

LEGEND:

No. CONSTRUCTION AREA SIGN

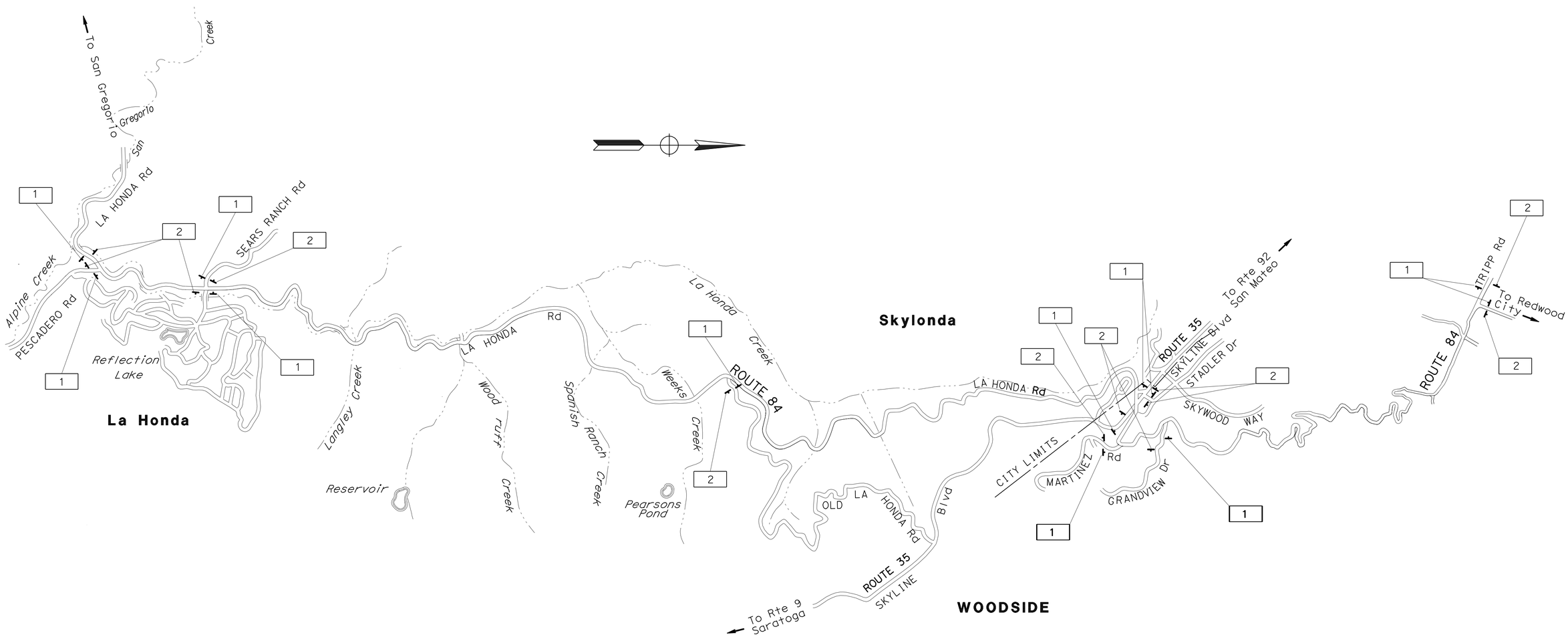

CONSTRUCTION AREA SIGNS

NO SCALE

APPROVED FOR CONSTRUCTION AREA SIGN WORK ONLY

CS-1

STATE OF CALIFORNIA - DEPARTMENT OF TRANSPORTATION
Caltrans
TRAFFIC

FUNCTIONAL SUPERVISOR: ROLAND AU-YEUNG
CALCULATED-DESIGNED BY: STEPHEN LAU
CHECKED BY: JERILYN STRUVEN
REVISED BY
DATE REVISED

LAST REVISION 11-06-11
DATE PLOTTED => 13-FEB-2012
TIME PLOTTED => 13:17

Dist	COUNTY	ROUTE	POST MILES TOTAL PROJECT	SHEET No.	TOTAL SHEETS
04	SM	84	8.3/19.4	6	12

REGISTERED CIVIL ENGINEER 11-01-11 DATE

11-07-11
PLANS APPROVAL DATE

REGISTERED PROFESSIONAL ENGINEER Jerilyn L. Struven No. 49964 Exp. 12-31-12 CIVIL STATE OF CALIFORNIA

THE STATE OF CALIFORNIA OR ITS OFFICERS OR AGENTS SHALL NOT BE RESPONSIBLE FOR THE ACCURACY OR COMPLETENESS OF SCANNED COPIES OF THIS PLAN SHEET.

LEGEND:

ROADSIDE SIGN NUMBER

REMOVE ROADSIDE SIGN

NOTE:

EXACT LOCATION AND POSITION OF ROADSIDE SIGNS TO BE DETERMINED BY THE ENGINEER.

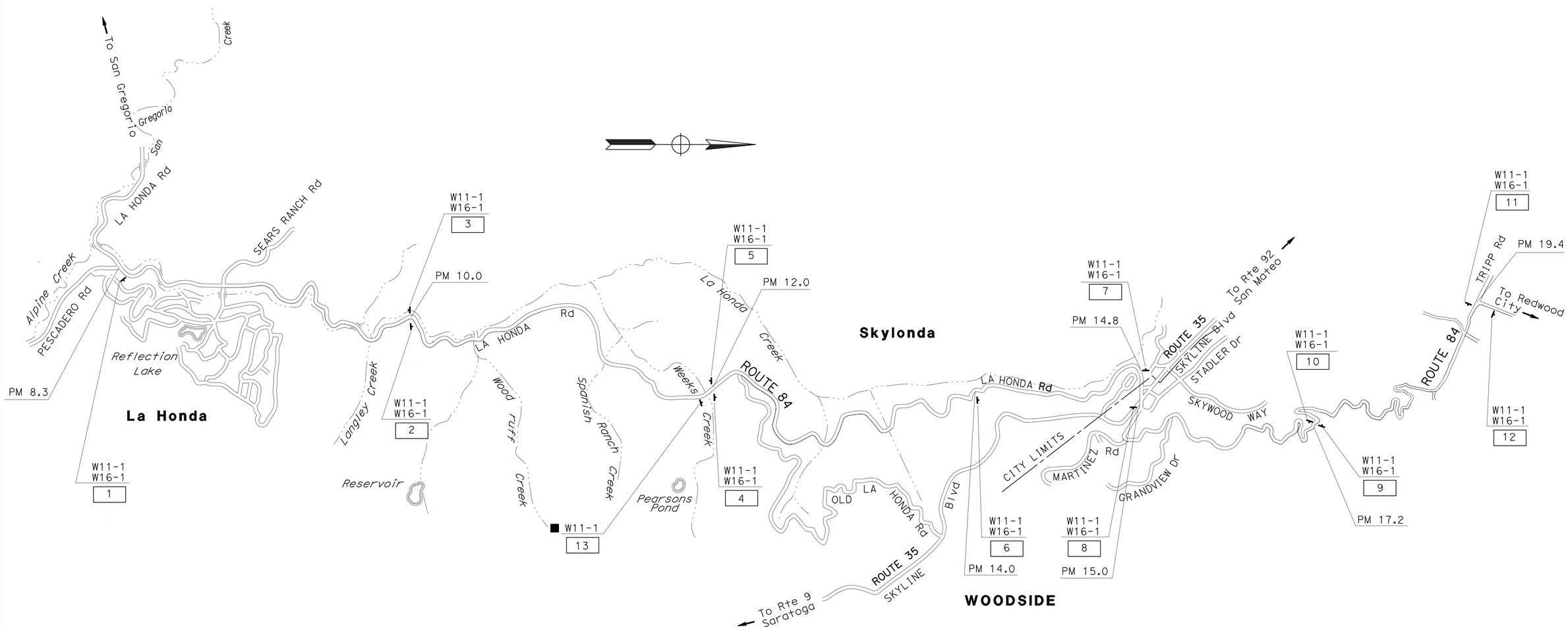

SIGN PLAN

NO SCALE

APPROVED FOR SIGN WORK ONLY

S-1

STATE OF CALIFORNIA - DEPARTMENT OF TRANSPORTATION

TRAFFIC

FUNCTIONAL SUPERVISOR: ROLAND AU-YEUNG

CALCULATED-DESIGNED BY: STEPHEN LAU

CHECKED BY: JERILYN L. STRUVEN

REVISED BY

DATE REVISED

LAST REVISION DATE PLOTTED => 13-FEB-2012
TIME PLOTTED => 13:17

11-06-11

BORDER LAST REVISED 7/2/2010

USERNAME => s120183
DGN FILE => 0400000856oa001.dgn

RELATIVE BORDER SCALE IS IN INCHES 0 1 2 3

UNIT 0707

PROJECT NUMBER & PHASE 04000008561

Dist	COUNTY	ROUTE	POST MILES TOTAL PROJECT	SHEET No.	TOTAL SHEETS
04	SM	84	8.3/19.4	7	12

REGISTERED CIVIL ENGINEER 11-01-11 DATE

11-07-11
PLANS APPROVAL DATE

REGISTERED PROFESSIONAL ENGINEER Jerilyn L. Struven No. 49964 Exp. 12-31-12 CIVIL STATE OF CALIFORNIA

THE STATE OF CALIFORNIA OR ITS OFFICERS OR AGENTS SHALL NOT BE RESPONSIBLE FOR THE ACCURACY OR COMPLETENESS OF SCANNED COPIES OF THIS PLAN SHEET.

ROADSIDE SIGN QUANTITIES

SIGN No.	MUTCD CODE	PANEL SIZE	POST SIZE AND LENGTH	ROADSIDE SIGNS ONE POST	REMOVE ROADSIDE SIGN WOOD POST	REMARKS
			4" x 6"	EA		
1	W11-1 W16-1	30" x 30" 24" x 30"	17'-6"	1		FEBT PM 8.3
2	W11-1 W16-1	30" x 30" 24" x 30"	17'-6"	1		FEBT PM 10.0
3	W11-1 W16-1	30" x 30" 24" x 30"	17'-6"	1		FWBT PM 10.0
4	W11-1 W16-1	30" x 30" 24" x 30"	17'-6"	1		FEBT PM 12.0
5	W11-1 W16-1	30" x 30" 24" x 30"	17'-6"	1		FWBT PM 12.0
6	W11-1 W16-1	30" x 30" 24" x 30"	17'-6"	1		FEBT PM 14.0
7	W11-1 W16-1	30" x 30" 24" x 30"	17'-6"	1		FWBT PM 14.8
8	W11-1 W16-1	30" x 30" 24" x 30"	17'-6"	1		FEBT PM 15.0
9	W11-1 W16-1	30" x 30" 24" x 30"	17'-6"	1		FEBT PM 17.2
10	W11-1 W16-1	30" x 30" 24" x 30"	17'-6"	1		FWBT PM 17.2
11	W11-1 W16-1	30" x 30" 24" x 30"	17'-6"	1		FWBT PM 19.4
12	W11-1 W16-1	30" x 30" 24" x 30"	17'-6"	1		FEBT PM 19.4
13	W11-1				1	
			TOTAL	12	1	

SIGN PANEL SUMMARY

SHEET No.	SIGN CODE	SIGN SIZE	SIGN AREA	SINGLE FACED	DOUBLE FACED	SIGN PANEL	BACKGROUND SHEETING COLOR	BACKGROUND RETROREFLECTIVE ASTM TYPE	LEGEND SHEETING COLOR	LEGEND RETROREFLECTIVE ASTM TYPE	FURNISH SINGLE SHEET ALUMINUM (0.063" UNFRAMED)	REMARKS
			SQFT			EA					SQFT	
S-1	W11-1	30" x 30"	6.25	X		12	YELLOW	III	BLACK	PLAIN	75	
S-1	W16-1	24" x 30"	5.00	X		12	YELLOW	III	BLACK	PLAIN	60	
										TOTAL	135	

SIGN QUANTITIES

SQ-1

STATE OF CALIFORNIA - DEPARTMENT OF TRANSPORTATION
Caltrans
TRAFFIC

FUNCTIONAL SUPERVISOR: ROLAND AU-YEUNG
CALCULATED-DESIGNED BY: STEPHEN LAU
CHECKED BY: JERILYN STRUVEN
REVISED BY
DATE REVISED

LAST REVISION 11-06-11
DATE PLOTTED => 13-FEB-2012
TIME PLOTTED => 13:17

Dist	COUNTY	ROUTE	POST MILES TOTAL PROJECT	SHEET No.	TOTAL SHEETS
04	SM	84	8.3/19.4	8	12

REGISTERED CIVIL ENGINEER 11-01-11 DATE

11-07-11
PLANS APPROVAL DATE

REGISTERED PROFESSIONAL ENGINEER Amy S. Chan No. 63662 Exp. 9-30-12 CIVIL STATE OF CALIFORNIA

THE STATE OF CALIFORNIA OR ITS OFFICERS OR AGENTS SHALL NOT BE RESPONSIBLE FOR THE ACCURACY OR COMPLETENESS OF SCANNED COPIES OF THIS PLAN SHEET.

PAVEMENT DELINEATION QUANTITIES

POST MILE	DETAIL No.	THERMOPLASTIC TRAFFIC STRIPE	PAVEMENT MARKER RETROREFLECTIVE
		4'' YELLOW	TYPE D
		LF	EA
8.32 TO 8.51	22M	1997.52	252
8.51 TO 8.84	22M	3535.14	444
8.84 TO 9.36	22M	5641.86	708
9.36 TO 12.25	22M	31939.32	3994
12.25 TO 14.95	22M	29720.25	3718
14.95 TO 15.13	22M	1749.09	220
15.13 TO 15.46	22M	3554.04	446
15.46 TO 15.92	22M	5014.38	628
15.92 TO 16.00	22M	816.69	104
16.00 TO 17.06	22M	11664.03	1460
17.06 TO 18.313	22M	13840.76	1732
18.313 TO 18.327	41	140.00	
18.327 TO 19.09	22M	8407.64	1052
19.09 TO 19.30	22M	2223.48	280
19.30 TO 19.44	22M	1436.82	182
TOTAL		121681.02	15220

COLD PLANE AC PAVEMENT & HMA SURFACING

POST MILE	AREA	HMA (TYPE A)	TACK COAT
	SQYD	TON	TON
14.95 TO 15.13	203.6	34.4	0.085
15.13 TO 15.46	413.7	69.8	0.172
15.46 TO 15.92	583.7	98.5	0.243
15.92 TO 16.00	95.1	16.0	0.040
16.00 TO 17.06	1357.7	229.1	0.566
17.06 TO 18.313	1611.1	271.9	0.671
18.313 TO 18.327	17.1	2.9	0.007
18.327 TO 19.09	978.7	165.2	0.408
19.09 TO 19.30	258.8	43.7	0.108
19.30 TO 19.44	182.5	30.8	0.076
TOTAL	5702	962.3	2.376

PORTABLE CHANGEABLE MESSAGE SIGN

DIRECTION	EA
FEBT	1
FWBT	1
TOTAL	2

REMOVE PAVEMENT DELINEATION QUANTITIES

POST MILE	DETAIL No.	REMOVE THERMOPLASTIC TRAFFIC STRIPE (HAZARDOUS WASTE)	REMOVE PAVEMENT MARKER	
		4'' YELLOW	TYPE D	TYPE AY
		LF	EA	
8.32 TO 8.51	22	1997.52	86	
8.51 TO 8.84	22	3535.14	150	
8.84 TO 11.62	22	30753.24	1284	
11.62 TO 11.82	22R	2217.6		
11.82 TO 11.92	22	1108.8	48	
11.92 TO 12.25	22R	3606.54		
12.25 TO 13.82	22R	17355.66		
13.82 TO 13.92	22	1108.8	48	
13.92 TO 14.62	22R	7761.6		
14.62 TO 14.95	22	3494.19	148	
14.95 TO 15.46	22	5408.13	228	
15.46 TO 15.92	22	5014.38	210	
15.92 TO 16.00	22	816.69	36	
16.00 TO 17.06	22	11664.03	488	
17.06 TO 17.58	22	5713.26	240	
17.58 TO 17.61	22	315.00	16	60
17.61 TO 18.313	22	7794.86	326	
18.313 TO 18.327	41	20.00		
18.327 TO 19.09	22	8407.64	352	
19.09 TO 19.30	22	2223.48	94	
19.30 TO 19.44	22	1436.82	62	
SUBTOTAL		121753.38	3816	60
TOTAL		121753.38	3876	

ROADWAY QUANTITIES

POST MILE	CENTERLINE RUMBLE STRIP (HMA, GROUND-IN INDENTATIONS)	ASPHALTIC EMULSION (FOG SEAL COAT) (N)
	STATION	TON
8.32 TO 8.51	9.99	0.05
8.51 TO 8.84	17.68	0.08
8.84 TO 9.36	28.21	0.13
9.36 TO 12.25	159.70	0.74
12.25 TO 14.95	148.60	0.69
14.95 TO 15.13	8.75	0.04
15.13 TO 15.46	17.77	0.08
15.46 TO 15.92	25.07	0.12
15.92 TO 16.00	4.08	0.02
16.00 TO 17.06	58.32	0.27
17.06 TO 18.313	69.20	0.32
18.327 TO 19.09	42.04	0.19
19.09 TO 19.30	11.12	0.05
19.30 TO 19.44	7.18	0.03
TOTAL	607.71	2.81

(N) = NOT A SEPARATE PAY ITEM, FOR INFORMATION ONLY

SUMMARY OF QUANTITIES

Q-1

REVISED BY | DATE REVISED
AMY CHAN | LEIANN MORITA
CALCULATED-DESIGNED BY | CHECKED BY
FUNCTIONAL SUPERVISOR: PATRICK NG
STATE OF CALIFORNIA - DEPARTMENT OF TRANSPORTATION
Caltrans DESIGN

LAST REVISION 11-OG-11 | DATE PLOTTED => 13-FEB-2012 | TIME PLOTTED => 13:17

DIST	COUNTY	ROUTE	POST MILES TOTAL PROJECT	SHEET NO.	TOTAL SHEETS
04	SM	84	8.3/19.4	9	12

Randell D. Hiatt
REGISTERED CIVIL ENGINEER

June 6, 2008
PLANS APPROVAL DATE

REGISTERED PROFESSIONAL ENGINEER
Randell D. Hiatt
No. C50200
Exp. 6-30-09
CIVIL
STATE OF CALIFORNIA

The State of California or its officers or agents shall not be responsible for the accuracy or completeness of electronic copies of this plan sheet.

To accompany plans dated 11-07-11

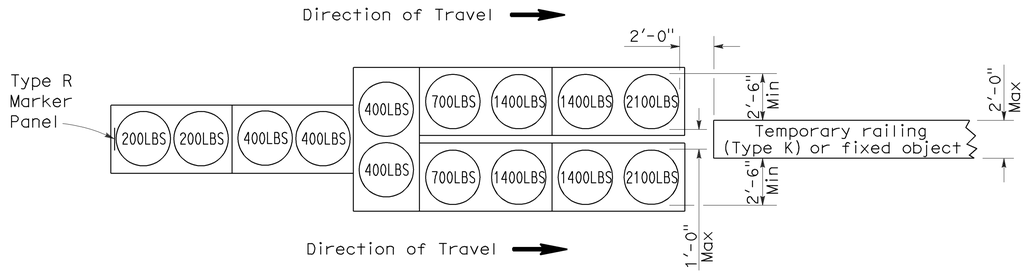

ARRAY 'TU14'

Approach speed 45 mph or more

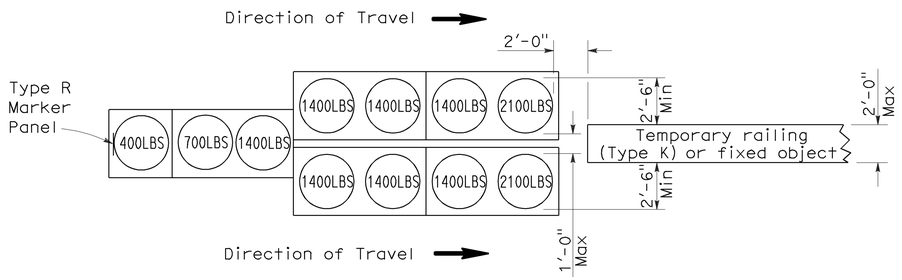

ARRAY 'TU11'

Approach speed less than 45 mph

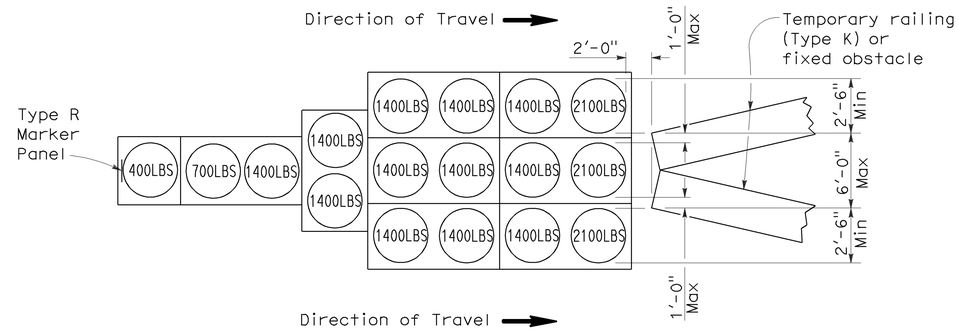

ARRAY 'TU17'

Approach speed less than 45 mph

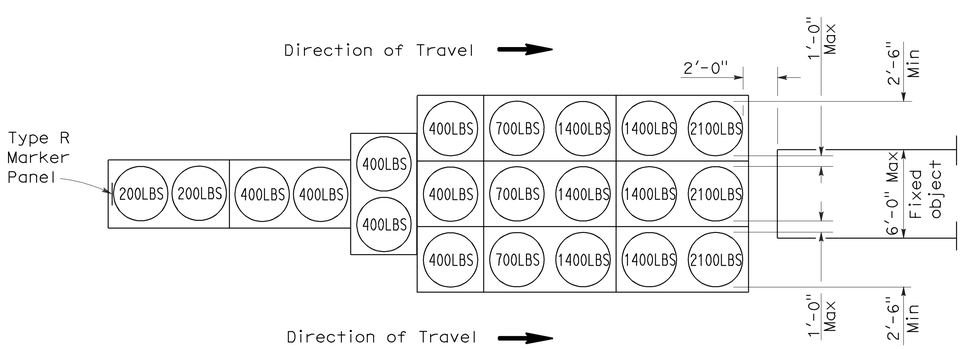

ARRAY 'TU21'

Approach speed 45 mph or more

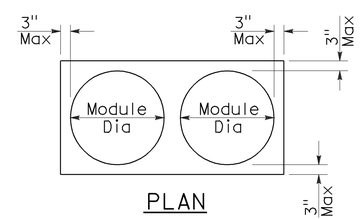

PLAN

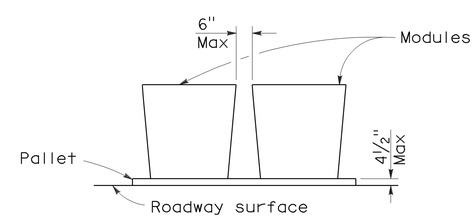

ELEVATION

CRASH CUSHION PALLET DETAIL

See Note 7

NOTES:

1. (XXX) Indicates sand filled module location and weight of sand in pounds for each module. Module spacing is based on the greater diameter of the module.
2. All sand weights are nominal.
3. Temporary crash cushion arrays shall not encroach on the traveled way.
4. Place the top of Type R marker panel 1" below the module lid.
5. Refer to Standard Plan A73B for marker details.
6. Approach speeds indicated conform to NCHRP 350 Report criteria.
7. Use of pallets is optional.

STATE OF CALIFORNIA
DEPARTMENT OF TRANSPORTATION

TEMPORARY CRASH CUSHION, SAND FILLED (UNIDIRECTIONAL)

NO SCALE

RSP T1A DATED JUNE 6, 2008 SUPERSEDES STANDARD PLAN T1A
DATED MAY 1, 2006 - PAGE 211 OF THE STANDARD PLANS BOOK DATED MAY 2006.

REVISED STANDARD PLAN RSP T1A

2006 REVISED STANDARD PLAN RSP T1A

DIST	COUNTY	ROUTE	POST MILES TOTAL PROJECT	SHEET NO.	TOTAL SHEETS
04	SM	84	8.3/19.4	10	12

Randell D. Hiatt
REGISTERED CIVIL ENGINEER

June 6, 2008
PLANS APPROVAL DATE

REGISTERED PROFESSIONAL ENGINEER
Randell D. Hiatt
No. C50200
Exp. 6-30-09
CIVIL
STATE OF CALIFORNIA

The State of California or its officers or agents shall not be responsible for the accuracy or completeness of electronic copies of this plan sheet.

To accompany plans dated 11-07-11

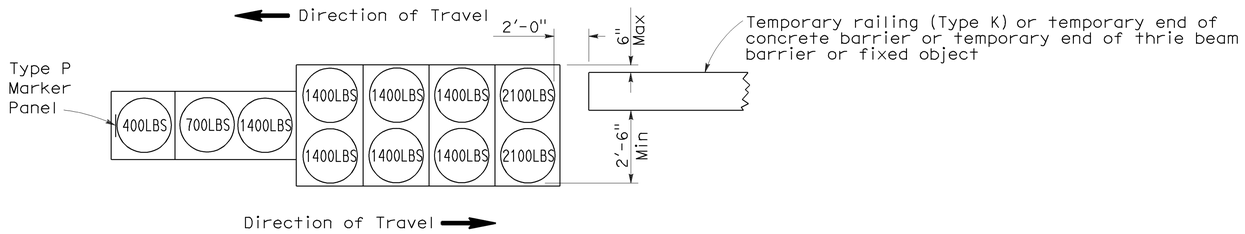

ARRAY 'TB11'

Approach speed less than 45 mph

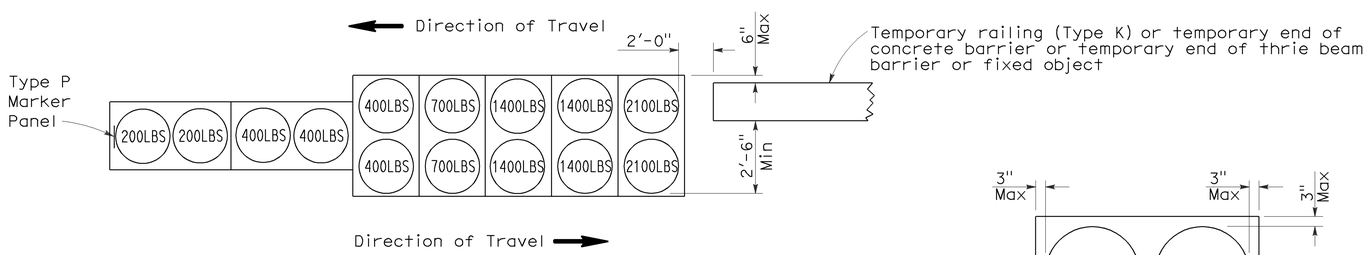

ARRAY 'TB14'

Approach speed 45 mph or more

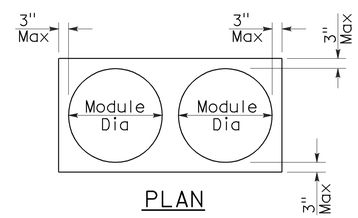

PLAN

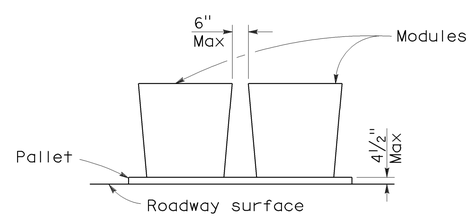

ELEVATION

CRASH CUSHION PALLET DETAIL

See Note 7

NOTES:

1. (XXX) Indicates sand filled module location and weight of sand in pounds for each module. Module spacing is based on the greater diameter of the module.
2. All sand weights are nominal.
3. Temporary crash cushion arrays shall not encroach on the traveled way.
4. Place the Type P marker panel so that the bottom of the panel rests upon the pallet.
5. Refer to Standard Plan A73B for marker details.
6. Approach speeds indicated conform to NCHRP 350 Report criteria.
7. Use of pallets is optional.

STATE OF CALIFORNIA
DEPARTMENT OF TRANSPORTATION

TEMPORARY CRASH CUSHION, SAND FILLED (BIDIRECTIONAL)

NO SCALE

RSP T1B DATED JUNE 6, 2008 SUPERSEDES STANDARD PLAN T1B
DATED MAY 1, 2006 - PAGE 212 OF THE STANDARD PLANS BOOK DATED MAY 2006.

REVISED STANDARD PLAN RSP T1B

2006 REVISED STANDARD PLAN RSP T1B

5-15-08

DIST	COUNTY	ROUTE	POST MILES TOTAL PROJECT	SHEET NO.	TOTAL SHEETS
04	SM	84	8.3/19.4	11	12

Randell D. Hiatt
REGISTERED CIVIL ENGINEER

June 6, 2008
PLANS APPROVAL DATE

REGISTERED PROFESSIONAL ENGINEER
Randell D. Hiatt
No. C50200
Exp. 6-30-09
CIVIL
STATE OF CALIFORNIA

The State of California or its officers or agents shall not be responsible for the accuracy or completeness of electronic copies of this plan sheet.

To accompany plans dated 11-07-11

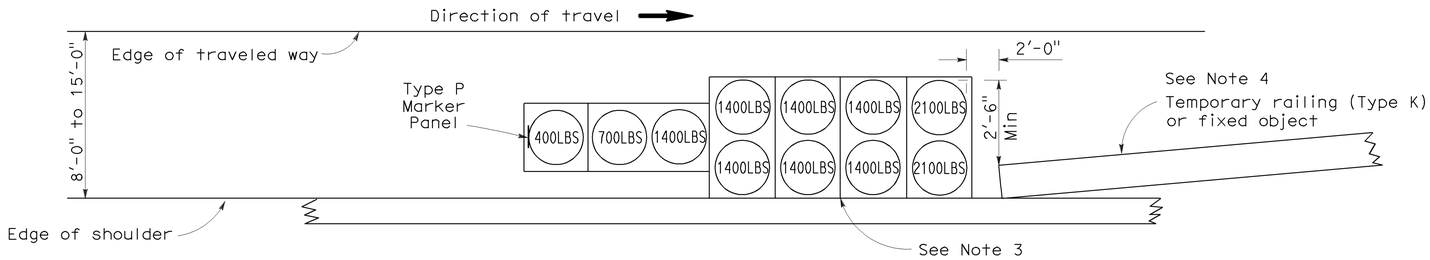

ARRAY 'TS11'

Approach speed less than 45 mph
See Note 9

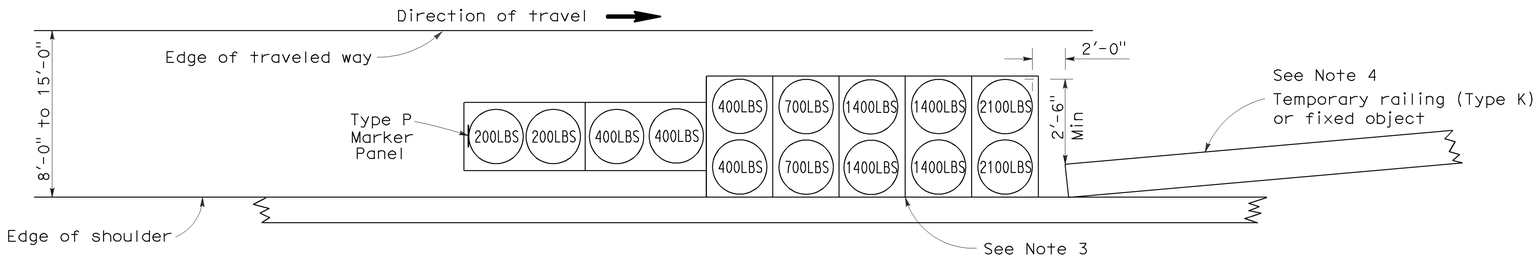

ARRAY 'TS14'

Approach speed 45 mph or more
See Note 9

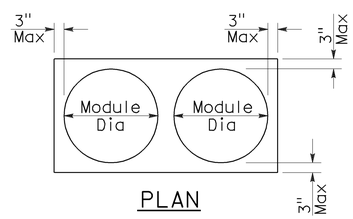

PLAN

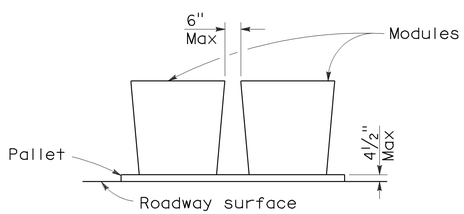

ELEVATION

CRASH CUSHION PALLET DETAIL

See Note 11

NOTES:

1. (XXX) Indicates sand filled module location and weight of sand in pounds for each module. Module spacing is based on the greater diameter of the module.
2. All sand weights are nominal.
3. The temporary crash cushion arrays shown on this plan shall be used only in locations where there will be traffic on one side of the temporary crash cushion array.
4. If the fixed object or approach end of the temporary railing is less than 15'-0" from the edge of traveled way, a temporary crash cushion is required in a construction or work zone.
5. Temporary crash cushion arrays shall not encroach on the traveled way.
6. Arrays for median shoulders shall conform to details shown on this plan for outside shoulders.
7. Place the Type P marker panel so that the bottom of the panel rests upon the pallet and faces traffic.
8. Refer to Standard Plan A73B for marker details.
9. For shoulder widths less than 8'-0", appropriate approved crash cushion protection, other than sand filled modules, shall be provided at fixed objects and at approach ends of temporary railing. The specific type of crash cushion shall be as shown on the project plans or as specified in the Special Provisions, or if not shown on the project plans or specified in the Special Provisions, shall be as approved by the Engineer.
10. Approach speeds indicated conform to NCHRP 350 Report criteria.
11. Use of pallets is optional.

STATE OF CALIFORNIA
DEPARTMENT OF TRANSPORTATION

TEMPORARY CRASH CUSHION, SAND FILLED (SHOULDER INSTALLATIONS)

NO SCALE

RSP T2 DATED JUNE 6, 2008 SUPERSEDES STANDARD PLAN T2
DATED MAY 1, 2006 - PAGE 213 OF THE STANDARD PLANS BOOK DATED MAY 2006.

REVISED STANDARD PLAN RSP T2

2006 REVISED STANDARD PLAN RSP T2

5-15-08

Dist	COUNTY	ROUTE	POST MILES TOTAL PROJECT	SHEET No.	TOTAL SHEETS
04	SM	84	8.3/19.4	12	12

Randell D. Hiatt
REGISTERED CIVIL ENGINEER

May 20, 2011
PLANS APPROVAL DATE

REGISTERED PROFESSIONAL ENGINEER
Randell D. Hiatt
No. C50200
Exp. 6-30-11
CIVIL
STATE OF CALIFORNIA

The State of California or its officers or agents shall not be responsible for the accuracy or completeness of electronic copies of this plan sheet.

To accompany plans dated 11-07-11

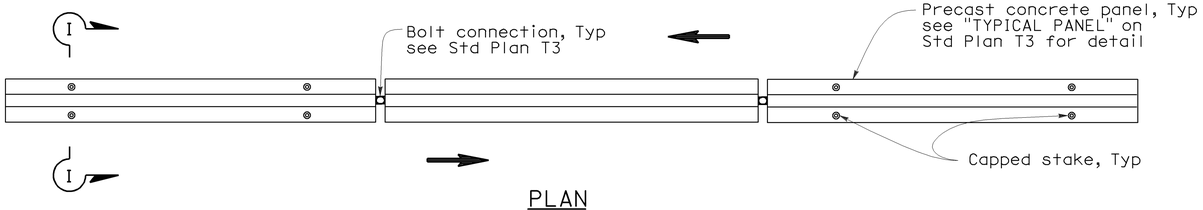

PLAN

RAILING STAKING CONFIGURATION FOR TWO-WAY TRAFFIC

See Note 1

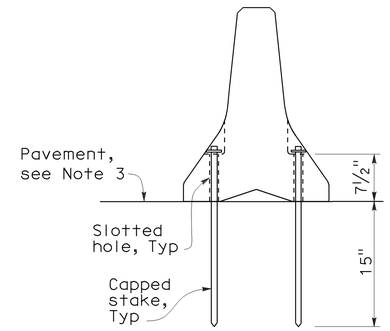

SECTION I-I

NOTES:

1. Where Type K Temporary Railing is placed as a temporary or long term barrier in two-way traffic on highways with less than 24" from the edge of traveled way, use four capped stakes per every other panel with end panels staked.
2. Where Type K Temporary Railing is placed 3" to 24" from the edge of an excavation on highways, use two capped stakes per panel along the traffic side.
3. Staked Type K Temporary Railing must be supported by at least 4" thick concrete, hot mix asphalt or existing asphalt concrete pavement.
4. The minimum yield strength for the washer must be 60,000 psi.
5. Direction of adjacent traffic indicated by ⟹.

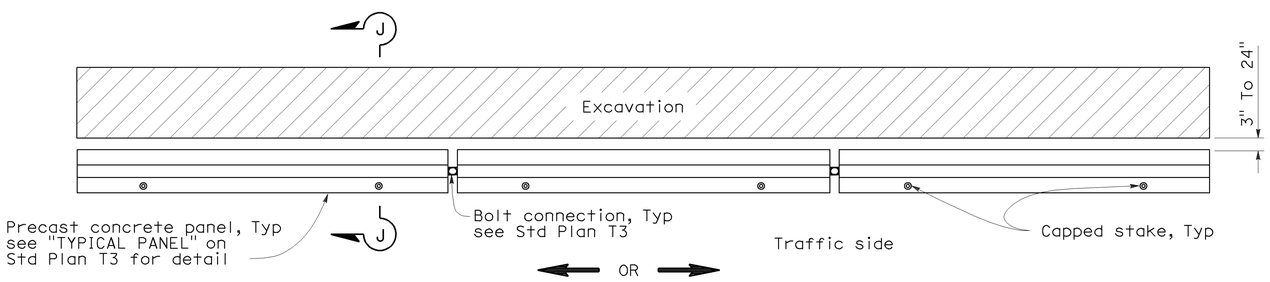

PLAN

RAILING STAKING CONFIGURATION ADJACENT TO AN EXCAVATION

See Note 2

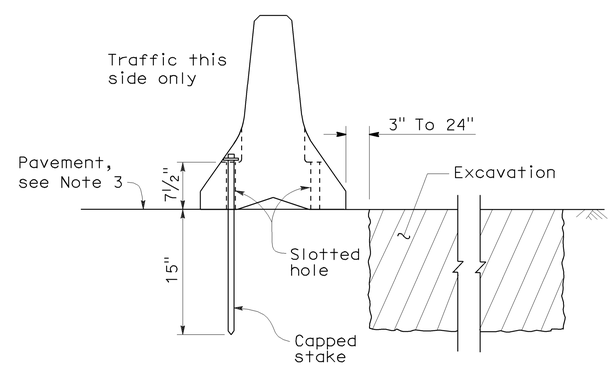

SECTION J-J

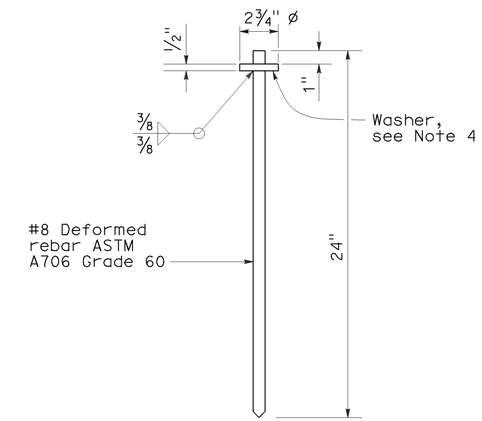

CAPPED STAKE DETAIL

STATE OF CALIFORNIA
DEPARTMENT OF TRANSPORTATION

TEMPORARY RAILING (TYPE K)

NO SCALE

NSP T3A DATED MAY 20, 2011 SUPPLEMENTS
THE STANDARD PLANS BOOK DATED MAY 2006.

NEW STANDARD PLAN NSP T3A

2006 NEW STANDARD PLAN NSP T3A