Dist	COUNTY	ROUTE	POST MILES TOTAL PROJECT	SHEET No.	TOTAL SHEETS
04	CC, Sol	80	13.4/14.1, 0.0/0.6	1	75

STATE OF CALIFORNIA

DEPARTMENT OF TRANSPORTATION

PROJECT PLANS FOR CONSTRUCTION ON

STATE HIGHWAY

IN CONTRA COSTA AND SOLANO COUNTIES AT CROCKETT AND IN VALLEJO

FROM 0.1 MILE WEST OF CARQUINEZ STRAIT BRIDGE OVERHEAD TO CARQUINEZ BRIDGE TOLL PLAZA

TO BE SUPPLEMENTED BY STANDARD PLANS DATED 2010

INDEX OF PLANS

SHEET No.	DESCRIPTION
1	TITLE SHEET AND LOCATION MAP
2 - 7	LAYOUT
8 - 12	TEMPORARY WATER POLLUTION CONTROL PLAN AND QUANTITIES
13 - 17	CONSTRUCTION AREA SIGNS
18 - 23	PAVEMENT DELINEATION PLAN AND DETAILS
24	SUMMARY OF QUANTITIES
25	EROSION CONTROL LEGEND, DETAILS AND QUANTITIES
26 - 32	REVISED STANDARD PLANS
STRUCTURE PLANS	
33 - 57	CARQUINEZ BRIDGE AND CROCKETT VIADUCT
58 - 64	ZAMPA BRIDGE MECHANICAL PLAN
65 - 75	ZAMPA BRIDGE ELECTRICAL PLAN

THE STANDARD PLANS LIST APPLICABLE TO THIS CONTRACT IS INCLUDED IN THE NOTICE TO BIDDERS AND SPECIAL PROVISIONS BOOK.

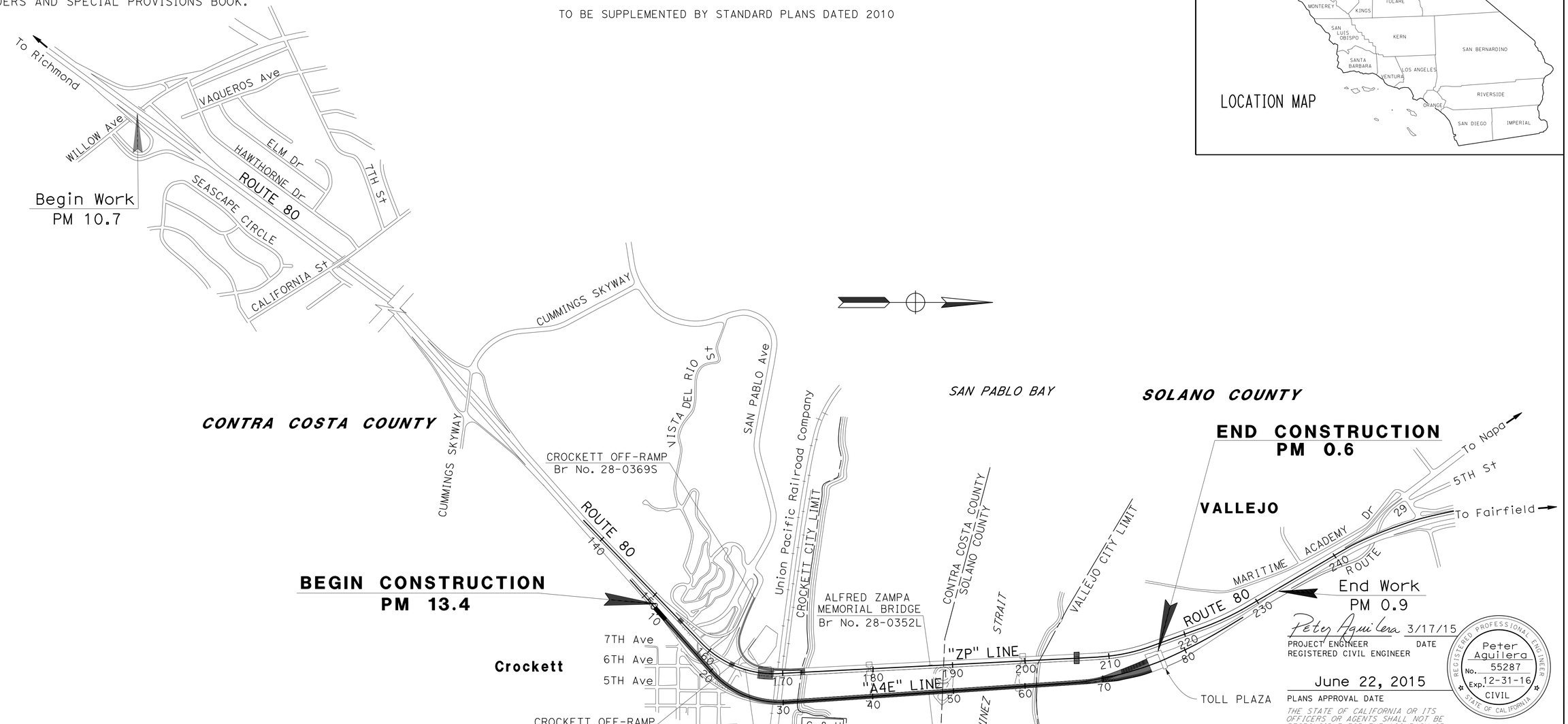

LOCATION MAP

Caltrans

Peter Aguilera 3/17/15
PROJECT ENGINEER DATE
REGISTERED CIVIL ENGINEER

June 22, 2015
PLANS APPROVAL DATE

REGISTERED PROFESSIONAL ENGINEER
Peter Aguilera
No. 55287
Exp. 12-31-16
CIVIL
STATE OF CALIFORNIA

THE STATE OF CALIFORNIA OR ITS OFFICERS OR AGENTS SHALL NOT BE RESPONSIBLE FOR THE ACCURACY OR COMPLETENESS OF SCANNED COPIES OF THIS PLAN SHEET.

PROJECT MANAGER: MOHSEN PAZOOKI

DESIGN MANAGER: ARLISSA PANG

THE CONTRACTOR SHALL POSSESS THE CLASS (OR CLASSES) OF LICENSE AS SPECIFIED IN THE "NOTICE TO BIDDERS."

CONTRACT No.	04-3G4034
PROJECT ID	0412000101

LAST REVISION 05-15-15

DATE PLOTTED => 03-JUL-2015
TIME PLOTTED => 14:47

Dist	COUNTY	ROUTE	POST MILES TOTAL PROJECT	SHEET No.	TOTAL SHEETS
04	CC, Sol	80	13.4/14.1, 0.0/0.6	2	75

Peter Aguilera 3/17/15
REGISTERED CIVIL ENGINEER DATE

6-22-15
PLANS APPROVAL DATE

REGISTERED PROFESSIONAL ENGINEER Peter Aguilera No. 55287 Exp. 12-31-16 CIVIL STATE OF CALIFORNIA

THE STATE OF CALIFORNIA OR ITS OFFICERS OR AGENTS SHALL NOT BE RESPONSIBLE FOR THE ACCURACY OR COMPLETENESS OF SCANNED COPIES OF THIS PLAN SHEET.

NOTE:

FOR ACCURATE RIGHT OF WAY DATA, CONTACT RIGHT OF WAY ENGINEERING AT THE DISTRICT OFFICE.

NOTE:

1. OFFSET TO CONCRETE BARRIER (TYPE 60) IS TO THE CENTERLINE OF THE CONCRETE BARRIER.

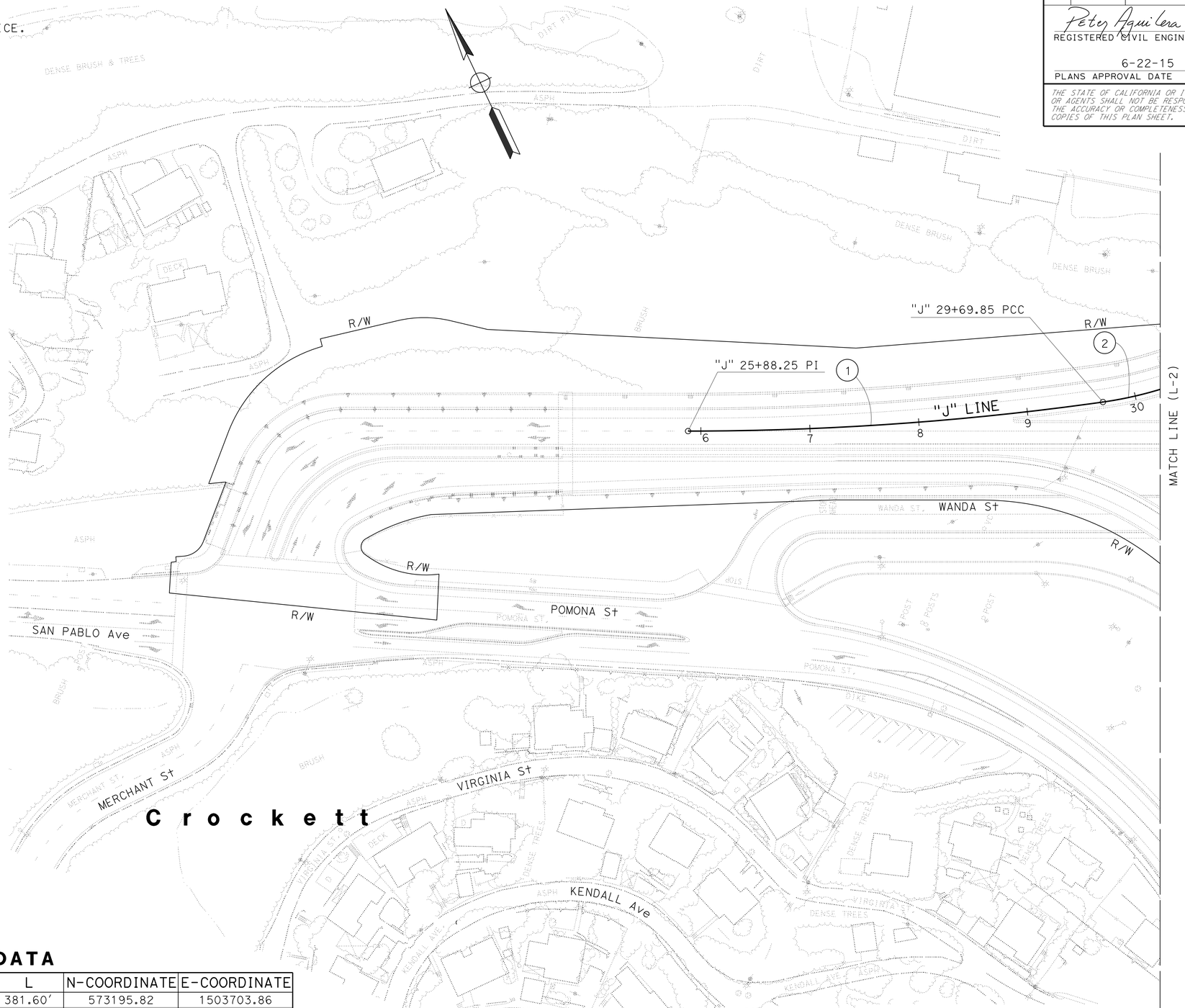

CURVE DATA

No. ⊕	R	Δ	T	L	N-COORDINATE	E-COORDINATE
1	2723.09′	08° 01′ 45″	191.11′	381.60′	573195.82	1503703.86
2	344.49′	92° 25′ 41″	359.41′	555.72′	570934.87	1502965.03

LAYOUT

SCALE: 1″ = 50′

L-1

STATE OF CALIFORNIA - DEPARTMENT OF TRANSPORTATION
Caltrans
DESIGN

FUNCTIONAL SUPERVISOR: ARLISSA PANG
CALCULATED-DESIGNED BY: PETER AGUILERA
CHECKED BY: VAN HEW
REVISED BY: PA
DATE REVISED: 2/25/15

LAST REVISION 05-13-15
DATE PLOTTED => 03-JUL-2015
TIME PLOTTED => 14:47

Dist	COUNTY	ROUTE	POST MILES TOTAL PROJECT	SHEET No.	TOTAL SHEETS
04	CC, Sol	80	13.4/14.1, 0.0/0.6	3	75

Peter Aguilera 3/17/15
REGISTERED CIVIL ENGINEER DATE

6-22-15
PLANS APPROVAL DATE

REGISTERED PROFESSIONAL ENGINEER Peter Aguilera No. 55287 Exp. 12-31-16 CIVIL STATE OF CALIFORNIA

THE STATE OF CALIFORNIA OR ITS OFFICERS OR AGENTS SHALL NOT BE RESPONSIBLE FOR THE ACCURACY OR COMPLETENESS OF SCANNED COPIES OF THIS PLAN SHEET.

NOTE:

FOR ACCURATE RIGHT OF WAY DATA, CONTACT RIGHT OF WAY ENGINEERING AT THE DISTRICT OFFICE.

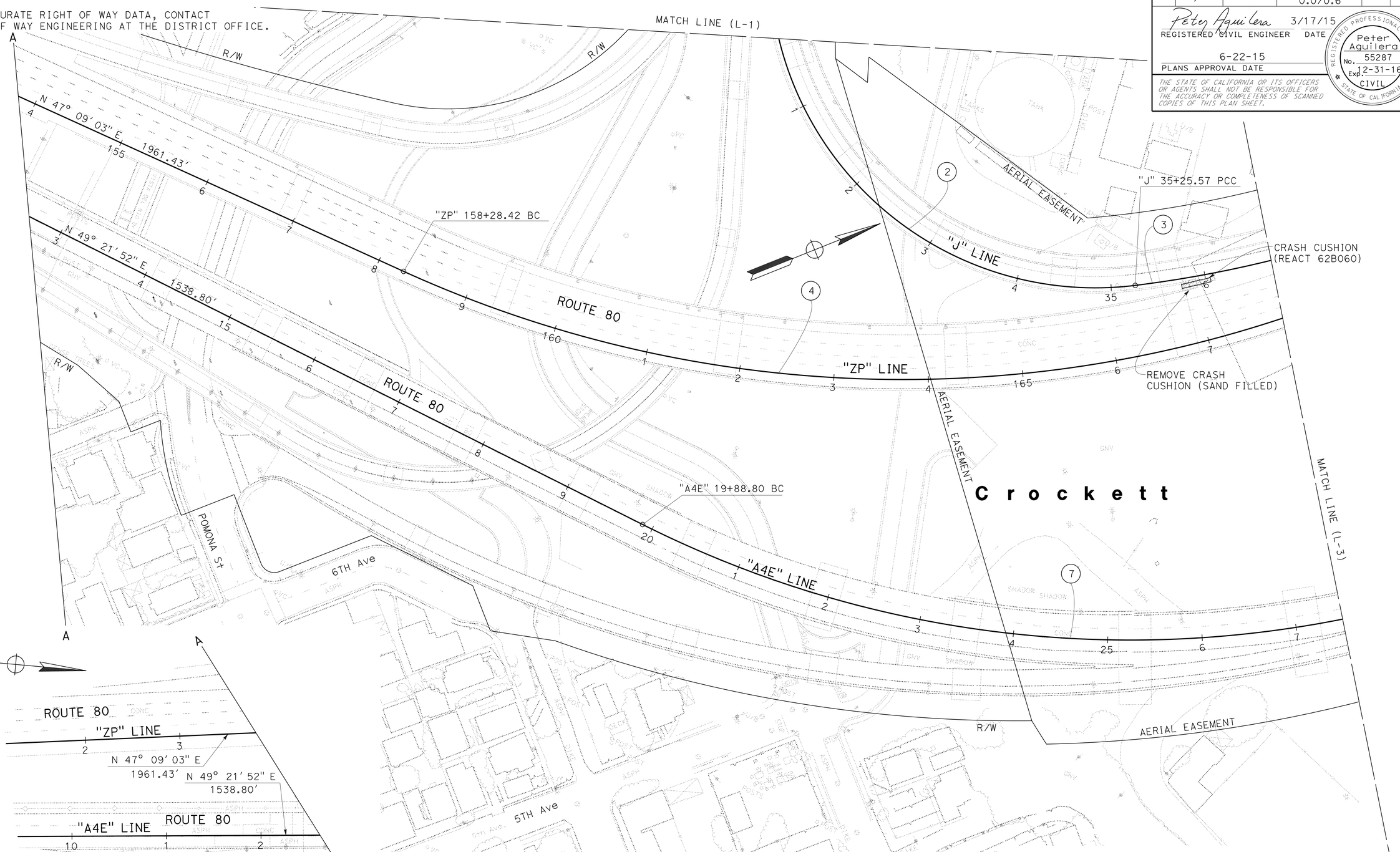

CURVE DATA

No. ⊕	R	Δ	T	L	N-COORDINATE	E-COORDINATE
2	344.49′	92° 25′ 41"	359.41′	555.72′	570934.87	1502965.03
3	1229′	12° 50′ 28"	138.30′	275.44′	571173.75	1502113.39
4	1276.24′	49° 12′ 14"	584.36′	1096′	571069.15	1502116.36
7	1150′	52° 17′ 58"	564.62′	1049.72′	571136.09	1502580.07

FOR NOTES, ABBREVIATIONS AND LEGEND, SEE SHEET L-1

LAYOUT

SCALE: 1" = 50′

L-2

REVISED BY	DATE REVISED
PA	2/25/15

CALCULATED-DESIGNED BY: PETER AGUILERA
CHECKED BY: VAN HEW
FUNCTIONAL SUPERVISOR: ARLISSA PANG

STATE OF CALIFORNIA - DEPARTMENT OF TRANSPORTATION
DESIGN

LAST REVISION 05-13-15
DATE PLOTTED => 03-JUL-2015
TIME PLOTTED => 14:47

Dist	COUNTY	ROUTE	POST MILES TOTAL PROJECT	SHEET No.	TOTAL SHEETS
04	CC, Sol	80	13.4/14.1, 0.0/0.6	4	75

Peter Aguilera 3/17/15
REGISTERED CIVIL ENGINEER DATE

6-22-15
PLANS APPROVAL DATE

REGISTERED PROFESSIONAL ENGINEER Peter Aguilera No. 55287 Exp. 12-31-16 CIVIL STATE OF CALIFORNIA

THE STATE OF CALIFORNIA OR ITS OFFICERS OR AGENTS SHALL NOT BE RESPONSIBLE FOR THE ACCURACY OR COMPLETENESS OF SCANNED COPIES OF THIS PLAN SHEET.

NOTE:

FOR ACCURATE RIGHT OF WAY DATA, CONTACT RIGHT OF WAY ENGINEERING AT THE DISTRICT OFFICE.

CURVE DATA

No. ⊕	R	Δ	T	L	N-COORDINATE	E-COORDINATE
3	1229′	12° 50′ 28″	138.30′	275.44′	571173.75	1502113.39
4	1276.24′	49° 12′ 14″	584.36′	1096′	571069.15	1502116.36
7	1150′	52° 17′ 58″	564.62′	1049.72′	571136.09	1502580.07

FOR NOTES, ABBREVIATIONS AND LEGEND, SEE SHEET L-1

LAYOUT

SCALE: 1" = 50′

L-3

REVISED BY	DATE REVISED
PA	2/25/15

CALCULATED-DESIGNED BY: PETER AGUILERA
CHECKED BY: VAN HEW
FUNCTIONAL SUPERVISOR: ARLISSA PANG

STATE OF CALIFORNIA - DEPARTMENT OF TRANSPORTATION
Caltrans
DESIGN

LAST REVISION 05-15-15 | DATE PLOTTED => 03-JUL-2015 | TIME PLOTTED => 14:47

Dist	COUNTY	ROUTE	POST MILES TOTAL PROJECT	SHEET No.	TOTAL SHEETS
04	CC, Sol	80	13.4/14.1, 0.0/0.6	5	75

Peter Aguilera 3/17/15
REGISTERED CIVIL ENGINEER DATE

6-22-15
PLANS APPROVAL DATE

REGISTERED PROFESSIONAL ENGINEER Peter Aguilera No. 55287 Exp. 12-31-16 CIVIL STATE OF CALIFORNIA

THE STATE OF CALIFORNIA OR ITS OFFICERS OR AGENTS SHALL NOT BE RESPONSIBLE FOR THE ACCURACY OR COMPLETENESS OF SCANNED COPIES OF THIS PLAN SHEET.

NOTE:

FOR ACCURATE RIGHT OF WAY DATA, CONTACT RIGHT OF WAY ENGINEERING AT THE DISTRICT OFFICE.

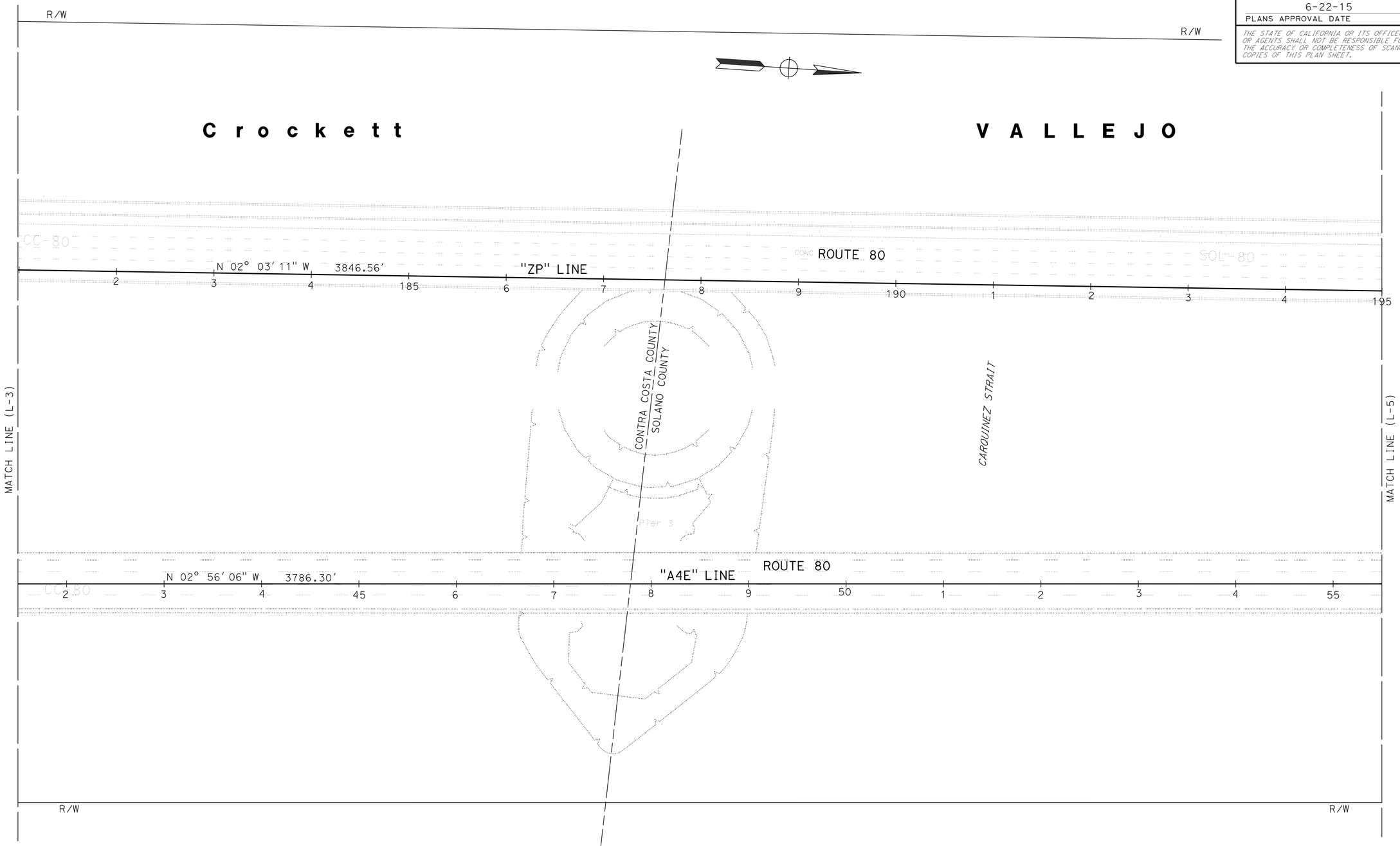

FOR NOTES, ABBREVIATIONS AND LEGEND, SEE SHEET L-1

LAYOUT

SCALE: 1" = 50'

L-4

PA	2/25/15
REVISED BY	DATE REVISED
PETER AGUILERA	VAN HEW
CALCULATED-DESIGNED BY	CHECKED BY
FUNCTIONAL SUPERVISOR	ARLISSA PANG

STATE OF CALIFORNIA - DEPARTMENT OF TRANSPORTATION

Caltrans® DESIGN

LAST REVISION 05-13-15 | DATE PLOTTED => 03-JUL-2015 TIME PLOTTED => 14:47

Dist	COUNTY	ROUTE	POST MILES TOTAL PROJECT	SHEET No.	TOTAL SHEETS
04	CC, Sol	80	13.4/14.1, 0.0/0.6	6	75

Peter Aguilera 3/17/15
REGISTERED CIVIL ENGINEER DATE

6-22-15
PLANS APPROVAL DATE

REGISTERED PROFESSIONAL ENGINEER Peter Aguilera No. 55287 Exp. 12-31-16 CIVIL STATE OF CALIFORNIA

THE STATE OF CALIFORNIA OR ITS OFFICERS OR AGENTS SHALL NOT BE RESPONSIBLE FOR THE ACCURACY OR COMPLETENESS OF SCANNED COPIES OF THIS PLAN SHEET.

NOTE:

FOR ACCURATE RIGHT OF WAY DATA, CONTACT RIGHT OF WAY ENGINEERING AT THE DISTRICT OFFICE.

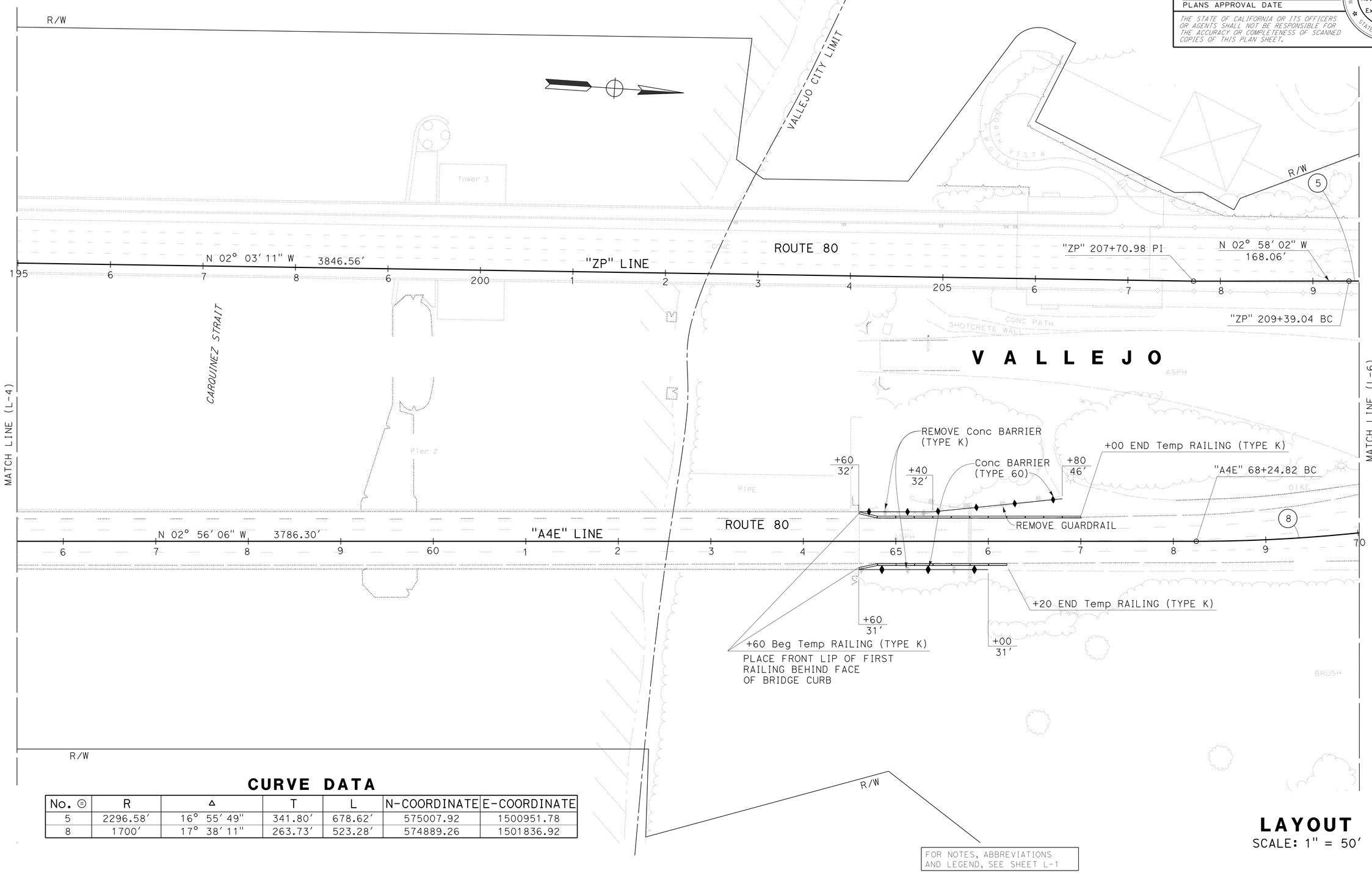

CURVE DATA

No. ⊕	R	Δ	T	L	N-COORDINATE	E-COORDINATE
5	2296.58′	16° 55′ 49″	341.80′	678.62′	575007.92	1500951.78
8	1700′	17° 38′ 11″	263.73′	523.28′	574889.26	1501836.92

LAYOUT

SCALE: 1″ = 50′

L-5

STATE OF CALIFORNIA - DEPARTMENT OF TRANSPORTATION
Caltrans DESIGN

FUNCTIONAL SUPERVISOR: ARLISSA PANG
CALCULATED-DESIGNED BY: PETER AGUILERA
CHECKED BY: VAN HEW
REVISED BY: PA
DATE REVISED: 2/25/15

LAST REVISION 05-15-15 | DATE PLOTTED => 03-JUL-2015 | TIME PLOTTED => 14:47

Dist	COUNTY	ROUTE	POST MILES TOTAL PROJECT	SHEET No.	TOTAL SHEETS
04	CC, Sol	80	13.4/14.1, 0.0/0.6	7	75

Peter Aguilera 3/17/15
REGISTERED CIVIL ENGINEER DATE

6-22-15
PLANS APPROVAL DATE

REGISTERED PROFESSIONAL ENGINEER Peter Aguilera No. 55287 Exp. 12-31-16 CIVIL STATE OF CALIFORNIA

THE STATE OF CALIFORNIA OR ITS OFFICERS OR AGENTS SHALL NOT BE RESPONSIBLE FOR THE ACCURACY OR COMPLETENESS OF SCANNED COPIES OF THIS PLAN SHEET.

NOTE:

FOR ACCURATE RIGHT OF WAY DATA, CONTACT RIGHT OF WAY ENGINEERING AT THE DISTRICT OFFICE.

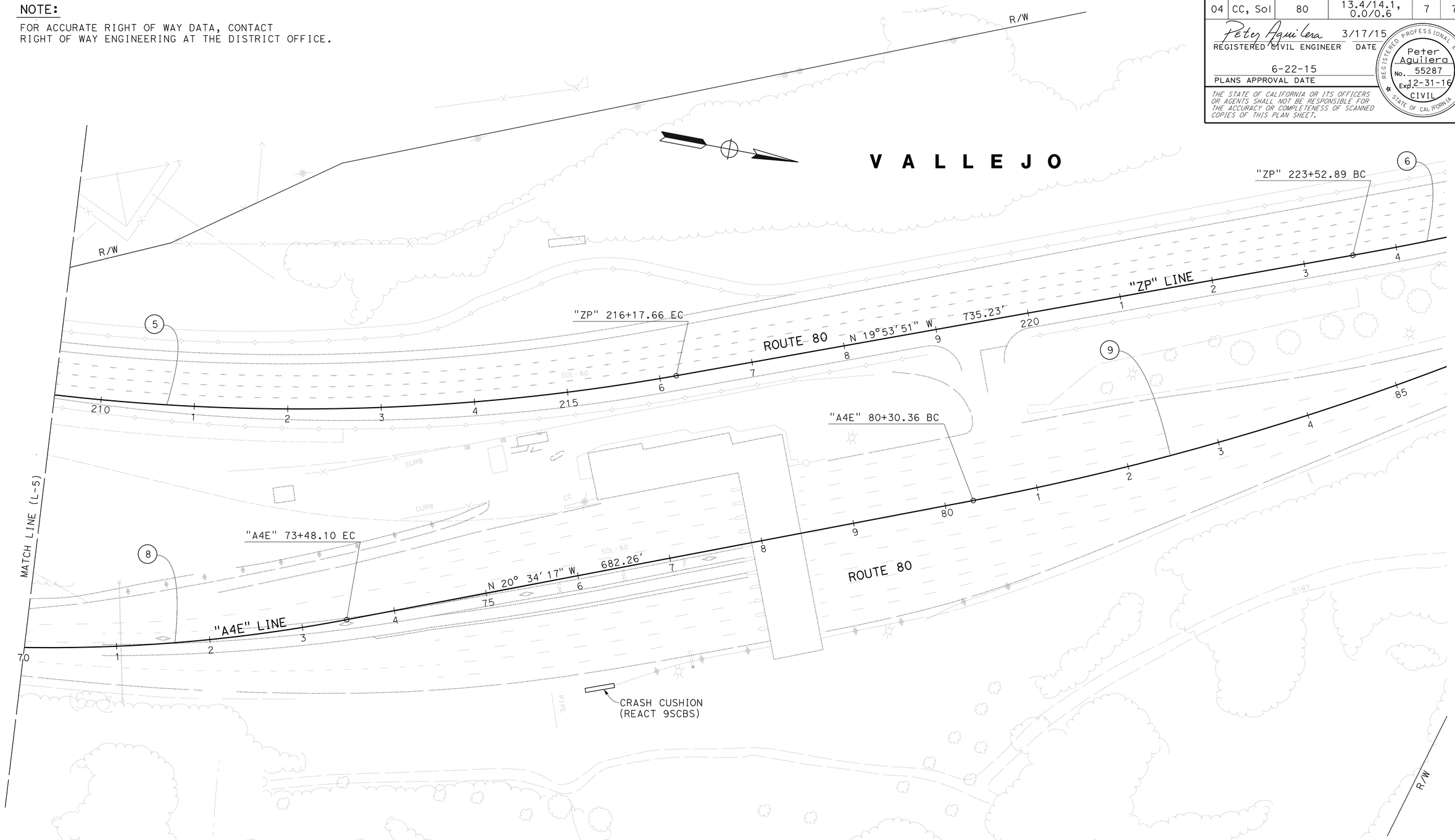

CURVE DATA

No. ⊕	R	Δ	T	L	N-COORDINATE	E-COORDINATE
5	2296.58′	16° 55′ 49"	341.80′	678.62′	575007.92	1500951.78
6	3608.92	10° 31′ 58"	332.65′	663.43′	575252.62	1499467.56
8	1700′	17° 38′ 11"	263.73′	523.28′	574889.26	1501836.92
9	3000′	11° 37′ 05"	305.21′	608.32′	575071.23	1500380.08

FOR NOTES, ABBREVIATIONS AND LEGEND, SEE SHEET L-1

LAYOUT

SCALE: 1" = 50′

L-6

REVISED BY	DATE REVISED
PA	2/25/15

PETER AGUILERA — VAN HEW — CALCULATED-DESIGNED BY — CHECKED BY

FUNCTIONAL SUPERVISOR: ARLISSA PANG

STATE OF CALIFORNIA - DEPARTMENT OF TRANSPORTATION — DESIGN — Caltrans

LAST REVISION 05-14-15 — DATE PLOTTED => 03-JUL-2015 — TIME PLOTTED => 14:47

Dist	COUNTY	ROUTE	POST MILES TOTAL PROJECT	SHEET No.	TOTAL SHEETS
04	CC, Sol	80	13.4/14.1, 0.0/0.6	8	75

REGISTERED CIVIL ENGINEER 5/18/15 DATE

6-22-15
PLANS APPROVAL DATE

REGISTERED PROFESSIONAL ENGINEER Jiangfan Chen No. 77248 Exp. 6-30-15 CIVIL STATE OF CALIFORNIA

THE STATE OF CALIFORNIA OR ITS OFFICERS OR AGENTS SHALL NOT BE RESPONSIBLE FOR THE ACCURACY OR COMPLETENESS OF SCANNED COPIES OF THIS PLAN SHEET.

NOTE:

FOR ACCURATE RIGHT OF WAY DATA, CONTACT RIGHT OF WAY ENGINEERING AT THE DISTRICT OFFICE.

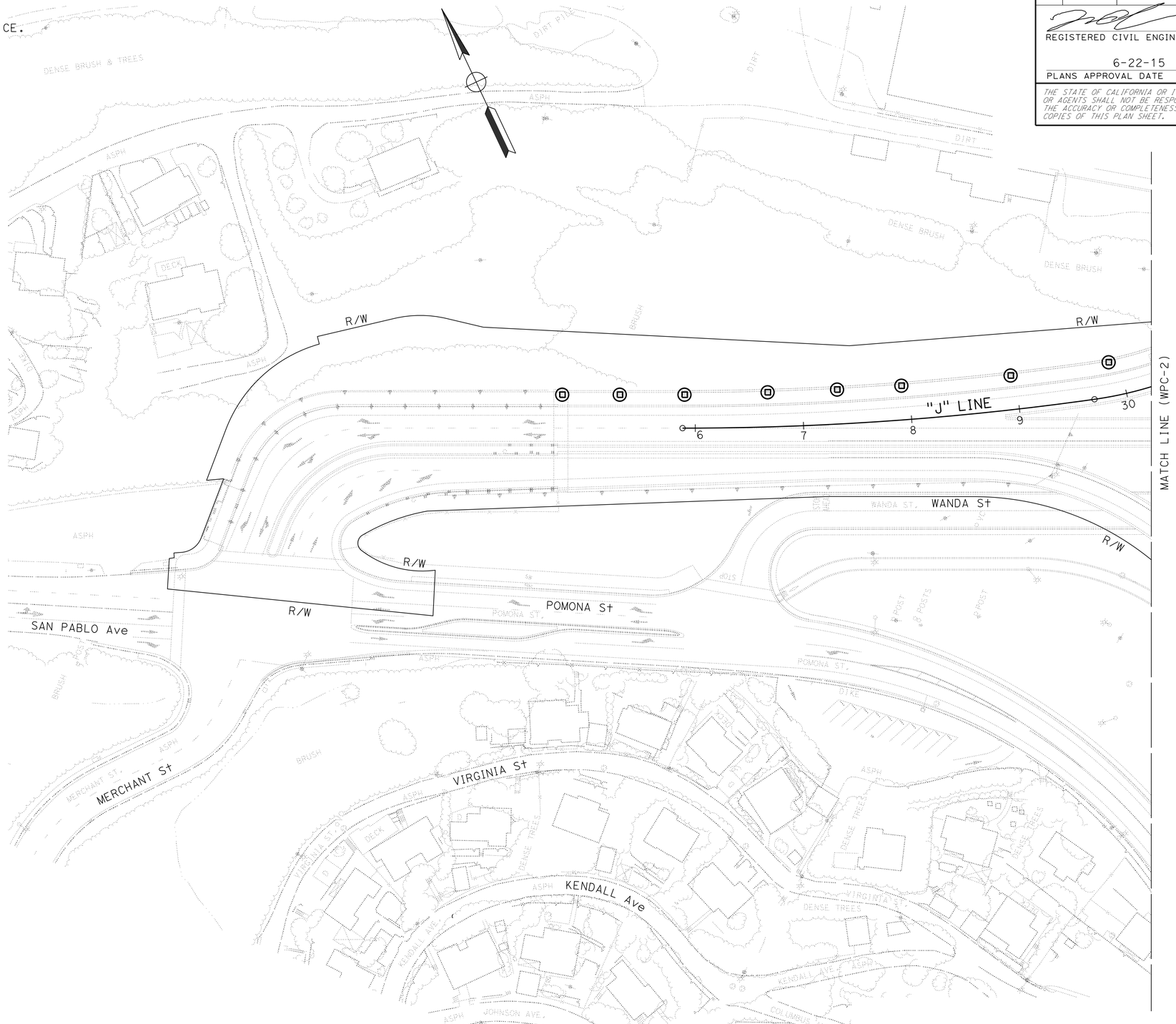

TEMPORARY WATER POLLUTION CONTROL PLAN

SCALE: 1" = 50'

APPROVED FOR TEMPORARY WATER POLLUTION CONTROL WORK ONLY

WPC-1

REVISED BY	NT
DATE REVISED	5/15/15
CALCULATED-DESIGNED BY	NGOCCHAU TRAN
CHECKED BY	JIANGFAN CHEN
FUNCTIONAL SUPERVISOR	KAMRAN NAKHJIRI

STATE OF CALIFORNIA - DEPARTMENT OF TRANSPORTATION

Caltrans® **WATER QUALITY**

LAST REVISION 05-15-15 | DATE PLOTTED => 03-JUL-2015 | TIME PLOTTED => 14:47

Dist	COUNTY	ROUTE	POST MILES TOTAL PROJECT	SHEET No.	TOTAL SHEETS
04	CC, Sol	80	13.4/14.1, 0.0/0.6	9	75

REGISTERED CIVIL ENGINEER 5/18/15 DATE

6-22-15
PLANS APPROVAL DATE

REGISTERED PROFESSIONAL ENGINEER Jiangfan Chen No. 77248 Exp. 6-30-15 CIVIL STATE OF CALIFORNIA

THE STATE OF CALIFORNIA OR ITS OFFICERS OR AGENTS SHALL NOT BE RESPONSIBLE FOR THE ACCURACY OR COMPLETENESS OF SCANNED COPIES OF THIS PLAN SHEET.

NOTE:

FOR ACCURATE RIGHT OF WAY DATA, CONTACT RIGHT OF WAY ENGINEERING AT THE DISTRICT OFFICE.

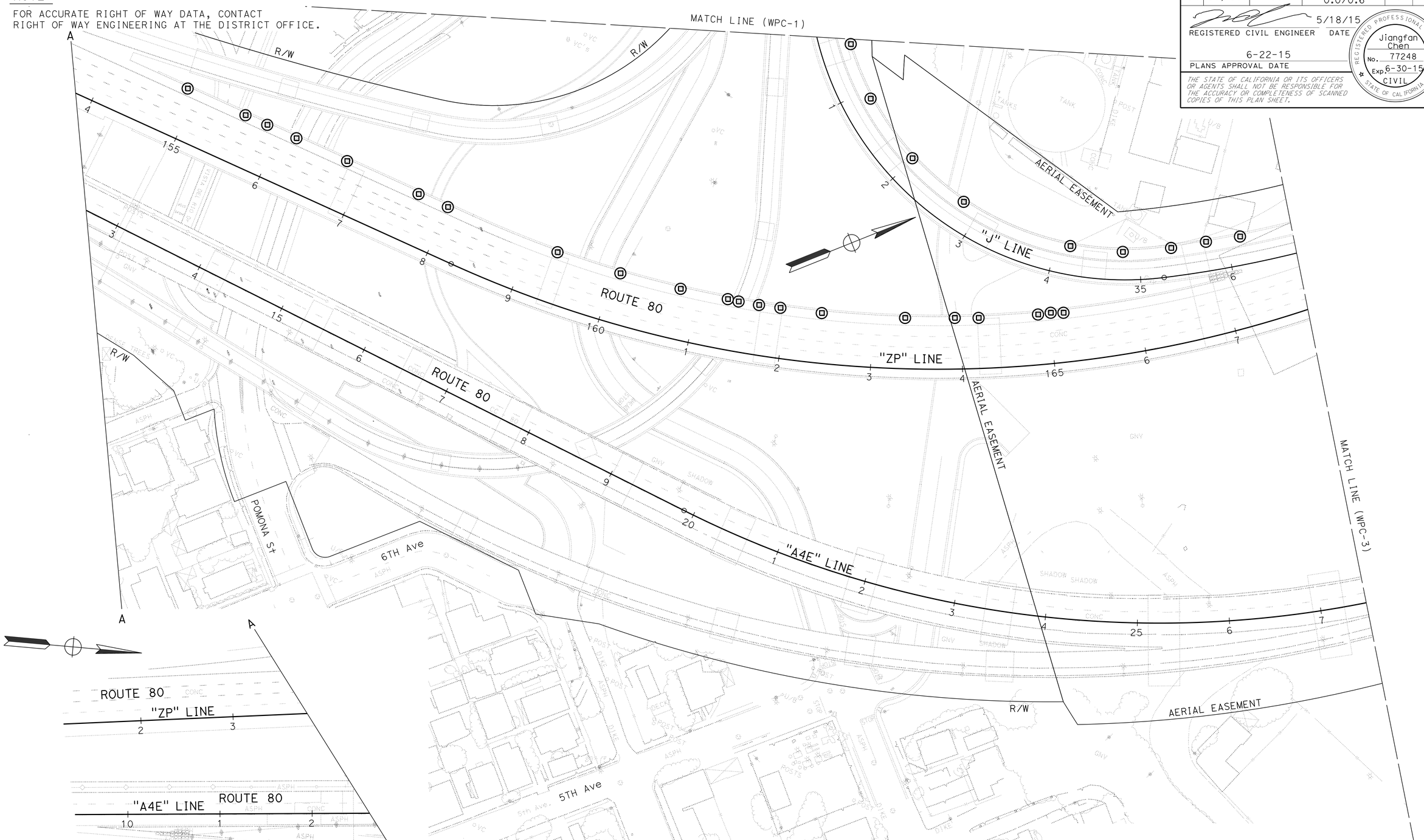

APPROVED FOR TEMPORARY WATER POLLUTION CONTROL WORK ONLY

TEMPORARY WATER POLLUTION CONTROL PLAN

SCALE: 1" = 50'

FOR NOTES, ABBREVIATIONS AND LEGEND, SEE SHEET WPC-1

WPC-2

REVISED BY	DATE REVISED
NT	5/15/15

CALCULATED-DESIGNED BY: NGOCCHAU TRAN
CHECKED BY: JIANGFAN CHEN

FUNCTIONAL SUPERVISOR: KAMRAN NAKHJIRI

STATE OF CALIFORNIA - DEPARTMENT OF TRANSPORTATION
Caltrans® WATER QUALITY

LAST REVISION 05-18-15 | DATE PLOTTED => 03-JUL-2015 | TIME PLOTTED => 14:47

Dist	COUNTY	ROUTE	POST MILES TOTAL PROJECT	SHEET No.	TOTAL SHEETS
04	CC, Sol	80	13.4/14.1, 0.0/0.6	10	75

REGISTERED CIVIL ENGINEER 5/18/15 DATE

6-22-15
PLANS APPROVAL DATE

REGISTERED PROFESSIONAL ENGINEER
Jiangfan Chen
No. 77248
Exp. 6-30-15
CIVIL
STATE OF CALIFORNIA

THE STATE OF CALIFORNIA OR ITS OFFICERS OR AGENTS SHALL NOT BE RESPONSIBLE FOR THE ACCURACY OR COMPLETENESS OF SCANNED COPIES OF THIS PLAN SHEET.

NOTE:

FOR ACCURATE RIGHT OF WAY DATA, CONTACT RIGHT OF WAY ENGINEERING AT THE DISTRICT OFFICE.

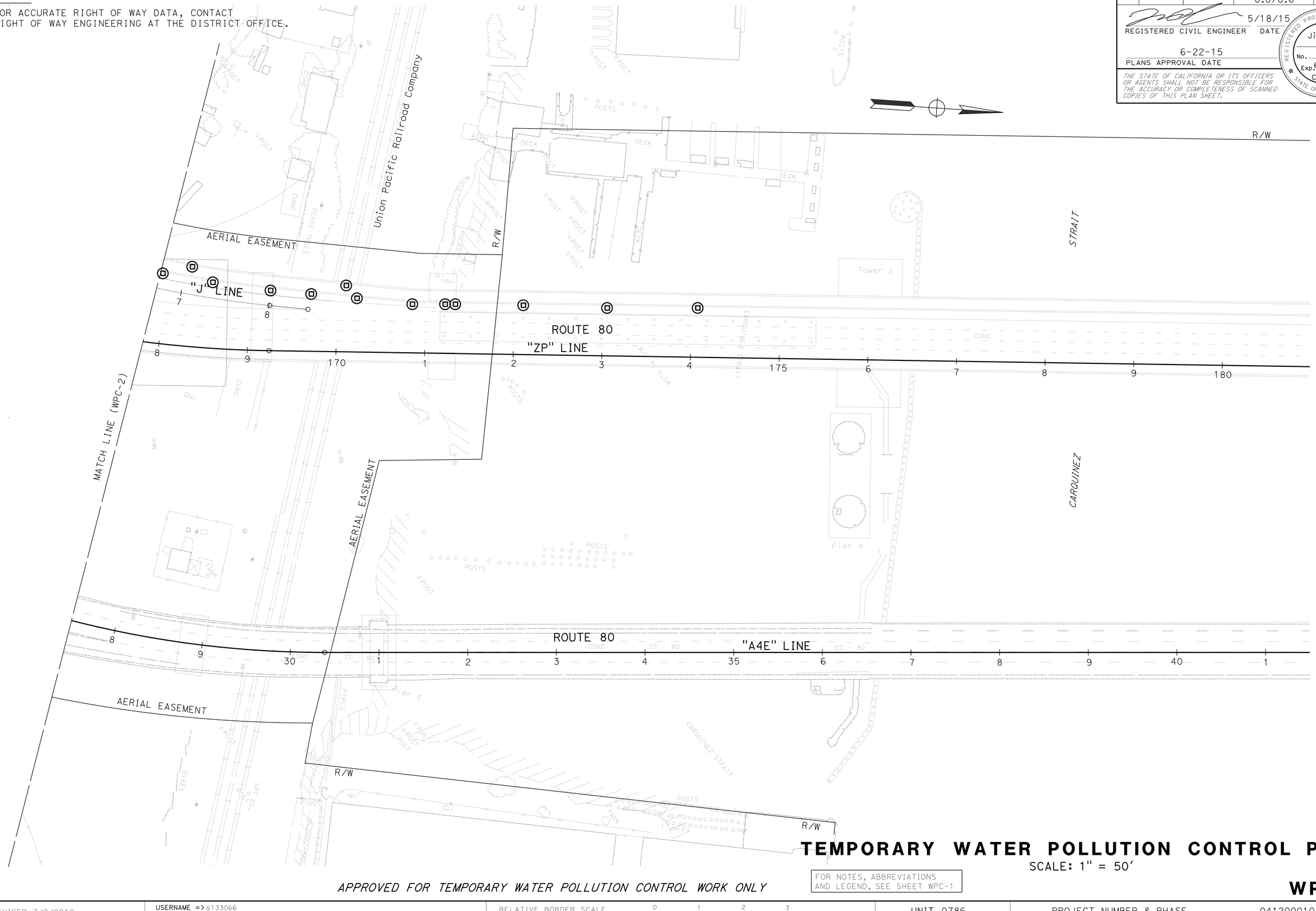

TEMPORARY WATER POLLUTION CONTROL PLAN

SCALE: 1" = 50'

FOR NOTES, ABBREVIATIONS AND LEGEND, SEE SHEET WPC-1

APPROVED FOR TEMPORARY WATER POLLUTION CONTROL WORK ONLY

WPC-3

STATE OF CALIFORNIA - DEPARTMENT OF TRANSPORTATION
Caltrans® **WATER QUALITY**

FUNCTIONAL SUPERVISOR: KAMRAN NAKHJIRI
CALCULATED-DESIGNED BY: NGOCCHAU TRAN
CHECKED BY: JIANGFAN CHEN
REVISED BY: NT
DATE REVISED: 5/15/15

LAST REVISION 05-18-15 | DATE PLOTTED => 03-JUL-2015 | TIME PLOTTED => 14:47

Dist	COUNTY	ROUTE	POST MILES TOTAL PROJECT	SHEET No.	TOTAL SHEETS
04	CC, Sol	80	13.4/14.1, 0.0/0.6	11	75

REGISTERED CIVIL ENGINEER 5/18/15 DATE

6-22-15
PLANS APPROVAL DATE

REGISTERED PROFESSIONAL ENGINEER
Jiangfan Chen
No. 77248
Exp. 6-30-15
CIVIL
STATE OF CALIFORNIA

THE STATE OF CALIFORNIA OR ITS OFFICERS OR AGENTS SHALL NOT BE RESPONSIBLE FOR THE ACCURACY OR COMPLETENESS OF SCANNED COPIES OF THIS PLAN SHEET.

NOTE:

FOR ACCURATE RIGHT OF WAY DATA, CONTACT
RIGHT OF WAY ENGINEERING AT THE DISTRICT OFFICE.

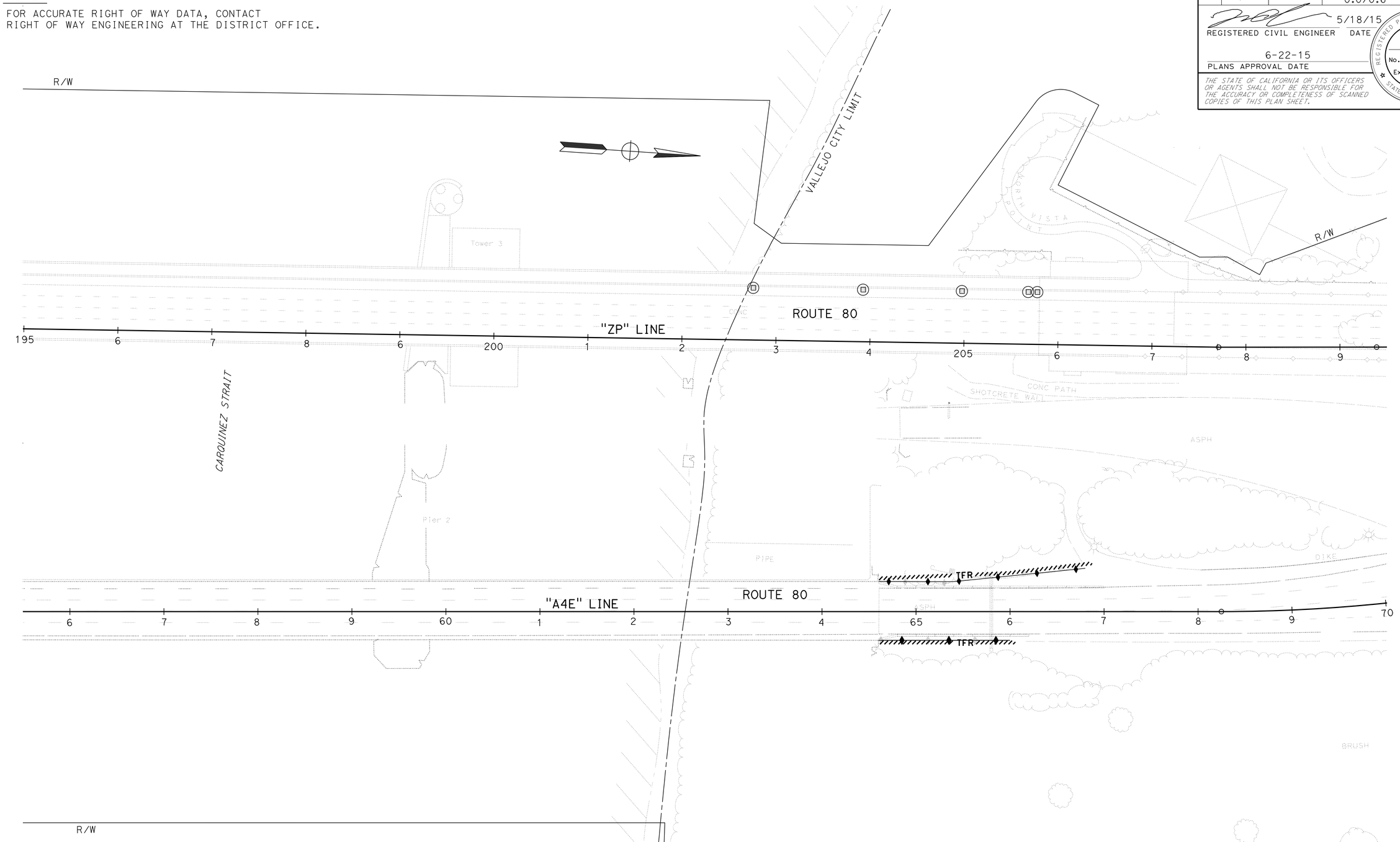

APPROVED FOR TEMPORARY WATER POLLUTION CONTROL WORK ONLY

TEMPORARY WATER POLLUTION CONTROL PLAN

SCALE: 1" = 50'

FOR NOTES, ABBREVIATIONS AND LEGEND, SEE SHEET WPC-1

WPC-4

NT	5/15/15
REVISED BY	DATE REVISED
NGOCCHAU TRAN	
JIANGFAN CHEN	
CALCULATED-DESIGNED BY	
CHECKED BY	
FUNCTIONAL SUPERVISOR	
KAMRAN NAKHJIRI	

STATE OF CALIFORNIA - DEPARTMENT OF TRANSPORTATION
Caltrans
WATER QUALITY

LAST REVISION 05-18-15
DATE PLOTTED => 03-JUL-2015
TIME PLOTTED => 14:47

Dist	COUNTY	ROUTE	POST MILES TOTAL PROJECT	SHEET No.	TOTAL SHEETS
04	CC, Sol	80	13.4/14.1, 0.0/0.6	12	75

REGISTERED CIVIL ENGINEER 3/17/15 DATE

6-22-15
PLANS APPROVAL DATE

REGISTERED PROFESSIONAL ENGINEER
Jiangfan Chen
No. 77248
Exp. 6-30-15
CIVIL
STATE OF CALIFORNIA

THE STATE OF CALIFORNIA OR ITS OFFICERS OR AGENTS SHALL NOT BE RESPONSIBLE FOR THE ACCURACY OR COMPLETENESS OF SCANNED COPIES OF THIS PLAN SHEET.

TEMPORARY WATER POLLUTION CONTROL QUANTITIES

ITEM	UNIT	Co - Rte - PM	QUANTITY
TEMPORARY DRAINAGE INLET PROTECTION	EA	CC, Sol - 80 - 13.4/14.1, 0.0/0.6	56
TEMPORARY FIBER ROLL	LF	Sol - 80 - 0.31/0.34	350

TEMPORARY WATER POLLUTION CONTROL QUANTITIES

WPCQ-1

STATE OF CALIFORNIA - DEPARTMENT OF TRANSPORTATION
Caltrans® **WATER QUALITY**

FUNCTIONAL SUPERVISOR: KAMRAN NAKHJIRI

CALCULATED-DESIGNED BY: NGOCCHAU TRAN
CHECKED BY: JIANGFAN CHEN

REVISED BY: NT
DATE REVISED: 2/12/15

LAST REVISION 03-20-15
DATE PLOTTED => 03-JUL-2015
TIME PLOTTED => 14:47

Dist	COUNTY	ROUTE	POST MILES TOTAL PROJECT	SHEET No.	TOTAL SHEETS
04	CC, Sol	80	13.4/14.1, 0.0/0.6	13	75

Jeri-Paul Fabian 4/3/15
REGISTERED CIVIL ENGINEER DATE

6-22-15
PLANS APPROVAL DATE

REGISTERED PROFESSIONAL ENGINEER Jeri-Paul F. Fabian No. 81174 Exp. 9-30-15 CIVIL STATE OF CALIFORNIA

THE STATE OF CALIFORNIA OR ITS OFFICERS OR AGENTS SHALL NOT BE RESPONSIBLE FOR THE ACCURACY OR COMPLETENESS OF SCANNED COPIES OF THIS PLAN SHEET.

STATIONARY MOUNTED CONSTRUCTION AREA SIGNS

SIGN LETTER	MUTCD CODE	MESSAGE	PANEL SIZE	NUMBER OF POST AND SIZE	No. OF SIGNS
A	W20-1	ROAD WORK AHEAD	48" x 48"	(ONE) 4" x 6"	2
B	W20-1	ROAD WORK AHEAD	60" x 60"	(TWO) 4" x 6"	2
C	G20-2	END ROAD WORK	36" x 18"	(ONE) 4" x 4"	2
D	G20-2	END ROAD WORK	48" x 24"	(ONE) 4" x 4"	2
E	C40(CA)	TRAFFIC FINES DOUBLED IN CONSTRUCTION ZONE	144" x 60"	(TWO) 6" x 8"	2
F	SPEC 1	SIDEWALK CLOSURE NOTICE (DATES - TIMES)	30" x 36"	(ONE) 4" x 4"	2
G	SPEC 2	SHUTTLE SERVICE TO VALLEJO CONTACT INFO	30" x 36"	(ONE) 4" x 4"	1
H	SPEC 3	SHUTTLE SERVICE TO CROCKETT CONTACT INFO	30" x 36"	(ONE) 4" x 4"	1
I	SPEC 4	CARQUINEZ BRIDGE SHUTTLE STOP	30" x 30"	(ONE) 4" x 4"	2

NOTES:

1. EXACT LOCATION AND POSITION OF CONSTRUCTION AREA SIGNS TO BE DETERMINED BY THE ENGINEER.
2. EXACT LOCATION AND MESSAGE OF PCMS TO BE DETERMINED BY THE ENGINEER.

LEGEND:

- CONSTRUCTION AREA SIGN DESIGNATION
- RAMP CLOSURE
- PEDESTRIAN AND BIKE SHUTTLE SERVICE STOP LOCATION

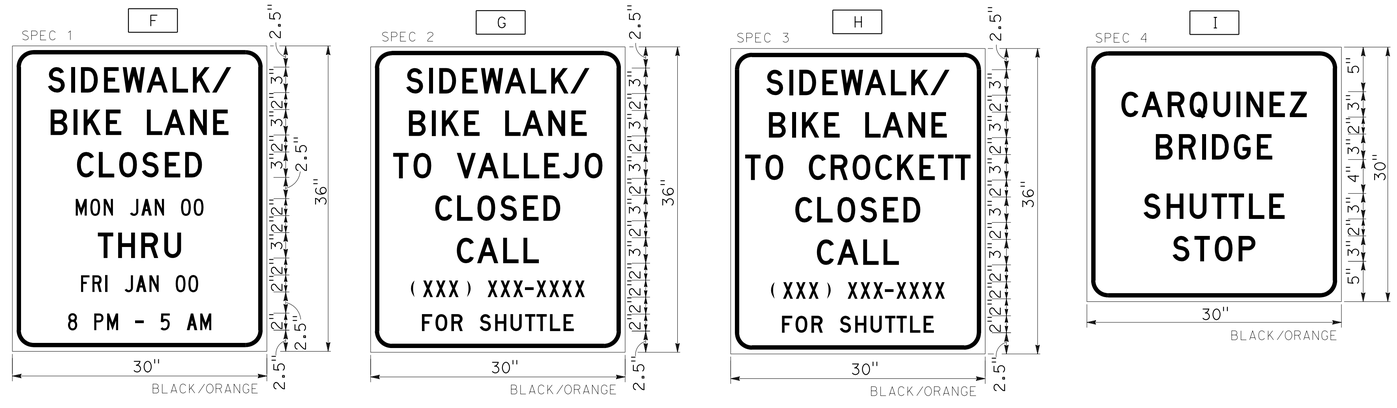

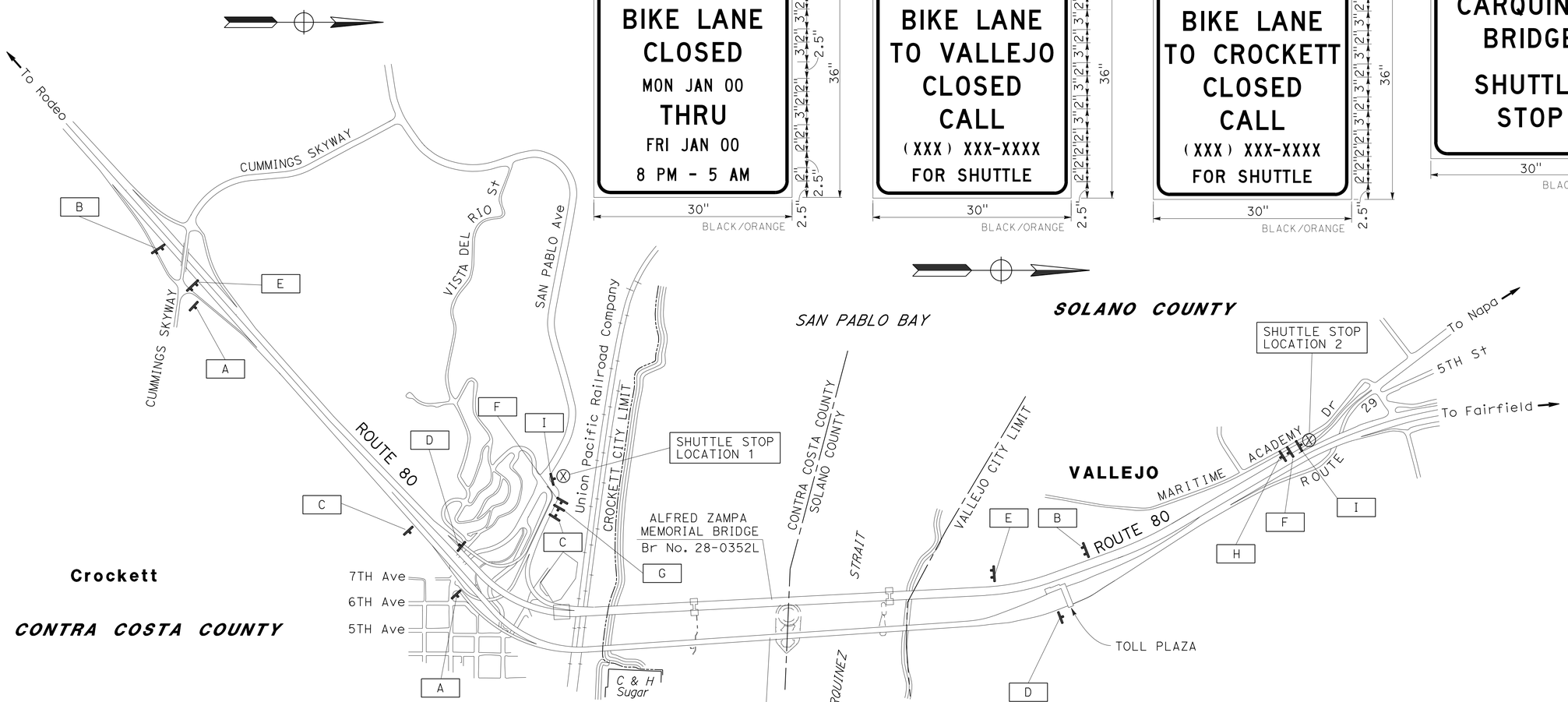

CONSTRUCTION AREA SIGNS

NO SCALE

APPROVED FOR CONSTRUCTION AREA SIGN WORK ONLY

CS-1

STATE OF CALIFORNIA - DEPARTMENT OF TRANSPORTATION
Caltrans TRAFFIC

FUNCTIONAL SUPERVISOR: LOURDES DAVID
CALCULATED-DESIGNED BY: JERI-PAUL FABIAN
CHECKED BY: CLAUDIA FANG
REVISED BY: JF
DATE REVISED: 2/25/15

LAST REVISION 06-17-15
DATE PLOTTED => 03-JUL-2015
TIME PLOTTED => 14:47

Dist	COUNTY	ROUTE	POST MILES TOTAL PROJECT	SHEET No.	TOTAL SHEETS
04	CC, Sol	80	13.4/14.1, 0.0/0.6	14	75

Jeri-Paul Fabian 4/3/15
REGISTERED CIVIL ENGINEER DATE

6-22-15
PLANS APPROVAL DATE

REGISTERED PROFESSIONAL ENGINEER Jeri-Paul F. Fabian No. 81174 Exp. 9-30-15 CIVIL STATE OF CALIFORNIA

THE STATE OF CALIFORNIA OR ITS OFFICERS OR AGENTS SHALL NOT BE RESPONSIBLE FOR THE ACCURACY OR COMPLETENESS OF SCANNED COPIES OF THIS PLAN SHEET.

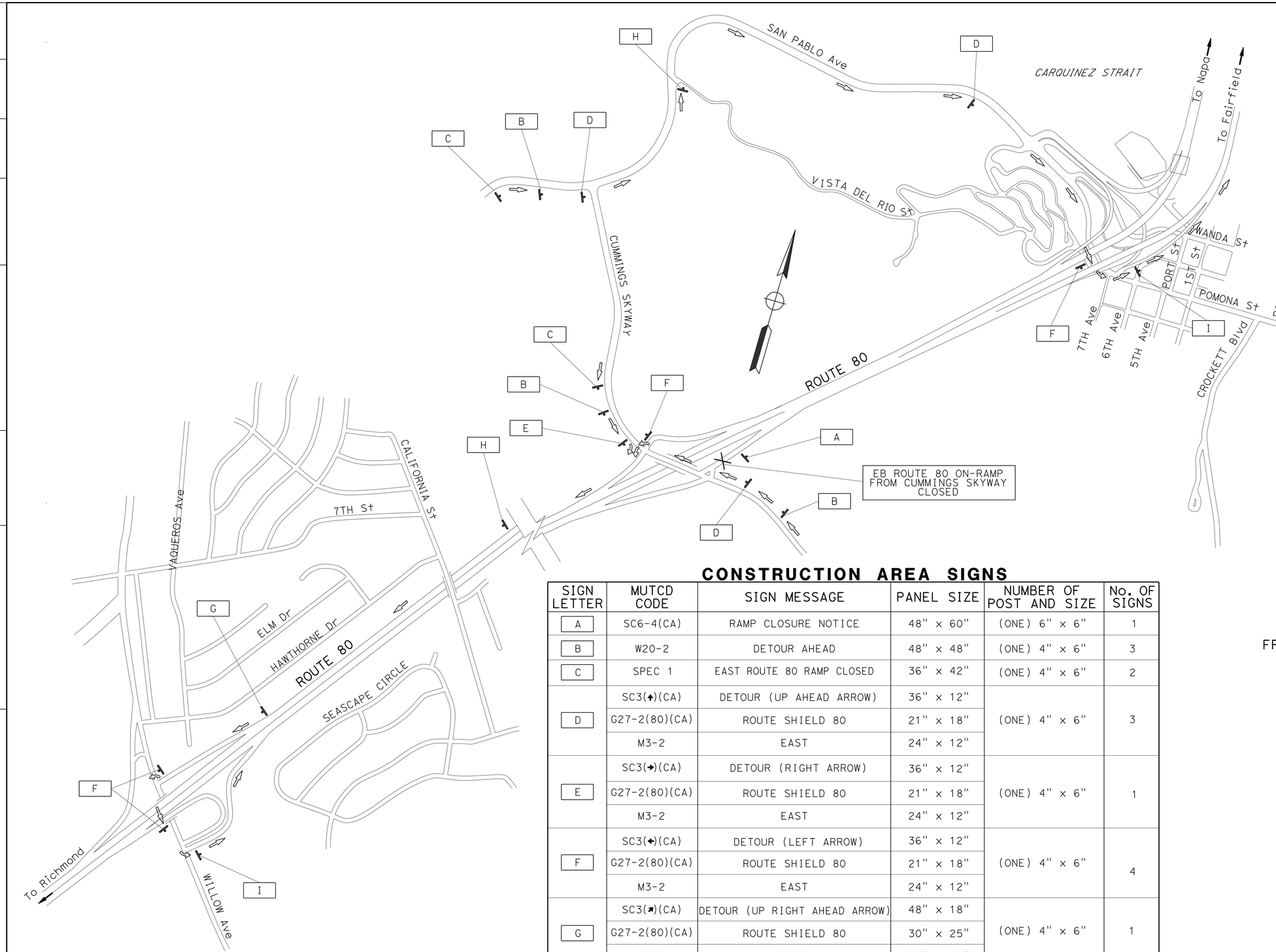

SPEC 1

C

5" D CAPS
BLACK/ORANGE

36" x 42"

CONSTRUCTION AREA SIGNS

SIGN LETTER	MUTCD CODE	SIGN MESSAGE	PANEL SIZE	NUMBER OF POST AND SIZE	No. OF SIGNS
A	SC6-4(CA)	RAMP CLOSURE NOTICE	48" x 60"	(ONE) 6" x 6"	1
B	W20-2	DETOUR AHEAD	48" x 48"	(ONE) 4" x 6"	3
C	SPEC 1	EAST ROUTE 80 RAMP CLOSED	36" x 42"	(ONE) 4" x 6"	2
D	SC3(↑)(CA)	DETOUR (UP AHEAD ARROW)	36" x 12"	(ONE) 4" x 6"	3
	G27-2(80)(CA)	ROUTE SHIELD 80	21" x 18"		
	M3-2	EAST	24" x 12"		
E	SC3(→)(CA)	DETOUR (RIGHT ARROW)	36" x 12"	(ONE) 4" x 6"	1
	G27-2(80)(CA)	ROUTE SHIELD 80	21" x 18"		
	M3-2	EAST	24" x 12"		
F	SC3(←)(CA)	DETOUR (LEFT ARROW)	36" x 12"	(ONE) 4" x 6"	4
	G27-2(80)(CA)	ROUTE SHIELD 80	21" x 18"		
	M3-2	EAST	24" x 12"		
G	SC3(↗)(CA)	DETOUR (UP RIGHT AHEAD ARROW)	48" x 18"	(ONE) 4" x 6"	1
	G27-2(80)(CA)	ROUTE SHIELD 80	30" x 25"		
	M3-2	EAST	30" x 15"		
H	SC3(↑)(CA)	DETOUR (UP AHEAD ARROW)	48" x 18"	(ONE) 4" x 4"	2
I	M4-8a	END DETOUR	24" x 18"	(ONE) 4" x 4"	2

APPROVED FOR CONSTRUCTION AREA SIGN WORK ONLY

FOR NOTES, ABBREVIATIONS AND LEGEND, SEE SHEET CS-1

DETOUR PLAN No. 1
EB ROUTE 80 ON-RAMP
FROM CUMMINGS SKYWAY CLOSURE

FROM NB SAN PABLO Ave
NB SAN PABLO Ave
CONTINUE ON EB POMONA St
ON-RAMP TO EB ROUTE 80

FROM WB CUMMINGS SKYWAY
WB CUMMINGS SKYWAY
ON-RAMP TO WB ROUTE 80
OFF-RAMP TO WILLOW Ave
SB WILLOW Ave
ON-RAMP TO EB ROUTE 80

FROM EB CUMMINGS SKYWAY
EB CUMMINGS SKYWAY
ON-RAMP TO WB ROUTE 80
OFF-RAMP TO WILLOW Ave
SB WILLOW Ave
ON-RAMP TO EB ROUTE 80

CONSTRUCTION AREA SIGNS
NO SCALE

CS-2

JERI-PAUL FABIAN	JF		
CLAUDIA FANG	2/25/15		
CALCULATED-DESIGNED BY	REVISED BY		
CHECKED BY	DATE REVISED		
FUNCTIONAL SUPERVISOR			
LOURDES DAVID			

STATE OF CALIFORNIA - DEPARTMENT OF TRANSPORTATION
Caltrans
TRAFFIC

LAST REVISION 03-26-15 | DATE PLOTTED => 03-JUL-2015 | TIME PLOTTED => 14:47

Dist	COUNTY	ROUTE	POST MILES TOTAL PROJECT	SHEET No.	TOTAL SHEETS
04	CC, Sol	80	13.4/14.1, 0.0/0.6	15	75

Jeri-Paul Fabian 4/3/15
REGISTERED CIVIL ENGINEER DATE

6-22-15
PLANS APPROVAL DATE

REGISTERED PROFESSIONAL ENGINEER Jeri-Paul F. Fabian No. 81174 Exp. 9-30-15 CIVIL STATE OF CALIFORNIA

THE STATE OF CALIFORNIA OR ITS OFFICERS OR AGENTS SHALL NOT BE RESPONSIBLE FOR THE ACCURACY OR COMPLETENESS OF SCANNED COPIES OF THIS PLAN SHEET.

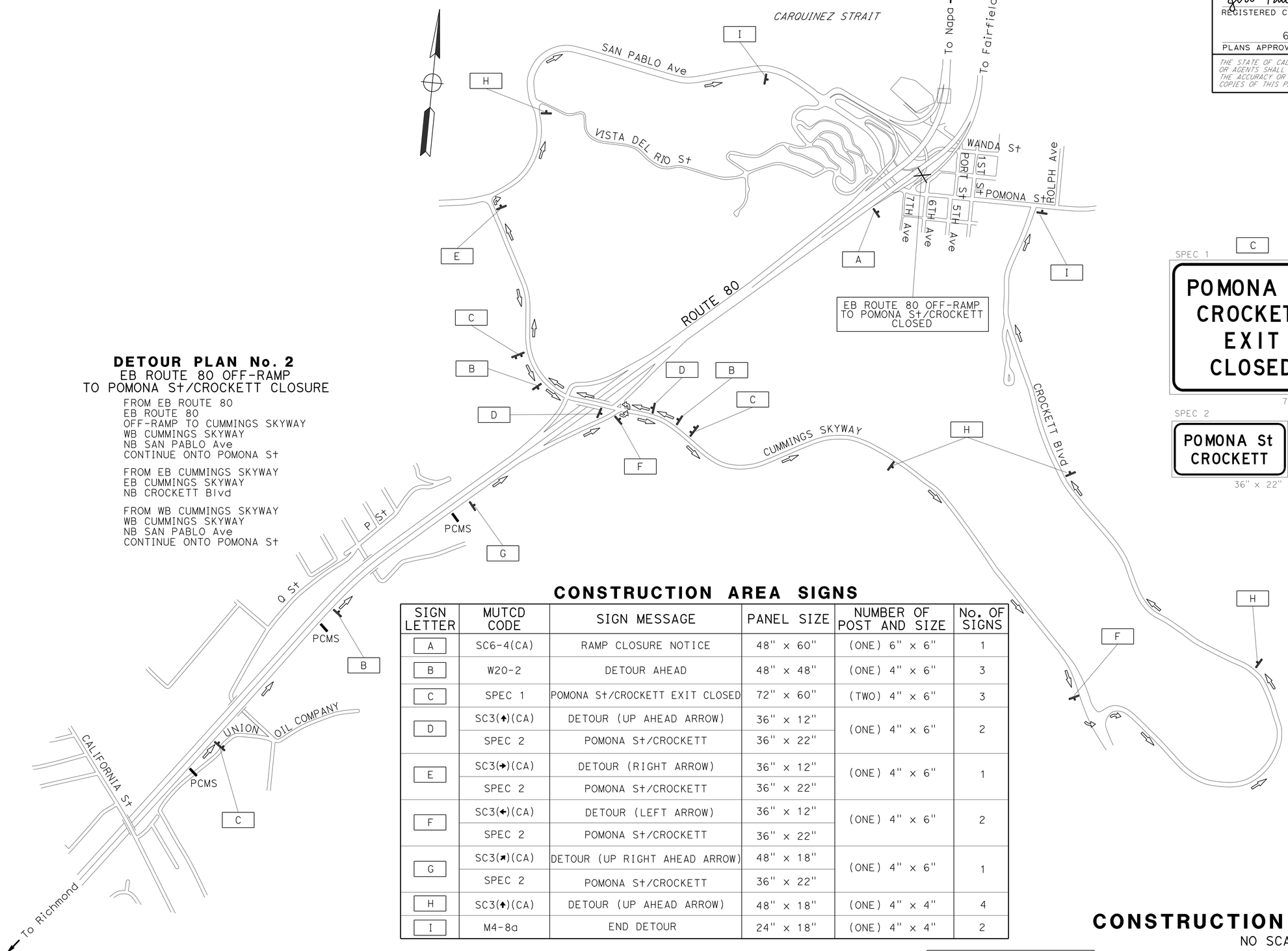

DETOUR PLAN No. 2
EB ROUTE 80 OFF-RAMP
TO POMONA St/CROCKETT CLOSURE

FROM EB ROUTE 80
EB ROUTE 80
OFF-RAMP TO CUMMINGS SKYWAY
WB CUMMINGS SKYWAY
NB SAN PABLO Ave
CONTINUE ONTO POMONA St

FROM EB CUMMINGS SKYWAY
EB CUMMINGS SKYWAY
NB CROCKETT Blvd

FROM WB CUMMINGS SKYWAY
WB CUMMINGS SKYWAY
NB SAN PABLO Ave
CONTINUE ONTO POMONA St

SPEC 1 — C

POMONA St
CROCKETT
EXIT
CLOSED

8" D CAPS BLACK/ORANGE

72" x 60"

SPEC 2

POMONA St
CROCKETT

5" C CAPS BLACK/ORANGE

36" x 22"

CONSTRUCTION AREA SIGNS

SIGN LETTER	MUTCD CODE	SIGN MESSAGE	PANEL SIZE	NUMBER OF POST AND SIZE	No. OF SIGNS
A	SC6-4(CA)	RAMP CLOSURE NOTICE	48" x 60"	(ONE) 6" x 6"	1
B	W20-2	DETOUR AHEAD	48" x 48"	(ONE) 4" x 6"	3
C	SPEC 1	POMONA St/CROCKETT EXIT CLOSED	72" x 60"	(TWO) 4" x 6"	3
D	SC3(↑)(CA)	DETOUR (UP AHEAD ARROW)	36" x 12"	(ONE) 4" x 6"	2
	SPEC 2	POMONA St/CROCKETT	36" x 22"		
E	SC3(→)(CA)	DETOUR (RIGHT ARROW)	36" x 12"	(ONE) 4" x 6"	1
	SPEC 2	POMONA St/CROCKETT	36" x 22"		
F	SC3(←)(CA)	DETOUR (LEFT ARROW)	36" x 12"	(ONE) 4" x 6"	2
	SPEC 2	POMONA St/CROCKETT	36" x 22"		
G	SC3(↗)(CA)	DETOUR (UP RIGHT AHEAD ARROW)	48" x 18"	(ONE) 4" x 6"	1
	SPEC 2	POMONA St/CROCKETT	36" x 22"		
H	SC3(↑)(CA)	DETOUR (UP AHEAD ARROW)	48" x 18"	(ONE) 4" x 4"	4
I	M4-8a	END DETOUR	24" x 18"	(ONE) 4" x 4"	2

APPROVED FOR CONSTRUCTION AREA SIGN WORK ONLY

FOR NOTES, ABBREVIATIONS AND LEGEND, SEE SHEET CS-1

CONSTRUCTION AREA SIGNS
NO SCALE

CS-3

STATE OF CALIFORNIA - DEPARTMENT OF TRANSPORTATION
Caltrans® TRAFFIC

FUNCTIONAL SUPERVISOR: LOURDES DAVID
CALCULATED-DESIGNED BY: JERI-PAUL FABIAN
CHECKED BY: CLAUDIA FANG
REVISED BY: JF
DATE REVISED: 2/25/15

LAST REVISION 04-02-15 | DATE PLOTTED => 03-JUL-2015 | TIME PLOTTED => 14:47

Dist	COUNTY	ROUTE	POST MILES TOTAL PROJECT	SHEET No.	TOTAL SHEETS
04	CC, Sol	80	13.4/14.1, 0.0/0.6	16	75

Jeri-Paul Fabian 4/3/15
REGISTERED CIVIL ENGINEER DATE

6-22-15
PLANS APPROVAL DATE

REGISTERED PROFESSIONAL ENGINEER
Jeri-Paul F. Fabian
No. 81174
Exp. 9-30-15
CIVIL
STATE OF CALIFORNIA

THE STATE OF CALIFORNIA OR ITS OFFICERS OR AGENTS SHALL NOT BE RESPONSIBLE FOR THE ACCURACY OR COMPLETENESS OF SCANNED COPIES OF THIS PLAN SHEET.

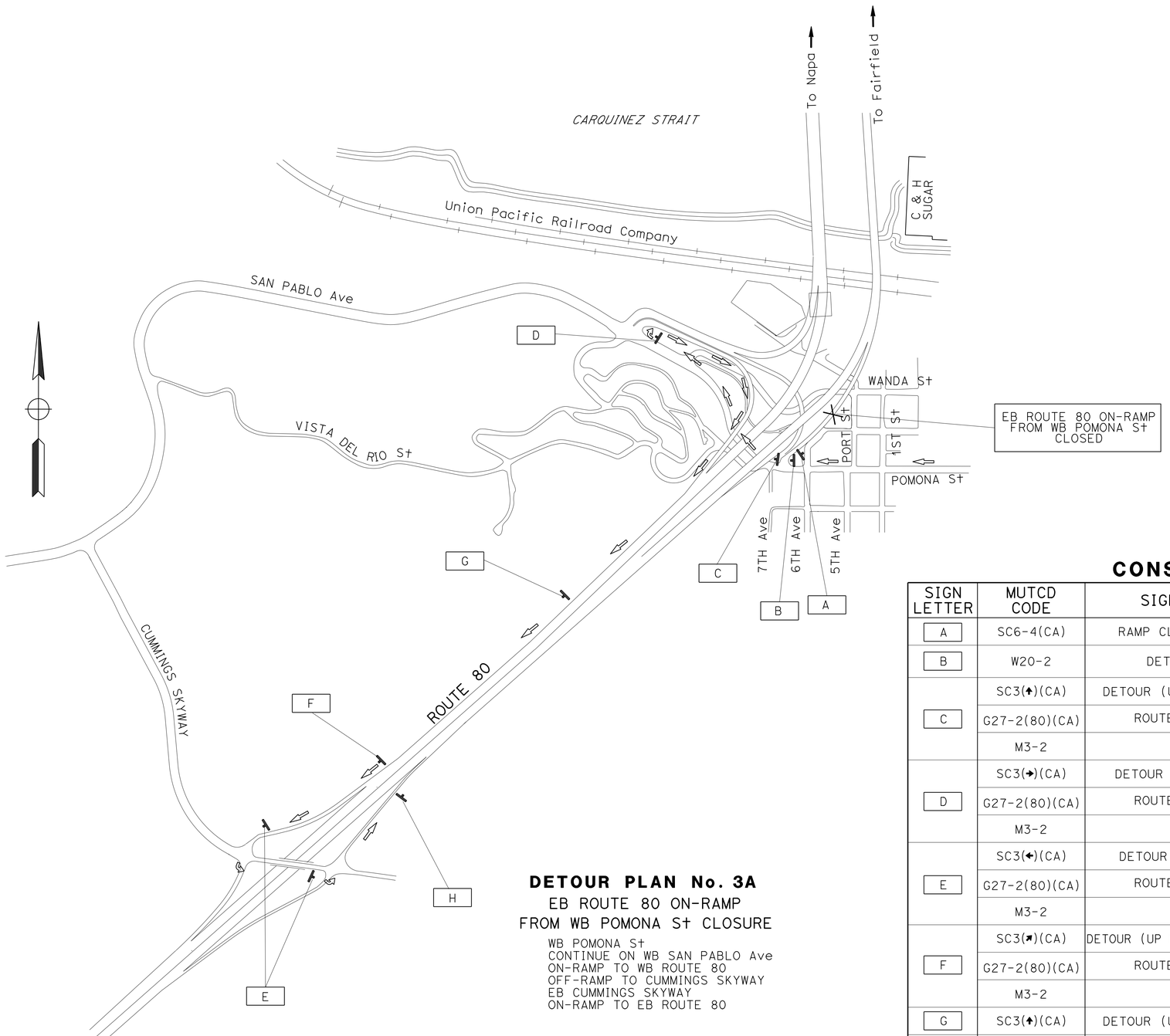

DETOUR PLAN No. 3A

EB ROUTE 80 ON-RAMP
FROM WB POMONA St CLOSURE

WB POMONA St
CONTINUE ON WB SAN PABLO Ave
ON-RAMP TO WB ROUTE 80
OFF-RAMP TO CUMMINGS SKYWAY
EB CUMMINGS SKYWAY
ON-RAMP TO EB ROUTE 80

CONSTRUCTION AREA SIGNS

SIGN LETTER	MUTCD CODE	SIGN MESSAGE	PANEL SIZE	NUMBER OF POST AND SIZE	No. OF SIGNS
A	SC6-4(CA)	RAMP CLOSURE NOTICE	48" × 60"	(ONE) 6" × 6"	1
B	W20-2	DETOUR AHEAD	36" × 36"	(ONE) 4" × 6"	1
C	SC3(↑)(CA)	DETOUR (UP AHEAD ARROW)	36" × 12"	(ONE) 4" × 6"	1
	G27-2(80)(CA)	ROUTE SHIELD 80	21" × 18"		
	M3-2	EAST	24" × 12"		
D	SC3(→)(CA)	DETOUR (RIGHT ARROW)	36" × 12"	(ONE) 4" × 6"	1
	G27-2(80)(CA)	ROUTE SHIELD 80	21" × 18"		
	M3-2	EAST	24" × 12"		
E	SC3(←)(CA)	DETOUR (LEFT ARROW)	36" × 12"	(ONE) 4" × 6"	2
	G27-2(80)(CA)	ROUTE SHIELD 80	21" × 18"		
	M3-2	EAST	24" × 12"		
F	SC3(↗)(CA)	DETOUR (UP RIGHT AHEAD ARROW)	48" × 18"	(ONE) 4" × 6"	1
	G27-2(80)(CA)	ROUTE SHIELD 80	30" × 25"		
	M3-2	EAST	30" × 15"		
G	SC3(↑)(CA)	DETOUR (UP AHEAD ARROW)	48" × 18"	(ONE) 4" × 4"	1
H	M4-8a	END DETOUR	24" × 18"	(ONE) 4" × 4"	1

APPROVED FOR CONSTRUCTION AREA SIGN WORK ONLY

FOR NOTES, ABBREVIATIONS AND LEGEND, SEE SHEET CS-1

CONSTRUCTION AREA SIGNS

NO SCALE

CS-4

STATE OF CALIFORNIA - DEPARTMENT OF TRANSPORTATION	Caltrans
TRAFFIC	
FUNCTIONAL SUPERVISOR	LOURDES DAVID
CALCULATED-DESIGNED BY	JERI-PAUL FABIAN
CHECKED BY	CLAUDIA FANG
REVISED BY	JF
DATE REVISED	2/25/15

LAST REVISION 04-15-15 | DATE PLOTTED => 03-JUL-2015 | TIME PLOTTED => 14:47

Dist	COUNTY	ROUTE	POST MILES TOTAL PROJECT	SHEET No.	TOTAL SHEETS
04	CC, Sol	80	13.4/14.1, 0.0/0.6	17	75

Jeri-Paul Fabian 4/3/15
REGISTERED CIVIL ENGINEER DATE

6-22-15
PLANS APPROVAL DATE

REGISTERED PROFESSIONAL ENGINEER Jeri-Paul F. Fabian No. 81174 Exp. 9-30-15 CIVIL STATE OF CALIFORNIA

THE STATE OF CALIFORNIA OR ITS OFFICERS OR AGENTS SHALL NOT BE RESPONSIBLE FOR THE ACCURACY OR COMPLETENESS OF SCANNED COPIES OF THIS PLAN SHEET.

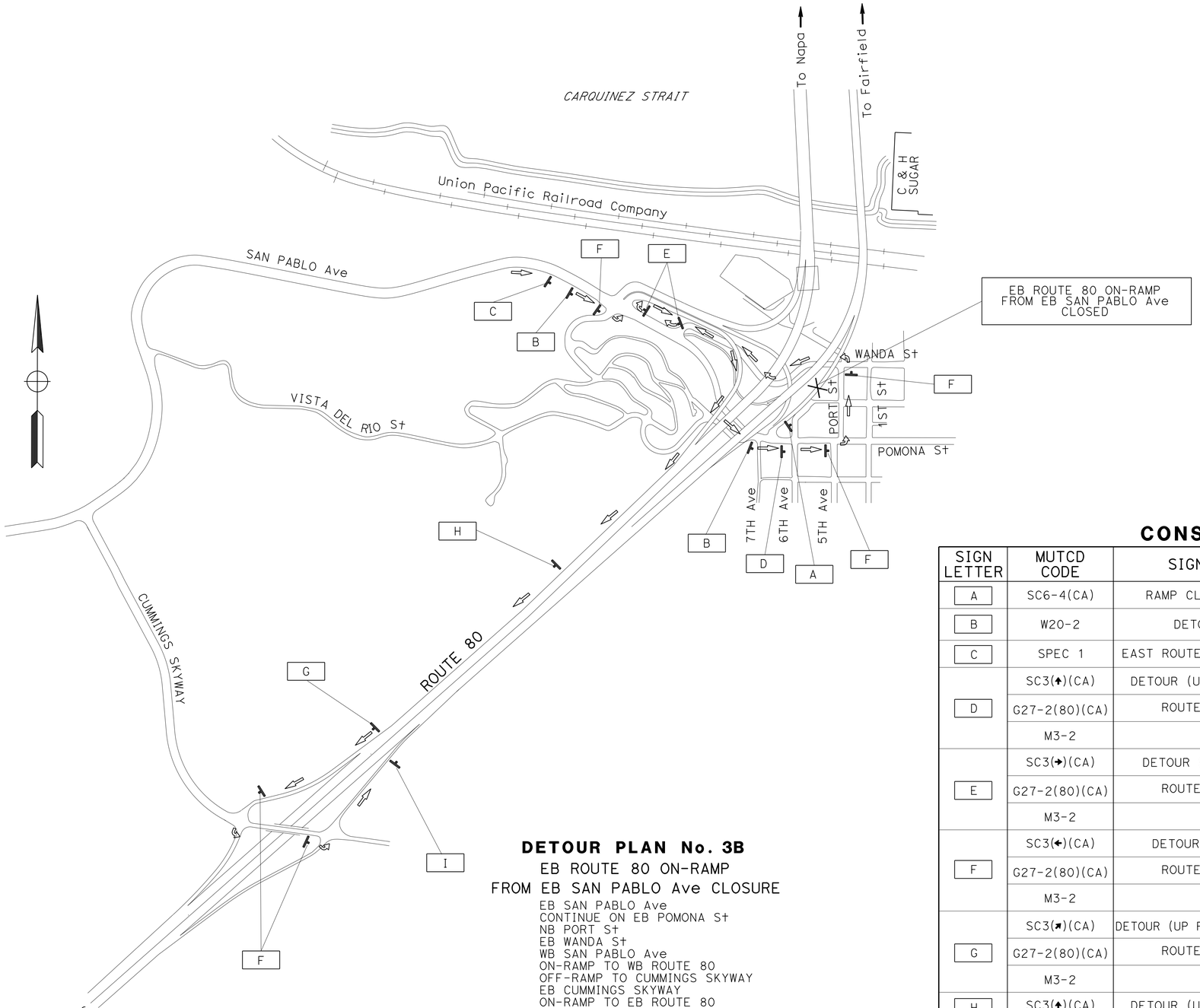

DETOUR PLAN No. 3B

EB ROUTE 80 ON-RAMP
FROM EB SAN PABLO Ave CLOSURE

EB SAN PABLO Ave
CONTINUE ON EB POMONA St
NB PORT St
EB WANDA St
WB SAN PABLO Ave
ON-RAMP TO WB ROUTE 80
OFF-RAMP TO CUMMINGS SKYWAY
EB CUMMINGS SKYWAY
ON-RAMP TO EB ROUTE 80

SPEC 1 C

5" D CAPS
BLACK/ORANGE

36" x 42"

CONSTRUCTION AREA SIGNS

SIGN LETTER	MUTCD CODE	SIGN MESSAGE	PANEL SIZE	NUMBER OF POST AND SIZE	No. OF SIGNS
A	SC6-4(CA)	RAMP CLOSURE NOTICE	48" x 60"	(ONE) 6" x 6"	1
B	W20-2	DETOUR AHEAD	36" x 36"	(ONE) 4" x 6"	2
C	SPEC 1	EAST ROUTE 80 RAMP CLOSED	36" x 42"	(ONE) 4" x 6"	1
D	SC3(↑)(CA)	DETOUR (UP AHEAD ARROW)	36" x 12"	(ONE) 4" x 6"	1
	G27-2(80)(CA)	ROUTE SHIELD 80	21" x 18"		
	M3-2	EAST	24" x 12"		
E	SC3(→)(CA)	DETOUR (RIGHT ARROW)	36" x 12"	(ONE) 4" x 6"	2
	G27-2(80)(CA)	ROUTE SHIELD 80	21" x 18"		
	M3-2	EAST	24" x 12"		
F	SC3(←)(CA)	DETOUR (LEFT ARROW)	36" x 12"	(ONE) 4" x 6"	5
	G27-2(80)(CA)	ROUTE SHIELD 80	21" x 18"		
	M3-2	EAST	24" x 12"		
G	SC3(↗)(CA)	DETOUR (UP RIGHT AHEAD ARROW)	48" x 18"	(ONE) 4" x 6"	1
	G27-2(80)(CA)	ROUTE SHIELD 80	30" x 25"		
	M3-2	EAST	30" x 15"		
H	SC3(↑)(CA)	DETOUR (UP AHEAD ARROW)	48" x 18"	(ONE) 4" x 4"	1
I	M4-8a	END DETOUR	24" x 18"	(ONE) 4" x 4"	1

APPROVED FOR CONSTRUCTION AREA SIGN WORK ONLY

FOR NOTES, ABBREVIATIONS AND LEGEND, SEE SHEET CS-1

CONSTRUCTION AREA SIGNS

NO SCALE

CS-5

STATE OF CALIFORNIA - DEPARTMENT OF TRANSPORTATION
Caltrans
TRAFFIC

FUNCTIONAL SUPERVISOR: LOURDES DAVID
CALCULATED-DESIGNED BY: JERI-PAUL FABIAN
CHECKED BY: CLAUDIA FANG
REVISED BY: JF
DATE REVISED: 2/25/15

LAST REVISION 04-15-15
DATE PLOTTED => 03-JUL-2015
TIME PLOTTED => 14:47

Dist	COUNTY	ROUTE	POST MILES TOTAL PROJECT	SHEET No.	TOTAL SHEETS
04	CC, Sol	80	13.4/14.1, 0.0/0.6	18	75

Peter Aguilera 3/17/15
REGISTERED CIVIL ENGINEER DATE

6-22-15
PLANS APPROVAL DATE

REGISTERED PROFESSIONAL ENGINEER Peter Aguilera No. 55287 Exp. 12-31-16 CIVIL STATE OF CALIFORNIA

THE STATE OF CALIFORNIA OR ITS OFFICERS OR AGENTS SHALL NOT BE RESPONSIBLE FOR THE ACCURACY OR COMPLETENESS OF SCANNED COPIES OF THIS PLAN SHEET.

NOTE:

FOR ACCURATE RIGHT OF WAY DATA, CONTACT RIGHT OF WAY ENGINEERING AT THE DISTRICT OFFICE.

NOTE:

1. ALL LANES 12' WIDE UNLESS OTHERWISE NOTED.

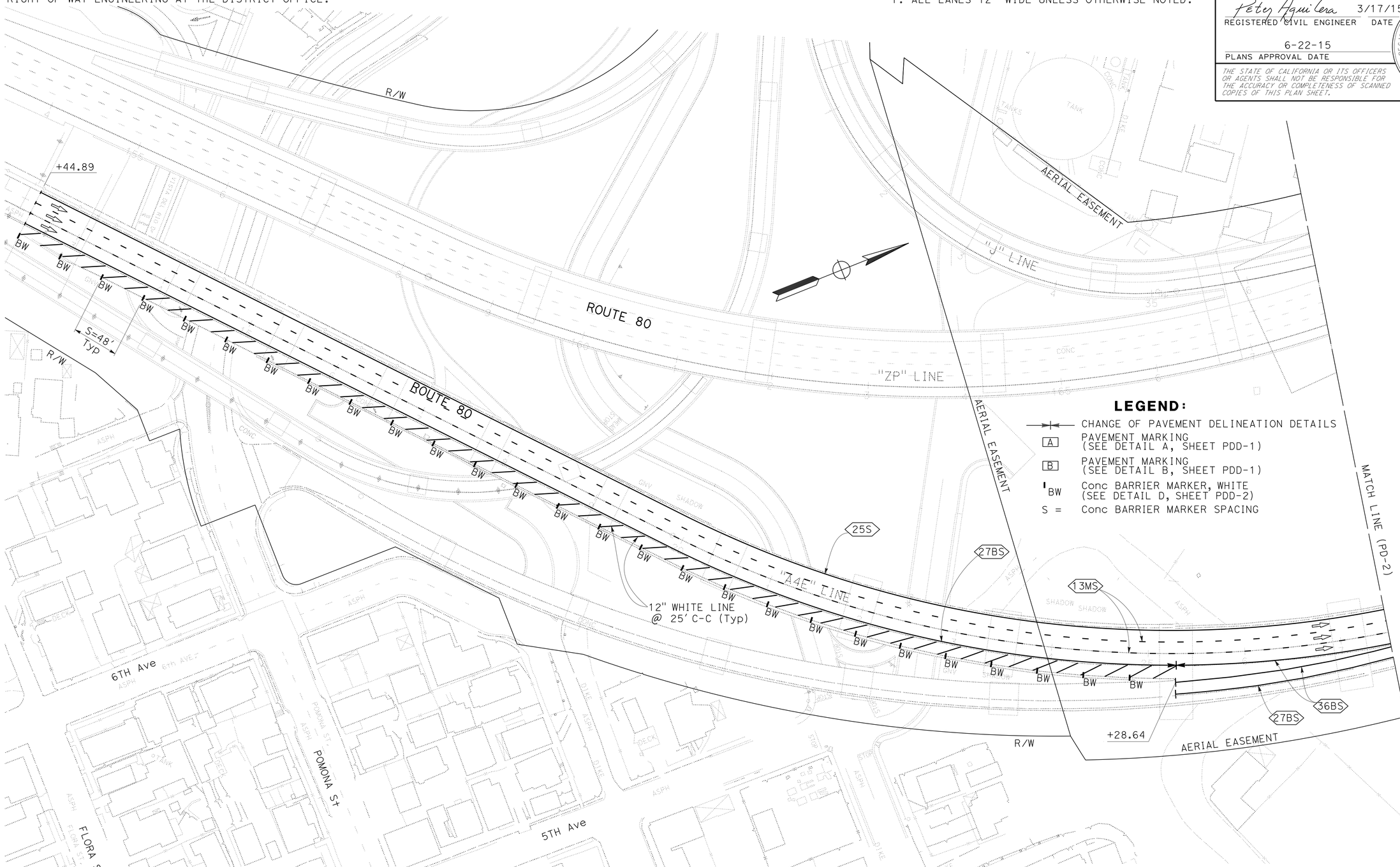

LEGEND:

- CHANGE OF PAVEMENT DELINEATION DETAILS
- [A] PAVEMENT MARKING (SEE DETAIL A, SHEET PDD-1)
- [B] PAVEMENT MARKING (SEE DETAIL B, SHEET PDD-1)
- BW Conc BARRIER MARKER, WHITE (SEE DETAIL D, SHEET PDD-2)
- S = Conc BARRIER MARKER SPACING

PAVEMENT DELINEATION PLAN
(CARQUINEZ BRIDGE)

SCALE: 1" = 50'

APPROVED FOR PAVEMENT DELINEATION WORK ONLY

PD-1

STATE OF CALIFORNIA - DEPARTMENT OF TRANSPORTATION
Caltrans
DESIGN

FUNCTIONAL SUPERVISOR: ARLISSA PANG
CALCULATED-DESIGNED BY: PETER AGUILERA
CHECKED BY: VAN HEW
REVISED BY: PA
DATE REVISED: 2/25/15

LAST REVISION: 05-12-15
DATE PLOTTED => 03-JUL-2015
TIME PLOTTED => 14:47

Dist	COUNTY	ROUTE	POST MILES TOTAL PROJECT	SHEET No.	TOTAL SHEETS
04	CC, Sol	80	13.4/14.1, 0.0/0.6	19	75

Peter Aguilera 3/17/15
REGISTERED CIVIL ENGINEER DATE

6-22-15
PLANS APPROVAL DATE

REGISTERED PROFESSIONAL ENGINEER Peter Aguilera No. 55287 Exp. 12-31-16 CIVIL STATE OF CALIFORNIA

THE STATE OF CALIFORNIA OR ITS OFFICERS OR AGENTS SHALL NOT BE RESPONSIBLE FOR THE ACCURACY OR COMPLETENESS OF SCANNED COPIES OF THIS PLAN SHEET.

NOTE:

FOR ACCURATE RIGHT OF WAY DATA, CONTACT RIGHT OF WAY ENGINEERING AT THE DISTRICT OFFICE.

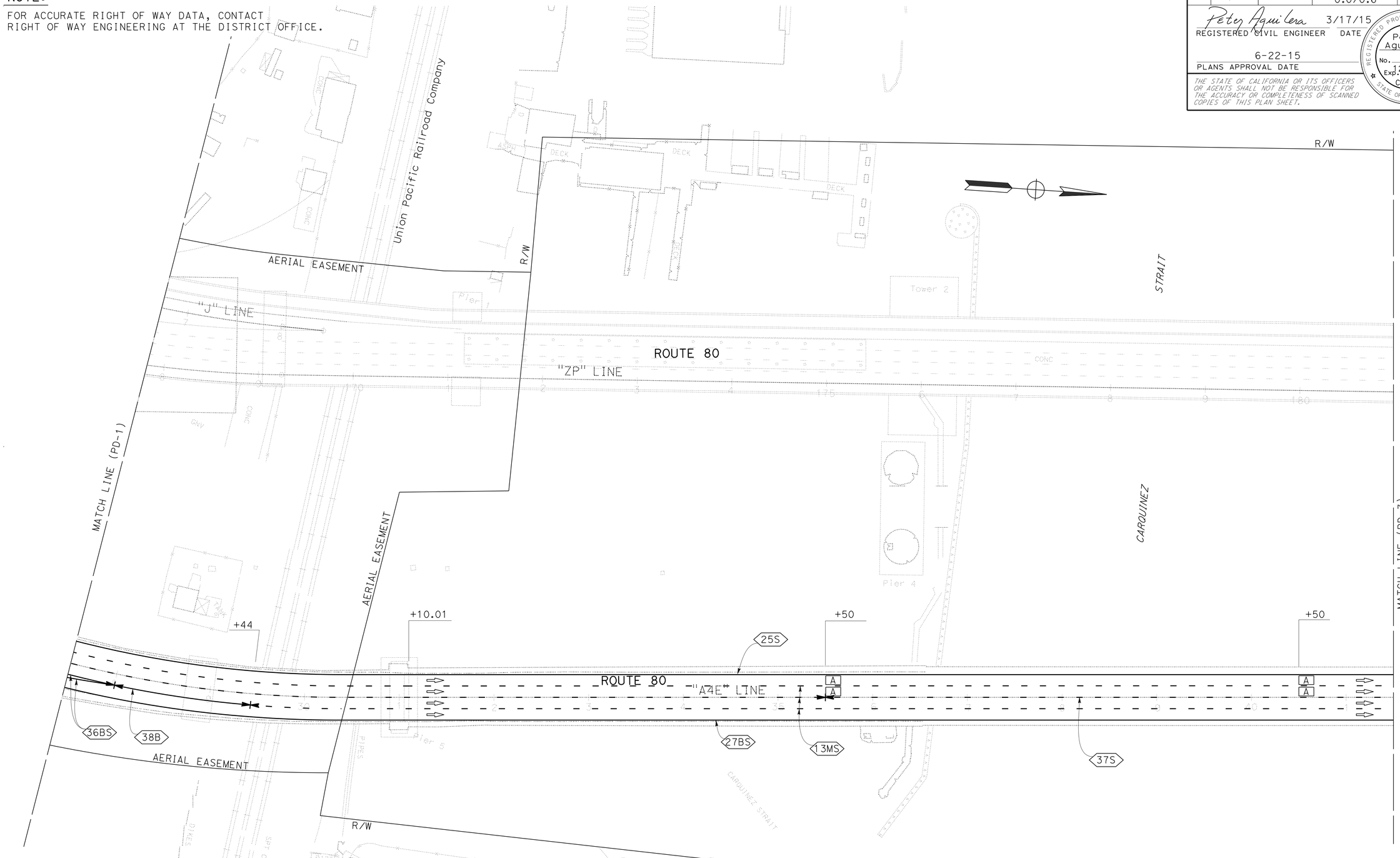

PAVEMENT DELINEATION PLAN
(CARQUINEZ BRIDGE)

SCALE: 1" = 50'

FOR NOTES, ABBREVIATIONS AND LEGEND, SEE SHEET PD-1

APPROVED FOR PAVEMENT DELINEATION WORK ONLY

PD-2

STATE OF CALIFORNIA - DEPARTMENT OF TRANSPORTATION
Caltrans® DESIGN

FUNCTIONAL SUPERVISOR: ARLISSA PANG
CALCULATED-DESIGNED BY: PETER AGUILERA
CHECKED BY: VAN HEW
REVISED BY: PA
DATE REVISED: 2/25/15

LAST REVISION 04-21-15
DATE PLOTTED => 03-JUL-2015
TIME PLOTTED => 14:47

Dist	COUNTY	ROUTE	POST MILES TOTAL PROJECT	SHEET No.	TOTAL SHEETS
04	CC, Sol	80	13.4/14.1, 0.0/0.6	20	75

Peter Aguilera 3/17/15
REGISTERED CIVIL ENGINEER DATE

6-22-15
PLANS APPROVAL DATE

REGISTERED PROFESSIONAL ENGINEER
Peter Aguilera
No. 55287
Exp. 12-31-16
CIVIL
STATE OF CALIFORNIA

THE STATE OF CALIFORNIA OR ITS OFFICERS OR AGENTS SHALL NOT BE RESPONSIBLE FOR THE ACCURACY OR COMPLETENESS OF SCANNED COPIES OF THIS PLAN SHEET.

NOTE:

FOR ACCURATE RIGHT OF WAY DATA, CONTACT RIGHT OF WAY ENGINEERING AT THE DISTRICT OFFICE.

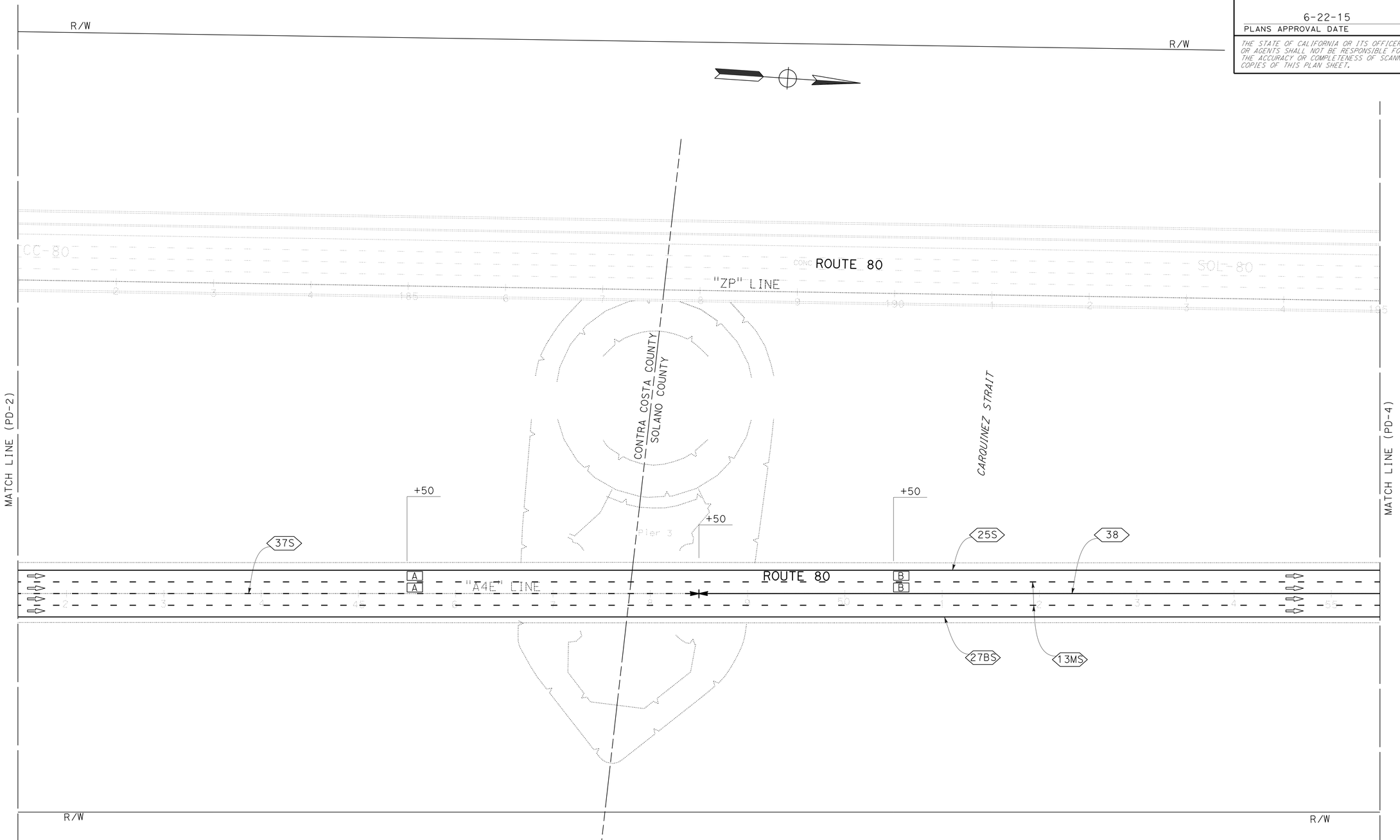

PAVEMENT DELINEATION PLAN
(CARQUINEZ BRIDGE)
SCALE: 1" = 50'

APPROVED FOR PAVEMENT DELINEATION WORK ONLY

FOR NOTES, ABBREVIATIONS AND LEGEND, SEE SHEET PD-1

PD-3

REVISED BY	PA
DATE REVISED	2/25/15
CALCULATED-DESIGNED BY	PETER AGUILERA
CHECKED BY	VAN HEW
FUNCTIONAL SUPERVISOR	ARLISSA PANG

STATE OF CALIFORNIA - DEPARTMENT OF TRANSPORTATION
Caltrans
DESIGN

LAST REVISION 02-26-15 | DATE PLOTTED => 03-JUL-2015 | TIME PLOTTED => 14:47

Dist	COUNTY	ROUTE	POST MILES TOTAL PROJECT	SHEET No.	TOTAL SHEETS
04	CC, Sol	80	13.4/14.1, 0.0/0.6	21	75

Peter Aguilera 3/17/15
REGISTERED CIVIL ENGINEER DATE

6-22-15
PLANS APPROVAL DATE

REGISTERED PROFESSIONAL ENGINEER
Peter Aguilera
No. 55287
Exp. 12-31-16
CIVIL
STATE OF CALIFORNIA

THE STATE OF CALIFORNIA OR ITS OFFICERS OR AGENTS SHALL NOT BE RESPONSIBLE FOR THE ACCURACY OR COMPLETENESS OF SCANNED COPIES OF THIS PLAN SHEET.

NOTE:

FOR ACCURATE RIGHT OF WAY DATA, CONTACT RIGHT OF WAY ENGINEERING AT THE DISTRICT OFFICE.

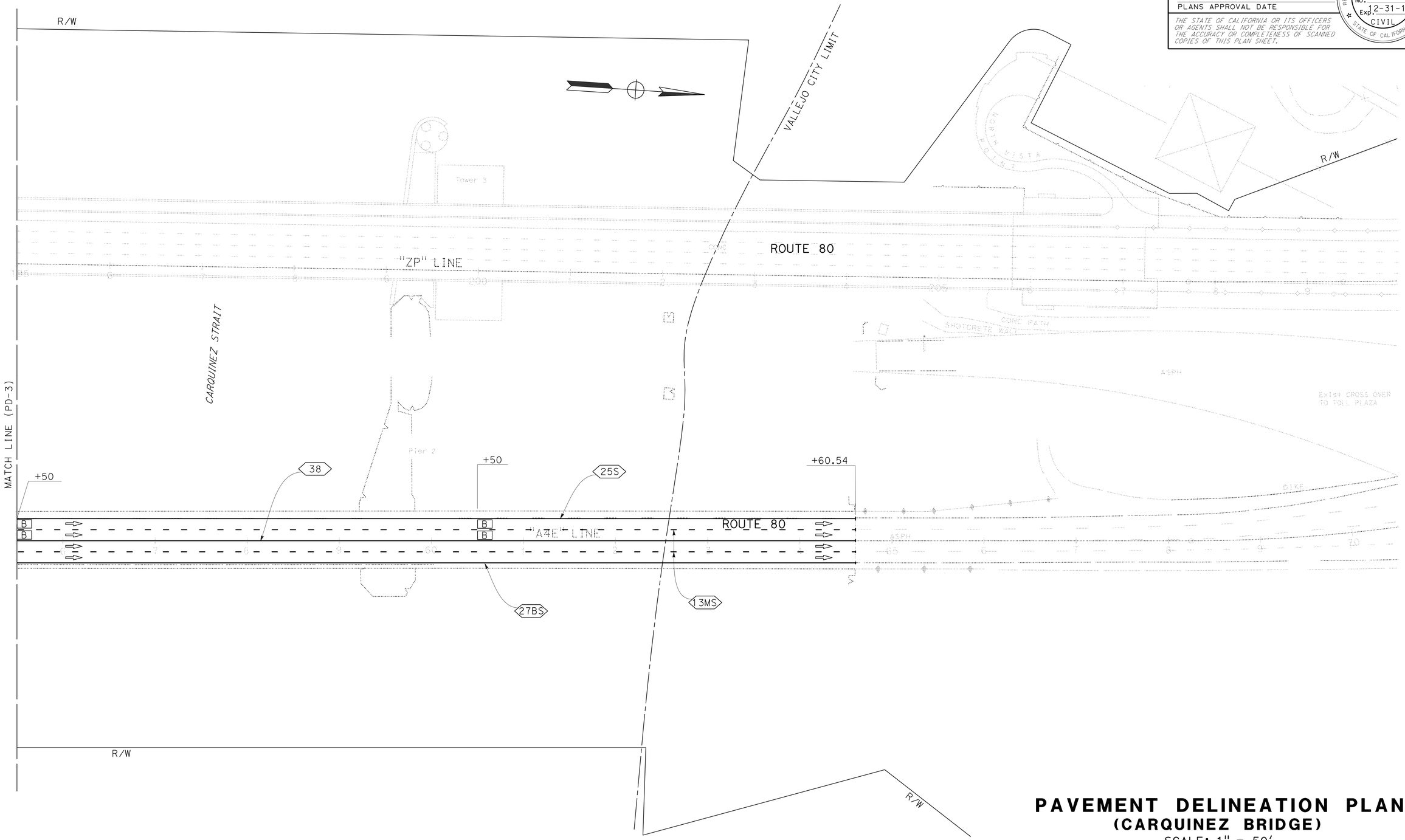

PAVEMENT DELINEATION PLAN
(CARQUINEZ BRIDGE)
SCALE: 1" = 50'

APPROVED FOR PAVEMENT DELINEATION WORK ONLY

FOR NOTES, ABBREVIATIONS AND LEGEND, SEE SHEET PD-1

PD-4

REVISED BY	PA
DATE REVISED	2/25/15
CALCULATED-DESIGNED BY	PETER AGUILERA
CHECKED BY	VAN HEW
FUNCTIONAL SUPERVISOR	ARLISSA PANG

STATE OF CALIFORNIA - DEPARTMENT OF TRANSPORTATION
Caltrans
DESIGN

LAST REVISION 02-26-15
DATE PLOTTED => 03-JUL-2015
TIME PLOTTED => 14:47

Dist	COUNTY	ROUTE	POST MILES TOTAL PROJECT	SHEET No.	TOTAL SHEETS
04	CC, Sol	80	13.4/14.1, 0.0/0.6	22	75

Peter Aguilera 3/17/15
REGISTERED CIVIL ENGINEER DATE

6-22-15
PLANS APPROVAL DATE

REGISTERED PROFESSIONAL ENGINEER Peter Aguilera No. 55287 Exp. 12-31-16 CIVIL STATE OF CALIFORNIA

THE STATE OF CALIFORNIA OR ITS OFFICERS OR AGENTS SHALL NOT BE RESPONSIBLE FOR THE ACCURACY OR COMPLETENESS OF SCANNED COPIES OF THIS PLAN SHEET.

NOTES:

1. INSTALL 4" WHITE LINE AFTER INSTALLING PAVEMENT MARKERS.
2. DETAIL 13MS IS PAVEMENT DELINEATION MODIFIED FROM DETAIL 13.
3. DETAIL 25S IS PAVEMENT DELINEATION MODIFIED FROM DETAIL 25.
4. DETAIL 27BS IS PAVEMENT DELINEATION MODIFIED FROM DETAIL 27B.
5. DETAIL 36BS IS PAVEMENT DELINEATION MODIFIED FROM DETAIL 36B.
6. DETAIL 37S IS PAVEMENT DELINEATION MODIFIED FROM DETAIL 37.
7. FOR DETAILS NOT SHOWN, SEE STANDARD PLANS AND REVISED STANDARD PLANS.
8. ALL SHADOW STRIPES SHOWN ARE TO BE USED ON CONCRETE PAVEMENT AND BRIDGE SURFACES ONLY.

LEGEND:

- TYPE A WHITE NON-REFLECTIVE MARKER
- TYPE G ONE-WAY CLEAR RETROREFLECTIVE MARKER
- TYPE H ONE-WAY YELLOW RETROREFLECTIVE MARKER
- 4" WHITE LINE
- 4" BLACK PAINT
- 4" YELLOW LINE

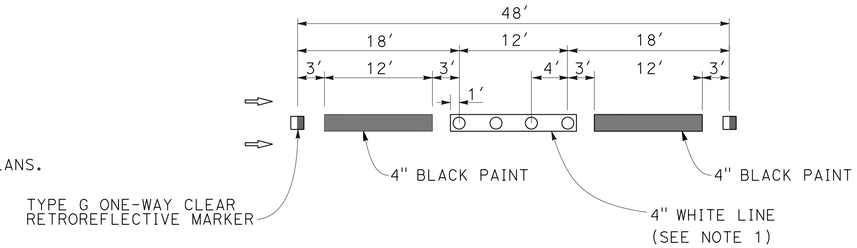

DETAIL 13MS

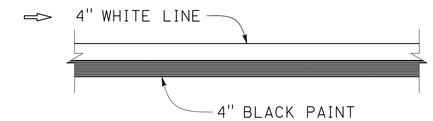

DETAIL 27BS

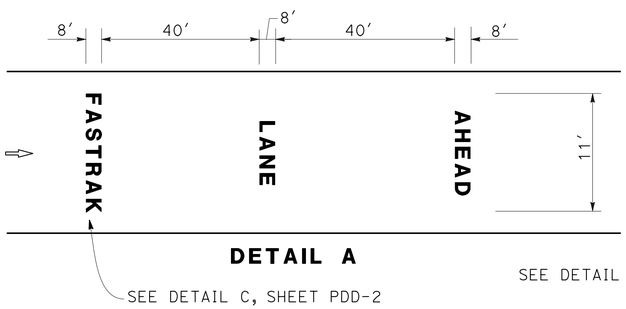

DETAIL A

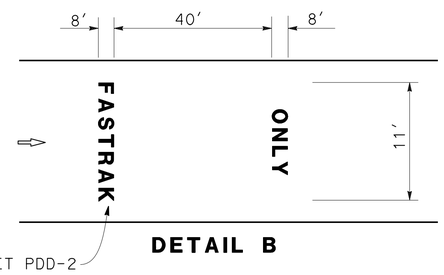

DETAIL B

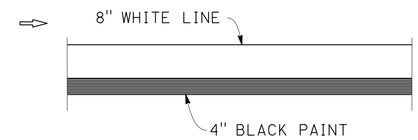

DETAIL SHOULDER HATCH

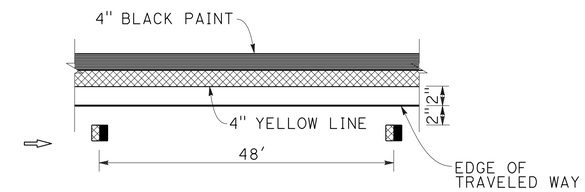

DETAIL 25S

TRAFFIC STRIPES, PAVEMENT MARKINGS AND PAVEMENT MARKERS

BRIDGE SECTION	DETAIL No.	REMOVE PAVEMENT MARKER	FURNISH AND INSTALL CONCRETE BARRIER MARKER	PAVEMENT MARKER				REMOVE PAINTED PAVEMENT MARKING		PAINT PAVEMENT MARKING (2-COAT)		THERMO-PLASTIC PAVEMENT MARKING (ENHANCED WET NIGHT VISIBILITY)	REMOVE THERMOPLASTIC TRAFFIC STRIPE		REMOVE YELLOW THERMO-PLASTIC TRAFFIC STRIPE (HAZARDOUS WASTE) 4" YELLOW	THERMOPLASTIC TRAFFIC STRIPE (ENHANCED WET NIGHT VISIBILITY)			REMOVE PAINTED TRAFFIC STRIPE	PAINT TRAFFIC STRIPE (2-COAT)
				NON-REFLECTIVE	RETROREFLECTIVE															
				TYPE A	TYPE C	TYPE G	TYPE H	8" WHITE	4" BLACK	12" WHITE	4" BLACK		4" WHITE	8" WHITE		4" WHITE	4" YELLOW	8" WHITE	4" BLACK	4" BLACK
		EA						SQFT					LF							
EB 80 APPROACH "A4E" 12+44.89 TO 31+10.01	25S	40					40								1844		1844		1844	1844
	LANE LINES	406											3867						3867	
	13MS			324		82										3867				3867
	27BS												1864			1864			1864	1864
	SHOULDER HATCH							860	430	1290	430									
	WHITE MARKER		27																	
	36BS	12				12								531				531	531	531
	38B	14				14								145				145		
CARQUINEZ BRIDGE "A4E" 31+10.01 TO 64+60.54	25S						71										3351			3351
	13MS			596		150										7142				7142
	27BS															3351				3351
	37S				88	2												1300		1300
	38					68												1611		
	FASTRAK LANE AHEAD											588								
	FASTRAK ONLY											390								
SUBTOTAL		472	27	920	88	328	111	860	430	1290	430	978	5731	676	1844	16224	5195	3587	8106	23250
TOTAL		472	27	920	527			1290		1720		978	7083		1844	21419		3587	8106	23250

PAVEMENT DELINEATION DETAILS AND QUANTITIES

NO SCALE

PDD-1

REVISED BY	DATE REVISED
VH	2/25/15

CALCULATED-DESIGNED BY: VAN HEW
CHECKED BY: PETER AGUILERA
FUNCTIONAL SUPERVISOR: ARLISSA PANG

STATE OF CALIFORNIA - DEPARTMENT OF TRANSPORTATION
Caltrans
DESIGN

LAST REVISION 06-17-15
DATE PLOTTED => 03-JUL-2015
TIME PLOTTED => 14:48

Dist	COUNTY	ROUTE	POST MILES TOTAL PROJECT	SHEET No.	TOTAL SHEETS
04	CC, Sol	80	13.4/14.1, 0.0/0.6	23	75

Peter Aguilera 3/17/15
REGISTERED CIVIL ENGINEER DATE

6-22-15
PLANS APPROVAL DATE

REGISTERED PROFESSIONAL ENGINEER
Peter Aguilera
No. 55287
Exp. 12-31-16
CIVIL
STATE OF CALIFORNIA

THE STATE OF CALIFORNIA OR ITS OFFICERS OR AGENTS SHALL NOT BE RESPONSIBLE FOR THE ACCURACY OR COMPLETENESS OF SCANNED COPIES OF THIS PLAN SHEET.

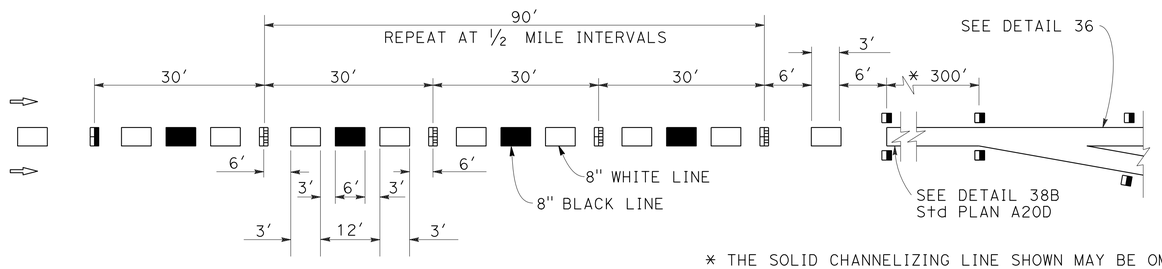

* THE SOLID CHANNELIZING LINE SHOWN MAY BE OMITTED ON SHORT AUXILIARY LANES WHERE WEAVING LENGTH IS CRITICAL

DETAIL 37S
LANE DROP AT EXIT RAMPS

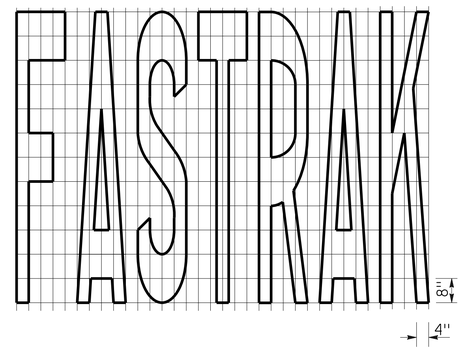

A=43 ft^2

DETAIL C

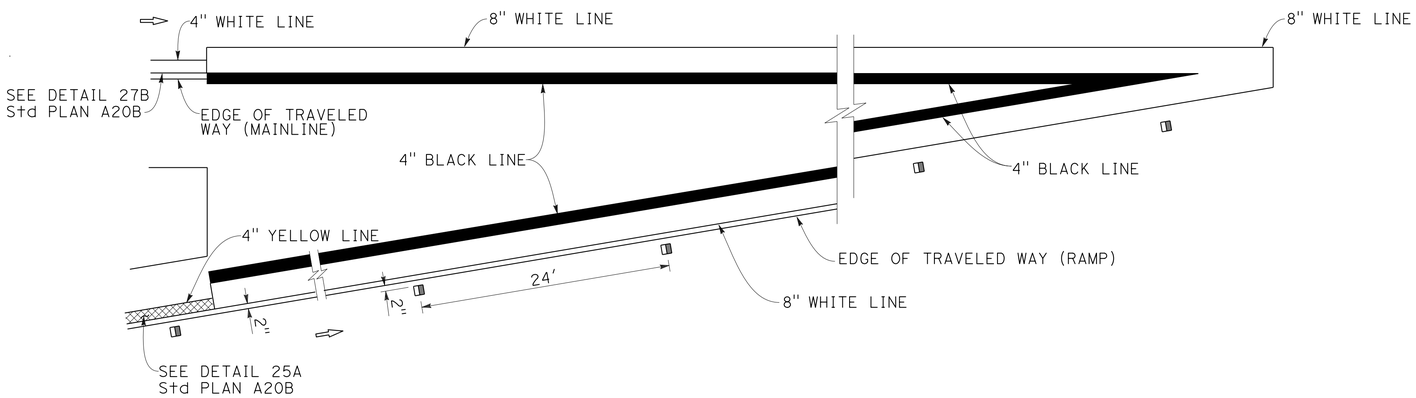

DETAIL 36BS
ENTRANCE RAMP NEUTRAL AREA (ACCELERATION LANE) TREATMENT

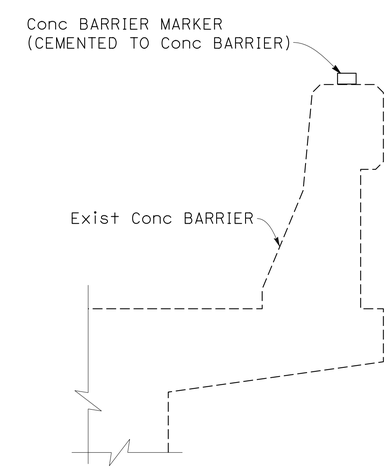

DETAIL D

PAVEMENT DELINEATION DETAILS

NO SCALE

PDD-2

REVISED BY	DATE REVISED
VH	2/25/15

CALCULATED-DESIGNED BY: VAN HEW
CHECKED BY: PETER AGUILERA
FUNCTIONAL SUPERVISOR: ARLISSA PANG

STATE OF CALIFORNIA - DEPARTMENT OF TRANSPORTATION
Caltrans
DESIGN

LAST REVISION 06-17-15
DATE PLOTTED => 03-JUL-2015
TIME PLOTTED => 14:48

Dist	COUNTY	ROUTE	POST MILES TOTAL PROJECT	SHEET No.	TOTAL SHEETS
04	CC, Sol	80	13.4/14.1, 0.0/0.6	24	75

Peter Aguilera 3/17/15
REGISTERED CIVIL ENGINEER DATE

6-22-15
PLANS APPROVAL DATE

REGISTERED PROFESSIONAL ENGINEER Peter Aguilera No. 55287 Exp. 12-31-16 CIVIL STATE OF CALIFORNIA

THE STATE OF CALIFORNIA OR ITS OFFICERS OR AGENTS SHALL NOT BE RESPONSIBLE FOR THE ACCURACY OR COMPLETENESS OF SCANNED COPIES OF THIS PLAN SHEET.

REMOVE GUARDRAIL

SHEET No.	STATION	LF
L-5	"A4E" 65+30 TO 66+80	150
TOTAL		150

REMOVE CONCRETE BARRIER (TYPE K)

SHEET No.	STATION	LF
L-5	"A4E" 64+60 TO 65+40 (Lt)	80
L-5	"A4E" 64+60 TO 66+00 (Rt)	140
TOTAL		220

CONCRETE BARRIER (TYPE 60)

SHEET No.	STATION	LF
L-5	"A4E" 64+60 TO 66+80 (Lt)	220
L-5	"A4E" 64+60 TO 66+00 (Rt)	140
TOTAL		360

TEMPORARY RAILING (TYPE K)

SHEET No.	STATION	LF
L-5	"A4E" 64+60 TO 67+00 (Lt)	240
L-5	"A4E" 64+60 TO 66+20 (Rt)	160
TOTAL		400

TREATED WOOD WASTE

SHEET No.	STATION	LB
L-5	"A4E" 65+30 TO 66+80	2100
TOTAL		2100

REMOVE CRASH CUSHION (SAND FILLED)

SHEET No.	STATION	EA
L-2	"A4E" 10+50	12
L-2	"J" 36+00	21
TOTAL		33

CRASH CUSHION (REACT 9SCBS)

SHEET No.	STATION	EA
L-2	"A4E" 10+50	1
L-6	"A4E" 76+00	1
TOTAL		2

CRASH CUSHION (REACT 62B060)

SHEET No.	STATION	EA
L-2	"J" 36+00	1
TOTAL		1

SUMMARY OF QUANTITIES

Q-1

STATE OF CALIFORNIA - DEPARTMENT OF TRANSPORTATION
Caltrans® DESIGN
FUNCTIONAL SUPERVISOR: ARLISSA PANG
CALCULATED-DESIGNED BY: PETER AGUILERA
CHECKED BY: VAN HEW
REVISED BY: PA
DATE REVISED: 2/25/15

LAST REVISION 06-17-15
DATE PLOTTED => 03-JUL-2015
TIME PLOTTED => 14:48

Dist	COUNTY	ROUTE	POST MILES TOTAL PROJECT	SHEET No.	TOTAL SHEETS
04	CC,Sol	80	13.0/14.1, 0.0/0.4	25	75

Alex McDonald
LICENSED LANDSCAPE ARCHITECT

6-22-15
PLANS APPROVAL DATE

LICENSED LANDSCAPE ARCHITECT
ALEXANDER K. J. MCDONALD No. 5242
Alex McDonald
Signature
8-31-16
Renewal Date
3-20-15
Date
STATE OF CALIFORNIA

THE STATE OF CALIFORNIA OR ITS OFFICERS OR AGENTS SHALL NOT BE RESPONSIBLE FOR THE ACCURACY OR COMPLETENESS OF SCANNED COPIES OF THIS PLAN SHEET.

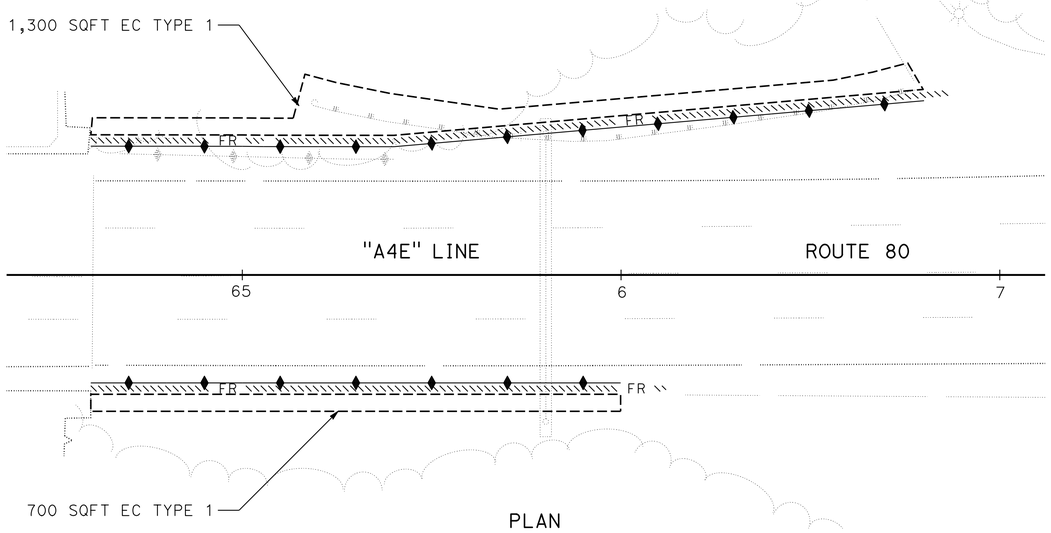

PLAN

EROSION CONTROL TYPE 1 AT CONCRETE BARRIER

FIELD DETERMINE IF EMBANKMENT OR CUT CONDITION EXISTS FOR FIBER ROLLS PLACEMENT.

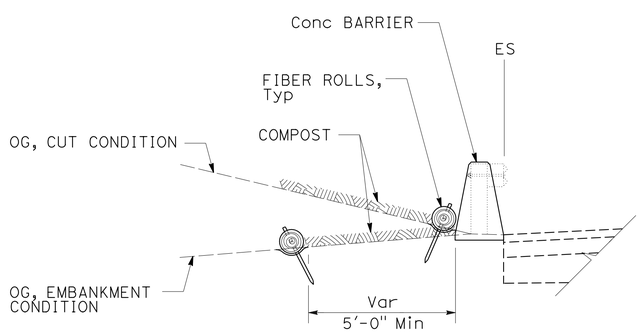

TYPICAL SECTION

EROSION CONTROL TYPE 1 AT CONCRETE BARRIER

CONCRETE BARRIER & REMOVE MBGR SHOWN. PLACE COMPOST IN A MANNER THAT DOES NOT OBSTRUCT STORM WATER FLOWS FROM PAVED AREAS.

LEGEND:

COMPOST

EROSION CONTROL TYPE 1

SEQUENCE	ITEM	MATERIAL		APPLICATION RATE	DEPTH	REMARKS
		DESCRIPTION	TYPE			
STEP 1	FIBER ROLLS	FIBER ROLL	10 TO 12 INCHES IN Dia	-	-	RICE STRAW FILLED, JUTE COVERED AND INSTALLATION TYPE 1
STEP 2	COMPOST	COMPOST	COARSE	404 CY/ACRE	3"	MAY BE SUBSTITUTED WITH TREE TRIMMING WOOD MULCH

EROSION CONTROL QUANTITIES

SHEET No.	STATION	FIBER ROLLS	COMPOST
		LF	SQFT
ECL-1	"A4E" 64+60 TO 66+80, Lt	220	1,300
ECL-1	"A4E" 64+60 TO 66+00, Rt	150	700
TOTAL		370	2,000

EROSION CONTROL LEGEND, DETAILS AND QUANTITIES

NO SCALE

ECL-1

REVISED BY	DATE REVISED
AKM	3/16/15

CALCULATED-DESIGNED BY: ALEX MCDONALD
CHECKED BY: CHRIS PADICK
FUNCTIONAL SUPERVISOR: DAVID W. YAM

STATE OF CALIFORNIA - DEPARTMENT OF TRANSPORTATION
Caltrans® WATER QUALITY

LAST REVISION 11-21-14
DATE PLOTTED => 03-JUL-2015
TIME PLOTTED => 14:48

M

Maint	MAINTENANCE
Max	MAXIMUM
MB	METAL BEAM
MBB	METAL BEAM BARRIER
MBGR	METAL BEAM GUARD RAILING
Med	MEDIAN
MGS	MIDWEST GUARDRAIL SYSTEM
MH	MANHOLE
Min	MINIMUM
Misc	MISCELLANEOUS
Misc I & S	MISCELLANEOUS IRON AND STEEL
Mkr	MARKER
Mod	MODIFIED,
	MODIFY
Mon	MONUMENT
MP	METAL PLATE
MPGR	METAL PLATE GUARD RAILING
MR	MOVEMENT RATING
MSE	MECHANICALLY STABILIZED EMBANKMENT
Mt	MOUNTAIN, MOUNT
Mtl	MATERIAL
MVP	MAINTENANCE VEHICLE PULLOUT

N

N	NORTH
NB	NORTHBOUND
No.	NUMBER (MUST HAVE PERIOD)
Nos.	NUMBERS (MUST HAVE PERIOD)
NPS	NOMINAL PIPE SIZE
NS	NEAR SIDE
NSP	NEW STANDARD PLAN
NTS	NOT TO SCALE

O

Oblr	OBLITERATE
OC	OVERCROSSING
OD	OUTSIDE DIAMETER
OF	OUTSIDE FACE
OG	ORIGINAL GROUND
OGAC	OPEN GRADED ASPHALT CONCRETE
OGFC	OPEN GRADED FRICTION COURSE
OH	OVERHEAD
OHWM	ORDINARY HIGH WATER MARK
O-O	OUT TO OUT
Opp	OPPOSITE
OSD	OVERSIDE DRAIN

P

P	PAGE
PAP	PERFORATED ALUMINUM PIPE
PB	PULL BOX
PC	POINT OF CURVATURE,
	PRECAST
PCC	POINT OF COMPOUND CURVE,
	PORTLAND CEMENT CONCRETE
PCMS	PORTABLE CHANGEABLE MESSAGE SIGN
PCP	PERFORATED CONCRETE PIPE,
	PRESTRESSED CONCRETE PIPE
PCVC	POINT OF COMPOUND VERTICAL CURVE
PEC	PERMIT TO ENTER AND CONSTRUCT
Ped	PEDESTRIAN
Ped OC	PEDESTRIAN OVERCROSSING
Ped UC	PEDESTRIAN UNDERCROSSING
Perm Mtl	PERMEABLE MATERIAL

P continued

PG	PROFILE GRADE
PI	POINT OF INTERSECTION
PJP	PARTIAL JOINT PENETRATION
Pkwy	PARKWAY
ℙ,PL	PLATE
P/L	PROPERTY LINE
PM	POST MILE,
	TIME FROM NOON TO MIDNIGHT
PN	PAVING NOTCH
POC	POINT OF HORIZONTAL CURVE
POT	POINT OF TANGENT
POVC	POINT OF VERTICAL CURVE
PP	PIPE PILE,
	PLASTIC PIPE,
	POWER POLE
PPL	PREFORMED PERMEABLE LINER
PPP	PERFORATED PLASTIC PIPE
PRC	POINT OF REVERSE CURVE
PRF	PAVEMENT REINFORCING FABRIC
PRVC	POINT OF REVERSE VERTICAL CURVE
PS&E	PLANS, SPECIFICATIONS AND ESTIMATES
PS, P/S	PRESTRESSED
PSP	PERFORATED STEEL PIPE
PT	POINT OF TANGENCY
PVC	POLYVINYL CHLORIDE
Pvmt	PAVEMENT

Q

Qty	QUANTITY

R

R	RADIUS
R & D	REMOVE AND DISPOSE
R & S	REMOVE AND SALVAGE
R/C	RATE OF CHANGE
RCA	REINFORCED CONCRETE ARCH
RCB	REINFORCED CONCRETE BOX
RCP	REINFORCED CONCRETE PIPE
RCPA	REINFORCED CONCRETE PIPE ARCH
Rd	ROAD
Reinf	REINFORCED,
	REINFORCEMENT,
	REINFORCING
Rel	RELOCATE
Repl	REPLACEMENT
Ret	RETAINING
Rev	REVISED, REVISION
Rdwy	ROADWAY
RHMA	RUBBERIZED HOT MIX ASPHALT
Riv	RIVER
RM	ROAD-MIXED
RP	RADIUS POINT,
	REFERENCE POINT
RR	RAILROAD
RSP	ROCK SLOPE PROTECTION,
	REVISED STANDARD PLAN
Rt	RIGHT
Rte	ROUTE
RW	REDWOOD,
	RETAINING WALL
R/W	RIGHT OF WAY
Rwy	RAILWAY

S

S	SOUTH,
	SUPPLEMENT
SAE	STRUCTURE APPROACH EMBANKMENT
Salv	SALVAGE
SAPP	STRUCTURAL ALUMINUM PLATE PIPE
SB	SOUTHBOUND
SC	SAND CUSHION
SCSP	SLOTTED CORRUGATED STEEL PIPE
SD	STORM DRAIN
Sec	SECOND,
	SECTION
Sep	SEPARATION
SG	SUBGRADE
Shld	SHOULDER
Sht	SHEET
Sim	SIMILAR
℄	STATION LINE
SM	SELECTED MATERIAL
Spec	SPECIAL,
	SPECIFICATIONS
SPP	SLOTTED PLASTIC PIPE
SS	SLOPE STAKE
SSBM	STRAP AND SADDLE BRACKET METHOD
SSD	STRUCTURAL SECTION DRAIN
SSPA	STRUCTURAL STEEL PLATE ARCH
SSPP	STRUCTURAL STEEL PLATE PIPE
SSPPA	STRUCTURAL STEEL PLATE PIPE ARCH
SSRP	STEEL SPIRAL RIB PIPE
St	STREET
Sta	STATION
STBB	SINGLE THRIE BEAM BARRIER
Std	STANDARD
Str	STRUCTURE
Surf	SURFACING
SW	SIDEWALK,
	SOUND WALL
Swr	SEWER
Sym	SYMMETRICAL
S4S	SURFACE 4 SIDES

T

T	SEMI-TANGENT
Tan	TANGENT
TBB	THRIE BEAM BARRIER
Tbr	TIMBER
TC	TOP OF CURB
TCB	TRAFFIC CONTROL BOX
TCE	TEMPORARY CONSTRUCTION EASEMENT
Tel	TELEPHONE
Temp	TEMPORARY
TG	TOP OF GRADE
Tot	TOTAL
TP	TELEPHONE POLE
TPB	TREATED PERMEABLE BASE
TPM	TREATED PERMEABLE MATERIAL
Trans	TRANSITION

T continued

TS	TRANSVERSE,
	TRAFFIC SIGNAL,
	TUBULAR STEEL
Typ	TYPICAL

U

UC	UNDERCROSSING
UD	UNDERDRAIN
UG	UNDERGROUND
UON	UNLESS OTHERWISE NOTED
UP	UNDERPASS

V

V	VALVE,
	DESIGN SPEED
Var	VARIABLE,
	VARIES
VC	VERTICAL CURVE
VCP	VITRIFIED CLAY PIPE
Vert	VERTICAL
Via	VIADUCT
Vol	VOLUME

W

W	WEST,
	WIDTH
WB	WESTBOUND
WH	WEEP HOLE
WM	WIRE MESH
WS	WATER SURFACE
WSP	WELDED STEEL PIPE
Wt	WEIGHT
WV	WATER VALVE
WW	WINGWALL
WWLOL	WINGWALL LAYOUT LINE

X

X Sec	CROSS SECTION
Xing	CROSSING

Y

Yr	YEAR
Yrs	YEARS

Dist	COUNTY	ROUTE	POST MILES TOTAL PROJECT	SHEET No.	TOTAL SHEETS
04	CC, Sol	80	13.4/14.1, 0.0/0.6	26	75

Grace M. Tsushima
REGISTERED CIVIL ENGINEER

July 19, 2013
PLANS APPROVAL DATE

REGISTERED PROFESSIONAL ENGINEER
Grace M. Tsushima
No. C49814
Exp. 9-30-14
CIVIL
STATE OF CALIFORNIA

THE STATE OF CALIFORNIA OR ITS OFFICERS OR AGENTS SHALL NOT BE RESPONSIBLE FOR THE ACCURACY OR COMPLETENESS OF SCANNED COPIES OF THIS PLAN SHEET.

TO ACCOMPANY PLANS DATED 6-22-15

2010 REVISED STANDARD PLAN RSP A10B

UNIT OF MEASUREMENT SYMBOLS:

Some of the symbols used in the project plan quantity tables and in the Bid Item List are:

TABLE A

SYMBOL USED	DEFINITIONS
ACRE	ACRE
CF	CUBIC FOOT
CY	CUBIC YARD
EA	EACH
GAL	GALLON
LB	POUND
LF	LINEAR FOOT
SQFT	SQUARE FOOT
SQYD	SQUARE YARD
STA	100 FEET
TAB	TABLET
TON	2,000 POUNDS

Some of the symbols used in the plans other than in the project plan quantity tables are:

TABLE B

SYMBOL USED	DEFINITIONS
ksi	KIPS PER SQUARE INCH
ksf	KIPS PER SQUARE FOOT
psi	POUNDS PER SQUARE INCH
psf	POUNDS PER SQUARE FOOT
lb/ft^3, pcf	POUNDS PER CUBIC FOOT
tsf	TONS PER SQUARE FOOT
mph, MPH *	MILES PER HOUR
ø	NOMINAL DIAMETER
oz	OUNCE
lb	POUND
kip	1,000 POUNDS
cal	CALORIE
ft	FOOT OR FEET
gal	GALLON

* For use on a sign panel only

STATE OF CALIFORNIA
DEPARTMENT OF TRANSPORTATION

ABBREVIATIONS (SHEET 2 OF 2)

NO SCALE

RSP A10B DATED JULY 19, 2013 SUPERSEDES STANDARD PLAN A10B DATED MAY 20, 2011 - PAGE 2 OF THE STANDARD PLANS BOOK DATED 2010.

REVISED STANDARD PLAN RSP A10B

6-7-13

Dist	COUNTY	ROUTE	POST MILES TOTAL PROJECT	SHEET No.	TOTAL SHEETS
04	CC, Sol	80	13.4/14.1, 0.0/0.6	27	75

REGISTERED CIVIL ENGINEER

July 19, 2013
PLANS APPROVAL DATE

REGISTERED PROFESSIONAL ENGINEER Roberta L. McLaughlin No. C40375 Exp. 3-31-15 CIVIL STATE OF CALIFORNIA

THE STATE OF CALIFORNIA OR ITS OFFICERS OR AGENTS SHALL NOT BE RESPONSIBLE FOR THE ACCURACY OR COMPLETENESS OF SCANNED COPIES OF THIS PLAN SHEET.

TO ACCOMPANY PLANS DATED 6-22-15

EXIT RAMP NEUTRAL AREA (GORE) TREATMENT

DETAIL 36

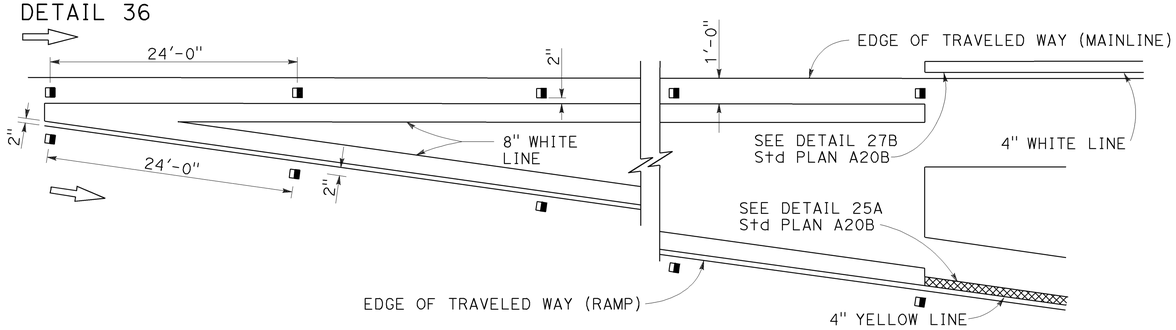

ENTRANCE RAMP NEUTRAL AREA (MERGE) TREATMENT

DETAIL 36A

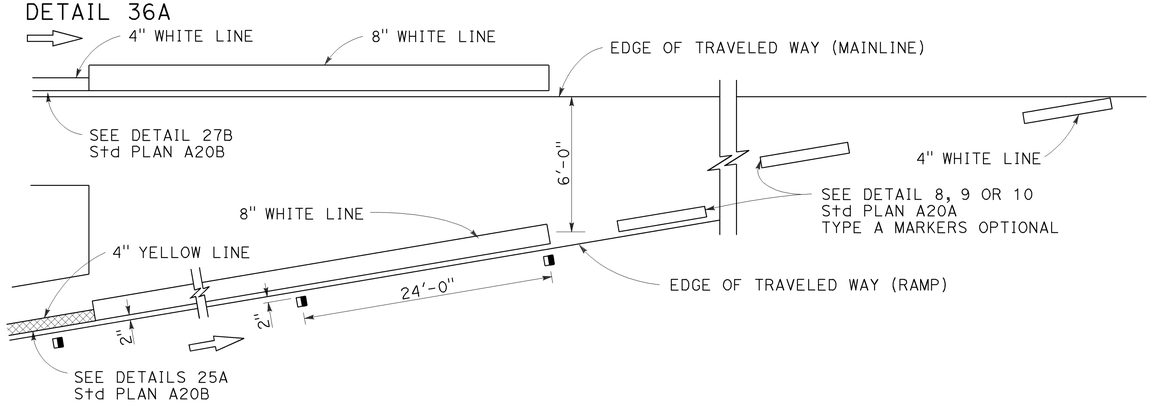

ENTRANCE RAMP NEUTRAL AREA (ACCELERATION LANE) TREATMENT

DETAIL 36B

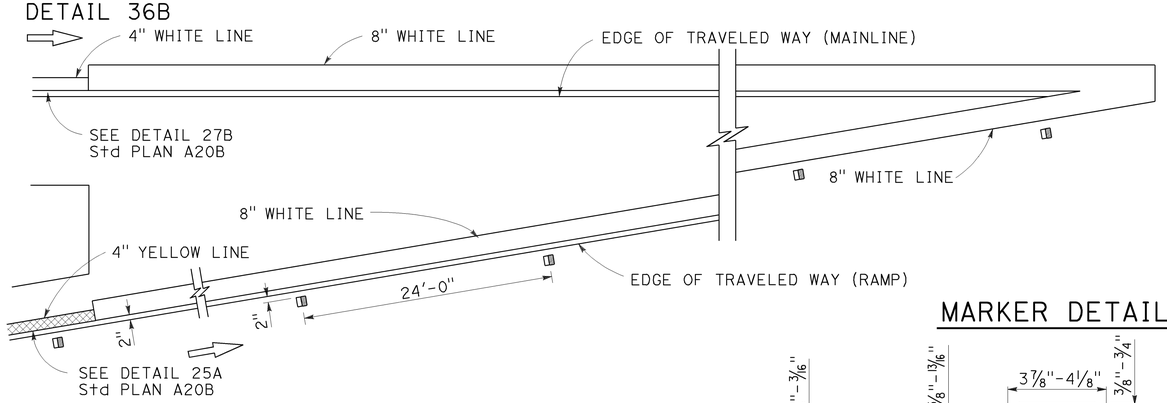

LANE DROP AT EXIT RAMPS

DETAIL 37

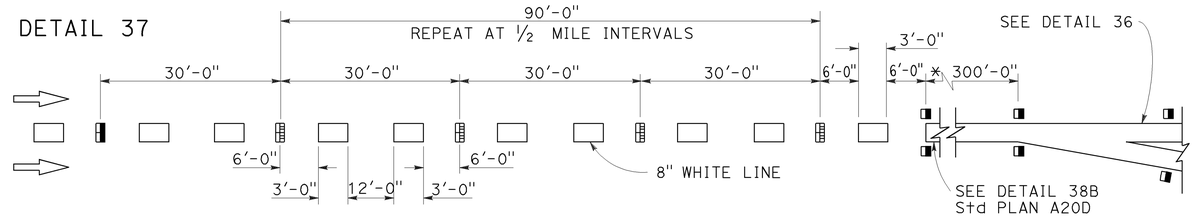

DETAIL 37A

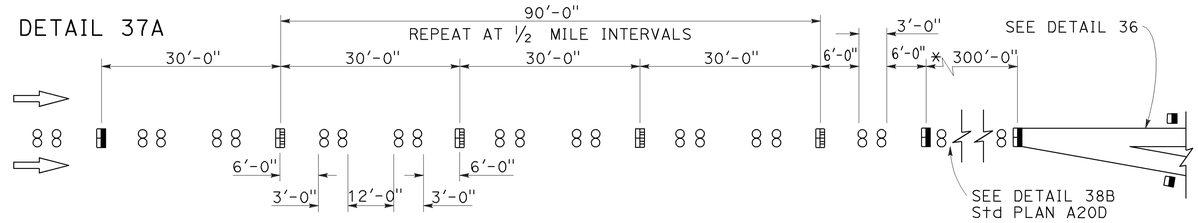

* The solid channelizing line shown may be omitted on short auxiliary lanes where weaving length is critical.

LANE DROP AT INTERSECTIONS

DETAIL 37B

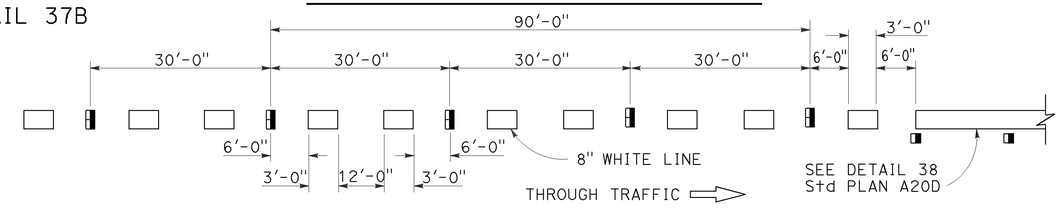

DETAIL 37C

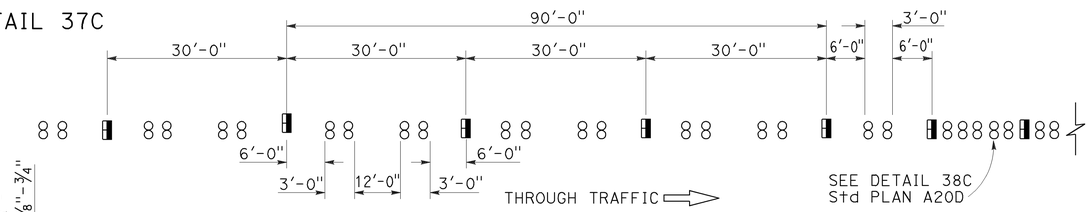

MARKER DETAILS

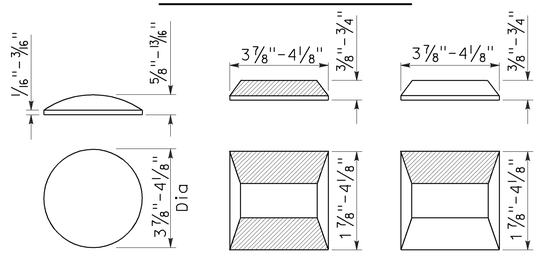

RETROREFLECTIVE FACE

LEGEND:

MARKERS

- ○ TYPE A WHITE NON-REFLECTIVE
- ⊟ TYPE C RED-CLEAR RETROREFLECTIVE
- ◨ TYPE G ONE-WAY CLEAR RETROREFLECTIVE

STATE OF CALIFORNIA
DEPARTMENT OF TRANSPORTATION

PAVEMENT MARKERS AND TRAFFIC LINE TYPICAL DETAILS

NO SCALE

RSP A20C DATED JULY 19, 2013 SUPERSEDES STANDARD PLAN A20C DATED MAY 20, 2011 - PAGE 11 OF THE STANDARD PLANS BOOK DATED 2010.

REVISED STANDARD PLAN RSP A20C

2010 REVISED STANDARD PLAN RSP A20C

4-29-13

Dist	COUNTY	ROUTE	POST MILES TOTAL PROJECT	SHEET No.	TOTAL SHEETS
04	CC, Sol	80	13.4/14.1, 0.0/0.6	28	75

REGISTERED CIVIL ENGINEER

July 20, 2012
PLANS APPROVAL DATE

REGISTERED PROFESSIONAL ENGINEER
Roberta L. McLaughlin
No. C40375
Exp. 3-31-13
CIVIL
STATE OF CALIFORNIA

THE STATE OF CALIFORNIA OR ITS OFFICERS OR AGENTS SHALL NOT BE RESPONSIBLE FOR THE ACCURACY OR COMPLETENESS OF SCANNED COPIES OF THIS PLAN SHEET.

TO ACCOMPANY PLANS DATED 6-22-15

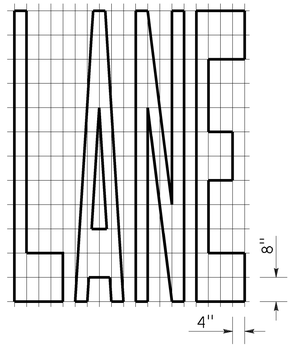

A=24 ft^2

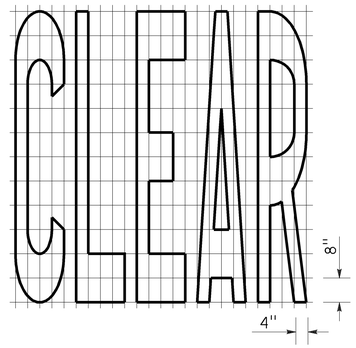

A=27 ft^2

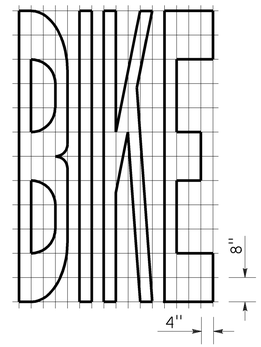

A=21 ft^2

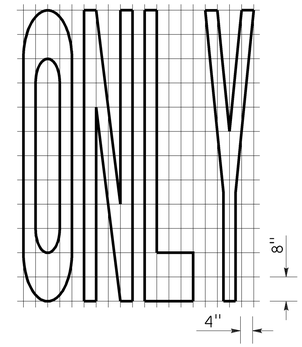

A=22 ft^2

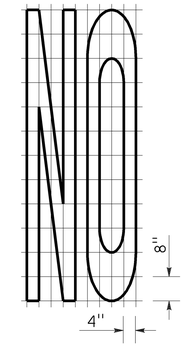

A=14 ft^2

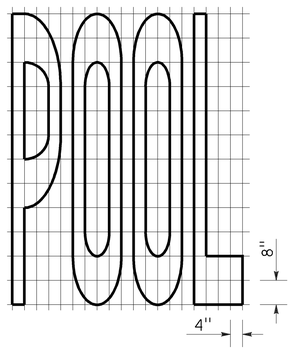

A=23 ft^2

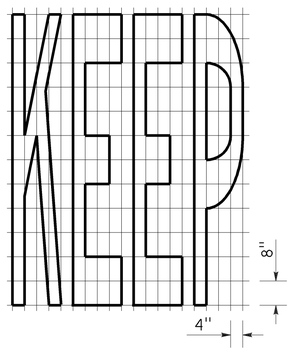

A=24 ft^2

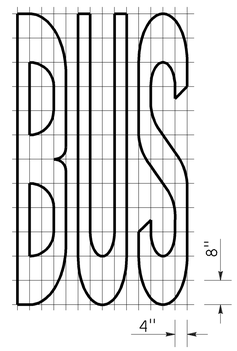

A=20 ft^2

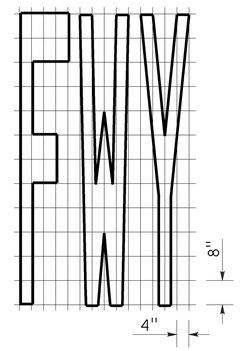

A=16 ft^2

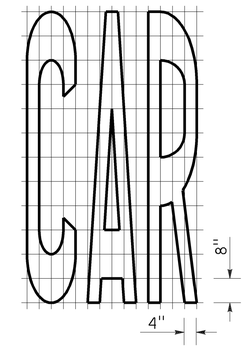

A=17 ft^2

WORD MARKINGS			
ITEM	ft^2	ITEM	ft^2
LANE	24	NO	14
POOL	23	BIKE	21
CAR	17	BUS	20
CLEAR	27	ONLY	22
KEEP	24	FWY	16

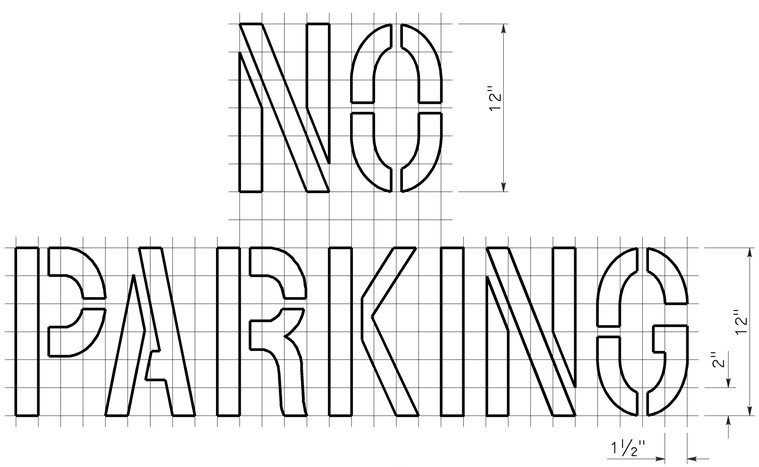

A=2 ft^2
See Notes 6 and 7

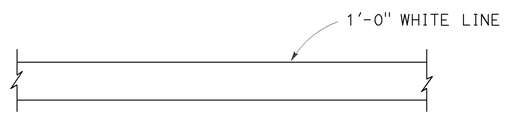

LIMIT LINE (STOP LINE)

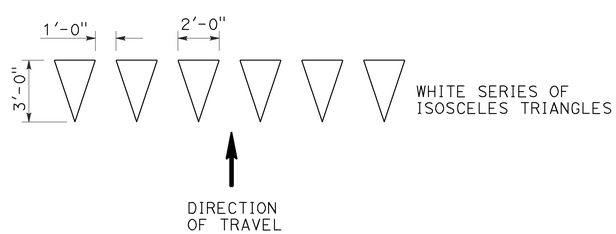

YIELD LINE

NOTES:

1. If a message consists of more than one word, it should read "UP", i.e., the first word should be nearest the driver.
2. The space between words should be at least four times the height of the characters for low speed roads, but not more than ten times the height of the characters. The space may be reduced appropriately where there is limited space because of local conditions.
3. Minor variations in dimensions may be accepted by the Engineer.
4. Portions of a letter, number or symbol may be separated by connecting segments not to exceed 2" in width.
5. The words "NO PARKING" pavement marking is to be used for parking facilities. For typical locations of markings, see Standard Plans A90A and A90B.
6. The words "NO PARKING", shall be painted in white letters no less than 1'-0" high on a contrasting background and located so that it is visible to traffic enforcement officials.

STATE OF CALIFORNIA
DEPARTMENT OF TRANSPORTATION

PAVEMENT MARKINGS WORDS, LIMIT AND YIELD LINES

NO SCALE

RSP A24E DATED JULY 20, 2012 SUPERSEDES STANDARD PLAN A24E
DATED MAY 20, 2011 - PAGE 17 OF THE STANDARD PLANS BOOK DATED 2010.

REVISED STANDARD PLAN RSP A24E

2010 REVISED STANDARD PLAN RSP A24E

6-12-12

Dist	COUNTY	ROUTE	POST MILES TOTAL PROJECT	SHEET No.	TOTAL SHEETS
04	CC, Sol	80	13.4/14.1, 0.0/0.6	29	75

LICENSED LANDSCAPE ARCHITECT

July 19, 2013
PLANS APPROVAL DATE

THE STATE OF CALIFORNIA OR ITS OFFICERS OR AGENTS SHALL NOT BE RESPONSIBLE FOR THE ACCURACY OR COMPLETENESS OF SCANNED COPIES OF THIS PLAN SHEET.

LICENSED LANDSCAPE ARCHITECT — Gregory A. Balzer — 2576 — 02-28-15 Renewal Date — 7-19-13 Date — STATE OF CALIFORNIA

TO ACCOMPANY PLANS DATED 6-22-15

A

AB	AGGREGATE BASE
ABS	ACRYLONITRILE-BUTADIENE-STYRENE
AC	ASPHALT CONCRETE
ACC	ARMOR-CLAD CONDUCTORS
Adj	ADJACENT/ADJUSTABLE
AIC	AUXILIARY IRRIGATION CONTROLLER
Alt	ALTERNATIVE
AMEND	AMENDMENT
ARV	AIR RELEASE VALVE
AUTO	AUTOMATIC
AUX	AUXILIARY
AVB	ATMOSPHERIC VACUUM BREAKER

B

B&B	BALLED AND BURLAPPED
B/B	BRASS/BRONZE
B/B/PL	BRASS/BRONZE/PLASTIC
B/PL	BRASS/PLASTIC
BFM	BONDED FIBER MATRIX
Bit Ctd	BITUMINOUS COATED
BP	BOOSTER PUMP
BPA	BACKFLOW PREVENTER ASSEMBLY
BPE	BACKFLOW PREVENTER ENCLOSURE
BV	BALL VALVE

C

C	CONDUIT
CAP	CORRUGATED ALUMINUM PIPE
CARV	COMBINATION AIR RELEASE VALVE
CB	COUPLING BAND
CCA	CAM COUPLER ASSEMBLY
CEC	CONTROLLER ENCLOSURE CABINET
CHDPE	CORRUGATED HIGH DENSITY POLYETHYLENE
CL	CHAIN LINK
CNC	CONTROL AND NEUTRAL CONDUCTORS
Conc	CONCRETE
CP	COPPER PIPE
CS	COMPOST SOCK
CSP	CORRUGATED STEEL PIPE
CST	CENTER STRIP
CV	CHECK VALVE

D

Dia	DIAMETER
DIP	DUCTILE IRON PIPE
DIT	DRIP IRRIGATION TUBING
DG	DECOMPOSED GRANITE
DN	DIAMETER NOMINAL
DVA	DRIP VALVE ASSEMBLY

E

EC	EROSION CONTROL
ECTC	EROSION CONTROL TECHNOLOGY COUNCIL
Elect	ELECTRIC/ELECTRICAL
Elev	ELEVATION
ELL	ELBOW
ENCL	ENCLOSURE
EP	EDGE OF PAVEMENT
ES	EDGE OF SHOULDER
EST	END STRIP
ESTB	ESTABLISHMENT
ETW	EDGE OF TRAVELED WAY

F

F	FULL CIRCLE
F/P	FULL/PART CIRCLE
FCV	FLOW CONTROL VALVE
FERT	FERTILIZER
FG	FINISHED GRADE
FH	FLEXIBLE HOSE
FIPT	FEMALE IRON PIPE THREAD
FIS	FERTILIZER INJECTOR SYSTEM
FL	FLOW LINE
FR	FIBER ROLL
FS	FLOW SENSOR
FSC	FLOW SENSOR CABLE
FV	FLUSH VALVE

G

Galv	GALVANIZED
GARV	GARDEN VALVE
GARVA	GARDEN VALVE ASSEMBLY
GM	GRAVEL MULCH
GPH	GALLONS PER HOUR
GPM	GALLONS PER MINUTE
GSP	GALVANIZED STEEL PIPE
GV	GATE VALVE

H

H	HALF CIRCLE
HDPE	HIGH DENSITY POLYETHYLENE
HP	HORSEPOWER/HINGE POINT
HPL	HIGH PRESSURE LINE
Hwy	HIGHWAY

I

IC	IRRIGATION CONTROLLER
ICC	IRRIGATION CONTROLLER(S) IN CONTROLLER ENCLOSURE CABINET
ID	INSIDE DIAMETER
IFS	IRRIGATION FILTRATION SYSTEM
IPS	IRON PIPE SIZE
IPT	IRON PIPE THREAD
Irr	IRRIGATION

L

L	LENGTH

M

Max	MAXIMUM
MBGR	METAL BEAM GUARD RAILING
MCV	MANUAL CONTROL VALVE
MIC	MASTER IRRIGATION CONTROLLER
Min	MINIMUM
MIPT	MALE IRON PIPE THREAD
Misc	MISCELLANEOUS
Mtl	MATERIAL
MVP	MAINTENANCE VEHICLE PULLOUT

N

NCN	NO COMMON NAME
NL	NOZZLE LINE
No.	NUMBER
NPT	NATIONAL PIPE THREAD

O

O/C	ON CENTER
OD	OUTSIDE DIAMETER
OL	OVERLAP

P

P	PART CIRCLE
PB	PULL BOX
PCC	PORTLAND CEMENT CONCRETE
PE	POLYETHYLENE
Pkt	PACKET
PL	PLASTIC
PLS	PURE LIVE SEED
PLT	PLANT/PLANTING
PLT ESTB	PLANT ESTABLISHMENT
PM	POST MILE
PR	PRESSURE RATED
PRLV	PRESSURE RELIEF VALVE
PRV	PRESSURE REGULATING VALVE
PVC	POLYVINYL CHLORIDE
Pvmt	PAVEMENT

Q

Q	QUARTER CIRCLE
QCV	QUICK COUPLING VALVE

R

R	RADIUS
RCP	REINFORCED CONCRETE PIPE
RCV	REMOTE CONTROL VALVE
RCVM	REMOTE CONTROL VALVE (MASTER)
RCVMF	REMOTE CONTROL VALVE (MASTER) W/FLOW SENSOR
RCVP	REMOTE CONTROL VALVE W/PRESSURE REGULATOR
RCW	RECYCLED WATER
RECP	ROLLED EROSION CONTROL PRODUCT
REQ	REQUIRED
RICS	REMOTE IRRIGATION CONTROL SYSTEM
R/W	RIGHT OF WAY

S

S	SLIP
SCH	SCHEDULE
SF	STATE-FURNISHED
Shld	SHOULDER
Sq	SQUARE
SST	SIDE STRIP
Sta	STATION
Std	STANDARD
SW	SIDEWALK/SOUND WALL

T

T	THIRD CIRCLE/THREAD
TLS	TRUCK LOADING STANDPIPE
TQ	THREE QUARTER CIRCLE
TRM	TURF REINFORCEMENT MAT
TT	TWO-THIRDS CIRCLE
TWSA	TREE WELL SPRINKLER ASSEMBLY
Typ	TYPICAL

U

UG	UNDERGROUND

W

W	WIDTH
W/	WITH
WM	WATER METER
WS	WYE STRAINER
WSA	WYE STRAINER ASSEMBLY
WSP	WELDED STEEL PIPE
WWM	WELDED WIRE MESH

NOTE:
For additional abbreviations, see Standard Plans A10A and A10B.

STATE OF CALIFORNIA
DEPARTMENT OF TRANSPORTATION

LANDSCAPE AND EROSION CONTROL ABBREVIATIONS

NO SCALE

RSP H1 DATED JULY 19, 2013 SUPERSEDES STANDARD PLAN H1 DATED MAY 20, 2011 - PAGE 218 OF THE STANDARD PLANS BOOK DATED 2010.

REVISED STANDARD PLAN RSP H1

2010 REVISED STANDARD PLAN RSP H1

6-28-13

Dist	COUNTY	ROUTE	POST MILES TOTAL PROJECT	SHEET No.	TOTAL SHEETS
04	CC, Sol	80	13.4/14.1, 0.0/0.6	30	75

REGISTERED CIVIL ENGINEER

July 19, 2013
PLANS APPROVAL DATE

REGISTERED PROFESSIONAL ENGINEER Gurinderpal Bhullar No. C48815 Exp. 9-30-14 CIVIL STATE OF CALIFORNIA

THE STATE OF CALIFORNIA OR ITS OFFICERS OR AGENTS SHALL NOT BE RESPONSIBLE FOR THE ACCURACY OR COMPLETENESS OF SCANNED COPIES OF THIS PLAN SHEET.

TO ACCOMPANY PLANS DATED 6-22-15

TABLE 1

TAPER LENGTH CRITERIA AND CHANNELIZING DEVICE SPACING

SPEED (S)	MINIMUM TAPER LENGTH * FOR WIDTH OF OFFSET 12 FEET (W)				MAXIMUM CHANNELIZING DEVICE SPACING		
					X	Y	Z **
	TANGENT 2L	MERGING L	SHIFTING L/2	SHOULDER L/3	TAPER	TANGENT	CONFLICT
mph	ft	ft	ft	ft	ft	ft	ft
20	160	80	40	27	20	40	10
25	250	125	63	42	25	50	12
30	360	180	90	60	30	60	15
35	490	245	123	82	35	70	17
40	640	320	160	107	40	80	20
45	1080	540	270	180	45	90	22
50	1200	600	300	200	50	100	25
55	1320	660	330	220	55	110	27
60	1440	720	360	240	60	120	30
65	1560	780	390	260	65	130	32
70	1680	840	420	280	70	140	35

* - For other offsets, use the following merging taper length formula for L:
For speed of 40 mph or less, $L = WS^2/60$
For speed of 45 mph or more, $L = WS$

Where: L = Taper length in feet
W = Width of offset in feet
S = Posted speed limit, off-peak 85th-percentile speed prior to work starting, or the anticipated operating speed in mph

** - Use for taper and tangent sections where there are no pavement markings or where there is a conflict between existing pavement markings and channelizers (CA).

TABLE 2

LONGITUDINAL BUFFER SPACE AND FLAGGER STATION SPACING

SPEED *	Min D **	DOWNGRADE Min D ***		
		-3%	-6%	-9%
mph	ft	ft	ft	ft
20	115	116	120	126
25	155	158	165	173
30	200	205	215	227
35	250	257	271	287
40	305	315	333	354
45	360	378	400	427
50	425	446	474	507
55	495	520	553	593
60	570	598	638	686
65	645	682	728	785
70	730	771	825	891

* - Speed is posted speed limit, off-peak 85th-percentile speed prior to work starting, or the anticipated operating speed in mph

** - Longitudinal buffer space or flagger station spacing

*** - Use on sustained downgrade steeper than -3 percent and longer than 1 mile.

TABLE 3

ADVANCE WARNING SIGN SPACING

ROAD TYPE	DISTANCE BETWEEN SIGNS *		
	A	B	C
	ft	ft	ft
URBAN - 25 mph OR LESS	100	100	100
URBAN - MORE THAN 25 mph TO 40 mph	250	250	250
URBAN - MORE THAN 40 mph	350	350	350
RURAL	500	500	500
EXPRESSWAY / FREEWAY	1000	1500	2640

* - The distances are approximate, are intended for guidance purposes only, and should be applied with engineering judgment. These distances should be adjusted by the Engineer for field conditions, if necessary, by increasing or decreasing the recommmended distances.

STATE OF CALIFORNIA
DEPARTMENT OF TRANSPORTATION

TRAFFIC CONTROL SYSTEM TABLES FOR LANE AND RAMP CLOSURES

NO SCALE

RSP T9 DATED JULY 19, 2013 SUPERSEDES RSP T9 DATED APRIL 19, 2013 THAT SUPPLEMENTS THE STANDARD PLANS BOOK DATED 2010.

REVISED STANDARD PLAN RSP T9

2010 REVISED STANDARD PLAN RSP T9

4-30-13

TO ACCOMPANY PLANS DATED 6-22-15

Dist	COUNTY	ROUTE	POST MILES TOTAL PROJECT	SHEET No.	TOTAL SHEETS
04	CC, Sol	80	13.4/14.1, 0.0/0.6	31	75

REGISTERED CIVIL ENGINEER

April 19, 2013
PLANS APPROVAL DATE

REGISTERED PROFESSIONAL ENGINEER Gurinderpal Bhullar No. C48815 Exp. 9-30-14 CIVIL STATE OF CALIFORNIA

THE STATE OF CALIFORNIA OR ITS OFFICERS OR AGENTS SHALL NOT BE RESPONSIBLE FOR THE ACCURACY OR COMPLETENESS OF SCANNED COPIES OF THIS PLAN SHEET.

NOTES:

See Revised Standard Plan RSP T9 for tables.

Use cone spacing X for taper segment, Y for tangent segment or Z for conflict situations, as approriate, per Table 1, unless X, Y, or Z cone spacing is shown on this sheet.

Unless otherwise specified in the special provisions, all temporary warning signs shall have black legend on fluorescent orange background.

California codes are designated by (CA). Otherwise, Federal (MUTCD) codes are shown.

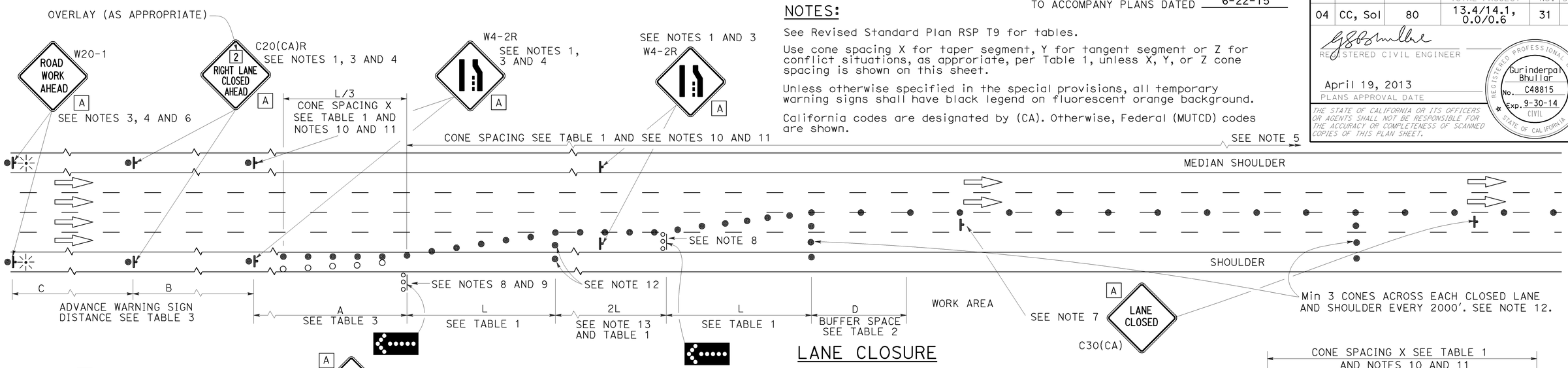

LANE CLOSURE

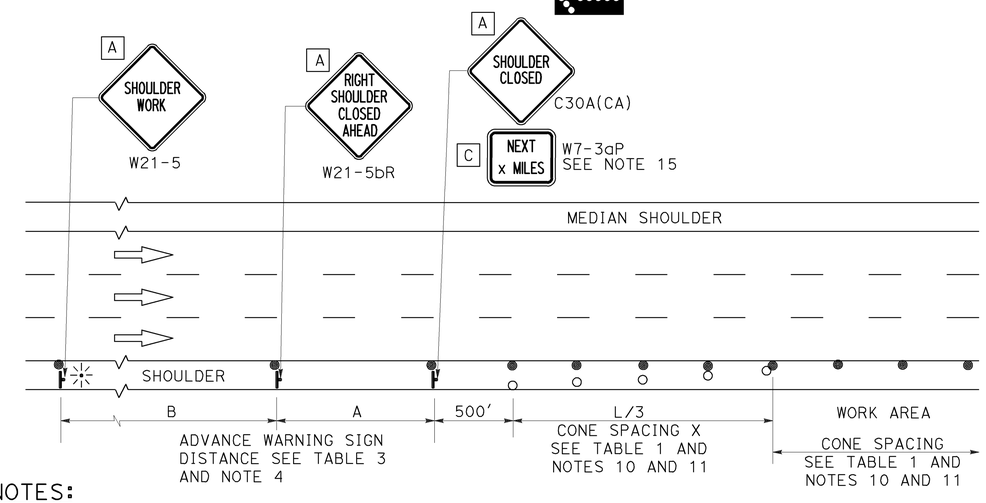

SHOULDER CLOSURE

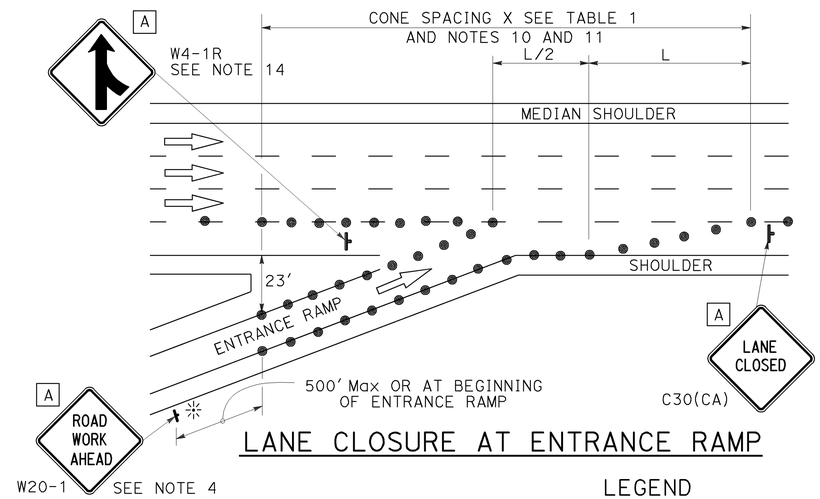

LANE CLOSURE AT ENTRANCE RAMP

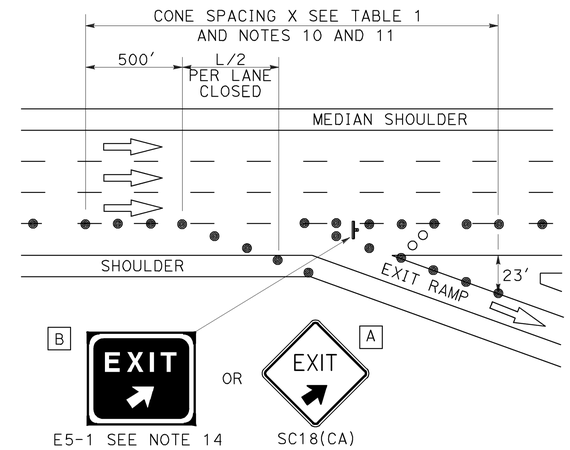

LANE CLOSURE AT EXIT RAMP

NOTES:

1. Median lane closures shall conform to the details as shown except that C20(CA)L and W4-2L signs shall be used.
2. At least one person shall be assigned to provide full time maintenance of traffic control devices for lane closures.
3. Duplicate sign installations are not required:
   a) On opposite shoulder if at least one-half of the available lanes remain open to traffic.
   b) In the median if the width of the median shoulder is less than 8' and the outside lanes are to be closed.
4. Each advance warning sign on each side of the roadway shall be equipped with at least two flags for daytime closure. Each flag shall be at least 16" x 16" in size and shall be orange or fluorescent red-orange in color. Flashing beacons shall be placed at the locations indicated for lane closure during hours of darkness.
5. A G20-2 "END ROAD WORK" sign, with minimum size of 48" x 24" as appropriate, shall be placed at the end of the lane closure unless the end of work area is obvious or ends within a larger project's limits.
6. If the W20-1 sign would follow within 2000' of a stationary W20-1 or G20-1 "ROAD WORK NEXT _____ MILES", use a C20(CA) sign for the first advance warning sign.
7. Place a C30(CA) sign every 2000' throughout length of lane closure.
8. One flashing arrow sign for each lane closed. The flashing arrow signs shall be Type I.
9. A minimum 1500' of sight distance shall be provided where possible for vehicles approaching the first flashing arrow sign. Lane closures shall not begin at top of crest vertical curve or on a horizontal curve.
10. All cones used for lane closures during the hours of darkness shall be fitted with retroreflective bands (or sleeves) as specified in the specifications.
11. Portable delineators, placed at one-half the spacing indicated for traffic cones may be used instead of cones for daytime closures only.
12. Unless otherwise specified in the special provisions, a minimum of 3 cones shall be placed transversely across each closed lane and shoulder at each location where a taper across a traffic lane ends and every 2000' as shown on the "Lane Closure" detail. Two Type II barricades may be used instead of the 3 cones. The transverse alignment of the cones or barricades on the closed shoulder may be shifted from the transverse alignment to provide access to the work.
13. Unless otherwise specified in the special provisions, the 2L tangent shown along lane lines shall be used between the L tapers required for each closed traffic lane.
14. Unless otherwise specified in the special provisions, the E5-1 or SC18(CA) and W4-1 signs shall be used as shown.
15. A W7-3aP "NEXT____ MILES" plaque must be used if theshoulder closure extends beyond the distance that can be perceived by road users.

LEGEND

- TRAFFIC CONE
- TRAFFIC CONE (OPTIONAL TAPER)
- TEMPORARY TRAFFIC CONTROL SIGN
- FLASHING ARROW SIGN (FAS)
- FAS SUPPORT OR TRAILER
- PORTABLE FLASHING BEACON

SIGN PANEL SIZE (Min)

A	48" x 48"
B	72" x 60"
C	36" x 30"

STATE OF CALIFORNIA
DEPARTMENT OF TRANSPORTATION

TRAFFIC CONTROL SYSTEM FOR LANE CLOSURE ON FREEWAYS AND EXPRESSWAYS

NO SCALE

RSP T10 DATED APRIL 19, 2013 SUPERSEDES STANDARD PLAN T10 DATED MAY 20, 2011 - PAGE 237 OF THE STANDARD PLANS BOOK DATED 2010.

REVISED STANDARD PLAN RSP T10

2010 REVISED STANDARD PLAN RSP T10

12-18-12

Dist	COUNTY	ROUTE	POST MILES TOTAL PROJECT	SHEET No.	TOTAL SHEETS
04	CC, Sol	80	13.4/14.1, 0.0/0.6	32	75

REGISTERED CIVIL ENGINEER

April 19, 2013
PLANS APPROVAL DATE

REGISTERED PROFESSIONAL ENGINEER Gurinderpal Bhullar No. C48815 Exp. 9-30-14 CIVIL STATE OF CALIFORNIA

THE STATE OF CALIFORNIA OR ITS OFFICERS OR AGENTS SHALL NOT BE RESPONSIBLE FOR THE ACCURACY OR COMPLETENESS OF SCANNED COPIES OF THIS PLAN SHEET.

TO ACCOMPANY PLANS DATED 6-22-15

TYPICAL RAMP CLOSURES

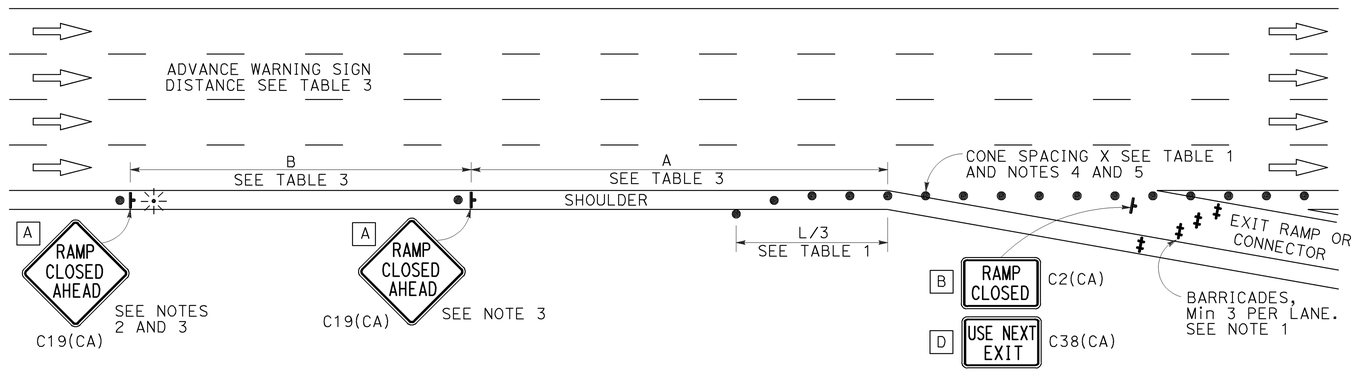

EXIT RAMP OR CONNECTOR

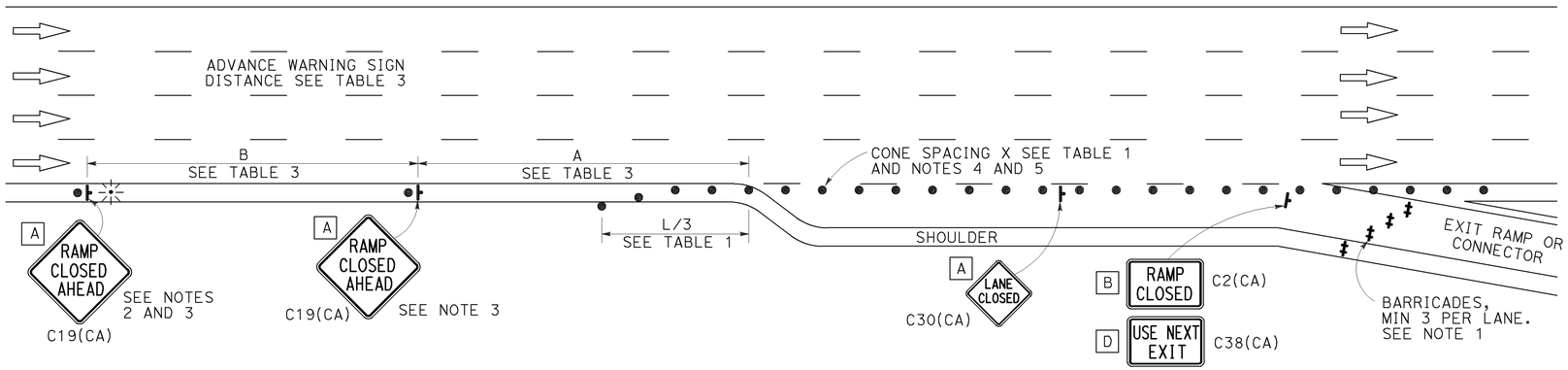

EXIT RAMP OR CONNECTOR WITH ADDITIONAL LANE

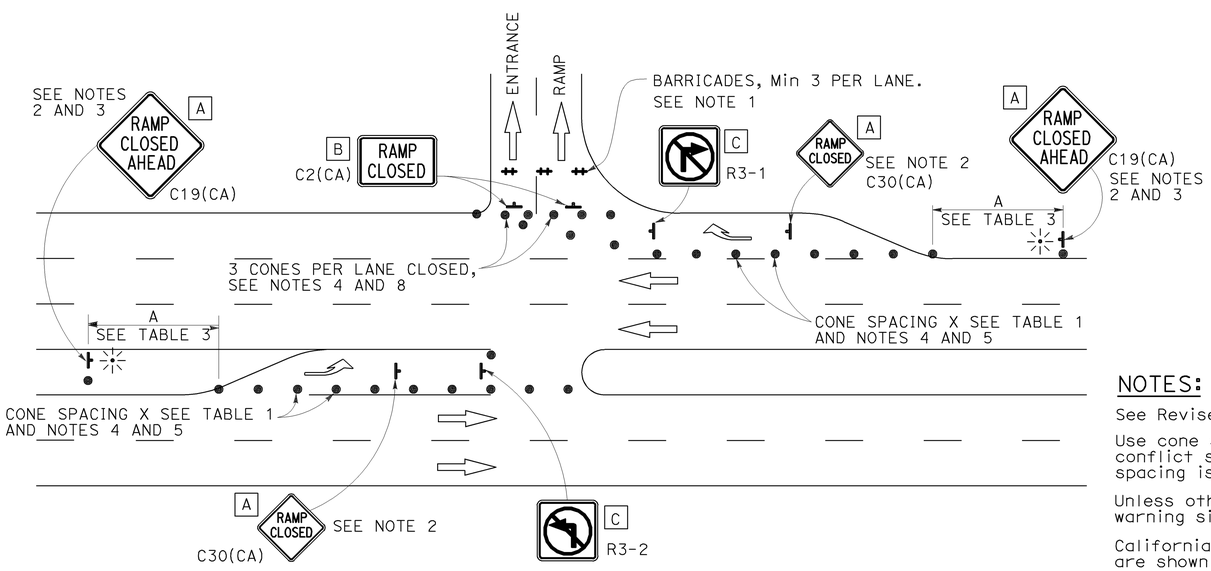

ENTRANCE RAMP WITH TURNING POCKETS

SIGN PANEL SIZE (Min)

- A 48" × 48"
- B 48" × 30"
- C 36" × 36"
- D 48" × 36"

LEGEND

- TRAFFIC CONE
- TEMPORARY TRAFFIC CONTROL SIGN
- BARRICADES
- PORTABLE FLASHING BEACON

NOTES:

1. Barricades shall be Type I, II, or III for closures lasting one week or less and Type III for closures lasting longer than one week.
2. In addition to placing the C19(CA) "RAMP CLOSED AHEAD" and C30(CA) "RAMP CLOSED" signs, black on orange overlay plates with the word "CLOSED" may be mounted, as directed by the Engineer, on all guide signs that refer to the closed ramp. The letter size on the overlay shall be the same as the guide sign.
3. Each advance C19(CA) "RAMP CLOSED AHEAD" sign shall be equipped with at least two flags for daytime closure. Each flag shall be at least 16" × 16" in size and shall be orange or fluorescent red-orange in color. A flashing beacon shall be placed on top of the first C19(CA) sign during hours of darkness.
4. All cones used for ramp closures during the hours of darkness shall be fitted with retroreflective bands (or sleeves) as specified in the specifications.
5. Portable delineators, placed at one-half the spacing indicated for traffic cones, may be used instead of cones for daytime ramp closures only.
6. At least one person shall be assigned to provide full time maintenance of traffic control devices, unless otherwise directed by the Engineer.
7. The existing "EXIT" signs shall be covered during ramp closures.
8. A minimum of 3 cones shall be placed transversely across each closed lane and shoulder.

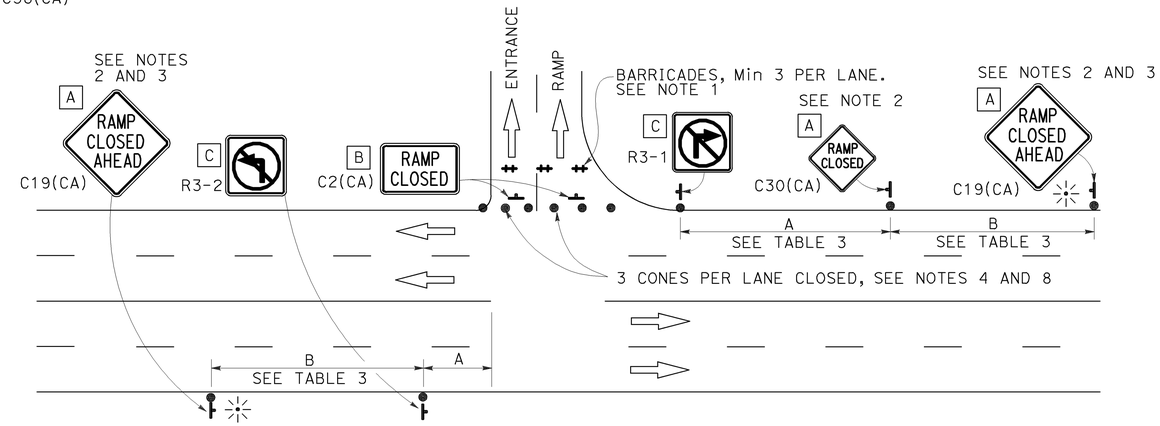

ENTRANCE RAMP WITHOUT TURNING POCKETS

NOTES:

See Revised Standard Plan RSP T9 for tables.

Use cone spacing X for taper segment, Y for tangent segment or Z for conflict situations, as approriate, per Table 1, unless X, Y, or Z cone spacing is shown on this sheet.

Unless otherwise specified in the special provisions, all temporary warning signs shall have black legend on fluorescent orange background.

California codes are designated by (CA). Otherwise, Federal (MUTCD) codes are shown.

STATE OF CALIFORNIA
DEPARTMENT OF TRANSPORTATION

TRAFFIC CONTROL SYSTEM FOR RAMP CLOSURE

NO SCALE

RSP T14 DATED APRIL 19, 2013 SUPERSEDES STANDARD PLAN T14
DATED MAY 20, 2011 - PAGE 242 OF THE STANDARD PLANS BOOK DATED 2010.

REVISED STANDARD PLAN RSP T14

2010 REVISED STANDARD PLAN RSP T14

12-18-12

DIST	COUNTY	ROUTE	POST MILES TOTAL PROJECT	SHEET No.	TOTAL SHEETS
04	CC, Sol	80	13.4/14.1, 0.0/0.6	33	75

REGISTERED CIVIL ENGINEER 2-06-15 DATE

6-22-15
PLANS APPROVAL DATE

REGISTERED PROFESSIONAL ENGINEER A. KUSHKAKI No. 59045 Exp. 6-30-15 CIVIL STATE OF CALIFORNIA

The State of California or its officers or agents shall not be responsible for the accuracy or completeness of electronic copies of this plan sheet.

INDEX TO PLANS

SHEET No.	TITLE
1	GENERAL PLAN
2	PARTIAL PLAN 1
3	PARTIAL PLAN 2
4	PARTIAL PLAN 3
5	JOINT RECONSTRUCTION DETAILS
6	JOINT SEAL TABLE AND DECK REPAIR DETAILS
7	DECK PLATING DETAILS

LEGEND:

- INDICATES EXISTING STRUCTURE
- INDICATES DIRECTION OF TRAFFIC
- INDICATES LIMITS OF REMOVE CONCRETE DECK SURFACE (3/8"), PREPARE CONCRETE BRIDGE DECK SURFACE AND PLACE POLYESTER CONCRETE OVERLAY (3/4" MIN). PRIOR TO PLACING POLYESTER CONCRETE OVERLAY, REPAIR UNSOUND CONCRETE (BOTH FULL DEPTH AND PATCH). SEE "PARTIAL PLAN 1 AND 2" SHEETS.
- INDICATES LIMITS OF PREPARE CONCRETE BRIDGE DECK SURFACE AND TREAT BRIDGE DECK. SEE "PARTIAL PLAN 3" SHEET.
- [1] REPLACE JOINT SEALS. SEE "PARTIAL PLAN 1 AND 2" SHEETS.
- [2] REPLACE STEEL FINGER JOINTS, SEE "PARTIAL PLAN 1 AND 2" SHEETS.
- [3] RECONSTRUCT CONCRETE DECK JOINTS SEE "PARTIAL PLAN 3" SHEET.

STANDARD PLANS

SHEET No.	TITLE
A10A	ABBREVIATIONS (SHEET 1 OF 2)
RSP A10B	ABBREVIATIONS (SHEET 2 OF 2)
B6-21	JOINT SEALS (MAXIMUM MOVEMENT RATING = 2")

CROCKETT OFF-RAMP WESTBOUND — BRIDGE NO. 28-0370K

QUANTITIES

PUBLIC SAFETY PLAN	LUMP	SUM
PREPARE CONCRETE BRIDGE DECK SURFACE	6,714	SQFT
TREAT BRIDGE DECK	6,714	SQFT
FURNISH BRIDGE DECK TREATMENT MATERIAL	75	GAL

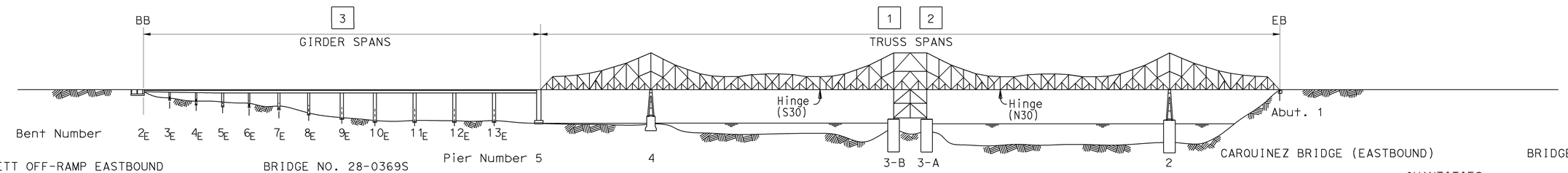

ELEVATION

NOT TO SCALE

CROCKETT OFF-RAMP EASTBOUND — BRIDGE NO. 28-0369S

QUANTITIES

PUBLIC SAFETY PLAN	LUMP	SUM
PREPARE CONCRETE BRIDGE DECK SURFACE	5,734	SQFT
TREAT BRIDGE DECK	5,734	SQFT
FURNISH BRIDGE DECK TREATMENT MATERIAL	64	GAL

NOTES:

1) CONCRETE MUST HAVE A MINIMUM COMPRESSIVE STRENGTH OF f'c = 4,000 PSI IN 28 DAYS.
2) REINFORCING BARS MUST BE EPOXY COATED WITH YIELD STRENGTH OF Fy = 60,000 PSI

CARQUINEZ BRIDGE (EASTBOUND) — BRIDGE NO. 23-0015R

QUANTITIES

LEAD COMPLIANCE PLAN	LUMP	SUM
PUBLIC SAFETY PLAN	LUMP	SUM
RAPID SETTING CONCRETE (PATCH)	1,307	CF
REMOVE CONCRETE DECK SURFACE	174,200	SQFT
REMOVE UNSOUND CONCRETE	1,307	CF
PREPARE CONCRETE BRIDGE DECK SURFACE	273,770	SQFT
FURNISH POLYESTER CONCRETE OVERLAY	13,065	CF
PLACE POLYESTER CONCRETE OVERLAY	174,200	SQFT
TREAT BRIDGE DECK	99,570	SQFT
FURNISH BRIDGE DECK TREATMENT MATERIAL	1,328	GAL
BRIDGE REMOVAL (PORTION), LOCATION A	LUMP	SUM
STRUCTURAL CONCRETE, BRIDGE	30	CY
DRILL AND BOND DOWEL	141	LF
CLEAN EXPANSION JOINT	1,248	LF
JOINT SEAL (MR 1/2")	52	LF
JOINT SEAL (MR 1")	1,456	LF
MOLDED STEEL REINFORCED ELASTOMERIC EXPANSION JOINT SEAL ASSEMBLY	104	LF
BAR REINFORCING STEEL (EPOXY COATED) (BRIDGE)	1,820	LB

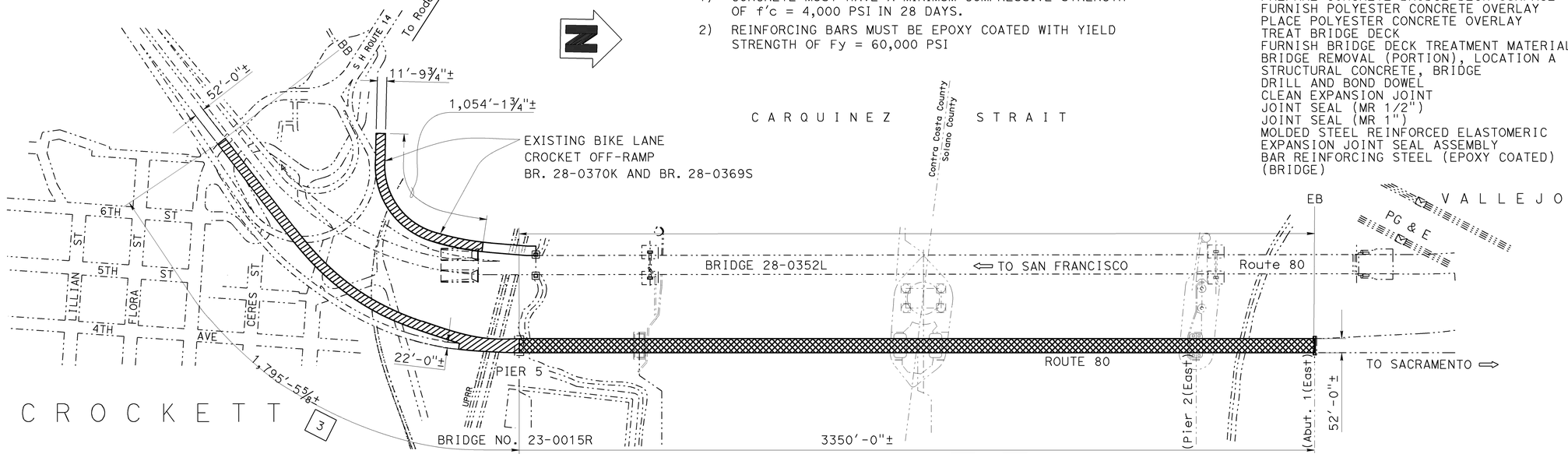

PLAN

NOT TO SCALE

NOTE:
THE CONTRACTOR MUST VERIFY ALL CONTROLLING FIELD DIMENSIONS BEFORE ORDERING OR FABRICATING ANY MATERIAL.

TREAT BRIDGE DECK, OVERLAY BRIDGE DECK, REHABILITATE DECK EXPANSION JOINT AND DECK SEISMIC JOINT AND REPLACE JOINT SEAL

	BY	CHECKED			
DESIGN	A. KUSHKAKI	C. LEE	LOAD FACTOR DESIGN	LIVE LOADING: HS20-44 AND ALTERNATIVE AND PERMIT DESIGN LOAD	
DETAILS	B. BALLESTEROS	A. KUSHKAKI	LAYOUT	B. BALLESTEROS	A. KUSHKAKI
QUANTITIES	A. KUSHKAKI	C. LEE	SPECIFICATIONS	D. KLEIN	PLANS AND SPECS COMPARED D. KLEIN

DESIGN ENGINEER 2-06-15

STATE OF CALIFORNIA
DEPARTMENT OF TRANSPORTATION

DIVISION OF MAINTENANCE
STRUCTURE MAINTENANCE AND INVESTIGATIONS

BRIDGE NO. VARIOUS
POST MILE VARIES

CARQUINEZ BRIDGE
GENERAL PLAN

STRUCTURES MAINTENANCE GENERAL PLAN SHEET (ENGLISH) (REV. 09-01-10)

ORIGINAL SCALE IN INCHES FOR REDUCED PLANS 0 1 2 3

UNIT: 3486
PROJECT NUMBER & PHASE: 04120001011
CONTRACT NO.: 04-3G4031

DISREGARD PRINTS BEARING EARLIER REVISION DATES

REVISION DATES 5-14-15 9-19-14 3-24-15

SHEET 1 OF 7

FILE => 3g4031_a01gp.dgn

USERNAME => s133066 DATE PLOTTED => 02-JUL-2015 TIME PLOTTED => 12:17

DIST	COUNTY	ROUTE	POST MILES TOTAL PROJECT	SHEET No	TOTAL SHEETS
04	CC, Sol	80	13.4/14.1, 0.0/0.6	34	75

REGISTERED CIVIL ENGINEER 2-06-15 DATE

6-22-15
PLANS APPROVAL DATE

REGISTERED PROFESSIONAL ENGINEER
A. KUSHKAKI
No. 59045
Exp. 6-30-15
CIVIL
STATE OF CALIFORNIA

The State of California or its officers or agents shall not be responsible for the accuracy or completeness of electronic copies of this plan sheet.

To get to the Caltrans web site, go to: http://www.dot.ca.gov

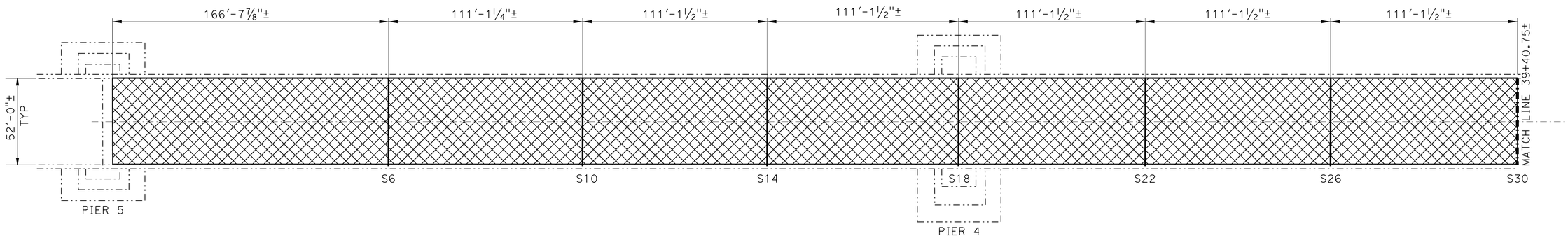

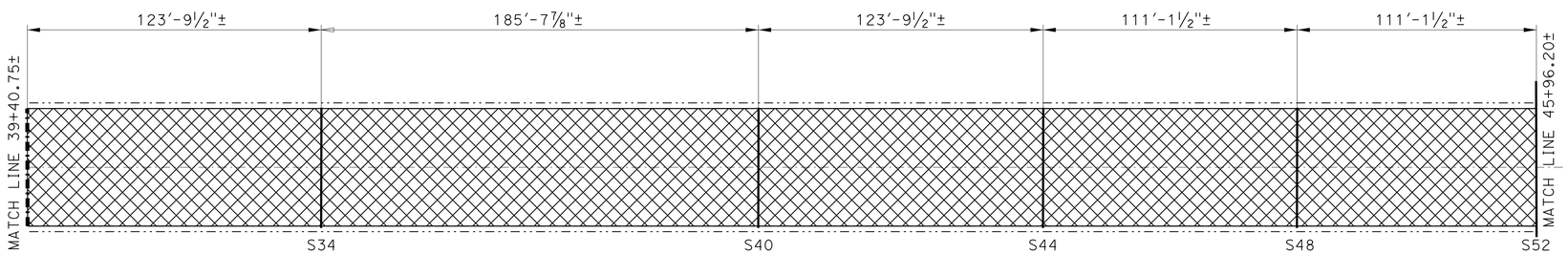

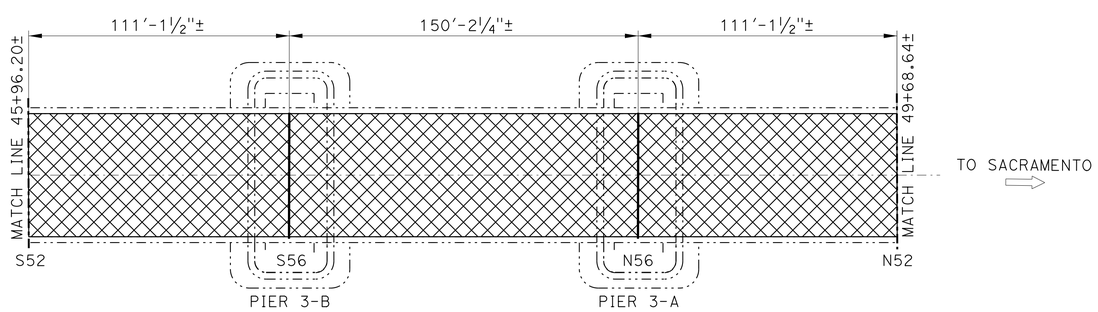

LEGEND:

S30	DENOTES BRIDGE TRUSS PANEL POINT
—·—·—	INDICATES EXISTING STRUCTURE
▬·▬·▬	INDICATES LOCATION OF REMOVE EXISTING STEEL FINGER JOINT, RECONSTRUCT EXPANSION JOINT. FOR DETAILS, SEE "JOINT RECONSTRUCTION DETAILS" SHEET.
———	INDICATES LOCATION OF CLEAN EXPANSION JOINT AND INSTALL NEW JOINT SEAL. FOR DETAILS SEE "JOINT SEAL TABLE AND DECK REPAIR DETAILS" SHEET.
▨	INDICATES LIMITS OF REMOVE CONCRETE DECK SURFACE (⅜"), PREPARE CONCRETE BRIDGE DECK SURFACE AND PLACE POLYESTER CONCRETE OVERLAY (¾" MIN). PRIOR TO PLACING POLYESTER CONCRETE OVERLAY, REPAIR UNSOUND CONCRETE (BOTH FULL DEPTH AND PATCH. FOR DETAILS, SEE "JOINT SEAL TABLE AND DECK REPAIR DETAILS" SHEET.

THE CONTRACTOR MUST VERIFY ALL CONTROLLING FIELD DIMENSIONS BEFORE ORDERING OR FABRICATING ANY MATERIAL.

TREAT BRIDGE DECK, OVERLAY BRIDGE DECK, REHABILITATE DECK EXPANSION JOINT AND DECK SEISMIC JOINT AND REPLACE JOINT SEAL

	BY	CHECKED
DESIGN	A. KUSHKAKI	C. LEE
DETAILS	B. BALLESTEROS	A. KUSHKAKI
QUANTITIES	A. KUSHKAKI	C. LEE

STATE OF CALIFORNIA
DEPARTMENT OF TRANSPORTATION

DIVISION OF MAINTENANCE
STRUCTURE MAINTENANCE AND INVESTIGATIONS

BRIDGE NO. VARIOUS
POST MILE VARIES

CARQUINEZ BRIDGE
PARTIAL PLAN 1

STRUCTURES DESIGN DETAIL SHEET (ENGLISH) (REV. 10/25/05)

ORIGINAL SCALE IN INCHES FOR REDUCED PLANS 0 1 2 3

UNIT: 3486
PROJECT NUMBER & PHASE: 04120001011
CONTRACT NO.: 04-3G4031

REVISION DATES: 9-16-14 9-19-14

SHEET 2 OF 7

FILE => 3g4031_b02gp.dgn

USERNAME => s133066 DATE PLOTTED => 03-JUL-2015 TIME PLOTTED => 14:48

DIST	COUNTY	ROUTE	POST MILES TOTAL PROJECT	SHEET No	TOTAL SHEETS
04	CC, Sol	80	13.4/14.1, 0.0/0.6	35	75

REGISTERED CIVIL ENGINEER 2-06-15 DATE

6-22-15
PLANS APPROVAL DATE

REGISTERED PROFESSIONAL ENGINEER
A. KUSHKAKI
No. 59045
Exp. 6-30-15
CIVIL
STATE OF CALIFORNIA

The State of California or its officers or agents shall not be responsible for the accuracy or completeness of electronic copies of this plan sheet.

To get to the Caltrans web site, go to: http://www.dot.ca.gov

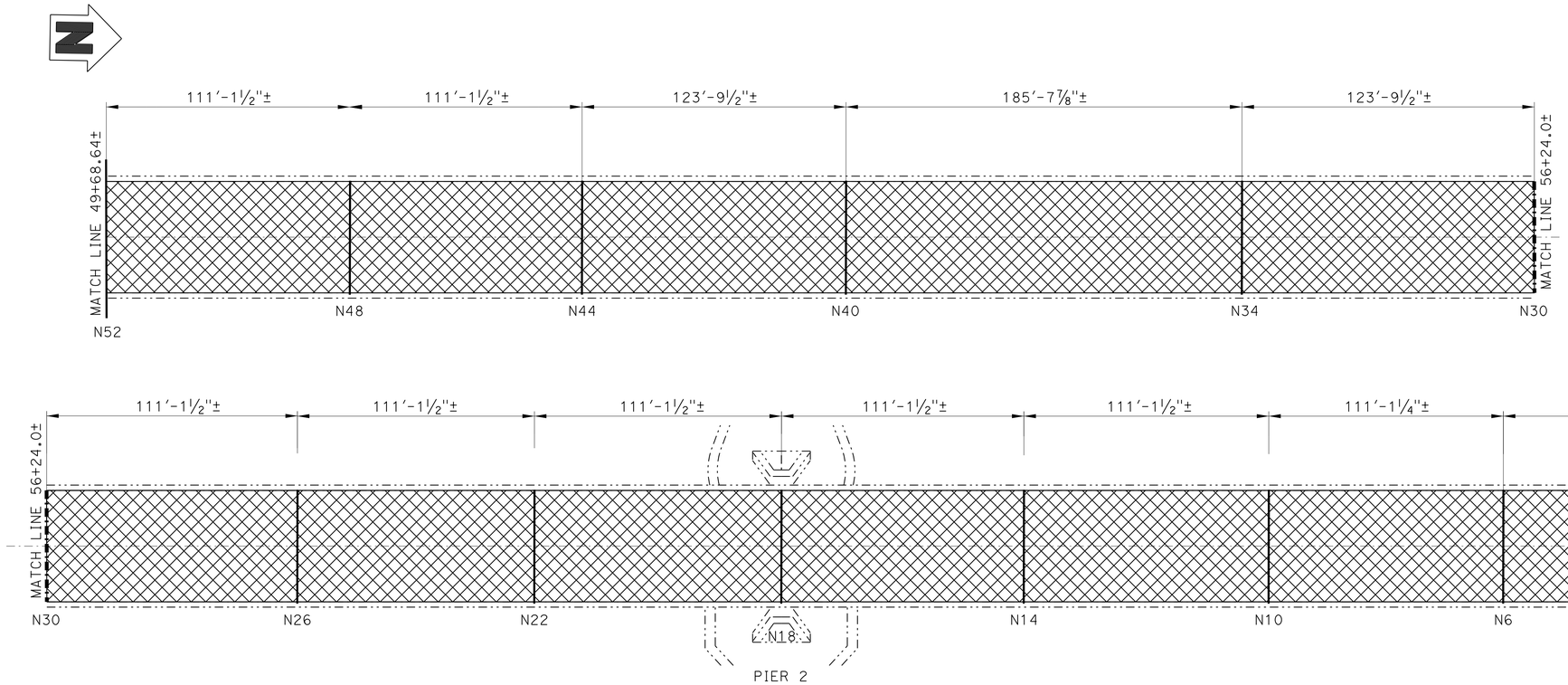

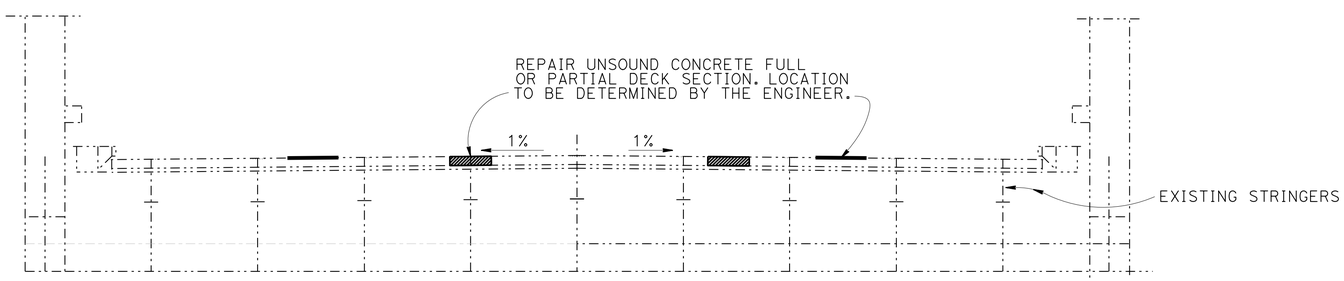

TYPICAL SECTION
NO SCALE

LEGEND:

N30 DENOTES BRIDGE TRUSS PANEL POINT

INDICATES EXISTING STRUCTURE

INDICATES LOCATION OF REMOVE EXISTING STEEL FINGER JOINT, RECONSTRUCT EXPANSION JOINT. FOR DETAILS, SEE "JOINT RECONSTRUCTION DETAILS" SHEET.

INDICATES LOCATION OF CLEAN EXPANSION JOINT AND INSTALL NEW JOINT SEAL. FOR DETAILS SEE "JOINT SEAL TABLE AND DECK REPAIR DETAILS" SHEET.

INDICATES LIMITS OF REMOVE CONCRETE DECK SURFACE (⅜"), PREPARE CONCRETE BRIDGE DECK SURFACE AND PLACE POLYESTER CONCRETE OVERLAY (¾" MIN). PRIOR TO PLACING POLYESTER CONCRETE OVERLAY, REPAIR UNSOUND CONCRETE (BOTH FULL DEPTH AND PATCH. FOR DETAILS, SEE "JOINT SEAL TABLE AND DECK REPAIR DETAILS" SHEET.

THE CONTRACTOR MUST VERIFY ALL CONTROLLING FIELD DIMENSIONS BEFORE ORDERING OR FABRICATING ANY MATERIAL.

TREAT BRIDGE DECK, OVERLAY BRIDGE DECK, REHABILITATE DECK EXPANSION JOINT AND DECK SEISMIC JOINT AND REPLACE JOINT SEAL

	BY	CHECKED
DESIGN	A. KUSHKAKI	C. LEE
DETAILS	B. BALLESTEROS	A. KUSHKAKI
QUANTITIES	A. KUSHKAKI	C. LEE

STATE OF CALIFORNIA
DEPARTMENT OF TRANSPORTATION

DIVISION OF MAINTENANCE
STRUCTURE MAINTENANCE AND INVESTIGATIONS

BRIDGE NO. VARIOUS
POST MILE VARIES

CARQUINEZ BRIDGE
PARTIAL PLAN 2

STRUCTURES DESIGN DETAIL SHEET (ENGLISH) (REV. 10/25/05)

ORIGINAL SCALE IN INCHES FOR REDUCED PLANS 0 1 2 3

UNIT: 3486
PROJECT NUMBER & PHASE: 04120001011
CONTRACT NO.: 04-3G4031

REVISION DATES: 9-16-14 9-19-14

SHEET 3 OF 7

FILE => 3g4031_c03gp.dgn

USERNAME => s133066 DATE PLOTTED => 03-JUL-2015 TIME PLOTTED => 14:48

DIST	COUNTY	ROUTE	POST MILES TOTAL PROJECT	SHEET No	TOTAL SHEETS
04	CC, Sol	80	13.4/14.1, 0.0/0.6	36	75

REGISTERED CIVIL ENGINEER 2-06-15 DATE

6-22-15
PLANS APPROVAL DATE

REGISTERED PROFESSIONAL ENGINEER
A. KUSHKAKI
No. 59045
Exp. 6-30-15
CIVIL
STATE OF CALIFORNIA

The State of California or its officers or agents shall not be responsible for the accuracy or completeness of electronic copies of this plan sheet.

To get to the Caltrans web site, go to: http://www.dot.ca.gov

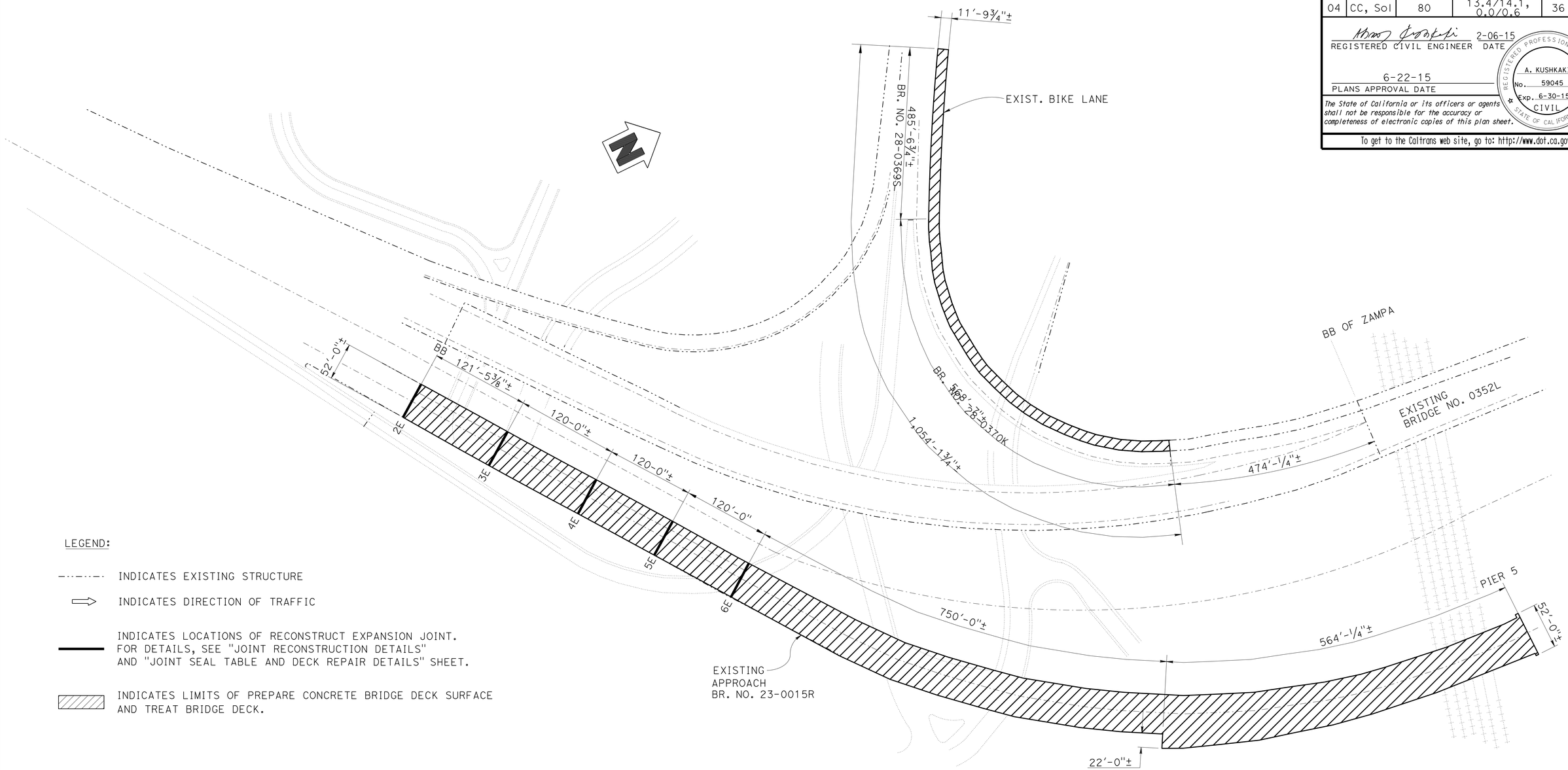

LEGEND:

- INDICATES EXISTING STRUCTURE
- INDICATES DIRECTION OF TRAFFIC
- INDICATES LOCATIONS OF RECONSTRUCT EXPANSION JOINT. FOR DETAILS, SEE "JOINT RECONSTRUCTION DETAILS" AND "JOINT SEAL TABLE AND DECK REPAIR DETAILS" SHEET.
- INDICATES LIMITS OF PREPARE CONCRETE BRIDGE DECK SURFACE AND TREAT BRIDGE DECK.

THE CONTRACTOR MUST VERIFY ALL CONTROLLING FIELD DIMENSIONS BEFORE ORDERING OR FABRICATING ANY MATERIAL.

TREAT BRIDGE DECK, OVERLAY BRIDGE DECK, REHABILITATE DECK EXPANSION JOINT AND DECK SEISMIC JOINT AND REPLACE JOINT SEAL

	BY	CHECKED
DESIGN	A. KUSHKAKI	C. LEE
DETAILS	B. BALLESTEROS	A. KUSHKAKI
QUANTITIES	A. KUSHKAKI	C. LEE

STATE OF CALIFORNIA
DEPARTMENT OF TRANSPORTATION

DIVISION OF MAINTENANCE
STRUCTURE MAINTENANCE AND INVESTIGATIONS

BRIDGE NO. VARIOUS
POST MILE VARIES

CARQUINEZ BRIDGE
PARTIAL PLAN 3

STRUCTURES DESIGN DETAIL SHEET (ENGLISH) (REV. 10/25/05)

ORIGINAL SCALE IN INCHES FOR REDUCED PLANS 0 1 2 3

UNIT: 3486
PROJECT NUMBER & PHASE: 04120001011
CONTRACT NO.: 04-3G4031

REVISION DATES: 9-16-14

SHEET 4 OF 7

FILE => 3g4031_d04gp.dgn

USERNAME => s133066 DATE PLOTTED => 03-JUL-2015 TIME PLOTTED => 14:48

DIST	COUNTY	ROUTE	POST MILES TOTAL PROJECT	SHEET No	TOTAL SHEETS
04	CC, Sol	80	13.4/14.1, 0.0/0.6	37	75

REGISTERED CIVIL ENGINEER 2-06-15 DATE

6-22-15
PLANS APPROVAL DATE

REGISTERED PROFESSIONAL ENGINEER A. KUSHKAKI No. 59045 Exp. 6-30-15 CIVIL STATE OF CALIFORNIA

The State of California or its officers or agents shall not be responsible for the accuracy or completeness of electronic copies of this plan sheet.

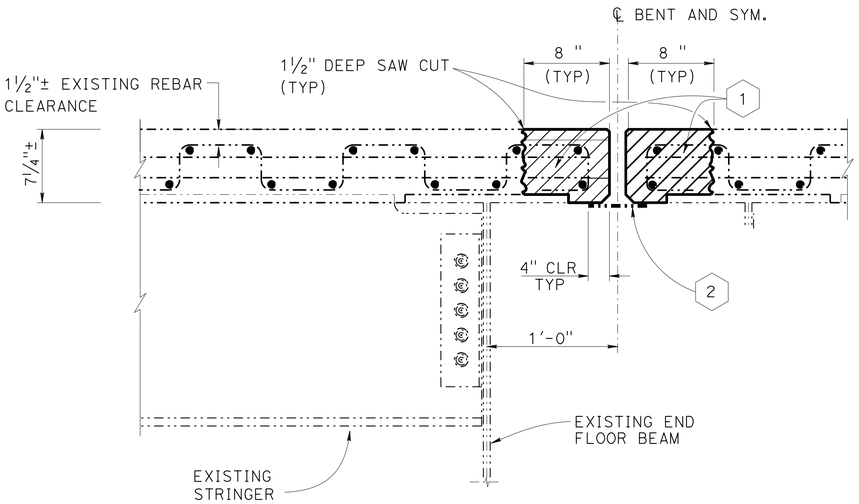

TYPICAL CONCRETE REMOVAL DETAIL

NO SCALE

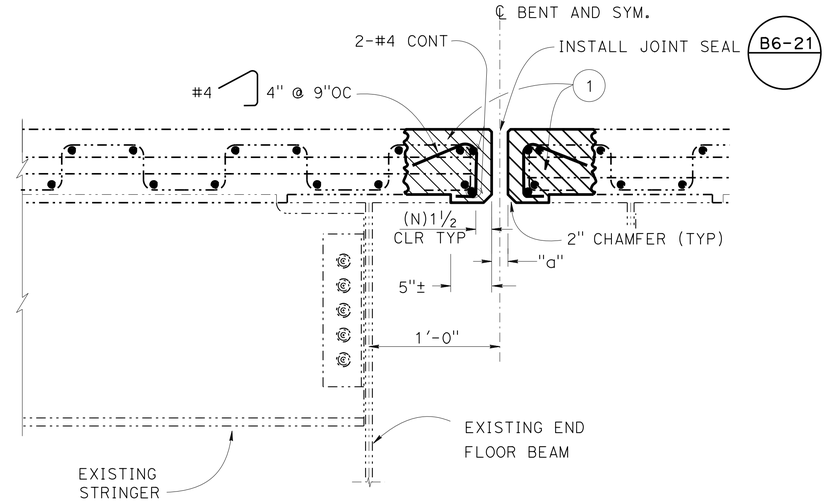

TYPICAL NEW JOINT DETAIL

NO SCALE

LEGEND:

- (1) REMOVE CONCRETE
- (2) REMOVE EXISTING 12" WIDE CONT. STEEL PLATE
- INDICATES EXISTING STRUCTURE
- INDICATES LIMITS OF BRIDGE REMOVAL (PORTION), RETAIN EXISTING REBAR
- INDICATES LIMITS OF STRUCTURAL CONCRETE, BRIDGE

EXPANSION JOINT RECONSTRUCTION DETAILS AT BRIDGE 23--0015R (ABUT 2E THRU 6E)

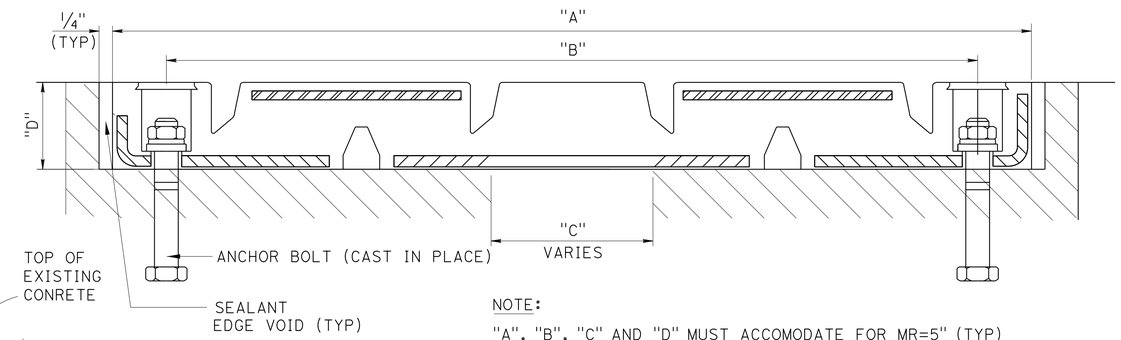

NOTE:
"A", "B", "C" AND "D" MUST ACCOMODATE FOR MR=5" (TYP)

MOLDED STEEL REINFORCED ELASTOMERIC EXPANSION JOINT SEAL ASSEMBLY DETAIL AT BR.NO. 23-0015R (HINGE N30 AND HINGE S30)

No Scale

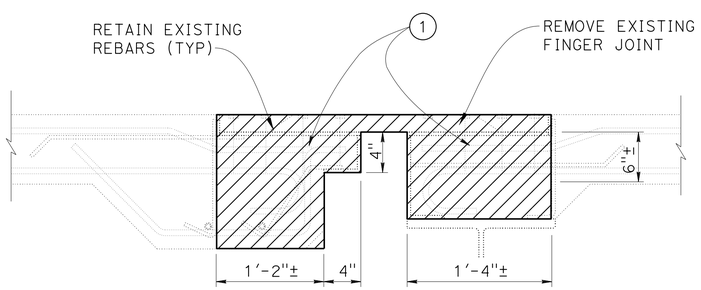

TYPICAL CONC. REMOVAL DETAIL

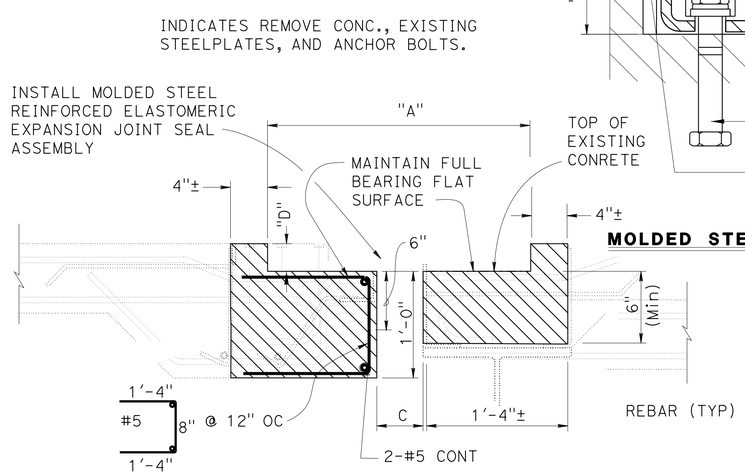

TYPICAL NEW JOINT DETAIL

NOTES:

1. RETAIN EXISTING REINFORCING BARS AND ANCHOR BARS.
2. NEW JOINT MUST BE CONSTRUCTED AFTER PLACEMENT OF ¾" POLYESTER CONCRETE OVERLAY.
3. FOR RAPID STRENGTH CONCRETE, THE MINIMUM COMPRESSIVE OF CONCRETE MUST BE 3000 PSI AT ONE HOUR PRIOR TO OPENING TO TRAFFIC. UNLESS IT IS PROTECTED BY STEEL PLATE.

NOTE:
THE CONTRACTOR MUST VERIFY ALL CONTROLLING FIELD DIMENSIONS BEFORE ORDERING OR FABRICATING ANY MATERIAL.

EXPANSION JOINT RECONSTRUCTION DETAILS AT BR. NO. 23-0015R (HINGE N30 AND HINGE S30)

NO SCALE

TREAT BRIDGE DECK, OVERLAY BRIDGE DECK, REHABILITATE DECK EXPANSION JOINT AND DECK SEISMIC JOINT AND REPLACE JOINT SEAL

	BY	CHECKED
DESIGN	A. KUSHKAKI	C. LEE
DETAILS	B. BALLESTEROS	A. KUSHKAKI
QUANTITIES	A. KUSHKAKI	C. LEE

STATE OF CALIFORNIA
DEPARTMENT OF TRANSPORTATION

DIVISION OF MAINTENANCE
STRUCTURE MAINTENANCE AND INVESTIGATIONS

BRIDGE NO. 23-0015R
POST MILE VARIES

CARQUINEZ BRIDGE
JOINT RECONSTRUCTION DETAILS

STRUCTURES MAINTENANCE DETAIL SHEET (ENGLISH) (REV. 09-01-10)

ORIGINAL SCALE IN INCHES FOR REDUCED PLANS 0 1 2 3

UNIT: 3486
PROJECT NUMBER & PHASE: 04120001011
CONTRACT NO.: 04-3G4031

DISREGARD PRINTS BEARING EARLIER REVISION DATES

REVISION DATES				SHEET	OF
09-16-14	04-15-14			5	7

FILE => 3g4031_e05jts.dgn

USERNAME => s133066 DATE PLOTTED => 03-JUL-2015 TIME PLOTTED => 14:26

DIST	COUNTY	ROUTE	POST MILES TOTAL PROJECT	SHEET No	TOTAL SHEETS
04	CC, Sol	80	13.4/14.1, 0.0/0.6	38	75

REGISTERED CIVIL ENGINEER 2-06-15 DATE

6-22-15
PLANS APPROVAL DATE

REGISTERED PROFESSIONAL ENGINEER A. KUSHKAKI No. 59045 Exp. 6-30-15 CIVIL STATE OF CALIFORNIA

The State of California or its officers or agents shall not be responsible for the accuracy or completeness of electronic copies of this plan sheet.

JOINT SEAL TABLE

BRIDGE NUMBER	JOINT LOCATION	MINIMUM "MR" (INCHES)	APPROXIMATE LENGTH (FEET)	EXISTING WATER STOP	APPROXIMATE DEPTH TO CLEAN EXPANSION JOINT (INCHES)
23-0015R	S6	1	52	NO	12
	S10	1	52	NO	12
	S14	1	52	NO	12
	S18	1	52	NO	12
	S22	1	52	NO	12
	S26	1	52	NO	12
	S30	* 5	52	NO	NA
	S34	1	52	NO	12
	S40	1	52	NO	12
	S44	1	52	NO	12
	S48	1	52	NO	12
	S52	1	52	NO	12
	S56	1	52	NO	12
	N56	1	52	NO	12
	N52	1	52	NO	12
	N48	1	52	NO	12
	N44	1	52	NO	12
	N40	1	52	NO	12
	N34	1	52	NO	12
	N30	* 5	52	NO	NA
	N26	1	52	NO	12
	N22	1	52	NO	12
	N18	1	52	NO	12
	N14	1	52	NO	12
	N10	1	52	NO	12
	N6	1	52	NO	12
	2E	½	52	NO	NA
	3E	1	52	NO	NA
	4E	1	52	NO	NA
	5E	1	52	NO	NA
	6E	1	52	NO	NA

* MOLDED STEEL REINFORCED ELASTOMERIC EXPANSION JOINT.

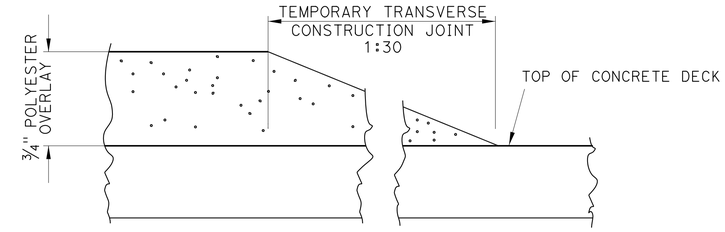

TRANSVERSE CONSTRUCTION JOINT

BR NO. 23-0015R

B6-21

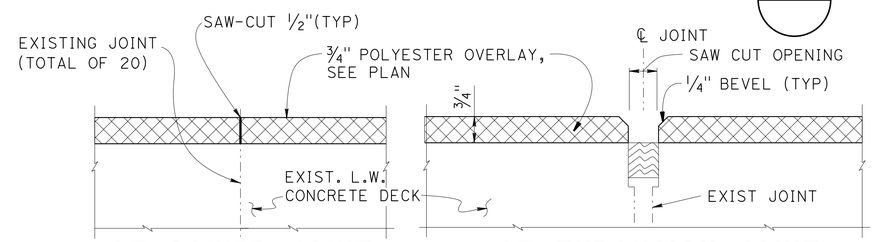

AT SAWED JOINT **AT EXPANSION JOINT**

EXISTING JOINT DETAIL BR NO. 23-0015R

NO SCALE

NOTES:

1. SAWCUT AND REPLACE JOINT SEAL PER PLAN AFTER COMPLETION OF DECK OVERLAY.
2. REINFORCING MAY BE ENCOUNTERED DURING UNSOUND CONCRETE DECK REMOVAL
3. REMOVE UNSOUND CONCRETE AND PATCH ACCORDINGLY IN THE AREA OF EXPOSED DECK REINFORCEMENT.

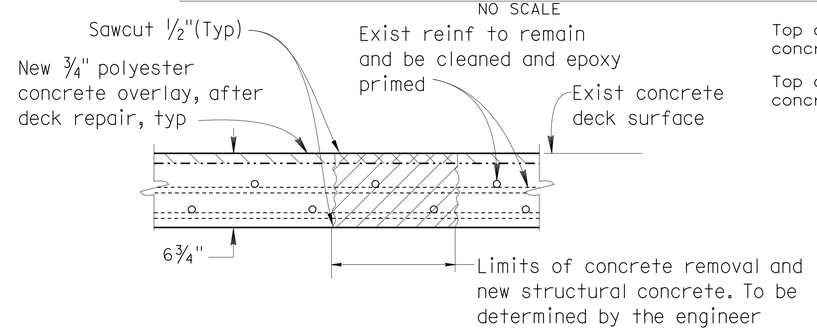

FULL DEPTH DECK REPLACEMENT DETAILS

Full depth repair must be completed prior to ¾" bridge deck removal

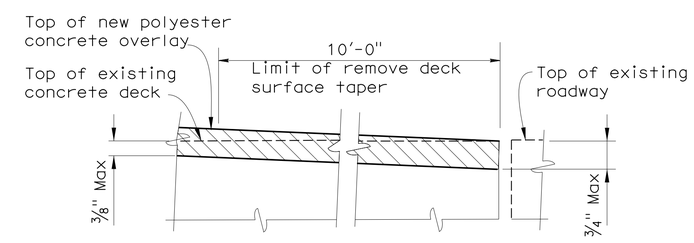

LONGITUDINAL OVERLAY CONFORM DETAIL

NO SCALE

TEMPORARY DECKING DESIGN LOAD CRITERIA

MOMENT DEMAND/ FOOT (kip-ft / ft)	BOLT SHEAR/FOOT (kip / ft)	BOLT TENSION (kip)
8	3.75	8

NOTE: PLATE DEFLECTION MUST NOT BE GREATER THAN S/300 (S=SPAN OF PLATE).
ANCHORAGE WASHER MUST BE NEOPRENE OR SIMILAR.
MAXIMUM BOLT SPACING MUST NOT EXCEED 24" O.C.
MAXIMUM PLATE SPAN = 2'-0"

NOTE:

THE CONTRACTOR MUST VERIFY ALL CONTROLLING FIELD DIMENSIONS BEFORE ORDERING OR FABRICATING ANY MATERIAL.

DECK REPAIR TABLE

REPAIR TYPE	REMOVAL ITEM	REPLACEMENT MATERIAL*	APPROXIMATE AREA DAMAGE (SF)	APPROXIMATE REMOVAL DEPTH (IN)
FULL DEPTH DECK REPLACEMENT	BRIDGE REMOVAL (PORTION)	STRUCTURAL CONCRETE (BRIDGE)	523	6¾
DECK DAMAGE REPAIR	REMOVE UNSOUND CONCRETE	REPID SETTING CONCRETE (PATCH)	5,226	3

* NOTE: POLYESTER CONCRETE OVERLAY COVERS BOTH STRUCTURAL CONCRETE(BRIDGE) AND RAPID SETTING CONCRETE (PATCH)

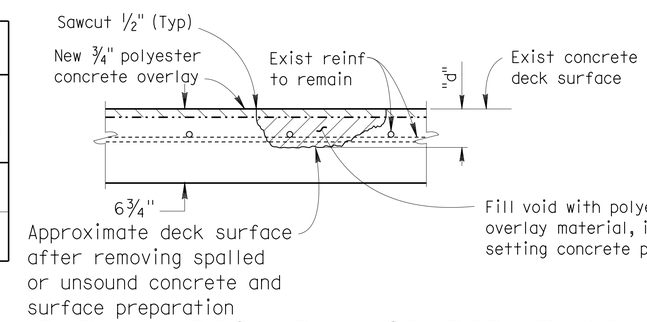

PARTIAL DECK DAMAGE REPAIR DETAIL

Location will be determined by the Engineer

TREAT BRIDGE DECK, OVERLAY BRIDGE DECK, REHABILITATE DECK EXPANSION JOINT AND DECK SEISMIC JOINT AND REPLACE JOINT SEAL

	BY	CHECKED
DESIGN	A. KUSHKAKI	C. LEE
DETAILS	B. BALLESTEROS	A. KUSHKAKI
QUANTITIES	A. KUSHKAKI	C. LEE

STATE OF CALIFORNIA
DEPARTMENT OF TRANSPORTATION

DIVISION OF MAINTENANCE
STRUCTURE MAINTENANCE AND INVESTIGATIONS

BRIDGE NO. 23-0015R
POST MILE VARIES

CARQUINEZ BRIDGE

JOINT SEAL TABLE AND DECK REPAIR DETAILS

STRUCTURES MAINTENANCE DETAIL SHEET (ENGLISH) (REV. 09-01-10)

ORIGINAL SCALE IN INCHES FOR REDUCED PLANS 0 1 2 3

UNIT: 3486
PROJECT NUMBER & PHASE: 04120001011
CONTRACT NO.: 04-3G4031

DISREGARD PRINTS BEARING EARLIER REVISION DATES → 9-16-14

REVISION DATES | SHEET 6 | OF 7

FILE => 3g4031_f06jnt.dgn

USERNAME => s133066 DATE PLOTTED => 03-JUL-2015 TIME PLOTTED => 14:28

DIST	COUNTY	ROUTE	POST MILES TOTAL PROJECT	SHEET No	TOTAL SHEETS
04	CC, Sol	80	13.4/14.1, 0.0/0.6	39	75

REGISTERED CIVIL ENGINEER 2-06-15 DATE

6-22-15
PLANS APPROVAL DATE

REGISTERED PROFESSIONAL ENGINEER A. KUSHKAKI No. 59045 Exp. 6-30-15 CIVIL STATE OF CALIFORNIA

The State of California or its officers or agents shall not be responsible for the accuracy or completeness of electronic copies of this plan sheet.

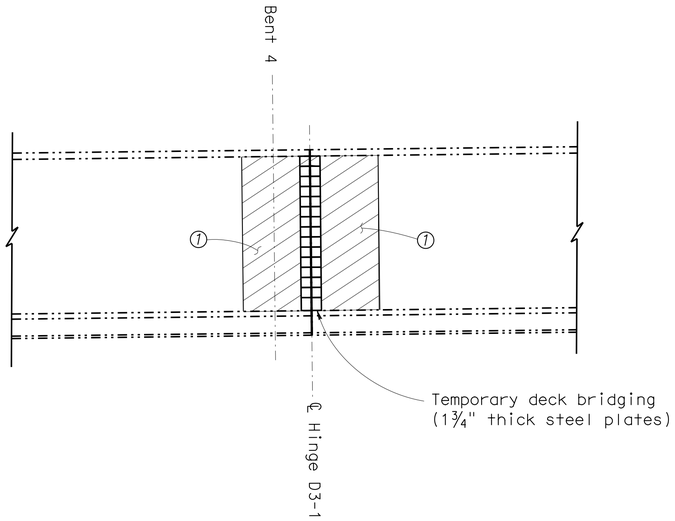

TAPER DETAIL

No Scale

Note:

① Place tapered 200:1 (leading / trailing edge = ½" thick Max) rigid pavement material at approach and departure of construction.

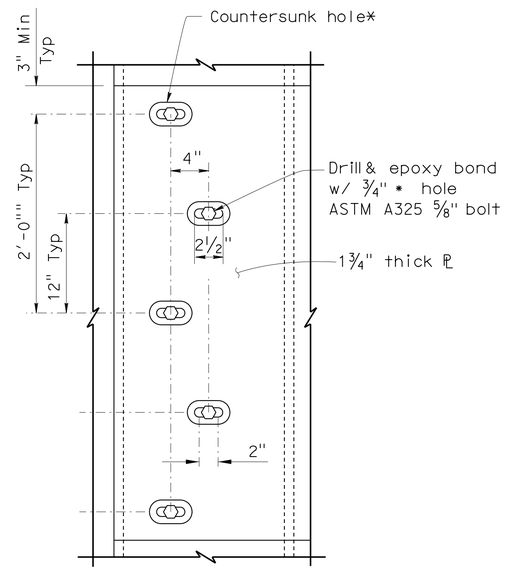

BOLT STAGGER DETAIL

1½" = 1'-0"

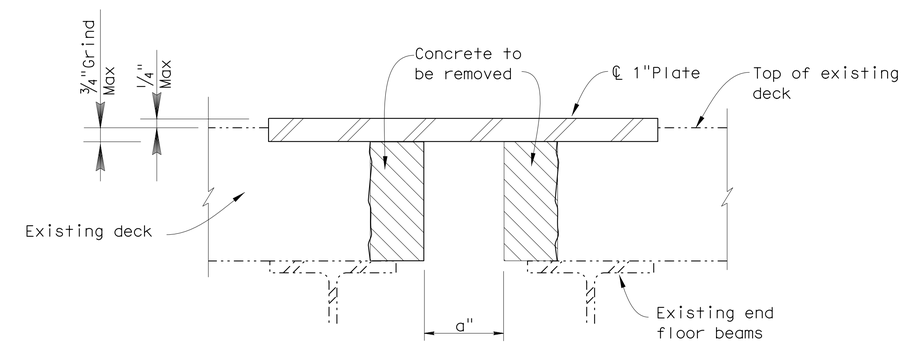

TEMPORARY RECESSED DECK PLATE DETAIL

AT BRIDGE 23-0015R (ABT 2E THRU 6E)
No Scale

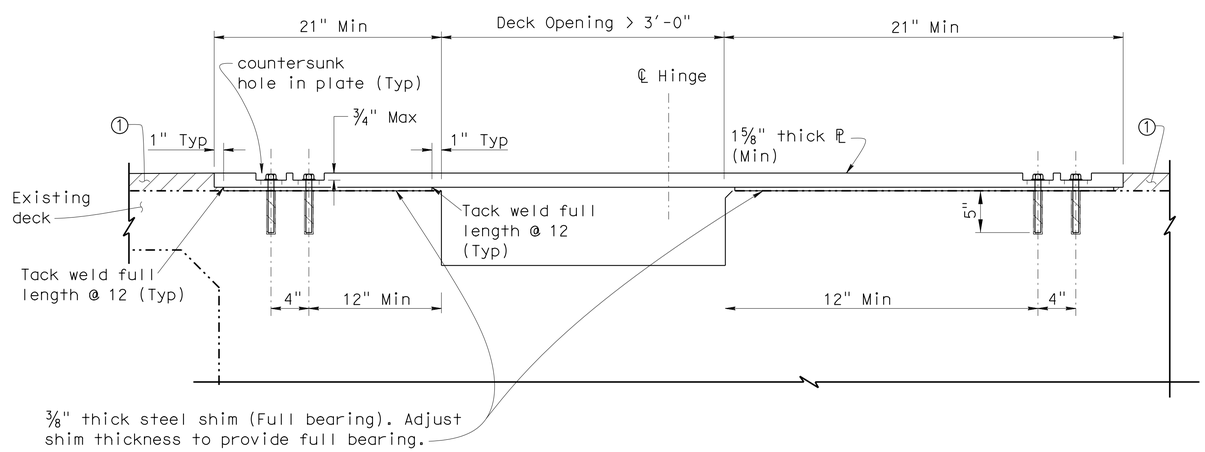

TEMPORARY DECK PLATE CONNECTION

NO SCALE

NOTE:

THE CONTRACTOR MUST VERIFY ALL CONTROLLING FIELD DIMENSIONS BEFORE ORDERING OR FABRICATING ANY MATERIAL.

TREAT BRIDGE DECK, OVERLAY BRIDGE DECK, REHABILITATE DECK EXPANSION JOINT AND DECK SEISMIC JOINT AND REPLACE JOINT SEAL

CROCKETT VIADUCT (D3-LINE)

DECK PLATING DETAILS

DESIGN	BY A. KUSHKAKI	CHECKED C. LEE
DETAILS	BY B. BALLESTEROS	CHECKED A. KUSHKAKI
QUANTITIES	BY A. KUSHKAKI	CHECKED C. LEE

STATE OF CALIFORNIA
DEPARTMENT OF TRANSPORTATION

DIVISION OF MAINTENANCE
STRUCTURE MAINTENANCE AND INVESTIGATIONS

BRIDGE NO. 28-0367L
POST MILE VARIES

STRUCTURES MAINTENANCE DETAIL SHEET (ENGLISH) (REV. 09-01-10)

ORIGINAL SCALE IN INCHES FOR REDUCED PLANS 0 1 2 3

UNIT: 3486
PROJECT NUMBER & PHASE: 04120001011
CONTRACT NO.: 04-3G4031

DISREGARD PRINTS BEARING EARLIER REVISION DATES → 4-16-15

REVISION DATES | SHEET 7 | OF 7

FILE => 3g4031_g07gp.dgn

USERNAME => s133066 DATE PLOTTED => 03-JUL-2015 TIME PLOTTED => 14:28

DIST	COUNTY	ROUTE	POST MILES TOTAL PROJECT	SHEET No.	TOTAL SHEETS
04	CC, Sol	80	13.4/14.1, 0.0/0.6	40	75

REGISTERED CIVIL ENGINEER 2-06-15 DATE

6-22-15
PLANS APPROVAL DATE

REGISTERED PROFESSIONAL ENGINEER A. KUSHKAKI No. 59045 Exp. 6-30-15 CIVIL STATE OF CALIFORNIA

The State of California or its officers or agents shall not be responsible for the accuracy or completeness of electronic copies of this plan sheet.

STANDARD PLANS

SHEET No.	TITLE
A10A	ABBREVIATIONS (SHEET 1 OF 2)
RSP A10B	ABBREVIATIONS (SHEET 2 OF 2)

INDEX TO PLANS

SHEET No.	TITLE
1	GENERAL PLAN
2	SWIVEL EXPANSION JOINT PLAN
3	DS640B (MODIFIED) DETAILS
4	DS800B (MODIFIED) DETAILS

LEGEND:

-·-·-·- INDICATES EXISTING STRUCTURE

━━━ INDICATES LOCATIONS OF REPLACE SWIVEL JOIST EXPANSION JOINT COMPONENTS.

⇨ INDICATES DIRECTION OF TRAFFIC

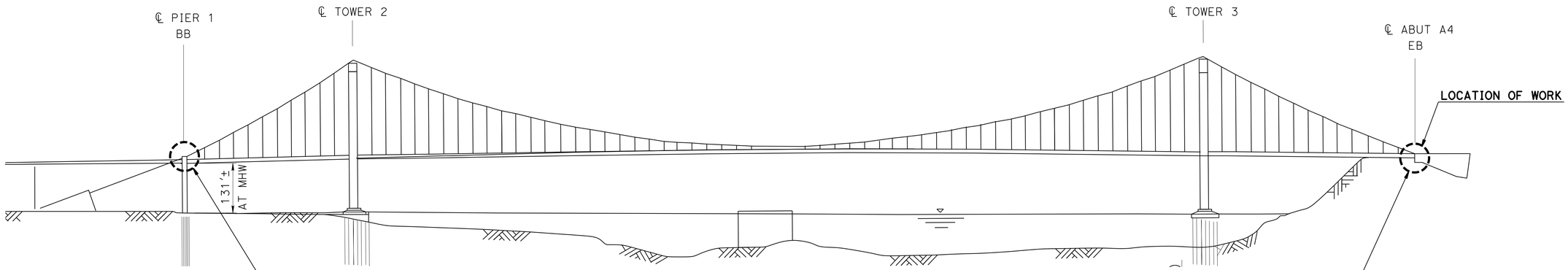

ELEVATION (23-0352L)
NO SCALE

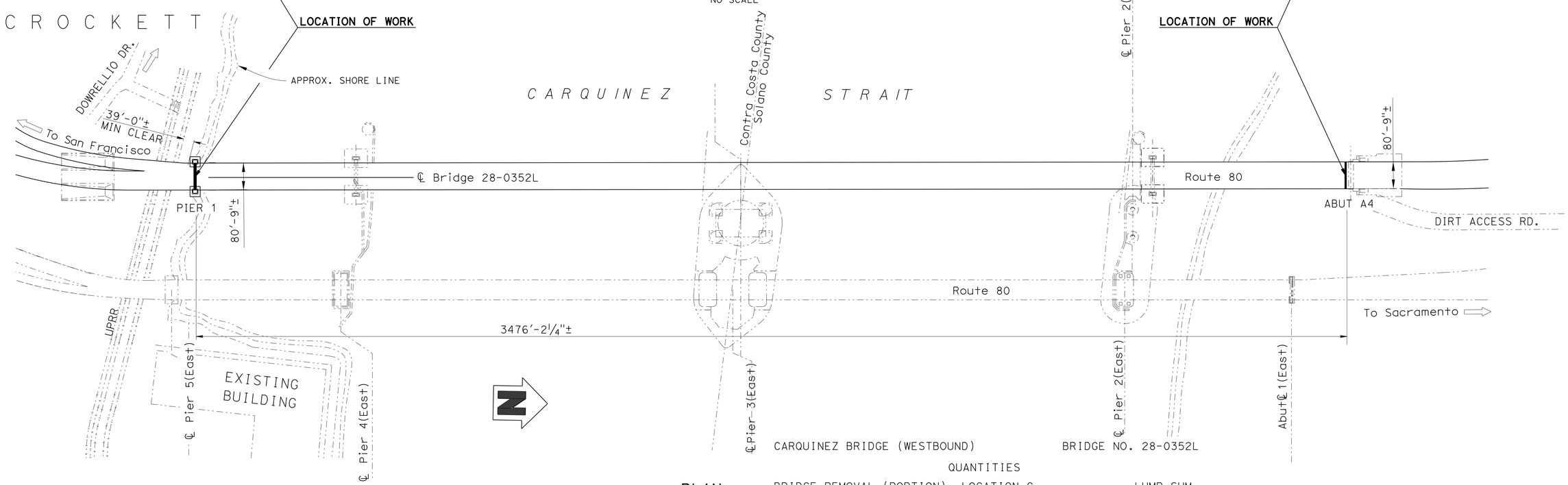

PLAN
NO SCALE

CARQUINEZ BRIDGE (WESTBOUND) BRIDGE NO. 28-0352L

QUANTITIES

BRIDGE REMOVAL (PORTION), LOCATION C	LUMP SUM
REPLACE SWIVEL JOIST EXPANSION JOINT COMPONENTS	LUMP SUM
BUILDING WORK	LUMP SUM

NOTE:
THE CONTRACTOR MUST VERIFY ALL CONTROLLING FIELD DIMENSIONS BEFORE ORDERING OR FABRICATING ANY MATERIAL.

TREAT BRIDGE DECK, OVERLAY BRIDGE DECK, REHABILITATE DECK EXPANSION JOINT AND DECK SEISMIC JOINT AND REPLACE JOINT SEAL

DESIGN ENGINEER 2-06-15

	BY	CHECKED
DESIGN	A. KUSHKAKI	C. LEE
DETAILS	B. BALLESTEROS	A. KUSHKAKI
QUANTITIES	A. KUSHKAKI	C. LEE

LOAD FACTOR DESIGN	LIVE LOADING: HS20-44 AND ALTERNATIVE AND PERMIT DESIGN LOAD		
LAYOUT	BY B. BALLESTEROS	CHECKED A. KUSHKAKI	
SPECIFICATIONS	BY D. KLEIN	PLANS AND SPECS COMPARED D. KLEIN	

STATE OF CALIFORNIA
DEPARTMENT OF TRANSPORTATION

DIVISION OF MAINTENANCE
STRUCTURE MAINTENANCE AND INVESTIGATIONS

BRIDGE NO. 28-0352L
POST MILE 13.8

WB CARQUINEZ (AL ZAMPA MEMORIAL) BRIDGE

GENERAL PLAN

STRUCTURES MAINTENANCE GENERAL PLAN SHEET (ENGLISH) (REV. 09-01-10)

ORIGINAL SCALE IN INCHES FOR REDUCED PLANS 0 1 2 3

UNIT: 3486
PROJECT NUMBER & PHASE: 04120001011 CONTRACT NO.: 04-3G4031

DISREGARD PRINTS BEARING EARLIER REVISION DATES

REVISION DATES				SHEET	OF
9-16-14	9-19-14	3-24-15	4-15-15	1	4

FILE => 3g4031_h08gp.dgn

USERNAME => s133066 DATE PLOTTED => 03-JUL-2015 TIME PLOTTED => 14:48

DIST	COUNTY	ROUTE	POST MILES TOTAL PROJECT	SHEET No	TOTAL SHEETS
04	CC, Sol	80	13.4/14.1, 0.0/0.6	41	75

REGISTERED CIVIL ENGINEER 2-06-15 DATE

6-22-15
PLANS APPROVAL DATE

REGISTERED PROFESSIONAL ENGINEER A. KUSHKAKI No. 59045 Exp. 6-30-15 CIVIL STATE OF CALIFORNIA

The State of California or its officers or agents shall not be responsible for the accuracy or completeness of electronic copies of this plan sheet.

NOTES:

1. FOR DETAILS A AND B, SEE "DS640B (MODIFIED) DETAILS" SHEET.
2. FOR DETAILS C AND D, SEE "DS800B (MODIFIED) DETAILS" SHEET.

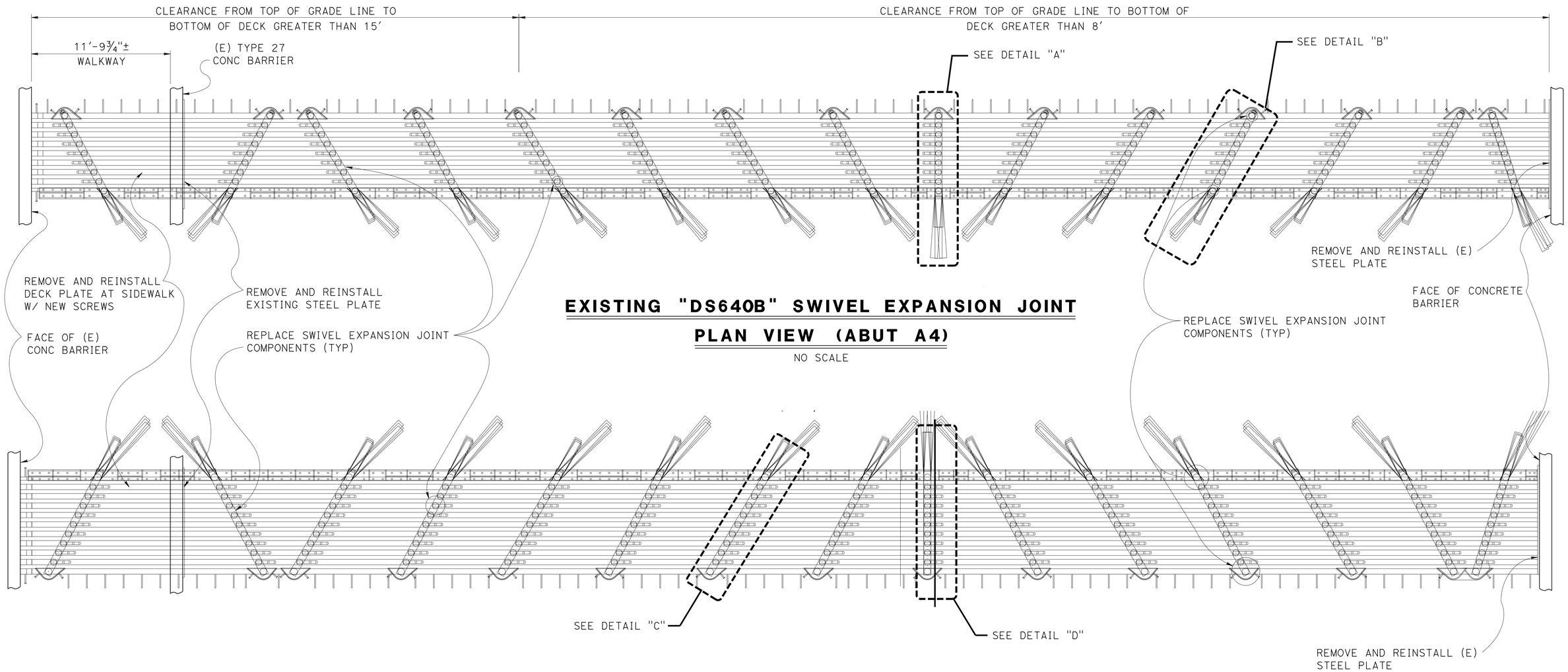

EXISTING "DS640B" SWIVEL EXPANSION JOINT PLAN VIEW (ABUT A4)

NO SCALE

EXISTING "DS800B" SWIVEL EXPANSION JOINT PLAN VIEW (PIER 1)

NO SCALE

NOTE:

THE CONTRACTOR MUST VERIFY ALL CONTROLLING FIELD DIMENSIONS BEFORE ORDERING OR FABRICATING ANY MATERIAL.

TREAT BRIDGE DECK, OVERLAY BRIDGE DECK, REHABILITATE DECK EXPANSION JOINT AND DECK SEISMIC JOINT AND REPLACE JOINT SEAL

	BY	CHECKED
DESIGN	A. KUSHKAKI	C. LEE
DETAILS	B. BALLESTEROS	A. KUSHKAKI
QUANTITIES	A. KUSHKAKI	C. LEE

STATE OF CALIFORNIA
DEPARTMENT OF TRANSPORTATION

DIVISION OF MAINTENANCE
STRUCTURE MAINTENANCE AND INVESTIGATIONS

BRIDGE NO. 28-0352L
POST MILE 13.8

WB CARQUINEZ (AL ZAMPA MEMORIAL) BRIDGE

SWIVEL EXPANSION JOINT PLAN

STRUCTURES MAINTENANCE DETAIL SHEET (ENGLISH) (REV. 09-01-10)

ORIGINAL SCALE IN INCHES FOR REDUCED PLANS 0 1 2 3

UNIT: 3486
PROJECT NUMBER & PHASE: 04120001011
CONTRACT NO.: 04-3G4031

DISREGARD PRINTS BEARING EARLIER REVISION DATES 9-16-14

REVISION DATES | SHEET 2 OF 4

FILE => 3g4031_i09sec.dgn

USERNAME => s133066 DATE PLOTTED => 03-JUL-2015 TIME PLOTTED => 14:24:46

DIST	COUNTY	ROUTE	POST MILES TOTAL PROJECT	SHEET No	TOTAL SHEETS
04	CC, Sol	80	13.4/14.1, 0.0/0.6	42	75

REGISTERED CIVIL ENGINEER 2-06-15 DATE

6-22-15
PLANS APPROVAL DATE

REGISTERED PROFESSIONAL ENGINEER A. KUSHKAKI No. 59045 Exp. 6-30-15 CIVIL STATE OF CALIFORNIA

The State of California or its officers or agents shall not be responsible for the accuracy or completeness of electronic copies of this plan sheet.

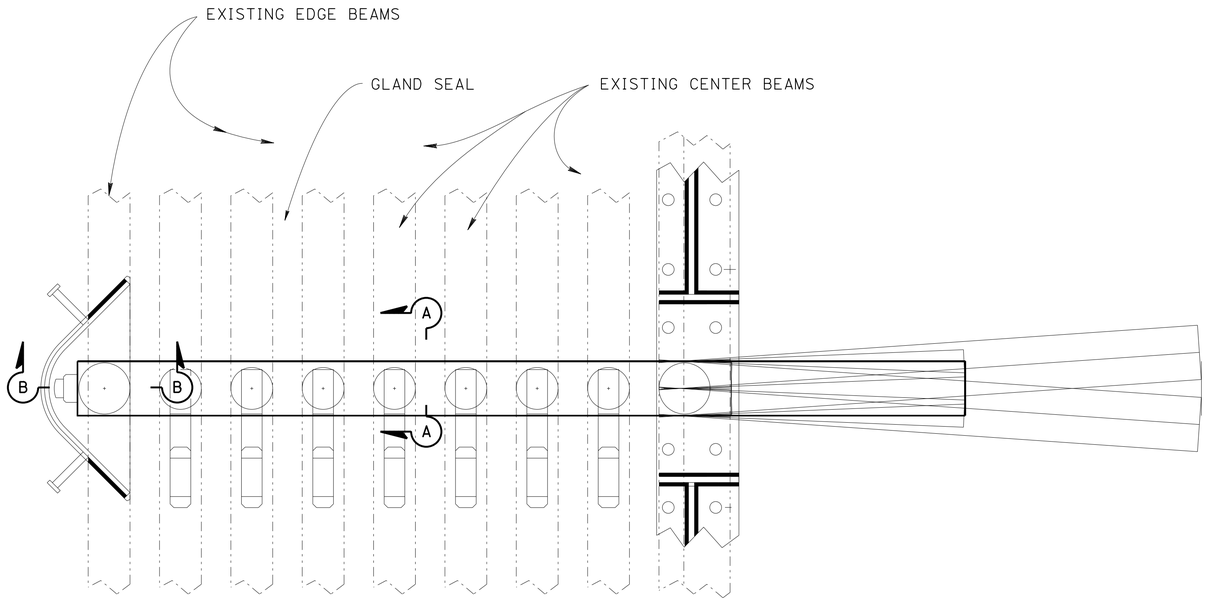

DETAIL A
No Scale

NOTE: FOR SECTION B-B SEE, "DS 800B (MODIFIED) DETAILS" SHEET.

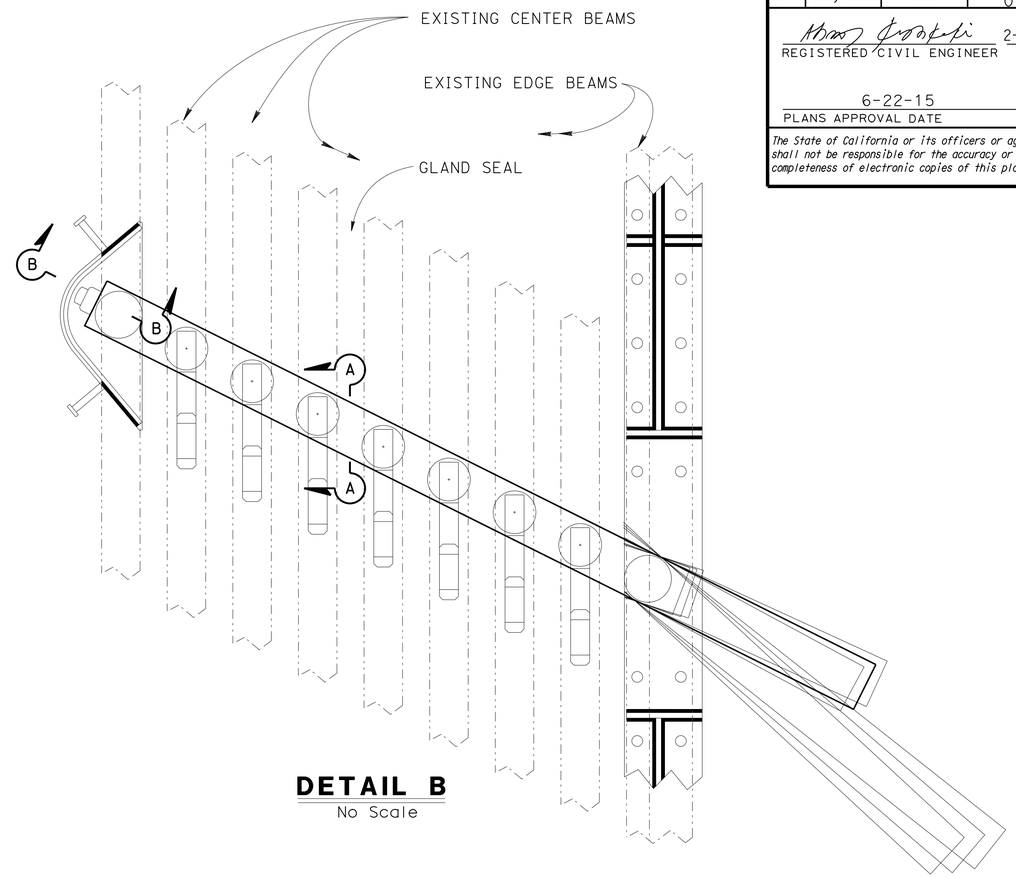

DETAIL B
No Scale

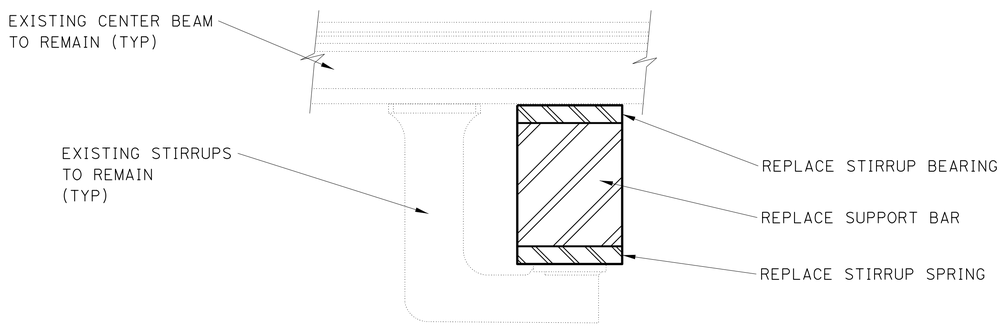

SECTION A-A
No Scale

SWIVEL JOIST EXPANSION JOINT COMPONENTS

COMPONENT	REPLACEMENT QUANTITY
SUPPORT BARS (STAINLESS STEEL)	15 EA
GLAND SEAL (M-500)	680 FT
SUPPORT BOX BEARINGS	30 EA
SUPPORT BOX SPRINGS	30 EA
STIRRUP BEARINGS	105 EA
STIRRUP SPRINGS	105 EA

NOTE:

THE CONTRACTOR MUST VERIFY ALL CONTROLLING FIELD DIMENSIONS BEFORE ORDERING OR FABRICATING ANY MATERIAL.

TREAT BRIDGE DECK, OVERLAY BRIDGE DECK, REHABILITATE DECK EXPANSION JOINT AND DECK SEISMIC JOINT AND REPLACE JOINT SEAL

WB CARQUINEZ (AL ZAMPA MEMORIAL) BRIDGE

DS640B (MODIFIED) DETAILS

	BY	CHECKED
DESIGN	A. KUSHKAKI	C. LEE
DETAILS	B. BALLESTEROS	A. KUSHKAKI
QUANTITIES	A. KUSHKAKI	C. LEE

STATE OF CALIFORNIA DEPARTMENT OF TRANSPORTATION

DIVISION OF MAINTENANCE STRUCTURE MAINTENANCE AND INVESTIGATIONS

BRIDGE NO. 28-0352L
POST MILE 13.8

STRUCTURES MAINTENANCE DETAIL SHEET (ENGLISH) (REV. 09-01-10)

ORIGINAL SCALE IN INCHES FOR REDUCED PLANS 0 1 2 3

UNIT: 3486
PROJECT NUMBER & PHASE: 04120001011
CONTRACT NO.: 04-3G4031

DISREGARD PRINTS BEARING EARLIER REVISION DATES

REVISION DATES 9-16-14

SHEET 3 OF 4

FILE => 3g4031_j10sec.dgn

USERNAME => s133066 DATE PLOTTED => 03-JUL-2015 TIME PLOTTED => 14:28

DIST	COUNTY	ROUTE	POST MILES TOTAL PROJECT	SHEET No	TOTAL SHEETS
04	CC, Sol	80	13.4/14.1, 0.0/0.6	43	75

REGISTERED CIVIL ENGINEER 2-06-15 DATE

6-22-15
PLANS APPROVAL DATE

REGISTERED PROFESSIONAL ENGINEER A. KUSHKAKI No. 59045 Exp. 6-30-15 CIVIL STATE OF CALIFORNIA

The State of California or its officers or agents shall not be responsible for the accuracy or completeness of electronic copies of this plan sheet.

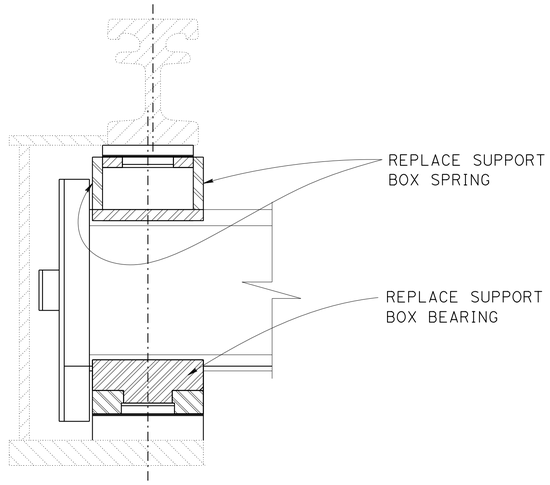

SECTION B-B
No Scale

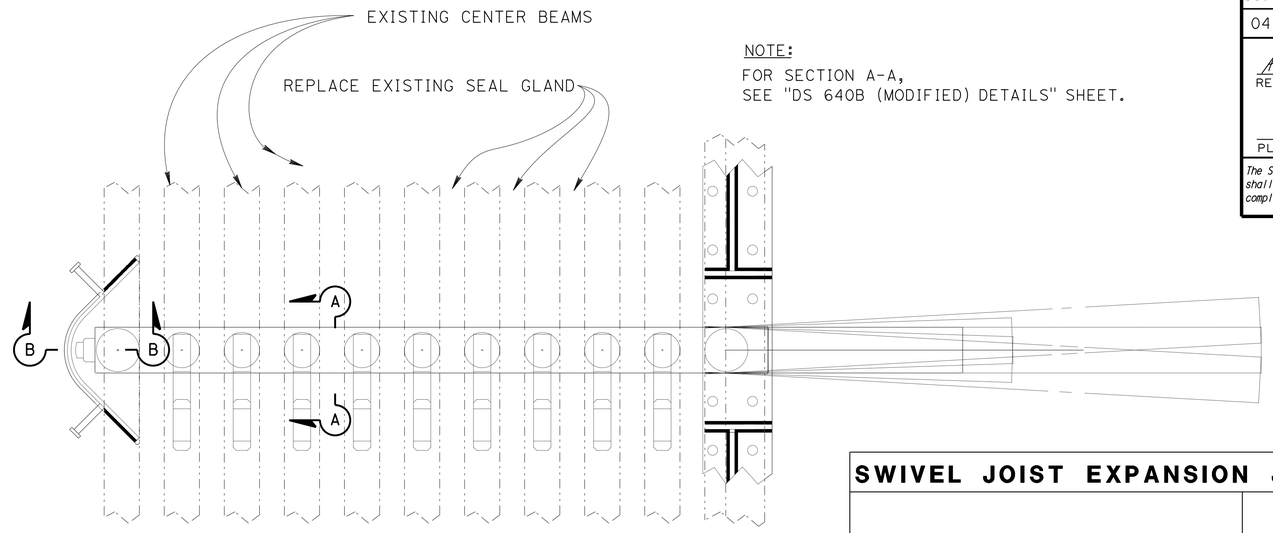

DETAIL C
No Scale

NOTE:
FOR SECTION A-A,
SEE "DS 640B (MODIFIED) DETAILS" SHEET.

SWIVEL JOIST EXPANSION JOINT COMPONENTS

COMPONENT	REPLACEMENT QUANTITY
SUPPORT BARS (STAINLESS STEEL)	15 EA
GLAND SEAL (M-500)	850 FT
SUPPORT BOX BEARINGS	30 EA
SUPPORT BOX SPRINGS	30 EA
STIRRUP BEARINGS	135 EA
STIRRUP SPRINGS	135 EA

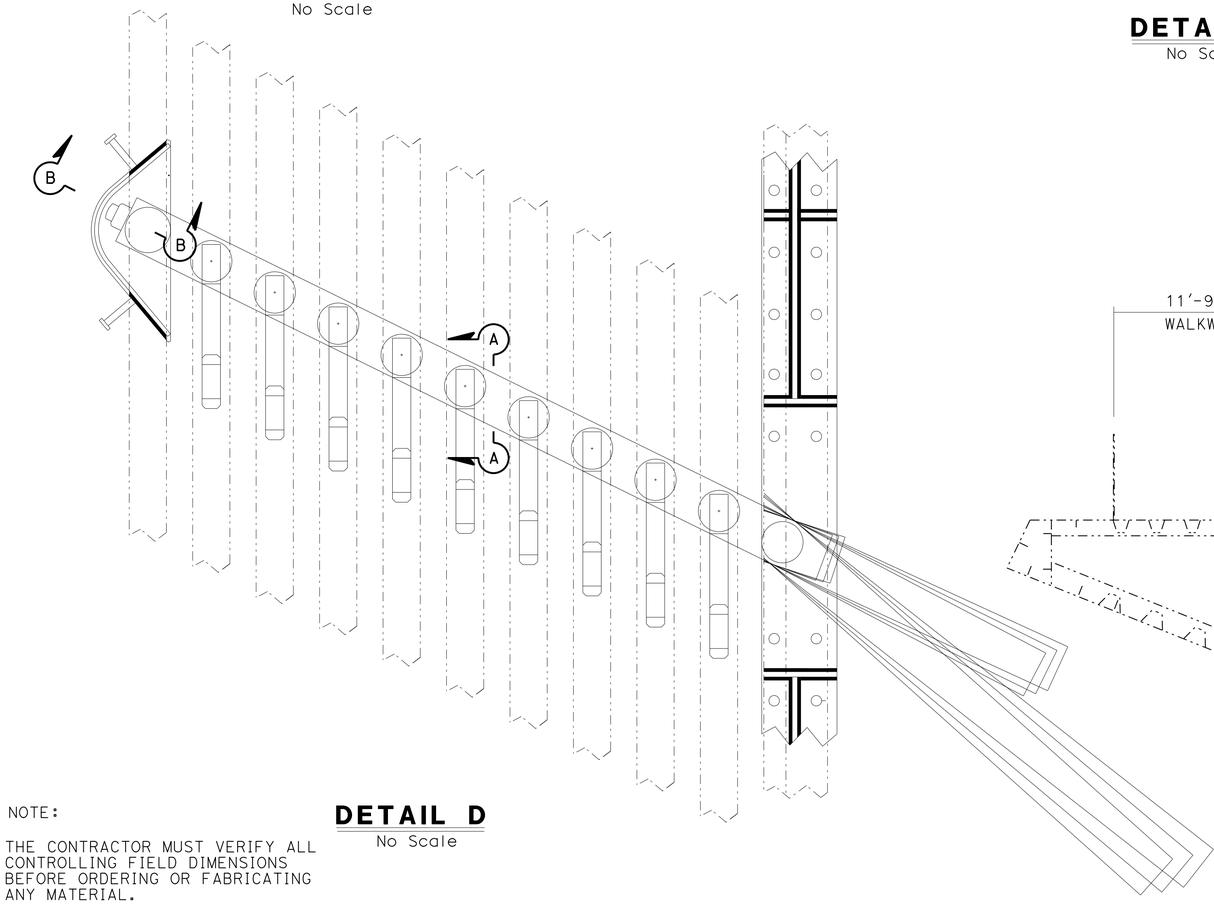

DETAIL D
No Scale

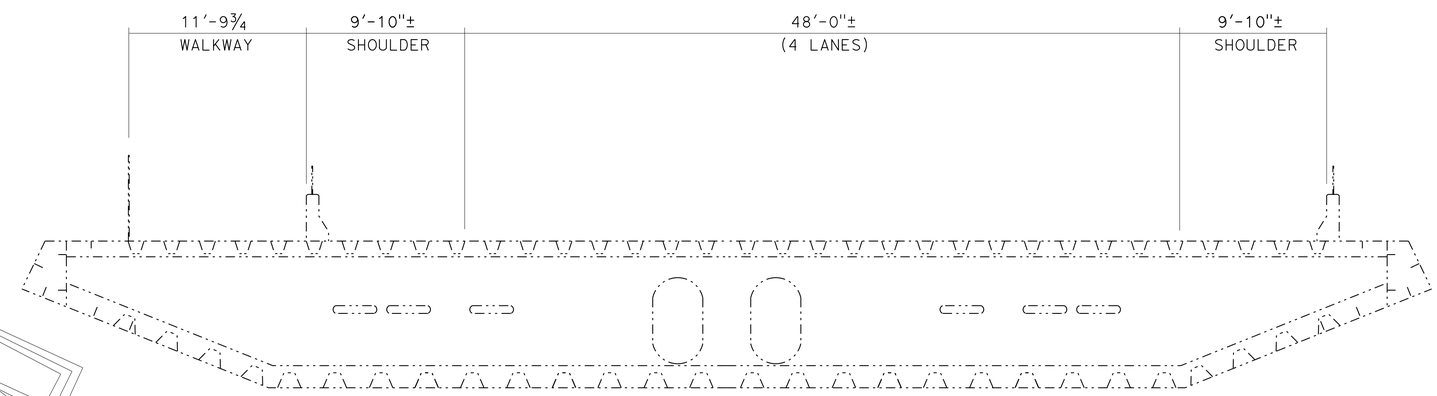

TYPICAL SECTION FACING NORTH
No Scale

NOTE:
THE CONTRACTOR MUST VERIFY ALL CONTROLLING FIELD DIMENSIONS BEFORE ORDERING OR FABRICATING ANY MATERIAL.

TREAT BRIDGE DECK, OVERLAY BRIDGE DECK, REHABILITATE DECK EXPANSION JOINT AND DECK SEISMIC JOINT AND REPLACE JOINT SEAL

	BY	CHECKED
DESIGN	A. KUSHKAKI	C. LEE
DETAILS	B. BALLESTEROS	A. KUSHKAKI
QUANTITIES	A. KUSHKAKI	C. LEE

STATE OF CALIFORNIA
DEPARTMENT OF TRANSPORTATION

DIVISION OF MAINTENANCE
STRUCTURE MAINTENANCE AND INVESTIGATIONS

BRIDGE NO. 28-0352L
POST MILE 13.8

WB CARQUINEZ (AL ZAMPA MEMORIAL) BRIDGE

DS800B (MODIFIED) DETAILS

STRUCTURES MAINTENANCE DETAIL SHEET (ENGLISH) (REV. 09-01-10)

ORIGINAL SCALE IN INCHES FOR REDUCED PLANS 0 1 2 3

UNIT: 3486
PROJECT NUMBER & PHASE: 04120001011
CONTRACT NO.: 04-3G4031

DISREGARD PRINTS BEARING EARLIER REVISION DATES

REVISION DATES 9-16-14

SHEET 4 OF 4

FILE => 3g4031_k11sec.dgn

USERNAME => s133066 DATE PLOTTED => 03-JUL-2015 TIME PLOTTED => 14:24

DIST	COUNTY	ROUTE	POST MILES TOTAL PROJECT	SHEET No.	TOTAL SHEETS
04	CC, Sol	80	13.4/14.1, 0.0/0.6	44	75

REGISTERED CIVIL ENGINEER 2-06-15 DATE

6-22-15
PLANS APPROVAL DATE

REGISTERED PROFESSIONAL ENGINEER A. KUSHKAKI No. 59045 Exp. 6-30-15 CIVIL STATE OF CALIFORNIA

The State of California or its officers or agents shall not be responsible for the accuracy or completeness of electronic copies of this plan sheet.

INDEX TO PLANS

SHEET No.	TITLE
1	GENERAL PLAN
2	EXISTING JOINT REMOVAL DETAILS - 1
3	CROSS SECTION
4	DECK PLATE DETAILS No. 1
5	DECK PLATE DETAILS No. 2
6	CHANNEL ASSEMBLY DETAILS No. 1
7	CHANNEL ASSEMBLY DETAILS No. 2
8	SUPPORT PLATE DETAILS
9	REINFORCEMENT DETAILS
10	OPTIONAL CONSTRUCTION SEQUENCE
11	EXISTING JOINT REMOVAL DETAILS - 2
12	NEW JOINT INSTALLATION DETAILS - 2
13	MAXIMUM MOVEMENT RATING = 2½"
14	DECK PLATING DETAILS

STANDARD PLANS

SHEET No.	TITLE
A10A	ABBREVIATIONS (SHEET 1 OF 2)
RSP A10B	ABBREVIATIONS (SHEET 2 OF 2)
B7-5	DECK DRAINS

NOTES:

1) CONCRETE MUST HAVE A MINIMUM COMPRESSIVE STRENGTH OF f'c = 4,000 PSI IN 28 DAYS.

2) REINFORCING BARS MUST BE EPOXY COATED WITH YIELD STRENGTH OF Fy = 60,000 PSI

3) CLEAN INSIDE SURFACES OF STEEL BOX GIRDERS INCLUDING ACCUMULATED DEBRIS, ANIMAL DROPPINGS, ABANDONED NESTS.

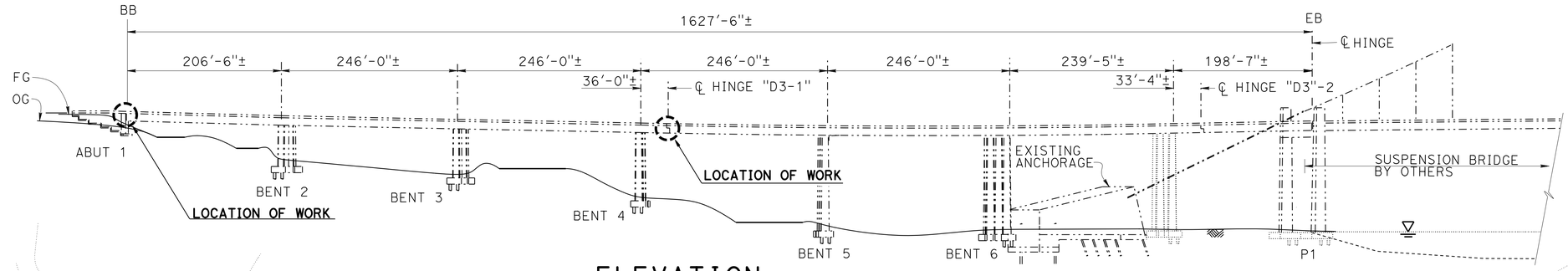

ELEVATION

NO SCALE

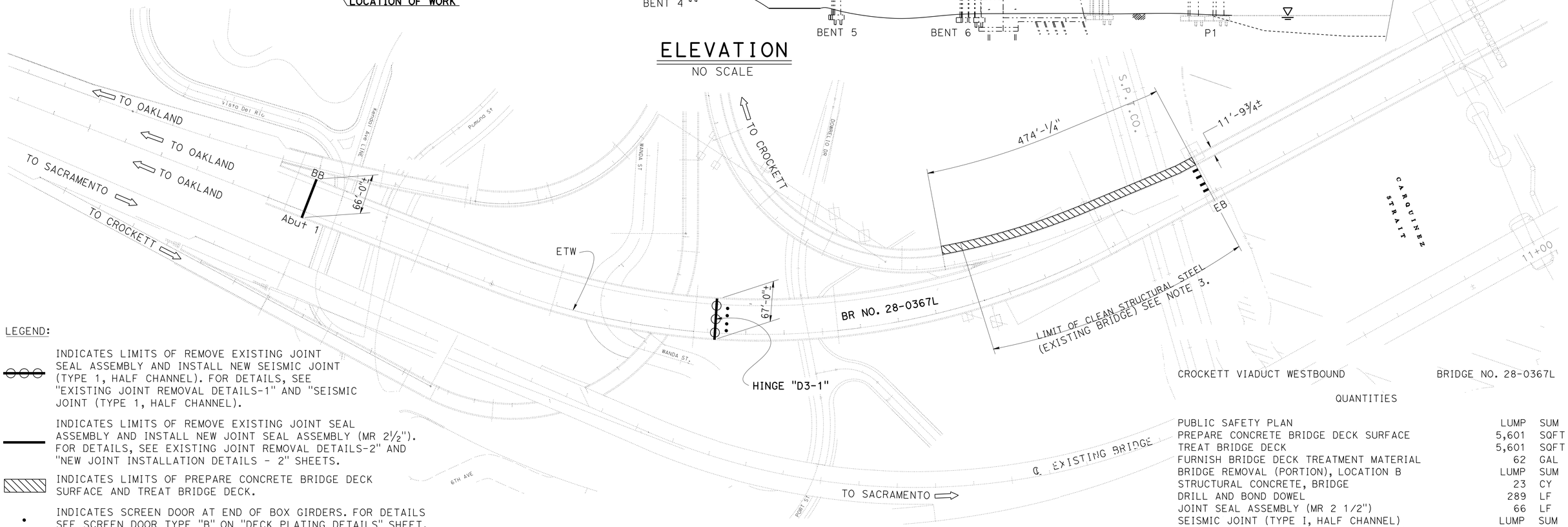

LEGEND:

INDICATES LIMITS OF REMOVE EXISTING JOINT SEAL ASSEMBLY AND INSTALL NEW SEISMIC JOINT (TYPE 1, HALF CHANNEL). FOR DETAILS, SEE "EXISTING JOINT REMOVAL DETAILS-1" AND "SEISMIC JOINT (TYPE 1, HALF CHANNEL).

INDICATES LIMITS OF REMOVE EXISTING JOINT SEAL ASSEMBLY AND INSTALL NEW JOINT SEAL ASSEMBLY (MR 2½"). FOR DETAILS, SEE EXISTING JOINT REMOVAL DETAILS-2" AND "NEW JOINT INSTALLATION DETAILS - 2" SHEETS.

INDICATES LIMITS OF PREPARE CONCRETE BRIDGE DECK SURFACE AND TREAT BRIDGE DECK.

INDICATES SCREEN DOOR AT END OF BOX GIRDERS. FOR DETAILS SEE SCREEN DOOR TYPE "B" ON "DECK PLATING DETAILS" SHEET.

INDICATES SCREEN DOOR AT END OF BOX GIRDERS. FOR DETAILS SEE SCREEN DOOR TYPE "A" ON "DECK PLATING DETAILS" SHEET.

NOTE:

THE CONTRACTOR MUST VERIFY ALL CONTROLLING FIELD DIMENSIONS BEFORE ORDERING OR FABRICATING ANY MATERIAL.

PLAN

NO SCALE

CROCKETT VIADUCT WESTBOUND BRIDGE NO. 28-0367L

QUANTITIES

PUBLIC SAFETY PLAN	LUMP	SUM
PREPARE CONCRETE BRIDGE DECK SURFACE	5,601	SQFT
TREAT BRIDGE DECK	5,601	SQFT
FURNISH BRIDGE DECK TREATMENT MATERIAL	62	GAL
BRIDGE REMOVAL (PORTION), LOCATION B	LUMP	SUM
STRUCTURAL CONCRETE, BRIDGE	23	CY
DRILL AND BOND DOWEL	289	LF
JOINT SEAL ASSEMBLY (MR 2 1/2")	66	LF
SEISMIC JOINT (TYPE I, HALF CHANNEL)	LUMP	SUM
BAR REINFORCING STEEL (EPOXY COATED) (BRIDGE)	4,495	LB
MISCELLANEOUS METAL (BRIDGE)	630	LB
CLEAN STRUCTURAL STEEL (EXISTING BRIDGE)	4822	SQFT

TREAT BRIDGE DECK, OVERLAY BRIDGE DECK, REHABILITATE DECK EXPANSION JOINT AND DECK SEISMIC JOINT AND REPLACE JOINT SEAL

CROCKETT VIADUCT
GENERAL PLAN

DESIGN ENGINEER 2-06-15

	BY	CHECKED
DESIGN	A. KUSHKAKI	C. LEE
DETAILS	B. BALLESTEROS	A. KUSHKAKI
QUANTITIES	A. KUSHKAKI	C. LEE

LOAD FACTOR DESIGN — LIVE LOADING: HS20-44 AND ALTERNATIVE AND PERMIT DESIGN LOAD

	BY	CHECKED
LAYOUT	B. BALLESTEROS	A. KUSHKAKI
SPECIFICATIONS	D. KLEIN	PLANS AND SPECS COMPARED D. KLEIN

STATE OF CALIFORNIA DEPARTMENT OF TRANSPORTATION

DIVISION OF MAINTENANCE STRUCTURE MAINTENANCE AND INVESTIGATIONS

BRIDGE NO. 28-0367L
POST MILE VARIES

STRUCTURES MAINTENANCE GENERAL PLAN SHEET (ENGLISH) (REV. 09-01-10)

ORIGINAL SCALE IN INCHES FOR REDUCED PLANS 0 1 2 3

UNIT: 3486
PROJECT NUMBER & PHASE: 04120001011 CONTRACT NO.: 04-3G4031

DISREGARD PRINTS BEARING EARLIER REVISION DATES 4-5-15 4-13-15 4-15-15

SHEET 1 OF 14

FILE => 3g4031_112gp.dgn

USERNAME => s133066 DATE PLOTTED => 03-JUL-2015 TIME PLOTTED => 14:48

DIST	COUNTY	ROUTE	POST MILES TOTAL PROJECT	SHEET No	TOTAL SHEETS
04	CC, Sol	80	13.4/14.1, 0.0/0.6	45	75

REGISTERED CIVIL ENGINEER 2-06-15 DATE

6-22-15
PLANS APPROVAL DATE

REGISTERED PROFESSIONAL ENGINEER A. KUSHKAKI No. 59045 Exp. 6-30-15 CIVIL STATE OF CALIFORNIA

The State of California or its officers or agents shall not be responsible for the accuracy or completeness of electronic copies of this plan sheet.

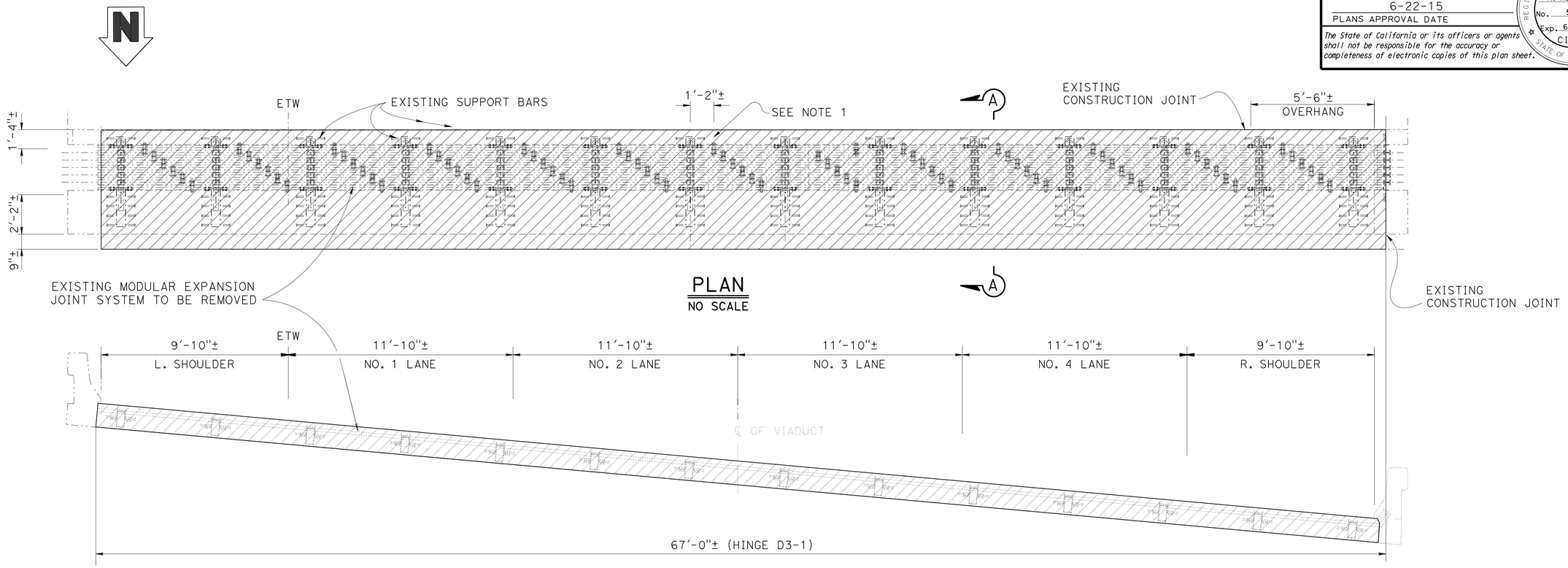

PLAN
NO SCALE

SECTION
NO SCALE

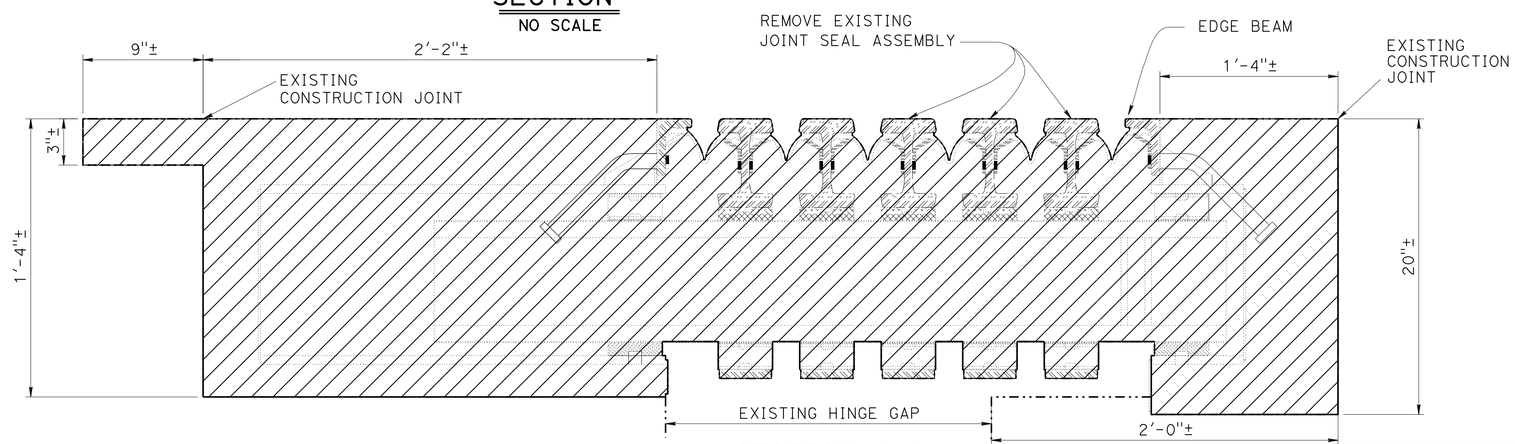

SECTION A-A
NO SCALE

NOTES:

1. REMOVE EXISTING MODULAR EXPANSION JOINT SYSTEM AND CONCRETE RECESS.
2. DO NOT DAMAGE CONCRETE BELOW OR OUTSIDE OF THE REMOVAL LIMITS.
3. PROTECT ADJACENT CONCRETE AT OVERHANG.

LEGEND:

INDICATES LIMITS OF BRIDGE REMOVAL (PORTION)

NOTE:

THE CONTRACTOR MUST VERIFY ALL CONTROLLING FIELD DIMENSIONS BEFORE ORDERING OR FABRICATING ANY MATERIAL.

TREAT BRIDGE DECK, OVERLAY BRIDGE DECK, REHABILITATE DECK EXPANSION JOINT AND DECK SEISMIC JOINT AND REPLACE JOINT SEAL

	BY	CHECKED
DESIGN	A. KUSHKAKI	C. LEE
DETAILS	B. BALLESTEROS	A. KUSHKAKI
QUANTITIES	A. KUSHKAKI	C. LEE

STATE OF CALIFORNIA
DEPARTMENT OF TRANSPORTATION

DIVISION OF MAINTENANCE
STRUCTURE MAINTENANCE AND INVESTIGATIONS

BRIDGE NO. 28-0367L
POST MILE VARIES

CROCKETT VIADUCT

EXISTING JOINT REMOVAL DETAILS - 1

STRUCTURES MAINTENANCE DETAIL SHEET (ENGLISH) (REV. 09-01-10)

ORIGINAL SCALE IN INCHES FOR REDUCED PLANS 0 1 2 3

UNIT: 3486
PROJECT NUMBER & PHASE: 04120001011
CONTRACT NO.: 04-3G4031

DISREGARD PRINTS BEARING EARLIER REVISION DATES

REVISION DATES

SHEET 2 OF 14

FILE => 3g4031_m13jtr.dgn

USERNAME => s133066 DATE PLOTTED => 03-JUL-2015 TIME PLOTTED => 14:24:08

DIST	COUNTY	ROUTE	POST MILES TOTAL PROJECT	SHEET No.	TOTAL SHEETS
04	CC, Sol	80	13.4/14.1, 0.0/0.6	46	75

REGISTERED CIVIL ENGINEER 2-06-15 DATE

6-22-15
PLANS APPROVAL DATE

REGISTERED PROFESSIONAL ENGINEER A. KUSHKAKI No. 59045 Exp. 6-30-15 CIVIL STATE OF CALIFORNIA

The State of California or its officers or agents shall not be responsible for the accuracy or completeness of electronic copies of this plan sheet.

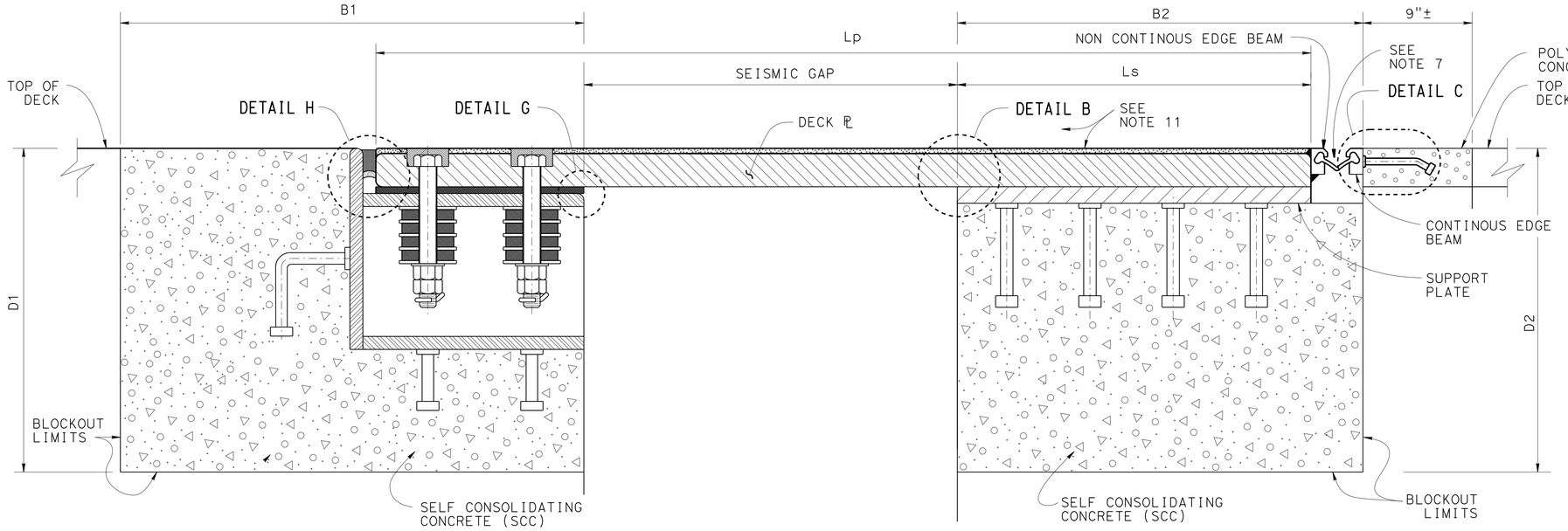

ELEVATION
NO SCALE

JOINT INFORMATION (MAXIMUM NON-SEISMIC MR = 4")		
LOCATION		D3-1
SKEW (°)		0
DECK PLATE	Thickness td (in)	2⅛
	Length Lp (in)	* 60
SUPPORT PLATE	Thickness ts (in)	1
	Length Ls (in)	22
SEISMIC GAP @ 70 °F	(in)	22
BLOCKOUT	B1 (in)	24
	B2 (in)	26
	D1 (in)	20
	D2 (in)	16

* Lp = SEE NOTE 5 ON PLAN SHEET 5 OF 14.

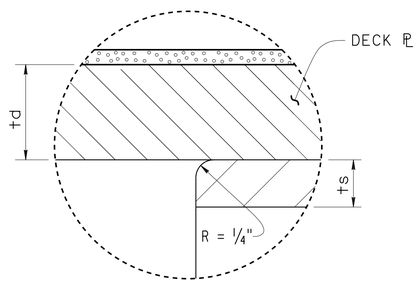

DETAIL B
NO SCALE

NOTES:

1. Top of Multilayer Polymer Overlay, polyester and SCC concrete must match top of deck profile.
2. For deck plate details see " DECK PLATE DETAILS No. 1" and " DECK PLATE DETAILS No. 2" sheets for TYPE I joint.
3. For mild reinforcement in blockout areas, see "REINFORCEMENT DETAILS" sheet for TYPE I joint Not all mild reinforcement is shown for clarity.
4. For channel assembly details, see "CHANNEL ASSEMBLY DETAILS No. 1" and "CHANNEL ASSEMBLY DETAILS No. 2" for TYPE I joint.
5. Place deck plate, support plate, and channel assembly so that full bearing is achieved between I) deck, support plates and II) deck plate and channel assembly.
6. Self-consolidating concrete must be used in joint blockout.
7. Strip seal joint seal assembly. Maximum non-seismic demand MR = 4".
8. Rubber gland of strip seal assembly must be one continuous piece. No field splice is permitted.
9. Strip seal must have a minimum movement rating of 4 inches, manufactured specifically for highway bridges.
10. For support plate details see "SUPPORT PLATE DETAILS" sheet for TYPE I joint.
11. Apply ⅜" of Multilayer Polymer Overlay to the deck plate.
12. Access to the joint is from the bottom. Minimum seismic gap 2'-0" at 70 °F.

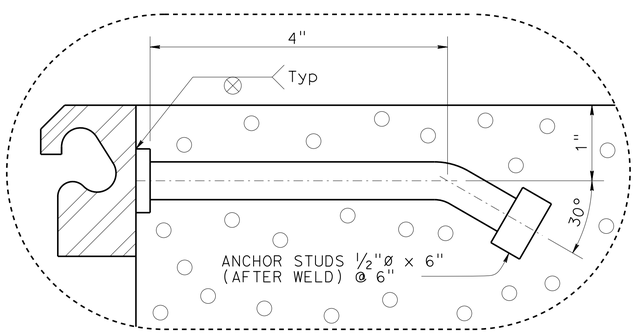

DETAIL C
NO SCALE

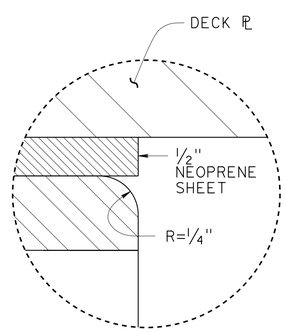

DETAIL G
NO SCALE

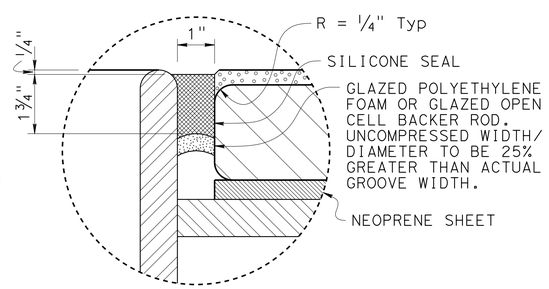

DETAIL H
NO SCALE

TREAT BRIDGE DECK, OVERLAY BRIDGE DECK, REHABILITATE DECK EXPANSION JOINT AND DECK SEISMIC JOINT AND REPLACE JOINT SEAL

SEISMIC JOINT (TYPE I, HALF CHANNEL)
CROSS SECTION

REVISED STANDARD DRAWING

FILE NO. xs8-080-1

APPROVAL DATE October 2014

STATE OF CALIFORNIA
DEPARTMENT OF TRANSPORTATION

DIVISION OF MAINTENANCE
STRUCTURE MAINTENANCE AND INVESTIGATIONS

BRIDGE NO. 28-0367L
POST MILE VARIES

DS OSD 2147A (ENGLISH STANDARD DRAWING "XS" BORDER REV. (02-02-11)

ORIGINAL SCALE IN INCHES FOR REDUCED PLANS 0 1 2 3

UNIT: 3486
PROJECT NUMBER & PHASE: 04120001011
CONTRACT NO.: 04-3G4031

DISREGARD PRINTS BEARING EARLIER REVISION DATES 4-15-15

REVISION DATES | SHEET 3 | OF 14

FILE => 3g4031_n14crossect.dgn

USERNAME => s133066 DATE PLOTTED => 03-JUL-2015 TIME PLOTTED => 14:48

DIST	COUNTY	ROUTE	POST MILES TOTAL PROJECT	SHEET No.	TOTAL SHEETS
04	CC, Sol	80	13.4/14.1, 0.0/0.6	47	75

REGISTERED CIVIL ENGINEER 2-06-15 DATE

6-22-15
PLANS APPROVAL DATE

REGISTERED PROFESSIONAL ENGINEER A. KUSHKAKI No. 59045 Exp. 6-30-15 CIVIL STATE OF CALIFORNIA

The State of California or its officers or agents shall not be responsible for the accuracy or completeness of electronic copies of this plan sheet.

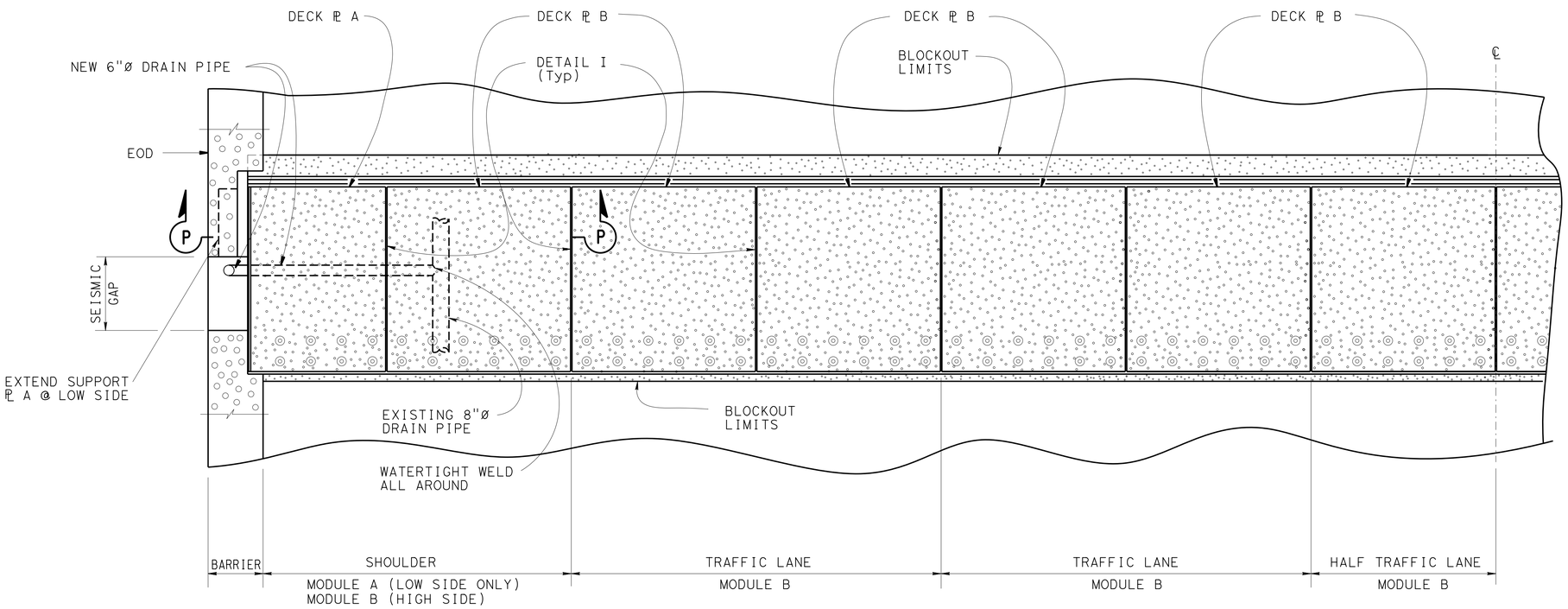

EXPANSION JOINT (HALF) PLAN

NO SCALE

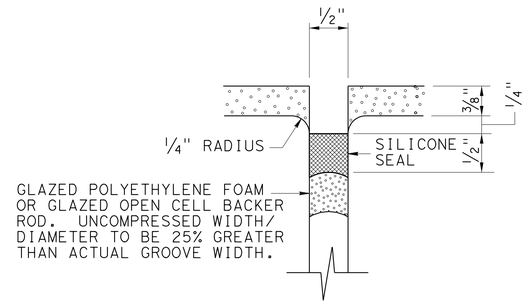

DETAIL I

NO SCALE

NOTES:

1. For Plates A and B see "DECK PLATE DETAILS No. 2" sheet.
2. Deck Plate A matches with Support Plate A and the Channel Assembly A (Module A) Likewise for Module B. Channel assemblies are 1/2 inch wider than their corresponding deck plates.
3. One Module B is placed per half traffic lane.
4. Only portions of barriers are shown for clarity.
5. For SECTION P-P see "DECK PLATE DETAILS No. 2" sheet for TYPE I joint.

LEGEND:

Denotes Multilayer Polymer Overlay.

TREAT BRIDGE DECK, OVERLAY BRIDGE DECK, REHABILITATE DECK EXPANSION JOINT AND DECK SEISMIC JOINT AND REPLACE JOINT SEAL

REVISED STANDARD DRAWING

FILE NO. xs8-080-2

APPROVAL DATE October 2014

STATE OF CALIFORNIA DEPARTMENT OF TRANSPORTATION

DIVISION OF MAINTENANCE STRUCTURE MAINTENANCE AND INVESTIGATIONS

BRIDGE NO. 28-0367L

POST MILE VARIES

SEISMIC JOINT (TYPE I, HALF CHANNEL)

DECK PLATE DETAILS No. 1

DS OSD 2147A (ENGLISH STANDARD DRAWING "XS" BORDER REV. (02-02-11)

ORIGINAL SCALE IN INCHES FOR REDUCED PLANS 0 1 2 3

UNIT: 3486
PROJECT NUMBER & PHASE: 0412000101

CONTRACT NO.: 04-3G4031

DISREGARD PRINTS BEARING EARLIER REVISION DATES

REVISION DATES

SHEET 4 OF 14

FILE => 3g4031_o15dckpltt1.dgn

USERNAME => s133066 DATE PLOTTED => 03-JUL-2015 TIME PLOTTED => 14:48

DIST	COUNTY	ROUTE	POST MILES TOTAL PROJECT	SHEET No.	TOTAL SHEETS
04	CC, Sol	80	13.4/14.1, 0.0/0.6	48	75

REGISTERED CIVIL ENGINEER 2-06-15 DATE

6-22-15
PLANS APPROVAL DATE

REGISTERED PROFESSIONAL ENGINEER A. KUSHKAKI No. 59045 Exp. 6-30-15 CIVIL STATE OF CALIFORNIA

The State of California or its officers or agents shall not be responsible for the accuracy or completeness of electronic copies of this plan sheet.

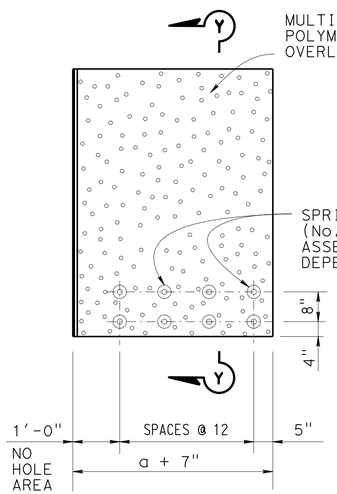

DECK PLATE A

NO SCALE

Note: Barrier not shown for clarity

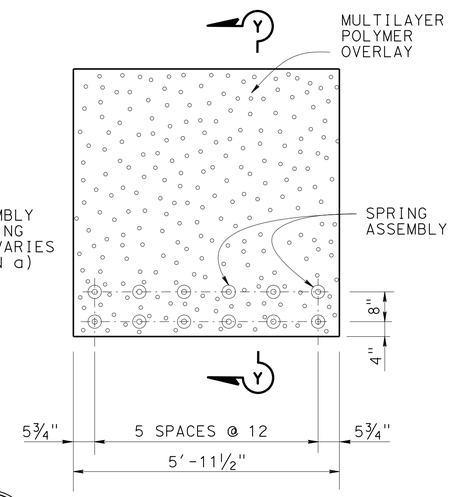

DECK PLATE B

NO SCALE

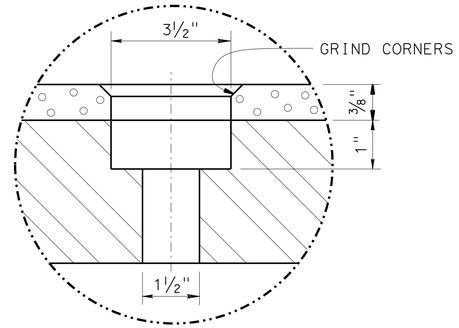

DETAIL L

NO SCALE

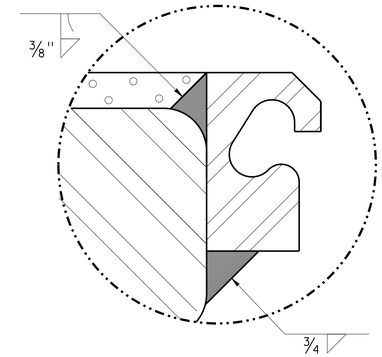

DETAIL Q

NO SCALE

NOTES:

1. For deck ℙ plan see "DECK PLATE DETAILS No. 1" sheet for TYPE I joint.
2. In Section P-P, Y may vary from ⅜" (Min) to ¾" (Max) at the thickest end of the deck ℙ (td).
3. For td, Lp, Lc, tc and Ls values see "CROSS SECTION" sheet for TYPE I joint.
4. Td thickness varies from 2⅛" to 3".
5. Lp is calculated as Lp = (16", channel seat) + (seismic gap @ 70°F) + (creep + shrinkage) + (temperature drop) + (SEE opening) + 4".

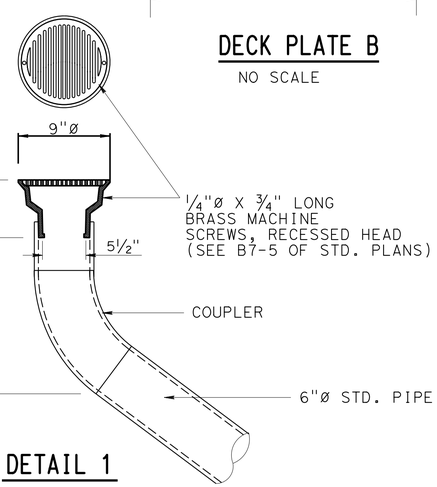

DETAIL 1

NO SCALE

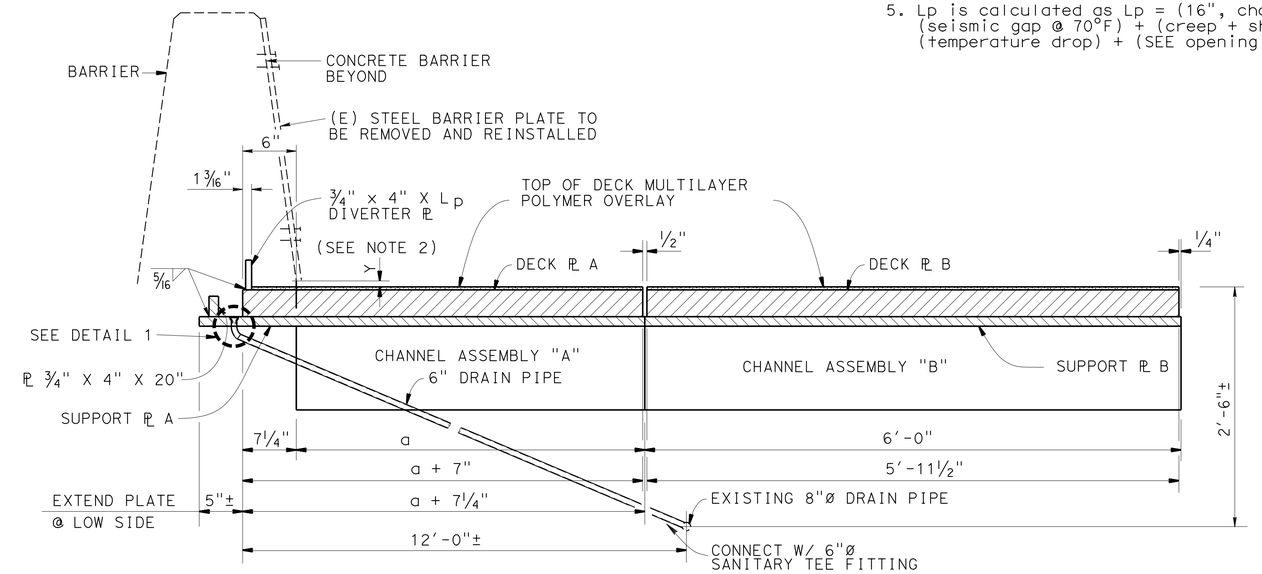

SECTION P-P

NO SCALE

CHANNEL ASSEMBLY "A" WIDTH	a (in)	84"±

a MIN = 30"

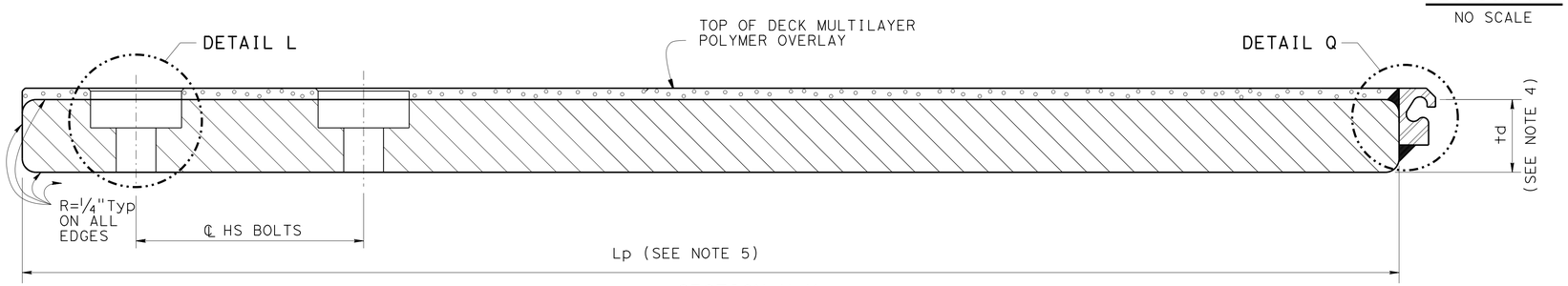

SECTION Y-Y

NO SCALE

TREAT BRIDGE DECK, OVERLAYBRIDGE DECK, REHABILITATE DECK EXPANSION JOINT AND DECK SEISMIC JOINT AND REPLACE JOINT SEAL

REVISED STANDARD DRAWING

FILE NO. xs8-080-3

APPROVAL DATE October 2014

STATE OF CALIFORNIA DEPARTMENT OF TRANSPORTATION

DIVISION OF MAINTENANCE STRUCTURE MAINTENANCE AND INVESTIGATIONS

BRIDGE NO. 28-0367L

POST MILE VARIES

SEISMIC JOINT (TYPE I, HALF CHANNEL)

DECK PLATE DETAILS No. 2

DS OSD 2147A (ENGLISH STANDARD DRAWING "XS" BORDER REV. (02-02-11)

ORIGINAL SCALE IN INCHES FOR REDUCED PLANS 0 1 2 3

UNIT: 3486
PROJECT NUMBER & PHASE: 04120001011
CONTRACT NO.: 04-3G4031

DISREGARD PRINTS BEARING EARLIER REVISION DATES

REVISION DATES 9/26/14

SHEET 5 OF 14

FILE => 3g4031_p16dckplt2.dgn

USERNAME => s133066 DATE PLOTTED => 03-JUL-2015 TIME PLOTTED => 14:48

DIST	COUNTY	ROUTE	POST MILES TOTAL PROJECT	SHEET No.	TOTAL SHEETS
04	CC, Sol	80	13.4/14.1, 0.0/0.6	49	75

REGISTERED CIVIL ENGINEER 2-06-15 DATE

6-22-15
PLANS APPROVAL DATE

REGISTERED PROFESSIONAL ENGINEER A. KUSHKAKI No. 59045 Exp. 6-30-15 CIVIL STATE OF CALIFORNIA

The State of California or its officers or agents shall not be responsible for the accuracy or completeness of electronic copies of this plan sheet.

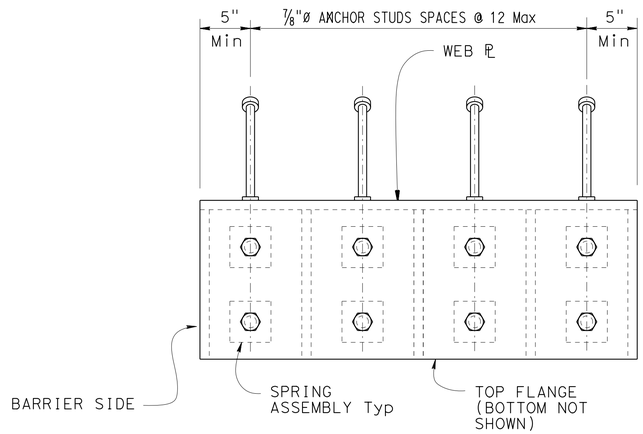

PLAN - BUILT UP CHANNEL ASSEMBLY "A" (Typ)

NO SCALE

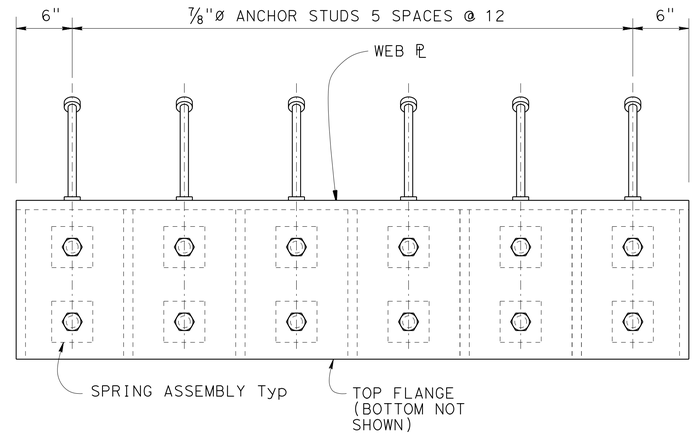

PLAN - BUILT UP CHANNEL ASSEMBLY "B" (Typ)

NO SCALE

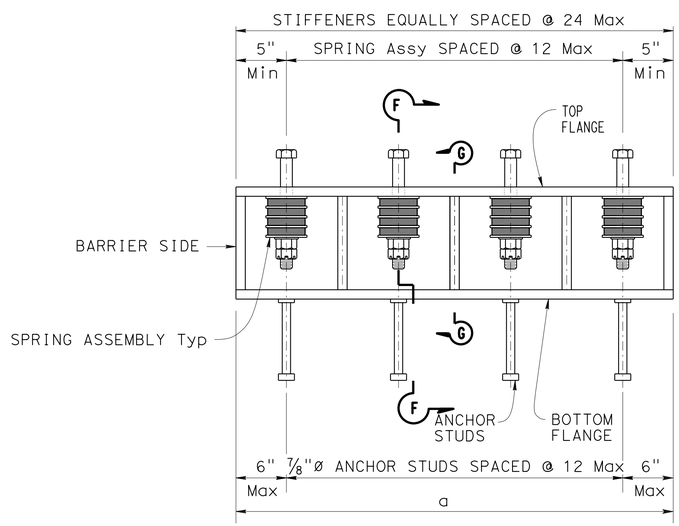

ELEVATION - BUILT UP CHANNEL ASSEMBLY "A" (Typ)

NO SCALE

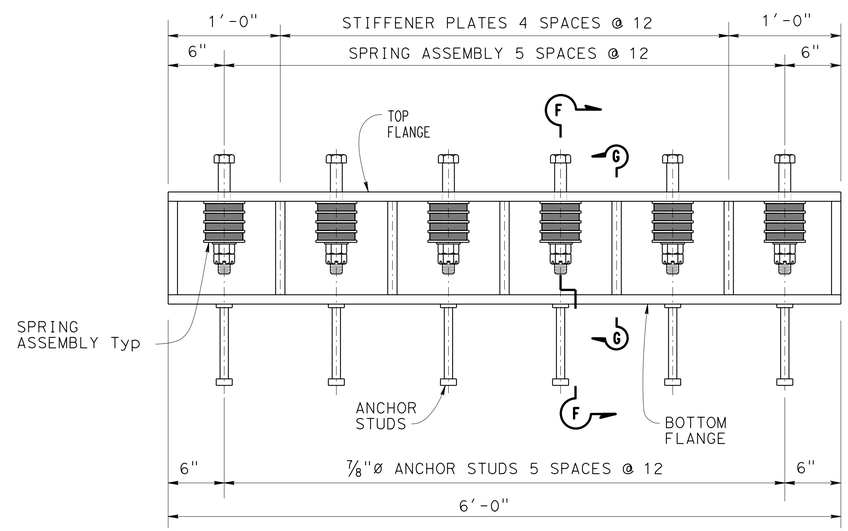

ELEVATION - BUILT UP CHANNEL ASSEMBLY "B" (Typ)

NO SCALE

NOTES:

1. For SECTIONS F-F and G-G See "CHANNEL ASSEMBLY DETAILS No. 2" sheet for TYPE I Joint.

TREAT BRIDGE DECK, OVERLAYBRIDGE DECK, REHABILITATE DECK EXPANSION JOINT AND DECK SEISMIC JOINT AND REPLACE JOINT SEAL

STANDARD DRAWING

FILE NO. xs8-080-4

APPROVAL DATE October 2014

STATE OF CALIFORNIA
DEPARTMENT OF TRANSPORTATION

DIVISION OF MAINTENANCE
STRUCTURE MAINTENANCE AND INVESTIGATIONS

BRIDGE NO. 28-0367L

POST MILE VARIES

SEISMIC JOINT (TYPE I, HALF CHANNEL)
CHANNEL ASSEMBLY DETAILS No. 1

DS OSD 2147A (ENGLISH STANDARD DRAWING "XS" BORDER REV. (02-02-11)

ORIGINAL SCALE IN INCHES FOR REDUCED PLANS 0 1 2 3

UNIT: 3486
PROJECT NUMBER & PHASE: 04120001011
CONTRACT NO.: 04-3G4031

DISREGARD PRINTS BEARING EARLIER REVISION DATES

REVISION DATES

SHEET 6 OF 14

FILE => 3g4031_q17chnlassydtl1.dgn

USERNAME => s133066 DATE PLOTTED => 03-JUL-2015 TIME PLOTTED => 14:48

DIST	COUNTY	ROUTE	POST MILES TOTAL PROJECT	SHEET No.	TOTAL SHEETS
04	CC, Sol	80	13.4/14.1, 0.0/0.6	50	75

REGISTERED CIVIL ENGINEER 2-06-15 DATE

6-22-15
PLANS APPROVAL DATE

REGISTERED PROFESSIONAL ENGINEER A. KUSHKAKI No. 59045 Exp. 6-30-15 CIVIL STATE OF CALIFORNIA

The State of California or its officers or agents shall not be responsible for the accuracy or completeness of electronic copies of this plan sheet.

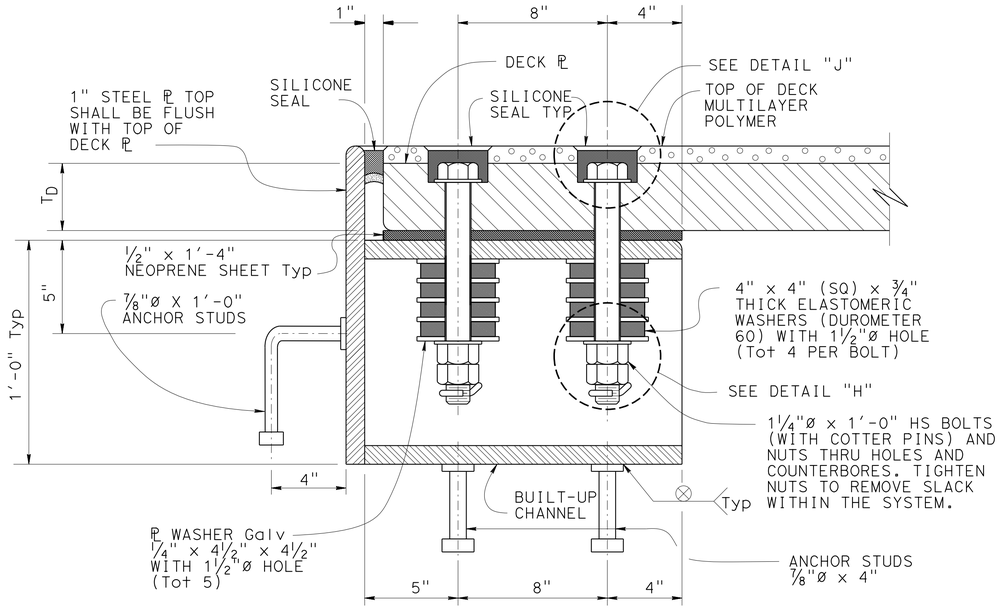

SECTION F-F

NO SCALE

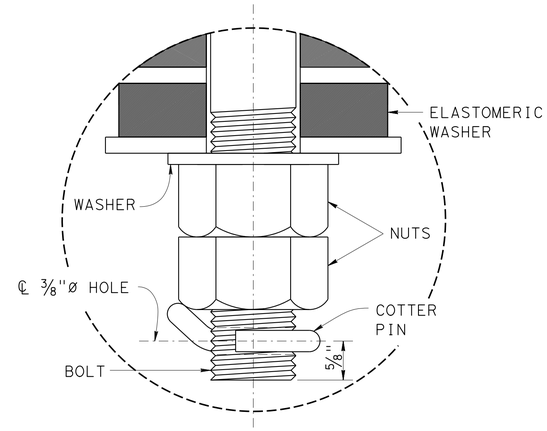

DETAIL H

NO SCALE

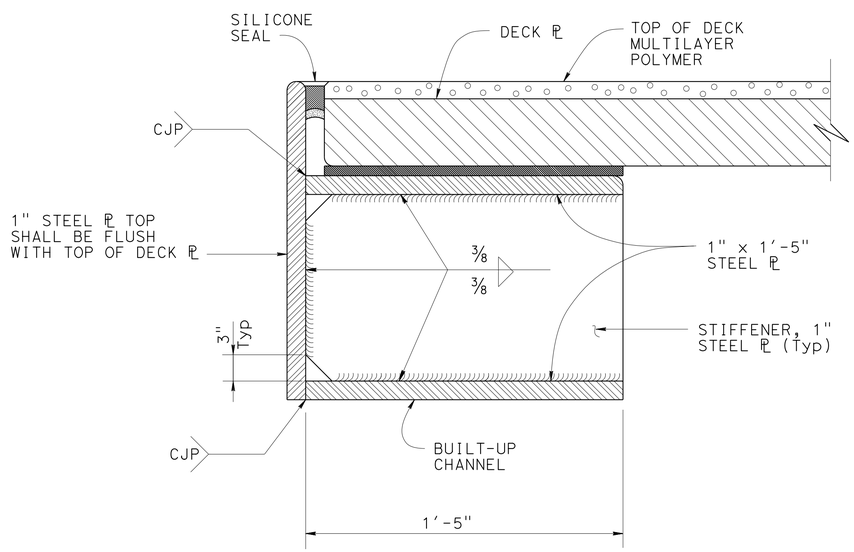

SECTION G-G

NO SCALE

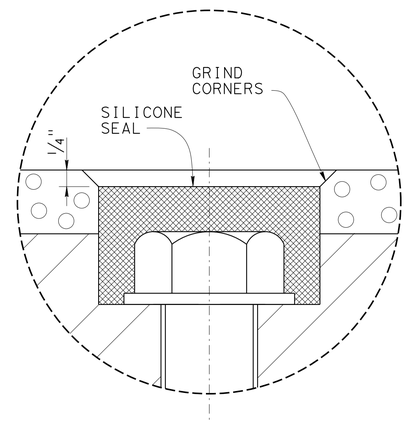

DETAIL J

NO SCALE

NOTES:

1. 1 1/2"ø holes in neoprene sheets must be drilled or punched so that the neoprene is not distorted at the time of installation.

2. For tc and td values see "CROSS SECTION" sheet for TYPE I joint.

TREAT BRIDGE DECK, OVERLAY BRIDGE DECK, REHABILITATE DECK EXPANSION JOINT AND DECK SEISMIC JOINT AND REPLACE JOINT SEAL

REVISED STANDARD DRAWING

FILE NO. xs8-080-5

APPROVAL DATE October 2014

STATE OF CALIFORNIA DEPARTMENT OF TRANSPORTATION

DIVISION OF MAINTENANCE STRUCTURE MAINTENANCE AND INVESTIGATIONS

BRIDGE NO. 28-0367L

POST MILE VARIES

SEISMIC JOINT (TYPE I, HALF CHANNEL)

CHANNEL ASSEMBLY DETAILS No. 2

DS OSD 2147A (ENGLISH STANDARD DRAWING "XS" BORDER REV. (02-02-11)

ORIGINAL SCALE IN INCHES FOR REDUCED PLANS 0 1 2 3

UNIT: 3486
PROJECT NUMBER & PHASE: 04120001011
CONTRACT NO.: 04-3G4031

DISREGARD PRINTS BEARING EARLIER REVISION DATES

REVISION DATES

SHEET 7 OF 14

FILE => 3g4031_r18chnlassydtl2.dgn

USERNAME => s133066 DATE PLOTTED => 03-JUL-2015 TIME PLOTTED => 14:48

DIST	COUNTY	ROUTE	POST MILES TOTAL PROJECT	SHEET No.	TOTAL SHEETS
04	CC, Sol	80	13.4/14.1, 0.0/0.6	51	75

REGISTERED CIVIL ENGINEER — DATE 2-06-15

6-22-15
PLANS APPROVAL DATE

REGISTERED PROFESSIONAL ENGINEER — A. KUSHKAKI — No. 59045 — Exp. 6-30-15 — CIVIL — STATE OF CALIFORNIA

The State of California or its officers or agents shall not be responsible for the accuracy or completeness of electronic copies of this plan sheet.

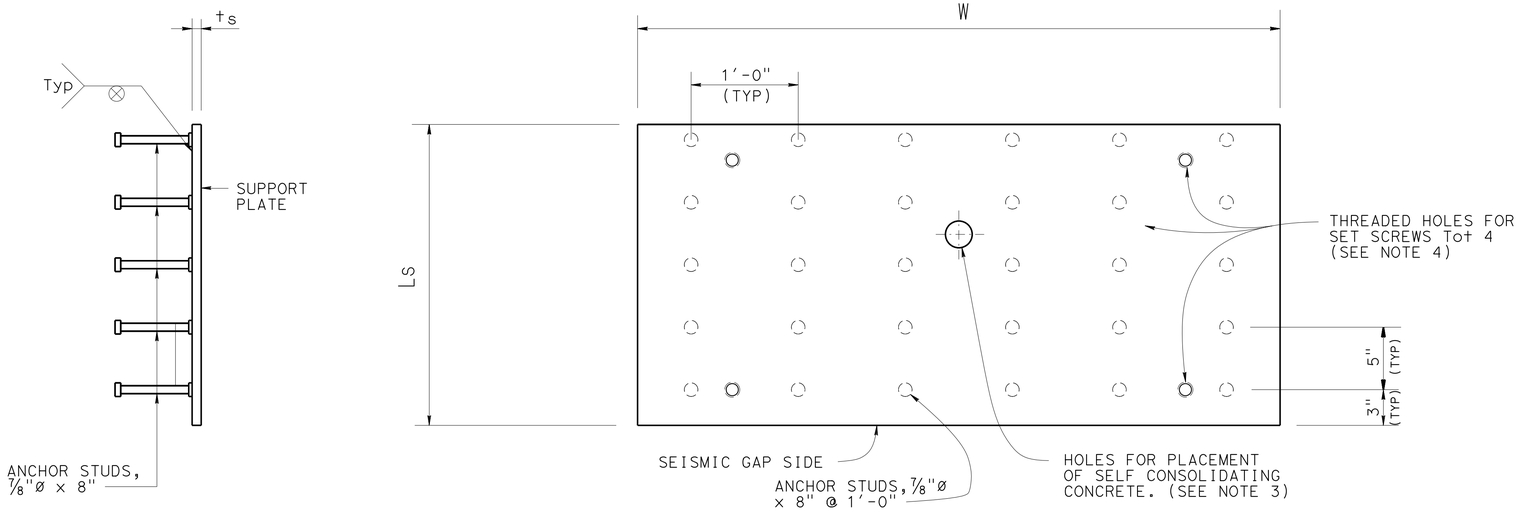

SIDE VIEW

PLAN VIEW

SUPPORT PLATE DETAIL

NO SCALE

SUPPORT PLATE WIDTH
MODULE A; W = a + 7¼"
MODULE B; W = 6'-0"

NOTES:

1. For Ls and ts values see "CROSS SECTION" sheet for TYPE I joint.
2. Support Plate B shown, Support Plate A similar.
3. Exact location and size of hole to be determined prior to support plate fabrication.
4. Threaded holes for installation if needed. Repair after support plate placement.

TREAT BRIDGE DECK, OVERLAYBRIDGE DECK, REHABILITATE DECK EXPANSION JOINT AND DECK SEISMIC JOINT AND REPLACE JOINT SEAL

REVISED STANDARD DRAWING

FILE NO. xs8-080-6

APPROVAL DATE October 2014

STATE OF CALIFORNIA
DEPARTMENT OF TRANSPORTATION

DIVISION OF MAINTENANCE
STRUCTURE MAINTENANCE AND INVESTIGATIONS

BRIDGE NO. 28-0367L
POST MILE VARIES

SEISMIC JOINT (TYPE I, HALF CHANNEL)
SUPPORT PLATE DETAILS

DS OSD 2147A (ENGLISH STANDARD DRAWING "XS" BORDER REV. (02-02-11)

ORIGINAL SCALE IN INCHES FOR REDUCED PLANS 0 1 2 3

UNIT: 3486
PROJECT NUMBER & PHASE: 04120001011
CONTRACT NO.: 04-3G4031

DISREGARD PRINTS BEARING EARLIER REVISION DATES

REVISION DATES

SHEET 8 OF 14

FILE => 3g4031_s19supptpltdtls.dgn

USERNAME => s133066 DATE PLOTTED => 03-JUL-2015 TIME PLOTTED => 14:48

DIST	COUNTY	ROUTE	POST MILES TOTAL PROJECT	SHEET No.	TOTAL SHEETS
04	CC, Sol	80	13.4/14.1, 0.0/0.6	52	75

REGISTERED CIVIL ENGINEER — DATE 2-06-15

6-22-15
PLANS APPROVAL DATE

REGISTERED PROFESSIONAL ENGINEER — A. KUSHKAKI — No. 59045 — Exp. 6-30-15 — CIVIL — STATE OF CALIFORNIA

The State of California or its officers or agents shall not be responsible for the accuracy or completeness of electronic copies of this plan sheet.

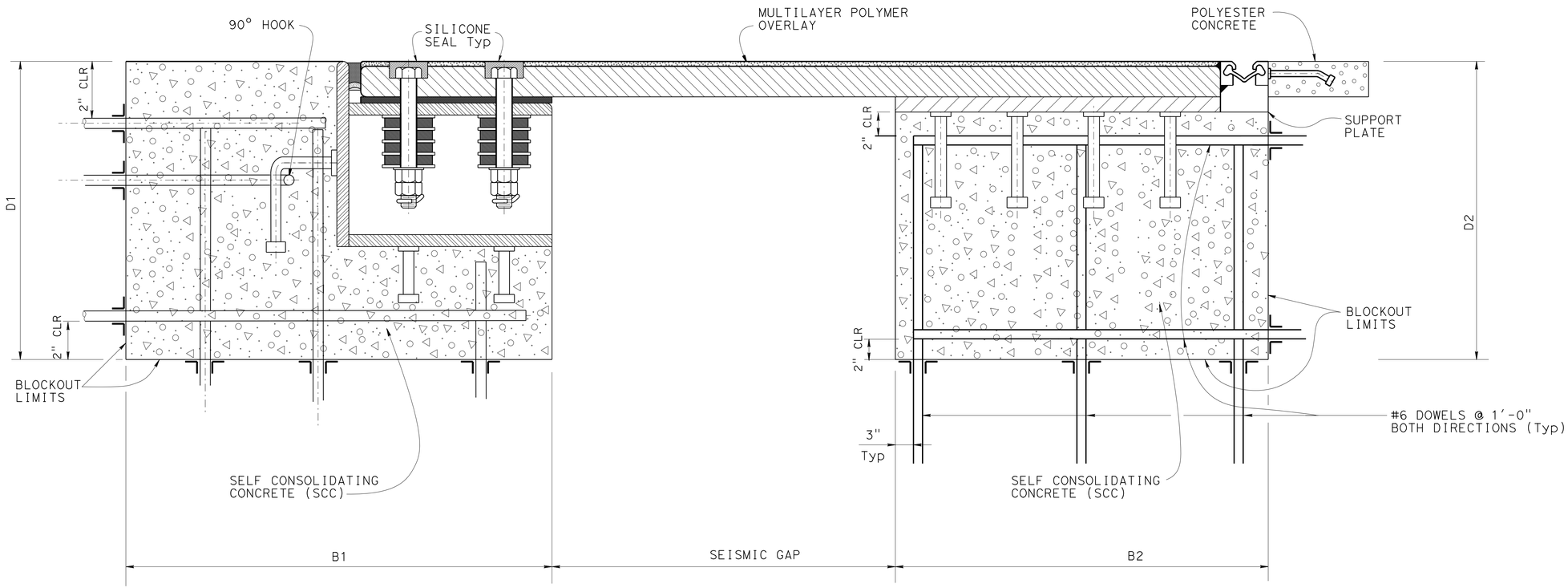

SIDE 1 **SIDE 2**

ELEVATION

NO SCALE

NOTES:

1. Unless noted all dowels are drilled and bonded with minimum embedment length of 8".
2. Top of Multilayer Polymer Overlay, Polyester Concrete, and SCC placed at deck profile.
3. Top of support plate parallel to top deck plate.
4. Seismic joint shown position at 70 °F.

TREAT BRIDGE DECK, OVERLAYBRIDGE DECK, REHABILITATE DECK EXPANSION JOINT AND DECK SEISMIC JOINT AND REPLACE JOINT SEAL

REVISED STANDARD DRAWING

FILE NO. xs8-080-7 — APPROVAL DATE October 2014

STATE OF CALIFORNIA
DEPARTMENT OF TRANSPORTATION

DIVISION OF MAINTENANCE
STRUCTURE MAINTENANCE AND INVESTIGATIONS

BRIDGE NO. 28-0367L
POST MILE VARIES

SEISMIC JOINT (TYPE I, HALF CHANNEL) REINFORCEMENT DETAILS

DS OSD 2147A (ENGLISH STANDARD DRAWING "XS" BORDER REV. (02-02-11)

ORIGINAL SCALE IN INCHES FOR REDUCED PLANS 0 1 2 3

UNIT: 3486
PROJECT NUMBER & PHASE: 04120001011
CONTRACT NO.: 04-3G4031

DISREGARD PRINTS BEARING EARLIER REVISION DATES

REVISION DATES

SHEET 9 OF 14

FILE => 3g4031_t20reinfdtls.dgn

USERNAME => s133066 DATE PLOTTED => 03-JUL-2015 TIME PLOTTED => 14:48

DIST	COUNTY	ROUTE	POST MILES TOTAL PROJECT	SHEET No.	TOTAL SHEETS
04	CC, Sol	80	13.4/14.1, 0.0/0.6	53	75

REGISTERED CIVIL ENGINEER 2-06-15 DATE

6-22-15
PLANS APPROVAL DATE

REGISTERED PROFESSIONAL ENGINEER A. KUSHKAKI No. 59045 Exp. 6-30-15 CIVIL STATE OF CALIFORNIA

The State of California or its officers or agents shall not be responsible for the accuracy or completeness of electronic copies of this plan sheet.

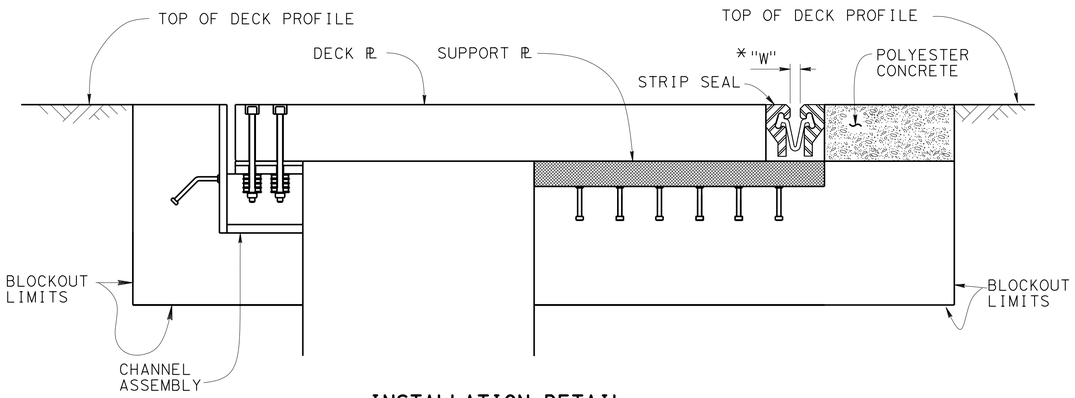

INSTALLATION DETAIL

NO SCALE

* TO SET MINIMUM JOINT OPENING "W"

"W" = ½"+[(Max Str temperature in °F)-(actual Str temperature in °F)]*(a_c or a_s)(12)(contributory L in feet)
½" Minimum
a_c = 0.0000060
a_s = 0.0000065

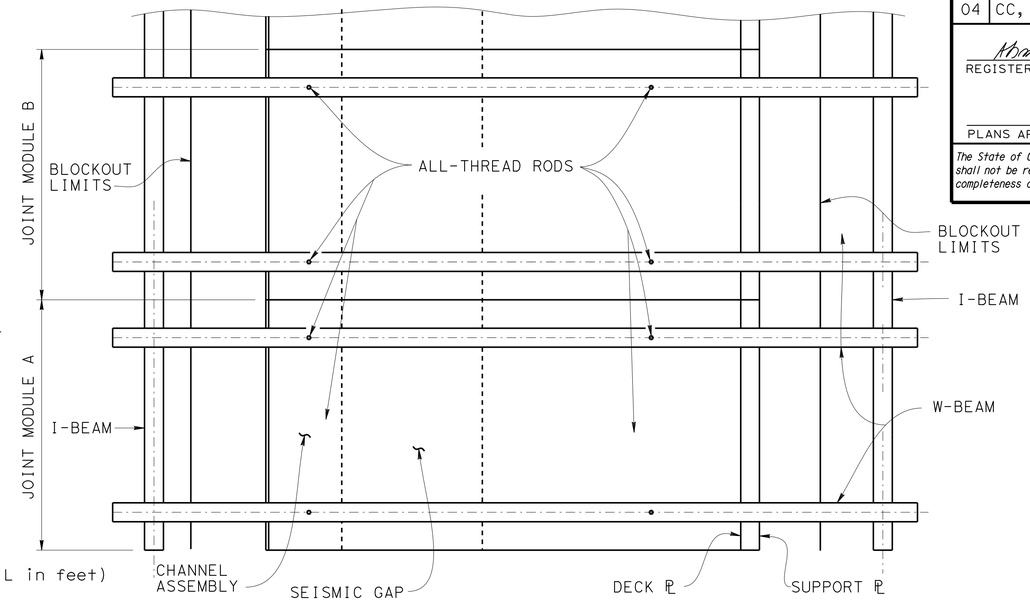

PARTIAL PLAN

NO SCALE

NOTES:

1. Not all reinforcement and joint details are shown for clarity.
2. Pipe nipples are optional.
3. After installation fill all deck holes with silicone and pipe nipple holes, if used, with threaded steel plugs.

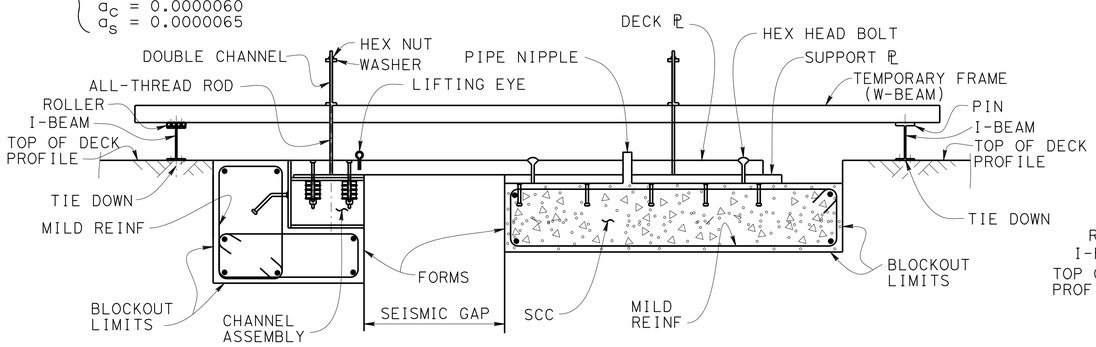

PHASE 1 (ELEVATION)

NO SCALE

1. Clean joint blockout, place forms and mild reinforcement.
2. Set joint modules into place and temporarily support them on timber to correct position ½ inch below final elevation. Each joint module consists of the channel assembly, and the deck and support plates clamped together at the shop and shipped to the site.
3. Install temporary steel frame, with roller on channel side and pin on support plate side.
4. Set all-thread rods to support and adjust joint modules.
5. Align and secure all joint modules together to final position, remove temporary timber supports.
6. Pour SCC below support plates, let concrete set.

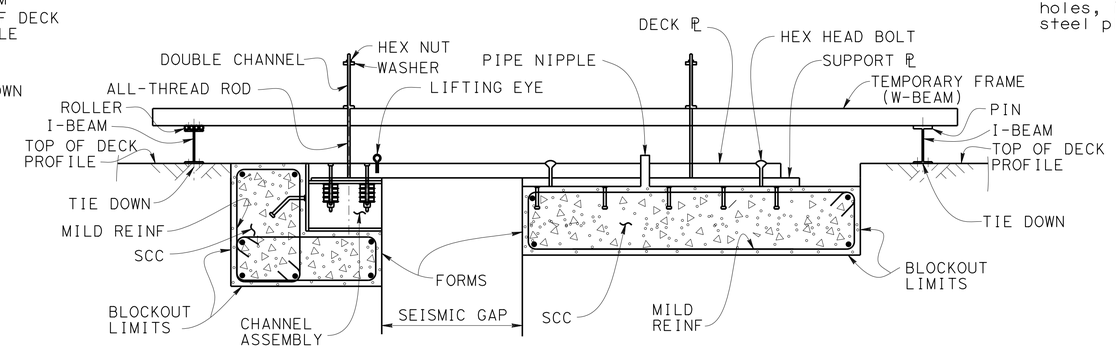

PHASE 2 (ELEVATION)

NO SCALE

1. Pour SCC in the channel assembly, and let SCC develop 1500 psi strength.
2. Release joint and remove temporary steel frame.
3. Remove pipes, bolts, forms and clean steel surfaces.
4. Place strip seal and polyester concrete.
5. Fill deck holes and seal joint with silicone.

TREAT BRIDGE DECK, OVERLAYBRIDGE DECK, REHABILITATE DECK EXPANSION JOINT AND DECK SEISMIC JOINT AND REPLACE JOINT SEAL

STANDARD DRAWING

FILE NO. xs8-080-8

APPROVAL DATE October 2014

STATE OF CALIFORNIA
DEPARTMENT OF TRANSPORTATION

DIVISION OF MAINTENANCE
STRUCTURE MAINTENANCE AND INVESTIGATIONS

BRIDGE NO. 28-0367L
POST MILE VARIES

SEISMIC JOINT (TYPE I, HALF CHANNEL)

OPTIONAL CONSTRUCTION SEQUENCE

DS OSD 2147A (ENGLISH STANDARD DRAWING "XS" BORDER REV. (02-02-11)

ORIGINAL SCALE IN INCHES FOR REDUCED PLANS 0 1 2 3

UNIT: 3486
PROJECT NUMBER & PHASE: 04120001011
CONTRACT NO.: 04-3G4031

DISREGARD PRINTS BEARING EARLIER REVISION DATES

REVISION DATES

SHEET 10 OF 14

FILE => 3g4031_u21constseq.dgn

USERNAME => s133066 DATE PLOTTED => 03-JUL-2015 TIME PLOTTED => 14:48

DIST	COUNTY	ROUTE	POST MILES TOTAL PROJECT	SHEET No	TOTAL SHEETS
04	CC, Sol	80	13.4/14.1, 0.0/0.6	54	75

REGISTERED CIVIL ENGINEER 2-06-15 DATE

6-22-15
PLANS APPROVAL DATE

REGISTERED PROFESSIONAL ENGINEER A. KUSHKAKI No. 59045 Exp. 6-30-15 CIVIL STATE OF CALIFORNIA

The State of California or its officers or agents shall not be responsible for the accuracy or completeness of electronic copies of this plan sheet.

LEGEND:

INDICATES LIMITS OF BRIDGE REMOVAL (PORTION)

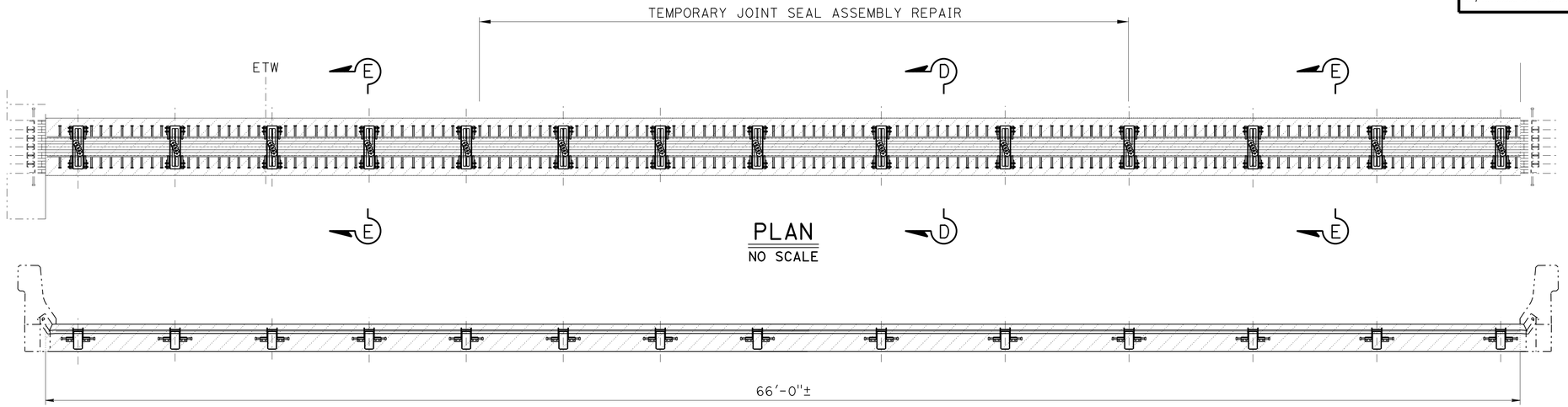

PLAN
NO SCALE

SECTION
NO SCALE

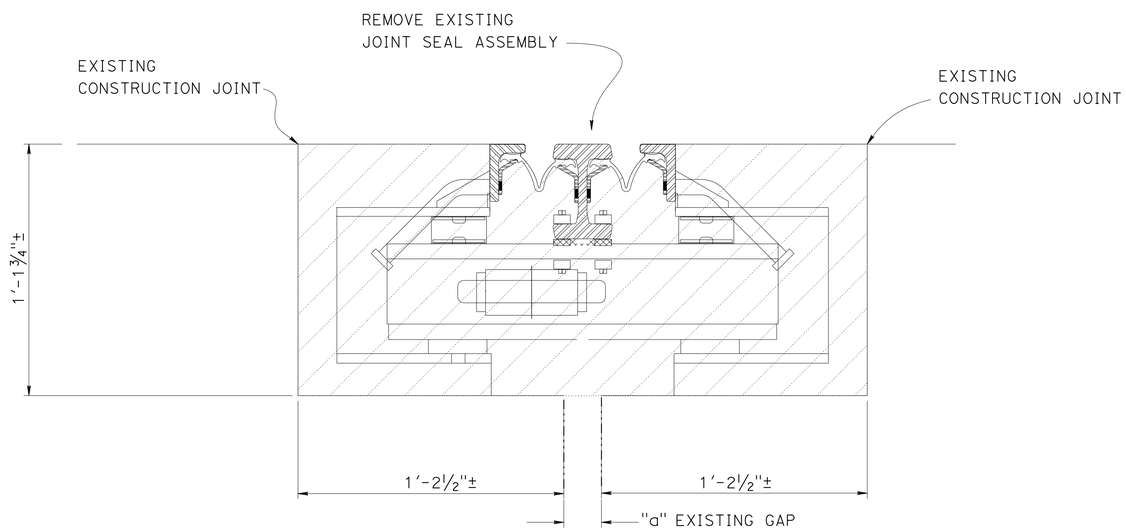

SECTION E-E
No Scale

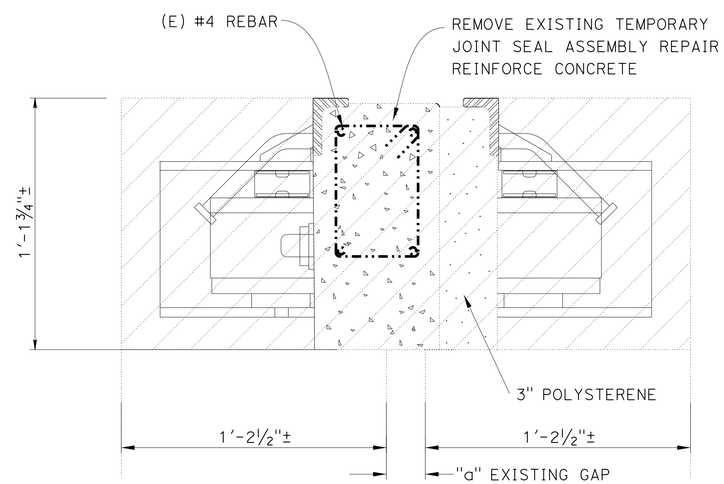

SECTION D-D
No Scale

NOTE:

THE CONTRACTOR MUST VERIFY ALL CONTROLLING FIELD DIMENSIONS BEFORE ORDERING OR FABRICATING ANY MATERIAL.

TREAT BRIDGE DECK, OVERLAY BRIDGE DECK, REHABILITATE DECK EXPANSION JOINT AND DECK SEISMIC JOINT AND REPLACE JOINT SEAL

DESIGN	BY A. KUSHKAKI	CHECKED C. LEE	
DETAILS	BY B. BALLESTEROS	CHECKED A. KUSHKAKI	
QUANTITIES	BY A. KUSHKAKI	CHECKED C. LEE	

STATE OF CALIFORNIA
DEPARTMENT OF TRANSPORTATION

DIVISION OF MAINTENANCE
STRUCTURE MAINTENANCE AND INVESTIGATIONS

BRIDGE NO. 28-0367L
POST MILE VARIES

CROCKETT VIADUCT ABUTMENT 1

EXISTING JOINT REMOVAL DETAILS - 2

STRUCTURES MAINTENANCE DETAIL SHEET (ENGLISH) (REV. 09-01-10)

ORIGINAL SCALE IN INCHES FOR REDUCED PLANS 0 1 2 3

UNIT: 3486
PROJECT NUMBER & PHASE: 04120001011 CONTRACT NO.: 04-3G4031

DISREGARD PRINTS BEARING EARLIER REVISION DATES 4-15-15

REVISION DATES | SHEET 11 | OF 14

FILE => 3g4031_v22jntrmvldtls.dgn

USERNAME => s133066 DATE PLOTTED => 03-JUL-2015 TIME PLOTTED => 14:29

DIST	COUNTY	ROUTE	POST MILES TOTAL PROJECT	SHEET No	TOTAL SHEETS
04	CC, Sol	80	13.4/14.1, 0.0/0.6	55	75

REGISTERED CIVIL ENGINEER 2-06-15 DATE

6-22-15
PLANS APPROVAL DATE

REGISTERED PROFESSIONAL ENGINEER
A. KUSHKAKI
No. 59045
Exp. 6-30-15
CIVIL
STATE OF CALIFORNIA

The State of California or its officers or agents shall not be responsible for the accuracy or completeness of electronic copies of this plan sheet.

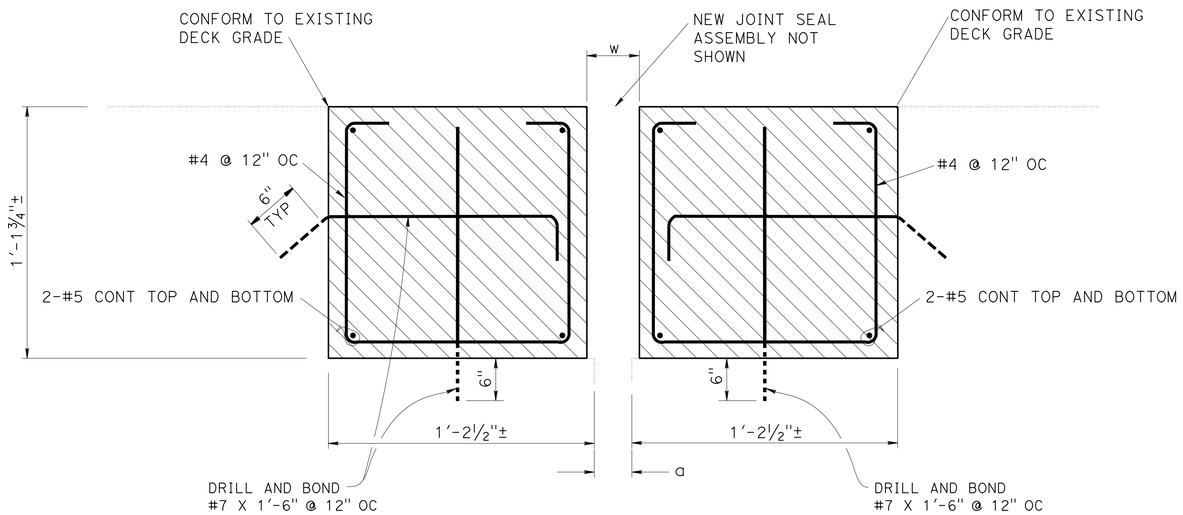

SECTION D-D
No Scale

LEGEND:

INDICATES LIMITS OF STRUCTURAL CONCRETE, BRIDGE

NOTES:

1. RETAINER BAR AND SUPPORT BAR OMITTED FOR CLARITY.
2. FIELD WELDING MUST BE PERFORMED ON THE JOINT AFTER CONCRETE POUR. THE JOINT MUST MATCH GRADE OF THE BRIDGE.

NOTE:

THE CONTRACTOR MUST VERIFY ALL CONTROLLING FIELD DIMENSIONS BEFORE ORDERING OR FABRICATING ANY MATERIAL.

TREAT BRIDGE DECK, OVERLAY BRIDGE DECK, REHABILITATE DECK EXPANSION JOINT AND DECK SEISMIC JOINT AND REPLACE JOINT SEAL

	BY	CHECKED
DESIGN	A. KUSHKAKI	C. LEE
DETAILS	B. BALLESTEROS	A. KUSHKAKI
QUANTITIES	A. KUSHKAKI	C. LEE

STATE OF CALIFORNIA
DEPARTMENT OF TRANSPORTATION

DIVISION OF MAINTENANCE
STRUCTURE MAINTENANCE AND INVESTIGATIONS

BRIDGE NO. 28-0367L
POST MILE VARIES

CROCKETT VIADUCT
NEW JOINT INSTALLATION DETAILS - 2

STRUCTURES MAINTENANCE DETAIL SHEET (ENGLISH) (REV. 09-01-10)

ORIGINAL SCALE IN INCHES FOR REDUCED PLANS 0 1 2 3

UNIT: 3486
PROJECT NUMBER & PHASE: 04120001011
CONTRACT NO.: 04-3G4031

DISREGARD PRINTS BEARING EARLIER REVISION DATES

REVISION DATES

SHEET 12 OF 14

FILE => 3g4031_w23jtinstindtls.dgn

USERNAME => s133066 DATE PLOTTED => 03-JUL-2015 TIME PLOTTED => 14:49

DIST	COUNTY	ROUTE	POST MILES TOTAL PROJECT	SHEET No.	TOTAL SHEETS
04	CC, Sol	80	13.4/14.1, 0.0/0.6	56	75

REGISTERED CIVIL ENGINEER 2-06-15 DATE

6-22-15
PLANS APPROVAL DATE

REGISTERED PROFESSIONAL ENGINEER A. KUSHKAKI No. 59045 Exp. 6-30-15 CIVIL STATE OF CALIFORNIA

The State of California or its officers or agents shall not be responsible for the accuracy or completeness of electronic copies of this plan sheet.

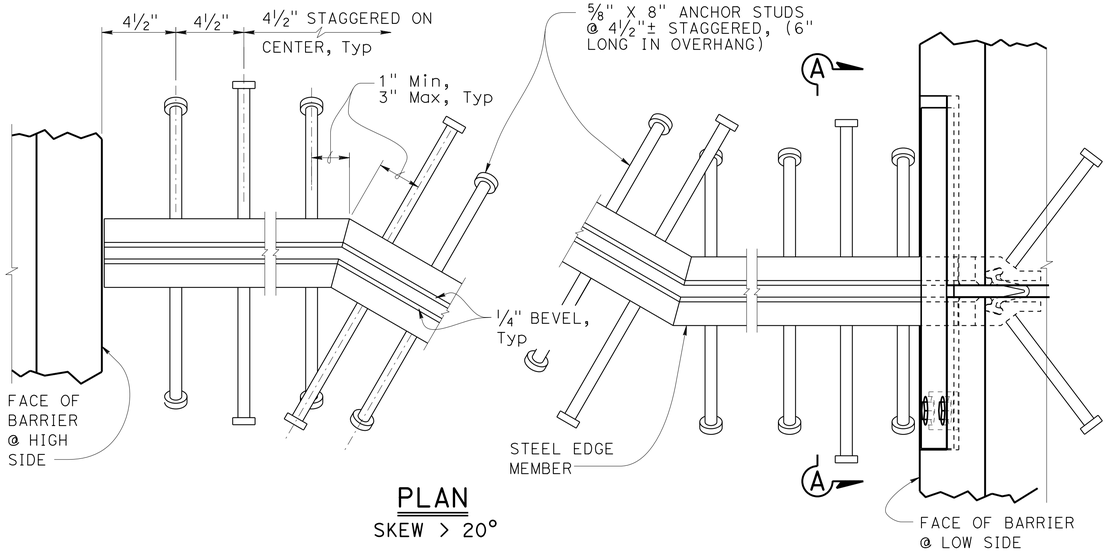

PLAN
SKEW > 20°

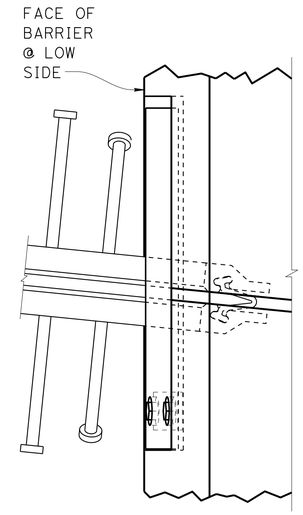

PLAN
SKEW ≤ 20°

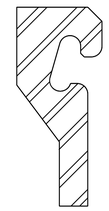

SCHEMATIC STEEL EDGE MEMBER

NOTES:

1. Alternatively, fillet or complete penetration welds be used at anchor studs.
2. Alternate types of anchor studs must be authorized.
3. Joint seal assembly to be used in conjunction with closure pour. (See other sheets for limits). Closure pour must not be placed until final deck surface is within the tolerances specified.
4. Use joint at crown of roadway, at any change in traverse slope in deck and at changes in horizontal direction. Place other joints at or near lanes. All metal parts must be painted or galvanized after fabrication.
5. Sheet Neoprene must be fabricated in one continuous piece and must be fabricated to bend around corners. Field splices of the neoprene are not allowed.
6. Insert assembly or expansion anchorage for 5/8" x 1¾" bolts. Use installation bolts extended ½" minimum past nut and coat with bond breaker, after concrete has cured, remove installation bolts, install HS bolts and sheet neoprene.
7. Sidewalk Detail similar to Barrier Detail on low side at both sides if the roadway is crowned or if the difference in elevation between the ends of the seal is 0.5′ or less.
8. a_c, a_s, are the thermal expansion coefficients for concrete and steel respectively.
9. Anchor studs must conform to ASTM 108.

JOINT INFORMATION			"a" DIMENSIONS		
LOCATION	MOVEMENT RATING (MR)	SKEW	WINTER	SPRING & FALL	SUMMER
Abut 1	2½	0	2½"	2"	1½"

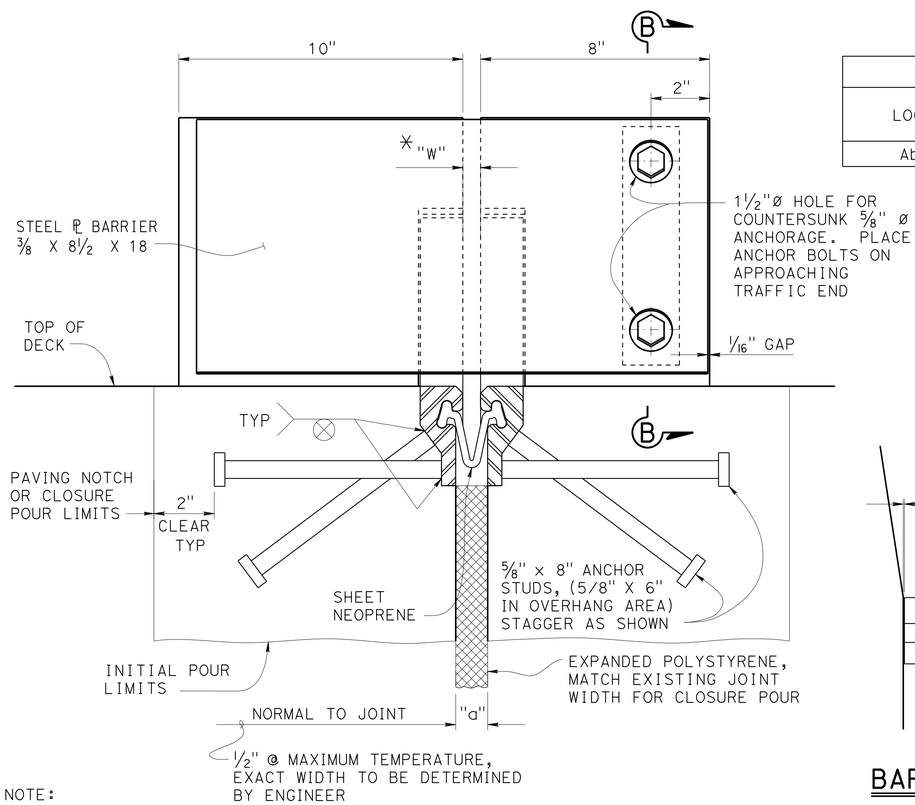

SECTION A-A

* TO SET MINIMUM JOINT OPENING "W"

$$"W" = \begin{cases} \frac{1}{2}" + [(\text{Max Str temperature in °F}) - (\text{actual Str temperature in °F})] * (a_c \text{ or } a_s)(12)(\text{contributory L in feet}) \\ \frac{1}{2}" \text{ Minimum} \\ a_c = 0.0000060 \\ a_s = 0.0000065 \end{cases}$$

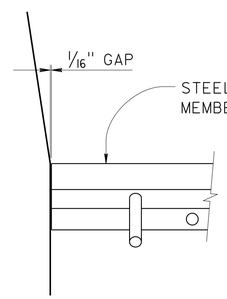

BARRIER DETAIL
HIGH SIDE

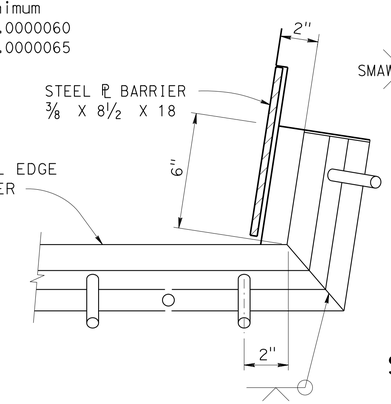

BARRIER DETAIL
LOW SIDE

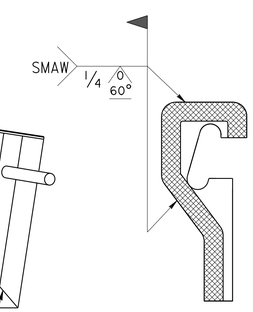

SCHEMATIC FIELD
WELD DETAIL

NOTE:
SHADED AREAS TO BE WELDED

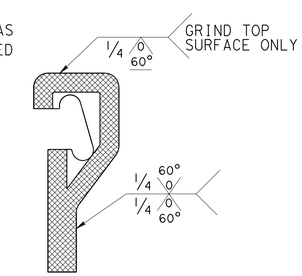

SCHEMATIC SHOP
WELD DETAIL

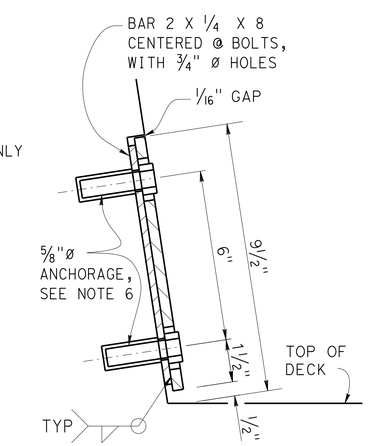

SECTION B-B

NOTE:

THE CONTRACTOR MUST VERIFY ALL CONTROLLING FIELD DIMENSIONS BEFORE ORDERING OR FABRICATING ANY MATERIAL.

NO SCALE

TREAT BRIDGE DECK, OVERLAY BRIDGE DECK, REHABILITATE DECK EXPANSION JOINT AND DECK SEISMIC JOINT AND REPLACE JOINT SEAL

STANDARD DRAWING
FILE NO. xs8-010
APPROVAL DATE July 2014

STATE OF CALIFORNIA
DEPARTMENT OF TRANSPORTATION

DIVISION OF MAINTENANCE
STRUCTURE MAINTENANCE AND INVESTIGATIONS

BRIDGE NO. 28-0367L
POST MILE VARIES

STRIP JOINT SEAL ASSEMBLY

MAXIMUM MOVEMENT RATING = 2½"

DS OSD 2147A (ENGLISH STANDARD DRAWING "XS" BORDER REV. (02-02-11)

ORIGINAL SCALE IN INCHES FOR REDUCED PLANS 0 1 2 3

UNIT: 3486
PROJECT NUMBER & PHASE: 04120001011
CONTRACT NO.: 04-3G4031

DISREGARD PRINTS BEARING EARLIER REVISION DATES

REVISION DATES

SHEET 13 OF 14

FILE => 3g4031_x24maxmvmtrtng.dgn

USERNAME => s133066 DATE PLOTTED => 03-JUL-2015 TIME PLOTTED => 14:49

DIST	COUNTY	ROUTE	POST MILES TOTAL PROJECT	SHEET No	TOTAL SHEETS
04	CC, Sol	80	13.4/14.1, 0.0/0.6	57	75

REGISTERED CIVIL ENGINEER 2-06-15 DATE

6-22-15
PLANS APPROVAL DATE

The State of California or its officers or agents shall not be responsible for the accuracy or completeness of electronic copies of this plan sheet.

REGISTERED PROFESSIONAL ENGINEER A. KUSHKAKI No. 59045 Exp. 6-30-15 CIVIL STATE OF CALIFORNIA

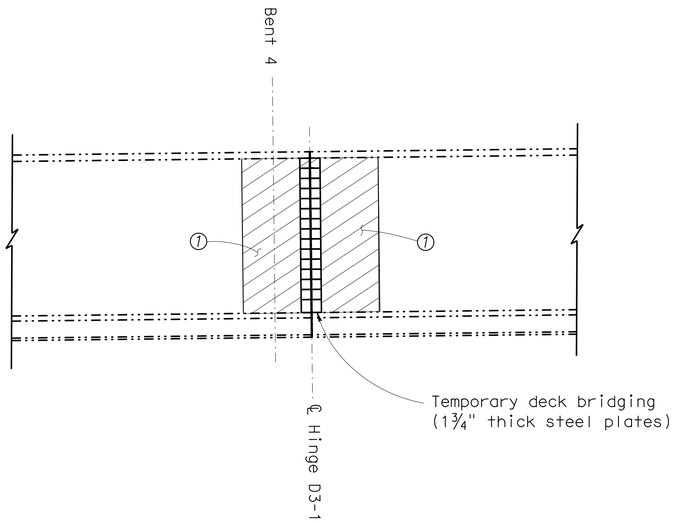

TAPER DETAIL

No Scale

Note:

1. Place tapered 200:1 (leading / trailing edge = ½" thick Max) rigid pavement material at approach and departure of construction.

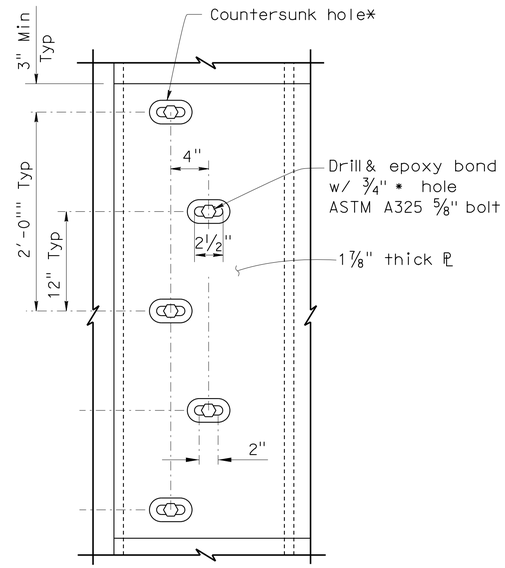

BOLT STAGGER DETAIL

1½" = 1'-0"

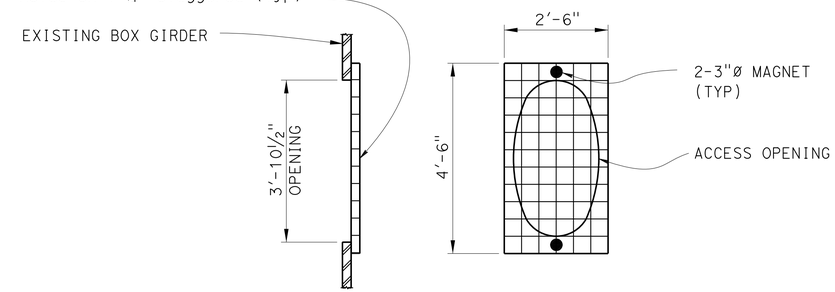

SCREEN DOOR TYPE "A"

No Scale

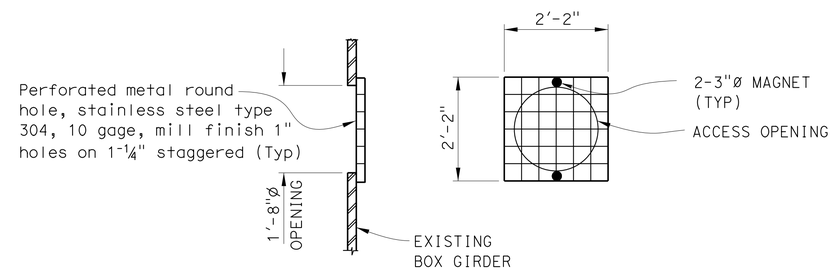

SCREEN DOOR TYPE "B"

No Scale

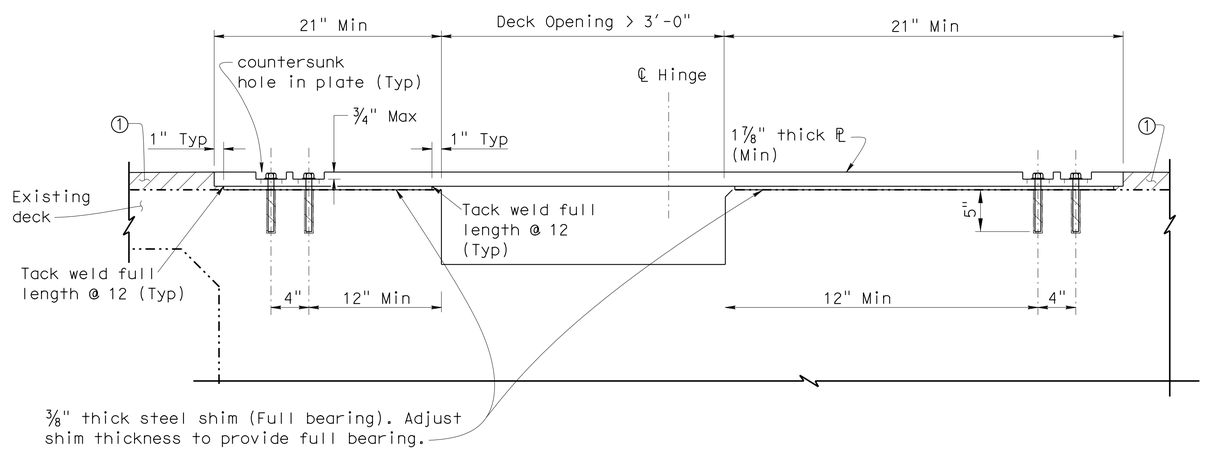

TEMPORARY DECK PLATE CONNECTION

NO SCALE

NOTE:

THE CONTRACTOR MUST VERIFY ALL CONTROLLING FIELD DIMENSIONS BEFORE ORDERING OR FABRICATING ANY MATERIAL.

TREAT BRIDGE DECK, OVERLAY BRIDGE DECK, REHABILITATE DECK EXPANSION JOINT AND DECK SEISMIC JOINT AND REPLACE JOINT SEAL

	BY	CHECKED
DESIGN	A. KUSHKAKI	C. LEE
DETAILS	B. BALLESTEROS	A. KUSHKAKI
QUANTITIES	A. KUSHKAKI	C. LEE

STATE OF CALIFORNIA
DEPARTMENT OF TRANSPORTATION

DIVISION OF MAINTENANCE
STRUCTURE MAINTENANCE AND INVESTIGATIONS

BRIDGE NO. 28-0367L
POST MILE VARIES

CROCKETT VIADUCT

DECK PLATING DETAILS

STRUCTURES MAINTENANCE DETAIL SHEET (ENGLISH) (REV. 09-01-10)

ORIGINAL SCALE IN INCHES FOR REDUCED PLANS 0 1 2 3

UNIT: 3486
PROJECT NUMBER & PHASE: 04120001011
CONTRACT NO.: 04-3G4031

DISREGARD PRINTS BEARING EARLIER REVISION DATES

REVISION DATES 4-5-15 4-15-15

SHEET 14 OF 14

FILE => 3g4031_y25dckpltgdtls.dgn

USERNAME => s133066 DATE PLOTTED => 03-JUL-2015 TIME PLOTTED => 14:24:53

Dist	COUNTY	ROUTE	POST MILES TOTAL PROJECT	SHEET No.	TOTAL SHEETS
04	CC, Sol	80	13.4/14.1, 0.0/0.6	58	75

Christopher M. Faria 11-17-14
REGISTERED MECHANICAL ENGINEER DATE

6-22-2015
PLANS APPROVAL DATE

REGISTERED PROFESSIONAL ENGINEER CHRISTOPHER M. FARIA No. M30419 Exp. 12-31-15 MECH STATE OF CALIFORNIA

The State of California or its officers or agents shall not be responsible for the accuracy or completeness of scanned copies of this plan sheet.

PLUMBING

—— - ——	Cold water
—— A ——	Compressed air
—— G ——	GAS
—— D ——	Equipment drain
—— F ——	Fire water
—— - - ——	Hot water
—— - - - ——	Hot water return
—— LPG ——	Liquified petroleum gas
—— R ——	Relief valve discharge pipe
—— SS ——	Sanitary sewer
————	Sanitary sewer (above grade)
—— ——	Sanitary sewer (below grade)
— — — —	Sanitary sewer vent

HEATING, VENTILATING AND AIR CONDITIONING

	Balance damper
	Flexible duct
—— EA ——	Exhaust air
—— OA ——	Outside air
—— RA ——	Return air
—— SA ——	Supply air
ER or CFM/ER CFM	Exhaust register
or SIZE CFM	Return register
or SIZE CFM	Supply diffuser
T	Thermostat
TS	Time switch
M	Motorized zone damper
▲	Three wire test station
F	Exhaust fan
FE	Fire extinguisher

PIPE FITTINGS AND VALVES

	Cap , threaded
	Elbow, turned down
	Elbow, turned up
	Reducer, concentric
	Pressure gauge (with valve and snubber)
	Strainer
	Union
	Union, insulating
	Valve, ball
	Valve, check
	Valve, gas
	Valve, gate
	Valve, safety relief
	Valve, pressure reducing
	Valve, pressure/temperature relief
	Water hammer arrestor

MISCELLANEOUS

L	Angle
℄	Centerline
ø	Diameter

Section / elevation letter
Sheet number

Detail number
Sheet number

MECHANICAL ABBREVIATIONS

A/C	Air Conditioning
ABS	Acrylonitrile Butadiene Styrene
AC	Air Compressor
AD	Air Drop
AP	Alternative Pipe
ATF	Automatic Transmission Fluid
AWG	American Wire Gauge
BH	Box Hydrant
Bldg	Building
BTU	British Thermal Unit
BTUH	British Thermal Unit Per Hour
BV	Balancing Valve
CHLF	Combination Heat/Light/Fan Unit
CFS	Cold Form Steel
CFM	Cubic Feet Per Minute
CI	Cast-Iron
CO	Cleanout
COTF	Cleanout Through Floor
COTG	Cleanout Through Grade
COTW	Cleanout To Wall
CV	Check Valve
CW	Cold Water
D	Depth
DB	Dry Bulb
DF	Drinking Fountain
DH	Dehumidifier
Dia	Diameter
(E)	Existing
EC	Evaporative Cooler
EEW	Emergency Eyewash And Shower
EF	Exhaust Fan
El	Elevation
EWC	Electric Water Cooler
EEHF	Exhaust Evacuation Hose Reel and Fan
FC	Flexible Connection
FD	Floor Drain
FDC	Fire Department Connection
FE	Fire Extinguisher
FG	Finish Grade
FH	Fire Hydrant
FEF	Fume Exhaust Fan
FOTC	Freestanding Overhead Travelling Crane
GA	Gauge
GALV	Galvanized
GLV	Globe Valve
GPM	Gallons Per Minute
GSP	Galvanized Steel Pipe
GV	Gate Valve
GWH	Gas Water Heater
GYP	Gypsum
H	Height
HB	Hydrant Box
H/C	Hot Water, High Pressure Cleaner
HF	Hose Faucet
HVAC	Heating, Ventilating And Air Conditioning
HW	Hot Water
Hz	Hertz
ID	Inside Diameter
IE	Invert Elevation
IN	Inch
IVF	Industrial Ventilation Fan
KS	Kitchen Sink
LAV	Lavatory
LIRH	Low Intensity Radiant Heater
MAX	Maximum
MAN	Manhole
MD	Manual Damper
MF	Make Up Fan
MIN	Minimum
NIC	Not In Contract
NO	Number
NPT	National Pipe Thread
NST	National Standard Thread
OA	Outside Air
OC	On Center
OD	Outside Diameter
OG	Original Ground
PCC	Portland Cement Concrete
PH	Phase
PRV	Pressure Reducing Valve
PSI	Pounds Per Square Inch
PVC	Polyvinyl Chloride
R	Radius
Reg	Register
RA	Return Air
RCP	Reinforced Concrete Pipe
REG	Required
RH	Radiant Heater
RV	Relief Valve
S/S	Service Sink
SA	Supply Air
SCH	Schedule
SDS	Sanitary Dump Station
SF	Supply Fan
SHR	Shower
SP	Static Pressure
SS	Sanitary Sewer
STA	Station
STD	Standard
TCV	Temperature Control Valve
TOT	Total
TS	Time Switch
TYP	Typical
UH	Unit Heater
UR	Urinal
V	Volt
VAC	Voltage, Alternating Current
VR	Vent Riser
VTR	Vent Thru Roof
W	Width
W/	With
W/O	Without
WD	Water Drop
WC	Water Closet
W.C.	Water Column
WH	Water Heater
WHA	Water Hammer Arrestor
WLS	Water Level Switch
Wp	Weatherproof
WS	Wash Sink
WSP	Welded Steel Pipe

APPROVED FOR MECHANICAL WORK ONLY

	BY	CHECKED
DESIGN	Chris Faria	Jack Wheeler
DETAILS	Angela Chen	Jack Wheeler
QUANTITIES	Chris Faria	Jack Wheeler

STATE OF CALIFORNIA
DEPARTMENT OF TRANSPORTATION

DIVISION OF ENGINEERING SERVICES
ELECTRICAL-MECHANICAL-WATER AND WASTEWATER DESIGN

BRIDGE No. 28-0352L
POST MILE X

ZAMPA BRIDGE ANCHORAGE DEHUMIDIFICATION

MECHANICAL LEGEND

SHEET M0-0

TAEMWW Imperial - CCSC Rev. 01/13

ORIGINAL SCALE IN INCHES FOR REDUCED PLANS 0 1 2 3

UNIT: 3615 CONTRACT No.:04-3G4031
PROJECT NUMBER & PHASE: 041200001011

DISREGARD PRINTS BEARING EARLIER REVISION DATES → 07-08-14 09-22-14 11-17-14

REVISION DATES (PRELIMINARY STAGE ONLY) SHEET OF

03-JUL-2015 13:04

P:\dist_04\0412000101_zampa_br_anchorage_dehumidification\expedite\M0_00.dgn

Dist	COUNTY	ROUTE	POST MILES TOTAL PROJECT	SHEET No.	TOTAL SHEETS
04	CC, Sol	80	13.4/14.1, 0.0/0.6	59	75

Christopher M. Faria 11-17-14
REGISTERED MECHANICAL ENGINEER DATE

6-22-2015
PLANS APPROVAL DATE

REGISTERED PROFESSIONAL ENGINEER
CHRISTOPHER M. FARIA
No. M30419
Exp. 12-31-15
MECH
STATE OF CALIFORNIA

The State of California or its officers or agents shall not be responsible for the accuracy or completeness of scanned copies of this plan sheet.

SCOPE OF WORK
PROVIDE A NEW DEHUMIDIFICATION UNIT IN EACH OF THE FOUR EXISTING ANCHORAGE ROOMS AT THE BRIDGE. THERE ARE TWO ANCHORAGE ROOMS AT THE NORTH END OF THE BRIDGE AND TWO ANCHORAGE ROOMS AT THE SOUTH END OF THE BRIDGE.

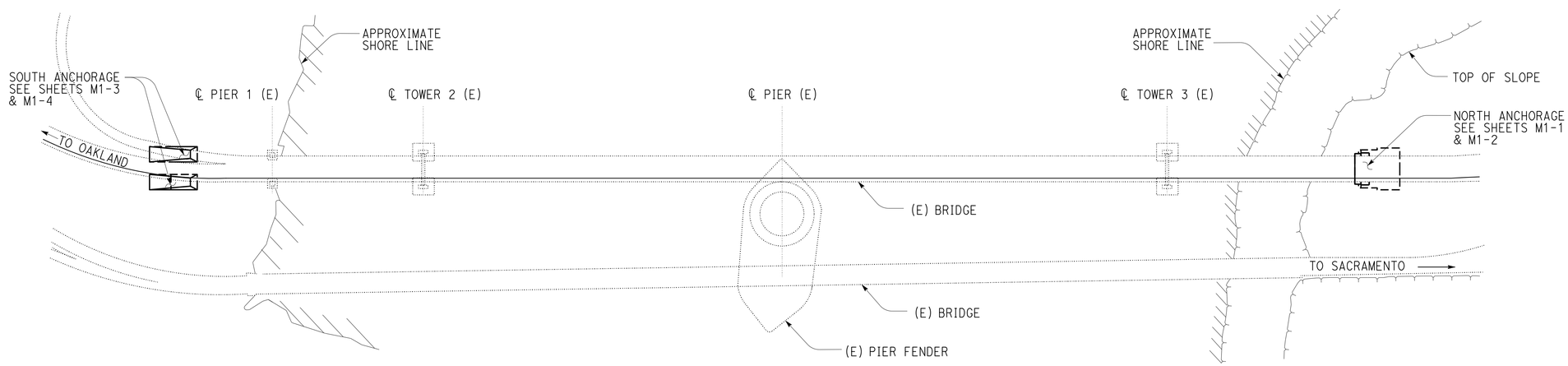

SITE PLAN

NO SCALE

APPROVED FOR MECHANICAL WORK ONLY

	BY	CHECKED
DESIGN	Chris Faria	Jack Wheeler
DETAILS	Angela Chen	Jack Wheeler
QUANTITIES	Chris Faria	Jack Wheeler

STATE OF CALIFORNIA
DEPARTMENT OF TRANSPORTATION

DIVISION OF ENGINEERING SERVICES
ELECTRICAL-MECHANICAL-WATER AND WASTEWATER DESIGN

BRIDGE No. 28-0352L
POST MILE X

ZAMPA BRIDGE ANCHORAGE DEHUMIDIFICATION

SITE PLAN

SHEET M1-0

TAEMWW Imperial - CCSC Rev. 01/13

ORIGINAL SCALE IN INCHES FOR REDUCED PLANS 0 1 2 3

UNIT: 3615 CONTRACT No.:04-3G4031
PROJECT NUMBER & PHASE: 041200001011

DISREGARD PRINTS BEARING EARLIER REVISION DATES → 07-08-14 03-22-14 11-17-14

REVISION DATES (PRELIMINARY STAGE ONLY) SHEET OF

03-JUL-2015 13:04

P:\dist_04\0412000101_zampa_br_anchorage_dehumidification\expedite\M1_00.dgn

Dist	COUNTY	ROUTE	POST MILES TOTAL PROJECT	SHEET No.	TOTAL SHEETS
04	CC, Sol	80	13.4/14.1, 0.0/0.6	60	75

Christopher M. Faria 11-17-14
REGISTERED MECHANICAL ENGINEER DATE

6-22-2015
PLANS APPROVAL DATE

REGISTERED PROFESSIONAL ENGINEER CHRISTOPHER M. FARIA No. M30419 Exp. 12-31-15 MECH STATE OF CALIFORNIA

The State of California or its officers or agents shall not be responsible for the accuracy or completeness of scanned copies of this plan sheet.

DEHUMIDIFIER SCHEDULE

UNIT No.	PROCESS CFM	PROCESS ESP In WC	REACT CFM	REACT ESP In WC	CAPACITY (Lb/Hr)	ELECTRICAL	WEIGHT (Lbs)	USE
DH-1	200	0.7	75	0.5	5.9	480V, 3Φ	200	NORTH WEST ANCHORAGE
DH-2	200	0.7	75	0.5	5.9	480V, 3Φ	200	NORTH EAST ANCHORAGE
DH-3	400	1.0	150	0.8	11.7	480V, 3Φ	250	SOUTH WEST ANCHORAGE
DH-4	400	1.0	150	0.8	11.7	480V, 3Φ	250	SOUTH EAST ANCHORAGE

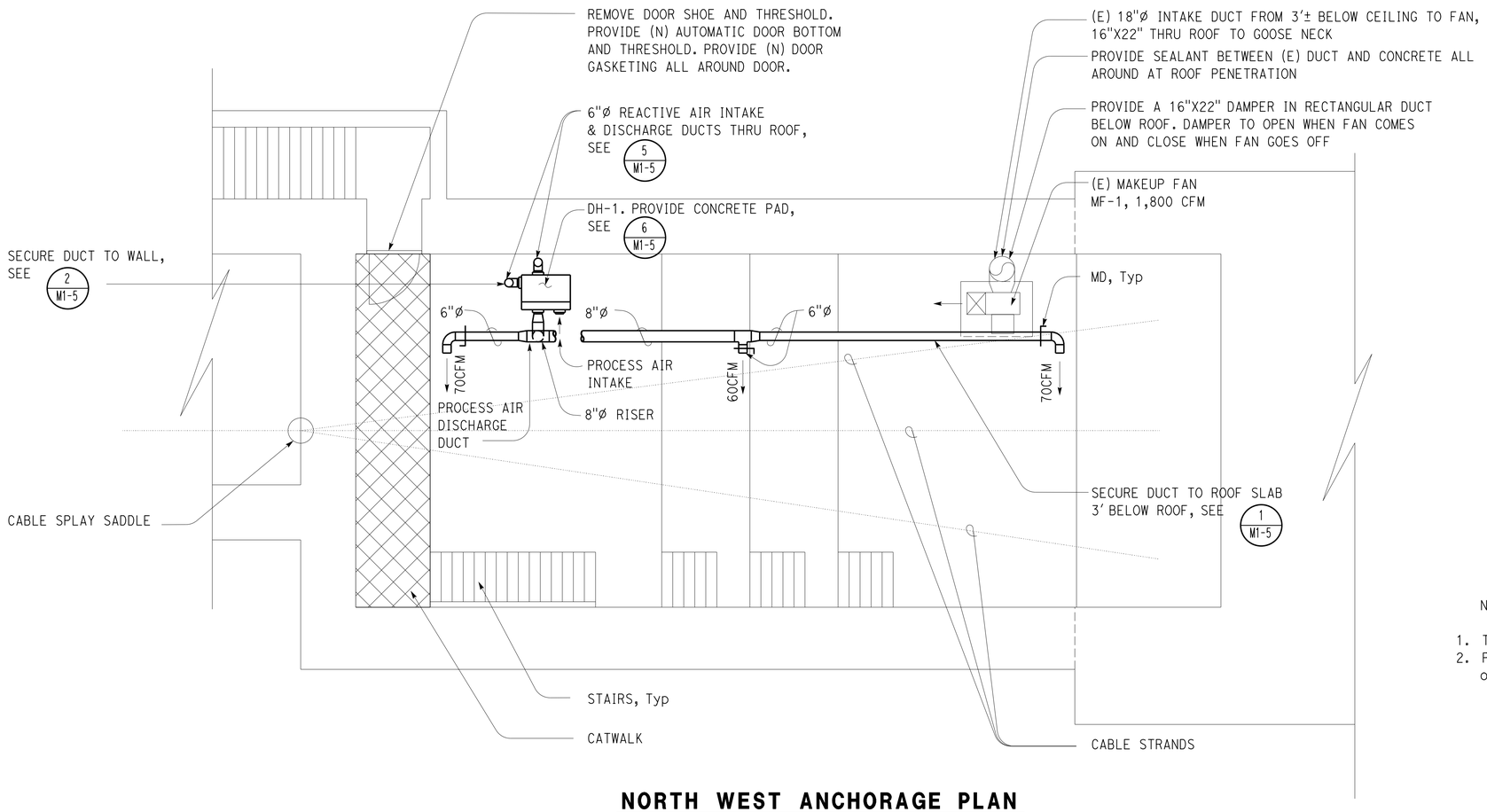

NORTH WEST ANCHORAGE PLAN

1/4" = 1'-0"

NOTES:

1. The reactive air discharge duct must be insulated.
2. Provide bird screen at process air discharge duct outlets.

APPROVED FOR MECHANICAL WORK ONLY

	BY	CHECKED
DESIGN	Chris Faria	Jack Wheeler
DETAILS	Angela Chen	Jack Wheeler
QUANTITIES	Chris Faria	Jack Wheeler

STATE OF CALIFORNIA
DEPARTMENT OF TRANSPORTATION

DIVISION OF ENGINEERING SERVICES
ELECTRICAL-MECHANICAL-WATER AND WASTEWATER DESIGN

BRIDGE No. 28-0352L
POST MILE X

ZAMPA BRIDGE ANCHORAGE DEHUMIDIFICATION
NORTH WEST ANCHORAGE PLAN

SHEET M1-1

TAEMWW Imperial - CCSC Rev. 01/13

ORIGINAL SCALE IN INCHES FOR REDUCED PLANS 0 1 2 3

UNIT: 3615 CONTRACT No.:04-3G4031
PROJECT NUMBER & PHASE: 04120001011

DISREGARD PRINTS BEARING EARLIER REVISION DATES → 07-08-14 09-22-14 11-17-14

REVISION DATES (PRELIMINARY STAGE ONLY) SHEET OF

P:\dist_04\0412000101_zampa_br_anchorage_dehumidification\expedite\M1_01.dgn

03-JUL-2015 13:04

Dist	COUNTY	ROUTE	POST MILES TOTAL PROJECT	SHEET No.	TOTAL SHEETS
04	CC, Sol	80	13.4/14.1, 0.0/0.6	61	75

Christopher M. Faria 11-17-14
REGISTERED MECHANICAL ENGINEER DATE

6-22-2015
PLANS APPROVAL DATE

REGISTERED PROFESSIONAL ENGINEER CHRISTOPHER M. FARIA No. M30419 Exp. 12-31-15 MECH STATE OF CALIFORNIA

The State of California or its officers or agents shall not be responsible for the accuracy or completeness of scanned copies of this plan sheet.

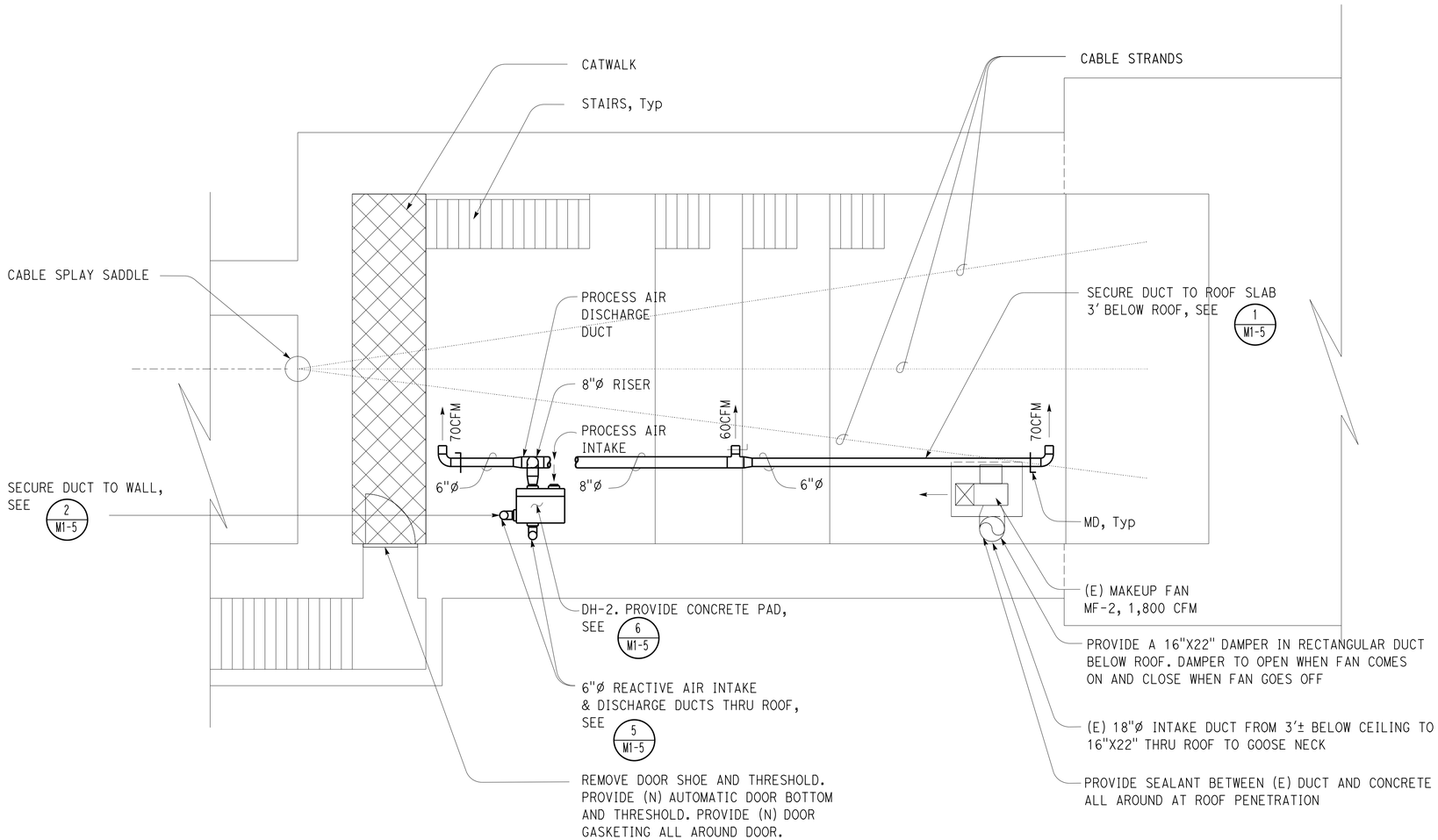

NOTES:

1. The reactive air discharge duct must be insulated.
2. Provide bird screen at process air discharge duct outlets.

NORTH EAST ANCHORAGE PLAN

1/4" = 1'-0"

APPROVED FOR MECHANICAL WORK ONLY

	BY	CHECKED
DESIGN	Chris Faria	Jack Wheeler
DETAILS	Angela Chen	Jack Wheeler
QUANTITIES	Chris Faria	Jack Wheeler

STATE OF CALIFORNIA
DEPARTMENT OF TRANSPORTATION

DIVISION OF ENGINEERING SERVICES
ELECTRICAL-MECHANICAL-WATER AND WASTEWATER DESIGN

BRIDGE No. 28-0352L
POST MILE X

ZAMPA BRIDGE ANCHORAGE DEHUMIDIFICATION

NORTH EAST ANCHORAGE PLAN

SHEET M1-2

TAEMWW Imperial - CCSC Rev. 01/13

ORIGINAL SCALE IN INCHES FOR REDUCED PLANS 0 1 2 3

UNIT: 3615 CONTRACT No.:04-3G4031
PROJECT NUMBER & PHASE: 04120001011

DISREGARD PRINTS BEARING EARLIER REVISION DATES → 07-08-14 09-22-14 11-17-14

REVISION DATES (PRELIMINARY STAGE ONLY) SHEET OF

P:\dist_04\0412000101_zampa_br_anchorage_dehumidification\expedite\M1_02.dgn

03-JUL-2015 13:04

Dist	COUNTY	ROUTE	POST MILES TOTAL PROJECT	SHEET No.	TOTAL SHEETS
04	CC, Sol	80	13.4/14.1, 0.0/0.6	62	75

Christopher M. Faria 11-17-14
REGISTERED MECHANICAL ENGINEER DATE

6-22-2015
PLANS APPROVAL DATE

REGISTERED PROFESSIONAL ENGINEER CHRISTOPHER M. FARIA No. M30419 Exp. 12-31-15 MECH STATE OF CALIFORNIA

The State of California or its officers or agents shall not be responsible for the accuracy or completeness of scanned copies of this plan sheet.

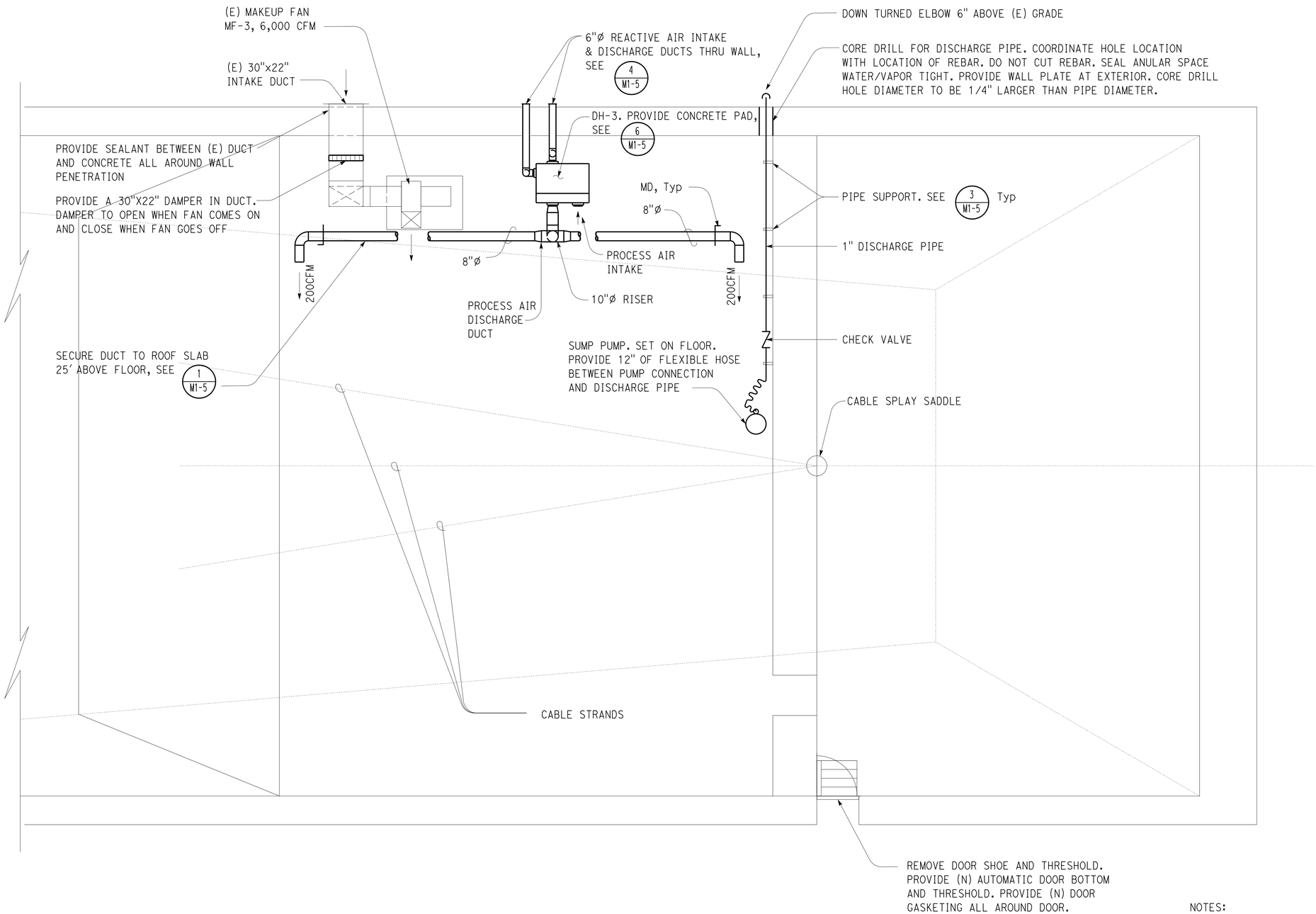

SOUTH WEST ANCHORAGE PLAN

1/4" = 1'-0"

NOTES:

1. Sump pump must be 1/3 HP, 20 GPM at 15' head, 115V, 60Hz, 1550 RPM.
2. The reactive air discharge duct must be insulated.
3. Provide bird screen at process air discharge duct outlets.

APPROVED FOR MECHANICAL WORK ONLY

	BY	CHECKED
DESIGN	Chris Faria	Jack Wheeler
DETAILS	Angela Chen	Jack Wheeler
QUANTITIES	Chris Faria	Jack Wheeler

STATE OF CALIFORNIA
DEPARTMENT OF TRANSPORTATION

DIVISION OF ENGINEERING SERVICES
ELECTRICAL-MECHANICAL-WATER AND WASTEWATER DESIGN

BRIDGE No. 28-0352L
POST MILE X

ZAMPA BRIDGE ANCHORAGE DEHUMIDIFICATION
SOUTH WEST ANCHORAGE PLAN

SHEET M1-3

TAEMWW Imperial - CCSC Rev. 01/13

ORIGINAL SCALE IN INCHES FOR REDUCED PLANS 0 1 2 3

UNIT: 3615 CONTRACT No.:04-3G4031
PROJECT NUMBER & PHASE: 04120001011

DISREGARD PRINTS BEARING EARLIER REVISION DATES → REVISION DATES (PRELIMINARY STAGE ONLY) 07-08-14 09-22-14 11-17-14

SHEET OF

03-JUL-2015 13:04

P:\dist_04\0412000101_zampa_br_anchorage_dehumidification\expedite\M1_03.dgn

Dist	COUNTY	ROUTE	POST MILES TOTAL PROJECT	SHEET No.	TOTAL SHEETS
04	CC, Sol	80	13.4/14.1, 0.0/0.6	63	75

Christopher M. Faria 11-17-14
REGISTERED MECHANICAL ENGINEER DATE

6-22-2015
PLANS APPROVAL DATE

REGISTERED PROFESSIONAL ENGINEER CHRISTOPHER M. FARIA No. M30419 Exp. 12-31-15 MECH STATE OF CALIFORNIA

The State of California or its officers or agents shall not be responsible for the accuracy or completeness of scanned copies of this plan sheet.

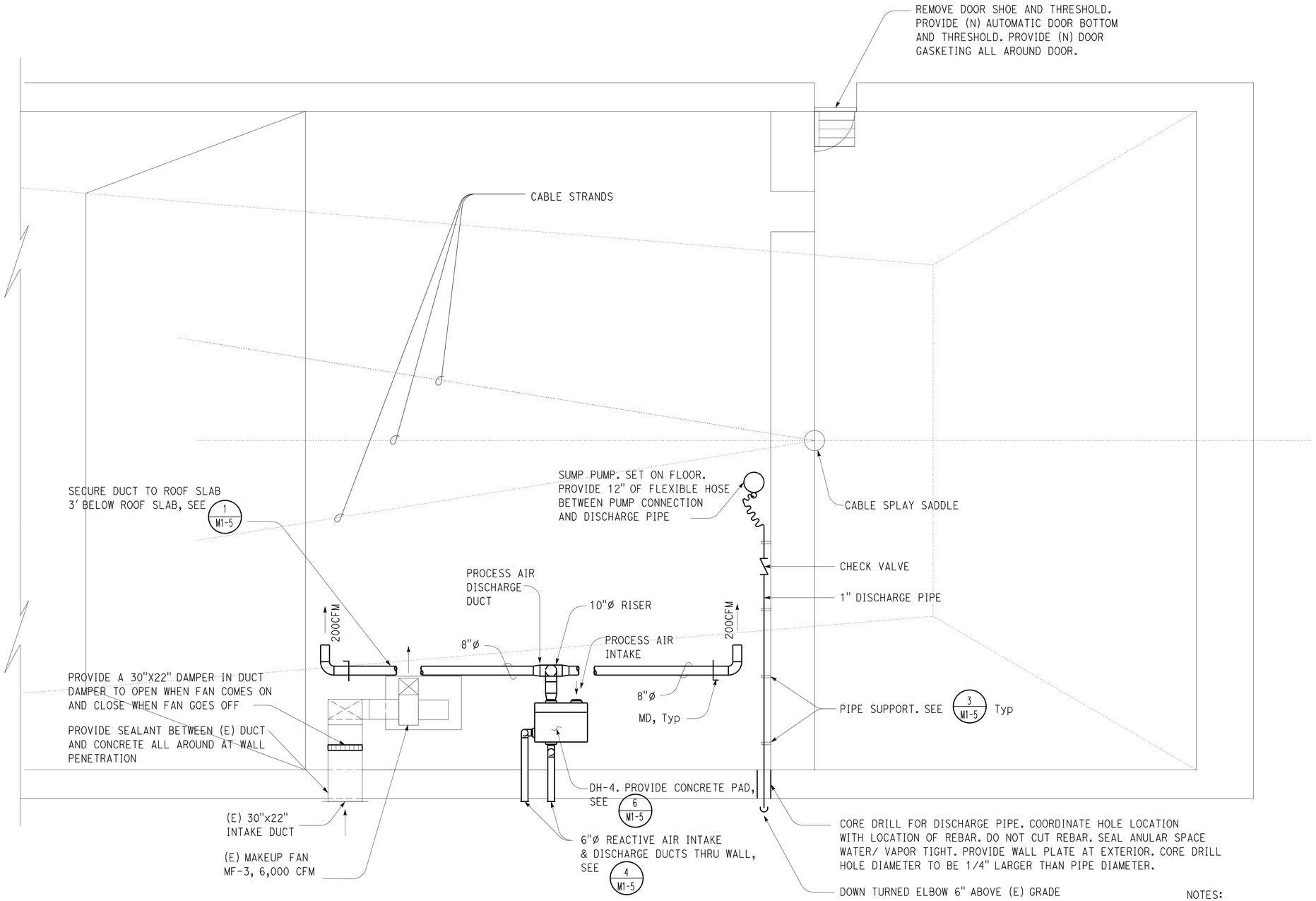

SOUTH EAST ANCHORAGE PLAN

1/4" = 1'-0"

NOTES:

1. Sump pump must be 1/3 HP, 20 GPM at 15' head, 115V, 60Hz, 1550 RPM.
2. The reactive air discharge duct must be insulated.
3. Provide bird screen at process air discharge duct outlets.

APPROVED FOR MECHANICAL WORK ONLY

	BY	CHECKED
DESIGN	Chris Faria	Jack Wheeler
DETAILS	Angela Chen	Jack Wheeler
QUANTITIES	Chris Faria	Jack Wheeler

STATE OF CALIFORNIA
DEPARTMENT OF TRANSPORTATION

DIVISION OF ENGINEERING SERVICES
ELECTRICAL-MECHANICAL-WATER AND WASTEWATER DESIGN

BRIDGE No. 28-0352L
POST MILE X

ZAMPA BRIDGE ANCHORAGE DEHUMIDIFICATION
SOUTH EAST ANCHORAGE PLAN

SHEET M1-4

TAEMWW Imperial - CCSC Rev. 01/13

ORIGINAL SCALE IN INCHES FOR REDUCED PLANS 0 1 2 3

UNIT: 3615 CONTRACT No.:04-3G4031
PROJECT NUMBER & PHASE: 04120001011

DISREGARD PRINTS BEARING EARLIER REVISION DATES → 07-08-14 09-22-14 11-17-14

REVISION DATES (PRELIMINARY STAGE ONLY) SHEET OF

03-JUL-2015 13:04

P:\dist_04\0412000101_zampa_br_anchorage_dehumidification\expedite\M1_04.dgn

Dist	COUNTY	ROUTE	POST MILES TOTAL PROJECT	SHEET No.	TOTAL SHEETS
04	CC, Sol	80	13.4/14.1, 0.0/0.6	64	75

Christopher M. Faria 11-17-14
REGISTERED MECHANICAL ENGINEER DATE

6-22-2015
PLANS APPROVAL DATE

REGISTERED PROFESSIONAL ENGINEER CHRISTOPHER M. FARIA No. M30419 Exp. 12-31-15 MECH STATE OF CALIFORNIA

The State of California or its officers or agents shall not be responsible for the accuracy or completeness of scanned copies of this plan sheet.

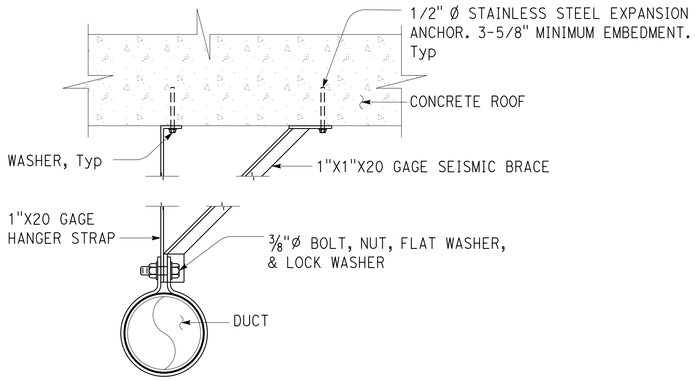

NOTES:

1. Altermate supports will be considered. Submit for approval.
2. Provide supports at 6' max spacing.

1 DUCT SUPPORT 1

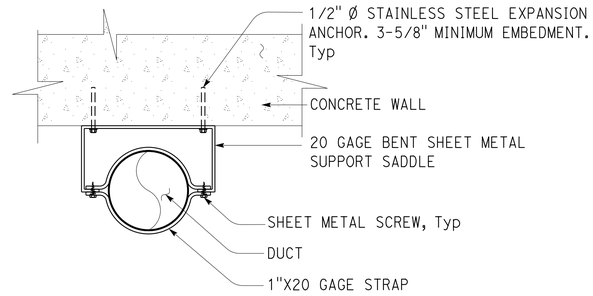

PLAN

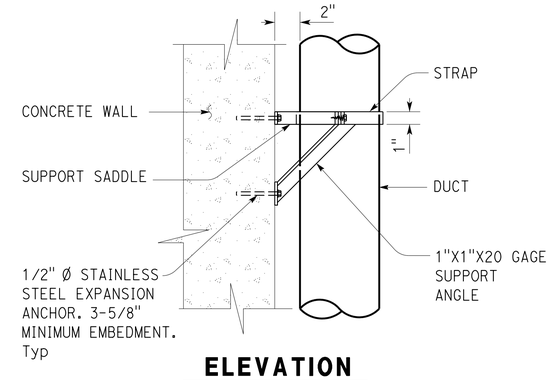

ELEVATION

NOTES:

1. Altermate supports will be considered. Submit for approval.
2. Provide supports at 6' max spacing.

2 DUCT SUPPORT 2

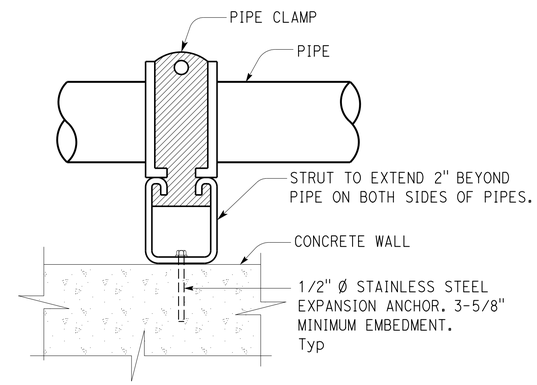

3 PIPE SUPPORT

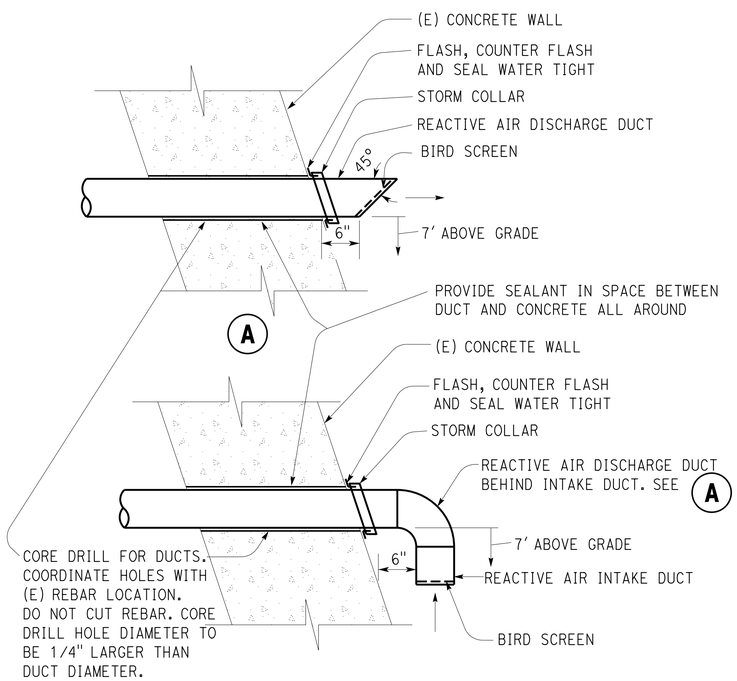

4 PENETRATION DETAIL 1

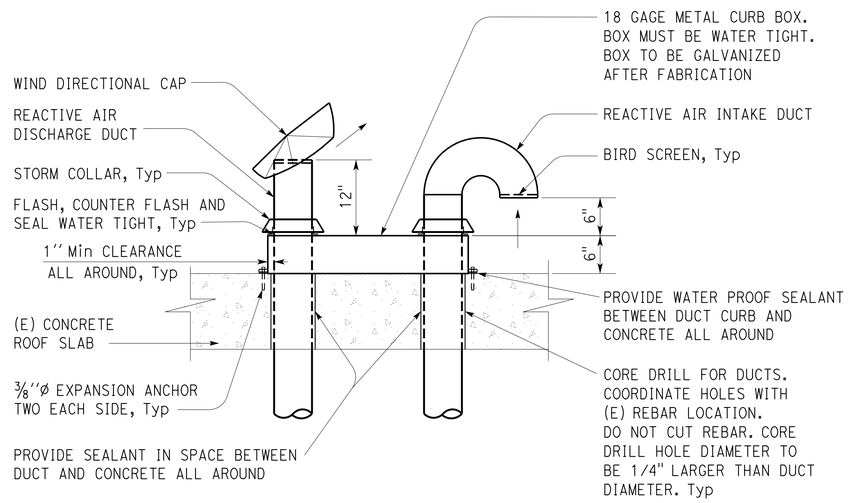

5 PENETRATION DETAIL 2

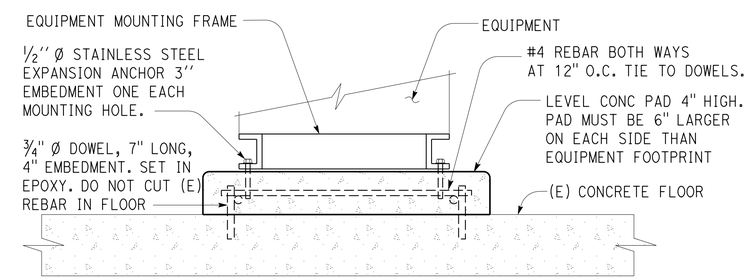

6 DETAIL

APPROVED FOR MECHANICAL WORK ONLY

NO SCALE

	BY	CHECKED
DESIGN	Chris Faria	Jack Wheeler
DETAILS	Angela Chen	Jack Wheeler
QUANTITIES	Chris Faria	Jack Wheeler

STATE OF CALIFORNIA
DEPARTMENT OF TRANSPORTATION

DIVISION OF ENGINEERING SERVICES
ELECTRICAL-MECHANICAL-WATER AND WASTEWATER DESIGN

BRIDGE No. 28-0352L
POST MILE X

ZAMPA BRIDGE ANCHORAGE DEHUMIDIFICATION

DETAILS

SHEET M1-5

TAEMWW Imperial - CCSC Rev. 01/13

ORIGINAL SCALE IN INCHES FOR REDUCED PLANS 0 1 2 3

UNIT: 3615 CONTRACT No.:04-3G4031
PROJECT NUMBER & PHASE: 04120001011

DISREGARD PRINTS BEARING EARLIER REVISION DATES → REVISION DATES (PRELIMINARY STAGE ONLY) 07-08-14 09-22-14 11-17-14 SHEET OF

P:\dist_04\0412000101_zampa_br_anchorage_dehumidification\expedite\M1_05.dgn 03-JUL-2015 13:04

GRAPHIC SYMBOLS FOR ELECTRICAL WIRING AND LAYOUT DIAGRAMS

SYMBOL	DESCRIPTION
	POLE-TOP ELECTROLIER
	POLE-ARM ELECTROLIER
CEILING / WALL	
(S) / -(S)	SURFACE FLUORESCENT, METAL HALIDE, LED, OR SODIUM VAPOR FIXTURE
(R) / -(R)	RECESSED FLUORESCENT, METAL HALIDE, LED, OR SODIUM VAPOR FIXTURE
(X) / -(X)	EXIT LIGHT
	SURFACE OR PENDANT INDIVIDUAL FLUORESCENT OR LED FIXTURE
R	RECESSED INDIVIDUAL FLUORESCENT OR LED FIXTURE
	SURFACE OR PENDANT CONTINUOUS ROW FLUORESCENT OR LED FIXTURES

NOTE: A LOWER CASE LETTER NEAR GRAPHIC LIGHTING FIXTURE SYMBOL DENOTES THAT FIXTURE IS CONTROLLED BY A SIMILARLY MARKED SWITCH, AN ALPHA-NUMERIC SYMBOL NEAR GRAPHIC LIGHTING FIXTURE SYMBOL DENOTES FIXTURE TYPE, (I=INCANDESCENT, F=FLUORESCENT, MH=METAL HALIDE, H=HIGH PRESSURE SODIUM VAPOR, L=LED), DESIGN TYPE, NUMBER OF LAMPS AND WATTAGE.

EXAMPLE : (4) F2-2x32
- 32 WATT LAMPS
- 2 LAMPS
- DESIGN TYPE
- FLUORESCENT
- NUMBER OF FIXTURES

SYMBOL	DESCRIPTION
(B) / -(B)	BLANK OUTLET
(J) / -(J)	JUNCTION BOX
(D)	DROP CORD
	SINGLE RECEPTACLE OUTLET
	DUPLEX RECEPTACLE OUTLET
(GFCI)	DUPLEX RECEPTACLE OUTLET (WITH GFCI)
(GFCI) WP	DUPLEX RECEPTACLE OUTLET, WEATHERPROOF (WITH GFCI)
	SINGLE, SPECIAL PURPOSE RECEPTACLE OUTLET
	DUPLEX, SPECIAL PURPOSE RECEPTACLE OUTLET
R	RANGE OUTLET
(C)	CLOCK HANGER RECEPTACLE
(F)	FAN HANGER RECEPTACLE
	FLOOR SINGLE RECEPTACLE OUTLET
	FLOOR DUPLEX RECEPTACLE OUTLET
	FLOOR SPECIAL PURPOSE OUTLET
	FLOOR RADIO OUTLET
	FLOOR TELEPHONE OUTLET
	MULTI-FLOOR OUTLET, 2 OR MORE GANG
	MULTI-OUTLET ASSEMBLY
S	SWITCH AND SINGLE RECEPTACLE
S	SWITCH AND DUPLEX RECEPTACLE
	RADIO OUTLET
	COMMUNICATION OUTLET
	SOUND SYSTEM LOUD SPEAKER OUTLET
R	RADIO OUTLET
TV	TELEVISION OUTLET
M	MICROPHONE OUTLET
T	THERMOSTAT

SYMBOL	DESCRIPTION
S	SINGLE-POLE SWITCH
S_2	DOUBLE-POLE SWITCH
S_3	THREE-WAY SWITCH
S_4	FOUR-WAY SWITCH
S_D	AUTOMATIC DOOR
S_K	KEY OPERATED SWITCH
S_P	SWITCH AND PILOT LIGHT
S_{MC}	MOMENTARY CONTACT SWITCH
S_{RC}	REMOTE CONTROL SWITCH
S_{WP}	WEATHERPROOF SWITCH
S_F	FAN SWITCH
S_L	LIGHT SWITCH
S_H	HEATER SWITCH
S_{VS}	VARIABLE SPEED MOTOR CONTROL SWITCH
S_{CHLF}	TWO TIMER SWITCHES, ONE SWITCH FOR LIGHT AND FAN AND ONE SWITCH FOR HEAT LAMP
S^{O}_{1}	OCCUPANCY SENSOR WALL SWITCH, SINGLE LEVEL
S^{O}_{2}	OCCUPANCY SENSOR WALL SWITCH, BILEVEL
S_M	MOTION SENSOR SWITCH
S_T	MANUAL MOTOR STARTING SWITCH, THERMAL OVERLOAD TYPE
S_{HP}	MANUAL MOTOR STARTING SWITCH, WITHOUT OVERLOAD ELEMENT
T_S	TIMER SWITCH
	PUSHBUTTON
L	PUSHBUTTON STATION, NC, WITH LOCKING DEVICE FOR OPEN
	PUSHBUTTON STATION MOTOR CONTROL
	BUZZER
	BELL
	COMBINATION BELL-BUZZER
PS	PRESSURE SWITCH
R	CONTROL RELAY
FS	FLOW SWITCH
PEU	PHOTOELECTRIC UNIT
C	HAND DRYER NOZZLE
H	HAND DRYER
	FLUSH-MOUNTED PANELBOARD AND CABINET
	SURFACE-MOUNTED PANELBOARD AND CABINET
	LIGHTING PANEL
	POWER PANEL
MUA TD	MUA TIME DELAY CONTROL STATION
	DISCONNECT SWITCH
	CONDUIT CONCEALED IN CEILING OR WALL
	CONDUIT CONCEALED IN FLOOR
	CONDUIT EXPOSED
	CROSS-LINES INDICATE NUMBER OF #12 AWG CONDUCTORS. LONGER CROSS-LINE INDICATES 1#12 AWG (G) FOR EQUIPMENT GROUNDING CONDUCTOR. NO CROSS-LINE INDICATES 2#12 WITH 1#12 (G) UNLESS OTHERWISE NOTED. ALL CONDUIT ½" UNLESS OTHERWISE NOTED.
A1,2	HOMERUN TO PANELBOARD, ARROWS INDICATE NUMBER OF CIRCUITS, LETTER DENOTES PANELBOARD, NUMERAL DENOTES CIRCUIT

SYMBOL	DESCRIPTION
—SM—	SURFACE METAL RACEWAY

(2) ½"C, PVC, 2#12
- CONDUCTOR INFO (PER CONDUIT)
- CONDUIT TYPE
- CONDUIT SIZE
- NUMBER OF CONDUITS (NO NUMBER INDICATES ONE CONDUIT)

SYMBOL	DESCRIPTION
—MC—	CONDUIT, RIGID STEEL, UNDERGROUND
—PVC—	CONDUIT, POLYVINYL CHLORIDE, UNDERGROUND
	CONDUIT, FLEXIBLE
	CONDUIT, TURN UP
	CONDUIT, TURN DOWN
	CONDUIT SEAL, EXPLOSION-PROOF
X	CONDUIT, EXPANSION JOINT
	ADAPTER, ONE TYPE CONDUIT TO ANOTHER
	POLE
OC	OCCUPANCY SENSOR
P	OCCUPANCY SENSOR POWER PACK
P	MANUAL PULL STATION
AV	AUDIO/VISUAL ALARM DEVICE
H	HEAT DETECTOR
S	SMOKE DETECTOR
G	GLASS BREAK DISCRIMINATOR
C	MAGNETIC CONTACT SWITCH-PEDESTRIAN DOOR
C	MAGNETIC CONTACT SWITCH-VEHICLE DOOR
K	KEYPAD FOR ALARM SYSTEM
W	COMBINATION DETECTOR (MICROWAVE/PASSIVE INFRARED)
	PULL BOX-LETTER INDICATES TYPE OF PULL BOX (E-ELECTRICAL, T-TELEPHONE, R-RADIO)
(T)	PULL BOX (TRAFFIC-RATED)-LETTER INDICATES TYPE OF PULL BOX (E-ELECTRICAL, T-TELEPHONE, R-RADIO)
CHLF	COMBINATION HEAT, LIGHT, AND FAN UNIT
A / EE-2	SECTION/ELEVATION LETTER — SHEET NUMBER
1 / EE-2	DETAIL NUMBER — SHEET NUMBER

REMODEL WORK

SYMBOL	DESCRIPTION
	EXISTING FLUORESCENT FIXTURE-TO REMAIN
	EXISTING COMBINATION STARTER/DISCONNECT-TO REMAIN
	EXISTING INCANDESCENT FIXTURE-TO REMAIN
	EXISTING INCANDESCENT FIXTURE-REMOVE
	EXISTING OUTLET-TO REMAIN
	EXISTING RECEPTACLE OUTLET-TO REMAIN
	EXISTING RECEPTACLE OUTLET-REMOVE
—E---E—	EXISTING CONDUIT AND CONDUCTORS-TO REMAIN UNLESS OTHERWISE NOTED
—X---X—	EXISTING CONDUIT AND CONDUCTORS-REMOVE
S	EXISTING SWITCH-TO REMAIN
	EXISTING SWITCH-REMOVE
J	EXISTING JUNCTION BOX-TO REMAIN
	EXISTING JUNCTION BOX-REMOVE

GRAPHIC SYMBOLS FOR ELECTRICAL DIAGRAMS

SYMBOL	DESCRIPTION
	CIRCUIT BREAKER, SINGLE-POLE
	CIRCUIT BREAKER, DOUBLE-POLE
	CIRCUIT BREAKER, THREE-POLE
GFCI	CIRCUIT BREAKER, WITH GROUND FAULT CIRCUIT INTERRUPTER
	CIRCUIT BREAKER, SINGLE-POLE, SWITCHED NEUTRAL
	CONTACT, NORMALLY OPEN
	CONTACT, NORMALLY CLOSED
	CONTACT, NORMALLY CLOSED, TIME DELAY CLOSING ON DE-ENERGIZING
	CONTACT, NORMALLY OPEN, TIME DELAY OPENING ON DE-ENERGIZING
	CONTACT, NORMALLY OPEN, TIME DELAY CLOSING ON ENERGIZING
	CONTACT, NORMALLY CLOSED, TIME DELAY OPENING ON ENERGIZING
	CONTACT, SINGLE-POLE, DOUBLE-THROW
	OPERATING COIL
	LIQUID LEVEL ACTUATED SWITCH, NORMALLY CLOSED
	LIQUID LEVEL ACTUATED SWITCH, NORMALLY OPEN
	PRESSURE ACTUATED SWITCH, NORMALLY CLOSED
	PRESSURE ACTUATED SWITCH, NORMALLY OPEN
	FLOW ACTUATED SWITCH, NORMALLY CLOSED
	FLOW ACTUATED SWITCH, NORMALLY OPEN
	TEMPERATURE ACTUATED SWITCH, NORMALLY CLOSED
	TEMPERATURE ACTUATED SWITCH, NORMALLY OPEN
	LIMIT SWITCH, NORMALLY CLOSED
	LIMIT SWITCH, NORMALLY OPEN
	PUSHBUTTON SWITCH, NORMALLY CLOSED
	PUSHBUTTON SWITCH, NORMALLY OPEN
	SWITCH, SINGLE-POLE
	SWITCH, SINGLE-POLE, DOUBLE-THROW
	SWITCH, DOUBLE-POLE
	SWITCH, DOUBLE-POLE, DOUBLE-THROW
	SWITCH, SINGLE-POLE, 3-POSITION
	THERMAL OVERLOAD
	FUSE
	RESISTOR
	VARIABLE RESISTOR
	TRANSFORMER WINDING
	GROUNDING ELECTRODE
	ENCLOSURE BOND
A	PILOT LIGHT (A=AMBER, G=GREEN, R=RED)
A	INDICATING LIGHT (A=AMBER, G=GREEN, R=RED)
G	GENERATOR
M	MOTOR
F	FAN MOTOR

Dist	COUNTY	ROUTE	POST MILES TOTAL PROJECT	SHEET No.	TOTAL SHEETS
04	CC, Sol	80	13.4/14.1, 0.0/0.6	65	75

Eric Greve 11-17-14
REGISTERED ELECTRICAL ENGINEER DATE

6-22-2015
PLANS APPROVAL DATE

REGISTERED PROFESSIONAL ENGINEER ERIC GREVE No. E 14791 Exp. 6-30-17 ELEC STATE OF CALIFORNIA

The State of California or its officers or agents shall not be responsible for the accuracy or completeness of scanned copies of this plan sheet.

DESIGN	BY Steven Roy	CHECKED Eric Greve	
DETAILS	BY Dali Zhou	CHECKED Steven Roy	
QUANTITIES	BY Steven Roy	CHECKED Eric Greve	

STATE OF CALIFORNIA
DEPARTMENT OF TRANSPORTATION

DIVISION OF ENGINEERING SERVICES
ELECTRICAL-MECHANICAL-WATER AND WASTEWATER DESIGN

BRIDGE No. 28-0352L
POST MILE

ZAMPA BRIDGE ANCHORAGE DEHUMIDIFICATION

LEGEND

SHEET EE0-0

TAEMWW Imperial - CCSC Rev. 02/13

ORIGINAL SCALE IN INCHES FOR REDUCED PLANS 0 1 2 3

UNIT: 3597 CONTRACT No.: 04-3G4034
PROJECT NUMBER & PHASE: 0412000101

DISREGARD PRINTS BEARING EARLIER REVISION DATES 01-08-14 11-17-14

REVISION DATES (PRELIMINARY STAGE ONLY) SHEET OF

03-JUL-2015 13:04

P:\dist_04\0412000101_zampa_br_anchorage_dehumidification\expedite\ee0_00.dgn

Dist	COUNTY	ROUTE	POST MILES TOTAL PROJECT	SHEET No.	TOTAL SHEETS
04	CC, Sol	80	13.4/14.1, 0.0/0.6	66	75

Eric Greve 11-17-14
REGISTERED ELECTRICAL ENGINEER DATE

6-22-2015
PLANS APPROVAL DATE

REGISTERED PROFESSIONAL ENGINEER ERIC GREVE No. E 14791 Exp. 6-30-17 ELEC STATE OF CALIFORNIA

The State of California or its officers or agents shall not be responsible for the accuracy or completeness of scanned copies of this plan sheet.

ABBREVIATIONS

A

A	AMPERES
AC	ALTERNATING CURRENT or ASPHALT CONCRETE
A/C	AIR CONDITIONING UNIT
ACS	AIR COMPRESSOR STARTER
AFCI	ARC FAULT CIRCUIT INTERRUPTER
AI	ANALOG INPUT
AL	ALARM LIGHT
AO	ANALOG OUTPUT
Approx	APPROXIMATE
AR	ALARM RESET
AS	AIR SPARGE

B

BC	BARE COPPER
BD	BUILDING DISCONNECT
Bldg	BUILDING
BP	BOOSTER PUMP
Brk	BREAKER

C

C	CONDUIT
Cat	CATEGORY
CB	CIRCUIT BREAKER
CC	CENTER CHANNEL LIGHT
CCTV	CLOSED CIRCUIT TELEVISION
CD	CONTROL DISCONNECT
Ckt	CIRCUIT
CL	CHAIN LINK
℄	CENTER LINE
Clr	CLEAR or CLEARANCE
CM	CENTER MARGIN LIGHT
CMS	CHANGEABLE MESSAGE SIGN
COMM	COMMUNICATION
Conc	CONCRETE
CR	CONTROL RELAY
CSW	CURRENT SWITCH

D

D	DEPTH
DC	DIRECT CURRENT
DI	DIGITAL INPUT
Dia	DIAMETER
DLC	LOOP DETECTOR LEAD-IN CABLE
DO	DIGITAL OUTPUT
DP	DUPLEX PLUG RECEPTACLE
DS	DOOR SWITCH

E

(E)	EXISTING
EB	EASTBOUND
EF	EXHAUST FAN
Elev	ELEVATION
EMS	EXTINGUISHABLE MESSAGE SIGN
EVR	ELECTRONIC VOLTAGE REGULATOR

F

F	FUSE
FG	FINISH GRADE
FL	FAILURE LIGHT
FLA	FLASHER
Flex	FLEXIBLE CONDUIT
FLS	FLOW SWITCH
FO	FIBER OPTIC
FR	FAILURE RESET or FLAME RESISTANT
FS	FLOAT SWITCH

G

G	GROUND
Ga	GAUGE
Galv	GALVANIZED
GFCI	GROUND FAULT CIRCUIT INTERRUPTER
GRS	GALVANIZED RIGID STEEL

H

hp	HORSEPOWER
HPS	HIGH PRESSURE SODIUM

I

IC	IRRIGATION CONTROLLER
ICC	IRRIGATION CONTROLLER CABINET
IR	INDUCTION RELAY
ISR	INTRINSICALLY SAFE RELAY

J

JB	JUNCTION BOX

K

kV	KILOVOLT
kVA	KILOVOLT AMPERES
kW	KILOWATT

L

L	LIGHT or LENGTH
LC	LIGHTING CONTACTOR
LCD	LIQUID CRYSTAL DISPLAY
LCP	LIGHTING CONTROL PANEL
LD	LIGHT DISCONNECT
LDCI	LEAK DETECTOR CIRCUIT INTERRUPTER
LED	LIGHT EMITTING DIODE
LL	LIQUID LEVEL RELAY
LLC	LIQUID LEVEL CONTROLLER
LP	LIGHT PANEL
LPS	LOW PRESSURE SODIUM
LS	LIGHT SWITCH
LT	LIGHT TRANSFORMER
LTO	LIGHT TRANSFORMER OVERLOAD

M

Max	MAXIMUM
MB	MAIN BREAKER
MC	METALLIC CONDUIT
MCP	MOTOR CIRCUIT PROTECTOR
MCC	MOTOR CONTROL CENTER
MD	MOTOR DISCONNECT
MH	MOUNTING HEIGHT
Min	MINIMUM
Misc	MISCELLANEOUS
MSB	MAIN SWITCHBOARD
MT	EMPTY CONDUIT
MUA	MAKE UP AIR (FAN)

N

(N)	NEW
Nav	NAVIGATIONAL LIGHTS
NB	NEUTRAL BUS or NORTHBOUND
NC	NORMALLY CLOSED
NEA	NORTHEAST ANCHORAGE
No.	NUMBER
Nos.	NUMBERS
NO	NORMALLY OPEN
NSW	
NWA	NORTHWEST ANCHORAGE

O

O/C	ON CENTER
OG	ORIGINAL GROUND
OH	OVERHEAD
OL	OVERLOAD

P

P	POLE (CIRCUIT BREAKER)
PB	PULL BOX or PUSHBUTTON
PCC	PORTLAND CONCRETE CEMENT
PCP	PUMP CONTROL PANEL
PD	PUMP DISCONNECT
PEC	PHOTOELECTRIC CONTROL
PEU	PHOTOELECTRIC UNIT
PFR	PHASE FAILURE RELAY
PG&E	PACIFIC GAS AND ELECTRIC
ℙ	PLATE
PL	PILOT LIGHT
PS	PRESSURE SWITCH
PTS	POWER TRANSFER SWITCH
PV	PHOTOVOLTAIC
PVC	POLYVINYL CHLORIDE

R

RD	RECEPTACLE DISCONNECT
RES	RESISTOR
Rm	ROOM
RTB	RADIO TERMINAL BOARD
R/W	RIGHT OF WAY

S

S	STARTER COIL
Sch	SCHEDULE
SD	SERVICE DISCONNECT
Sec	SECONDS
SEA	SOUTHEAST ANCHORAGE
SFR	SEAL FAILURE RELAY
SL	SUMP LIGHT
SPR	STANDBY POWER RECEPTACLE
Sq	SQUARE
SS	SELECTOR SWITCH
ST	STARTER
Std	STANDARD
SV	SOLENOID VALVE
SVE	SOIL VAPOR EXTRACTION
SWA	SOUTHWEST ANCHORAGE

T

TB	TERMINAL BLOCK
TC	TELEPHONE CABLE
TDR	TIME DELAY RELAY
TGLS	TOGGLE SWITCH
TM	TIME METER
Tot	TOTAL
TS	TIMER SWITCH
TSW	TEST SWITCH
TTB	TELEPHONE TERMINAL BOARD
Typ	TYPICAL

U

UPS	UNINTERRUPTIBLE POWER SUPPLY

V

V	VOLT(S)
Var	VARIABLE or VARIES

W

W	WATT or WIDTH
WB	WESTBOUND
WIM	WEIGH-IN-MOTION
WLS	WATER LEVEL SWITCH
WP	WEATHERPROOF
WSMS	WEIGH STATION MESSAGE SIGN

X

XFMR	TRANSFORMER

SYMBOLS

∠	ANGLE
@	AT
°	DEGREES
Δ	DELTA
Ω	OHM(S)
ø	PHASE
±	PLUS OR MINUS

PROJECT NOTES

1. Separate grounded (Neutral) conductor must be used for each 120-volt circuit.
2. Homeruns to Panelboards must be installed as shown on the plans. Homeruns must not be combined.
3. A single insulated equipment grounding conductor, sized as required, must be installed in each conduit run.

STANDARD NOTES

- AB Abandon. If applied to conduit, remove conductors.
- BC Install pull box in existing conduit run.
- CB Install conduit into existing pull box.
- CC Connect new and existing conduit. Remove existing conductors and install conductors as indicated.
- CF Conduit to remain for future use. Remove conductors, install pull rope and plug.
- FA Remove foundation above grade and abandon foundation below grade.
- RL Relocate equipment.
- RLD Relocated equipment.
- SC Splice new to existing conductors.

DESIGN	BY Steven Roy	CHECKED Eric Greve	
DETAILS	BY Dali Zhou	CHECKED Steven Roy	
QUANTITIES	BY Steven Roy	CHECKED Eric Greve	

STATE OF CALIFORNIA
DEPARTMENT OF TRANSPORTATION

DIVISION OF ENGINEERING SERVICES
ELECTRICAL-MECHANICAL-WATER AND WASTEWATER DESIGN

BRIDGE No. 28-0352L
POST MILE

ZAMPA BRIDGE ANCHORAGE DEHUMIDIFICATION

NOTES AND ABBREVIATIONS

SHEET EE0-1

TAEMWW Imperial - CCSC Rev. 02/13

ORIGINAL SCALE IN INCHES FOR REDUCED PLANS 0 1 2 3

UNIT: 3597 CONTRACT No.: 04-3G4034
PROJECT NUMBER & PHASE: 0412000101

DISREGARD PRINTS BEARING EARLIER REVISION DATES → 07-08-14 11-17-14

REVISION DATES (PRELIMINARY STAGE ONLY) SHEET OF

03-JUL-2015 13:04

P:\dist_04\0412000101_zampa_br_anchorage_dehumidification\expedite\ee0_01.dgn

Dist	COUNTY	ROUTE	POST MILES TOTAL PROJECT	SHEET No.	TOTAL SHEETS
04	CC, Sol	80	13.4/14.1, 0.0/0.6	67	75

Eric Greve 11-17-14
REGISTERED ELECTRICAL ENGINEER DATE

6-22-2015
PLANS APPROVAL DATE

REGISTERED PROFESSIONAL ENGINEER ERIC GREVE No. E 14791 Exp. 6-30-17 ELEC STATE OF CALIFORNIA

The State of California or its officers or agents shall not be responsible for the accuracy or completeness of scanned copies of this plan sheet.

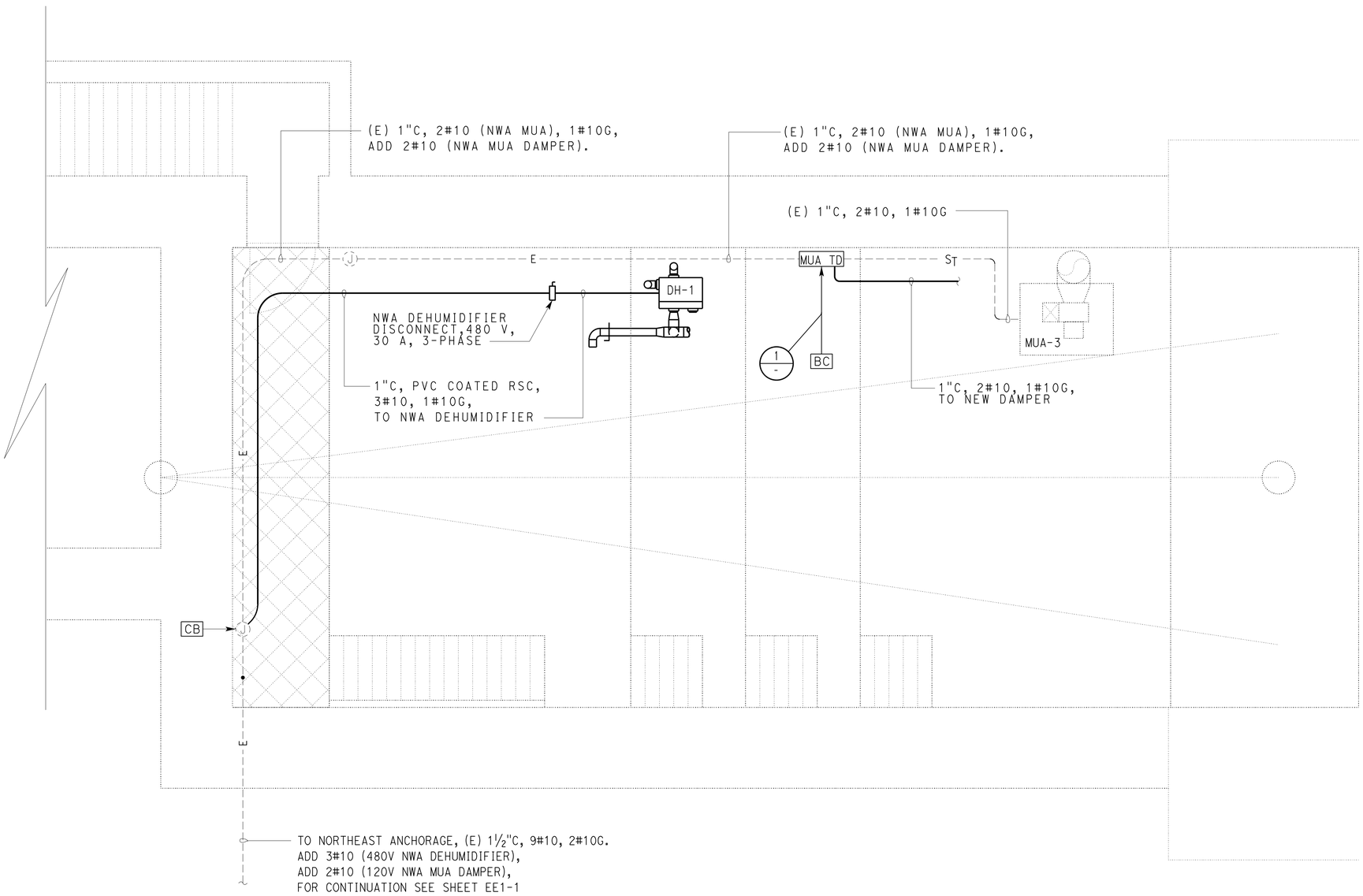

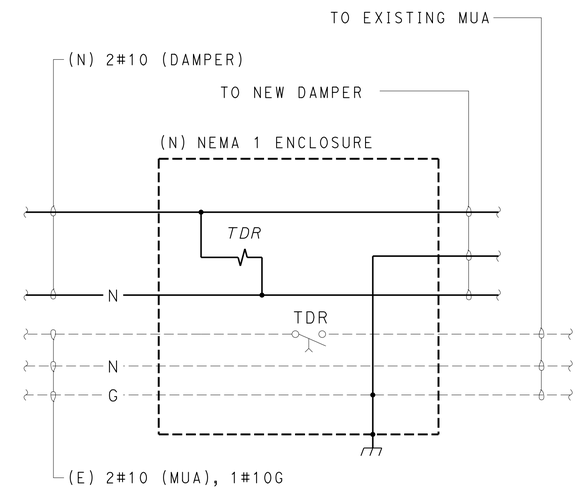

1 MUA TIME DELAY SCHEMATIC

NORTH WEST ANCHORAGE PLAN

NO SCALE

DESIGN SUPERVISOR	DESIGN	BY Steven Roy	CHECKED Eric Greve	STATE OF CALIFORNIA DEPARTMENT OF TRANSPORTATION	DIVISION OF ENGINEERING SERVICES ELECTRICAL-MECHANICAL-WATER AND WASTEWATER DESIGN
DESIGN ENGINEER	DETAILS	BY Dali Zhou	CHECKED Steven Roy		
	QUANTITIES	BY Steven Roy	CHECKED Eric Greve		

BRIDGE No. 28-0352L
POST MILE

ZAMPA BRIDGE ANCHORAGE DEHUMIDIFICATION

NORTHWEST ANCHORAGE

SHEET EE1-0

TAEMWW Imperial - CCSC Rev. 02/13

ORIGINAL SCALE IN INCHES FOR REDUCED PLANS 0 1 2 3

UNIT: 3597 CONTRACT No.: 04-3G4034
PROJECT NUMBER & PHASE: 0412000101

DISREGARD PRINTS BEARING EARLIER REVISION DATES → 07-08-14 11-17-14

REVISION DATES (PRELIMINARY STAGE ONLY) SHEET OF

03-JUL-2015 13:04

P:\dist_04\0412000101_zampa_br_anchorage_dehumidification\expedite\ee1_00.dgn

Dist	COUNTY	ROUTE	POST MILES TOTAL PROJECT	SHEET No.	TOTAL SHEETS
04	CC, Sol	80	13.4/14.1, 0.0/0.6	68	75

Eric Greve 11-17-14
REGISTERED ELECTRICAL ENGINEER DATE

6-22-2015
PLANS APPROVAL DATE

REGISTERED PROFESSIONAL ENGINEER ERIC GREVE No. E 14791 Exp. 6-30-17 ELEC STATE OF CALIFORNIA

The State of California or its officers or agents shall not be responsible for the accuracy or completeness of scanned copies of this plan sheet.

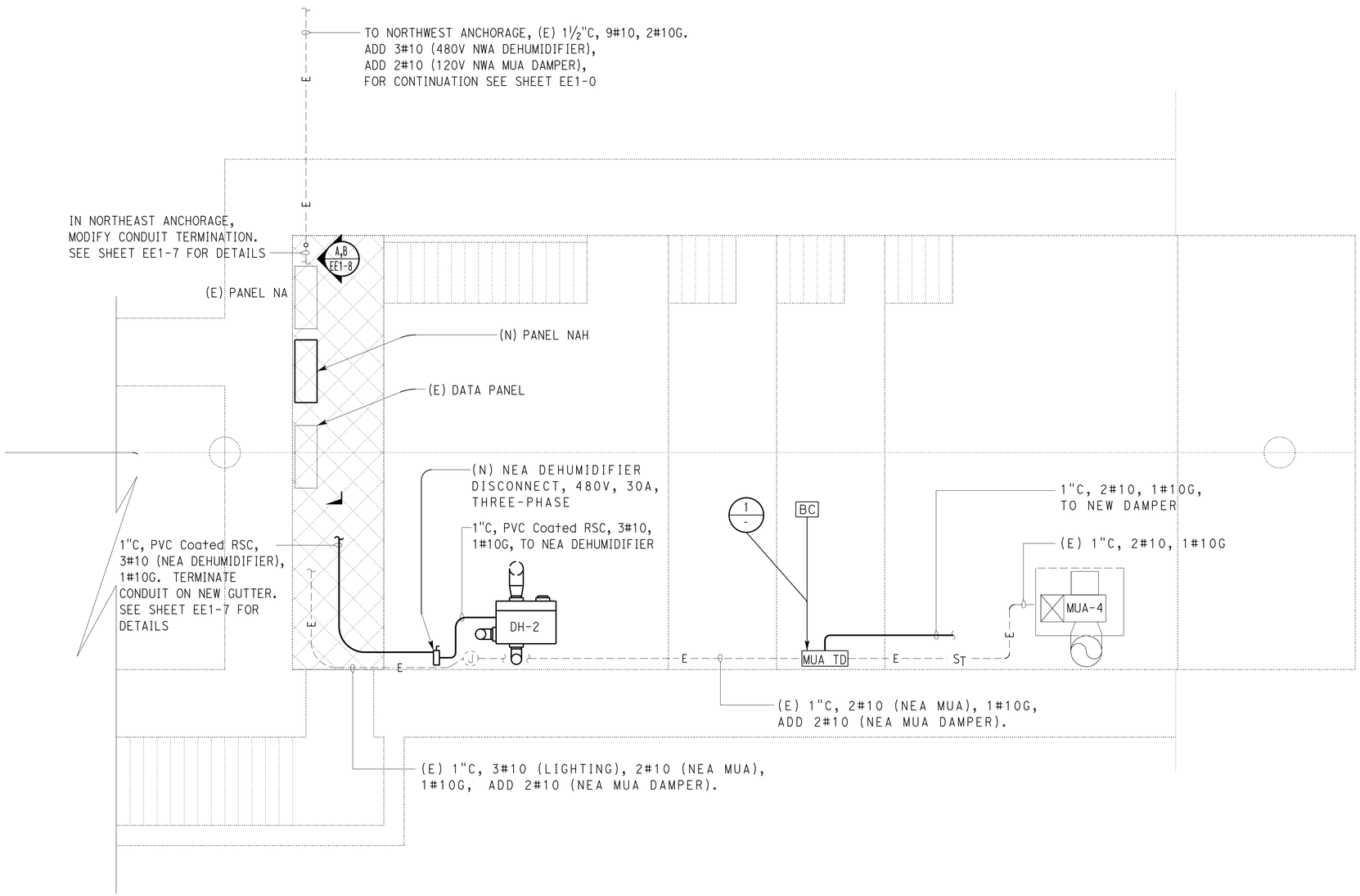

NORTH EAST ANCHORAGE PLAN

NO SCALE

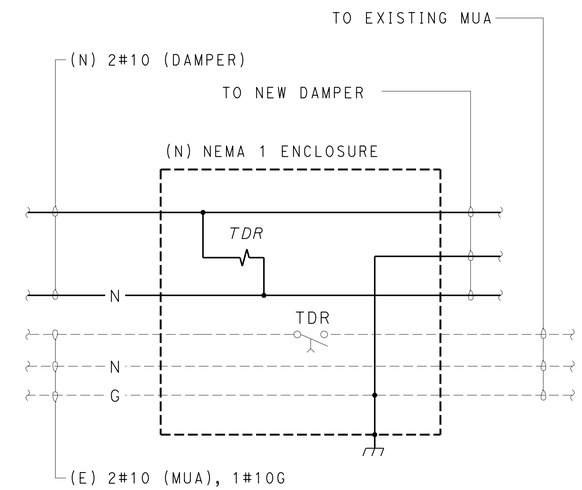

1 MUA TIME DELAY SCHEMATIC

DESIGN	BY Steven Roy	CHECKED Eric Greve	
DETAILS	BY Dali Zhou	CHECKED Steven Roy	
QUANTITIES	BY Steven Roy	CHECKED Eric Greve	

STATE OF CALIFORNIA
DEPARTMENT OF TRANSPORTATION

DIVISION OF ENGINEERING SERVICES
ELECTRICAL-MECHANICAL-WATER AND WASTEWATER DESIGN

BRIDGE No. 28-0352L
POST MILE

ZAMPA BRIDGE ANCHORAGE DEHUMIDIFICATION
NORTHEAST ANCHORAGE

SHEET EE1-1

TAEMWW Imperial - CCSC Rev. 02/13

ORIGINAL SCALE IN INCHES FOR REDUCED PLANS 0 1 2 3

UNIT: 3597 CONTRACT No.: 04-3G4034
PROJECT NUMBER & PHASE: 0412000101

DISREGARD PRINTS BEARING EARLIER REVISION DATES → 07-08-14 11-17-14

REVISION DATES (PRELIMINARY STAGE ONLY) SHEET OF

03-JUL-2015 13:04

P:\dist_04\0412000101_zampa_br_anchorage_dehumidification\expedite\ee1_01.dgn

Dist	COUNTY	ROUTE	POST MILES TOTAL PROJECT	SHEET No.	TOTAL SHEETS
04	CC, Sol	80	13.4/14.1, 0.0/0.6	69	75

Eric Greve 11-17-14
REGISTERED ELECTRICAL ENGINEER DATE

6-22-2015
PLANS APPROVAL DATE

REGISTERED PROFESSIONAL ENGINEER ERIC GREVE No. E 14791 Exp. 6-30-17 ELEC STATE OF CALIFORNIA

The State of California or its officers or agents shall not be responsible for the accuracy or completeness of scanned copies of this plan sheet.

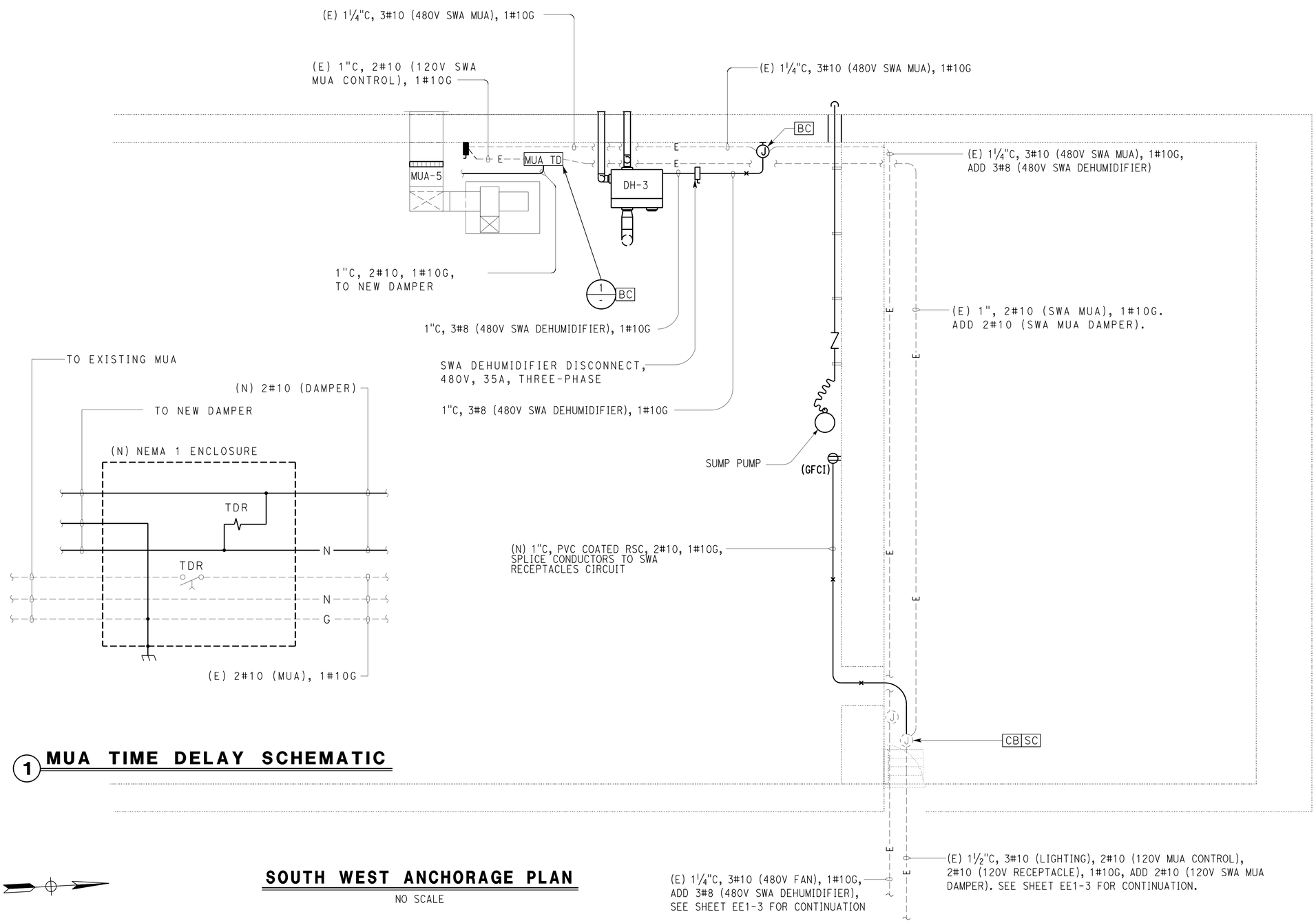

1 MUA TIME DELAY SCHEMATIC

SOUTH WEST ANCHORAGE PLAN

NO SCALE

DESIGN	BY Steven Roy	CHECKED Eric Greve	
DETAILS	BY Dali Zhou	CHECKED Steven Roy	
QUANTITIES	BY Steven Roy	CHECKED Eric Greve	

STATE OF CALIFORNIA DEPARTMENT OF TRANSPORTATION

DIVISION OF ENGINEERING SERVICES ELECTRICAL-MECHANICAL-WATER AND WASTEWATER DESIGN

BRIDGE No. 28-0352L
POST MILE

ZAMPA BRIDGE ANCHORAGE DEHUMIDIFICATION

SOUTHWEST ANCHORAGE

SHEET EE1-2

TAEMWW Imperial - CCSC Rev. 02/13

ORIGINAL SCALE IN INCHES FOR REDUCED PLANS 0 1 2 3

UNIT: 3597 CONTRACT No.: 04-3G4034
PROJECT NUMBER & PHASE: 0412000101

DISREGARD PRINTS BEARING EARLIER REVISION DATES → 07-08-14 11-17-14

REVISION DATES (PRELIMINARY STAGE ONLY) SHEET OF

03-JUL-2015 13:04

P:\dist_04\0412000101_zampa_br_anchorage_dehumidification\expedite\ee1_02.dgn

Dist	COUNTY	ROUTE	POST MILES TOTAL PROJECT	SHEET No.	TOTAL SHEETS
04	CC, Sol	80	13.4/14.1, 0.0/0.6	70	75

Eric Greve 11-17-14
REGISTERED ELECTRICAL ENGINEER DATE

6-22-2015
PLANS APPROVAL DATE

REGISTERED PROFESSIONAL ENGINEER ERIC GREVE No. E 14791 Exp. 6-30-17 ELEC STATE OF CALIFORNIA

The State of California or its officers or agents shall not be responsible for the accuracy or completeness of scanned copies of this plan sheet.

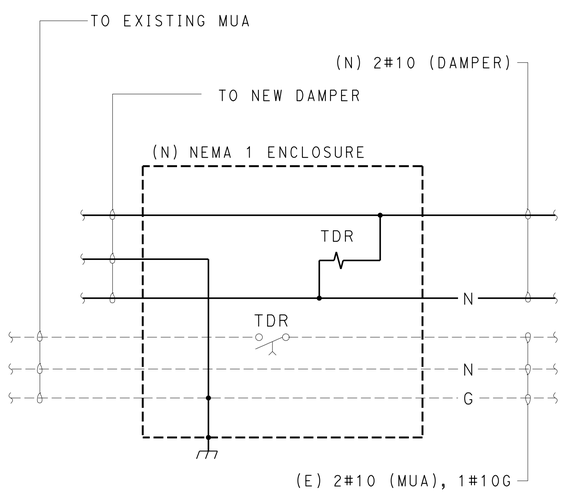

1 MUA TIME DELAY SCHEMATIC

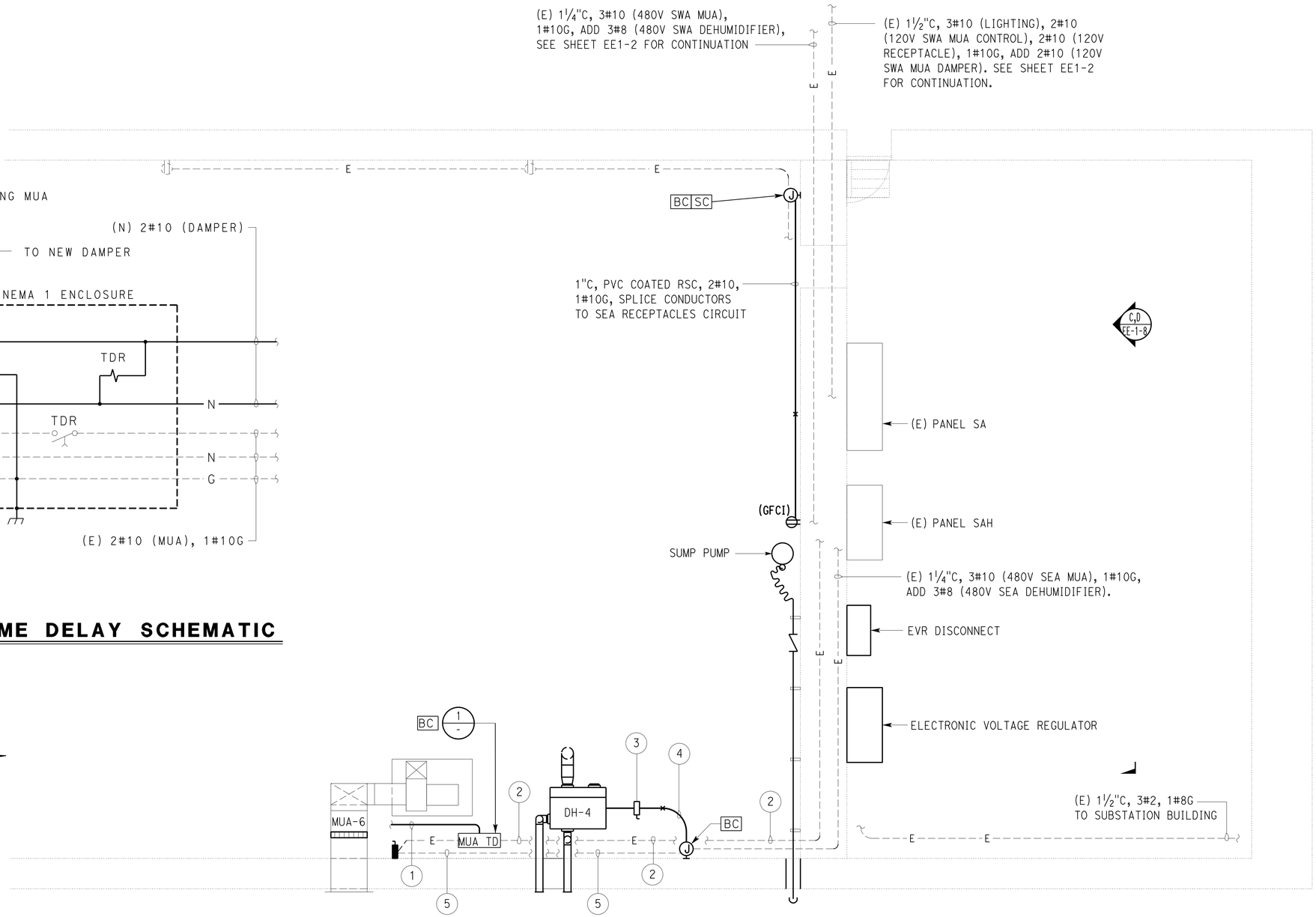

SOUTH EAST ANCHORAGE PLAN

NO SCALE

NOTES:

1. 1"C, 2#10, 1#10G, To New SEA MUA Damper.
2. Existing 1"C, 2#10 (SEA MUA), 1#10G. Add 2#10 (SEA MUA Damper).
3. SEA Dehumidifier Disconnect, 480 V, 35 A, 3-phase.
4. 1"C, 3#8 (480 V SEA Dehumidifier), 1#10G.
5. Existing 1¼"C, 3#10 (480 V SEA MUA), 1#10G.

	BY	CHECKED
DESIGN	Steven Roy	Eric Greve
DETAILS	Dali Zhou	Steven Roy
QUANTITIES	Steven Roy	Eric Greve

STATE OF CALIFORNIA DEPARTMENT OF TRANSPORTATION

DIVISION OF ENGINEERING SERVICES ELECTRICAL-MECHANICAL-WATER AND WASTEWATER DESIGN

BRIDGE No. 28-0352L
POST MILE

ZAMPA BRIDGE ANCHORAGE DEHUMIDIFICATION

SOUTHEAST ANCHORAGE

SHEET EE1-3

TAEMWW Imperial - CCSC Rev. 02/13

ORIGINAL SCALE IN INCHES FOR REDUCED PLANS 0 1 2 3

UNIT: 3597 CONTRACT No.: 04-3G4034
PROJECT NUMBER & PHASE: 0412000101

DISREGARD PRINTS BEARING EARLIER REVISION DATES → 07-08-14 11-17-14

REVISION DATES (PRELIMINARY STAGE ONLY) SHEET OF

03-JUL-2015 13:04

P:\dist_04\0412000101_zampa_br_anchorage_dehumidification\expedite\ee1_03.dgn

Dist	COUNTY	ROUTE	POST MILES TOTAL PROJECT	SHEET No.	TOTAL SHEETS
04	CC, Sol	80	13.4/14.1, 0.0/0.6	71	75

Eric Greve 11-17-14
REGISTERED ELECTRICAL ENGINEER DATE

6-22-2015
PLANS APPROVAL DATE

REGISTERED PROFESSIONAL ENGINEER ERIC GREVE No. E 14791 Exp. 6-30-17 ELEC STATE OF CALIFORNIA

The State of California or its officers or agents shall not be responsible for the accuracy or completeness of scanned copies of this plan sheet.

NOTES:

1. Replace existing 20A, 3P CB with 90A, 3P CB.
2. Replace existing 50A, 3P CB with 100A, 3P CB.

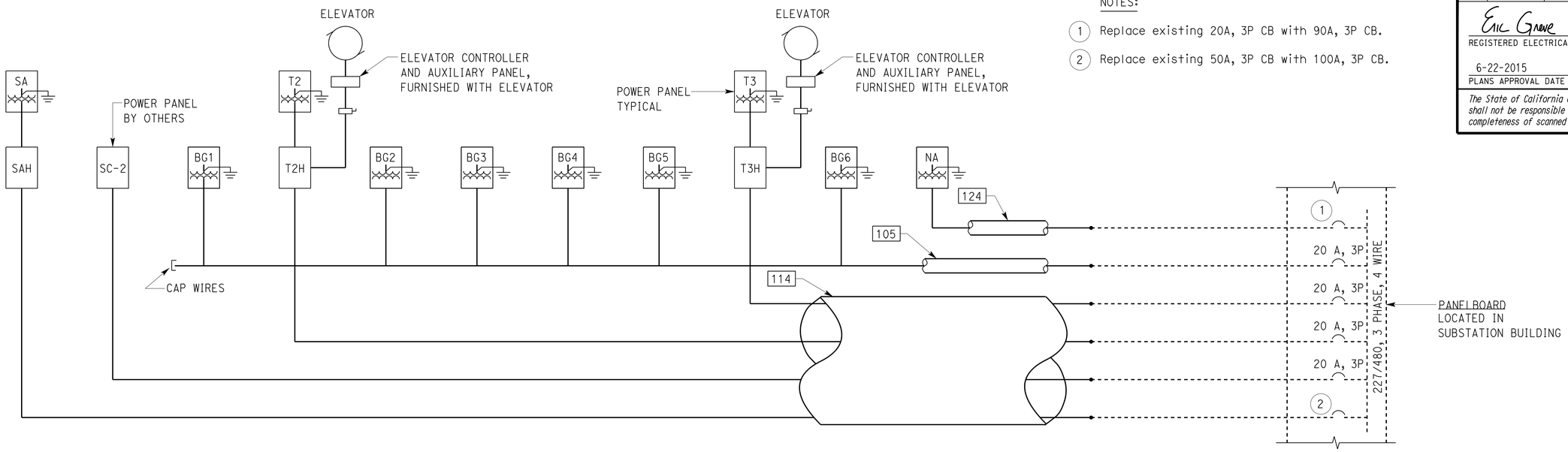

SINGLE LINE DIAGRAM

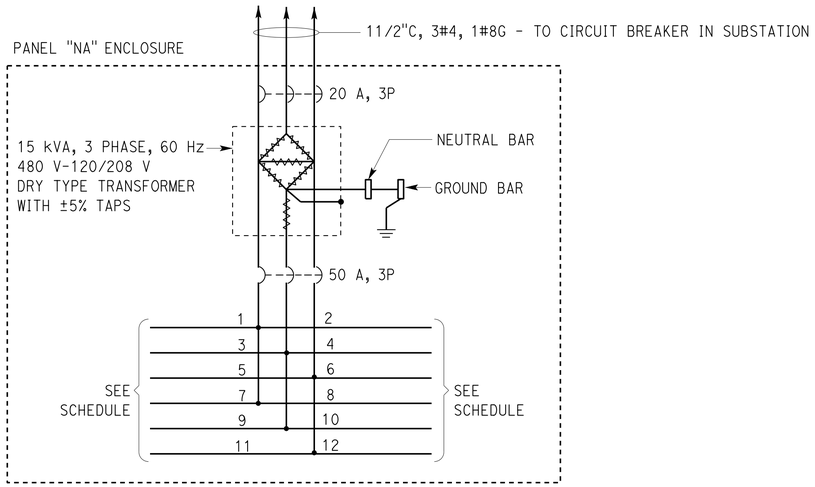

NORTHEAST ANCHORAGE POWER SCHEMATIC

EXISTING

(LOADS IN VA) PANEL NA LOCATION: NEA

LOAD DESCRIPTION	LTG	REC	OTH.	CB				CB	LTG	REC	OTH.	LOAD DESCRIPTION
LIGHTING	1200	-		20/1	1	A	2	20/1		-	864	MUA-3 (1/3 HP)
LIGHTING	1200	-		20/1	3	B	4	20/1	-	540	-	RECEPTACLE
RECEPTACLE	-	540		20/1	5	C	6	20/1	-	-	-	SPARE
MUA-4 (1/3 HP)	-	-	864	20/1	7	A	8	20/1	1200	-	-	LIGHTING
SUMP PUMP	-	-	-	20/1	9	B	10	20/1	1200	-	-	LIGHTING
SPARE	-	-	-	20/1	11	C	12	20/1	-	-	300	SECURITY
SPACE					13	A	14					SPACE
SPACE					15	B	16					SPACE
SPACE					17	C	18					SPACE
TOTAL	2400	540	864						2400	540	1164	**TOTAL**

LOAD SUMMARY	(kVA)
LIGHTING: (AT 125%)	6.00
RECEPTACLES: 1st 10 kVA AT 100%	1.08
ALL OTHERS: (AT 100%)	2.03
TOTAL kVA:	9.11 = 22 A AT 208 V, 3-PHASE 11 A AT 480 V, 3-PHASE

BALANCE:	(kVA)
PHASE A:	4728
PHASE B:	3540
PHASE C:	840

VOLTAGE: 120/208 V
PHASE/WIRES: 3-PHASE, 4-WIRE
MAINS RATING: 125A AT 208 V, 3 PHASE
MAIN CB: 50 AMPERES
MOUNTING: SURFACE
A. I. C.: PER CALCULATIONS

	BY	CHECKED
DESIGN	Steven Roy	Eric Greve
DETAILS	Carol Christian	Steven Roy
QUANTITIES	Steven Roy	Eric Greve

STATE OF CALIFORNIA
DEPARTMENT OF TRANSPORTATION

DIVISION OF ENGINEERING SERVICES
ELECTRICAL-MECHANICAL-WATER AND WASTEWATER DESIGN

BRIDGE No. 28-0352L
POST MILE

ZAMPA BRIDGE ANCHORAGE DEHUMIDIFICATION

ONE LINE DIAGRAM & NEA POWER (EXISTING)

SHEET EE1-4

TAEMWW Imperial - CCSC Rev. 02/13

ORIGINAL SCALE IN INCHES FOR REDUCED PLANS 0 1 2 3

UNIT: 3597 CONTRACT No.: 04-3G4034
PROJECT NUMBER & PHASE: 0412000101

DISREGARD PRINTS BEARING EARLIER REVISION DATES → 07-08-14 11-17-14

REVISION DATES (PRELIMINARY STAGE ONLY) SHEET OF

03-JUL-2015 13:04

P:\dist_04\0412000101_zampa_br_anchorage_dehumidification\expedite\ee1_04.dgn

Dist	COUNTY	ROUTE	POST MILES TOTAL PROJECT	SHEET No.	TOTAL SHEETS
04	CC, Sol	80	13.4/14.1, 0.0/0.6	72	75

Eric Greve 11-17-14
REGISTERED ELECTRICAL ENGINEER DATE

6-22-2015
PLANS APPROVAL DATE

REGISTERED PROFESSIONAL ENGINEER ERIC GREVE No. E 14791 Exp. 6-30-17 ELEC STATE OF CALIFORNIA

The State of California or its officers or agents shall not be responsible for the accuracy or completeness of scanned copies of this plan sheet.

(LOADS IN VA) PANEL NA (5) LOCATION: NEA

LOAD DESCRIPTION	LTG	REC	OTH.	CB				CB	LTG	REC	OTH.	LOAD DESCRIPTION
LIGHTING	1200	–		20/1	1	A	2	20/1		–	864	MUA-3 (1/3 HP)
LIGHTING	1200	–		20/1	3	B	4	20/1	–	540	–	RECEPTACLE
RECEPTACLE	–	540		20/1	5	C	6	20/1	–	–	120	MUA-3 DAMPER
MUA-4 (1/3 HP)	–	–	864	20/1	7	A	8	20/1	1200	–	–	LIGHTING
MUA-4 DAMPER	–	–	120	20/1	9	B	10	20/1	1200	–	–	LIGHTING
SPARE	–	–	–	20/1	11	C	12	20/1	–	–	300	SECURITY
SPACE					13	A	14					SPACE
SPACE					15	B	16					SPACE
SPACE					17	C	18					SPACE
TOTAL	2400	540	984						2400	540	1284	TOTAL

LOAD SUMMARY	(kVA)
LIGHTING: (AT 125%)	6.00
RECEPTACLES: 1st 10 kVA AT 100%	1.08
ALL OTHERS: (AT 100%)	2.03
TOTAL kVA:	9.11 = 22 A AT 208 V, 3-PHASE 11 A AT 480 V, 3-PHASE

VOLTAGE: 120/208 V
PHASE/WIRES: 3-PHASE, 4-WIRE
MAINS RATING: 125A AT 208 V, 3 PHASE
MAIN CB: 50 AMPERES
MOUNTING: SURFACE
A. I. C.: PER CALCULATIONS

NOTES:

1. 3#10 (480V NEA Dehumidifier)
2. 3#10 (480V NWA Dehumidifier)
3. Install new gutter. See sheet EE1-8 for conduit system.
4. For clarity, some conduits to be connected to new gutter are not shown.
5. Panel NA is existing. New loads are shown in BOLD.
6. Panel NAH is new.

(LOADS IN VA) (6) PANEL NAH LOCATION: NORTHEAST ANCHORAGE

LOAD DESCRIPTION	LTG	REC	OTH.	CB				CB	LTG	REC	OTH.	LOAD DESCRIPTION
POWER PANEL NA	2400	-	1728	20/3	1	A	2	30/3	-	-	6240	DEHUMIDIFIER NEA
	2400	540	120		3	B	4		-	-	6240	
	-	540	420		5	C	6		-	-	6240	
SPACE	-	-	-		7	A	8	30/3	-	-	6240	DEHUMIDIFIER NWA
	-	-	-		9	B	10		-	-	6240	
	-	-	-		11	C	12		-	-	6240	
TOTAL	4800	1080	2268						0.00	0.00	37440	**TOTAL**

LOAD SUMMARY	(kVA)
LIGHTING: AT 125%	6.00
RECEPTACLES: 1st 10 kVA AT 100%	1.08
ALL OTHERS: (AT 100%)	39.7
TOTAL kVA:	46.8 ⟹ 56.3 AMPERES AT 480 V, 3-PHASE

VOLTAGE: 480 V
PHASE/WIRES: 3-PHASE, 3-WIRE
MAIN RATING: 125 A
MAIN CB: 90 A
MOUNTING: SURFACE
A. I. C.: PER CALCULATIONS

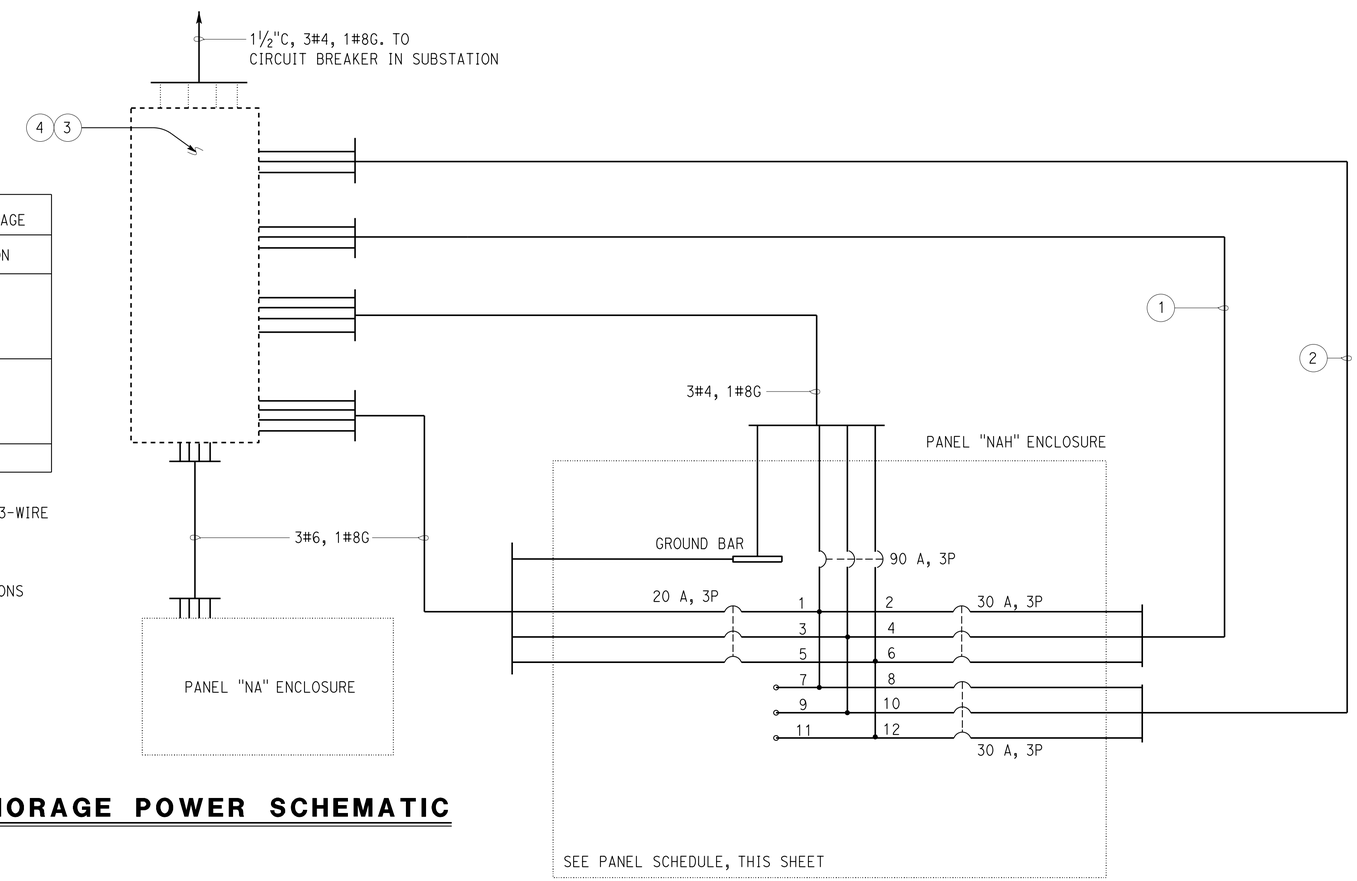

NORTHEAST ANCHORAGE POWER SCHEMATIC

MODIFIED

	BY	CHECKED
DESIGN	Steven Roy	Eric Greve
DETAILS	Carol Christian	Steven Roy
QUANTITIES	Steven Roy	Eric Greve

STATE OF CALIFORNIA DEPARTMENT OF TRANSPORTATION

DIVISION OF ENGINEERING SERVICES ELECTRICAL-MECHANICAL-WATER AND WASTEWATER DESIGN

BRIDGE No. 28-0352L
POST MILE

ZAMPA BRIDGE ANCHORAGE DEHUMIDIFICATION

NORTHEAST ANCHORAGE POWER (MODIFIED)

SHEET EE1-5

TAEMWW Imperial - CCSC Rev. 02/13

ORIGINAL SCALE IN INCHES FOR REDUCED PLANS 0 1 2 3

UNIT: 3597 CONTRACT No.: 04-3G4034
PROJECT NUMBER & PHASE: 0412000101

DISREGARD PRINTS BEARING EARLIER REVISION DATES → 07-08-14 11-17-14

REVISION DATES (PRELIMINARY STAGE ONLY) SHEET OF

03-JUL-2015 13:05

P:\dist_04\0412000101_zampa_br_anchorage_dehumidification\expedite\ee1_05.dgn

Dist	COUNTY	ROUTE	POST MILES TOTAL PROJECT	SHEET No.	TOTAL SHEETS
04	CC, Sol	80	13.4/14.1, 0.0/0.6	73	75

Eric Greve 11-17-14
REGISTERED ELECTRICAL ENGINEER DATE

6-22-2015
PLANS APPROVAL DATE

REGISTERED PROFESSIONAL ENGINEER ERIC GREVE No. E 14791 Exp. 6-30-17 ELEC STATE OF CALIFORNIA

The State of California or its officers or agents shall not be responsible for the accuracy or completeness of scanned copies of this plan sheet.

NOTES:

(1) Remove existing 50A, 3P CB

PANEL "SAH"

(LOADS IN VA) LOCATION: SEA

LOAD DESCRIPTION	LTG	REC	OTH.	CB				CB	LTG	REC	OTH.	LOAD DESCRIPTION
POWER PANEL "SA"	2400	-	1728	30	1	A	2	30	-	-	942	MUA-5 (2 HP) EAST
↓	2400	540	300		3	B	4		-	-	942	↓
↓	-	540	600	3	5	C	6	3	-	-	942	↓
SPACE	-	-	-		7	A	8	30	-	-	942	MUA-6 (2 HP) WEST
↓	-	-	-		9	B	10		-	-	942	↓
↓	-	-	-		11	C	12	3	-	-	942	↓
SPACE	-	-	-		13	A	14		-	-	-	SPACE
↓	-	-	-		15	B	16		-	-	-	↓
↓	-	-	-		17	C	18		-	-	-	↓
TOTAL	4800	1080	2628						0.00	0.00	5652	**TOTAL**

LOAD SUMMARY	(kVA)
LIGHTING: AT 125%)	6.00
RECEPTACLES: 1st 10 kVA AT 100%	1.08
ALL OTHERS: (AT 100%)	8.28
TOTAL kVA:	15.36 = 19 A AT 480 V, 3-PHASE

BALANCE:	(kVA)
PHASE A:	6.6
PHASE B:	5.72
PHASE C:	3.02

VOLTAGE: 277/480 V
PHASE/WIRES: 3-PHASE, 3-WIRE
MAINS: 125 A
MAIN CB: 50 A
MOUNTING: SURFACE
A. I. C.: PER CALCULATIONS

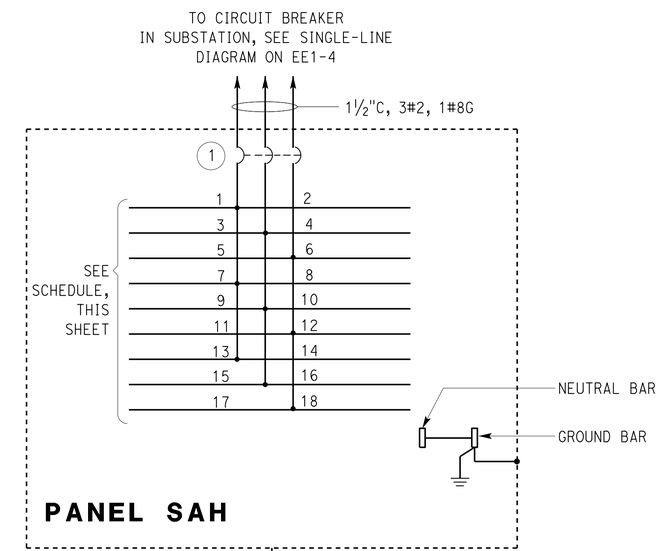

PANEL SA

(LOADS IN VA) LOCATION: SEA

LOAD DESCRIPTION	LTG	REC	OTH.	CB				CB	LTG	REC	OTH.	LOAD DESCRIPTION
LIGHTING	1200	-	-	20/1	1	A	2	20/1	-	-	864	MUA-6 CONTROL
LIGHTING	1200	-	-	20/1	3	B	4	20/1	-	540	-	RECEPTACLE
RECEPTACLE	-	540	-	20/1	5	C	6	20/1	-	-	300	SPARE SUMP PUMP
MUA-5 CONTROL	-	-	864	20/1	7	A	8	20/1	1200	-	-	LIGHTING
SMIP V-SAT	-	-	300	20/1	9	B	10	20/1	1200	-	-	LIGHTING
SMIP RECORDERS	-	-	300	20/1	11	C	12	20/1	-	-	300	SECURITY
SPACE	-	-	-		13	A	14		-	-	-	SPACE
↓	-	-	-		15	B	16		-	-	-	↓
↓	-	-	-		17	C	18		-	-	-	↓
TOTAL	2400	540	1464						2400	540	1464	**TOTAL**

LOAD SUMMARY	(kVA)
LIGHTING: (AT 125%)	6.00
RECEPTACLES: 1st 10 kVA AT 100%	1.08
ALL OTHERS: (AT 100%)	2.63
TOTAL kVA:	9.71 = 27 A AT 208 V, 3-PHASE 12 A AT 480 V, 3-PHASE

BALANCE:	(kVA)
PHASE A:	4728
PHASE B:	3840
PHASE C:	1440

VOLTAGE: 120/208 V
PHASE/WIRES: 3-PHASE, 4-WIRE
MAINS RATING: 125 A
MAIN CB: 50 A
MOUNTING: SURFACE
A. I. C.: PER CALCULATIONS

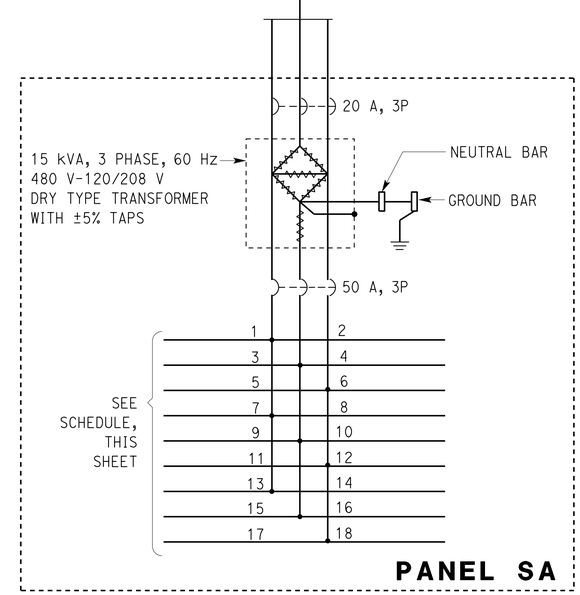

DESIGN	BY Steven Roy	CHECKED Eric Greve	
DETAILS	BY Carol Christian	CHECKED Steven Roy	
QUANTITIES	BY Steven Roy	CHECKED Eric Greve	

STATE OF CALIFORNIA
DEPARTMENT OF TRANSPORTATION

DIVISION OF ENGINEERING SERVICES
ELECTRICAL-MECHANICAL-WATER AND WASTEWATER DESIGN

BRIDGE No. 28-0352L
POST MILE

ZAMPA BRIDGE ANCHORAGE DEHUMIDIFICATION
SOUTHEAST ANCHORAGE POWER (EXISTING)

SHEET EE1-6

TAEMWW Imperial - CCSC Rev. 02/13

ORIGINAL SCALE IN INCHES FOR REDUCED PLANS 0 1 2 3

UNIT: 3597 CONTRACT No.: 04-3G4034
PROJECT NUMBER & PHASE: 0412000101

DISREGARD PRINTS BEARING EARLIER REVISION DATES 07-08-14 11-17-14

REVISION DATES (PRELIMINARY STAGE ONLY) SHEET OF

03-JUL-2015 13:05

P:\dist_04\0412000101_zampa_br_anchorage_dehumidification\expedite\ee1_06.dgn

Dist	COUNTY	ROUTE	POST MILES TOTAL PROJECT	SHEET No.	TOTAL SHEETS
04	CC, Sol	80	13.4/14.1, 0.0/0.6	74	75

Eric Greve 11-17-14
REGISTERED ELECTRICAL ENGINEER DATE

6-22-2015
PLANS APPROVAL DATE

REGISTERED PROFESSIONAL ENGINEER ERIC GREVE No. E 14791 Exp. 6-30-17 ELEC STATE OF CALIFORNIA

The State of California or its officers or agents shall not be responsible for the accuracy or completeness of scanned copies of this plan sheet.

(LOADS IN VA) (5) PANEL "SAH" LOCATION: SEA

LOAD DESCRIPTION	LTG	REC	OTH.	CB				CB	LTG	REC	OTH.	LOAD DESCRIPTION
POWER PANEL "SA"	2400	–	1728	30	1	A	2	30	–	–	942	MUA-5 (2 HP) EAST
↓	2400	540	300		3	B	4		–	–	942	↓
↓	–	540	600	3	5	C	6	3	–	–	942	↓
DEHUMIDIFIER SEA	–	–	9144	35	7	A	8	30	–	–	942	MUA-6 (2 HP) WEST
↓	–	–	9144		9	B	10		–	–	942	↓
↓	–	–	9144	3	11	C	12	3	–	–	942	↓
DEHUMIDIFIER SWA	–	–	9144	35	13	A	14		–	–	–	SPACE
↓	–	–	9144		15	B	16		–	–	–	↓
↓	–	–	9144	3	17	C	18		–	–	–	↓
TOTAL	4800	1080	54864						0.00	0.00	5652	TOTAL

LOAD SUMMARY	(kVA)
LIGHTING: AT 125%)	6.00
RECEPTACLES: 1st 10 kVA AT 100%	1.08
ALL OTHERS: (AT 100%)	69.8
TOTAL kVA:	66.4 = 80 A AT 480 V, 3-PHASE

BALANCE:	(kVA)
PHASE A:	6.6
PHASE B:	5.72
PHASE C:	3.02

VOLTAGE: 277/480 V
PHASE/WIRES: 3-PHASE, 3-WIRE
MAINS: 125 A
MAIN CB: 100 A
MOUNTING: SURFACE
A. I. C.: PER CALCULATIONS

NOTES:

(1) Install new 100A, 3P CB in existing Panel SAH

(5) Panel SAH is existing. New loads are shown in BOLD.

(6) Panel SA is existing. New loads are shown in BOLD.

(LOADS IN VA) (6) PANEL SA LOCATION: SEA

LOAD DESCRIPTION	LTG	REC	OTH.	CB				CB	LTG	REC	OTH.	LOAD DESCRIPTION
LIGHTING	1200	–	–	20/1	1	A	2	20/1	–	–	864	MUA-6 CONTROL
LIGHTING	1200	–	–	20/1	3	B	4	20/1	–	540?	–	RECEPTACLE
RECEPTACLE	–	540?	–	20/1	5	C	6	20/1	–	–	120	DAMPER (MUA-6)
MUA-5 CONTROL	–	–	864	20/1	7	A	8	20/1	1200	–	–	LIGHTING
SMIP V-SAT	–	–	300	20/1	9	B	10	20/1	1200	–	–	LIGHTING
SMIP RECORDERS	–	–	300	20/1	11	C	12	20/1	–	–	300	SECURITY
DAMPER (MUA-5)	120	–	–		13	A	14		–	–	–	SPACE
↓	–	–	–		15	B	16		–	–	–	↓
↓	–	–	–		17	C	18		–	–	–	↓
TOTAL	2520	540?	1464						2400	540?	1284	TOTAL

LOAD SUMMARY	(kVA)
LIGHTING: (AT 125%)	6.00
RECEPTACLES: 1st 10 kVA AT 100%	1.08
ALL OTHERS: (AT 100%)	2.63
TOTAL kVA:	9.71 = 27 A AT 208 V, 3-PHASE 12 A AT 480 V, 3-PHASE

BALANCE:	(kVA)
PHASE A:	4728
PHASE B:	3840
PHASE C:	1440

VOLTAGE: 120/208 V
PHASE/WIRES: 3-PHASE, 4-WIRE
MAINS RATING: 125 A
MAIN CB: 50 A
MOUNTING: SURFACE
A. I. C.: PER CALCULATIONS

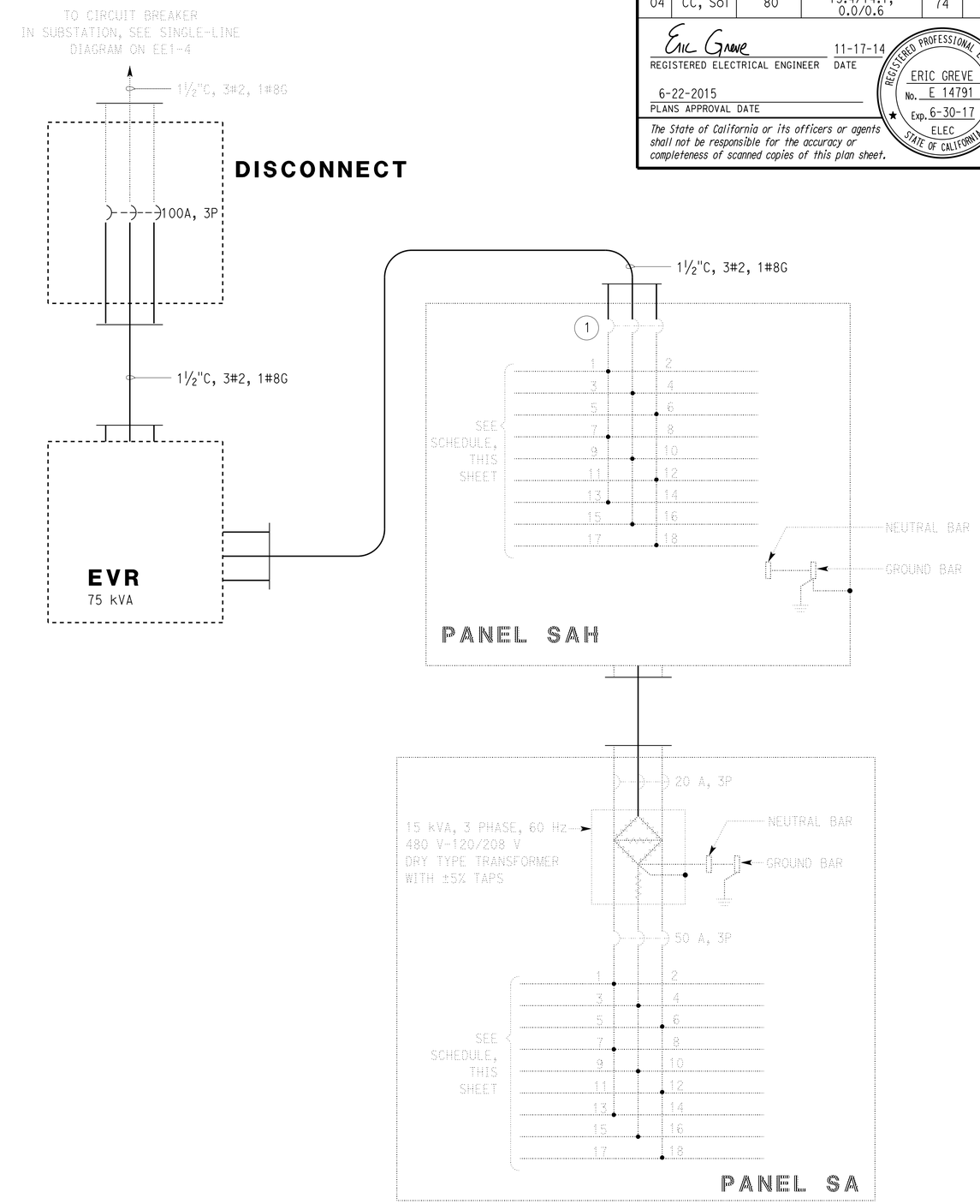

DESIGN	BY Steven Roy	CHECKED Eric Greve	
DETAILS	BY Carol Christian	CHECKED Steven Roy	
QUANTITIES	BY Steven Roy	CHECKED Eric Greve	

STATE OF CALIFORNIA
DEPARTMENT OF TRANSPORTATION

DIVISION OF ENGINEERING SERVICES
ELECTRICAL-MECHANICAL-WATER AND WASTEWATER DESIGN

BRIDGE No. 28-0352L
POST MILE

ZAMPA BRIDGE ANCHORAGE DEHUMIDIFICATION
SOUTHEAST ANCHORAGE POWER (MODIFIED)

SHEET EE1-7

TAEMWW Imperial - CCSC Rev. 02/13

ORIGINAL SCALE IN INCHES FOR REDUCED PLANS 0 1 2 3

UNIT: 3597 CONTRACT No.: 04-3G4034
PROJECT NUMBER & PHASE: 0412000101

DISREGARD PRINTS BEARING EARLIER REVISION DATES → 01-08-14 11-17-14

REVISION DATES (PRELIMINARY STAGE ONLY) SHEET OF

03-JUL-2015 13:05

P:\dist_04\0412000101_zampa_br_anchorage_dehumidification\expedite\ee1_07.dgn

Dist	COUNTY	ROUTE	POST MILES TOTAL PROJECT	SHEET No.	TOTAL SHEETS
04	CC, Sol	80	13.4/14.1, 0.0/0.6	75	75

Eric Greve 11-17-14
REGISTERED ELECTRICAL ENGINEER DATE

6-22-2015
PLANS APPROVAL DATE

The State of California or its officers or agents shall not be responsible for the accuracy or completeness of scanned copies of this plan sheet.

REGISTERED PROFESSIONAL ENGINEER ERIC GREVE No. E 14791 Exp. 6-30-17 ELEC STATE OF CALIFORNIA

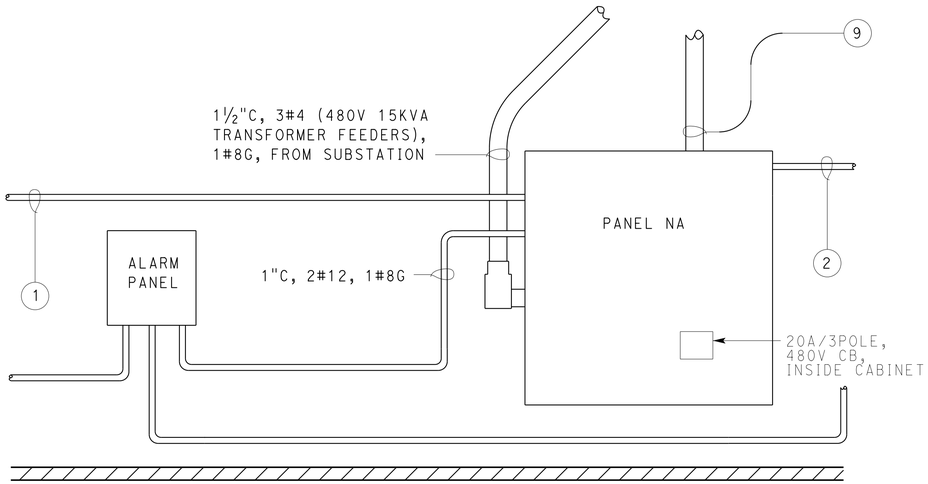

EXISTING
(A) PANEL NA
NO SCALE

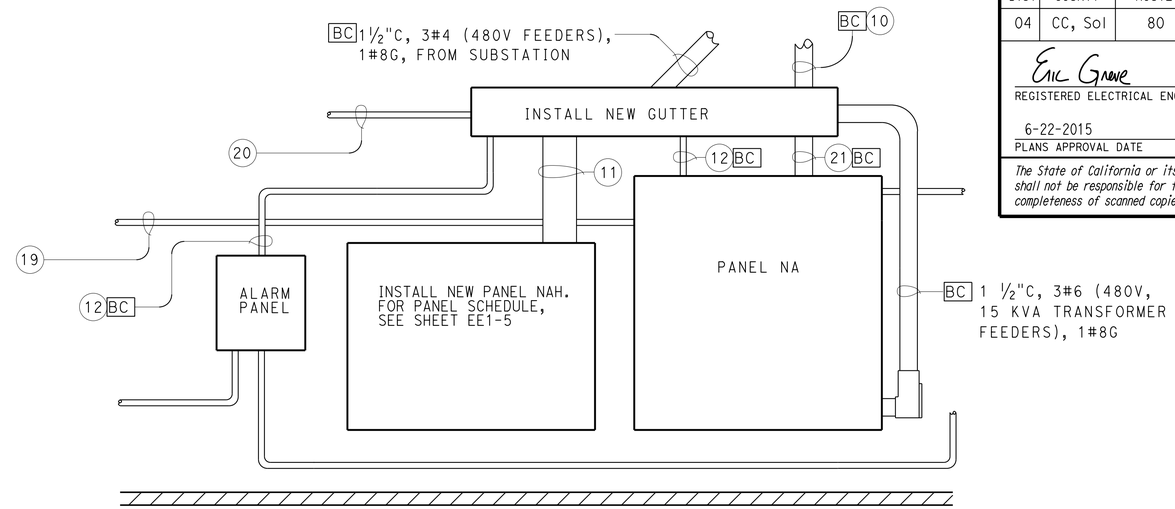

MODIFIED
(B) PANEL NA
NO SCALE

NOTES:

1. 1"C, 5#10, 1#10G, to remain
2. 1"C, 4#10, 1#10G, to remain
3. 1¼"C, 3#6 (480V 15KVA transformer feeders), 1#10G, to remain
4. 1¼"C, 3#10 (480V SWA MUA), 1#10G, to remain
5. 1¼"C, 3#10 (480V SEA MUA), 1#10G, to remain
6. 1¼"C, 3#2 (480V Panel SAH feeders), 1#10G, to remain. Pull conductors back to floor level.

NOTES (CONTINUED):

7. 1"C, 4#12, 2#12G, to remain
8. 1¼"C, 7#10, 1#10G, to remain
9. 1½"C, 9#10, 2#10G. To Northwest Anchorage.
10. 1½"C, 9#10, 2#10G. Add 3#10 (480V NWA Dehumidifier), 2#10 (120V NWA MUA DAMPER). To NorthWest Anchorage.
11. 3"C, 3#4 (480V Panel NAH feeders), 3#6 (480V 15KVA transformer feeders), 3#10 (480V NWA Dehumidifier), 3#10 (480V NEA DEHUMIDIFIER), 1#8G
12. 1"C, 2#12 (Alarm Panel), 1#8G
13. 1¼"C (E), 3#2 (480V disconnect feeders), 1#10G
14. 1½"C, 3#2 (480V disconnect feeders), 1#10G
15. 1½"C, 3#2 (480V EVR feeders), 1#10G
16. 1½"C, 3#2 (480V Panel SAH feeders), 1#10G
17. 1¼"C (E), 3#2 (480V Panel SAH feeders), 1#10G
18. 1¼"C, 3#10 (480V SWA MUA), 1#10G, to SWA, add 3#8 (480V SWA Dehumidifier)
19. (E) 1"C, 3#10 (LIGHTING), 2#10 (NEA MUA), 1#10G. ADD 2#10 (NEA MUA DAMPER).
20. (N) 1" PVC Coated RSC, 3#10 (NEA DEHUMIDIFIER), 1#10G.
21. 1½"C, 9#10, 2#10G. ADD 2#10 (NWA MUA DAMPER). To Northwest Anchorage.
22. 1¼"C, 3#10 (480V SEA MUA), 1#10G, ADD 3#8 (480V SEA DEHUMIDIFIER).
23. 1¼"C, 7#10, 1#10G, ADD 2#10 (SWA MUA DAMPER).
24. 1¼"C, 7#10, 1#10G, ADD 2#10 (SEA MUA DAMPER).

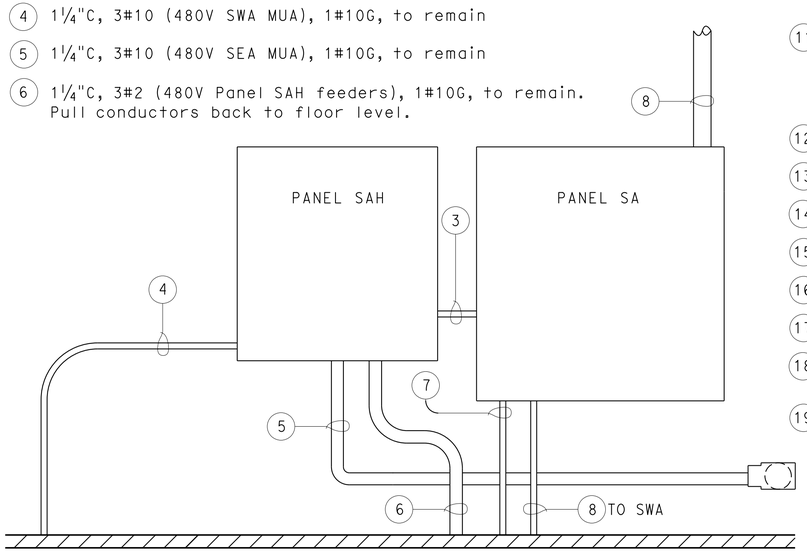

EXISTING
(C) PANEL SAH AND SA
NO SCALE

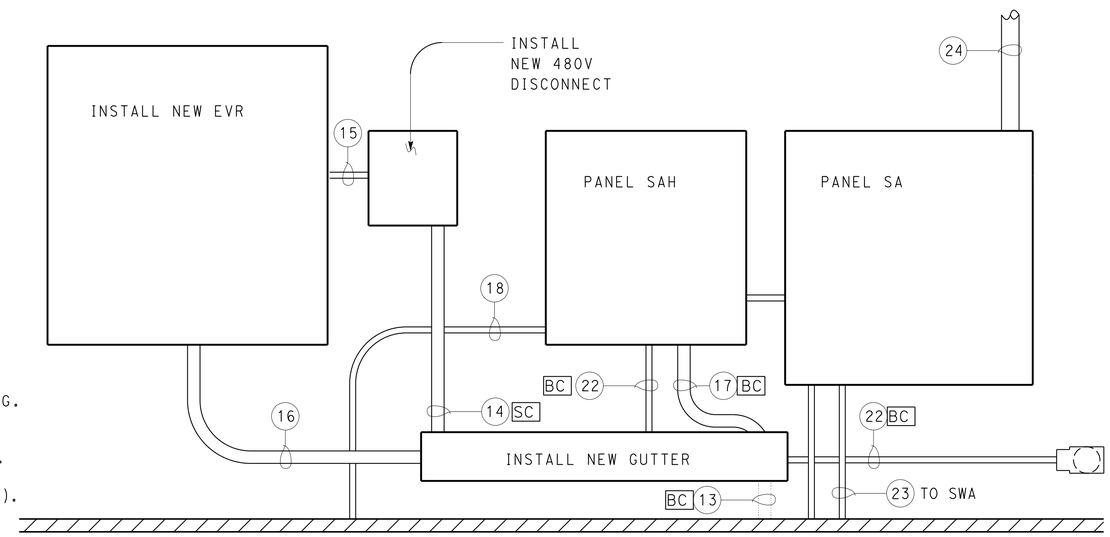

MODIFIED
(D) PANEL SAH AND SA
NO SCALE

	BY	CHECKED
DESIGN	Steven Roy	Eric Greve
DETAILS	Carol Christian	Steven Roy
QUANTITIES	Steven Roy	Eric Greve

STATE OF CALIFORNIA
DEPARTMENT OF TRANSPORTATION

DIVISION OF ENGINEERING SERVICES
ELECTRICAL-MECHANICAL-WATER AND WASTEWATER DESIGN

BRIDGE No. 28-0352L
POST MILE

ZAMPA BRIDGE ANCHORAGE DEHUMIDIFICATION

ANCHORAGE ELECTRICAL PANEL ELEVATIONS

SHEET EE1-8

TAEMWW Imperial - CCSC Rev. 02/13

ORIGINAL SCALE IN INCHES FOR REDUCED PLANS 0 1 2 3

UNIT: 3597 CONTRACT No.: 04-3G4034
PROJECT NUMBER & PHASE: 0412000101

DISREGARD PRINTS BEARING EARLIER REVISION DATES → 01-06-14 11-17-14

REVISION DATES (PRELIMINARY STAGE ONLY) SHEET OF

03-JUL-2015 13:05

P:\dist_04\0412000101_zampa_br_anchorage_dehumidification\expedite\ee1_08.dgn