# INFORMATION HANDOUT

**For Contract No. 04-3G4034**
**At 04-CC,Sol-80-13.4/14.1, 0.0/0.6**

**Identified by**
**Project ID 0412000101**

04-3G4034
04-CC,Sol-80-13.4/14.1, 0.0/0.6
Project ID 0412000101

## MATERIALS INFORMATION

Limited Asbestos Survey Report

Bridge As-Built Drawings

# LIMITED ASBESTOS SURVEY REPORT

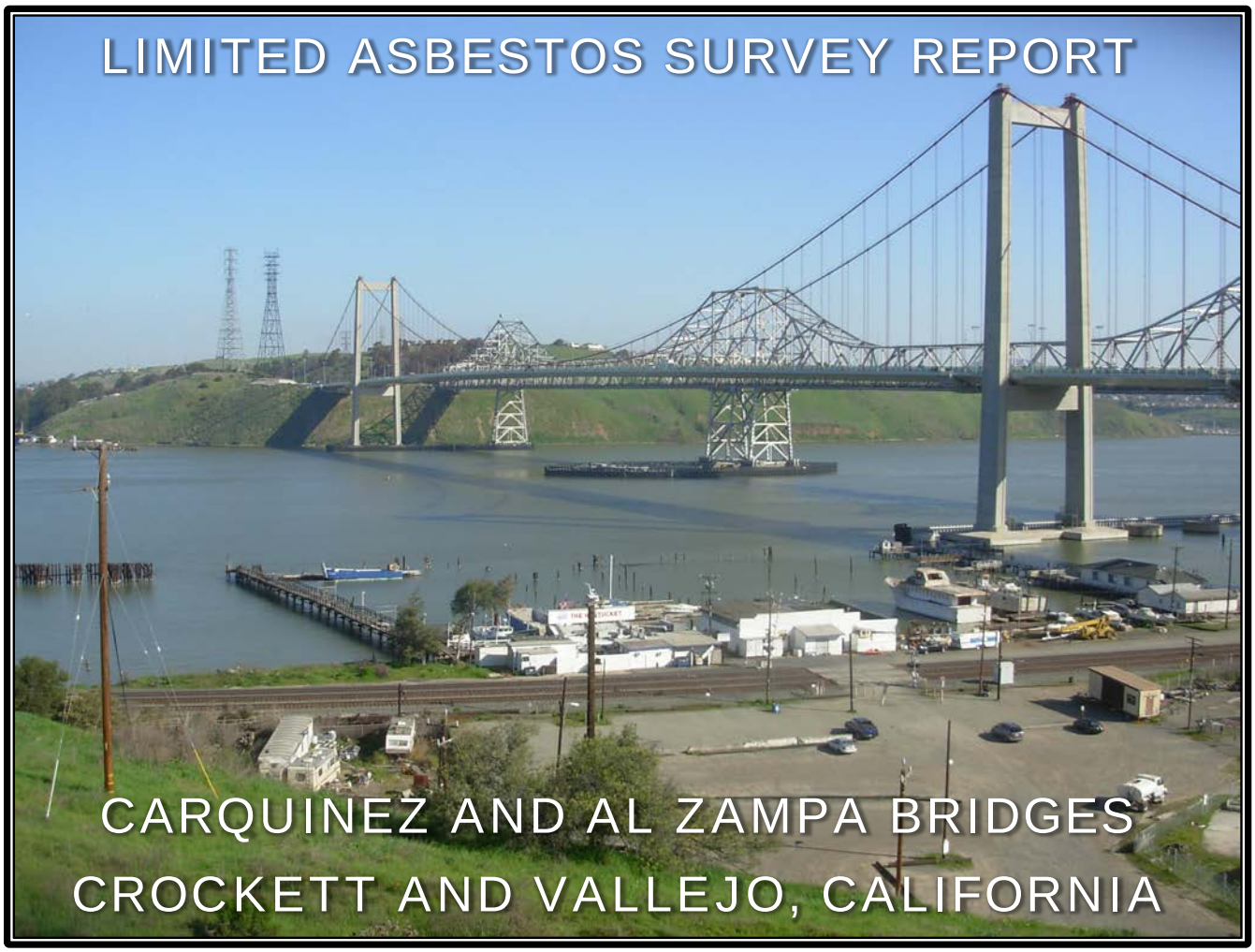

# CARQUINEZ AND AL ZAMPA BRIDGES
# CROCKETT AND VALLEJO, CALIFORNIA

*PREPARED FOR*:
CALIFORNIA DEPARTMENT OF TRANSPORTATION
DISTRICT 4
OFFICE OF ENVIRONMENTAL ENGINEERING
111 GRAND AVENUE
OAKLAND, CALIFORNIA

*PREPARED BY*:
GEOCON CONSULTANTS, INC.
6671 BRISA STREET
LIVERMORE, CALIFORNIA

GEOCON PROJECT NO. E8721-02-24
CALTRANS EA 04-3G4031
CALTRANS PROJECT NO. 04-1200-0101-1

MARCH 2015

## TABLE OF CONTENTS

**LIMITED ASBESTOS SURVEY REPORT** Page


REPORT LIMITATIONS ..... i
PROJECT TEAM ..... iii
EXECUTIVE SUMMARY ..... iv
1.0 INTRODUCTION ..... 1
1.1 Site Description and Proposed Improvements ..... 1
1.2 Purpose ..... 1
2.0 BACKGROUND ..... 1
3.0 SCOPE OF SERVICES ..... 2
4.0 INVESTIGATIVE METHODS ..... 2
5.0 INVESTIGATIVE RESULTS ..... 3
6.0 CONCLUSIONS ..... 3

TABLE
Summary of Analytical Laboratory Test Results – Asbestos

FIGURES
1. Vicinity Map
2A-E. Site Plans

SITE PHOTOGRAPHS (1 through 15)

APPENDICES
A. Caltrans Bridge List
B. Laboratory Analytical Report and Chain-of-Custody Documentation

## REPORT LIMITATIONS

This limited asbestos survey was conducted in conformance with generally accepted standards of practice for identifying and evaluating asbestos in structures. Due to the nature of structure surveys, asbestos, and laboratory analytical limitations, some asbestos in the structures may not have been identified. Structure spaces such as cavities, crawlspaces, and pipe chases may have been concealed to our investigator. Previous structure renovation work may have concealed or covered spaces or materials, or may have partially demolished materials and left debris in inaccessible areas. Additionally, renovation activities may have partially replaced asbestos with indistinguishable non-asbestos materials. Asbestos may exist in areas of the structures not accessible or sampled in conjunction with this Task Order.

During renovation or demolition operations, suspect materials may be uncovered which are different from those accessible for sampling during this assessment. Personnel in charge of renovation/demolition should be alerted to note materials uncovered during such activities that differ substantially from those included in this or previous assessment reports. If suspect materials are found, additional sampling and analysis should be performed to determine if the materials contain asbestos.

This report has been prepared exclusively for the State of California Department of Transportation (Caltrans) District 4. The information contained herein is only valid as of the date of the report, and will require an update to reflect additional information obtained.

This report is not a comprehensive site characterization and should not be construed as such. The findings as presented in this report are predicated on the results of the limited sampling and laboratory testing performed. In addition, the information obtained is not intended to address potential impacts related to sources other than those specified herein. Therefore, the report should be deemed conclusive with respect to only the information obtained. We make no warranty, express or implied, with respect to the content of this report or any subsequent reports, correspondence or consultation. Geocon strived to perform the services summarized herein in accordance with the local standard of care in the geographic region at the time the services were rendered.

The contents of this report reflect the views of the authors who are responsible for the facts and accuracy of the data presented herein. The contents do not necessarily reflect the official views or policies of the State of California or the Federal Highway Administration. This report does not constitute a standard, specification, or regulation.

**GEOCON CONSULTANTS, INC.**

David Watts, CAC No. 98-2404
Senior Project Scientist

**CALIFORNIA DEPARTMENT OF TRANSPORTATION – DISTRICT 4**
**OFFICE OF ENVIRONMENTAL ENGINEERING**

| Reviewed By: | Recommended By: | Approved By: |
|---|---|---|
| Keith Fang<br>Task Order Manager | Chris Wilson, PE<br>District Branch Chief | Allen Baradar, PE<br>District Office Chief |

## PROJECT TEAM

| Contact | Affiliation | Responsibility |
|---|---|---|
| Romy Fuentes, PE<br>510.622.8803<br>510.622.0198 fax<br>romy_f_fuentes@dot.ca.gov | Caltrans – District 4<br>111 Grand Avenue, MS 7A<br>Oakland, CA 94612 | Contract Manager |
| Keith Fang<br>510.286.5657/510.286-6220<br>510.286.5639 fax<br>keith.fang@dot.ca.gov | Caltrans – District 4<br>Environmental Engineering<br>111 Grand Avenue, MS8C<br>Oakland, CA 94612 | Task Order Manager |
| Richard Day, CEG, CHG<br>David Watts, CAC<br>925.371.5900<br>925.371.5915 fax<br>livermore@geoconinc.com | Geocon Consultants, Inc.<br>6671 Brisa Street<br>Livermore, CA 94550<br>(*Caltrans Contractor*) | Project Management<br>Sample Collection<br>Field QA/QC<br>Investigation Report |
| Doug Krause, CIH<br>530.758.6397<br>530.758.6506 fax<br>dskrause@pacbell.net | Krause & Associates<br>216 F. Street<br>Suite 162<br>Davis, CA 95616<br>(*Geocon Subcontractor*) | Health and Safety |
| Chris Dojlidko<br>510.895.3675<br>510.895.3680 fax<br>sanleandrolab@emsl.com | EMSL Analytical, Inc.<br>464 McCormick Street<br>San Leandro, CA 94577<br>*(Geocon Subcontractor)* | Asbestos Analysis |

## EXECUTIVE SUMMARY

This limited asbestos survey report was prepared for four bridges on Interstate 80 in Crockett and Vallejo, California. We performed a limited asbestos survey at the project locations. The project locations are depicted on the Vicinity Map, Figure 1, and Site Plans, Figures 2A through E. The bridges included in our survey are presented in the Caltrans Bridge List, Appendix A. Caltrans has requested an investigation at the project locations to provide data regarding the presence of asbestos prior to refurbishment of the bridge deck and deck joint systems.

This report documents the investigation sampling methods and laboratory analytical data. The primary objective of our survey was to determine and quantify asbestos at the project locations prior to improvements. The information obtained from this investigation will be used by Caltrans to coordinate proposed activities, determine appropriate abatement/disposal costs, and identify health and safety concerns during improvements.

The field investigation was performed on March 2 and 3, 2015. The following field activities were performed during our sampling efforts:

- Collected 22 bulk samples of suspect asbestos; and
- Transported samples to a Caltrans-approved, California-certified environmental laboratory.

Samples were collected from locations presented on the Site Plans. Bridge and suspect asbestos sample identification numbers are presented in the report table. Materials represented by the samples collected are presented in the Site Photographs.

Bulk suspect asbestos material samples were collected after first wetting friable materials with a light mist of water. The samples were transferred to labeled containers and sealed. Seven suspect asbestos materials were identified during the survey. Sampling locations were distributed throughout the homogeneous areas (spaces where the material was observed).

We relinquished bulk samples using standard chain-of-custody documentation for asbestos analysis. Asbestos content was determined using U.S. Environmental Protection Agency (EPA) Test Method 600/R-93/116 for polarized light microscopy (PLM). We requested laboratory analyses to be within a 120-hour turnaround.

No asbestos was detected in the samples of suspect materials collected during our survey. Laboratory results for the asbestos samples are summarized on the report table. Reproductions of the laboratory report and chain-of-custody documentation are presented in Appendix B.

We provide the following conclusions and recommendations based on the results of our investigation.

Since no asbestos was detected, the California Occupational Safety and Health Administration (Cal/OSHA) standard does not apply for activities disturbing suspect materials represented by samples collected during our survey. In addition, suspect materials represented by samples collected during our survey would not be considered a California hazardous waste based on asbestos content.

In accordance with Bay Area Air Quality Management District (BAAQMD) Regulation 11, Rule 2, written notification is required ten working days prior to commencement of *any* demolition activity (whether asbestos is present or not).

## LIMITED ASBESTOS SURVEY REPORT

# 1.0 INTRODUCTION

This limited asbestos survey report was prepared for four bridges on Interstate 80 in Crockett and Vallejo, California. We performed a limited asbestos survey at the project locations. This report documents the investigation sampling methods and laboratory analytical data.

## 1.1 Site Description and Proposed Improvements

The project locations are depicted on the Vicinity Map, Figure 1, and Site Plans, Figures 2A through E. The bridges included in our survey are presented in the Caltrans Bridge List, Appendix A. Caltrans has requested an investigation at the project locations to provide data regarding the presence of asbestos prior to refurbishment of the bridge deck and deck joint systems.

## 1.2 Purpose

The primary objective of our survey was to determine and quantify asbestos at the project location prior to improvements. The information obtained from this investigation will be used by Caltrans to coordinate proposed activities, determine appropriate abatement/disposal costs, and identify health and safety concerns during improvements.

# 2.0 BACKGROUND

The *Code of Federal Regulations (CFR),* 40 CFR 61, Subpart M, National Emissions Standards for Hazardous Air Pollutants (NESHAP) and Federal Occupational Safety and Health Administration (FED OSHA) classify asbestos-containing material (ACM) as any material or product that contains *greater than* 1% asbestos. Nonfriable ACM is classified by NESHAP as either Category I or Category II material defined as follows:

- **Category I** – asbestos-containing packings, gaskets, resilient floor coverings, and asphalt roofing products.
- **Category II** – all remaining types of non-friable asbestos-containing material not included in Category I that when dry, cannot be crumbled, pulverized, or reduced to powder by hand pressure.

Regulated asbestos-containing material (RACM), a hazardous waste when friable, is classified as any manufactured material that contains *greater than* 1% asbestos by dry weight *and* is:

- Friable; or
- Category I material that has become friable; or
- Category I material that has been subjected to sanding, grinding, cutting, or abrading; or
- Category II non-friable material that has a high probability of becoming crumbled, pulverized, or reduced to a powder during demolition or renovation activities.

Activities that disturb materials containing *any* amount of asbestos are subject to certain requirements of the Cal/OSHA asbestos standard contained in Title 8, CCR Section 1529. Typically, removal or disturbance of more than 100 square feet of material containing more than 0.1% asbestos must be performed by a registered asbestos abatement contractor, but associated waste labeling is not required if the material contains 1% or less asbestos. When the asbestos content of a material exceeds 1%, virtually all requirements of the standard become effective.

Materials containing more than 1% asbestos are also subject to NESHAP regulations (40 CFR Part 61, Subpart M). RACM (friable ACM and nonfriable ACM that will become friable during demolition operations) must be removed from structures prior to demolition. Certain nonfriable ACM and materials containing 1% or less asbestos may remain in structures during demolition; however, there are waste handling/disposal issues and Cal/OSHA work requirements that must be followed. Contractors are responsible for segregating and characterizing waste streams prior to disposal.

With respect to potential worker exposure, notification, and registration requirements, Cal/OSHA defines asbestos-containing construction material (ACCM) as construction material that contains more than 0.1% asbestos (Title 8, CCR 341.6).

## 3.0 SCOPE OF SERVICES

Mr. David Watts, a California-Certified Asbestos Consultant (CAC), certification number 98-2404 (expiration September 16, 2015), performed the asbestos survey on March 2 and 3, 2015. Twenty-two bulk samples representing seven suspect asbestos materials were collected. The following field activities were performed during our sampling efforts:

- Collected bulk samples of suspect asbestos; and
- Transported samples to a Caltrans-approved, California-certified environmental laboratory.

Samples were collected from locations presented on the Site Plans. Bridge and suspect asbestos sample identification numbers are presented in the report table. Materials represented by the samples collected are presented in the Site Photographs.

## 4.0 INVESTIGATIVE METHODS

Bulk suspect asbestos material samples were collected after first wetting friable materials with a light mist of water. The samples were transferred to labeled containers and sealed. Seven suspect asbestos materials were identified during our limited survey. Sampling locations were distributed throughout the homogeneous areas (spaces where the material was observed).

We relinquished bulk samples using standard chain-of-custody documentation for asbestos analysis. Asbestos content was determined using U.S. EPA Test Method 600/R-93/116 for PLM. We requested laboratory analyses to be within a 120-hour turnaround.

## 5.0 INVESTIGATIVE RESULTS

No asbestos was detected in the samples of suspect materials collected during our survey. Laboratory results for the asbestos samples are summarized on the report table. Reproductions of the laboratory report and chain-of-custody documentation are presented in Appendix B.

## 6.0 CONCLUSIONS

Since no asbestos was detected, the Cal/OSHA standard does not apply for activities disturbing suspect materials represented by samples collected during our survey. In addition, suspect materials represented by samples collected during our survey would not be considered a California hazardous waste based on asbestos content.

In accordance with BAAQMD Regulation 11, Rule 2, written notification is required ten working days prior to commencement of *any* demolition activity (whether asbestos is present or not).

**SUMMARY OF ANALYTICAL LABORATORY TEST RESULTS - ASBESTOS**
**CARQUINEZ AND AL ZAMPA BRIDGES**
**CROCKETT AND VALLEJO, CALIFORNIA**

**Polarized Light Microscopy (PLM) - EPA Test Method 600/R-93/116**

| Bridge No. | Sample Group No. | Description of Suspect Material | Approximate Quantity | Friable | Site Photos | Asbestos Content |
|---|---|---|---|---|---|---|
| 23-0015R | 0015R-1 | Concrete (approach deck) | NA | NA | 1 through 3 | ND |
| | 0015R-2 | Joint fill material (approach expansion joints) | NA | NA | 3 | ND |
| | 0015R-3 | Concrete (truss section deck) | NA | NA | 4 through 6 | ND |
| 28-0370K | 0370K-4 | Concrete (bike ramp deck) | NA | NA | 7 through 9 | ND |
| 28-0352L | 0352L-5 | Concrete (Al Zampa deck) | NA | NA | 10 through 12 | ND |
| | 0352L-6 | Asphalt (Al Zampa deck) | NA | NA | 10 through 12 | ND |
| 28-0367L | 0367L-7 | Concrete (Crockett Viaduct deck) | NA | NA | 13 through 15 | ND |

**Notes:**
NA = Not applicable
ND = No asbestos fibers detected

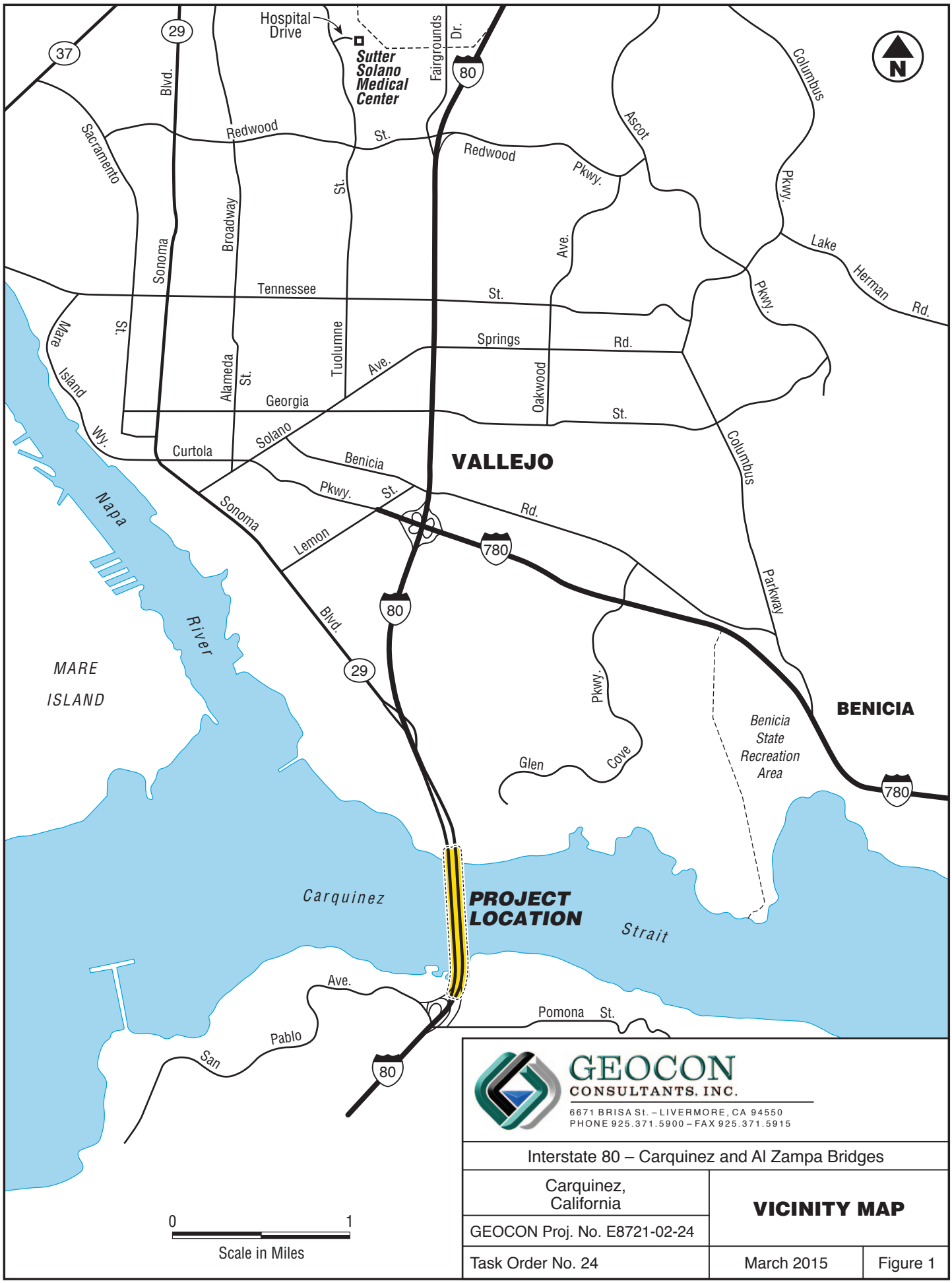


GEOCON CONSULTANTS, INC.
6671 BRISA St. – LIVERMORE, CA 94550
PHONE 925.371.5900 – FAX 925.371.5915

Interstate 80 – Carquinez and Al Zampa Bridges

Carquinez, California

GEOCON Proj. No. E8721-02-24

Task Order No. 24

**VICINITY MAP**

March 2015

Figure 1

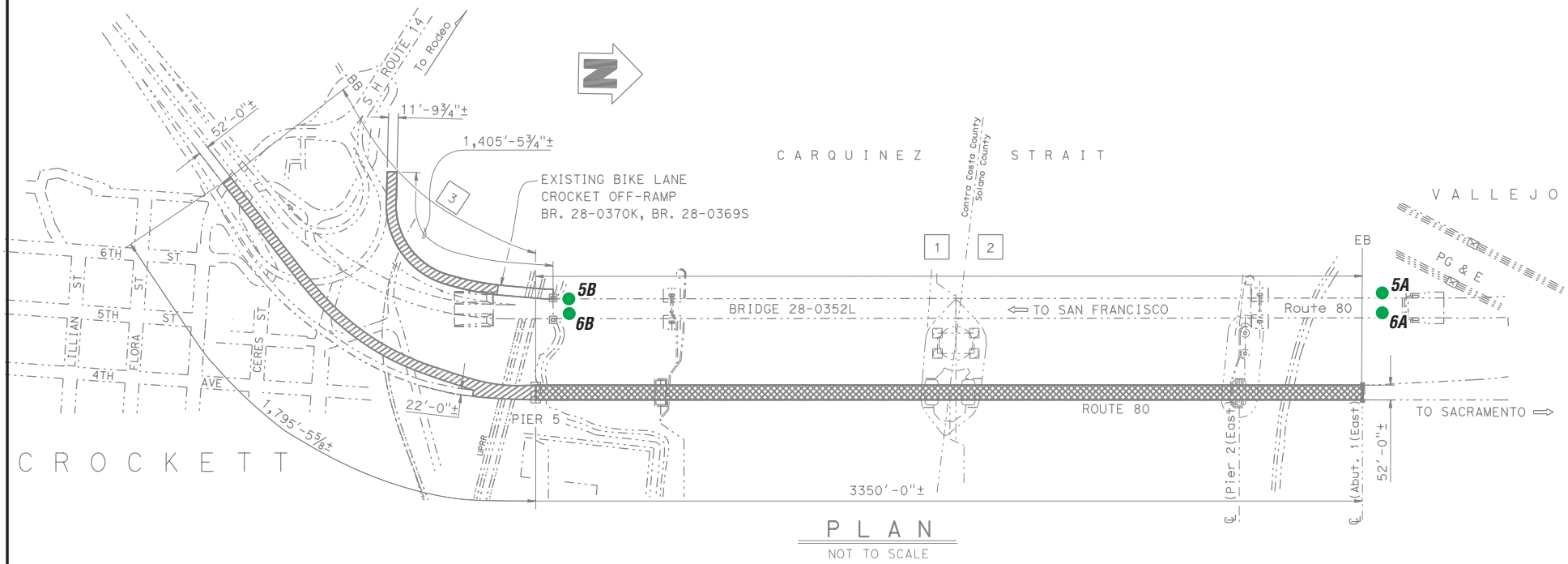


LEGEND:

- Approximate Asbestos Sample Location

GEOCON
CONSULTANTS, INC.
6671 BRISA St. – LIVERMORE, CA 94550
PHONE 925.371.5900 – FAX 925.371.5915

Interstate 80 – Carquinez and Al Zampa Bridges

| | | |
|---|---|---|
| Carquinez, California | **SITE PLAN** | |
| GEOCON Proj. No. E8721-02-24 | | |
| Task Order No. 24 | March 2015 | Figure 2A |

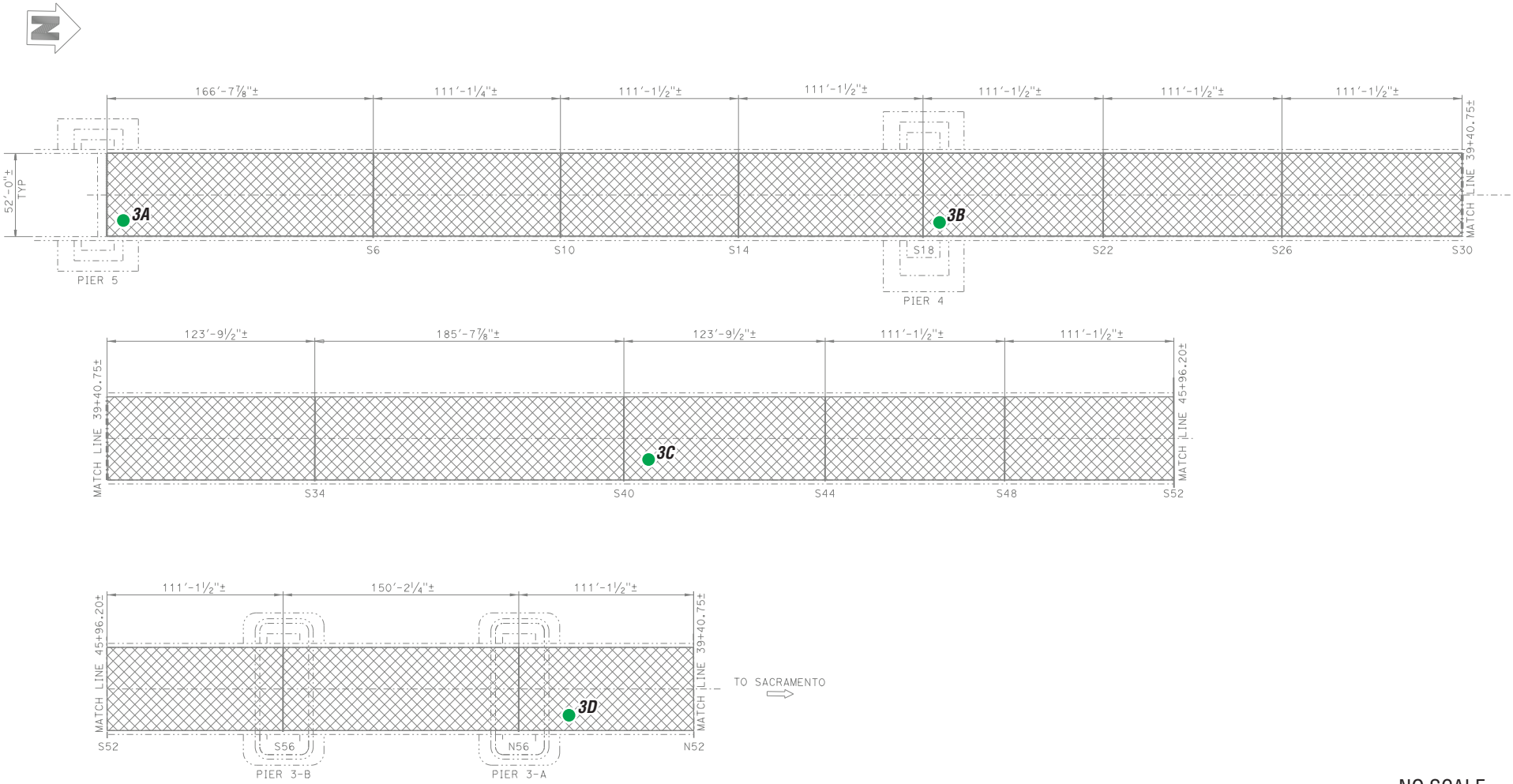


NO SCALE

LEGEND:

- Approximate Asbestos Sample Location

GEOCON
CONSULTANTS, INC.
6671 BRISA St. – LIVERMORE, CA 94550
PHONE 925.371.5900 – FAX 925.371.5915

Interstate 80 – Carquinez and Al Zampa Bridges

| | | |
|---|---|---|
| Carquinez, California | **SITE PLAN** | |
| GEOCON Proj. No. E8721-02-24 | | |
| Task Order No. 24 | March 2015 | Figure 2B |

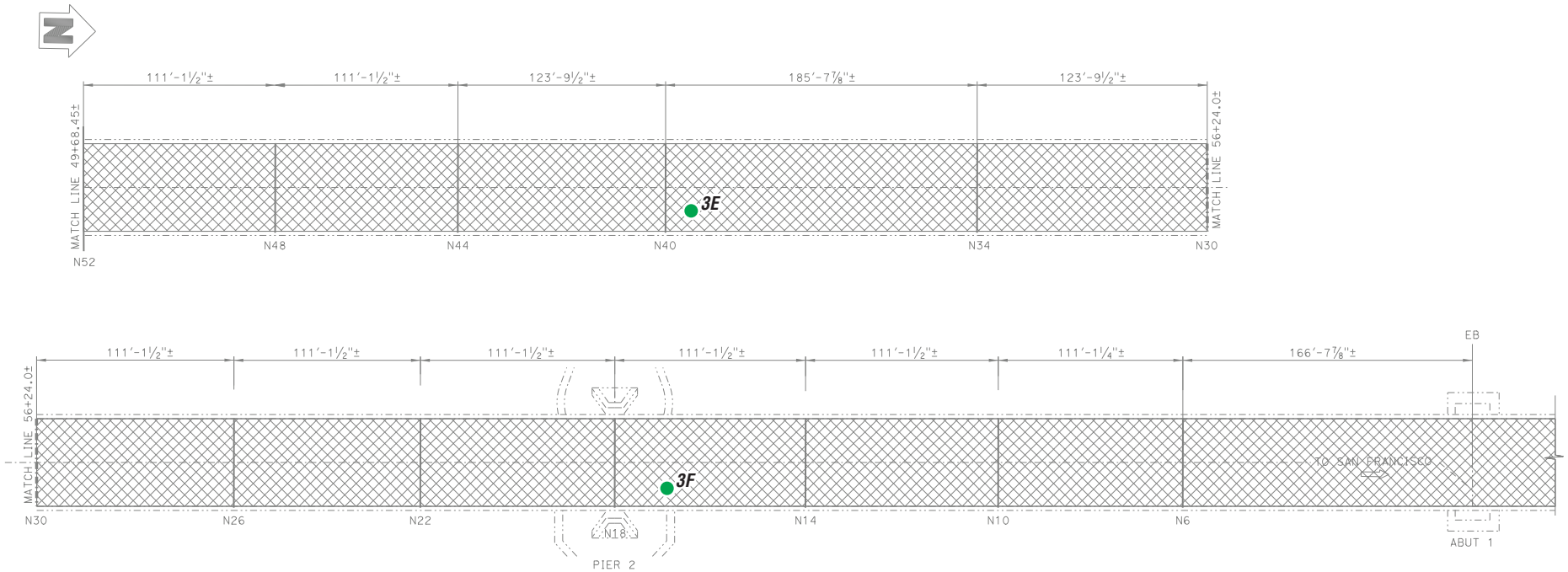


NO SCALE

LEGEND:

- Approximate Asbestos Sample Location

GEOCON
CONSULTANTS, INC.
6671 BRISA St. – LIVERMORE, CA 94550
PHONE 925.371.5900 – FAX 925.371.5915

Interstate 80 – Carquinez and Al Zampa Bridges

| | | |
|---|---|---|
| Carquinez, California | **SITE PLAN** | |
| GEOCON Proj. No. E8721-02-24 | | |
| Task Order No. 24 | March 2015 | Figure 2C |

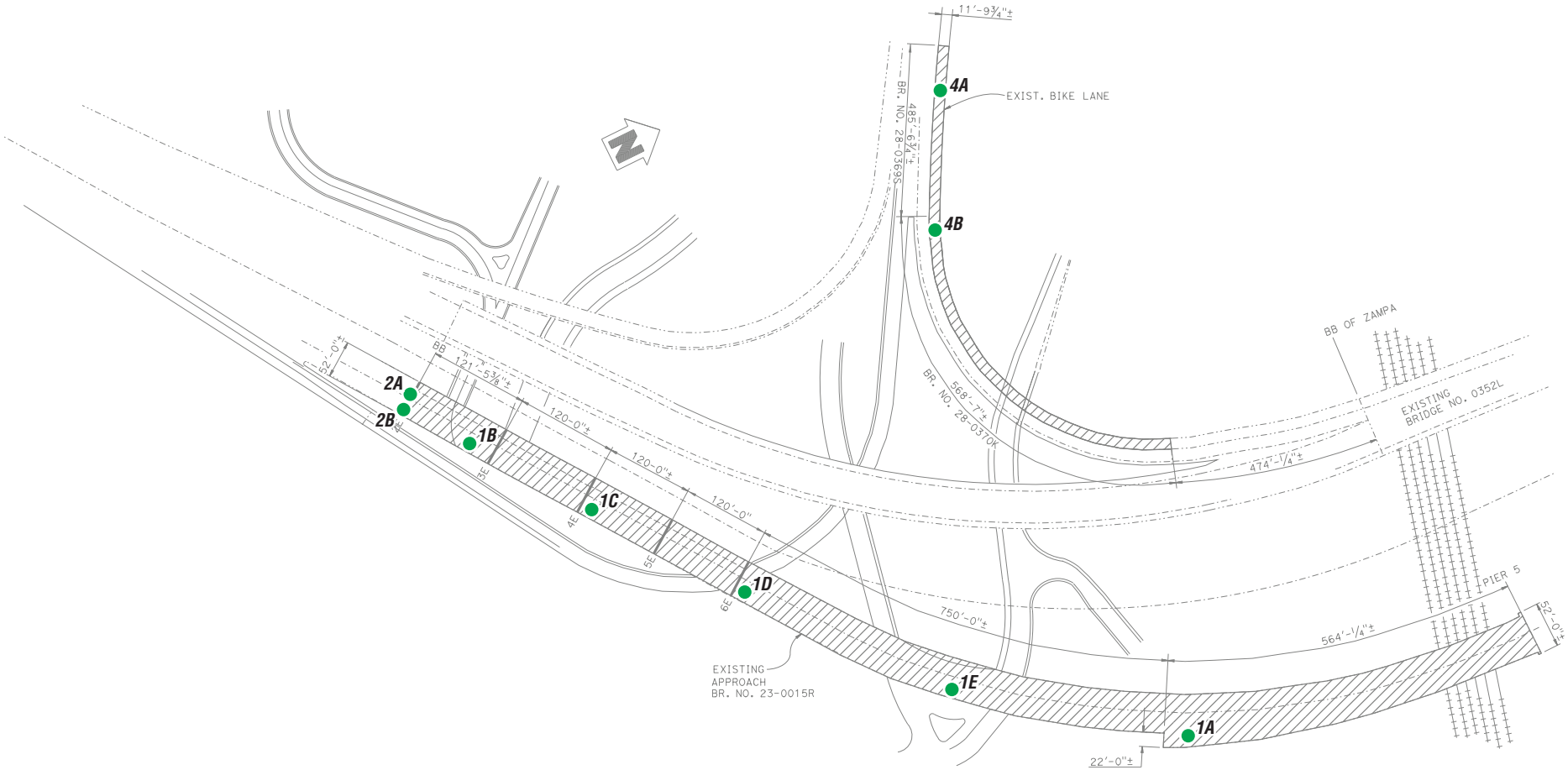


NO SCALE

LEGEND:

- Approximate Asbestos Sample Location

GEOCON CONSULTANTS, INC.
6671 BRISA St. – LIVERMORE, CA 94550
PHONE 925.371.5900 – FAX 925.371.5915

| | | |
|---|---|---|
| Interstate 80 – Carquinez and Al Zampa Bridges | | |
| Carquinez, California | **SITE PLAN** | |
| GEOCON Proj. No. E8721-02-24 | | |
| Task Order No. 24 | March 2015 | Figure 2D |

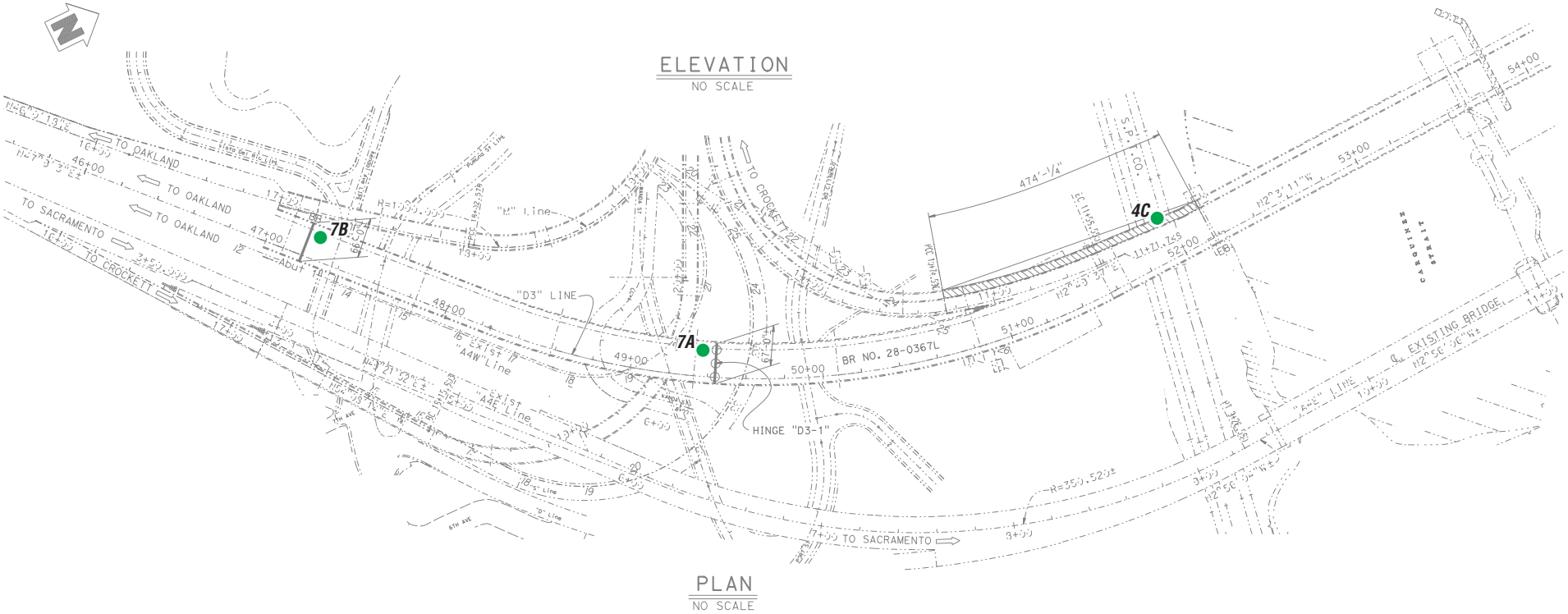


NO SCALE

LEGEND:

- Approximate Asbestos Sample Location

GEOCON
CONSULTANTS, INC.
6671 BRISA St. – LIVERMORE, CA 94550
PHONE 925.371.5900 – FAX 925.371.5915

| | | |
|---|---|---|
| Interstate 80 – Carquinez and Al Zampa Bridges | | |
| Carquinez, California | **SITE PLAN** | |
| GEOCON Proj. No. E8721-02-24 | | |
| Task Order No. 24 | March 2015 | Figure 2E |

**Photo 1 – Carquinez Bridge (23-0015R) approach on Interstate 80 in Crockett, California**

**Photo 2 – Carquinez Bridge approach deck**

**Photo 3 – Carquinez Bridge approach deck joint**

GEOCON
CONSULTANTS, INC.
6671 BRISA STREET – LIVERMORE, CA 94550
PHONE 925.371.5900 – FAX 925.371.5915

| PHOTOGRAPHS 1, 2, & 3 | | |
|---|---|---|
| Carquinez and Al Zampa Bridges<br>Crockett and Vallejo, California | | |
| E8721-02-24 | Task Order No. 24 | March 2015 |

**Photo 4 – Carquinez Bridge truss section**

**Photo 5 – Carquinez Bridge truss section expansion joint**

**Photo 6 – Carquinez Bridge truss section deck joint**

**Photo 7 – Al Zampa Bridge bike ramp (28-0370K)**

**Photo 8 – Al Zampa Bridge bike ramp**

**Photo 9 – Al Zampa Bridge bike ramp**

GEOCON
CONSULTANTS, INC.
6671 BRISA STREET – LIVERMORE, CA 94550
PHONE 925.371.5900 – FAX 925.371.5915

| **PHOTOGRAPHS 7, 8, & 9** | | |
|---|---|---|
| Carquinez and Al Zampa Bridges<br>Crockett and Vallejo, California | | |
| E8721-02-24 | Task Order No. 24 | March 2015 |

**Photo 10 – Al Zampa Bridge (28-0352L)**

**Photo 11 – Al Zampa Bridge expansion joint**

**Photo 12 – Al Zampa Bridge deck and expansion joint**

**Photo 13 – Crockett Viaduct (28-0367L)**

**Photo 14 – Crockett Viaduct**

**Photo 15 – Crockett Viaduct deck and expansion joint**

GEOCON
CONSULTANTS, INC.
6671 BRISA STREET – LIVERMORE, CA 94550
PHONE 925.371.5900 – FAX 925.371.5915

| PHOTOGRAPHS 13, 14, & 15 | | |
|---|---|---|
| Carquinez and Al Zampa Bridges<br>Crockett and Vallejo, California | | |
| E8721-02-24 | Task Order No. 24 | March 2015 |

# APPENDIX A

## Caltrans Bridge List

Contract 04A4336, Caltrans Project No. 04-1200-0101-1, Task Order 24

| | | | |
|---|---|---|---|
| 23 0015R | EB CARQUINEZ | 04-SOL-080 | PM 000.01 |
| 28 0370K | CROCKETT OFF-RAMP WB (BIKE RAMP) | 04-CC-080 | PM 013.76 |
| 28 0352L | WB CARQUINEZ (AL ZAMPA) | 04-CC-080 | PM 013.80 |
| 28 0367L | CROCKETT VIADUCT | 04-CC-080 | PM 013.62 |

# APPENDIX B

**EMSL Analytical, Inc**
**464 McCormick Street, San Leandro, CA 94577**
Phone/Fax: (510) 895-3675 / (510) 895-3680
http://www.EMSL.com sanleandrolab@emsl.com

| | |
|---|---|
| EMSL Order: | 091503058 |
| CustomerID: | GECN21 |
| CustomerPO: | E8721-02-24 |
| ProjectID: | E8721-02-xx |

Attn: **Dave Watts**
**Geocon Consultants, Inc.**
**6671 Brisa Street**
**Livermore, CA 94550**

| | |
|---|---|
| Phone: | (925) 371-5900 |
| Fax: | (925) 371-5915 |
| Received: | 03/03/15 12:00 PM |
| Analysis Date: | 3/4/2015 |
| Collected: | 3/3/2015 |

Project: **E8721-02-24**

# Test Report: Asbestos Analysis of Bulk Materials via EPA 600/R-93/116 Method using Polarized Light Microscopy

| | | | Non-Asbestos | | | Asbestos |
|---|---|---|---|---|---|---|
| **Sample** | **Description** | **Appearance** | **%** | **Fibrous** | **% Non-Fibrous** | **% Type** |
| 0015R-1A Concrete<br>*091503058-0001* | | Gray<br>Non-Fibrous<br>Homogeneous | | | 10% Quartz<br>90% Non-fibrous (other) | **None Detected** |
| 0015R-1B Concrete<br>*091503058-0002* | APPROACH | Gray<br>Non-Fibrous<br>Homogeneous | | | 10% Quartz<br>90% Non-fibrous (other) | **None Detected** |
| 0015R-1C Concrete<br>*091503058-0003* | APPROACH | Gray<br>Non-Fibrous<br>Homogeneous | | | 20% Quartz<br>80% Non-fibrous (other) | **None Detected** |
| 0015R-1D<br>*091503058-0004* | APPROACH | Gray<br>Non-Fibrous<br>Homogeneous | | | 10% Quartz<br>90% Non-fibrous (other) | **None Detected** |
| 0015R-1E-Concrete<br>*091503058-0005* | APPROACH | Gray<br>Non-Fibrous<br>Homogeneous | | | 20% Quartz<br>80% Non-fibrous (other) | **None Detected** |
| 0015R-2A Joint Fill Material<br>*091503058-0006* | APPROACH | Black<br>Fibrous<br>Homogeneous | 40% | Cellulose | 60% Non-fibrous (other) | **None Detected** |
| 0015R-2B Joint Fill Material<br>*091503058-0007* | APPROACH | Black<br>Fibrous<br>Homogeneous | 40% | Cellulose | 60% Non-fibrous (other) | **None Detected** |
| 0015R-3A Concrete<br>*091503058-0008* | TRUSS SYSTEM | Gray<br>Non-Fibrous<br>Homogeneous | | | 20% Quartz<br>80% Non-fibrous (other) | **None Detected** |

Analyst(s)

*Alexander Shmurakov (3)*
*Laura Torres (19)*

Chris Dojlidko, Laboratory Manager
or other approved signatory

EMSL maintains liability limited to cost of analysis. This report relates only to the samples reported and may not be reproduced, except in full, without written approval by EMSL. EMSL bears no responsibility for sample collection activities or analytical method limitations. Interpretation and use of test results are the responsibility of the client. This report must not be used by the client to claim product certification, approval, or endorsement by NVLAP, NIST or any agency of the federal government. Non-friable organically bound materials present a problem matrix and therefore EMSL recommends gravimetric reduction prior to analysis. Samples received in good condition unless otherwise noted. Estimated accuracy, precision and uncertainty data available upon request. Unless requested by the client, building materials manufactured with multiple layers (i.e. linoleum, wallboard, etc.) are reported as a single sample. Reporting limit is 1%
Samples analyzed by EMSL Analytical, Inc San Leandro, CA NVLAP Lab Code 101048-3, WA C884

Initial report from 03/04/2015 19:41:39

**EMSL Analytical, Inc**
**464 McCormick Street, San Leandro, CA 94577**
Phone/Fax: (510) 895-3675 / (510) 895-3680
http://www.EMSL.com sanleandrolab@emsl.com

| | |
|---|---|
| EMSL Order: | 091503058 |
| CustomerID: | GECN21 |
| CustomerPO: | E8721-02-24 |
| ProjectID: | E8721-02-xx |

Attn: **Dave Watts**
**Geocon Consultants, Inc.**
**6671 Brisa Street**
**Livermore, CA 94550**

| | |
|---|---|
| Phone: | (925) 371-5900 |
| Fax: | (925) 371-5915 |
| Received: | 03/03/15 12:00 PM |
| Analysis Date: | 3/4/2015 |
| Collected: | 3/3/2015 |

Project: **E8721-02-24**

# Test Report: Asbestos Analysis of Bulk Materials via EPA 600/R-93/116 Method using Polarized Light Microscopy

| | | | Non-Asbestos | | Asbestos |
|---|---|---|---|---|---|
| **Sample** | **Description** | **Appearance** | **% Fibrous** | **% Non-Fibrous** | **% Type** |
| 0015R-3B Concrete<br>*091503058-0009* | TRUSS SYSTEM | Gray<br>Non-Fibrous<br>Homogeneous | | 10% Quartz<br>90% Non-fibrous (other) | **None Detected** |
| 0015R-3C Concrete<br>*091503058-0010* | TRUSS SYSTEM | Gray<br>Non-Fibrous<br>Homogeneous | | 10% Quartz<br>90% Non-fibrous (other) | **None Detected** |
| 0015R-3D Concrete<br>*091503058-0011* | TRUSS SYSTEM | Gray<br>Non-Fibrous<br>Homogeneous | | 10% Quartz<br>90% Non-fibrous (other) | **None Detected** |
| 0015R-3E Concrete<br>*091503058-0012* | TRUSS SYSTEM | Gray<br>Non-Fibrous<br>Homogeneous | | 10% Quartz<br>90% Non-fibrous (other) | **None Detected** |
| 0015R-3F<br>*091503058-0013* | TRUSS SYSTEM | Gray<br>Non-Fibrous<br>Homogeneous | | 10% Quartz<br>90% Non-fibrous (other) | **None Detected** |
| 0370K-4A Concrete<br>*091503058-0014* | BIKE BRIDGE | Gray<br>Non-Fibrous<br>Homogeneous | | 10% Quartz<br>90% Non-fibrous (other) | **None Detected** |
| 0370K-4B Concrete<br>*091503058-0015* | BIKE BRIDGE | Gray<br>Non-Fibrous<br>Homogeneous | | 10% Quartz<br>90% Non-fibrous (other) | **None Detected** |
| 0370K-4C-Concrete<br>*091503058-0016* | BIKE BRIDGE | Gray<br>Non-Fibrous<br>Homogeneous | | 10% Quartz<br>90% Non-fibrous (other) | **None Detected** |

Analyst(s)

*Alexander Shmurakov (3)*
*Laura Torres (19)*

Chris Dojlidko, Laboratory Manager
or other approved signatory

EMSL maintains liability limited to cost of analysis. This report relates only to the samples reported and may not be reproduced, except in full, without written approval by EMSL. EMSL bears no responsibility for sample collection activities or analytical method limitations. Interpretation and use of test results are the responsibility of the client. This report must not be used by the client to claim product certification, approval, or endorsement by NVLAP, NIST or any agency of the federal government. Non-friable organically bound materials present a problem matrix and therefore EMSL recommends gravimetric reduction prior to analysis. Samples received in good condition unless otherwise noted. Estimated accuracy, precision and uncertainty data available upon request. Unless requested by the client, building materials manufactured with multiple layers (i.e. linoleum, wallboard, etc.) are reported as a single sample. Reporting limit is 1%
Samples analyzed by EMSL Analytical, Inc San Leandro, CA NVLAP Lab Code 101048-3, WA C884

Initial report from 03/04/2015 19:41:39

**EMSL Analytical, Inc**
**464 McCormick Street, San Leandro, CA 94577**
Phone/Fax: (510) 895-3675 / (510) 895-3680
http://www.EMSL.com sanleandrolab@emsl.com

| | |
|---|---|
| EMSL Order: | 091503058 |
| CustomerID: | GECN21 |
| CustomerPO: | E8721-02-24 |
| ProjectID: | E8721-02-xx |

Attn: **Dave Watts**
**Geocon Consultants, Inc.**
**6671 Brisa Street**
**Livermore, CA 94550**

| | |
|---|---|
| Phone: | (925) 371-5900 |
| Fax: | (925) 371-5915 |
| Received: | 03/03/15 12:00 PM |
| Analysis Date: | 3/4/2015 |
| Collected: | 3/3/2015 |

Project: **E8721-02-24**

# Test Report: Asbestos Analysis of Bulk Materials via EPA 600/R-93/116 Method using Polarized Light Microscopy

| | | | Non-Asbestos | | Asbestos |
|---|---|---|---|---|---|
| **Sample** | **Description** | **Appearance** | **% Fibrous** | **% Non-Fibrous** | **% Type** |
| 0352L-5A Concrete<br>*091503058-0017* | ZAMPA | Tan<br>Non-Fibrous<br>Homogeneous | | 10% Quartz<br>90% Non-fibrous (other) | **None Detected** |
| 0352L-5B Concrete<br>*091503058-0018* | ZAMPA | Gray<br>Non-Fibrous<br>Homogeneous | | 10% Quartz<br>90% Non-fibrous (other) | **None Detected** |
| 0352L-6A Asphalt<br>*091503058-0019* | ZAMPA | Black<br>Non-Fibrous<br>Homogeneous | | 5% Quartz<br>40% Matrix<br>55% Non-fibrous (other) | **None Detected** |
| 0352L-6B Asphalt<br>*091503058-0020* | ZAMPA | Black<br>Non-Fibrous<br>Homogeneous | | 40% Matrix<br>60% Non-fibrous (other) | **None Detected** |
| 0367L-7A Concrete<br>*091503058-0021* | VIADUCT | Gray<br>Non-Fibrous<br>Homogeneous | | 10% Quartz<br>90% Non-fibrous (other) | **None Detected** |
| 0367L-7B Concrete<br>*091503058-0022* | VIADUCT | Gray<br>Non-Fibrous<br>Homogeneous | | 10% Quartz<br>90% Non-fibrous (other) | **None Detected** |

Analyst(s)

*Alexander Shmurakov (3)*
*Laura Torres (19)*

Chris Dojlidko, Laboratory Manager
or other approved signatory

EMSL maintains liability limited to cost of analysis. This report relates only to the samples reported and may not be reproduced, except in full, without written approval by EMSL. EMSL bears no responsibility for sample collection activities or analytical method limitations. Interpretation and use of test results are the responsibility of the client. This report must not be used by the client to claim product certification, approval, or endorsement by NVLAP, NIST or any agency of the federal government. Non-friable organically bound materials present a problem matrix and therefore EMSL recommends gravimetric reduction prior to analysis. Samples received in good condition unless otherwise noted. Estimated accuracy, precision and uncertainty data available upon request. Unless requested by the client, building materials manufactured with multiple layers (i.e. linoleum, wallboard, etc.) are reported as a single sample. Reporting limit is 1%
Samples analyzed by EMSL Analytical, Inc San Leandro, CA NVLAP Lab Code 101048-3, WA C884

Initial report from 03/04/2015 19:41:39



**THIS IS THE LAST PAGE OF THE REPORT.**

# Asbestos Chain of Custody

**EMSL Order Number** *(Lab Use Only)*: №091503058

EMSL ANALYTICAL, INC.
2235 POLVOROSA DR., STE. 230
SAN LEANDRO, CA 94577
PHONE: (510) 895-3675
FAX: (510) 895-3680

EMSL ANALYTICAL, INC. LABORATORY • PRODUCTS • TRAINING

| | |
|---|---|
| Company: GEOCON | EMSL-Bill to: ☒ Same ☐ Different<br>If Bill to is Different note instructions in Comments** |
| Street: 6671 BRISA ST | *Third Party Billing requires written authorization from third party* |
| City: LIVERMORE State/Province: CA | Zip/Postal Code: 94550 Country: USA |
| Report To (Name): D. WATTS | Fax #: 925-371-5915 |
| Telephone #: 925-371-5900 | Email Address: WATTS@GEOCONINC.COM |
| Project Name/Number: E8721-02-24 | |
| Please Provide Results: ☐ Fax ☒ Email | Purchase Order: U.S. State Samples Taken: CA |

**Turnaround Time (TAT) Options* – Please Check**

☐ 3 Hour ☐ 6 Hour ☐ 24 Hour ☐ 48 Hour ☐ 72 Hour ☐ 96 Hour ☒ 1 Week ☐ 2 Week

**For TEM Air 3 hours/6 hours, please call ahead to schedule.*There is a premium charge for 3 Hour TEM AHERA or EPA Level II TAT. You will be asked to sign an authorization form for this service Analysis completed in accordance with EMSL's Terms and Conditions located in the Analytical Price Guide*

**PCM - Air**
- ☐ NIOSH 7400
- ☐ w/ OSHA 8hr. TWA

**PLM - Bulk (reporting limit)**
- ☒ PLM EPA 600/R-93/116 (<1%)
- ☐ PLM EPA NOB (<1%)

Point Count
- ☐ 400 (<0 25%) ☐ 1000 (<0.1%)

Point Count w/Gravimetric
- ☐ 400 (<0.25%) ☐ 1000 (<0 1%)
- ☐ NYS 198.1 (friable in NY)
- ☐ NYS 198.6 NOB (non-friable-NY)
- ☐ NIOSH 9002 (<1%)

**TEM – Air** ☐ **4-4.5hr TAT (AHERA only)**
- ☐ AHERA 40 CFR, Part 763
- ☐ NIOSH 7402
- ☐ EPA Level II
- ☐ ISO 10312

**TEM - Bulk**
- ☐ TEM EPA NOB
- ☐ NYS NOB 198 4 (non-friable-NY)
- ☐ Chatfield SOP
- ☐ TEM Mass Analysis-EPA 600 sec 2 5

**TEM – Water:** EPA 100.2
- Fibers >10µm ☐ Waste ☐ Drinking
- All Fiber Sizes ☐ Waste ☐ Drinking

**TEM- Dust**
- ☐ Microvac - ASTM D 5755
- ☐ Wipe - ASTM D6480
- ☐ Carpet Sonication (EPA 600/J-93/167)

**Soil/Rock/Vermiculite**
- ☐ PLM CARB 435 - A (0 25% sensitivity)
- ☐ PLM CARB 435 - B (0.1% sensitivity)
- ☐ TEM CARB 435 - B (0.1% sensitivity)
- ☐ TEM CARB 435 - C (0.01% sensitivity)
- ☐ EPA Protocol (Semi-Quantitative)
- ☐ EPA Protocol (Quantitative)

**Other:**
- ☐

☐ **Check For Positive Stop – Clearly Identify Homogenous Group**

**Samplers Name:** D. WATTS **Samplers Signature:** [signature]

| Sample # | Sample Description | Volume/Area (Air) HA # (Bulk) | Date/Time Sampled |
|---|---|---|---|
| 0015R-1A-E | CONCRETE (APPROACH) | NA | 2 MAR 2015 |
| -2A&B | JOINT FILL MATERIAL (APPROACH) | | |
| -3A-F | CONCRETE (TRUSS SYSTEM) | | |
| 0370K-4A-C | CONCRETE (BIKE BRIDGE) | | 3 MAR 2015 |
| 0352L-5A/B | CONCRETE (RAMPA) | | |
| -6A/B | ASPHALT ( " ) | | |
| 0367L-7A/B | CONCRETE (VIADUCT) | | |
| | | | |

**Client Sample # (s):** **Total # of Samples:** 22

**Relinquished (Client):** [signature] **Date:** 3/3/15 **Time:** 1200

**Received (Lab):** [signature] **Date:** 3/3/15 **Time:** 1200

**Comments/Special Instructions:**

| DIST. | COUNTY | ROUTE | KILOMETER POST TOTAL PROJECT | SHEET NO. | TOTAL SHEETS |
|---|---|---|---|---|---|
| 04 | CC, Sol | 80 | 22.0/22.7, 0.0/1.8 | 345 | 714 |

REGISTERED ENGINEER - CIVIL

7-12-99
PLANS APPROVAL DATE

The State of California or its officers or agents shall not be responsible for the accuracy or completeness of electronic copies of this plan sheet.

REGISTERED PROFESSIONAL ENGINEER G. I. Orsolini No. 44461 Exp. 3/31/02 CIVIL STATE OF CALIFORNIA

DE LEUW- PAC-STERNMAN
120 Howard Street, Suite 850
San Francisco, CA 94105

STATE OF CALIFORNIA
DEPARTMENT OF TRANSPORTATION

**AS BUILT**
SEE ATTACHMENTS

STRUCTURE REPRESENTATIVE: Brian Boal
INITIAL:_____ DATE: October 15th, 2004

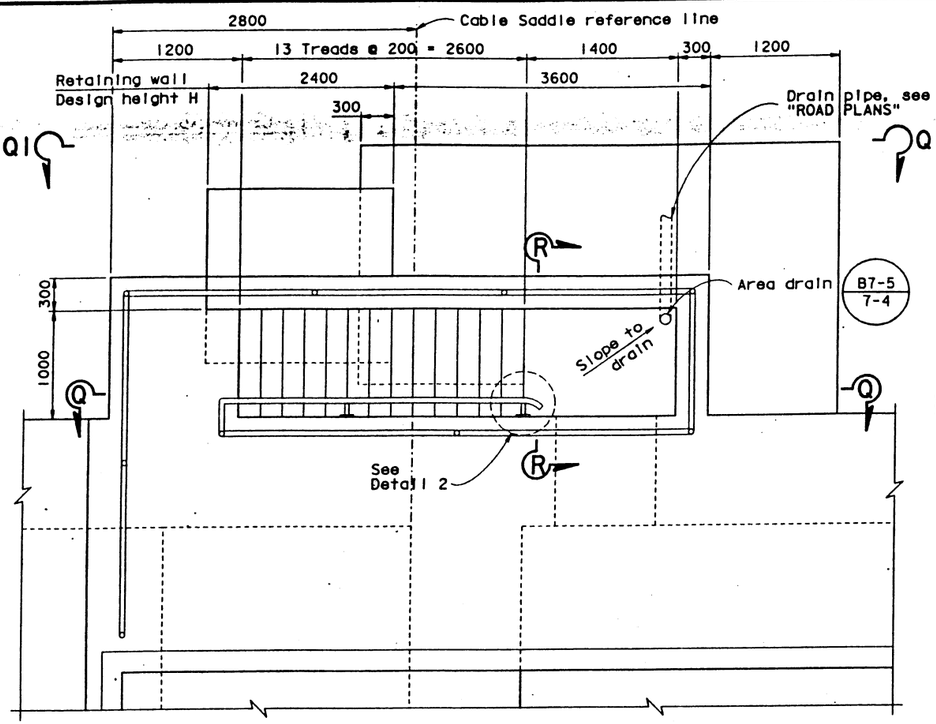


## PLAN-ACCESS STAIRS TO SPLAY CHAMBER
1:25

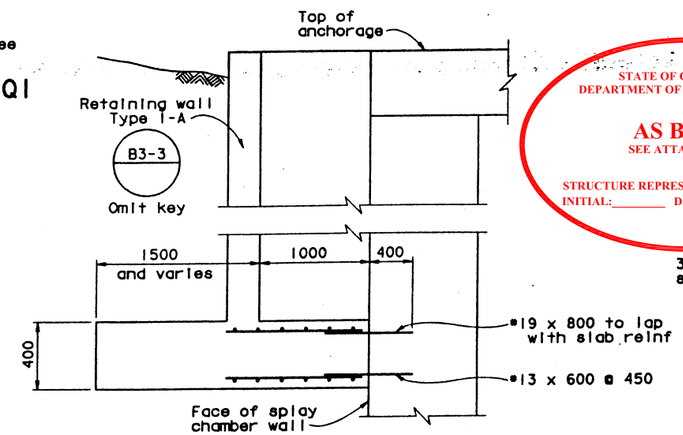


## SECTION R-R
1:25

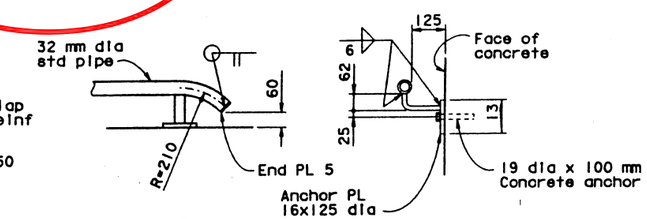


## DETAIL 2
1:10

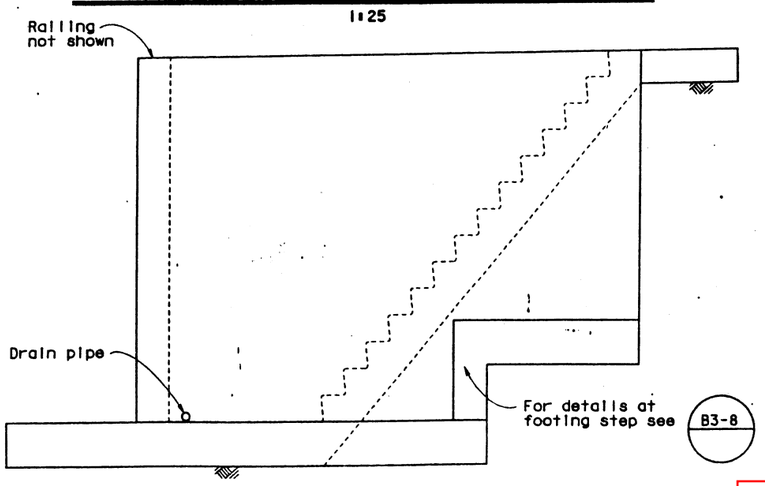


## SECTION Q1-Q1
1:25

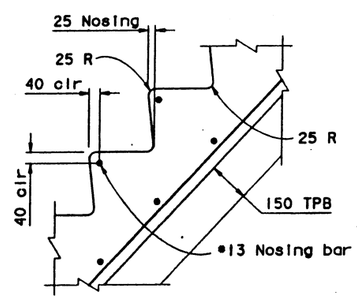


## DETAIL 1
1:10

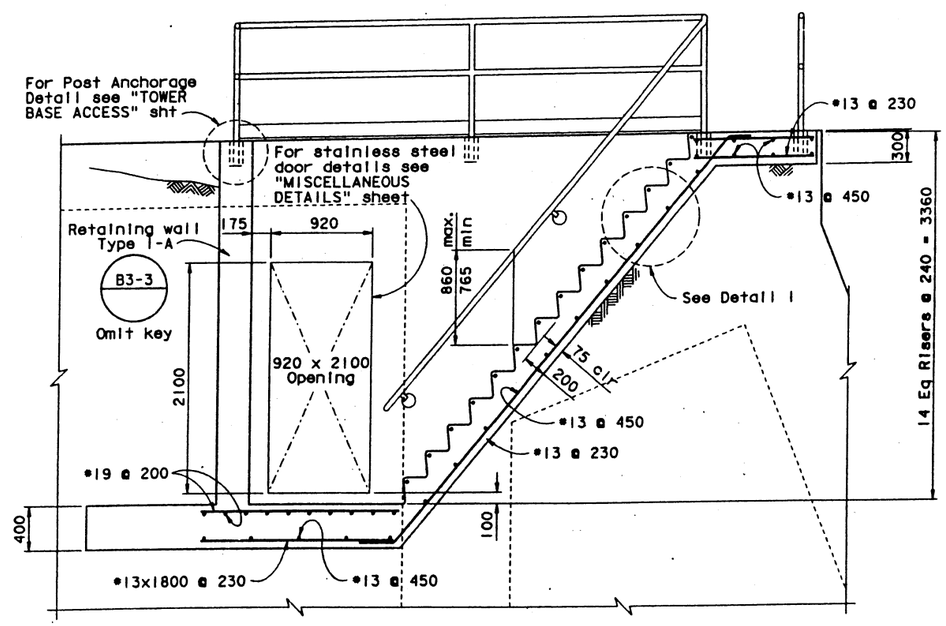


Note: Retaining wall reinforcement not shown. See B3-3

## SECTION Q-Q
1:25

ALL DIMENSIONS ARE IN MILLIMETERS UNLESS OTHERWISE SHOWN

*West Chamber Access shown. For revised details and contour grading of the East Chamber Access, see Attachments #21.38 & 21.39.*

V. Gastoni
DESIGN OVERSIGHT
Vincent Gastoni 3/31/99
SIGN OFF DATE
Rev. Date 6-2-97

| | BY | CHECKED |
|---|---|---|
| DESIGN | R. Mathur | J. Olson |
| DETAILS | R. Wilson | J. Olson |
| QUANTITIES | R. Mathur | J. Downing |

ORIGINAL SCALE IN MILLIMETERS FOR REDUCED PLANS 0 10 20 30 40 50 60 70 80 90 100

PREPARED FOR THE STATE OF CALIFORNIA DEPARTMENT OF TRANSPORTATION

G. Orsolini
PROJECT ENGINEER
T. Spoth
BRIDGE DESIGN MANAGER
CU 04
EA 013011
FILE => ettd20_20102120

BRIDGE NO. 28-0352L
KILOMETER POST 0.01

# CARQUINEZ BRIDGE & OVERHEAD
# NORTH ANCHORAGE REINF DETAILS NO. 7

DISREGARD PRINTS BEARING EARLIER REVISION DATES
REVISION DATES (PRELIMINARY STAGE ONLY) 4/20/98 9/18/98 2/16/99 1/19/99 1/18/99 2/16/99 4/7/99

SHEET 111 OF 348

PEN TABLE=> @PEN@

USERNAME => trlim DATE PLOTTED => 20-JUL-1999 TIME PLOTTED => 10:32 FILE => ettd20_20102120

| DIST. | COUNTY | ROUTE | KILOMETER POST TOTAL PROJECT | SHEET NO. | TOTAL SHEETS |
|---|---|---|---|---|---|
| 04 | CC, Sol | 80 | 22.0/22.7, 0.0/1.8 | 346 | 714 |

Caltrans Metric

REGISTERED ENGINEER - CIVIL

7-12-99

PLANS APPROVAL DATE

The State of California or its officers or agents shall not be responsible for the accuracy or completeness of electronic copies of this plan sheet.

REGISTERED PROFESSIONAL ENGINEER G. L. Orsolini No. 44461 Exp. 3/31/02 CIVIL STATE OF CALIFORNIA


DE LEUW- PAC-STERNMAN
120 Howard Street, Suite 850
San Francisco, CA 94105


NOTES:

1. For DETAIL 1 - SHEAR KEY REINF, see "ABUTMENT A4 DETAILS NO. 2" sheet.
2. Construct shear key closure pours after superstructure and wind tongue are in place

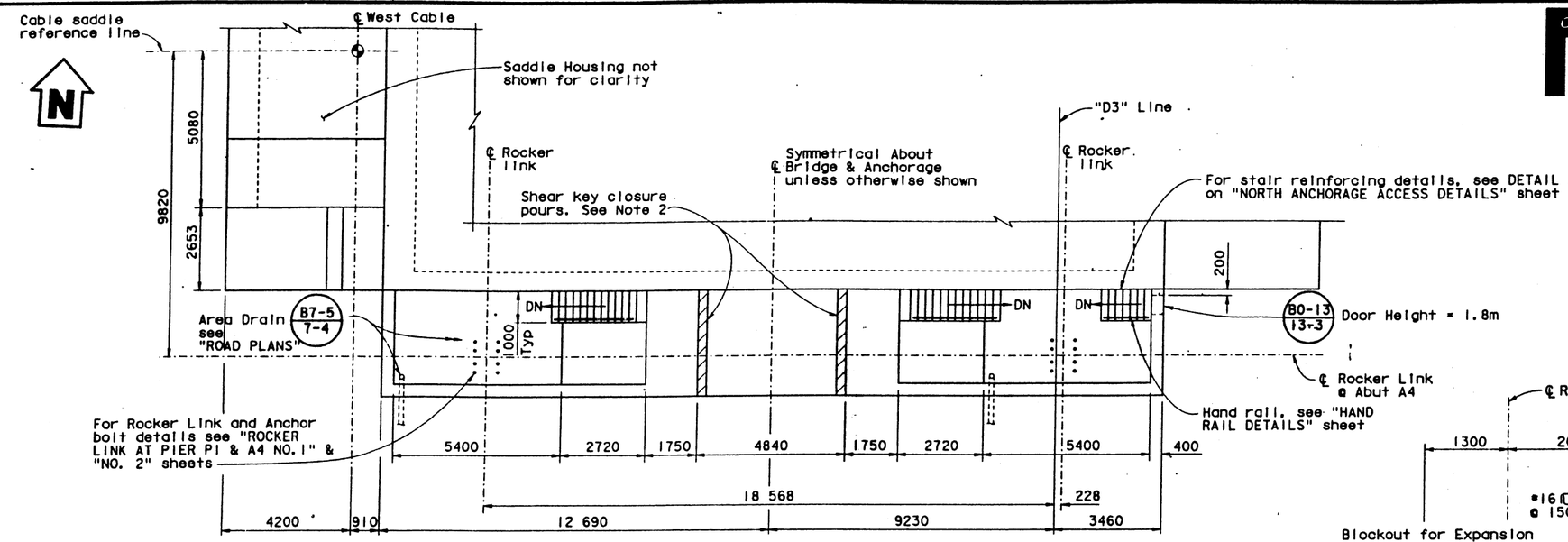


PLAN
1:80

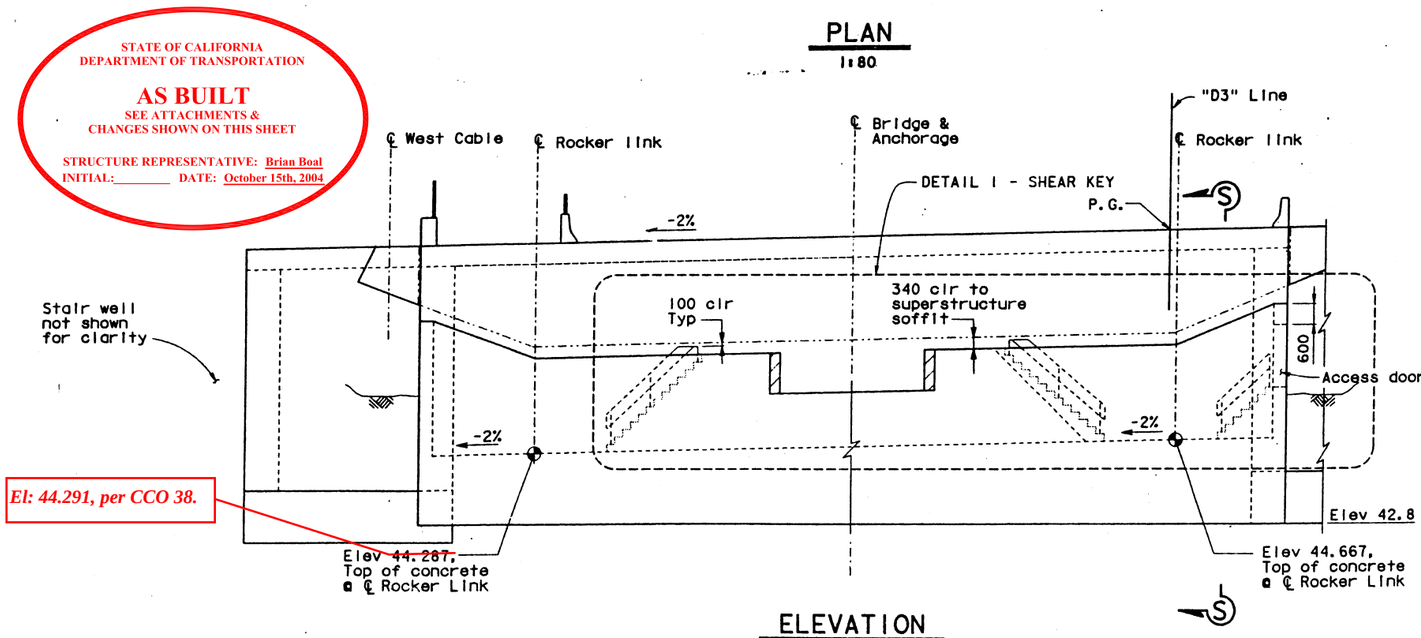


ELEVATION
1:80

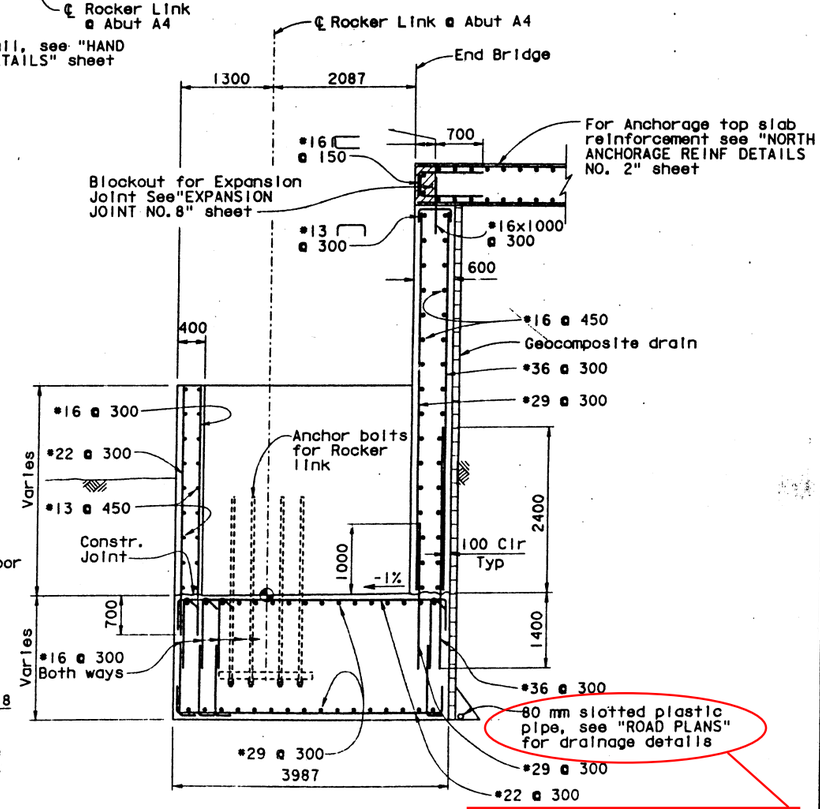


SECTION S-S
1:40

See Attachment #21.33 to #21.38 (CCO #62), for revised drainage system.

ALL DIMENSIONS ARE IN MILLIMETERS UNLESS OTHERWISE SHOWN

| | | | | | |
|---|---|---|---|---|---|
| V. Gastoni, DESIGN OVERSIGHT, Vasant Gastoni 3/31/99, SIGN OFF DATE | DESIGN BY R. Mathur | CHECKED J. Olson | PREPARED FOR THE STATE OF CALIFORNIA DEPARTMENT OF TRANSPORTATION | G. Orsolini, PROJECT ENGINEER; T. Spoth, BRIDGE DESIGN MANAGER | BRIDGE NO. 28-0352L; KILOMETER POST 0.01 | CARQUINEZ BRIDGE & OVERHEAD ABUTMENT A4 DETAILS NO. 1 |
| Rev. Date 8-2-97 | DETAILS BY R. Peng | CHECKED J. Olson | | | | |
| | QUANTITIES BY R. Mathur | CHECKED J. Downing | | CU 04 EA 013011 | DISREGARD PRINTS BEARING EARLIER REVISION DATES | SHEET 112 OF 348 |

ORIGINAL SCALE IN MILLIMETERS FOR REDUCED PLANS 0 10 20 30 40 50 60 70 80 90 100

FILE => ettq21_20102129

PEN TABLE => GPEN6

FILE => ettq21_20102129 TIME PLOTTED => 10:33 DATE PLOTTED => 20-JUL-1999 SCHNAME => ...

| DIST. | COUNTY | ROUTE | KILOMETER POST TOTAL PROJECT | SHEET NO. | TOTAL SHEETS |
|---|---|---|---|---|---|
| 04 | CC, Sol | 80 | 22.0/22.7, 0.0/1.8 | 347 | 714 |

Caltrans Metric

Gregory J. Orsolini
REGISTERED ENGINEER - CIVIL
7-12-99
PLANS APPROVAL DATE

REGISTERED PROFESSIONAL ENGINEER G. J. Orsolini No. 44461 Exp. 3/31/02 CIVIL STATE OF CALIFORNIA

The State of California or its officers or agents shall not be responsible for the accuracy or completeness of electronic copies of this plan sheet.

DE LEUW- PAC-STEINMAN
120 Howard Street, Suite 850
San Francisco, CA 94105

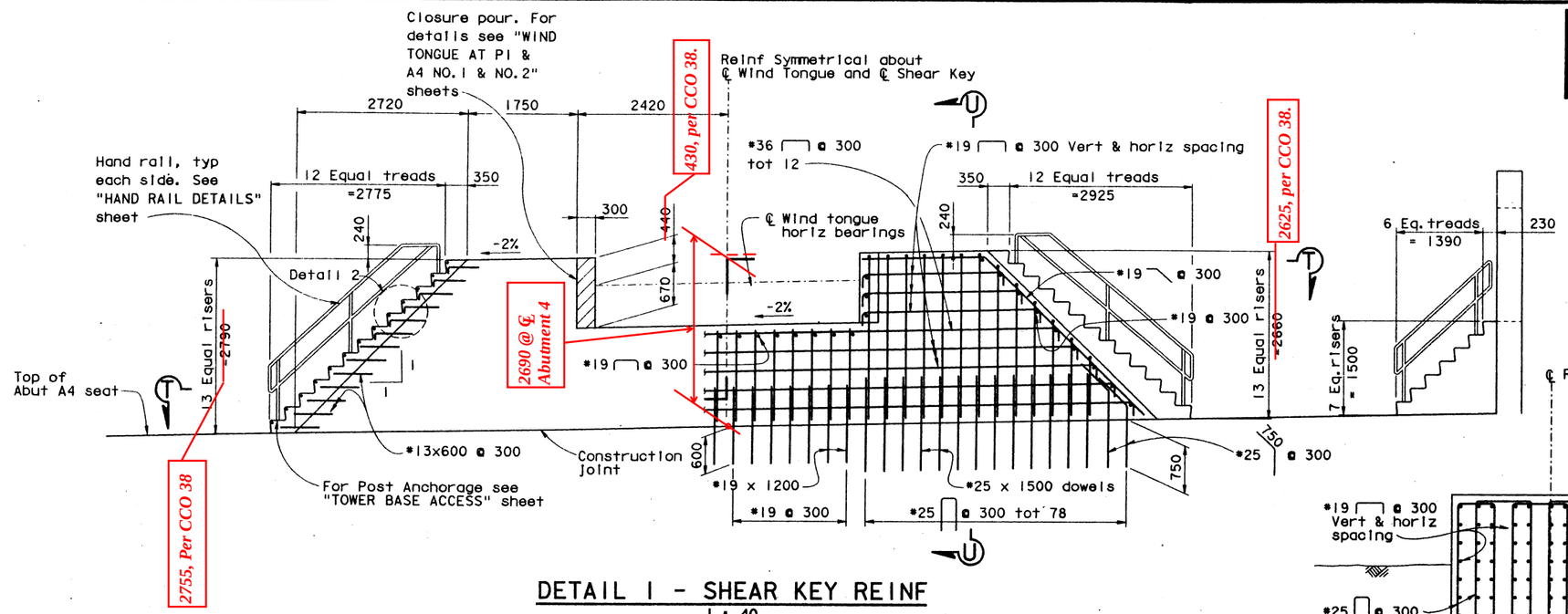


## DETAIL 1 - SHEAR KEY REINF
1 : 40

NOTES:

1. For location of DETAIL 1 - SHEAR KEY REINF, see "ABUTMENT A4 DETAILS NO. 1" sheet.

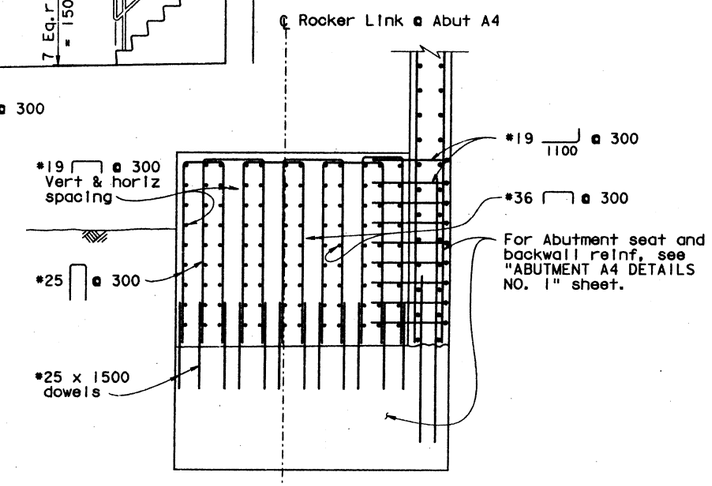


## SECTION U-U
1 : 40

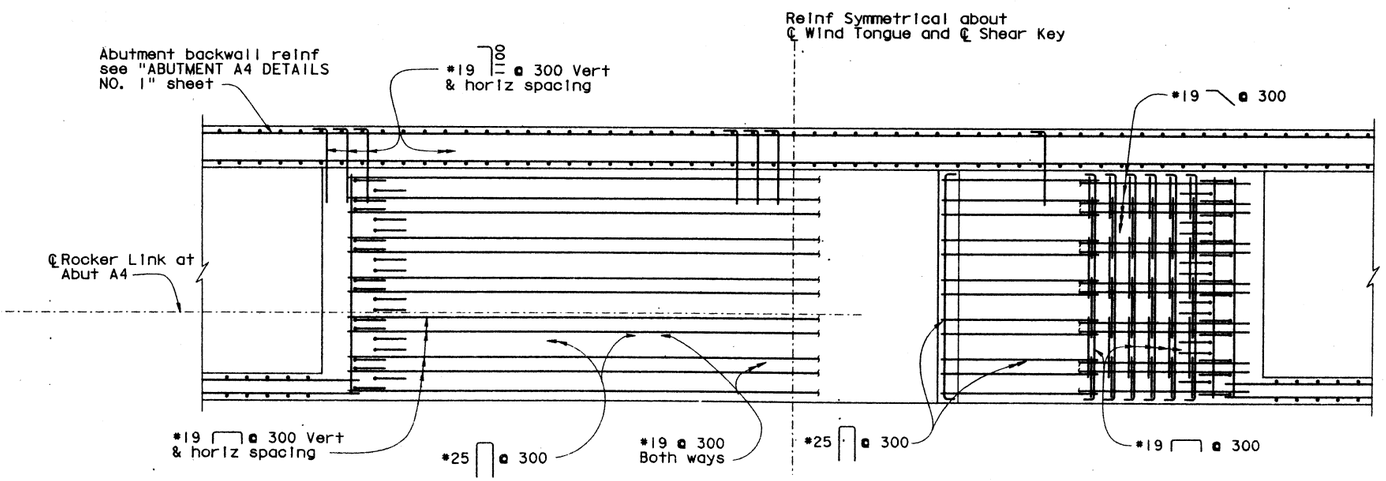


## SECTION T-T
1 : 40

STATE OF CALIFORNIA
DEPARTMENT OF TRANSPORTATION
AS BUILT
STRUCTURE REPRESENTATIVE: Brian Boal
INITIAL: _____ DATE: October 15th, 2004

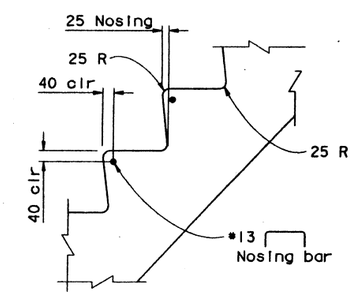


## DETAIL 2
1:10

ALL DIMENSIONS ARE IN MILLIMETERS UNLESS OTHERWISE SHOWN

| | | | |
|---|---|---|---|
| V. Gastoni, DESIGN OVERSIGHT; Vincent Gastoni 3/31/99, SIGN OFF DATE | DESIGN | BY R. Mathur | CHECKED J. Olson |
| Rev. Date 6-2-97 | DETAILS | BY R. Peng | CHECKED J. Olson |
| | QUANTITIES | BY R. Mathur | CHECKED J. Downing |

PREPARED FOR THE STATE OF CALIFORNIA DEPARTMENT OF TRANSPORTATION

G. Orsolini, PROJECT ENGINEER
T. Spoth, BRIDGE DESIGN MANAGER

ORIGINAL SCALE IN MILLIMETERS FOR REDUCED PLANS 0 10 20 30 40 50 60 70 80 90 100

CU 04
EA 013011

BRIDGE NO. 28-0352L
KILOMETER POST 0.01

# CARQUINEZ BRIDGE & OVERHEAD
# ABUTMENT A4 DETAILS NO. 2

DISREGARD PRINTS BEARING EARLIER REVISION DATES
REVISION DATES (PRELIMINARY STAGE ONLY): 4/24/98 5/14/98 2/14/98 1/18/99 1/18/99 2/18/99 4/7/99

SHEET 113 OF 348

FILE => ettd22_20102137
PEN TABLE=>$PEN$
USERNAME => trlim DATE PLOTTED => 20-Jul-1999 TIME PLOTTED => 10:34

| DIST. | COUNTY | ROUTE | KILOMETER POST TOTAL PROJECT | SHEET NO. | TOTAL SHEETS |
|---|---|---|---|---|---|
| 04 | CC, Sol | 80 | 22.0/22.7, 0.0/1.8 | 348 | 714 |

REGISTERED ENGINEER - CIVIL

7-12-99
PLANS APPROVAL DATE

REGISTERED PROFESSIONAL ENGINEER G. L. Orsolini No. 44461 Exp. 3/31/02 CIVIL STATE OF CALIFORNIA

The State of California or its officers or agents shall not be responsible for the accuracy or completeness of electronic copies of this plan sheet.

DE LEUW- PAC-STEINMAN
120 Howard Street, Suite 850
San Francisco, CA 94105

NOTES:

1. For location of Detail 2, Saddle Housing see "NORTH ANCHORAGE SECTIONS NO. 3" sheet.
2. For Section W-W see "NORTH ANCHORAGE MISC DETAILS NO. 2" sheet
3. For Detail 3, Concrete Wall with Railing see "NORTH ANCHORAGE MISC DETAILS NO. 2" sheet

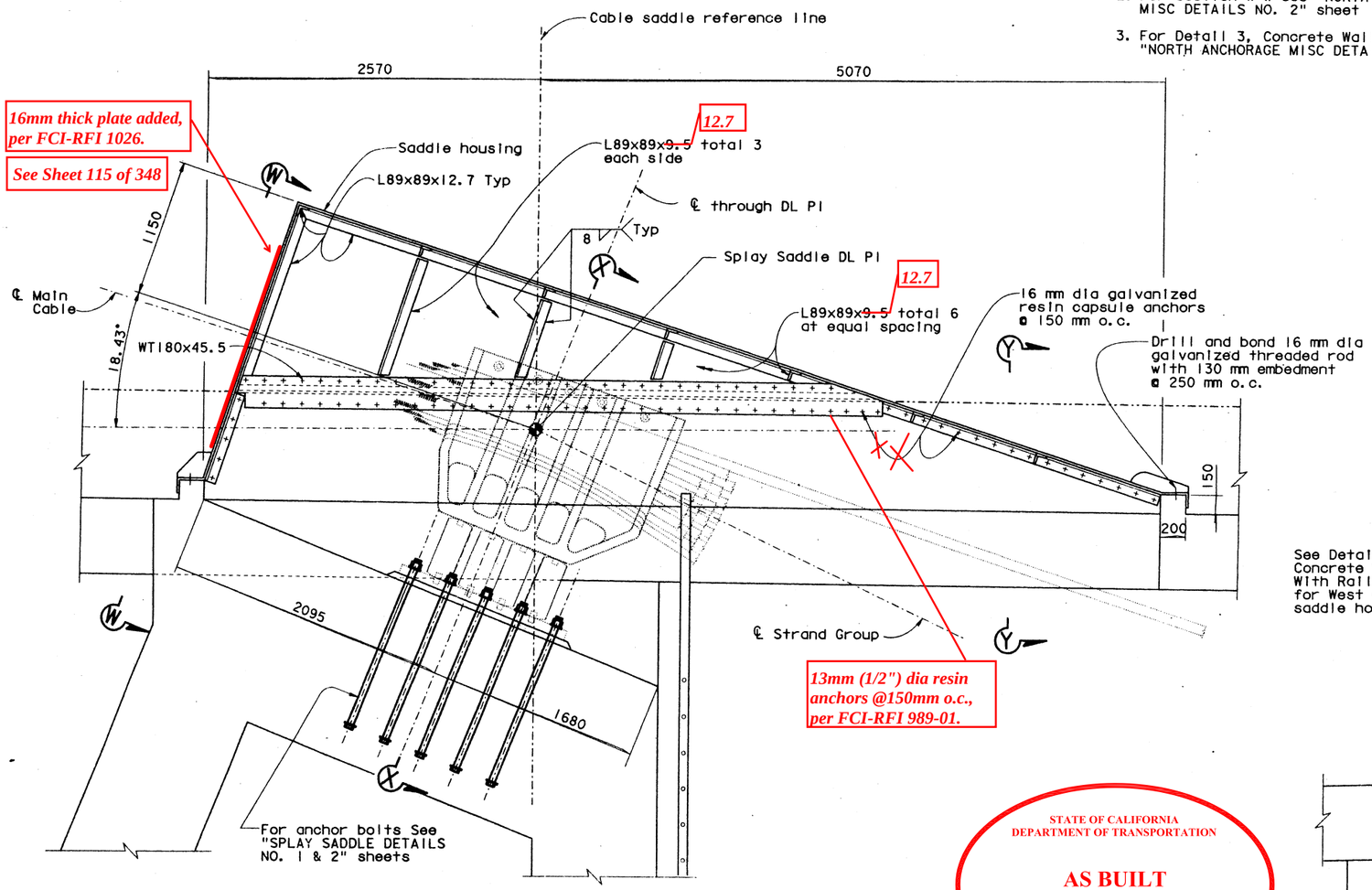


DETAIL 2 - SADDLE HOUSING
1:20

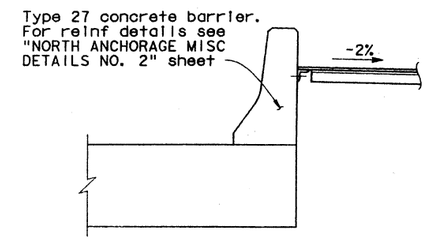


SECTION Y-Y
1:20

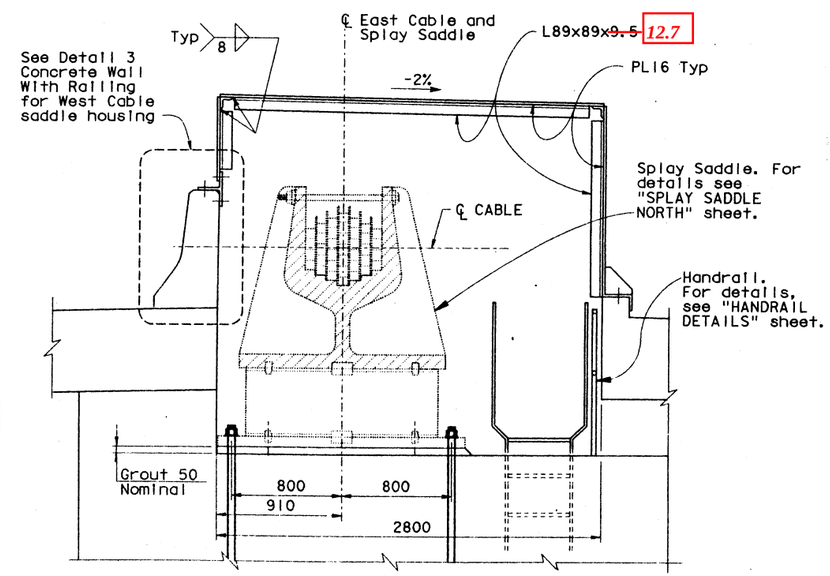


SECTION X-X
1:20

STATE OF CALIFORNIA
DEPARTMENT OF TRANSPORTATION

AS BUILT

STRUCTURE REPRESENTATIVE: Brian Boal
INITIAL:_____ DATE: October 15th, 2004

ALL DIMENSIONS ARE IN MILLIMETERS UNLESS OTHERWISE SHOWN

V. Gastoni
DESIGN OVERSIGHT
Vincent Gastoni 3/31/99
SIGN OFF DATE
Rev. Date 6-2-97

| | BY | CHECKED |
|---|---|---|
| DESIGN | R. Mathur | J. Hwang |
| DETAILS | R. Wilson | J. Hwang |
| QUANTITIES | R. Mathur | J. Hwang |

PREPARED FOR THE STATE OF CALIFORNIA DEPARTMENT OF TRANSPORTATION

G. Orsolini
PROJECT ENGINEER
T. Spoth
BRIDGE DESIGN MANAGER

BRIDGE NO. 28-0352L
KILOMETER POST 0.01

CARQUINEZ BRIDGE & OVERHEAD
NORTH ANCHORAGE MISC DETAILS NO. 1

ORIGINAL SCALE IN MILLIMETERS FOR REDUCED PLANS 0 10 20 30 40 50 60 70 80 90 100

CU 04
EA 013011

DISREGARD PRINTS BEARING EARLIER REVISION DATES

REVISION DATES (PRELIMINARY STAGE ONLY) 1/24/98 3/18/98 2/10/98 1/8/99 1/18/99 2/16/99

SHEET 114 OF 348

PEN TABLE-> $PEN$

FILE => ettg23_20102139

USERNAME => ttrlim DATE PLOTTED => 20-Jul-1999 TIME PLOTTED => 10:36

| DIST. | COUNTY | ROUTE | KILOMETER POST TOTAL PROJECT | SHEET NO. | TOTAL SHEETS |
|---|---|---|---|---|---|
| 04 | CC, Sol | 80 | 22.0/22.7, 0.0/1.8 | 349 | 714 |

Caltrans Metric

Gregory J. Orsolini
REGISTERED ENGINEER - CIVIL
7-12-99
PLANS APPROVAL DATE
The State of California or its officers or agents shall not be responsible for the accuracy or completeness of electronic copies of this plan sheet.

REGISTERED PROFESSIONAL ENGINEER G. L. Orsolini No. 44461 Exp. 3/31/02 CIVIL STATE OF CALIFORNIA

DE LEUW- PAC-STEINMAN
120 Howard Street, Suite 850
San Francisco, CA 94105

STATE OF CALIFORNIA
DEPARTMENT OF TRANSPORTATION
**AS BUILT**
SEE ATTACHMENTS &
CHANGES SHOWN ON THIS SHEET
STRUCTURE REPRESENTATIVE: Brian Boal
INITIAL:_____ DATE: October 15th, 2004

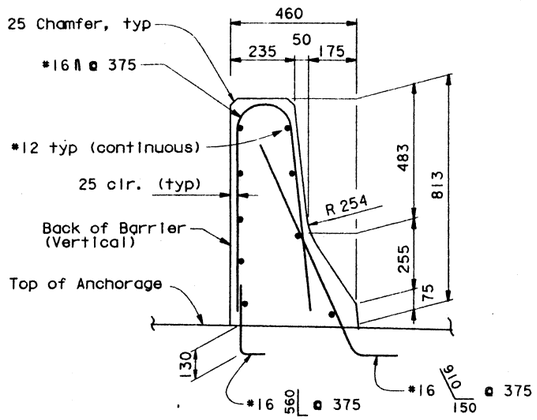


## CONCRETE BARRIER TYPE 27
1:10

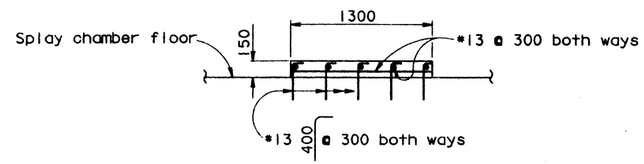


## REINF - EXHAUST EQUIPMENT PAD
1:25

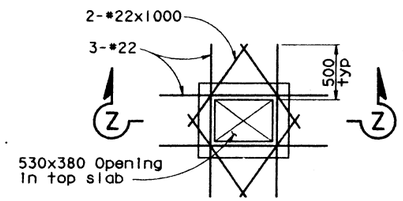


## ADDITIONAL REINF AROUND DUCT OPENING
1 : 25

NOTES:

1. Epoxy coated reinforcement is to be used in all Type 27 barriers and the Concrete Wall with Railing.
2. For location of Section W-W see "NORTH ANCHORAGE MISC DETAILS NO. 1" sheet
3. For location of Detail 3 see "NORTH ANCHORAGE MISC DETAILS NO. 1" sheet
4. For location of Exhaust Equipment Pad and Duct Opening see "NORTH ANCHORAGE PLAN" sheet.

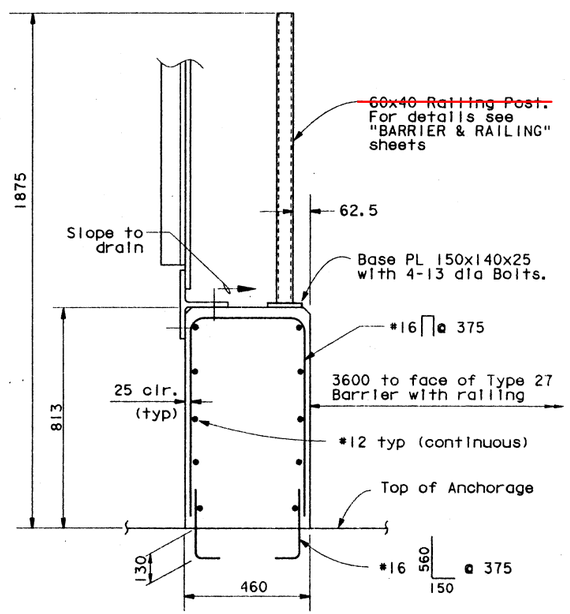


## DETAIL 3
## CONCRETE WALL WITH RAILING
1:10

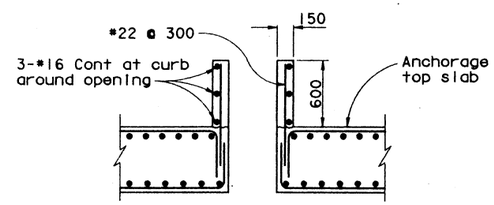


## SECTION Z-Z
1 : 25

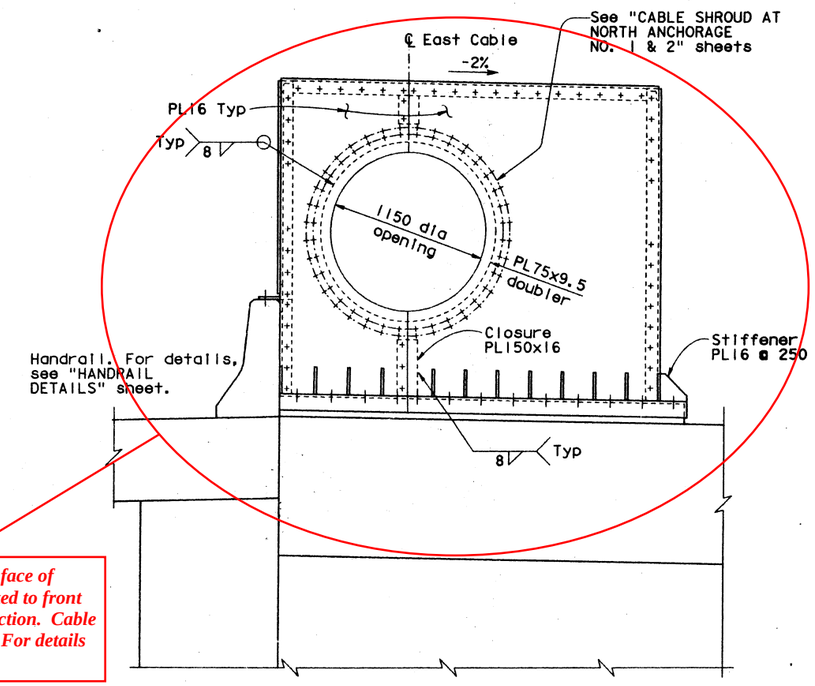


*Error in placement of hole in front face of splay chamber cap. Two plates bolted to front of chamber with hole in correct loaction. Cable shrouds bolted to the added plates. For details see Attachment #20.15.*

## SECTION W-W
1:20

ALL DIMENSIONS ARE IN MILLIMETERS UNLESS OTHERWISE SHOWN

V. Gastoni
DESIGN OVERSIGHT
Vincent Gastoni 3/31/99
SIGN OFF DATE
Rev. Date 6-2-97

| | | | |
|---|---|---|---|
| DESIGN | BY R. Mathur | CHECKED J. Hwang | |
| DETAILS | BY H. Gawlik | CHECKED J. Hwang | |
| QUANTITIES | BY R. Mathur | CHECKED J. Hwang | |

PREPARED FOR THE STATE OF CALIFORNIA DEPARTMENT OF TRANSPORTATION

G. Orsolini
PROJECT ENGINEER
T. Spoth
BRIDGE DESIGN MANAGER

BRIDGE NO. 28-0352L
KILOMETER POST 0.01

CARQUINEZ BRIDGE & OVERHEAD
NORTH ANCHORAGE MISC DETAILS NO. 2

ORIGINAL SCALE IN MILLIMETERS FOR REDUCED PLANS 0 10 20 30 40 50 60 70 80 90 100

CU 04
EA 013011
FILE => etfa24_20102147

DISREGARD PRINTS BEARING EARLIER REVISION DATES
REVISION DATES (PRELIMINARY STAGE ONLY) 1/24/96 9/18/98 2/18/98 1/8/99 1/18/99 2/16/99 4/7/99

SHEET 115 OF 348

PEN TABLE=>$PEN$

FILE => etfa24_20102147
TIME PLOTTED => 10:36
DATE PLOTTED => 20-Jul-1999
USERNAME => tfrim

| DIST. | COUNTY | ROUTE | KILOMETER POST TOTAL PROJECT | SHEET NO. | TOTAL SHEETS |
|---|---|---|---|---|---|
| 04 | CC, Sol | 80 | 22.0/22.7, 0.0/1.8 | 350 | 714 |

Caltrans Metric

Gregory J. Orsolini
REGISTERED ENGINEER - CIVIL

7-12-99
PLANS APPROVAL DATE

REGISTERED PROFESSIONAL ENGINEER G. J. Orsolini No. 44461 Exp. 3/31/02 CIVIL STATE OF CALIFORNIA

The State of California or its officers or agents shall not be responsible for the accuracy or completeness of electronic copies of this plan sheet.

DE LEUW- PAC-STEINMAN
120 Howard Street, Suite 850
San Francisco, CA 94105

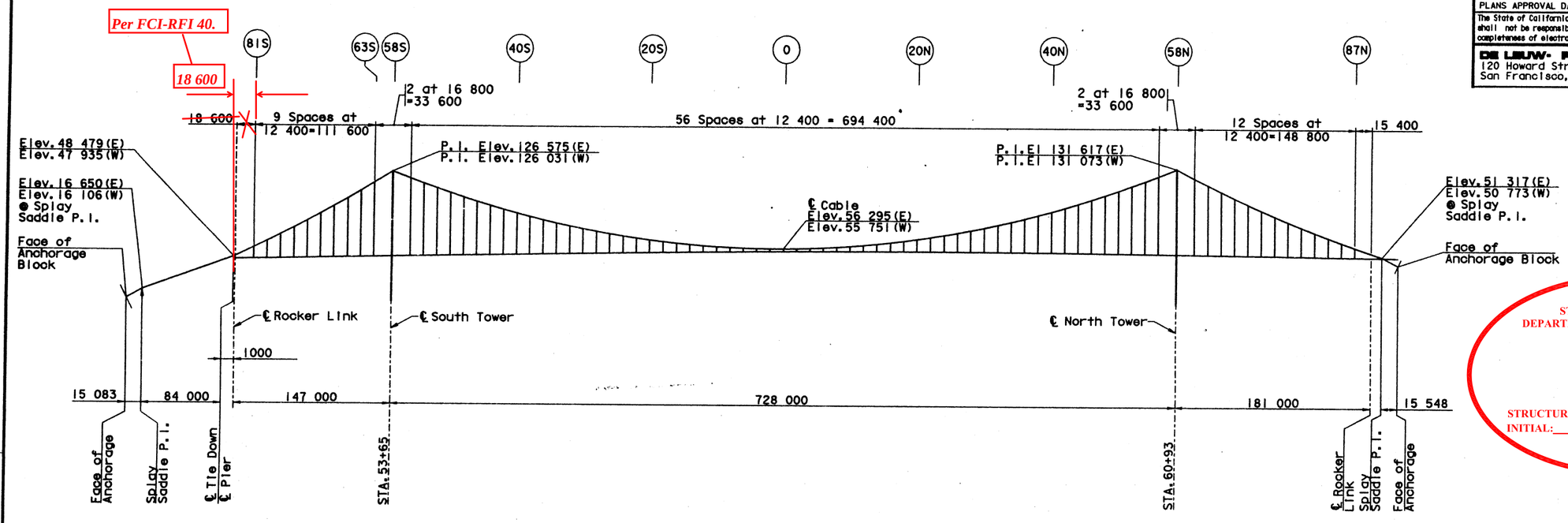


## MAIN CABLE GEOMETRY-ELEVATION

1:2000

STATE OF CALIFORNIA
DEPARTMENT OF TRANSPORTATION

**AS BUILT**

STRUCTURE REPRESENTATIVE: Brian Boal
INITIAL:_____ DATE: October 15th, 2004

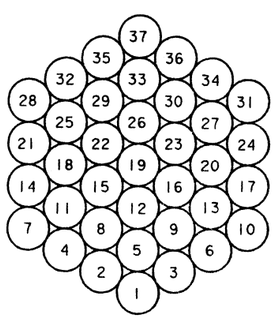


## ARRANGEMENT OF STRANDS

1:5
(Looking South)

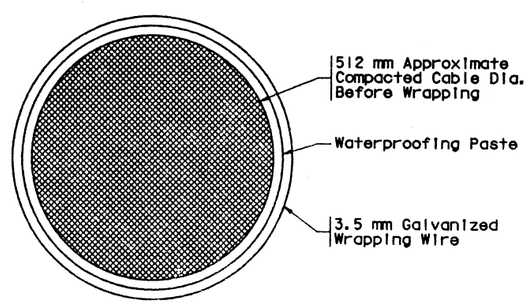


## COMPACTED FINISHED CABLE

1:5

| CABLE DATA @ 27° C | | |
|---|---|---|
| Cable Diameter (mm) | - | 512 |
| Wire Diameter (mm) | - | 5.00 |
| Number of Wires | - | 8,584 |
| Number of Strands | - | 37 |
| Number of Wires per Strand | - | 232 |
| Cable Area (mm²) | - | 167,055 |

## MATERIALS:

Main Cable Wire:
- Ultimate Strength ≥ 1570 N/mm²
- 0.2% Offset Yield Strength ≥ 1180 N/mm²
- Proportional Limit ≥ 800 N/mm²

No machine straightening or any other form of cold working of wire shall be permitted after galvanizing.

Main cable wire shall be hot dip galvanized 300 g/m²

## NOTES:

1) The main cable layout geometry shown is derived from the design dead load of 144.48 kN/m plus a uniformly distributed future dead load of 4.67 kN/m.

2) Elevations are for the ℄ of the main cable.

(20S) = Suspender Panel Point (typ.)

ALL DIMENSIONS ARE IN MILLIMETERS UNLESS OTHERWISE SHOWN

V. Gastoni
DESIGN OVERSIGHT
Vaughn Gastoni 3/31/99
SIGN OFF DATE
Rev. Date 6-2-97

| | BY | CHECKED |
|---|---|---|
| DESIGN | D. Khazem | F. Waggoner |
| DETAILS | E. Magadia | F. Waggoner |
| QUANTITIES | T. Harkin | F. Waggoner |

PREPARED FOR THE STATE OF CALIFORNIA DEPARTMENT OF TRANSPORTATION

D. Khazem
PROJECT ENGINEER
T. Spoth
BRIDGE DESIGN MANAGER

BRIDGE NO. 28-0352L
KILOMETER POST 0.01

# CARQUINEZ BRIDGE & OVERHEAD
# MAIN CABLE LAYOUT

CU 04
EA 013011

DISREGARD PRINTS BEARING EARLIER REVISION DATES

REVISION DATES (PRELIMINARY STAGE ONLY) 12/4/98 3/18/98 12/18/98 1/26/99 1/29/99 2/16/99 3/31/99

SHEET 116 OF 348

ORIGINAL SCALE IN MILLIMETERS FOR REDUCED PLANS 0 10 20 30 40 50 60 70 80 90 100

FILE => ott025_20102153

DGN

SEN/NAME => TF-FILE DATE PLOTTED => 20-JUL-1999 TIME PLOTTED => 10:37

| DIST. | COUNTY | ROUTE | KILOMETER POST TOTAL PROJECT | SHEET NO. | TOTAL SHEETS |
|---|---|---|---|---|---|
| 04 | CC, Sol | 80 | 22.0/22.7, 0.0/1.8 | 351 | 714 |

Caltrans Metric

REGISTERED ENGINEER - CIVIL

7-12-99
PLANS APPROVAL DATE

REGISTERED PROFESSIONAL ENGINEER — V. L. Orsolini — No. 44461 — Exp. 3/31/02 — CIVIL — STATE OF CALIFORNIA

The State of California or its officers or agents shall not be responsible for the accuracy or completeness of electronic copies of this plan sheet.

DE LEUW- PAC-STEINMAN
120 Howard Street, Suite 850
San Francisco, CA 94105

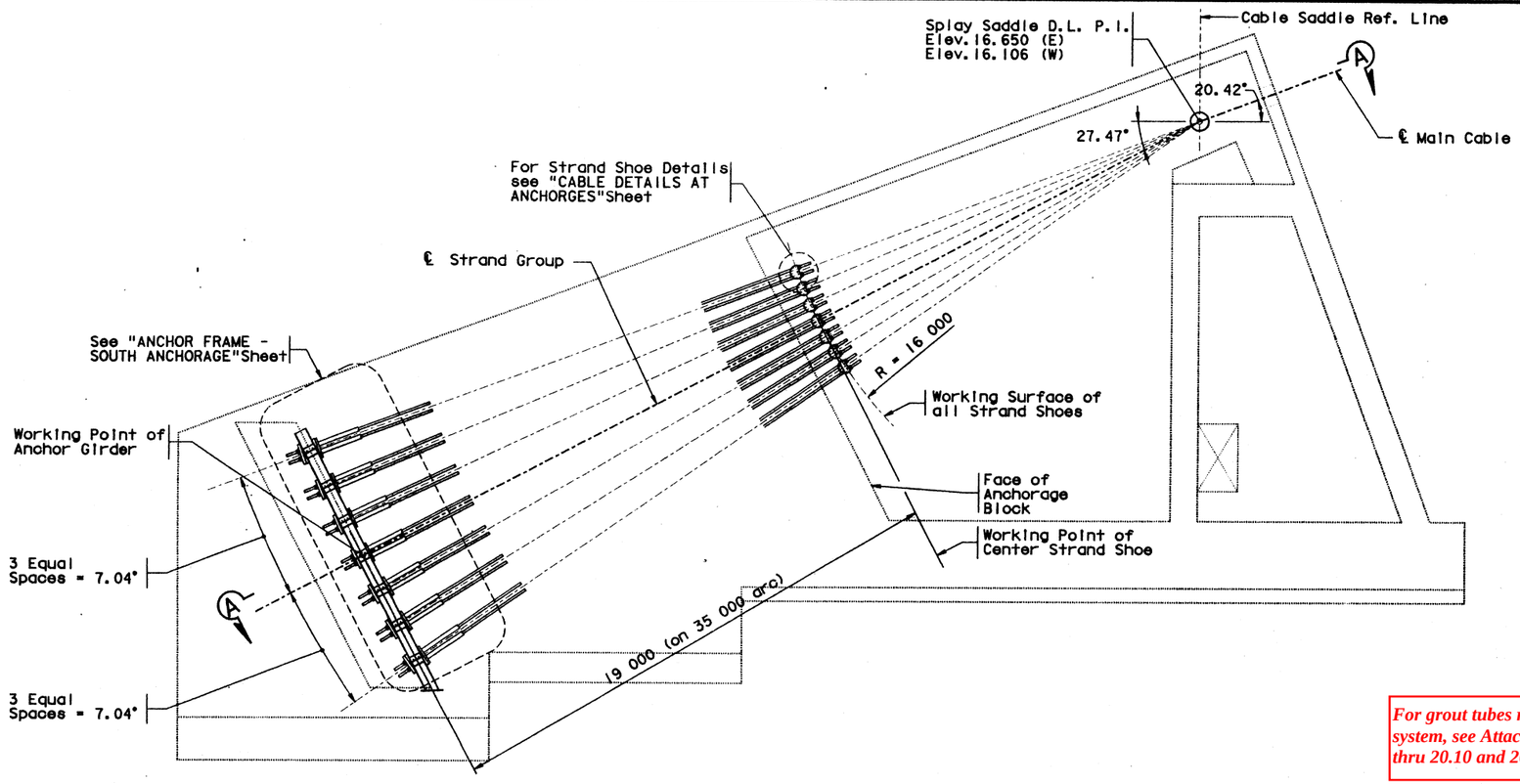


## ELEVATION OF EAST CABLE - SOUTH ANCHORAGE

1:100 (West Cable Similar Except as Noted)

STATE OF CALIFORNIA
DEPARTMENT OF TRANSPORTATION

**AS BUILT**
SEE ATTACHMENTS

STRUCTURE REPRESENTATIVE: Brian Boal
INITIAL:_____ DATE: October 15th, 2004

*For grout tubes rigid support system, see Attachment #20.07 thru 20.10 and 20.12.*

## NOTES:

1. Contractor shall provide a rigid support system for the steel grout tubes. The system shall be designed to maintain proper alignment of tubes during the erection process. The design of the supports shall be submitted to the Engineer for review.
2. Limits of access chamber shown are approximate. Finished size and design details are to be determined by the Contractor and submitted to the Engineer for review.

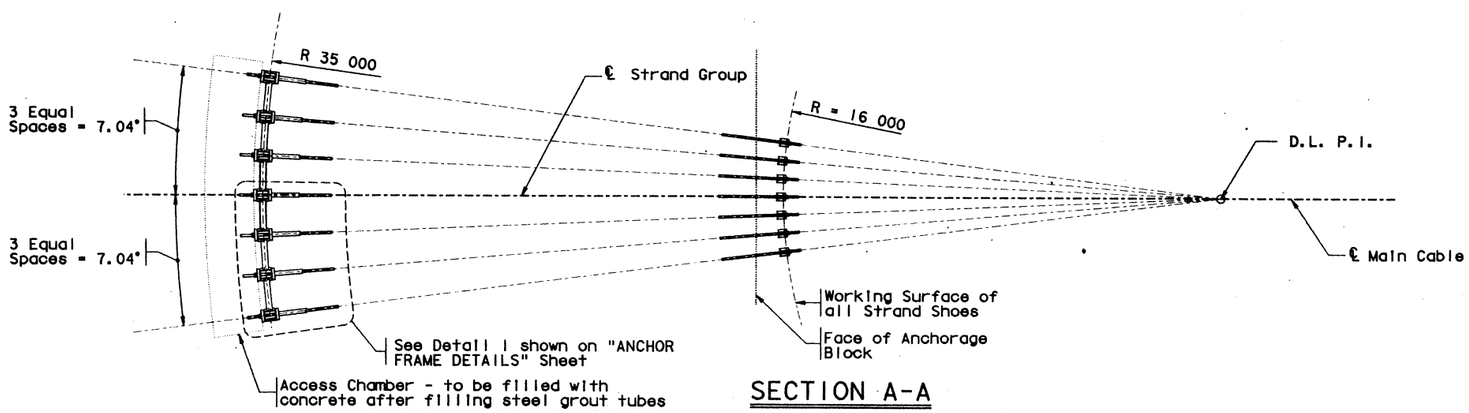


## SECTION A-A

1:100

ALL DIMENSIONS ARE IN MILLIMETERS UNLESS OTHERWISE SHOWN

| | | | |
|---|---|---|---|
| V. Gastoni, DESIGN OVERSIGHT | | | |
| Vincent Gastoni 3/31/99, SIGN OFF DATE | | | |
| Rev. Date 6-2-97 | | | |

| | BY | CHECKED |
|---|---|---|
| DESIGN | T. Harkin | F. Waggoner |
| DETAILS | E. Magadia | F. Waggoner |
| QUANTITIES | T. Harkin | F. Waggoner |

PREPARED FOR THE STATE OF CALIFORNIA DEPARTMENT OF TRANSPORTATION

D. Khazem, PROJECT ENGINEER
T. Spoth, BRIDGE DESIGN MANAGER

BRIDGE NO. 28-0352L
KILOMETER POST 0.01

# CARQUINEZ BRIDGE & OVERHEAD
# CABLE LAYOUT AT SOUTH ANCHORAGE

ORIGINAL SCALE IN MILLIMETERS FOR REDUCED PLANS 0 10 20 30 40 50 60 70 80 90 100

CU 04
EA 013011

DISREGARD PRINTS BEARING EARLIER REVISION DATES

REVISION DATES (PRELIMINARY STAGE ONLY): 4/24/98 9/18/98 12/18/98 01/08/99 01/15/99 2/16/99 3/31/99

SHEET 117 OF 348

FILE -> etto26_20102159

DATE PLOTTED => 20-Jul-1999 TIME PLOTTED => 10:38
USERNAME => trlim

#DGN#

| DIST. | COUNTY | ROUTE | KILOMETER POST TOTAL PROJECT | SHEET NO. | TOTAL SHEETS |
|---|---|---|---|---|---|
| 04 | CC, Sol | 80 | 22.0/22.7, 0.0/1.8 | 352 | 714 |

Caltrans Metric

Gregory J. Orsolini
REGISTERED ENGINEER - CIVIL
7-12-99
PLANS APPROVAL DATE

REGISTERED PROFESSIONAL ENGINEER G. J. Orsolini No. 44461 Exp. 3/31/02 CIVIL STATE OF CALIFORNIA

The State of California or its officers or agents shall not be responsible for the accuracy or completeness of electronic copies of this plan sheet.

DE LEUW- PAC-STEINMAN
120 Howard Street, Suite 850
San Francisco, CA 94105

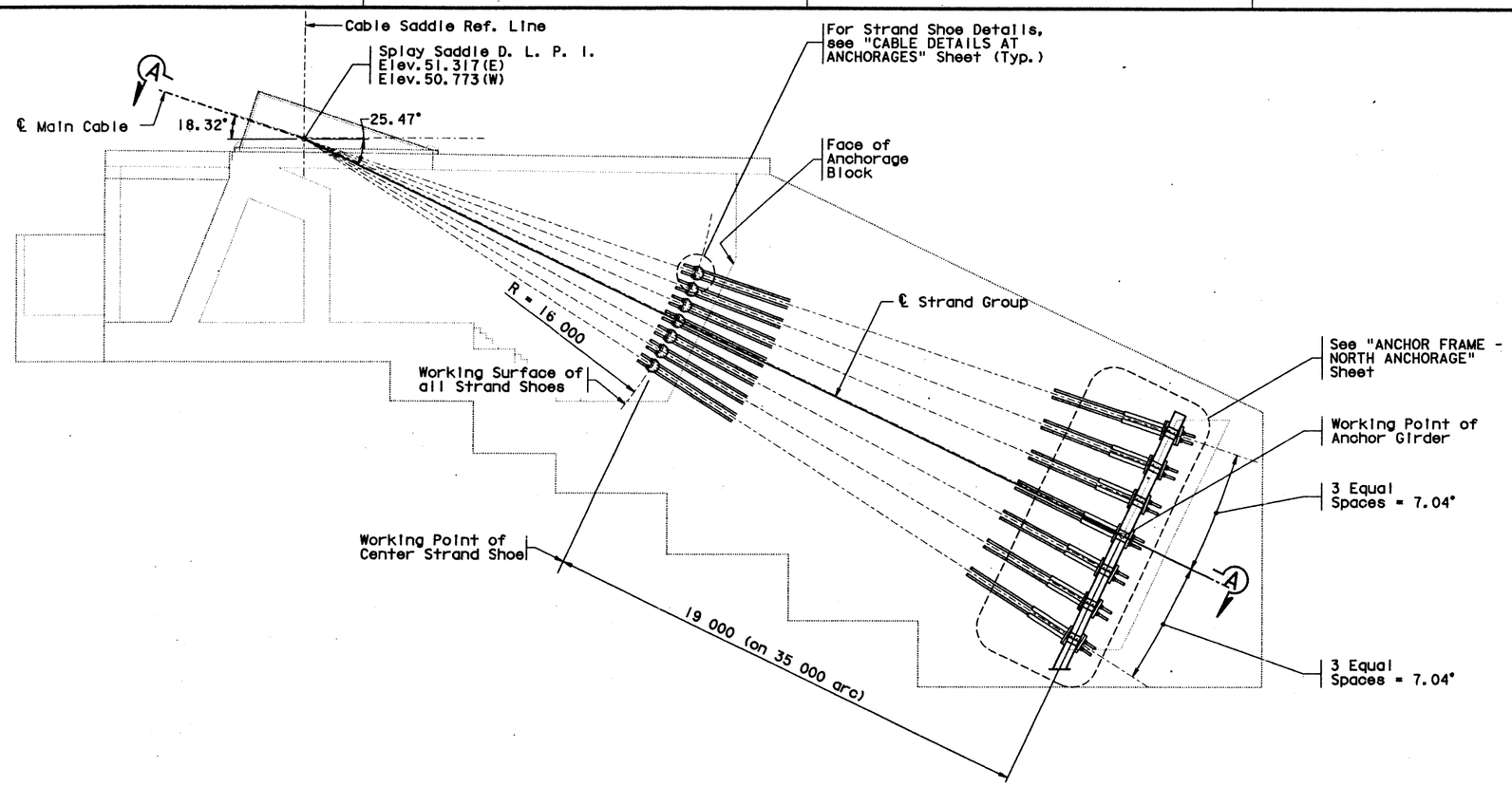


## ELEVATION OF EAST CABLE - NORTH ANCHORAGE

1:100 (West Cable Similar Except As Noted)

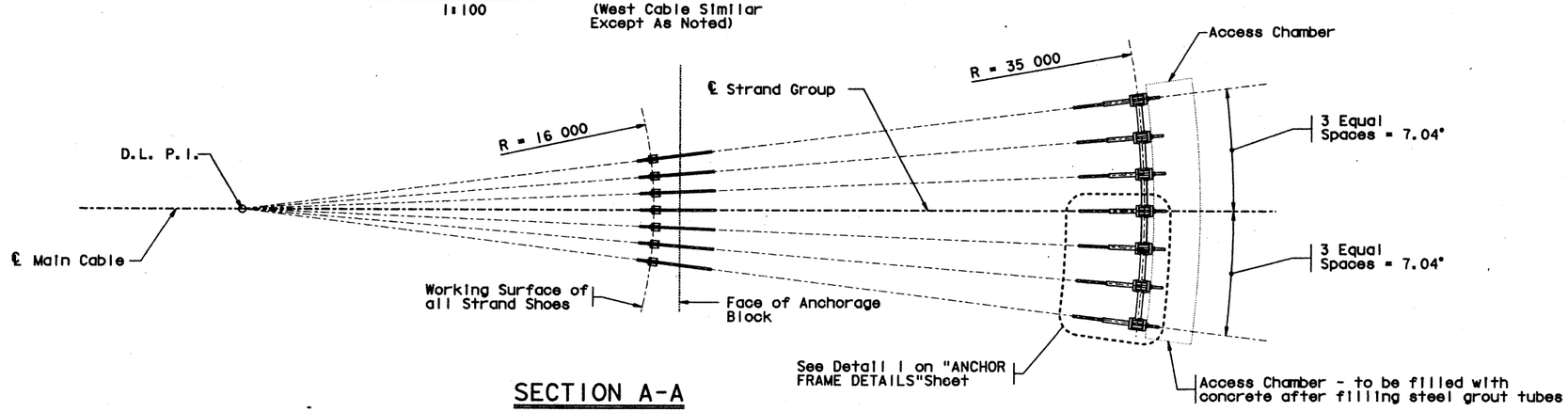


## SECTION A-A

1:100

STATE OF CALIFORNIA
DEPARTMENT OF TRANSPORTATION

**AS BUILT**
SEE ATTACHMENTS

STRUCTURE REPRESENTATIVE: Brian Boal
INITIAL:_____ DATE: October 15th, 2004

*See Attachments #20.04 thru 20.07 and 20.11.*

## NOTES:

1) For notes applicable to this sheet, see "CABLE LAYOUT AT SOUTH ANCHORAGE" sheet.

ALL DIMENSIONS ARE IN MILLIMETERS UNLESS OTHERWISE SHOWN

V. Gastoni
DESIGN OVERSIGHT
Vincent Gastoni 3/31/99
SIGN OFF DATE
Rev. Date 6-2-97

| | BY | CHECKED |
|---|---|---|
| DESIGN | T. Harkin | F. Waggoner |
| DETAILS | E. Magadia | F. Waggoner |
| QUANTITIES | T. Harkin | F. Waggoner |

PREPARED FOR THE STATE OF CALIFORNIA DEPARTMENT OF TRANSPORTATION

D. Khazem
PROJECT ENGINEER
T. Spoth
BRIDGE DESIGN MANAGER

CU 04
EA 013011

BRIDGE NO. 28-0352L
KILOMETER POST 0.01

# CARQUINEZ BRIDGE & OVERHEAD
# CABLE LAYOUT AT NORTH ANCHORAGE

ORIGINAL SCALE IN MILLIMETERS FOR REDUCED PLANS 0 10 20 30 40 50 60 70 80 90 100

DISREGARD PRINTS BEARING EARLIER REVISION DATES

REVISION DATES (PRELIMINARY STAGE ONLY) 4/24/98 9/18/98 2/18/98 01/06/98 01/15/99 2/16/99 3/31/99

SHEET 118 OF 348

FILE => etta27_20102204

USERNAME => tfrlim DATE PLOTTED => 20-Jul-1999 TIME PLOTTED => 10:38

@DGN@

| DIST. | COUNTY | ROUTE | KILOMETER POST TOTAL PROJECT | SHEET NO. | TOTAL SHEETS |
|---|---|---|---|---|---|
| 04 | CC, Sol | 80 | 22.0/22.7, 0.0/1.8 | 353 | 714 |

Caltrans Metric

Gregory J. Orsolini
REGISTERED ENGINEER - CIVIL
7-12-99
PLANS APPROVAL DATE
REGISTERED PROFESSIONAL ENGINEER G. L. Orsolini No. 44461 Exp. 3/31/02 CIVIL STATE OF CALIFORNIA

The State of California or its officers or agents shall not be responsible for the accuracy or completeness of electronic copies of this plan sheet.

DE LEUW- PAC-STEINMAN
120 Howard Street, Suite 850
San Francisco, CA 94105

Note: Strand shoe, nuts, strands, and exposed length of rods shall be painted after final strand adjustment.

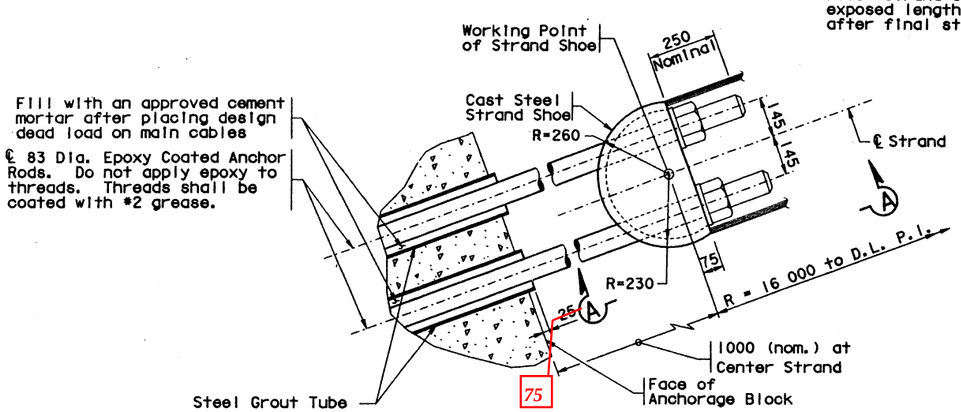


## STRAND SHOE DETAILS
1: 10

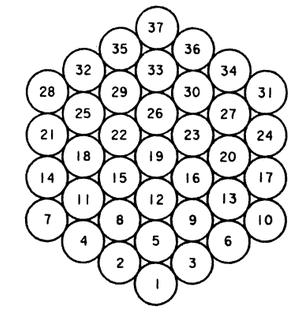


## MAIN CABLE CROSS SECTION
## (STRAND ARRANGEMENT)
1:5
(Looking South)

*A194 Grade 2H, per FCI-RFI 370-00.*

## MATERIALS:

Strand Shoes: Cast Steel ASTM A148M Grade 620-415

Anchor Rods : ASTM A354 Grade BC with ~~ASTM A563, Grade C~~ heavy hex nuts and ASTM F436 washers

Structural Frame and Bearing Plates: ASTM A709, Fy = 345 MPa

Steel Grout Tubes: ASTM A53

*Per FCI-RFI 197, ASTM A53 standard schedule 40 pipe was used w/min wall thickness = 6mm & I.D. not less than 140mm.*
*Anchor Rod Coupler material substitution - BSEN 10083 GR 34CrNiMo6, per FCI-RFI-359-02.*

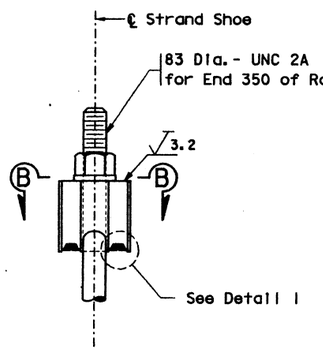


## SECTION A-A
1:10

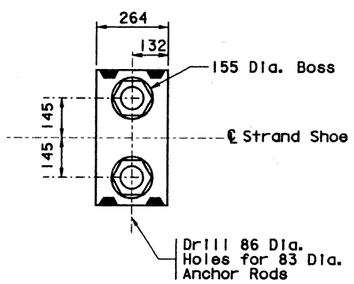


## SECTION B-B
1:10

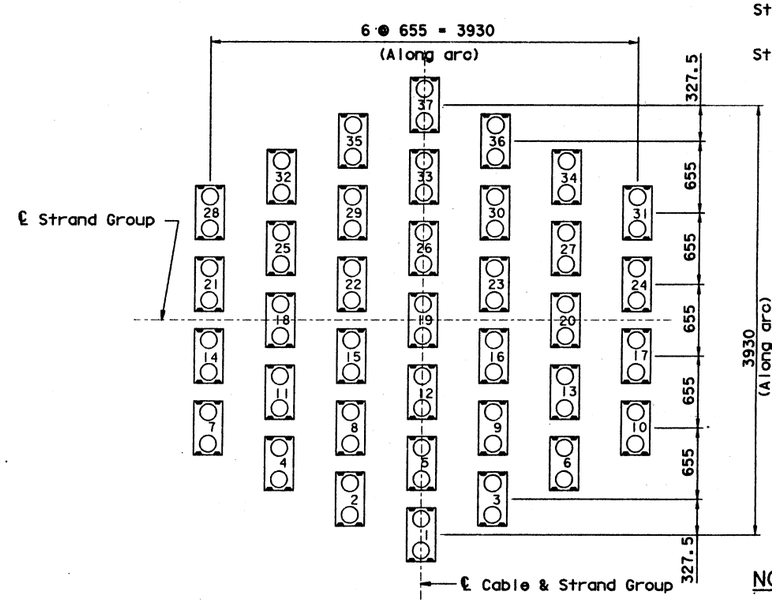


## ANCHORAGE STRAND SHOE ARRANGEMENT
1:25
(Looking South)
(South Anchorage shown, North Anchorage is similar and opposite hand)
(Dimensions Given are at Working Point of Strand Shoes)

STATE OF CALIFORNIA
DEPARTMENT OF TRANSPORTATION
**AS BUILT**
SEE ATTACHMENTS & CHANGES SHOWN ON THIS SHEET
STRUCTURE REPRESENTATIVE: Brian Boal
INITIAL:_____ DATE: October 15th, 2004

*For revised wire layout, see Attachments 20.13 &20.14*

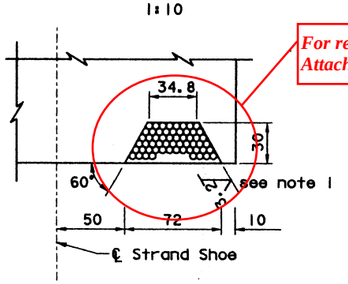


## DETAIL 1
1:2

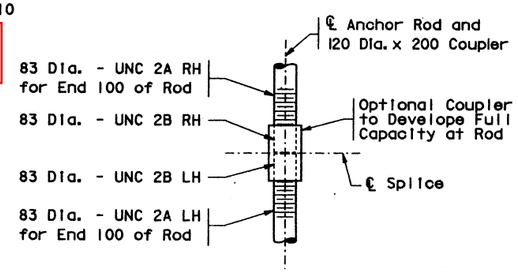


## ANCHOR ROD COUPLER DETAIL
(Maximum of one splice per rod, adjacent splices shall be staggered)
1:10

## NOTES:

1. ✓ symbol indicates steel surface machining requirements.

ALL DIMENSIONS ARE IN MILLIMETERS UNLESS OTHERWISE SHOWN

| | | | | | |
|---|---|---|---|---|---|
| V. Gastoni, DESIGN OVERSIGHT; Vincent Gastoni 3/31/99, SIGN OFF DATE | | | | | |
| Rev. Date 6-2-97 | DESIGN | BY T. Harkin | CHECKED F. Waggoner | PREPARED FOR THE STATE OF CALIFORNIA DEPARTMENT OF TRANSPORTATION | D. Khazem, PROJECT ENGINEER |
| | DETAILS | BY E. Magadia | CHECKED F. Waggoner | | T. Spoth, BRIDGE DESIGN MANAGER |
| | QUANTITIES | BY T. Harkin | CHECKED F. Waggoner | | CU 04, EA 013011 |

BRIDGE NO. 28-0352L; KILOMETER POST 0.01

# CARQUINEZ BRIDGE & OVERHEAD CABLE DETAILS AT ANCHORAGES

ORIGINAL SCALE IN MILLIMETERS FOR REDUCED PLANS 0 10 20 30 40 50 60 70 80 90 100

DISREGARD PRINTS BEARING EARLIER REVISION DATES → REVISION DATES (PRELIMINARY STAGE ONLY) 4/24/98 9/18/98 2/18/98 11/08/98 11/25/98 2/16/99 3/31/99

SHEET 119 OF 348

FILE => etta28_20102216

DGN

USERNAME => trlim DATE PLOTTED => 20-JUL-1999 TIME PLOTTED => 10:39

| DIST. | COUNTY | ROUTE | KILOMETER POST TOTAL PROJECT | SHEET NO. | TOTAL SHEETS |
|---|---|---|---|---|---|
| 04 | CC, Sol | 80 | 22.0/22.7, 0.0/1.8 | 354 | 714 |

Caltrans Metric

Gregory J. Orsolini
REGISTERED ENGINEER - CIVIL
7-12-99
PLANS APPROVAL DATE

REGISTERED PROFESSIONAL ENGINEER G. L. Orsolini No. 44461 Exp. 3/31/02 CIVIL STATE OF CALIFORNIA

The State of California or its officers or agents shall not be responsible for the accuracy or completeness of electronic copies of this plan sheet.

DE LEUW- PAC-STEINMAN
120 Howard Street, Suite 850
San Francisco, CA 94105

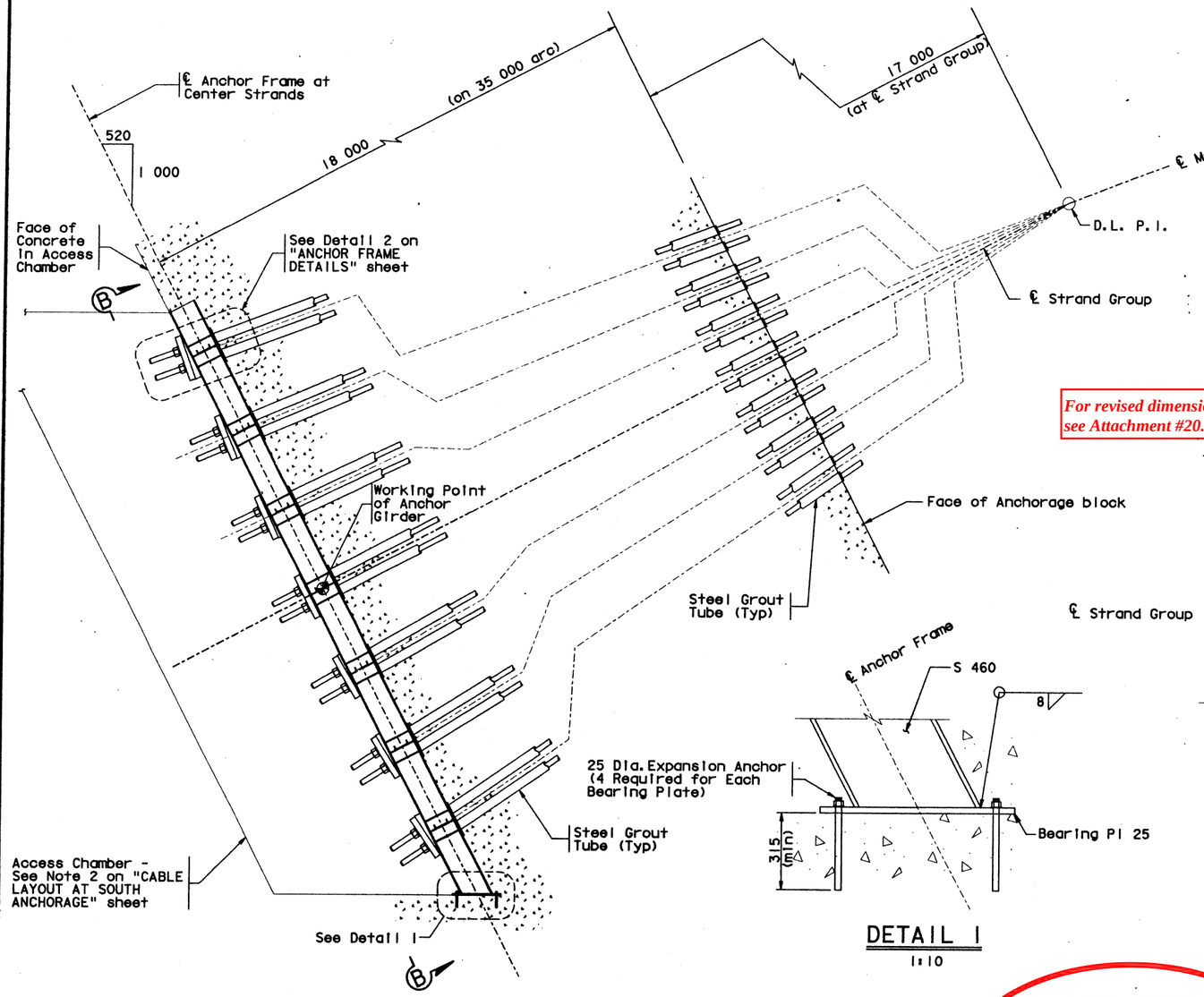


ELEVATION OF EAST ANCHOR GIRDER - SOUTH ANCHORAGE
ALONG ℄ MAIN CABLE AND STRAND GROUP

1:40 (West Anchor Girder similar except as noted)

DETAIL 1
1:10

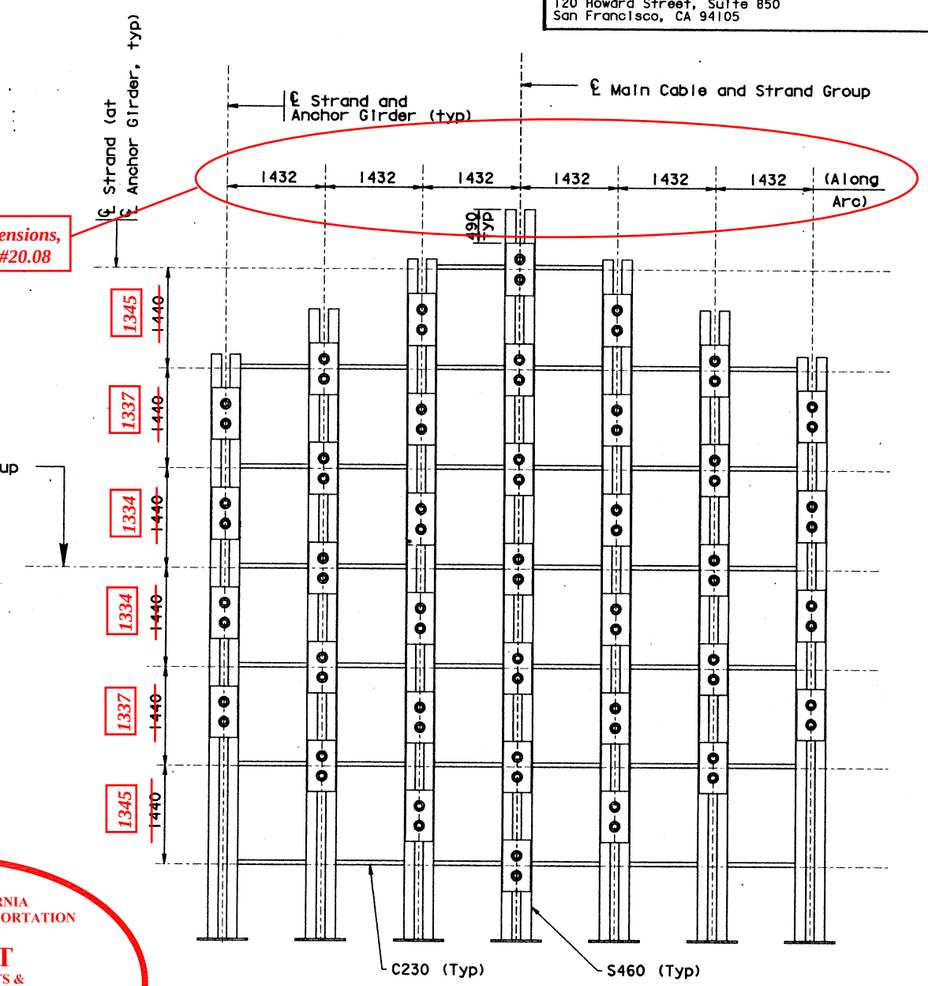


*For revised dimensions, see Attachment #20.08*

SECTION B-B
1:40

STATE OF CALIFORNIA
DEPARTMENT OF TRANSPORTATION

**AS BUILT**
SEE ATTACHMENTS & CHANGES SHOWN ON THIS SHEET

STRUCTURE REPRESENTATIVE: Brian Boal
INITIAL:_____ DATE: October 15th, 2004

ALL DIMENSIONS ARE IN MILLIMETERS UNLESS OTHERWISE SHOWN

V. Gastoni
DESIGN OVERSIGHT
Vincent Gastoni 3/31/99
SIGN OFF DATE
Rev. Date 6-2-97

| | BY | CHECKED |
|---|---|---|
| DESIGN | T. Harkin | F. Waggoner |
| DETAILS | E. Magadia | F. Waggoner |
| QUANTITIES | T. Harkin | F. Waggoner |

PREPARED FOR THE STATE OF CALIFORNIA DEPARTMENT OF TRANSPORTATION

D. Khazem
PROJECT ENGINEER
T. Spoth
BRIDGE DESIGN MANAGER

BRIDGE NO. 28-0352L
KILOMETER POST 0.01

# CARQUINEZ BRIDGE & OVERHEAD
# ANCHOR FRAME - SOUTH ANCHORAGE

ORIGINAL SCALE IN MILLIMETERS FOR REDUCED PLANS 0 10 20 30 40 50 60 70 80 90 100

CU 04
EA 013011

DISREGARD PRINTS BEARING EARLIER REVISION DATES

REVISION DATES (PRELIMINARY STAGE ONLY) 4/24/98 3/18/99 12/10/98 01/08/99 01/25/99 2/16/99

SHEET 120 OF 348

FILE => etta29_20102227

USERNAME => trrlim DATE PLOTTED => 20-Jul-1999 TIME PLOTTED => 10:40

@DGN@

| DIST. | COUNTY | ROUTE | KILOMETER POST TOTAL PROJECT | SHEET NO. | TOTAL SHEETS |
|---|---|---|---|---|---|
| 04 | CC, Sol | 80 | 22.0/22.7, 0.0/1.8 | 265 | 714 |

Caltrans Metric

Gregory J. Orsolini
REGISTERED ENGINEER - CIVIL

7-12-99
PLANS APPROVAL DATE

REGISTERED PROFESSIONAL ENGINEER G. J. Orsolini No. 44461 Exp. 3/31/02 CIVIL STATE OF CALIFORNIA

The State of California or its officers or agents shall not be responsible for the accuracy or completeness of electronic copies of this plan sheet.

DE LEUW- PAC-STERMAN
120 Howard Street, Suite 850
San Francisco, CA 94105

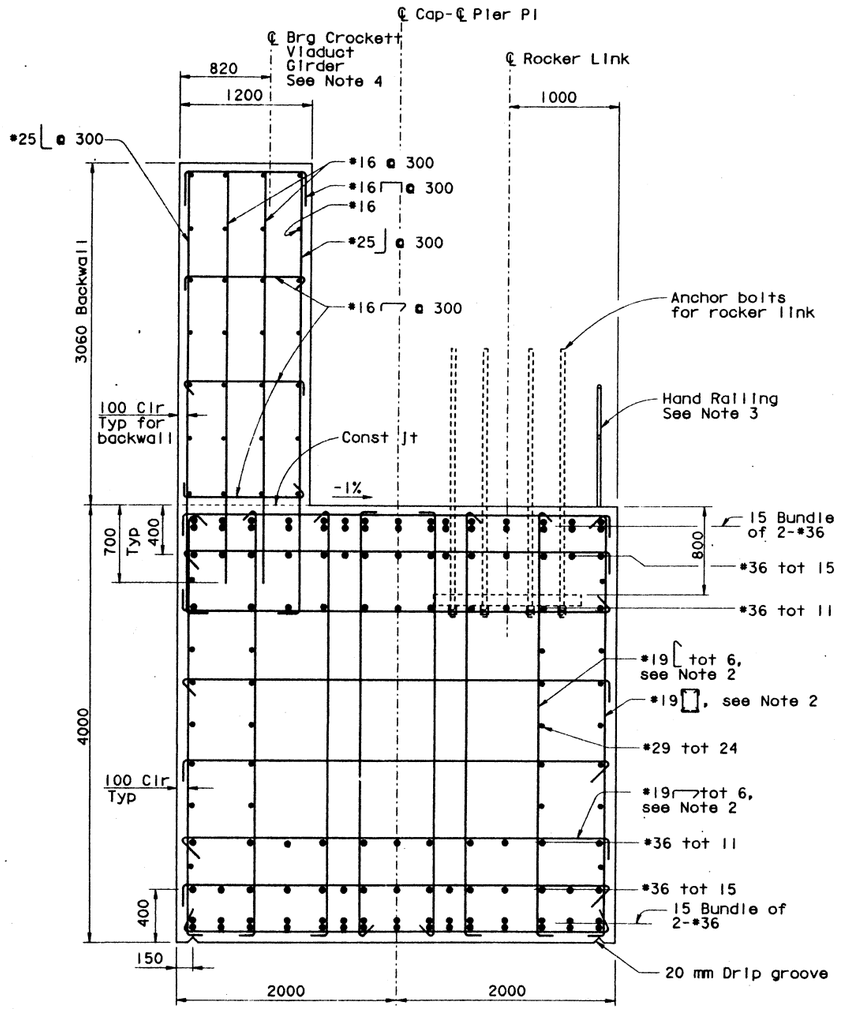


SECTION I-I
1 : 25

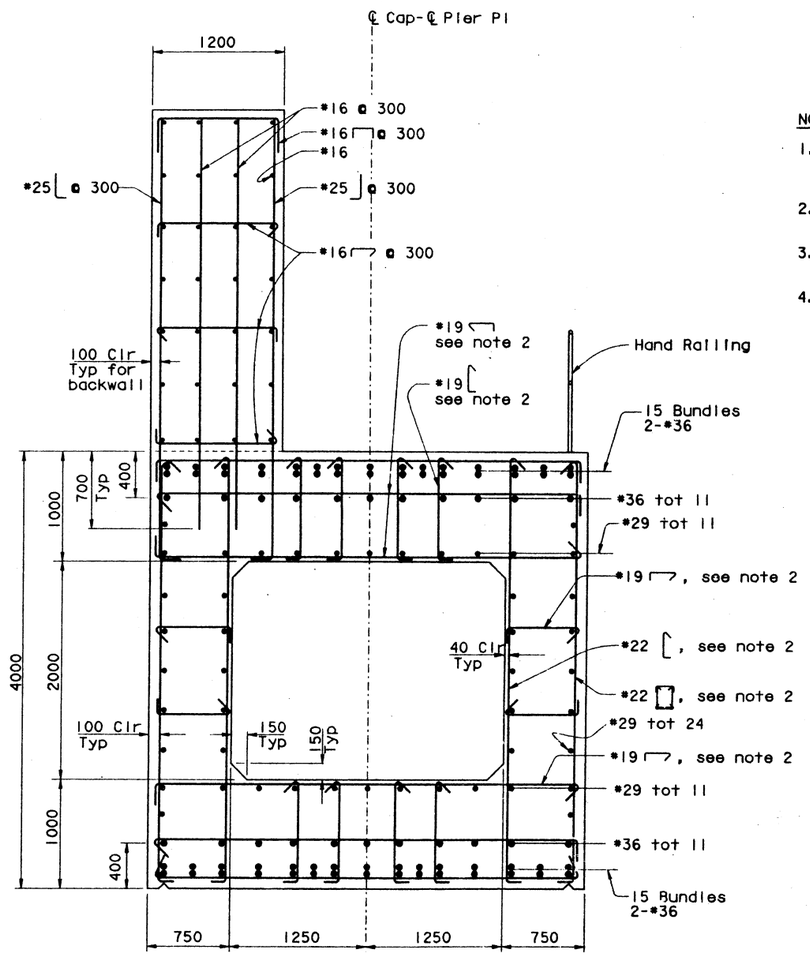


SECTION J-J
1 : 25

NOTES:

1. For location of SECTION I-I and SECTION J-J, see "PIER PI CAP NO. 1" sheet.
2. For tie spacing, see "PIER PI CAP NO. 4" sheet.
3. For hand railing details, see "HANDRAIL DETAILS" sheet.
4. Crockett Viaduct Girders will be erected following completion of Pier Pl. Installation of Viaduct Bearings and Girders shall be coordinated with Crockett Viaduct Contractor. Pier Pl backwall details shall be modified to accommodate the Viaduct Bearings and Girders.

STATE OF CALIFORNIA
DEPARTMENT OF TRANSPORTATION
AS BUILT
NO CHANGES
STRUCTURE REPRESENTATIVE: Brian Boal
INITIAL:_____ DATE: October 15th, 2004

ALL DIMENSIONS ARE IN MILLIMETERS UNLESS OTHERWISE SHOWN

V. Gastoni
DESIGN OVERSIGHT
Vincent Gastoni 3/31/99
SIGN OFF DATE
Rev. Date 8-2-97

| | | | |
|---|---|---|---|
| DESIGN | BY G. Matesic/M. Sah | CHECKED D. Morgan/ A. Loof | |
| DETAILS | BY B. Wilson | CHECKED D. Morgan/ A. Loof | |
| QUANTITIES | BY M. Sah | CHECKED E. Buno | |

ORIGINAL SCALE IN MILLIMETERS FOR REDUCED PLANS 0 10 20 30 40 50 60 70 80 90 100

PREPARED FOR THE STATE OF CALIFORNIA DEPARTMENT OF TRANSPORTATION

G. Orsolini
PROJECT ENGINEER
T. Spoth
BRIDGE DESIGN MANAGER

CU 04
EA 013011
FILE => epTr07_20082128

BRIDGE NO. 28-0352L
KILOMETER POST 0.01

# CARQUINEZ BRIDGE & OVERHEAD
## PIER PI CAP NO. 2

DISREGARD PRINTS BEARING EARLIER REVISION DATES
REVISION DATES (PRELIMINARY STAGE ONLY) 4/20/98 9/18/98 12/10/98 1/8/99 1/18/99 2/16/99

SHEET 31 OF 348

PEN TABLE=> $PEN$

USERNAME => trandad DATE PLOTTED => 20-JUL-1999 TIME PLOTTED => 08:21
FILE => epTr07_20082128

NOTES:

1. For location of SECTIONS K-K, L-L and M-M, see "PIER PI CAP NO. 1" sheet.

| DIST. | COUNTY | ROUTE | KILOMETER POST TOTAL PROJECT | SHEET NO. | TOTAL SHEETS |
|---|---|---|---|---|---|
| 04 | CC, Sol | 80 | 22.0/22.7, 0.0/1.8 | 266 | 714 |

REGISTERED ENGINEER - CIVIL

7-12-99
PLANS APPROVAL DATE

The State of California or its officers or agents shall not be responsible for the accuracy or completeness of electronic copies of this plan sheet.

REGISTERED PROFESSIONAL ENGINEER G. L. Orsolini No. 44461 Exp. 3/31/02 CIVIL STATE OF CALIFORNIA

DE LEUW- PAC-STEINMAN
120 Howard Street, Suite 850
San Francisco, CA 94105

STATE OF CALIFORNIA
DEPARTMENT OF TRANSPORTATION

AS BUILT
NO CHANGES

STRUCTURE REPRESENTATIVE: Brian Boal
INITIAL:_____ DATE: October 15th, 2004

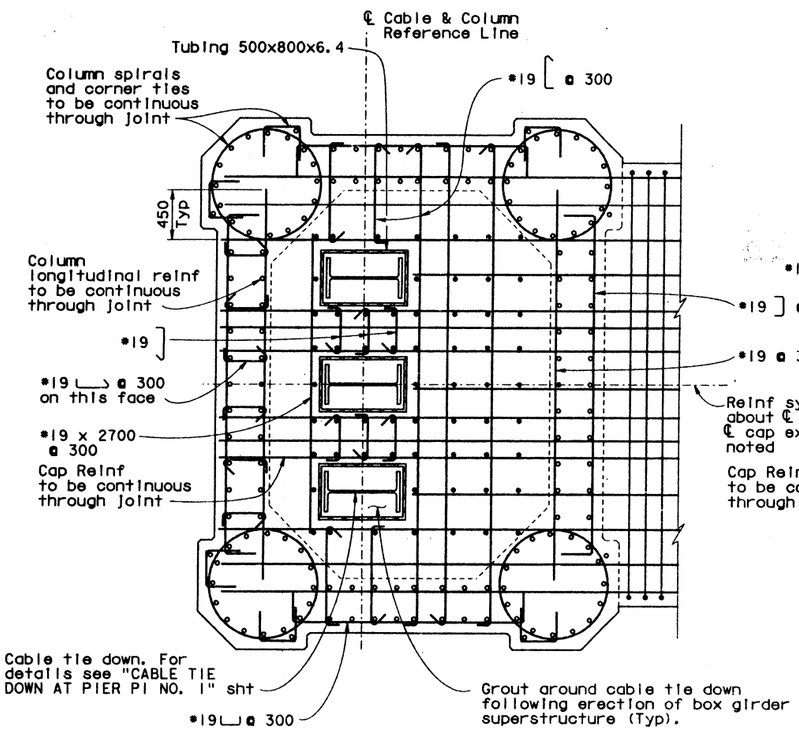


## SECTION K-K

1:25

o Indicates column reinf - continuous through joint

● Indicates bars added to joint

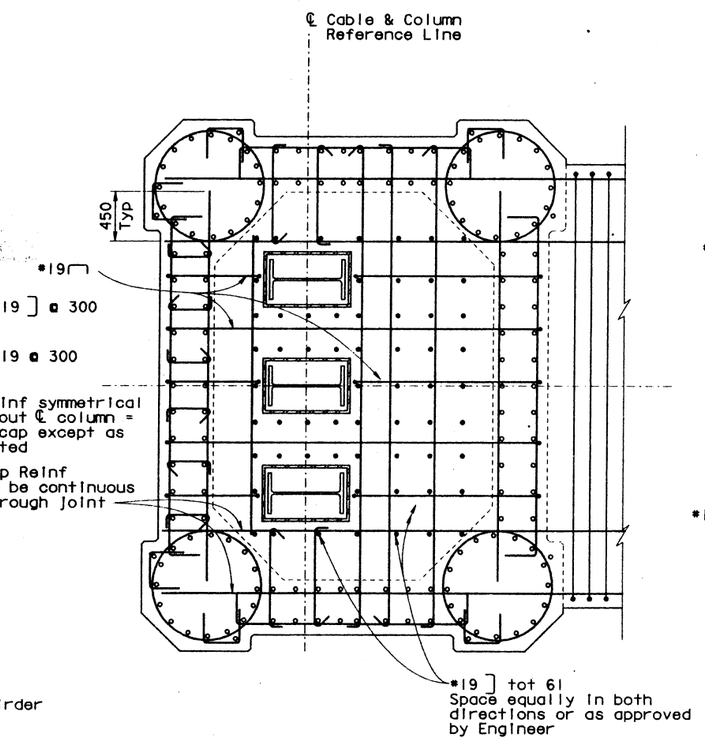


## SECTION L-L

1:25

o Indicates column reinf continuous through joint

● Indicates bars added to joint

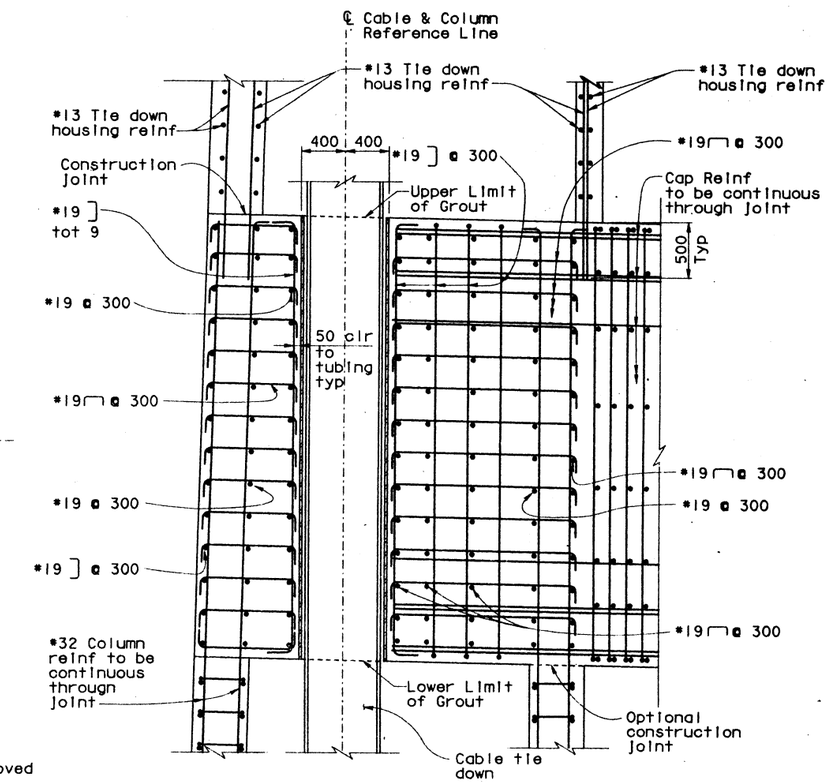


## SECTION M-M

1:25

ALL DIMENSIONS ARE IN MILLIMETERS UNLESS OTHERWISE SHOWN

V. Gastoni
DESIGN OVERSIGHT
Vincent Gastoni 3/31/99
SIGN OFF DATE

Rev. Date 6-2-97

| | BY | CHECKED |
|---|---|---|
| DESIGN | M. Sah | D. Morgan/A. Loof |
| DETAILS | R. Peng | D. Morgan/A. Loof |
| QUANTITIES | M. Sah | E. Buno |

PREPARED FOR THE STATE OF CALIFORNIA DEPARTMENT OF TRANSPORTATION

G. Orsolini
PROJECT ENGINEER
T. Spoth
BRIDGE DESIGN MANAGER

CU 04
EA 013011

ORIGINAL SCALE IN MILLIMETERS FOR REDUCED PLANS 0 10 20 30 40 50 60 70 80 90 100

FILE => ep1f08_20082745

BRIDGE NO. 28-0352L
KILOMETER POST 0.01

# CARQUINEZ BRIDGE & OVERHEAD
## PIER PI CAP NO. 3

DISREGARD PRINTS BEARING EARLIER REVISION DATES

REVISION DATES (PRELIMINARY STAGE ONLY) 4/24/98 9/18/98 12/16/98 1/8/99 1/18/99 2/16/99

SHEET 32 OF 348

PEN TABLE => $PEN$

USERNAME => TPT1CHT DATE PLOTTED => 20-JUL-1999 TIME PLOTTED => 08:28

FILE => ep1f08_20082745

NOTES:

1. For location of SECTION O-O, see "PIER P1 CAP NO. 1" sheet.

| DIST. | COUNTY | ROUTE | KILOMETER POST TOTAL PROJECT | SHEET NO. | TOTAL SHEETS |
|---|---|---|---|---|---|
| 04 | CC, Sol | 80 | 22.0/22.7, 0.0/1.8 | 267 | 714 |

Gregory L. Orsolini
REGISTERED ENGINEER - CIVIL

7-12-99
PLANS APPROVAL DATE

REGISTERED PROFESSIONAL ENGINEER G. L. Orsolini No. 44461 Exp. 3/31/02 CIVIL STATE OF CALIFORNIA

The State of California or its officers or agents shall not be responsible for the accuracy or completeness of electronic copies of this plan sheet.

DE LEUW- PAC-STERNMAN
120 Howard Street, Suite 850
San Francisco, CA 94105

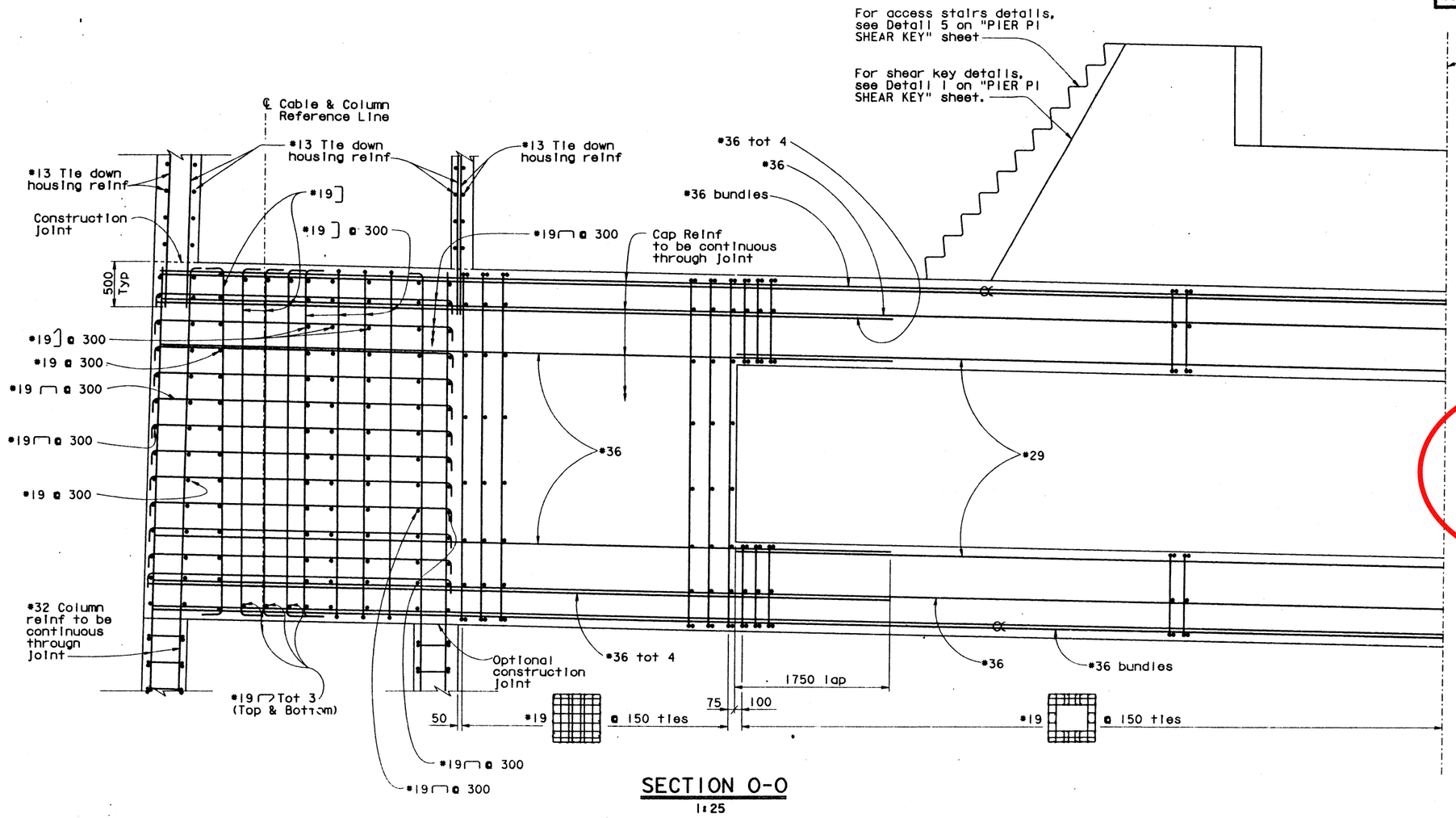


SECTION O-O
1:25

STATE OF CALIFORNIA
DEPARTMENT OF TRANSPORTATION

AS BUILT
NO CHANGES

STRUCTURE REPRESENTATIVE: Brian Boal
INITIAL:_____ DATE: October 15th, 2004

ALL DIMENSIONS ARE IN MILLIMETERS UNLESS OTHERWISE SHOWN

V. Gastoni
DESIGN OVERSIGHT
Vincent Gastoni 3/31/99
SIGN OFF DATE
Rev. Date 6-2-97

| | | | |
|---|---|---|---|
| DESIGN | BY M. Sah | CHECKED D. Morgan | |
| DETAILS | BY R. Peng | CHECKED J. Quincy | |
| QUANTITIES | BY M. Sah | CHECKED E. Buno | |

PREPARED FOR THE STATE OF CALIFORNIA DEPARTMENT OF TRANSPORTATION

G. Orsolini
PROJECT ENGINEER
T. Spoth
BRIDGE DESIGN MANAGER

BRIDGE NO. 28-0352L
KILOMETER POST 0.01

CARQUINEZ BRIDGE & OVERHEAD
PIER P1 CAP NO. 4

ORIGINAL SCALE IN MILLIMETERS FOR REDUCED PLANS 0 10 20 30 40 50 60 70 80 90 100

CU 04
EA 013011

DISREGARD PRINTS BEARING EARLIER REVISION DATES

REVISION DATES (PRELIMINARY STAGE ONLY) 4/24/98 9/18/98 2/24/98 1/8/99 1/18/99 2/16/99

SHEET 33 OF 348

FILE => eptr09_20082746

USERNAME => trrlcnf DATE PLOTTED => 20-JUL-1999 TIME PLOTTED => 08:29

| DIST. | COUNTY | ROUTE | KILOMETER POST TOTAL PROJECT | SHEET NO. | TOTAL SHEETS |
|---|---|---|---|---|---|
| 04 | CC, Sol | 80 | 22.0/22.7, 0.0/1.8 | 268 | 714 |

Caltrans Metric

REGISTERED ENGINEER - CIVIL

7-12-99

PLANS APPROVAL DATE

REGISTERED PROFESSIONAL ENGINEER G. L. Orsolini No. 44461 Exp. 3/31/02 CIVIL STATE OF CALIFORNIA

The State of California or its officers or agents shall not be responsible for the accuracy or completeness of electronic copies of this plan sheet.


DE LEUW- PAC-STEINMAN
120 Howard Street, Suite 850
San Francisco, CA 94105


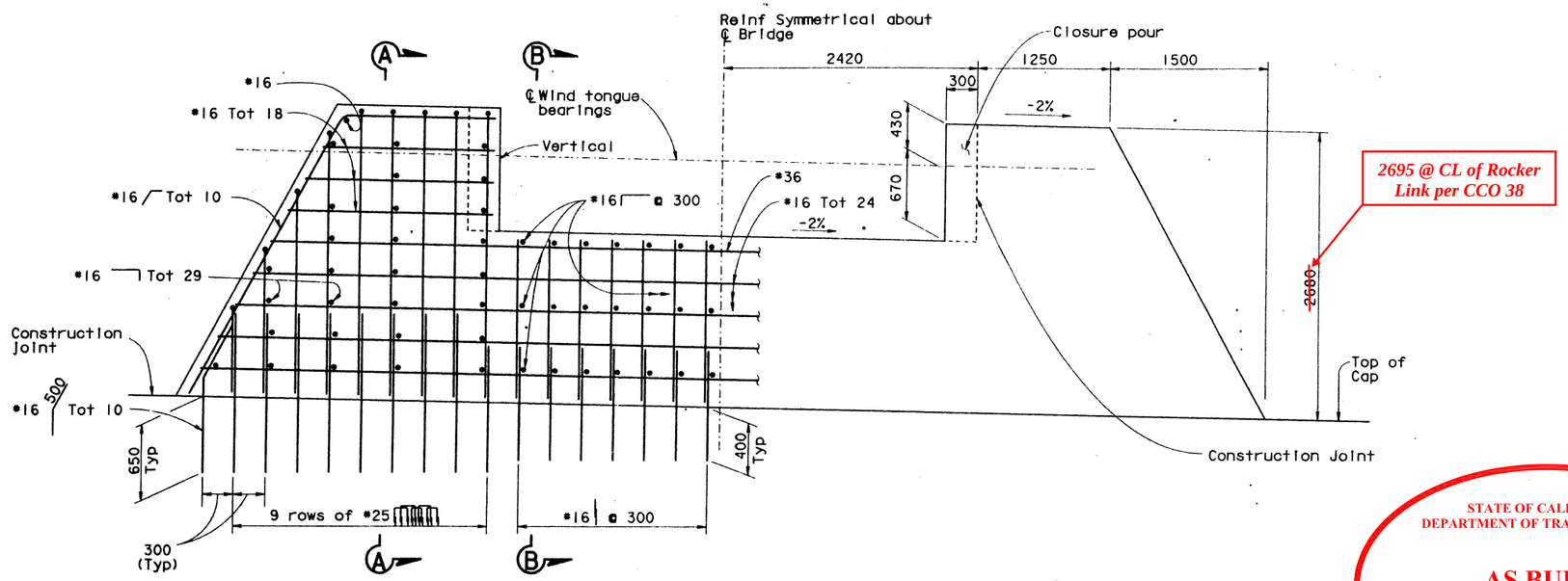


2695 @ CL of Rocker Link per CCO 38

## DETAIL 1 - SHEAR KEY REINFORCEMENT (LOOKING SOUTH)

1 : 25

NOTES:

1. For location of DETAIL 1 - SHEAR KEY REINF and DETAIL 5, see "PIER P1 CAP NO. 1" sheet.
2. For BEARING DETAILS , see "WIND TONGUE DETAIL AT PIER P1" sheet.

STATE OF CALIFORNIA
DEPARTMENT OF TRANSPORTATION

AS BUILT

STRUCTURE REPRESENTATIVE: Brian Boal
INITIAL:_____ DATE: October 15th, 2004

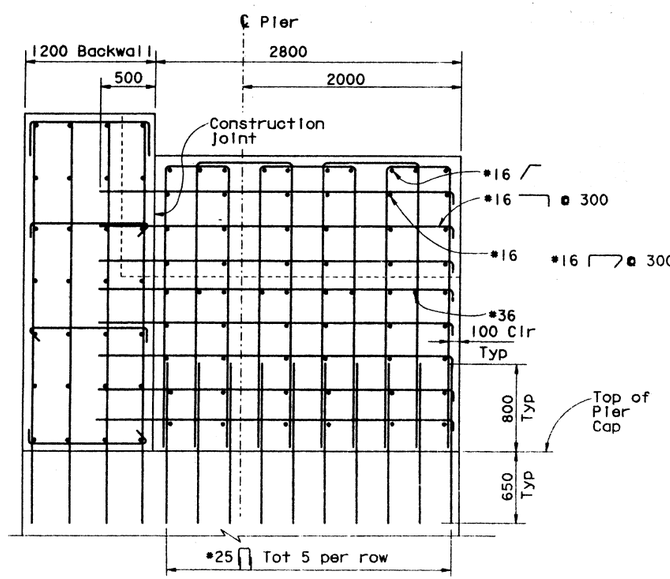


## SECTION A-A

1 : 25

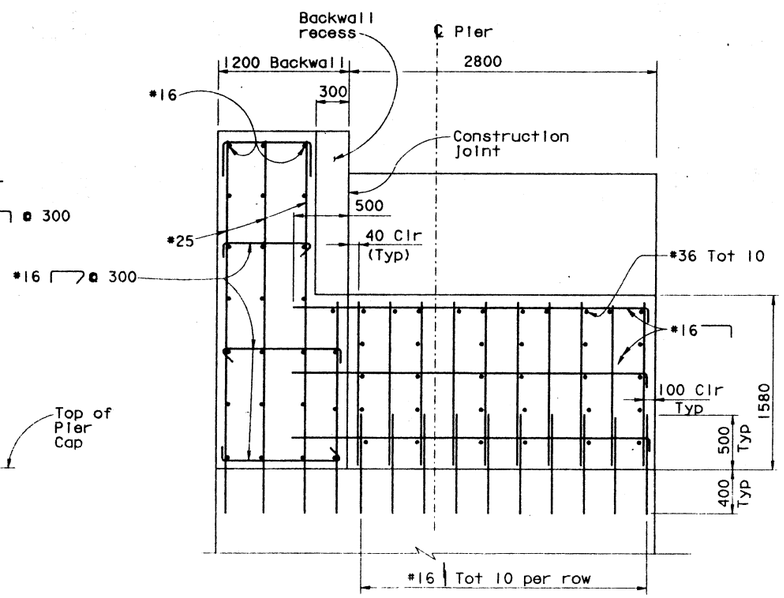


## SECTION B-B

1 : 25

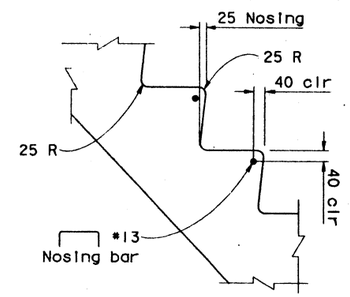


## DETAIL 8

1 : 10

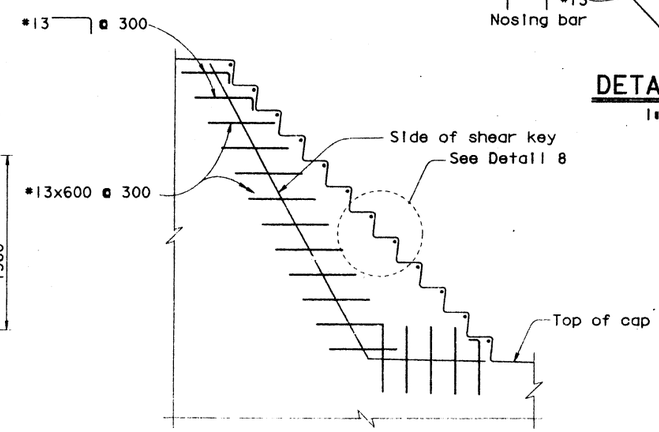


## DETAIL 5

1 : 25

ALL DIMENSIONS ARE IN MILLIMETERS UNLESS OTHERWISE SHOWN

| | | | | | |
|---|---|---|---|---|---|
| V. Gastoni DESIGN OVERSIGHT Vincent Gastoni 3/31/99 SIGN OFF DATE | DESIGN BY M. Sah | CHECKED D. Morgan | PREPARED FOR THE STATE OF CALIFORNIA DEPARTMENT OF TRANSPORTATION | G. Orsolini PROJECT ENGINEER | BRIDGE NO. 28-0352L |
| Rev. Date 8-2-97 | DETAILS BY A. Castilla | CHECKED J. Quincy | | T. Spoth BRIDGE DESIGN MANAGER | KILOMETER POST 0.01 |
| | QUANTITIES BY M. Sah | CHECKED E. Bunn | | CU 04 EA 013011 | |

CARQUINEZ BRIDGE & OVERHEAD

PIER P1 SHEAR KEY

ORIGINAL SCALE IN MILLIMETERS FOR REDUCED PLANS 0 10 20 30 40 50 60 70 80 90 100

FILE => epir10_20082747

DISREGARD PRINTS BEARING EARLIER REVISION DATES

REVISION DATES (PRELIMINARY STAGE ONLY) 4/24/98 5/18/98 2/16/99 1/8/99 1/18/99 2/16/99 4/1/99 6/11/99

SHEET 34 OF 348

PEN TABLE => $PEN$

USERNAME => rrricht DATE PLOTTED => 20-Jul-1999 TIME PLOTTED => 08:30

FILE => epir10_20082747

| DIST. | COUNTY | ROUTE | KILOMETER POST TOTAL PROJECT | SHEET NO. | TOTAL SHEETS |
|---|---|---|---|---|---|
| 04 | CC, Sol | 80 | 22.0/22.7, 0.0/1.8 | 269 | 714 |

REGISTERED ENGINEER - CIVIL

7-12-99
PLANS APPROVAL DATE

REGISTERED PROFESSIONAL ENGINEER G. L. Orsolini No. 44461 Exp. 3/31/02 CIVIL STATE OF CALIFORNIA

The State of California or its officers or agents shall not be responsible for the accuracy or completeness of electronic copies of this plan sheet.

DE LEUW- PAC-STERNMAN
120 Howard Street, Suite 850
San Francisco, CA 94105

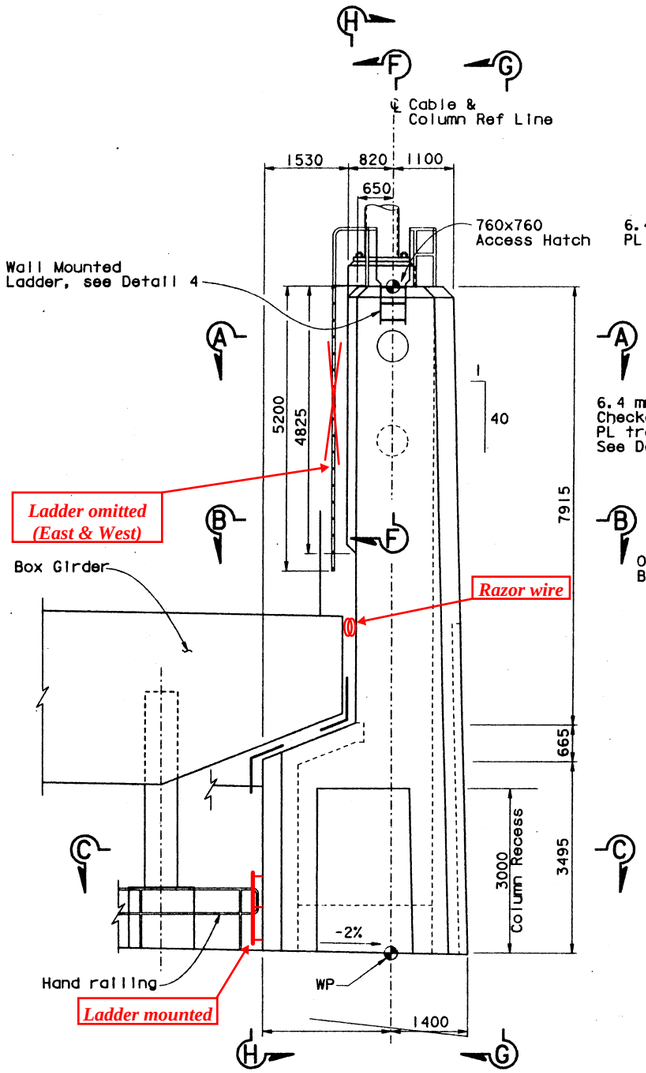


(West side shown, East side similar except as noted)

DETAIL I
1 : 50

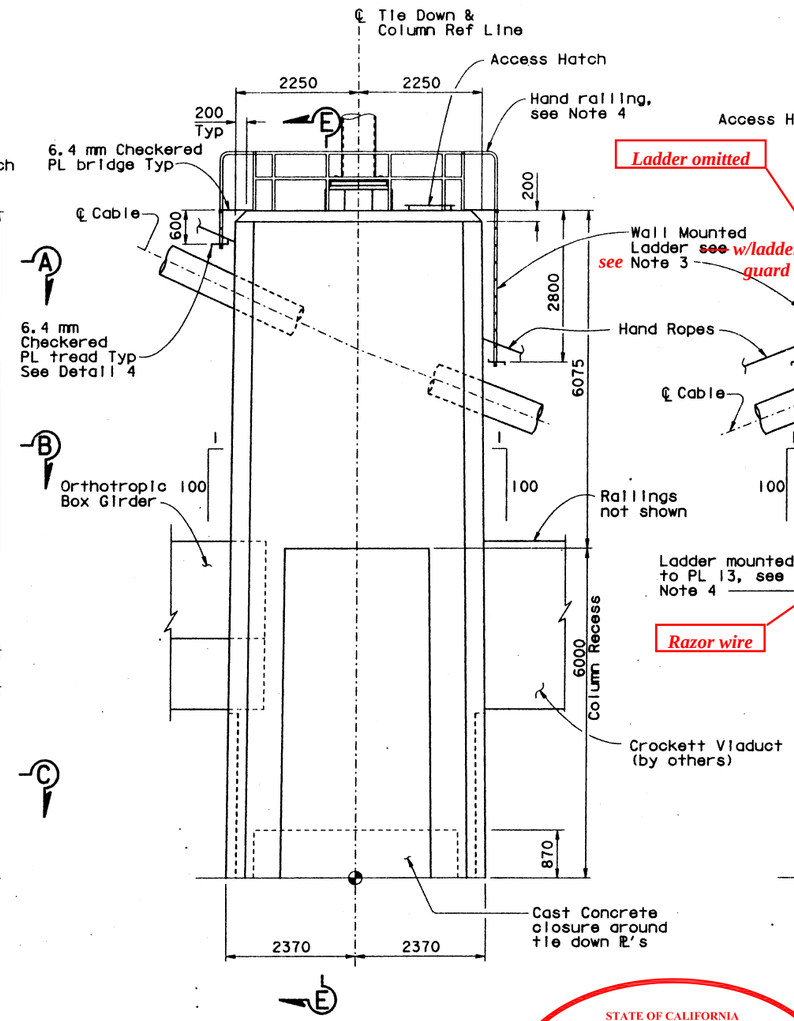


VIEW G-G
1 : 50

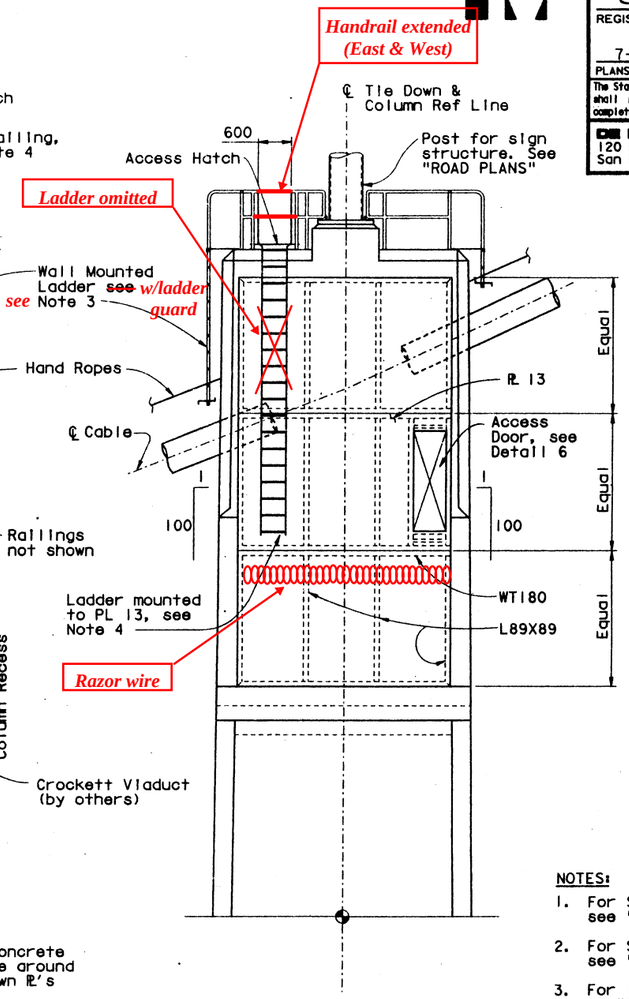


VIEW H-H
1 : 50

STATE OF CALIFORNIA
DEPARTMENT OF TRANSPORTATION

AS BUILT
SEE ATTACHMENTS & CHANGES SHOWN ON THIS SHEET

STRUCTURE REPRESENTATIVE: Brian Boal
INITIAL:_____ DATE: October 15th, 2004

For Security Details, see Attachments 21.102 & 21.103.

NOTES:

1. For Sections A-A, B-B and C-C, see "TIE DOWN HOUSING NO. 2" sheet.
2. For Sections E-E and F-F, see "TIE DOWN HOUSING NO. 3" sheet.
3. For ladder details, see "DETAIL P" on "STAIR DETAILS NO. 3" sheet.
4. For ladder layout details, see "STAIR DETAILS NO. 3" sheet. For ladder connection to PL, see Detail 7 on "PIER P1 MISCELLANEOUS DETAILS" sheet.
5. For hand railing details, see "HAND RAIL DETAILS" sheet.
6. For Details 4 and 6, see "PIER P1 MISCELLANEOUS DETAILS" sheet.

ALL DIMENSIONS ARE IN MILLIMETERS UNLESS OTHERWISE SHOWN

V. Gastoni
DESIGN OVERSIGHT
Vincent Gastoni 3/31/99
SIGN OFF DATE
Rev. Date 8-2-97

| | BY | CHECKED |
|---|---|---|
| DESIGN | G. Orsolini | D. Morgan |
| DETAILS | R. Peng | J. Quincy |
| QUANTITIES | M. Sah | E. Buno |

PREPARED FOR THE STATE OF CALIFORNIA DEPARTMENT OF TRANSPORTATION

G. Orsolini
PROJECT ENGINEER
T. Spoth
BRIDGE DESIGN MANAGER

BRIDGE NO. 28-0352L
KILOMETER POST 0.01

# CARQUINEZ BRIDGE & OVERHEAD
# TIE DOWN HOUSING NO. 1

ORIGINAL SCALE IN MILLIMETERS FOR REDUCED PLANS 0 10 20 30 40 50 60 70 80 90 100

CU 04
EA 013011

DISREGARD PRINTS BEARING EARLIER REVISION DATES

REVISION DATES (PRELIMINARY STAGE ONLY) 4/27/98 9/18/98 2/16/99 1/8/99 1/18/99 2/18/99 6/11/99

SHEET 35 OF 348

FILE => epirll_20082748
PEN TABLE=> $PEN$
USERNAME => trrichf DATE PLOTTED => 20-Jul-1999 TIME PLOTTED => 08:31

STATE OF CALIFORNIA
DEPARTMENT OF TRANSPORTATION

**AS BUILT**

STRUCTURE REPRESENTATIVE: Brian Boal
INITIAL:_____ DATE: October 15th, 2004

NOTES:

1. For location of SECTIONS A-A, B-B and C-C, see "TIE DOWN HOUSING NO. 1" sheet.
2. For Section D-D, see "TIE DOWN HOUSING NO. 3" sheet.
3. For ladder details, see "STAIR DETAILS NO. 3" sheet.
4. For ladder layout details, see "STAIR DETAILS NO. 3" sheet. For ladder connection to PL, see Detail 7 on "PIER P1 MISCELLANEOUS DETAILS" sheet.
5. For cable shroud details, see "CABLE SHROUD AT PIER P1 NO. 1" and "NO. 2" sheets.
6. Inside faces of Tie Down Housing are vertical.
7. For grating details, see "GRATING DETAILS" sheet.

Caltrans Metric

| DIST. | COUNTY | ROUTE | KILOMETER POST TOTAL PROJECT | SHEET NO. | TOTAL SHEETS |
|---|---|---|---|---|---|
| 04 | CC, Sol | 80 | 22.0/22.7, 0.0/1.8 | 270 | 714 |

Gregory J. Orsolini
REGISTERED ENGINEER - CIVIL
7-12-99
PLANS APPROVAL DATE
REGISTERED PROFESSIONAL ENGINEER G. J. Orsolini No. 44461 Exp. 3/31/02 CIVIL STATE OF CALIFORNIA
The State of California or its officers or agents shall not be responsible for the accuracy or completeness of electronic copies of this plan sheet.

DE LEUW- PAC-STERMAN
120 Howard Street, Suite 850
San Francisco, CA 94105

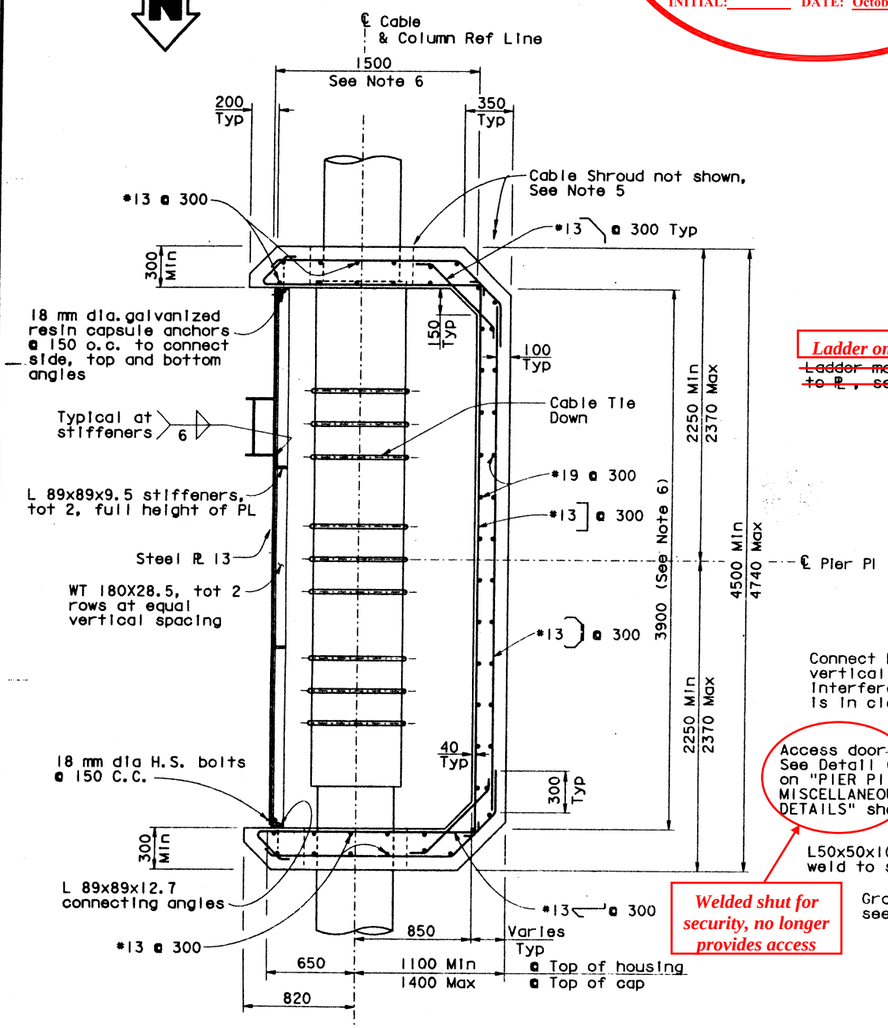


SECTION A-A
1 : 20

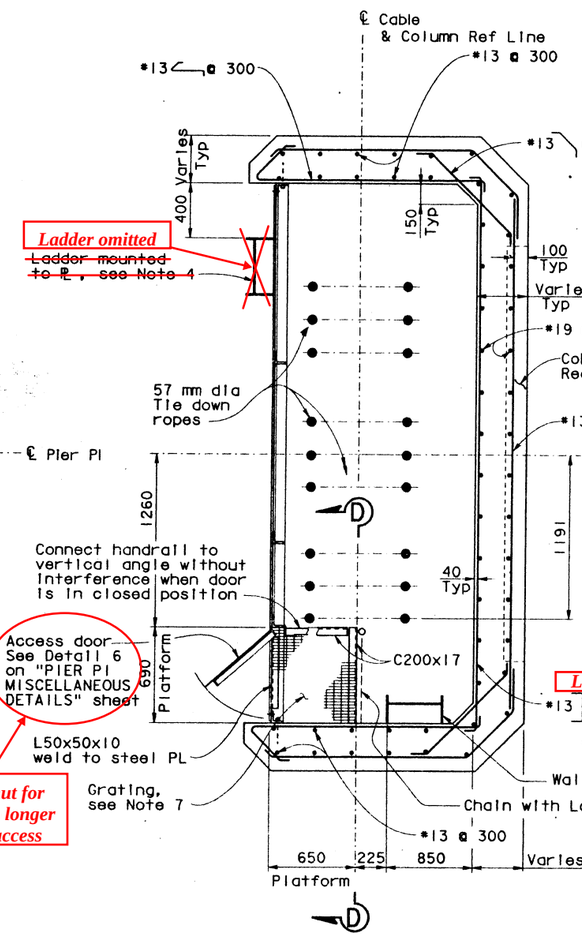


SECTION B-B
1 : 20

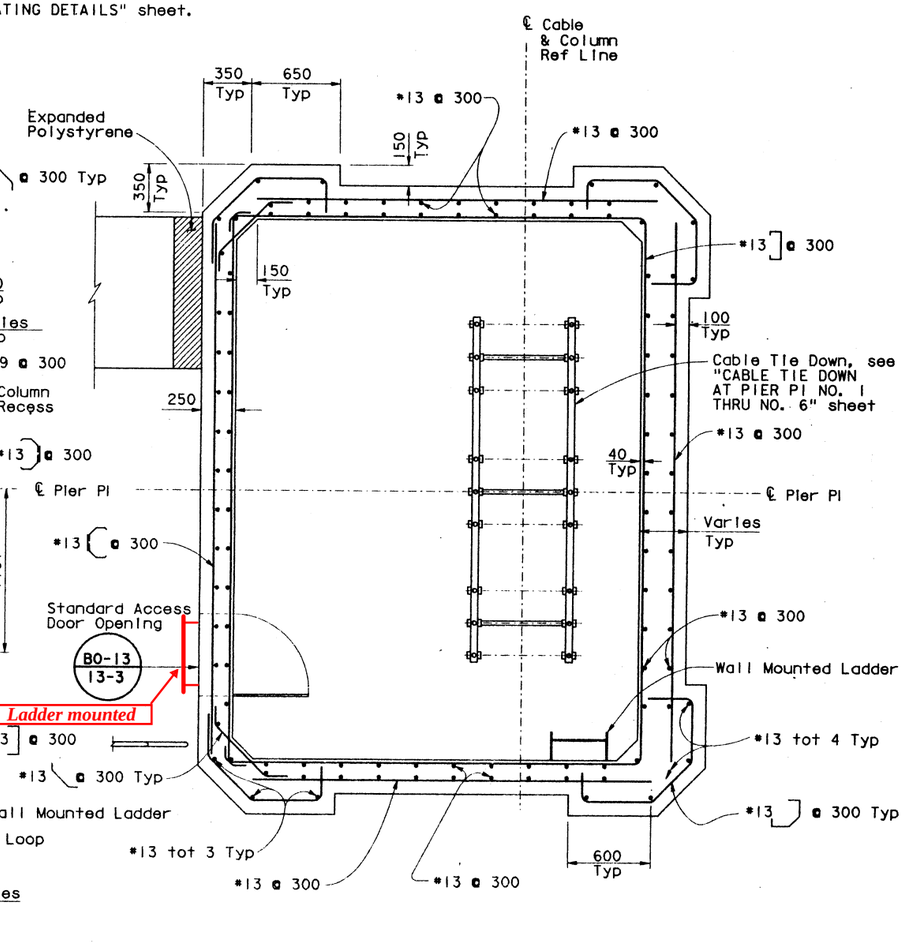


SECTION C-C
1 : 20

ALL DIMENSIONS ARE IN MILLIMETERS UNLESS OTHERWISE SHOWN

V. Gastoni
DESIGN OVERSIGHT
Vincent Gastoni 3/31/99
SIGN OFF DATE
Rev. Date 8-2-97

| | | | |
|---|---|---|---|
| DESIGN | BY G. Orsolini | CHECKED D. Morgan | |
| DETAILS | BY R. Peng | CHECKED J. Quincy | |
| QUANTITIES | BY M. Sah | CHECKED E. Buno | |

PREPARED FOR THE STATE OF CALIFORNIA DEPARTMENT OF TRANSPORTATION

G. Orsolini
PROJECT ENGINEER
T. Spoth
BRIDGE DESIGN MANAGER

BRIDGE NO. 28-0352L
KILOMETER POST 0.01

# CARQUINEZ BRIDGE & OVERHEAD
# TIE DOWN HOUSING NO. 2

ORIGINAL SCALE IN MILLIMETERS FOR REDUCED PLANS 0 10 20 30 40 50 60 70 80 90 100

CU 04
EA 013011

DISREGARD PRINTS BEARING EARLIER REVISION DATES

REVISION DATES (PRELIMINARY STAGE ONLY) 4/24/98 9/18/98 2/18/98 1/8/99 1/18/99 2/16/99 6/11/99

SHEET 36 OF 348

FILE => eplr12_20082754
PEN TABLE=>$PEN$
FILE => eplr12_20082754 DATE PLOTTED => 20-JUL-1999 TIME PLOTTED => 08:31
$SERVNAME => TFP1CHF

| DIST. | COUNTY | ROUTE | KILOMETER POST TOTAL PROJECT | SHEET NO. | TOTAL SHEETS |
|---|---|---|---|---|---|
| 04 | CC, Sol | 80 | 22.0/22.7, 0.0/1.8 | 271 | 714 |

REGISTERED ENGINEER - CIVIL

7-12-99
PLANS APPROVAL DATE

The State of California or its officers or agents shall not be responsible for the accuracy or completeness of electronic copies of this plan sheet.

REGISTERED PROFESSIONAL ENGINEER G. L. Orsolini No. 44461 Exp. 3/31/02 CIVIL STATE OF CALIFORNIA

DE LEUW- PAC-STEINMAN
120 Howard Street, Suite 850
San Francisco, CA 94105

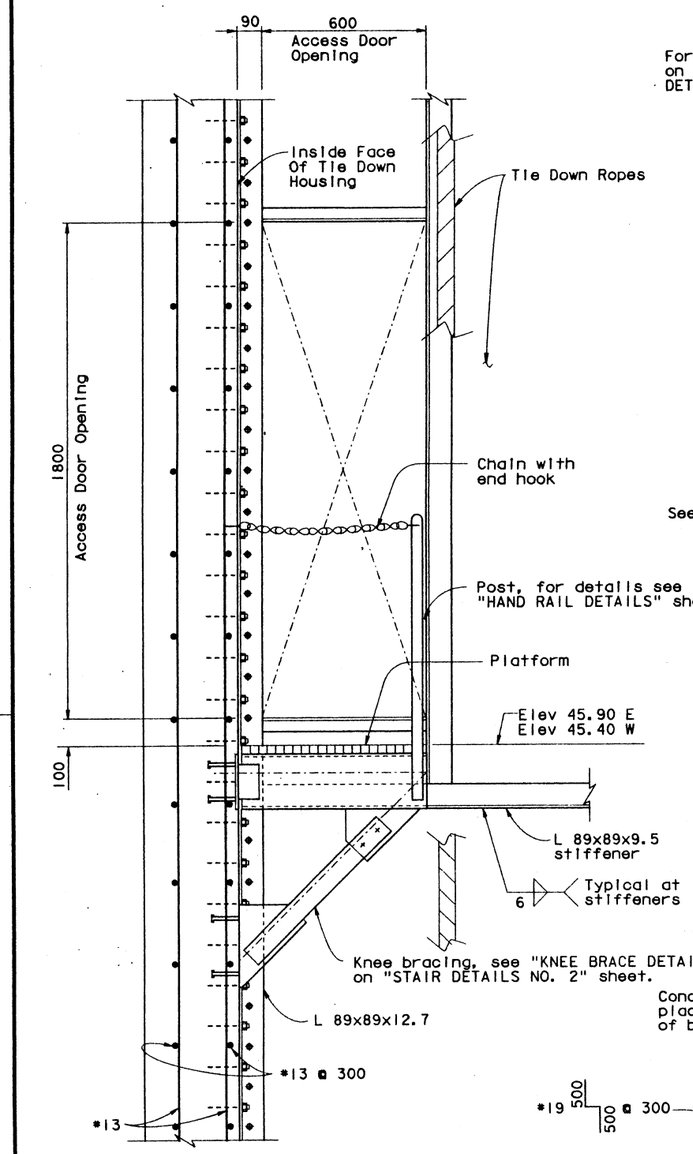


SECTION D-D
1 : 10

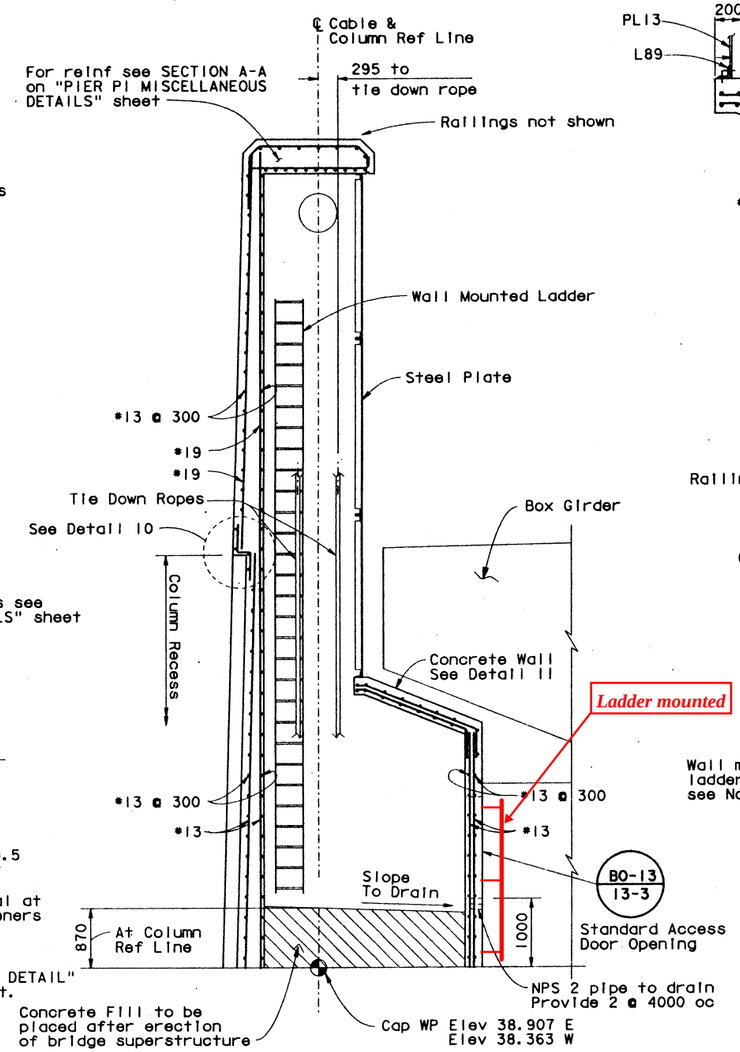


SECTION E-E
1 : 40

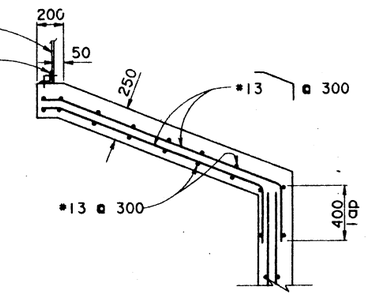


DETAIL 11
1 : 20

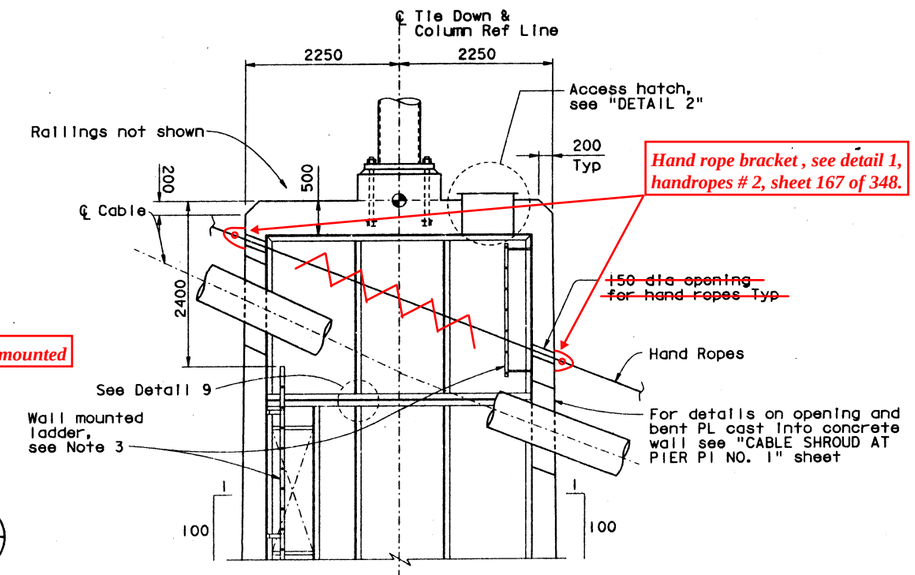


SECTION F-F
(HOUSING REINF NOT SHOWN FOR CLARITY)
1 : 40

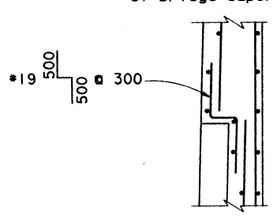


DETAIL 10
1 : 20

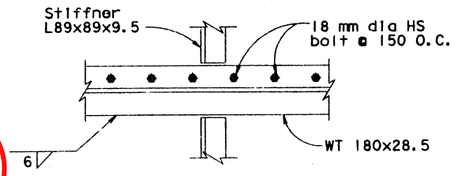


DETAIL 9
1 : 10

STATE OF CALIFORNIA
DEPARTMENT OF TRANSPORTATION
AS BUILT
STRUCTURE REPRESENTATIVE: Brian Boal
INITIAL: _____ DATE: October 15th, 2004

NOTES:

1. For location of SECTION D-D, see "TIE DOWN HOUSING NO. 2" sheet.
2. For location of SECTIONS E-E & F-F, see "TIE DOWN HOUSING NO. 1" sheet.
3. For ladder details, see "DETAIL P" on "STAIR DETAILS NO. 3" sheet.
4. For Detail 2, see "PIER P1 MISCELLANEOUS DETAILS" sheet.

ALL DIMENSIONS ARE IN MILLIMETERS UNLESS OTHERWISE SHOWN

V. Gastoni
DESIGN OVERSIGHT
Vincent Gastoni 3/31/99
SIGN OFF DATE
Rev. Date 6-2-97

| | | | |
|---|---|---|---|
| DESIGN | BY M. Sah | CHECKED | D. Morgan |
| DETAILS | BY R. Wilson | CHECKED | J. Quincy |
| QUANTITIES | BY M. Sah | CHECKED | E. Buno |

PREPARED FOR THE STATE OF CALIFORNIA DEPARTMENT OF TRANSPORTATION

G. Orsolini
PROJECT ENGINEER
T. Spoth
BRIDGE DESIGN MANAGER

BRIDGE NO. 28-0352L
KILOMETER POST 0.01

# CARQUINEZ BRIDGE & OVERHEAD
# TIE DOWN HOUSING No. 3

ORIGINAL SCALE IN MILLIMETERS FOR REDUCED PLANS 0 10 20 30 40 50 60 70 80 90 100

CU 04
EA 013011
FILE => epir13_20082923

DISREGARD PRINTS BEARING EARLIER REVISION DATES

REVISION DATES (PRELIMINARY STAGE ONLY) 4/24/98 9/18/98 2/16/98 1/18/99 1/18/99 2/15/99 4/27/99 6/11/99

SHEET 37 OF 348

PEN TABLE=> $PEN$

USERNAME => trmikesi DATE PLOTTED => 20-Jul-1999 TIME PLOTTED => 08:29

FILE => epir13_20082923

| DIST. | COUNTY | ROUTE | KILOMETER POST TOTAL PROJECT | SHEET NO. | TOTAL SHEETS |
|---|---|---|---|---|---|
| 04 | CC, Sol | 80 | 22.0/22.7, 0.0/1.8 | 272 | 714 |

Caltrans Metric

Gregory J. Orsolini
REGISTERED ENGINEER - CIVIL
7-12-99
PLANS APPROVAL DATE
REGISTERED PROFESSIONAL ENGINEER G. J. Orsolini No. 44461 Exp. 3/31/02 CIVIL STATE OF CALIFORNIA

The State of California or its officers or agents shall not be responsible for the accuracy or completeness of electronic copies of this plan sheet.

DE LEUW- PAC-STEINMAN
120 Howard Street, Suite 850
San Francisco, CA 94105

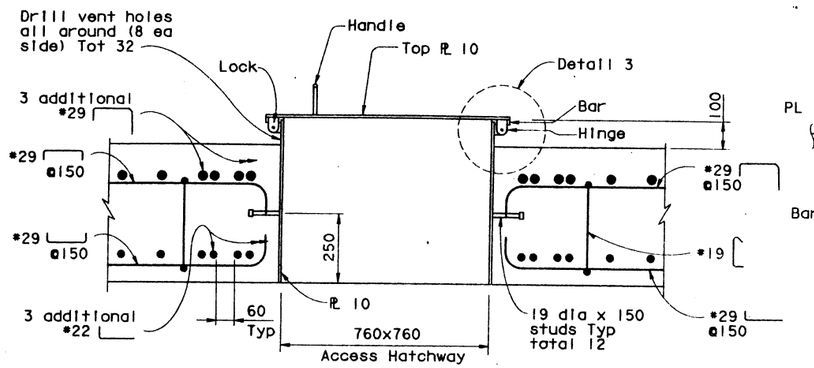


DETAIL 2: ACCESS HATCH
1 : 10

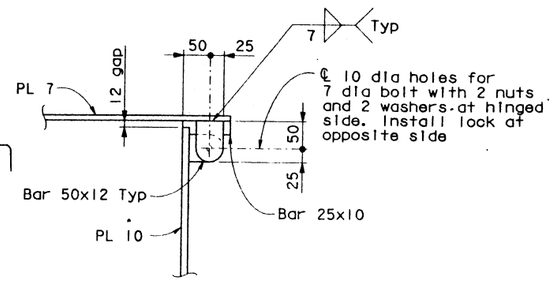


DETAIL 3
1:5

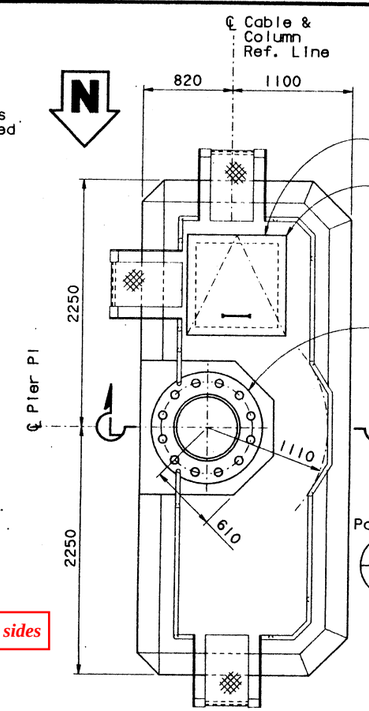


ROOF PLAN-PIER PI
1:25

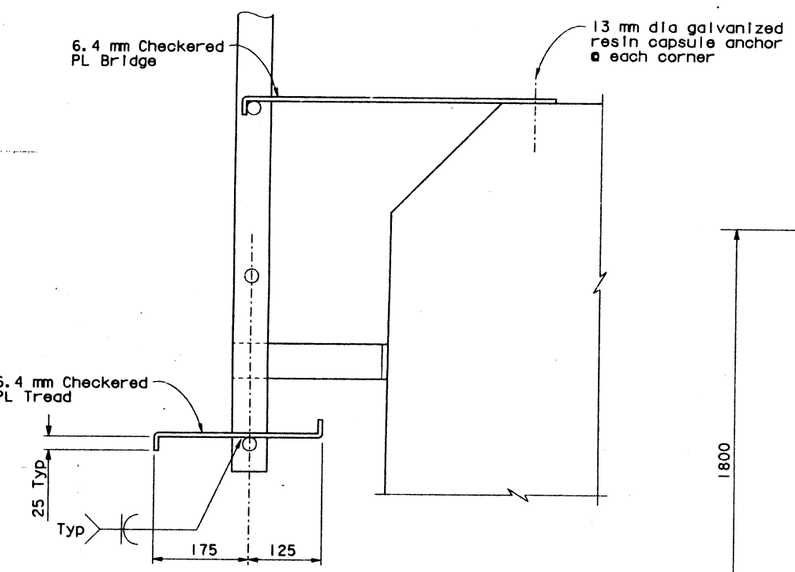


DETAIL 4
1:5

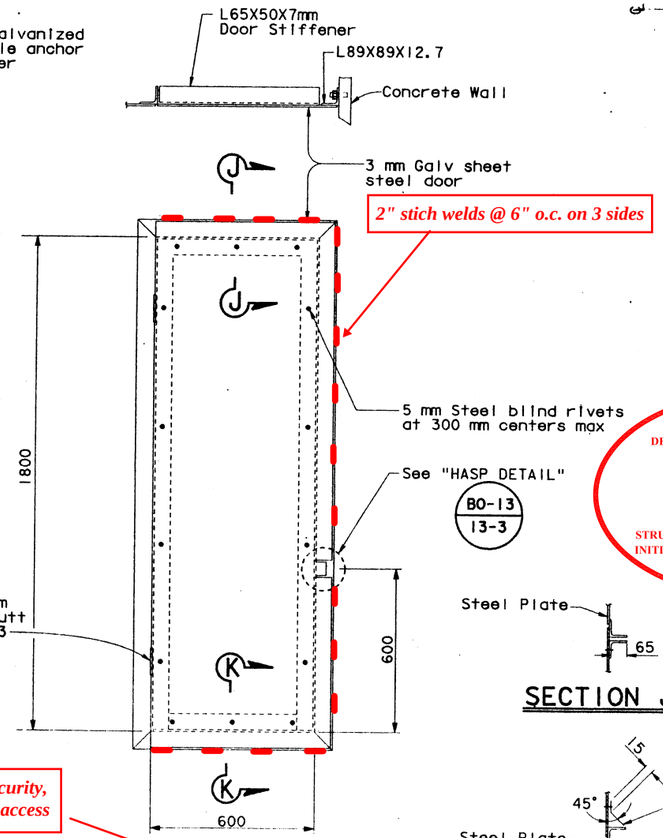


DETAIL 6: ACCESS DOOR
1:10

Welded shut for security, no longer provides access

STATE OF CALIFORNIA
DEPARTMENT OF TRANSPORTATION
AS BUILT
STRUCTURE REPRESENTATIVE: Brian Boal
INITIAL: _____ DATE: October 15th, 2004

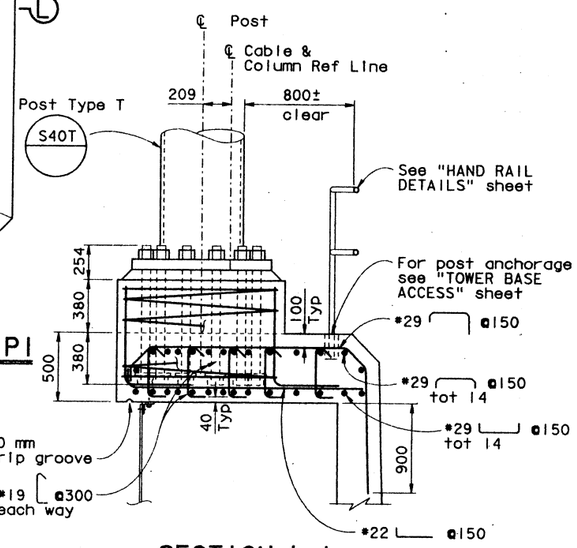


SECTION L-L
1 : 20




SECTION J-J

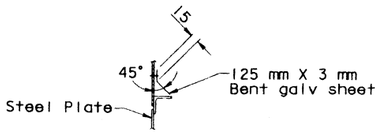


SECTION K-K

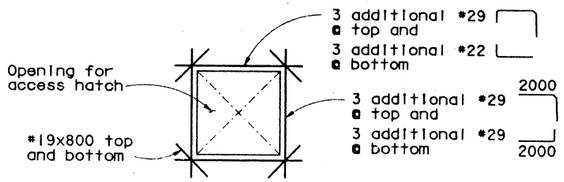


ADDITIONAL REINF AROUND ACCESS HATCH OPENING

NOTE:
Center additional rebars at ℄ opening or at corners

ALL DIMENSIONS ARE IN MILLIMETERS UNLESS OTHERWISE SHOWN

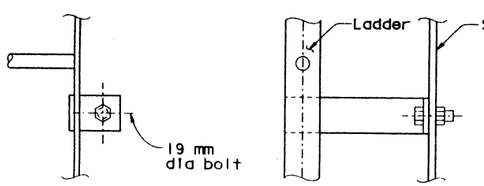


DETAIL 7
1:5

V. Gastoni
DESIGN OVERSIGHT
Vincent Gastoni 3/31/99
SIGN OFF DATE
Rev. Date 6-2-97

| | | | |
|---|---|---|---|
| DESIGN | BY M. Sah | CHECKED | D. Morgan |
| DETAILS | BY R. Wilson | CHECKED | J. Quincy |
| QUANTITIES | BY M. Sah | CHECKED | E. Buno |

ORIGINAL SCALE IN MILLIMETERS FOR REDUCED PLANS 0 10 20 30 40 50 60 70 80 90 100

PREPARED FOR THE STATE OF CALIFORNIA DEPARTMENT OF TRANSPORTATION

G. Orsolini
PROJECT ENGINEER
T. Spoth
BRIDGE DESIGN MANAGER

CU 04
EA 013011

FILE => epfr14_20082924

BRIDGE NO. 28-0352L
KILOMETER POST 0.01

# CARQUINEZ BRIDGE & OVERHEAD PIER PI MISCELLANEOUS DETAILS

DISREGARD PRINTS BEARING EARLIER REVISION DATES

REVISION DATES (PRELIMINARY STATE ONLY) 4/24/96 9/18/98 12/17/98 1/8/99 11/18/99 2/16/99 6/11/99

SHEET 38 OF 348

PEN TABLE=> $PENS

FILE => epfr14_20082924
TIME PLOTTED => 08:31
DATE PLOTTED => 20-JUL-1999
LSENAME => tmilkes

| DIST. | COUNTY | ROUTE | KILOMETER POST TOTAL PROJECT | SHEET NO. | TOTAL SHEETS |
|---|---|---|---|---|---|
| 04 | CC, Sol | 80 | 22.0/22.7, 0.0/1.8 | 273 | 714 |

Caltrans Metric

Gregory J. Orsolini
REGISTERED ENGINEER - CIVIL
7-12-99
PLANS APPROVAL DATE

REGISTERED PROFESSIONAL ENGINEER G. J. Orsolini No. 44461 Exp. 3/31/02 CIVIL STATE OF CALIFORNIA

The State of California or its officers or agents shall not be responsible for the accuracy or completeness of electronic copies of this plan sheet.

DE LEUW- PAC-STEINMAN
120 Howard Street, Suite 850
San Francisco, CA 94105

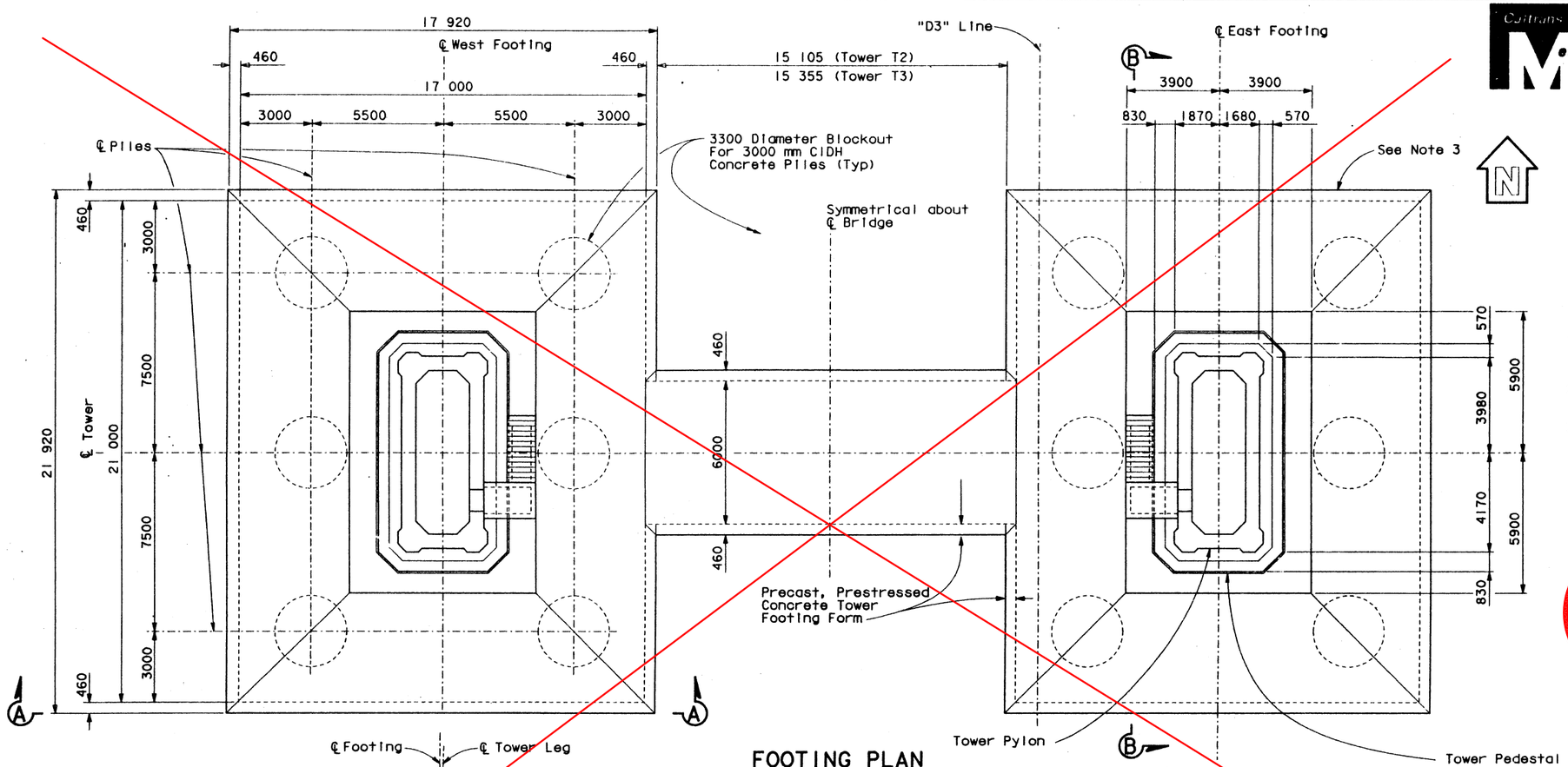


FOOTING PLAN
1 : 100

NOTES:

1. For pile details, see "Pile Details No. 2" sheet.
2. Tower T2 shown; Tower T3 similar except as noted.
3. For pier protection details at Tower T3, see "TOWER T3 PIER PROTECTION NO. 2" AND "NO. 3" sheets.

STATE OF CALIFORNIA
DEPARTMENT OF TRANSPORTATION

AS BUILT
SEE ATTACHMENTS

STRUCTURE REPRESENTATIVE: Brian Boal
INITIAL:_____ DATE: October 15th, 2004

*For Tower 2 security details, see attachment #21.91. For as built see attachments #17.01 thru #17.14 (Ben G. Gerwick Construction drawings).*

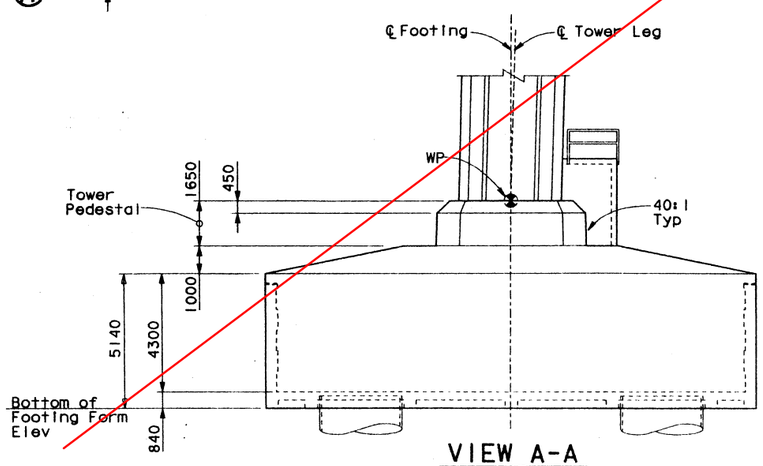


VIEW A-A
1 : 100

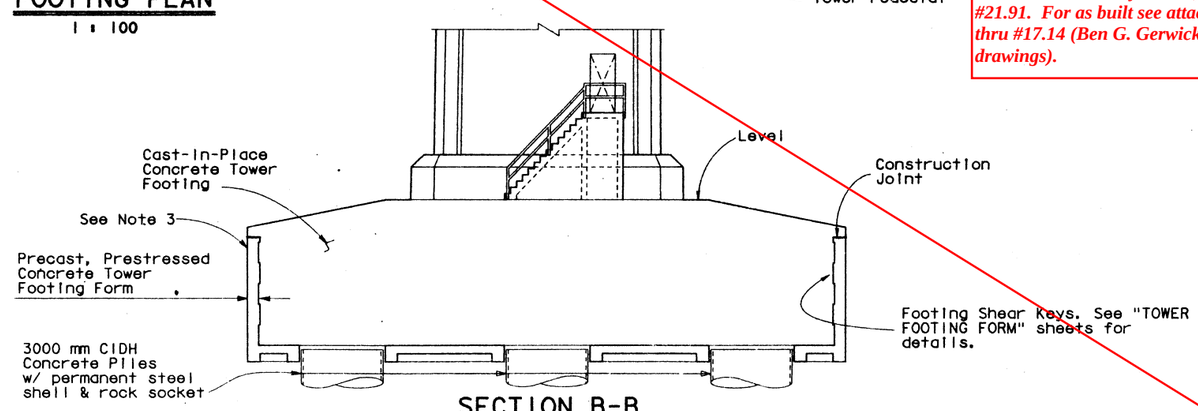


SECTION B-B
1 : 100

ALL DIMENSIONS ARE IN MILLIMETERS UNLESS OTHERWISE SHOWN

| | | | | | |
|---|---|---|---|---|---|
| V. Gastoni<br>DESIGN OVERSIGHT<br>Vincent Gastoni 3/31/99<br>SIGN OFF DATE | | DESIGN BY I. SAVAGE | CHECKED D. MORGAN/J. QUINCY | PREPARED FOR THE STATE OF CALIFORNIA DEPARTMENT OF TRANSPORTATION | G. Orsolini<br>PROJECT ENGINEER<br>T. Spoth<br>BRIDGE DESIGN MANAGER |
| Rev. Date 6-2-97 | | DETAILS BY R. WILSON | CHECKED D. MORGAN/J. QUINCY | | |
| | | QUANTITIES BY I. SAVAGE | CHECKED R. BATEMAN | | |

BRIDGE NO. 28-0352L
KILOMETER POST 0.01

CARQUINEZ BRIDGE & OVERHEAD
TOWER FOOTING LAYOUT

ORIGINAL SCALE IN MILLIMETERS FOR REDUCED PLANS 0 10 20 30 40 50 60 70 80 90 100

CU 04
EA 013011

DISREGARD PRINTS BEARING EARLIER REVISION DATES

REVISION DATES (PRELIMINARY STAGE ONLY) 4/24/98 9/18/98 2/14/98 1/8/99 1/14/99 2/16/99

SHEET 39 OF 348

FILE => etf101_20082925
PEN TABLE=>$PEN$
USERNAME => trmikes DATE PLOTTED => 20-Jul-1999 TIME PLOTTED => 08:32

| DIST. | COUNTY | ROUTE | KILOMETER POST TOTAL PROJECT | SHEET NO. | TOTAL SHEETS |
|---|---|---|---|---|---|
| 04 | CC, Sol | 80 | 22.0/22.7, 0.0/1.8 | 274 | 714 |

Caltrans Metric

REGISTERED ENGINEER - CIVIL

7-12-99

PLANS APPROVAL DATE

REGISTERED PROFESSIONAL ENGINEER G. I. Orsolini No. 44461 Exp. 3/31/02 CIVIL STATE OF CALIFORNIA

The State of California or its officers or agents shall not be responsible for the accuracy or completeness of electronic copies of this plan sheet.

DE LEUW- PAC-STEINMAN
120 Howard Street, Suite 850
San Francisco, CA 94105

STATE OF CALIFORNIA
DEPARTMENT OF TRANSPORTATION

**AS BUILT**

STRUCTURE REPRESENTATIVE: Brian Boal
INITIAL:_____ DATE: October 15th, 2004

*Assumed method not used*
*Delete Sheet*

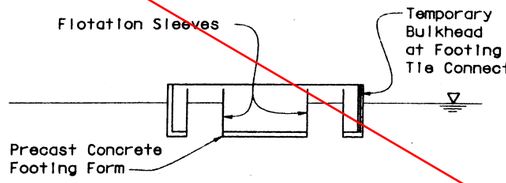


ELEVATION
No Scale

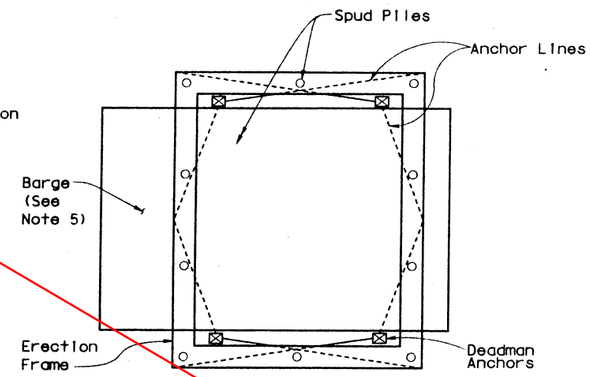


PLAN A-A
No Scale

Step 1A: (off-site)

A. Precast Tower Footing Form, including flotation sleeves and temporary bulkheads.
B. Prestress Bottom Grid and Walls.
C. Prepare Footing Form for towing to site.

NOTES

1. Construction Sequence shown for placing Tower Foundations is assumed. Contractor shall submit complete construction sequence to the Engineer for approval.
2. For additional assumed construction steps, see "FOOTING CONSTRUCTION SEQUENCE NO. 2" and "NO. 3" SHEETS.
3. Field conditions for placing Tower Foundations have been assumed. The Contractor shall varify field conditions prior to submitting the complete construction sequence.
4. Mudline O.G. and Rock Line shown are not to scale.
5. Orientation of Barge and Erection Frame at Tower T2 shall not conflict with Construction Area Enclosure.

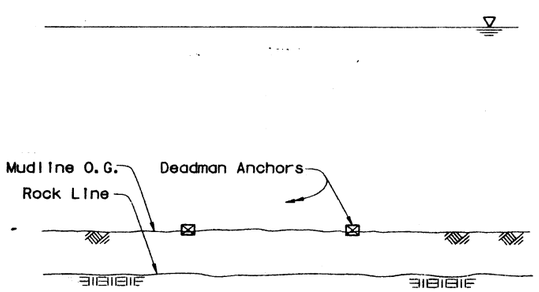


ELEVATION
No Scale

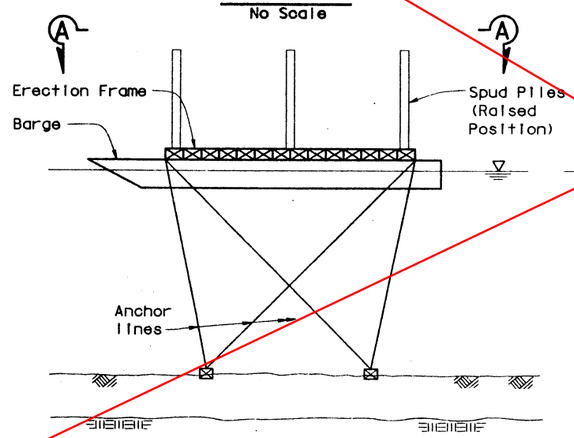


ELEVATION
No Scale

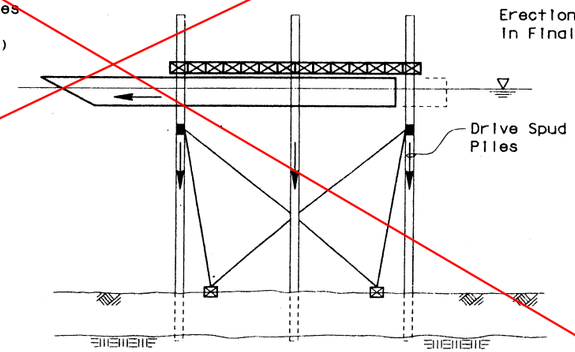


ELEVATION
No Scale

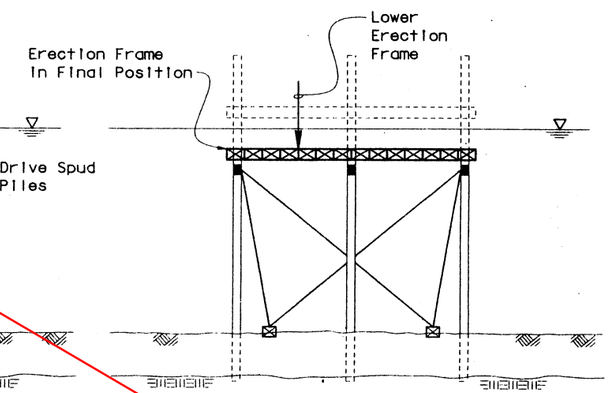


ELEVATION
No Scale

Step 1B: (on-site)

A. Construct Temporary Access Trestle.
B. Place Deadman Anchors for stabilization of Tower Footing Erection Frame.

Step 2:

A. Move Erection Frame to site on barge. Spud piles are in raised position.
B. Anchor Barge and align Erection Frame.

Step 3:

A. Drive Spud Piles outside Barge Footprint.
B. Pin Erection Frame in place on high tide.
C. Anchor Spud Piles.
D. Float out Barge on low tide.

Step 4:

A. Drive remaining Spud Piles.
B. Lower Erection Frame to Final Elevation and lock in place.
C. Cut off Spud Piles to allow Tower Footing Form to be floated into position.

ALL DIMENSIONS ARE IN MILLIMETERS UNLESS OTHERWISE SHOWN

V. Gastoni
DESIGN OVERSIGHT
Vincent Gastoni 3/31/99
SIGN OFF DATE
Rev. Date 6-2-97

| | BY | CHECKED |
|---|---|---|
| DESIGN | G. ORSOLINI | J. QUINCY |
| DETAILS | R. PENG | J. QUINCY |
| QUANTITIES | I. Savage | R. BATEMAN |

PREPARED FOR THE STATE OF CALIFORNIA DEPARTMENT OF TRANSPORTATION

G. Orsolini
PROJECT ENGINEER
T. Spoth
BRIDGE DESIGN MANAGER

BRIDGE NO. 28-0352L
KILOMETER POST 0.01

CARQUINEZ BRIDGE & OVERHEAD
FOOTING CONST SEQUENCE NO. 1

ORIGINAL SCALE IN MILLIMETERS FOR REDUCED PLANS 0 10 20 30 40 50 60 70 80 90 100

CU 04
EA 013011

DISREGARD PRINTS BEARING EARLIER REVISION DATES

REVISION DATES (PRELIMINARY STAGE ONLY) 4/24/98 9/18/98 2/24/98 1/8/99 2/16/99

SHEET 40 OF 348

FILE => etffg01_20082926

PEN TABLE => $PEN$

FILE => etffg01_20082926 TIME PLOTTED => 08:33 DATE PLOTTED => 20-Jul-1999 USERNAME => rrmi-ebsi

| DIST. | COUNTY | ROUTE | KILOMETER POST TOTAL PROJECT | SHEET NO. | TOTAL SHEETS |
|---|---|---|---|---|---|
| 04 | CC, Sol | 80 | 22.0/22.7, 0.0/1.8 | 255 | 714 |

REGISTERED ENGINEER - CIVIL

7-12-99
PLANS APPROVAL DATE

REGISTERED PROFESSIONAL ENGINEER G. L. Orsolini No. 44461 Exp. 3/31/02 CIVIL STATE OF CALIFORNIA

The State of California or its officers or agents shall not be responsible for the accuracy or completeness of electronic copies of this plan sheet.

DE LEUW- PAC-STEINMAN
120 Howard Street, Suite 850
San Francisco, CA 94105

## LEGEND

New Construction

Existing Structure

Limits of building removal (for details, see Road Plans)

**NOTE:**
For excavation and grading limits at North Anchorage, see "ROAD PLANS".

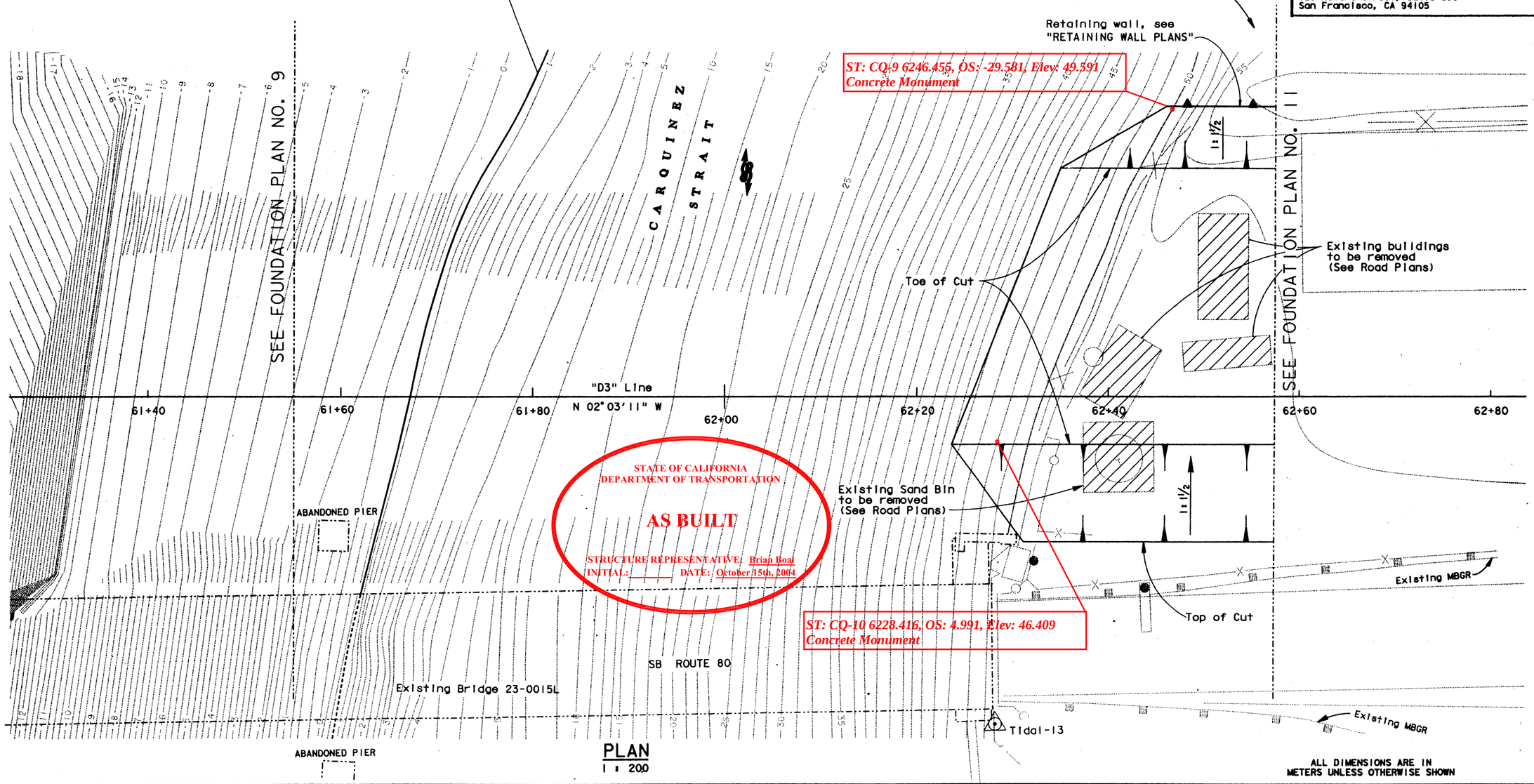


STATE OF CALIFORNIA
DEPARTMENT OF TRANSPORTATION
AS BUILT
STRUCTURE REPRESENTATIVE: Brian Boal
INITIAL: _____ DATE: October 15th, 2004

PLAN
1 : 200

ALL DIMENSIONS ARE IN METERS UNLESS OTHERWISE SHOWN

C. Y. Chen 2/16/99
GEOTECHNICAL PROFESSIONAL APPROVAL DATE

| | | | | | | | |
|---|---|---|---|---|---|---|---|
| V. Gastoni | PHOTOGRAMMETRY AS OF: | DRAWN | BY | DESIGN | BY G. Orsolini | CHECKED J. Quincy | |
| DESIGN OVERSIGHT Vamsi Gastoni 3/31/99 | SURVEYED BY | TRACED | BY | DETAILS | BY H. Gawlu | CHECKED J. Quincy | |
| SIGN OFF DATE | FIELD CHECKED BY | CHECKED | BY | QUANTITIES | BY G. Orsolini | CHECKED R. Bateman | |

Rev. Date: 6-2-97

ORIGINAL SCALE IN MILLIMETERS FOR REDUCED PLANS 0 10 20 30 40 50 60 70 80 90 100

PREPARED FOR THE STATE OF CALIFORNIA DEPARTMENT OF TRANSPORTATION

G. Orsolini
PROJECT ENGINEER
T. Spoth
BRIDGE DESIGN MANAGER

CU 04
EA 013011

FILE => cfndl0_20082218

BRIDGE NO. 28-0352L
KILOMETER POST 0.01

# CARQUINEZ BRIDGE & OVERHEAD FOUNDATION PLAN NO. 10

DISREGARD PRINTS BEARING EARLIER REVISION DATES

REVISION DATES (PRELIMINARY STAGE ONLY): 4/24/98 9/18/98 12/14/98 1/8/99 1/18/99 2/18/99 5/11/99

SHEET 21 OF 348

PEN TABLE=>@PEN@

USERNAME => tranoda DATE PLOTTED => 20-JUL-1999 TIME PLOTTED => 08:28 FILE => cfndl0_20082218

| NO | R | Δ | T | L |
|---|---|---|---|---|
| 2 | 700.000 | 16°55'48" | 104.179 | 206.840 |

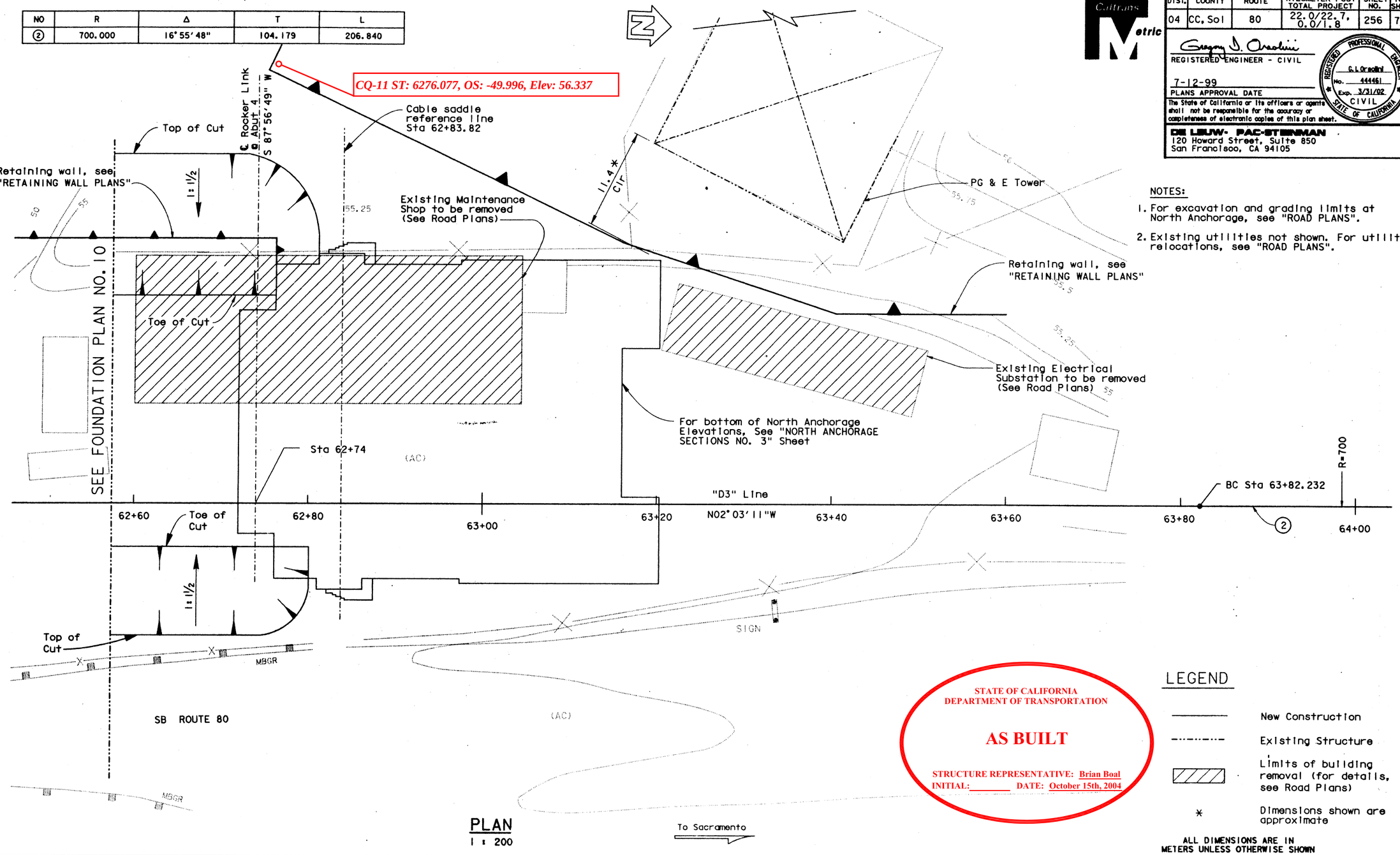


PLAN
1 : 200

| DIST. | COUNTY | ROUTE | KILOMETER POST TOTAL PROJECT | SHEET NO. | TOTAL SHEETS |
|---|---|---|---|---|---|
| 04 | CC, Sol | 80 | 22.0/22.7, 0.0/1.8 | 256 | 714 |

Caltrans Metric

REGISTERED ENGINEER - CIVIL
7-12-99
PLANS APPROVAL DATE
The State of California or its officers or agents shall not be responsible for the accuracy or completeness of electronic copies of this plan sheet.

REGISTERED PROFESSIONAL ENGINEER G. L. Orsolini No. 44461 Exp. 3/31/02 CIVIL STATE OF CALIFORNIA

DE LEUW- PAC-STEINMAN
120 Howard Street, Suite 850
San Francisco, CA 94105

NOTES:

1. For excavation and grading limits at North Anchorage, see "ROAD PLANS".
2. Existing utilities not shown. For utility relocations, see "ROAD PLANS".

STATE OF CALIFORNIA
DEPARTMENT OF TRANSPORTATION
AS BUILT
STRUCTURE REPRESENTATIVE: Brian Boal
INITIAL:_____ DATE: October 15th, 2004

LEGEND

- New Construction
- Existing Structure
- Limits of building removal (for details, see Road Plans)
- * Dimensions shown are approximate

ALL DIMENSIONS ARE IN METERS UNLESS OTHERWISE SHOWN

GEOTECHNICAL PROFESSIONAL APPROVAL DATE 2/18/99

V. Gastoni
DESIGN OVERSIGHT
3/31/99
SIGN OFF DATE

PHOTOGRAMMETRY AS OF:
SURVEYED BY
FIELD CHECKED BY

DRAWN BY
TRACED BY
CHECKED BY

DESIGN BY G. Orsolini CHECKED J. Quincy
DETAILS BY H. Gawlu CHECKED J. Quincy
QUANTITIES BY G. Orsolini CHECKED R. Bateman

PREPARED FOR THE STATE OF CALIFORNIA DEPARTMENT OF TRANSPORTATION

G. Orsolini
PROJECT ENGINEER
T. Spoth
BRIDGE DESIGN MANAGER

CU 04
EA 013011

BRIDGE NO. 28-0352L
KILOMETER POST 0.01

# CARQUINEZ BRIDGE & OVERHEAD
# FOUNDATION PLAN NO. 11

Rev. Date: 6-2-97

ORIGINAL SCALE IN MILLIMETERS FOR REDUCED PLANS 0 10 20 30 40 50 60 70 80 90 100

DISREGARD PRINTS BEARING EARLIER REVISION DATES

REVISION DATES (PRELIMINARY STAGE ONLY) 4/24/98 9/18/98 12/16/98 1/8/99 1/18/99 2/16/99 5/11/99

SHEET 22 OF 348

FILE => cfndll_20082217
PEN TABLE=>@PEN@

USERNAME => troonoa DATE PLOTTED => 20-Jul-1999 TIME PLOTTED => 08:27

| DIST. | COUNTY | ROUTE | KILOMETER POST TOTAL PROJECT | SHEET NO. | TOTAL SHEETS |
|---|---|---|---|---|---|
| 04 | CC, Sol | 80 | 22.0/22.7, 0.0/1.8 | 257 | 714 |

REGISTERED ENGINEER - CIVIL

7-12-99

PLANS APPROVAL DATE

REGISTERED PROFESSIONAL ENGINEER G. L. Orsolini No. 44461 Exp. 3/31/02 CIVIL STATE OF CALIFORNIA

The State of California or its officers or agents shall not be responsible for the accuracy or completeness of electronic copies of this plan sheet.

DE LEUW- PAC-STEINMAN
120 Howard Street, Suite 850
San Francisco, CA 94105

Notes:

1. For concrete at the North Anchorage and North and South Pier Protection, see "CONCRETE STRENGTH & TYPE LIMITS NO. 2" sheet.

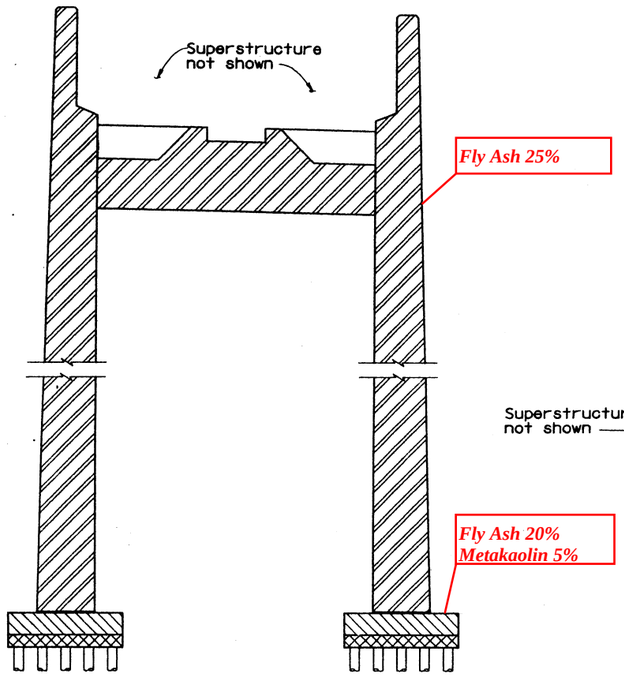


PIER P1
(Looking South)
No Scale

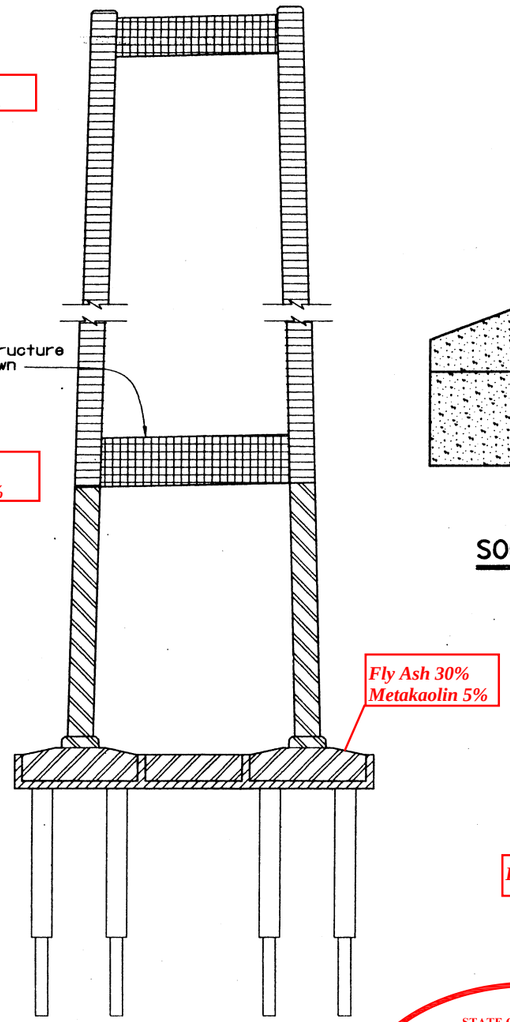


TOWERS T2 & T3
No Scale

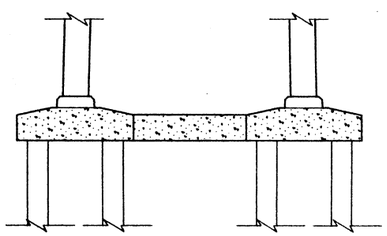

TOWERS T2 & T3 MASS CONCRETE
No Scale

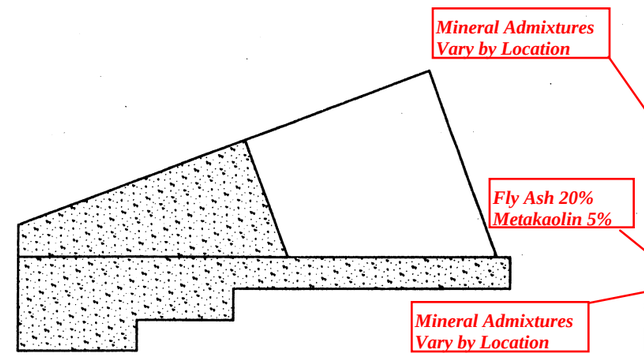


SOUTH ANCHORAGE MASS CONCRETE
No Scale

LEGEND:

- Structural Concrete, Bridge (f'c = 25 MPa @ 28 days) — Fly Ash 35%
- Structural Concrete, Bridge (f'c = 28 MPa @ 28 days)
- Structural Concrete, Bridge (f'c = 35 MPa @ 28 days) — Fly Ash 25%
- Structural Concrete, Bridge (f'c = 42 MPa @ 28 days) — Fly Ash 25%
- Structural Concrete, Bridge (f'c = 56 MPa @ 28 days)
- Structural Concrete, Bridge Footing (f'c = 25 MPa @ 28 days)
- Seal Course Concrete — Fly Ash 25%
- Precast, Prestressed Concrete Tower Footing Form (f'c = 42 MPa @ 28 days)
- Areas of Mass Concrete

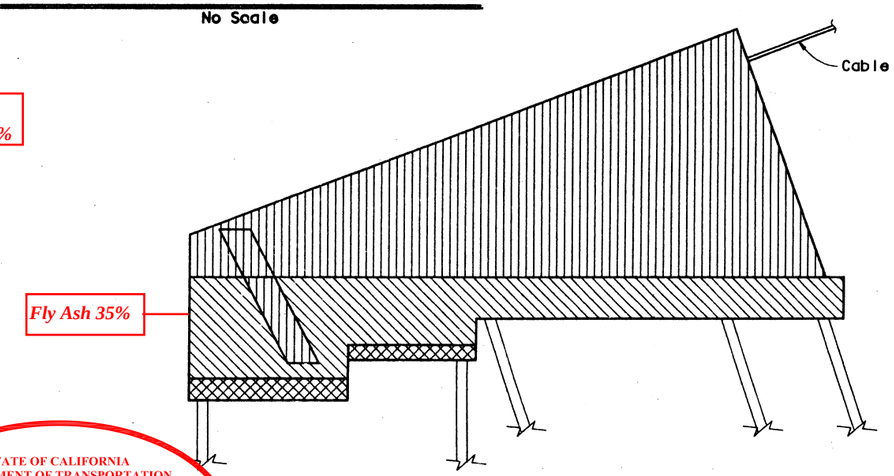


SOUTH ANCHORAGE
No Scale

STATE OF CALIFORNIA
DEPARTMENT OF TRANSPORTATION

AS BUILT

STRUCTURE REPRESENTATIVE: Brian Boal
INITIAL:_____ DATE: October 15th, 2004

ALL DIMENSIONS ARE IN MILLIMETERS UNLESS OTHERWISE SHOWN

V. Gastoni
DESIGN OVERSIGHT
Vernet Gastoni 3/31/99
SIGN OFF DATE
Rev. Date 6-2-97

| | BY | CHECKED |
|---|---|---|
| DESIGN | G. ORSOLINI | J. Quincy |
| DETAILS | R. PENG | J. Quincy |
| QUANTITIES | R. Mathur | R. Bateman |

ORIGINAL SCALE IN MILLIMETERS FOR REDUCED PLANS 0 10 20 30 40 50 60 70 80 90 100

PREPARED FOR THE STATE OF CALIFORNIA DEPARTMENT OF TRANSPORTATION

G. Orsolini
PROJECT ENGINEER
T. Spoth
BRIDGE DESIGN MANAGER

CU 04
EA 013011

BRIDGE NO. 28-0352L
KILOMETER POST 0.01

# CARQUINEZ BRIDGE & OVERHEAD
## CONCRETE STRENGTH & TYPE LIMITS NO. 1

DISREGARD PRINTS BEARING EARLIER REVISION DATES → REVISION DATES (PRELIMINARY STAGE ONLY) 4/28/94 3/18/98 2/16/98 1/8/99 1/18/99 5/16/99

SHEET 23 OF 348

FILE => dst101_20082210
PEN TABLE=>$PEN$

USERNAME => tromdo DATE PLOTTED => 20-JUL-1999 TIME PLOTTED => 08:26

| DIST. | COUNTY | ROUTE | KILOMETER POST TOTAL PROJECT | SHEET NO. | TOTAL SHEETS |
|---|---|---|---|---|---|
| 04 | CC, Sol | 80 | 22.0/22.7, 0.0/1.8 | 258 | 714 |

Caltrans Metric

Gregory J. Orsolini
REGISTERED ENGINEER - CIVIL
7-12-99
PLANS APPROVAL DATE

REGISTERED PROFESSIONAL ENGINEER G. J. Orsolini No. 44461 Exp. 3/31/02 CIVIL STATE OF CALIFORNIA

The State of California or its officers or agents shall not be responsible for the accuracy or completeness of electronic copies of this plan sheet.

DE LEUW- PAC-STEINMAN
120 Howard Street, Suite 850
San Francisco, CA 94105

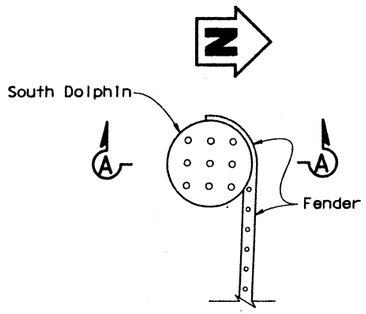


PARTIAL PLAN
South Pier Dolphin
No Scale

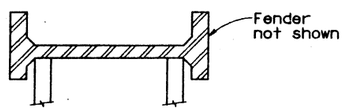


SECTION A-A
No Scale

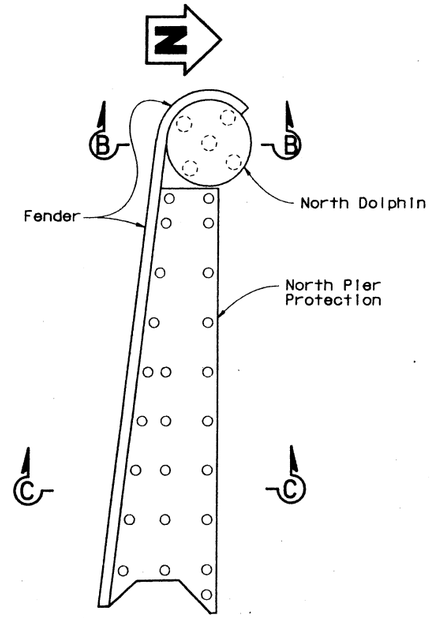


PARTIAL PLAN
North Pier Protection & Dolphin
No Scale

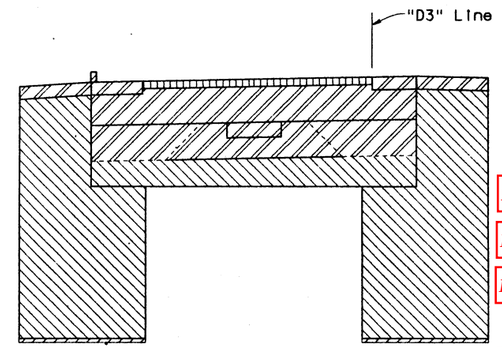


SECTION D-D
No Scale

LEGEND:

| | |
|---|---|
| Fly Ash 25% | Structural Concrete, Bridge (f'c = 28 MPa @ 28 days) |
| Fly Ash 35% | Structural Concrete, Bridge Footing (f'c = 25 MPa @ 28 days) |
| Fly Ash 25% | Structural Concrete, Approach slab (Type N) |
| | Areas of Mass Concrete |
| Fly Ash 25% | Seal Course Concrete |

STATE OF CALIFORNIA
DEPARTMENT OF TRANSPORTATION

AS BUILT

STRUCTURE REPRESENTATIVE: Brian Boal
INITIAL:_____ DATE: October 15th, 2004

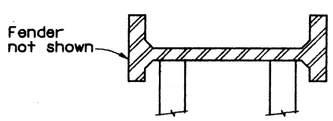


SECTION B-B
No Scale

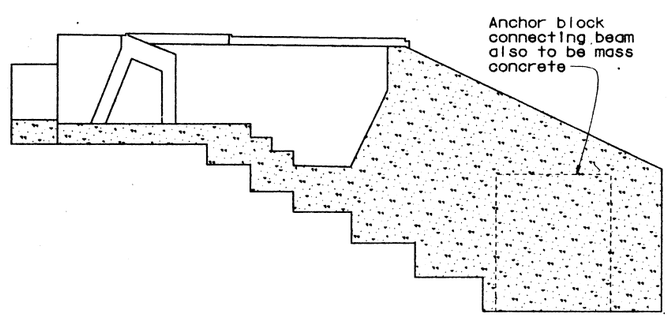


NORTH ANCHORAGE MASS CONCRETE
No Scale

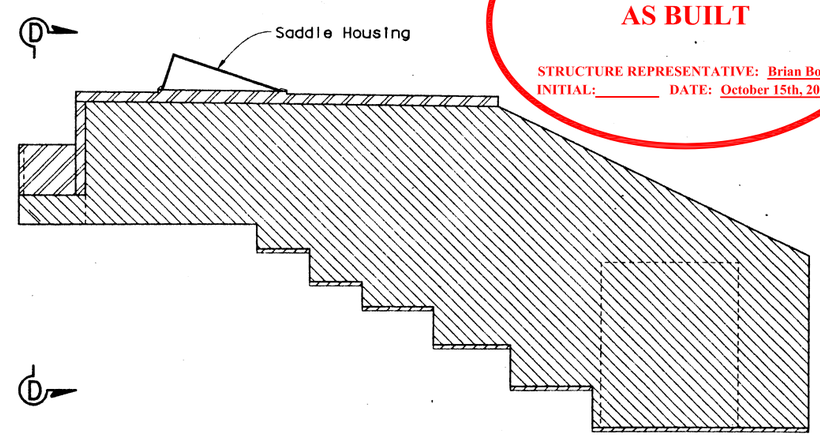


NORTH ANCHORAGE ELEVATION
No Scale

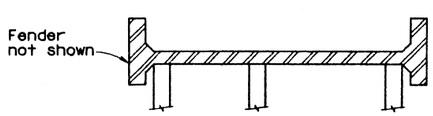


SECTION C-C
No Scale

ALL DIMENSIONS ARE IN
MILLIMETERS UNLESS OTHERWISE SHOWN

V. Gastoni
DESIGN OVERSIGHT
Vincent Gastoni 3/31/99
SIGN OFF DATE

Rev. Date 6-2-97

| | BY | CHECKED |
|---|---|---|
| DESIGN | G. ORSOLINI | J. Quincy |
| DETAILS | R. PENG | J. Quincy |
| QUANTITIES | R. Mathur | R. Bateman |

PREPARED FOR THE
STATE OF CALIFORNIA
DEPARTMENT OF TRANSPORTATION

G. Orsolini
PROJECT ENGINEER
T. Spoth
BRIDGE DESIGN MANAGER

BRIDGE NO. 28-0352L
KILOMETER POST 0.01

# CARQUINEZ BRIDGE & OVERHEAD
# CONCRETE STRENGTH & TYPE LIMITS NO. 2

ORIGINAL SCALE IN MILLIMETERS FOR REDUCED PLANS 0 10 20 30 40 50 60 70 80 90 100

CU 04
EA 013011

DISREGARD PRINTS BEARING EARLIER REVISION DATES

REVISION DATES (PRELIMINARY STAGE ONLY) 4/24/98 9/18/98 12/18/98 1/18/99 1/18/99 2/18/99 6/11/99

SHEET 24 OF 348

FILE => dst102_20082204
PEN TABLE=> $PEN$

USERNAME => tranmag DATE PLOTTED => 20-JUL-1999 TIME PLOTTED => 08:26
FILE => dst102_20082204

| DIST. | COUNTY | ROUTE | KILOMETER POST TOTAL PROJECT | SHEET NO. | TOTAL SHEETS |
|---|---|---|---|---|---|
| 04 | CC, Sol | 80 | 22.0/22.7, 0.0/1.8 | 259 | 714 |

REGISTERED ENGINEER - CIVIL
7-12-99
PLANS APPROVAL DATE
The State of California or its officers or agents shall not be responsible for the accuracy or completeness of electronic copies of this plan sheet.

REGISTERED PROFESSIONAL ENGINEER G. L. Orsolini No. 44461 Exp. 3/31/02 CIVIL STATE OF CALIFORNIA

DE LEUW- PAC-STERNMAN
120 Howard Street, Suite 850
San Francisco, CA 94105

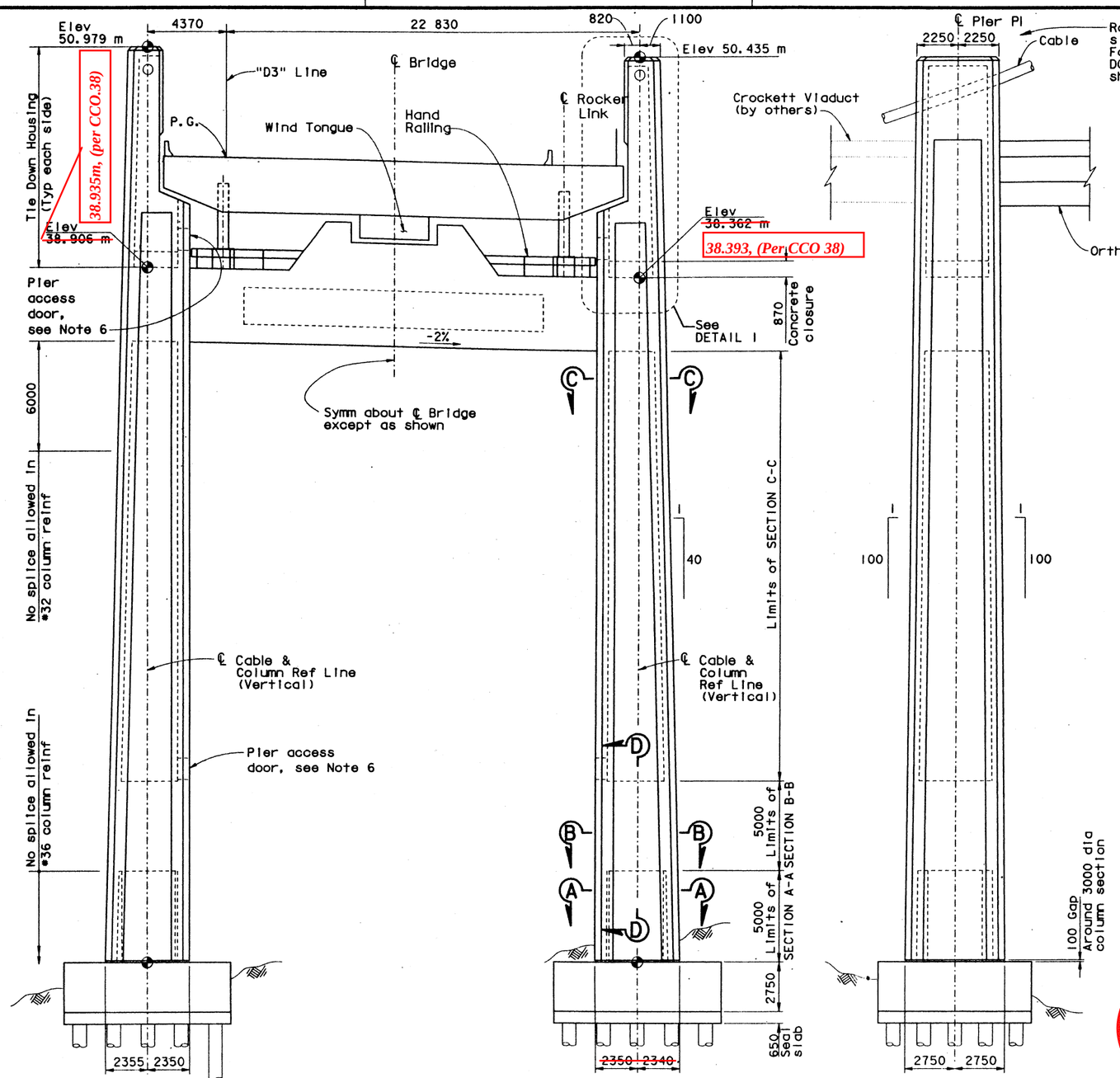


ELEVATION (LOOKING SOUTH)
1 : 125

ELEVATION (LOOKING WEST)
1 : 125

NOTES:

1. For SECTIONS A-A, B-B and C-C, see "PIER PI COLUMNS NO. 1" sheet.
2. For SECTION D-D, see "PIER PI COLUMN NO. 2" sheet.
3. For PIER CAP PLAN and ELEVATION, see "PIER PI CAP NO. 1" sheet.
4. For DETAIL 1, see "TIE DOWN HOUSING NO. 1" sheet.
5. Reinforcement in footing and within limits of SECTION A-A and B-B shall be epoxy coated.
6. For Pier PI access door, see "~~PIER PI ACCESS DETAILS~~" sheet. 38 of 348

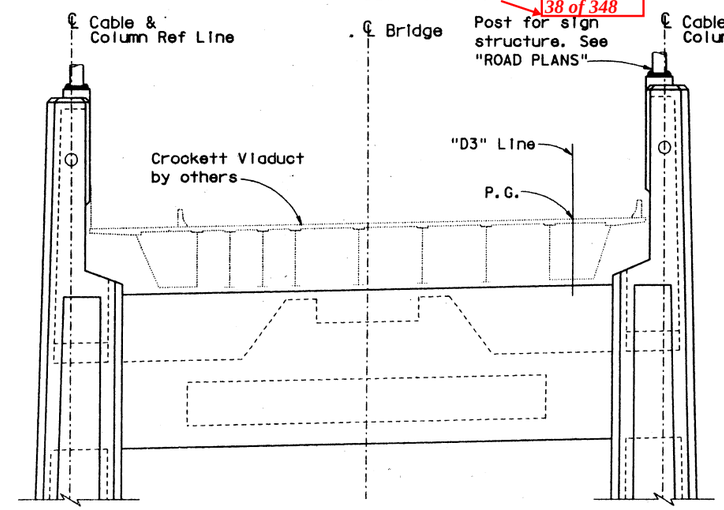


PARTIAL ELEVATION (LOOKING NORTH)
1 : 125

STATE OF CALIFORNIA
DEPARTMENT OF TRANSPORTATION
**AS BUILT**
SEE ATTACHMENTS & CHANGES SHOWN ON THIS SHEET
STRUCTURE REPRESENTATIVE: Brian Boal
INITIAL:_____ DATE: October 15th, 2004

*For Pier 1 Security Details, See Attachments #21.92, 21.102, & 21.103.*

ALL DIMENSIONS ARE IN MILLIMETERS UNLESS OTHERWISE SHOWN

V. Gastoni
DESIGN OVERSIGHT
Vincent Gastoni 3/31/99
SIGN OFF DATE
Rev. Date 6-2-97

| | | | |
|---|---|---|---|
| DESIGN | BY G. Matesic | CHECKED D. Morgan/A. Loof | |
| DETAILS | BY B. Wilson | CHECKED D. Morgan/A. Loof | |
| QUANTITIES | BY G. Matesic | CHECKED E. Buno | |

PREPARED FOR THE STATE OF CALIFORNIA DEPARTMENT OF TRANSPORTATION

G. Orsolini
PROJECT ENGINEER
T. Spoth
BRIDGE DESIGN MANAGER

CU 04
EA 013011

BRIDGE NO. 28-0352L
KILOMETER POST 0.01

# CARQUINEZ BRIDGE & OVERHEAD
# PIER PI GENERAL LAYOUT

DISREGARD PRINTS BEARING EARLIER REVISION DATES
REVISION DATES (PRELIMINARY STAGE ONLY) 4/24/98 9/18/98 2/14/98 12/8/98 1/15/99 2/16/99 6/11/99

SHEET 25 OF 348

ORIGINAL SCALE IN MILLIMETERS FOR REDUCED PLANS 0 10 20 30 40 50 60 70 80 90 100

FILE => epir01_20082203
PEN TABLE=> $PEN$
USERNAME => tranada DATE PLOTTED => 20-JUL-1999 TIME PLOTTED => 08:25

| DIST. | COUNTY | ROUTE | KILOMETER POST TOTAL PROJECT | SHEET NO. | TOTAL SHEETS |
|---|---|---|---|---|---|
| 04 | CC, Sol | 80 | 22.0/22.7, 0.0/1.8 | 260 | 714 |

Caltrans Metric

REGISTERED ENGINEER - CIVIL

7-12-99
PLANS APPROVAL DATE

REGISTERED PROFESSIONAL ENGINEER G. L. Orsolini No. 44461 Exp. 3/31/02 CIVIL STATE OF CALIFORNIA

The State of California or its officers or agents shall not be responsible for the accuracy or completeness of electronic copies of this plan sheet.

DE LEUW- PAC-STERMAN
120 Howard Street, Suite 850
San Francisco, CA 94105

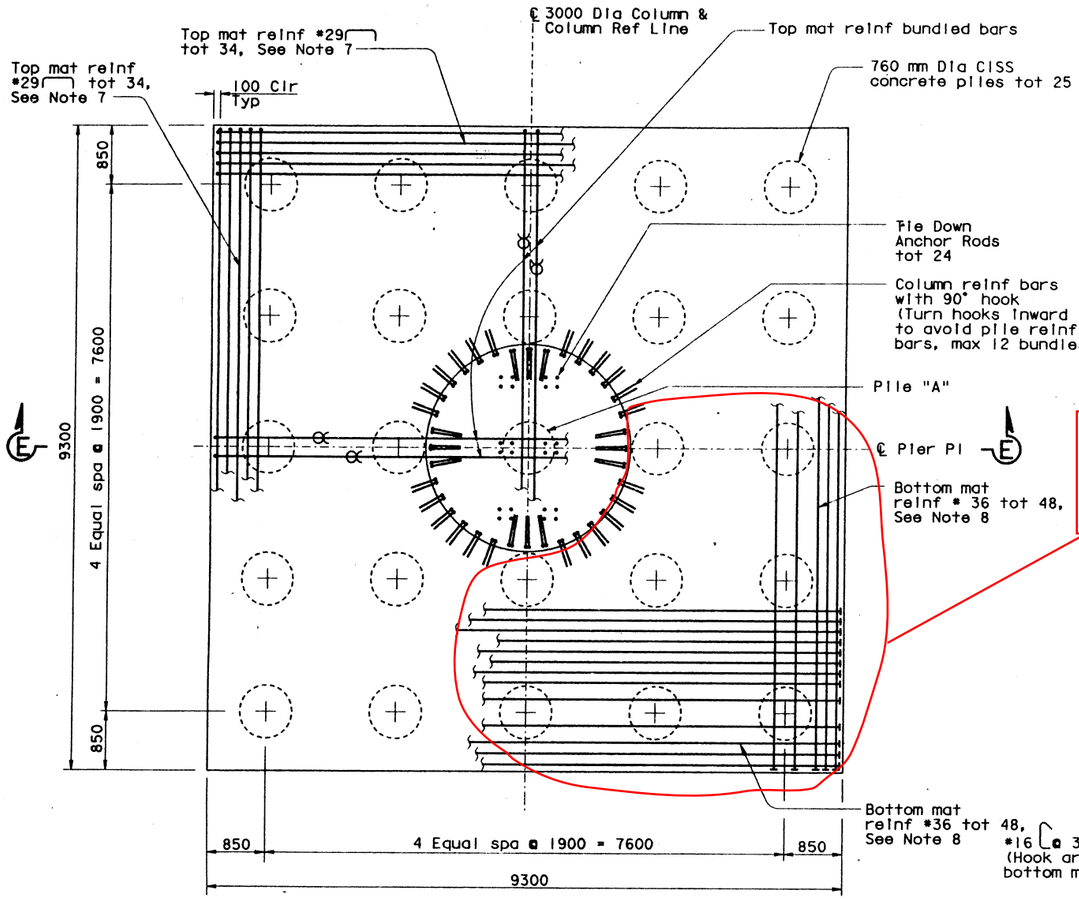


## FOOTING PLAN
1 : 40

*Due to excessive buried debris, locations of piles in SE corner of West Footing were modified and an additional pile was placed. Precise pile location not available.*

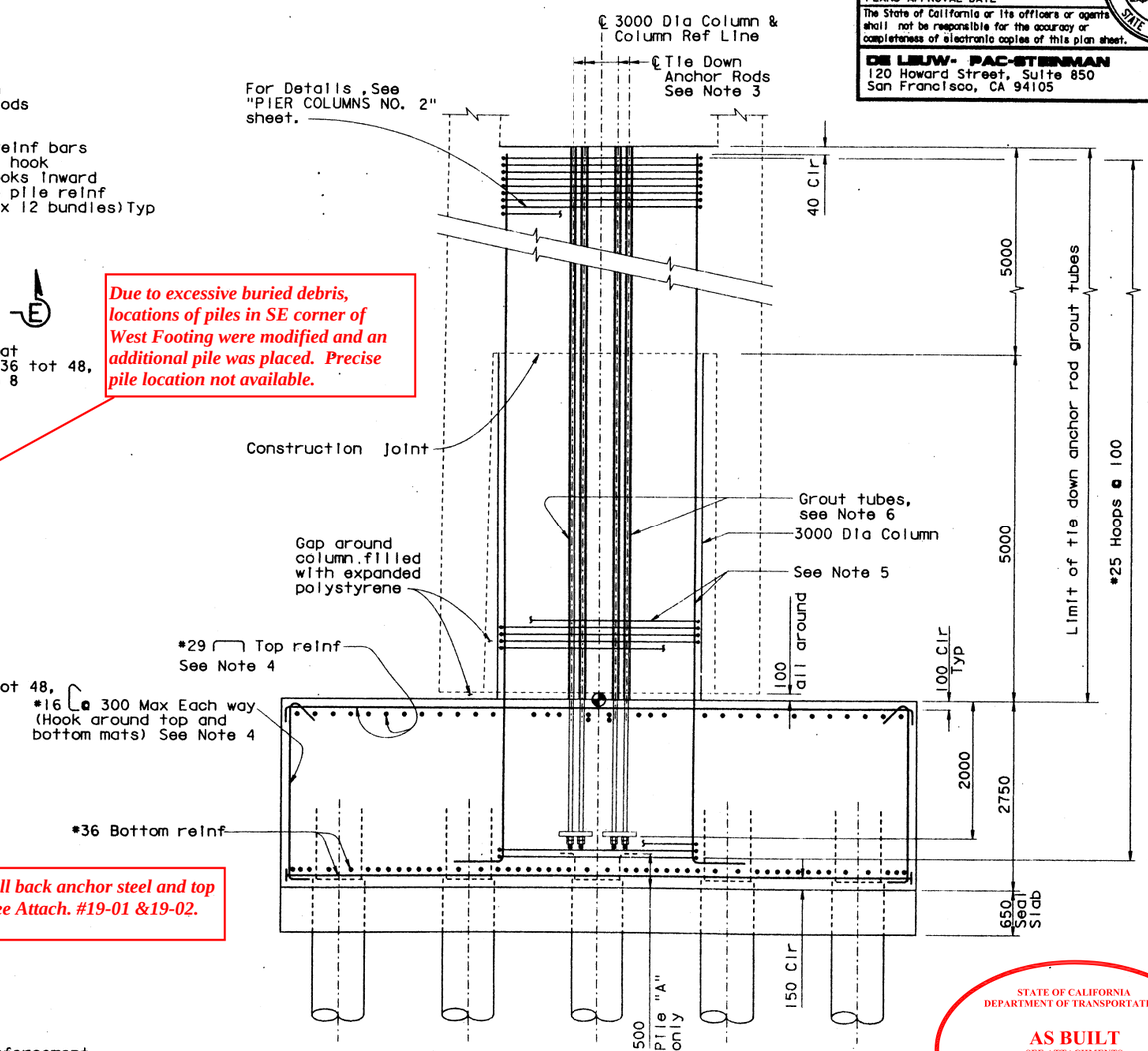


*For tower pull back anchor steel and top rebar mat, See Attach. #19-01 &19-02.*

(WEST SIDE SHOWN, EAST SIDE SIMILAR)

## SECTION E-E
1 : 40

## NOTES:

1. All reinforcement in footing shall be epoxy coated.
2. For 760mm CISS concrete pile details, see "PILE DETAILS NO. 1" sheet.
3. For cable tie down details, see "CABLE TIE DOWN AT PIER PI NOS. 1 THROUGH 6" sheets.
4. For additional footing reinforcement, see "PIER PI FOOTINGS NO. 2" sheet.
5. For column reinforcement, see "PIER PI COLUMNS NO. 1" sheet.
6. Pressure grout around tie down anchor rods placed in grout tubes following erection of box girder superstructure. Place grout from bottom to top.
7. Place 10 bars through 3000 dia column (min) top mat.
8. Place 2 bars through each pile (min) bottom mat.

LEGEND

—┤ Indicates welded headed bar reinforcement

STATE OF CALIFORNIA
DEPARTMENT OF TRANSPORTATION
AS BUILT
SEE ATTACHMENTS
STRUCTURE REPRESENTATIVE: Brian Boal
INITIAL: _____ DATE: October 15th, 2004

ALL DIMENSIONS ARE IN MILLIMETERS UNLESS OTHERWISE SHOWN

V. Gastoni
DESIGN OVERSIGHT
Vincent Gastoni 3/31/99
SIGN OFF DATE
Rev. Date 8-2-97

| | BY | CHECKED |
|---|---|---|
| DESIGN | G. Matesic | D. Morgan/J. Downing |
| DETAILS | B. Wilson | D. Morgan/J. Downing |
| QUANTITIES | G. Matesic | E. Buno |

PREPARED FOR THE STATE OF CALIFORNIA DEPARTMENT OF TRANSPORTATION

G. Orsolini
PROJECT ENGINEER
T. Spoth
BRIDGE DESIGN MANAGER

BRIDGE NO. 28-0352L
KILOMETER POST 0.01

CARQUINEZ BRIDGE & OVERHEAD
PIER PI FOOTINGS NO. 1

ORIGINAL SCALE IN MILLIMETERS FOR REDUCED PLANS 0 10 20 30 40 50 60 70 80 90 100

CU 04
EA 013011

DISREGARD PRINTS BEARING EARLIER REVISION DATES

REVISION DATES (PRELIMINARY STAGE ONLY) 4/1/98 9/18/98 2/24/98 1/8/99 1/18/99 5/16/99

SHEET 26 OF 348

FILE => epfr02.20083452
PEN TABLE => $PEN$

USERNAME => fromda DATE PLOTTED => 20-Jul-1999 TIME PLOTTED => 08:35

| DIST. | COUNTY | ROUTE | KILOMETER POST TOTAL PROJECT | SHEET NO. | TOTAL SHEETS |
|---|---|---|---|---|---|
| 04 | CC, Sol | 80 | 22.0/22.7, 0.0/1.8 | 261 | 714 |

Caltrans Metric

Gregory J. Orsolini
REGISTERED ENGINEER - CIVIL

7-12-99
PLANS APPROVAL DATE

REGISTERED PROFESSIONAL ENGINEER G. L. Orsolini No. 44461 Exp. 3/31/02 CIVIL STATE OF CALIFORNIA

The State of California or its officers or agents shall not be responsible for the accuracy or completeness of electronic copies of this plan sheet.

DE LEUW- PAC-STERMAN
120 Howard Street, Suite 850
San Francisco, CA 94105

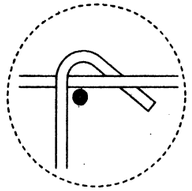

## DETAIL 2
NTS

## NOTES:

1. Ties in Zone 1 & 2 shall hook over the outer top and bottom footing main reinf.
2. Space ties evenly in Zone 1.

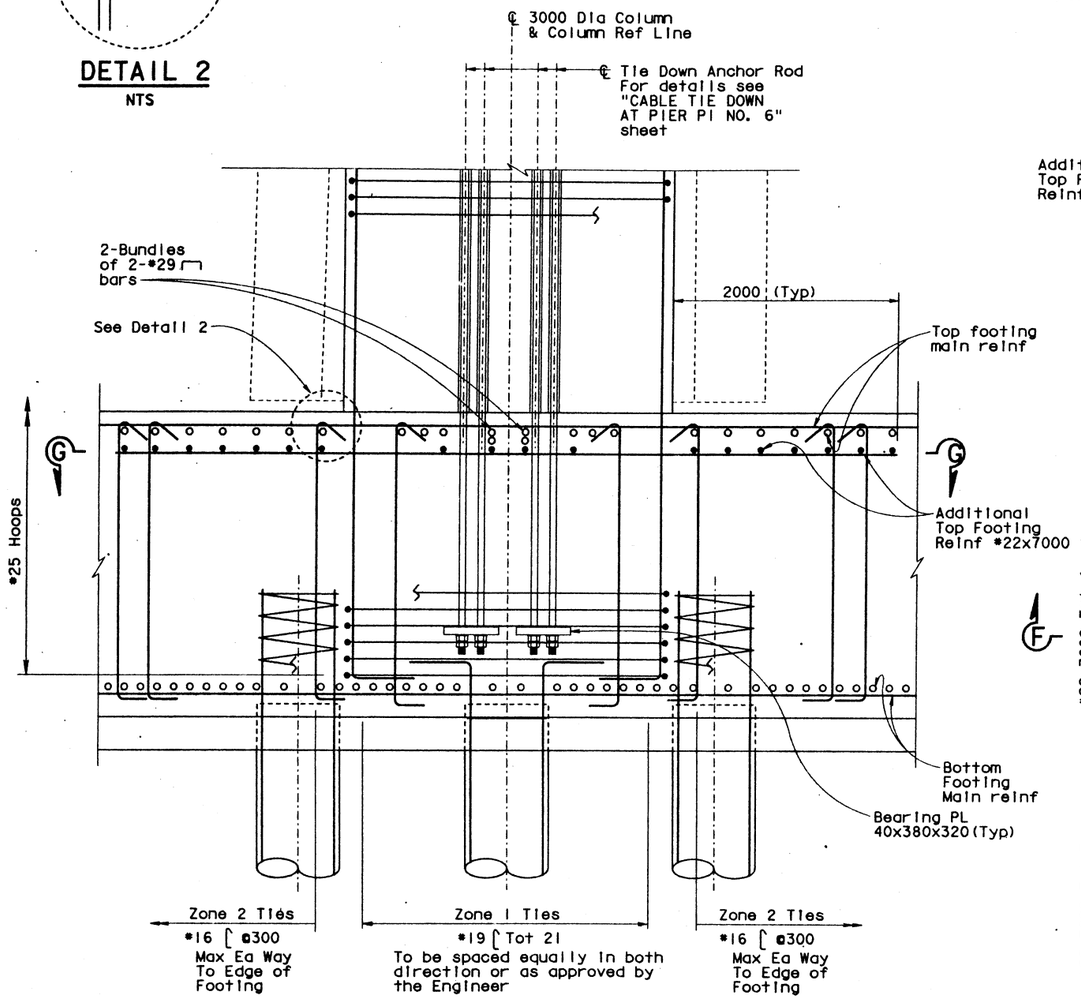


## SECTION F-F
1 : 25

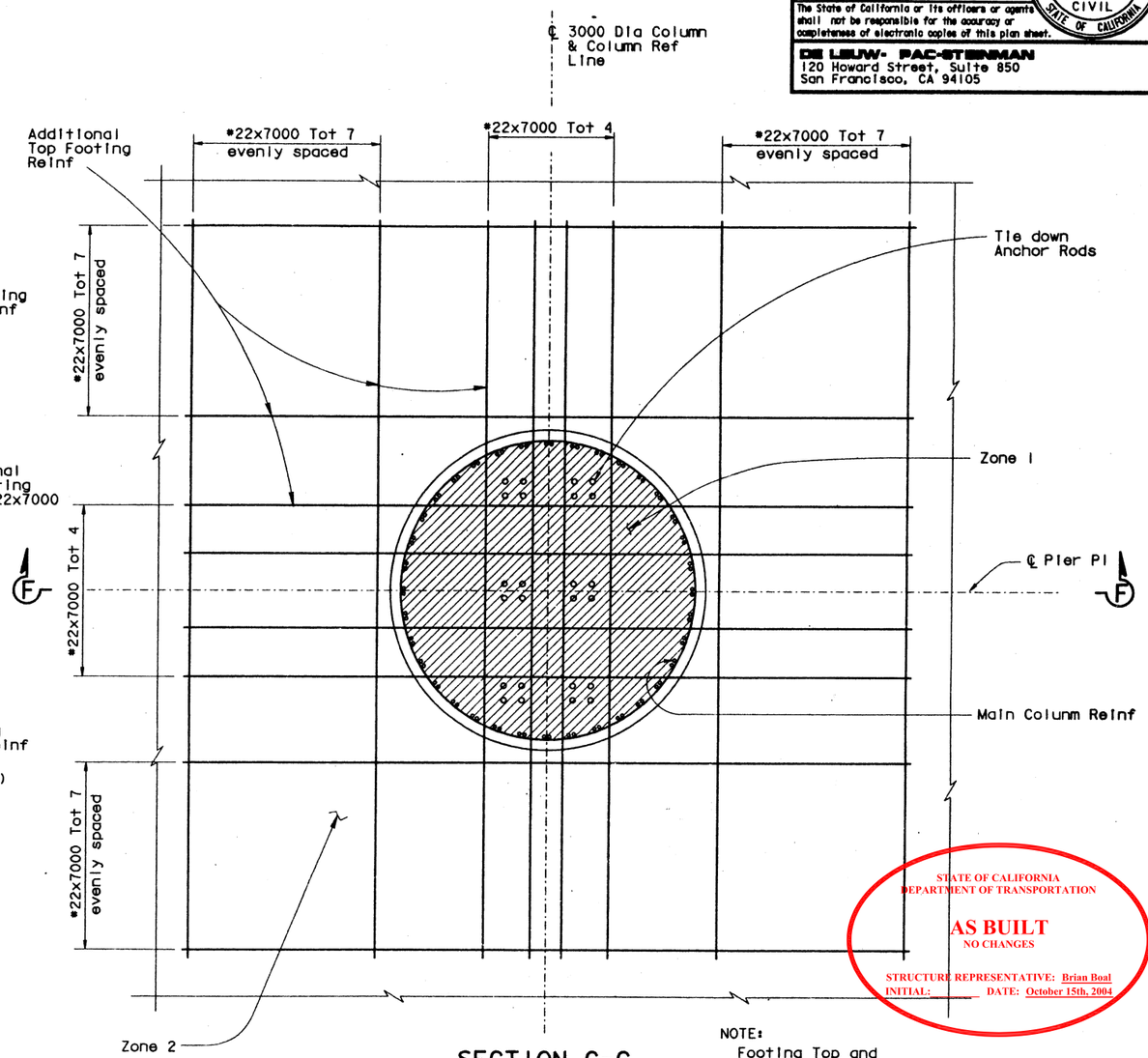


## SECTION G-G
1 : 25

NOTE:
Footing Top and Bot Main Reinf not shown for clarity

STATE OF CALIFORNIA
DEPARTMENT OF TRANSPORTATION
AS BUILT
NO CHANGES
STRUCTURE REPRESENTATIVE: Brian Boal
INITIAL: DATE: October 15th, 2004

LEGEND

- Zone 1 Footing Ties, see Section G-G
- Zone 2 Footing Ties (Remainder of Footing Area), see Section G-G
- ○ Indicates Column and Footing Reinf
- ● Indicates Additional Top Mat Footing Reinf

ALL DIMENSIONS ARE IN MILLIMETERS UNLESS OTHERWISE SHOWN

V. Gastoni
DESIGN OVERSIGHT
Vincent Gastoni 3/31/99
SIGN OFF DATE
Rev. Date 6-2-97

| | BY | CHECKED |
|---|---|---|
| DESIGN | M. Sah | D. Morgan/J. Downing |
| DETAILS | R. Peng | D. Morgan/J. Downing |
| QUANTITIES | M. Sah | E. Buno |

PREPARED FOR THE STATE OF CALIFORNIA DEPARTMENT OF TRANSPORTATION

G. Orsolini
PROJECT ENGINEER
T. Spoth
BRIDGE DESIGN MANAGER

BRIDGE NO. 28-0352L
KILOMETER POST 0.01

# CARQUINEZ BRIDGE & OVERHEAD
# PIER PI FOOTINGS NO. 2

ORIGINAL SCALE IN MILLIMETERS FOR REDUCED PLANS 0 10 20 30 40 50 60 70 80 90 100

CU 04
EA 013011

DISREGARD PRINTS BEARING EARLIER REVISION DATES

REVISION DATES (PRELIMINARY STAGE ONLY) 4/24/98 9/18/98 2/14/98 1/8/99 1/18/99 2/16/99 6/11/99

SHEET 27 OF 348

FILE => epir03_20082151

USERNAME => tranna DATE PLOTTED => 20-Jul-1999 TIME PLOTTED => 08:24

| DIST. | COUNTY | ROUTE | KILOMETER POST TOTAL PROJECT | SHEET NO. | TOTAL SHEETS |
|---|---|---|---|---|---|
| 04 | CC, Sol | 80 | 22.0/22.7, 0.0/1.8 | 262 | 714 |

REGISTERED ENGINEER - CIVIL

7-12-99
PLANS APPROVAL DATE

REGISTERED PROFESSIONAL ENGINEER G. J. Orsolini No. 44461 Exp. 3/31/02 CIVIL STATE OF CALIFORNIA

The State of California or its officers or agents shall not be responsible for the accuracy or completeness of electronic copies of this plan sheet.

DE LEUW- PAC-STEINMAN
120 Howard Street, Suite 850
San Francisco, CA 94105

STATE OF CALIFORNIA
DEPARTMENT OF TRANSPORTATION

**AS BUILT**

STRUCTURE REPRESENTATIVE: Brian Boal
INITIAL:_____ DATE: October 15th, 2004

NOTES:

1. All reinforcement in SECTION A-A and B-B shall be epoxy coated.
2. For VIEW H-H, See "PIER PI COLUMN NO. 2" sheet.
3. For location of SECTIONS A-A, B-B and C-C, See "PIER PI GENERAL LAYOUT" sheet.
4. Alternate wall ties as shown in VIEW H-H for limits of SECTIONS A-A and C-C.
5. For cable tie down details see "CABLE TIE DOWN AT PIER PI NO. 1 THRU NO. 6" sheets

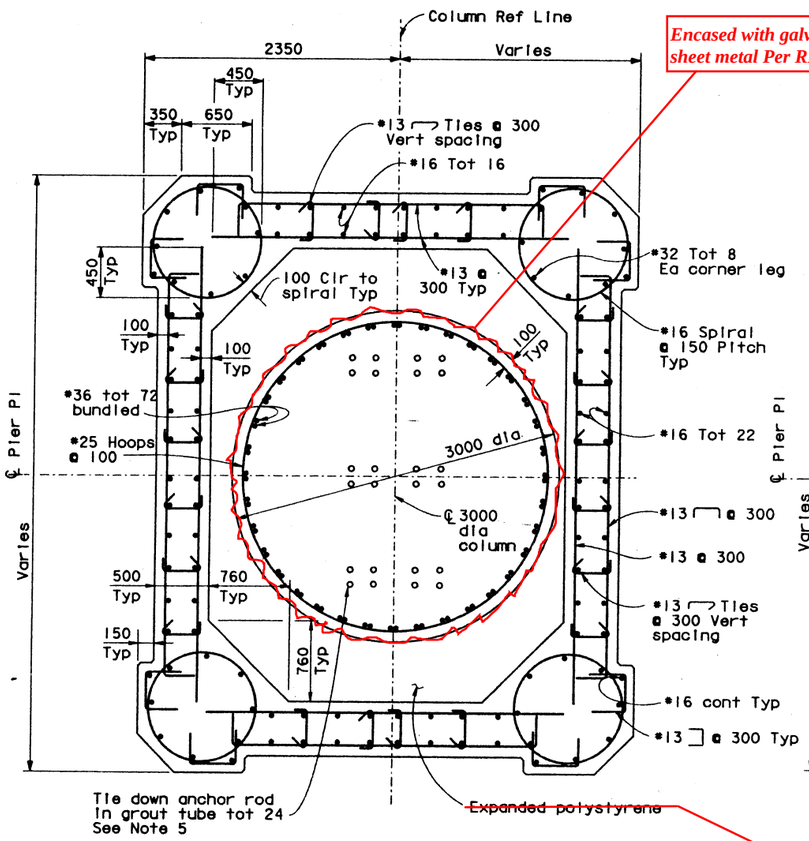


Encased with galvanized corrugated sheet metal Per RFI 127

Omitted Per FCI-RFI 110

SECTION A-A
1 = 25

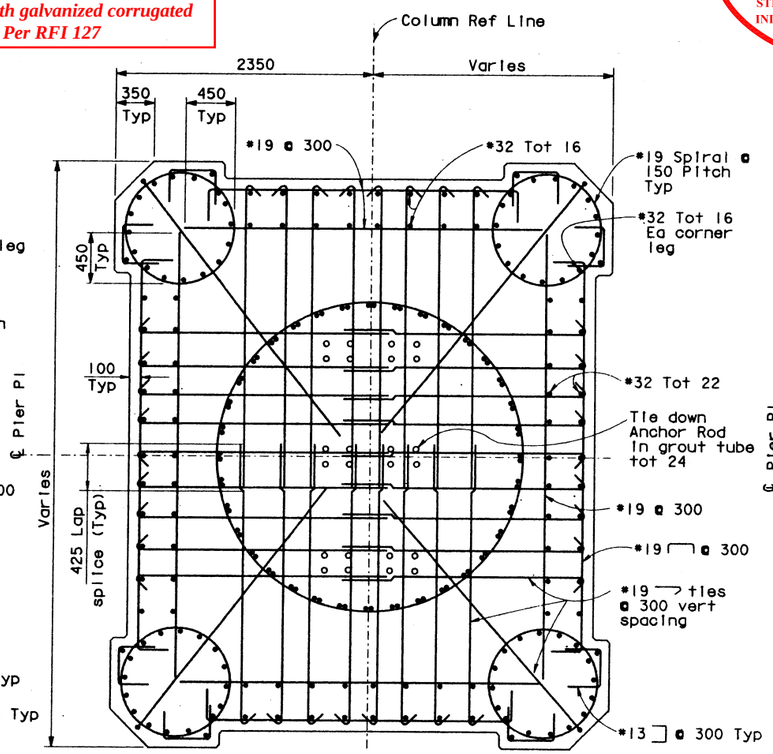


SECTION B-B
1 = 25

55 for main bars, and min. 25 for spirals and ties (FCI-RFI 204 &225)

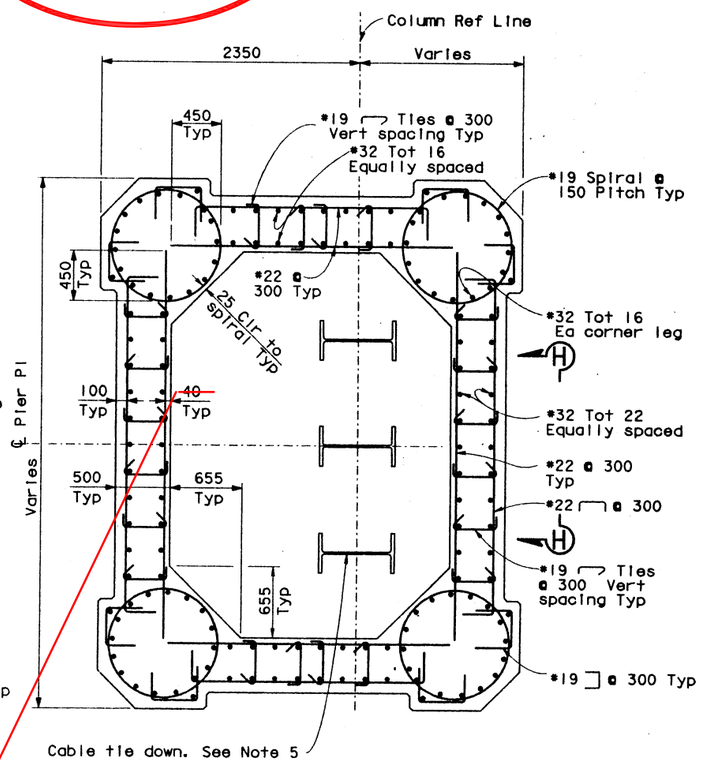


SECTION C-C
1 = 25

ALL DIMENSIONS ARE IN MILLIMETERS UNLESS OTHERWISE SHOWN

V. Gastoni
DESIGN OVERSIGHT
3/31/99
SIGN OFF DATE
Rev. Date 8-2-97

| | | | |
|---|---|---|---|
| DESIGN | BY G. Matesic | CHECKED D. Morgan/A. Loof | |
| DETAILS | BY R. Wilson | CHECKED D. Morgan/A. Loof | |
| QUANTITIES | BY G. Matesic | CHECKED E. Buno | |

PREPARED FOR THE STATE OF CALIFORNIA DEPARTMENT OF TRANSPORTATION

G. Orsolini
PROJECT ENGINEER
T. Spoth
BRIDGE DESIGN MANAGER

CU 04
EA 013011

BRIDGE NO. 28-0352L
KILOMETER POST 0.01

CARQUINEZ BRIDGE & OVERHEAD
PIER PI COLUMNS NO. 1

DISREGARD PRINTS BEARING EARLIER REVISION DATES

REVISION DATES (PRELIMINARY STAGE ONLY) 4/24/98 9/18/98 2/24/98 11/8/99 1/18/99 2/16/99 4/13/99 6/11/99

SHEET 28 OF 348

ORIGINAL SCALE IN MILLIMETERS FOR REDUCED PLANS 0 10 20 30 40 50 60 70 80 90 100

FILE => epIr04_20082145

USERNAME => rfrontoo DATE PLOTTED => 20-JUL-1999 TIME PLOTTED => 08:23

| DIST. | COUNTY | ROUTE | KILOMETER POST TOTAL PROJECT | SHEET NO. | TOTAL SHEETS |
|---|---|---|---|---|---|
| 04 | CC, Sol | 80 | 22.0/22.7, 0.0/1.8 | 263 | 714 |

REGISTERED ENGINEER - CIVIL

7-12-99
PLANS APPROVAL DATE

The State of California or its officers or agents shall not be responsible for the accuracy or completeness of electronic copies of this plan sheet.

REGISTERED PROFESSIONAL ENGINEER G. L. Orsolini No. 44461 Exp. 3/31/02 CIVIL STATE OF CALIFORNIA

DE LEUW- PAC-STEINMAN
120 Howard Street, Suite 850
San Francisco, CA 94105

Notes:

1. For location of SECTION D-D, see "PIER PI GENERAL LAYOUT" sheet.
2. For Section B-B, see "PIER PI COLUMN NO. 1" sheet.
3. For Location of View H-H, see "PIER PI COLUMN NO. 1" sheet

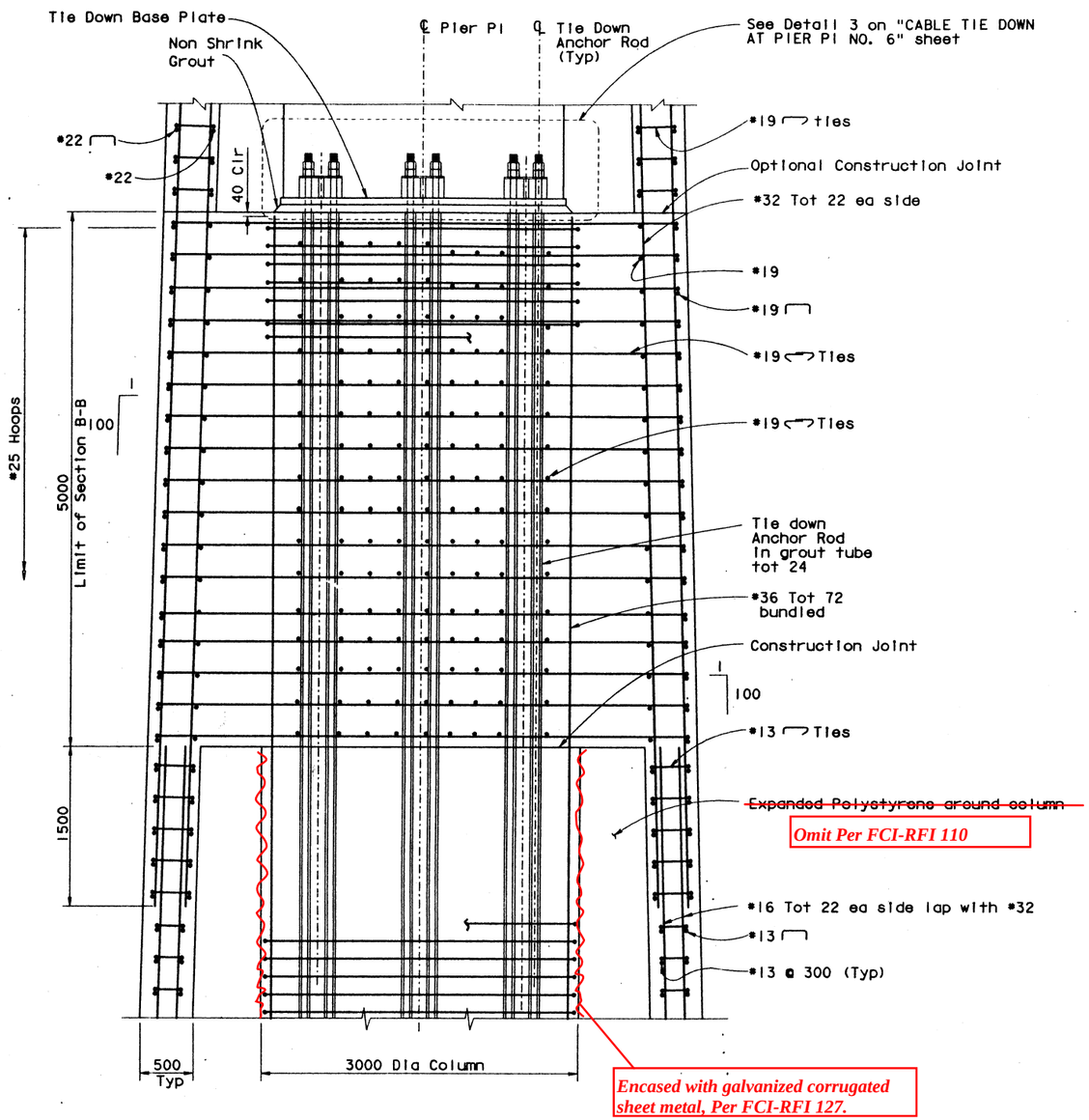


SECTION D-D
1 : 25

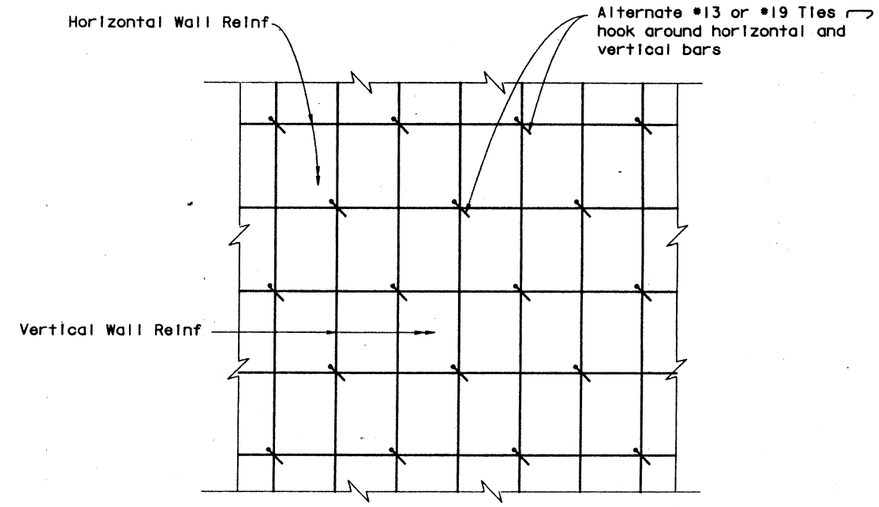


VIEW H-H
NTS

STATE OF CALIFORNIA
DEPARTMENT OF TRANSPORTATION

AS BUILT

STRUCTURE REPRESENTATIVE: Brian Boal
INITIAL:_____ DATE: October 15th, 2004

ALL DIMENSIONS ARE IN MILLIMETERS UNLESS OTHERWISE SHOWN

V. Gastoni
DESIGN OVERSIGHT
Vincent Gastoni 3/31/99
SIGN OFF DATE
Rev. Date 6-2-97

| | | | |
|---|---|---|---|
| DESIGN | BY G. Matesic | CHECKED D. Morgan/A. Loof | |
| DETAILS | BY R. Wilson | CHECKED D. Morgan/A. Loof | |
| QUANTITIES | BY G. Matesic | CHECKED E. Buno | |

PREPARED FOR THE STATE OF CALIFORNIA DEPARTMENT OF TRANSPORTATION

G. Orsolini
PROJECT ENGINEER
T. Spoth
BRIDGE DESIGN MANAGER

CU 04
EA 013011

BRIDGE NO. 28-0352L
KILOMETER POST 0.01

CARQUINEZ BRIDGE & OVERHEAD
PIER PI COLUMNS NO. 2

ORIGINAL SCALE IN MILLIMETERS FOR REDUCED PLANS 0 10 20 30 40 50 60 70 80 90 100

DISREGARD PRINTS BEARING EARLIER REVISION DATES

REVISION DATES (PRELIMINARY STAGE ONLY) 4/24/98 9/18/98 12/14/98 1/8/99 1/18/99 2/16/99

SHEET 29 OF 348

FILE => epir05_20082139

USERNAME => tranndg DATE PLOTTED => 20-Jul-1999 TIME PLOTTED => 08:23

| DIST. | COUNTY | ROUTE | KILOMETER POST TOTAL PROJECT | SHEET NO. | TOTAL SHEETS |
|---|---|---|---|---|---|
| 04 | CC, Sol | 80 | 22.0/22.7, 0.0/1.8 | 264 | 714 |

REGISTERED ENGINEER - CIVIL
7-12-99
PLANS APPROVAL DATE

The State of California or its officers or agents shall not be responsible for the accuracy or completeness of electronic copies of this plan sheet.

G. L. Orsolini No. 44461 Exp. 3/31/02 CIVIL — REGISTERED PROFESSIONAL ENGINEER — STATE OF CALIFORNIA

DE LEUW- PAC-STEINMAN
120 Howard Street, Suite 850
San Francisco, CA 94105

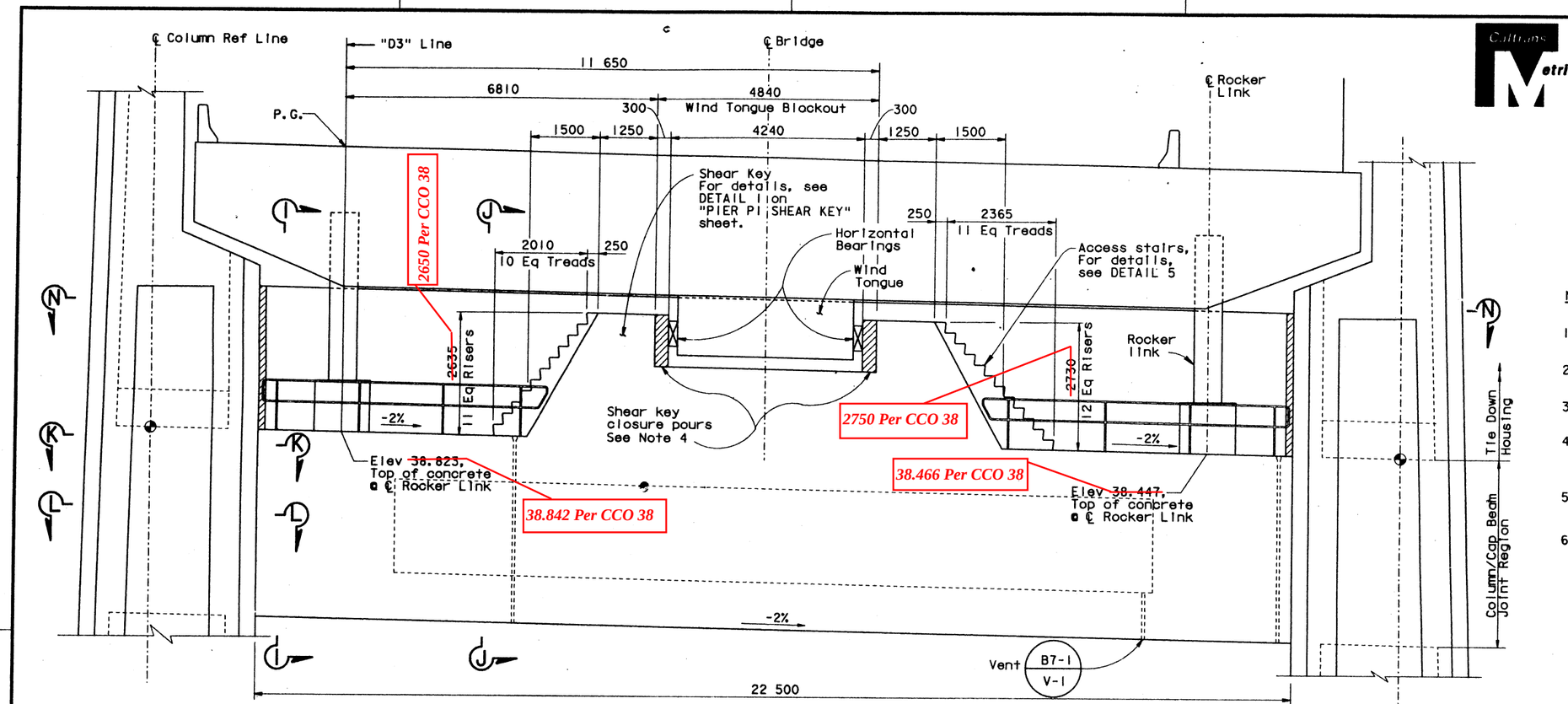


## PARTIAL ELEVATION (LOOKING SOUTH)

1 : 50

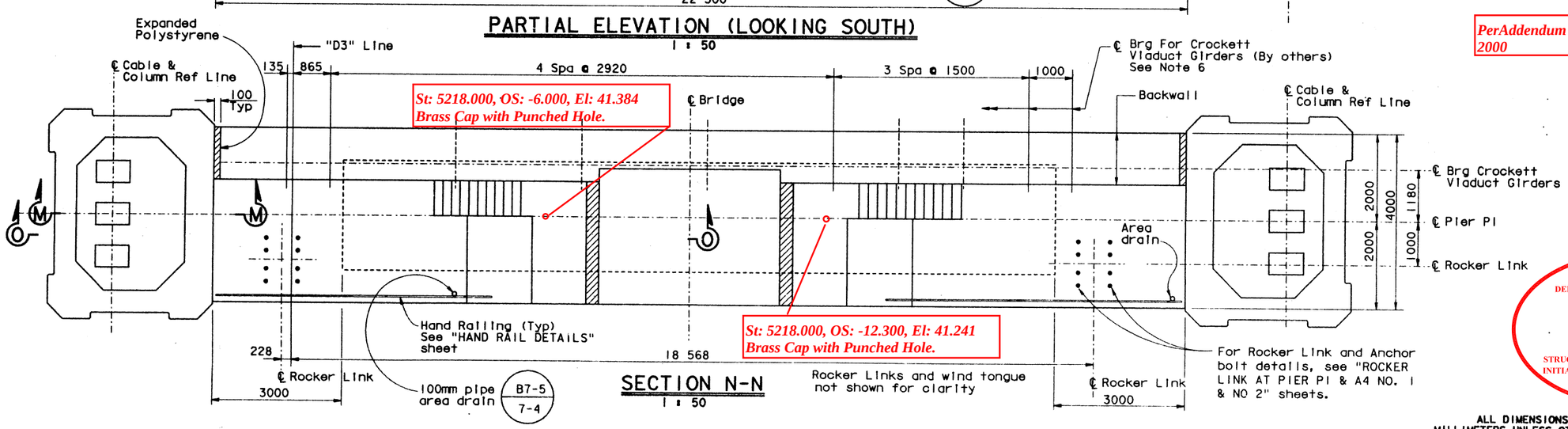


## SECTION N-N

1 : 50

NOTES:

1. For Section I-I and J-J See "PIER P1 CAP NO. 2" Sheet.
2. For Section K-K, L-L and M-M See "PIER P1 CAP NO. 3" Sheet.
3. For Section O-O See "PIER P1 CAP NO. 4" Sheet.
4. Construct shear key closure pours after superstructure and wind tongue are in place.
5. For Detail 5, see "PIER P1 SHEAR KEY" sheet.
6. Crockett Viaduct Girders will be erected following completion of Pier P1. Installation of Viaduct Bearings and Girders shall be coordinated with Crockett Viaduct Contractor. Pier P1 backwall details shall be modified to accommodate the Viaduct Bearings and Girders.

*The location of Crockett Viaduct girders shown is approximate.*

*PerAddendum No. 5 dated January 21, 2000*

STATE OF CALIFORNIA
DEPARTMENT OF TRANSPORTATION
AS BUILT
STRUCTURE REPRESENTATIVE: Brian Boal
INITIAL: _____ DATE: October 15th, 2004

ALL DIMENSIONS ARE IN MILLIMETERS UNLESS OTHERWISE SHOWN

V. Gastoni
DESIGN OVERSIGHT
Vincent Gastoni 3/31/99
SIGN OFF DATE
Rev. Date 6-2-97

| | BY | CHECKED |
|---|---|---|
| DESIGN | G. Matesic/M. Sah | D. Morgan/A. Loof |
| DETAILS | R. Wilson | D. Morgan/A. Loof |
| QUANTITIES | M. Sah | E. Buno |

PREPARED FOR THE STATE OF CALIFORNIA DEPARTMENT OF TRANSPORTATION

G. Orsolini
PROJECT ENGINEER
T. Spoth
BRIDGE DESIGN MANAGER

BRIDGE NO. 28-0352L
KILOMETER POST 0.01

CARQUINEZ BRIDGE & OVERHEAD
PIER P1 CAP NO. 1

ORIGINAL SCALE IN MILLIMETERS FOR REDUCED PLANS 0 10 20 30 40 50 60 70 80 90 100

CU 04
EA 013011
FILE => eplr06_20082134

DISREGARD PRINTS BEARING EARLIER REVISION DATES
REVISION DATES (PRELIMINARY STAGE ONLY) 4/24/98 9/18/98 12/14/98 1/8/99 1/14/99 2/16/99

SHEET 30 OF 348

PEN TABLE => $PEN$

USERNAME => tranda DATE PLOTTED => 20-Jul-1999 TIME PLOTTED => 08:22 FILE => eplr06_20082134

STATE OF CALIFORNIA
DEPARTMENT OF TRANSPORTATION

**AS BUILT**
SEE ATTACHMENTS &
CHANGES SHOWN ON THIS SHEET

STRUCTURE REPRESENTATIVE: Brian Boal
INITIAL:_____ DATE: October 15th, 2004

| DIST | COUNTY | ROUTE | KILOMETER POST TOTAL PROJECT | SHEET NO. | TOTAL SHEETS |
|---|---|---|---|---|---|
| 04 | CC, Sol | 80 | | 235 | 714 |

Caltrans Metric

Gregory J. Orsolini
REGISTERED ENGINEER - CIVIL

PLANS APPROVAL DATE

The State of California or its officers or agents shall not be responsible for the accuracy or completeness of electronic copies of this plan sheet.

REGISTERED PROFESSIONAL ENGINEER G. J. Orsolini No. 44461 Exp. 3/31/02 CIVIL STATE OF CALIFORNIA

**DE LEUW-OPAC-STEINMAN**
120 Howard Street, Suite 850
San Francisco, CA 94105

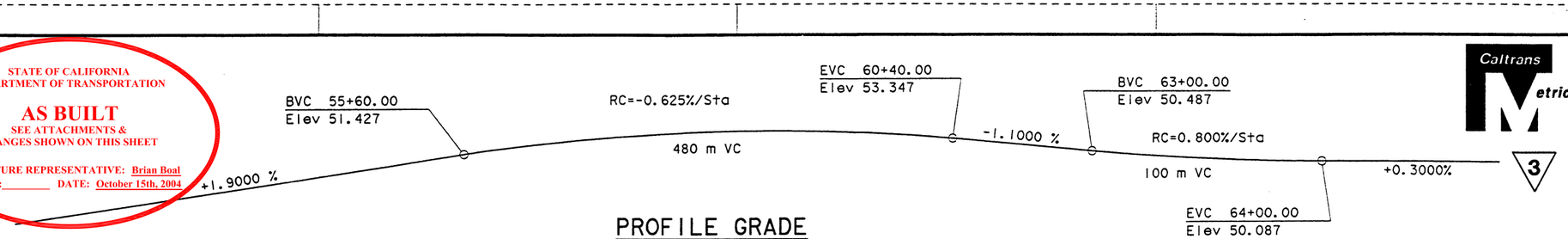


## PROFILE GRADE
No Scale

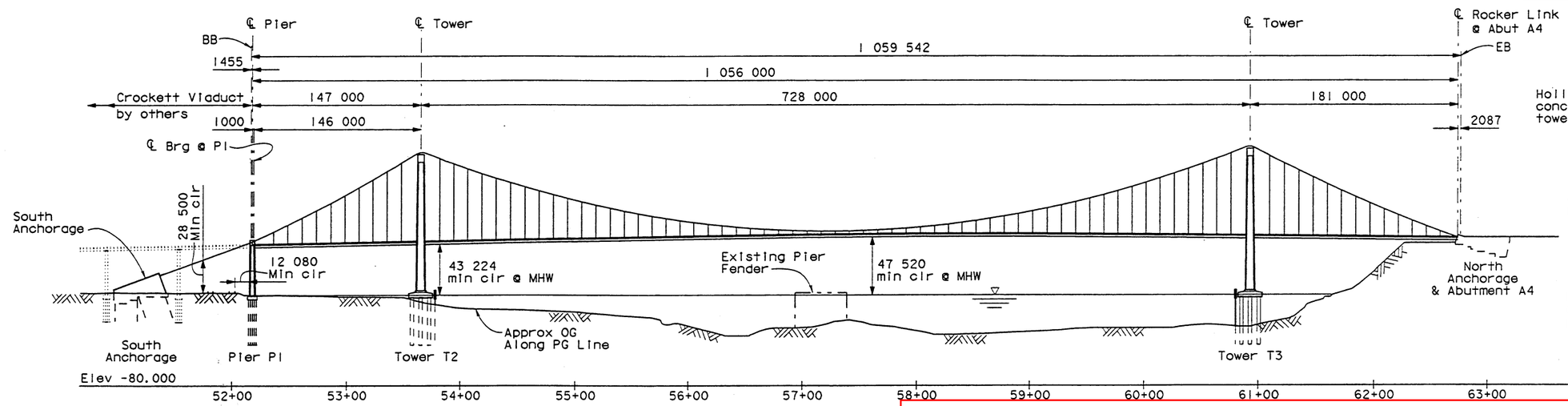


## ELEVATION
1:2000

*As Built elevations reported on these plans were determined by OSC field engineers and reported in the document titled "Bridge Department As-Built Survey on Carquinez Bridge". District 04 Surveyors performed an independent survey of the bridge. Both reports are included in the Engineer's report of completion.*

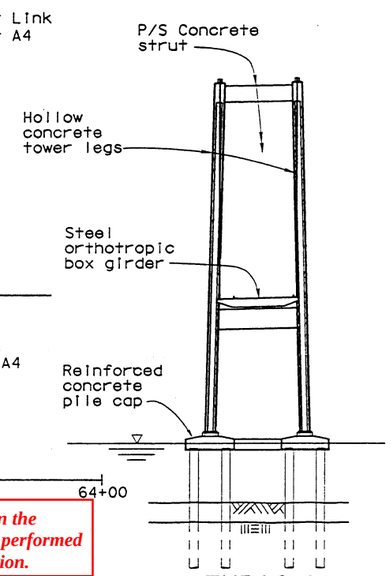


## TYPICAL SECTION
1:1000

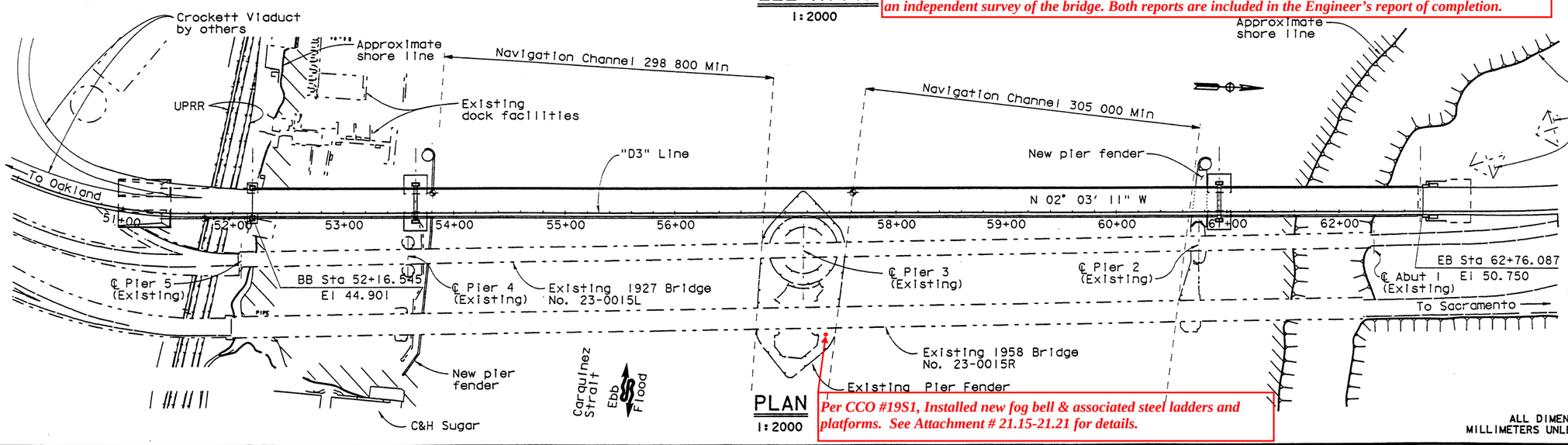


## PLAN
1:2000

*Per CCO #19S1, Installed new fog bell & associated steel ladders and platforms. See Attachment # 21.15-21.21 for details.*

## NOTES:
1. For typical section details, see "TYPICAL SECTION" sheet.
2. For pile data, see "PILE DATA" sheets.
3. For Hydraulic Summary, see "GENERAL NOTES" sht.
4. For datum information, see "GENERAL NOTES" sht.

## LEGEND
- Point of minimum Vertical Clearance
- New Construction
- Existing Structure

ALL DIMENSIONS ARE IN MILLIMETERS UNLESS OTHERWISE SHOWN

| | | | | | | | |
|---|---|---|---|---|---|---|---|
| V. Gastoni, M. Marquez | DESIGN | BY T. Spoth | CHECKED G. Orsolini | LOAD FACTOR DESIGN | LIVE LOADING: HS20-44 WITH MODIFIED LANE LOAD FOR LONG SPAN BRIDGES | | |
| DESIGN OVERSIGHT Vincent J. Gastoni 3/31/99 | DETAILS | BY R. Wilson | CHECKED G. Orsolini | LAYOUT | BY G. Orsolini | CHECKED T. Spoth | |
| SIGN OFF DATE | QUANTITIES | BY G. Orsolini | CHECKED T. Spoth | SPECIFICATIONS | BY G. Matesic | PLANS AND SPECS COMPARED G. Orsolini/T. Spoth | |

PREPARED FOR THE STATE OF CALIFORNIA DEPARTMENT OF TRANSPORTATION

T. Spoth
BRIDGE DESIGN MANAGER

BRIDGE NO. 28-0352L
KILOMETER POST 0.01

# CARQUINEZ BRIDGE & OVERHEAD
# GENERAL PLAN

Rev. Date: 6-2-97

3 REVISED PER ADDENDUM NO. 3 DATED DECEMBER 2, 1999

ORIGINAL SCALE IN MILLIMETERS FOR REDUCED PLANS 0 10 20 30 40 50 60 70 80 90 100

CU
EA 013011

FILE => gdp001110144

DISREGARD PRINTS BEARING EARLIER REVISION DATES

REVISION DATES (PRELIMINARY STAGE ONLY) 4/24/98 9/18/98 12/14/98 1/3/99 1/15/99 2/16/99 9/30/99

SHEET 1 OF 348

PEN TABLE => $PEN$

USERNAME => trflm DATE PLOTTED => 1-Dec-1999 TIME PLOTTED => 11:02

| DIST. | COUNTY | ROUTE | KILOMETER POST TOTAL PROJECT | SHEET NO. | TOTAL SHEETS |
|---|---|---|---|---|---|
| 04 | Sol | 80 | | 236 | 714 |

Caltrans Metric

REGISTERED ENGINEER - CIVIL

PLANS APPROVAL DATE

The State of California or its officers or agents shall not be responsible for the accuracy or completeness of electronic copies of this plan sheet.

REGISTERED PROFESSIONAL ENGINEER G. L. Orsolini No. 44461 Exp. 3/31/02 CIVIL STATE OF CALIFORNIA

DE LEUW-OPAC-STEINMAN
120 Howard Street, Suite 850
San Francisco, CA 94105


Sht. No. TITLE

1 GENERAL PLAN
2 INDEX TO PLANS
3 GENERAL NOTES
4 PILE DATA NO. 1
5 PILE DATA NO. 2
6 STRUCTURE PLAN NO. 1
7 STRUCTURE PLAN NO. 2
8 STRUCTURE PLAN NO. 3
9 STRUCTURE PLAN NO. 4
10 BRIDGE TYPICAL SECTIONS NO. 1
11 BRIDGE TYPICAL SECTIONS NO. 2
12 FOUNDATION PLAN NO. 1
13 FOUNDATION PLAN NO. 2
14 FOUNDATION PLAN NO. 3
15 FOUNDATION PLAN NO. 4
16 FOUNDATION PLAN NO. 5
17 FOUNDATION PLAN NO. 6
18 FOUNDATION PLAN NO. 7
19 FOUNDATION PLAN NO. 8
20 FOUNDATION PLAN NO. 9
21 FOUNDATION PLAN NO. 10
22 FOUNDATION PLAN NO. 11
23 CONCRETE STRENGTH AND TYPE LIMITS NO. 1
24 CONCRETE STRENGTH AND TYPE LIMITS NO. 2
25 PIER P1 GENERAL LAYOUT
26 PIER P1 FOOTINGS NO. 1
27 PIER P1 FOOTINGS NO. 2
28 PIER P1 COLUMNS NO. 1
29 PIER P1 COLUMNS NO. 2
30 PIER P1 CAP NO. 1
31 PIER P1 CAP NO. 2
32 PIER P1 CAP NO. 3
33 PIER P1 CAP NO. 4
34 PIER P1 SHEAR KEY
35 TIE DOWN HOUSING NO. 1
36 TIE DOWN HOUSING NO. 2
37 TIE DOWN HOUSING NO. 3
38 PIER P1 MISC DETAILS
39 TOWER FOOTING LAYOUT
40 FOOTING CONSTRUCTION SEQUENCE NO. 1
41 FOOTING CONSTRUCTION SEQUENCE NO. 2
42 FOOTING CONSTRUCTION SEQUENCE NO. 3
43 TOWER FOOTING FORM NO. 1
44 TOWER FOOTING FORM NO. 2
45 TOWER FOOTING FORM NO. 3
46 TOWER FOOTING FORM NO. 4
47 TOWER FOOTING FORM NO. 5
48 TOWER FOOTING FORM NO. 6
49 TOWER FOOTING CONST DETAILS NO. 1
50 TOWER FOOTING CONST DETAILS NO. 2
51 TOWER FOOTING REINF NO. 1
52 TOWER FOOTING REINF NO. 2
53 TOWER FOOTING DETAILS NO. 1
54 TOWER FOOTING DETAILS NO. 2
55 TOWER FOOTING DETAILS NO. 3
56 TOWER FOOTING DETAILS NO. 4
57 TOWER FOOTING TIE NO. 1
58 TOWER FOOTING TIE NO. 2
59 TOWER T2 ELEVATIONS
60 TOWER T3 ELEVATIONS
61 TOWER SECTIONS NO. 1
62 TOWER SECTIONS NO. 2
63 TOWER SECTIONS NO. 3
64 TOWER SECTIONS NO. 4
65 TOWER REINF ELEVATION
66 TOWER LOWER STRUT PLAN & ELEVATION
67 TOWER LOWER STRUT SECTIONS NO. 1
68 TOWER LOWER STRUT SECTIONS NO. 2
69 TOWER LOWER STRUT SECTIONS NO. 3
70 TOWER LOWER STRUT SECTIONS NO. 4
71 TOWER LOWER STRUT SHEAR KEY
72 TOWER UPPER STRUT PLAN & ELEVATION
73 TOWER UPPER STRUT SECTIONS NO. 1
74 TOWER UPPER STRUT SECTIONS NO. 2
75 TOWER UPPER STRUT SECTIONS NO. 3
76 TOWER UPPER STRUT SECTIONS NO. 4
77 TOWER MISC DETAILS
78 MANUAL HOIST
79 TOWER BASE ACCESS
80 TOWER T2 PIER PROTECTION NO. 1
81 TOWER T2 PIER PROTECTION NO. 2
82 TOWER T2 PIER PROTECTION NO. 3
83 TOWER T2 PIER PROTECTION NO. 4
84 TOWER T2 PIER PROTECTION NO. 5
85 TOWER T3 PIER PROTECTION NO. 1
86 TOWER T3 PIER PROTECTION NO. 2
87 TOWER T3 PIER PROTECTION NO. 3
88 TOWER T3 PIER PROTECTION NO. 4
89 TOWER T3 PIER PROTECTION NO. 5
90 TOWER T3 PIER PROTECTION NO. 6
91 TOWER T3 PIER PROTECTION NO. 7
92 SOUTH ANCHORAGE GENERAL LAYOUT
93 SOUTH ANCHORAGE FOOTING DETAILS NO. 1
94 SOUTH ANCHORAGE FOOTING DETAILS NO. 2
95 SOUTH ANCHORAGE SECTIONS
96 SOUTH ANCHORAGE REINF DETAILS NO. 1
97 SOUTH ANCHORAGE REINF DETAILS NO. 2
98 SOUTH ANCHORAGE MISC DETAILS
99 NORTH ANCHORAGE GENERAL LAYOUT
100 NORTH ANCHORAGE PLAN
101 NORTH ANCHORAGE SECTIONS NO. 1
102 NORTH ANCHORAGE SECTIONS NO. 2
103 NORTH ANCHORAGE SECTIONS NO. 3
104 NORTH ANCHORAGE SECTIONS NO. 4
105 NORTH ANCHORAGE REINF DETAILS NO. 1
106 NORTH ANCHORAGE REINF DETAILS NO. 2
107 NORTH ANCHORAGE REINF DETAILS NO. 3
108 NORTH ANCHORAGE REINF DETAILS NO. 4
109 NORTH ANCHORAGE REINF DETAILS NO. 5
110 NORTH ANCHORAGE REINF DETAILS NO. 6
111 NORTH ANCHORAGE REINF DETAILS NO. 7
112 ABUTMENT A4 DETAILS NO. 1
113 ABUTMENT A4 DETAILS NO. 2
114 NORTH ANCHORAGE MISC DETAILS NO. 1
115 NORTH ANCHORAGE MISC DETAILS NO. 2
116 MAIN CABLE LAYOUT
117 CABLE LAYOUT AT SOUTH ANCHORAGE
118 CABLE LAYOUT AT NORTH ANCHORAGE
119 CABLE DETAILS AT ANCHORAGES
120 ANCHOR FRAME - SOUTH ANCHORAGE
121 ANCHOR FRAME - NORTH ANCHORAGE
122 ANCHOR FRAME DETAILS
123 SPLAY SADDLE SOUTH
124 SPLAY SADDLE NORTH
125 SPLAY SADDLE DETAILS NO. 1
126 SPLAY SADDLE DETAILS NO. 2
127 SPLAY SADDLE STRAND SPACERS
128 SADDLE AT TOWER T2
129 SADDLE PLAN - TOWER T2
130 SADDLE AT TOWER T3
131 SADDLE PLAN - TOWER T3
132 SADDLE TROUGH DETAILS
133 SADDLE ACCESS PLATFORM
134 TOWER SADDLE STRAND SPACERS
135 CABLE SHROUD AT SOUTH ANCHORAGE NO. 1
136 CABLE SHROUD AT SOUTH ANCHORAGE NO. 2
137 CABLE SHROUD AT PIER P1 NO. 1
138 CABLE SHROUD AT PIER P1 NO. 2
139 CABLE SHROUD AT PIER P1 NO. 3
140 CABLE SHROUD AT PIER P1 NO. 4
141 CABLE SHROUD AT T2 AND T3 NO. 1
142 CABLE SHROUD AT T2 AND T3 NO. 2
143 CABLE SHROUD AT NORTH ANCHORAGE NO. 1
144 CABLE SHROUD AT NORTH ANCHORAGE NO. 2
145 CABLE TIE DOWN AT PIER P1 NO. 1
146 CABLE TIE DOWN AT PIER P1 NO. 2
147 CABLE TIE DOWN AT PIER P1 NO. 3
148 CABLE TIE DOWN AT PIER P1 NO. 4
149 CABLE TIE DOWN AT PIER P1 NO. 5
150 CABLE TIE DOWN AT PIER P1 NO. 6
151 CABLE BAND DETAILS NO. 1
152 CABLE BAND DETAILS NO. 2
153 CABLE BAND DETAILS NO. 3
154 CENTER TIE NO. 1
155 CENTER TIE NO. 2
156 CENTER TIE NO. 3
157 CENTER TIE NO. 4
158 CENTER TIE NO. 5
159 CENTER TIE NO. 6
160 SUSPENDERS TYPE I
161 SUSPENDERS TYPE II
162 SUSPENDER CONNECTIONS
163 SUSPENDER DETAILS NO. 1
164 SUSPENDER DETAILS NO. 2
165 SUSPENDER DETAILS NO. 3
166 HANDROPES NO. 1
167 HANDROPES NO. 2
168 HANDROPES NO. 3
169 HANDROPES NO. 4
170 GIRDER PLAN AND ELEV NO. 1
171 GIRDER PLAN AND ELEV NO. 2
172 GIRDER PLAN AND ELEV NO. 3
173 GIRDER PLAN AND ELEV NO. 4
174 GIRDER PLAN AND ELEV NO. 5
175 GIRDER PLAN AND ELEV NO. 6
176 GIRDER FRAMING PLAN NO. 1
177 GIRDER FRAMING PLAN NO. 2
178 GIRDER FRAMING PLAN NO. 3
179 GIRDER FRAMING PLAN NO. 4
180 GIRDER FRAMING PLAN NO. 5
181 GIRDER FRAMING PLAN NO. 6
182 TYPICAL SECTION NO. 1
183 TYPICAL SECTION NO. 2
184 TYPICAL SECTION NO. 3
185 BOX GIRDER GEOMETRY CONTORLS
186 TYPICAL GIRDER SEGMENT PLAN NO. 1
187 TYPICAL GIRDER SEGMENT PLAN NO. 2
188 GIRDER SEGMENT AT PIER P1 NO. 1
189 GIRDER SEGMENT AT PIER P1 NO. 2
190 GIRDER SEGMENT AT ABUT A4 NO. 1
191 GIRDER SEGMENT AT ABUT A4 NO. 2
192 GIRDER SEGMENT AT TOWER NO. 1
193 GIRDER SEGMENT AT TOWER NO. 2
194 GIRDER SEGMENT AT TOWER NO. 3
195 GIRDER SEGMENT AT TOWER NO. 4
196 GIRDER SEGMENT AT CENTER TIE NO. 1
197 GIRDER SEGMENT AT CENTER TIE NO. 2
198 GIRDER BULKHEAD DETAILS NO. 1
199 GIRDER BULKHEAD DETAILS NO. 2
200 GIRDER BULKHEAD DETAILS NO. 3
201 GIRDER BULKHEAD DETAILS NO. 4
202 LONGITUDINAL BULKHEAD DETAILS
203 LONGITUDINAL BULKHEAD AT P1 & A4
204 GIRDER DETAILS NO. 1
205 GIRDER DETAILS NO. 2
206 GIRDER DETAILS NO. 3
207 GIRDER DETAILS NO. 4
208 GIRDER DETAILS NO. 5
209 TYPICAL SECTION AT CENTER TIE
210 TYPICAL SECTION AT TOWERS
211 GIRDER ELEVATION AT T2 AND T3
212 GIRDER DETAILS AT TOWERS NO. 1
213 GIRDER DETAILS AT TOWERS NO. 2
214 GIRDER DETAILS AT TOWERS NO. 3
215 SCHEMATIC CROSS SECTION AT TOWERS
216 ROCKER LINK AT TOWERS NO. 1
217 ROCKER LINK AT TOWERS NO. 2
218 ROCKER LINK AT TOWERS NO. 3
219 WIND TONGUE AT TOWERS NO. 1
220 WIND TONGUE AT TOWERS NO. 2
221 GIRDER END VIEW AT PIER P1
222 TYPICAL SECTION AT PIER P1
223 GIRDER END VIEW AT ANCH A4
224 TYPICAL SECTION AT ANCH A4
225 SCHEMATIC SECTION AT P1 & A4
226 EXPANSION JOINT NO. 1
227 EXPANSION JOINT NO. 2
228 EXPANSION JOINT NO. 3
229 EXPANSION JOINT NO. 4
230 EXPANSION JOINT NO. 5
231 EXPANSION JOINT NO. 6
232 EXPANSION JOINT NO. 7
233 EXPANSION JOINT NO. 8
234 ROCKER LINK AT PIER P1 & A4 NO. 1
235 ROCKER LINK AT PIER P1 & A4 NO. 2
236 WIND TONGUE AT P1 & A4 NO. 1
237 WIND TONGUE AT P1 & A4 NO. 2
238 GIRDER ACCESS HATCHES NO. 1
239 GIRDER ACCESS HATCHES NO. 2
240 GIRDER ACCESS HATCHES NO. 3
241 GIRDER MAINTENANCE WALKWAY
242 UTILITY BRACKET
243 ELECTROLIER BASE
244 BARRIER & RAILING NO. 1
245 BARRIER & RAILING NO. 2
246 BARRIER & RAILING NO. 3
247 BARRIER & RAILING NO. 4
248 BARRIER & RAILING NO. 5
249 BARRIER & RAILING NO. 6
250 BARRIER & RAILING NO. 7
251 BARRIER & RAILING NO. 8
252 BARRIER & RAILING NO. 9
253 BARRIER & RAILING NO. 10
254 BARRIER & RAILING NO. 11
255 BARRIER & RAILING NO. 12
256 BARRIER & RAILING NO. 13
257 BARRIER & RAILING NO. 14
258 DRAINAGE DETAILS NO. 1
259 DRAINAGE DETAILS NO. 2
260 ASSUMED TEMP FOOTBRIDGE ERECTION
261 ASSUMED GIRDER ERECTION
262 TRAVELER RAILS NO. 1
263 TRAVELER RAILS NO. 2
264 TRAVELER PLATFORMS NO. 1
265 TRAVELER PLATFORMS NO. 2
266 TRAVELER PLATFORMS NO. 3
267 TRAVELER PLATFORMS NO. 4
268 TRAVELER PLATFORMS NO. 5
269 TRAVELER PLATFORMS NO. 6
270 TRAVELER PLATFORMS NO. 7
271 TRAVELER PLATFORMS NO. 8
272 TRAVELER PLATFORMS NO. 9
273 PIER P1 ACCESS DETAILS
274 TOWER T2 ACCESS
275 TOWER T3 ACCESS
276 TOWER ACCESS DETAILS NO. 1
277 TOWER ACCESS DETAILS NO. 2
278 TOWER ACCESS DETAILS NO. 3
279 TOWER ACCESS DETAILS NO. 4
280 TOWER ACCESS DETAILS NO. 5
281 SOUTH ANCHORAGE ACCESS DETAILS NO. 1
282 SOUTH ANCHORAGE ACCESS DETAILS NO. 2
283 SOUTH ANCHORAGE ACCESS DETAILS NO. 3
284 NORTH ANCHORAGE ACCESS DETAILS
285 STAIR DETAILS NO. 1
286 STAIR DETAILS NO. 2
287 STAIR DETAILS NO. 3
288 HAND RAIL DETAILS
289 GRATING DETAILS
290 PILE DETAILS NO. 1
291 PILE DETAILS NO. 2
292 PILE DETAILS NO. 3
293 MISC DETAILS
294 EXCAVATION AND BACKFILL NO. 1
295 EXCAVATION AND BACKFILL NO. 2
296 EXCAVATION AND BACKFILL NO. 3
297 EXCAVATION AND BACKFILL NO. 4
298 LOG OF TEST BORINGS NO. 1
299 LOG OF TEST BORINGS NO. 2
300 LOG OF TEST BORINGS NO. 3
301 LOG OF TEST BORINGS NO. 97-1
302 LOG OF TEST BORINGS NO. 97-1
303 LOG OF TEST BORINGS NO. 97-1A
304 LOG OF TEST BORINGS NO. 97-1A
305 LOG OF TEST BORINGS NO. 97-2
306 LOG OF TEST BORINGS NO. 97-2
307 LOG OF TEST BORINGS NO. 97-3
308 LOG OF TEST BORINGS NO. 97-3
309 LOG OF TEST BORINGS NO. 97-4
310 LOG OF TEST BORINGS NO. 97-4
311 LOG OF TEST BORINGS NO. 97-4
312 LOG OF TEST BORINGS NO. 97-4
313 LOG OF TEST BORINGS NO. 97-4
314 LOG OF TEST BORINGS NO. 97-4
315 LOG OF TEST BORINGS NO. 97-5
316 LOG OF TEST BORINGS NO. 97-5
317 LOG OF TEST BORINGS NO. 98-1
318 LOG OF TEST BORINGS NO. 98-1
319 LOG OF TEST BORINGS NO. 98-2
320 LOG OF TEST BORINGS NO. 98-2
321 LOG OF TEST BORINGS NO. 98-2
322 LOG OF TEST BORINGS NO. 98-3
323 LOG OF TEST BORINGS NO. 98-3
324 LOG OF TEST BORINGS NO. 98-3
325 LOG OF TEST BORINGS
326 LOG OF TEST BORINGS
327 LOG OF TEST BORINGS NO. 98-4
328 LOG OF TEST BORINGS NO. 98-5
329 LOG OF TEST BORINGS NO. 98-6
330 LOG OF TEST BORINGS NO. 98-7
331 LOG OF TEST BORINGS NO. 98-8
332 CARQUINEZ STRAIT BRIDGE MAIN SPANS, LOG OF TEST BORINGS
333 CARQUINEZ STRAIT BRIDGE MAIN SPANS, LOG OF TEST BORINGS NO. 96B-37, 96B-41, 96B-42
334 CARQUINEZ STRAIT BRIDGE MAIN SPANS, LOG OF TEST BORINGS NO. 95B-1
335 CARQUINEZ STRAIT BRIDGE MAIN SPANS, LOG OF TEST BORINGS NO. 95B-2
336 CARQUINEZ STRAIT BRIDGE MAIN SPANS, LOG OF TEST BORINGS NO. 95B-3
337 CARQUINEZ STRAIT BRIDGE MAIN SPANS, LOG OF TEST BORINGS NO. 96B-29, 96B-39, 96B-40
338 CARQUINEZ STRAIT BRIDGE MAIN SPANS, LOG OF TEST BORINGS NO. 96B-46, 96B-47, 96B-48, 96B-49, 96B-50, 96B-51
339 CARQUINEZ BRIDGE SOUTH APPROACH, LOG OF TEST BORINGS
340 CARQUINEZ BRIDGE SOUTH APPROACH, LOG OF TEST BORINGS
341 CARQUINEZ BRIDGE SOUTH APPROACH, LOG OF TEST BORINGS NO. 95-4, 95-10, 96-14
342 CARQUINEZ BRIDGE SOUTH APPROACH, LOG OF TEST BORINGS NO. 96-19, 96-24, 96-35
343 CARQUINEZ BRIDGE SOUTH APPROACH, LOG OF TEST BORINGS NO. 96-25, 96-31, 96-32
344 CARQUINEZ STRAIT BRIDGE, LOG OF TEST BORINGS NO. B-1H, B-2H, B-3H, B-4H, B-5H, B-6H
345 CARQUINEZ STRAIT BRIDGE, LOG OF TEST BORINGS, 1A, 1B, 3A, 3B, 3C, 3D, 5A, 5B
346 CARQUINEZ STRAIT BRIDGE, LOG OF TEST BORINGS, 2A, 2B, 4A, 4B, 4C, 4D, 4E, 6A
347 CARQUINEZ STRAIT BRIDGE, PIER NO. 4 PILE DRIVING LOG
348 CARQUINEZ STRAIT BRIDGE, BORINGS AND TEST PILE DATA
348a LOG OF TEST BORINGS
348b LOG OF TEST BORINGS PB-1
348c LOG OF TEST BORINGS PB-1
348d LOG OF TEST BORINGS PB-1
348e LOG OF TEST BORINGS PB-2
348f LOG OF TEST BORINGS PB-2
348g LOG OF TEST BORINGS PB-2
348h LOG OF TEST BORINGS PB-3
348i LOG OF TEST BORINGS PB-3
348j LOG OF TEST BORINGS PB-3
348k LOG OF TEST BORINGS PB-4
348l LOG OF TEST BORINGS PB-4
348m LOG OF TEST BORINGS PB-4
348n LOG OF TEST BORINGS PB-5
348o LOG OF TEST BORINGS PB-5
348p LOG OF TEST BORINGS PB-5


**3 REVISED PER ADDENDUM NO. 3 DATED DECEMBER 2, 1999**

STATE OF CALIFORNIA DEPARTMENT OF TRANSPORTATION
AS BUILT
NO CHANGES
STRUCTURE REPRESENTATIVE: Brian Boal
INITIAL: ____ DATE: October 15th, 2004

ALL DIMENSIONS ARE IN MILLIMETERS UNLESS OTHERWISE SHOWN

V. Gastoni
DESIGN OVERSIGHT
Vincent Gastoni 3/31/99
SIGN OFF DATE
Rev. Date 6-2-97

| | | | |
|---|---|---|---|
| DESIGN | BY G. Orsolini | CHECKED D. Khazem | |
| DETAILS | BY H. Gawliu | CHECKED O. Muller | |
| QUANTITIES | BY G. Orsolini | CHECKED D. Khazem | |

PREPARED FOR THE STATE OF CALIFORNIA DEPARTMENT OF TRANSPORTATION

G. Orsolini
PROJECT ENGINEER
T. Spoth
BRIDGE DESIGN MANAGER

BRIDGE NO. 28-0352L
KILOMETER POST 0.01

CARQUINEZ BRIDGE & OVERHEAD
INDEX TO PLANS

ORIGINAL SCALE IN MILLIMETERS FOR REDUCED PLANS 0 10 20 30 40 50 60 70 80 90 100

CU 04
EA 013011

DISREGARD PRINTS BEARING EARLIER REVISION DATES

REVISION DATES (PRELIMINARY STAGE ONLY) 4/24/98 9/18/98 12/18/98 1/8/99 1/18/99 2/10/99 3/30/99

SHEET 2 OF 348

FILE => c1tp0101i1003i
PEN TABLE=> SPENS
DATE PLOTTED => 1-Dec-1999 TIME PLOTTED => 11:00
USERNAME => trilm

## GENERAL NOTES

### DESIGN
Bridge Design Specifications: 1983 AASHTO with interims and revisions by Caltrans except as noted.

### DESIGN (STEEL BOX GIRDER)
AASHTO 1996 and AASHTO LRFD 1994 with interims 1996 & 1997

### Live Loading
HS20-44 with modified lane load for long span bridges as follows:

| Load Length L (m) | Uniform Load kN/m/lane | Concentrated Load kN/lane |
|---|---|---|
| 0 < L ≤ 183 | 9.34 | 115.7 |
| 183 < L < 366 | 11.68 - L/78.3 | 144.6 - L/6.33 |
| 366 ≤ L | 7.01 | 86.7 |

Permit loading used for design of the bridge superstructure, but not used for orthotropic deck design.

### Seismic Loading
Site Specific ARS(Rock Spectra), see below:

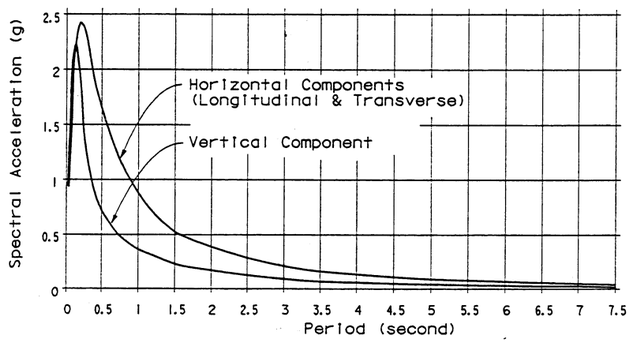


### Suspender Replacement
Exchange of one suspender allowed, provided one lane of traffic is closed for 60 000mm in each direction adjacent to the suspender under consideration.

### Suspender Loss
33 percent increase in allowable load for suspenders in the event of one suspender loss.

### Additional Load Combinations
Load Factor Design:

Group VIIA:
1.0DL + 0.17(LL+I) + 1.0E + 1.0B + 1.0SF + 1.0PS + 1.0EQ

Group XI:
1.0DL + 1.0E + 1.0B + 1.0SF + 1.0PS + 1.0V

Where:
DL = Dead Load
LL+I = Live Load plus Impact
E = Earth Pressure
B = Buoyancy
SF = Stream Flow
PS = Prestress
EQ = Earthquake
V = vessel collision impact force

STATE OF CALIFORNIA
DEPARTMENT OF TRANSPORTATION
**AS BUILT**
STRUCTURE REPRESENTATIVE: Brian Boal
INITIAL:_____ DATE: October 15th, 2004

### Fatigue Loading
In accordance with AASHTO LRFD Bridge Design Specifications, 1994, with interims.

### Wind Loading
Static Wind Loading and Buffeting Response: 47 m/sec @ Elev. +50.00
Critical Flutter Velocity: Not less than 70 m/sec @ Elev. +50.00

### Temperature Gradient
11 degrees C between the top and bottom of the orthotropic box.

### REINFORCED CONCRETE (See Concrete Strength & Type Limits sheets)
fy = 414 MPa (ASTM A706M, Grade 414 Reinforcement)
Tower Legs:
f'c = 56 MPa, n = 6 (Between Footing and lower strut)
f'c = 35 MPa, n = 7 (Elsewhere)
Pier P1 Columns & Cap, Tower Footings, Abutment A4, Dolphin Caps and Fenders:
f'c = 28 MPa, n = 8
All other components:
f'c = 25 MPa, n = 9

*Tower struts :*
*f'c = 42Mpa, n=6.5 (Per RFI-CB-02)*

### PRESTRESSED CONCRETE
See "Prestressing Notes" on "TOWER FOOTING FORM" sheets, "TOWER LOWER STRUT PLAN & ELEVATION", and "TOWER UPPER STRUT PLAN & ELEVATION" sheets.

### STRUCTURAL STEEL
A709M, Grade 345: Fy = 345 MPa. (T2 Toughness requirements for the steel box girder only)

HS Bolts: All bolts shall be M22 x 2.5 HS bolts conforming to ASTM A325M unless otherwise indicated.

All fillet welds shall be 8mm unless otherwise indicated.

### STRUCTURAL STEEL (Steel Shells for CIDH and CISS Concrete Piles)
ASTM A252M, Grade 3
Fy = 310 MPa
Fu = 455 MPa

### STRUCTURAL STEEL (Steel Pipe Piles)
ASTM A252M, Grade 3
Fy = 310 MPa
Fu = 455 MPa

### CABLE SYSTEM
Main Cable Wire:
Fy = 1180 MPa
Fu ≥ 1570 MPa
Proportional Limit ≥ 800 MPa
Castings:
A148M, Grade 620-414
Fy = 414 MPa
Anchor Rods, Anchor Bolts, Cable Band Bolts: A354, Grade BC (Epoxy Coated)
Fy = 752 MPa
Fu = 862 MPa
Suspender, Cable Tie Down and Hand Ropes: A602M, Class A (Zinc Coated)
Fu = 1517 MPa

### TIMBER
Treated Douglas Fir, Grade: Select Structural

### PLASTIC MEMBERS (FENDER SYSTEM)
Reinforced Recycled Plastic

### HIGH STRENGTH THREADED RODS & TIE RODS
(Assumed for Tower Footing Forms)
ASTM A722M, Grade 1035

### CORROSION ALLOWANCES
For corrosion allowances, see "PILE DETAILS" sheets

### DATUM
Elevation based on 1929 NGVD Datum.
Mean Sea Level is at elevation 0.00.
All Elevations shown in Meters.

| HYDROLOGIC SUMMARY | |
|---|---|
| MLLW | -0.80 |
| MSL | 0.00 |
| MHW | 0.82 |

| ALLOWABLE BEARING PRESSURE (At Abutment A4 and North Anchorage) | |
|---|---|
| Above Elev 37.00 | Below Elev 37.00 |
| 815 kPa | 1435 kPa |

### INDEX TO STANDARD PLANS (Dated July 1997)

| | |
|---|---|
| A10A | ABBREVIATIONS |
| A10B | SYMBOLS |
| B0-13 | BRIDGE DETAILS |
| B2-9 | LOAD TEST PILE DETAILS (1) |
| B2-11 | LOAD TEST PILE DETAILS (3) |
| B3-3 | RETAINING WALL TYPE 1A |
| B3-8 | RETAINING WALL DETAILS NO. 1 |
| B6-21 | JOINT SEALS |
| B7-1 | BOX GIRDER DETAILS |
| B7-5 | DECK DRAINS |
| B8-5 | CAST-IN-PLACE PRESTRESSED GIRDER DETAILS |
| S40T | OVERHEAD SIGNS - TUBLAR FOUNDATION DETAILS |
| ES-6B | LIGHTING STANDARDS TYPES 15, 21 AND 22 |
| ES-7A | SIGNAL, LIGHTING AND ELECTRICAL DETAILS STRUCTURE INSTALLATIONS |
| ES-7B | SIGNAL, LIGHTING AND ELECTRICAL DETAILS STRUCTURE INSTALLATIONS |

STANDARD PLAN SHEET NO.
DETAIL NO.

### ABBREVIATIONS

| | |
|---|---|
| B to B | Back to Back |
| BOT | Bottom |
| BS | Both Sides |
| C to C | Center to Center |
| CISS | Cast-in-Steel-Shell |
| CONT | Continuous |
| DL | Dead Load |
| DN | Down |
| DO | Ditto |
| E | East |
| ES | Each Side |
| FS | Far Side |
| MHW | Mean High Water |
| MLLW | Mean Lower Low Water |
| MSL | Mean Seal Level |
| NS | Near Side |
| NTS | Not To Scale |
| Perm | Permanent |
| P/S | Prestressing |
| RRP | Reinforced Recycled Plastic |
| W | West |
| WP | Work Point |
| UPRR | Union Pacific Railroad |
| CPGW | Complete Penetration Groove Weld |
| PPGW | Partial Penetration Groove Weld |
| PP | Panel Point |
| WJ | Welded Joint |
| SS | Stainless Steel |
| ✓ | Machine Finish Symbol |

Caltrans Metric

| DIST. | COUNTY | ROUTE | KILOMETER POST TOTAL PROJECT | SHEET NO. | TOTAL SHEETS |
|---|---|---|---|---|---|
| 04 | CC, Sol | 80 | 22.0/22.7, 0.0/1.8 | 237 | 714 |

Gregory J. Orsolini
REGISTERED ENGINEER - CIVIL
7-12-99
PLANS APPROVAL DATE
REGISTERED PROFESSIONAL ENGINEER G. I. Orsolini No. 44461 Exp. 3/31/02 CIVIL STATE OF CALIFORNIA
The State of California or its officers or agents shall not be responsible for the accuracy or completeness of electronic copies of this plan sheet.

**DE LEUW- PAC-STEINMAN**
120 Howard Street, Suite 850
San Francisco, CA 94105

QUANTITIES

3

| | | | |
|---|---|---|---|
| REMOVE FENDER | | LUMP SUM | |
| STRUCTURE EXCAVATION (BRIDGE) | 4,750 | m³ | |
| * ~~STRUCTURE EXCAVATION (TYPE A)~~ | ~~535~~ | ~~m³~~ | |
| STRUCTURE EXCAVATION (TYPE A) (CLASS I) | 4,290 | m³ | |
| STRUCTURE EXCAVATION (TYPE A) (CLASS II) | ~~7,340~~ | ~~m³~~ | *7875 |
| STRUCTURE EXCAVATION (TYPE D) | 345 | m³ | |
| STRUCTURE EXCAVATION (ROCK) | 15,300 | m³ | |
| STRUCTURE BACKFILL (BRIDGE) | *6000 ~~5,700~~ | m³ | |
| SAND FILL | 224 | m³ | |
| ASPHALT CONCRETE (BRIDGE) | 2,320 | tonn | |
| FURNISH STEEL PIPE PILING (NPS 16) | *5740 ~~6,030~~ | m | |
| DRIVE STEEL PIPE PILE (NPS 16) | ~~160~~ | EA | *160 |
| 3000 MM PERMANENT STEEL SHELL | *502 ~~497~~ | m | |
| 3000 MM CAST-IN-DRILLED-HOLE CONCRETE PILING | ~~996~~ | m | *1001 |
| 2700 MM CAST-IN-DRILLED-HOLE CONCRETE PILING(ROCK SOCKET) | *721 ~~741~~ | m | |
| INSTALL STATE-FURNISHED 3000 MM PERMANENT STEEL SHELL | 499 | m | |
| FURNISH CAST-IN-STEEL SHELL CONCRETE PILING (NPS 30) (TYPE A) | 12,565 | m | |
| DRIVE CAST-IN-STEEL SHELL CONCRETE PILE (NPS 30) (TYPE A) | 380 | EA | |
| FURNISH CAST-IN-STEEL SHELL CONCRETE PILING (NPS 30) (TYPE B) | 1,760 | m | |
| DRIVE CAST-IN-STEEL SHELL CONCRETE PILE (NPS 30) (TYPE B) | 50 | EA | |
| FURNISH CAST-IN-STEEL SHELL CONCRETE PILING (NPS 30) (TYPE C) | 1,300 | m | |
| DRIVE CAST-IN-STEEL SHELL CONCRETE PILE (NPS 30) (TYPE C) | 32 | EA | |
| FURNISH CAST-IN-STEEL SHELL CONCRETE PILING (NPS 60) | 210 | m | |
| DRIVE CAST-IN-STEEL SHELL CONCRETE PILE (NPS 60) | 5 | EA | |
| PRESTRESSING CAST-IN-PLACE CONCRETE | LUMP SUM | | |
| TOWER FOOTING FORM | 2 | EA | |
| SEAL COURSE CONCRETE | 1,332 | m³ | |
| STRUCTURAL CONCRETE, BRIDGE FOOTING | 18,400 ~~17,800~~ | m³ | |
| STRUCTURAL CONCRETE, BRIDGE | 27,480 ~~26,580~~ | m³ | |
| STRUCTURAL CONCRETE, APPROACH SLAB (TYPE N) | 145 | m³ | |
| JOINT SEAL ASSEMBLY (MR=1270 MM) | 25 | m | |
| JOINT SEAL ASSEMBLY (MR=1000 MM) | 25 | m | |
| MAINTENANCE WALKWAY | 740 | m² | |
| BAR REINFORCING STEEL (BRIDGE) | 4,968,000 ~~4,662,000~~ | kg | |
| BAR REINFORCING STEEL (EPOXY COATED)(BRIDGE) | 283,000 | kg | |
| WELDED HEADED BAR REINFORCEMENT | 1,208 | EA | |
| BRIDGE DECK MEMBRANE WATERPROOFING | 26,500 | m² | |
| FURNISH STRUCTURAL STEEL (BRIDGE) | 12,722,000 | kg | |
| ERECT STRUCTURAL STEEL (BRIDGE) | 12,722,000 | kg | |
| FURNISH CABLE SYSTEM (WEST CABLE) | LUMP SUM | | |
| FURNISH CABLE SYSTEM (EAST CABLE) | LUMP SUM | | |
| ERECT CABLE SYSTEM (WEST CABLE) | LUMP SUM | | |
| ERECT CABLE SYSTEM (EAST CABLE) | LUMP SUM | | |
| MAINTENANCE TRAVELER | 3 | EA | |
| RRP LUMBER | 160 | m³ | |
| TREATED LUMBER AND TIMBER | 140 | m³ | |
| CLEAN AND PAINT STRUCTURAL STEEL | LUMP SUM | | |
| CLEAN AND PAINT CABLE SYSTEM | LUMP SUM | | |
| MISCELLANEOUS METAL (BRIDGE) | 89,000 | kg | |
| BRIDGE DECK DRAINAGE SYSTEM | 21,300 ~~19,230~~ | kg | |
| CONCRETE BARRIER (TYPE 27 MODIFIED) | 2,170 | m | |
| METAL BRIDGE RAILING | 1,060 | m | |
| BARRIER MOUNTED BRIDGE RAILING | 1,110 | m | |
| LIGHTING AND ELECTRICAL SYSTEM | LUMP SUM | | |
| NAVIGATIONAL LIGHTING, AVIATION LIGHTING AND FOG DETECTION SYSTEM | LUMP SUM | | |
| TOS AND CALL BOX SYSTEM | LUMP SUM | | |
| SEISMIC MONITORING ELECTRICAL SYSTEM | LUMP SUM | | |
| SECURITY SYSTEM | LUMP SUM | | |
| MECHANICAL WORK | LUMP SUM | | |
| BUILDING WORK (SUBSTATION) | LUMP SUM | | |
| STRUCTURE EXCAVATION (TYPE D)(CLASS I) | 453 | m³ | |
| STRUCTURE EXCAVATION (TYPE D)(CLASS II) | 475 | m³ | |
| FURNISH CAST-IN-STEEL SHELL CONCRETE PILING (NPS 30) | 2,380 | m³ | |
| DRIVE CAST-IN-STEEL SHELL CONCRET PILING (NPS 30) | 64 | EA | |

ALL DIMENSIONS ARE IN MILLIMETERS UNLESS OTHERWISE SHOWN

3 REVISED PER ADDENDUM NO. 3 DATED DECEMBER 2, 1999

** Revised per Addendum No. 5 dated January 21, 2000*

FILE => gltp02_30083948

V. Gastoni
DESIGN OVERSIGHT
Vincent Gastoni 3/31/99
SIGN OFF DATE
Rev. Date 6-2-97

| | BY | CHECKED |
|---|---|---|
| DESIGN | G. Orsolini | D. Khazem |
| DETAILS | H. Gawliu | D. Khazem |
| QUANTITIES | G. Orsolini | T. Spoth |

PREPARED FOR THE STATE OF CALIFORNIA DEPARTMENT OF TRANSPORTATION

G. Orsolini
PROJECT ENGINEER
T. Spoth
BRIDGE DESIGN MANAGER

BRIDGE NO. 28-0352L
KILOMETER POST 0.01

CU 04
EA 013011

# CARQUINEZ BRIDGE & OVERHEAD
## GENERAL NOTES

ORIGINAL SCALE IN MILLIMETERS FOR PRODUCED PLANS 0 10 20 30 40 50 60 70 80 90 100

DISREGARD PRINTS BEARING EARLIER REVISION DATES

REVISION DATES (PRELIMINARY STAGE ONLY) 4/24/98 9/18/98 12/18/98 1/8/99 1/18/99 2/15/99 3/31/99 4/9/99 6/11/99

SHEET 3 OF 348

FILE => gltp02_30083948
PEN TABLE=> $PEN$

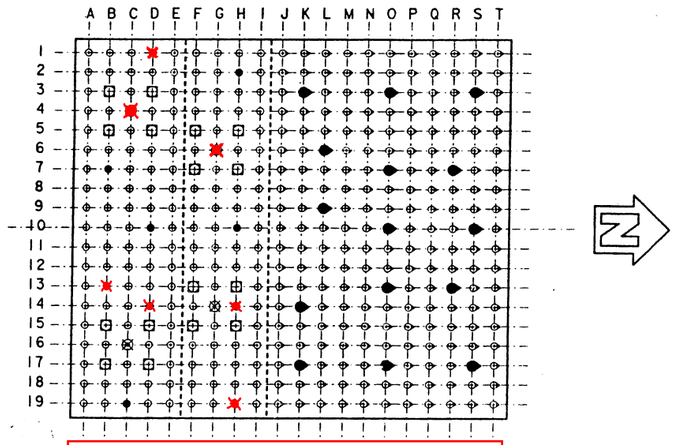


✱ = Revised test pile locations per CCO# 8.

## KEY PLAN - SOUTH ANCHORAGE PILE LAYOUT

No Scale

### PILE DATA - CAST-IN-STEEL-SHELL CONCRETE PILES (NPS 30) (TYPE A) AT SOUTH ANCHORAGE

| CONTROL LOCATION | PILE DESIGNATION | PILE TYPE | DESIGN LOADING (SERVICE) | NOMINAL RESISTANCE | | DESIGN TIP ELEVATION | | | SPECIFIED TIP ELEVATION |
|---|---|---|---|---|---|---|---|---|---|
| | | | | COMPRESSION | TENSION | (1) | (2) | (3) | |
| A | A1,B1,C1,D1,E1<br>A2,B2,C2,D2,E2 | NPS 30x0.625 | N/A | 3150 kN | 2000 kN | -29.5 | -25.0 | -20.0 | -29.5 |
| B | A3,B3,C3,D3,E3<br>A4,B4,C4,D4,E4 | NPS 30x0.625 | N/A | 2800 kN | 1550 kN | -30.0 | -24.5 | -20.0 | -30.0 |
| C | A5,B5,C5,D5,E5<br>A6,B6,C6,D6,E6<br>A7,B7,C7,D7,E7 | NPS 30x0.625 | N/A | 2500 kN | 1100 kN | -30.5 | -26.0 | -20.0 | -30.5 |
| D | A8,B8,C8,D8,E8<br>A9,B9,C9,D9,E9<br>A10,B10,C10,D10,E10<br>A11,B11,C11,D11,E11<br>A12,B12,C12,D12,E12 | NPS 30x0.625 | N/A | 2500 kN | 450 kN | -30.5 | -26.0 | -20.0 | -30.5 |
| E | A13,B13,C13,D13,E13<br>A14,B14,C14,D14,E14<br>A15,B15,C15,D15,E15 | NPS 30x0.625 | N/A | 2500 kN | 1100 kN | -31.0 | -25.0 | -15.0 | -31.0 |
| F | A16,B16,C16,D16,E16<br>A17,B17,C17,D17,E17 | NPS 30x0.625 | N/A | 2800 kN | 1550 kN | -28.0 | -23.0 | -15.0 | -28.0 |
| G | A18,B18,C18,D18,E18<br>A19,B19,C19,D19,E19 | NPS 30x0.625 | N/A | 3150 kN | 2000 kN | -26.5 | -22.5 | -15.0 | -26.5 |
| H | F1,G1,H1,I1<br>F2,G2,,H2,I2<br>F3,G3,H3,I3 | NPS 30x0.625 | N/A | 4800 kN | 2150 kN | -37.0 | -27.5 | -20.0 | -37.0 |
| I | F4,G4,H4,I4<br>F5,G5,H5,I5<br>F6,G6,H6,I6<br>F7,G7,H7,I7 | NPS 30x0.625 | N/A | 4450 kN | 1700 kN | -38.0 | -27.5 | -20.0 | -38.0 |
| J | F8,G8,H8,I8<br>F9,G9,H9,I9<br>F10,G10,H10,I10<br>F11,G11,H11,I11<br>F12,G12,H12,I12 | NPS 30x0.625 | N/A | 3900 kN | 1100 kN | -36.5 | -26.0 | -20.0 | -36.5 |
| K | F13,G13,H13,I13<br>F14,G14,H14,I14<br>F15,G15,H15,I15<br>F16,G16,H16,I16 | NPS 30x0.625 | N/A | 4450 kN | 1700 kN | -38.0 | -28.0 | -14.5 | -38.0 |
| L | F17,G17,H17,I17<br>F18,G18,H18,I18<br>F19,G19,H19,I19 | NPS 30x0.625 | N/A | 4800 kN | 2150 kN | -33.5 | -25.5 | -14.5 | -33.5 |

### PILE DATA - CAST-IN-STEEL- SHELL CONCRETE PILES (NPS 30) (TYPE A) AT SOUTH ANCHORAGE

| CONTROL LOCATION | LOCATION | PILE TYPE | DESIGN LOADING (SERVICE) | NOMINAL RESISTANCE | | DESIGN TIP ELEVATION | | | SPECIFIED TIP ELEVATION |
|---|---|---|---|---|---|---|---|---|---|
| | | | | COMPRESSION | TENSION | (1) | (2) | (3) | |
| M | J1,K1,L1,M1<br>J2,K2,L2,M2<br>J3,K3,L3,M3 | NPS 30x0.625 | N/A | 4300 kN | 2100 kN | -35.5 | -27.5 | -17.5 | -35.5 |
| N | J4,K4,L4,M4<br>J5,K5,L5,M5<br>J6,K6,L6,M6<br>J7,K7,L7,M7 | NPS 30x0.625 | N/A | 4300 kN | 1800 kN | -38.5 | -29.0 | -17.5 | -38.5 |
| O | J8,K8,L8,M8<br>J9,K9,L9,M9<br>J10,K10,L10,M10<br>J11,K11,L11,M11<br>J12,K12,L12,M12 | NPS 30x0.625 | N/A | 4300 kN | 1400 kN | -39.5 | -28.0 | -17.5 | -39.5 |
| P | J13,K13,L13,M13<br>J14,K14,L14,M14<br>J15,K15,L15,M15<br>J16,K16,L16,M16 | NPS 30x0.625 | N/A | 4300 kN | 1800 kN | -39.5 | -32.0 | -12.0 | -39.5 |
| Q | J17,K17,L17,M17<br>J18,K18,L18,M18<br>J19,K19,L19,M19 | NPS 30x0.625 | N/A | 4300 kN | 2100 kN | -33.5 | -28.0 | -12.0 | -33.5 |
| R | N1,O1,P1,Q1<br>N2,O2,P2,Q2<br>N3,O3,P3,Q3 | NPS 30x0.625 | N/A | 2900 kN | 1450 kN | -30.0 | -24.0 | -17.5 | -30.0 |
| S | N4,O4,P4<br>N5,O5,P5<br>N6,O6,P6<br>N7,O7,P7 | NPS 30x0.625 | N/A | 2900 kN | 1150 kN | -34.0 | -28.0 | -17.5 | -34.0 |
| T | N8,O8,P8<br>N9,O9,P9<br>N10,O10,P10<br>N11,O11,P11<br>N12,O12,P12 | NPS 30x0.625 | N/A | 2900 kN | 750 kN | -35.0 | -29.0 | -17.5 | -35.0 |
| U | N13,O13,P13<br>N14,O14,P14<br>N15,O15,P15<br>N16,O16,P16 | NPS 30x0.625 | N/A | 2900 kN | 1150 kN | -35.5 | -28.5 | -12.0 | -35.5 |
| V | N17,O17,P17,Q17<br>N18,O18,P18,Q18<br>N19,O19,P19,Q19 | NPS 30x0.625 | N/A | 2900 kN | 1450 kN | -29.5 | -24.5 | -12.0 | -29.5 |
| W | R1,S1,T1<br>R2,S2,T2<br>R3,S3,T3 | NPS 30x0.625 | N/A | 2450 kN | 600 kN | -29.5 | -25.0 | -17.5 | -29.5 |
| X | Q4,R4,S4<br>Q5,R5,S5<br>Q6,R6,S6<br>Q7,R7,S7 | NPS 30x0.625 | N/A | 2300 kN | 500 kN | -31.5 | -28.0 | -17.5 | -31.5 |
| Y | Q8,R8,S8<br>Q9,R9,S9<br>Q10,R10,S10<br>Q11,R11,S11<br>Q12,R12,S12 | NPS 30x0.625 | N/A | 2350 kN | 100 kN | -34.0 | -30.0 | -17.5 | -34.0 |
| Z | Q13,R13,S13<br>Q14,R14,S14<br>Q15,R15,S15,T15<br>Q16,R16,S16,T16 | NPS 30x0.625 | N/A | 2300 kN | 500 kN | -33.0 | -26.0 | -12.0 | -33.0 |
| AA | R17,S17,T17<br>R18,S18,T18<br>R19,S19,T19 | NPS 30x0.625 | N/A | ~~2450 kN~~ | ~~600 kN~~ | ~~-27.5~~ | ~~-20.0~~ | ~~-12.0~~ | ~~27.5~~ |
| BB | T4,T5,T6,T7<br>T8,T9,T10,T11<br>T12<br>T13,T14 | NPS 30x0.625 | N/A | N/A | N/A | N/A | N/A | -17.5 | -17.5 ✱ |

5

### PILE DATA - CAST-IN-STEEL-SHELL CONCRETE PILES (NPS 30) (TYPE B) AT PIER P1

| LOCATION | PILE TYPE | DESIGN LOADING (SERVICE) | NOMINAL RESISTANCE | | DESIGN TIP ELEVATION | | | SPECIFIED TIP ELEVATION |
|---|---|---|---|---|---|---|---|---|
| | | | COMPRESSION | TENSION | (1) | (2) | (3) | |
| EAST FOOTING | NPS 30x0.625 | N/A | 5700 kN | 2250 kN | -36.0 | -23.0 | -22.0 | -36.0 |
| WEST FOOTING | NPS 30x0.625 | N/A | 5700 kN | 2250 kN | -38.0 | -26.0 | -22.0 | -38.0 |

Caltrans Metric

5

| DIST. | COUNTY | ROUTE | KILOMETER POST TOTAL PROJECT | SHEET NO. | TOTAL SHEETS |
|---|---|---|---|---|---|
| 04 | CC, Sol | 80 | 22.0/22.7, 0.0/1.8 | 238 | 714 |

Gregory L. Orsolini
REGISTERED ENGINEER - CIVIL

7-12-99
PLANS APPROVAL DATE

REGISTERED PROFESSIONAL ENGINEER G. L. Orsolini No. 44461 Exp. 3/31/02 CIVIL STATE OF CALIFORNIA

The State of California or its officers or agents shall not be responsible for the accuracy or completeness of electronic copies of this plan sheet.

DE LEUW- PAC-STERMAN
120 Howard Street, Suite 850
San Francisco, CA 94105

## NOTES:

1. Design tip elevation is controlled by the following demands: (1) compression, (2) tension, (3) lateral loads.
2. For pile details see "PILE DETAILS" sheets.
3. "Nominal Resistance" is defined as the design capacity required to resist the factored axial demands.
4. Tip Elevations shown are in meters.
5. ✱ Indicates specified tip elevation shall not be lowered.
6. For test pile details, see "SOUTH ANCHORAGE MISC DETAILS" sheet.

## LEGEND:

- Plumb Piles
- Piles with 3 Vertical : 1 Horizontal Batter
- Load Test Piles
- Anchor Piles
- Plumb Index Piles
- Batter (3 Vertical :1 Horizontal) Index Piles

Revised per Addendum #5 dated January 21, 2000.

STATE OF CALIFORNIA
DEPARTMENT OF TRANSPORTATION

AS BUILT
SEE ATTACHMENTS &
CHANGES SHOWN ON THIS SHEET

STRUCTURE REPRESENTATIVE: Brian Boal
INITIAL:_____ DATE: October 15th, 2004

For actual pile tip elevvations see attachment # 11.01

ALL DIMENSIONS ARE IN MILLIMETERS UNLESS OTHERWISE SHOWN

V. Gastonl
DESIGN OVERSIGHT
Vincent Gastonl 3/31/99
SIGN OFF DATE
Rev. Date 6-2-97

| | | | |
|---|---|---|---|
| DESIGN | BY R. Chang | CHECKED M. Duan/J. Quincy | |
| DETAILS | BY H. Gawliu | CHECKED M. Duan/J. Quincy | |
| QUANTITIES | BY R. Chang | CHECKED A. Loof | |

PREPARED FOR THE STATE OF CALIFORNIA DEPARTMENT OF TRANSPORTATION

G. Orsolini, PROJECT ENGINEER
T. Spoth, BRIDGE DESIGN MANAGER

BRIDGE NO. 28-0352L
KILOMETER POST 0.01

CARQUINEZ BRIDGE & OVERHEAD
PILE DATA NO. 1

ORIGINAL SCALE IN MILLIMETERS FOR REDUCED PLANS 0 10 20 30 40 50 60 70 80 90 100

CU 04
EA 013011

DISREGARD PRINTS BEARING EARLIER REVISION DATES

REVISION DATES (PRELIMINARY STAGE ONLY) 4/24/98 3/30/98 5/20/98 1/8/99 1/15/99 2/16/99 4/1/99 6/11/99

SHEET 4 OF 348

FILE => a1tp03_20083838
PEN TABLE => $PEN$
DATE PLOTTED => 20-Jul-1999 TIME PLOTTED => 08:38
$SCENAME => trflm

| DIST. | COUNTY | ROUTE | KILOMETER POST TOTAL PROJECT | SHEET NO. | TOTAL SHEETS |
|---|---|---|---|---|---|
| 04 | Sol | 80 | | 239 | 714 |

Caltrans Metric

3

Gregory J. Orsolini
REGISTERED ENGINEER - CIVIL

PLANS APPROVAL DATE

The State of California or its officers or agents shall not be responsible for the accuracy or completeness of electronic copies of this plan sheet.

REGISTERED PROFESSIONAL ENGINEER G. L. Orsolini No. 44461 Exp. 3/31/02 CIVIL STATE OF CALIFORNIA

**DE LEUW-OPAC-STEINMAN**
120 Howard Street, Suite 850
San Francisco, CA 94105

PILE DATA TABLE - 2700 mm CAST-IN-DRILLED-HOLE CONCRETE PILE (ROCK SOCKET) WITH PP3000 mm PERMANENT STEEL SHELL AT TOWERS T2 AND T3

| LOCATION | PILE TYPE | DESIGN LOADING | NOMINAL RESISTANCE CIDH PILE + SHELL | | NOMINAL RESISTANCE PERMANENT SHELL | | CUT-OFF ELEV (m) | PERMANENT SHELL ~~SPECIFIED~~ TIP ELEV (m) | Actual CIDH (ROCK SOCKET) DESIGN TIP ELEV (m) | | | SPECIFIED TIP ELEV (m) | Actual ~~MIN~~ LENGTH OF ROCK SOCKET (m) |
|---|---|---|---|---|---|---|---|---|---|---|---|---|---|
| | | | COMPRESSION (kN) | TENSION (kN) | COMPRESSION (kN) | TENSION (kN) | | | (1) | (2) | (3) | | |
| ~~Tower T2-East Ftg~~ | ~~2700 mm CIDH (Rock Socket) W/ PP3000 I.D.x 45 Perm. Shell~~ | ~~NA~~ | ~~88,100~~ | ~~35,500~~ | ~~13,700~~ | ~~11,000~~ | ~~-1.55~~ | ~~48.8~~ | ~~-91.9~~ | ~~-61.3~~ | ~~-54.5~~ | ~~-91.9~~ | ~~43.1~~ |
| ~~Tower T2-West Ftg~~ | ~~2700 mm CIDH (Rock Socket) W/ PP3000 I.D.x 45 Perm. Shell~~ | ~~NA~~ | ~~88,100~~ | ~~35,500~~ | ~~14,700~~ | ~~11,800~~ | ~~-1.55~~ | ~~-48.8~~ | ~~-90.7~~ | ~~-60.2~~ | ~~53.5~~ | ~~90.7~~ | ~~41.9~~ |
| Tower T3-EE1 | 2700 mm CIDH (Rock Socket) W/ PP3000 I.D.x 45 Perm. Shell | NA | 75,200 | 14,900 | 0 | 0 | -1.55 | ~~-40.5~~ -43.418 | -64.5 | -45.8 | -49.5 | ~~-64.5~~ -65.488 | ~~24.0~~ 22.07 |
| Tower T3-EE2 | 2700 mm CIDH (Rock Socket) W/ PP3000 I.D.x 45 Perm. Shell | NA | 75,200 | 14,900 | 0 | 0 | -1.55 | ~~-39.0~~ -39.94 | -62.5 | -44.1 | -49.0 | ~~-62.5~~ -59.765 | ~~23.5~~ 19.825 |
| Tower T3-EE3 | 2700 mm CIDH (Rock Socket) W/ PP3000 I.D.x 45 Perm. Shell | NA | 75,200 | 14,900 | 0 | 0 | -1.55 | ~~-36.5~~ -38.190 | -52.0 | -40.6 | -45.0 | ~~-52.0~~ -55.025 | ~~15.5~~ 16.835 |
| Tower T3-EW1 | 2700 mm CIDH (Rock Socket) W/ PP3000 I.D.x 45 Perm. Shell | NA | 75,200 | 14,900 | 0 | 0 | -1.55 | ~~-40.0~~ -40.897 | -63.8 | -45.2 | -49.5 | ~~-63.8~~ -60.337 | ~~23.0~~ 19.440 |
| Tower T3-EW2 | 2700 mm CIDH (Rock Socket) W/ PP3000 I.D.x 45 Perm. Shell | NA | 75,200 | 14,900 | 0 | 0 | -1.55 | ~~-38.5~~ -41.640 | -54.0 | -40.9 | -47.0 | ~~-54.0~~ -61.60 | ~~15.5~~ 19.960 |
| Tower T3-EW3 | 2700 mm CIDH (Rock Socket) W/ PP3000 I.D.x 45 Perm. Shell | NA | 75,200 | 14,900 | 0 | 0 | -1.55 | ~~-36.0~~ -39.519 | -51.4 | -40.1 | -44.5 | ~~-51.4~~ -59.60 | ~~15.4~~ 20.081 |
| Tower T3-WE1 | 2700 mm CIDH (Rock Socket) W/ PP3000 I.D.x 45 Perm. Shell | NA | 75,200 | 14,900 | 0 | 0 | -1.55 | ~~-39.0~~ -42.590 | -54.9 | -43.1 | -48.0 | ~~-54.9~~ -59.70 | ~~15.9~~ 17.110 |
| Tower T3-WE2 | 2700 mm CIDH (Rock Socket) W/ PP3000 I.D.x 45 Perm. Shell | NA | 75,200 | 14,900 | 0 | 0 | -1.55 | ~~-37.5~~ -41.50 | -52.9 | -41.5 | -46.0 | ~~-52.9~~ -61.40 | ~~15.4~~ 19.900 |
| Tower T3-WE3 | 2700 mm CIDH (Rock Socket) W/ PP3000 I.D.x 45 Perm. Shell | NA | 75,200 | 14,900 | 0 | 0 | -1.55 | ~~-35.0~~ -40.063 | -50.5 | -39.2 | -43.5 | ~~-50.5~~ -68.36 | ~~15.5~~ 28.297 |
| Tower T3-WW1 | 2700 mm CIDH (Rock Socket) W/ PP3000 I.D.x 45 Perm. Shell | NA | 75,200 | 14,900 | 0 | 0 | -1.55 | ~~-39.0~~ -42.556 | -54.7 | -43.1 | -48.0 | ~~-54.7~~ -62.186 | ~~15.7~~ 19.630 |
| Tower T3-WW2 | 2700 mm CIDH (Rock Socket) W/ PP3000 I.D.x 45 Perm. Shell | NA | 75,200 | 14,900 | 0 | 0 | -1.55 | ~~-37.0~~ -41.719 | -52.6 | -41.1 | -45.5 | ~~-52.6~~ -64.621 | ~~15.6~~ 22.902 |
| Tower T3-WW3 | 2700 mm CIDH (Rock Socket) W/ PP3000 I.D.x 45 Perm. Shell | NA | 75,200 | 14,900 | 0 | 0 | -1.55 | ~~-35.0~~ -39.558 | -50.4 | -39.1 | -43.5 | ~~-50.4~~ -63.390 | ~~15.4~~ 23.832 |

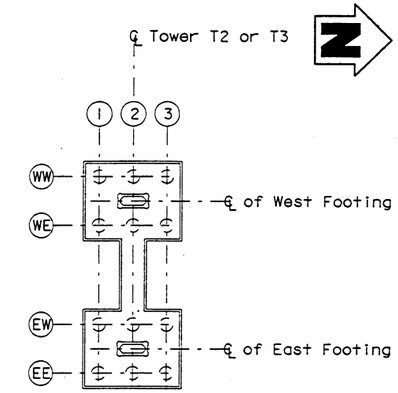


PILE DATA TABLE - CAST-IN-STEEL SHELL CONCRETE PILE (NPS 30) (TYPE C) NEAR TOWERS T2 AND T3 PIER PROTECTION

| LOCATION | PILE TYPE | DESIGN LOADING | NOMINAL RESISTANCE | | DESIGN TIP ELEV. (m) | | SPECIFIED TIP ELEV. (m) | PENETRATION IN ROCK (m) |
|---|---|---|---|---|---|---|---|---|
| | | | COMPRESSION | TENSION | (1) | (3) | | |
| Dolphin-Near Tower T2 | NPS 30 X 0.5 | NA | 590 kN | 0 kN | -35.0 | -33.0 | -35.0 | NA |
| ~~Fendering-Near Tower T3~~ | ~~NPS 30 X 0.5~~ | ~~NA~~ | ~~930 kN~~ | ~~0 kN~~ | ~~-42.0~~ | ~~-35.0~~ | ~~-42.0~~ | ~~1.0~~ |

*Per CCO #56, See Attachment #11.02*

PILE DATA TABLE - CAST-IN-STEEL SHELL CONCRETE PILE (NPS 60) NEAR TOWER T3 PIER PROTECTION

| LOCATION | PILE TYPE | DESIGN LOADING | NOMINAL RESISTANCE | | DESIGN TIP ELEV. (m) | | SPECIFIED TIP ELEV. (m) | PENETRATION IN ROCK (m) |
|---|---|---|---|---|---|---|---|---|
| | | | COMPRESSION | TENSION | (1) | (3) | | |
| Dolphin-Near Tower T3 | NPS 60 X 1.0 | NA | ~~1160 kN~~ 1550 kN | 0 kN | ~~-40.5~~ -44.0 | ~~-41.0~~ -44.0 | -41.0 | 1.5 |

PILE DATA TABLE - STEEL PIPE PILE (NPS 16) NEAR TOWER T2 PIER PROTECTION

| LOCATION | PILE TYPE | DESIGN LOADING | NOMINAL RESISTANCE | | DESIGN TIP ELEV. (m) | | SPECIFIED TIP ELEV. (m) |
|---|---|---|---|---|---|---|---|
| | | | COMPRESSION | TENSION | (1) | (3) | |
| Fendering-Near Tower T2 | NPS 16 X 0.5 | NA | 66 kN | 0 kN | -32.0 | -26.0 | -32.0 |

3 **REVISED PER ADDENDUM NO. 3 DATED DECEMBER 2, 1999**

## NOTES:

1. Design tip elevation is controlled by the following demands: (1) compression, (2) tension, (3) lateral loads.
2. For pile details see "PILE DETAILS" sheets.
3. "Nominal Resistance" is defined as the design capacity required to resist the factored axial demands.

STATE OF CALIFORNIA
DEPARTMENT OF TRANSPORTATION

**AS BUILT**
SEE ATTACHMENTS &
CHANGES SHOWN ON THIS SHEET

STRUCTURE REPRESENTATIVE: Brian Boal
INITIAL:_____ DATE: October 15th, 2004

*For additional pile data see attachment #11.02*

ALL DIMENSIONS ARE IN MILLIMETERS UNLESS OTHERWISE SHOWN

V. Gastoni
DESIGN OVERSIGHT
Vincent Gastoni 3/31/99
SIGN OFF DATE
Rev. Date 6-2-97

| | BY | CHECKED |
|---|---|---|
| DESIGN | S. Apte/S. Marlow | D. Morgan/J. Quincy |
| DETAILS | F.G. Lee | D. Morgan/J. Quincy |
| QUANTITIES | S. Apte/S. Marlow | E. Buno/R. Bateman |

PREPARED FOR THE STATE OF CALIFORNIA DEPARTMENT OF TRANSPORTATION

G. Orsolini
PROJECT ENGINEER
T. Spoth
BRIDGE DESIGN MANAGER

BRIDGE NO. 28-0352L
KILOMETER POST 0.01

CARQUINEZ BRIDGE & OVERHEAD
PILE DATA NO. 2

ORIGINAL SCALE IN MILLIMETERS FOR REDUCED PLANS 0 10 20 30 40 50 60 70 80 90 100

CU 04
EA 013011

DISREGARD PRINTS BEARING EARLIER REVISION DATES

REVISION DATES (PRELIMINARY STAGE ONLY) 4/24/98 9/18/98 12/18/98 1/8/99 1/15/99 2/15/99 6/17/99 9/30/99

SHEET 5 OF 348

FILE => GTP040110592I

PEN TABLE=> $PEN$

FILE => altp040110592I
TIME PLOTTED => 10:59
DATE PLOTTED => 1-Dec-1999
USERNAME => trlim

| DIST. | COUNTY | ROUTE | KILOMETER POST TOTAL PROJECT | SHEET NO. | TOTAL SHEETS |
|---|---|---|---|---|---|
| 04 | CC, Sol | 80 | 22.0/22.7, 0.0/1.8 | 240 | 714 |

Caltrans Metric

REGISTERED ENGINEER - CIVIL

7-12-99

PLANS APPROVAL DATE

REGISTERED PROFESSIONAL ENGINEER — G. L. Orsolini — No. 44461 — Exp. 3/31/02 — CIVIL — STATE OF CALIFORNIA

The State of California or its officers or agents shall not be responsible for the accuracy or completeness of electronic copies of this plan sheet.


DE LEUW- PAC-STEINMAN
120 Howard Street, Suite 850
San Francisco, CA 94105


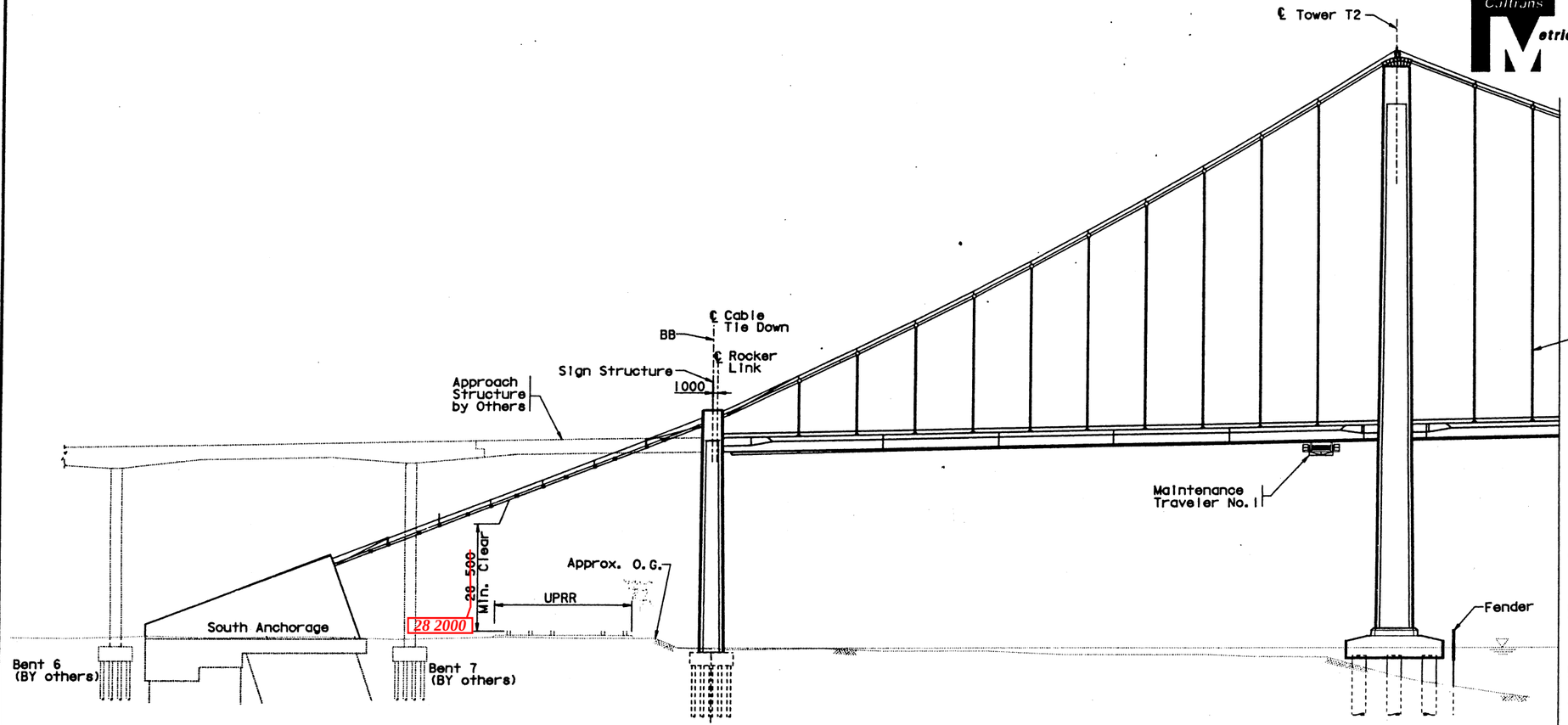


ELEVATION
1:500

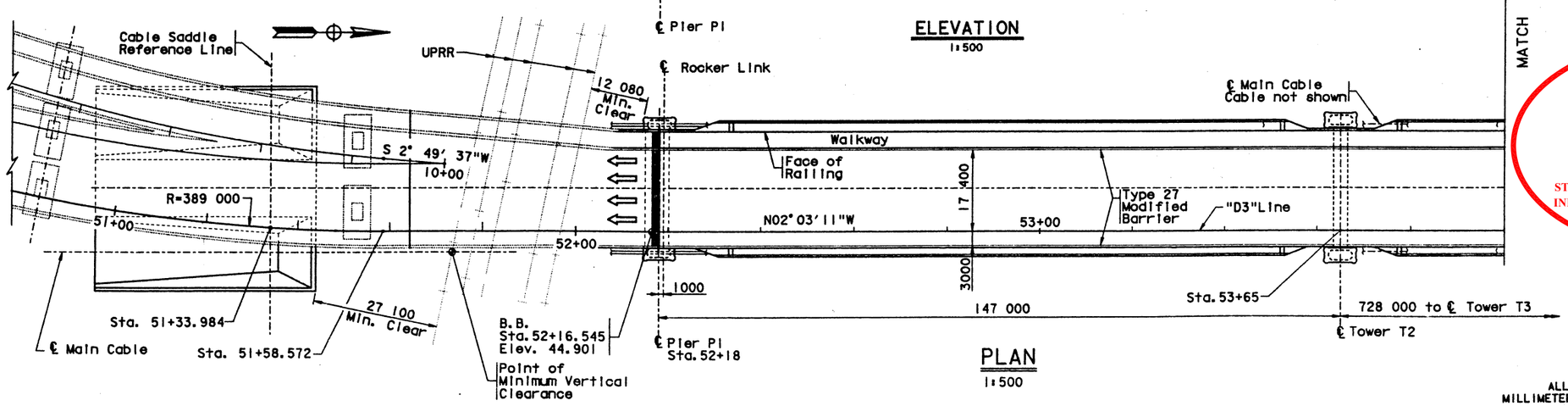


PLAN
1:500

MATCH LINE STA. 54+00

STATE OF CALIFORNIA
DEPARTMENT OF TRANSPORTATION

**AS BUILT**

STRUCTURE REPRESENTATIVE: Brian Boal
INITIAL:_____ DATE: October 15th, 2004

ALL DIMENSIONS ARE IN MILLIMETERS UNLESS OTHERWISE SHOWN

V. Gastoni
DESIGN OVERSIGHT
Vincent Gastoni 3/31/99
SIGN OFF DATE

Rev. Date 6-2-97

| | BY | CHECKED |
|---|---|---|
| DESIGN | D. Khazem | G. Orsolini |
| DETAILS | G. Jimenez | G. Orsolini |
| QUANTITIES | S. Condell | G. Orsolini |

PREPARED FOR THE STATE OF CALIFORNIA DEPARTMENT OF TRANSPORTATION

D. Khazem
PROJECT ENGINEER
T. Spoth
BRIDGE DESIGN MANAGER

BRIDGE NO. 28-0352L
KILOMETER POST 0.01

# CARQUINEZ BRIDGE & OVERHEAD
## STRUCTURE PLAN NO. 1

CU 04
EA 013011

ORIGINAL SCALE IN MILLIMETERS FOR REDUCED PLANS 0 10 20 30 40 50 60 70 80 90 100

DISREGARD PRINTS BEARING EARLIER REVISION DATES

REVISION DATES (PRELIMINARY STAGE ONLY) 4/24/98 5/18/98 12/18/98 01/28/99 01/25/99 2/16/99 3/31/99

SHEET 6 OF 348

FILE => asp101_20083845

USERNAME => trflim DATE PLOTTED => 20-JUL-1999 TIME PLOTTED => 08:42

@DGN@

| DIST. | COUNTY | ROUTE | KILOMETER POST TOTAL PROJECT | SHEET NO. | TOTAL SHEETS |
|---|---|---|---|---|---|
| 04 | CC, Sol | 80 | 22.0/22.7, 0.0/1.8 | 241 | 714 |

Caltrans Metric

Gregory J. Orsolini
REGISTERED ENGINEER - CIVIL

7-12-99
PLANS APPROVAL DATE

REGISTERED PROFESSIONAL ENGINEER
G. J. Orsolini
No. 44461
Exp. 3/31/02
CIVIL
STATE OF CALIFORNIA

The State of California or its officers or agents shall not be responsible for the accuracy or completeness of electronic copies of this plan sheet.

DE LEUW- PAC-STEINMAN
120 Howard Street, Suite 850
San Francisco, CA 94105

STATE OF CALIFORNIA
DEPARTMENT OF TRANSPORTATION

**AS BUILT**
NO CHANGES

STRUCTURE REPRESENTATIVE: Brian Boal
INITIAL:_____ DATE: October 15th, 2004

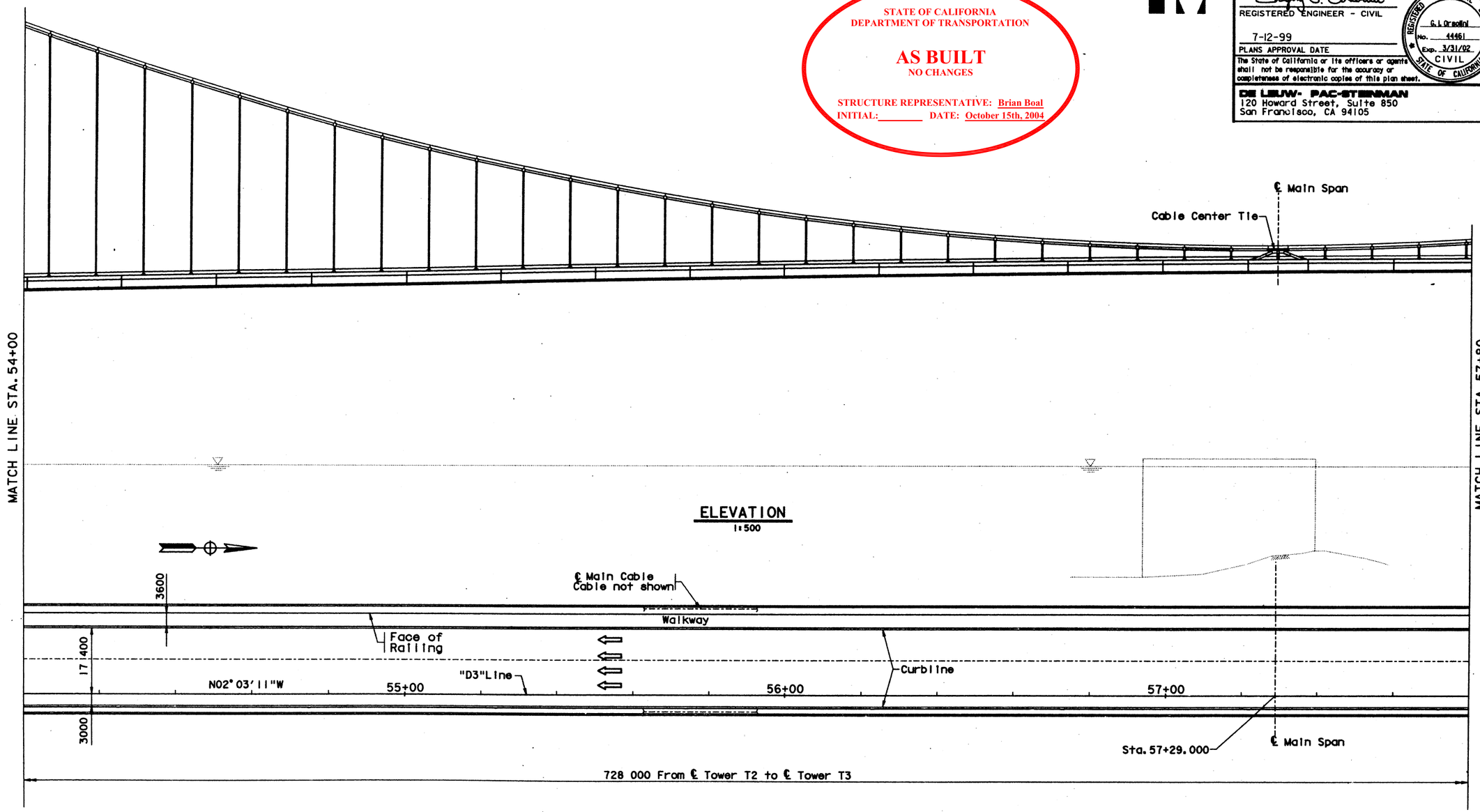


ALL DIMENSIONS ARE IN MILLIMETERS UNLESS OTHERWISE SHOWN

V. Gastoni
DESIGN OVERSIGHT
Vincent Gastoni 3/31/99
SIGN OFF DATE
Rev. Date 6-2-97

| | BY | CHECKED |
|---|---|---|
| DESIGN | D. Khazem | G. Orsolini |
| DETAILS | G. Jimenez | G. Orsolini |
| QUANTITIES | S. Condell | G. Orsolini |

ORIGINAL SCALE IN MILLIMETERS FOR REDUCED PLANS 0 10 20 30 40 50 60 70 80 90 100

PREPARED FOR THE
STATE OF CALIFORNIA
DEPARTMENT OF TRANSPORTATION

D. Khazem
PROJECT ENGINEER
T. Spoth
BRIDGE DESIGN MANAGER

CU 04
EA 013011

BRIDGE NO. 28-0352L
KILOMETER POST 0.01

# CARQUINEZ BRIDGE & OVERHEAD
# STRUCTURE PLAN NO. 2

DISREGARD PRINTS BEARING EARLIER REVISION DATES →
REVISION DATES (PRELIMINARY STAGE ONLY) 4/24/98 9/18/98 2/18/98 10/08/98 1/25/99 2/16/99 3/31/99

SHEET 7 OF 348

FILE => asp102_20083851

USERNAME => trlim DATE PLOTTED => 20-Jul-1999 TIME PLOTTED => 08:43

⊕DGN⊕

| DIST. | COUNTY | ROUTE | KILOMETER POST TOTAL PROJECT | SHEET NO. | TOTAL SHEETS |
|---|---|---|---|---|---|
| 04 | CC, Sol | 80 | 22.0/22.7, 0.0/1.8 | 242 | 714 |

Caltrans Metric

Gregory L. Orsolini
REGISTERED ENGINEER - CIVIL

7-12-99
PLANS APPROVAL DATE

REGISTERED PROFESSIONAL ENGINEER — G. L. Orsolini — No. 44461 — Exp. 3/31/02 — CIVIL — STATE OF CALIFORNIA

The State of California or its officers or agents shall not be responsible for the accuracy or completeness of electronic copies of this plan sheet.

DE LEUW- PAC-STEINMAN
120 Howard Street, Suite 850
San Francisco, CA 94105

STATE OF CALIFORNIA
DEPARTMENT OF TRANSPORTATION

**AS BUILT**
NO CHANGES

STRUCTURE REPRESENTATIVE: Brian Boal
INITIAL:_____ DATE: October 15th, 2004

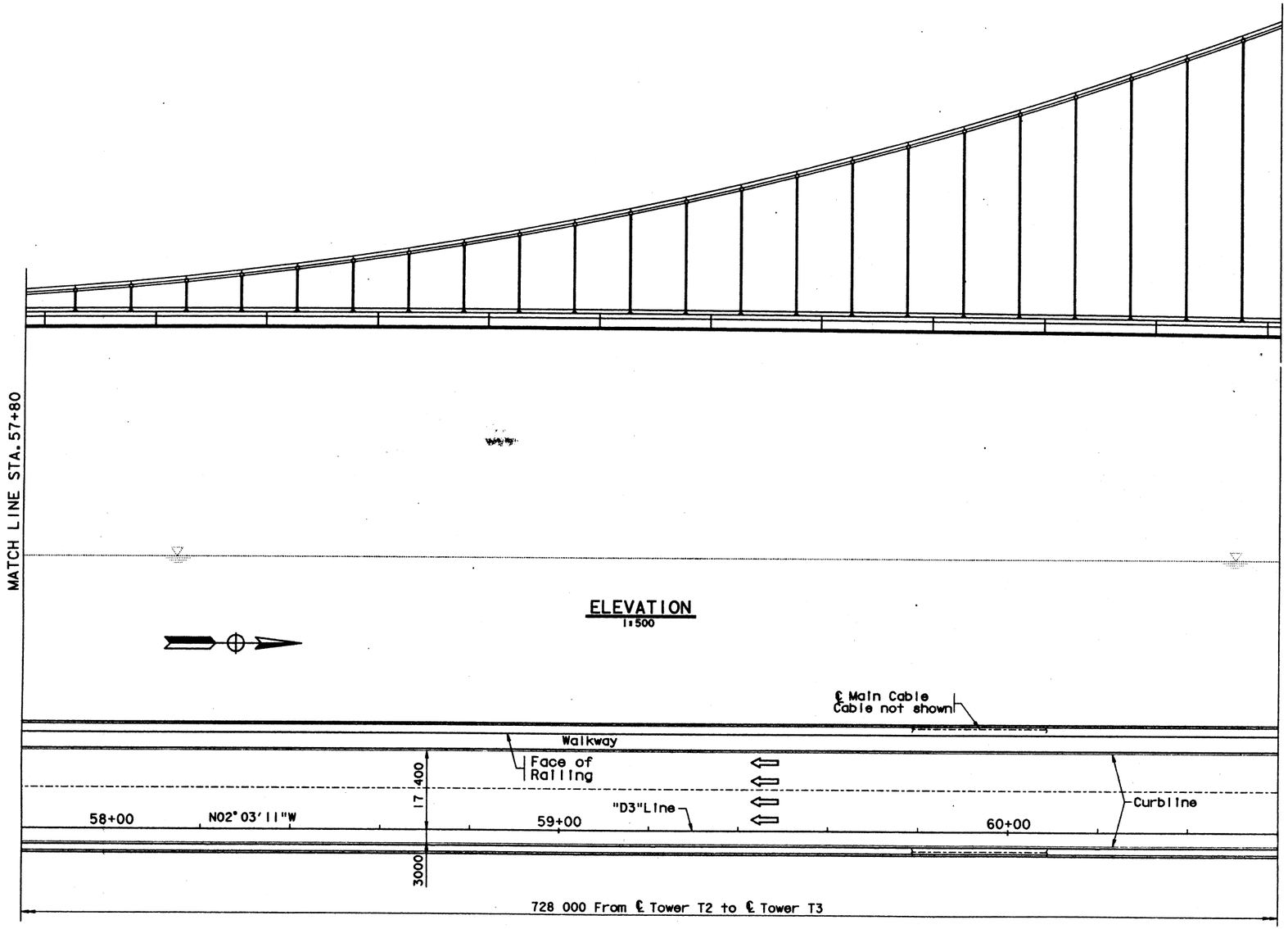


ALL DIMENSIONS ARE IN MILLIMETERS UNLESS OTHERWISE SHOWN

V. Gastoni
DESIGN OVERSIGHT
Vincent Gastoni 3/31/99
SIGN OFF DATE
Rev. Date 6-2-97

| | BY | CHECKED |
|---|---|---|
| DESIGN | D. Khazem | G. Orsolini |
| DETAILS | G. Jimenez | G. Orsolini |
| QUANTITIES | S. Condell | G. Orsolini |

PREPARED FOR THE STATE OF CALIFORNIA DEPARTMENT OF TRANSPORTATION

D. Khazem
PROJECT ENGINEER
T. Spoth
BRIDGE DESIGN MANAGER

BRIDGE NO. 28-0352L
KILOMETER POST 0.01

# CARQUINEZ BRIDGE & OVERHEAD
# STRUCTURE PLAN NO. 3

ORIGINAL SCALE IN MILLIMETERS FOR REDUCED PLANS 0 10 20 30 40 50 60 70 80 90 100

CU 04
EA 013011

DISREGARD PRINTS BEARING EARLIER REVISION DATES

REVISION DATES (PRELIMINARY STAGE ONLY) 4/24/98 9/18/98 12/14/98 01/26/99 01/15/99 2/16/99 3/31/99

SHEET 8 OF 348

FILE => asp103_20083857

USERNAME => trrlim DATE PLOTTED => 20-JUL-1999 TIME PLOTTED => 08:43

@DGN@

| DIST. | COUNTY | ROUTE | KILOMETER POST TOTAL PROJECT | SHEET NO. | TOTAL SHEETS |
|---|---|---|---|---|---|
| 04 | CC, Sol | 80 | 22.0/22.7, 0.0/1.8 | 243 | 714 |

Caltrans Metric

Gregory J. Orsolini
REGISTERED ENGINEER - CIVIL

7-12-99
PLANS APPROVAL DATE

REGISTERED PROFESSIONAL ENGINEER G. J. Orsolini No. 44461 Exp. 3/31/02 CIVIL STATE OF CALIFORNIA

The State of California or its officers or agents shall not be responsible for the accuracy or completeness of electronic copies of this plan sheet.

DE LEUW- PAC-STEINMAN
120 Howard Street, Suite 850
San Francisco, CA 94105

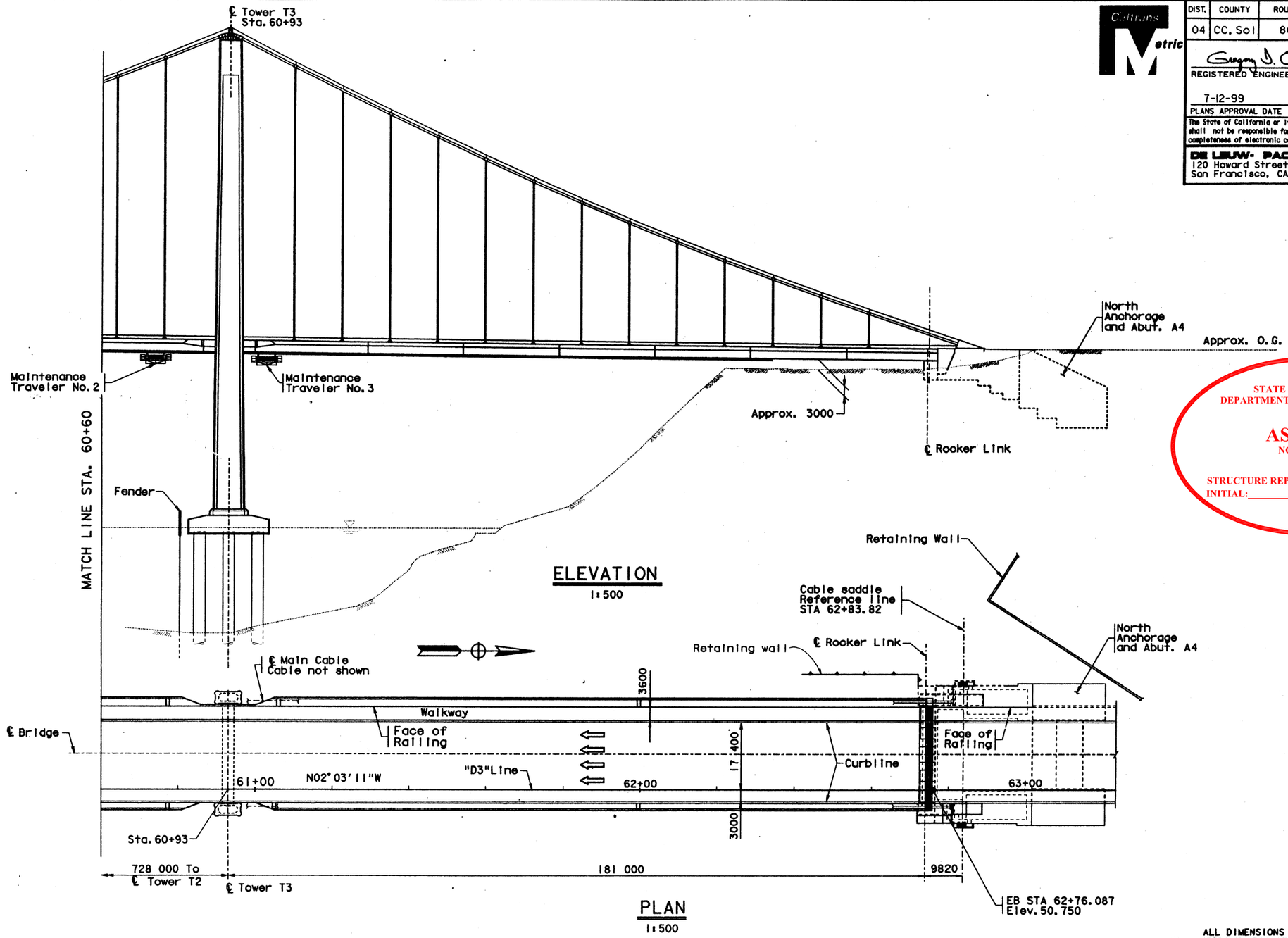


STATE OF CALIFORNIA
DEPARTMENT OF TRANSPORTATION

AS BUILT
NO CHANGES

STRUCTURE REPRESENTATIVE: Brian Boal
INITIAL:_____ DATE: October 15th, 2004

ALL DIMENSIONS ARE IN MILLIMETERS UNLESS OTHERWISE SHOWN

V. Gastoni
DESIGN OVERSIGHT
Vincent Gastoni 3/31/99
SIGN OFF DATE

Rev. Date 6-2-97

| | BY | CHECKED |
|---|---|---|
| DESIGN | D. Khazem | G. Orsolini |
| DETAILS | G. Jimenez | G. Orsolini |
| QUANTITIES | S. Condell | G. Orsolini |

PREPARED FOR THE STATE OF CALIFORNIA DEPARTMENT OF TRANSPORTATION

D. Khazem
PROJECT ENGINEER
T. Spoth
BRIDGE DESIGN MANAGER

CU 04
EA 013011

BRIDGE NO. 28-0352L
KILOMETER POST 0.01

# CARQUINEZ BRIDGE & OVERHEAD
## STRUCTURE PLAN NO. 4

ORIGINAL SCALE IN MILLIMETERS FOR REDUCED PLANS 0 10 20 30 40 50 60 70 80 90 100

DISREGARD PRINTS BEARING EARLIER REVISION DATES

REVISION DATES (PRELIMINARY STAGE ONLY) 4/24/98 9/18/98 12/18/98 01/08/99 01/15/99 2/16/99 3/31/99 6/11/99

SHEET 9 OF 348

FILE => asp104_20083904

DATE PLOTTED => 20-JUL-1999 TIME PLOTTED => 08:44
USERNAME => trilim

◆DGN◆

| DIST. | COUNTY | ROUTE | KILOMETER POST TOTAL PROJECT | SHEET NO. | TOTAL SHEETS |
|---|---|---|---|---|---|
| 04 | CC, Sol | 80 | 22.0/22.7, 0.0/1.8 | 244 | 714 |

Caltrans Metric

REGISTERED ENGINEER - CIVIL

7-12-99
PLANS APPROVAL DATE

REGISTERED PROFESSIONAL ENGINEER G. L. Orsolini No. 44461 Exp. 3/31/02 CIVIL STATE OF CALIFORNIA

The State of California or its officers or agents shall not be responsible for the accuracy or completeness of electronic copies of this plan sheet.

DE LEUW- PAC-STERMAN
120 Howard Street, Suite 850
San Francisco, CA 94105

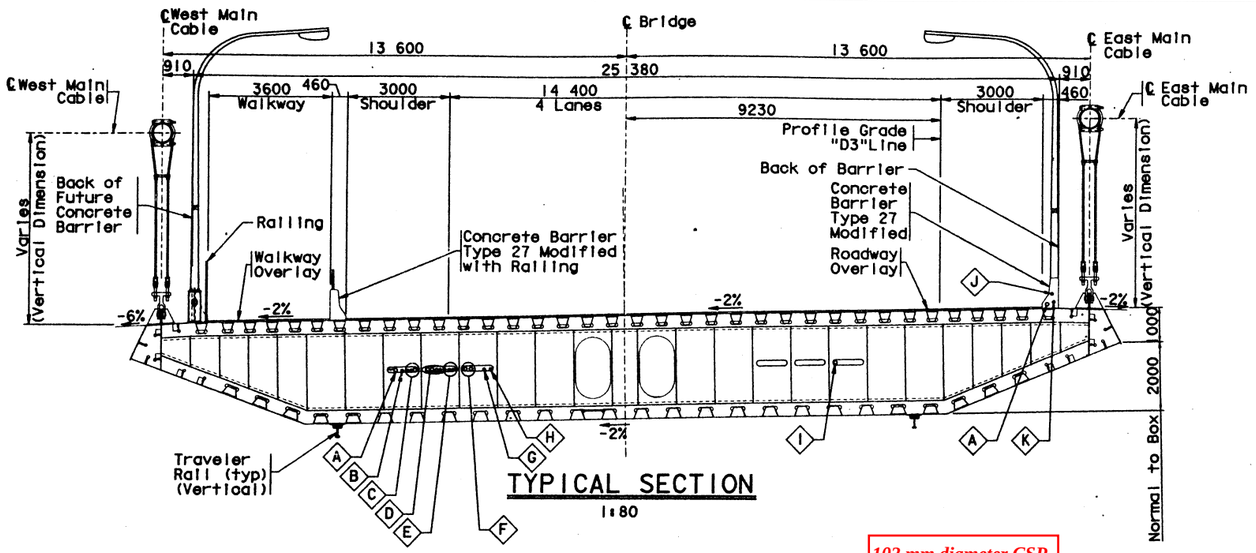


TYPICAL SECTION
1:80

102 mm diameter CSP water line

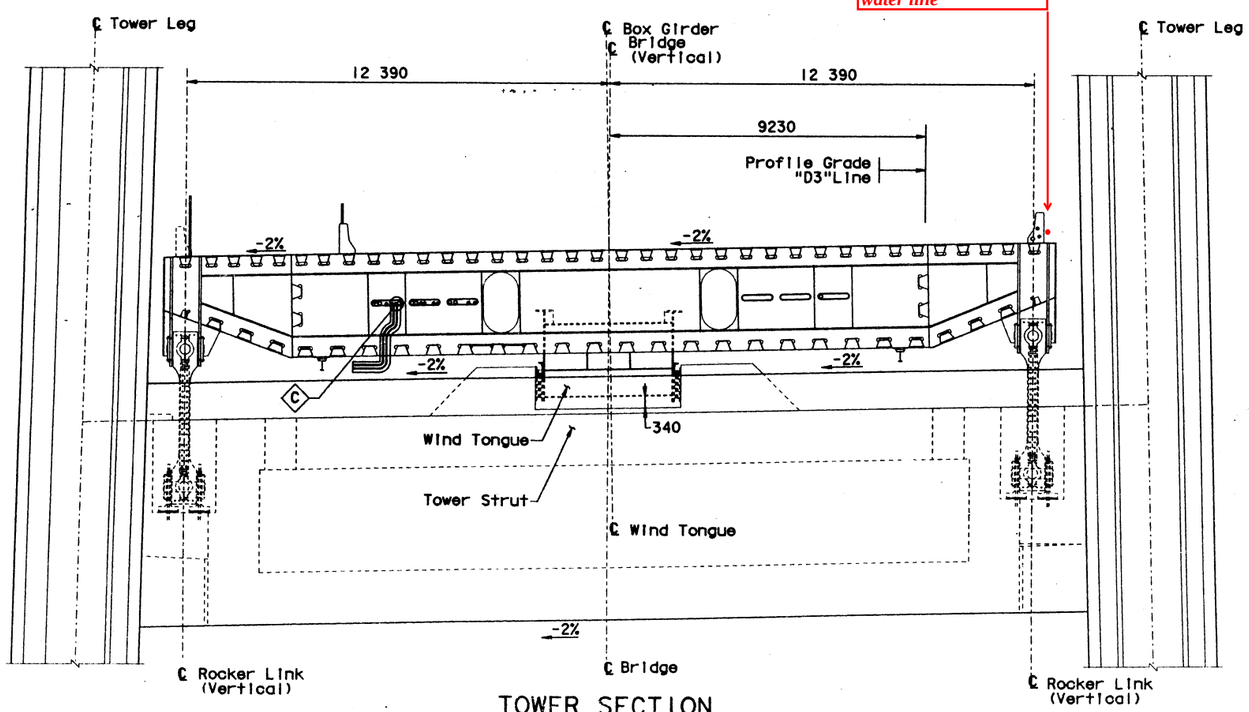


TOWER SECTION
1:80

Note: For details not shown, see "Typical Section"

## NOTES:

1. For utilities, see Electrical and Mecanical Drawings.
2. For details not shown, see "Typical Section."

## LIST OF UTILITIES:

| LOCATION | UTILITY |
|---|---|
| A | 53 Dia. conduit, Roadway Lights |
| B | 41 Dia. conduit, Navigation Lights |
| C | 2-41 Dia. & 1-78 Dia. conduits, Seismic Detection and Security Systems |
| D | 2-53 Dia & 2-41 Dia. conduits, Power Panel |
| E | 2-41 Dia. conduits (spare) |
| F | 2-103 Dia. conduits, PACBELL |
| G | 41 Dia. conduit, Power Panel |
| H | 41 Dia. conduit, Box Girder Lighting |
| I | 103 O.D. Compressed Air Line |
| J | 41 Dia. conduit, Call Box Power |
| K | 41 Call Box Control |

STATE OF CALIFORNIA
DEPARTMENT OF TRANSPORTATION

AS BUILT

STRUCTURE REPRESENTATIVE: Brian Boal
INITIAL:_____ DATE: October 15th, 2004

ALL DIMENSIONS ARE IN MILLIMETERS UNLESS OTHERWISE SHOWN

V. Gastoni
DESIGN OVERSIGHT
Vincent Gastoni 3/31/99
SIGN OFF DATE

Rev. Date: 6-2-97

| | | | |
|---|---|---|---|
| DESIGN | D. Khazem | CHECKED G. Orsolini | |
| DETAILS | J. Cometano | CHECKED G. Orsolini | |
| QUANTITIES | S. Condell | CHECKED M. Rahnama | |

PREPARED FOR THE STATE OF CALIFORNIA DEPARTMENT OF TRANSPORTATION

ORIGINAL SCALE IN INCHES FOR REDUCED PLANS 0 10 20 30 40 50 60 70 80 90 100

D. Khazem
PROJECT ENGINEER
T. Spoth
BRIDGE DESIGN MANAGER

CU 04
EA 013011

BRIDGE NO. 28-0352L
KILOMETER POST 0.01

DISREGARD PRINTS BEARING EARLIER REVISION DATES

REVISION DATES (PRELIMINARY STAGE ONLY) 4/24/98 5/18/98 12/18/98 01/15/99 1/25/99 7/16/99 3/31/99

SHEET 10 OF 348

# CARQUINEZ BRIDGE & OVERHEAD
# BRIDGE TYPICAL SECTIONS NO. 1

USERNAME => trflm DATE PLOTTED => 20-Jul-1999 TIME PLOTTED => 08:45

©DGN©

*California Department of Transportation*
*Division of Maintenance*

# *Structure Maintenance and Investigations*

---

**B**RIDGE

**I**NSPECTION

**R**ECORDS

**I**NFORMATION

**S**YSTEM

---

The requested documents have been generated by BIRIS.

These documents are the property of the California Department of Transportation and should be handled in accordance with Deputy Directive 55 and the State Administrative Manual.

Records for “Confidential” bridges may only be released outside the Department of Transportation upon execution of a confidentiality agreement.

Caltrans now has a web site! To get to the web site, go to: http://www.dot.ca.gov

| DIST | COUNTY | ROUTE | KILOMETER POST TOTAL PROJECT | SHEET No | TOTAL SHEETS |
|---|---|---|---|---|---|
| 04 | CC, Sol | 80 | 19.5/22.7, 0.0/0.7 | 348 | 1050 |

Caltrans Metric

Michael Marquez 5-8-00
REGISTERED CIVIL ENGINEER

7-17-00
PLANS APPROVAL DATE

REGISTERED PROFESSIONAL ENGINEER
Michael J Marquez
No. 54355
Exp. 12-31-03
CIVIL
STATE OF CALIFORNIA

The State of California or its officers or agents shall not be responsible for the accuracy or completeness of electronic copies of this plan sheet.

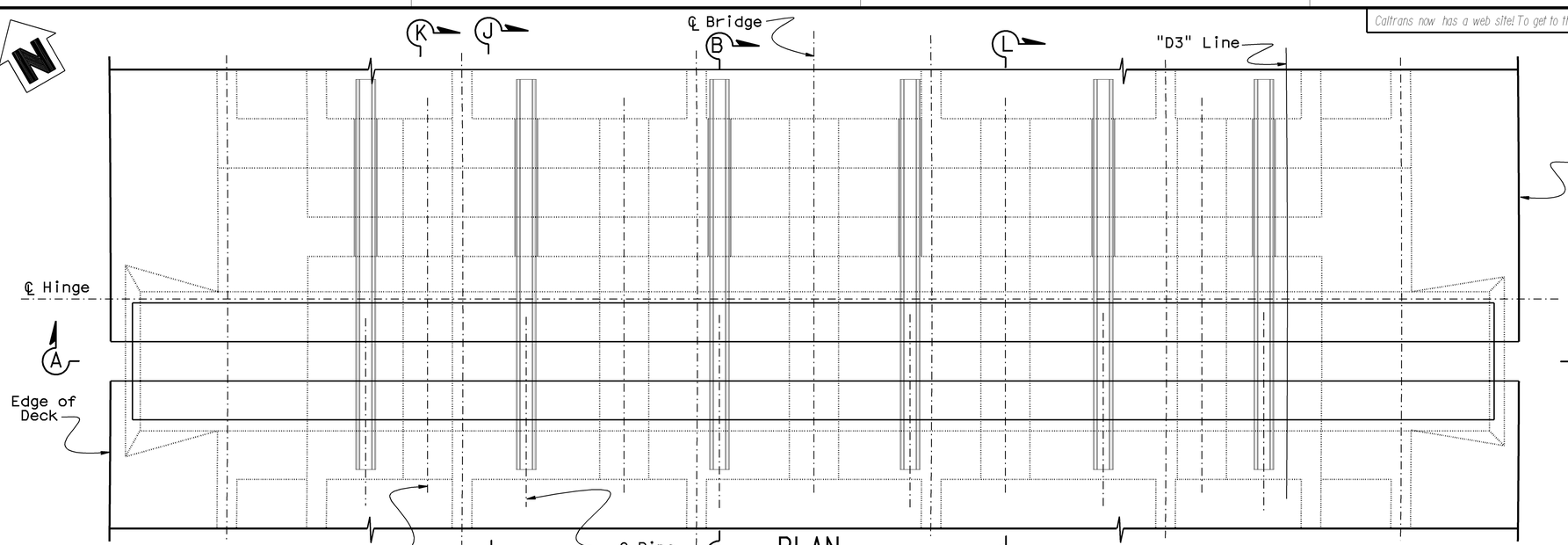


PLAN
1: 40

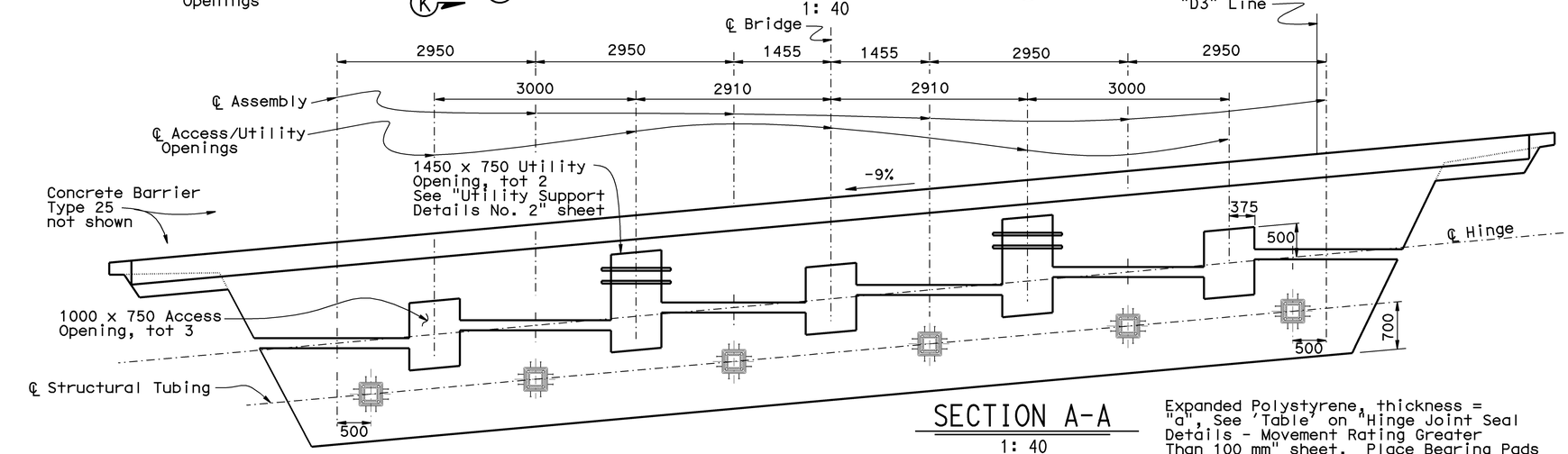


SECTION A-A
1: 40

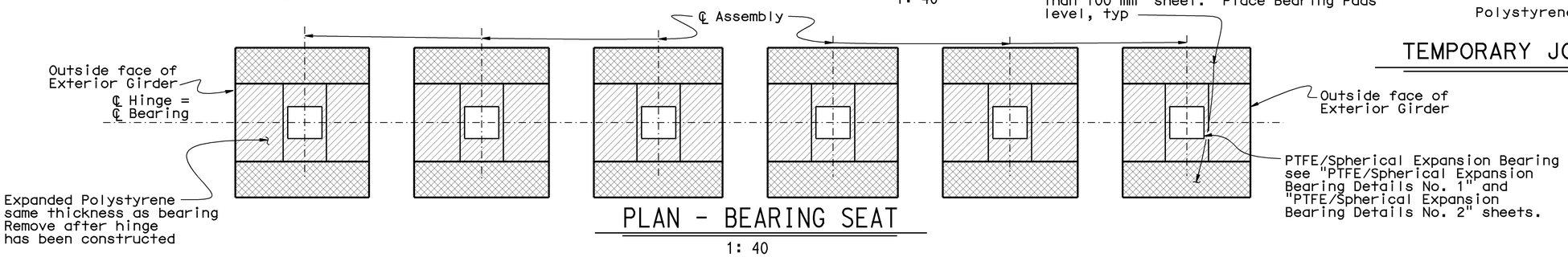


PLAN - BEARING SEAT
1: 40

NOTES:

1. See Bridge Details B0-13/13-1 & B0-13/13-2
2. To provide for free movement of the completed hinge, concrete is to be excluded from the joint by sealing all openings.
3. Contractor shall submit details of joint seal assembly for Engineer's approval prior to construction.
4. For 'Section B-B' see "Hinge "D3"-1 Details No. 2" sheet.
5. For 'Section J-J' see "Hinge "D3"-1 Details No. 5" and "Hinge "D3"-1 Details No. 6" sheets.
6. For 'Section K-K' see "Hinge "D3"-1 Details No. 7" and "Hinge "D3"-1 Details No. 8" sheets.
7. For 'Section L-L' see "Hinge "D3"-1 Details No. 9" and "Hinge "D3"-1 Details No. 10" sheets.

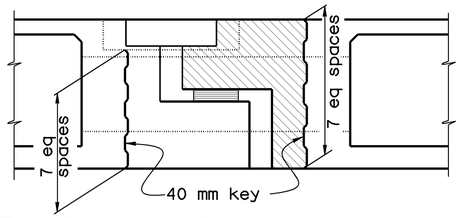


Indicates cast-in-place concrete to be placed after supporting side of hinge is constructed and brg pads are properly positioned. Falsework shall remain in place until concrete has attained a strength of at least 25 MPa.

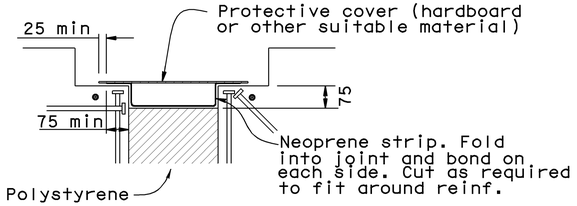


TEMPORARY JOINT PROTECTION DETAIL
No Scale

ALL DIMENSIONS ARE IN MILLIMETERS UNLESS OTHERWISE SHOWN

| | BY | CHECKED |
|---|---|---|
| DESIGN | Michael J Marquez | Ali Asnaashari |
| DETAILS | Janie Chlubna | Ali Asnaashari |
| QUANTITIES | Kenneth L Solak | Mary L Warrick |

STATE OF CALIFORNIA
DEPARTMENT OF TRANSPORTATION

DIVISION OF STRUCTURES
STRUCTURE DESIGN 3

BRIDGE NO. 28-0367L
KILOMETER POST 13.5 (8.39)

# CROCKETT VIADUCT
## HINGE "D3"-1 DETAILS NO. 1

STRUCTURES DESIGN DETAIL SHEET (METRIC) (REV. 3/1/99)

ORIGINAL SCALE IN MILLIMETERS FOR REDUCED PLANS 0 10 20 30 40 50 60 70 80 90 100

CU 04206
EA 013051

DISREGARD PRINTS BEARING EARLIER REVISION DATES

REVISION DATES (PRELIMINARY STAGE ONLY): 4-14-99 11-29-99 4-17-00

SHEET 78 OF 225

FILE => a-28-0367l-h-hg01.dgn

NO AS BUILT CORRECTIONS
CORRECTIONS TRANSFERED BY: kg
FIELD CORRECTIONS BY: Eric Urmeneta
TRANSFER DATE: 04-04-2005
FIELD CORRECTION DATE: 11-04-2004
CONTRACT No: 04-03054

USERNAME => rechris DATE PLOTTED => 20-APR-2005 TIME PLOTTED => 13:51

ClibPDF - www.fastio.com

| DIST | COUNTY | ROUTE | KILOMETER POST TOTAL PROJECT | SHEET No | TOTAL SHEETS |
|---|---|---|---|---|---|
| 04 | CC, Sol | 80 | 19.5/22.7, 0.0/0.7 | 349 | 1050 |

Michael Marquez 5-8-00
REGISTERED CIVIL ENGINEER

7-17-00
PLANS APPROVAL DATE

REGISTERED PROFESSIONAL ENGINEER Michael J Marquez No. 54355 Exp. 12-31-03 CIVIL STATE OF CALIFORNIA

*The State of California or its officers or agents shall not be responsible for the accuracy or completeness of electronic copies of this plan sheet.*

*Caltrans now has a web site! To get to the web site, go to: http://www.dot.ca.gov*

Caltrans Metric

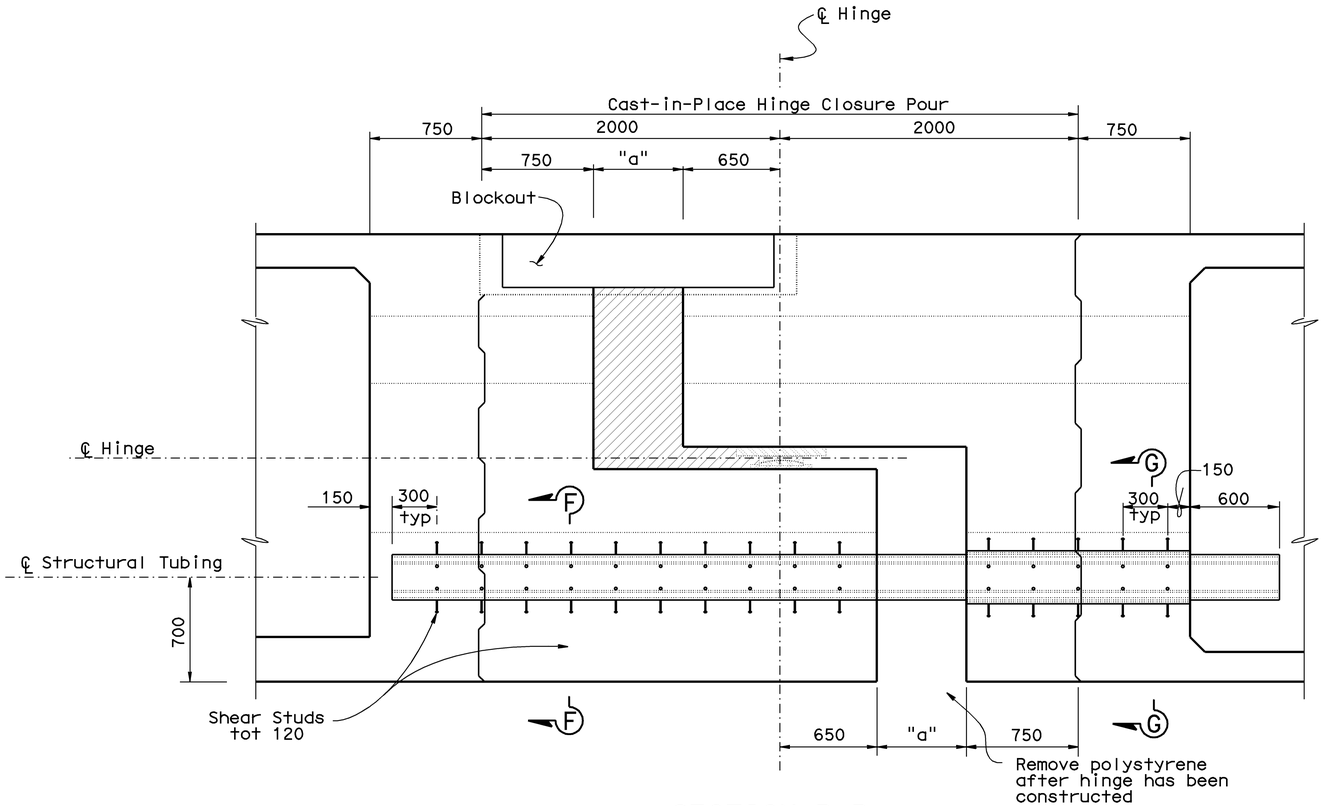


SECTION B-B
1: 20

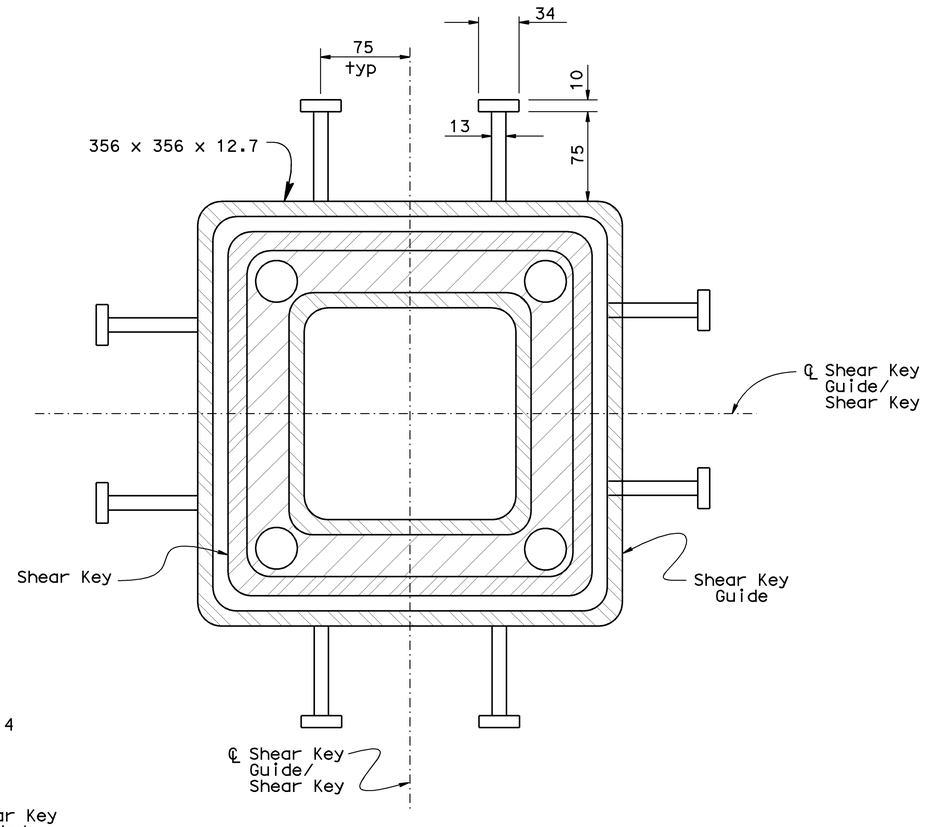


SECTION G-G
1 : 2.5

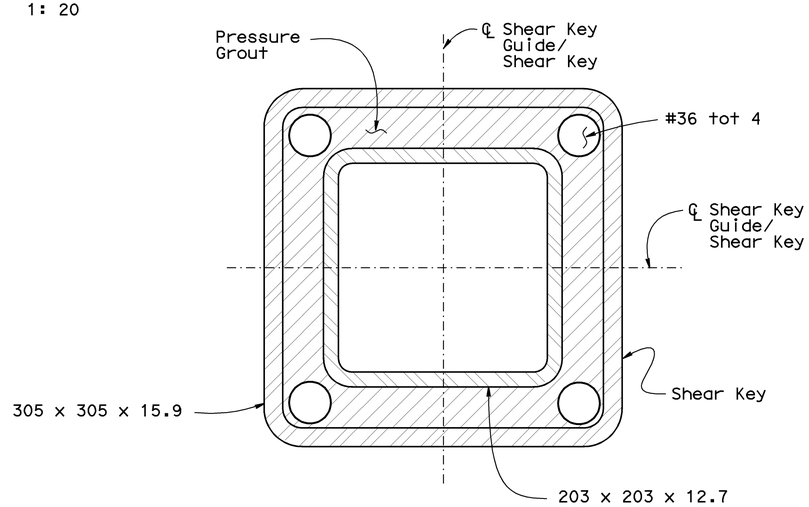


SECTION F-F
1 : 2.5

NOTE:

For location of 'Section B-B' see "Hinge "D3"-1 Details No. 1" sheet.

For "a" dimension see "Hinge Joint Seal Details Movement Rating Greater Than 100 mm" sheet.

ALL DIMENSIONS ARE IN MILLIMETERS UNLESS OTHERWISE SHOWN

NO AS BUILT CORRECTIONS

CONTRACT NO: 04-03054
TRANSFER DATE: 04-04-2005
FIELD CORRECTION DATE: 11-04-2004
CORRECTIONS TRANSFERED BY: kc
FIELD CORRECTIONS BY: Eric Urmeneta

| | | | |
|---|---|---|---|
| DESIGN | BY Michael J Marquez | CHECKED Ali Asnaashari | |
| DETAILS | BY Janie Chlubna | CHECKED Ali Asnaashari | |
| QUANTITIES | BY Kenneth L Solak | CHECKED Mary L Warrick | |

STATE OF CALIFORNIA
DEPARTMENT OF TRANSPORTATION

DIVISION OF STRUCTURES
STRUCTURE DESIGN 3

BRIDGE NO. 28-0367L
KILOMETER POST 13.5 (8.39)

# CROCKETT VIADUCT
## HINGE "D3"-1 DETAILS NO. 2

STRUCTURES DESIGN DETAIL SHEET (METRIC) (REV. 3/1/99)

ORIGINAL SCALE IN MILLIMETERS FOR REDUCED PLANS 0 10 20 30 40 50 60 70 80 90 100

CU 04206
EA 013051

DISREGARD PRINTS BEARING EARLIER REVISION DATES

REVISION DATES (PRELIMINARY STAGE ONLY): 4-15-99 2-24-00 4-17-00

SHEET 79 OF 225

FILE => a-28-0367l-h-hg02.dgn

USERNAME => kechris DATE PLOTTED => 20-APR-2005 TIME PLOTTED => 13:49

ClibPDF - www.fastio.com

| DIST | COUNTY | ROUTE | KILOMETER POST TOTAL PROJECT | SHEET No | TOTAL SHEETS |
|---|---|---|---|---|---|
| 04 | CC,Sol | 80 | 19.5/22.7, 0.0/0.7 | 350 | 1050 |

Michael Marquez 5-8-00
REGISTERED CIVIL ENGINEER

7-17-00
PLANS APPROVAL DATE

REGISTERED PROFESSIONAL ENGINEER Michael J Marquez No. 54355 Exp. 12-31-03 CIVIL STATE OF CALIFORNIA

*The State of California or its officers or agents shall not be responsible for the accuracy or completeness of electronic copies of this plan sheet.*

*Caltrans now has a web site! To get to the web site, go to: http://www.dot.ca.gov*

Caltrans Metric

TRANSFER DATE: 04-01-2005
FIELD CORRECTION DATE: 11-04-2004
CONTRACT NO: 04-013054

CORRECTIONS TRANSFERRED BY: kc
FIELD CORRECTIONS BY: Eric Urmeneta

NO AS BUILT CORRECTIONS

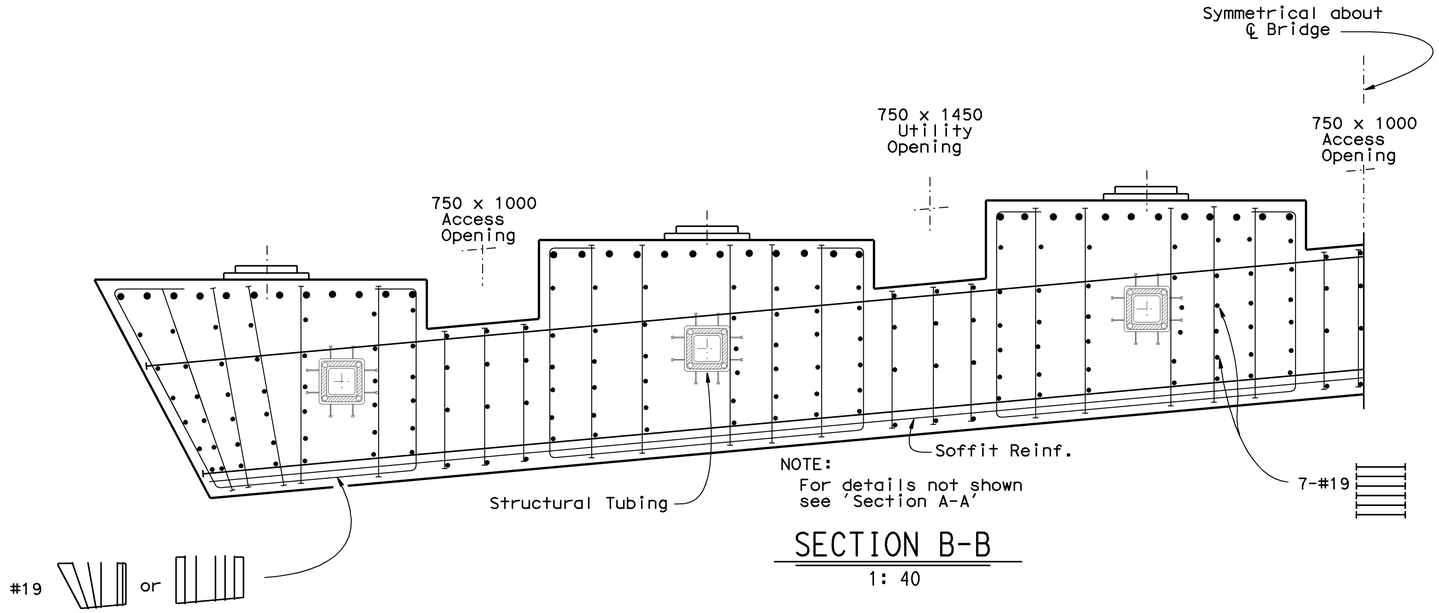


## SECTION B-B

1: 40

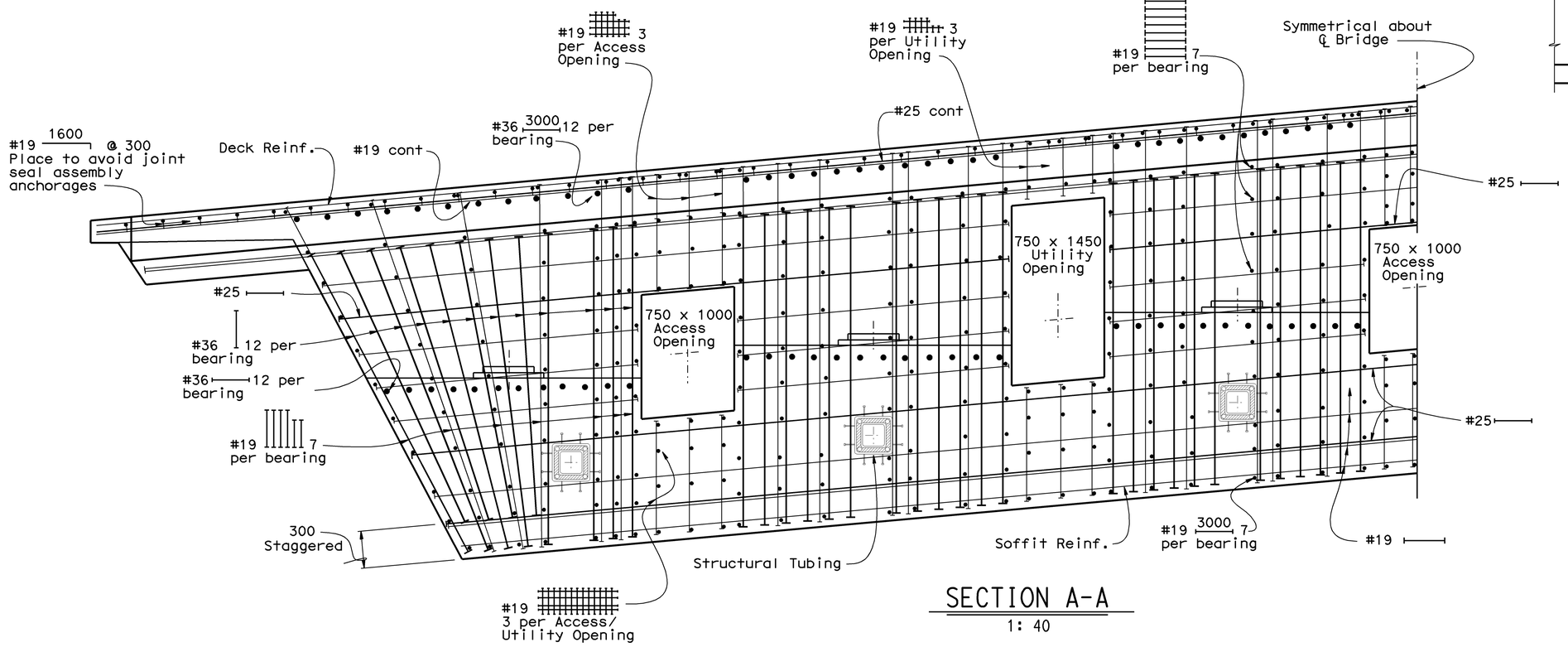


## SECTION A-A

1: 40

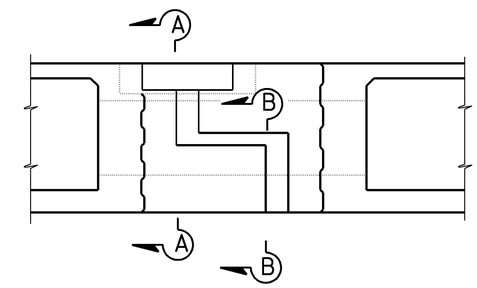


ALL DIMENSIONS ARE IN MILLIMETERS UNLESS OTHERWISE SHOWN

| | | | |
|---|---|---|---|
| DESIGN | BY Michael J Marquez | CHECKED Ali Asnaashari | |
| DETAILS | BY Janie Chlubna | CHECKED Ali Asnaashari | |
| QUANTITIES | BY Kenneth L Solak | CHECKED Mary L Warrick | |

STATE OF CALIFORNIA
DEPARTMENT OF TRANSPORTATION

DIVISION OF STRUCTURES
STRUCTURE DESIGN 3

BRIDGE NO. 28-0367L
KILOMETER POST 13.5 (8.39)

# CROCKETT VIADUCT
## HINGE "D3"-1 DETAILS NO. 3

STRUCTURES DESIGN DETAIL SHEET (METRIC) (REV. 3/1/99)

ORIGINAL SCALE IN MILLIMETERS FOR REDUCED PLANS 0 10 20 30 40 50 60 70 80 90 100

CU 04206
EA 013051

DISREGARD PRINTS BEARING EARLIER REVISION DATES

REVISION DATES (PRELIMINARY STAGE ONLY) 12-2-99 4-17-00

SHEET 80 OF 225

FILE => a-28-0367l-h-hg03.dgn

USERNAME => kechris DATE PLOTTED => 18-AUG-2008 TIME PLOTTED => 11:31

ClibPDF - www.fastio.com

| DIST | COUNTY | ROUTE | KILOMETER POST TOTAL PROJECT | SHEET No | TOTAL SHEETS |
|---|---|---|---|---|---|
| 04 | CC,Sol | 80 | 19.5/22.7, 0.0/0.7 | 351 | 1050 |

Caltrans Metric

Michael Marquez 5-8-00
REGISTERED CIVIL ENGINEER

7-17-00
PLANS APPROVAL DATE

REGISTERED PROFESSIONAL ENGINEER Michael J Marquez No. 54355 Exp. 12-31-03 CIVIL STATE OF CALIFORNIA

*The State of California or its officers or agents shall not be responsible for the accuracy or completeness of electronic copies of this plan sheet.*

*Caltrans now has a web site! To get to the web site, go to: http://www.dot.ca.gov*

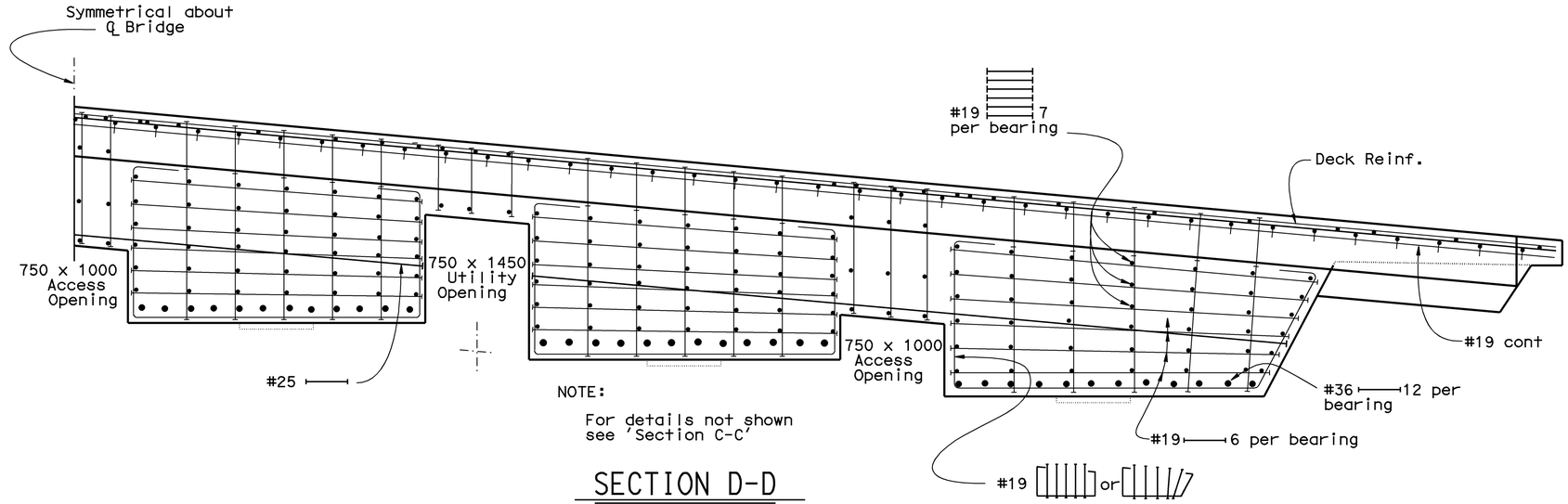


NOTE:

For details not shown see 'Section C-C'

## SECTION D-D

1: 40

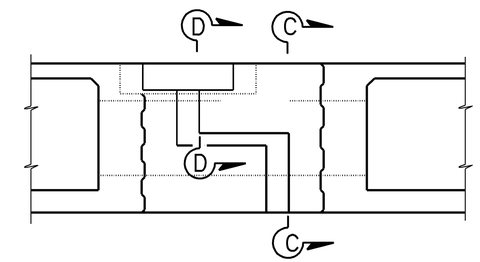


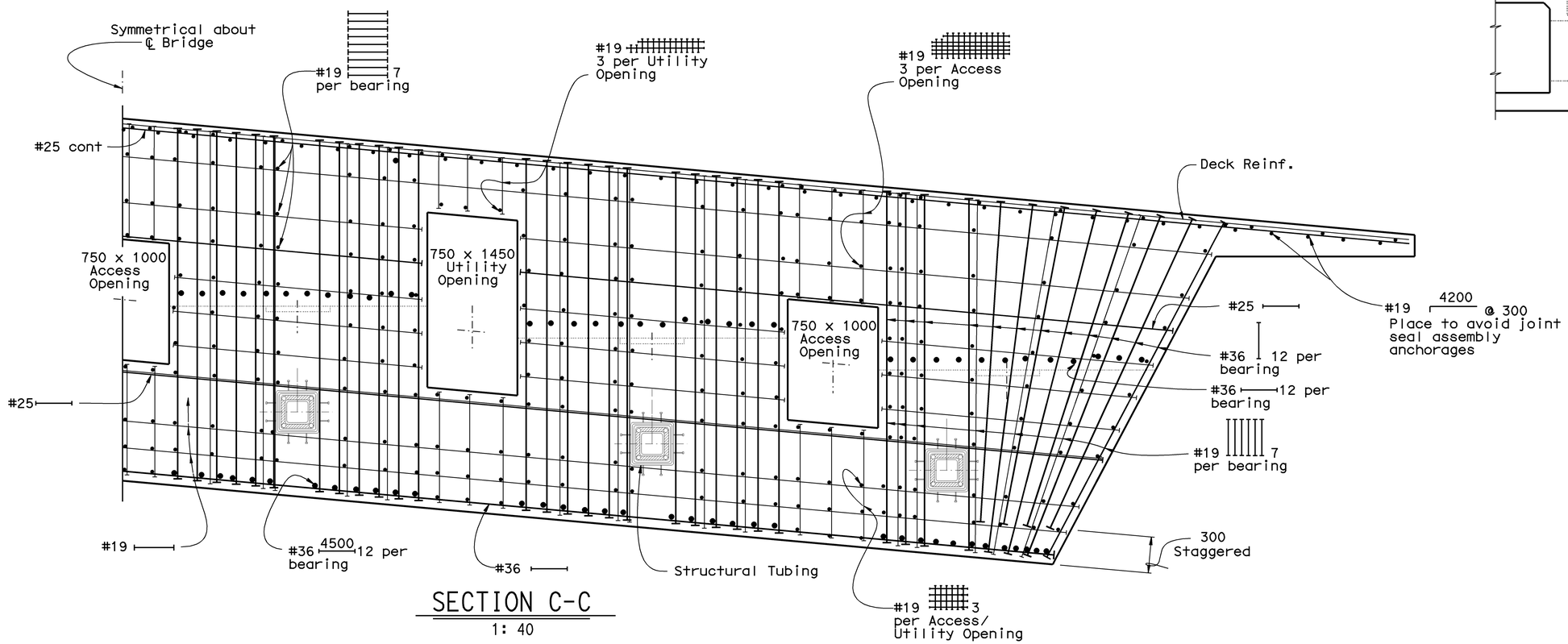


## SECTION C-C

1: 40

ALL DIMENSIONS ARE IN MILLIMETERS UNLESS OTHERWISE SHOWN

| | | | |
|---|---|---|---|
| DESIGN | BY Michael J Marquez | CHECKED Ali Asnaashari | |
| DETAILS | BY Janie Chlubna | CHECKED Ali Asnaashari | |
| QUANTITIES | BY Kenneth L Solak | CHECKED Mary L Warrick | |

STATE OF CALIFORNIA DEPARTMENT OF TRANSPORTATION

DIVISION OF STRUCTURES STRUCTURE DESIGN 3

BRIDGE NO. 28-0367L
KILOMETER POST 13.5 (8.39)

# CROCKETT VIADUCT
# HINGE "D3"-1 DETAILS NO. 4

STRUCTURES DESIGN DETAIL SHEET (METRIC) (REV. 3/1/99)

ORIGINAL SCALE IN MILLIMETERS FOR REDUCED PLANS 0 10 20 30 40 50 60 70 80 90 100

CU 04206
EA 013051

DISREGARD PRINTS BEARING EARLIER REVISION DATES

REVISION DATES (PRELIMINARY STAGE ONLY) 11-30-99 4-17-00

SHEET 81 OF 225

FILE => a-28-0367l-h-hg04.dgn

NO AS BUILT CORRECTIONS

CORRECTIONS TRANSFERED BY: kg
FIELD CORRECTIONS BY: Eric Urmeneta

TRANSFER DATE: 04-04-2005
FIELD CORRECTION DATE: 11-04-2004

CONTRACT NO: 04-033054

USERNAME => rkechris DATE PLOTTED => 20-APR-2005 TIME PLOTTED => 13:49

ClibPDF - www.fastio.com

Caltrans now has a web site! To get to the web site, go to: http://www.dot.ca.gov

Caltrans Metric

| DIST | COUNTY | ROUTE | KILOMETER POST TOTAL PROJECT | SHEET No | TOTAL SHEETS |
|---|---|---|---|---|---|
| 04 | CC,Sol | 80 | 19.5/22.7, 0.0/0.7 | 352 | 1050 |

Michael Marquez 5-8-00
REGISTERED CIVIL ENGINEER

7-17-00
PLANS APPROVAL DATE

REGISTERED PROFESSIONAL ENGINEER Michael J Marquez No. 54355 Exp. 12-31-03 CIVIL STATE OF CALIFORNIA

*The State of California or its officers or agents shall not be responsible for the accuracy or completeness of electronic copies of this plan sheet.*

NOTES:

1. Maintain a 40 mm clearance to any portion of the head element of the "T-Headed" reinforcing from the top of the deck only.
2. Maintain a minimum of 25 mm clearance to any portion of the head element of the "T-Headed reinforcing but normal minimum clearance to the bar portion of the "T-Headed" reinforcing must be maintained.

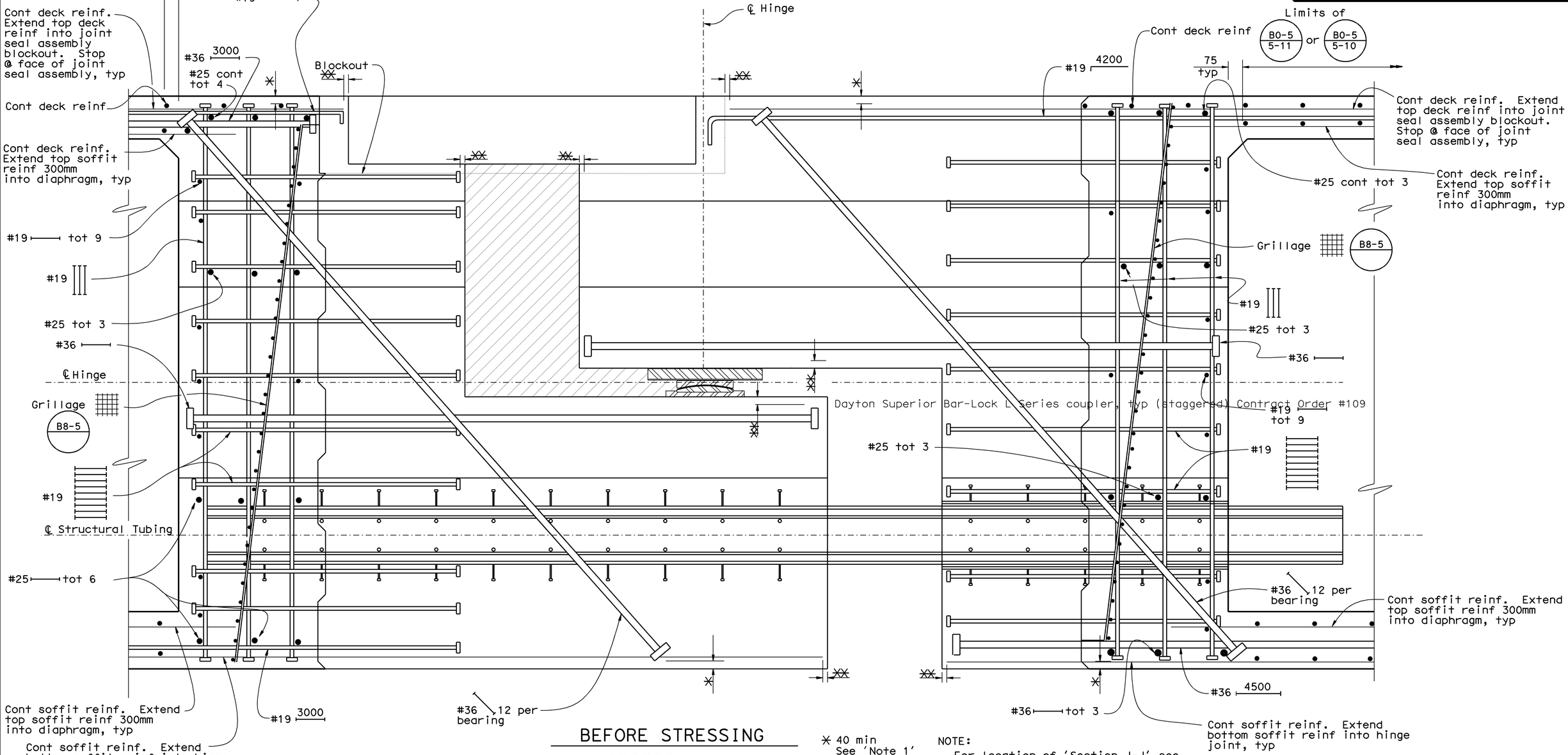


BEFORE STRESSING

SECTION J-J

1:10

✳ 40 min See 'Note 1'

✳✳ 25 min See 'Note 2'

NOTE:
For location of 'Section J-J' see "Hinge "D3"-1 Details No. 1" sheet.

ALL DIMENSIONS ARE IN MILLIMETERS UNLESS OTHERWISE SHOWN

| | | | |
|---|---|---|---|
| DESIGN | BY Michael J Marquez | CHECKED Ali Asnaashari | |
| DETAILS | BY Janie Chlubna | CHECKED Ali Asnaashari | |
| QUANTITIES | BY Kenneth L Solak | CHECKED Mary L Warrick | |

STATE OF CALIFORNIA
DEPARTMENT OF TRANSPORTATION

DIVISION OF STRUCTURES
STRUCTURE DESIGN 3

BRIDGE NO. 28-0367L
KILOMETER POST 13.5 (8.39)

# CROCKETT VIADUCT

## HINGE "D3"-1 DETAILS NO. 5

STRUCTURES DESIGN DETAIL SHEET (METRIC) (REV. 3/1/99)

ORIGINAL SCALE IN MILLIMETERS FOR REDUCED PLANS 0 10 20 30 40 50 60 70 80 90 100

CU 04206
EA 013051

DISREGARD PRINTS BEARING EARLIER REVISION DATES

REVISION DATES (PRELIMINARY STAGE ONLY): 4-16-99 | 5-4-99 | 11-23-99 | 11-30-99 | 1-18-00 | 4-17-00

SHEET 82 OF 225

FILE => a-28-0367l-h-hg05.dgn

NO AS BUILT CORRECTIONS

CORRECTIONS TRANSFERRED BY: kc
FIELD CORRECTIONS BY: Eric Urmeneta

TRANSFER DATE: 04-01-2005
FIELD CORRECTION DATE: 11-04-2004

CONTRACT NO: 04-013054

USERNAME => kechris DATE PLOTTED => 18-AUG-2008 TIME PLOTTED => 11:18

ClibPDF - www.fastio.com

| DIST | COUNTY | ROUTE | KILOMETER POST TOTAL PROJECT | SHEET No | TOTAL SHEETS |
|---|---|---|---|---|---|
| 04 | CC,Sol | 80 | 19.5/22.7, 0.0/0.7 | 353 | 1050 |

Caltrans Metric

Michael Marquez 5-8-00
REGISTERED CIVIL ENGINEER

7-17-00
PLANS APPROVAL DATE

REGISTERED PROFESSIONAL ENGINEER Michael J Marquez No. 54355 Exp. 12-31-03 CIVIL STATE OF CALIFORNIA

*The State of California or its officers or agents shall not be responsible for the accuracy or completeness of electronic copies of this plan sheet.*

*Caltrans now has a web site! To get to the web site, go to: http://www.dot.ca.gov*

NOTES:

1. Maintain a 40 mm clearance to any portion of the head element of the "T-Headed" reinforcing from the top of the deck only.
2. Maintain a minimum of 25 mm clearance to any portion of the head element of the "T-Headed reinforcing but normal minimum clearance to the bar portion of the "T-Headed" reinforcing must be maintained.

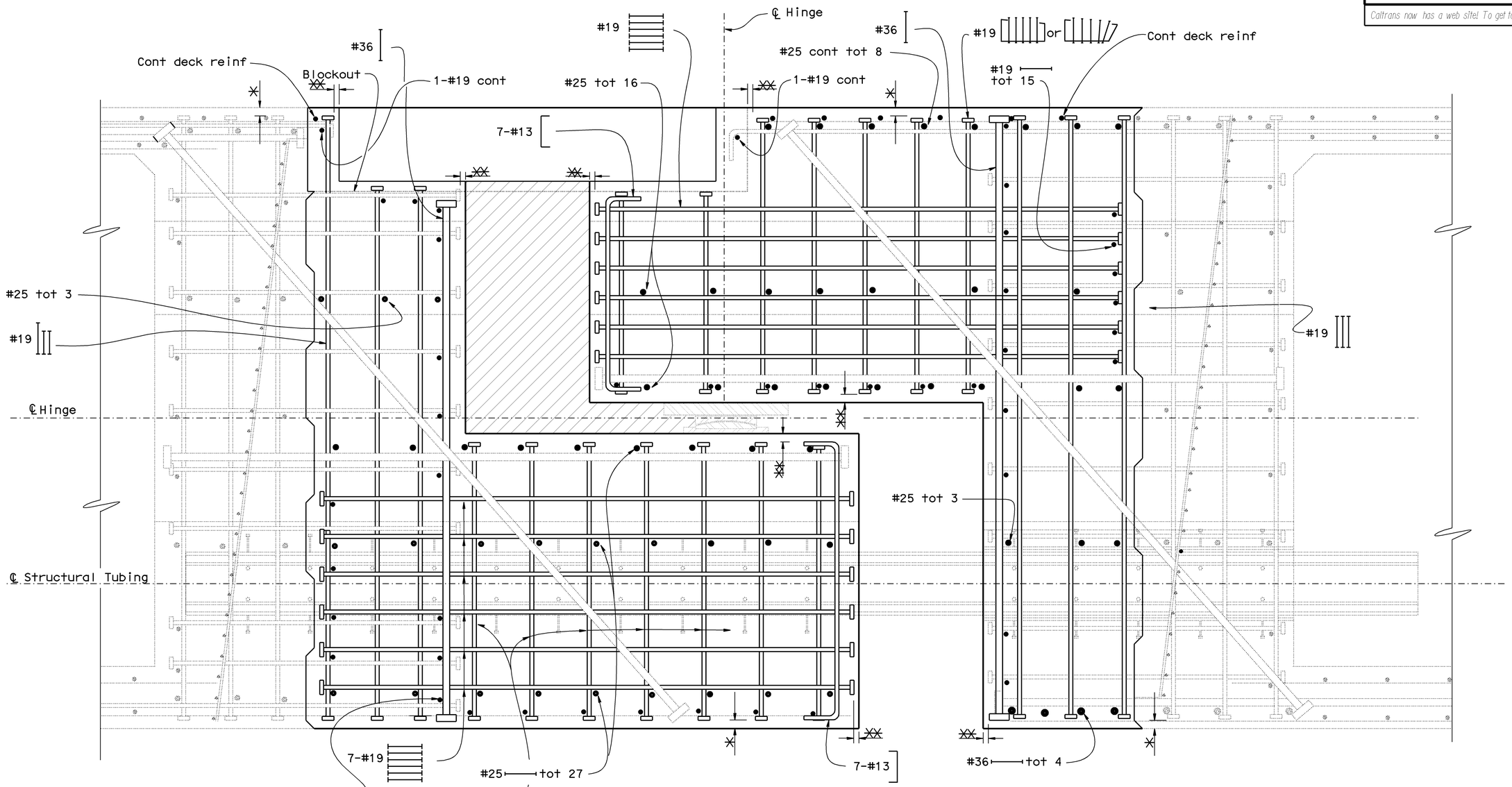


AFTER STRESSING

SECTION J-J

1:10

✳ 40 min See 'Note 1'

✳✳ 25 min See 'Note 2'

NOTE:
For location of 'Section J-J' see "Hinge "D3"-1 Details No. 1" sheet.

ALL DIMENSIONS ARE IN MILLIMETERS UNLESS OTHERWISE SHOWN

| | | |
|---|---|---|
| DESIGN | BY Michael J Marquez | CHECKED Ali Asnaashari |
| DETAILS | BY Janie Chlubna | CHECKED Ali Asnaashari |
| QUANTITIES | BY Kenneth L Solak | CHECKED Mary L Warrick |

STATE OF CALIFORNIA
DEPARTMENT OF TRANSPORTATION

DIVISION OF STRUCTURES
STRUCTURE DESIGN 3

BRIDGE NO. 28-0367L
KILOMETER POST 13.5 (8.39)

# CROCKETT VIADUCT

## HINGE "D3"-1 DETAILS NO. 6

STRUCTURES DESIGN DETAIL SHEET (METRIC) (REV. 3/1/99)

ORIGINAL SCALE IN MILLIMETERS FOR REDUCED PLANS 0 10 20 30 40 50 60 70 80 90 100

CU 04206
EA 013051

DISREGARD PRINTS BEARING EARLIER REVISION DATES

REVISION DATES (PRELIMINARY STAGE ONLY): 4-16-99 | 5-4-99 | 11-23-99 | 11-30-99 | 1-18-00 | 4-17-00

SHEET 83 OF 225

FILE => a-28-0367l-h-hg06.dgn

NO AS BUILT CORRECTIONS

CORRECTIONS TRANSFERED BY: kg
FIELD CORRECTIONS BY: Eric Urmeneta

TRANSFER DATE: 04-04-2005
FIELD CORRECTION DATE: 11-04-2004

CONTRACT NO: 04-03054

USERNAME => kechris DATE PLOTTED => 20-APR-2005 TIME PLOTTED => 13:49

ClibPDF - www.fastio.com

| DIST | COUNTY | ROUTE | KILOMETER POST TOTAL PROJECT | SHEET No | TOTAL SHEETS |
|---|---|---|---|---|---|
| 04 | CC,Sol | 80 | 19.5/22.7, 0.0/0.7 | 354 | 1050 |

Michael Marquez 5-8-00
REGISTERED CIVIL ENGINEER

7-17-00
PLANS APPROVAL DATE

REGISTERED PROFESSIONAL ENGINEER Michael J Marquez No. 54355 Exp. 12-31-03 CIVIL STATE OF CALIFORNIA

*The State of California or its officers or agents shall not be responsible for the accuracy or completeness of electronic copies of this plan sheet.*

*Caltrans now has a web site! To get to the web site, go to: http://www.dot.ca.gov*

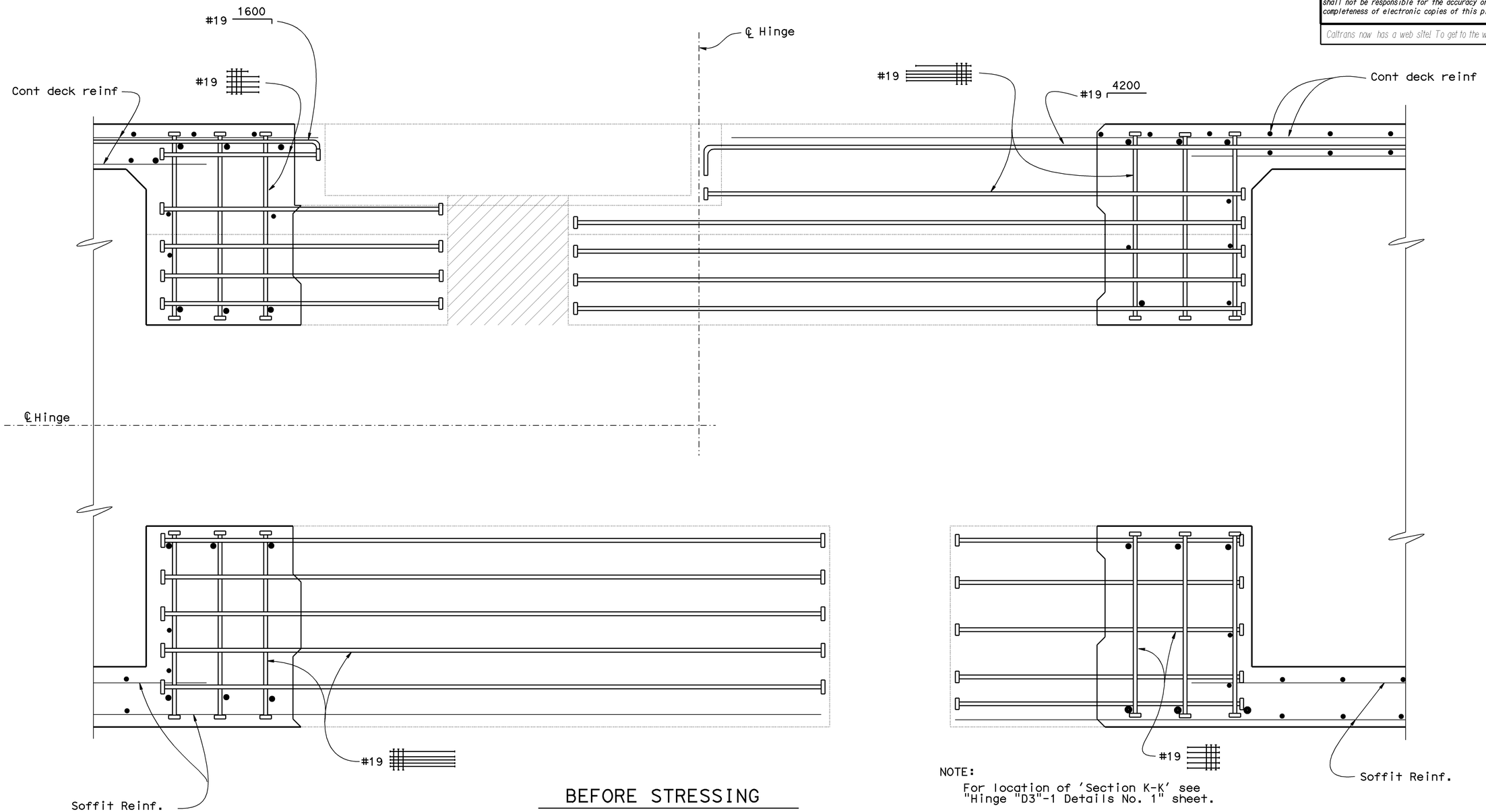


BEFORE STRESSING

SECTION K-K

1:10

NOTE:

For location of 'Section K-K' see "Hinge "D3"-1 Details No. 1" sheet.

For details not shown see 'Section J-J' on "Hinge "D3"-1 Details No. 5" and "Hinge "D3"-1 Details No. 6" sheets.

ALL DIMENSIONS ARE IN MILLIMETERS UNLESS OTHERWISE SHOWN

| | BY | CHECKED |
|---|---|---|
| DESIGN | Michael J Marquez | Ali Asnaashari |
| DETAILS | Janie Chlubna | Ali Asnaashari |
| QUANTITIES | Kenneth L Solak | Mary L Warrick |

STATE OF CALIFORNIA
DEPARTMENT OF TRANSPORTATION

DIVISION OF STRUCTURES
STRUCTURE DESIGN 3

BRIDGE NO. 28-0367L
KILOMETER POST 13.5 (8.39)

# CROCKETT VIADUCT
## HINGE "D3"-1 DETAILS NO. 7

STRUCTURES DESIGN DETAIL SHEET (METRIC) (REV. 3/1/99)

ORIGINAL SCALE IN MILLIMETERS FOR REDUCED PLANS 0 10 20 30 40 50 60 70 80 90 100

CU 04206
EA 013051

DISREGARD PRINTS BEARING EARLIER REVISION DATES

REVISION DATES (PRELIMINARY STAGE ONLY): 4-16-99 | 5-4-99 | 11-23-99 | 11-30-99 | 1-19-00 | 4-17-00

SHEET 84 OF 225

FILE => a-28-0367l-h-hg07.dgn

NO AS BUILT CORRECTIONS

CORRECTIONS TRANSFERED BY: kg
FIELD CORRECTIONS BY: Eric Urmeneta

TRANSFER DATE: 04-04-2005
FIELD CORRECTION DATE: 11-04-2004

CONTRACT NO: 04-03054

USERNAME => rkechris DATE PLOTTED => 20-APR-2005 TIME PLOTTED => 13:49

ClibPDF - www.fastio.com

| DIST | COUNTY | ROUTE | KILOMETER POST TOTAL PROJECT | SHEET No | TOTAL SHEETS |
|---|---|---|---|---|---|
| 04 | CC,Sol | 80 | 19.5/22.7, 0.0/0.7 | 355 | 1050 |

Caltrans Metric

Michael Marquez 5-8-00
REGISTERED CIVIL ENGINEER

7-17-00
PLANS APPROVAL DATE

REGISTERED PROFESSIONAL ENGINEER Michael J Marquez No. 54355 Exp. 12-31-03 CIVIL STATE OF CALIFORNIA

*The State of California or its officers or agents shall not be responsible for the accuracy or completeness of electronic copies of this plan sheet.*

*Caltrans now has a web site! To get to the web site, go to: http://www.dot.ca.gov*

NO AS BUILT CORRECTIONS

CORRECTIONS TRANSFERED BY: kg
FIELD CORRECTIONS BY: Eric Urmeneta

TRANSFER DATE: 04-04-2005
FIELD CORRECTION DATE: 11-04-2004

CONTRACT NO: 04-033054

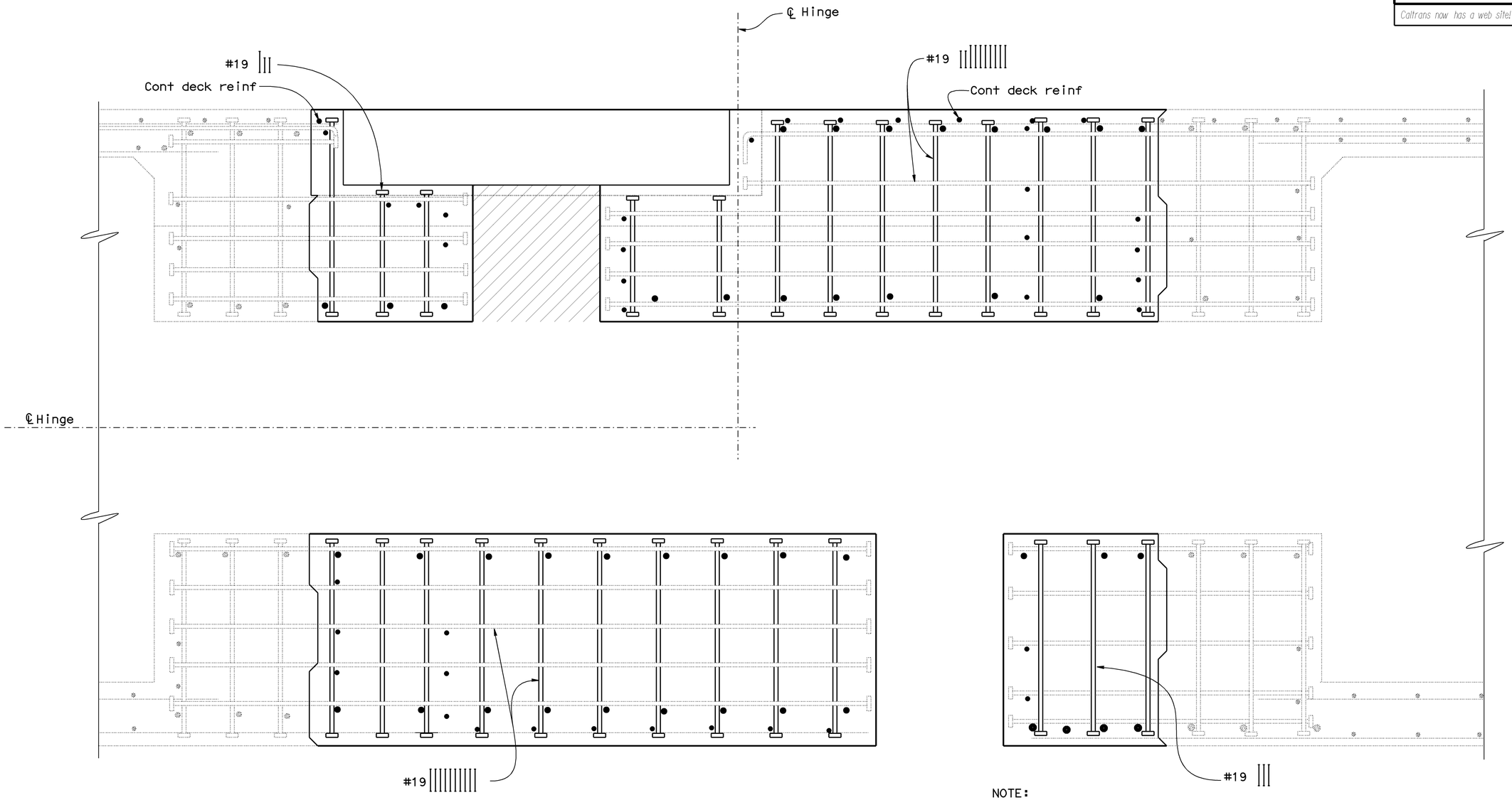


AFTER STRESSING

SECTION K-K

1:10

NOTE:

For location of 'Section K-K' see "Hinge "D3"-1 Details No. 1" sheet.

For details not shown see 'Section J-J' on "Hinge "D3"-1 Details No. 5" and "Hinge "D3"-1 Details No. 6" sheets.

ALL DIMENSIONS ARE IN MILLIMETERS UNLESS OTHERWISE SHOWN

| | BY | CHECKED |
|---|---|---|
| DESIGN | Michael J Marquez | Ali Asnaashari |
| DETAILS | Janie Chlubna | Ali Asnaashari |
| QUANTITIES | Kenneth L Solak | Mary L Warrick |

STATE OF CALIFORNIA
DEPARTMENT OF TRANSPORTATION

DIVISION OF STRUCTURES
STRUCTURE DESIGN 3

BRIDGE NO. 28-0367L
KILOMETER POST 13.5 (8.39)

# CROCKETT VIADUCT
# HINGE "D3"-1 DETAILS NO. 8

STRUCTURES DESIGN DETAIL SHEET (METRIC) (REV. 3/1/99)

ORIGINAL SCALE IN MILLIMETERS FOR REDUCED PLANS 0 10 20 30 40 50 60 70 80 90 100

CU 04206
EA 013051

DISREGARD PRINTS BEARING EARLIER REVISION DATES

REVISION DATES (PRELIMINARY STAGE ONLY): 4-16-99 | 5-4-99 | 11-23-99 | 11-30-99 | 1-19-00 | 4-17-00

SHEET 85 OF 225

FILE => a-28-0367l-h-hg08.dgn

USERNAME => rkechris DATE PLOTTED => 20-APR-2005 TIME PLOTTED => 13:49

ClibPDF - www.fastio.com

| DIST | COUNTY | ROUTE | KILOMETER POST TOTAL PROJECT | SHEET No | TOTAL SHEETS |
|---|---|---|---|---|---|
| 04 | CC,Sol | 80 | 19.5/22.7, 0.0/0.7 | 356 | 1050 |

Caltrans Metric

Michael Marquez 5-8-00
REGISTERED CIVIL ENGINEER

7-17-00
PLANS APPROVAL DATE

REGISTERED PROFESSIONAL ENGINEER Michael J Marquez No. 54355 Exp. 12-31-03 CIVIL STATE OF CALIFORNIA

*The State of California or its officers or agents shall not be responsible for the accuracy or completeness of electronic copies of this plan sheet.*

*Caltrans now has a web site! To get to the web site, go to: http://www.dot.ca.gov*

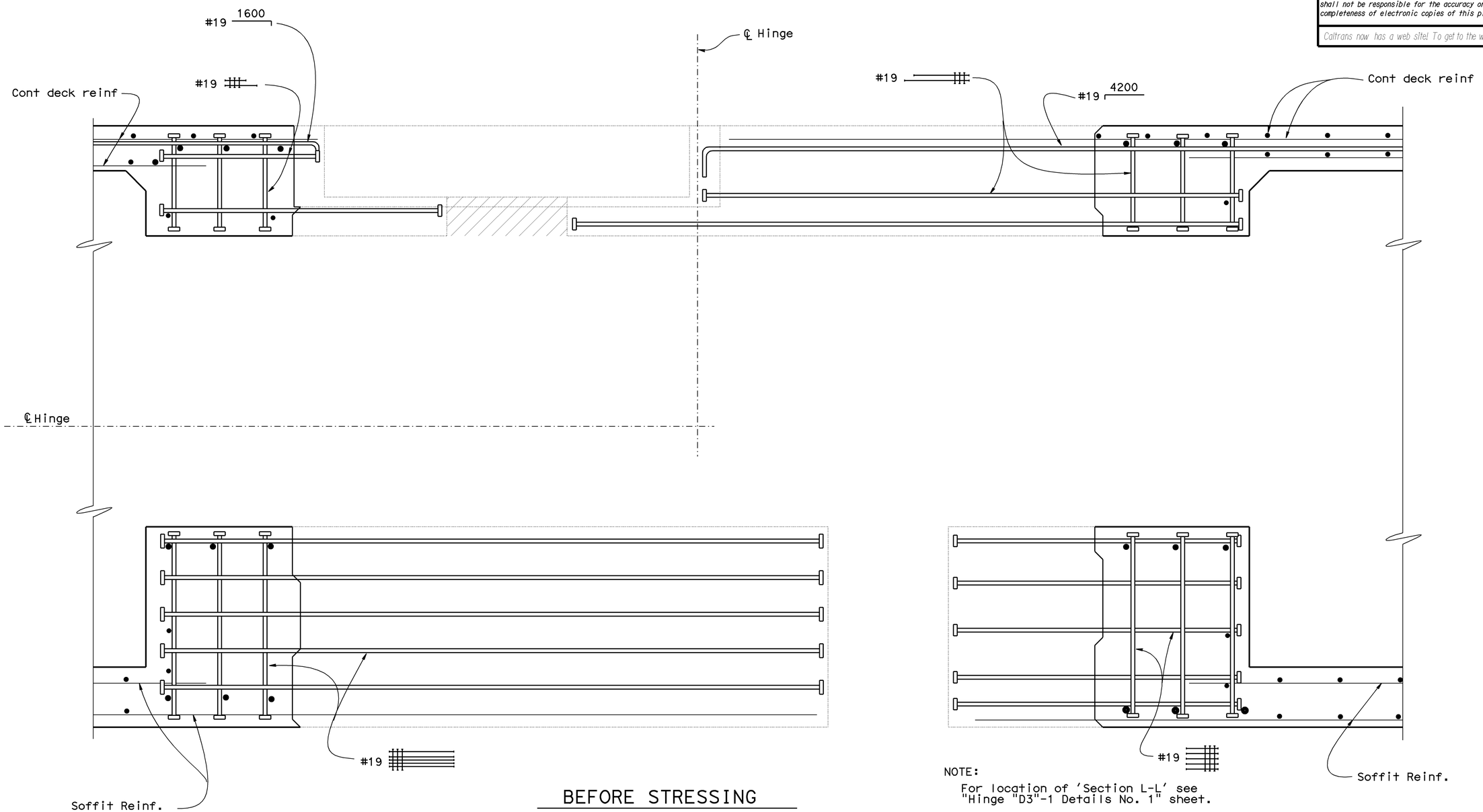


BEFORE STRESSING

SECTION L-L

1:10

NOTE:

For location of 'Section L-L' see "Hinge "D3"-1 Details No. 1" sheet.

For details not shown see 'Section J-J' on "Hinge "D3"-1 Details No. 5" and "Hinge "D3"-1 Details No. 6" sheets

ALL DIMENSIONS ARE IN MILLIMETERS UNLESS OTHERWISE SHOWN

| | BY | CHECKED |
|---|---|---|
| DESIGN | Michael J Marquez | Ali Asnaashari |
| DETAILS | Janie Chlubna | Ali Asnaashari |
| QUANTITIES | Kenneth L Solak | Mary L Warrick |

STATE OF CALIFORNIA
DEPARTMENT OF TRANSPORTATION

DIVISION OF STRUCTURES
STRUCTURE DESIGN 3

BRIDGE NO. 28-0367L
KILOMETER POST 13.5 (8.39)

# CROCKETT VIADUCT
# HINGE "D3"-1 DETAILS NO. 9

STRUCTURES DESIGN DETAIL SHEET (METRIC) (REV. 3/1/99)

ORIGINAL SCALE IN MILLIMETERS FOR REDUCED PLANS 0 10 20 30 40 50 60 70 80 90 100

CU 04206
EA 013051

DISREGARD PRINTS BEARING EARLIER REVISION DATES

REVISION DATES (PRELIMINARY STAGE ONLY) 12-8-99 1-19-00 4-17-00

SHEET 86 OF 225

FILE => a-28-0367l-h-hg09.dgn

NO AS BUILT CORRECTIONS

CORRECTIONS TRANSFERED BY: kg
FIELD CORRECTIONS BY: Eric Urmeneta

TRANSFER DATE: 04-04-2005
FIELD CORRECTION DATE: 11-04-2004

CONTRACT No: 04-03054

USERNAME => rkechris DATE PLOTTED => 20-APR-2005 TIME PLOTTED => 13:50

ClibPDF - www.fastio.com

| DIST | COUNTY | ROUTE | KILOMETER POST TOTAL PROJECT | SHEET No | TOTAL SHEETS |
|---|---|---|---|---|---|
| 04 | CC,Sol | 80 | 19.5/22.7, 0.0/0.7 | 357 | 1050 |

Michael Marquez 5-8-00
REGISTERED CIVIL ENGINEER

7-17-00
PLANS APPROVAL DATE

REGISTERED PROFESSIONAL ENGINEER
Michael J Marquez
No. 54355
Exp. 12-31-03
CIVIL
STATE OF CALIFORNIA

*The State of California or its officers or agents shall not be responsible for the accuracy or completeness of electronic copies of this plan sheet.*

*Caltrans now has a web site! To get to the web site, go to: http://www.dot.ca.gov*

Caltrans Metric

CONTRACT No: 04-03054
TRANSFER DATE: 04-04-2005
FIELD CORRECTION DATE: 11-04-2004
CORRECTIONS TRANSFERED BY: kc
FIELD CORRECTIONS BY: Eric Urmeneta

**NO AS BUILT CORRECTIONS**

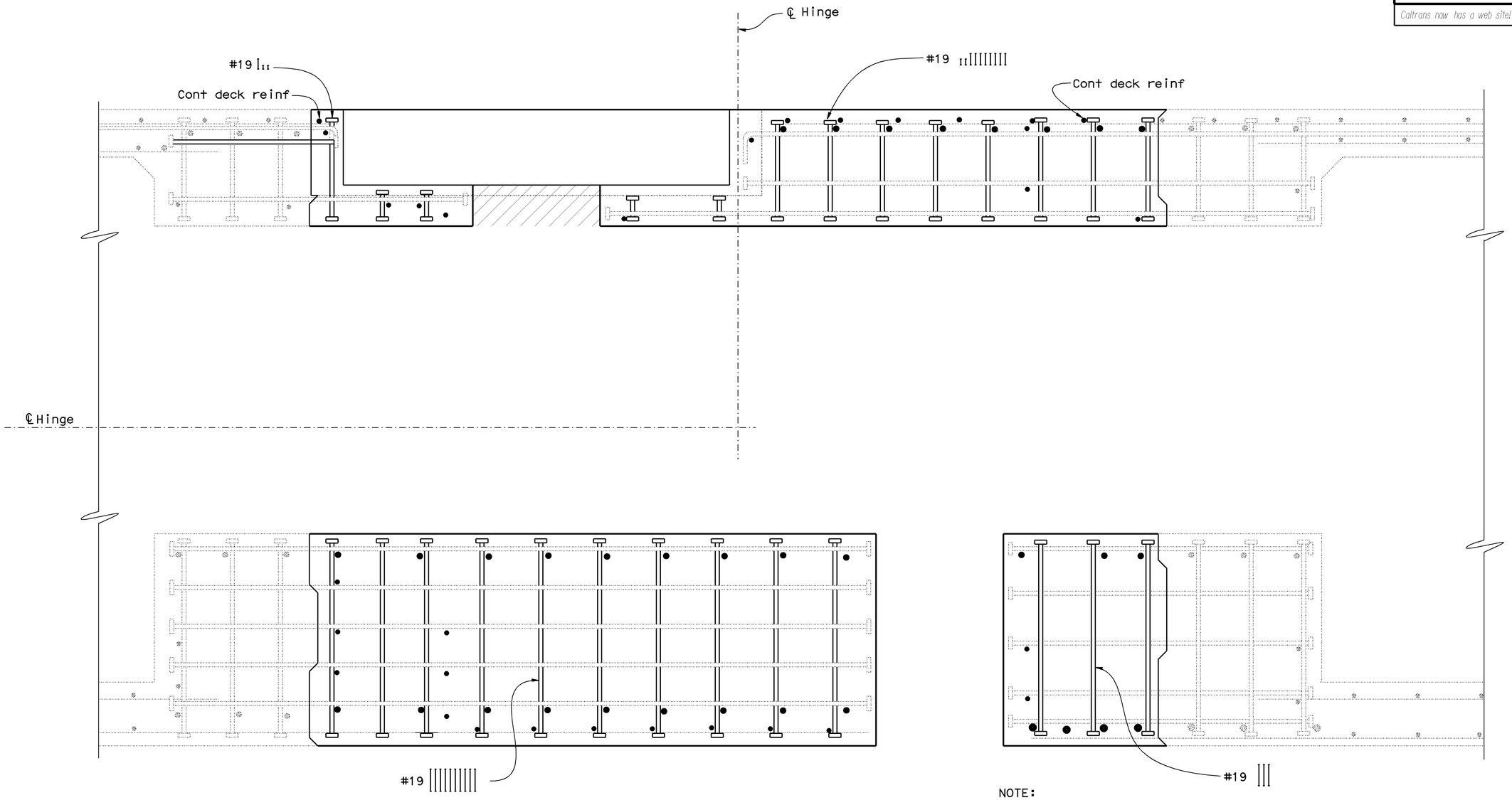


AFTER STRESSING

SECTION L-L

1:10

NOTE:

For location of 'Section L-L' see "Hinge "D3"-1 Details No. 1" sheet.

For details not shown see 'Section J-J' on "Hinge "D3"-1 Details No. 5" and "Hinge "D3"-1 Details No. 6" sheets

ALL DIMENSIONS ARE IN MILLIMETERS UNLESS OTHERWISE SHOWN

| | BY | CHECKED |
|---|---|---|
| DESIGN | Michael J Marquez | Ali Asnaashari |
| DETAILS | Janie Chlubna | Ali Asnaashari |
| QUANTITIES | Kenneth L Solak | Mary L Warrick |

STATE OF CALIFORNIA
DEPARTMENT OF TRANSPORTATION

DIVISION OF STRUCTURES
STRUCTURE DESIGN 3

BRIDGE NO. 28-0367L
KILOMETER POST 13.5 (8.39)

# CROCKETT VIADUCT
## HINGE "D3"-1 DETAILS NO. 10

STRUCTURES DESIGN DETAIL SHEET (METRIC) (REV. 3/1/99)

ORIGINAL SCALE IN MILLIMETERS FOR REDUCED PLANS 0 10 20 30 40 50 60 70 80 90 100

CU 04206
EA 013051

DISREGARD PRINTS BEARING EARLIER REVISION DATES

REVISION DATES (PRELIMINARY STAGE ONLY): 12-8-99 1-19-00 4-17-00

SHEET 87 OF 225

FILE => a-28-0367l-h-hg10.dgn

USERNAME => rkechris DATE PLOTTED => 20-APR-2005 TIME PLOTTED => 13:50

ClibPDF - www.fastio.com

*California Department of Transportation*
*Division of Maintenance*

# *Structure Maintenance and Investigations*

---

**B**RIDGE

**I**NSPECTION

**R**ECORDS

**I**NFORMATION

**S**YSTEM

---

The requested documents have been generated by BIRIS.

These documents are the property of the California Department of Transportation and should be handled in accordance with Deputy Directive 55 and the State Administrative Manual.

Records for “Confidential” bridges may only be released outside the Department of Transportation upon execution of a confidentiality agreement.

| DIST | COUNTY | ROUTE | KILOMETER POST TOTAL PROJECT | SHEET No | TOTAL SHEETS |
|---|---|---|---|---|---|
| 04 | CC,Sol | 80 | 19.5/22.7, 0.0/0.7 | 286 | 1050 |

Michael Marquez 5-8-00
REGISTERED CIVIL ENGINEER

7-17-00
PLANS APPROVAL DATE

REGISTERED PROFESSIONAL ENGINEER Michael J Marquez No. 54355 Exp. 12-31-03 CIVIL STATE OF CALIFORNIA

*The State of California or its officers or agents shall not be responsible for the accuracy or completeness of electronic copies of this plan sheet.*

*Caltrans now has a web site! To get to the web site, go to: http:/www.dot.ca.gov*

Caltrans Metric

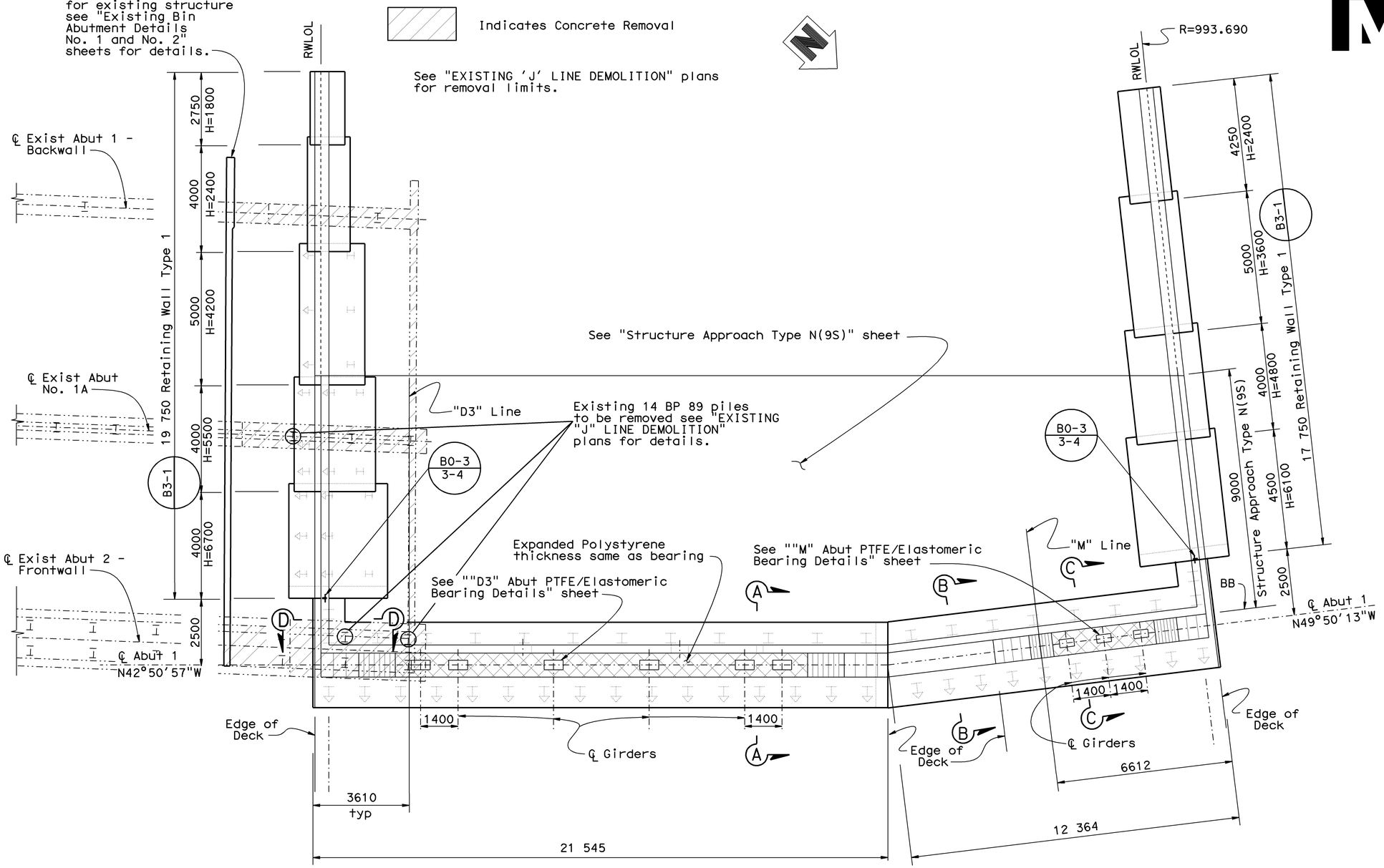


## PLAN
1: 80

NOTES:

For pile layout see "Abutment Details No. 2" sheet.

For abutment 'Elevation' view see "Abutment Details No. 3" sheet.

For 'Section A-A', 'Section B-B' and 'Section C-C' see "Abutment Details No. 4" sheet.

For 'Section D-D' and retaining wall 'Elevation' views see "Abutment Details No. 7" sheet.

Indicates HP 360 x 174 Piles

Indicates HP 360 x 174 Battered Piles

Indicates HP 250 x 62 Piles

Indicates HP 250 x 62 Battered Piles

ALL DIMENSIONS ARE IN MILLIMETERS UNLESS OTHERWISE SHOWN

| | BY | CHECKED |
|---|---|---|
| DESIGN | Ali Asnaashari | Lewis L Shen |
| DETAILS | Janie Chlubna | Lewis L Shen |
| QUANTITIES | Kenneth L Solak | Mary L Warrick |

STATE OF CALIFORNIA
DEPARTMENT OF TRANSPORTATION

DIVISION OF STRUCTURES
STRUCTURE DESIGN 3

BRIDGE NO. 28-0367L
KILOMETER POST 13.5 (8.39)

# CROCKETT VIADUCT
# ABUTMENT DETAILS NO. 1

STRUCTURES DESIGN DETAIL SHEET (METRIC) (REV. 3/1/99)

ORIGINAL SCALE IN MILLIMETERS FOR REDUCED PLANS 0 10 20 30 40 50 60 70 80 90 100

CU 04206
EA 013051

DISREGARD PRINTS BEARING EARLIER REVISION DATES

REVISION DATES (PRELIMINARY STAGE ONLY) 11-9-99 2-11-00 4-13-00 4-24-00

SHEET 16 OF 225

FILE => a-28-0367l-g-abt01.dgn

NO AS BUILT CORRECTIONS

CORRECTIONS TRANSFERRED BY: kc
FIELD CORRECTIONS BY: Eric Urmeneta

TRANSFER DATE: 10-10-2008
FIELD CORRECTION DATE: 11-04-2004

CONTRACT NO: 04-013054

USERNAME => kechris DATE PLOTTED => 13-NOV-2008 TIME PLOTTED => 15:52

ClibPDF - www.fastio.com

| DIST | COUNTY | ROUTE | KILOMETER POST TOTAL PROJECT | SHEET No | TOTAL SHEETS |
|---|---|---|---|---|---|
| 04 | CC,Sol | 80 | 19.5/22.7, 0.0/0.7 | 287 | 1050 |

Michael Marquez 5-8-00
REGISTERED CIVIL ENGINEER

7-17-00
PLANS APPROVAL DATE

REGISTERED PROFESSIONAL ENGINEER Michael J Marquez No. 54355 Exp. 12-31-03 CIVIL STATE OF CALIFORNIA

*The State of California or its officers or agents shall not be responsible for the accuracy or completeness of electronic copies of this plan sheet.*

*Caltrans now has a web site! To get to the web site, go to: http:/www.dot.ca.gov*

Caltrans Metric

CONTRACT NO: 04-013054
TRANSFER DATE: 10-10-2008
FIELD CORRECTION DATE: 11-04-2004
CORRECTIONS TRANSFERRED BY: kc
FIELD CORRECTIONS BY: Eric Urmeneta

**NO AS BUILT CORRECTIONS**

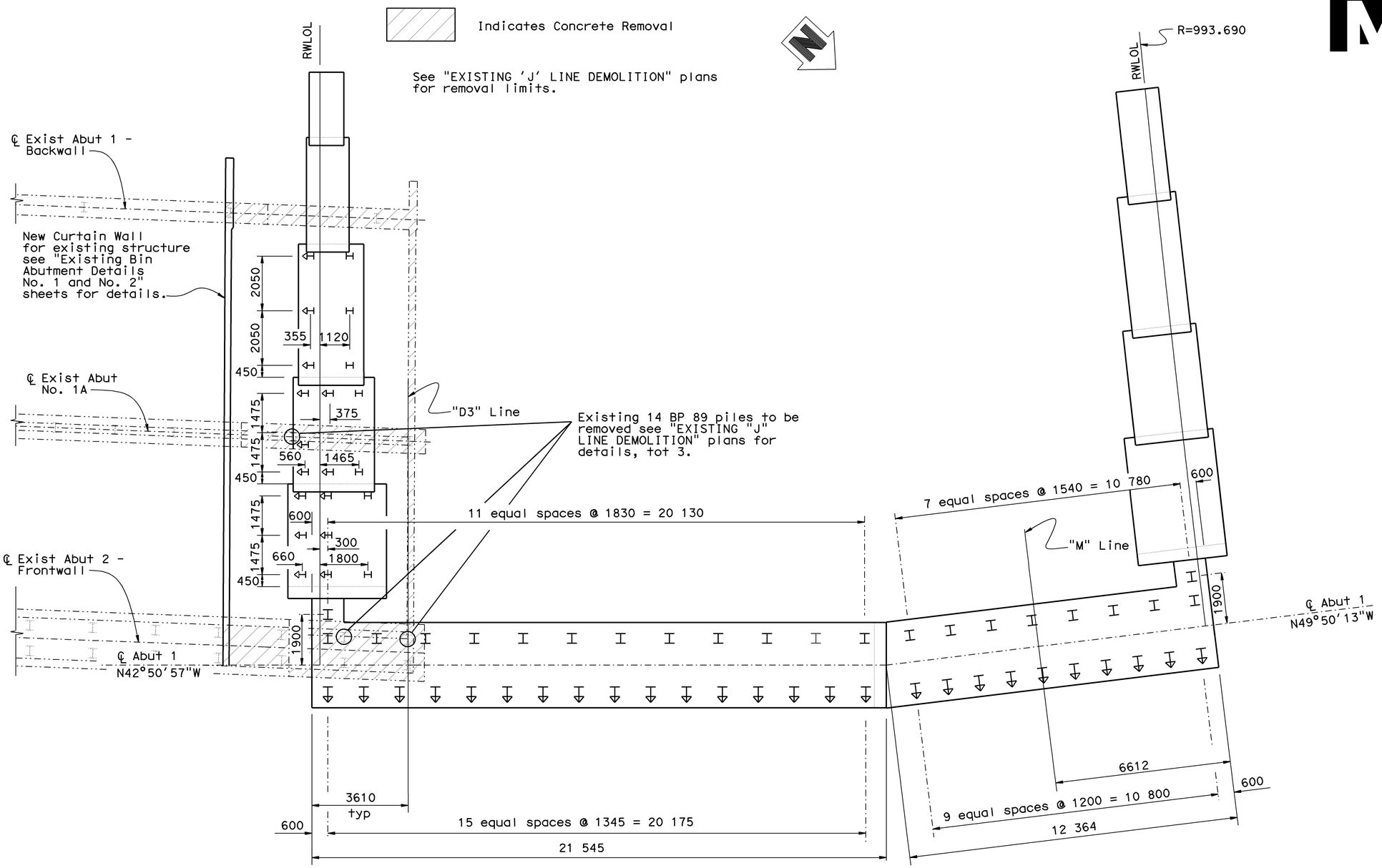


NOTES:

For abutment layout see "Abutment Details No. 1" sheet.

Indicates HP 360 x 174 Piles

Indicates HP 360 x 174 Battered Piles

Indicates HP 250 x 62 Piles

Indicates HP 250 x 62 Battered Piles

## PLAN - PILE LAYOUT

1: 80

B3-1

ALL DIMENSIONS ARE IN MILLIMETERS UNLESS OTHERWISE SHOWN

| | BY | CHECKED |
|---|---|---|
| DESIGN | Ali Asnaashari | Lewis L Shen |
| DETAILS | Janie Chlubna | Lewis L Shen |
| QUANTITIES | Kenneth L Solak | Mary L Warrick |

STATE OF CALIFORNIA
DEPARTMENT OF TRANSPORTATION

DIVISION OF STRUCTURES
STRUCTURE DESIGN 3

BRIDGE NO. 28-0367L
KILOMETER POST 13.5 (8.39)

# CROCKETT VIADUCT
## ABUTMENT DETAILS NO. 2

STRUCTURES DESIGN DETAIL SHEET (METRIC) (REV. 3/1/99)

ORIGINAL SCALE IN MILLIMETERS FOR REDUCED PLANS 0 10 20 30 40 50 60 70 80 90 100

CU 04206
EA 013051

DISREGARD PRINTS BEARING EARLIER REVISION DATES

REVISION DATES (PRELIMINARY STAGE ONLY) 4-24-00

SHEET 17 OF 225

FILE => a-28-0367l-g-abt02.dgn

USERNAME => rrechris DATE PLOTTED => 13-NOV-2008 TIME PLOTTED => 15:53

ClibPDF - www.fastio.com

| DIST | COUNTY | ROUTE | KILOMETER POST TOTAL PROJECT | SHEET No | TOTAL SHEETS |
|---|---|---|---|---|---|
| 04 | CC,Sol | 80 | 19.5/22.7, 0.0/0.7 | 288 | 1050 |

Caltrans Metric

Michael Marquez 5-8-00
REGISTERED CIVIL ENGINEER

7-17-00
PLANS APPROVAL DATE

REGISTERED PROFESSIONAL ENGINEER Michael J Marquez No. 54355 Exp. 12-31-03 CIVIL STATE OF CALIFORNIA

*The State of California or its officers or agents shall not be responsible for the accuracy or completeness of electronic copies of this plan sheet.*

*Caltrans now has a web site! To get to the web site, go to: http://www.dot.ca.gov*

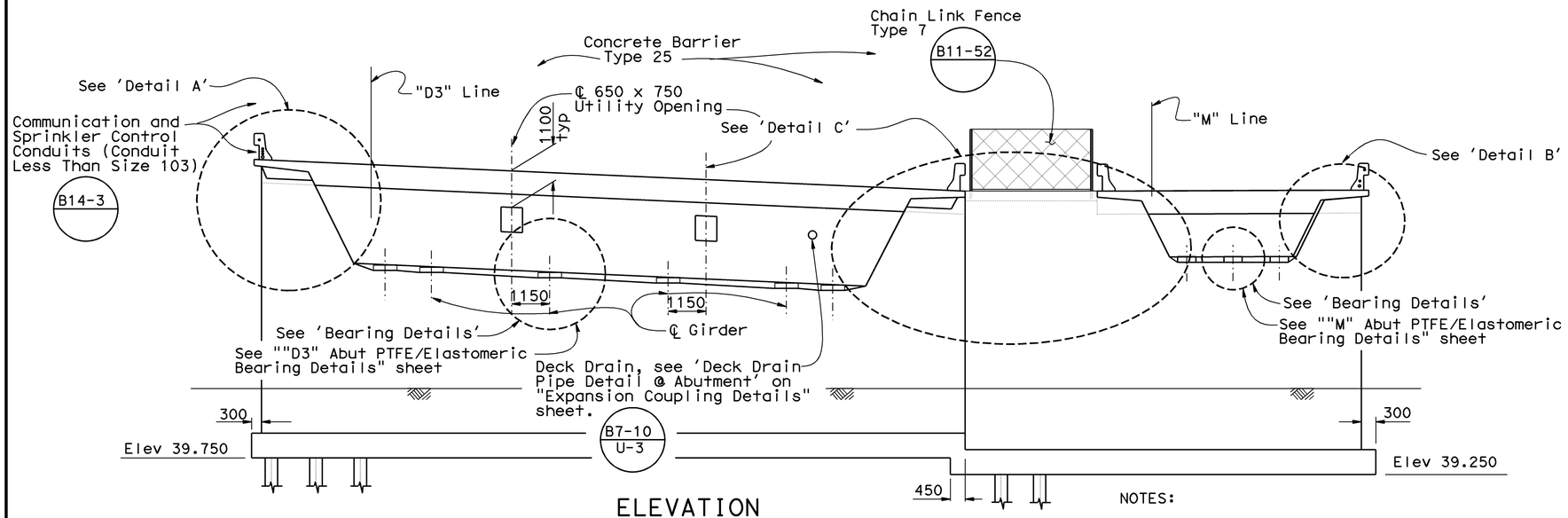


## ELEVATION

1: 80

NOTES:

For 'Detail A' and 'Detail B' see "Abutment Details No. 5" sheet.

For 'Detail C' see "Abutment Details No. 6" sheet.

For 'Plan' view see "Abutment Details No. 1" sheet.

For location of 'Detail E' see "Abutment Details No. 4" sheet.

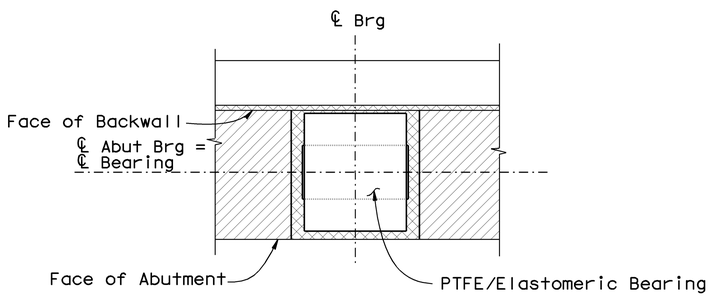


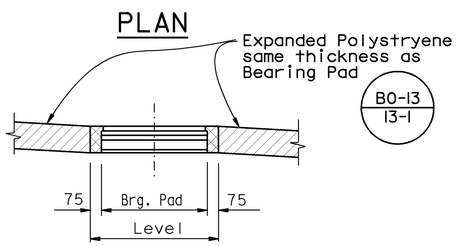


## ELEVATION BEARING DETAILS

No Scale

Details typical at all bearing pads

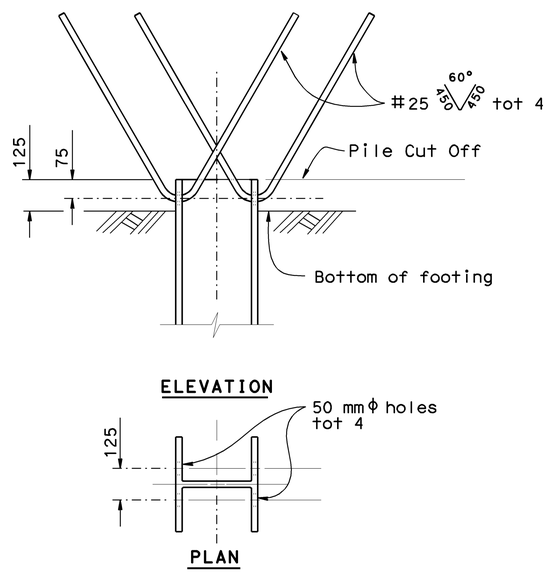


## STEEL PILE ANCHOR

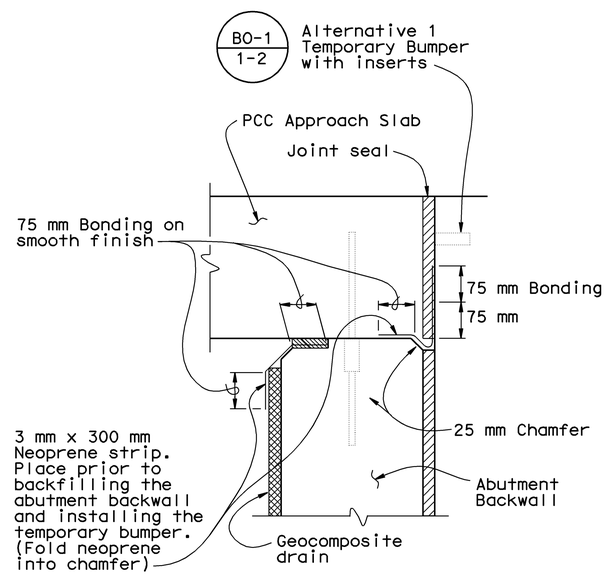


## JOINT PROTECTION DETAIL

No Scale

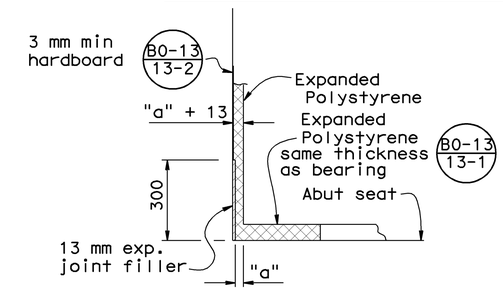


See "Joint Seal Assembly (Maximum Movement Rating = 100 mm)" sheet for "M" Line dimension 'a'

and "Abutment Joint Seal Details Movement Rating Greater Than 100 mm" sheet for "D3" Line dimension 'a'

## DETAIL 'E'

No Scale

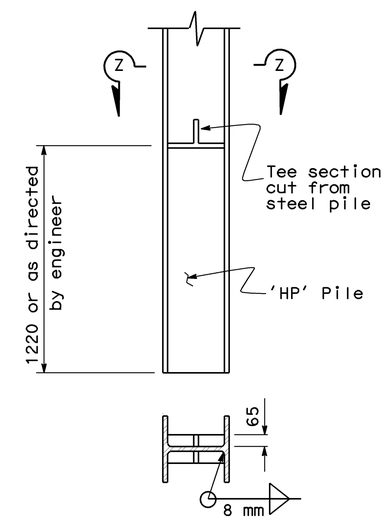


## SECTION Z-Z

## PILE LUG

No Scale

Bottom of Footing Elevations are shown in meters

ALL DIMENSIONS ARE IN MILLIMETERS UNLESS OTHERWISE SHOWN

| | | |
|---|---|---|
| DESIGN | BY Ali Asnaashari | CHECKED Lewis L Shen |
| DETAILS | BY Janie Chlubna | CHECKED Lewis L Shen |
| QUANTITIES | BY Kenneth L Solak | CHECKED Mary L Warrick |

STATE OF CALIFORNIA
DEPARTMENT OF TRANSPORTATION

DIVISION OF STRUCTURES
STRUCTURE DESIGN 3

BRIDGE NO. 28-0367L
KILOMETER POST 13.5 (8.39)

# CROCKETT VIADUCT
# ABUTMENT DETAILS NO. 3

STRUCTURES DESIGN DETAIL SHEET (METRIC) (REV. 3/1/99)

ORIGINAL SCALE IN MILLIMETERS FOR REDUCED PLANS 0 10 20 30 40 50 60 70 80 90 100

CU 04206
EA 013051

DISREGARD PRINTS BEARING EARLIER REVISION DATES

REVISION DATES (PRELIMINARY STAGE ONLY): 11-9-99 2-11-00 3-7-00 4-13-00 4-24-00

SHEET 18 OF 225

FILE => a-28-0367l-g-abt03.dgn

NO AS BUILT CORRECTIONS

CORRECTIONS TRANSFERRED BY: kc
FIELD CORRECTIONS BY: Eric Urmeneta

TRANSFER DATE: 10-10-2008
FIELD CORRECTION DATE: 11-04-2004

CONTRACT NO: 04-013054

USERNAME => kechris DATE PLOTTED => 13-NOV-2008 TIME PLOTTED => 15:53

ClibPDF - www.fastio.com

| DIST | COUNTY | ROUTE | KILOMETER POST TOTAL PROJECT | SHEET No | TOTAL SHEETS |
|---|---|---|---|---|---|
| 04 | CC,Sol | 80 | 19.5/22.7, 0.0/0.7 | 289 | 1050 |

Caltrans Metric

Michael Marquez 5-8-00
REGISTERED CIVIL ENGINEER

7-17-00
PLANS APPROVAL DATE

REGISTERED PROFESSIONAL ENGINEER Michael J Marquez No. 54355 Exp. 12-31-03 CIVIL STATE OF CALIFORNIA

*The State of California or its officers or agents shall not be responsible for the accuracy or completeness of electronic copies of this plan sheet.*

*Caltrans now has a web site! To get to the web site, go to: http://www.dot.ca.gov*

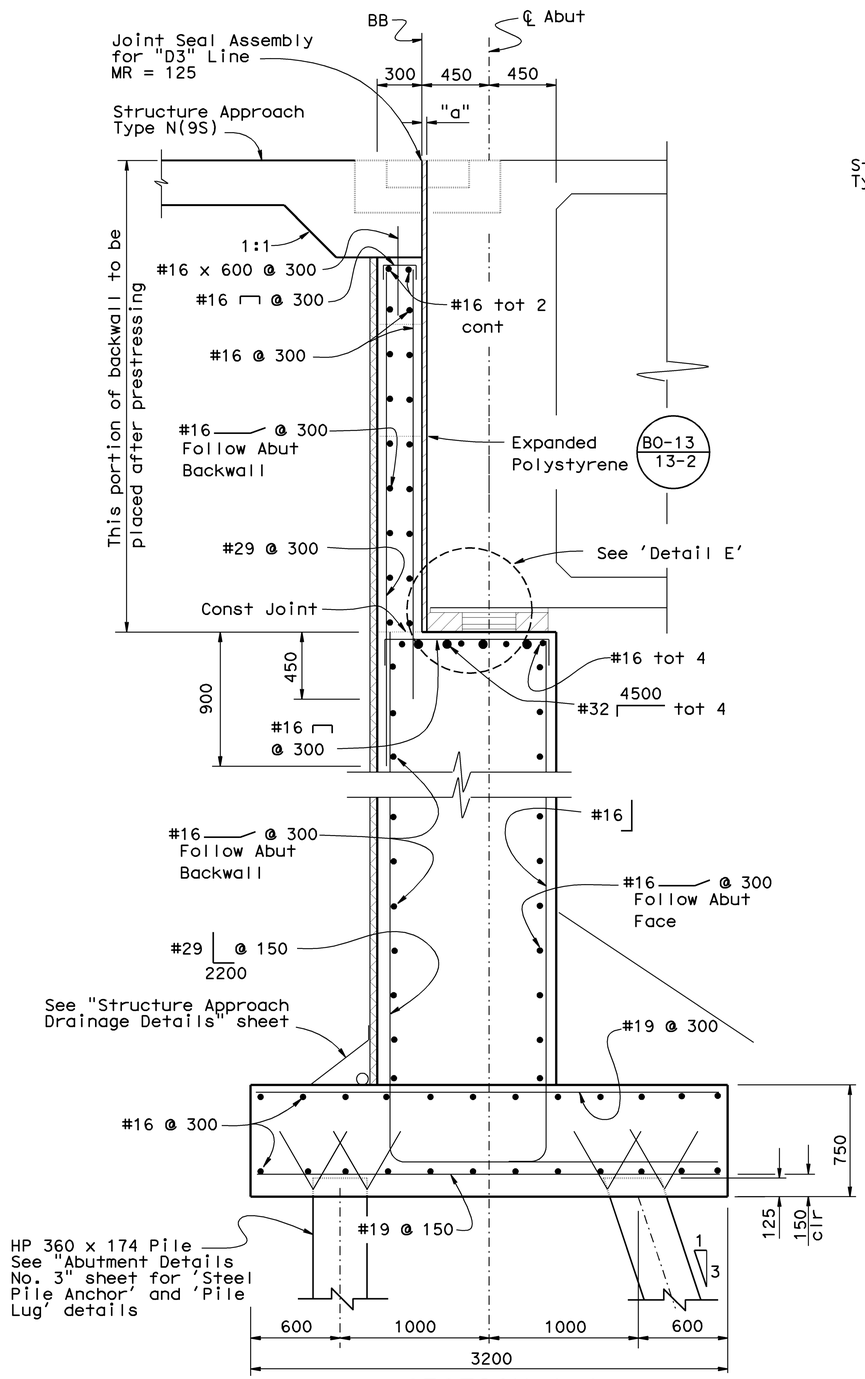


SECTION A-A
1: 20

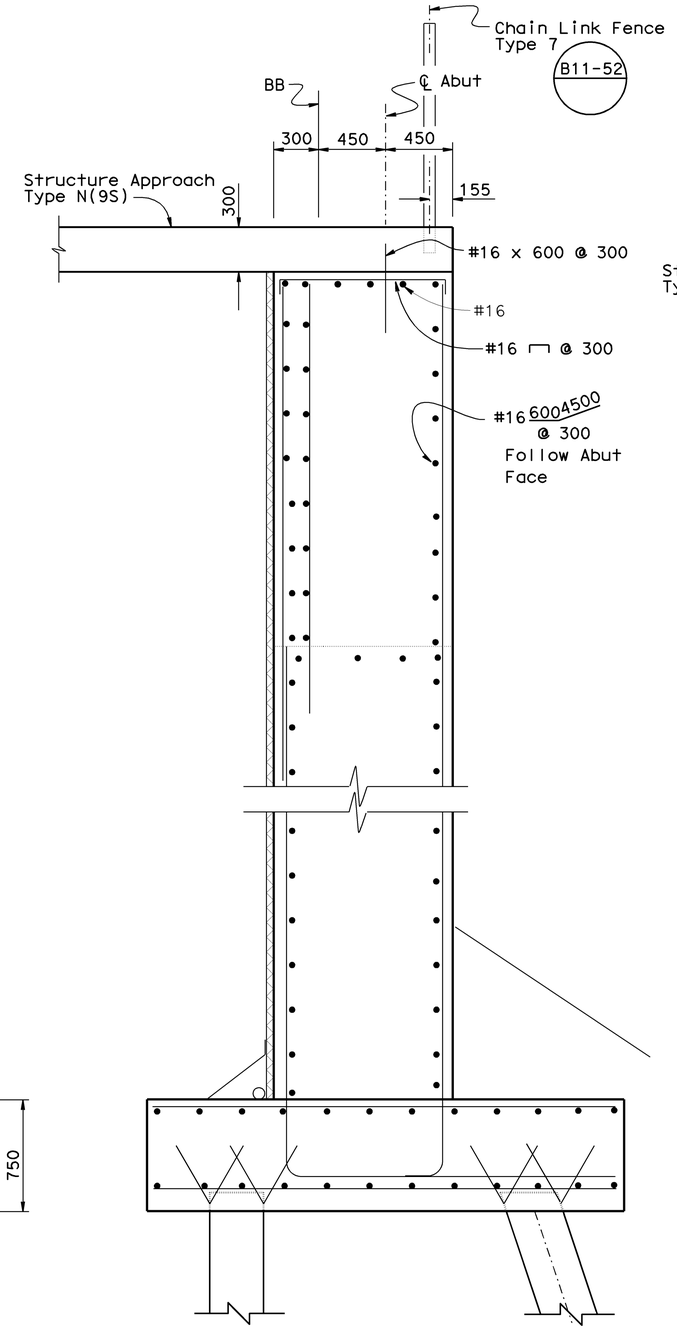


For details not shown see 'Section A-A' and 'Section C-C'

SECTION B-B
1: 20

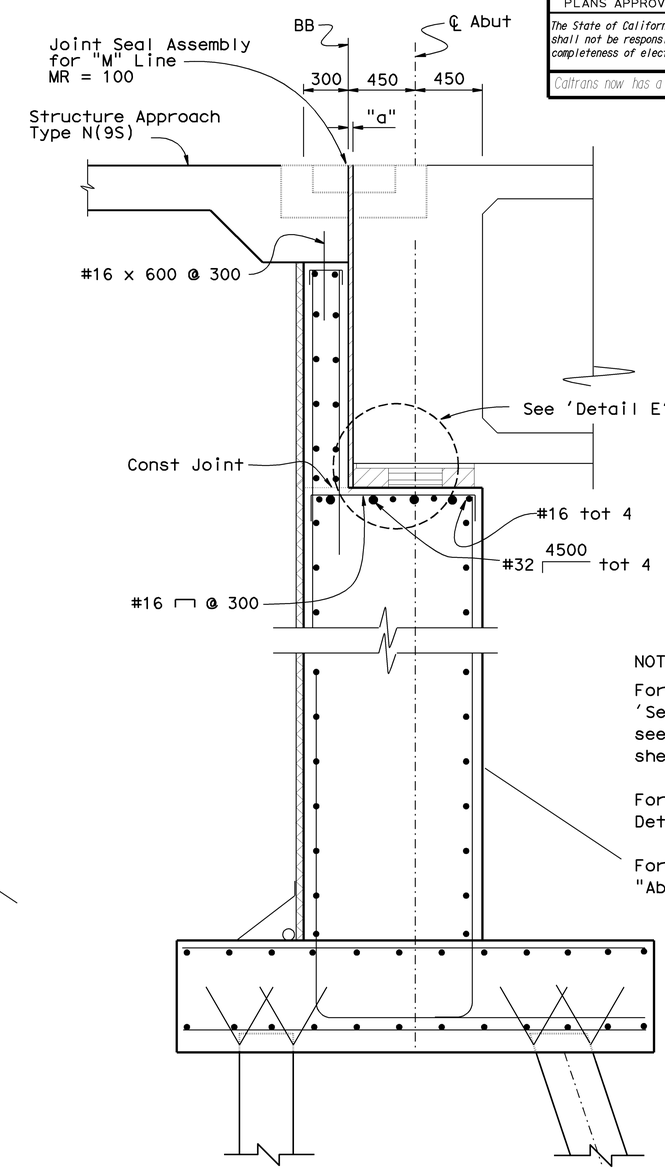


For details not shown see 'Section A-A'

SECTION C-C
1: 20

NOTES:

For location of 'Section A-A', 'Section B-B' and 'Section C-C' see "Abutment Details No. 1" sheet.

For 'Section D-D' see "Abutment Details No. 7" sheet.

For 'Detail E' details see "Abutment Details No. 3" sheet.

ALL DIMENSIONS ARE IN MILLIMETERS UNLESS OTHERWISE SHOWN

| | BY | CHECKED |
|---|---|---|
| DESIGN | Ali Asnaashari | Lewis L Shen |
| DETAILS | MKnight / JChlubna | Lewis L Shen |
| QUANTITIES | Kenneth L Solak | Mary L Warrick |

STATE OF CALIFORNIA
DEPARTMENT OF TRANSPORTATION

DIVISION OF STRUCTURES
STRUCTURE DESIGN 3

BRIDGE NO. 28-0367L
KILOMETER POST 13.5 (8.39)

# CROCKETT VIADUCT
# ABUTMENT DETAILS NO. 4

STRUCTURES DESIGN DETAIL SHEET (METRIC) (REV. 3/1/99)

ORIGINAL SCALE IN MILLIMETERS FOR REDUCED PLANS 0 10 20 30 40 50 60 70 80 90 100

CU 04206
EA 013051

DISREGARD PRINTS BEARING EARLIER REVISION DATES

REVISION DATES (PRELIMINARY STAGE ONLY): 11-15-99 2-14-00 3-8-00 4-13-00

SHEET 19 OF 225

FILE => a-28-0367l-g-abt04.dgn

AS BUILT CORRECTIONS

CORRECTIONS TRANSFERRED BY: kc
FIELD CORRECTIONS BY: Eric Urmeneta

TRANSFER DATE: 10-10-2008
FIELD CORRECTION DATE: 11-04-2004

CONTRACT NO: 04-013054

USERNAME => kechris DATE PLOTTED => 13-NOV-2008 TIME PLOTTED => 15:53

ClibPDF - www.fastio.com

| DIST | COUNTY | ROUTE | KILOMETER POST TOTAL PROJECT | SHEET No | TOTAL SHEETS |
|---|---|---|---|---|---|
| 04 | CC,Sol | 80 | 19.5/22.7, 0.0/0.7 | 290 | 1050 |

Michael Marquez 5-8-00
REGISTERED CIVIL ENGINEER

7-17-00
PLANS APPROVAL DATE

REGISTERED PROFESSIONAL ENGINEER Michael J Marquez No. 54355 Exp. 12-31-03 CIVIL STATE OF CALIFORNIA

*The State of California or its officers or agents shall not be responsible for the accuracy or completeness of electronic copies of this plan sheet.*

*Caltrans now has a web site! To get to the web site, go to: http:/www.dot.ca.gov*

Caltrans Metric

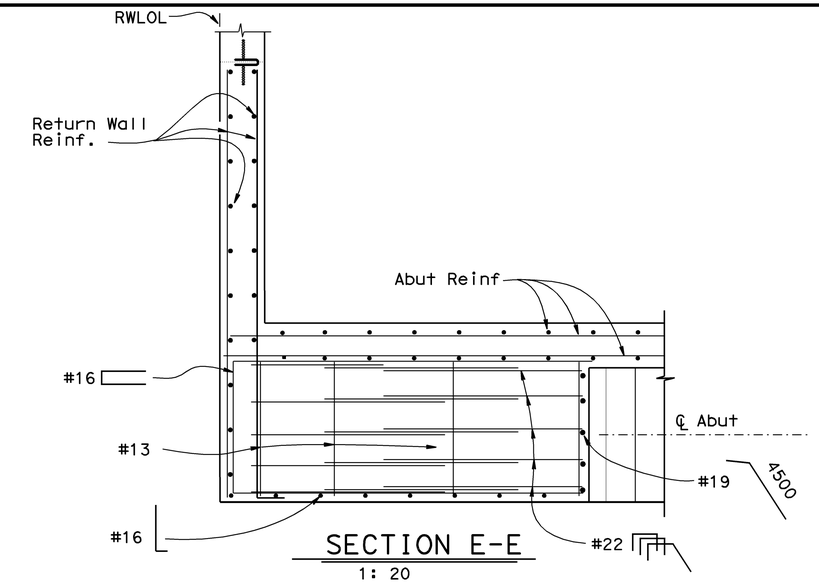


SECTION E-E
1: 20

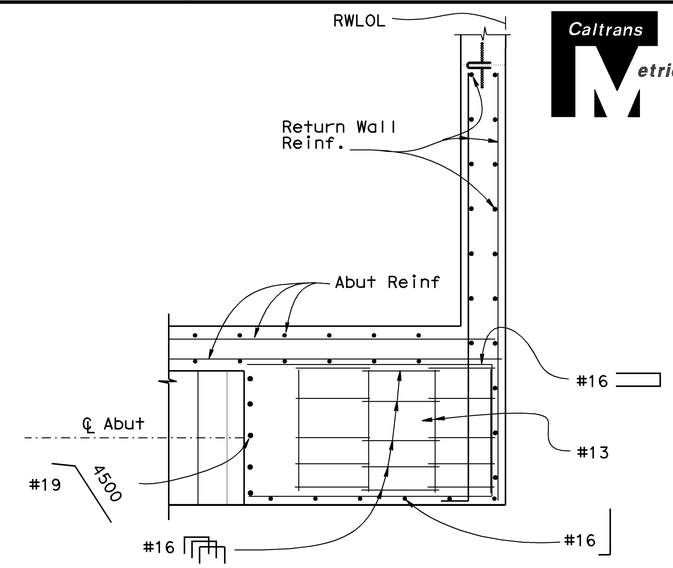


SECTION F-F
1: 20

NOTE:
For Joint Seal Assembly Blockout see "Abutment Joint Seal Details - Movement Rating Greater Than 100 mm" sheet

NOTE:
For location of 'Detail A' and 'Detail B' see "Abutment Details No. 3" sheet.

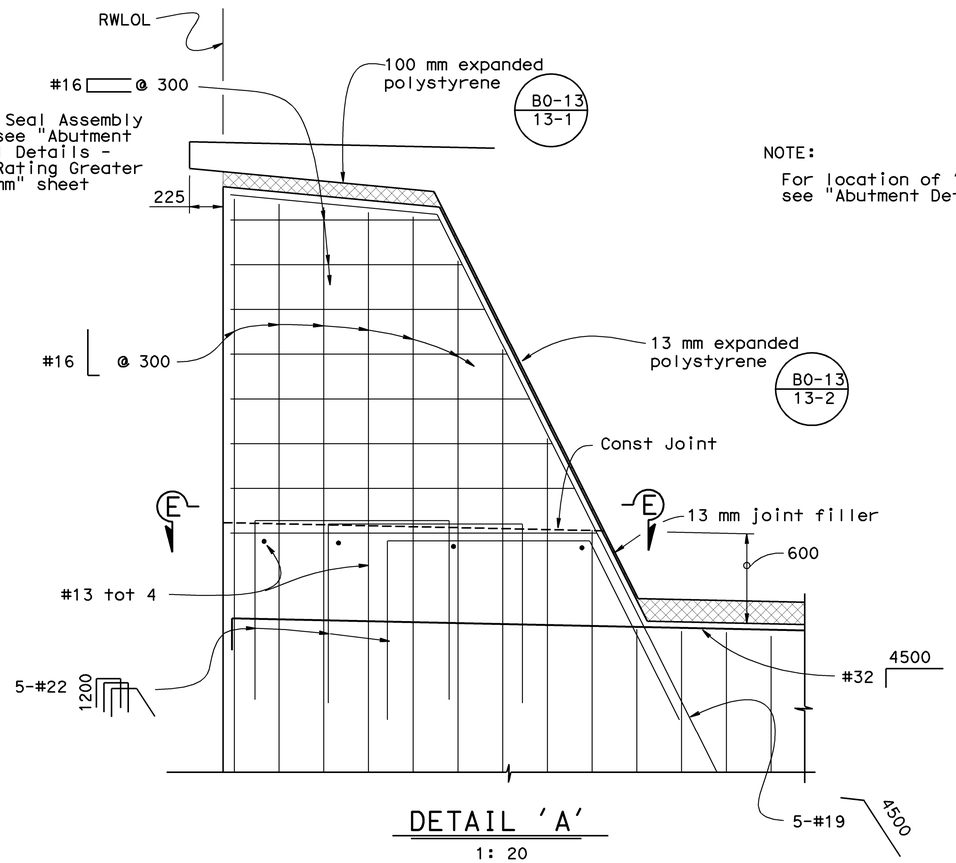


DETAIL 'A'
1: 20

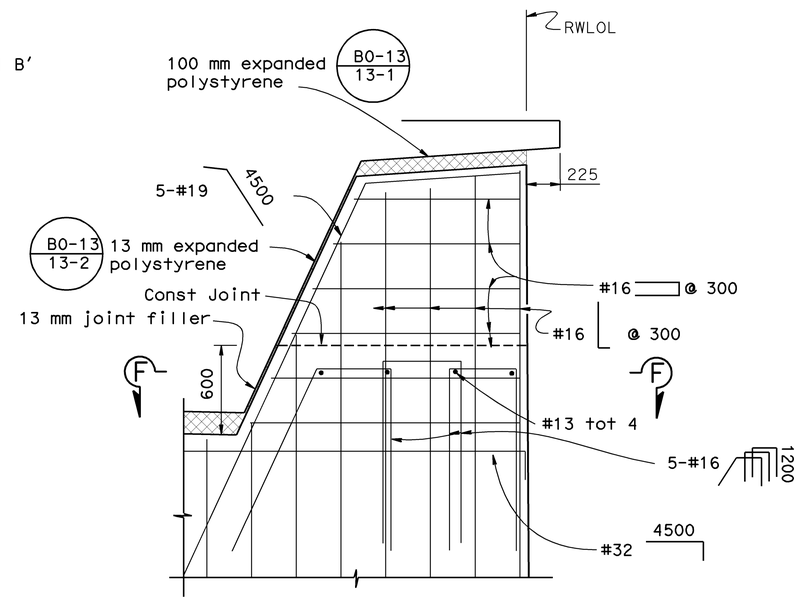


DETAIL 'B'
1: 20

ALL DIMENSIONS ARE IN MILLIMETERS UNLESS OTHERWISE SHOWN

| | | | |
|---|---|---|---|
| DESIGN | BY Ali Asnaashari | CHECKED Lewis L Shen | |
| DETAILS | BY MKnight / JChlubna | CHECKED Lewis L Shen | |
| QUANTITIES | BY Kenneth L Solak | CHECKED Mary L Warrick | |

STATE OF CALIFORNIA
DEPARTMENT OF TRANSPORTATION

DIVISION OF STRUCTURES
STRUCTURE DESIGN 3

BRIDGE NO. 28-0367L
KILOMETER POST 13.5 (8.39)

# CROCKETT VIADUCT
## ABUTMENT DETAILS NO. 5

STRUCTURES DESIGN DETAIL SHEET (METRIC) (REV. 3/1/99)

ORIGINAL SCALE IN MILLIMETERS FOR REDUCED PLANS 0 10 20 30 40 50 60 70 80 90 100

CU 04206
EA 013051

DISREGARD PRINTS BEARING EARLIER REVISION DATES

REVISION DATES (PRELIMINARY STAGE ONLY) 11-16-99 2-15-00 4-13-00

SHEET 20 OF 225

FILE => a-28-0367l-g-abt05.dgn

NO AS BUILT CORRECTIONS

CORRECTIONS TRANSFERRED BY: kc
FIELD CORRECTIONS BY: Eric Urmeneta

TRANSFER DATE: 10-10-2008
FIELD CORRECTION DATE: 11-04-2004

CONTRACT NO: 04-013054

USERNAME => rkechris DATE PLOTTED => 13-NOV-2008 TIME PLOTTED => 15:53

ClibPDF - www.fastio.com

| DIST | COUNTY | ROUTE | KILOMETER POST TOTAL PROJECT | SHEET No | TOTAL SHEETS |
|---|---|---|---|---|---|
| 04 | CC,Sol | 80 | 19.5/22.7, 0.0/0.7 | 291 | 1050 |

Michael Marquez 5-8-00
REGISTERED CIVIL ENGINEER

7-17-00
PLANS APPROVAL DATE

REGISTERED PROFESSIONAL ENGINEER Michael J Marquez No. 54355 Exp. 12-31-03 CIVIL STATE OF CALIFORNIA

*The State of California or its officers or agents shall not be responsible for the accuracy or completeness of electronic copies of this plan sheet.*

*Caltrans now has a web site! To get to the web site, go to: http://www.dot.ca.gov*

Caltrans Metric

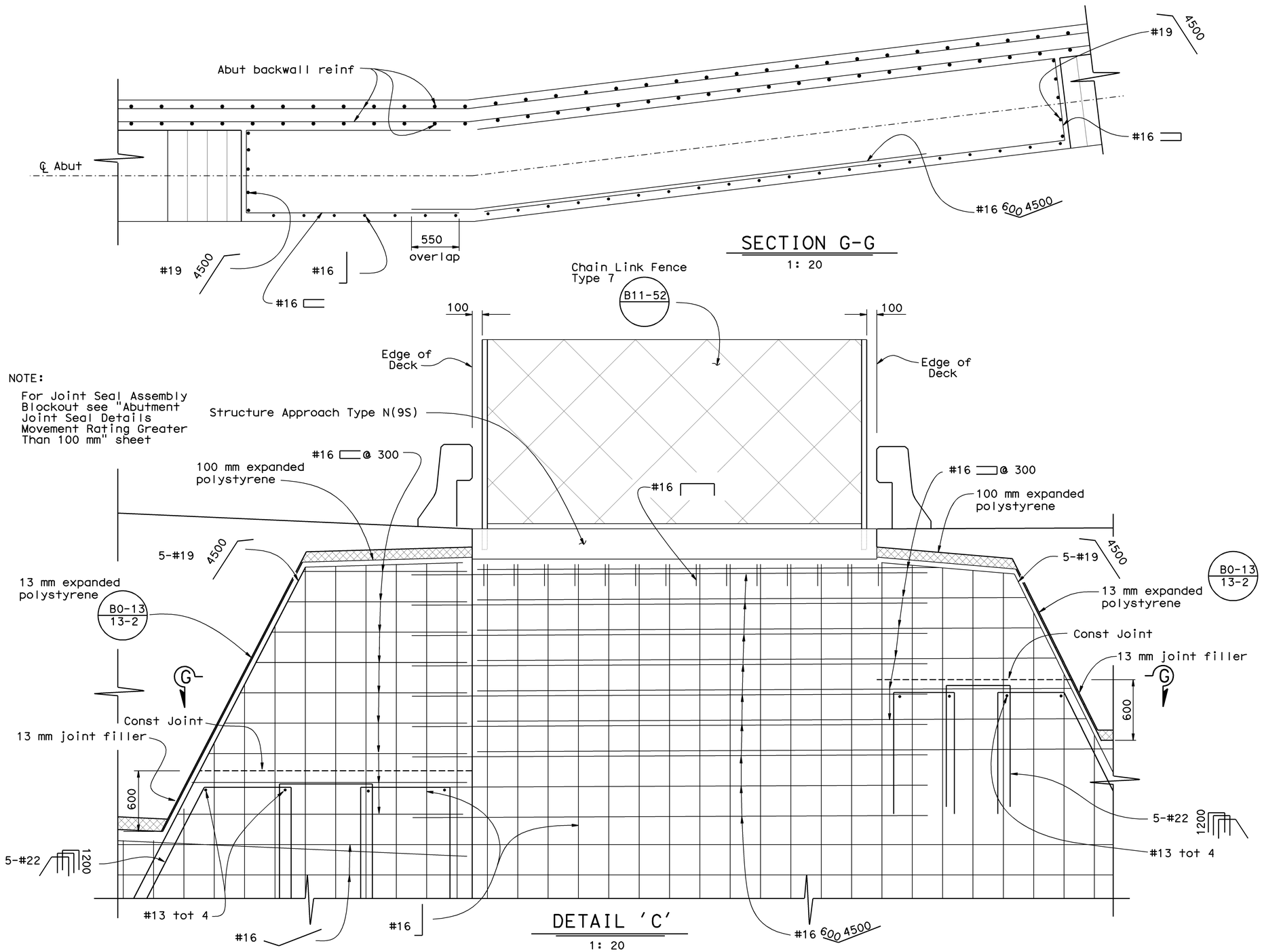


NOTE:

For Joint Seal Assembly Blockout see "Abutment Joint Seal Details Movement Rating Greater Than 100 mm" sheet

NOTES:

For location of 'Detail C' see "Abutment Details No. 3" sheet.

ALL DIMENSIONS ARE IN MILLIMETERS UNLESS OTHERWISE SHOWN

NO AS BUILT CORRECTIONS

CORRECTIONS TRANSFERRED BY: kc
FIELD CORRECTIONS BY: Eric Urmeneta

TRANSFER DATE: 10-10-2008
FIELD CORRECTION DATE: 11-04-2004

CONTRACT NO: 04-013054

| | | | |
|---|---|---|---|
| DESIGN | BY Ali Asnaashari | CHECKED Lewis L Shen | |
| DETAILS | BY Janie Chlubna | CHECKED Lewis L Shen | |
| QUANTITIES | BY Kenneth L Solak | CHECKED Mary L Warrick | |

STATE OF CALIFORNIA
DEPARTMENT OF TRANSPORTATION

DIVISION OF STRUCTURES
STRUCTURE DESIGN 3

BRIDGE NO. 28-0367L
KILOMETER POST 13.5 (8.39)

# CROCKETT VIADUCT
# ABUTMENT DETAILS NO. 6

STRUCTURES DESIGN DETAIL SHEET (METRIC) (REV. 3/1/99)

ORIGINAL SCALE IN MILLIMETERS FOR REDUCED PLANS 0 10 20 30 40 50 60 70 80 90 100

CU 04206
EA 013051

DISREGARD PRINTS BEARING EARLIER REVISION DATES

REVISION DATES (PRELIMINARY STAGE ONLY) 11-17-99 2-16-00 4-13-00

SHEET 21 OF 225

FILE => a-28-0367l-g-abt06.dgn

USERNAME => rkechris DATE PLOTTED => 13-NOV-2008 TIME PLOTTED => 15:53

ClibPDF - www.fastio.com

| DIST | COUNTY | ROUTE | KILOMETER POST TOTAL PROJECT | SHEET No | TOTAL SHEETS |
|---|---|---|---|---|---|
| 04 | CC,Sol | 80 | 19.5/22.7, 0.0/0.7 | 292 | 1050 |

Caltrans Metric

Michael Marquez 5-8-00
REGISTERED CIVIL ENGINEER

7-17-00
PLANS APPROVAL DATE

REGISTERED PROFESSIONAL ENGINEER Michael J Marquez No. 54355 Exp. 12-31-03 CIVIL STATE OF CALIFORNIA

*The State of California or its officers or agents shall not be responsible for the accuracy or completeness of electronic copies of this plan sheet.*

*Caltrans now has a web site! To get to the web site, go to: http://www.dot.ca.gov*

NO AS BUILT CORRECTIONS

CORRECTIONS TRANSFERRED BY: kc
FIELD CORRECTIONS BY: Eric Urmeneta

TRANSFER DATE: 10-10-2008
FIELD CORRECTION DATE: 11-04-2004

CONTRACT NO: 04-013054

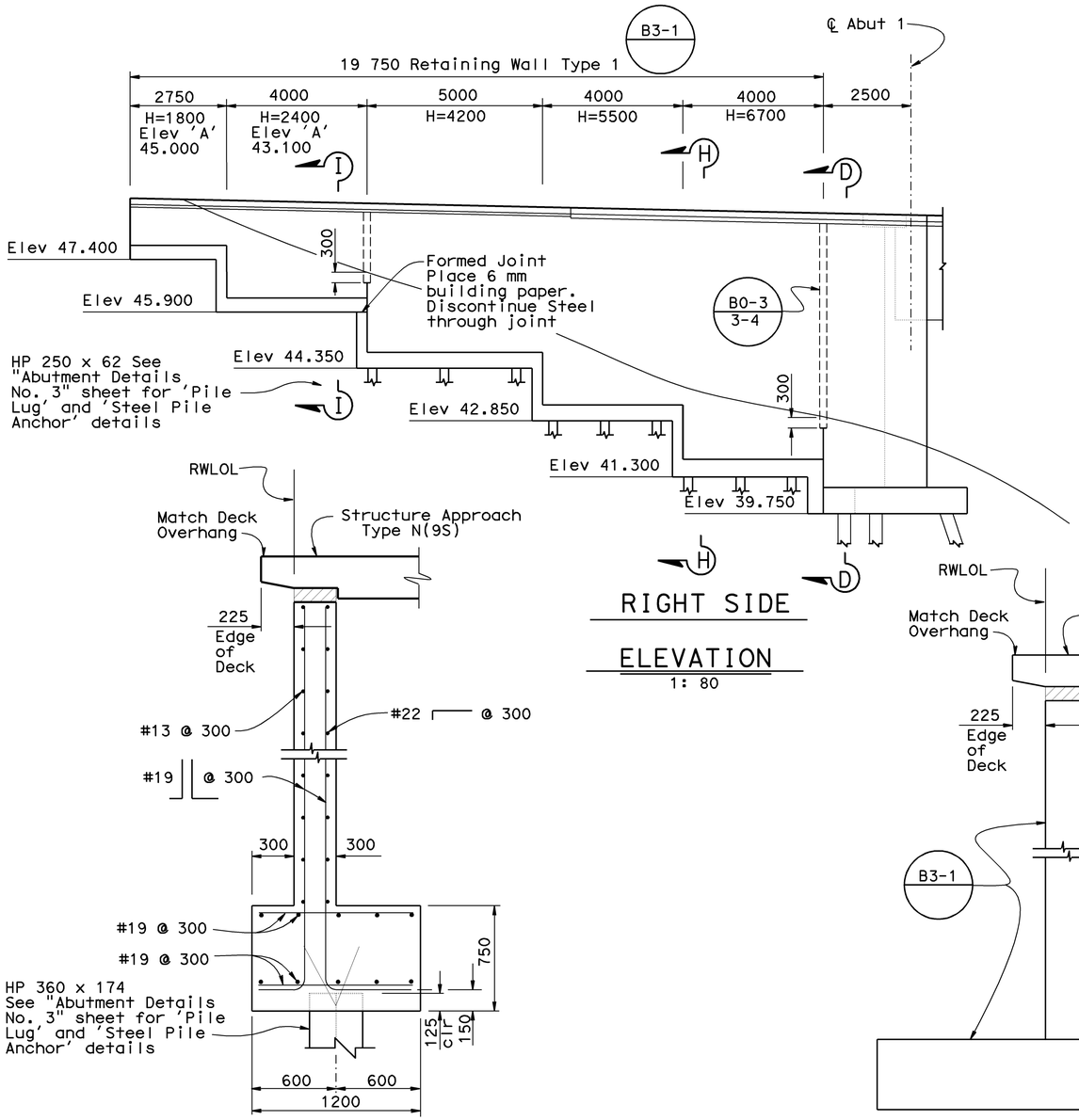


RIGHT SIDE

ELEVATION

1: 80

SECTION D-D

1:20

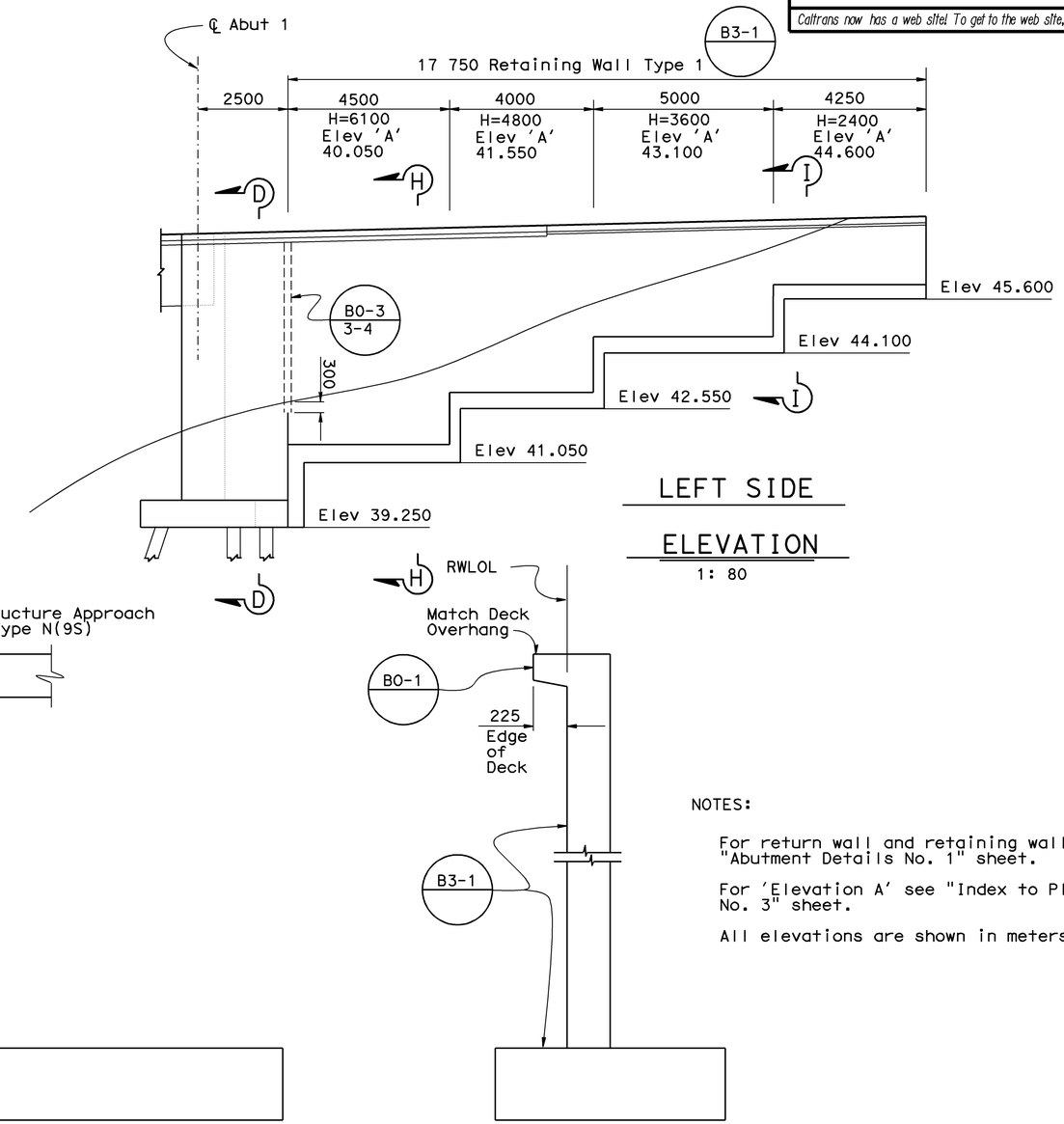


LEFT SIDE

ELEVATION

1: 80

SECTION H-H

1:20

Piles (if any) not shown

SECTION I-I

1:20

NOTES:

For return wall and retaining wall layout see "Abutment Details No. 1" sheet.

For 'Elevation A' see "Index to Plans No. 3" sheet.

All elevations are shown in meters

ALL DIMENSIONS ARE IN MILLIMETERS UNLESS OTHERWISE SHOWN

| | | | |
|---|---|---|---|
| DESIGN | BY Ali Asnaashari | CHECKED Lewis L Shen | |
| DETAILS | BY Janie Chlubna | CHECKED Lewis L Shen | |
| QUANTITIES | BY Kenneth L Solak | CHECKED Mary L Warrick | |

STATE OF CALIFORNIA
DEPARTMENT OF TRANSPORTATION

DIVISION OF STRUCTURES
STRUCTURE DESIGN 3

BRIDGE NO. 28-0367L
KILOMETER POST 13.5 (8.39)

# CROCKETT VIADUCT

# ABUTMENT DETAILS NO. 7

STRUCTURES DESIGN DETAIL SHEET (METRIC) (REV. 3/1/99)

ORIGINAL SCALE IN MILLIMETERS FOR REDUCED PLANS 0 10 20 30 40 50 60 70 80 90 100

CU 04206
EA 013051

DISREGARD PRINTS BEARING EARLIER REVISION DATES

REVISION DATES (PRELIMINARY STAGE ONLY) 11-9-99 2-16-00 3-8-00 4-13-00 5-2-00

SHEET 22 OF 225

FILE => a-28-03671-g-abt07.dgn

USERNAME => rechris DATE PLOTTED => 13-NOV-2008 TIME PLOTTED => 15:53

ClibPDF - www.fastio.com

| DIST | COUNTY | ROUTE | KILOMETER POST TOTAL PROJECT | SHEET No | TOTAL SHEETS |
|---|---|---|---|---|---|
| 04 | CC,Sol | 80 | 19.5/22.7, 0.0/0.7 | 293 | 1050 |

Michael Marquez 5-8-00
REGISTERED CIVIL ENGINEER

7-17-00
PLANS APPROVAL DATE

REGISTERED PROFESSIONAL ENGINEER
Michael J Marquez
No. 54355
Exp. 12-31-03
CIVIL
STATE OF CALIFORNIA

*The State of California or its officers or agents shall not be responsible for the accuracy or completeness of electronic copies of this plan sheet.*

*Caltrans now has a web site! To get to the web site, go to: http://www.dot.ca.gov*

Caltrans Metric

AS BUILT CORRECTIONS

CORRECTIONS TRANSFERRED BY: kc
FIELD CORRECTIONS BY: Eric Urmeneta

TRANSFER DATE: 04-01-2005
FIELD CORRECTION DATE: 06-23-2004

CONTRACT NO: 04-013054

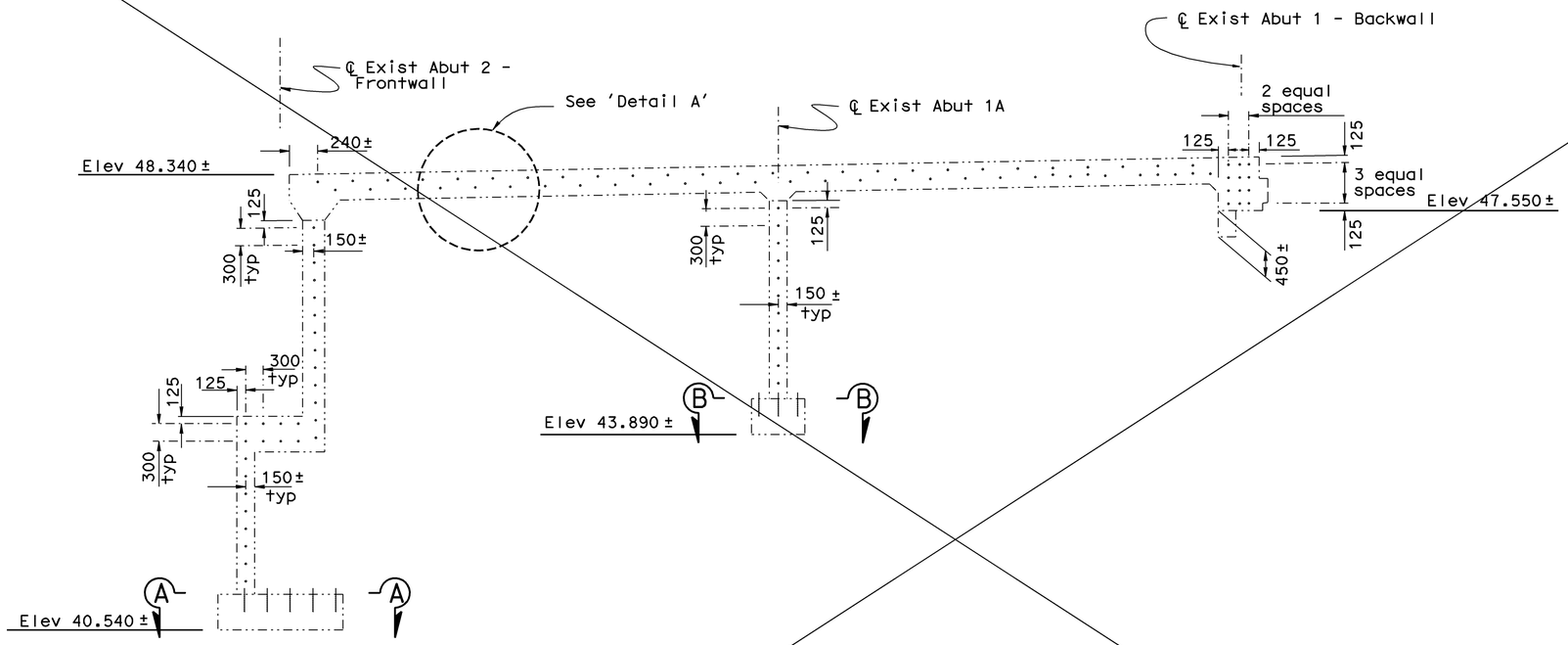


ELEVATION
1: 50

NOTE:

All dowels are #16 Drill & Bond in a 300 mm deep hole

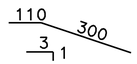


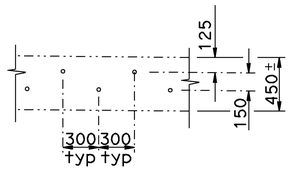


DETAIL 'A'
1: 25

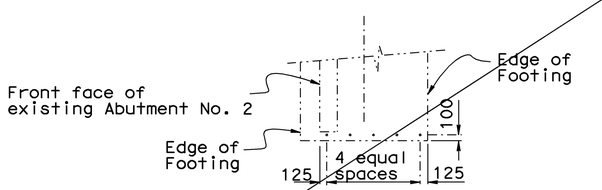


SECTION A-A
1: 50

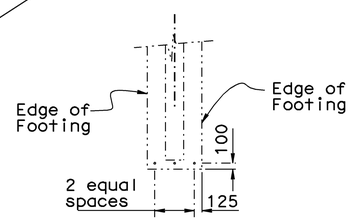


SECTION B-B
1: 50

Eliminated from Contract
Contract Change Order #165

NOTE:

See "CROCKETT BRIDGE REMOVAL", structure plans for removal limits.

See "Existing Bin Abutment Details No. 2" sheet for existing structure curtain wall details.

Bottom of footing elevations are in meters.

ALL DIMENSIONS ARE IN MILLIMETERS UNLESS OTHERWISE SHOWN

| | | |
|---|---|---|
| DESIGN | BY Eric Burgeson | CHECKED Lewis L Shen |
| DETAILS | BY Janie Chlubna | CHECKED Lewis L Shen |
| QUANTITIES | BY Kenneth L Solak | CHECKED Mary L Warrick |

STATE OF CALIFORNIA
DEPARTMENT OF TRANSPORTATION

DIVISION OF STRUCTURES
STRUCTURE DESIGN 3

BRIDGE NO. 28-0367L
KILOMETER POST 13.5 (8.39)

# CROCKETT VIADUCT
# EXISTING BIN ABUTMENT DETAILS NO. 1

STRUCTURES DESIGN DETAIL SHEET (METRIC) (REV. 3/1/99)

ORIGINAL SCALE IN MILLIMETERS FOR REDUCED PLANS 0 10 20 30 40 50 60 70 80 90 100

CU 04206
EA 013051

DISREGARD PRINTS BEARING EARLIER REVISION DATES

REVISION DATES (PRELIMINARY STAGE ONLY) 2-17-00 3-14-00 5-2-00

SHEET 23 OF 225

FILE => a-28-0367l-g-abt08.dgn

USERNAME => kechris DATE PLOTTED => 13-NOV-2008 TIME PLOTTED => 15:53

ClibPDF - www.fastio.com

| DIST | COUNTY | ROUTE | KILOMETER POST TOTAL PROJECT | SHEET No | TOTAL SHEETS |
|---|---|---|---|---|---|
| 04 | CC,Sol | 80 | 19.5/22.7, 0.0/0.7 | 294 | 1050 |

Michael Marquez 5-8-00
REGISTERED CIVIL ENGINEER

7-17-00
PLANS APPROVAL DATE

REGISTERED PROFESSIONAL ENGINEER Michael J Marquez No. 54355 Exp. 12-31-03 CIVIL STATE OF CALIFORNIA

*The State of California or its officers or agents shall not be responsible for the accuracy or completeness of electronic copies of this plan sheet.*

*Caltrans now has a web site! To get to the web site, go to: http://www.dot.ca.gov*

Caltrans Metric

AS BUILT CORRECTIONS

CORRECTIONS TRANSFERRED BY: kc
FIELD CORRECTIONS BY: Eric Urmeneta

TRANSFER DATE: 04-01-2005
FIELD CORRECTION DATE: 06-22-2004

CONTRACT NO: 04-013054

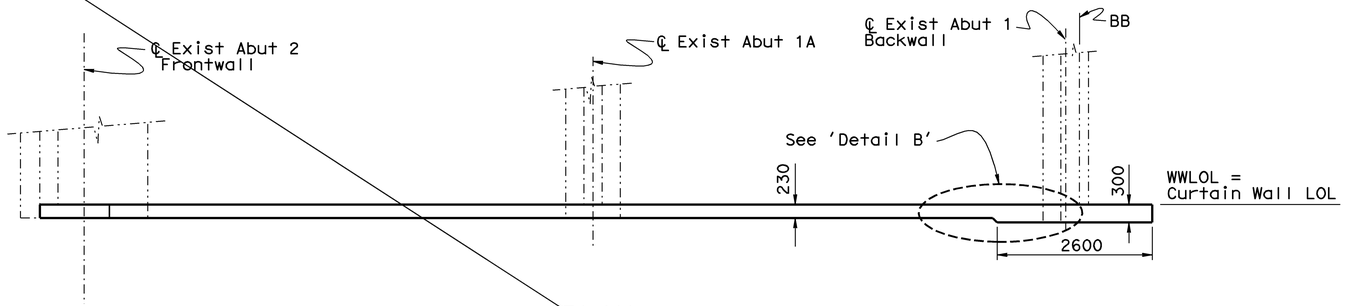


PLAN
1: 50

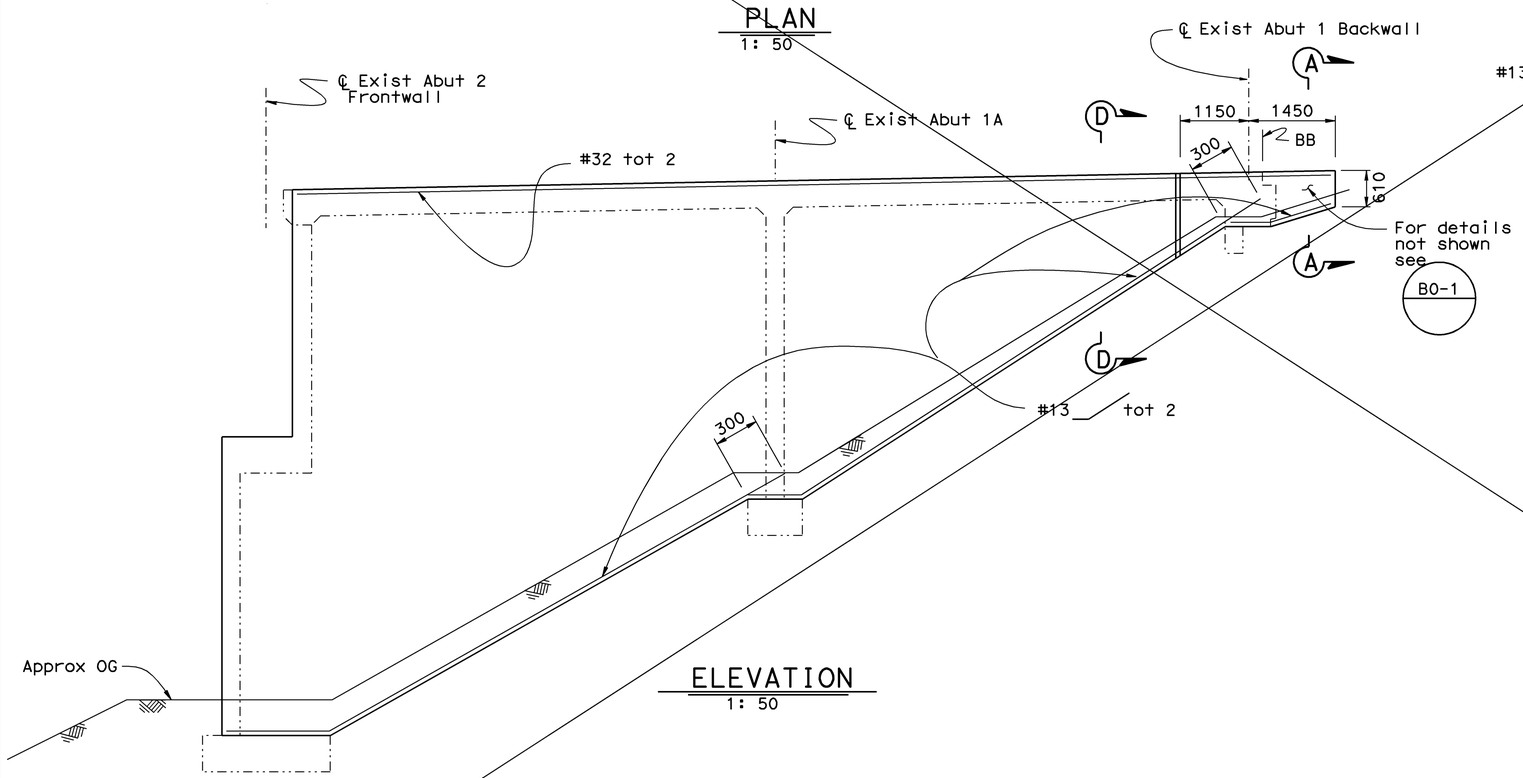


ELEVATION
1: 50

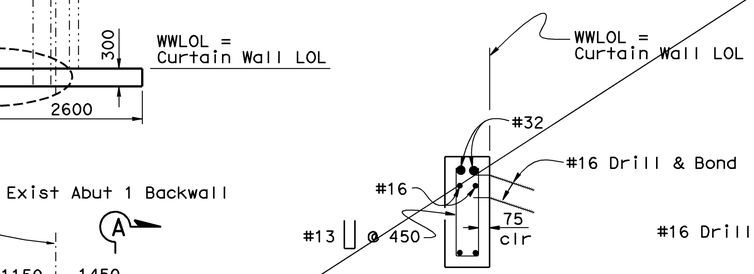


SECTION A-A
1: 20

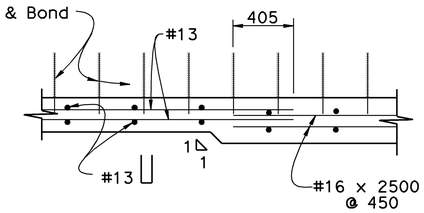


DETAIL 'B'
1: 20

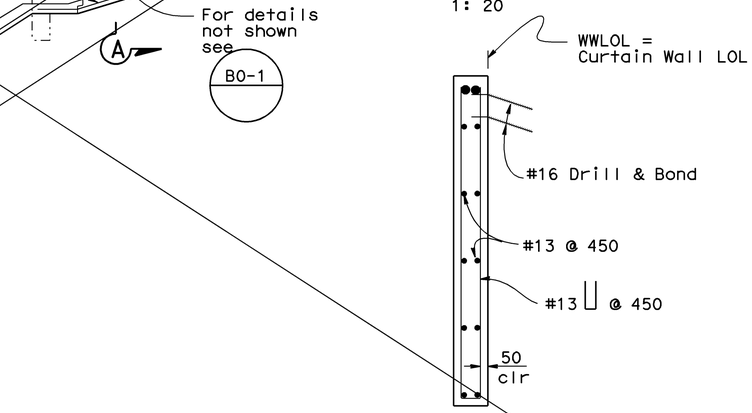


For details not shown see 'Section A-A'

SECTION D-D
1: 20

Curtain Wall Eliminated.
Temporary Chain Link Fence put in instead

Contract Change Order #165

NOTE:

See "Existing Bin Abutment Details No. 1" sheet for existing structure curtain wall drill & bond details.

ALL DIMENSIONS ARE IN MILLIMETERS UNLESS OTHERWISE SHOWN

| | | | |
|---|---|---|---|
| DESIGN | BY Eric Burgeson | CHECKED Lewis L Shen | |
| DETAILS | BY Janie Chlubna | CHECKED Lewis L Shen | |
| QUANTITIES | BY Kenneth L Solak | CHECKED Mary L Warrick | |

STATE OF CALIFORNIA
DEPARTMENT OF TRANSPORTATION

DIVISION OF STRUCTURES
STRUCTURE DESIGN 3

BRIDGE NO. 28-0367L
KILOMETER POST 13.5 (8.39)

# CROCKETT VIADUCT
## EXISTING BIN ABUTMENT DETAILS NO. 2

STRUCTURES DESIGN DETAIL SHEET (METRIC) (REV. 3/1/99)

ORIGINAL SCALE IN MILLIMETERS FOR REDUCED PLANS 0 10 20 30 40 50 60 70 80 90 100

CU 04206
EA 013051

DISREGARD PRINTS BEARING EARLIER REVISION DATES

REVISION DATES (PRELIMINARY STAGE ONLY) 2-17-00 4-13-00

SHEET 24 OF 225

USERNAME => kechris DATE PLOTTED => 13-NOV-2008 TIME PLOTTED => 15:53

FILE => a-28-0367l-g-abt09.dgn

ClibPDF - www.fastio.com

| DIST | COUNTY | ROUTE | KILOMETER POST TOTAL PROJECT | SHEET No. | TOTAL SHEETS |
|---|---|---|---|---|---|
| 04 | CC,Sol | 80 | 20.6/22.1, 0.0/0.8 | 148 | 1[illegible] |

Allan Chow 2-25-04
REGISTERED CIVIL ENGINEER

11-13-04
PLANS APPROVAL DATE

REGISTERED PROFESSIONAL ENGINEER Allan Chow No. 50781 Exp. 9-30-05 CIVIL STATE OF CALIFORNIA

*The State of California or its officers or agents shall not be responsible for the accuracy or completeness of electronic copies of this plan sheet.*

*Caltrans now has a web site! To get to the web site, go to: http://www.dot.ca.gov*

Caltrans Metric

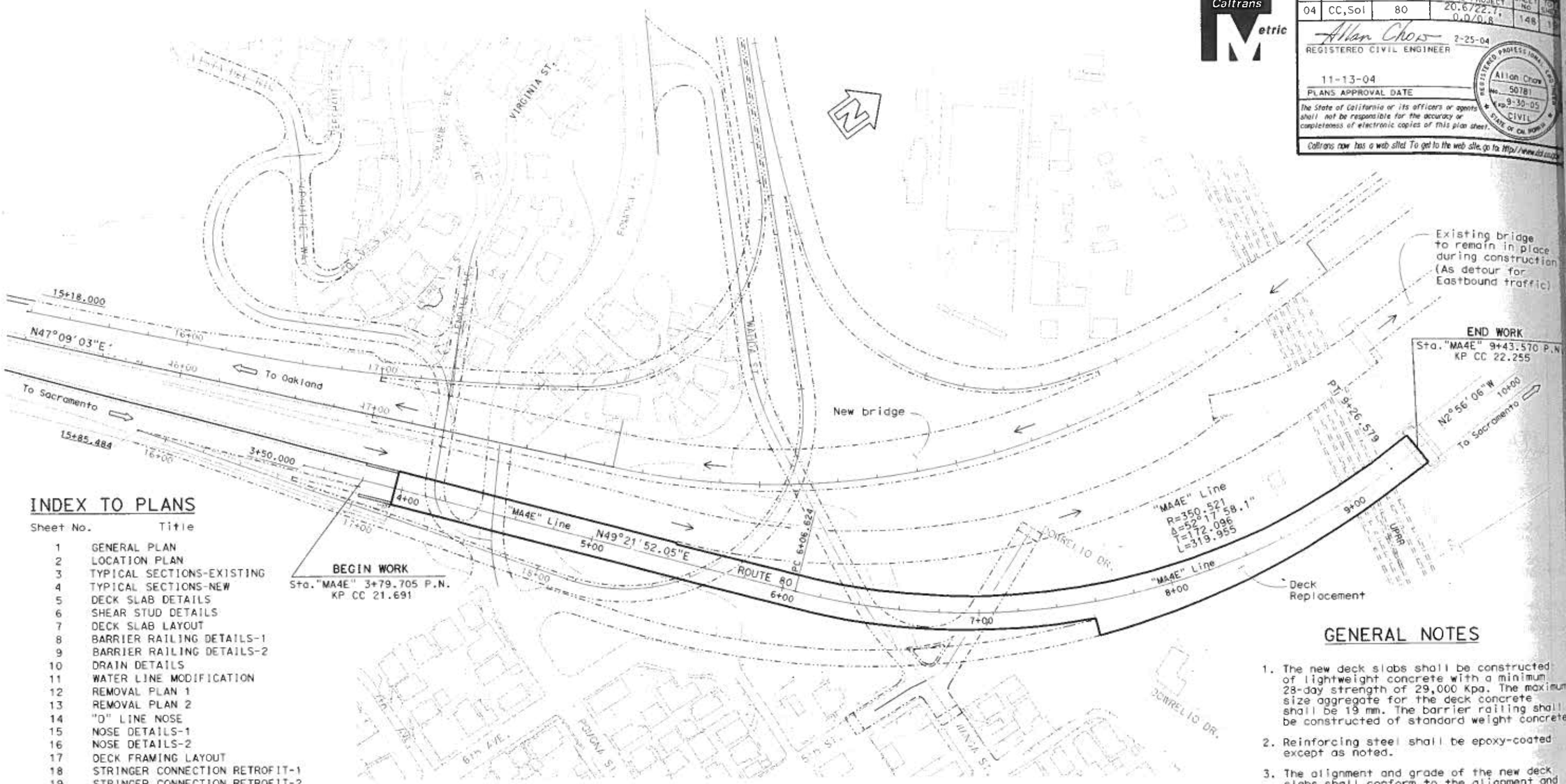


## INDEX TO PLANS


| Sheet No. | Title |
|---|---|
| 1 | GENERAL PLAN |
| 2 | LOCATION PLAN |
| 3 | TYPICAL SECTIONS-EXISTING |
| 4 | TYPICAL SECTIONS-NEW |
| 5 | DECK SLAB DETAILS |
| 6 | SHEAR STUD DETAILS |
| 7 | DECK SLAB LAYOUT |
| 8 | BARRIER RAILING DETAILS-1 |
| 9 | BARRIER RAILING DETAILS-2 |
| 10 | DRAIN DETAILS |
| 11 | WATER LINE MODIFICATION |
| 12 | REMOVAL PLAN 1 |
| 13 | REMOVAL PLAN 2 |
| 14 | "D" LINE NOSE |
| 15 | NOSE DETAILS-1 |
| 16 | NOSE DETAILS-2 |
| 17 | DECK FRAMING LAYOUT |
| 18 | STRINGER CONNECTION RETROFIT-1 |
| 19 | STRINGER CONNECTION RETROFIT-2 |
| 20 | STRINGER CONNECTION DETAILS-1 |
| 21 | STRINGER CONNECTION DETAILS-2 |
| 22 | STRINGER CONNECTION DETAILS-3 |
| 23 | STRINGER CONNECTION DETAILS-4 |
| 24 | STRINGER CONNECTION DETAILS-5 |
| 25 | STRINGER CONNECTION DETAILS-6 |


NOTE:
THE CONTRACTOR SHALL VERIFY ALL CONTROLLING FIELD DIMENSIONS BEFORE ORDERING OR FABRICATING ANY MATERIAL.

## STANDARD PLANS DATED JULY 1999

GENERAL ROAD WORK

| | |
|---|---|
| A76A | CONCRETE BARRIER TYPE 60 |
| A76B | CONCRETE BARRIER TYPE 60 |
| T-3 | TEMPORARY RAILING (TYPE K) |

BRIDGE

| | |
|---|---|
| B11-53 | CONCRETE BARRIER RAILING TYPE 25 |

PLAN
1:1000

QUANTITIES

| | | |
|---|---|---|
| TEMPORARY SUPPORT | LUMP | SUM |
| BRIDGE REMOVAL (PORTION), LOCATION A | LUMP | SUM |
| MODIFY NPS 4 SUPPLY LINE (BRIDGE) | 22 | m |
| LIGHTWEIGHT CONCRETE (BRIDGE) | 1 730 | $m^3$ |
| BAR REINFORCING STEEL (EPOXY COATED) (BRIDGE) | 388 000 | kg |
| STRUCTURAL STEEL (BRIDGE) | 55 500 | kg |
| SPOT BLAST CLEAN AND PAINT UNDERCOAT | 2 540 | $m^2$ |
| WORK AREA MONITORING (LOCATION C) | LUMP | SUM |
| BRIDGE DECK DRAINAGE SYSTEM | 320 | kg |
| CONCRETE BARRIER (TYPE 25) | 1 118 | m |

## GENERAL NOTES

1. The new deck slabs shall be constructed of lightweight concrete with a minimum 28-day strength of 29,000 Kpa. The maximum size aggregate for the deck concrete shall be 19 mm. The barrier railing shall be constructed of standard weight concrete.
2. Reinforcing steel shall be epoxy-coated except as noted.
3. The alignment and grade of the new deck slabs shall conform to the alignment and grade of the existing deck slabs. The grade shall conform to the existing stringers, as noted on the plans.
4. For details of the existing structure refer to Contract 56-14CBC2, Contract 56-14CBC3 and Contract 04-043934.

ALL DIMENSIONS ARE IN METERS UNLESS OTHERWISE SHOWN

Kenneth R Brown
DESIGN ENGINEER 2-25-04

| | | | | | |
|---|---|---|---|---|---|
| DESIGN | R.W. White | CHECKED R.E. Keim | LOAD FACTOR DESIGN | LIVE LOADING: HS30-44 AND ALTERNATIVE AND PERMIT DESIGN LOAD | |
| DETAILS | P.S. Daplas | CHECKED R.W. White | LAYOUT | | CHECKED |
| QUANTITIES | R.E. Keim | CHECKED R.W. White | SPECIFICATIONS | | PLANS AND SPECS COMPARED |

STRUCTURES DESIGN GENERAL PLAN SHEET (METRIC) (REV.9-2-96)

ORIGINAL SCALE IN MILLIMETERS FOR REDUCED PLANS 0 10 20 30 40 50 60 70 80 90 100

STATE OF CALIFORNIA
DEPARTMENT OF TRANSPORTATION

DIVISION OF MAINTENANCE
STRUCTURE MAINTENANCE AND INVESTIGATIONS

CU 04254
EA 013091

BRIDGE NO. 23-15R
KILOMETER POST 21.7

# CARQUINEZ BRIDGE
# APPROACH SPANS DECK REPLACEMENT
## GENERAL PLAN

DISREGARD PRINTS BEARING EARLIER REVISION DATES

REVISION DATES (PRELIMINARY STATE ONLY)
7-21-03 8-6-03 10-27-03 11-26-03 02-27-04 03-22-04 04-14-04 06-10-04 07-30-04

SHEET 1 OF 25

FILE => 0u1gpdeckrep.dgn

| DIST | COUNTY | ROUTE | KILOMETER POST TOTAL PROJECT | SHEET No | TOTAL SHEETS |
|---|---|---|---|---|---|
| 04 | CC,Sol | 80 | 20.6/22.7, 0.0/0.8 | 149 | 199 |

Allan Chow 2-25-04
REGISTERED CIVIL ENGINEER

11-13-04
PLANS APPROVAL DATE

REGISTERED PROFESSIONAL ENGINEER Allan Chow No. 50781 Exp. 9-30-05 CIVIL STATE OF CALIFORNIA

*The State of California or its officers or agents shall not be responsible for the accuracy or completeness of electronic copies of this plan sheet.*

*Caltrans now has a web site! To get to the web site, go to: http://www.dot.ca.gov*

Caltrans Metric

Legend:

(F) Reconstruct 102 mm waterline for 64 mm fire valve and 25 mm gate valve (See "WATER LINE MODIFICATION" sheet)

D Deck drain (See "DRAIN DETAILS" sheet)

(A) Barrier railing transition (See "BARRIER RAILING DETAILS" sheets)

Note:
All existing stations and dimensions are approximate.

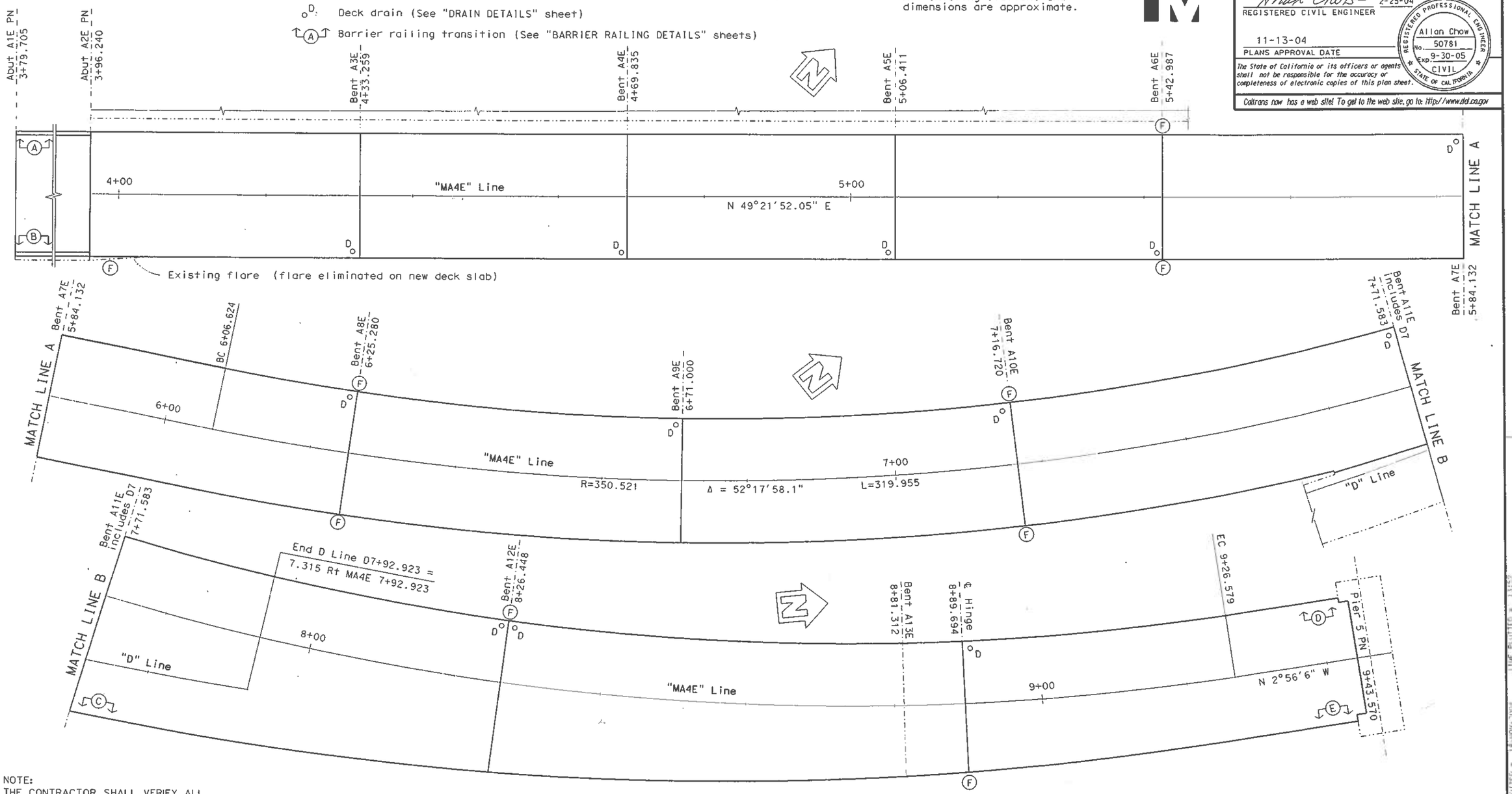


NOTE:
THE CONTRACTOR SHALL VERIFY ALL CONTROLLING FIELD DIMENSIONS BEFORE ORDERING OR FABRICATING ANY MATERIAL.

Note: Deck removal area = 9,816.02 $m^2$

PLAN
1:250

ALL DIMENSIONS ARE IN METERS UNLESS OTHERWISE SHOWN

| | | | |
|---|---|---|---|
| DESIGN | BY J.R. Ramirez | CHECKED R.W. White | |
| DETAILS | BY P.S. Doplas | CHECKED R.W. White | |
| QUANTITIES | BY R.W. White | CHECKED R.E. Keim | |

STATE OF CALIFORNIA
DEPARTMENT OF TRANSPORTATION

DIVISION OF MAINTENANCE
STRUCTURE MAINTENANCE AND INVESTIGATIONS

BRIDGE NO. 23-15R
KILOMETER POST 21.7

# CARQUINEZ BRIDGE
## APPROACH SPANS DECK REPLACEMENT
## LOCATION PLAN

PICTURES DESIGN DETAIL SHEET (METRIC) (REV. 9/2/98)

ORIGINAL SCALE IN MILLIMETERS FOR REDUCED PLANS 0 10 20 30 40 50 60 70 80 90 100

CU 04254
EA 013091

FILE = 0021ocpln.dgn

DISREGARD PRINTS BEARING EARLIER REVISION DATES

REVISION DATES (PRELIMINARY STAGE ONLY) 01-22-96 04-18-00 06-11-03 01-12-01 8-12-03 10-21-03 10-27-99 11-30-99 02-27-00

SHEET 2 OF 25

DATE PLOTTED = 18-NOV-2004 TIME PLOTTED = 13:52

| DIST | COUNTY | ROUTE | KILOMETER POST TOTAL PROJECT | SHEET NO. | TOTAL SHEETS |
|---|---|---|---|---|---|
| 04 | CC,Sol | 80 | 20.6/22.7, 0.0/0.8 | 150 | 199 |

Allan Chow 2-25-04
REGISTERED CIVIL ENGINEER

11-13-04
PLANS APPROVAL DATE

REGISTERED PROFESSIONAL ENGINEER Allan Chow No. 50781 Exp. 9-30-05 CIVIL STATE OF CALIFORNIA

*The State of California or its officers or agents shall not be responsible for the accuracy or completeness of electronic copies of this plan sheet.*

Caltrans now has a web site! To get to the web site, go to: http://www.dot.ca.gov

Caltrans Metric

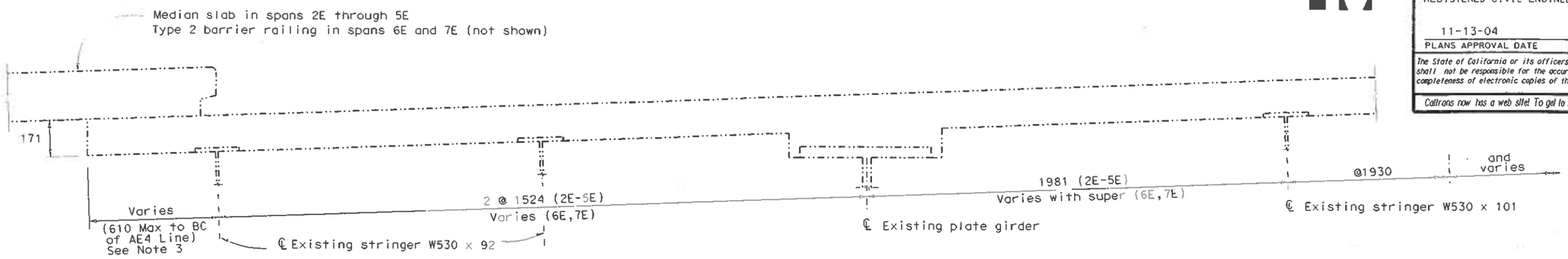


SPANS 2E THROUGH 7E

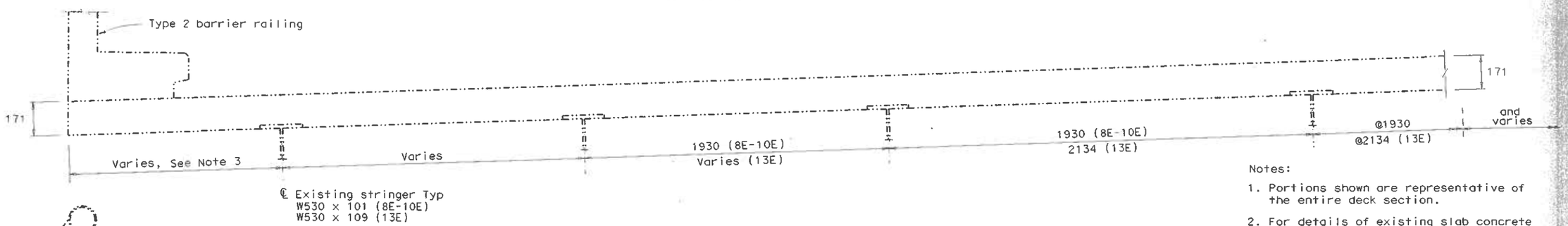


SPANS 8E THROUGH 10E AND SPAN 13E

Notes:

1. Portions shown are representative of the entire deck section.
2. For details of existing slab concrete and reinforcing steel and stringer and plate girder layout, refer to Contract 56-14CBC2, Contract 56-14CBC3 and Contract 04-043934.
3. The edge of deck location for the existing and new deck is shown on "DECK SLAB LAYOUT" sheet.
4. All existing dimensions are approximate.

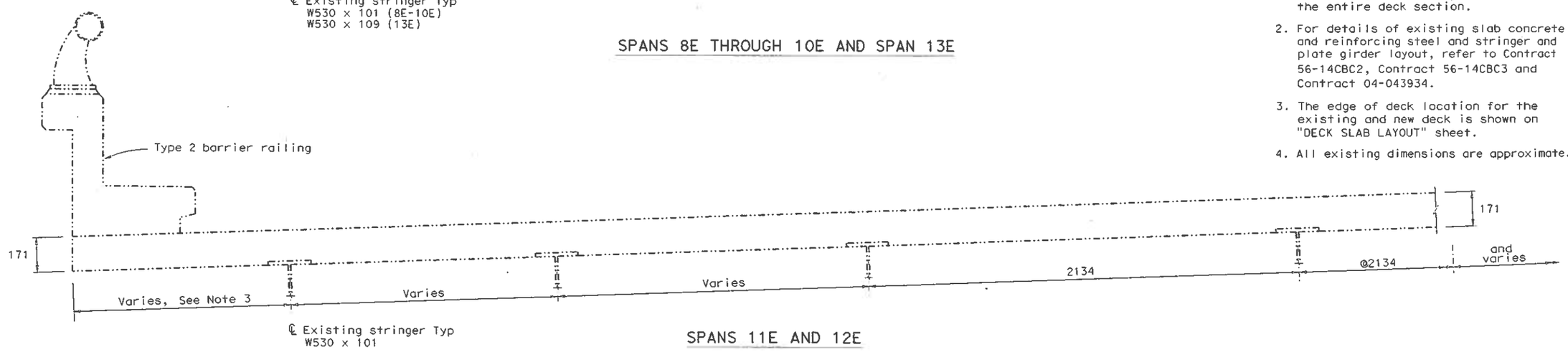


SPANS 11E AND 12E

NOTE:
THE CONTRACTOR SHALL VERIFY ALL CONTROLLING FIELD DIMENSIONS BEFORE ORDERING OR FABRICATING ANY MATERIAL.

## TYPICAL SECTIONS (PARTIAL) - EXISTING

1:10

ALL DIMENSIONS ARE IN MILLIMETERS UNLESS OTHERWISE SHOWN

| | | | |
|---|---|---|---|
| DESIGN | J.R. Ramirez | CHECKED | R.W. White |
| DETAILS | P.S. Daplas | CHECKED | R.W. White |
| QUANTITIES | J.R. Ramirez | CHECKED | R.W. White |

STATE OF CALIFORNIA
DEPARTMENT OF TRANSPORTATION

DIVISION OF MAINTENANCE
STRUCTURE MAINTENANCE AND INVESTIGATIONS

BRIDGE NO. 23-15R
KILOMETER POST 21.7

CARQUINEZ BRIDGE
APPROACH SPANS DECK REPLACEMENT
TYPICAL SECTIONS - EXISTING

STRUCTURES DESIGN DETAIL SHEET (METRIC) (REV. 9/2/98)

ORIGINAL SCALE IN MILLIMETERS FOR REDUCED PLANS 0 10 20 30 40 50 60 70 80 90 100

CU 04254
EA 013091

FILE = 0054rpdeck1.dgn

DISREGARD PRINTS BEARING EARLIER REVISION DATES → 08-31-01 01-10-03 3-6-03 10-07-99 10-21-99 10-21-99 11-19-99 03-27-00 03-27-00

REVISION DATE (PRELIMINARY STAGE ONLY)

SHEET 3 OF 26

| DIST | COUNTY | ROUTE | KILOMETER POST TOTAL PROJECT | SHEET No | TOTAL SHEETS |
|---|---|---|---|---|---|
| 04 | CC,Sol | 80 | 20.6/22.7, 0.0/0.8 | 151 | 199 |

Caltrans Metric

Allan Chow 2-25-04
REGISTERED CIVIL ENGINEER

11-13-04
PLANS APPROVAL DATE

REGISTERED PROFESSIONAL ENGINEER Allan Chow No. 50781 Exp. 9-30-05 CIVIL STATE OF CALIFORNIA

*The State of California or its officers or agents shall not be responsible for the accuracy or completeness of electronic copies of this plan sheet.*

*Caltrans now has a web site! To get to the web site, go to: http://www.dot.ca.gov*

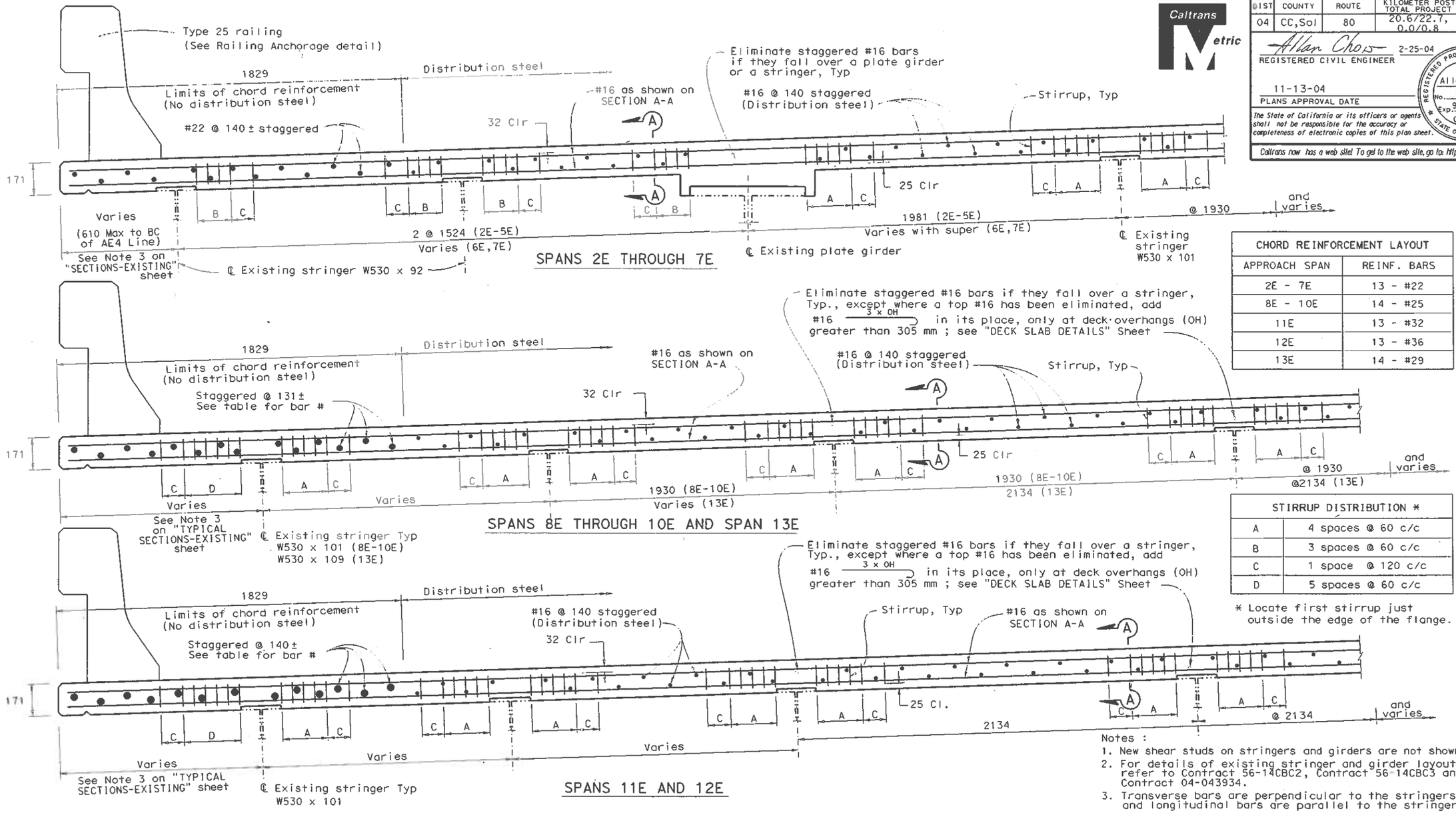


| CHORD REINFORCEMENT LAYOUT | |
|---|---|
| APPROACH SPAN | REINF. BARS |
| 2E - 7E | 13 - #22 |
| 8E - 10E | 14 - #25 |
| 11E | 13 - #32 |
| 12E | 13 - #36 |
| 13E | 14 - #29 |

| STIRRUP DISTRIBUTION * | |
|---|---|
| A | 4 spaces @ 60 c/c |
| B | 3 spaces @ 60 c/c |
| C | 1 space @ 120 c/c |
| D | 5 spaces @ 60 c/c |

* Locate first stirrup just outside the edge of the flange.

Notes :

1. New shear studs on stringers and girders are not shown.
2. For details of existing stringer and girder layout, refer to Contract 56-14CBC2, Contract 56-14CBC3 and Contract 04-043934.
3. Transverse bars are perpendicular to the stringers and longitudinal bars are parallel to the stringers.
4. Portions shown are representative of the entire deck section.
5. All existing dimensions are approximate.
6. All reinforcing steel shown is epoxy-coated. Type 25 barrier railing steel is epoxy-coated (includes transitions).
7. At the contractor's option, permanent steel deck form may be used at span 13E.

## TYPICAL SECTIONS (PARTIAL) - NEW

1:10

NOTE:
THE CONTRACTOR SHALL VERIFY ALL CONTROLLING FIELD DIMENSIONS BEFORE ORDERING OR FABRICATING ANY MATERIAL.

ALL DIMENSIONS ARE IN MILLIMETERS UNLESS OTHERWISE SHOWN

| | | | |
|---|---|---|---|
| DESIGN | J.R. Ramirez | CHECKED | R.W. White |
| DETAILS | P.S. Daplas | CHECKED | R.W. White |
| QUANTITIES | J.R. Ramirez | CHECKED | R.W. White |

STATE OF CALIFORNIA
DEPARTMENT OF TRANSPORTATION

DIVISION OF MAINTENANCE
STRUCTURE MAINTENANCE AND INVESTIGATIONS

BRIDGE NO. 23-15R
LOGITUDE POST 21.7

CU 04254
EA 013091

CARQUINEZ BRIDGE
APPROACH SPANS DECK REPLACEMENT
TYPICAL SECTIONS - NEW

STRUCTURE DESIGN DETAIL SHEET (METRIC) REV. 9/2/98

ORIGINAL SCALE IN MILLIMETERS FOR REDUCED PLANS

FILE = D:\DGN\secnew.dgn

EIS-EGAPD PRINTS BEARING EARLIER REVISION DATES

REVISION DATES (PRELIMINARY STAGE ONLY)
06-11-03 06-10-03 8-5-03 10-22-99 11-22-99 11-29-99 12-22-00 01-22-01

SHEET 4 OF 25

USERNAME = tomrich DATE PLOTTED = 18-NOV-2003 TIME PLOTTED = 13:53

| DIST | COUNTY | ROUTE | KILOMETER POST TOTAL PROJECT | SHEET No | TOTAL SHEETS |
|---|---|---|---|---|---|
| 04 | CC,Sol | 80 | 20.6/22.1, 0.0/0.8 | 152 | 199 |

Caltrans Metric

Allan Chow 2-25-04
REGISTERED CIVIL ENGINEER

11-13-04
PLANS APPROVAL DATE

REGISTERED PROFESSIONAL ENGINEER Allan Chow No. 50781 Exp. 9-30-05 CIVIL STATE OF CALIFORNIA

*The State of California or its officers or agents shall not be responsible for the accuracy or completeness of electronic copies of this plan sheet.*

Caltrans now has a web site! To get to the web site, go to: http://www.dot.ca.gov

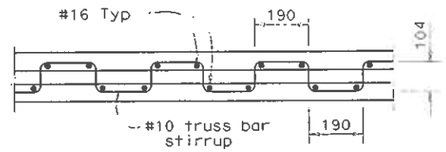


## SECTION A-A
(Showing typical truss bar stirrup)
1:10

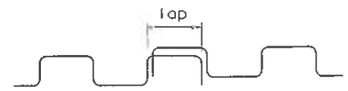


## STIRRUP SPLICE DETAIL

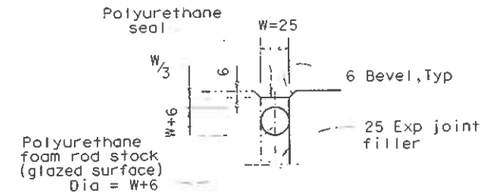


## DETAIL 1
1:2.5

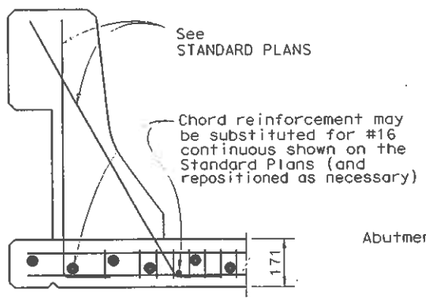


## TYPE 25 RAILING ANCHORAGE
1:10

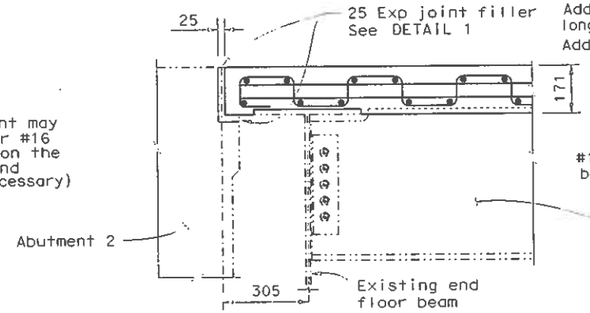


## ABUTMENT 2

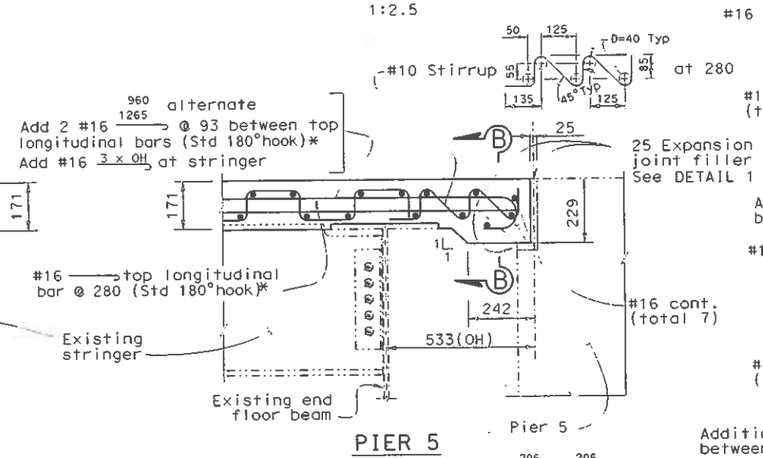


## PIER 5

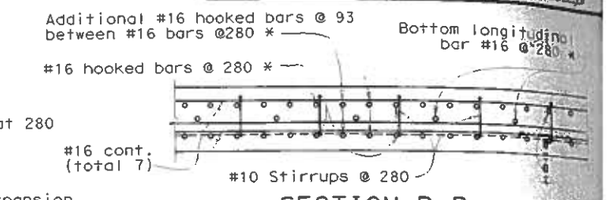


## SECTION B-B
1:10
Added #16 3 x OH at stringer, Typ

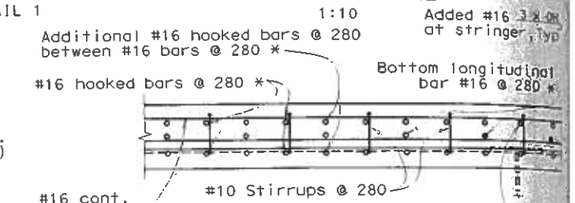


## SECTION C-C
1:10
Added #16 3 x OH at stringer, Typ

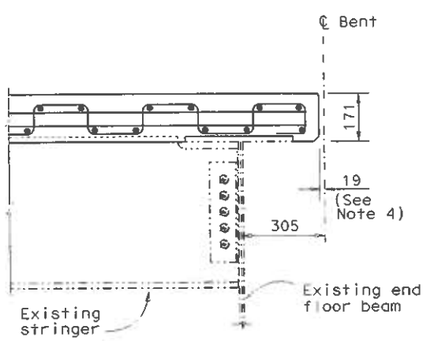


## BENTS 3 THROUGH 6
(Detail symmetrical about ℄ Bent)

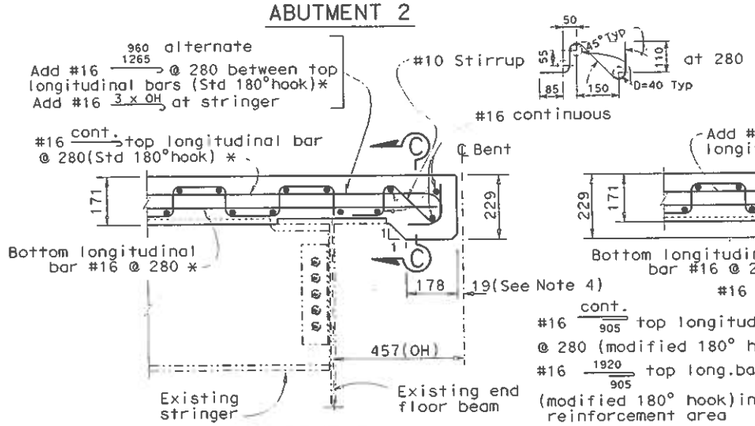


## BENT 7
(Detail symmetrical about ℄ Bent)

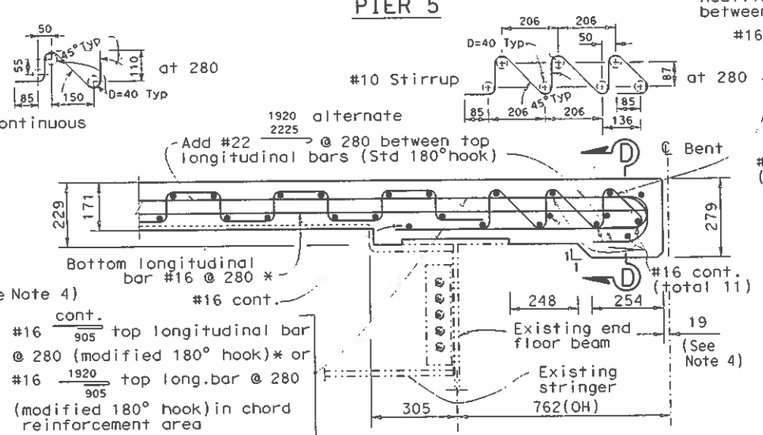


## BENTS 8 THRU 12 AND HINGE IN SPAN 13E
(Detail symmetrical about ℄ Bent or Hinge)

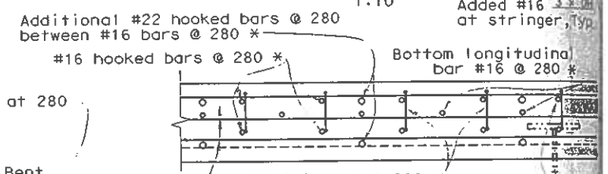


## SECTION D-D
1:10
Added #16 3 x OH at stringer, Typ

Notes:

1. Bottom of deck grades shall match the lower surface of the top flanges of the stringers, as shown on the plans. Top of deck grades shall be linear from edge-of-deck to edge-of-deck, shall be smooth and continuous, and shall provide the minimum depth of slab as shown on the plans.
2. Existing shear studs on end floor beams and new shear studs on stringers are not shown.
3. For additional deck reinforcement, see ""D" LINE NOSE" sheet.
4. Width at 21°C.
5. All reinforcing steel shown is epoxy-coated.
6. Open joints in barrier railing match deck joint widths.

Note: Deck joints at Bents 3-12 and hinge at span 13E are open-type

## SLAB OVERHANGS AT END FLOOR BEAMS
1:10

* Not used in the "chord reinforcement" area (See "TYPICAL SECTIONS-NEW" sheet) (Detail symmetrical about ℄ Bent)

ALL DIMENSIONS ARE IN MILLIMETERS UNLESS OTHERWISE SHOWN

NOTE:
THE CONTRACTOR SHALL VERIFY ALL CONTROLLING FIELD DIMENSIONS BEFORE ORDERING OR FABRICATING ANY MATERIAL.

| | | | |
|---|---|---|---|
| DESIGN | J.R. Ramirez | CHECKED | R.E. Keim |
| DETAILS | P.S. Daplas | CHECKED | R.E. Keim |
| QUANTITIES | J.R. Ramirez | CHECKED | R.W. White |

STATE OF CALIFORNIA
DEPARTMENT OF TRANSPORTATION

DIVISION OF MAINTENANCE
STRUCTURE MAINTENANCE AND INVESTIGATIONS

BRIDGE No. 23-15R
POST MILE 21.7

CARQUINEZ BRIDGE
APPROACH SPANS DECK REPLACEMENT
DECK SLAB DETAILS

CU 04254
EA 013091

REVISION DATES (PRELIMINARY STAGE ONLY): 01-27-00 01-28-00 04-13-00 06-11-00 07-10-00 11-19-99 11-29-99 12-22-00 05-24-00

SHEET 5

STRUCTURES DESIGN DETAIL SHEET (METRIC) (REV. 9/2/98)

ORIGINAL SCALE IN MILLIMETERS FOR REDUCED PLANS 0 10 20 30 40 50 60 70 80 90 100

FILE = 0bridsec1rlb.dgn

| DIST | COUNTY | ROUTE | KILOMETER POST TOTAL PROJECT | SHEET No | TOTAL SHEETS |
|---|---|---|---|---|---|
| 04 | CC,Sol | 80 | 20.6/22.7, 0.0/0.8 | 153 | 199 |

Allan Chow 2-25-04
REGISTERED CIVIL ENGINEER

11-13-04
PLANS APPROVAL DATE

REGISTERED PROFESSIONAL ENGINEER Allan Chow No. 50781 Exp. 9-30-05 CIVIL STATE OF CALIFORNIA

*The State of California or its officers or agents shall not be responsible for the accuracy or completeness of electronic copies of this plan sheet.*

*Caltrans now has a web site! To get to the web site, go to: http://www.dot.ca.gov*

Caltrans Metric

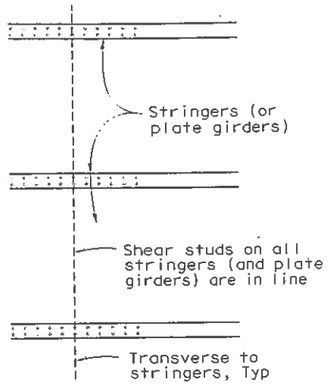


PLAN
No Scale

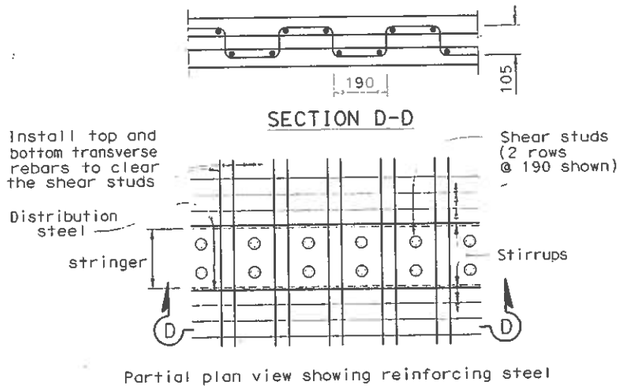


Partial plan view showing reinforcing steel

DETAIL
1:10

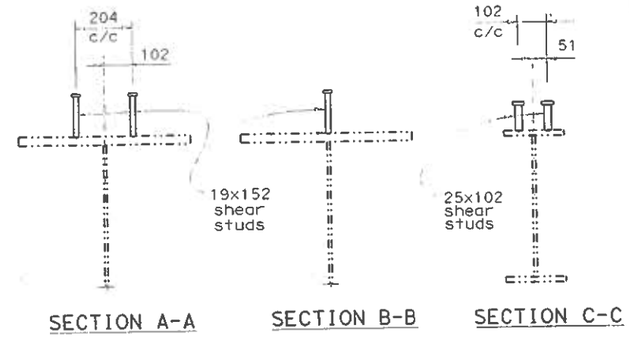


SHEAR STUD DETAILS
1:10

Notes:

1. When plate girder stud layout falls on a floor beam, relocate that one location to a 190 space.
2. For details of existing stringer and girder layout refer to Contract 56-14CBC2, Contract 56-14CBC3 and Contract 04-043934.
3. Existing shear studs (one line of 19 x 152 at 305 max) on end floor beams at Bents E8 through E13 and Pier 5 shall be retained.

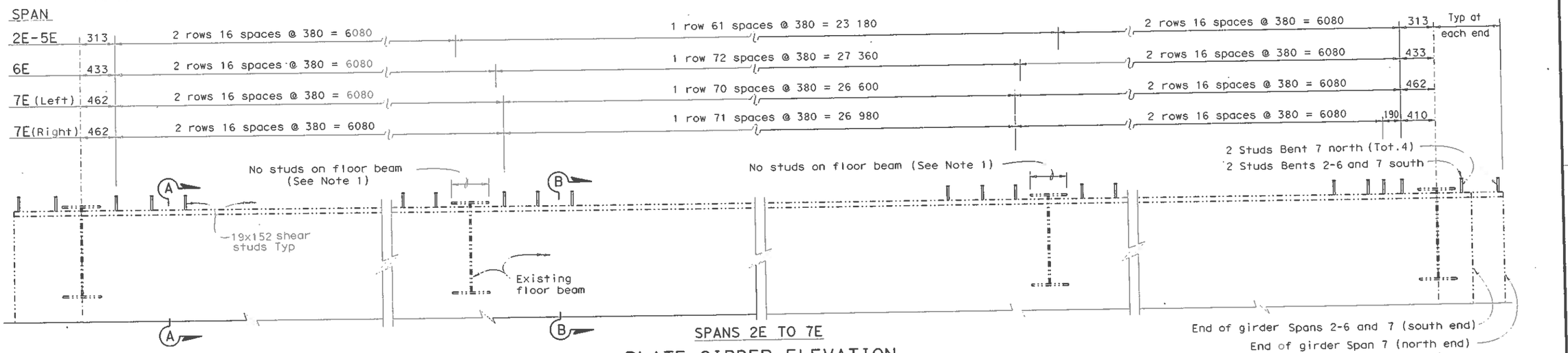


SPANS 2E TO 7E
PLATE GIRDER ELEVATION
No Scale

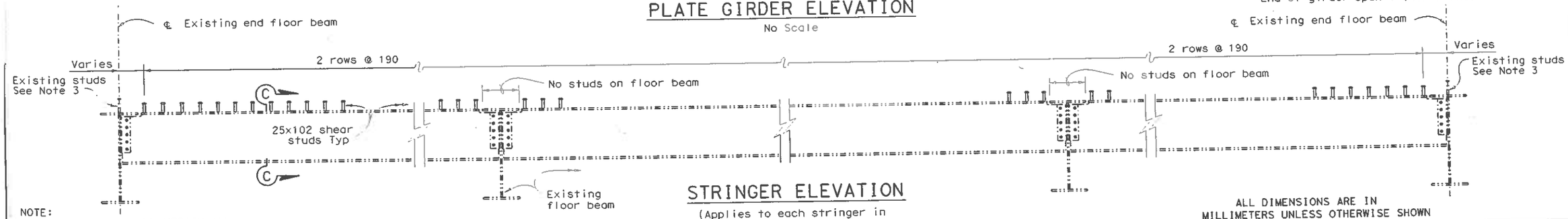


STRINGER ELEVATION
(Applies to each stringer in Spans 2E through 13E)
No Scale

NOTE:
THE CONTRACTOR SHALL VERIFY ALL CONTROLLING FIELD DIMENSIONS BEFORE ORDERING OR FABRICATING ANY MATERIAL.

ALL DIMENSIONS ARE IN MILLIMETERS UNLESS OTHERWISE SHOWN

| | | | |
|---|---|---|---|
| DESIGN | J.R. Ramirez | CHECKED | R.W. White |
| DETAILS | P.S. Daplas | CHECKED | R.W. White |
| QUANTITIES | J.R. Ramirez | CHECKED | R.W. White |

STATE OF CALIFORNIA
DEPARTMENT OF TRANSPORTATION

DIVISION OF MAINTENANCE
STRUCTURE MAINTENANCE AND INVESTIGATIONS

CU 04254
EA 013091

BRIDGE NO. 23-15R
KILOMETER POST 21.7

CARQUINEZ BRIDGE
APPROACH SPANS DECK REPLACEMENT
SHEAR STUD DETAILS

DISREGARD PRINTS BEARING EARLIER REVISION DATES

SHEET 6 OF 25

STRUCTURES DESIGN DETAIL SHEET (METRIC) (REV. 5/2/96)

ORIGINAL SCALE IN MILLIMETERS FOR REDUCED PLANS

FILE = 00GEN1stud.dgn

USERNAME = trmilt=1 DATE PLOTTED = 18-NOV-2004 TIME PLOTTED = 15:53

*California Department of Transportation*
*Division of Maintenance*

# *Structure Maintenance and Investigations*

---

**B**RIDGE

**I**NSPECTION

**R**ECORDS

**I**NFORMATION

**S**YSTEM

---

The requested documents have been generated by BIRIS.

These documents are the property of the California Department of Transportation and should be handled in accordance with Deputy Directive 55 and the State Administrative Manual.

Records for “Confidential” bridges may only be released outside the Department of Transportation upon execution of a confidentiality agreement.

| FED. ROAD DIV. No. | STATE | PROJ. No. | FISCAL YEAR | SHEET No. | TOTAL SHEETS |
|---|---|---|---|---|---|
| 7 | CALIF. | | | | |

| DIST. | COUNTY | ROUTE | RADIUS | SHEET No. | TOTAL SHEETS |
|---|---|---|---|---|---|
| IV | CC-Sol | 7 | DF | 19 | 35 |

BRIDGE ENGINEER — CIVIL ENGINEER — LICENSE 5006

DATE APPROVED October 3, 1955

BRIDGE DEPARTMENT

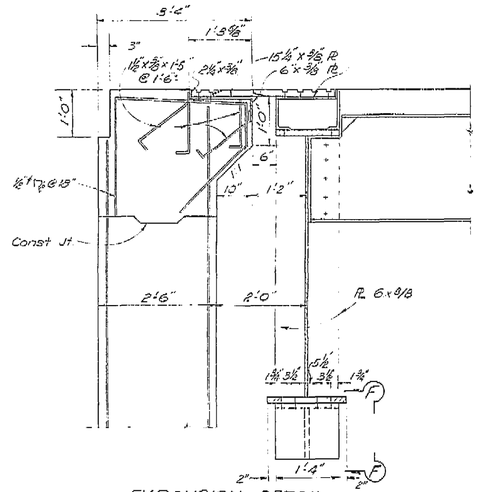


EXPANSION DETAIL
@ ABUTMENT No. 1 PIER 5 SIMILAR
Scale: 3/4" = 1'-0"

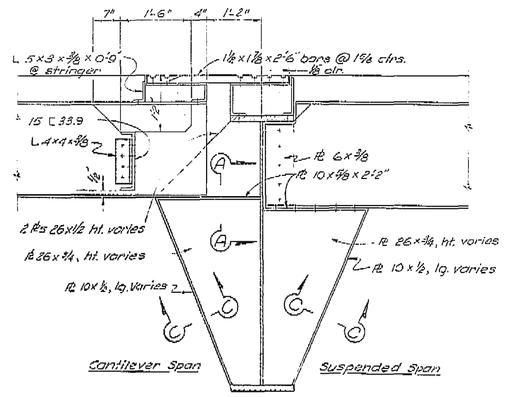


EXPANSION
DETAIL @ L-30 & 86
Scale: 3/4" = 1'-0"

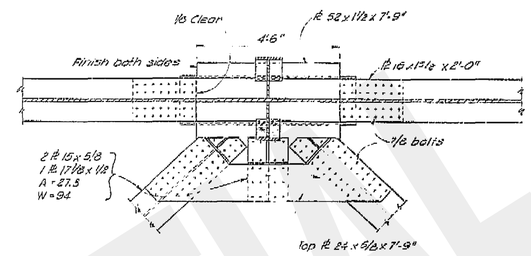


SECTION D-D
Scale: 1 1/2" = 1'-0"

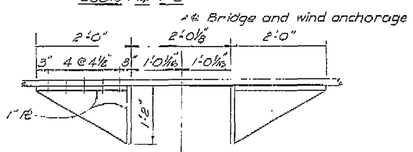


SECTION
E-F
Scale: 3/4" = 1'-0"

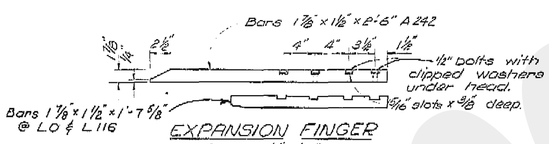


EXPANSION FINGER
Scale: 1 1/2" = 1'-0"

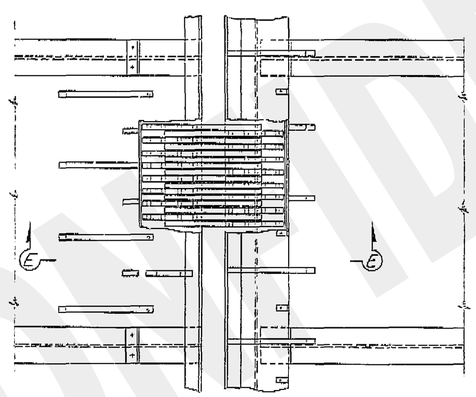

PLAN @ L-18 & 86
EXP. DETAIL
Scale: 3/4" = 1'-0"

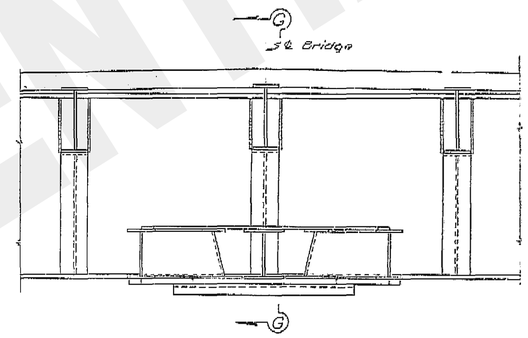


SHEAR LOCK @ L-30 EXPANSION & @ L 86
Scale: 1/2" = 1'-0"

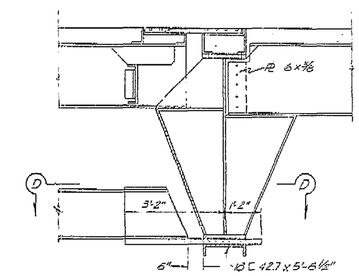


SECTION G-G
Scale: 1/2" = 1'-0"

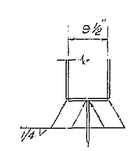


SECTION A-A
Scale: 3/4" = 1'-0"

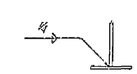

SECTION C-C
Scale: 3/4" = 1'-0"

Note:
All bolts 7/8, except as noted.

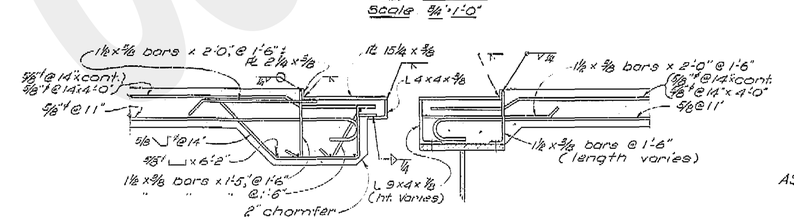


SECTION E-E
Scale: 1" = 1'-0"

AS BUILT NOTE: For complete details and dimensions of structural steel see Shop Drawings. Panel point numbers shown refer to Shop Drawings.

THIS SET OF PLANS HAS BEEN CORRECTED TO CONFORM TO THE "AS BUILT" DRAWINGS LISTED BELOW, AS SUBMITTED BY RESIDENT ENGINEER _____
EXACTITUDE CORRECTED BY: _____ DATE: _____

AS BUILT PLANS
Contract No. 56-140B123
Date Completed _____
Document No. 4000 2117

DESIGN 3 SECTION

| Submitted for | Approved | Approved Recommended | Approved |
|---|---|---|---|
| DESIGN | W. R. Ashby | DATE 1-D-F | C. S.S. |
| DETAILS | W. D. Zwick | DATE 5-55 | DATE 5-55 |
| QUANTITIES | W. R. Ashby | DATE 5-55 | DATE 5-55 |
| SPECIFICATIONS | W. R. Ashby | DATE 5-55 | DATE 5-55 |

Approved for Construction: [signature] DATE 8-9-55
DIRECTOR OF PUBLIC WORKS
Dep. Director

STATE OF CALIFORNIA
DEPARTMENT OF PUBLIC WORKS
DIVISION OF HIGHWAYS

CARQUINEZ STRAIT BRIDGE
SUPER STRUCTURE

EXPANSION DETAILS

| SCALE As Noted | BRIDGE 28-15 | FILE | DRAWING C-1165-139 |
|---|---|---|---|

PREL. DRAWING No. P-1165

CONFIDENTIAL

ClibPDF - www.fastio.com