FOR CONTRACT NO. 04-3S5804
PROJECT ID 0400001008

INFORMATION HANDOUT

PERMITS

CALIFORNIA REGIONAL WATER QUALITY CONTROL BOARD
SAN FRANCISCO BAY REGION 401 PERMIT

DEPARTMENT OF FISH AND GAME
FINAL LAKE OR STREAMBED ALTERATION AGREEMENT

UNITED STATES ARMY CORPS OF ENGINEERS
NON-REPORTING NATIONWIDE 404 PERMIT

SAN FRANCISCO BAY CONSERVATION AND DEVELOPMENT COMMITION (bcdc)

MATERIALS INFORMATION

GEOTECHNICAL REPORT

PRELIMINARY SITE INVESTIGATION REPORT

ROUTE: 04-Mrn-37-12.1

California Regional Water Quality Control Board
San Francisco Bay Region

Linda S. Adams
Secretary for Environmental Protection

1515 Clay Street, Suite 1400, Oakland, California 94612
(510) 622-2300 • Fax (510) 622-2460
http://www.waterboards.ca.gov/sanfranciscobay

Arnold Schwarzenegger
Governor

April 26, 2011
CIWQS Place No.: 759558
Site No. 02-21-C0803

Sent via electronic mail: No hard copy to follow

California Department of Transportation
Attn: Ms. Betsy Joseph
Betsy_Joseph@dot.ca.gov
PO Box 23660
Oakland, CA 94623-0660

Subject: Water Quality Certification for the State Route 37 Levee Construction and Culvert Replacement Project, City of Novato, Marin County

Department Project No.: EA 04-3S5801

Dear Ms. Joseph:

San Francisco Bay Regional Water Quality Control Board (Water Board) staff have reviewed the 401 water quality certification application submitted by the California Department of Transportation (the Department) for the State Route 37 (SR 37) Levee Construction and Culvert Replacement Project (Project). The Department was issued a permit for the Project from the U.S. Army Corps of Engineers (ACOE) pursuant to Clean Water Act (CWA) Section 404 Nationwide Permit No. 3 (*Maintenance*) (ACOE File No. 2010-00353N). You applied to this office under Section 401 of the CWA for water quality certification verifying that the Project does not violate State water quality standards.

Project: The Department proposes to construct a levee beneath the State Route 37 bridge spanning Novato Creek, raise the grade of an adjacent dirt roadway, and replace a deteriorated culvert beneath the same dirt roadway.

Levee Construction
There is an existing levee between the Project site and Novato Creek, however, the existing levee overtops during coincident high tide and high flow storm events. Caltrans is proposing to construct a secondary levee immediately east of the existing levee to prevent possible flooding of SR 37. The proposed levee would run south to north beneath the SR 37 bridge at approximate post-mile 12.

Culvert Replacement

Impacts: Culvert replacement will result in the permanent fill of approximately 0.01 acres of waters of the State.

Mitigation: Because the placement of filter fabric will reduce sediment input to the lagoon, and because the culvert replacement is in-kind, no additional mitigation is required for this Project.

CEQA Compliance: In October 2009, the Department found that the project was categorically exempt from CEQA pursuant to 14 CCR § 15301, existing facilities.

Certification: I hereby issue an order certifying that any discharge from the referenced project will comply with the applicable provisions of sections 301 (Effluent Limitations), 302 (Water Quality Related Effluent Limitations), 303 (Water Quality Standards and Implementation Plans), 306 (National Standards of Performance), and 307 (Toxic and Pretreatment Effluent Standards) of the Clean Water Act, and with other applicable requirements of State law. This discharge is also regulated under State Water Resources Control Board Order No. 2003 - 0017 – DWQ, "General Waste Discharge Requirements for Dredge and Fill Discharges That Have Received State Water Quality Certification" which requires compliance with all conditions of this Water Quality Certification. The following conditions are associated with this certification:

Project-Specific Conditions

1. All work shall be conducted only between August 31 and October 15;

Standard Conditions

2. Except as expressly allowed in this certification, no debris, rubbish, creosote-treated wood, soil, silt, sand, cement, concrete, or washings thereof, or other construction-related materials or wastes, oil or petroleum products or other organic or earthen material shall be allowed to enter into, or be placed where it may be washed by rainfall or runoff into the Lagoon. Any of these materials placed within or where they may enter the Lagoon by the Department or any party working under contract, or with the permission of the Department shall be removed immediately. When operations are completed, any excess material shall be removed from the work area and any areas adjacent to the work area where such material may be washed into the Lagoon. During construction, the Department and contractor shall not dump any litter or construction debris in waters of the State, or where it may be washed into waters of the State. All such debris and waste shall be picked up daily and properly disposed of at an appropriate site;

3. The Department shall adhere to the Standard and Regional conditions imposed by Nationwide Permit No. 3, issued to the Department by the Corps;

4. The Project shall be constructed in conformance with the Project Description described in this certification and Project Plans attached to this certification. Any change in the Project

may require modification to the certification and shall be reported to the Water Board. Any significant change in Project description must be accepted by the Water Board's Executive Officer prior to implementation of said change in the Project;

5. No fueling, cleaning or maintenance of vehicles or equipment shall take place within waters of the state or within any areas where an accidental discharge to waters of the state may occur;

6. The use of recycled or broken concrete as slope protection is prohibited;

7. The Department shall maintain a copy of this water quality certification at the Project site so as to be available at all times to site operating personnel. It is the responsibility of the Department to assure that all personnel (employees, contractors, and subcontractors) are adequately informed and trained regarding the conditions of this certification;

8. This certification action is subject to modification or revocation upon administrative or judicial review, including review and amendment pursuant to Section 13330 of the California Water Code (CWC) and Section 3867 of Title 23 of the California Code of Regulations(23 CCR);

9. This certification action does not apply to any discharge from any activity involving a hydroelectric facility requiring a Federal Energy Regulatory Commission (FERC) license or an amendment to a FERC license, unless the pertinent certification application was filed pursuant to California Code of Regulations (CCR) Title 23, Subsection 3855(b) and that application specifically identified that a FERC license or amendment to a FERC license for a hydroelectric facility was being sought; and,

10. Certification is conditioned upon total payment of the full fee required in State regulations (23 CCR Section 3833). Water Board staff received full payment of $1,781 on March 16, 2010.

We anticipate your cooperation in implementing these conditions. However, please be advised that any violation of water quality certification conditions is a violation of State law and subject to administrative civil liability pursuant to California Water Code (CWC) section 13350. Failure to respond, inadequate response, late response, or failure to meet any condition of this certification may subject you to civil liability imposed by the Water Board to a maximum of $5,000 per day per violation or $10 for each gallon of waste discharged in violation of this certification.

We anticipate no further action on this request. Should new information come to our attention that indicates a water quality problem with this project, the Water Board may issue Waste Discharge Requirements pursuant to 23 CCR Section 3857.

If you have any question, please contact Brendan Thompson at (510) 622-2506, or via e-mail to BThompson@waterboards.ca.gov.

Sincerely,

Bruce H. Wolfe
Executive Officer

cc (via e-mail):

Mr. Bill Orme SWRCB-DWQ
Mr. Hal Durio, USACE
Ms. Jane Hicks, USACE
Ms. Laurie Monarres, USACE
Ms. Holly Costa, USACE

Mr. Dale Bowyer, Water Board
USEPA
Mr. Hardeep Takhar, Caltrans
Mr. Cyrus Vafai, Caltrans
Ms. Andrea Meier, USACE

Attachment

Project Plans

Dist	COUNTY	ROUTE	POST MILES TOTAL PROJECT	SHEET No.	TOTAL SHEETS
04	Mrn	37	11.7/12.2		

REGISTERED CIVIL ENGINEER DATE

PLANS APPROVAL DATE

REGISTERED PROFESSIONAL ENGINEER No. Exp. CIVIL STATE OF CALIFORNIA

THE STATE OF CALIFORNIA OR ITS OFFICERS OR AGENTS SHALL NOT BE RESPONSIBLE FOR THE ACCURACY OR COMPLETENESS OF SCANNED COPIES OF THIS PLAN SHEET.

Legend

- Excavation
- Emb (Embankment)
- Slurry Cement

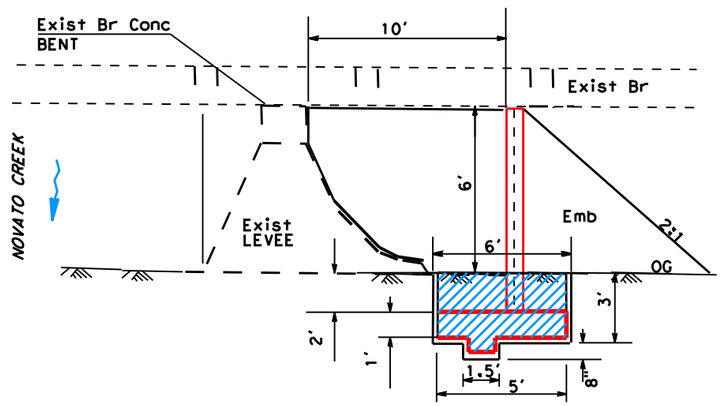

Excavation Limits
Ret. Wall Under East Bound
(50' L x 6' W x 3.7' D)
Ret. Wall Under West Bound
(45' L x 6' W x 3.7' D)

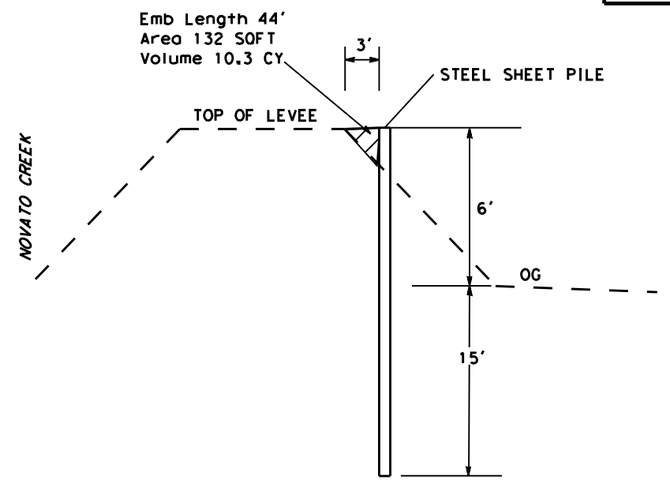

STEEL SHEET PILING

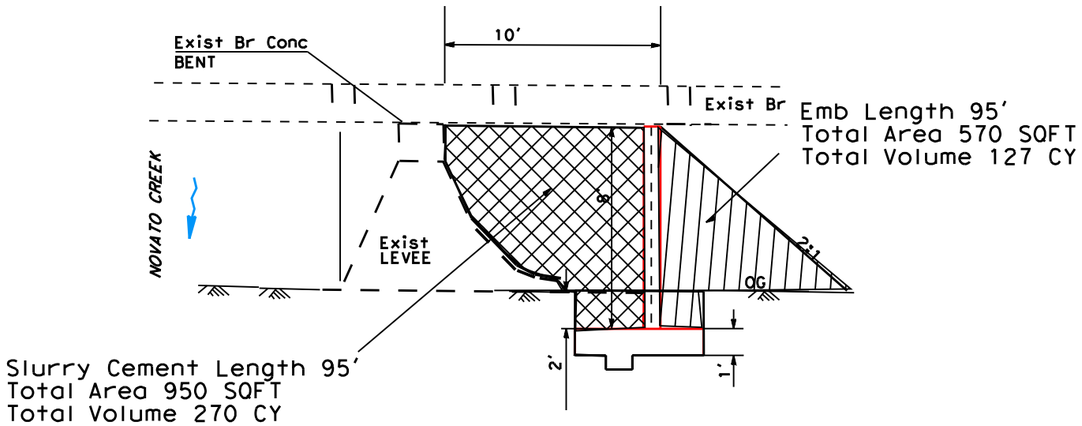

Backfill Limits

	AREA (SQFT)	VOLUME (CUBIC YARD)
WALL UNDER EASTBOUND 50'	504 (SLURRY)	143 (SLURRY)
	302 (Embankment)	67 (Embankment)
WALL UNDER EASTBOUND 45'	446 (SLURRY)	127 (SLURRY)
	268 (Embankment)	60 (Embankment)

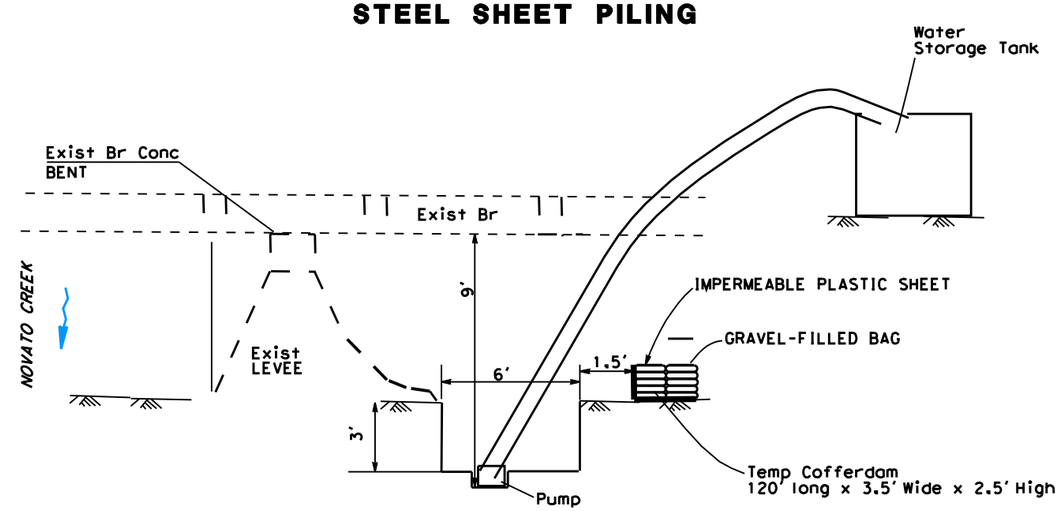

Temp COFFERDAM LIMITS
120' L x 3.5' W x 2.5' H

NOT TO SCALE

STATE OF CALIFORNIA - DEPARTMENT OF TRANSPORTATION
Caltrans
06-DESIGN

FUNCTIONAL SUPERVISOR: GETACHEW ESHETE

CALCULATED-DESIGNED BY: SATWINDER BRAR
CHECKED BY: WILLIAM LEON

REVISED BY | DATE REVISED

LAST REVISION 01-05-11 | DATE PLOTTED => $DATE | TIME PLOTTED => $TIME

Dist	COUNTY	ROUTE	POST MILES TOTAL PROJECT	SHEET No.	TOTAL SHEETS
04	Mrn	37	11.7/12.2		

REGISTERED CIVIL ENGINEER DATE

PLANS APPROVAL DATE

REGISTERED PROFESSIONAL ENGINEER No. Exp. CIVIL STATE OF CALIFORNIA

THE STATE OF CALIFORNIA OR ITS OFFICERS OR AGENTS SHALL NOT BE RESPONSIBLE FOR THE ACCURACY OR COMPLETENESS OF SCANNED COPIES OF THIS PLAN SHEET.

RETAINING WALL AND SHEET PILE WALL PLAN

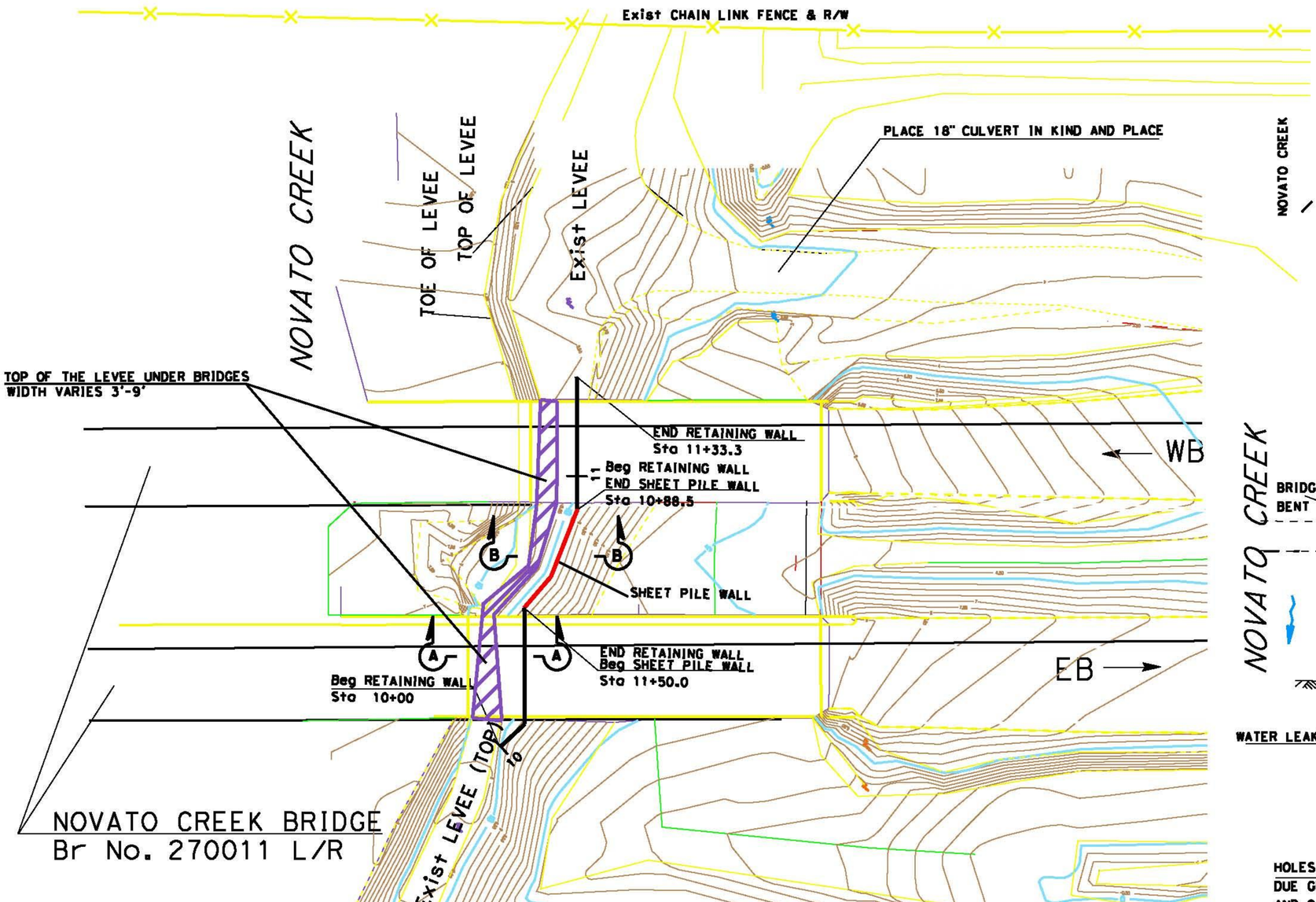

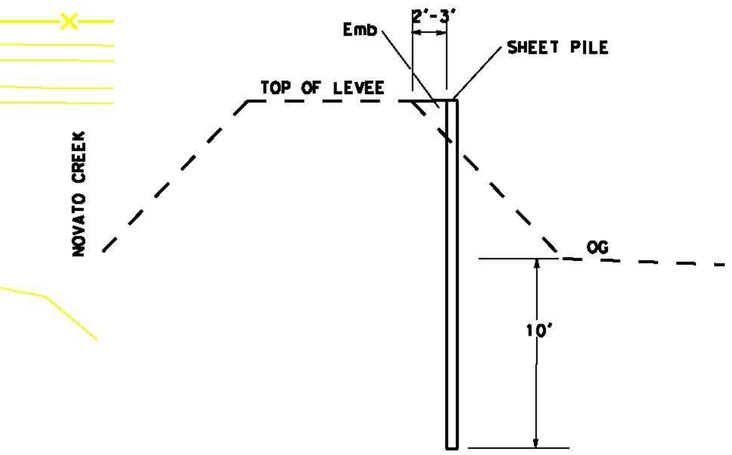

SHEET PILE WALL TYPICAL SECTION

SECTION B-B

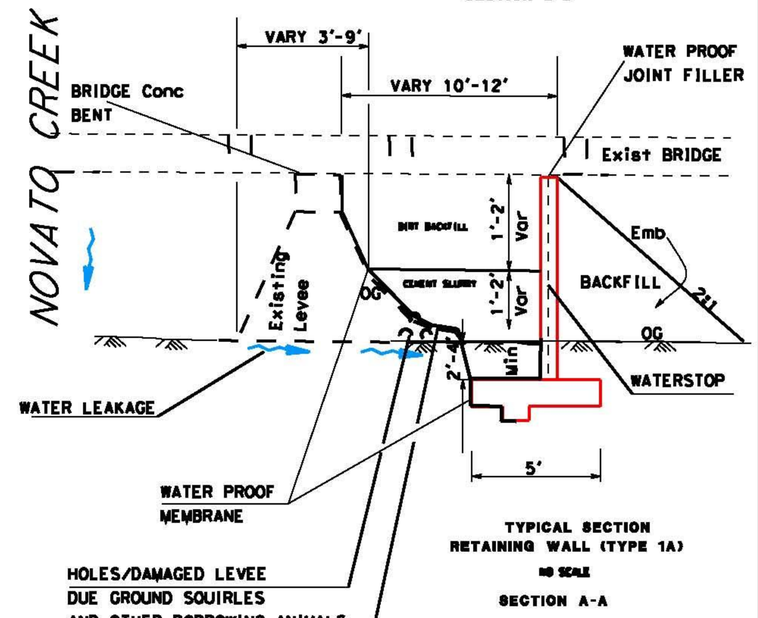

TYPICAL SECTION RETAINING WALL (TYPE 1A)

NO SCALE

SECTION A-A

Figure 1.

LAYOUT L-1

NOT TO SCALE

REVISED BY	DATE REVISED

CALCULATED-DESIGNED BY	SATWINDER BRAR
CHECKED BY	WILLIAM LEON

FUNCTIONAL SUPERVISOR: GETACHEW ESHETE

STATE OF CALIFORNIA - DEPARTMENT OF TRANSPORTATION

Caltrans

06-DESIGN

LAST REVISION 01-05-11 | DATE PLOTTED => $DATE | TIME PLOTTED => $TIME

State of California – The Natural Resources Agency
EDMUND G. BROWN, JR., Governor
DEPARTMENT OF FISH AND GAME
Bay Delta Region
7329 Silverado Trail
Napa, California 94558
(707) 944-5520
www.dfg.ca.gov

June 16, 2011

Betcy Joseph
California Department of Transportation
111 Grand Avenue
Oakland, CA 94623

Subject: Final Lake or Streambed Alteration Agreement
Notification No. 1600-2011-0144-R3
Novato Creek Bridge Levee Project

Dear Ms. Joseph:

Enclosed is the final Streambed Alteration Agreement ("Agreement") for the Novato Creek Bridge Levee Project ("Project"). Before the Department may issue an Agreement, it must comply with the California Environmental Quality Act ("CEQA"). In this case, the Department, acting as a Lead agency, determined your project is exempt from CEQA and filed a notice of exemption ("NOE") on June 16, 2011.

Under CEQA, filing a NOE starts a 35-day period within which a party may challenge the filing agency's approval of the project. You may begin your project before the 35-day period expires if you have obtained all necessary local, state, and federal permits or other authorizations. However, if you elect to do so, it will be at your own risk.

If you have any questions regarding this matter, please contact Timothy Dodson, Environmental Scientist at 707-944-5513 or tdodson@dfg.ca.gov.

Sincerely,

for Scott Wilson
Environmental Program Manager
Bay Delta Region

cc: Timothy Dodson
Warden Mingal
Lieutenant Roberts

Steve Harris
California Department of Transportation

Conserving California's Wildlife Since 1870

CALIFORNIA DEPARTMENT OF FISH AND GAME
BAY DELTA REGION
7329 SILVERADO TRAIL
NAPA, CALIFORNIA 94558
(707) 944-5520
www.dfg.ca.gov

STREAMBED ALTERATION AGREEMENT
NOTIFICATION NO. 1600-2011-0144-R3
Novato Creek

CALIFORNIA DEPARTMENT OF TRANSPORTATION
NOVATO CREEK BRIDGE LEVEE PROJECT

This Streambed Alteration Agreement (Agreement) is entered into between the California Department of Fish and Game (DFG) and the California Department of Transportation (Permittee) as represented by Betcy Joseph.

RECITALS

WHEREAS, pursuant to Fish and Game Code (FGC) section 1602, Permittee notified DFG on May 2 2011, that Permittee intends to complete the project described herein.

WHEREAS, pursuant to FGC section 1603, DFG has determined that the project could substantially adversely affect existing fish or wildlife resources and has included measures in the Agreement necessary to protect those resources.

WHEREAS, Permittee has reviewed the Agreement and accepts its terms and conditions, including the measures to protect fish and wildlife resources.

NOW THEREFORE, Permittee agrees to complete the project in accordance with the Agreement

PROJECT LOCATION

The proposed project will occur under and adjacent to State Route (SR) 37, 0.85 miles east of its junction of SR 101, at postmile 11.07 in Marin County, California; Latitude 38.083333, Longitude -122.53575. Site access is obtained from the shoulder of SR 37.

PROJECT DESCRIPTION

The project involves modification of existing levees, construction of a new levee, and replacing an existing culvert. The levee will be constructed using two techniques. Earthen berm levee walls will be constructed under the east and west bound lanes of

the SR 37 Novato Creek Bridges. The levee in the space between the east and west bound bridges will be constructed using steel sheet piles.

The earthen levees and sheet piles will be installed approximately 10 feet east and in front of the existing levee. The length of each retaining wall will be approximately 45 to 50 feet long, 8 feet high, and will be 6 feet above the original ground level. The retaining wall foundations will be 2 feet below the original ground and will be 5 feet wide. The sheet piles will be driven into the ground using vibration equipment between the east and west bound bridge lanes and will have an overlap with the earthen levees. The sheet piles will be 44 feet long and extend 15 feet below the original ground and will be 8 feet above the original ground. Imported borrow soil and cement slurry will be used to cover the wall and backfill between the proposed walls and existing levee. A waterproof membrane will be used between the levee/piles and the imported borrow to prevent water seepage.

The culvert replacement will occur to the north of SR-37. The culvert is located under and existing dirt levee access road. The 18-inch diameter and 32-foot long corrugated metal pipe will be replaced with an 18-inch diameter and 32-foot long plastic pipe. The pipe conveys stormwater from underneath the bridge along the dirt road to a tidal marsh. If water is present at the time of construction, a clear water diversion system will be used to dewater the work area. A gravel bag berm with an impermeable membrane will be setup to prevent water from entering the work area. The berm will be 1.5 feet away from the edge of the excavated area for the length of the walls. The berm will be 2.5 feet high, 3.5 feet wide and 120 feet long.

Project includes the hazing, herding, capture, holding, and relocation of animals in order to prevent injury from project activities. The dewatered work area will be surveyed by a biological monitor at the time of dewatering and during subsequent work days. If necessary, the biological monitor will trap, capture, move, and relocate entrapped animals from the work area(s) to a safe and suitable location. Salt-marsh harvest mouse, California clapper rail, and California black rail shall not be so pursued, captured, or held. If individuals of these species are present where project activities may result in injury to them, project activities shall be suspended until the individuals have moved to a safe location on their own.

Construction equipment access and staging areas will utilize the existing levee access road on the north side of SR-37.

PROJECT IMPACTS

Existing fish or wildlife resources the project could substantially adversely affect include:

- California clapper rail
- California black rail
- salt marsh harvest mouse
- swallows
- bats

- tidewater goby
- California freshwater shrimp
- California red-legged frog
- soft bird's beak
- Point Reyes bird's beak
- Contra Costa goldfields
- alkali milk-vetch
- pale yellow hayfield tarplant
- Marin knotwed
- saline clover
- pickleweed

The adverse effects the project could have on the fish or wildlife resources identified above include:

- loss of habitat
- water quality degradation
- short-term release of contaminants
- change in stream flow
- dewatering
- direct take of fish and other aquatic species
- disruption to nesting birds and other wildlife
- direct take of terrestrial species
- disturbance from project activity

MEASURES TO PROTECT FISH AND WILDLIFE RESOURCES

1. Administrative Measures

Permittee shall meet each administrative requirement described below.

1.1 Documentation at Project Site. Permittee shall make the Agreement, any extensions and amendments to the Agreement, and all related notification materials and California Environmental Quality Act (CEQA) documents, readily available at the project site at all times and shall be presented to DFG personnel, or personnel from another state, federal, or local agency upon request.

1.2 Providing Agreement to Persons at Project Site. Permittee shall provide copies of the Agreement and any extensions and amendments to the Agreement to all persons who will be working on the project at the project site on behalf of Permittee, including but not limited to contractors, subcontractors, inspectors, and monitors.

1.3 Notification of Conflicting Provisions. Permittee shall notify DFG if Permittee determines or learns that a provision in the Agreement

might conflict with a provision imposed on the project by another local, state, or federal agency. In that event, DFG shall contact Permittee to resolve any conflict.

1.4 Project Site Entry. Permittee agrees that DFG personnel may enter the project site at any time to verify compliance with the Agreement.

1.5 Notify DFG Prior to Work. The Permittee shall notify DFG by email at least five working days prior to commencement of covered activities. See contact info below.

1.6 Work According to Plans. Except as they are contradicted by measures required by this agreement, all work shall be conducted in conformance with the project description and measures included in the notification.

2. Avoidance and Minimization Measures

To avoid or minimize adverse impacts to fish and wildlife resources identified above, Permittee shall implement each measure listed below.

2.1 Seasonal Work Period. Work at the project site shall be confined to the period August 31 to October 15. Revegetation work is not confined to this time period.

2.2 Qualified Biologist on Site. Work shall not commence until the Permittee has identified and DFG has approved a qualified biologist for the project. The qualified biologist shall be present on site to monitor for salt marsh harvest mice, California clapper rails, California black rails, and other special status species during a) all vegetation removal; b) the construction of the exclusion fencing; c) all work within 300 feet of tidal or pickleweed habitats. Prior to work each day the qualified biologist shall thoroughly inspect the work area and adjacent habitat areas to determine if salt marsh harvest mice, California clapper rails, California black rails, or other special status species are present in these areas. If the biologist deems it necessary to stop work for any reason to protect special status species, the Resident Engineer or their designee shall be informed and they shall immediately stop work.

2.3 Limit Disturbance to Vegetation. Disturbance or removal of vegetation shall not exceed the minimum necessary to complete operations.

2.4 Work During Dry Weather Only. The work period shall be restricted to periods of dry weather. Work shall not begin unless a no precipitation forecast is obtained covering the entire time necessary to halt operations and implement all appropriate measures to prevent the delivery of fine sediments to the stream prior to the onset of rainfall. This forecast shall be documented upon request by DFG.

2.5 Flag Work Sites. The perimeter of the work site shall be adequately flagged to prevent damage to adjacent riparian habitat. No work activities shall occur outside the perimeter.

2.6 Stabilize Disturbed Areas. All exposed/disturbed areas within the project site shall be stabilized to the greatest extent possible. Erosion control measures, such as, silt fences, straw hay bales, gravel or rock lined ditches, water check bars, and broadcasted straw shall be used where ever silt laden water has the potential to leave the work site and enter State waters. Modifications, repairs and improvements to erosion control measures shall be made whenever it is needed. At no time shall silt laden runoff be allowed to enter the stream or directed to where it may enter a water body.

2.7 Salt Marsh Harvest Mouse. If any areas with pickleweed or vegetation within 50 feet from the edge of pickleweed need to be cleared for project activities, vegetation shall be removed only with non-mechanized hand tools (i.e. trowel, hoe, rake, and shovel). No motorized equipment, including weed wackers or lawn mowers, shall be used to remove this vegetation. Vegetation shall be removed according to the Vegetation Removal and Replacement Plan and under the supervision of a qualified biologist approved by DFG. Vegetation shall be retained and stored to keep it in healthy condition suitable for re-establishment. If a mouse of any species is observed within the areas being removed of vegetation, DFG shall be notified. Unless otherwise approved by DFG, the mouse shall be allowed to leave on its own volition. Vegetation removal may begin when no mice are observed, or with DFG approval, and shall start at the edge farthest from the water and work towards the water. This method of removal provides cover for salt-marsh harvest mouse and allows salt-marsh harvest mouse to move towards the water on its own volition as vegetation is being removed.

2.8 Vegetation Removal and Replacement Plan. The Permittee shall prepare a salt marsh vegetation removal and restoration plan. The plan shall be submitted to DFG a minimum of two months prior to commencement of any construction activities for review and

approval. The plan shall include quantitative and qualitative descriptions and procedures for vegetation removal and replacement. Images and diagrams shall be included. A nearby reference site shall be designated and used for comparison with replanted sites.

2.9 Exclusion Fencing. Prior to construction activities, a temporary mouse proof barrier shall be installed between areas occupied by pickleweed and the work site. The barrier shall prevent entry of salt-marsh harvest mouse into work sites. In general, the fence shall be constructed of overlapping plywood sheets that are trenched into the ground to prevent mouse movement under or between the sheets. Standards and specifications for fence construction are included as Exhibit A. Fence stakes shall face towards the work site, away from the habitat. The final design and proposed location of the fencing shall be reviewed and approved by DFG prior to placement. Permittee will verify location via photographs and e-mail to DFG prior to installation. The qualified biologist will have the ability to make field adjustments to the location of the fencing depending in site-specific habitat conditions.

2.10 Entrapped Animals. If entrapped animals are found by any crew member, the qualified biologist will be informed immediately. If the entrapped animal is a mouse, the qualified biologist will be contacted immediately for identification and to identify a course of action. Otherwise, the biologist will immediately assist the animal in escaping or will remove the animal. Captured animals will be either relocated immediately to suitable habitat outside the work area or temporarily retained and returned to the site of capture after the project surface disturbance has been completed. Salt-marsh harvest mouse, California clapper rail, and California black rail shall not be pursued, captured, or held. If individuals of these species are present where project activities may result in injury to them, project activities shall be suspended until the individuals have moved to a safe location on their own. DFG will be immediately informed if any special-status species are found.

2.11 Divert Water Around Work Area. Work shall be performed in isolation of water. If there is any water when the work is done, prior to the start of work, the Permittee shall construct coffer dams around the work site and divert all water through a suitably sized pipe. Coffer dams shall be constructed as close as practicable to the work area. The coffer dams shall be constructed with clean gravel and bags, and may be sealed with sheet plastic. All materials shall be removed from the work area upon project

completion. Normal water fluctuations shall be restored to the affected area(s) immediately upon completion of work at that location. If the coffer dams or water diversion fail, they shall be repaired immediately. Diversion shall be conducted such that water at the downstream end does not scour the channel bed or banks. No other diversion method shall be used without authorization of DFG. If another diversion method is preferred, the Permittee must submit a plan detailing the desired diversion method. Authorization of any other diversion method shall be at the discretion of DFG.

2.12 Screen Intake. The water diversion intake apparatus shall be screened with a fine mesh screen. The screen shall be cleaned as needed. In Novato Creek and waters where salmonids may be present NOAA fish screening requirements shall be implemented.

2.13 Discharge to Settling Pond. If the work site must be dewatered, any muddy, or otherwise contaminated, water shall be pumped to a settling pond where the water can clear prior to re-entering the water body.

2.14 Dewatering Plan. The Permittee shall prepare a dewatering plan. The plan shall be submitted to DFG a minimum of two months prior to commencement of any construction activities for review and approval. The plan shall include quantitative and qualitative descriptions and procedures for dewatering the work site. Images and diagrams shall be included.

2.15 Relocation Plan. The Permittee shall prepare a species relocation plan. The plan shall be submitted to DFG a minimum of two months prior to commencement of any construction activities for review and approval. The plan shall describe qualified biologists to conduct relocation, potentially present species, capture methods, handling procedures, stress minimization techniques, holding tank sizes, water quality considerations, data collection, transportation, as well as equipment cleaning and disinfection.

2.16 Qualified Biologist to Check Dewatered Area. The qualified biologist shall check daily for stranded aquatic life as the water level in the dewatering area drops and until dewatering facilities are removed. All stranded native aquatic vertebrates in the dewatered areas shall be immediately relocated to the nearest suitable habitat.

2.17 Concrete. Concrete shall be excluded from surface water for a period of 30 days after it is poured/sprayed. During that time the concrete shall be kept moist and runoff from the concrete shall not be allowed to enter any water body. Commercial sealants may be applied to the concrete surface where difficulty in excluding flow for a long period may occur. If sealant is used, water shall be excluded from the site until the sealant is cured. If groundwater comes into contact with fresh concrete, it shall be prevented from flowing towards surface water.

2.18 Equipment Storage and Maintenance. Staging and storage areas for equipment, materials, fuels, lubricants and solvents, shall be located outside of the stream channel and water body banks. Stationary equipment such as motors, pumps, generators, compressors and welders, located within or adjacent to a water body shall be positioned over drip pans. Any equipment or vehicles driven and/or operated within or adjacent to a water body must be checked and maintained daily, to prevent leaks of materials that if introduced to water could be deleterious to aquatic life. Vehicles must be moved away from the water body prior to refueling and lubrication.

2.19 Emergency Spill Response Plan. An emergency response plan shall be prepared and submitted to DFG prior to the start of construction. The plan shall identify the actions which will be taken in the event of spill of petroleum products, or other material harmful to aquatic or plant life, and the emergency response materials which will be kept at the site to allow the rapid containment and clean-up of any spilled material.

2.20 Nest Protection. Prior to project construction, a qualified biologist shall survey vegetation and structures, including bridges, to identify any areas with active bird nests. If nests are detected, Permittee shall consult with the US Fish and Wildlife Service and DFG to determine additional protection measures to be amended into this Agreement.

2.21 Special Status Plant Survey. Prior to the start of project construction, the Permittee shall submit to DFG a report of a botanical survey of the project site and work areas. Surveys shall be conducted in accordance with DFG's Protocols for Surveying and Evaluating Impacts to Special Status Native Plant Populations and Natural Communities (http://dfg.ca.gov/habcon/plant/plants.html.). If any special status plants are detected, the Permittee shall consult with the US Fish

and Wildlife Service and DFG to determine additional protection measures to be amended into this Agreement. No collection or transplantation of special status plants shall occur without express authorization from DFG.

2.22 Bat Survey. Prior to culvert replacement, the site shall be surveyed for bats by a qualified biologist. If bats are found, there shall be no further disturbance to the culvert until DFG has been consulted. DFG reserves the right provide additional provisions to this agreement designed to protect nesting/roosting bats.

2.23 Listed Species. The project site has been identified as an area that is potentially inhabited by species listed as threatened and or endangered under the federal Endangered Species Act and the California Endangered Species Act. This agreement does not authorize the take, or incidental take, of any federally or state listed threatened or endangered species. The Permittee shall consult with the appropriate federal agency prior to commencement of the project. Any unauthorized take of such listed species may result in prosecution.

2.24 Remove Trash and Food Wastes. All trash will be properly stored and removed at the end of each work day. Following construction, all trash and construction debris shall be removed.

2.25 No Pets on Site. No pets shall be permitted in the work area.

3. Compensatory Measures

To compensate for adverse impacts to fish and wildlife resources identified above that cannot be avoided or minimized, Permittee shall implement each measure listed below.

3.1 Replacement of Salt Marsh Vegetation. Following operations at each site where vegetation removal occurs, vegetation shall be replaced and re-established in the disturbed areas according to the Vegetation Removal and Replacement Plan. Replanted areas shall be monitored and maintained as necessary for a minimum of five years. All planting shall have a minimum of 80% survival at the end of the minimum monitoring period and shall attain 70% ground cover relative to pre-planting conditions after three years and 75% coverage after 5 years. Planted areas shall have a native plant richness that is at least 90% of a designated reference site. If the survival, cover, and native richness are not meeting these goals, the Permittee is responsible for replacement planting, additional watering, weeding, invasive exotic eradication, or any other

additional mitigation for the temporal loss of habitat. The additional mitigation will be at least equal to that already agreed to.

CONTACT INFORMATION

Any communication that Permittee or DFG submits to the other shall be in writing and any communication or documentation shall be delivered to the address below by U.S. mail, fax, or email, or to such other address as Permittee or DFG specifies by written notice to the other.

To Permittee:

Betcy Joseph
California Department of Transportation
111 Grand Avenue
Oakland, CA 94623

To DFG:

Department of Fish and Game
Bay Delta Region
7329 Silverado Trail
Napa California 94558
Attn: Lake and Streambed Alteration Program – Timothy S. Dodson
Notification #1600-2011-0044-R3
f: (707) 944-5553
tdodson@dfg.ca.gov

LIABILITY

Permittee shall be solely liable for any violations of the Agreement, whether committed by Permittee or any person acting on behalf of Permittee, including its officers, employees, representatives, agents or contractors and subcontractors, to complete the project or any activity related to it that the Agreement authorizes.

This Agreement does not constitute DFG's endorsement of, or require Permittee to proceed with the project. The decision to proceed with the project is Permittee's alone.

SUSPENSION AND REVOCATION

DFG may suspend or revoke in its entirety the Agreement if it determines that Permittee or any person acting on behalf of Permittee, including its officers, employees, representatives, agents, or contractors and subcontractors, is not in compliance with the Agreement.

Before DFG suspends or revokes the Agreement, it shall provide Permittee written notice by certified or registered mail that it intends to suspend or revoke. The notice shall state the reason(s) for the proposed suspension or revocation, provide Permittee an opportunity to correct any deficiency before DFG suspends or revokes the Agreement, and include instructions to Permittee, if necessary, including but not limited to a directive to immediately cease the specific activity or activities that caused DFG to issue the notice.

ENFORCEMENT

Nothing in the Agreement precludes DFG from pursuing an enforcement action against Permittee instead of, or in addition to, suspending or revoking the Agreement.

Nothing in the Agreement limits or otherwise affects DFG's enforcement authority or that of its enforcement personnel.

OTHER LEGAL OBLIGATIONS

This Agreement does not relieve Permittee or any person acting on behalf of Permittee, including its officers, employees, representatives, agents, or contractors and subcontractors, from obtaining any other permits or authorizations that might be required under other federal, state, or local laws or regulations before beginning the project or an activity related to it.

This Agreement does not relieve Permittee or any person acting on behalf of Permittee, including its officers, employees, representatives, agents, or contractors and subcontractors, from complying with other applicable statutes in the FGC including, but not limited to, FGC sections 2050 et seq. (threatened and endangered species), 3503 (bird nests and eggs), 3503.5 (birds of prey), 5650 (water pollution), 5652 (refuse disposal into water), 5901 (fish passage), 5937 (sufficient water for fish), and 5948 (obstruction of stream).

Nothing in the Agreement authorizes Permittee or any person acting on behalf of Permittee, including its officers, employees, representatives, agents, or contractors and subcontractors, to trespass.

AMENDMENT

DFG may amend the Agreement at any time during its term if DFG determines the amendment is necessary to protect an existing fish or wildlife resource.

Permittee may amend the Agreement at any time during its term, provided the amendment is mutually agreed to in writing by DFG and Permittee. To request an amendment, Permittee shall submit to DFG a completed DFG "Request to Amend Lake

or Streambed Alteration" form and include with the completed form payment of the corresponding amendment fee identified in DFG's current fee schedule (see Cal. Code Regs., tit. 14, § 699.5).

TRANSFER AND ASSIGNMENT

This Agreement may not be transferred or assigned to another entity, and any purported transfer or assignment of the Agreement to another entity shall not be valid or effective, unless the transfer or assignment is requested by Permittee in writing, as specified below, and thereafter DFG approves the transfer or assignment in writing.

The transfer or assignment of the Agreement to another entity shall constitute a minor amendment, and therefore to request a transfer or assignment, Permittee shall submit to DFG a completed DFG "Request to Amend Lake or Streambed Alteration" form and include with the completed form payment of the minor amendment fee identified in DFG's current fee schedule (see Cal. Code Regs., tit. 14, § 699.5).

EXTENSIONS

In accordance with FGC section 1605(b), Permittee may request one extension of the Agreement, provided the request is made prior to the expiration of the Agreement's term. To request an extension, Permittee shall submit to DFG a completed DFG "Request to Extend Lake or Streambed Alteration" form and include with the completed form payment of the extension fee identified in DFG's current fee schedule (see Cal. Code Regs., tit. 14, § 699.5). DFG shall process the extension request in accordance with FGC 1605(b) through (e).

If Permittee fails to submit a request to extend the Agreement prior to its expiration, Permittee must submit a new notification and notification fee before beginning or continuing the project the Agreement covers (Fish & G. Code, § 1605, subd. (f)). .

EFFECTIVE DATE

The Agreement becomes effective on the date of DFG's signature, which shall be: 1) after Permittee's signature; 2) after DFG complies with all applicable requirements under the California Environmental Quality Act (CEQA); and 3) after payment of the applicable FGC section 711.4 filing fee listed at http://www.dfg.ca.gov/habcon/ceqa/ceqa_changes.html.

TERM

This Agreement shall expire on December 31, 2013, unless it is terminated or extended before then. All provisions in the Agreement shall remain in force throughout its term. Permittee shall remain responsible for implementing any provisions specified herein to

protect fish and wildlife resources after the Agreement expires or is terminated, as FGC section 1605(a)(2) requires.

EXHIBITS

The documents listed below are included as exhibits to the Agreement and incorporated herein by reference.

Exhibit A. Temporary Mouse Proof Barrier, Construction Specifications.

AUTHORITY

If the person signing the Agreement (signatory) is doing so as a representative of Permittee, the signatory hereby acknowledges that he or she is doing so on Permittee's behalf and represents and warrants that he or she has the authority to legally bind Permittee to the provisions herein.

AUTHORIZATION

This Agreement authorizes only the project described herein. If Permittee begins or completes a project different from the project the Agreement authorizes, Permittee may be subject to civil or criminal prosecution for failing to notify DFG in accordance with FGC section 1602.

CONCURRENCE

The undersigned accepts and agrees to comply with all provisions contained herein.

FOR CALIFORNIA DEPARTMENT OF TRANSPORTATION

Betcy Joseph — 6/6/11

Betcy Joseph — Date

FOR DEPARTMENT OF FISH AND GAME

for — June 16, 2011

Scott Wilson — Date

Environmental Program Manager

Prepared by: Timothy S. Dodson
Environmental Scientist

Date Prepared: June 3, 2011

EXHIBIT A

Temporary Mouse Proof Barrier, Construction Specifications

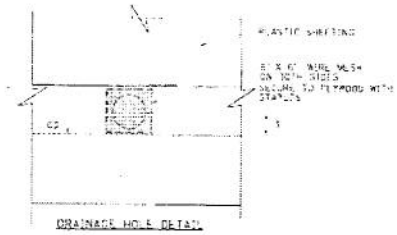

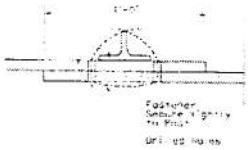

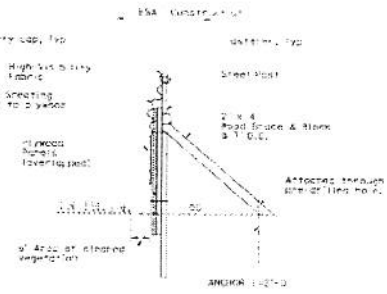

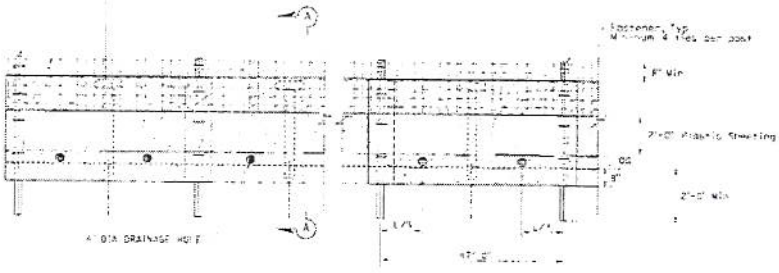

STATE OF CALIFORNIA - DEPARTMENT OF TRANSPORTATION
Caltrans
WATER QUALITY
DAVID W. YAU

CONSTRUCTION DETAILS
(TEMPORARY MOUSE PROOF BARRIER)
NO SCALE

C-15

Removal

When the Engineer determines that temporary fence (Type ESA) is no longer required, remove and dispose of it under Section 7-1.13, "Disposal of Material Outside the Highway Right of Way," of the Standard Specifications.

Backfill and repair ground disturbance caused by the installation and removal of temporary fence (Type ESA), including holes and depressions, under Section 15-1.02, "Preservation of Property," of the Standard Specifications.

MEASUREMENT AND PAYMENT

Temporary fence (Type ESA) is measured and paid for by the linear foot in the same manner specified for fence (Type BW or WM) in Section 80, "Fences," of the Standard Specifications.

The contract price paid per linear foot for temporary fence (Type ESA) includes full compensation for furnishing all labor, materials, tools, equipment, and incidentals, and for doing all the work involved in constructing the temporary fence (Type ESA), complete in place, including maintenance, removal of materials, and backfilling and repairing holes, depressions and other ground disturbance, as shown on the plans, as specified in the Standard Specifications and these special provisions, and as ordered by the Engineer.

10-1.14 MOUSE PROOF BARRIER

GENERAL

Summary

This work includes constructing, maintaining, and removing mouse proof barrier. Mouse proof barrier provides an impenetrable fence for mice and a visible boundary adjacent to protected areas such as an ESA (environmentally sensitive area).

Signs are not required for mouse proof barrier.

Submittals

Submit a Certificate of Compliance as specified in Section 6-1.07, "Certificates of Compliance" of the Standard Specifications for:

1. High visibility fabric
2. Safety cap for metal posts
3. Wire mesh for drainage holes
4. Plastic sheeting

MATERIALS

High Visibility Fabric

High visibility fabric for mouse proof barrier must consist of one of the following:

1. Polyethylene
2. Polypropylene
3. Combined polyethylene and polypropylene.

Sample under ASTM D 4354, Procedure C.
Test under ASTM D 4759. All properties must be based on Minimum Average Roll Value.
Identify, store, and handle under ASTM D 4873.
High visibility fabric must:

1. Contain ultraviolet inhibitors
2. Comply with the following:

Property	Specifications	Requirements
Width, inches, Min	Measured	48
Opening size inches	Measured	1" x 1" (Min) 2" x 2" (Max)
Color	Observed	Orange
Grab breaking load 1-inch grip, lb, Min. in each direction	ASTM D4632	260
Apparent elongation percent, Min., in each direction	ASTM D4632	5
Ultraviolet Degradation percent of original unexposed grab breaking load 500 hr, minimum	ASTM D4355	70

Posts

Steel posts must:

1. Have a "U," "T," "L," or other cross sectional shape that can resist failure from lateral loads.
2. Be pointed on the end to be driven into the ground.
3. Weigh at least 0.75-pound per foot.
4. Be at least 6 feet long.
5. Have a safety cap attached to the exposed end. The safety cap must be yellow, orange or red plastic and fit snugly to the metal post.

Wood Blocks and Brace

Wood blocks and brace must be:

1. Pressure treated fir, redwood, cedar, or pine and cut from sound timber
2. Straight and free of loose or unsound knots and other defects that would render the stakes unfit for use.
3. Grade 2.

Plywood

Plywood must be:

1. At least 1/2 inch thick and have nominal dimensions of 4' x 8'.
2. Pressure treated in accordance to Section 58 of the Standard Specifications.
3. Exterior grade.

Plastic Sheeting

Plastic sheeting must be 6 mil thick.

Wire Mesh

Wire mesh must:

1. Have vertical and horizontal wires of at least 19-gage that are welded at each intersection.
2. Have openings with maximum dimensions of 1/4" x 1/4".
3. Be galvanized.

Fasteners

Fasteners must be galvanized tie wires or locking plastic fasteners.

Anchors

Fabricate anchors form No. 4 steel reinforcing bar.

CONSTRUCTION

General

Mouse proof barrier must be installed from outside of the protected area before clearing and grubbing activities.

Plastic sheeting and wire mesh must be secured to plywood with galvanized staples so they are flush with the surface and there are no gaps or openings.

Wood brace and blocks must be attached to plywood with galvanized steel screws.

Clear a 6" swath of vegetation parallel to the fence on the ESA (Environmentally Sensitive Area) side of the fence after installation.

Maintenance

Maintain mouse proof barrier by:

1. Keeping posts in a vertical position
2. Reattaching plastic sheeting to plywood
3. Reattaching wire mesh to drain holes
4. Cleaning debris from both sides of drain holes
5. Reattaching fabric to posts
6. Replacing damaged sections of fabric
7. Replacing damaged wire mesh
8. Replacing damaged plywood
9. Replacing damaged plastic sheeting

Removal

When the Engineer determines that mouse proof barrier is no longer required, remove and dispose of it under Section 7-1.13, "Disposal of Material Outside the Highway Right of Way," of the Standard Specifications.

Backfill and repair ground disturbance caused by the installation and removal of mouse proof barrier, including holes and depressions, under Section 15-1.02, "Preservation of Property," of the Standard Specifications.

MEASUREMENT AND PAYMENT

Mouse proof barrier is measured and paid for by the linear foot.

The contract price paid per linear foot for mouse proof barrier includes full compensation for furnishing all labor, materials, tools, equipment, and incidentals, and for doing all the work involved in constructing the mouse proof barrier, complete in place, including maintenance, removal of materials, and backfilling and repairing holes, depressions and other ground disturbance, as shown on the plans, as specified in the Standard Specifications and these special provisions, and as ordered by the Engineer.

10-1.15 TEMPORARY CONSTRUCTION ENTRANCE

GENERAL

Summary

This work includes constructing, maintaining, and removing temporary construction entrance to provide temporary access.

The SWPPP must describe and include the use of temporary construction entrance as a water pollution control practice for tracking control.

Temporary construction entrance must be Type 1, Type 2, or a combination.

Submittals

Submit a Certificate of Compliance under Section 6-1.07, "Certificates of Compliance," of the Standard Specifications for:

1. Temporary entrance fabric
2. Rock

Submit details for alternatives at least 5 business days before installation. You may propose alternatives for the following items:

1. Alternative sump
2. Alternative corrugated steel panels

Revised

FOR DEPARTMENT USE ONLY				
Date Received	Amount Received	Amount Due	Date Complete	Notification No.
5/2/11	$ Ø	$2521.80		1600-2011-0144-3

Rec'd 5/5/11 Ck# 052-445-710

STATE OF CALIFORNIA
DEPARTMENT OF FISH AND GAME

Dodson Wdn Mingal Lt Roberts

NOTIFICATION OF LAKE OR STREAMBED ALTERATION

Complete EACH field, unless otherwise indicated, following the enclosed instructions and submit ALL required enclosures. Attach additional pages, if necessary.

Fish & Game
MAY 26 2011
Yountville

1. APPLICANT PROPOSING PROJECT

Name	Betcy Joseph		
Business/Agency	California Department of Transportation (Caltrans)		
Street Address	111 Grand Ave.		
City, State, Zip	Oakland CA, 94623		
Telephone	(515) 286-5097	Fax	
Email			

2. CONTACT PERSON (*Complete only if different from applicant*)

Name	Steven Harris		
Street Address	111 Grand Ave.		
City, State, Zip	Oakland CA, 94623		
Telephone	(510) 267-7195	Fax	(515) 286-6374
Email			

3. PROPERTY OWNER (*Complete only if different from applicant*)

Name	Caltrans		
Street Address			
City, State, Zip			
Telephone		Fax	
Email			

4. PROJECT NAME AND AGREEMENT TERM

A. Project Name	Novato Creek Bridge Levee Project
B. Agreement Term Requested	☑ Regular (*5 years or less*) ☐ Long-term (*greater than 5 years*)

C. Project Term		D. Seasonal Work Period		E. Number of Work Days
Beginning (*year*)	Ending (*year*)	Start Date (*month/day*)	End Date (*month/day*)	
2011	2011	08/31	10/15	45.00

5. AGREEMENT TYPE

Check the applicable box. If box B, C, D, or E is checked, complete the specified attachment.

A.	☑ Standard *(Most construction projects, excluding the categories listed below)*	
B.	☐ Gravel/Sand/Rock Extraction (*Attachment A*)	*Mine I.D. Number:* _____
C.	☐ Timber Harvesting (*Attachment B*)	THP *Number:* _____
D.	☐ Water Diversion/Extraction/Impoundment (*Attachment C*)	*SWRCB Number:* _____
E.	☐ Routine Maintenance (*Attachment D*)	
F.	☐ DFG Fisheries Restoration Grant Program (FRGP)	*FRGP Contract Number:* _____
G.	☐ Master	
H.	☐ Master Timber Harvesting	

6. FEES

Please see the current fee schedule to determine the appropriate notification fee. Itemize each project's estimated cost and corresponding fee. ***Note: The Department may not process this notification until the correct fee has been received.***

	A. Project	B. Project Cost	C. Project Fee
1	Novato Creek Bridge Levee Project	$400,000.00	$2,521.50
2			
3			
4			
5			
		D. Base Fee *(if applicable)*	
		E. TOTAL FEE ENCLOSED	$2,521.50

7. PRIOR NOTIFICATION OR ORDER

A. Has a notification previously been submitted to, or a Lake or Streambed Alteration Agreement previously been issued by, the Department for the project described in this notification?

☐ Yes (*Provide the information below*) ☑ No

Applicant: _____ Notification Number: _____ Date: _____

B. Is this notification being submitted in response to an order, notice, or other directive ("order") by a court or administrative agency (including the Department)?

☑ No ☐ Yes (*Enclose a copy of the order, notice, or other directive. If the directive is not in writing, identify the person who directed the applicant to submit this notification and the agency he or she represents, and describe the circumstances relating to the order.*)

☐ *Continued on additional page(s)*

Revised

NOTIFICATION OF LAKE OR STREAMBED ALTERATION

Fish & Game
MAY 26 2011
Yountville

8. PROJECT LOCATION

A. Address or description of project location.

(*Include a map that marks the location of the project with a reference to the nearest city or town, and provide driving directions from a major road or highway*)

The proposed project will be located on State Route (SR) 37, 0.85 miles east of the junction of SR-101 and SR-37, at postmile (PM) 11.07 in Marin County, California.

The project site is located within the Novato 7.5-minute U.S. Geological Survey (USGS) quadrangle (Township 3N, Range 6W, Sections are unmapped on quadrangle).

Coordinates: 38° 05' 00" N/ 122° 31' 05" W {NAD83}).

Driving directions:
From the within Novato, take South Novato Blvd., cross SR101 and proceed east onto SR-37 and the project site (0.9 miles).

☐ *Continued on additional page(s)*

B. River, stream, or lake affected by the project.	None. The closest stream is Novato Creek.
C. What water body is the river, stream, or lake tributary to?	San Pablo Bay
D. Is the river or stream segment affected by the project listed in the state or federal Wild and Scenic Rivers Acts?	☐ Yes ☑ No ☐ Unknown
E. County	Marin

F. USGS 7.5 Minute Quad Map Name	G. Township	H. Range	I. Section	J. ¼ Section
Novato	03N	6W	21	NE
note: USGS maps do not delineate Sections on the maps				

☑ *Continued on additional page(s)*

K. Meridian (*check one*)	☐ Humboldt ☑ Mt. Diablo ☐ San Bernardino
L. Assessor's Parcel Number(s)	

No parcel numbers. State property, owned by Caltrans.
Adjacent parcels include:15716012, 15320031

☐ *Continued on additional page(s)*

M. Coordinates (*If available, provide at least latitude/longitude or UTM coordinates and check appropriate boxes*)

Latitude/Longitude	*Latitude:* 38.087496	*Longitude:* -123.534479	
	☐ Degrees/Minutes/Seconds	☑ Decimal Degrees	☐ Decimal Minutes
UTM	*Easting:* 540807.09	*Northing:* 4215609.38	☑ Zone 10 ☐ Zone 11
Datum used for Latitude/Longitude or UTM	☐ NAD 27	☑ NAD 83 or WGS 84	

Fish & Game
MAY 26 2011
Yountville

9. PROJECT CATEGORY AND WORK TYPE *(Check each box that applies)*

PROJECT CATEGORY	NEW CONSTRUCTION	REPLACE EXISTING STRUCTURE	REPAIR/MAINTAIN EXISTING STRUCTURE
Bank stabilization – bioengineering/recontouring	☐	☐	☐
Bank stabilization – rip-rap/retaining wall/gabion	☐	☑	☐
Boat dock/pier	☐	☐	☐
Boat ramp	☐	☐	☐
Bridge	☐	☐	☐
Channel clearing/vegetation management	☐	☐	☐
Culvert	☐	☑	☐
Debris basin	☐	☐	☐
Dam	☐	☐	☐
Diversion structure – weir or pump intake	☐	☐	☐
Filling of wetland, river, stream, or lake	☐	☐	☐
Geotechnical survey	☐	☐	☐
Habitat enhancement – revegetation/mitigation	☐	☐	☐
Levee	☑	☐	☐
Low water crossing	☐	☐	☐
Road/trail	☐	☐	☐
Sediment removal – pond, stream, or marina	☐	☐	☐
Storm drain outfall structure	☐	☐	☐
Temporary stream crossing	☐	☐	☐
Utility crossing : Horizontal Directional Drilling	☐	☐	☐
Jack/bore	☐	☐	☐
Open trench	☐	☐	☐
Other *(specify)*:	☐	☐	☐

Revised

NOTIFICATION OF LAKE OR STREAMBED ALTERATION

Fish & Game
MAY 26 2011
Yountville

10. PROJECT DESCRIPTION

A. Describe the project in detail. Photographs of the project location and immediate surrounding area should be included.

- Include any structures (e.g., rip-rap, culverts, or channel clearing) that will be placed, built, or completed in or near the stream, river, or lake.
- Specify the type and volume of materials that will be used.
- If water will be diverted or drafted, specify the purpose or use.

Enclose diagrams, drawings, plans, and/or maps that provide all of the following: site specific construction details; the dimensions of each structure and/or extent of each activity in the bed, channel, bank or floodplain; an overview of the entire project area (i.e., "bird's-eye view") showing the location of each structure and/or activity, significant area features, and where the equipment/machinery will enter and exit the project area.

This is a storm damage project within existing, previously disturbed and maintained Caltrans right-of-way (ROW). The proposed project will be located on State Route (SR) 37 at postmile (PM) 11.07 in Marin County, California. The project site is located within the Novato 7.5-minute U.S. Geological Survey (USGS) quadrangle (Township 3N, Range 6W, 38° 05' 00" N/ 122° 31' 05" W {NAD83}) in Marin County, California (see Figure 1-1, Map of project location, and Appendix A for Design Layouts). This project involves building 2 retaining walls under the east and west bounds bridge decks and installing sheet piles between the east and west bound bridges. The retaining walls and sheet piles will serve as a secondary levee. The existing levees under the bridges are damaged, washed out and burrowed by ground squirrels and other burrowing animals which caused the levee to leak during heavy rain storms and high tide events as illustrated on plans. The existing levee that is under the bridges is narrower and non-uniform shape, and original ground is not leveled comparing to rest the existing levee within the project limits.

The retaining walls and sheet piles will be installed approximately 10 feet east and in front of the existing damaged levee. The lengths of the each retaining wall will be approximately 45 to 50 feet long, 8 feet high under and across east and west bounds bridge deck, 6 feet will be above the original ground. The walls' foundation will be 2 feet below the original ground and 5 feet wide and 12 inch thick for the length of the walls. An imported borrow soil and Cement Slurry will be used to cover the wall and backfill between the proposed walls and existing levee as shown on the plans. The total estimated backfill area for the walls is 570 square feet, 127 cubic yard. The total estimated cement slurry backfill behind the walls is 950 square feet, 270 cubic yard, as shown on the plans. A water proof membrane will be used between the walls and the imported borrow to prevent water seepage.

continued, see attached.

☑ *Continued on additional page(s)*

B. Specify the equipment and machinery that will be used to complete the project.

Construction equipment that will be used to build the proposed project will include a sheet pile drive vibratory equipment, Bobcat, backhoe, compactor, concrete equipment, trucks for transporting imported borrow and concrete. The vibratory equipment will be used for approximately 3 day, 8 hours per day. The equipment has a noise level of 70-90 dB.

The equipment will be staged on one of the two adjacent access roads within the Caltrans ROW.

☐ *Continued on additional page(s)*

C. Will water be present during the proposed work period (specified in box 4.D) in the stream, river, or lake (specified in box 8.B).	☑ Yes ☐ No (*Skip to box 11*)
D. Will the proposed project require work in the wetted portion of the channel?	☐ Yes (*Enclose a plan to divert water around work site*) ☑ No

Revised

NOTIFICATION OF LAKE OR STREAMBED ALTERATION

Fish & Game
MAY 26 2011
Yountville

11. PROJECT IMPACTS

A. Describe impacts to the bed, channel, and bank of the river, stream, or lake, and the associated riparian habitat. Specify the dimensions of the modifications in length (linear feet) and area (square feet or acres) and the type and volume of material (cubic yards) that will be moved, displaced, or otherwise disturbed, if applicable.

None:

☑ *Continued on additional page(s)*

B. Will the project affect any vegetation? ☑ Yes (*Complete the tables below*) ☐ No

Vegetation Type	Temporary Impact	Permanent Impact
Invasive plants; oat grass, fennel, yellow star thistle, mustard, etc.	Linear feet: 300 Total area: 0.1 acres	Linear feet: 120 Total area: 0.05 acres
pickleweed (Salicornia virginica.)	Linear feet: 10 Total area: 0.0025 acres	Linear feet: Total area:

Tree Species	Number of Trees to be Removed	Trunk Diameter (range)

☐ *Continued on additional page(s)*

C. Are any special status animal or plant species, or habitat that could support such species, known to be present on or near the project site?

☑ Yes *(List each species and/or describe the habitat below)* ☐ No ☐ Unknown

California clapper rail, Salt marsh harvest mouse

☐ *Continued on additional page(s)*

D. Identify the source(s) of information that supports a "yes" or "no" answer above in Box 11.C.

(1) USFWS Official List of Species that may occur within the Novato USGS Quad; (2) CNDDB Rarefind Database; (3) BIOS.

☐ *Continued on additional page(s)*

E. Has a biological study been completed for the project site?

☑ Yes (*Enclose the biological study*) ☐ No

Note: A biological assessment or study may be required to evaluate potential project impacts on biological resources.

F. Has a hydrological study been completed for the project or project site?

☐ Yes (*Enclose the hydrological study*) ☑ No

Note: A hydrological study or other information on site hydraulics (e.g., flows, channel characteristics, and/or flood recurrence intervals) may be required to evaluate potential project impacts on hydrology.

Revised

Fish & Game
MAY 26 2011
Yountville

12. MEASURES TO PROTECT FISH, WILDIFE, AND PLANT RESOURCES

A. Describe the techniques that will be used to prevent sediment from entering watercourses during and after construction.

Caltrans standard Best Management Practices will be used during construction. Caltrans will implement erosion control measures and a standard water pollution prevention plan.

Prior to construction, an environmentally sensitive area (ESA) fence, silt fence, and a mouse proof fence will be placed along the edge of the adjacent wetland to prevent inadvertent encroachment by personnel or equipment, and to prevent wildlife from entering into the action area. Actions within the project area will be limited to vehicle and equipment operations on existing roads. No project activities will occur outside the delineated project construction area.

☐ *Continued on additional page(s)*

B. Describe project avoidance and/or minimization measures to protect fish, wildlife, and plant resources.

Terms and conditions of the 31-Mar-11 USFWS's letter of concurrence (see attached).
-Work will be scheduled to occur between August 31 and October 15 to avoid the nesting season for sensitive species.
-The Service-approved biologist(s) will be onsite to monitor during initial ground disturbing activities.
-A Worker Environmental Awareness Training Program will be provided for all construction personnel.
-Prior to construction, the limits of the construction zones will be delineated with high visibility temporary fencing
-To prevent harvest mice from moving through the project site during construction,temporary exclusion fencing will be placed around a defined work area prior to the start of construction.

☐ *Continued on additional page(s)*

C. Describe any project mitigation and/or compensation measures to protect fish, wildlife, and plant resources.

Terms and conditions of the 31-Mar-11 USFWS's letter of concurrence (see attached).
-Disturbed land will be restored to on-site pre-construction conditions to the extent feasible and seeded with a regionally appropriate seed mix.
-Best management practices (BMPs) will be implemented, as recommended or required by the State or Regional Water Quality Control Board and the City or County of Marin, to protect water quality.
-To prevent entrapment of salt marsh harvest mice, any pipes or similar objects will be capped prior to the end of each work day or inspected by a Service-approved biologist prior to commencement of work activities the following day.
-Construction equipment and materials will be staged on an existing access road adjacent to the project site.

☐ *Continued on additional page(s)*

13. PERMITS

List any local, state, and federal permits required for the project and check the corresponding box(es). Enclose a copy of each permit that has been issued.

A.	RWQCB, §401	☑ Applied	☐ Issued
B.	U.S. Army Cops of Engineers 404 Nationwide Permit #3	☐ Applied	☑ Issued
C.	USFWS B.O.	☐ Applied	☑ Issued

D. Unknown whether ☐ local, ☑ state, or ☐ federal permit is needed for the project. (*Check each box that applies*)

☐ *Continued on additional page(s)*

14. ENVIRONMENTAL REVIEW

A. Has a draft or final document been prepared for the project pursuant to the California Environmental Quality Act (CEQA), National Environmental Protection Act (NEPA), California Endangered Species Act (CESA) and/or federal Endangered Species Act (ESA)?

☑ Yes (*Check the box for each CEQA, NEPA, CESA, and ESA document that has been prepared and enclose a copy of each*)

☐ No (*Check the box for each CEQA, NEPA, CESA, and ESA document listed below that will be or is being prepared*)

☐ Notice of Exemption	☐ Mitigated Negative Declaration	☐ NEPA document (*type*):
☐ Initial Study	☐ Environmental Impact Report	☐ CESA document (*type*):
☐ Negative Declaration	☐ Notice of Determination *(Enclose)*	☑ ESA document (*type*): B.A,
☐ THP/ NTMP	☐ Mitigation, Monitoring, Reporting Plan	

B. State Clearinghouse Number (*if applicable*)	n/a		
C. Has a CEQA lead agency been determined?	☑ Yes (*Complete boxes D, E, and F*)	☐ No (*Skip to box 14.G*)	
D. CEQA Lead Agency	Caltrans		
E. Contact Person	Valerie Heusinkveld	F. Telephone Number	(510) 286-5594

G. If the project described in this notification is part of a larger project or plan, briefly describe that larger project or plan.

☐ *Continued on additional page(s)*

H. Has an environmental filing fee (Fish and Game Code section 711.4) been paid?

☐ Yes (*Enclose proof of payment*) ☑ No (*Briefly explain below the reason a filing fee has not been paid*)

There is no §711.4 filing fee associated with a CEQA CE

Note: If a filing fee is required, the Department may not finalize a Lake or Streambed Alteration Agreement until the filing fee is paid.

15. SITE INSPECTION

Check one box only.

☑ In the event the Department determines that a site inspection is necessary, I hereby authorize a Department representative to enter the property where the project described in this notification will take place at any reasonable time, and hereby certify that I am authorized to grant the Department such entry.

☐ I request the Department to first contact (*insert name*) _____ at (*insert telephone number*) _____ to schedule a date and time to enter the property where the project described in this notification will take place. I understand that this may delay the Department's determination as to whether a Lake or Streambed Alteration Agreement is required and/or the Department's issuance of a draft agreement pursuant to this notification.

16. DIGITAL FORMAT

Is any of the information included as part of the notification available in digital format (i.e., CD, DVD, etc.)?

☐ Yes (Please enclose the information via digital media with the completed notification form)

☑ No

17. SIGNATURE

I hereby certify that to the best of my knowledge the information in this notification is true and correct and that I am authorized to sign this notification as, or on behalf of, the applicant. I understand that if any information in this notification is found to be untrue or incorrect, the Department may suspend processing this notification or suspend or revoke any draft or final Lake or Streambed Alteration Agreement issued pursuant to this notification. I understand also that if any information in this notification is found to be untrue or incorrect and the project described in this notification has already begun, I and/or the applicant may be subject to civil or criminal prosecution. I understand that this notification applies only to the project(s) described herein and that I and/or the applicant may be subject to civil or criminal prosecution for undertaking any project not described herein unless the Department has been separately notified of that project in accordance with Fish and Game Code section 1602 or 1611.

Signature of Applicant or Applicant's Authorized Representative

Date 4/28/2011

Print Name

DEPARTMENT OF THE ARMY
SAN FRANCISCO DISTRICT, U.S. ARMY CORPS OF ENGINEERS
1455 MARKET STREET
SAN FRANCISCO, CALIFORNIA 94103-1398

NOV 8 2010

Regulatory Division

SUBJECT: File Number 2010-00353N

Mr. Jeffrey G. Jensen
California Department of Transportation
Office of Biological Sciences and Permits
BO Box 23660
Oakland, California 94623-0660

Dear Mr. Jensen:

This letter is written in response to your submittal of October 4, 2010 concerning Department of the Army authorization to proceed with the construction of the Marin 37 Storm Damage Levee Repair Project located in Marin County on State Route 37 on the north side of San Pablo Bay approximately 0.86 mile east of the route 37 junction with U.S. route 101. The project site is immediately east of the Novato Creek levee.

Based on a review of the information you submitted and an inspection of the project site conducted by Corps personnel on October 7, 2010, your project qualifies for authorization under Department of the Army Nationwide Permit 3 – Maintenance (72 Fed. Reg. 11092, March 12, 2007), pursuant to Section 404 of the Clean Water Act (33 U.S.C. Section 1344). See Enclosure 1. All work shall be completed in accordance with the plans and drawings titled "*District 04 Marin County Route 37 Post Miles Total Project 11.7 – 12.2, Construction Details C-1, Drainage Profile DP-1*".

The project must be in compliance with the General Conditions cited in Enclosure 2 for this Nationwide Permit authorization to remain valid. Non-compliance with any condition could result in the suspension, modification or revocation of the authorization for your project, thereby requiring you to obtain an Individual Permit from the Corps. This Nationwide Permit authorization does not obviate the need to obtain other State or local approvals required by law.

This verification is valid until the NWP is modified, reissued, or revoked. All of the existing NWPs are scheduled to be modified, reissued, or revoked prior to March 18, 2012. It is incumbent upon you to remain informed of changes to the NWPs. We will issue a public notice when the NWPs are reissued. Furthermore, if you commence or are under contract to commence this activity before the date that the relevant nationwide permit is modified or revoked, you will have twelve months from the date of the modification or revocation of the NWP to complete the activity under the present terms and conditions of this nationwide permit. Upon completion of the project and all associated mitigation requirements, you shall sign and return the Certification

of Compliance, Enclosure 3, verifying that you have complied with the terms and conditions of the permit.

This authorization will not be effective until you have obtained a Section 401 water quality certification from the San Francisco Bay Regional Water Quality Control Board (RWQCB). If the RWQCB fails to act on a valid request for certification within two months after receipt of a complete application, the Corps will presume a waiver of water quality certification has been obtained. You shall submit a copy of the certification to the Corps prior to the commencement of work.

To ensure compliance with this Nationwide Permit authorization, the following special conditions shall be implemented:

1. The enclosed U.S. Fish and Wildlife Service (FWS) Consultation Letter dated September 24, 2010 contains 26 avoidance measures which Caltrans has agreed to implement during the construction of this project. With the implementation of these 26 avoidance measures and the information provided to FWS in the Biological Assessment (BA) provided by Caltrans, FWS has determined that the proposed action is not likely to adversely affect the salt marsh harvest mouse or California clapper rail. Your authorization under this Corps permit is conditional upon your compliance with all 26 of the mandatory avoidance measures whose terms and conditions are incorporated by reference in this permit. Failure to implement the 26 avoidance measures constitutes non-compliance with this Corps permit. The FWS is the appropriate authority to determine compliance with the terms and conditions of its consultation with Caltrans.

2. The drainage pattern of the wetland shown on the Preliminary Delineation Map as wetland No. 1 must be restored back to its existing conditions. If the site needs to be elevated to compensate for a new vertical alignment of the culvert, Caltrans will first remove the topsoil of the wetland and stockpile it on site and use the original top soil on the surface when the wetland site is re-contoured. When contouring is completed, use BMP erosion controls on the site.

3 Use ESA fencing on the Novato River levee road between the edge of the road and the Novato River Marsh and between the approach road to the levee and wetland No. 2 which is shown on the enclosed Preliminary Delineation Map. The location for the ESA fencing at these locations runs along the same line that represents the project boundary limits on the enclosed Preliminary Delineation Map.

Should you have any questions regarding this matter, please call Hal Durio of our Regulatory Division at 415 503 6785. Please address all correspondence to the Regulatory Division and refer to the File Number at the head of this letter. If you would like to provide comments on our permit review process, please complete the Customer Survey Form available online at http://per2.nwp.usace.army.mil/survey.html.

Sincerely,

Jane M. Hicks
Chief, Regulatory Division

Enclosures

Copy furnished:

Map of Wetlands and Waters of the US in the Area of State Route 37 Storm Damage Levee Repair Project

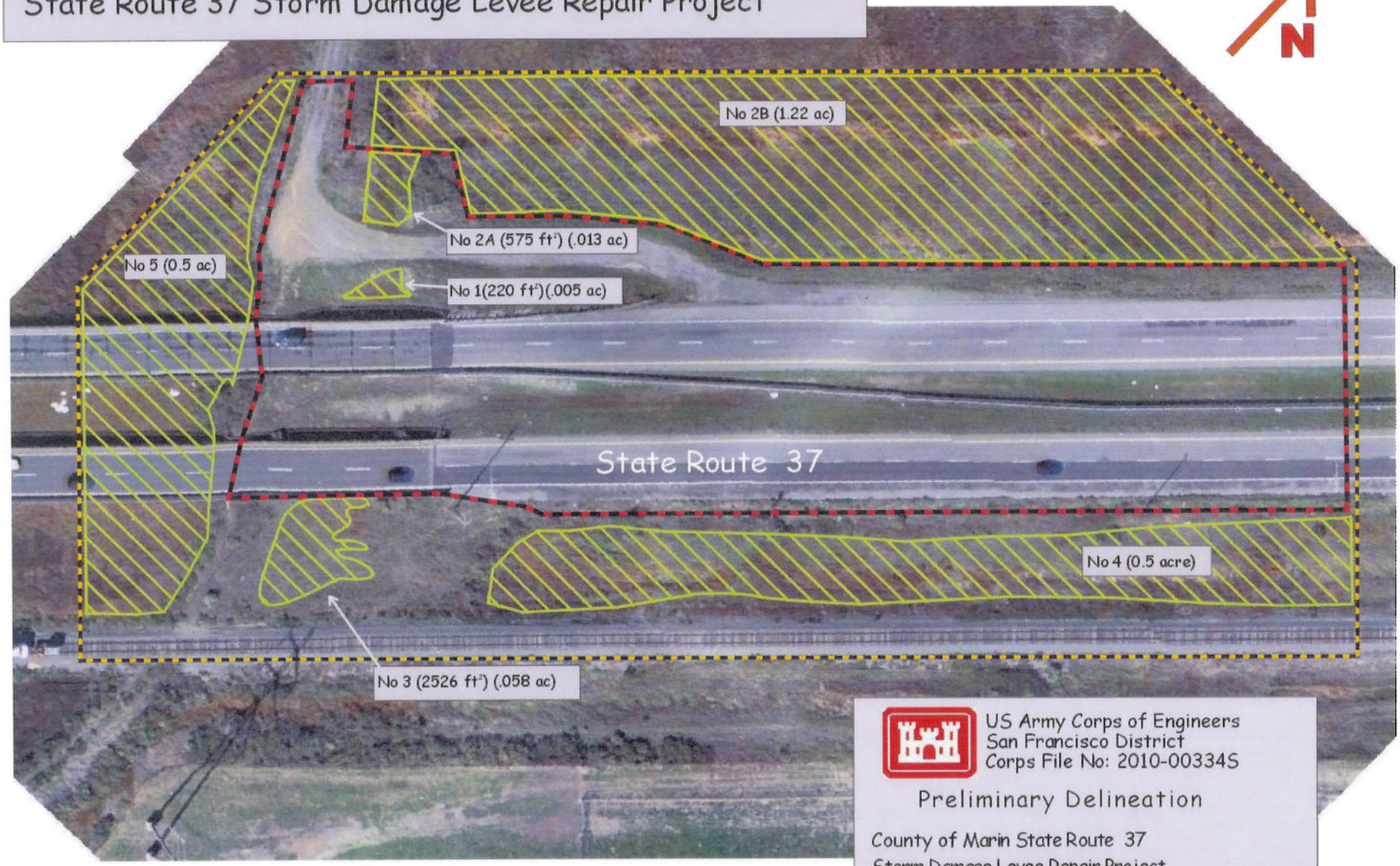

Project Boundary Limits

Project Study Limits

US Army Corps of Engineers
San Francisco District
Corps File No: 2010-00334S

Preliminary Delineation

County of Marin State Route 37
Storm Damage Levee Repair Project
California Department of Transportation
Post Miles 11.5 / 12.5 Caltrans EA: 04-3S580_
Date: October 13, 2010 Page 1 of 1

H. Durio

3. *Maintenance*.

(a) The repair, rehabilitation, or replacement of any previously authorized, currently serviceable, structure, or fill, or of any currently serviceable structure or fill authorized by 33 CFR 330.3, provided that the structure or fill is not to be put to uses differing from those uses specified or contemplated for it in the original permit or the most recently authorized modification. Minor deviations in the structure's configuration or filled area, including those due to changes in materials, construction techniques, or current construction codes or safety standards that are necessary to make the repair, rehabilitation, or replacement are authorized. This NWP authorizes the repair, rehabilitation, or replacement of those structures or fills destroyed or damaged by storms, floods, fire or other discrete events, provided the repair, rehabilitation, or replacement is commenced, or is under contract to commence, within two years of the date of their destruction or damage. In cases of catastrophic events, such as hurricanes or tornadoes, this two-year limit may be waived by the district engineer, provided the permittee can demonstrate funding, contract, or other similar delays.

(b) This NWP also authorizes the removal of accumulated sediments and debris in the vicinity of and within existing structures (e.g., bridges, culverted road crossings, water intake structures, etc.) and the placement of new or additional riprap to protect the structure. The removal of sediment is limited to the minimum necessary to restore the waterway in the immediate vicinity of the structure to the approximate dimensions that existed when the structure was built, but cannot extend further than 200 feet in any direction from the structure. This 200 foot limit does not apply to maintenance dredging to remove accumulated sediments blocking or restricting outfall and intake structures or to maintenance dredging to remove accumulated sediments from canals associated with outfall and intake structures. All dredged or excavated materials must be deposited and retained in an upland area unless otherwise specifically approved by the district engineer under separate authorization. The placement of riprap must be the minimum necessary to protect the structure or to ensure the safety of the structure. Any bank stabilization measures not directly associated with the structure will require a separate authorization from the district engineer.

(c) This NWP also authorizes temporary structures, fills, and work necessary to conduct the maintenance activity. Appropriate measures must be taken to maintain normal downstream flows and minimize flooding to the maximum extent practicable, when temporary structures, work, and discharges, including cofferdams, are necessary for construction activities, access fills, or dewatering of construction sites. Temporary fills must consist of materials, and be placed in a manner, that will not be eroded by expected high flows. Temporary fills must be removed in their entirety and the affected areas returned to preconstruction elevations. The areas affected by temporary fills must be revegetated, as appropriate.

(d) This NWP does not authorize maintenance dredging for the primary purpose of navigation or beach restoration. This NWP does not authorize new stream channelization or stream relocation projects.

Notification: For activities authorized by paragraph (b) of this NWP, the permittee must submit a preconstruction notification to the district engineer prior to commencing the activity (see general condition 27). Where maintenance dredging is proposed, the pre-construction notification must

include information regarding the original design capacities and configurations of the outfalls, intakes, small impoundments, and canals. (Sections 10 and 404)

Note: This NWP authorizes the repair, rehabilitation, or replacement of any previously authorized structure or fill that does not qualify for the Clean Water Act Section 404(f) exemption for maintenance.

Note: To qualify for NWP authorization, the prospective permittee must comply with the following general conditions, as appropriate, in addition to any regional or case-specific conditions imposed by the division engineer or district engineer. Prospective permittees should contact the appropriate Corps district office to determine if regional conditions have been imposed on an NWP. Prospective permittees should also contact the appropriate Corps district office to determine the status of Clean Water Act Section 401 water quality certification and/ or Coastal Zone Management Act consistency for an NWP.

1. *Navigation.* (a) No activity may cause more than a minimal adverse effect on navigation.
(b) Any safety lights and signals prescribed by the U.S. Coast Guard, through regulations or otherwise, must be installed and maintained at the permittee's expense on authorized facilities in navigable waters of the United States.
(c) The permittee understands and agrees that, if future operations by the United States require the removal, relocation, or other alteration, of the structure or work herein authorized, or if, in the opinion of the Secretary of the Army or his authorized representative, said structure or work shall cause unreasonable obstruction to the free navigation of the navigable waters, the permittee will be required, upon due notice from the Corps of Engineers, to remove, relocate, or alter the structural work or obstructions caused thereby, without expense to the United States. No claim shall be made against the United States on account of any such removal or alteration.

2. *Aquatic Life Movements.* No activity may substantially disrupt the necessary life cycle movements of those species of aquatic life indigenous to the waterbody, including those species that normally migrate through the area, unless the activity's primary purpose is to impound water. Culverts placed in streams must be installed to maintain low flow conditions.

3. *Spawning Areas.* Activities in spawning areas during spawning seasons must be avoided to the maximum extent practicable. Activities that result in the physical destruction (e.g., through excavation, fill, or downstream smothering by substantial turbidity) of an important spawning area are not authorized.

4. *Migratory Bird Breeding Areas.* Activities in waters of the United States that serve as breeding areas for migratory birds must be avoided to the maximum extent practicable.

5. *Shellfish Beds.* No activity may occur in areas of concentrated shellfish populations, unless the activity is directly related to a shellfish harvesting activity authorized by NWPs 4 and 48.

6. *Suitable Material.* No activity may use unsuitable material (e.g., trash, debris, car bodies, asphalt, etc.). Material used for construction or discharged must be free from toxic pollutants in toxic amounts (see Section 307 of the Clean Water Act).

7. *Water Supply Intakes.* No activity may occur in the proximity of a public water supply intake, except where the activity is for the repair or improvement of public water supply intake structures or adjacent bank stabilization.

8. *Adverse Effects From Impoundments.* If the activity creates an impoundment of water, adverse effects to the aquatic system due to accelerating the passage of water, and/or restricting its flow must be minimized to the maximum extent practicable.

9. *Management of Water Flows.* To the maximum extent practicable, the preconstruction course, condition, capacity, and location of open waters must be maintained for each activity, including stream channelization and storm water management activities, except as provided below. The activity must be constructed to withstand expected high flows. The activity must not restrict or impede the passage of normal or high flows, unless the primary purpose of the activity is to impound water or manage high flows. The activity may alter the preconstruction course, condition, capacity, and location of open waters if it benefits the aquatic environment (e.g., stream restoration or relocation activities).

10. *Fills Within 100-Year Floodplains.* The activity must comply with applicable FEMA-approved state or local floodplain management requirements.

11. *Equipment.* Heavy equipment working in wetlands or mudflats must be placed on mats, or other measures must be taken to minimize soil disturbance.

12. *Soil Erosion and Sediment Controls.* Appropriate soil erosion and sediment controls must be used and maintained in effective operating condition during construction, and all exposed soil and other fills, as well as any work below the ordinary high water mark or high tide line, must be permanently stabilized at the earliest practicable date. Permittees are encouraged to perform work within waters of the United States during periods of low-flow or no-flow.

13. *Removal of Temporary Fills.* Temporary fills must be removed in their entirety and the affected areas returned to pre-construction elevations. The affected areas must be revegetated, as appropriate.

14. *Proper Maintenance.* Any authorized structure or fill shall be properly maintained, including maintenance to ensure public safety.

15. *Wild and Scenic Rivers.* No activity may occur in a component of the National Wild and Scenic River System, or in a river officially designated by Congress as a "study river" for possible inclusion in the system while the river is in an official study status, unless the appropriate Federal agency with direct management responsibility for such river, has determined in writing that the proposed activity will not adversely affect the Wild and Scenic River designation or study status. Information on Wild and Scenic Rivers may be obtained from the appropriate Federal land management agency in the area (e.g., National Park Service, U.S. Forest Service, Bureau of Land Management, U.S. Fish and Wildlife Service).

16. *Tribal Rights.* No activity or its operation may impair reserved tribal

rights, including, but not limited to, reserved water rights and treaty fishing and hunting rights.

17. *Endangered Species.* (a) No activity is authorized under any NWP which is likely to jeopardize the continued existence of a threatened or endangered species or a species proposed for such designation, as identified under the Federal Endangered Species Act (ESA), or which will destroy or adversely modify the critical habitat of such species. No activity is authorized under any NWP which ''may affect'' a listed species or critical habitat, unless Section 7 consultation addressing the effects of the proposed activity has been completed.
(b) Federal agencies should follow their own procedures for complying with the requirements of the ESA. Federal permittees must provide the district engineer with the appropriate documentation to demonstrate compliance with those requirements.
(c) Non-federal permittees shall notify the district engineer if any listed species or designated critical habitat might be affected or is in the vicinity of the project, or if the project is located in designated critical habitat, and shall not begin work on the activity until notified by the district engineer that the requirements of the ESA have been satisfied and that the activity is authorized. For activities that might affect Federally-listed endangered or threatened species or designated critical habitat, the pre-construction notification must include the name(s) of the endangered or threatened species that may be affected by the proposed work or that utilize the designated critical habitat that may be affected by the proposed work. The district engineer will determine whether the proposed activity ''may affect'' or will have ''no effect'' to listed species and designated critical habitat and will notify the non-Federal applicant of the Corps' determination within 45 days of receipt of a complete pre-construction notification. In cases where the non-Federal applicant has identified listed species or critical habitat that might be affected or is in the vicinity of the project, and has so notified the Corps, the applicant shall not begin work until the Corps has provided notification the proposed activities will have ''no effect'' on listed species or critical habitat, or until Section 7 consultation has been completed.
(d) As a result of formal or informal consultation with the FWS or NMFS the district engineer may add speciesspecific regional endangered species conditions to the NWPs.
(e) Authorization of an activity by a NWP does not authorize the ''take'' of a threatened or endangered species as defined under the ESA. In the absence of separate authorization (e.g., an ESA Section 10 Permit, a Biological Opinion with ''incidental take'' provisions, etc.) from the U.S. FWS or the NMFS, both lethal and non-lethal ''takes'' of protected species are in violation of the ESA. Information on the location of threatened and endangered species and their critical habitat can be obtained directly from the offices of the U.S. FWS and NMFS or their world wide Web pages at *http://www.fws.gov/* and *http://www.noaa.gov/fisheries.html* respectively.

18. *Historic Properties.* (a) In cases where the district engineer determines that the activity may affect properties listed, or eligible for listing, in the National Register of Historic Places, the activity is not authorized, until the requirements of Section 106 of the National Historic Preservation Act (NHPA) have been satisfied.
(b) Federal permittees should follow their own procedures for complying with the requirements of Section 106 of the National Historic Preservation Act. Federal permittees must provide the district engineer with the appropriate documentation to demonstrate compliance with those requirements.
(c) Non-federal permittees must submit a pre-construction notification to the district engineer if the authorized activity may have the potential to cause effects to any historic properties listed, determined to be eligible for listing on, or potentially eligible for listing on the National Register of Historic Places, including previously unidentified properties. For such activities, the preconstruction notification must state which historic properties may be affected by the proposed work or include a vicinity map indicating the location of the historic properties or the potential for the presence of historic properties. Assistance regarding information on the location of or potential for the presence of historic resources can be sought from the State Historic Preservation Officer or Tribal Historic Preservation Officer, as appropriate, and the National Register of Historic Places (see 33 CFR 330.4(g)). The district engineer shall make a reasonable and good faith effort to carry out appropriate identification efforts, which may include background research, consultation, oral history interviews, sample field investigation, and field survey. Based on the information submitted and these efforts, the district engineer shall determine whether the proposed activity has the potential to cause an effect on the historic properties. Where the non-Federal applicant has identified historic properties which the activity may have the potential to cause effects and so notified the Corps, the non-Federal applicant shall not begin the activity until notified by the district engineer either that the activity has no potential to cause effects or that consultation under Section 106 of the NHPA has been completed.
(d) The district engineer will notify the prospective permittee within 45 days of receipt of a complete preconstruction notification whether NHPA Section 106 consultation is required. Section 106 consultation is not required when the Corps determines that the activity does not have the potential to cause effects on historic properties (see 36 CFR 800.3(a)). If NHPA section 106 consultation is required and will occur, the district engineer will notify the non-Federal applicant that he or she cannot begin work until Section 106 consultation is completed.
(e) Prospective permittees should be aware that section 110k of the NHPA (16 U.S.C. 470h–2(k)) prevents the Corps from granting a permit or other assistance to an applicant who, with intent to avoid the requirements of Section 106 of the NHPA, has intentionally significantly adversely affected a historic property to which the permit would relate, or having legal power to prevent it, allowed such significant adverse effect to occur, unless the Corps, after consultation with the Advisory Council on Historic Preservation (ACHP), determines that circumstances justify granting such assistance despite the adverse effect created or permitted by the applicant. If

circumstances justify granting the assistance, the Corps is required to notify the ACHP and provide documentation specifying the circumstances, explaining the degree of damage to the integrity of any historic properties affected, and proposed mitigation. This documentation must include any views obtained from the applicant, SHPO/THPO, appropriate Indian tribes if the undertaking occurs on or affects historic properties on tribal lands or affects properties of interest to those tribes, and other parties known to have a legitimate interest in the impacts to the permitted activity on historic properties.

19. *Designated Critical Resource Waters.* Critical resource waters include, NOAA-designated marine sanctuaries, National Estuarine Research Reserves, state natural heritage sites, and outstanding national resource waters or other waters officially designated by a state as having particular environmental or ecological significance and identified by the district engineer after notice and opportunity for public comment. The district engineer may also designate additional critical resource waters after notice and opportunity for comment.
(a) Discharges of dredged or fill material into waters of the United States are not authorized by NWPs 7, 12, 14, 16, 17, 21, 29, 31, 35, 39, 40, 42, 43, 44, 49, and 50 for any activity within, or directly affecting, critical resource waters, including wetlands adjacent to such waters.
(b) For NWPs 3, 8, 10, 13, 15, 18, 19, 22, 23, 25, 27, 28, 30, 33, 34, 36, 37, and 38, notification is required in accordance with general condition 27, for any activity proposed in the designated critical resource waters including wetlands adjacent to those waters. The district engineer may authorize activities under these NWPs only after it is determined that the impacts to the critical resource waters will be no more than minimal.

20. *Mitigation.* The district engineer will consider the following factors when determining appropriate and practicable mitigation necessary to ensure that adverse effects on the aquatic environment are minimal:
(a) The activity must be designed and constructed to avoid and minimize adverse effects, both temporary and permanent, to waters of the United States to the maximum extent practicable at the project site (i.e., on site).
(b) Mitigation in all its forms (avoiding, minimizing, rectifying, reducing, or compensating) will be required to the extent necessary to ensure that the adverse effects to the aquatic environment are minimal.
(c) Compensatory mitigation at a minimum one-for-one ratio will be required for all wetland losses that exceed 1/10 acre and require preconstruction notification, unless the district engineer determines in writing that some other form of mitigation would be more environmentally appropriate and provides a projectspecific waiver of this requirement. For wetland losses of 1/10 acre or less that require pre-construction notification, the district engineer may determine on a case-by-case basis that compensatory mitigation is required to ensure that the activity results in minimal adverse effects on the aquatic environment. Since the likelihood of success is greater and the impacts to potentially valuable uplands are reduced, wetland restoration should be the first compensatory mitigation option considered.
(d) For losses of streams or other open waters that require pre-construction notification, the district engineer may require compensatory mitigation, such as stream restoration, to ensure that the activity results in minimal adverse effects on the aquatic environment.
(e) Compensatory mitigation will not be used to increase the acreage losses allowed by the acreage limits of the NWPs. For example, if an NWP has an acreage limit of 1/2 acre, it cannot be used to authorize any project resulting in the loss of greater than 1/2 acre of waters of the United States, even if compensatory mitigation is provided that replaces or restores some of the lost waters. However, compensatory mitigation can and should be used, as necessary, to ensure that a project already meeting the established acreage limits also satisfies the minimal impact requirement associated with the NWPs.
(f) Compensatory mitigation plans for projects in or near streams or other open waters will normally include a requirement for the establishment, maintenance, and legal protection (e.g., conservation easements) of riparian areas next to open waters. In some cases, riparian areas may be the only compensatory mitigation required. Riparian areas should consist of native species. The width of the required riparian area will address documented water quality or aquatic habitat loss concerns. Normally, the riparian area will be 25 to 50 feet wide on each side of the stream, but the district engineer may require slightly wider riparian areas to address documented water quality or habitat loss concerns. Where both wetlands and open waters exist on the project site, the district engineer will determine the appropriate compensatory mitigation (e.g., riparian areas and/or wetlands compensation) based on what is best for the aquatic environment on a watershed basis. In cases where riparian areas are determined to be the most appropriate form of compensatory mitigation, the district engineer may waive or reduce the requirement to provide wetland compensatory mitigation for wetland losses.
(g) Permittees may propose the use of mitigation banks, in-lieu fee arrangements or separate activityspecific compensatory mitigation. In all cases, the mitigation provisions will specify the party responsible for accomplishing and/or complying with the mitigation plan.
(h) Where certain functions and services of waters of the United States are permanently adversely affected, such as the conversion of a forested or scrub-shrub wetland to a herbaceous wetland in a permanently maintained utility line right-of-way, mitigation may be required to reduce the adverse effects of the project to the minimal level.

21. *Water Quality.* Where States and authorized Tribes, or EPA where applicable, have not previously certified compliance of an NWP with CWA Section 401, individual 401 Water Quality Certification must be obtained or waived (see 33 CFR 330.4(c)). The district engineer or State or Tribe may require additional water quality management measures to ensure that the authorized activity does not result in more than minimal degradation of water quality.

22. *Coastal Zone Management.* In coastal states where an NWP has not previously received a state coastal zone

management consistency concurrence, an individual state coastal zone management consistency concurrence must be obtained, or a presumption of concurrence must occur (see 33 CFR 330.4(d)). The district engineer or a State may require additional measures to ensure that the authorized activity is consistent with state coastal zone management requirements.

23. *Regional and Case-By-Case* ***Conditions.*** The activity must comply with any regional conditions that may have been added by the Division Engineer (see 33 CFR 330.4(e)) and with any case specific conditions added by the Corps or by the state, Indian Tribe, or U.S. EPA in its section 401 Water Quality Certification, or by the state in its Coastal Zone Management Act consistency determination.

24. *Use of Multiple Nationwide Permits.* The use of more than one NWP for a single and complete project is prohibited, except when the acreage loss of waters of the United States authorized by the NWPs does not exceed the acreage limit of the NWP with the highest specified acreage limit. For example, if a road crossing over tidal waters is constructed under NWP 14, with associated bank stabilization authorized by NWP 13, the maximum acreage loss of waters of the United States for the total project cannot exceed ⅓-acre.

25. *Transfer of Nationwide Permit Verifications.* If the permittee sells the property associated with a nationwide permit verification, the permittee may transfer the nationwide permit verification to the new owner by submitting a letter to the appropriate Corps district office to validate the transfer. A copy of the nationwide permit verification must be attached to the letter, and the letter must contain the following statement and signature: "When the structures or work authorized by this nationwide permit are still in existence at the time the property is transferred, the terms and conditions of this nationwide permit, including any special conditions, will continue to be binding on the new owner(s) of the property. To validate the transfer of this nationwide permit and the associated liabilities associated with compliance with its terms and conditions, have the transferee sign and date below."

(Transferee)_____
(Date) _____

26. *Compliance Certification.* Each permittee who received an NWP verification from the Corps must submit a signed certification regarding the completed work and any required mitigation. The certification form must be forwarded by the Corps with the NWP verification letter and will include:
(a) A statement that the authorized work was done in accordance with the NWP authorization, including any general or specific conditions;
(b) A statement that any required mitigation was completed in accordance with the permit conditions; and
(c) The signature of the permittee certifying the completion of the work and mitigation.

27. *Pre-Construction Notification.* (a) *Timing.* Where required by the terms of the NWP, the prospective permittee must notify the district engineer by submitting a pre-construction notification (PCN) as early as possible. The district engineer must determine if the PCN is complete within 30 calendar days of the date of receipt and, as a general rule, will request additional information necessary to make the PCN complete only once. However, if the prospective permittee does not provide all of the requested information, then the district engineer will notify the prospective permittee that the PCN is still incomplete and the PCN review process will not commence until all of the requested information has been received by the district engineer. The prospective permittee shall not begin the activity:
(1) Until notified in writing by the district engineer that the activity may proceed under the NWP with any special conditions imposed by the district or division engineer; or
(2) If 45 calendar days have passed from the district engineer's receipt of the complete PCN and the prospective permittee has not received written notice from the district or division engineer. However, if the permittee was required to notify the Corps pursuant to general condition 17 that listed species or critical habitat might be affected or in the vicinity of the project, or to notify the Corps pursuant to general condition 18 that the activity may have the potential to cause effects to historic properties, the permittee cannot begin the activity until receiving written notification from the Corps that is "no effect" on listed species or "no potential to cause effects" on historic properties, or that any consultation required under Section 7 of the Endangered Species Act (see 33 CFR 330.4(f)) and/or Section 106 of the National Historic Preservation (see 33 CFR 330.4(g)) is completed. Also, work cannot begin under NWPs 21, 49, or 50 until the permittee has received written approval from the Corps. If the proposed activity requires a written waiver to exceed specified limits of an NWP, the permittee cannot begin the activity until the district engineer issues the waiver. If the district or division engineer notifies the permittee in writing that an individual permit is required within 45 calendar days of receipt of a complete PCN, the permittee cannot begin the activity until an individual permit has been obtained. Subsequently, the permittee's right to proceed under the NWP may be modified, suspended, or revoked only in accordance with the procedure set forth in 33 CFR 330.5(d)(2).
(b) *Contents of Pre-Construction Notification:* The PCN must be in writing and include the following information:
(1) Name, address and telephone numbers of the prospective permittee;
(2) Location of the proposed project;
(3) A description of the proposed project; the project's purpose; direct and indirect adverse environmental effects the project would cause; any other NWP(s), regional general permit(s), or individual permit(s) used or intended to be used to authorize any part of the proposed project or any related activity. The description should be sufficiently detailed to allow the district engineer to determine that the adverse effects of the project will be minimal and to determine the need for compensatory mitigation. Sketches should be provided when necessary to show that the activity complies with the terms of the NWP. (Sketches usually clarify the project and when provided result in a quicker decision.);
(4) The PCN must include a delineation of special aquatic sites and other waters of the United States on the

project site. Wetland delineations must be prepared in accordance with the current method required by the Corps. The permittee may ask the Corps to delineate the special aquatic sites and other waters of the United States, but there may be a delay if the Corps does the delineation, especially if the project site is large or contains many waters of the United States. Furthermore, the 45 day period will not start until the delineation has been submitted to or completed by the Corps, where appropriate;

(5) If the proposed activity will result in the loss of greater than 1/10 acre of wetlands and a PCN is required, the prospective permittee must submit a statement describing how the mitigation requirement will be satisfied. As an alternative, the prospective permittee may submit a conceptual or detailed mitigation plan.

(6) If any listed species or designated critical habitat might be affected or is in the vicinity of the project, or if the project is located in designated critical habitat, for non-Federal applicants the PCN must include the name(s) of those endangered or threatened species that might be affected by the proposed work or utilize the designated critical habitat that may be affected by the proposed work. Federal applicants must provide documentation demonstrating compliance with the Endangered Species Act; and

(7) For an activity that may affect a historic property listed on, determined to be eligible for listing on, or potentially eligible for listing on, the National Register of Historic Places, for non-Federal applicants the PCN must state which historic property may be affected by the proposed work or include a vicinity map indicating the location of the historic property. Federal applicants must provide documentation demonstrating compliance with Section 106 of the National Historic Preservation Act.

(c) *Form of Pre-Construction Notification:* The standard individual permit application form (Form ENG 4345) may be used, but the completed application form must clearly indicate that it is a PCN and must include all of the information required in paragraphs (b)(1) through (7) of this general condition. A letter containing the required information may also be used.

(d) *Agency Coordination:* (1) The district engineer will consider any comments from Federal and state agencies concerning the proposed activity's compliance with the terms and conditions of the NWPs and the need for mitigation to reduce the project's adverse environmental effects to a minimal level.

(2) For all NWP 48 activities requiring pre-construction notification and for other NWP activities requiring preconstruction notification to the district engineer that result in the loss of greater than 1/2-acre of waters of the United States, the district engineer will immediately provide (e.g., via facsimile transmission, overnight mail, or other expeditious manner) a copy of the PCN to the appropriate Federal or state offices (U.S. FWS, state natural resource or water quality agency, EPA, State Historic Preservation Officer (SHPO) or Tribal Historic Preservation Office (THPO), and, if appropriate, the NMFS). With the exception of NWP 37, these agencies will then have 10 calendar days from the date the material is transmitted to telephone or fax the district engineer notice that they intend to provide substantive, site-specific comments. If so contacted by an agency, the district engineer will wait an additional 15 calendar days before making a decision on the preconstruction notification. The district engineer will fully consider agency comments received within the specified time frame, but will provide no response to the resource agency, except as provided below. The district engineer will indicate in the administrative record associated with each preconstruction notification that the resource agencies' concerns were considered. For NWP 37, the emergency watershed protection and rehabilitation activity may proceed immediately in cases where there is an unacceptable hazard to life or a significant loss of property or economic hardship will occur. The district engineer will consider any comments received to decide whether the NWP 37 authorization should be modified, suspended, or revoked in accordance with the procedures at 33 CFR 330.5.

(3) In cases of where the prospective permittee is not a Federal agency, the district engineer will provide a response to NMFS within 30 calendar days of receipt of any Essential Fish Habitat conservation recommendations, as required by Section 305(b)(4)(B) of the Magnuson-Stevens Fishery Conservation and Management Act.

(4) Applicants are encouraged to provide the Corps multiple copies of pre-construction notifications to expedite agency coordination.

(5) For NWP 48 activities that require reporting, the district engineer will provide a copy of each report within 10 calendar days of receipt to the appropriate regional office of the NMFS.

(e) *District Engineer's Decision:* In reviewing the PCN for the proposed activity, the district engineer will determine whether the activity authorized by the NWP will result in more than minimal individual or cumulative adverse environmental effects or may be contrary to the public interest. If the proposed activity requires a PCN and will result in a loss of greater than 1/10 acre of wetlands, the prospective permittee should submit a mitigation proposal with the PCN. Applicants may also propose compensatory mitigation for projects with smaller impacts. The district engineer will consider any proposed compensatory mitigation the applicant has included in the proposal in determining whether the net adverse environmental effects to the aquatic environment of the proposed work are minimal. The compensatory mitigation proposal may be either conceptual or detailed. If the district engineer determines that the activity complies with the terms and conditions of the NWP and that the adverse effects on the aquatic environment are minimal, after considering mitigation, the district engineer will notify the permittee and include any conditions the district engineer deems necessary. The district engineer must approve any compensatory mitigation proposal before the permittee commences work. If the prospective permittee elects to submit a compensatory mitigation plan with the PCN, the district engineer will expeditiously review the proposed compensatory mitigation plan. The district engineer must review the plan within 45 calendar days of receiving a complete PCN and determine whether the proposed mitigation would ensure no more than minimal adverse effects on the aquatic environment. If the net adverse effects of the project on the aquatic environment (after

consideration of the compensatory mitigation proposal) are determined by the district engineer to be minimal, the district engineer will provide a timely written response to the applicant. The response will state that the project can proceed under the terms and conditions of the NWP.

If the district engineer determines that the adverse effects of the proposed work are more than minimal, then the district engineer will notify the applicant either: (1) That the project does not qualify for authorization under the NWP and instruct the applicant on the procedures to seek authorization under an individual permit; (2) that the project is authorized under the NWP subject to the applicant's submission of a mitigation plan that would reduce the adverse effects on the aquatic environment to the minimal level; or (3) that the project is authorized under the NWP with specific modifications or conditions. Where the district engineer determines that mitigation is required to ensure no more than minimal adverse effects occur to the aquatic environment, the activity will be authorized within the 45-day PCN period. The authorization will include the necessary conceptual or specific mitigation or a requirement that the applicant submit a mitigation plan that would reduce the adverse effects on the aquatic environment to the minimal level. When mitigation is required, no work in waters of the United States may occur until the district engineer has approved a specific mitigation plan.

28. *Single and Complete Project.* The activity must be a single and complete project. The same NWP cannot be used more than once for the same single and complete project.

Making San Francisco Bay Better

PERMIT NO. M87-42
(Issued on August 12, 1987, As
Amended Through July 29, 2004)
AMENDMENT NO. THREE

California Department of Transportation
P.O. Box 23660
Oakland, California 94623-0660

ATTENTION: Ms. Susan Chang

Ladies and Gentlemen:

I. Authorization

A. Subject to the conditions stated below, the permittee, the California Department of Transportation, is hereby authorized to do the following:

Location: Within the Commission's "Bay", shoreline band and "certain waterway" jurisdictions, within state highway right-of-ways, in the nine Bay Area Counties at various tunnels, docks, tidal waterways, and at all existing, state-maintained highway bridges including, but not limited to, the San Francisco-Oakland Bay, Benicia-Martinez, Carquinez, Dumbarton, Richmond-San Rafael, Bay Farm Island, San Mateo-Hayward, Highway 37-Petaluma River, Highway 37-Sonoma Creek and Highway 37-Napa River Bridges.

Description: A ten-year maintenance permit to:

(1) repair and replace bridge fenders on a one-for-one basis;

(2) replace riprap on an in-kind basis with no overall increase in the amount of Bay coverage, a maximum Bay coverage of 10,000 square feet at any given repair or new riprap site, and no substantial increase in revetment thickness, at the base of bridge supports to protect the integrity of the supports and for shoreline protection along existing banks;

(~~4~~3) dredge up to 100,000 cubic yards of material from the Bay within any 12-month period for the purpose of maintaining tunnels under the Bay, ~~docks, and tidal creeks~~ and dispose of the material at an approved in-Bay disposal site, an approved ocean disposal site, or at an upland location outside of the Commission's jurisdiction;

(4) remove silt and debris from existing drainage facilities such as box culverts, drains, ditches, pipes, dikes and outfalls and dispose of excavated material at an upland location outside of the Commission's jurisdiction;

(5) repair and maintain existing levees and dikes by importing material or by dredging from areas inland of the levee or dike and placing the material in a manner that does not involve new fill in the Bay;

(6) repair and replace existing drainage culverts, tide control structures, tide gates and retaining walls on an in-kind basis at their existing locations with no overall increase in Bay fill;

(7) conduct routine maintenance, repairs, reconstruction and replacement activities to structural and related elements including trusses, stringers, floor beams, strands, suspension cable systems, surfaces, expansion joints, girders, bearing systems, piles and boat docks;

~~(3)~~ (8) resurface, repair and replace pavement surfaces on existing roads, bridge decks, multi-use paths, bicycle lanes, sidewalks and other public service facilities (e.g., vista points and roadside rest areas) so long as the areas of the paved surfaces are not increased;

(9) repair and replace existing traffic control and traffic safety devices such as fences, gates, railings, barriers, traffic stripes, pavement markings, pavement markers, flashing beacons, signals, lighting and electrical systems, retaining walls, curbs, public service facilities, (such as vista points and roadside rests) and power, lighting, and irrigation facilities;

(10) install, repair, and replace various regulatory, warning and roadway informational signs;

(11) install bridge security devices limited to cameras, surveillance equipment, sensors, software and hardware updating requirements;

(12) maintain, in-kind, existing bridge security devices such as fencing, electronic gates, electrified fencing and signs;

(13) maintain and repair existing operational and maintenance facilities such as buildings, toll booths, vehicle wash racks, fueling facilities, parking lots, service roads, maintenance catwalks, traveler scaffolding, utility lines and related facilities with no overall increase in size or intensity of use;

(14) maintain and repair existing electrical facilities, substations, Supervisory Control and Data Acquisition (SCADA) systems, and traffic management devices, e.g., cameras sensors, metering, call boxes, electronic message signs, installation of FastTrak (electronic toll collection system) with no overall increase in size of intensity of use; and

(15) maintain and replace existing erosion control and highway plantings including irrigation facilities with like plantings, erosion control devices and irrigation.

B. This authority is generally pursuant to and limited by your original application received May 21, 1987, your letter requesting Amendment No. One dated September 15, 1998, your letter requesting Amendment No. Two dated May 4, 1998, and your letters dated January 3, 2003, and August 21, 2003, requesting Amendment No. Three and ~~its~~ any accompanying and subsequently submitted exhibits, and all conditions of this amended permit.

C. Work authorized in the original permit was to ~~herein may~~ be carried out until August 1, 1997 at which time the permit ~~shall~~ was to expire unless an extension of time was granted by further amendment of the original authorization. Amendment No. One authorized an extension of time to conduct the activities authorized herein until September 19, 1999. Amendment No. Two authorized an extension of time to conduct the activities authorized herein until August 1, 2007. Amendment No. Three authorizes an extension of time to conduct the activities authorized herein until December 31, 2013 and incorporates two other Caltrans maintenance permits (M76-37 and M87-41) into this permit. This amended permit may be renewed for successive ~~ten~~ five year periods at the discretion and by or on behalf of the Commission.

II. Special Conditions

The authorization made herein shall be subject to the following special conditions, in addition to the standard conditions in Part IV:

A. Riprap

1. **Riprap Material.** Riprap material shall be either quarry rock or specially cast or carefully selected concrete pieces free of reinforcing steel and other extraneous material and conforming to quality requirements for specific gravity, absorption, and durability specified by the California Department of Transportation or the U. S. Army Corps of Engineers. The material shall be generally spheroid-shaped. The overall thickness of the slope protection shall be no more than three feet measured perpendicular to the slope. Use of dirt, small concrete rubble, concrete pieces with exposed rebar, large and odd shaped pieces of concrete, and asphalt concrete as riprap is prohibited.

2. **Riprap Placement.** Riprap material shall be placed so that a permanent shoreline with a minimum amount of fill is established by means of an engineered slope. The slope shall be created by the placement of a filter layer protected by riprap material of sufficient size to withstand wind and wave generated forces at the site.

3. **Design.** Professionals knowledgeable of the Commission's concerns, such as civil engineers experienced in coastal processes, should participate in the design of the shoreline protection improvements authorized herein.

4. **Maximum Covered Area.** At any given revetment repair or new installation site, repairs and new work shall cover less than 10,000 square feet of the horizontal projection of the work below the shoreline.

5. **Annual Rip Rap Report.** The permittee shall submit a report to the Commission by March 1 of each year that this permit is in effect, summarizing the amounts, in cubic yards, and locations of rip rap placed within the Commission's jurisdiction during the previous calendar year. The report shall include a drawing or map showing the locations of rip rap placed and the locations where the riprap was placed. A drawing or map showing the locations shall be included in the report. The report shall also describe the rip rap work proposed for the current calendar year. Within 30 days of the date BCDC receives the annual report, BCDC shall notify the permittee of any proposed work that does not conform to the intent or terms and conditions of this permit. Such notification shall constitute denial of the proposed work. A separate BCDC application may be made for any such denied work.

6. **Maintenance.** The shoreline protection improvements authorized herein shall be regularly maintained by, and at the expense of the permittee. Maintenance shall include, but not be limited to, collecting any riprap materials that become dislodged and repositioning them in appropriate locations within the riprap covered areas, replacing in-kind riprap material that is lost, repairing the required filter fabric as needed, and removing debris that collects on top of the riprap. Within 30 days after notification by the staff of the Commission, the permittee shall correct any maintenance deficiency noted by the staff.

~~D.~~ B. **Dredging.** ~~Dredge material shall be disposed of at a Corps of Engineers approved site in the Bay or at an upland location outside of the Commission's jurisdiction.~~ For the following dredging activities located within the Commission's Bay (including tidal marshes up to 5 feet above mean seal level) and certain waterway jurisdiction(s) including but not limited to activities involving removal of silt and debris from existing drainage facilities such as box culverts, drains and outfalls, the permittee shall comply with the following:

1. For dredging activities that involve the removal of less than twenty cubic yards of material:

   a. **Removal Activities and Disposal.** All dredging, excavation and/or removal activities shall be conducted in a manner that minimizes the resuspension of sediments and release of material into adjacent Bay waters and/or tidal marshes. All material removed from the Commission's jurisdiction shall be tested and disposed of at an appropriate facility located outside of the Commission's jurisdiction.

2. For dredging activities that involve the removal of over twenty cubic yards of material:

   a. **Water Quality Approvals.** At least 45 days prior to the commencement of any dredging episode authorized herein, the permittee shall submit to the Executive Director water quality certification, waste discharge requirement, or any other required approvals from the California Regional Water Quality Control Board, San Francisco Bay Region, for that episode. Failure to obtain such certification prior to the commencement of the dredging episode shall terminate the Commission's authorization for that dredging episode. The Executive Director may, upon review of the Regional Board approval, either: (1) approve the dredging episode(s) consistent with this authorization, or (2) amend the Commission approval to modify existing or include additional conditions related to water quality. If the Executive Director amends the permit to change or add permit conditions, this permit shall become null and void unless the permittee agrees to amend this authorization in a manner specified by or on behalf of the Commission.

   b. **Dredging Report**

      (1) **Prior Notice of Episode.** The permittee shall notify the staff by telephone or in writing at least seven (7) days prior to undertaking any dredging episode. The permittee shall permit the Commission staff or representatives of other state or federal agencies to come aboard the dredge or barge associated with the dredging or disposal that work has occurred beyond that authorized by the permit, such violation may result in the initiation of enforcement action by or on behalf of the Commission. episode and observe the operation to ensure that the dredging or disposal activity is consistent with the dredging report required herein and the other terms and conditions of this permit.

      (2) **Dredging Report.** Within thirty (30) days of completion of each dredging episode of the dredging authorized by this permit, the permittee shall submit to the Commission a report which contains: (1) a bathymetric map showing (a) the location of all areas authorized to be dredged and the authorized depth based on Mean Lower Low Water (MLLW); and (b) the actual areas, and the depth dredged based on MLLW, and any dredging that occurred outside the area authorized to be dredged or below the authorized depths; (2) a vicinity map showing the disposal site; and (3) the actual volume of the material dredged and disposed. The Commission reserves the right to have such report inspected by a reliable third party familiar with bathymetric mapping in order to verify the contents of the report. If a third party selected by or on behalf of the Commission indicates that the report is inaccurate, the Commission reserves the right to require the permittee to submit a revised report that meets the requirements of this condition. If the Commission determines that the contents of the dredging report indicate

   c. **Seasonal Limitations.** Except as provided below, all dredging and in-bay disposal activities shall be confined to the work windows provided below to minimize disturbance to the following endangered and special status species:

Location	Species of Concern	Work Window Period	Consulting Agency
SF Bay Bridge to Sherman Island	Steelhead trout Chinook salmon juveniles	June 1 through November 30 June 1 through November 30	NOAA & CDFG NOAA
Carquinez Bridge to Collinsville	Sacramento splittail Delta smelt	Consultation required at all times Consultation required at all times	FWS & CDFG FWS & CDFG
Pinole Shoal. Suisun Bay Channel and New York Slough	Chinook salmon (adults)	June 1 through November 30	NOAA
North San Pablo Bay, Napa & Petaluma Rivers	Delta Smelt	January 1 through January 31 and August 1 through November 30	FWS & CDFG
Napa & Petaluma Rivers & Sonoma Creek	Steelhead trout	July 1 through November 30	NOAA & CDFG
San Pablo Bay & South SF Bay	Western snowy plover	Consultation required at all times	FWS & CDFG
North SF Bay & San Pablo Bay shallow berthing areas	Dungeness crab	January 1 through April 30 & July 1 through December 31	CDFG
Richardson Bay, North & South Bay	Pacific herring	March 1 through November 30	CDFG
Waters of Marin County from Golden Gate Bridge to Richmond-San Rafael Bridge	Coho salmon	June 1 through October 15	NOAA
Central SF Bay	Steelhead trout Pacific herring	June 1 through November 30 March 1 through November 30	NOAA & CDFG CDFG
Berkeley Marina to San Lorenzo Creek within 1 mile of the shoreline	California least tern	January 1 through March 15 and August 1 through December 31	FWS & CDFG
South of Highway 92 Bridge (San Mateo-Hayward)	California least tern	January 1 through May 31 and September 1 through December 31	FWS & CDFG
In areas with eelgrass beds	California least tern	Consultation required at all times	FWS & CDFG
Baywide in areas of salt marsh habitat	California clapper rail	Consultation required at all times	FWS & CDFG

Location	Species of Concern	Work Window Period	Consulting Agency
Baywide within 250 feet of salt marsh habitat	California clapper rail	January 1 through January 31 and September 1 through December 31	FWS & CDFG
In and adjacent to salt marsh habitat	Salt marsh harvest mouse	Consultation required at all times	FWS & CDFG
Within 300' of known roost site	California brown pelican	January 1 through May 31 and October 1 through December 31	FWS

CDFG-California Department of Fish and Game; NOAA-NOAA Fisheries, FWS—U.S. Fish and Wildlife Service

These work windows are consistent with Tables F-1 and F-2 of Appendix F, "In-Bay Disposal and Dredging" and Figures 3.2 and 3.3 of the Long-Term Management Strategy (LTMS) Management Plan 2001. No work inconsistent with the time and location limits contained in these tables may be conducted without the approval of the Executive Director, provided that such approval may only be issued after (1) consultation between the US Army Corps of Engineers and the US. Fish and Wildlife Service and/or NOAA Fisheries has occurred; and (2) the Executive Director has determined that dredging and in-bay disposal outside of the work window will be consistent with the Commission's laws and policies.

d. **Herring.** To protect important fisheries or migrating anadromous fish species, no dredging shall occur pursuant to this permit between December 1 and March 1 of any year during the duration of this permit unless written approval of dredging during this period is provided by or on behalf of the Commission prior to the commencement of the dredging during the closure period. Approval of any dredging activities between December 1 and March 1 of any year shall be made by or on behalf of the Commission only upon the finding that: (1) a dredging or disposal operation which was begun prior to December 1 of any year could not be completed by the December 1 deadline due to unforeseen delays; (2) a professional biologist, or other individual sufficiently competent to identify herring spawning activity, is at the project site during all dredging operations; and (3) if herring spawning is detected at or within 200 meters of the dredging operations by the permittee's on-site biologist or qualified staff person, Department of Fish and Game personnel, or the Commission staff, all dredging will cease for a minimum of 14 days or until it can be determined that the herring hatch has been completed and larval herring concentrations have left the site. To facilitate rapid and efficient communication under these circumstances, the permittee shall provide the Commission staff and Department of Fish and Game personnel with all necessary telephone, FAX, and pager numbers. Dredging may be resumed thereafter at the sole discretion of the permittee and the Commission staff, but shall be terminated no later than December 31 of that year, or if further spawning takes place at the site.

e. **Barge Overflow Sampling and Testing.** Results of any effluent water quality or other testing required by the San Francisco Bay Regional Water Quality Control Board shall be submitted in writing to the Commission's office at the same time that such testing is submitted to the Regional Board.

f. **Monitoring and Enforcement.** The permittee shall allow the Commission staff or representatives of other state or federal agencies to come aboard the dredge or barge associated with any dredging or disposal episode and observe the operation(s) to ensure that these activities are consistent with pre-dredging reports required herein and other terms and conditions of this permit. Further, the Commission reserves the right to have post-dredging reports inspected by a reliable third party familiar with bathymetric mapping in order to verify the contents of these reports. If a third party selected by or on behalf of the Commission indicates that a post-dredging report is inaccurate, the Commission reserves the right to require the permittee to submit a revised report that meets the conditions of this permit. If the Commission determines that the post-dredging report indicates that work has occurred beyond that authorized by this permit such violation may result in the initiation of enforcement action by or on behalf of the Commission.

g. **Long-Term Management Strategy Program.** If, at any time during the effective life of this permit, the Commission's laws, Bay Plan policies, or regulations are changed and are in effect regarding dredging, dredged material disposal, and beneficial reuse consistent with the multi-agency Long-Term Management Strategy Program (LTMS), this permit shall become null and void unless the permittee agrees to amend this authorization to meet the new laws, policies, or regulations in a manner specified by or on behalf of the Commission.

C. **Marsh Protection**

1. **Best Management Practices.** All construction operations shall be performed to prevent construction materials from falling, washing, or blowing into the Bay. In the event that such material escapes or is placed in an area subject to tidal action of the Bay, the permittee shall immediately retrieve and remove such material at its expense. The permittee shall also employ best management practices, such as compaction, soil fences, jute matting, etc. to assure that material placed in the Bay will not simply erode away shortly after placement.

2. **Marsh and Upland Plant Protection During Construction.** The work authorized by this permit shall be performed in a manner that will prevent, avoid, or minimize to the extent possible any significant adverse impact on any tidal marsh, other sensitive wetland resources, and existing native upland vegetation. If any unforeseen adverse impacts occur to any such areas as a result of the activities authorized herein, the permittee shall restore the area to its previous condition, including returning the disturbed area to its original elevation and soil composition and, if the area does not revegetate to its former condition within one year, the permittee shall seed all disturbed areas with appropriate vegetation consistent with plans approved by or on behalf of the Commission. The permittee shall employ mitigation measures to minimize impacts to wetland areas, such as: (1) minimizing all traffic in marsh/mudflat areas; and (2) carefully removing, storing, and replacing wetland vegetation that has been removed or "peeled back" from construction areas as soon as possible following construction.

D. **Fences.** This permit authorizes the in-kind maintenance of existing fences only and does not authorize increases in the heights of existing fences nor the installation of new fences.

E. **Creosote Treated Wood.** No pilings or other wood structures that have been pressure treated with creosote shall be used in any area subject to tidal action in the Bay or any certain waterway, in any salt pond, or in any managed wetland within the Commission's jurisdiction as part of the project authorized herein.

~~B.~~ F. **Debris Removal.** ~~Any debris that results from construction authorized herein shall be removed to an upland location outside of the jurisdiction of the Commission. Sandblasting activities shall be excluded from this condition.~~ All construction debris and any debris uncovered as a result of excavation or grading, such as concrete, asphalt, wood, plastics, etc., shall be removed from the project site for proper disposal outside of the Commission's jurisdiction. Excavated debris may be temporarily stored within the Commission's jurisdiction, provided measures are employed to assure that material does not wash or erode into the surrounding marsh or waterways. In the event that any such material is placed in any area within the Commission's jurisdiction for an extended period (i.e. more than 60 days), the permittee, their assigns, or successors in interest, or the owner of the improvements, shall remove such material, at their expense, within ten days after they have been notified by the Executive Director of such placement.

G. **Construction Operations.** All construction activity shall be performed in such ~~a manner~~ as to minimize turbidity of the water. All construction operations shall be performed to prevent construction materials from falling into the Bay. In the event that such material escapes or is placed in an area subject to tidal action of the Bay, the permittee shall immediately retrieve and remove such material at its expense.

H. **In-kind Repairs and Maintenance.** Any in-kind repairs and maintenance of Bay structures shall only utilize construction materials that are approved for use in the San Francisco Bay. Construction shall only occur during current approved months during the year to avoid potential impacts to fish and wildlife. BCDC staff should be contacted to confirm current restrictions.

I. **Notice to Contractor.** The permittee shall provide a copy of this permit to any contractor or person working in concert with the permittee to carry out the activities authorized herein and shall point out the special conditions contained herein.

~~A.~~ J. **Abandonment.** If, at any time, the Commission determines that the improvements in the Bay authorized herein, have been abandoned for a period of two years or more, or have deteriorated to the point that public health, safety or welfare is adversely affected, the Commission may require that the improvements be removed, by the permittees, their assigns or successors in interest, or by the owner of the improvements within sixty days or such other reasonable time as the Commission may direct.

III. Findings and Declarations

On behalf of the Commission, I find and declare that:

A. The project authorized by this amended permit involves the following: (1) routine repairs, reconstruction, replacement, removal and maintenance of structures in the Bay that does not involve any substantial enlargement or change in use as defined in Regulation Section 10601(a)(6); (2) placing of riprap and repairs to protective works that would over less than 10,000 square feet of Bay surface area as defined in Regulation Section ~~10122(a)(5)~~ 10601(a)(2); (3) routine maintenance dredging as defined in Regulation Section ~~10122(a)(1)~~ 10602(a); and ~~repair and replacement of~~

~~bridge pavement surface,~~ the placing of inert inorganic fill in, extraction of materials from, or making any substantial change of use of any such area within the 100-foot shoreline band in such a way as to have no adverse effect upon present or possible future maximum feasible public access to the Bay consistent with the project, or upon present or possible future use for a priority water-related use of any area designated for such use, which is defined in Regulation Section ~~10122(b)(1)~~ 10601(b)(1), and thus is a "minor repair or improvement" for which the Executive Director may issue (1) a permit, pursuant to Government Code Section 66632(f) and Regulation Section ~~10530(a)~~ 10622(a), and (2) an amendment to a permit pursuant to Regulation Section 10810.

B. The project authorized by this amended permit is consistent with the McAteer-Petris Act and with the San Francisco Bay Plan in that it will not adversely affect the Bay nor public access to and enjoyment of the Bay.

C. Amendment No. Three. Amendment No. Three to the permit involves combining three previously issued permits (BCDC Permit Nos. M76-37, M87-41 and M87-42) for routine maintenance activities into one permit. The permit conditions contained in this amended permit have been revised to reflect the Commission's current policies. Additionally, this amended permit may be extended for five-year increments, pursuant to the Commission's current regulations regarding maintenance dredging. Conditions contained in the amended authorization will ensure that maintenance activities are conducted in a manner that minimizes impacts on the Bay and its resources. These include Special Condition s II-C and II-E that require the permittee to immediately remove any construction debris that inadvertently enters the Bay and prohibits the use of creosote treated wood in areas subject to tidal action to protect Bay water quality and resource values.

~~C.~~ D.The Commission further finds, declares, and certifies that the activity or activities authorized herein are consistent with the Commission's Amended Management Program for San Francisco Bay, as approved by the Department of Commerce under the Federal Coastal Zone Management Act of 1972, as amended.

~~D.~~ E. Pursuant to Regulation Section ~~10910~~ 11501, the project authorized by this amended permit is categorically exempt from the requirement to prepare an environmental impact report.

~~E.~~ .F Pursuant to Regulation Section ~~10542~~ 10620, this project was originally listed with the Commission on July 16, 1987.

IV. Standard Conditions

A. All required permissions from governmental bodies must be obtained before the commencement of work; these bodies include, but are not limited to, the U. S. Army Corps of Engineers, the State Lands Commission, the Regional Water Quality Control Board, and the city and/or county in which the work is to be performed, whenever any of these may be required. This amended permit does not relieve the permittee of any obligations imposed by State or Federal law, either statutory or otherwise.

B. The attached Notice of Completion and Declaration of Compliance form shall be returned to the Commission within 30 days following completion of the work.

C. Work must be performed in the precise manner and at the precise locations indicated in your application, and amendment request, as such may have been modified by the terms of the amended permit and any plans approved in writing by or on behalf of the Commission.

D. Work must be performed in a manner so as to minimize muddying of waters, and if diking is involved, dikes shall be waterproof. If any seepage returns to the Bay, the permittee will be subject to the regulations of the Regional Water Quality Control Board in that region.

~~E. The rights derived from this permit are assignable as provided herein. An assignment shall not be effective until the assignee shall have executed and the Commission shall have received an acknowledgment that the assignee has read and understood the applications for this permit and the permit itself and agrees to be bound by the terms and conditions of the permit, and the assignee is accepted by the Executive Director as being reasonably capable of complying with the terms of the permit.~~

E. The rights, duties, and obligations contained in this amended permit are assignable. When the permittee transfers any interest in any property either on which the authorized activity will occur or which is necessary to the full compliance of one or more conditions to this amended permit, the permittee/transferor and the transferee shall execute and submit to the Commission a permit assignment form acceptable to the Executive Director. An assignment shall not be effective until the assignee executes and the Executive Director receives an acknowledgment that the assignee has read and understands the amended permit and agrees to be bound by the terms and conditions of the amended permit, and the assignee is accepted by the Executive Director as being reasonably capable of complying with the terms and conditions of the amended permit.

F. Unless otherwise provided in this amended permit, all the terms and conditions of this amended permit shall remain effective for so long as the amended permit remains in effect or for so long as any use or construction authorized by this amended permit exists, whichever is longer.

G. Unless otherwise provided in this amended permit, the terms and conditions of this amended permit shall bind all future owners and future possessors of any legal interest in the land and shall run with the land.

H. Unless otherwise provided in this amended permit, any work authorized herein shall be completed within the time limits specified in this amended permit, or, if no time limits are specified in the amended permit, within three years. If the work is not completed by the date specified in the amended permit, or, if no date is specified, within three years from the date of the amended permit, the amended permit shall become null and void. If this amended permit becomes null and void for a failure to comply with these time limitations, any fill placed in reliance on this amended permit shall be removed by the permittee or its assignee upon receiving written notification by or on behalf of the Commission to remove the fill.

I. Except as otherwise noted, violation of any of the terms of this amended permit shall be grounds for revocation. The Commission may revoke any amended permit for such violation after a public hearing held on reasonable notice to the permittee or its assignee if the amended permit has been effectively assigned. If the amended permit is revoked, the Commission may determine, if it deems appropriate, that all or part of any fill or structure placed pursuant to this amended permit shall be removed by the permittee or its assignee if the amended permit has been assigned.

J. This amended permit shall not take effect unless the permittee executes the original of this amended permit and returns it to the Commission within ten days after the date of the issuance of the amended permit. No work shall be done until the acknowledgment is duly executed and returned to the Commission.

K. Any area subject to the jurisdiction of the San Francisco Bay Conservation and Development Commission under either the McAteer-Petris Act or the Suisun Marsh Preservation Act at the time the amended permit is granted or thereafter shall remain subject to that jurisdiction notwithstanding the placement of any fill or the implementation of any substantial change in use authorized by this amended permit.

L. Any area not subject to the jurisdiction of the San Francisco Bay Conservation and Development Commission that becomes, as a result of any work or project authorized in this amended permit, subject to tidal action shall become subject to the Commission's "bay" jurisdiction ~~up to the line of highest tidal action~~.

M. Unless the Commission directs otherwise, this amended permit shall become null and void if any term, standard condition, or special condition of this amended permit shall be found illegal or unenforceable through the application of statute, administrative ruling, or court determination. If this amended permit becomes null and void, any fill or structures placed in reliance on this amended permit shall be subject to removal by the permittee or its assignee if the amended permit has been assigned to the extent that the Commission determines that such removal is appropriate. Any uses authorized shall be terminated to the extent that the Commission determines that such uses should be terminated.

Executed at San Francisco, California, on behalf of the San Francisco Bay Conservation and Development Commission on the date first above written.

WILL TRAVIS
Executive Director
San Francisco Bay Conservation and
Development Commission

WT/MBL/ra

cc: U. S. Army Corps of Engineers, Attn.: Regulatory Functions Branch
San Francisco Bay Regional Water Quality Control Board,
Attn.: Certification Section
Environmental Protection Agency, Attn: Mike Monroe, WTR-8
Stefan Galvez, Caltrans
Jeff Jensen, Caltrans

* *

Receipt acknowledged, contents understood and agreed to:

Executed at _____ _____
Applicant

On _____ By: _____

_____
Title

State of California
DEPARTMENT OF TRANSPORTATION

Business, Transportation and Housing Agency

Memorandum

Flex your power!
Be energy efficient!

To: MS. BETCY JOSEPH
Project Manager
Office of Project Management - North
Division of Engineering Services

Date: March 23, 2011

Attention: S. Brar

File: 04-MRN-37, PM 11.7
04- 3S5801
Novato Creek Bridge- Levee

From: RIFAAT NASHED RN
Engineering Geologist
Office of Geotechnical Design – West
Geotechnical Services
Division of Engineering Services

GRANT WILCOX GW
Chief, Branch B
Office of Geotechnical Design – West
Geotechnical Services
Division of Engineering Services

Subject : Geology and Geotechnical Recommendation

This memo is in response to your request to provide the District Preliminary Geotechnical Report (PGR) for the construction of a barrier wall and sheet pile wall at the Novato Creek Bridge to seal a leaking levee at this location.

Project Location

The new proposed barrier wall and sheet pile are located underneath and in the median between the two sides (eastbound and westbound) of the Novato Creek bridges at State Route 37 in Marin County.

Topography and Drainage

The project site is located south of Burdell Mountain, north of Bel Marin Keys, west of San Pablo Bay, and east of the city of Novato.

Novato Creek begins on the west side of Burdell Mountain and initially slopes to the west. However, it soon turns south, then east to feed into Stafford Lake. It runs through the city of Novato. East of Novato, it crosses under Highway 101 and State Route 37 before flowing through Bel Marin Keys and entering the northwest corner of Pablo Bay.

The project site is located approximately 6.5 feet above sea level. The elevation of the top of the levee is approximately 11.5 feet with the lowest point is approximately 3 ft in the median approximately 100 feet east of the site.

Geology

The project is located in Marin County. Marin County is located in the central portion of the Coast Range geomorphic province. In Marin County, east of San Andreas Fault, the Tertiary strata rest with angular unconformity on two deformed Mesozoic rock complexes, the Great Valley complex and the Franciscan complex (USGS, MF-2337).

The project area is entirely covered by Holocene estuarine deposits (bay mud) as surficial deposits. The Holocene sediments were deposited in a tidal march, estuary, delta, or lagoon. These sediments contain silt, fine sands, peats and clays (CGS, Geologic map of the Novato 7.5' Quadrangle- attached). These deposits include artificial fill over marine and marsh deposits (young bay mud) (Marin County Plan, 2005).

The bedrock is represented by the Franciscan complex, which underlies the majority of Marin County east of San Andreas Fault and is dominated by the mélange. It consists of sandstone, shale, and weakly to strongly metamorphosed greywacke, argillite, basalt, serpentinite, chert, limestone, and other rocks (Marin County Plan, 2005).

The project site is located 7.4 miles southwest of the Rodgers Creek Fault, 8.3 miles northwest of the Hayward Fault, and 13.4 miles east of the San Andreas Fault. The Rodgers Creek Fault is the controlling fault and has a Maximum Magnitude (MMx) = 7.1 and the Peak Bedrock Acceleration is 0.24.

Subsurface Condition

The following information is based on As- Built Log of Test Borings (LOTB's) for the Novato Creek Bridge (Earthquake Retrofit Project No. 319) in 1957.

Three Boreholes (B-1, B-2, and B-3) were drilled on both sides of Novato Creek (see the attached Logs). According to these borings the project site is underlain by approximately 2 ft of fill materials, approximately 30 ft of very soft blue clay, over approximately 10 ft of slightly compact clayey sand, over approximately 18 ft of stiff to very stiff silty clay with some gravel, over approximately 22 ft of very soft to soft blue clay, over approximately 10 ft of stiff sandy clay, and approximately 10 ft of compacted clayey sand.

Groundwater

According to the 1957 as-built, Log of Test Borings (LOTB's), borehole No.B-2, the depth of groundwater is 2.9 feet below the ground surface, measured in January 1957.

Recently on March 2011, the Geotechnical Design West Office, installed two shallow piezometers at the toe of the levee adjacent to each bridge and on the east side of Novato Creek (at approximate elevation of 6.5 feet). The initial reading for the groundwater depth was one foot below the ground surface (March 4, 2011). We have since measured the groundwater elevation on 4 different dates and times (see attached table). The groundwater depth fluctuated between 6 inches to 1.4 feet below the ground surface. We will continue to take readings at high and low tide to determine if groundwater is tidal influenced. Currently, there has been too much rainfall to ascertain whether the groundwater is tidal influenced. We will continue to take readings until construction begins. Maintenance efforts to seal these areas with foam injection grout and bag concrete have failed.

Cause of Levee Leakage

In our initial investigation, we could not determine the source of the levee leakage (see attached memo from February 17, 2006). Subsequent discussions with Maintenance staff and additional field investigation have led us to the following conclusions:

The bents of the highway 37 bridges were built into or as a part of the existing levee system. We do not know which was built first the bridges or the existing levee. As it exists today, the levee crosses the bridges at the bent location. Therefore, the bent makes up the upper portion of the levee where it crosses under the bridge. Because the concrete in the bents and the fill material in the levee expand and contract at different rates as it heats and cools throughout the year, a small gap is formed. Small rodents further aggravate the situation by taking advantage of this contact joint to burrow. During major storm events combined with high tide, the water will reach an elevation high enough to pass through these weak spots. The two worst leak locations appear to be on the north side of both bridges where the bents abut the levee at the lateral contact.

Recommendation

Is it our recommendation to drive interlocking sheet piles on the dry side of the levee in the median between the bridges. The top of the sheet piles should match the top of the levee. Fill the gap with compacted fill or slurry grout. Under the bridges, where access is makes it impossible to drive sheet piles, build a concrete barrier wall. Build the barrier as high as possible but leave a gap of at least 3 tenths of a foot from the underside of the bridge. Fill the area between the barrier wall and the levee with slurry cement (Std. Spec. 19.3.062 Slurry Cement Backfill). Backfill on the other side of the barrier with compacted earth at a 2(H): 1(V) slope. Avoid direct contact between the bridge deck and the slurry cement backfill. There should be a three foot overlap of the barrier wall and the sheet piles. Ideally, the barrier wall could be poured directly against the sheet pile in this 3 foot overlap. At a minimum, slurry cement backfill should be poured into the overlap to ensure a water proof seal. The sheet piles and barrier wall should create a rodent proof barrier to guard against future leaks.

If you have any questions or need additional information, please call Rifaat Nashed at (510) 622-1773 or Grant Wilcox at (510) 286-4835.

c: TPokrywka, GWilcox, CChen, Route File, Daily File

RNashed/GWilcox/mm

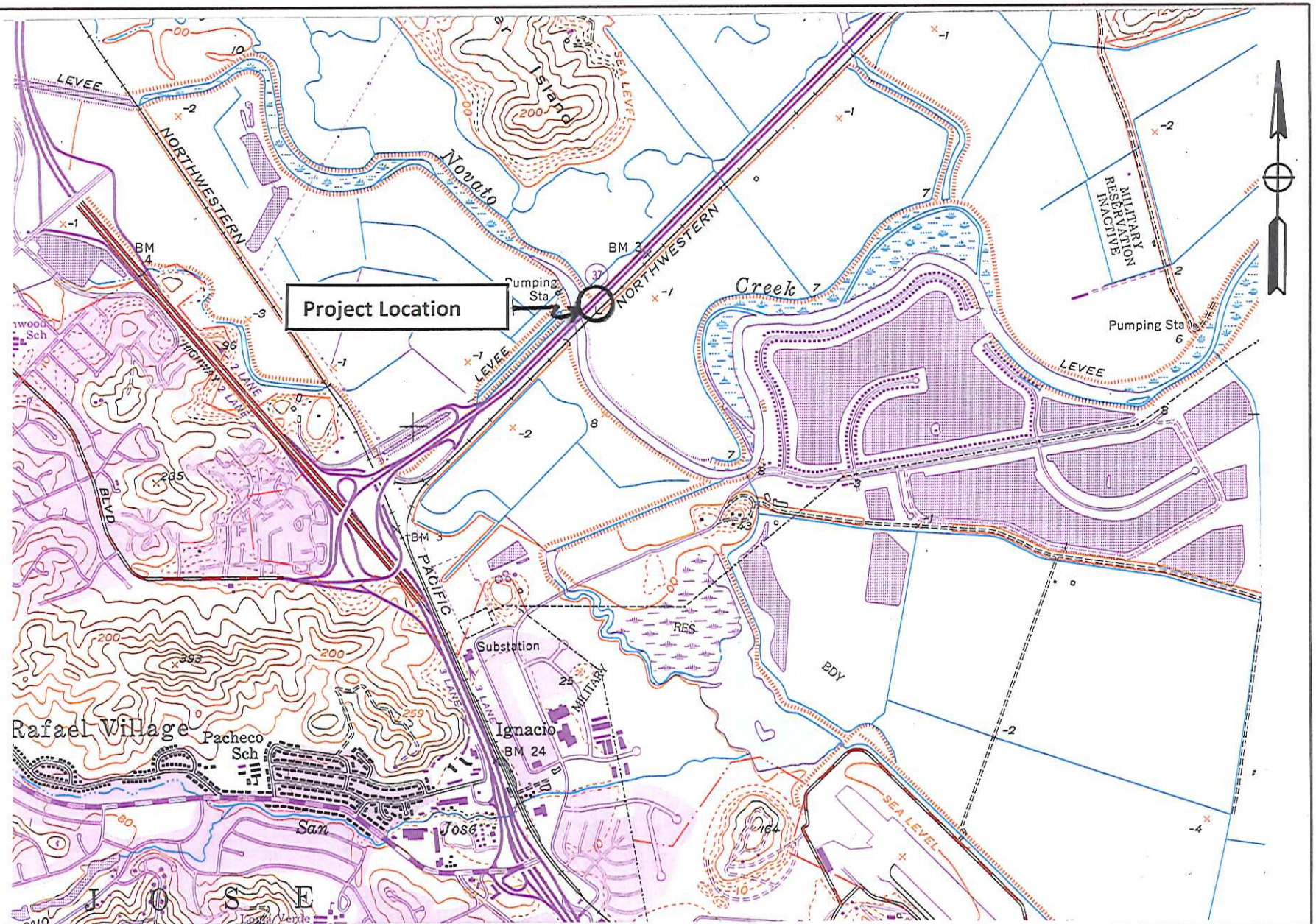

Division of Engineering Services
Geotechnical Services
Office of Geotechnical Design - West
Branch B

Caltrans

NOVATO CREEK BRIDGE

04-Mrn-37 PM 11.7

E-FIS 04000010081 March 2011

Location Map

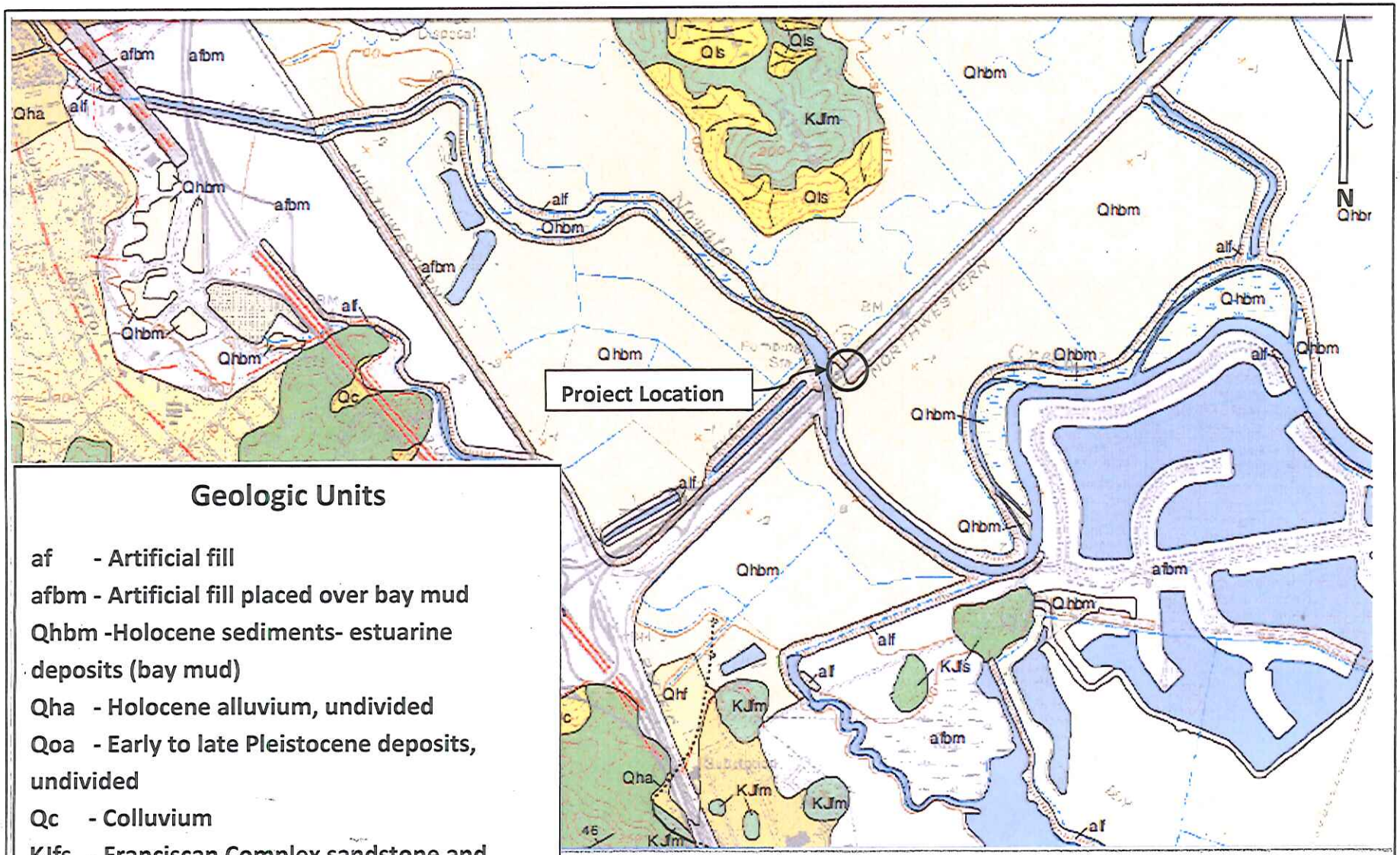

Geologic Units

af - Artificial fill
afbm - Artificial fill placed over bay mud
Qhbm -Holocene sediments- estuarine deposits (bay mud)
Qha - Holocene alluvium, undivided
Qoa - Early to late Pleistocene deposits, undivided
Qc - Colluvium
KJfs - Franciscan Complex sandstone and shale
KJfm - Franciscan Complex melange

Scale 1: 20,000

Source: CGS- Geologic Map of the Novato 7.5' Quadrangle, Marin and Sonoma Counties, 2002, by Salem Rice and others

Caltrans
Division of Engineering Services
Geotechnical Services
Office of Geotechnical Design - West
Branch B

NOVATO CREEK BRIDGE
04-Mrn-37 PM 11.7
E-FIS 04000010081 March 2011
Geology Map

HWY 37 Marin County Post Mile 12.07 - Depth to Groundwater Readings

North Piezometer (5' total depth)

Date	Depth to GW* Feet	Time GW reading	Tide Elevation Feet**	Time of high/Low
03/04/11	1.05	11:50 AM	5.81	12:32 PM
03/07/11	0.5	9:08 AM	0.84	8:51 AM
03/07/11	0.5	9:38 AM	0.84	8:51 AM
03/11/11	1.41	10:45 AM	0.63	11:59 AM
03/22/11	0.5	10:20 AM	-0.59	10:16 AM

South Piezometer (3.5' total depth)

Date	Depth to GW* Feet	Time GW Reading	Tide Elevation Feet**	Time of high/Low
03/04/11	1.05	11:50 AM	5.81	12:32 PM
03/07/11	0.5	9:08 AM	0.84	8:51 AM
03/07/11	0.5	9:38 AM	0.84	8:51 AM
03/11/11	1.42	10:45 AM	0.63	11:59 AM
03/22/11	0.5	10:20 AM	-0.59	10:16 AM

Piezometer Construction

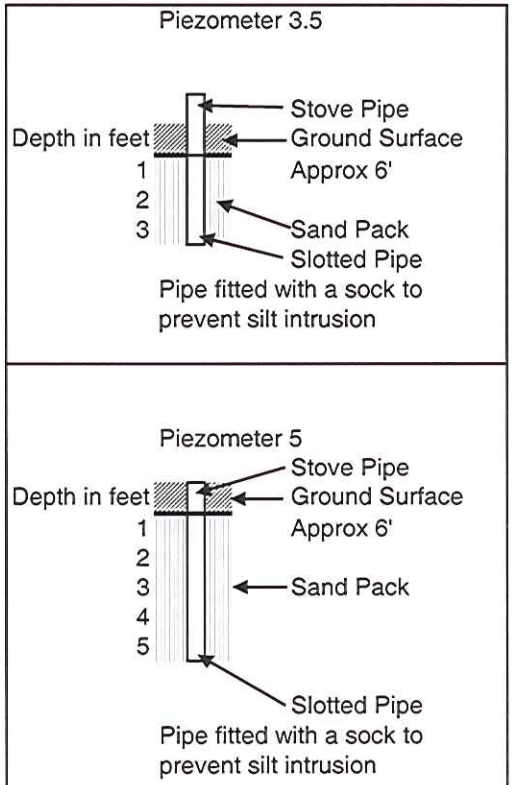

* Depth to Groundwater below ground surface

**Low and high tide varies from a low of approximately 0.80 feet to a high of 5.80 feet.

State of California
DEPARTMENT OF TRANSPORTATION

Business, Transportation and Housing Agency

Memorandum

Flex your power!
Be energy efficient!

To: MS. KIM LE
District Office Chief
Office of Maintenance Services

Date: February 17, 2006

Attention: Steven Kakihara

File: 04-MRN-37 PM 11.7
59-930323
Levee failure

From: ANNA SOJOURNER
Engineering Geologist
Office of Geotechnical Design – West
Geotechnical Services
Division of Engineering Services

GRANT WILCOX WN for G. Wilcox
Senior Engineering Geologist
Office of Geotechnical Design – West
Geotechnical Services
Division of Engineering Services

Subject: Roadway Flooding

This memo is in regards to the reported levee failure at Marin 37, Postmile 11.7. Anna Sojourner visited this site on February 16, 2006.

During the storm over New Years, which coincided with the highest tides of the year, the area east of the levee was flooded and the road was shut down for over a week. The area east of the levee is a floodplain that lies below sea level, and the road is also at a very low elevation here. The floodplain appears to be at a lower elevation than the channel of Novato Creek, and therefore, regular flooding is to be expected here.

We were told that the levee was recently injected with expanding foam to fill large voids that were allowing water to seep through the levee.

It is extremely difficult to assess how the levee breach occurred. There are no obvious blow-outs and no obvious sediment wash to indicate exactly how water breached the levee. The Hydraulics Group should make a site assessment to determine exactly how the levee is being breached. In the absence of a determination by Hydraulics, we can offer for consideration a few preliminary solutions.

Rebuild the levee under the bridge

The levee under the bridge has deteriorated. It no longer reaches the top of the bridge abutment and was found to have large voids, which have been filled with foam.

Rebuilding the levee would require a large excavation to create room for equipment. The levee under the bridge could be rebuilt with imported borrow.

Remove and rebuilt the levee adjacent to the bridge abutment

If the levee immediately adjacent to the bridge were rebuilt higher, this could prevent water from spilling under the bridge. However, groundwater will continue to accumulate in the floodplain. This might mean that the roadway would continue to flood in large storms when the groundwater is high.

Rebuild the bridge

Depending on the condition of the bridge, it could be rebuilt with a higher deck. A higher levee could be built under the new bridge to prevent spillover into the floodplain. However, some water will continue to accumulate in the floodplain even with a new bridge, since the floodplain lies below sea level and accumulates groundwater and surface runoff. Rebuilding the bridge might only prevent flooding of the roadway if it were accompanied with raising or otherwise protecting the road east of the bridge, since water will continue to accumulate in the floodplain.

Build a dyke along the road

The road east of the levee lies in a floodplain below sea level. Rather than trying to prevent inevitable flooding, the road could be protected from floodwaters. The dyke could be built with imported borrow. The length of the dyke necessary is unknown, but could be as long as the entire road through the floodplain, which is two miles.

Raise the road

The road east of the bridge could be rebuilt on an embankment to raise its elevation out of the probable depth of flooding. The length of the embankment needed to avoid flooding is unknown, but could be as long as the entire road through the floodplain, which is two miles.

The road floods where it lies in the low parts of the floodplain. Rebuilding the levee should prevent spillover and seepage, but we are concerned that any solution that does not include raising or protecting the road may not stop the flooding. This issue may be resolved by Hydraulics studies.

If you have any questions or need additional information, please call me at 510-622-8839 or Grant Wilcox at 510-286-4835.

c: TPokrywka, GWilcox, ASojourner, Daily File, Route File

ASojourner/mm

11-14-94
TO ACCOMPANY PLANS DATED

DIST	COUNTY	ROUTE	POST MILES TOTAL PROJECT	SHEET NO.	TOTAL SHEETS
04	Mrn,Son	37	R11.2/14.6,0.0/0.3	24	63

The State of California or its officers or agents shall not be responsible for the accuracy or completeness of electronic copies of this plan sheet.

REGISTERED PROFESSIONAL ENGINEER DOUGLAS R. BELL No. GE 2140 Exp. 3-31-95 GEOTECHNICAL STATE OF CALIFORNIA

D.R. Bell

NOTE:
The As-Built Log of Test Borings sheet were used to prepare the Geotechnical Report.

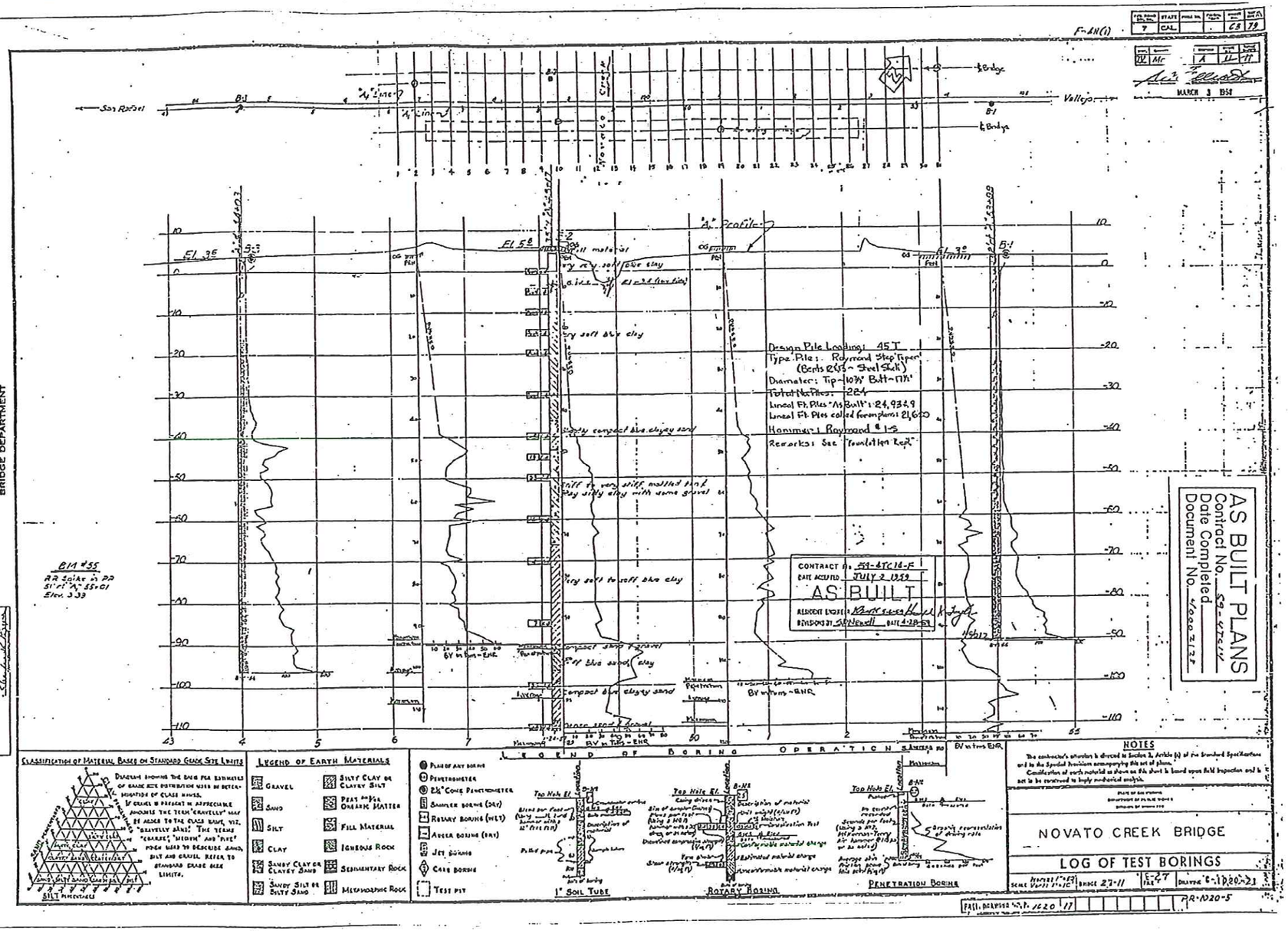

NO AS BUILT CHANGES
AS BUILT
CORRECTIONS BY A. Saadeh
CONTRACT NO. 04-141104
DATE 6-18-96 9-12-97

EARTHQUAKE RETROFIT PROJECT NO. 319

NOVATO CREEK BRIDGE

AS-BUILT LOG OF TEST BORINGS

ong Toan
ON OVERSIGHT
11/2/94
OFF DATE

NOTE:
ADDITIONAL AS-BUILT FOUNDATION DATA MAY BE AVAILABLE AT THE DIVISION OF NEW TECHNOLOGY, MATERIALS AND RESEARCH 5900 FOLSOM BOULEVARD, SACRAMENTO, CALIFORNIA 95819

	BY	CHECKED
DESIGN	G. Nascimento	W. Koo
DETAILS	G. Buelow	A. Wang
QUANTITIES	S. King	R. Khalafbeigi

PREPARED FOR THE STATE OF CALIFORNIA DEPARTMENT OF TRANSPORTATION

ORIGINAL SCALE IS IN INCHES FOR REDUCED PLANS 0 1 2 3

Wei Te Koo
PROJECT ENGINEER

CU 04
EA 141101

BRIDGE NO. 27-11 R/L
POST MILE 11.96

DISREGARD PRINTS BEARING EARLIER REVISION DATES 1/1/93

REVISION DATES (PRELIMINARY STAGE ONLY)

SHEET 5 OF 5

BRIDGE DEPARTMENT

63

PRELIMINARY SITE INVESTIGATION REPORT

STATE ROUTE 37
AT NOVATO CREEK PROJECT
NOVATO, MARIN COUNTY, CALIFORNIA

PREPARED FOR:
CALIFORNIA DEPARTMENT OF TRANSPORTATION
DISTRICT 4
OFFICE OF ENVIRONMENTAL ENGINEERING
111 GRAND AVENUE, MS8C
OAKLAND, CA 94612

PREPARED BY:
GEOCON CONSULTANTS, INC.
6671 BRISA STREET
LIVERMORE, CA 94550

GEOCON PROJECT NO. E8560-06-15
CALTRANS EA 04-3S5801

APRIL 2011

TABLE OF CONTENTS

PRELIMINARY SITE INVESTIGATION REPORT Page

REPORT LIMITATIONS i

PROJECT TEAM ii

1.0 INTRODUCTION 1
- 1.1 Project Description and Proposed Improvements 1
- 1.2 General Objectives 1

2.0 BACKGROUND 1
- 2.1 Hazardous Waste Determination Criteria 1
- 2.2 DTSC Variance 2
- 2.3 Environmental Screening Levels 3
- 2.4 Naturally Occurring Asbestos 4

3.0 SCOPE OF SERVICES 4
- 3.1 Pre-field Activities 4
- 3.2 Field Activities 5

4.0 INVESTIGATIVE METHODS 5
- 4.1 Sampling Procedures 5
- 4.2 Laboratory Analyses 6
- 4.3 Laboratory QA/QC 6

5.0 INVESTIGATIVE RESULTS 7
- 5.1 Subsurface Conditions 7
- 5.2 Laboratory Analytical Results 7
- 5.3 Laboratory Quality Assurance/Quality Control 7
- 5.4 Statistical Evaluation for Lead Detected in Soil Samples 8
  - 5.4.1 Calculating the UCLs for the Arithmetic Mean 8
  - 5.4.2 Correlation of Total and WET Lead 9

6.0 CONCLUSIONS 10
- 6.1 Soil 10
  - 6.1.1 Lead Results 10
  - 6.1.2 CAM 17 Metals 10
  - 6.1.3 Organics 11
  - 6.1.4 Naturally Occurring Asbestos 11
- 6.2 Groundwater 12
  - 6.2.1 CAM 17 Metals 12
  - 6.2.2 Organics 12
- 6.3 Worker Protection 12

TABLE OF CONTENTS, CONTINUED

FIGURES

1. Vicinity Map
2. Site Plan

TABLES

1. Boring Coordinates
2. Summary of Lead and pH Results - Soil
3. Summary of CAM 17 Metals Results -Soil
4. Summary of Organics Results - Soil
5. Summary of NOA Results – Soil
6. Summary of CAM 17 Metals Results – Groundwater
7. Summary of Organics Results - Groundwater
8. Summary of Lead Statistics

APPENDICES

A. DTSC Variance
B. Laboratory Reports and Chain-of-custody Documentation
C. Lead Regression and Metals Statistical Analysis

REPORT LIMITATIONS

This report has been prepared exclusively for the State of California Department of Transportation (Caltrans) District 4. The information contained herein is only valid as of the date of the report and will require an update to reflect additional information obtained.

This report is not a comprehensive site characterization and should not be construed as such. The findings as presented in this report are predicated on the results of the limited sampling and laboratory testing performed. In addition, the information obtained is not intended to address potential impacts related to sources other than those specified herein. Therefore, the report should be deemed conclusive with respect to only the information obtained. We make no warranty, express or implied, with respect to the content of this report or any subsequent reports, correspondence or consultation. Geocon strived to perform the services summarized herein in accordance with the local standard of care in the geographic region at the time the services were rendered.

The contents of this report reflect the views of the author who is responsible for the facts and accuracy of the data presented herein. The contents do not necessarily reflect the official views or policies of the State of California or the Federal Highway Administration. This report does not constitute a standard, specification, or regulation.

GEOCON CONSULTANTS, INC.

Lauren Vigliotti, PG
Project Geologist

PROFESSIONAL GEOLOGIST
LAUREN J. VIGLIOTTI
No. 8775
STATE OF CALIFORNIA

Richard Day, CEG, CHG
Project Manager

CALIFORNIA DEPARTMENT OF TRANSPORTATION – DISTRICT 4
OFFICE OF ENVIRONMENTAL ENGINEERING

Reviewed By:	Recommended By:	Approved By:
Max Raafati, PE Task Order Manager	Ray Boyer, PE District Branch Chief	Allen Baradar, PE, REA District Office Chief

PROJECT TEAM

Contact	Affiliation	Responsibility
Romy Fuentes, PE 510.622.8803 510.622.0198 fax romy_f_fuentes@dot.ca.gov	Caltrans – District 4 Consultant Services 111 Grand Avenue, MS7A Oakland, California 94612	Contract Manager
Max Raafati, PE 510.286.5657 510.286.5642 fax max_raafati@dot.ca.gov	Caltrans – District 4 Environmental Engineering 111 Grand Avenue, MS8C Oakland, California 94612	Task Order Manager
Richard Day, CEG, CHG Lauren Vigliotti, PG 925.371.5900 925.371.5915 fax livermore@geoconinc.com	Geocon Consultants, Inc. 6671 Brisa Street Livermore, CA 94550 *(Caltrans Consultant)*	Project Management Sample Collection Field QA/QC Investigation Report
Doug Krause, CIH 530.758.6397 530.758.6506 fax dskrause@pacbell.net	Krause & Associates 216 F. Street Suite 162 Davis, CA 95616 (*Geocon Subconsultant*)	Health and Safety
Diane Galvan 562.989.4045 562.989.4040 fax diane@atlglobal.com	Advanced Technology Laboratories 1510 E. 33rd Street Signal Hill, CA 90807 (*Geocon Subcontractor*)	Soil Sample Analysis
Dan Kocher 510.895.3675 510.895.3680 milpitaslab@emsl.com	EMSL Analytical Inc. 2235 Polvorosa Avenue, Suite 230 San Leandro, CA 94577 *(Geocon Subcontractor)*	Asbestos Analysis

PRELIMINARY SITE INVESTIGATION REPORT

1.0 INTRODUCTION

This Preliminary Site Investigation Report for the State Route 37 (SR-37) at Novato Creek project was prepared by Geocon Consultants, Inc. under California Department of Transportation (Caltrans) Contract No. 04A3578 and Task Order No. 15 (TO-15), EA 04-3S5801.

1.1 Project Description and Proposed Improvements

The project location consists of Caltrans right-of-way (ROW) along a portion of the northbound and southbound shoulder of SR-37 at Novato Creek, between Post Mile (PM) MRN-37-PM 11.7/12.2, in Novato in Marin County, California. The investigation was conducted prior to repairing damage from excessive storm runoff in 2006, and consists of constructing a retaining wall parallel to Novato Creek, which runs beneath SR-37. The project location is depicted on the Vicinity Map, Figure 1.

1.2 General Objectives

The purpose of the site investigation was to evaluate concentrations of California Assessment Manual (CAM) 17 metals, including aerially deposited lead (ADL), total petroleum hydrocarbons (TPH), and naturally occurring asbestos (NOA) in soil at the project location. Groundwater may be encountered during the proposed construction activities; therefore, groundwater samples were collected for analysis of metals and organics.

ADL may be present at the project location primarily due to historic leaded fuel emissions from automobile exhausts. Lead poses risks related to inhalation, ingestion, and dermal contact with the material. NOA may be in soil within the project limits. If not managed, disturbance of NOA during construction activities may potentially pose an inhalation risk to the health of construction personnel.

The information obtained from this investigation will be used by Caltrans to evaluate soil and groundwater disposal costs and identify health and safety concerns.

2.0 BACKGROUND

2.1 Hazardous Waste Determination Criteria

Regulatory criteria to classify a waste as California hazardous for handling and disposal purposes are contained in the CCR, Title 22, Division 4.5, Chapter 11, Article 3, §66261.24. Criteria to classify a waste as Resource, Conservation, and Recovery Act (RCRA) hazardous are contained in Chapter 40 of the Code of Federal Regulations (40 CFR), Section 261.

For waste containing metals, the waste is classified as California hazardous when: 1) the total metal content exceeds the respective Total Threshold Limit Concentration (TTLC); or 2) the soluble metal content exceeds the respective Soluble Threshold Limit Concentration (STLC) based on the standard Waste Extraction Test (WET). A waste has the potential of exceeding the STLC when the waste's total metal content is greater than or equal to ten times the respective STLC value since the WET uses a 1:10 dilution ratio. Hence, when a total metal is detected at a concentration greater than or equal to ten times the respective STLC, and assuming that 100 percent of the total metals are soluble, soluble metal analysis is required. A material is classified as RCRA hazardous, or Federal hazardous, when the soluble metal content exceeds the Federal regulatory level based on the Toxicity Characteristic Leaching Procedure (TCLP).

The above regulatory criteria are based on chemical concentrations. Wastes may also be classified as hazardous based on other criteria such as ignitability and corrosivity; however, for the purposes of this investigation, toxicity (i.e., lead concentrations) is the primary factor considered for waste classification since waste generated during the construction activities would not likely warrant testing for ignitability or other criteria. Waste that is classified as either California hazardous or RCRA hazardous requires management as a hazardous waste.

2.2 DTSC Variance

The DTSC issued a statewide Variance effective July 1, 2009, regarding the management of ADL-impacted soils within Caltrans right-of-way. Under the Variance, soil that is classified as a non-RCRA hazardous waste, based primarily on ADL content, may be suitable for reuse within Caltrans right-of-way. ADL soil that is classified as a RCRA hazardous waste is not eligible for reuse under the Variance and must be disposed of as a RCRA hazardous waste (Caltrans Type Z-3).

ADL soil reused under the Variance must always be at least five feet above the highest groundwater elevation and, depending on lead concentrations, must be covered with at least one foot of non-hazardous soil or a pavement structure. The ADL soil may not be placed in areas where it might contact groundwater or surface water (such as streams and rivers), and must be buried in locations that are protected from erosion that may result from storm water run-on and run-off.

Review of the statewide Variance indicates the following conditions regarding the reuse and management of ADL-impacted soil as fill material for construction and maintenance operations. If ADL soil meets the Variance criteria but is not intended to be reused within Caltrans right-of-way, then the excavated soil must be disposed of as a California hazardous waste (Caltrans Type Z-2). A copy of the Variance is presented as Appendix B.

Caltrans Type Y-1: ADL soil exhibiting a total lead concentration less than or equal to 1,411 milligrams per kilogram (mg/kg), a DI-WET (WET using deionized water as extractant) lead

concentration less than or equal to 1.5 milligrams per liter (mg/l), and a pH value greater than or equal to 5.5 may be reused within the same Caltrans corridor and must be covered with at least one foot of non-hazardous soil.

Caltrans Type Y-2: ADL soil exhibiting a total lead concentration less than or equal to 1,411 mg/kg, a DI-WET lead concentration less than or equal to 1.5 mg/l, and a pH value greater than 5 and less than 5.5 may be reused within the same Caltrans corridor and must be covered and protected from infiltration by a pavement structure.

ADL soil exhibiting a total lead concentration less than or equal to 1,411 mg/kg, a DI-WET lead concentration greater than 1.5 mg/l and less than or equal to 150 mg/l, and a pH value greater than 5 may be reused within the same Caltrans corridor and must be covered and protected from infiltration by a pavement structure.

ADL soil exhibiting a total lead concentration greater than 1,411 mg/kg and less than or equal to 3,397 mg/kg, a DI-WET lead concentration less than or equal to 150 mg/l, and a pH value greater than 5 may be reused within the same Caltrans corridor and must be covered and protected from infiltration by a pavement structure.

Caltrans Type Z-2: ADL soil exhibiting a total lead concentration greater than 3,397 mg/kg, a DI-WET lead concentration greater than 150 mg/l, or a pH value less than or equal to 5 is not eligible for reuse under the Variance and must be disposed of as a California hazardous waste.

Caltrans Type Z-3: ADL soil exhibiting a TCLP lead concentration greater than or equal to 5 mg/l is not eligible for reuse under the Variance and must be disposed of as a RCRA hazardous waste.

2.3 Environmental Screening Levels

The San Francisco Bay Regional Water Quality Control Board (SFRWQCB) has prepared a technical report entitled *Screening For Environmental Concerns At Sites With Contaminated Soil and Groundwater, Interim Final* (May 2008), which presents Environmental Screening Levels (ESLs) for soil, groundwater, soil gas, and surface water, to assist in evaluating sites impacted by releases of hazardous chemicals. The ESLs are conservative values for more than 100 commonly detected contaminants, which may be used to compare with environmental data collected at a site. ESLs are strictly risk assessment tools and "not regulatory clean up standards." The presence of a chemical at concentrations in excess of an ESL does not necessarily indicate that adverse impacts to human health or the environment are occurring; this simply indicates that a potential for adverse risk may exist and that additional evaluation is or "may be" warranted (SFRWQCB, 2008).

The most conservative ESL table was used for this characterization: Table A – Shallow Soil (≤3 meters below ground surface; bgs) – Groundwater is a Current or Potential Source of Drinking Water. The respective ESLs are listed at the end of Tables 3 and 4 for comparative purposes.

2.4 Naturally Occurring Asbestos

As defined in current California Air Resources Board (CARB) rules, serpentine material refers to any material that contains at least 10% serpentine, and asbestos-containing serpentine refers to serpentine materials with an asbestos content greater than 5% as determined by CARB Test Method 435 (CARB 435). The use of serpentine material for road surfacing is prohibited in California by Title 17 of the California Code of Regulations (CCR) Section 93106, Asbestos Airborne Toxic Control Measure (ATCM) for Surfacing Application (ATCM 93106), unless the material has been tested and determined to have an asbestos content of less than 0.25%. Materials found to contain asbestos of 0.25% or more are considered to be designated waste if transported offsite, requiring disposal at a landfill facility designated to accept asbestos waste. Alternatively, asbestos-containing materials may be reused onsite if buried beneath a minimum 6 inches of soil.

The CARB specifies mitigation practices for construction, grading, quarrying, and surface mining operations that contain natural occurrences of asbestos outlined in Title 17, Section 93105, Asbestos ATCM for Construction, Grading, Quarrying, and Surface Mining Operations (ATCM 93105). Based on Part (e) Subpart (2) of ATCM 93105 an asbestos dust mitigation plan is required and must be implemented for a project if NOA is disturbed after the start of construction. Additionally, ATCM 93105 specifies that the air pollution control district (APCD) must be notified and an asbestos dust mitigation plan submitted to the APCD. The ATCM states that air monitoring may be required on the property. NOA potentially posses a health hazard when it becomes an airborne particulate.

The construction/maintenance activities mentioned above could disturb NOA-laden debris and soil, thereby potentially creating an airborne hazard. Mitigation practices can reduce the risk of exposure to airborne NOA containing dust. Dust suppression practices include wetting the materials being disturbed and wearing approved respirators with high-efficiency particulate air (HEPA) filters during construction activities.

3.0 SCOPE OF SERVICES

The scope of services requested by Caltrans under TO-15, EA 04-4S5801 included the following:

3.1 Pre-field Activities

- Prepared a site-specific *Health and Safety Plan* to provide guidelines on the use of personal protective equipment and the health and safety procedures implemented during the field activities.

- Provided a minimum of 48-hours notice to the local public utilities via Underground Service Alert prior to job site mobilization.
- Retained the services of Advanced Technology Laboratories (ATL), a Caltrans-approved and California-certified analytical laboratory, to perform the chemical analyses of soil samples.
- Retained the services of EMSL, a Caltrans-approved and California-certified analytical laboratory, to perform the asbestos analysis of soil samples.

3.2 Field Activities

The field investigation was performed on March 24, 2011, by Geocon staff. The following field activities were performed during the sampling efforts:

- Advanced eight soil borings along the northbound shoulder and southbound embankment of SR-37 at the project location using hand-auger and direct-push drilling techniques. The borings were advanced to a maximum depth of 4.5 feet.
- Collected 24 soil samples for selected analysis of CAM 17 metals, total lead, organics, NOA, and pH.
- Collected 2 groundwater samples from piezometers located adjacent to the northbound and southbound sides of SR-37 for analysis of metals, TPH, and volatile organic compounds (VOCs).
- Transported samples to California-certified environmental laboratories for analysis under standard chain-of-custody (COC) documentation.

4.0 INVESTIGATIVE METHODS

4.1 Sampling Procedures

Soil samples were collected from eight boring locations identified by the Caltrans TO Manager. Geocon recorded the boring locations using Differential Global Positioning System (DGPS) equipment. Boring coordinates are presented on Table 1 and boring locations are shown on the Site Plan, Figure 2.

The soil samples for analysis of CAM 17 metals and TPH were collected in new stainless steel tubes sealed with Teflon tape and plastic end-caps. Soil samples for total lead and NOA analyses were collected into new resealable plastic bags. The groundwater samples were collected using new polyvinyl chloride (PVC) tubing fitted with a check valve and dispensed into laboratory-supplied containers, preserved as necessary. Sample containers were labeled and transported to Caltrans-approved, certified environmental laboratories using standard COC documentation. Soil borings were backfilled to surface with soil cuttings.

Geocon provided QA/QC procedures during the field activities. These procedures included washing the sampling equipment with a Liqui-Nox® solution followed by a double rinse with deionized water.

Decontamination water was disposed of to the ground surface within Caltrans right-of-way in a manner not to create runoff, away from drain inlets or potential water bodies.

4.2 Laboratory Analyses

Laboratory analyses were performed under an expedited 48-hour turnaround-time (TAT). Soil and groundwater samples submitted for CAM17 metals, lead, TPH, and pH were analyzed by ATL; NOA analysis of the soil samples was performed by EMSL. The laboratory reports and COC documentation are included in Appendix A.

The soil samples were analyzed as follows:

- 17 samples for total lead using Environmental Protection Agency (EPA) Test Method 6010 ICAP
- 8 samples for CAM 17 metals according to Title 22 CCR, EPA Test Methods 6010 ICAP and 7471A
- 4 samples with total lead concentrations exceeding 50 milligrams per kilograms (mg/kg) (i.e. ten times the STLC of 5.0 milligrams per liter, mg/l), were further analyzed for WET lead.
- 2 samples with total lead concentrations exceeding 100 mg/kg and WET lead concentrations exceeding the STLC of 5.0 mg/l were further analyzed for TCLP and DI-WET lead.
- 10 samples for TPH as gasoline (TPHg), benzene, toluene, ethylbenzene, and xylenes (BTEX) using EPA Method 8021
- 9 samples for TPH as diesel (TPHd) using EPA Method 8015B
- 8 samples for NOA using the CARB Test Method 435
- 8 samples for pH using EPA Method 9045

The two groundwater samples collected from piezometers were analyzed for CAM 17 metals using the methods above, TPHg, TPHd, and TPHmo using EPA Method 8015B, and VOCs using EPA Method 8260B.

4.3 Laboratory QA/QC

QA/QC procedures were performed for each method of analysis with specificity for each analyte listed in the test method's QA/QC. The laboratory QA/QC procedures included the following:

- One method blank for every ten samples, batch of samples or type of matrix, whichever was more frequent.
- One sample analyzed in duplicate for every ten samples, batch of samples or type of matrix, whichever was more frequent.
- One spiked sample for every ten samples, batch of samples or type of matrix; whichever was more frequent, with spike made at ten times the detection limit or at the analyte level.

Prior to submitting the samples to the laboratory, the COC documentation was reviewed for accuracy and completeness.

5.0 INVESTIGATIVE RESULTS

5.1 Subsurface Conditions

Observations during field activities indicated that surface soil at the project location generally consists of brown, gravelly sand and silt. Rip rap was also observed at the project location. Groundwater was measured at a depth of approximately two feet below ground surface in the piezometers sampled during the field activities.

5.2 Laboratory Analytical Results

The analytical results are summarized in Tables 2 through 7 and are summarized below:

Soil

- The following metals were not detected above their respective laboratory reporting limits: antimony, beryllium, cadmium, molybdenum, selenium, silver, and thallium.
- Lead was reported at concentrations ranging from 5.3 to 150 mg/kg.
- WET lead was reported at concentrations ranging from 2.9 to 7.2 mg/l.
- TCLP and DI-WET lead were not detected above the laboratory reporting limits of 0.25 mg/l.
- Remaining CAM 17 metals were reported in the samples at total concentrations below ten times their respective STLCs.
- TPHg and BTEX were not detected above their respective laboratory reporting limits.
- TPHd was reported at concentrations ranging from 1.5 to 24 mg/kg.
- NOA was not detected above the 0.25% target analytical sensitivity level.
- pH values ranged from 6.3 to 7.6

Groundwater

- Arsenic, barium, chromium, cobalt, copper, lead, mercury, nickel, vanadium, and zinc were detected above the laboratory reporting limits.
- The following metals were not detected above their respective laboratory reporting limits: antimony, beryllium, cadmium, molybdenum, selenium, silver, and thallium.
- TPH and VOCs were not reported above their respective laboratory reporting limits.

5.3 Laboratory Quality Assurance/Quality Control

We reviewed the QA/QC results provided with the laboratory analytical reports. The data indicate non-detect results for the method blanks.

Matrix spike and/or matrix spike duplicates (MS/MSDs) were outside recovery criteria for several of the analyses. The relative percent differences (RPDs) of the duplicate samples for a number of the

analyses were outside criteria. However, the case narratives in the laboratory reports state that the analytical batch was validated by the laboratory control sample (LCS). The data showed acceptable recoveries and RPDs for the remainder of the duplicates and matrix spikes. Dilution was necessary for two analyses due to sample matrix.

Based on this limited data review, no additional qualifications of the soil data are necessary, and the data are of sufficient quality for the purposes of this report.

5.4 Statistical Evaluation for Lead Detected in Soil Samples

Statistical methods were applied to the total lead data to evaluate: 1) the upper confidence limits (UCLs) of the arithmetic means of the total lead concentrations for each sampling depth; and 2) if an acceptable correlation between total and WET lead concentrations exists that would allow the prediction of WET lead concentrations based on calculated UCLs. Per Caltrans, the lead data for the site were treated as a single sample population for statistical evaluation, which consisted of samples from borings 11-01 to 11-08 collected adjacent to northbound and southbound SR-37.

5.4.1 Calculating the UCLs for the Arithmetic Mean

The upper one-sided 90% and 95% UCLs of the arithmetic mean are defined as the values that, when calculated repeatedly for randomly drawn subsets of site data, equal or exceed the true mean 90% and 95% of the time, respectively. Statistical confidence limits are the classical tool for addressing uncertainties of a distribution mean. The UCLs of the arithmetic mean concentration are used as the mean concentrations because it is not possible to know the true mean due to the essentially infinite number of soil samples that could be collected from a site. The UCLs therefore account for uncertainties due to limited sampling data. As data become less limited at a site, uncertainties decrease, and the UCLs move closer to the true mean.

Non-parametric bootstrap techniques were used to calculate the UCLs. For those samples in which total lead was not detected, a value equal to one-half of the detection limit was used in the UCL calculation. The bootstrap test results are included in Appendix C. The following table presents the calculated UCLs and statistics for the data set.

Borings 11-01 to 11-08

SAMPLE INTERVAL (feet)	TOTAL LEAD MEAN (mg/kg)	MINIMUM VALUE (mg/kg)	MAXIMUM VALUE (mg/kg)
0 to 0.5	55.6	6.7	150
1.0 to 1.5	29.8	2.5	110
2.5 to 3.0	11.1	5.3	19

5.4.2 Correlation of Total and WET Lead

Total and corresponding WET lead concentrations are bivariate data with a linear structure. This linear structure should allow for the prediction of WET lead concentrations based on the maximum total lead concentrations presented in the tables above.

To estimate the degree of interrelation between total and corresponding WET lead values (x and y, respectively), the *correlation coefficient [r]* is used. The correlation coefficient is a ratio that ranges from +1 to –1. A *correlation coefficient* of +1 indicates a perfect direct relationship between two variables; a *correlation coefficient* of –1 indicates that one variable changes inversely with relation to the other. Between the two extremes is a spectrum of less-than-perfect relationships, including zero, which indicates the lack of any sort of linear relationship at all. The *correlation coefficient* was calculated for the four (x, y) data points (i.e., soil samples analyzed for both total lead [x] and WET lead [y]). The resulting *coefficient of determination* (r^2) equaled 0.686, which yields a corresponding *correlation coefficient* (r) of 0.828.

For the *correlation coefficient* that indicates a linear relationship between total and WET lead concentrations, it is possible to compute the line of dependence or a best-fit line between the two variables. A least squares method was used to find the equation of a best-fit line (regression line) by forcing the y-intercept equal to zero since that is a known point. The equation of the regression line was determined to be $y = 0.0455(x)$, where x represents total lead concentrations and y represents predicted WET lead concentrations.

This equation was used to estimate the expected WET lead concentrations for the maximum total lead concentrations of samples collected from the project location (see Section 5.4.1). Regression analysis results and a scatter plot depicting the (x, y) data points along with the regression line are included in Appendix C. The predicted WET lead concentrations are summarized in Table 8.

6.0 CONCLUSIONS

6.1 Soil

6.1.1 Lead Results

The following table summarizes the predicted waste classification for excavated soil based on the calculated weighted averages of the total lead UCLs and predicted WET lead concentrations for data collected at the Site. Weighted averages are calculated by using the total lead concentration for each 0.5-foot depth interval as the value for the underlying 0.5-foot depth interval (unless a sample was collected from the underlying depth interval). The total and WET lead calculations are summarized below and in Table 8.

Excavation Depth	90% UCL Total Lead (mg/kg)	90% UCL Predicted WET Lead (mg/l)	95% UCL Total Lead (mg/kg)	Waste Classification
0 to 1 ft	78	3.5	84	Non-Hazardous
Underlying soil (1 to 3 ft)	*37*	*1.7*	*40*	*Non-Hazardous*
0 to 2.5 ft	58	2.6	63	Non-Hazardous
Underlying Soil (2.5 to 3 ft)	*14*	*0.6*	*14*	*Non-Hazardous*
0 to 3 ft	50	2.3	55	Non-Hazardous

90% UCL applicable for waste classification and onsite reuse; 95% UCL applicable for risk assessment and offsite disposal

Based on the data presented in the above table, soil excavated from the project site would be classified as non-hazardous since the predicted WET lead concentrations are less than the lead STLC of 5.0 mg/l.

6.1.2 CAM 17 Metals

The CAM 17 metals concentrations in site soil, other than lead, were compared to ESLs (Table A, SFRWQCB, May 2008). Arsenic and vanadium were reported with concentrations greater than their respective ESL values in the soil samples collected at the site. Arsenic was detected in the samples at concentrations ranging from less than the laboratory reporting limit of 1.0 to mg/kg to 6.4 mg/kg, exceeding the residential land use ESL of 0.39 mg/kg and the commercial/industrial land use ESL of 1.6 mg/kg for shallow soil (≤3 meters; SFRWQCB, Table A). Vanadium was reported in the soil samples at concentrations between 29 mg/kg and 50 mg/kg, exceeding the residential land use ESL of 16 mg/kg for shallow soil.

Upper one-sided 95% Upper Confidence Limits (UCLs) were calculated for the full set of arsenic and vanadium concentrations. Non-parametric bootstrap techniques were used to calculate the UCLs. For

those samples in which arsenic was not detected, a value equal to one-half of the detection limit was used in the UCL calculation. The UCLs were compared with the residential and commercial/industrial land use ESLs and with published background levels typically present in California soils as presented in *Background Concentrations of Trace and Major Elements in California Soils* (Kearney Foundation of Soil Science, Division of Agriculture and Natural Resources, University of California, March 1996). The bootstrap results are included in Appendix B. The calculated standard bootstrap UCLs, ESLs and published background concentrations are summarized in the table below:

Metal	95% UCL	RESIDENTIAL ESL	COMMERCIAL/ INDUSTRIAL ESL	PUBLISHED BACKGROUND MEAN[1]	PUBLISHED BACKGROUND RANGE [1]
Arsenic	5.0	0.39	1.6	3.5	0.6 to 11.0
Vanadium	41.3	16	200	112	39 to 288

Concentrations reported in milligrams per kilogram (mg/kg)

[1] Kearney Foundation of Soil Science, March 1996

The 95% UCL value for arsenic in the soil samples collected at the Site is greater than the residential and commercial/industrial land use ESLs and within the published background range. The SFRWQCB *November 2007 Update to Environmental Screening Levels (ESLs) Technical Document* states that ambient background concentrations of arsenic typically exceed risk-based screening levels. In such instances, it may be more appropriate to compare site data to regionally specific established background levels.

The 95% UCL value for vanadium in the soil samples collected at the site is greater than the residential land use ESL. However, the 95% UCL for vanadium is less than the commercial/industrial land use ESL and the published background range.

Based on the reported arsenic and vanadium results, there may be restrictions on reuse and/or disposal options for excavated soil.

6.1.3 Organics

TPHg or BTEX were not detected in the soil samples. Reported TPHd concentrations were less than the residential or commercial/industrial land use ESLs. Therefore, there should be no reuse or disposal restrictions on reuse options for excavated soil based on TPHg and TPHd content.

6.1.4 Naturally Occurring Asbestos

NOA was not detected above the target analytical sensitivity of 0.25%; therefore, there should be no restrictions on handling of excavated soil based on NOA content.

6.2 Groundwater

6.2.1 CAM 17 Metals

The following metals were reported in the groundwater samples at total concentrations exceeding their respective ESLs for groundwater that is a Current or Potential Source of Drinking Water and for Surface Water (SFRWQCB, Tables A and F): arsenic, barium, chromium, cobalt, copper, lead, mercury, nickel, vanadium, and zinc.

Groundwater encountered during the construction project may require special handling and/or treatment prior to disposal or discharge based on total CAM 17 metals concentrations.

6.2.2 Organics

TPH or VOCs were not detected above the laboratory reporting limits in the samples; therefore, groundwater encountered during the construction project should not require special handling and/or treatment prior to disposal or discharge based on organics concentrations.

6.3 Worker Protection

The contractor(s) should prepare a project-specific health and safety plan to prevent or minimize worker exposure to metals in soil and groundwater. The plan should include protocols for environmental and personnel monitoring, requirements for personal protective equipment, and other health and safety protocols and procedures for the handling of metals in soil and groundwater.