DIST	COUNTY	ROUTE	POST MILES TOTAL PROJECT	SHEET NO.	TOTAL SHEETS
04	Son	37	0.9/2.6	15	22

Raymond Don Tsztoo
REGISTERED CIVIL ENGINEER

January 18, 2008
PLANS APPROVAL DATE

REGISTERED PROFESSIONAL ENGINEER Raymond Don Tsztoo No. C37332 Exp. 6-30-08 CIVIL STATE OF CALIFORNIA

The State of California or its officers or agents shall not be responsible for the accuracy or completeness of electronic copies of this plan sheet.

To accompany plans dated 2-8-10

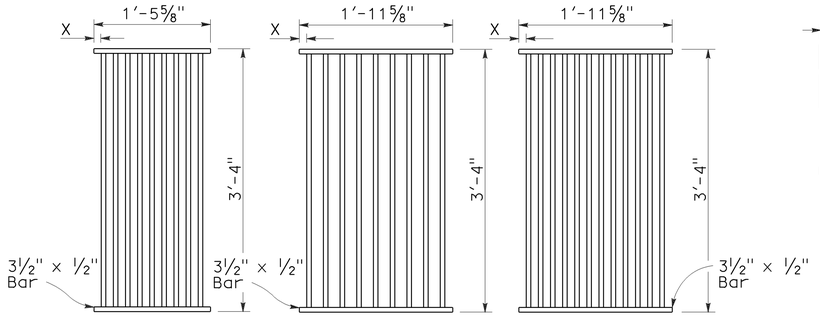

TYPE 18-9

1⅜" Clear spacing. Use within the roadbed on highways where bicycles and pedestrians are excluded.

TYPE 24-9

2" Clear spacing. Use in locations off the roadbed on all types of highways.

TYPE 24-12

1⅜" Clear spacing. Use within the roadbed on highways where bicycles and pedestrians are excluded.

RECTANGULAR GRATE DETAILS

(See table below)

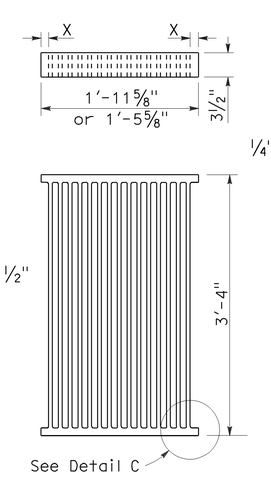

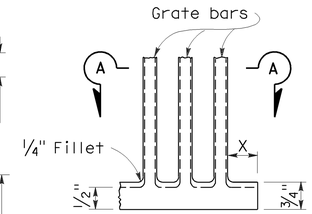

DETAIL C

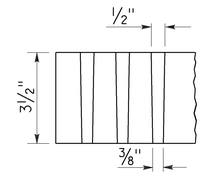

SECTION A-A

ALTERNATIVE CAST NODULAR IRON GRATE OR CAST STEEL GRATE

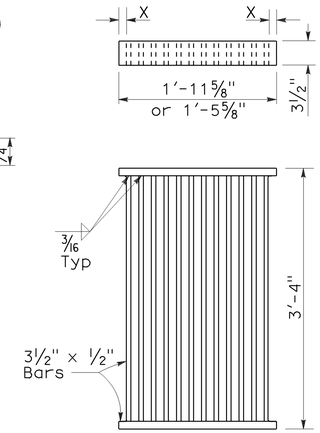

ALTERNATIVE WELDED GRATE

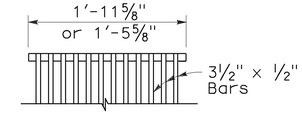

CAST END BLOCK

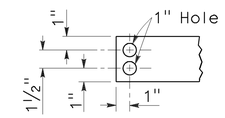

END OF BAR

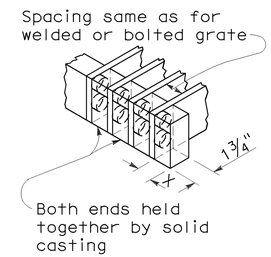

ALTERNATIVE CAST NODULAR IRON OR CAST STEEL END BLOCK GRATE

NOTES:

1. Grate type numbers refer to approximate width of grate in inches and number of bars, respectively.
2. Contractor has the option of using cast nodular iron, cast steel, welded, bolted, or cast end block grate.
3. See Special Provisions for requirements pertaining to galvanizing or asphalt dipping of grates and frames.
4. Rounded top of bars optional on all grates.
5. Pipe inlets with a grate shall be placed so that bars parallel direction of principle surface flow.
6. Full penetration butt welds may be substituted for the fillet welds on all anchors.
7. Standard square, hexagon, round or equivalent headed anchors may be substituted for the right angle hooks on the anchors shown on this plan.
8. Grate and frame weights are based on welded grates (weights of face angles, steps, protection bars, etc. are not included).

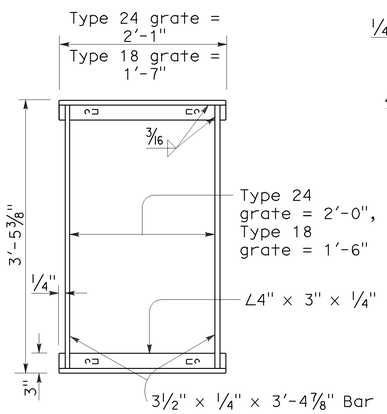

TYPICAL FRAME

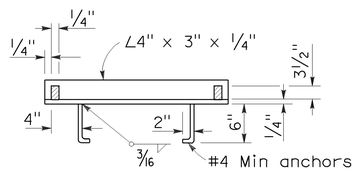

CROSS SECTION

(Thru frame)

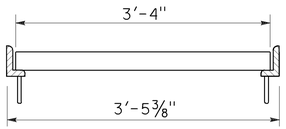

LONGITUDINAL SECTION

(Thru frame and grate)

RECTANGULAR FRAME DETAILS

(For all rectangular grates)

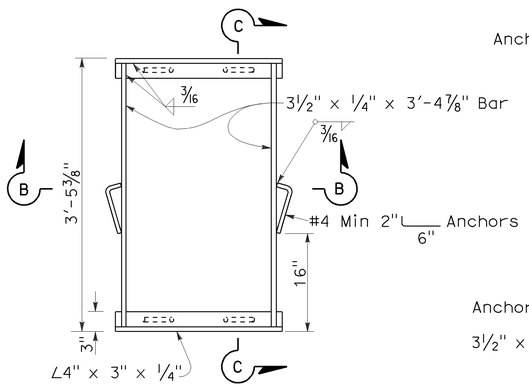

TYPICAL FRAME

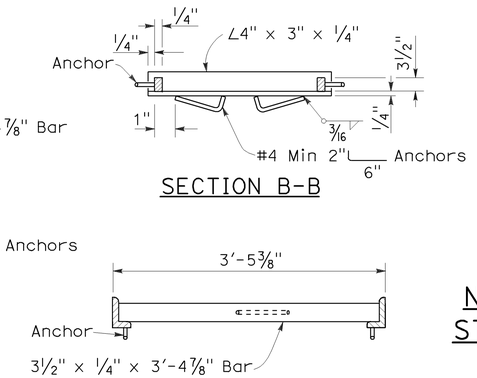

SECTION B-B

SECTION C-C

ALTERNATIVE ANCHOR FOR RECTANGULAR FRAME

(For details not shown, See Rectangular Frame Details)

INLET TYPE	GRATE TYPE	No. OF GRATES	WEIGHT LB
GDO	24-12	2	634
GOL-7	24-12	1	326
GOL-10	24-12	1	326
GO,G1,G2,G3,G4 (TYPE 24)	24-9	1	263
	24-12	1	326
G4 (TYPE 18),G5,G6	18-9	1	249
GT1	18-9	2	498
GT2	18-9	2	498
GT3	24-12	2	652
GT4	24-12	2	652
TRASH RACK			22

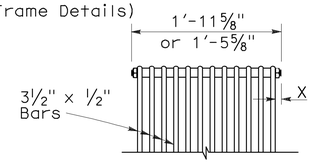

BOLTED END BLOCK

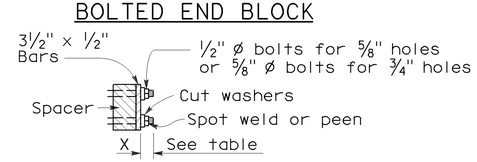

BOLTING DETAIL

ALTERNATIVE BOLTED GRATE

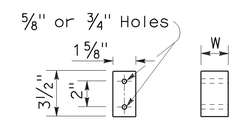

BAR SPACER

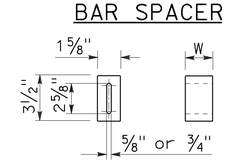

ALTERNATIVE SPACER

W = 1⅜" or 2"

GRATE BAR SPACING TABLE

TYPE	No. OF BARS	CLEAR BAR SPACING	X
18-9	9	1⅜"	1 1/16"
24-9	9	2"	1 9/16"
24-12	12	1⅜"	1¼"

INLET TYPE	COVER TYPE	WEIGHT LB
OS	PLATE	174
OL-7	PLATE	170
OL-10	PLATE	170
OL-14	PLATE	170
OL-21	PLATE	170
OCP	PLATE	112
OCPI	PLATE	112
OCPI	REDWOOD	42
OMP	PLATE	177
OMPI	PLATE	177

BASIS FOR MISC IRON & STEEL FINAL PAY WEIGHTS FOR DRAINAGE INLETS

(See General Notes, No 8)

STATE OF CALIFORNIA
DEPARTMENT OF TRANSPORTATION

GRATE DETAILS

NO SCALE

RSP D77A DATED JANUARY 18, 2008 SUPERSEDES STANDARD PLAN D77A DATED MAY 1, 2006 - PAGE 155 OF THE STANDARD PLANS BOOK DATED MAY 2006.

REVISED STANDARD PLAN RSP D77A

2006 REVISED STANDARD PLAN RSP D77A

12-14-07

DIST	COUNTY	ROUTE	POST MILES TOTAL PROJECT	SHEET NO.	TOTAL SHEETS
04	Son	37	0.9/2.6	16	22

Randell D. Hiatt
REGISTERED CIVIL ENGINEER

June 6, 2008
PLANS APPROVAL DATE

REGISTERED PROFESSIONAL ENGINEER
Randell D. Hiatt
No. C50200
Exp. 6-30-09
CIVIL
STATE OF CALIFORNIA

The State of California or its officers or agents shall not be responsible for the accuracy or completeness of electronic copies of this plan sheet.

To accompany plans dated 2-8-10

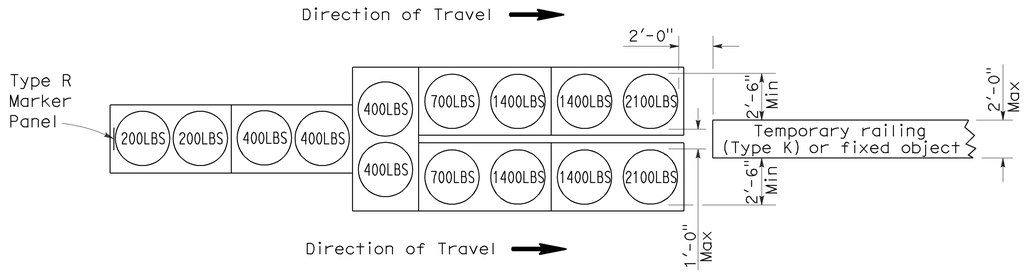

ARRAY 'TU14'

Approach speed 45 mph or more

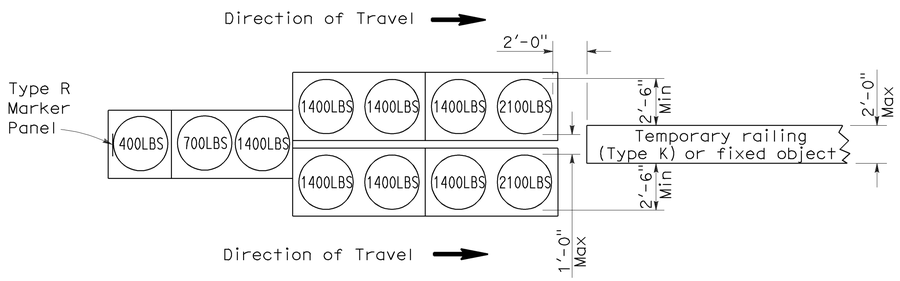

ARRAY 'TU11'

Approach speed less than 45 mph

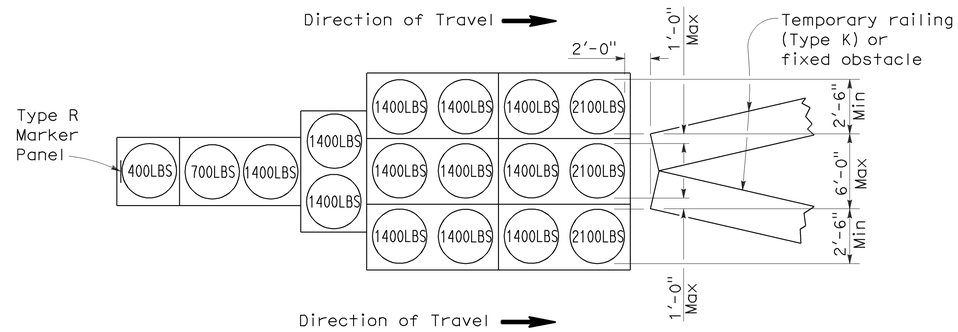

ARRAY 'TU17'

Approach speed less than 45 mph

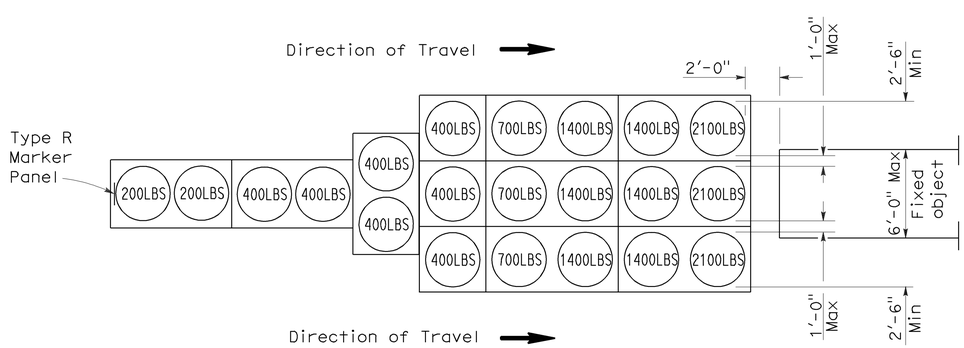

ARRAY 'TU21'

Approach speed 45 mph or more

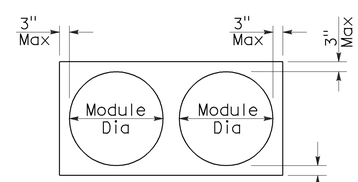

PLAN

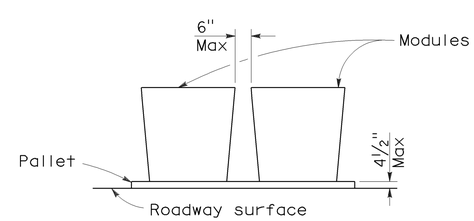

ELEVATION

CRASH CUSHION PALLET DETAIL

See Note 7

NOTES:

1. (XXX) Indicates sand filled module location and weight of sand in pounds for each module. Module spacing is based on the greater diameter of the module.
2. All sand weights are nominal.
3. Temporary crash cushion arrays shall not encroach on the traveled way.
4. Place the top of Type R marker panel 1" below the module lid.
5. Refer to Standard Plan A73B for marker details.
6. Approach speeds indicated conform to NCHRP 350 Report criteria.
7. Use of pallets is optional.

STATE OF CALIFORNIA
DEPARTMENT OF TRANSPORTATION

TEMPORARY CRASH CUSHION, SAND FILLED (UNIDIRECTIONAL)

NO SCALE

RSP T1A DATED JUNE 6, 2008 SUPERSEDES STANDARD PLAN T1A
DATED MAY 1, 2006 - PAGE 211 OF THE STANDARD PLANS BOOK DATED MAY 2006.

REVISED STANDARD PLAN RSP T1A

2006 REVISED STANDARD PLAN RSP T1A

DIST	COUNTY	ROUTE	POST MILES TOTAL PROJECT	SHEET NO.	TOTAL SHEETS
04	Son	37	0.9/2.6	17	22

Randell D. Hiatt
REGISTERED CIVIL ENGINEER

June 6, 2008
PLANS APPROVAL DATE

REGISTERED PROFESSIONAL ENGINEER
Randell D. Hiatt
No. C50200
Exp. 6-30-09
CIVIL
STATE OF CALIFORNIA

The State of California or its officers or agents shall not be responsible for the accuracy or completeness of electronic copies of this plan sheet.

To accompany plans dated 2-8-10

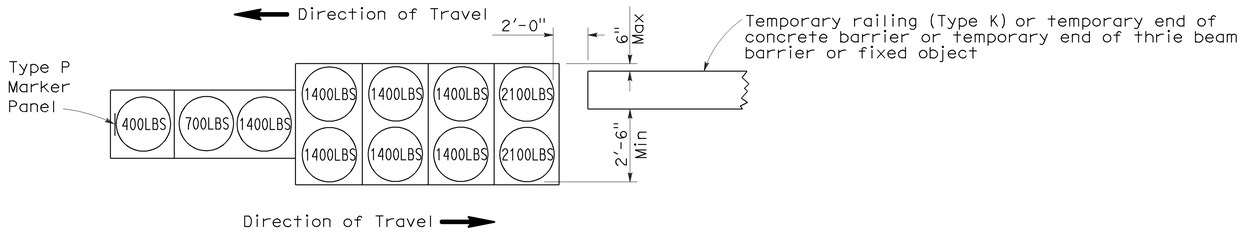

ARRAY 'TB11'

Approach speed less than 45 mph

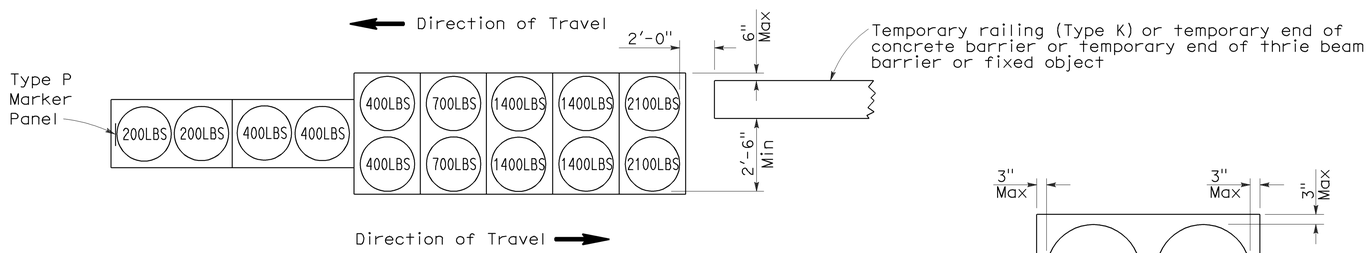

ARRAY 'TB14'

Approach speed 45 mph or more

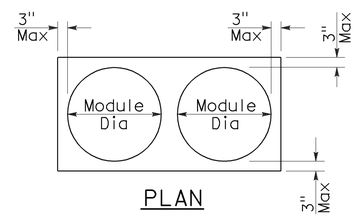

PLAN

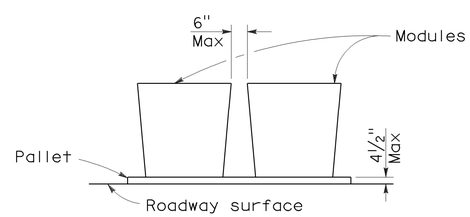

ELEVATION

CRASH CUSHION PALLET DETAIL

See Note 7

NOTES:

1. (XXX) Indicates sand filled module location and weight of sand in pounds for each module. Module spacing is based on the greater diameter of the module.
2. All sand weights are nominal.
3. Temporary crash cushion arrays shall not encroach on the traveled way.
4. Place the Type P marker panel so that the bottom of the panel rests upon the pallet.
5. Refer to Standard Plan A73B for marker details.
6. Approach speeds indicated conform to NCHRP 350 Report criteria.
7. Use of pallets is optional.

STATE OF CALIFORNIA
DEPARTMENT OF TRANSPORTATION

TEMPORARY CRASH CUSHION, SAND FILLED (BIDIRECTIONAL)

NO SCALE

RSP T1B DATED JUNE 6, 2008 SUPERSEDES STANDARD PLAN T1B
DATED MAY 1, 2006 - PAGE 212 OF THE STANDARD PLANS BOOK DATED MAY 2006.

REVISED STANDARD PLAN RSP T1B

2006 REVISED STANDARD PLAN RSP T1B

5-15-08

DIST	COUNTY	ROUTE	POST MILES TOTAL PROJECT	SHEET NO.	TOTAL SHEETS
04	Son	37	0.9/2.6	18	22

Randell D. Hiatt
REGISTERED CIVIL ENGINEER

June 6, 2008
PLANS APPROVAL DATE

REGISTERED PROFESSIONAL ENGINEER
Randell D. Hiatt
No. C50200
Exp. 6-30-09
CIVIL
STATE OF CALIFORNIA

The State of California or its officers or agents shall not be responsible for the accuracy or completeness of electronic copies of this plan sheet.

To accompany plans dated 2-8-10

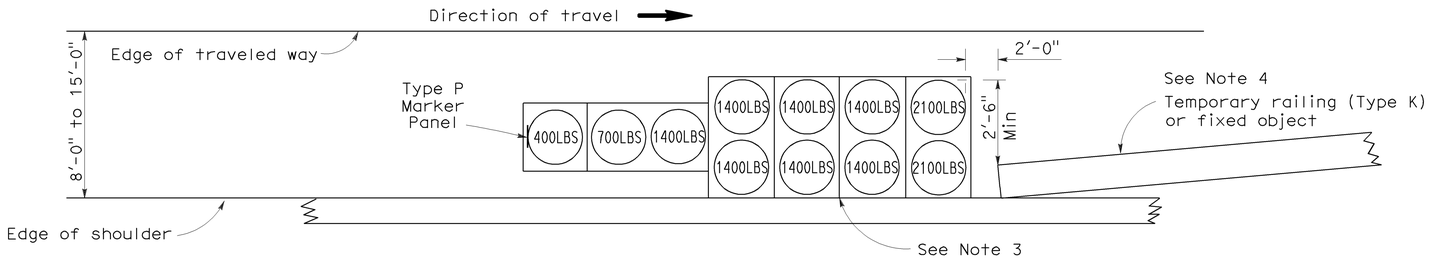

ARRAY 'TS11'

Approach speed less than 45 mph
See Note 9

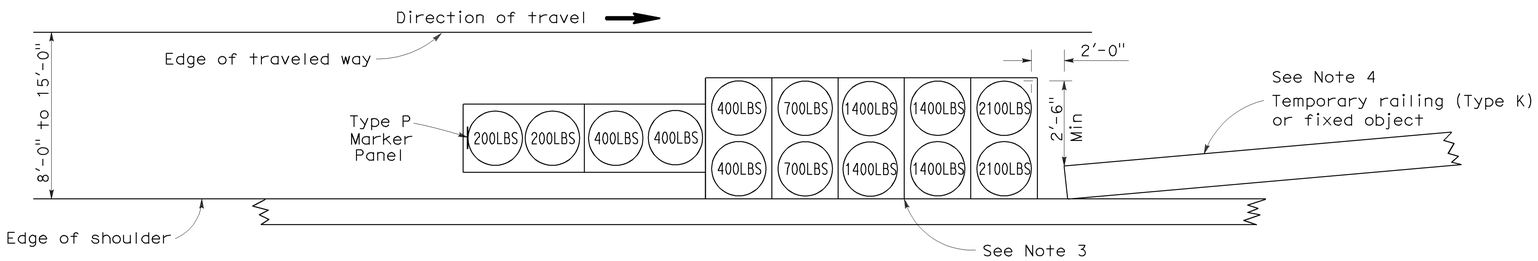

ARRAY 'TS14'

Approach speed 45 mph or more
See Note 9

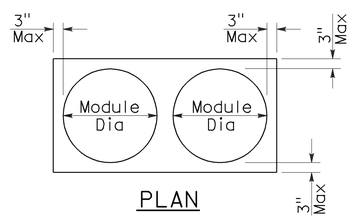

PLAN

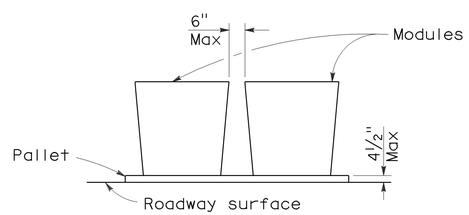

ELEVATION

CRASH CUSHION PALLET DETAIL

See Note 11

NOTES:

1. (XXX) Indicates sand filled module location and weight of sand in pounds for each module. Module spacing is based on the greater diameter of the module.
2. All sand weights are nominal.
3. The temporary crash cushion arrays shown on this plan shall be used only in locations where there will be traffic on one side of the temporary crash cushion array.
4. If the fixed object or approach end of the temporary railing is less than 15'-0" from the edge of traveled way, a temporary crash cushion is required in a construction or work zone.
5. Temporary crash cushion arrays shall not encroach on the traveled way.
6. Arrays for median shoulders shall conform to details shown on this plan for outside shoulders.
7. Place the Type P marker panel so that the bottom of the panel rests upon the pallet and faces traffic.
8. Refer to Standard Plan A73B for marker details.
9. For shoulder widths less than 8'-0", appropriate approved crash cushion protection, other than sand filled modules, shall be provided at fixed objects and at approach ends of temporary railing. The specific type of crash cushion shall be as shown on the project plans or as specified in the Special Provisions, or if not shown on the project plans or specified in the Special Provisions, shall be as approved by the Engineer.
10. Approach speeds indicated conform to NCHRP 350 Report criteria.
11. Use of pallets is optional.

STATE OF CALIFORNIA
DEPARTMENT OF TRANSPORTATION

TEMPORARY CRASH CUSHION, SAND FILLED (SHOULDER INSTALLATIONS)

NO SCALE

RSP T2 DATED JUNE 6, 2008 SUPERSEDES STANDARD PLAN T2
DATED MAY 1, 2006 - PAGE 213 OF THE STANDARD PLANS BOOK DATED MAY 2006.

REVISED STANDARD PLAN RSP T2

2006 REVISED STANDARD PLAN RSP T2

5-15-08

DIST	COUNTY	ROUTE	POST MILES TOTAL PROJECT	SHEET NO.	TOTAL SHEETS
04	Son	37	0.9/2.6	19	22

REGISTERED CIVIL ENGINEER

June 5, 2009
PLANS APPROVAL DATE

Glenn DeCou No. C34547 Exp. 9-30-09 CIVIL — REGISTERED PROFESSIONAL ENGINEER — STATE OF CALIFORNIA

The State of California or its officers or agents shall not be responsible for the accuracy or completeness of electronic copies of this plan sheet.

To accompany plans dated 2-8-10

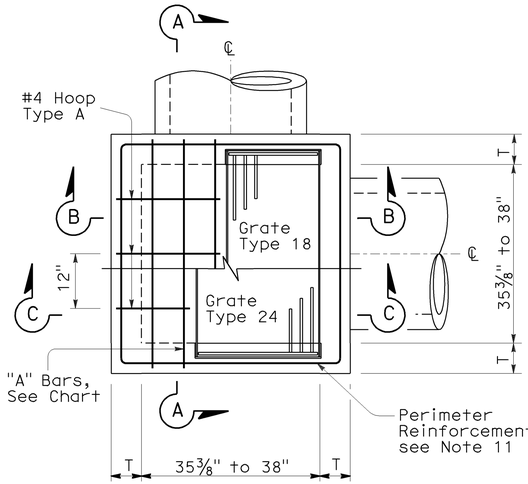

STANDARD TYPE G2 OR G4

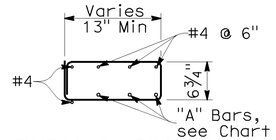

TYPICAL SECTION
(HOOP TYPE A)

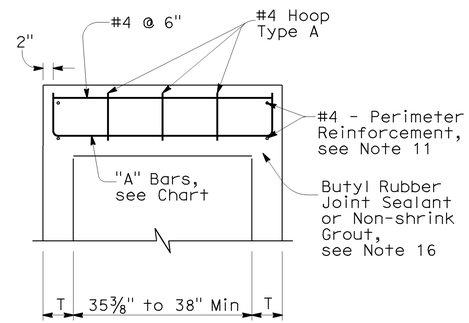

SECTION A-A

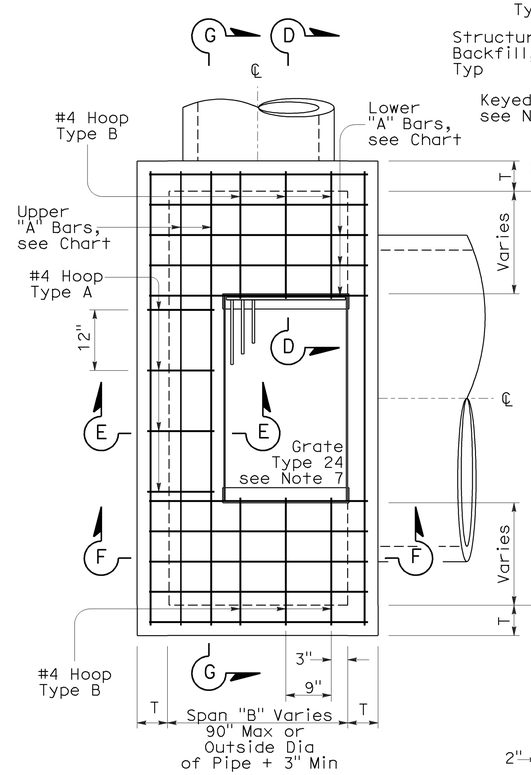

EXPANDED TYPE G2 OR G4
(Top Rebar Not Shown)

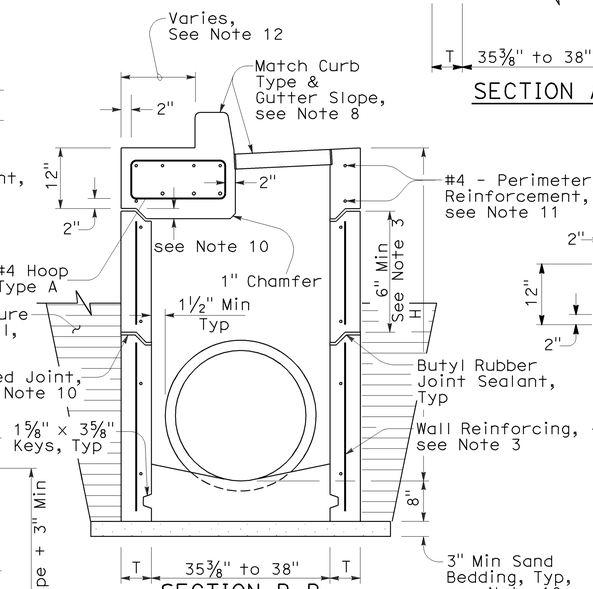

SECTION B-B
(with G4 Top)

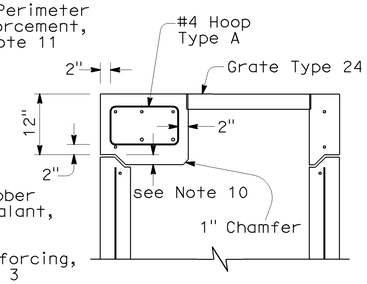

SECTION C-C
(with G2 Top)

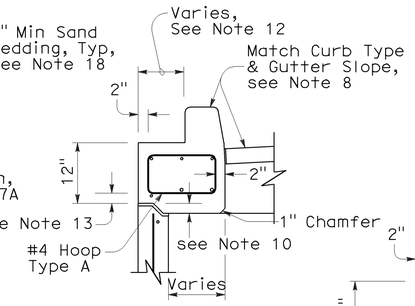

SECTION E-E
(with G4 Top)

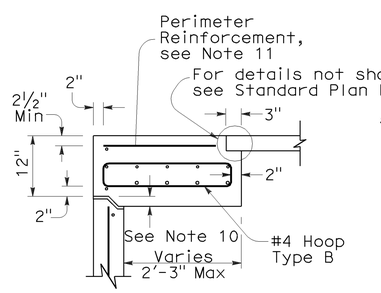

SECTION D-D

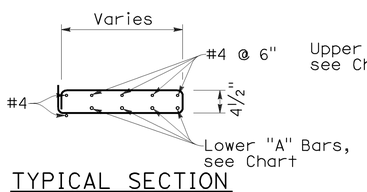

TYPICAL SECTION
(HOOP TYPE B)

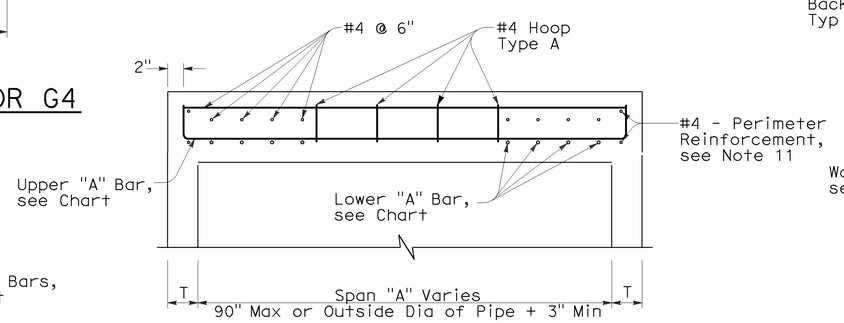

SECTION G-G

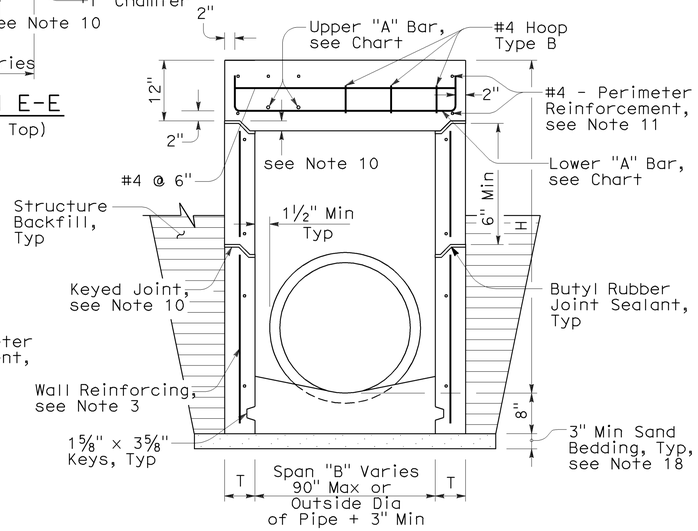

SECTION F-F
(with G2 Top)

NOTES:

1. "H" is the difference in elevation between the outlet pipe flow line and the normal gutter grade line undepressed.
2. For "T" wall thickness: T=6" when "H" is 8' or less. T=8" when "H" is over 8'.
3. Wall reinforcing not required when "H" is 8' or less and the unsupported width or length is 6'-0" or less. Reinforce wall exceeding these limits with #4 bars @ 1'-6" ± centers placed 2" clear to the inside of inlet unless otherwise shown. Short independent wall sections or height adjustment rings 6" to 24" high must have a minimum of two #4 horizontal bars.
4. Seal pre-cast inlets connection openings between wall and pipe with non-shrink grout or resilient connectors as specified in the Special Provisions.
5. Steps - None required where "H" is less than 2'-6". Where "H" is 2'-6" or more, install steps with lowest rung 1'-0" above the floor and highest rung not more than 6" below bottom of lid. The distance between steps must not exceed 1'-0" and be uniform throughout the length of the wall. Place steps in the wall without an opening. Steps inserts may be substituted for the bar steps. Step inserts must comply with State Industrial Safety Requirements. See Standard Plan D74C for step details.
6. Pipe(s) can be placed in any wall.
7. Set inlet so that grate bars are parallel to direction of principal surface flow.
8. Type G4 inlet can use Grate Type 18 or 24. Type G2 inlet uses Grate Type 24. See Revised Standard Plan RSP D77A and Standard Plan D77B for grate and frame details and weights of miscellaneous Iron and Steel.
9. G4 inlet details are the same as the G2 with the addition of a curb and sloped grate that matches the adjacent curb and gutter depression. See Standard Plans D78A & D78B for gutter and inlet depresssion details. See Revised Standard Plan RSP A87A & Standard Plan A87B for Curb and Dike Details.
10. Provide pre-cast inlets with separate top sections for final grade adjustment under Standard Specifcation Section 51-1.02. Provide keyed joints between the top and wall and multiple wall sections. Joint design may vary but must be 1" to 3" in depth.
11. Perimeter reinforcement serves as a rigid frame to position and attach the required structural reinforcement and may be tack welded at outer corners when using ASTM A706 weldable bars.
12. This dimension will vary with different grates, curbs types, box width and wall thickness.
13. 2" unless inlet is expanded in the Span "A" direction, then clearance is 2" plus the diameter of the lower "A" bar.
14. Place "A" Bars at an angle so hooked ends will maintain 2" clear coverage.
15. Refer to Standard Plan D73, Table A for concrete quantities.
16. Non-shrink grout can be used for upper most joint to facilitate final top grade adjustment.
17. Slope inlet floors 4:1 towards the outlet pipe. Pre-cast inlets may have monolithic sloped floors, flat floors, or no floors in which case a sloped floor must be cast in the field. Inlet floors do not require reinforcing.
18. Extend sand bedding under all structure backfill.

TOP REINFORCEMENT CHART

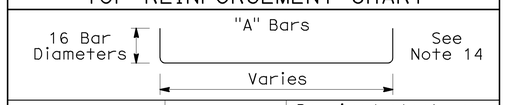

Span	"A" Bars	Required steel area per foot (in^2/ft)
Under 38" with Type 24 Grate	#5 @ 7" C-C 2-#5 Min	0.525
Under 38" with Type 18 Grate	#5 @ 7" C-C 3-#5 Min	0.525
38"-60"	#5 @ 6" C-C	0.621
61"-72"	#5 @ 5" C-C	0.744
73"-90"	#6 @ 6" C-C	0.811

STATE OF CALIFORNIA
DEPARTMENT OF TRANSPORTATION

DRAINAGE INLETS (PRECAST)

NO SCALE

NSP D73A DATED JUNE 5, 2009 SUPPLEMENTS THE STANDARD PLANS BOOK DATED MAY 2006.

NEW STANDARD PLAN NSP D73A

2006 NEW STANDARD PLAN NSP D73A

3-16-09

DIST	COUNTY	ROUTE	POST MILES TOTAL PROJECT	SHEET NO.	TOTAL SHEETS
04	Son	37	0.9/2.6	20	22

Raymond Don Tsztoo
REGISTERED CIVIL ENGINEER

March 7, 2008
PLANS APPROVAL DATE

REGISTERED PROFESSIONAL ENGINEER
Raymond Don Tsztoo
No. C37332
Exp. 6-30-08
CIVIL
STATE OF CALIFORNIA

The State of California or its officers or agents shall not be responsible for the accuracy or completeness of electronic copies of this plan sheet.

To accompany plans dated 2-8-10

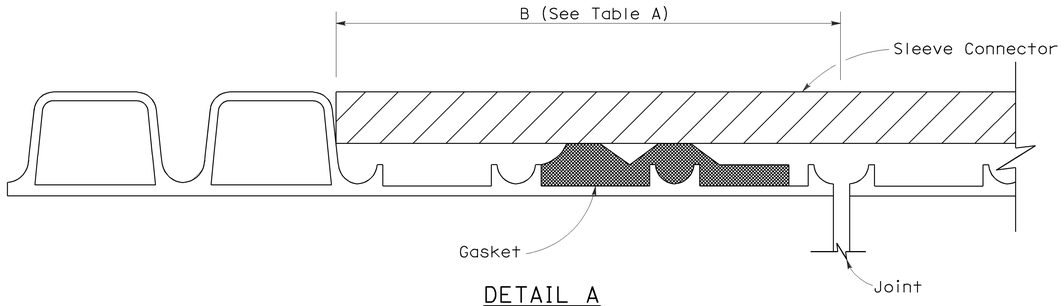

DETAIL A

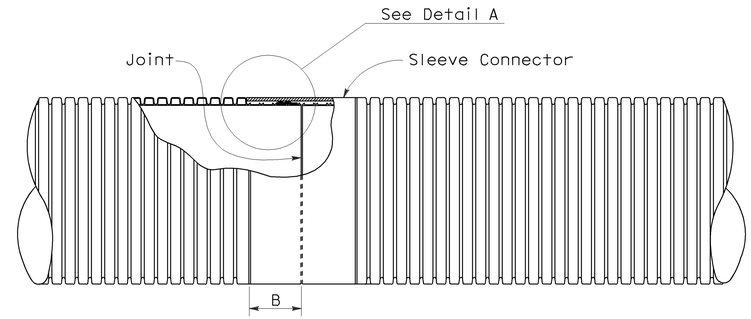

PLAN VIEW
Liner Insert
See Note 4

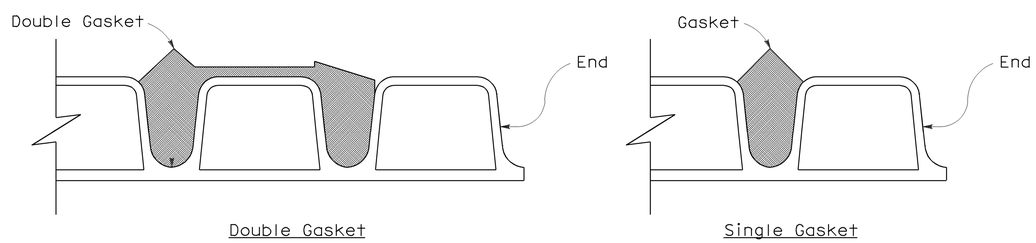

DETAIL B

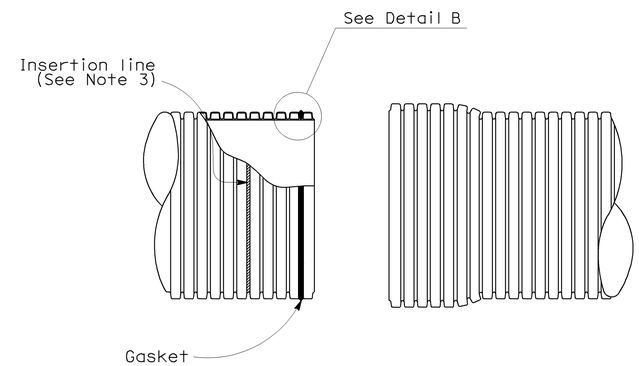

SPIGOT BELL

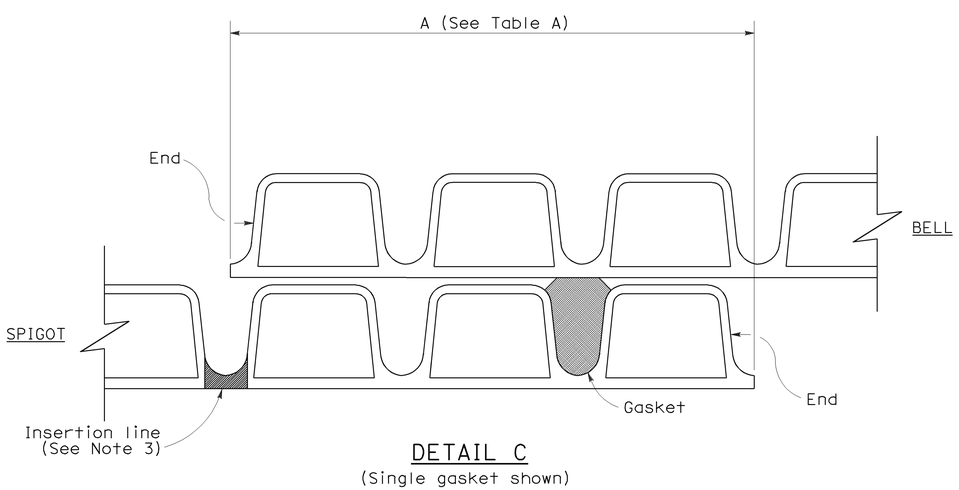

DETAIL C
(Single gasket shown)

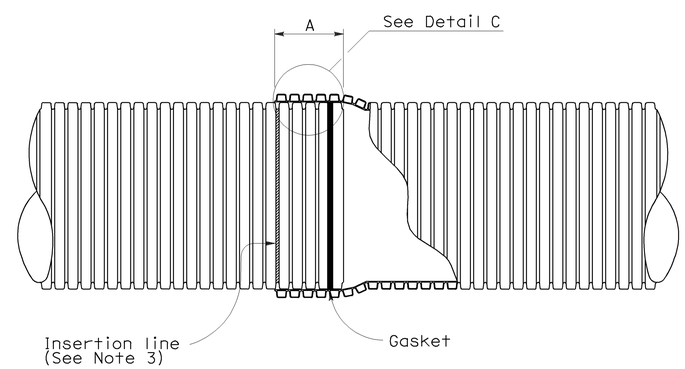

BELL AND SPIGOT JOINT

NOTES:

1. For pipe sections installed on straight alignment, the pipe sections shall be joined to achieve maxium joint overlap at all points on the periphery as indicated in Table A where the plans call for positive or watertight joints. Maxium joint overlap is recommended where the plans call for standard joints, but in no case shall the joint overlap be less than 3½".
2. For pipe sections installed on curved alignment, the maxium angle of deflection from straight alignment at any joint shall not exceed two degrees. Where the plans call for watertightness, field testing for compliance is required. Where plans call for positive joints, the pipe sections shall be joined to achieve Table A Dimensions on one side of the joint. Joints classified as standard shall have no less than 3½" joint overlap at any point on the periphery.
3. Factory applied insertion line limit shall be placed on spigot.
4. Liner insert to be used inside of existing pipe.

TABLE A

JOINT OVERLAP DIMENSIONS		
PIPE Dia (NOMINAL)	A	B
12"	5¾"	4¼"
15"	6¾"	5⅝"
18"	6¾"	5⅝"
21"	8½"	5⅝"
24"	8½"	6⅛"
30"	8½"	7⅛"
36"	8½"	8⅛"

STATE OF CALIFORNIA
DEPARTMENT OF TRANSPORTATION

CORRUGATED POLYVINYL CHLORIDE PIPE WITH SMOOTH INTERIOR STANDARD AND POSITIVE JOINTS

NO SCALE

NSP D97I DATED MARCH 7, 2008 SUPPLEMENTS THE STANDARD PLANS BOOK DATED MAY 2006.

NEW STANDARD PLAN NSP D97I

2006 NEW STANDARD PLAN NSP D97I

190A

2-13-08

DIST	COUNTY	ROUTE	POST MILES TOTAL PROJECT	SHEET NO.	TOTAL SHEETS
04	Son	37	0.9/2.6	21	22

LICENSED LANDSCAPE ARCHITECT

August 15, 2008
PLANS APPROVAL DATE

The State of California or its officers or agents shall not be responsible for the accuracy or completeness of electronic copies of this plan sheet.

LICENSED LANDSCAPE ARCHITECT — Robert B. Schott — Signature — 11-04-08 Renewal Date — 08-11-08 Date — STATE OF CALIFORNIA

To accompany plans dated 2-8-10

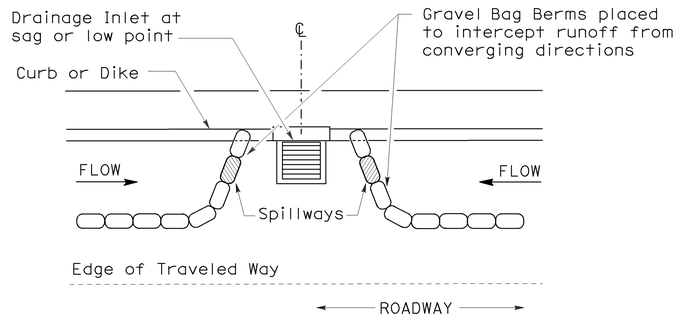

PLAN

CONFIGURATION FOR SAG POINT INLET (GRAVEL BAG BERM)

GRAVEL BAG BERM (TYPE 3A) SPACING TABLE

SLOPE OF ROADWAY (PERCENT)	1 to 3.9	4 to 5.9	6 to 7.9	8 to 10	10+
INTERVAL BETWEEN BERM	100′	75′	50′	25′	12′

For slope of less than 1%, install barriers only if erosion/sediment is prevalent

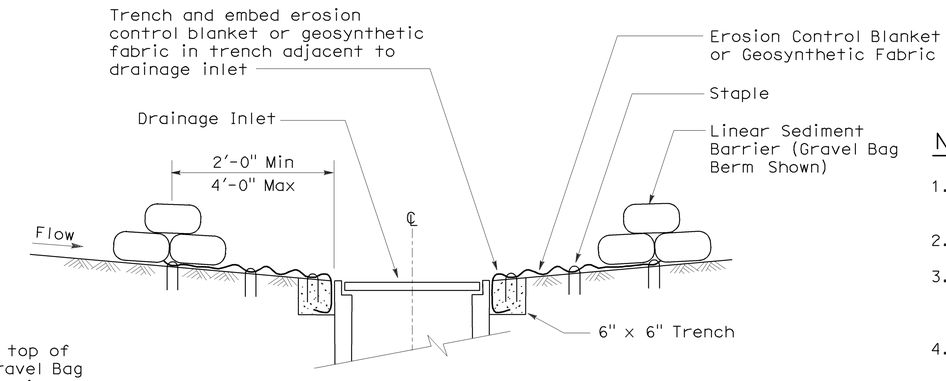

SECTION A-A

NOTES:

1. Place safety cones adjacent to drainage inlet protection.
2. Dimensions may vary to fit field conditions.
3. Install a minimum of 3 gravel bag berms upstream of each drainage inlet to be protected.
4. Position erosion control blanket or geosynthetic fabric at edge of concrete apron and secure in trench.
5. Erosion control blanket or geosynthetic fabric is not required if the area adjacent to the drainage inlet is vegetated or paved.

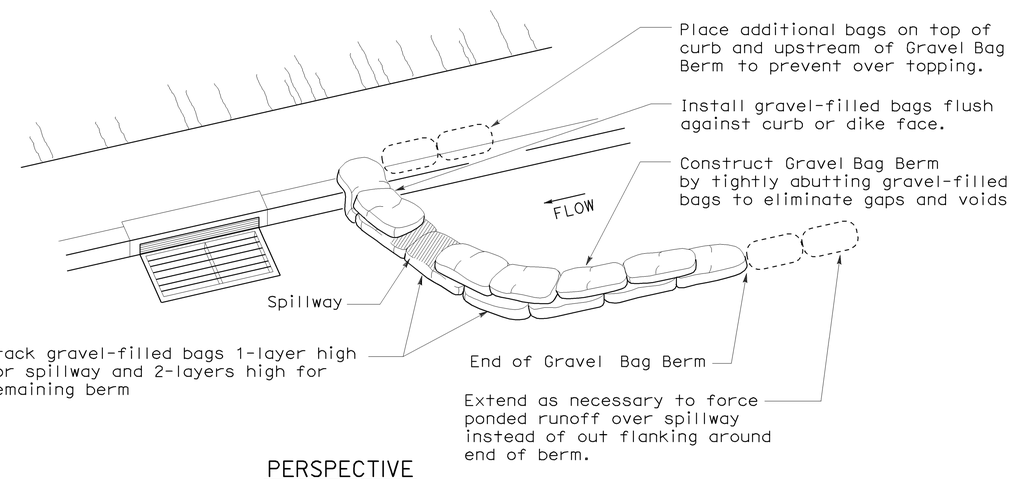

PERSPECTIVE

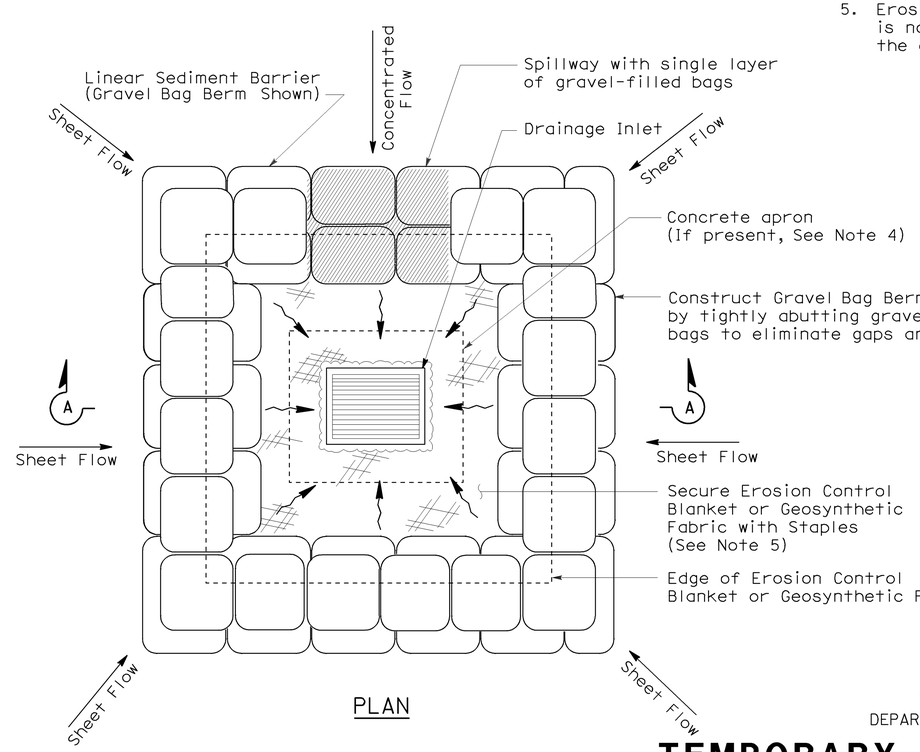

PLAN

TEMPORARY DRAINAGE INLET PROTECTION (TYPE 3B)

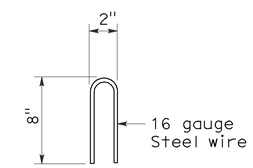

STAPLE DETAIL

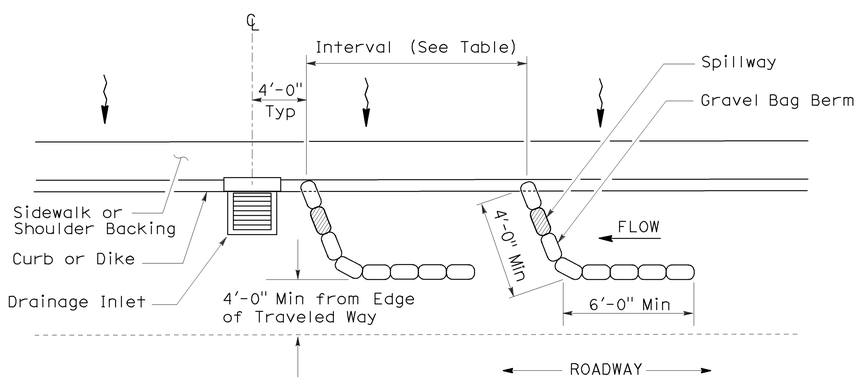

PLAN

TEMPORARY DRAINAGE INLET PROTECTION (TYPE 3A) (GRAVEL BAG BERM)

STATE OF CALIFORNIA
DEPARTMENT OF TRANSPORTATION

TEMPORARY WATER POLLUTION CONTROL DETAILS (TEMPORARY DRAINAGE INLET PROTECTION)

NO SCALE

NSP T62 DATED AUGUST 15, 2008 SUPPLEMENTS THE STANDARD PLANS BOOK DATED MAY 2006.

NEW STANDARD PLAN NSP T62

2006 NEW STANDARD PLAN NSP T62

7-11-08

DIST	COUNTY	ROUTE	POST MILES TOTAL PROJECT	SHEET NO.	TOTAL SHEETS
04	Son	37	0.9/2.6	22	22

LICENSED LANDSCAPE ARCHITECT

August 15, 2008
PLANS APPROVAL DATE

LICENSED LANDSCAPE ARCHITECT Robert B. Schott 3825 Signature 11-04-08 Renewal Date 08-11-08 Date STATE OF CALIFORNIA

The State of California or its officers or agents shall not be responsible for the accuracy or completeness of electronic copies of this plan sheet.

To accompany plans dated 2-8-10

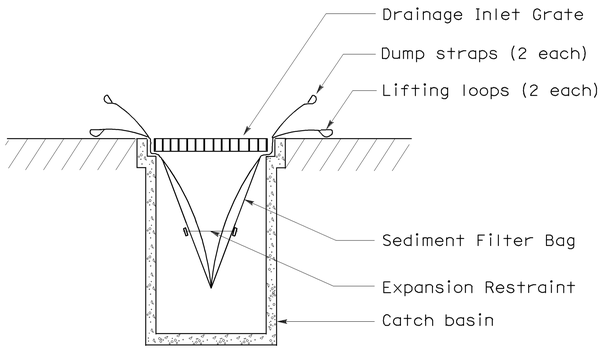

SECTION B-B

SEDIMENT FILTER BAG DETAIL

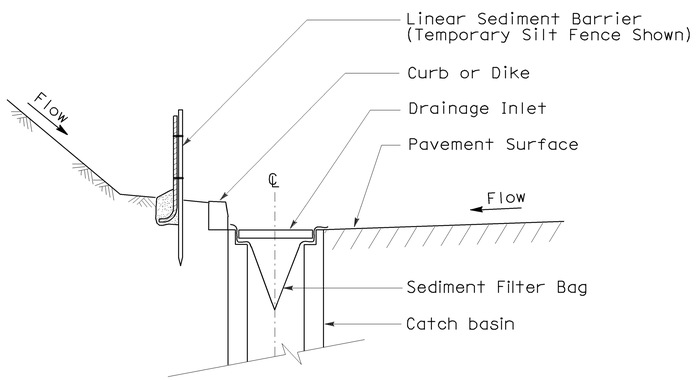

SECTION A-A

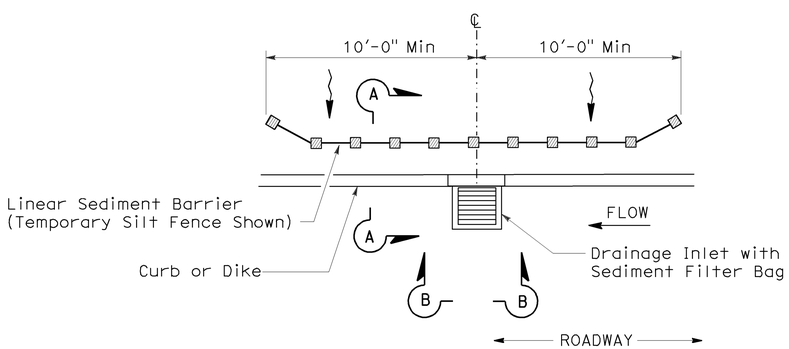

PLAN

TEMPORARY DRAINAGE INLET PROTECTION (TYPE 5) (SEDIMENT FILTER BAG)

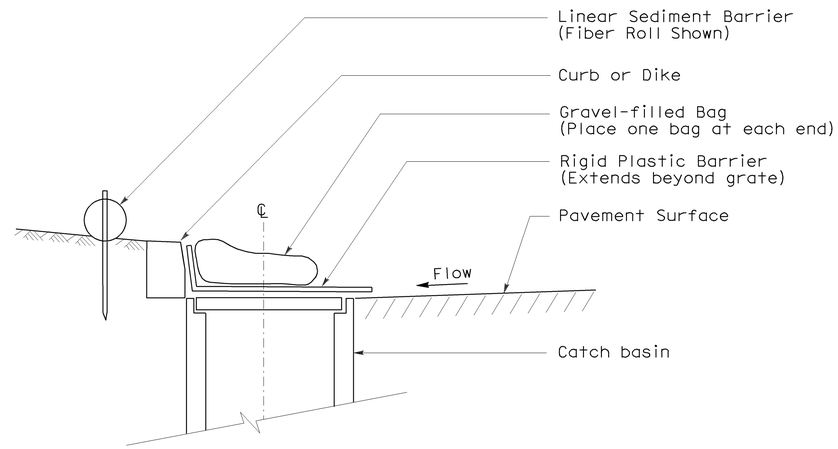

SECTION

TEMPORARY DRAINAGE INLET PROTECTION (TYPE 6A) (CATCH BASIN WITH GRATE)

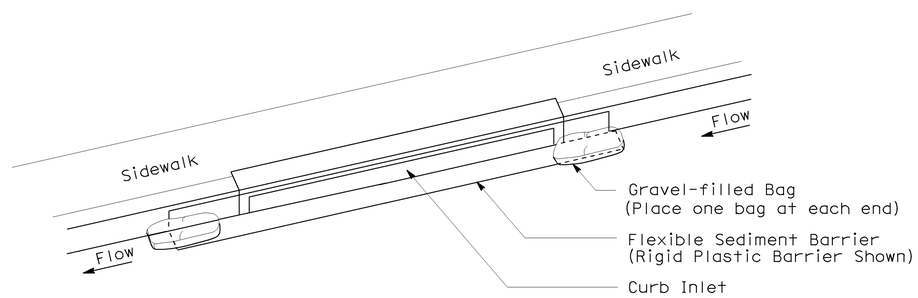

PERSPECTIVE

TEMPORARY DRAINAGE INLET PROTECTION (TYPE 6B) (CURB INLET WITHOUT GRATE)

NOTES:

1. See Standard Plan T51 for Temporary Silt Fence.
2. Dimensions may vary to fit field conditions.

STATE OF CALIFORNIA
DEPARTMENT OF TRANSPORTATION

TEMPORARY WATER POLLUTION CONTROL DETAILS (TEMPORARY DRAINAGE INLET PROTECTION)

NO SCALE

NSP T64 DATED AUGUST 15, 2008 SUPPLEMENTS THE STANDARD PLANS BOOK DATED MAY 2006.

NEW STANDARD PLAN NSP T64

2006 NEW STANDARD PLAN NSP T64

7-11-08

Dist	COUNTY	ROUTE	POST MILES TOTAL PROJECT	SHEET No.	TOTAL SHEETS
04	Son	37	0.9/2.6	1	22

INDEX OF PLANS

SHEET No.	DESCRIPTION
1	TITLE SHEET
2	EROSION CONTROL DETAILS
3-12	DRAINAGE PLAN, PROFILES, DETAILS AND QUANTITIES
13	CONSTRUCTION AREA SIGNS
14	PAVEMENT DELINEATION PLAN AND QUANTITIES
15-22	REVISED AND NEW STANDARD PLANS

THE STANDARD PLANS LIST APPLICABLE TO THIS CONTRACT IS INCLUDED IN THE NOTICE TO BIDDERS AND SPECIAL PROVISIONS BOOK.

STATE OF CALIFORNIA

DEPARTMENT OF TRANSPORTATION

PROJECT PLANS FOR CONSTRUCTION ON

STATE HIGHWAY

IN SONOMA COUNTY
ABOUT 8 MILES EAST OF NOVATO AT VARIOUS LOCATIONS
FROM 0.9 MILE EAST OF THE MARIN COUNTY LINE
TO 1.3 MILES WEST OF ROUTE 121

TO BE SUPPLEMENTED BY STANDARD PLANS DATED MAY 2006

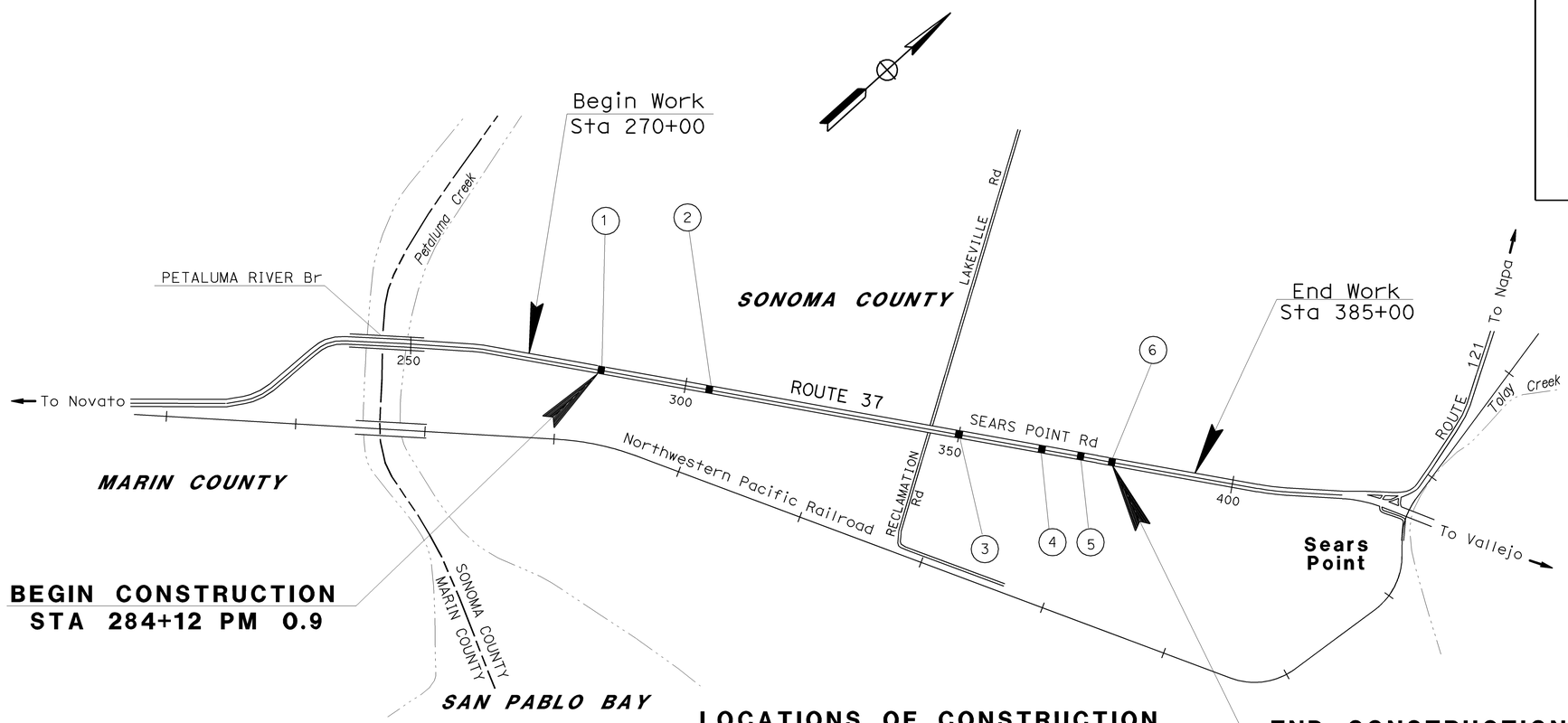

LOCATIONS OF CONSTRUCTION

LOCATION No.	COUNTY	ROUTE	PM	DIRECTION
1	Son	37	0.9	WB
2	Son	37	1.3	WB
3	Son	37	2.1	WB
4	Son	37	2.3	WB
5	Son	37	2.5	WB AND EB
6	Son	37	2.6	WB AND EB

NO SCALE

LOCATION MAP

PROJECT MANAGER: LAWRENCE A. JONES

DESIGN ENGINEER: HUNG. H. DO

THE CONTRACTOR SHALL POSSESS THE CLASS (OR CLASSES) OF LICENSE AS SPECIFIED IN THE "NOTICE TO BIDDERS."

1-29-10
PROJECT ENGINEER REGISTERED CIVIL ENGINEER — DATE

February 8, 2010
PLANS APPROVAL DATE

REGISTERED PROFESSIONAL ENGINEER — Hung H. Do — No. 55485 — Exp. 12-31-10 — CIVIL — STATE OF CALIFORNIA

THE STATE OF CALIFORNIA OR ITS OFFICERS OR AGENTS SHALL NOT BE RESPONSIBLE FOR THE ACCURACY OR COMPLETENESS OF SCANNED COPIES OF THIS PLAN SHEET.

CONTRACT No. **04-4A2304**

LAST REVISION 02-04-10 — DATE PLOTTED => 08-FEB-2010 — TIME PLOTTED => 10:28

Dist	COUNTY	ROUTE	POST MILES TOTAL PROJECT	SHEET No.	TOTAL SHEETS
04	Son	37	0.9/2.6	2	22

LICENSED LANDSCAPE ARCHITECT

2-8-10
PLANS APPROVAL DATE

LICENSED LANDSCAPE ARCHITECT
JENNIFER EGAWA No. 5084
Signature
7-31-10
Renewal Date
Date
STATE OF CALIFORNIA

THE STATE OF CALIFORNIA OR ITS OFFICERS OR AGENTS SHALL NOT BE RESPONSIBLE FOR THE ACCURACY OR COMPLETENESS OF SCANNED COPIES OF THIS PLAN SHEET.

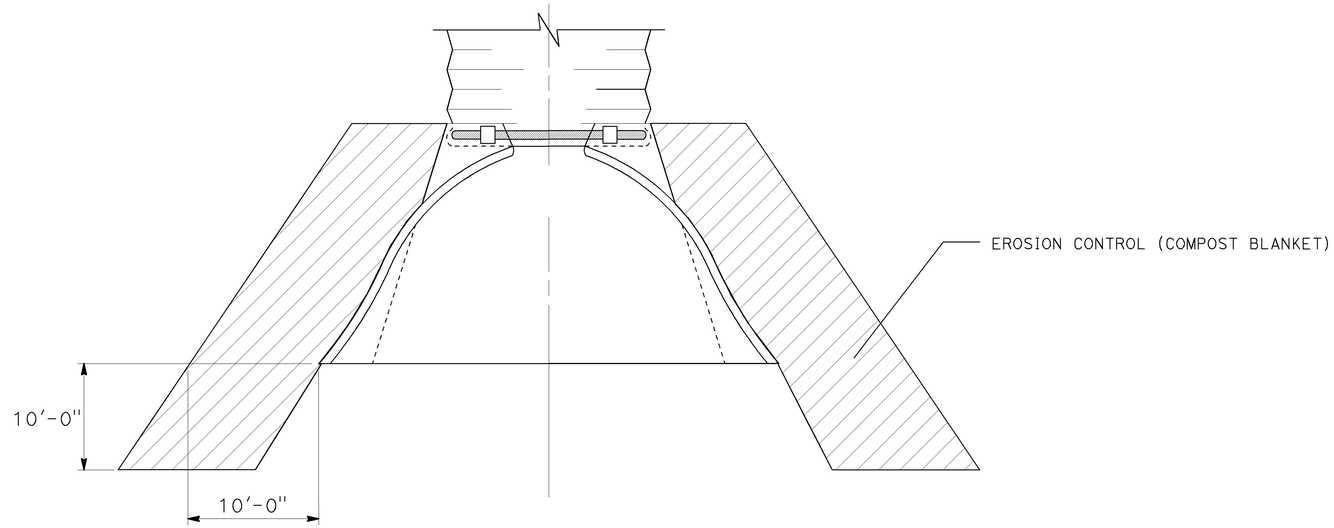

PLAN

EROSION CONTROL AT FLARED END SECTION

EROSION CONTROL QUANTITIES

LOC No.	POSTMILE	EROSION CONTROL (COMPOST BLANKET)
		CY
1	0.89	1.5
2	1.3	1.5
3	2.14	1.5
4	2.34	1.5
5	2.56	3.0
6	2.62	3.0
	TOTALS	12.0

EROSION CONTROL DETAILS

NO SCALE

ECD-1

REVISED BY | DATE REVISED

JENNIFER EGAWA
ALEX MCDONALD

CALCULATED-DESIGNED BY
CHECKED BY

SENIOR LANDSCAPE ARCHITECT
DAVID W. YAM

STATE OF CALIFORNIA - DEPARTMENT OF TRANSPORTATION
Caltrans
WATER QUALITY

LAST REVISION 12-17-09 | DATE PLOTTED => 08-FEB-2010 | TIME PLOTTED => 10:23

Dist	COUNTY	ROUTE	POST MILES TOTAL PROJECT	SHEET No.	TOTAL SHEETS
04	Son	37	0.9/2.6	3	22

REGISTERED CIVIL ENGINEER 1-29-10 DATE

2-8-10
PLANS APPROVAL DATE

REGISTERED PROFESSIONAL ENGINEER Hung H. Do No. 55485 Exp. 12-31-10 CIVIL STATE OF CALIFORNIA

THE STATE OF CALIFORNIA OR ITS OFFICERS OR AGENTS SHALL NOT BE RESPONSIBLE FOR THE ACCURACY OR COMPLETENESS OF SCANNED COPIES OF THIS PLAN SHEET.

FOR ACCURATE RIGHT OF WAY DATA,
CONTACT RIGHT OF WAY ENGINEERING
AT THE DISTRICT OFFICE.

LEGEND:

No. DRAINAGE SYSTEM NUMBER

a DRAINAGE UNIT

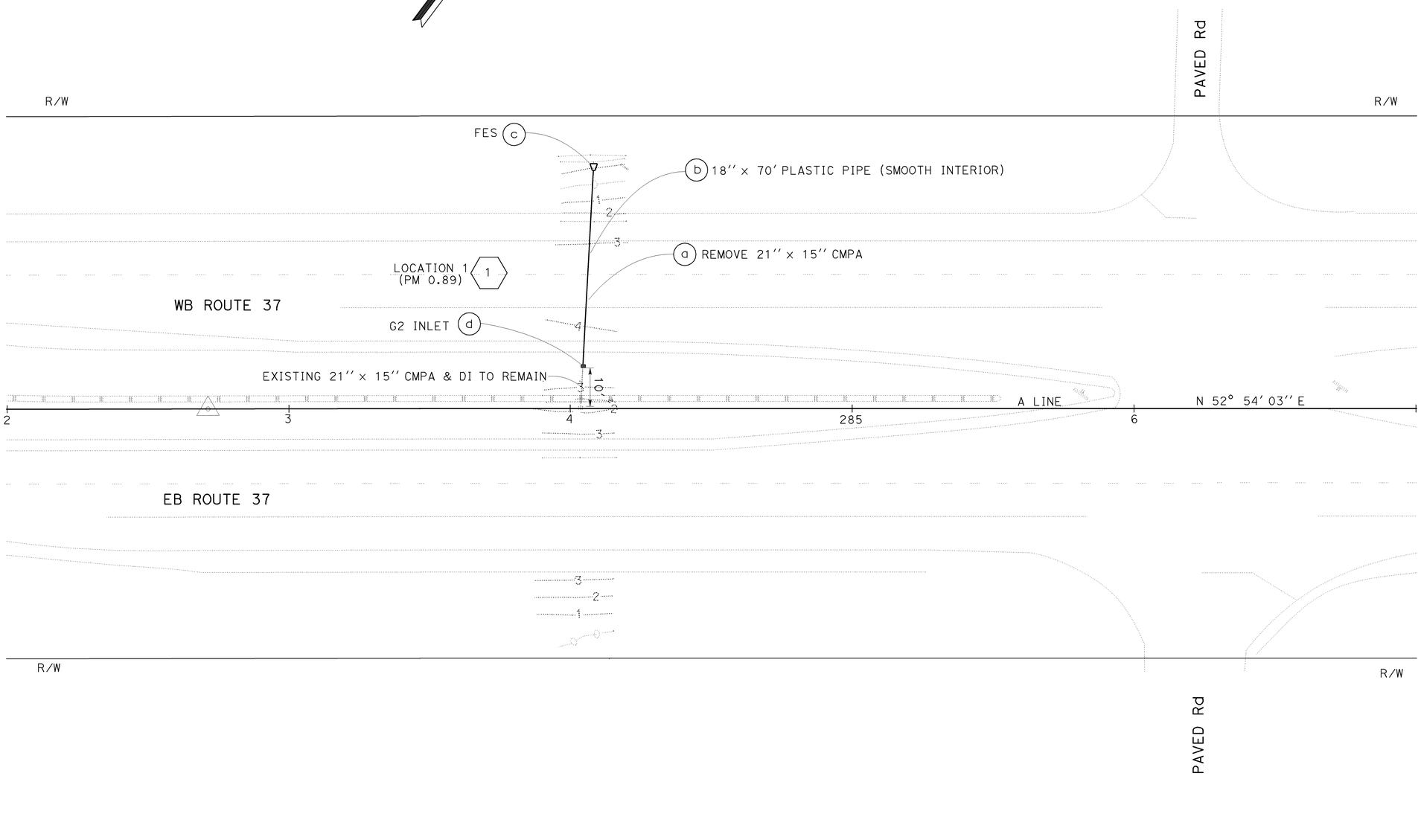

DRAINAGE PLAN

SCALE: 1'' = 20'

THIS PLAN ACCURATE FOR
DRAINAGE WORK ONLY

D-1

STATE OF CALIFORNIA - DEPARTMENT OF TRANSPORTATION
Caltrans®
DESIGN

FUNCTIONAL SUPERVISOR: GORDON W. JEONG

CALCULATED-DESIGNED BY: MICHAEL PHAM
CHECKED BY: HUNG H. DO

REVISED BY
DATE REVISED

LAST REVISION 12-22-09
DATE PLOTTED => 08-FEB-2010
TIME PLOTTED => 10:24

Dist	COUNTY	ROUTE	POST MILES TOTAL PROJECT	SHEET No.	TOTAL SHEETS
04	Son	37	0.9/2.6	4	22

REGISTERED CIVIL ENGINEER 1-29-10 DATE

2-8-10
PLANS APPROVAL DATE

REGISTERED PROFESSIONAL ENGINEER Hung H. Do No. 55485 Exp. 12-31-10 CIVIL STATE OF CALIFORNIA

THE STATE OF CALIFORNIA OR ITS OFFICERS OR AGENTS SHALL NOT BE RESPONSIBLE FOR THE ACCURACY OR COMPLETENESS OF SCANNED COPIES OF THIS PLAN SHEET.

FOR ACCURATE RIGHT OF WAY DATA,
CONTACT RIGHT OF WAY ENGINEERING
AT THE DISTRICT OFFICE.

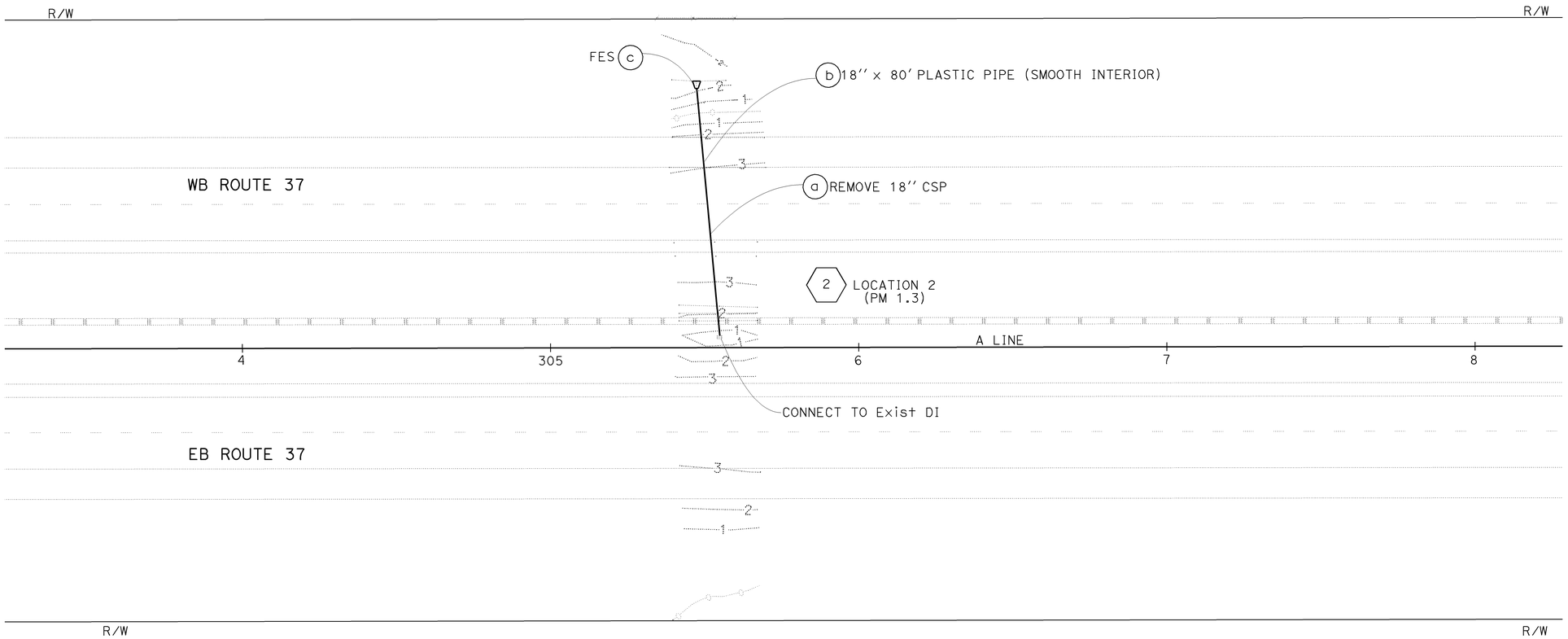

FOR NOTES, ABBREVIATIONS AND LEGEND, SEE SHEET D-1

THIS PLAN ACCURATE FOR DRAINAGE WORK ONLY

DRAINAGE PLAN

SCALE: 1'' = 20'

D-2

STATE OF CALIFORNIA - DEPARTMENT OF TRANSPORTATION
Caltrans®
DESIGN

FUNCTIONAL SUPERVISOR: GORDON W. JEONG
CALCULATED-DESIGNED BY: MICHAEL PHAM
CHECKED BY: HUNG H. DO
REVISED BY
DATE REVISED

LAST REVISION 01-28-10
DATE PLOTTED => 08-FEB-2010
TIME PLOTTED => 10:49

Dist	COUNTY	ROUTE	POST MILES TOTAL PROJECT	SHEET No.	TOTAL SHEETS
04	Son	37	0.9/2.6	5	22

REGISTERED CIVIL ENGINEER 1-29-10 DATE

2-8-10
PLANS APPROVAL DATE

REGISTERED PROFESSIONAL ENGINEER Hung H. Do No. 55485 Exp. 12-31-10 CIVIL STATE OF CALIFORNIA

THE STATE OF CALIFORNIA OR ITS OFFICERS OR AGENTS SHALL NOT BE RESPONSIBLE FOR THE ACCURACY OR COMPLETENESS OF SCANNED COPIES OF THIS PLAN SHEET.

FOR ACCURATE RIGHT OF WAY DATA,
CONTACT RIGHT OF WAY ENGINEERING
AT THE DISTRICT OFFICE.

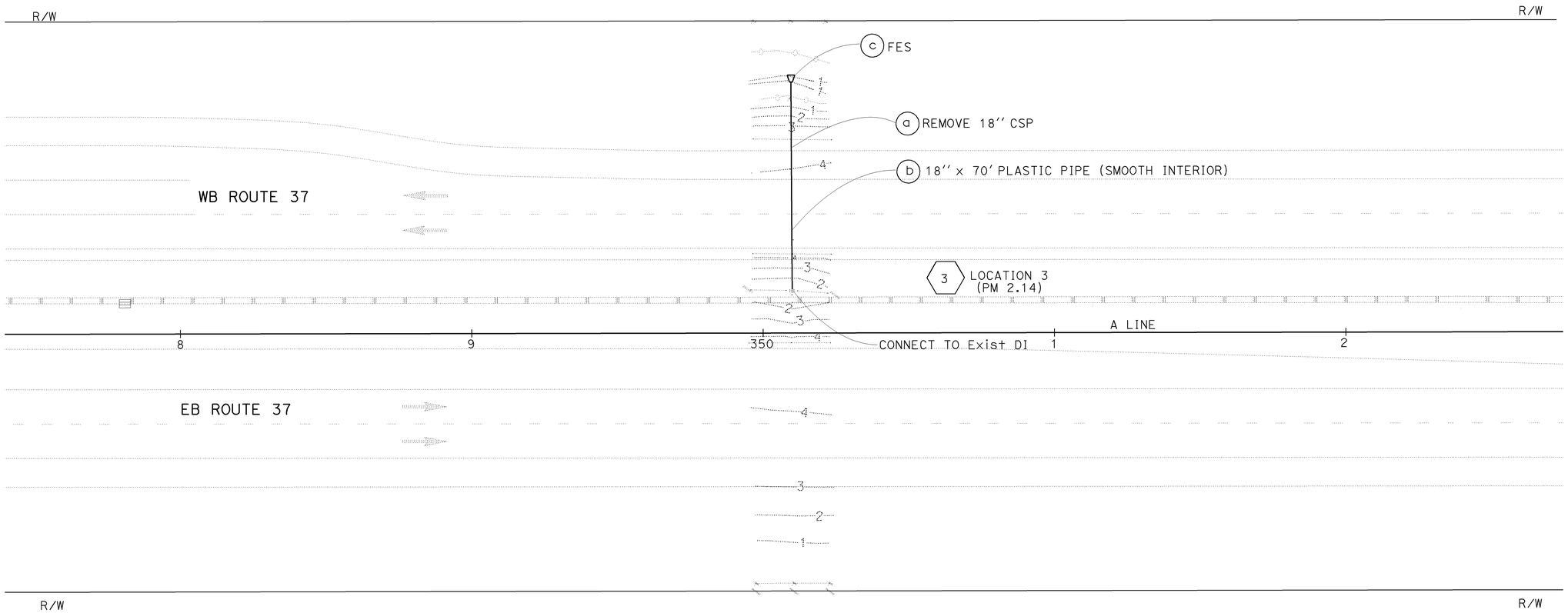

FOR NOTES, ABBREVIATIONS AND LEGEND, SEE SHEET D-1

THIS PLAN ACCURATE FOR DRAINAGE WORK ONLY

DRAINAGE PLAN

SCALE: 1'' = 20'

D-3

STATE OF CALIFORNIA - DEPARTMENT OF TRANSPORTATION
Caltrans
DESIGN

FUNCTIONAL SUPERVISOR: GORDON W. JEONG
CALCULATED-DESIGNED BY: MICHAEL PHAM
CHECKED BY: HUNG H. DO
REVISED BY
DATE REVISED

LAST REVISION 01-27-10 DATE PLOTTED => 08-FEB-2010 TIME PLOTTED => 10:36

BORDER LAST REVISED 4/11/2008
RELATIVE BORDER SCALE IS IN INCHES 0 1 2 3
USERNAME => s120496
DGN FILE => 4a230ia003.dgn
CU 04221
EA 4A2301

Dist	COUNTY	ROUTE	POST MILES TOTAL PROJECT	SHEET No.	TOTAL SHEETS
04	Son	37	0.9/2.6	6	22

REGISTERED CIVIL ENGINEER 1-29-10 DATE

2-8-10
PLANS APPROVAL DATE

REGISTERED PROFESSIONAL ENGINEER Hung H. Do No. 55485 Exp. 12-31-10 CIVIL STATE OF CALIFORNIA

THE STATE OF CALIFORNIA OR ITS OFFICERS OR AGENTS SHALL NOT BE RESPONSIBLE FOR THE ACCURACY OR COMPLETENESS OF SCANNED COPIES OF THIS PLAN SHEET.

FOR ACCURATE RIGHT OF WAY DATA,
CONTACT RIGHT OF WAY ENGINEERING
AT THE DISTRICT OFFICE.

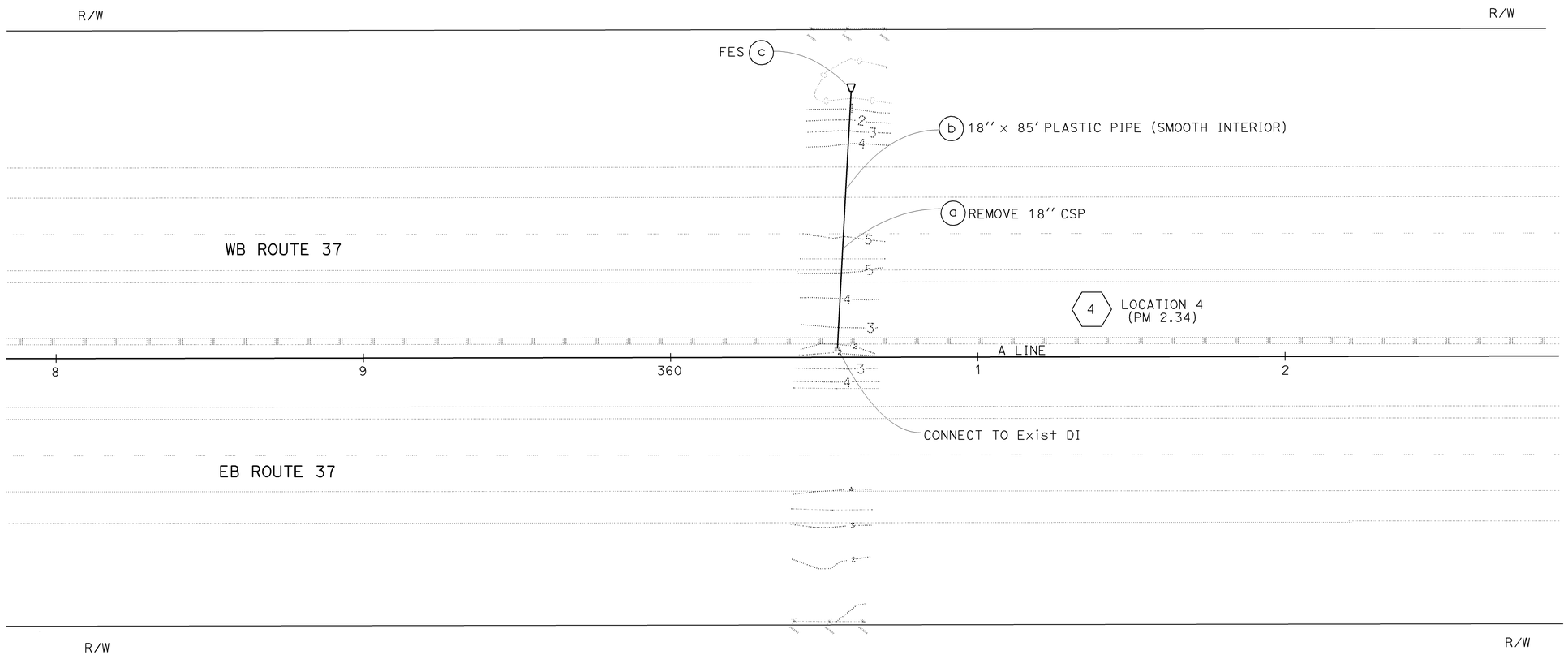

FOR NOTES, ABBREVIATIONS AND LEGEND, SEE SHEET D-1

THIS PLAN ACCURATE FOR DRAINAGE WORK ONLY

DRAINAGE PLAN

SCALE: 1'' = 20'

D-4

REVISED BY	DATE REVISED

CALCULATED-DESIGNED BY: MICHAEL PHAM
CHECKED BY: HUNG H. DO
FUNCTIONAL SUPERVISOR: GORDON W. JEONG

STATE OF CALIFORNIA - DEPARTMENT OF TRANSPORTATION
Caltrans®
DESIGN

LAST REVISION 01-27-10 | DATE PLOTTED => 08-FEB-2010 | TIME PLOTTED => 10:37

Dist	COUNTY	ROUTE	POST MILES TOTAL PROJECT	SHEET No.	TOTAL SHEETS
04	Son	37	0.9/2.6	7	22

REGISTERED CIVIL ENGINEER 1-29-10 DATE

2-8-10
PLANS APPROVAL DATE

REGISTERED PROFESSIONAL ENGINEER Hung H. Do No. 55485 Exp. 12-31-10 CIVIL STATE OF CALIFORNIA

THE STATE OF CALIFORNIA OR ITS OFFICERS OR AGENTS SHALL NOT BE RESPONSIBLE FOR THE ACCURACY OR COMPLETENESS OF SCANNED COPIES OF THIS PLAN SHEET.

FOR ACCURATE RIGHT OF WAY DATA,
CONTACT RIGHT OF WAY ENGINEERING
AT THE DISTRICT OFFICE.

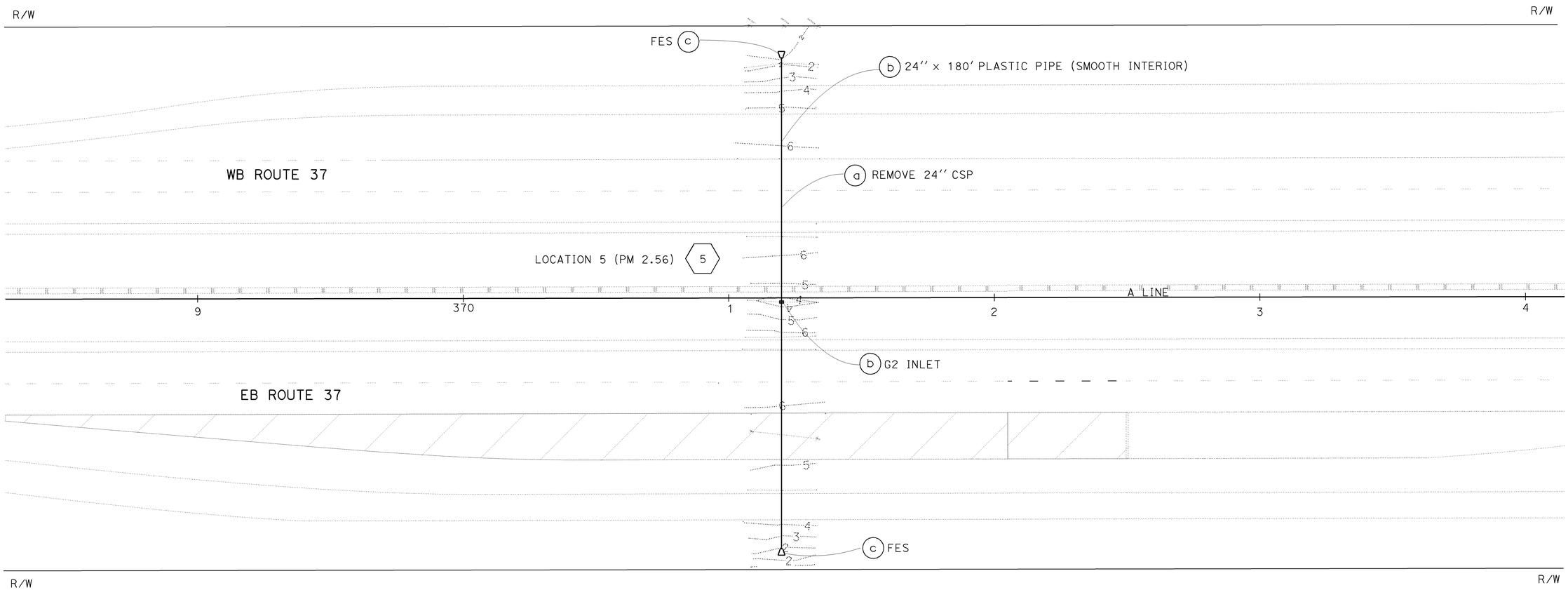

FOR NOTES, ABBREVIATIONS AND LEGEND, SEE SHEET D-1

THIS PLAN ACCURATE FOR DRAINAGE WORK ONLY

DRAINAGE PLAN

SCALE: 1'' = 20'

D-5

STATE OF CALIFORNIA - DEPARTMENT OF TRANSPORTATION
Caltrans® DESIGN

FUNCTIONAL SUPERVISOR: GORDON W. JEONG
CALCULATED-DESIGNED BY: MICHAEL PHAM
CHECKED BY: HUNG H. DO
REVISED BY
DATE REVISED

LAST REVISION 01-27-10
DATE PLOTTED => 08-FEB-2010
TIME PLOTTED => 10:39

Dist	COUNTY	ROUTE	POST MILES TOTAL PROJECT	SHEET No.	TOTAL SHEETS
04	Son	37	0.9/2.6	8	22

REGISTERED CIVIL ENGINEER 1-29-10 DATE

2-8-10
PLANS APPROVAL DATE

REGISTERED PROFESSIONAL ENGINEER Hung H. Do No. 55485 Exp. 12-31-10 CIVIL STATE OF CALIFORNIA

THE STATE OF CALIFORNIA OR ITS OFFICERS OR AGENTS SHALL NOT BE RESPONSIBLE FOR THE ACCURACY OR COMPLETENESS OF SCANNED COPIES OF THIS PLAN SHEET.

FOR ACCURATE RIGHT OF WAY DATA,
CONTACT RIGHT OF WAY ENGINEERING
AT THE DISTRICT OFFICE.

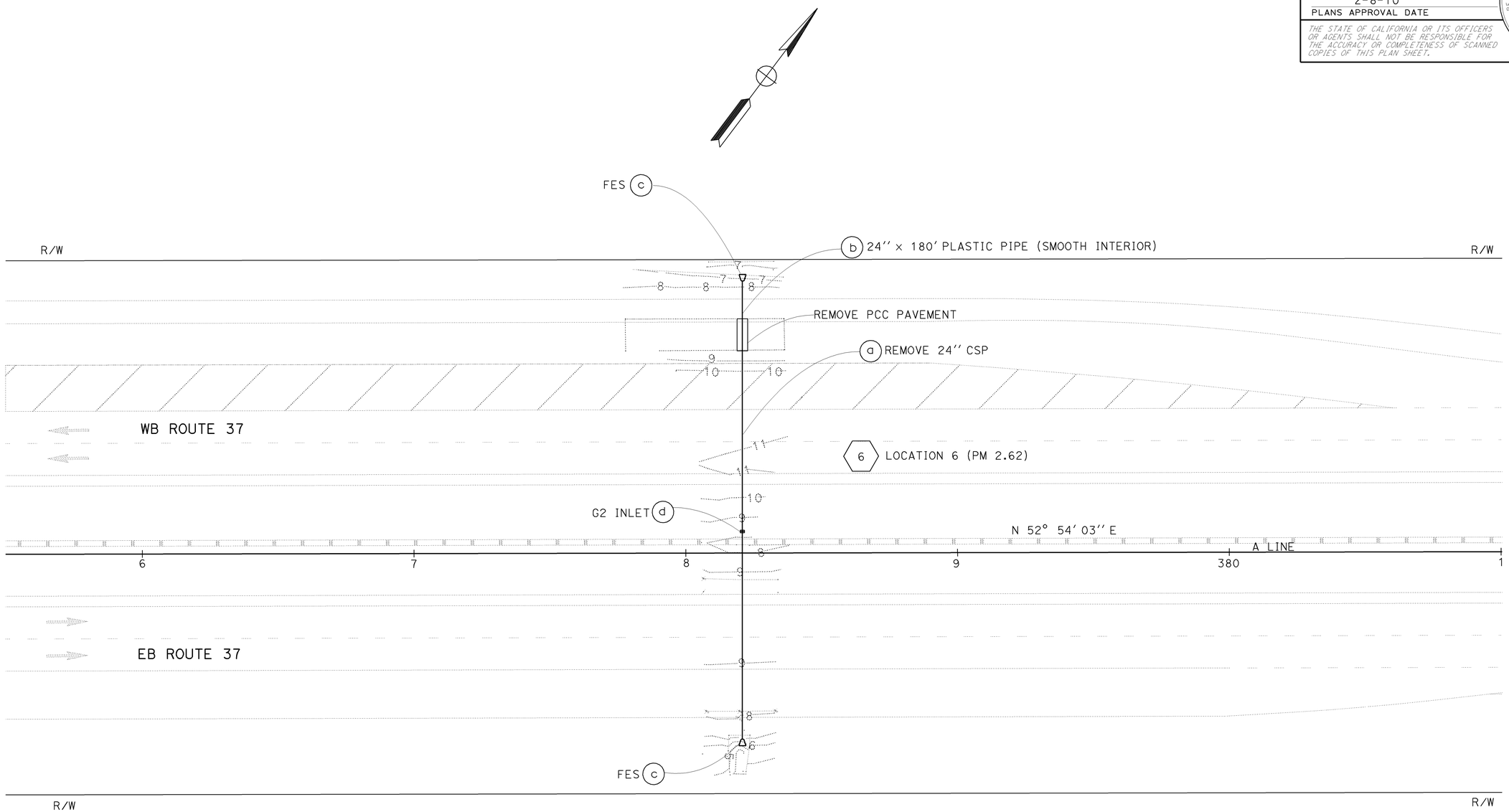

FOR NOTES, ABBREVIATIONS AND LEGEND, SEE SHEET D-1

THIS PLAN ACCURATE FOR DRAINAGE WORK ONLY

DRAINAGE PLAN

SCALE: 1'' = 20'

D-6

STATE OF CALIFORNIA - DEPARTMENT OF TRANSPORTATION
DESIGN

FUNCTIONAL SUPERVISOR: GORDON W. JEONG
CALCULATED-DESIGNED BY: MICHAEL PHAM
CHECKED BY: HUNG H. DO
REVISED BY
DATE REVISED

LAST REVISION 01-27-10 | DATE PLOTTED => 08-FEB-2010 | TIME PLOTTED => 10:40

Dist	COUNTY	ROUTE	POST MILES TOTAL PROJECT	SHEET No.	TOTAL SHEETS
04	Son	37	0.9/2.6	9	22

REGISTERED CIVIL ENGINEER 1-29-10 DATE

2-8-10
PLANS APPROVAL DATE

REGISTERED PROFESSIONAL ENGINEER Hung H. Do No. 55485 Exp. 12-31-10 CIVIL STATE OF CALIFORNIA

THE STATE OF CALIFORNIA OR ITS OFFICERS OR AGENTS SHALL NOT BE RESPONSIBLE FOR THE ACCURACY OR COMPLETENESS OF SCANNED COPIES OF THIS PLAN SHEET.

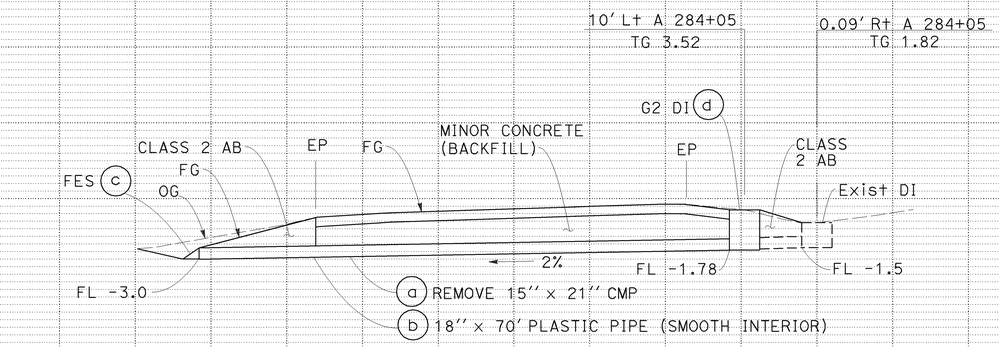

DRAINAGE SYSTEM No. 1

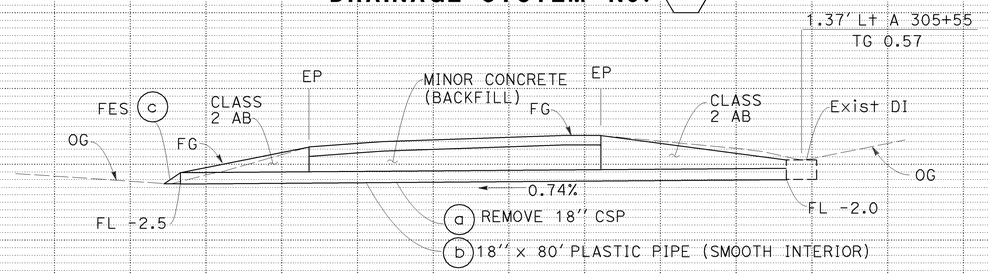

DRAINAGE SYSTEM No. 2

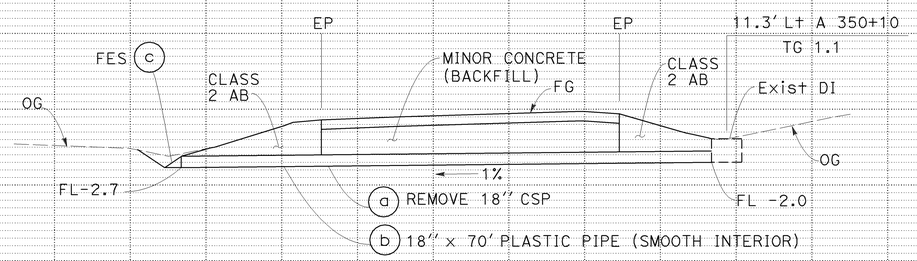

DRAINAGE SYSTEM No. 3

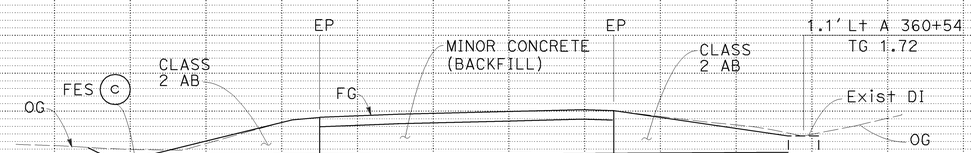

DRAINAGE SYSTEM No. 4

DRAINAGE PROFILES

SCALE: HORIZ 1'' = 10'
VERT 1'' = 10'

DP-1

STATE OF CALIFORNIA - DEPARTMENT OF TRANSPORTATION
Caltrans®
HYDRAULICS

FUNCTIONAL SUPERVISOR: GORDON W. JEONG
CALCULATED-DESIGNED BY: HUNG H. DO
CHECKED BY: CHARLOTTE CASHIN
REVISED BY: A
DATE REVISED: A

LAST REVISION 01-27-10
DATE PLOTTED => 08-FEB-2010
TIME PLOTTED => 10:41

Dist	COUNTY	ROUTE	POST MILES TOTAL PROJECT	SHEET No.	TOTAL SHEETS
04	Son	37	0.9/2.6	10	22

REGISTERED CIVIL ENGINEER 1-29-10 DATE

2-8-10
PLANS APPROVAL DATE

REGISTERED PROFESSIONAL ENGINEER Hung H. Do No. 55485 Exp. 12-31-10 CIVIL STATE OF CALIFORNIA

THE STATE OF CALIFORNIA OR ITS OFFICERS OR AGENTS SHALL NOT BE RESPONSIBLE FOR THE ACCURACY OR COMPLETENESS OF SCANNED COPIES OF THIS PLAN SHEET.

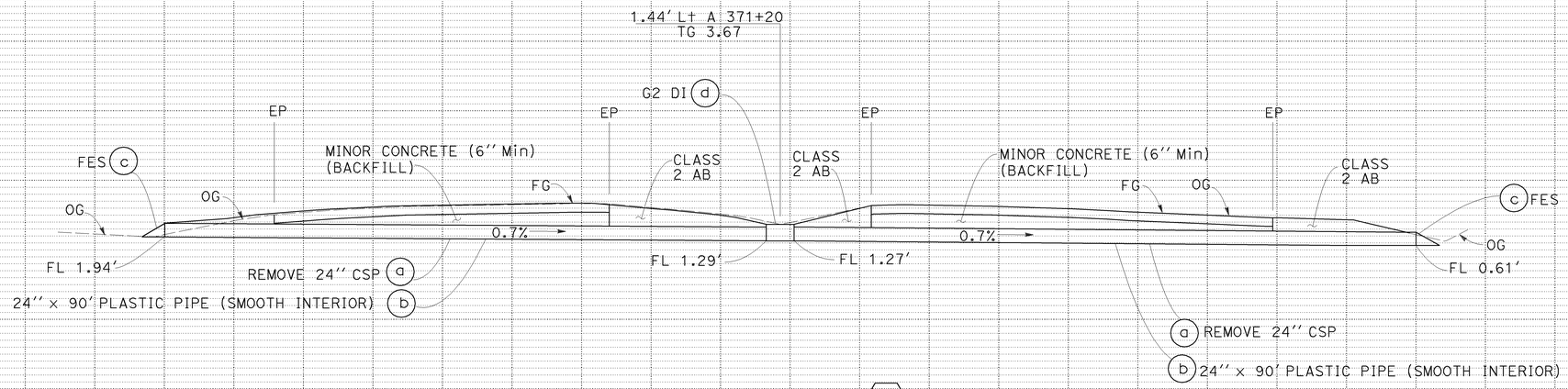

DRAINAGE SYSTEM No. 5

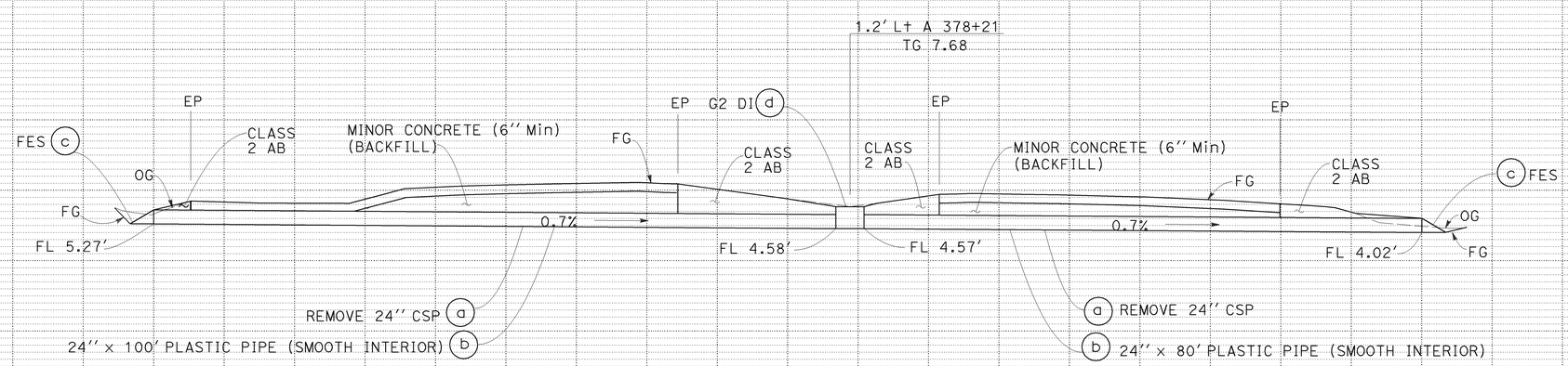

DRAINAGE SYSTEM No. 6

DRAINAGE PROFILES

SCALE: HORIZ 1'' = 10'
VERT 1'' = 10'

DP-2

STATE OF CALIFORNIA - DEPARTMENT OF TRANSPORTATION
Caltrans
HYDRAULICS

FUNCTIONAL SUPERVISOR: GORDON W. JEONG
CALCULATED-DESIGNED BY: HUNG H. DO
CHECKED BY: CHARLOTTE CASHIN
REVISED BY: A A

LAST REVISION 01-28-10
DATE PLOTTED => 08-FEB-2010
TIME PLOTTED => 10:43

Dist	COUNTY	ROUTE	POST MILES TOTAL PROJECT	SHEET No.	TOTAL SHEETS
04	Son	37	0.9/2.6	11	22

REGISTERED CIVIL ENGINEER 1-29-10 DATE

2-8-10
PLANS APPROVAL DATE

REGISTERED PROFESSIONAL ENGINEER Hung H. Do No. 55485 Exp. 12-31-10 CIVIL STATE OF CALIFORNIA

THE STATE OF CALIFORNIA OR ITS OFFICERS OR AGENTS SHALL NOT BE RESPONSIBLE FOR THE ACCURACY OR COMPLETENESS OF SCANNED COPIES OF THIS PLAN SHEET.

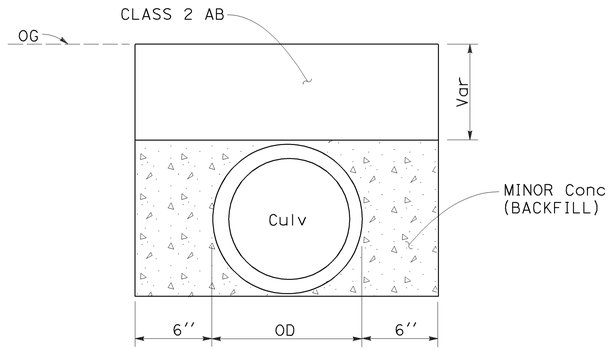

BACKFILL IN UNPAVED AREA

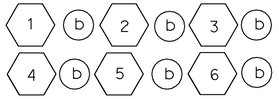

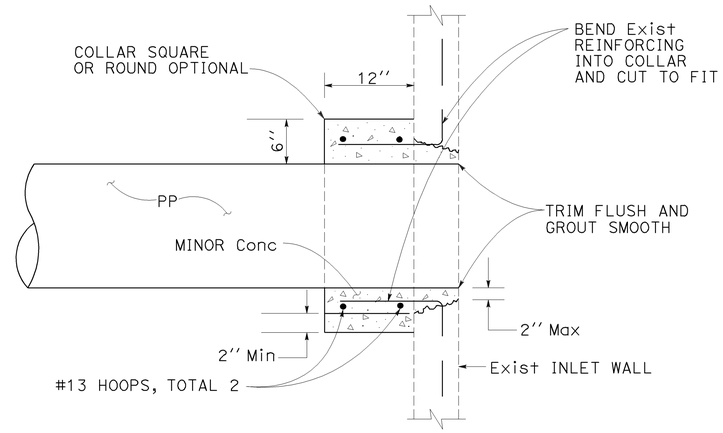

PIPE CONNECTION TO EXISTING INLET

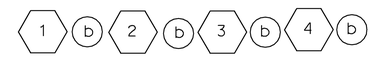

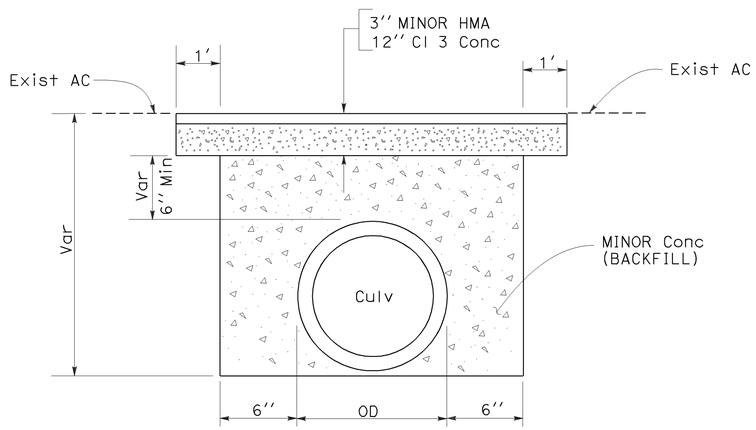

MINOR CONCRETE BACKFILL IN PAVED AREA

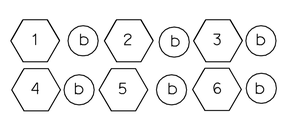

DRAINAGE DETAILS

NO SCALE

THIS PLAN ACCURATE FOR DRAINAGE WORK ONLY

DD-1

STATE OF CALIFORNIA - DEPARTMENT OF TRANSPORTATION

Caltrans

HYDRAULICS

FUNCTIONAL SUPERVISOR: GORDON W. JEONG

CALCULATED-DESIGNED BY: HUNG H. DO

CHECKED BY: CHARLOTTE CASHIN

REVISED BY

DATE REVISED

LAST REVISION 02-01-10

DATE PLOTTED => 08-FEB-2010

TIME PLOTTED => 10:44

Dist	COUNTY	ROUTE	POST MILES TOTAL PROJECT	SHEET No.	TOTAL SHEETS
04	Son	37	0.9/2.6	12	22

REGISTERED CIVIL ENGINEER DATE 1-29-10

PLANS APPROVAL DATE 2-8-10

REGISTERED PROFESSIONAL ENGINEER Hung H. Do No. 55485 Exp. 12-31-10 CIVIL STATE OF CALIFORNIA

THE STATE OF CALIFORNIA OR ITS OFFICERS OR AGENTS SHALL NOT BE RESPONSIBLE FOR THE ACCURACY OR COMPLETENESS OF ELECTRONIC COPIES OF THIS PLAN SHEET.

NOTE:

1. PLASTIC PIPE SHALL BE SMOOTH INTERIOR WALL TYPE.

DRAINAGE QUANTITIES

DRAINAGE SYSTEM No.	DRAINAGE UNIT	MINOR Conc (MINOR STRUCTURE) CY	REMOVE CULVERT LF	18'' PP LF	24'' PP LF	18'' PLASTIC FLARED END SECTION EA	24'' PLASTIC FLARED END SECTION EA	Misc IRON & STEEL LBS	FRAME & GRATE TYPE 24-9 (N) EA	MAXIMUM COVER (N) LF	PIPE JOINT CLASSIFICATION (N) TYPE	DESCRIPTION	STATION	DRAINAGE PLAN SHEET No.	DRAINAGE SYSTEM No.	DRAINAGE UNIT
1	a		60									REMOVE 21'' x 15'' CMPA		D-1	1	a
	b			60						4	S	18'' PP	A 284+05			b
	c					1						FLARED END SECTION				c
	d	1.31						263	1			G2 INLET	10' Lt A 284+05			d
2	a		70									REMOVE 18'' CSP		D-1	2	a
	b			70						5	S	18'' PP	A 305+55			b
	c					1						FLARED END SECTION				c
3	a		70									REMOVE 18'' CSP		D-1	3	a
	b			70						6	S	18'' PP	A 350+10			b
	c					1						FLARED END SECTION				c
4	a		70									REMOVE 18'' CSP		D-2	4	a
	b			70						6	S	18'' PP	A 360+54			b
	c					1						FLARED END SECTION				c
5	a		180									REMOVE 24'' CSP		D-2	5	a
	b				180					4	S	24'' PP	A 371+20			b
	c						2					FLARED END SECTION				c
	d	1.31						263	1			G2 INLET	1.44' Lt A 371+20			d
6	a		180									REMOVE 24'' CSP		D-2	6	a
	b				180					4	S	24'' PP	A 378+21			b
	c						2					FLARED END SECTION				c
	d	1.82						263	1			G2 INLET	1.2' Lt A 378+21			d
TOTAL		4.5	630	270	360	4	4	789	3							

(N) NOT A SEPARATE PAY ITEM, FOR INFORMATION ONLY.

STATE OF CALIFORNIA - DEPARTMENT OF TRANSPORTATION

Caltrans HYDRAULICS

FUNCTIONAL SUPERVISOR: GORDON W. JEONG

CALCULATED-DESIGNED BY: HUNG H. DO

CHECKED BY: CHARLOTTE CASHIN

REVISED BY / DATE REVISED

DRAINAGE QUANTITIES
DQ-1

LAST REVISION 02-01-10 DATE PLOTTED => 08-FEB-2010 TIME PLOTTED => 10:46

Dist	COUNTY	ROUTE	POST MILES TOTAL PROJECT	SHEET No.	TOTAL SHEETS
04	Son	37	0.9/2.6	13	22

REGISTERED CIVIL ENGINEER 1-29-10 DATE

2-8-10
PLANS APPROVAL DATE

REGISTERED PROFESSIONAL ENGINEER Jerilyn L. Struven No. 49964 Exp. 12-31-10 CIVIL STATE OF CALIFORNIA

THE STATE OF CALIFORNIA OR ITS OFFICERS OR AGENTS SHALL NOT BE RESPONSIBLE FOR THE ACCURACY OR COMPLETENESS OF SCANNED COPIES OF THIS PLAN SHEET.

NOTES:

1. LOCATION OF CONSTRUCTION AREA SIGNS SHOWN ARE APPROXIMATE. EXACT LOCATION TO BE DETERMINED BY THE ENGINEER.
2. SIGN POST LENGTH ARE APPROXIMATE, EXACT SIZE AND LENGTH TO BE DETERMINED BY THE ENGINEER.

LEGEND:

[X] CONSTRUCTION AREA SIGN NUMBER

CONSTRUCTION AREA SIGNS

SIGN No.	MUTCD CODE	MESSAGE	PANEL SIZE	NUMBER OF POST AND SIZE	No. OF SIGNS	REMARKS
1	W20	ROAD WORK AHEAD	60'' x 60''	2-4'' x 6''	4	*S
2	G20-2	END ROAD WORK	36'' x 18''	1-4'' x 4''	4	*S

*S - STATIONARY MOUNTED

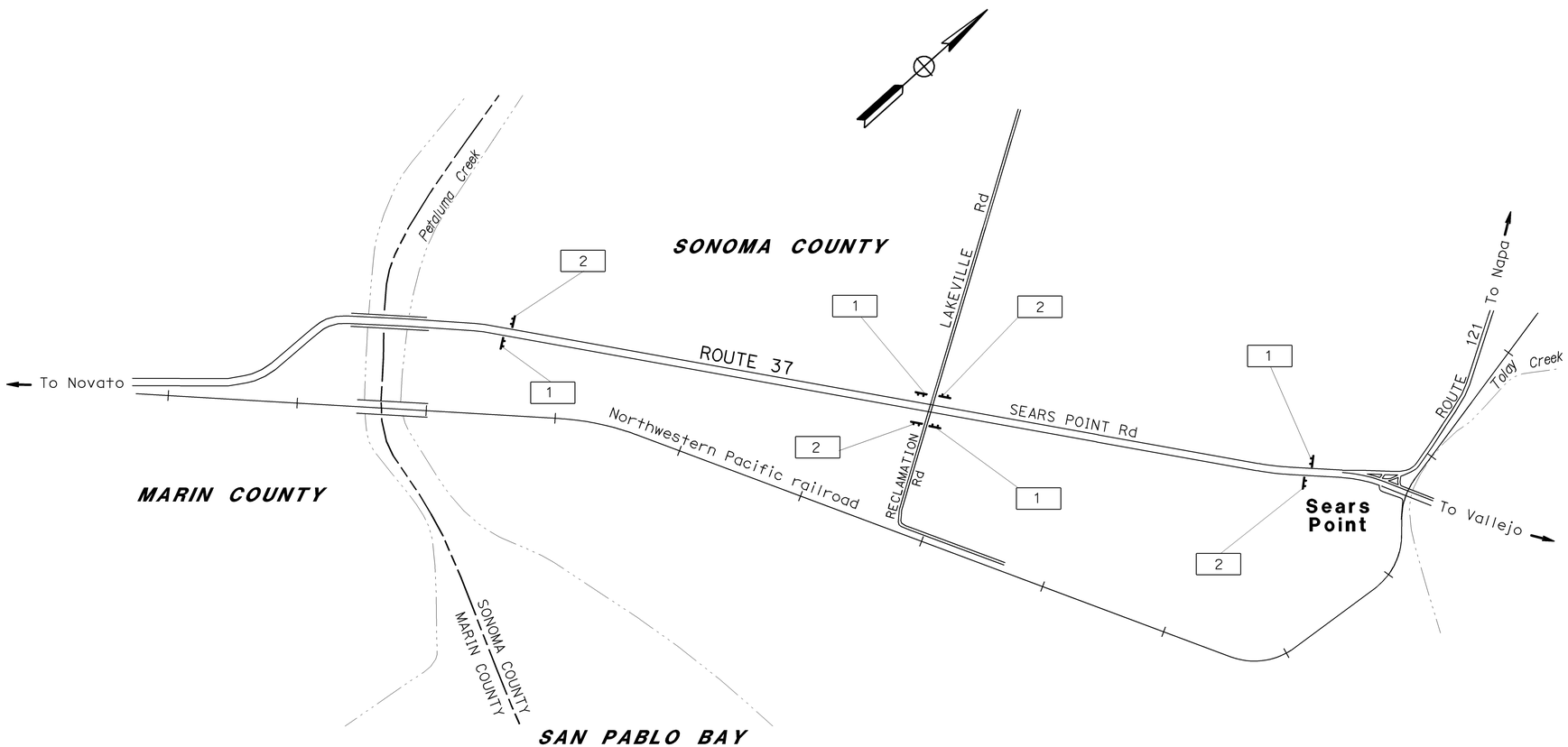

THIS PLAN ACCURATE FOR CONSTRUCTION AREA SIGN WORK ONLY

CONSTRUCTION AREA SIGNS

NO SCALE

CS-1

STATE OF CALIFORNIA - DEPARTMENT OF TRANSPORTATION
Caltrans
TRAFFIC

FUNCTIONAL SUPERVISOR: ROLAND AU-YEUNG
CALCULATED-DESIGNED BY: SHARI TALAI
CHECKED BY: JERILYN STRUVEN
REVISED BY
DATE REVISED

LAST REVISION 02-01-10 | DATE PLOTTED => 08-FEB-2010 | TIME PLOTTED => 10:47

Dist	COUNTY	ROUTE	POST MILES TOTAL PROJECT	SHEET No.	TOTAL SHEETS
04	Son	37	0.9/2.6	14	22

REGISTERED CIVIL ENGINEER 1-29-10 DATE

2-8-10
PLANS APPROVAL DATE

REGISTERED PROFESSIONAL ENGINEER Hung H. Do No. 55485 Exp. 12-31-10 CIVIL STATE OF CALIFORNIA

THE STATE OF CALIFORNIA OR ITS OFFICERS OR AGENTS SHALL NOT BE RESPONSIBLE FOR THE ACCURACY OR COMPLETENESS OF SCANNED COPIES OF THIS PLAN SHEET.

FOR ACCURATE RIGHT OF WAY DATA,
CONTACT RIGHT OF WAY ENGINEERING
AT THE DISTRICT OFFICE.

LEGEND:

No. PAVEMENT DELINEATION DETAIL

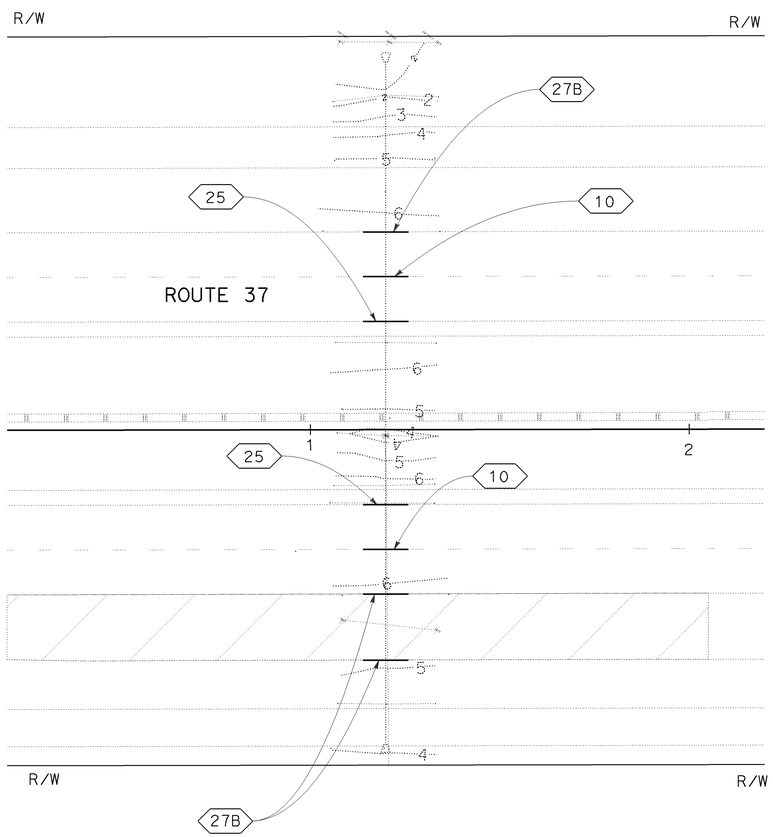

TYPICAL LOCATION 1-6

TRAFFIC STRIPES, PAVEMENT MARKING AND PAVEMENT MARKERS

LOCATION	STATION LIMITS	Loc	DETAIL No.			4'' THERMOPLASTIC TRAFFIC STRIPE		PAVEMENT MARKERS (NON-REFLECTIVE)	PAVEMENT MARKERS (RETROREFLECTIVE)
						WHITE	YELLOW	TYPE A	TYPE H
						LF		EA	
1	284+00 TO 284+05	WB	25				5		
		WB		27B		5			
		WB			10			1	1
2	305+50 TO 305+55	WB	25			5			
		WB		27B			5		
		WB			10			1	1
3	350+10 TO 350+15	WB	25			5			
		WB		27B			5		
		WB			10			1	1
4	360+60 TO 360+65	WB	25			5			
		WB		27B			5		
		WB			10			1	1
5	371+20 TO 371+25	EB & WB	25			12			
		EB & WB		27B			24		
		EB & WB			10			1	2
6	378+21 TO 378+26	EB & WB	25			12			
		EB & WB		27B			24		
		EB & WB			10			2	2
SUBTOTAL						44	68		
TOTAL						112		7	7

ROADWAY QUANTITIES

LOCATION	STATION LIMITS	Loc	MINOR CONCRETE (BACKFILL)	CLASS 2 AGGREGATE BASE	CLASS 3 CONCRETE	MINOR HMA
			CY			TON
1	284+00 TO 284+05	WB	20.5	7.4	8.0	3.3
2	305+50 TO 305+55	WB	24.0	11.4	8.0	4.0
3	350+10 TO 350+15	WB	24.0	11.4	8.0	4.0
4	360+60 TO 360+65	WB	24.0	11.4	8.0	4.0
5	371+20 TO 371+25	EB & WB	77.0	27.0	16.7	8.4
6	378+21 TO 378+26	EB & WB	77.0	27.0	16.7	8.4
TOTAL			246.5	95.6	65.4	32.1

PAVEMENT DELINEATION PLAN AND QUANTITIES

NO SCALE

THIS PLAN ACCURATE FOR
PAVEMENT DELINEATION WORK ONLY

PD-1

STATE OF CALIFORNIA - DEPARTMENT OF TRANSPORTATION
Caltrans®
DESIGN

FUNCTIONAL SUPERVISOR: GORDON W. JEONG
CALCULATED-DESIGNED BY: MICHAEL PHAM
CHECKED BY: HUNG H. DO
REVISED BY
DATE REVISED

LAST REVISION 02-04-10
DATE PLOTTED => 08-FEB-2010
TIME PLOTTED => 10:48