Dist	COUNTY	ROUTE	POST MILES TOTAL PROJECT	SHEET No.	TOTAL SHEETS
04	SM	101,280	Var	1	43

STATE OF CALIFORNIA
DEPARTMENT OF TRANSPORTATION

ACHSNHG-X081(026)E

PROJECT PLANS FOR CONSTRUCTION ON
STATE HIGHWAY
IN SAN MATEO COUNTY AT VARIOUS LOCATIONS ON ROUTES 101 AND 280

TO BE SUPPLEMENTED BY STANDARD PLANS DATED 2010

INDEX OF PLANS

SHEET No.	DESCRIPTION
1	TITLE AND LOCATION MAP
2	LOCATIONS OF CONSTRUCTION
3-24	CONSTRUCTION DETAILS
25-26	CONSTRUCTION AREA SIGNS
27-35	DETOUR PLAN
36-43	SUMMARY OF QUANTITIES

THE STANDARD PLANS LIST APPLICABLE TO THIS CONTRACT IS INCLUDED IN THE NOTICE TO BIDDERS AND SPECIAL PROVISIONS BOOK.

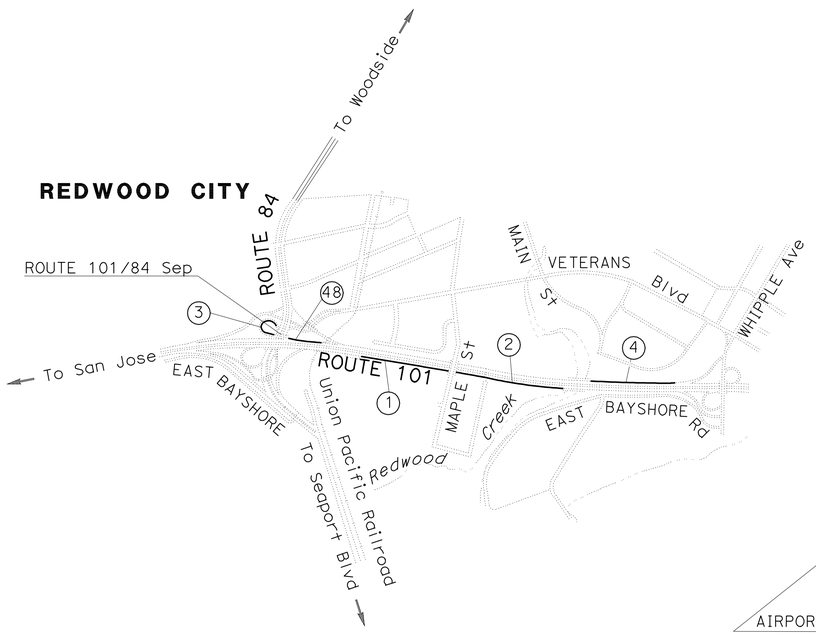

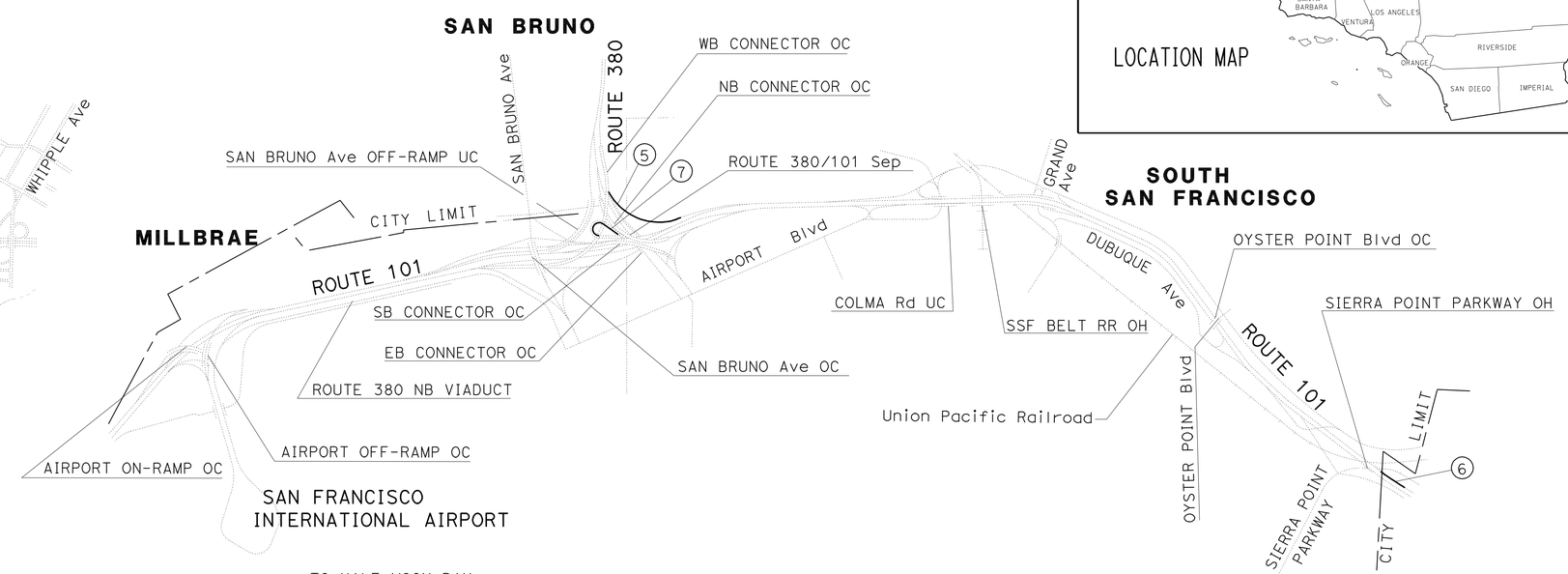

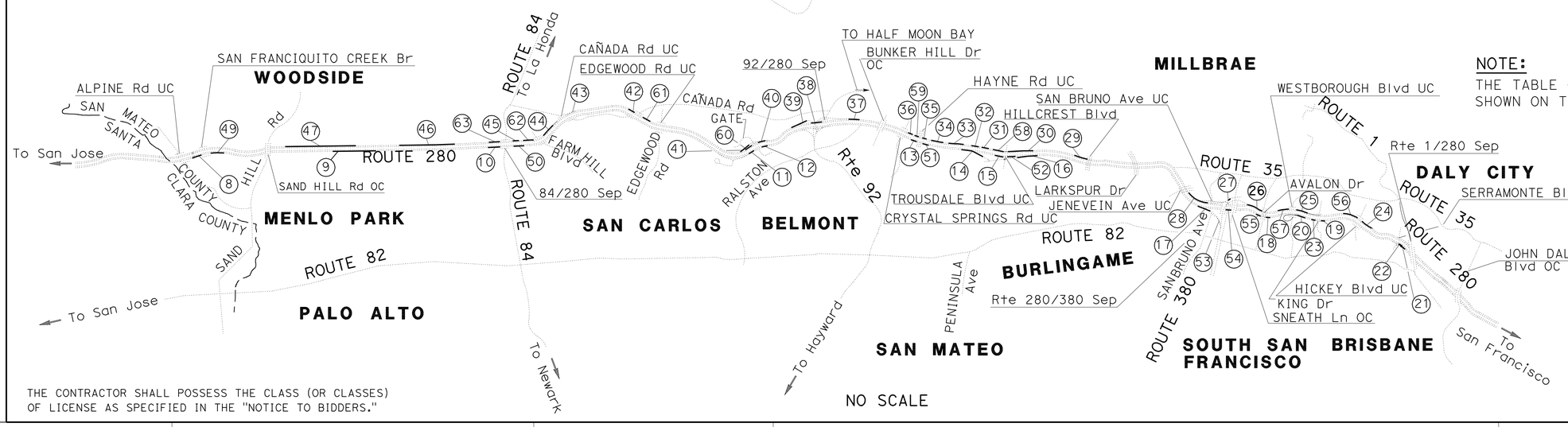

NOTE:
THE TABLE OF LOCATIONS OF CONSTRUCTION IS SHOWN ON THE LOCATIONS OF CONSTRUCTION SHEET.

THE CONTRACTOR SHALL POSSESS THE CLASS (OR CLASSES) OF LICENSE AS SPECIFIED IN THE "NOTICE TO BIDDERS."

NO SCALE

PROJECT ENGINEER REGISTERED CIVIL ENGINEER — DATE 03/15/12

REGISTERED PROFESSIONAL ENGINEER HARPREET BINNING No. 68470 Exp. 9/30/13 STATE OF CALIFORNIA

June 11, 2012
PLANS APPROVAL DATE

THE STATE OF CALIFORNIA OR ITS OFFICERS OR AGENTS SHALL NOT BE RESPONSIBLE FOR THE ACCURACY OR COMPLETENESS OF SCANNED COPIES OF THIS PLAN SHEET.

CONTRACT No.	04-4A3204
PROJECT ID	0400020505

PROJECT MANAGER: MOHAMMAD SULEIMAN
DESIGN ENGINEER: THANH NGUYEN

LAST REVISION 03-15-12 | DATE PLOTTED => 10-JUL-2012 | TIME PLOTTED => 16:09

Dist	COUNTY	ROUTE	POST MILES TOTAL PROJECT	SHEET No.	TOTAL SHEETS
04	SM	101,280	Var	2	43

REGISTERED CIVIL ENGINEER 03-15-12 DATE

6-11-12
PLANS APPROVAL DATE

REGISTERED PROFESSIONAL ENGINEER HARPREET BINNING No. 68470 Exp. 9/30/13 CIVIL STATE OF CALIFORNIA

THE STATE OF CALIFORNIA OR ITS OFFICERS OR AGENTS SHALL NOT BE RESPONSIBLE FOR THE ACCURACY OR COMPLETENESS OF SCANNED COPIES OF THIS PLAN SHEET.

LOCATIONS OF CONSTRUCTION

LOCATION	ROUTE	DIRECTION	PM	MAINLINE/RAMP/ BRANCH CONNECTOR	DESCRIPTION
1	101	NB	5.78	MAINLINE	Beg AT CMS; END AT Conc WALL ABUTMENT (MAPLE St OC Br No. 35-0087)
2	101	NB	5.88/6.17	MAINLINE	NORTH END OF MAPLE St OC (Br No. 35-0087) TO Exist CONCRETE BARRIER ON REDWOOD CREEK BRIDGE
3	101	SB	5.37	RAMP	ROUTE 101 SB, Beg SOUTH OF Br No. 35-0083, OFF-RAMP TO SEAPORT Blvd
48	101	SB	5.45	RAMP	ROUTE 101 SB OFF-RAMP TO SEAPORT Blvd; BEWTEEN Br No. 35-0065 TO Br No. 35-0083
4	101	SB	6.34	MAINLINE	SOUTH OF WHIPPLE Ave OC, FROM Exist MBGR TO BRIDGE RAILING; REDWOOD CREEK Br No. 35-0145
5	101	SB	20.58	BRANCH CONNECTOR	Rte 101 SB BRANCH TO Rte 380 WB CONNECTOR AT THE EAST APPROACH END OF Br No. 35-0256
6	101	SB	23.75	MAINLINE	NORTH SIDE OF SIERRA POINT PARKWAY OVERHEAD (Br No. 35-0130)
7	101	SB	R20.33/R20.61	RAMP	Rte 101 OFF-RAMP (EXIT 423A) TO BRIDGE APPROACH (Br No. 35-0272H)
8	280	NB	R0.28	MAINLINE	SOUTH OF SAN FRANCISQUITO CREEK (Br No. 35-0234R)
49	280	NB	R0.43	MAINLINE	NORTH OF SAN FRANCISQUITO CREEK (Br No. 35-0234R)
9	280	NB	R2.20/R2.87	MAINLINE	Beg 215′ NORTH OF "EXIT 25" SIGN
10	280	NB	R3.27	MAINLINE	SOUTH OF ROUTE 280/84 SEPARATION (Br No. 35-0232R)
50	280	NB	R3.42	MAINLINE	NORTH OF ROUTE 280/84 SEPARATION (Br No. 35-0232R)
11	280	NB	9.34	MAINLINE	SOUTH OF RANCHO PULGAS UC (Br No. 35-0247R)
12	280	NB	9.47	MAINLINE	NORTH OF RANCHO PULGAS UC (Br No. 35-0247R)
13	280	NB	R14.21	MAINLINE	SOUTH OF HAYNE ROAD UC (Br No. 35-0210R)
51	280	NB	R14.25/R14.45	MAINLINE	NORTH OF HAYNE ROAD UC (Br No. 35-0210R)
14	280	NB	R16.75/R16.95	MAINLINE/RAMP	Rte 280 NB OFF-RAMP TO TROUSDALE Dr (FROM HILL TO "TROUSDALE Dr, BURLINGAME" SIGN)
15	280	NB	R16.95/R17.15	MAINLINE	SOUTH OF TROUSDALE Dr UC (Br No. 35-0215R)
52	280	NB	R17.22	MAINLINE	NORTH OF TROUSDALE Dr UC (Br No. 35-0215R)
16	280	NB	R17.29	RAMP	TROUSDALE Dr ON-RAMP TO NB ROUTE 280
17	280	NB	R20.72	BRANCH CONNECTOR	Rte 280 NB BRANCH CONNECTOR TO 380 EB SOUTH OF Br No. 35-0227
53	280	NB	R20.82	BRANCH CONNECTOR	Rte 280 NB BRANCH CONNECTOR TO 380 EB SOUTH OF Br No. 35-0062G
54	280	NB	R21.05	MAINLINE	NORTH OF Rte 380 UC (Br No. 35-0217R)
18	280	NB	R22.08/R22.59	MAINLINE	NORTH OF AVALON DR (Br No. 35-0228R)
55	280	NB	R22.03	MAINLINE	SOUTH OF AVALON DR (Br No. 35-0228R)
19	280	NB	R23.16/R23.38	MAINLINE	NORTH OF KING Dr UC (Br No. 35-0202R)
20	280	NB	R22.66/R22.92	RAMP	NORTH OF WESTBOROUGH Blvd UC (Br No. 35-0212R)
21	280	NB	R24.68	MAINLINE	NORTH OF SERRAMONTE Dr UC (Br No. 35-0209R)
22	280	NB	R24.77	RAMP	SERRAMONTE Blvd ON-RAMP TO NB ROUTE 280
23	280	NB	R23.08	MAINLINE	SOUTH OF KING Dr UC (Br No. 35-0202R)
24	280	SB	R24.28	MAINLINE	NORTH OF HICKEY Blvd UC (Br No. 35-0116L)
56	280	SB	R24.14	MAINLINE	EXTEND MBGR SOUTH OF HICKEY Blvd UC (Br No. 35-0116L)
25	280	SB	R22.89/R22.67	MAINLINE	NORTH OF WESTBOROUGH Blvd UC (Br No. 35-0212L)
57	280	SB	R22.61	MAINLINE	SOUTH OF WESTBOROUGH Blvd UC (Br No. 35-0212L)
26	280	SB	R22.04/R21.10	MAINLINE	SOUTH OF AVALON Dr UC (Br No. 35-0228L)
27	280	SB	R21.25	RAMP	SNEATH LANE ON-RAMP TO SB ROUTE 280
28	280	SB	R20.64/R20.30	MAINLINE	SOUTH OF SAN BRUNO Ave AND NORTH OF WHITMAN WAY UC
29	280	SB	R17.89	MAINLINE	SOUTH OF HILLCREST Blvd UC (Br No. 35-0211L)
30	280	SB	R17.26	MAINLINE	NORTH OF TROUSDALE Dr UC (Br No. 35-0215L)
58	280	SB	R17.11	MAINLINE	SOUTH OF TROUSDALE Dr UC (Br No. 35-0215L)
31	280	SB	R16.38/R16.10	MAINLINE	SOUTH OF "BLACK MTN AND BUNKER HILL Dr SIGN", POLE No. 16312 TO CONNECTING WITH Exist MBGR
32	280	SB	R15.94	MAINLINE	NORTH OF CALL BOX SM-280-163 AND CONNECT TO Exist MBGR
33	280	SB	R15.73	MAINLINE	100′ NORTH AND 300′ SOUTH OF "HILLSBOROUGH CITY LIMIT" SIGN
34	280	SB	R14.85/R14.45	MAINLINE	700′ NORTH AND 1400′ SOUTH OF CALL BOX SM-280-147
35	280	SB	R14.33	MAINLINE	NORTH OF HAYNE ROAD UC (Br No. 35-0210L)
59	280	SB	R14.19	MAINLINE	SOUTH OF HAYNE ROAD UC (Br No. 35-0210L)
36	280	SB	R13.87	MAINLINE	325′ NORTH AND 375′ SOUTH OF CALL BOX SM-280-143
37	280	SB	11.78	MAINLINE	200′ NORTH AND 250′ SOUTH OF "RALSTON AVE" SIGN
38	280	SB	10.78	MAINLINE	Beg AT BRIDGE RAILING; S280-E92 CONNECTOR OC (Br No. 35-0245F)
39	280	SB	10.64	BRANCH CONNECTOR	Rte 92 TO SB Rte 280; AT THE TUNNEL EXIT
40	280	SB	9.48	MAINLINE	NORTH OF RANCHO PULGAS UC (Br No. 35-0247L)
60	280	SB	9.40/9.20	MAINLINE	SOUTH OF RANCHO PULGAS UC (Br No. 35-0247L)
41	280	SB	9.24	RAMP	RANCHO PULGAS ON-RAMP TO SB ROUTE 280 (Br No. 35-0247L)
42	280	SB	R6.58	MAINLINE	Beg AT BRIDGE RAILING; SOUTH OF CANADA ROAD UC (Br No. 35-0276L)
61	280	SB	R6.67	MAINLINE	END AT BRIDGE RAILING; NORTH OF CANADA ROAD UC (Br No. 35-0276L)
43	280	SB	R5.37/R5.03	MAINLINE	Beg SOUTH OF "Farm Hill Blvd NEXT EXIT" SIGN, END AT BRIDGE RAILING OF CANADA ROAD UC (Br No. 35-0231L)
44	280	SB	R4.75	MAINLINE	END AT BRIDGE RAILING; NORTH OF FARM HILL Blvd UC (Br No. 35-0230L)
62	280	SB	R4.60	MAINLINE	Beg AT BRIDGE RAILING; SOUTH OF FARM HILL Blvd UC (Br No. 35-0230L)
45	280	SB	R3.44	MAINLINE	END AT BRIDGE RAILING; NORTH OF ROUTE 280/84 SEPARATION (Br No. 35-0232L)
63	280	SB	R3.28	MAINLINE	Beg AT BRIDGE RAILING; SOUTH OF ROUTE 280/84 SEPARATION (Br No. 35-0232L)
46	280	SB	R2.91	MAINLINE	NORTH OF "Los Altos Hills 8" SIGN
47	280	SB	R2.66/R2.26	MAINLINE	750′ NORTH AND 1300′ SOUTH OF CALL BOX SM-280-0027

LOCATIONS OF CONSTRUCTION
LC-1

REVISED BY | DATE REVISED
SHAKILA HANIF | HARPREET BINNING
CALCULATED-DESIGNED BY | CHECKED BY
FUNCTIONAL SUPERVISOR
THANH NGUYEN

STATE OF CALIFORNIA - DEPARTMENT OF TRANSPORTATION
Caltrans
06-DESIGN

LAST REVISION 03-26-12 | DATE PLOTTED => 18-JUN-2012 | TIME PLOTTED => 13:25

Dist	COUNTY	ROUTE	POST MILES TOTAL PROJECT	SHEET No.	TOTAL SHEETS
04	SM	101,280	Var	3	43

REGISTERED CIVIL ENGINEER 03-15-12 DATE

6-11-12
PLANS APPROVAL DATE

REGISTERED PROFESSIONAL ENGINEER HARPREET BINNING No. 68470 Exp. 9/30/13 CIVIL STATE OF CALIFORNIA

THE STATE OF CALIFORNIA OR ITS OFFICERS OR AGENTS SHALL NOT BE RESPONSIBLE FOR THE ACCURACY OR COMPLETENESS OF SCANNED COPIES OF THIS PLAN SHEET.

NOTES: (THIS SHEET)

1. WHEN NECESSARY TO PLACE DIKE IN FRONT OF FACE OF GUARD RAILING, ONLY TYPE C DIKE MAY BE USED. FOR DIKE DETAILS, SEE STANDARD PLAN A87B.
2. FOR STANDARD RAILING POST EMBEDMENT, SEE STANDARD PLANS A77C3.
3. GUARD RAILING DELINEATION TO BE USED WHERE SHOWN ON THE PROJECT PLANS.
4. WHEN DIKE OR CURB IS PLACED UNDER GUARD RAILING, THE MAXIMUM HEIGHT OF THE DIKE OR CURB SHALL BE 4". MOUNTABLE DIKE SHOULD NOT BE USED. FOR DIKE AND CURB DETAILS, SEE STANDARD PLANS A87A AND A87B.
5. FOR DETAILS OF TYPICAL DISTANCE BETWEEN THE FACE OF RAIL AND HINGE POINT, SEE STANDARD PLAN A77C3.
6. FOR STEEL LINE POSTS, USE TWENTY 1/4" SELF-TAPPING SCREWS IN 0.22" DIAMETER HOLES OR 1/4" BOLTS IN 9/32" DIAMETER HOLES.
7. EXISTING UTILITY FACILITIES ARE NOT SHOWN ON THE PLANS.

LEGEND:

⇨ DIRECTION OF TRAVEL

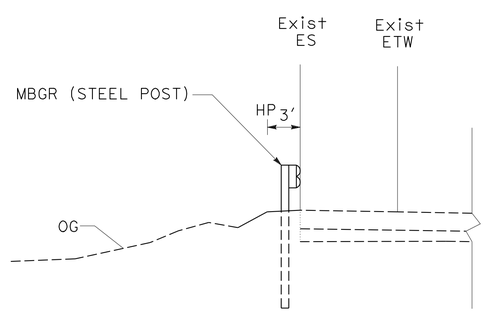

ROUTE 101 & 280

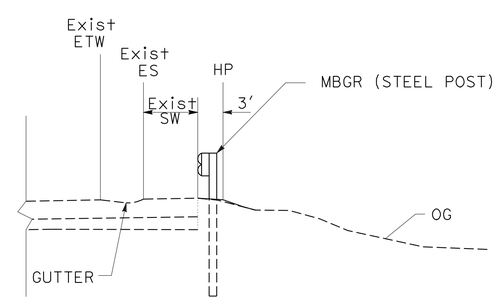

LOCATIONS 14, 16, 22

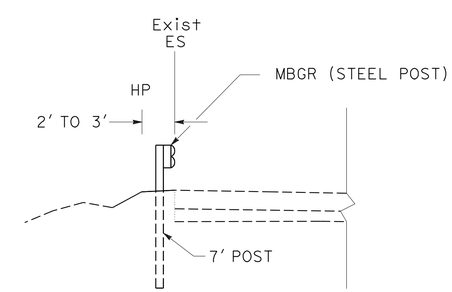

NARROW EMBANKMENT

TYPICAL CROSS SECTIONS

NO SCALE

CONSTRUCTION DETAILS
C-1

STATE OF CALIFORNIA - DEPARTMENT OF TRANSPORTATION
Caltrans® 06-DESIGN

FUNCTIONAL SUPERVISOR: THANH NGUYEN
CALCULATED-DESIGNED BY: AMIT NIJHAWAN
CHECKED BY: HARPREET BINNING
REVISED BY
DATE REVISED

LAST REVISION 01-26-12
DATE PLOTTED => 22-JUN-2012
TIME PLOTTED => 06:41

Dist	COUNTY	ROUTE	POST MILES TOTAL PROJECT	SHEET No.	TOTAL SHEETS
04	SM	101,280	Var	4	43

REGISTERED CIVIL ENGINEER 03-15-12 DATE

6-11-12
PLANS APPROVAL DATE

REGISTERED PROFESSIONAL ENGINEER HARPREET BINNING No. 68470 Exp. 9/30/13 CIVIL STATE OF CALIFORNIA

THE STATE OF CALIFORNIA OR ITS OFFICERS OR AGENTS SHALL NOT BE RESPONSIBLE FOR THE ACCURACY OR COMPLETENESS OF SCANNED COPIES OF THIS PLAN SHEET.

NOTES: (THIS SHEET)

1. LOCATIONS OF NESTED MBGR TO BE DETERMINED BY THE ENGINEER.
2. FOR DIKE POSITIONING WITH GUARD RAILING INSTALLATIONS, SEE STANDARD PLAN A77C4.
3. THE 15:1 OR FLATTER FLARE FOR TYPE 12CC LAYOUT IS BASED ON THE EDGE OF THE PAVED SHOULDER OR OFFSET LINE OF EDGE OF THE TRAVELED WAY. THE LENGTH OF THE GUARD RAILING WITHIN THE 15:1 OR FLATTER FLARE IS BASED ON SITE CONDITIONS AND SHOULD BE A LENGTH EQUAL TO MULTIPLES OF 12'-6".
4. EXISTING UTILITY FACILITIES ARE NOT SHOWN ON THE PLANS.

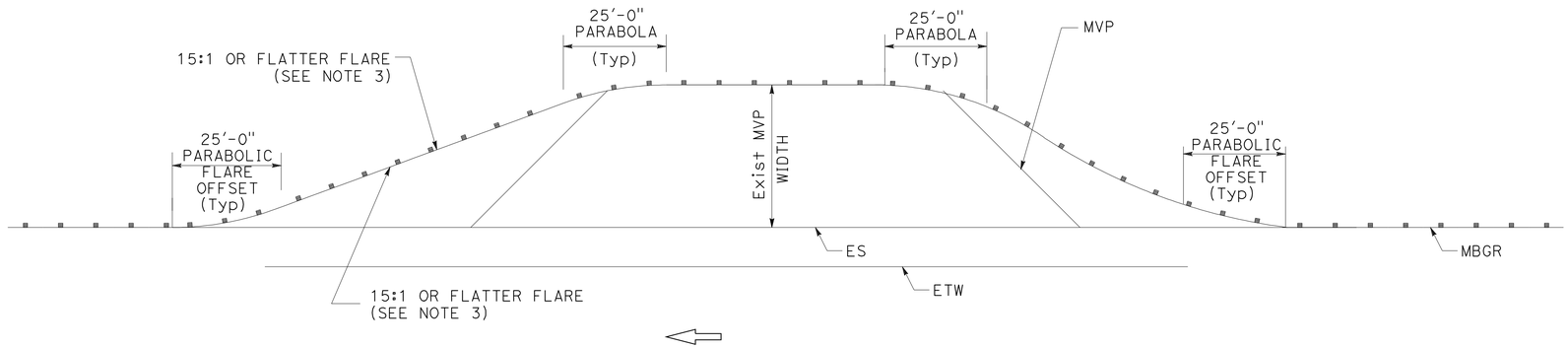

PLAN

METAL BEAM GUARD RAILING AT Exist MVP

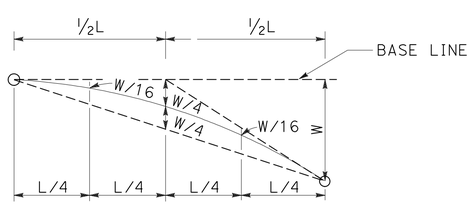

TYPICAL PARABOLIC LAYOUT

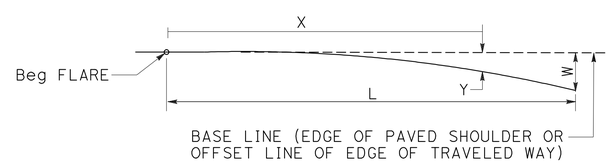

$$Y = \frac{WX^2}{L^2}$$

Y = OFFSET FROM BASE LINE
W = MAXIMUM OFFSET
X = DISTANCE ALONG BASE LINE
L = LENGTH OF FLARE

PARABOLIC FLARE OFFSETS

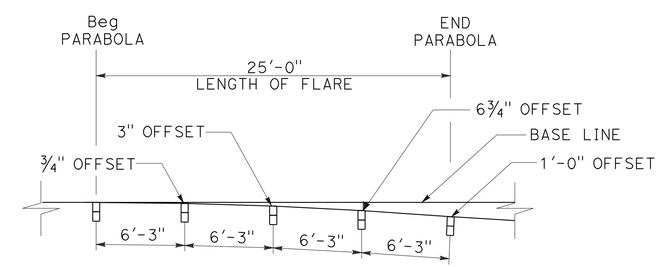

TYPICAL FLARE OFFSETS FOR 1 FOOT Max END OFFSET

METAL BEAM GUARD RAILING TYPICAL LAYOUTS FOR EMBANKMENTS AT MVP

CONSTRUCTION DETAILS

NO SCALE

C-2

STATE OF CALIFORNIA - DEPARTMENT OF TRANSPORTATION
Caltrans
06-DESIGN
FUNCTIONAL SUPERVISOR: THANH NGUYEN
CALCULATED-DESIGNED BY: AMIT NIJHAWAN
CHECKED BY: HARPREET BINNING
REVISED BY
DATE REVISED

LAST REVISION 01-26-12
DATE PLOTTED => 22-JUN-2012
TIME PLOTTED => 06:43

Dist	COUNTY	ROUTE	POST MILES TOTAL PROJECT	SHEET No.	TOTAL SHEETS
04	SM	101,280	Var	5	43

REGISTERED CIVIL ENGINEER 03-15-12 DATE

6-11-12
PLANS APPROVAL DATE

REGISTERED PROFESSIONAL ENGINEER HARPREET BINNING No. 68470 Exp. 9/30/13 CIVIL STATE OF CALIFORNIA

THE STATE OF CALIFORNIA OR ITS OFFICERS OR AGENTS SHALL NOT BE RESPONSIBLE FOR THE ACCURACY OR COMPLETENESS OF SCANNED COPIES OF THIS PLAN SHEET.

NOTE:

EXISTING UTILITY FACILITIES ARE NOT SHOWN ON THE PLANS.

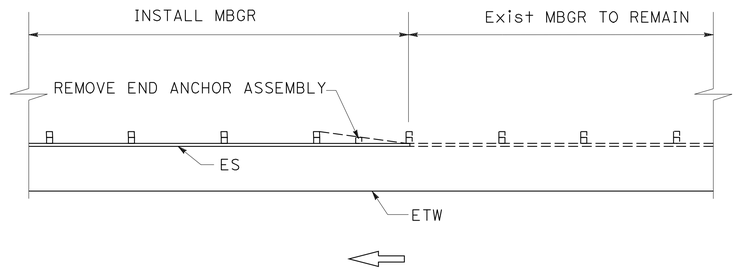

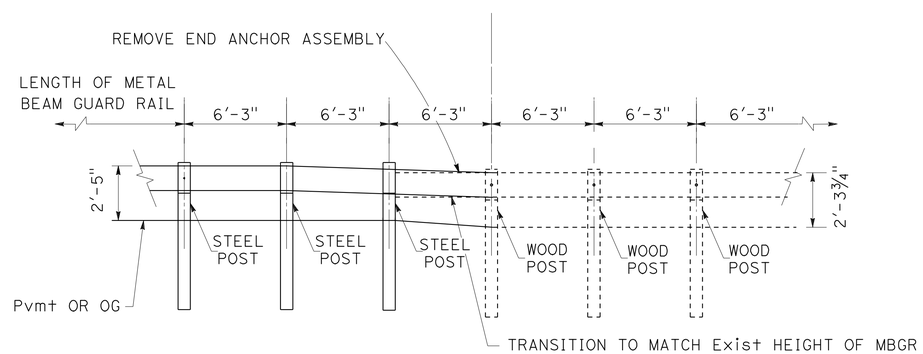

NEW MBGR TO Exist MBGR CONNECTION

CONSTRUCTION DETAILS

NO SCALE

C-3

STATE OF CALIFORNIA - DEPARTMENT OF TRANSPORTATION
Caltrans
06-DESIGN

FUNCTIONAL SUPERVISOR: THANH NGUYEN

CALCULATED-DESIGNED BY: AMIT NIJHAWAN
CHECKED BY: HARPREET BINNING

REVISED BY
DATE REVISED

LAST REVISION 12-12-11
DATE PLOTTED => 11-JUN-2012
TIME PLOTTED => 11:01

Dist	COUNTY	ROUTE	POST MILES TOTAL PROJECT	SHEET No.	TOTAL SHEETS
04	SM	101,280	Var	6	43

REGISTERED CIVIL ENGINEER 03-15-12 DATE

6-11-12
PLANS APPROVAL DATE

REGISTERED PROFESSIONAL ENGINEER HARPREET BINNING No. 68470 Exp. 9/30/13 CIVIL STATE OF CALIFORNIA

THE STATE OF CALIFORNIA OR ITS OFFICERS OR AGENTS SHALL NOT BE RESPONSIBLE FOR THE ACCURACY OR COMPLETENESS OF SCANNED COPIES OF THIS PLAN SHEET.

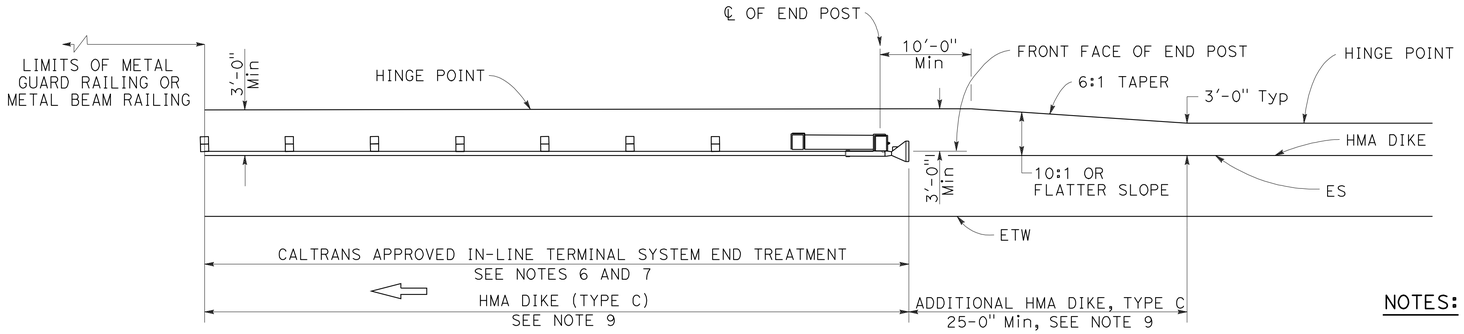

TYPE 16A LAYOUT (MODIFIED)

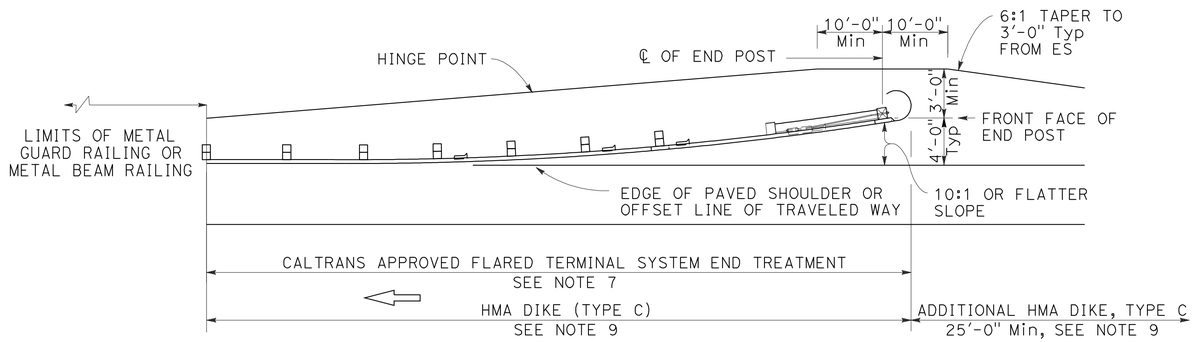

TYPE 16B LAYOUT (MODIFIED)

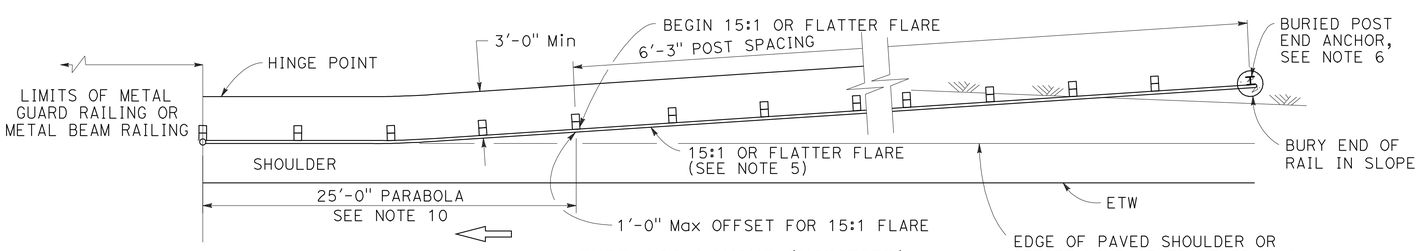

TYPE 16C LAYOUT (MODIFIED)

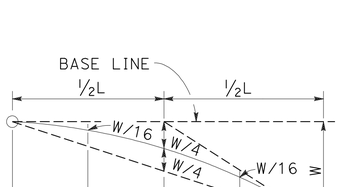

TYPICAL PARABOLIC LAYOUT

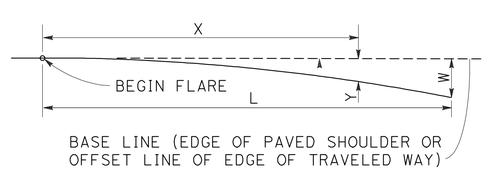

$$Y = \frac{WX^2}{L^2}$$

Y = OFFSET FROM BASE LINE
W = MAXIMUM OFFSET
X = DISTANCE ALONG BASE LINE
L = LENGTH OF FLARE

PARABOLIC FLARE OFFSETS

NOTES:

1. LINE POST, BLOCKS AND HARDWARE TO BE USED ARE SHOWN ON STANDARD PLANS A77A2 AND A77B1.
2. GUARD RAILING POST SPACING TO BE 6'-3" CENTER TO CENTER, EXCEPT AS OTHERWISE NOTED.
3. EXCEPT AS NOTED, LINE POSTS ARE W6 X 9 STEEL POSTS, 6'-0" IN LENGTH, WITH 6" x 8" x 1'-2" NOTCHED WOOD BLOCKS OR NOTCHED RECYCLED PLASTIC BLOCKS.
4. A 4'-0" MINIMUM CLEARANCE IS REQUIRED BETWEEN THE FACE OF THE RAILING AND THE FACE OF A FIXED OBJECT LOCATED DIRECTLY BEHIND STANDARD GUARD RAILING SECTIONS WITH POST SPACING OF 6'-3". CONSTRUCT GUARD RAILING AS SHOWN IN THE DETAIL "STRENGTHENED RAILING SECTIONS FOR FIXED OBJECTS" ON THIS PLAN, WHERE THE CLEARANCE BETWEEN THE FACE OF THE RAILING AND THE FACE OF A FIXED OBJECT IS LESS THAN 4'-0", BUT NOT LESS THAN 2'-3". WHERE THE CLEARANCE IS LESS THAN 2'-3", A CONCRETE WALL OR BARRIER SHOULD BE CONSTRUCTED TO SHIELD THE FIXED OBJECT(S).
5. THE 15:1 OR FLATTER FLARE USED WITH TYPE 16C (MODIFIED) LAYOUT IS BASED ON THE EDGE OF THE PAVED SHOULDER OR OFFSET LINE OF EDGE OF THE TRAVELED WAY. THE LENGTH OF GUARD RAILING WITHIN THE 15:1 OR FLATTER FLARE IS BASED ON SITE CONDITIONS AND SHOULD BE A LENGTH EQUAL TO MULTIPLES OF 12'-6".
6. FOR DETAILS OF THE BURIED POST END ANCHOR USED WITH TYPE 16C (MODIFIED) LAYOUT, SEE STANDARD PLAN A77I2.
7. AS SITE CONDITIONS DICTATE, CONSTRUCT ADDITIONAL GUARD RAILING TO SHIELD FIXED OBJECT(S). ADDITIONAL GUARD RAILING LENGTH EQUAL TO MULTIPLES OF 12'-6". POST SPACING AT 6'-3" EXCEPT AS SPECIFIED IN NOTE 4.
8. LAYOUT TYPES 16A, 16B OR 16C ARE TYPICALLY USED WHERE GUARD RAILING IS RECOMMENDED TO SHIELD ROADSIDE FIXED OBJECT(S) AND A CRASHWORTHY END TREATMENT IS REQUIRED FOR ONLY ONE DIRECTION OF TRAFFIC.
9. WHERE PLACEMENT OF DIKE IS REQUIRED WITH GUARD RAILING, SEE STANDARD PLAN A77C4 FOR DIKE POSITIONING DETAILS.
10. FOR TYPICAL FLARE OFFSETS FOR 25'-0" LENGTH PARABOLA WITH MAXIMUM 1'-0" OFFSET, SEE STANDARD PLAN A77E1.
11. EXISTING UTILITY FACILITIES ARE NOT SHOWN ON THE PLANS.

NO SCALE

CONSTRUCTION DETAILS
C-4

REVISED BY | DATE REVISED
AMIT NIJHAWAN | HARPREET BINNING
CALCULATED-DESIGNED BY | CHECKED BY
FUNCTIONAL SUPERVISOR
THANH NGUYEN

STATE OF CALIFORNIA - DEPARTMENT OF TRANSPORTATION
Caltrans 06-DESIGN

LAST REVISION 12-12-11 | DATE PLOTTED => 18-JUN-2012 | TIME PLOTTED => 13:25

Dist	COUNTY	ROUTE	POST MILES TOTAL PROJECT	SHEET No.	TOTAL SHEETS
04	SM	101,280	Var	7	43

REGISTERED CIVIL ENGINEER 03-15-12 DATE

6-11-12
PLANS APPROVAL DATE

REGISTERED PROFESSIONAL ENGINEER HARPREET BINNING No. 68470 Exp. 9/30/13 CIVIL STATE OF CALIFORNIA

THE STATE OF CALIFORNIA OR ITS OFFICERS OR AGENTS SHALL NOT BE RESPONSIBLE FOR THE ACCURACY OR COMPLETENESS OF SCANNED COPIES OF THIS PLAN SHEET.

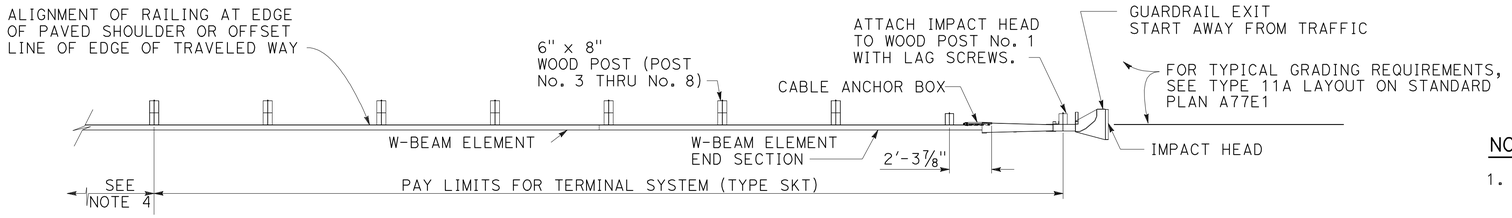

PLAN

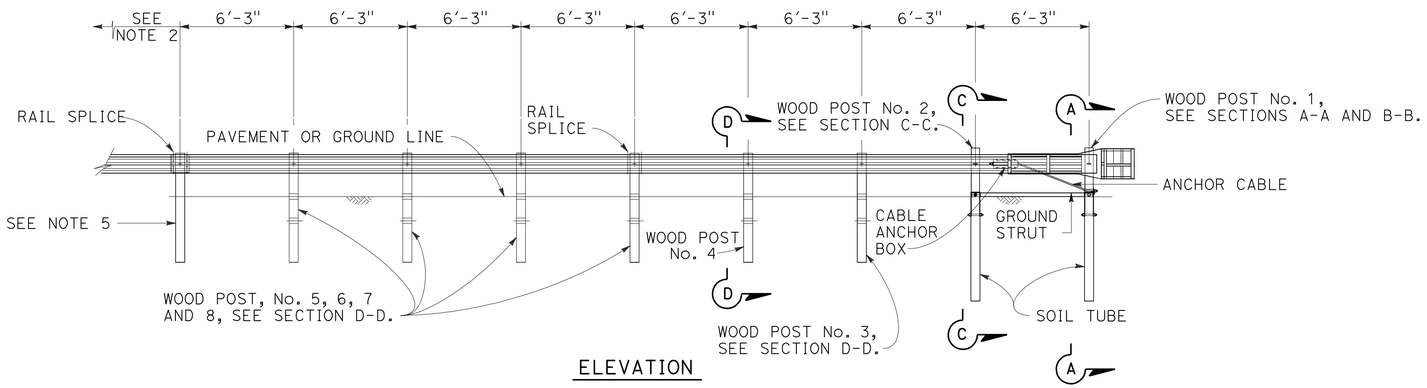

ELEVATION

TERMINAL SYSTEM (TYPE SKT)

NOTES: (THIS SHEET)

1. FOR ADDITIONAL DETAILS OF TERMINAL SYSTEM (TYPE SKT), REFER TO THE MANUFACTURER'S INSTALLATION INSTRUCTIONS.
2. TERMINAL SYSTEM (TYPE SKT) MUST BE CONSTRUCTED SO THAT THE FULL LENGTH OF THE TERMINAL SYSTEM GUARD RAILING IS IN STRAIGHT ALIGNMENT. TERMINAL SYSTEM (TYPE SKT) CAN BE FLARED AT A MAXIMUM RATE OF 25:1 TO PREVENT THE IMPACT HEAD FROM ENCROACHING ON THE SHOULDER. THE FLARE IS NOT REQUIRED AND MAY BE DECREASED OR ELIMINATED FOR SPECIFIC INSTALLATIONS.
3. TERMINAL SYSTEM (TYPE SKT) NOT TO BE USED WHERE EXTRUSION OF THE RAIL ON THE BACK SIDE OF THE INSTALLATION WOULD BE IN THE PATH OF PEDESTRIAN TRAFFIC OR WHERE THERE IS LESS THAN 25'-0" BETWEEN THE OUTLET SIDE OF THE IMPACTED HEAD AND ANY ADJACENT VEHICLE TRAFFIC.
4. FOR THE LENGTH AND TYPE OF METAL BEAM GUARD RAILING OR METAL BARRIER RAILING THE TERMINAL SYSTEM IS ATTACHED TO, SEE PROJECT PLANS. FOR TYPICAL USE OF THIS TERMINAL SYSTEM WITH GUARD RAILING, SEE THE A77E AND A77F SERIES OF THE STANDARD PLANS.
5. ATTACH RAIL ELEMENT TO THIS POST AND BLOCK. PAYMENT FOR THIS POST, BLOCK AND HARDWARE IS INCLUDED IN PAYMENT FOR THE TYPE OF RAILING OR BARRIER THE TERMINAL SYSTEM IS ATTACHED TO, NOT PART OF PAYMENT FOR TERMINAL SYSTEM (TYPE SKT).
6. EXISTING UTILITY FACILITIES ARE NOT SHOWN ON THE PLANS.

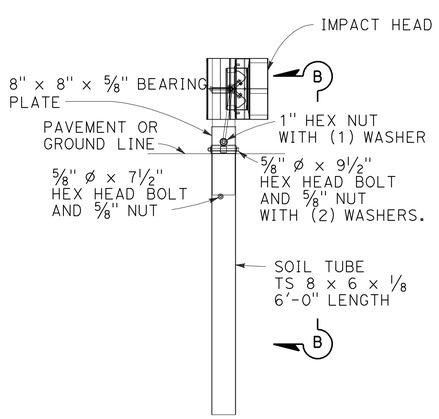

SECTION A-A

POST No. 1

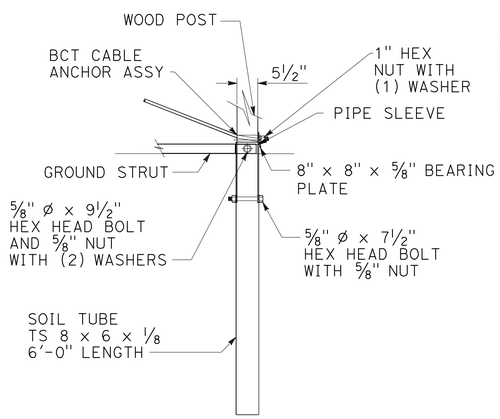

SECTION B-B

PARTIAL VIEW POST No. 1

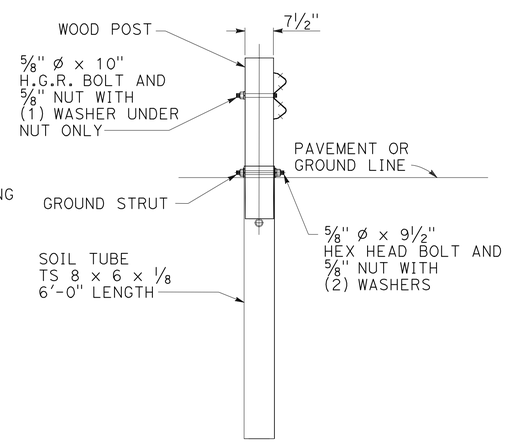

SECTION C-C

AT POST No. 2

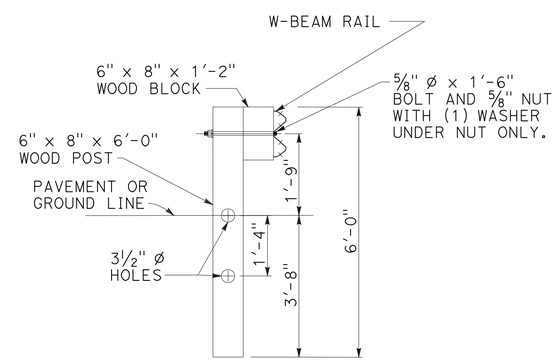

SECTION D-D

POST No. 3 THROUGH No. 8

METAL BEAM RAILING TERMINAL SYSTEM (TYPE SKT)

NO SCALE

CONSTRUCTION DETAILS C-5

STATE OF CALIFORNIA - DEPARTMENT OF TRANSPORTATION
06-DESIGN
FUNCTIONAL SUPERVISOR: THANH NGUYEN
CALCULATED-DESIGNED BY: SHAKILA HANIF
CHECKED BY: HARPREET BINNING
REVISED BY
DATE REVISED

LAST REVISION 03-15-12
DATE PLOTTED => 11-JUN-2012
TIME PLOTTED => 11:01

Dist	COUNTY	ROUTE	POST MILES TOTAL PROJECT	SHEET No.	TOTAL SHEETS
04	SM	101,280	Var	8	43

LICENSED CIVIL ENGINEER 03-15-12

PLANS APPROVAL DATE 6-11-12

REGISTERED PROFESSIONAL ENGINEER HARPREET BINNING No. 68470 Exp. 9/30/13 CIVIL STATE OF CALIFORNIA

THE STATE OF CALIFORNIA OR ITS OFFICERS OR AGENTS SHALL NOT BE RESPONSIBLE FOR THE ACCURACY OR COMPLETENESS OF SCANNED COPIES OF THIS PLAN SHEET.

NOTES:

1. FOR ADDITIONAL DETAILS OF TERMINAL SYSTEM (TYPE ET), REFER TO THE MANUFACTURER'S INSTALLATION INSTRUCTIONS.
2. TERMINAL SYSTEM (TYPE ET) MUST BE CONSTRUCTED SO THAT THE FULL LENGTH OF THE TERMINAL SYSTEM GUARD RAILING IS IN STRAIGHT ALIGNMENT. THE GUARD RAIL EXTRUDER HEAD OF THE TERMINAL SYSTEM SHALL NOT ENCROACH UPON THE ADJACENT PAVED SHOULDER OR LANE. A TRAFFIC APPROACH FLARE OF 50:1 OR 25:1 FOR THE FULL LENGTH OF TERMINAL SYSTEM (TYPE ET) INSTALLATION MAY BE USED WHERE THE GUARD RAIL EXTRUDER HEAD WOULD ENCROACH UPON THE ADJACENT PAVED SHOULDER OR LANE.
3. SLIDE GUARD RAIL EXTRUDER OVER THE END OF THE RAIL ELEMENT AND ATTACH TO POST NO.1 WITH LAG SCREWS. DO NOT BOLT RAIL ELEMENT TO POST. GUARD RAIL EXTRUDER ATTACHMENT BRACKETS HAVE 3 HOLES IN EACH BRACKET TO PROVIDE TOLERANCE ADJUSTMENT. USE THE HOLES IN THE BRACKET CLOSEST TO CENTER OF POST No. 1. DRILL 1/4" PILOT HOLES TO ACCOMMODATE LAG SCREWS.
4. ATTACH STRUT TO POSTS No. 1 AND 2 FOUNDATION TUBES WITH HEX HEAD BOLTS, WASHERS AND HEX NUTS. BOLTS EXTEND THROUGH THE STRUT, STEEL FOUNDATION TUBE, AND WOOD POSTS. CHANNEL SIDE OF STRUT TO FACE DOWNWARD.
5. FOR LENGTH AND TYPE OF METAL BEAM GUARD RAILING OR METAL BARRIER RAILING THE TERMINAL SYSTEM IS ATTACHED TO, SEE PROJECT PLANS. FOR TYPICAL USE OF THIS TERMINAL SYSTEM, SEE THE A77E AND A77F SERIES OF THE STANDARD PLANS.
6. ATTACH RAIL ELEMENT TO THIS POST AND BLOCK. PAYMENT FOR THIS POST, BLOCK AND HARDWARE INCLUDED IN PAYMENT FOR THE TYPE OF RAILING OR BARRIER THE TERMINAL SYSTEM IS ATTACHED TO, NOT PART OF THE PAYMENT FOR TERMINAL SYSTEM (TYPE ET).
7. YELLOW RETROREFLECTIVE SHEETING, AS PROVIDED BY TERMINAL SYSTEM (TYPE ET) MANUFACTURER, SHALL BE ADHERED TO THE FACE OF EXTRUDER HEAD. THE SHEETING SHALL BE CONSISTENT WITH THE DESIGN PATTERN AND COLORS OF A TYPE P OBJECT MARKER PANEL.
8. ATTACH RAIL TO POST No. 2 (NO WOOD BLOCK) IN SAME MANNER SHOWN IN SECTION A-A. DO NOT BOLT RAIL TO POST No. 1, SEE NOTE 3.
9. TERMINAL SYSTEM (TYPE ET) NOT TO BE USED WHERE EXTRUSION OF THE RAIL ON THE BACK SIDE OF THE INSTALLATION WOULD BE IN THE PATH OF PEDESTRIAN OR VEHICULAR TRAFFIC.
10. A CONTINUOUS RAIL ELEMENT SECTION BETWEEN POSTS NO.1 AND 5 (NO INTERMEDIATE RAIL SPLICES) MAY CONTINUE TO BE USED IN EXISTING INSTALLATIONS. NEW INSTALLATIONS SHALL BE CONSTRUCTED AS SHOWN WITH TWO RAIL ELEMENT SECTIONS BETWEEN POST No. 1 AND 5.
11. A 6'-0" LENGTH STEEL FOUNDATION TUBE, TS 8 x 6 x 3/16", WITHOUT SOIL PLATE, MAY BE USED IN PLACE OF THE 4'-6" LENGTH STEEL FOUNDATION TUBE AND SOIL PLATE SHOWN. MINIMUM EMBEDMENT OF THE 6'-0" LENGTH TUBE SHALL BE 5'-9". A 5/8" Ø HEX HEAD BOLT AND NUTS SHALL BE INSTALLED IN THE HOLE IN THE 6'-0" LENGTH TUBE TO KEEP THE WOOD POST FROM DROPPING INTO THE TUBE.
12. EXISTING UTILITY FACILITIES ARE NOT SHOWN ON THE PLANS.

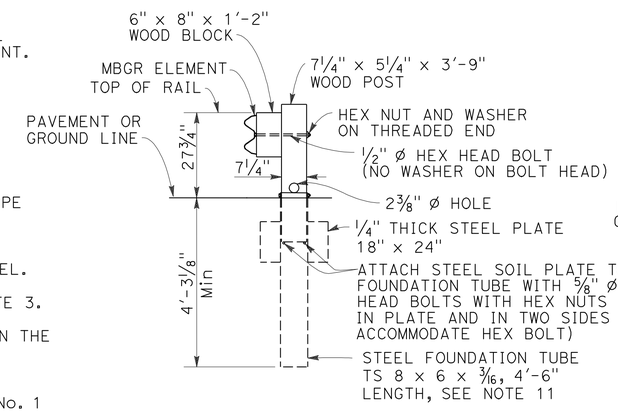

SECTION A-A

SOIL PLATE AND WOOD POST ATTACHMENT TO STEEL FOUNDATION TUBE SIMILAR FOR POSTS No. 1, 2 AND 4. WOOD BLOCKS NOT USED WITH POSTS No. 1 AND 2. SEE NOTE 8.

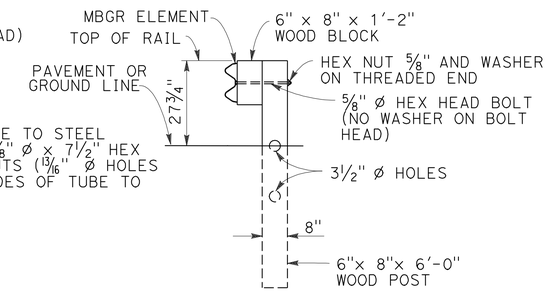

SECTION B-B

POSTS No. 5, 7 AND 8 SIMILAR EXCEPT RAIL ELEMENTS ARE NOT ATTACHED TO POSTS No. 5 AND 7

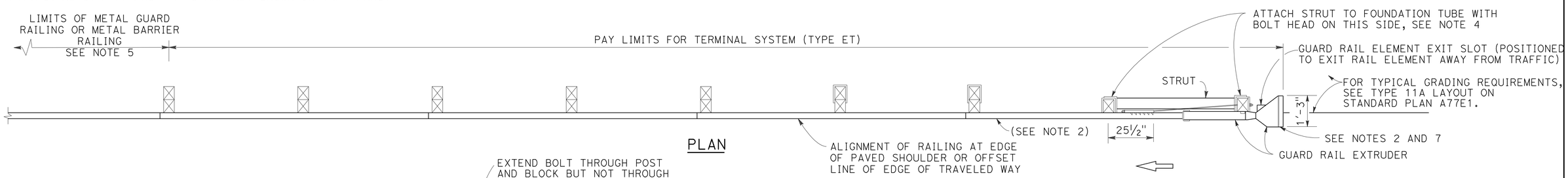

PLAN

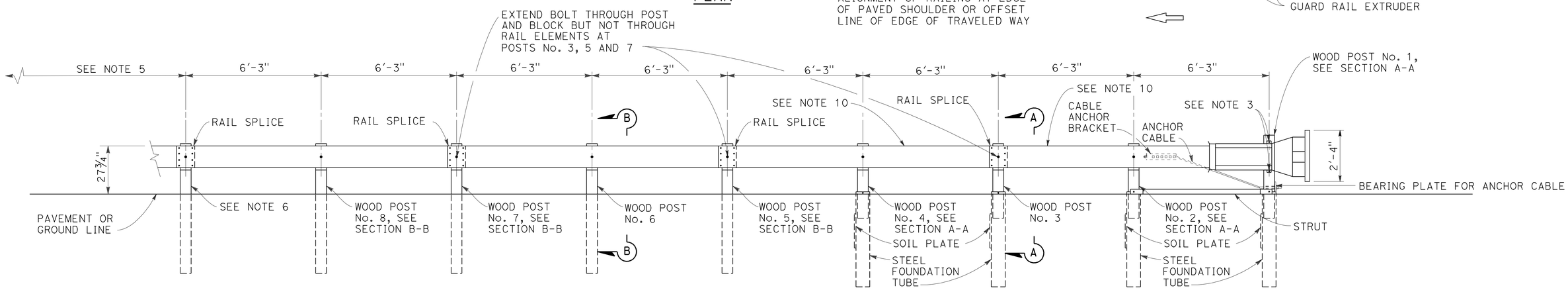

ELEVATION

(TYPE ET PLUS SHOWN)
SEE NOTES 9 AND 10

METAL BEAM RAILING TERMINAL SYSTEM (TYPE ET)

CONSTRUCTION DETAILS

NO SCALE

C-6

STATE OF CALIFORNIA - DEPARTMENT OF TRANSPORTATION
06-DESIGN
Caltrans®
SENIOR LANDSCAPE ARCHITECT THANH NGUYEN
CALCULATED-DESIGNED BY SHAKILA HANIF
CHECKED BY HARPREET BINNING
REVISED BY
DATE REVISED

LAST REVISION 02-16-12
DATE PLOTTED => 11-JUN-2012
TIME PLOTTED => 11:12

Dist	COUNTY	ROUTE	POST MILES TOTAL PROJECT	SHEET No.	TOTAL SHEETS
04	SM	101,280	Var	9	43

03-15-12
LICENSED CIVIL ENGINEER

6-11-12
PLANS APPROVAL DATE

REGISTERED PROFESSIONAL ENGINEER HARPREET BINNING No. 68470 Exp. 9/30/13 CIVIL STATE OF CALIFORNIA

THE STATE OF CALIFORNIA OR ITS OFFICERS OR AGENTS SHALL NOT BE RESPONSIBLE FOR THE ACCURACY OR COMPLETENESS OF SCANNED COPIES OF THIS PLAN SHEET.

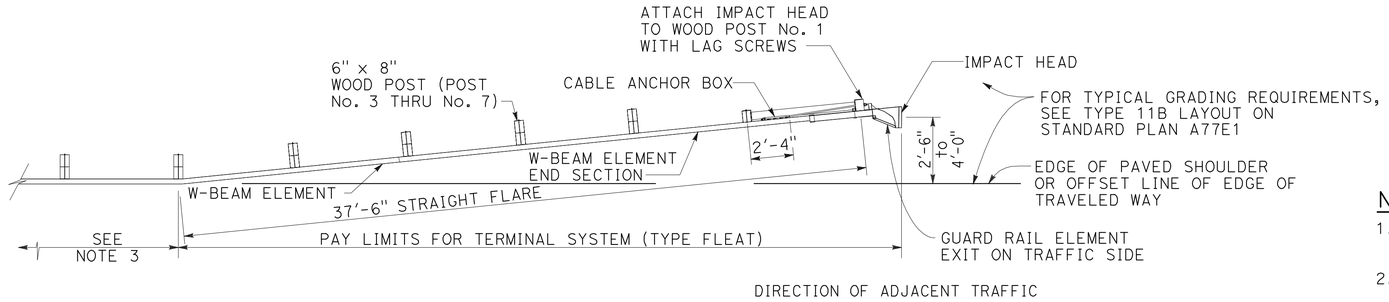

PLAN

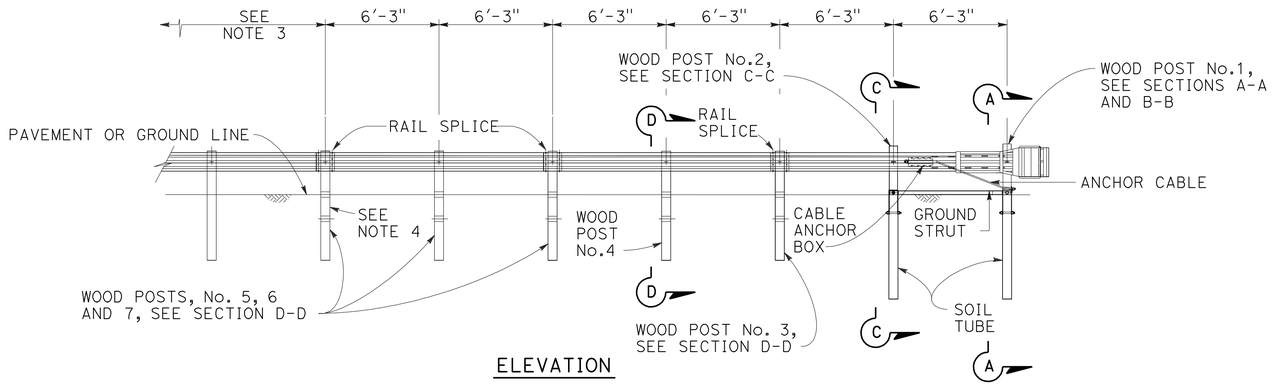

ELEVATION

TERMINAL SYSTEM (TYPE FLEAT)

NOTES:

1. FOR ADDITIONAL DETAILS OF TERMINAL SYSTEM (TYPE FLEAT), REFER TO THE MANUFACTURER'S INSTALLATION INSTRUCTIONS.
2. TERMINAL SYSTEM (TYPE FLEAT) NOT TO BE USED WHERE EXTRUSION OF THE RAIL ON THE FRONT SIDE OF THE INSTALLATION WOULD BE IN THE PATH OF PEDESTRIAN TRAFFIC.
3. FOR THE LENGTH AND TYPE OF METAL BEAM GUARD RAILING OR METAL BARRIER RAILING THE TERMINAL SYSTEM IS ATTACHED TO, SEE PROJECT PLANS. FOR TYPICAL USE OF THIS TERMINAL SYSTEM WITH GUARD RAILING, SEE THE A77E AND A77F SERIES OF THE STANDARD PLANS.
4. ATTACH RAIL ELEMENT TO THIS POST AND BLOCK. PAYMENT FOR THIS POST, BLOCK AND ATTACHING HARDWARE IS INCLUDED IN PAYMENT FOR TERMINAL SYSTEM (TYPE FLEAT).
5. EXISTING UTILITY FACILITIES ARE NOT SHOWN ON THE PLANS.

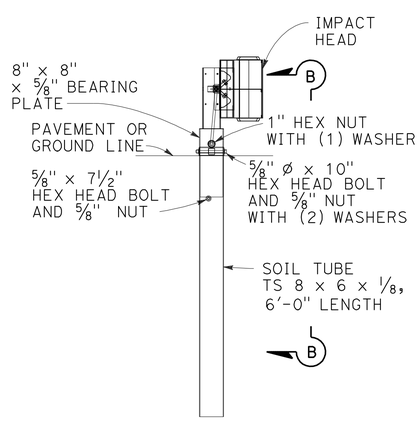

SECTION A-A
POST No. 1

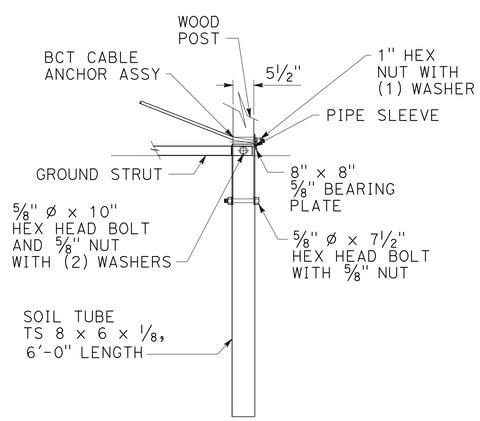

SECTION B-B
PARTIAL VIEW POST No. 1

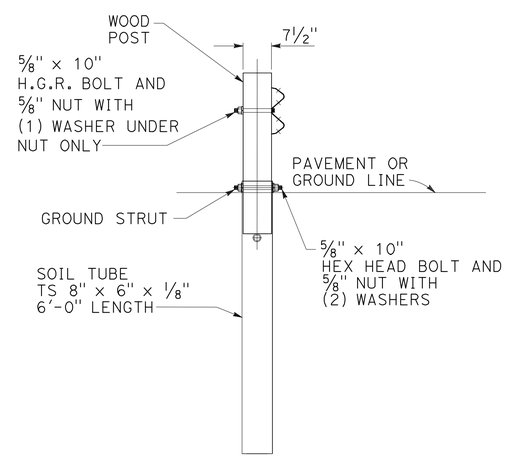

SECTION C-C
AT POST No. 2

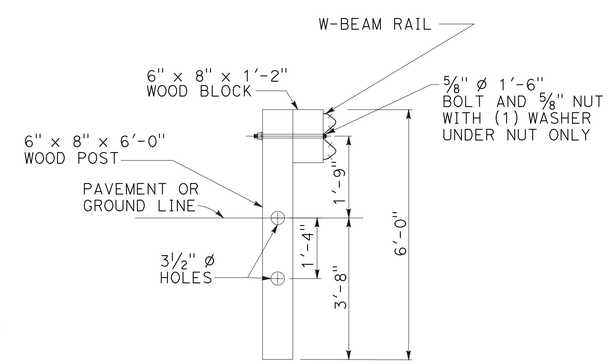

SECTION D-D
POST No. 3 THROUGH No. 7

METAL BEAM RAILING TERMINAL SYSTEM (TYPE FLEAT)

CONSTRUCTION DETAILS

NO SCALE

C-7

STATE OF CALIFORNIA - DEPARTMENT OF TRANSPORTATION
Caltrans® 06-DESIGN
SENIOR LANDSCAPE ARCHITECT THANH NGUYEN
CALCULATED-DESIGNED BY SHAKILA HANIF
CHECKED BY HARPREET BINNING
REVISED BY
DATE REVISED

LAST REVISION 02-16-12
DATE PLOTTED => 11-JUN-2012
TIME PLOTTED => 11:12

Dist	COUNTY	ROUTE	POST MILES TOTAL PROJECT	SHEET No.	TOTAL SHEETS
04	SM	101,280	Var	10	43

REGISTERED CIVIL ENGINEER 03-15-12 DATE

6-11-12
PLANS APPROVAL DATE

REGISTERED PROFESSIONAL ENGINEER HARPREET BINNING No. 68470 Exp. 9/30/13 CIVIL STATE OF CALIFORNIA

THE STATE OF CALIFORNIA OR ITS OFFICERS OR AGENTS SHALL NOT BE RESPONSIBLE FOR THE ACCURACY OR COMPLETENESS OF SCANNED COPIES OF THIS PLAN SHEET.

NOTES:(THIS SHEET)

1. SEE MANUFACTURER PLANS FOR ADDITIONAL DETAILS AND DIMENSIONS NOT SHOWN ON PLANS.
2. SYSTEM TO BE INSTALLED PER MANUFACTURER SPECIFICATIONS.
3. ONLY TIGHTEN THE CABLE ASSEMBLIES USING THE NUTS AT THE CABLE BRACKET (SEE DETAIL D). DO NOT TIGHTEN THE CABLES AT THE FRONT OF THE GROUND ANCHOR.
4. WHEN DRIVING STEEL POST, ENSURE THAT A DRIVING CAP WITH TIMBER OR PLASTIC INSERT IS USED TO PREVENT DAMAGE TO THE GALVANIZING TO THE TOP OF THE STEEL POST.
5. EXISTING UTILITY FACILITIES ARE NOT SHOWN ON THE PLANS.

LEGEND:

ITEM	DESCRIPTION
1	X-TENSION TERMINAL COMPONENT KIT
2	X-TENSION HARDWARE KIT
3	X-TENSION SYSTEM HARDWARE KIT
4	X-TENSION GUARDRAIL COMPONENT KIT 3
5	I-BEAM POST, MIDDLE, X350

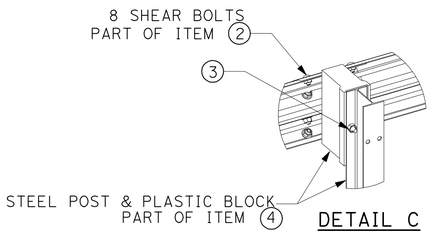

DETAIL C

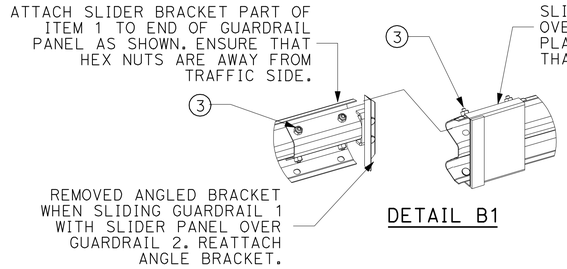

DETAIL B1

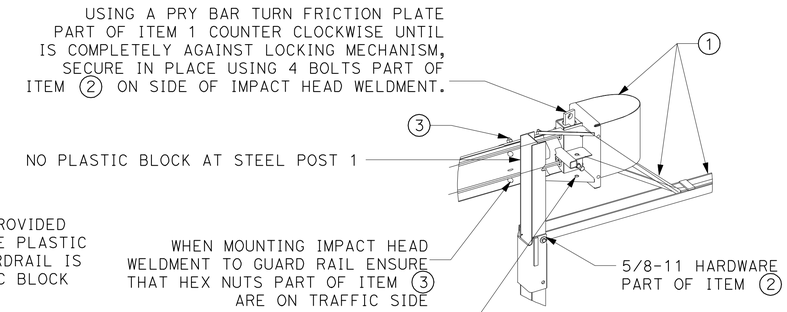

DETAIL A1

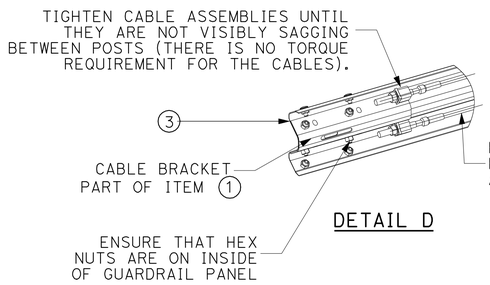

DETAIL D

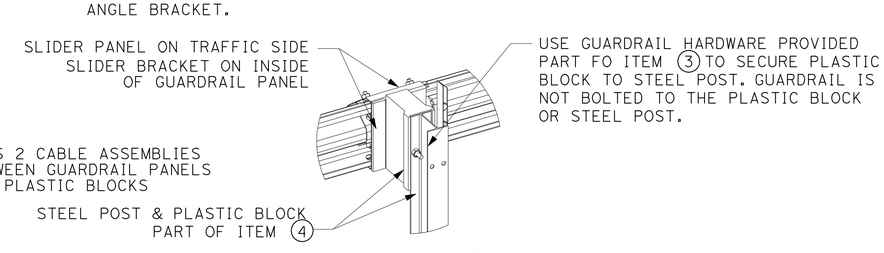

DETAIL B2

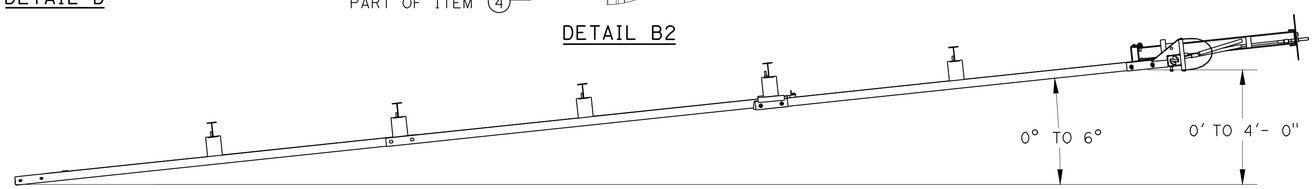

FLARED TERMINAL SYSTEM DETAIL

PASS CABLE ASSEMBLY UNDER THE STEEL STRAP ON THE GROUND STRUT AND FORWARD THROUGH THE HOLES AT FRONT END OF GROUND STRUT. THEN PASS CABLE ASSEMBLY THROUGH LOWER HOLE IN IMPACT HEAD WELDMENT AND THROUGH FRICTION PLATE AND OUT THE BACK SIDE OF THE IMPACT HEAD. (REPEAT FOR SECOND CABLE ASSEMBLY TO PASS THROUGH UPPER HOLE IN IMPACT HEAD WELDMENT).

IN-LINE TERMINAL SYSTEM DETAIL

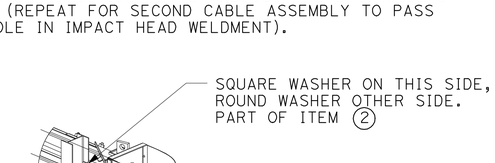

DETAIL A2

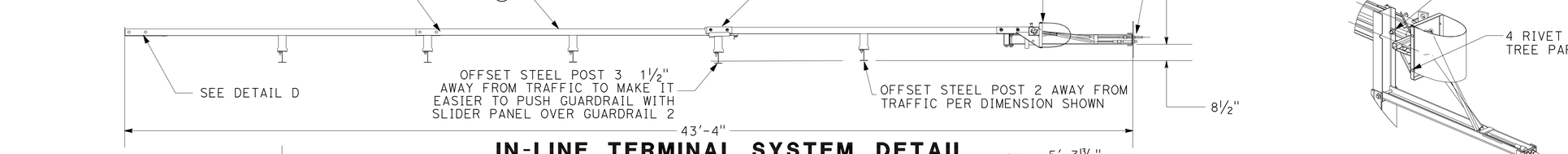

TERMINAL SYSTEM (TYPE X-TENSION) MODEL No. XTGTSS3

SECTION A-A

CONSTRUCTION DETAILS

NO SCALE

C-8

STATE OF CALIFORNIA - DEPARTMENT OF TRANSPORTATION
Caltrans® 06-DESIGN

REVISED BY	DATE REVISED
AMIT NIJHAWAN	HARPREET BINNING
CALCULATED-DESIGNED BY	CHECKED BY
FUNCTIONAL SUPERVISOR	THANH NGUYEN

LAST REVISION 12-12-11 DATE PLOTTED => 11-JUN-2012 TIME PLOTTED => 11:13

Dist	COUNTY	ROUTE	POST MILES TOTAL PROJECT	SHEET No.	TOTAL SHEETS
04	SM	101,280	Var	11	43

REGISTERED CIVIL ENGINEER 03-15-12 DATE

6-11-12
PLANS APPROVAL DATE

REGISTERED PROFESSIONAL ENGINEER HARPREET BINNING No. 68470 Exp. 9/30/13 CIVIL STATE OF CALIFORNIA

THE STATE OF CALIFORNIA OR ITS OFFICERS OR AGENTS SHALL NOT BE RESPONSIBLE FOR THE ACCURACY OR COMPLETENESS OF SCANNED COPIES OF THIS PLAN SHEET.

NOTES: (THIS SHEET)

1. THE CONTRACTOR SHALL VERIFY ALL CONTROLLING FIELD DIMENSIONS BEFORE ORDERING OR FABRICATING ANY MATERIAL.
2. EXISTING UTILITY FACILITIES ARE NOT SHOWN ON THE PLANS.
3. FOR LOCATIONS, SEE Q-SHEETS.

LEGEND:

-·-·-·- INDICATES EXISTING STUCTURE

——— INDICATES NEW STRUCTURE

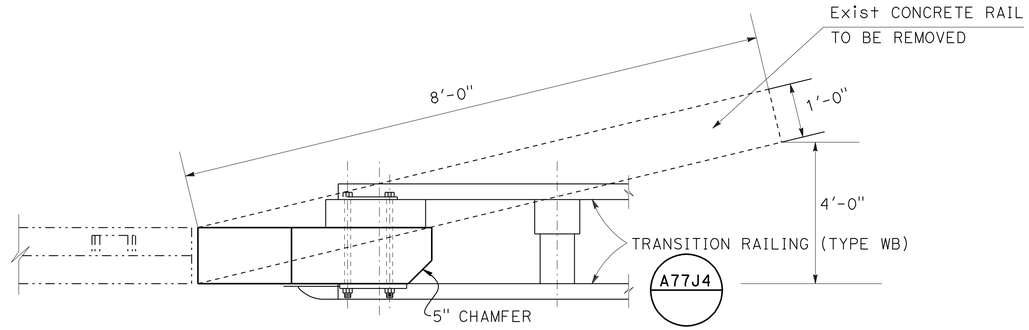

PLAN
3/4" = 1'-0"

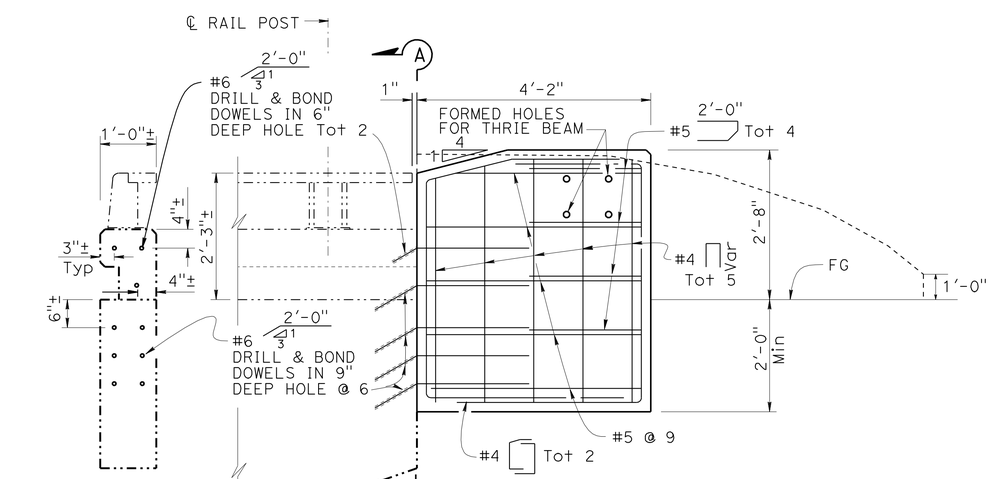

NO EXISTING END BLOCK
SECTION A-A
3/4" = 1'-0"

ELEVATION
3/4" = 1'-0"

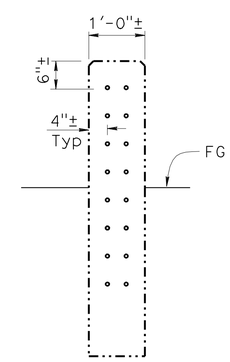

EXISTING END BLOCK
SECTION A-A
3/4" = 1'-0"

BRIDGE RAILING CONNECTION - ANCHOR BLOCK TO TYPE 1M CONCRETE BARRIER

CONSTRUCTION DETAILS

NO SCALE

C-9

STATE OF CALIFORNIA - DEPARTMENT OF TRANSPORTATION
Caltrans 06-DESIGN

FUNCTIONAL SUPERVISOR: THANH NGUYEN

CALCULATED-DESIGNED BY: AMIT NIJHAWAN
CHECKED BY: HARPREET BINNING

REVISED BY
DATE REVISED

LAST REVISION 01-26-12
DATE PLOTTED => 11-JUN-2012
TIME PLOTTED => 11:13

Dist	COUNTY	ROUTE	POST MILES TOTAL PROJECT	SHEET No.	TOTAL SHEETS
04	SM	101,280	Var	12	43

REGISTERED CIVIL ENGINEER 03-15-12 DATE

6-11-12
PLANS APPROVAL DATE

REGISTERED PROFESSIONAL ENGINEER HARPREET BINNING No. 68470 Exp. 9/30/13 CIVIL STATE OF CALIFORNIA

THE STATE OF CALIFORNIA OR ITS OFFICERS OR AGENTS SHALL NOT BE RESPONSIBLE FOR THE ACCURACY OR COMPLETENESS OF SCANNED COPIES OF THIS PLAN SHEET.

NOTES: (THIS SHEET)

1. THE CONTRACTOR SHALL VERIFY ALL CONTROLLING FIELD DIMENSIONS BEFORE ORDERING OR FABRICATING ANY MATERIAL.
2. EXISTING UTILITY FACILITIES ARE NOT SHOWN ON THE PLANS.
3. FOR LOCATIONS, SEE Q-SHEETS.
4. CUT AND REMOVE TYPE 9 CONCRETE BARRIER AND BRIDGE APPROACH GUARD RAILING AS REQUIRED.
5. USE ALTERNATIVE 1 WHERE THERE IS NO EXISTING END BLOCK, ALTERNATIVE 5 SIMILAR, USE WHERE THERE IS EXISTING END BLOCK.

LEGEND:

-·-·-·- INDICATES EXISTING STUCTURE

——— INDICATES NEW STRUCTURE

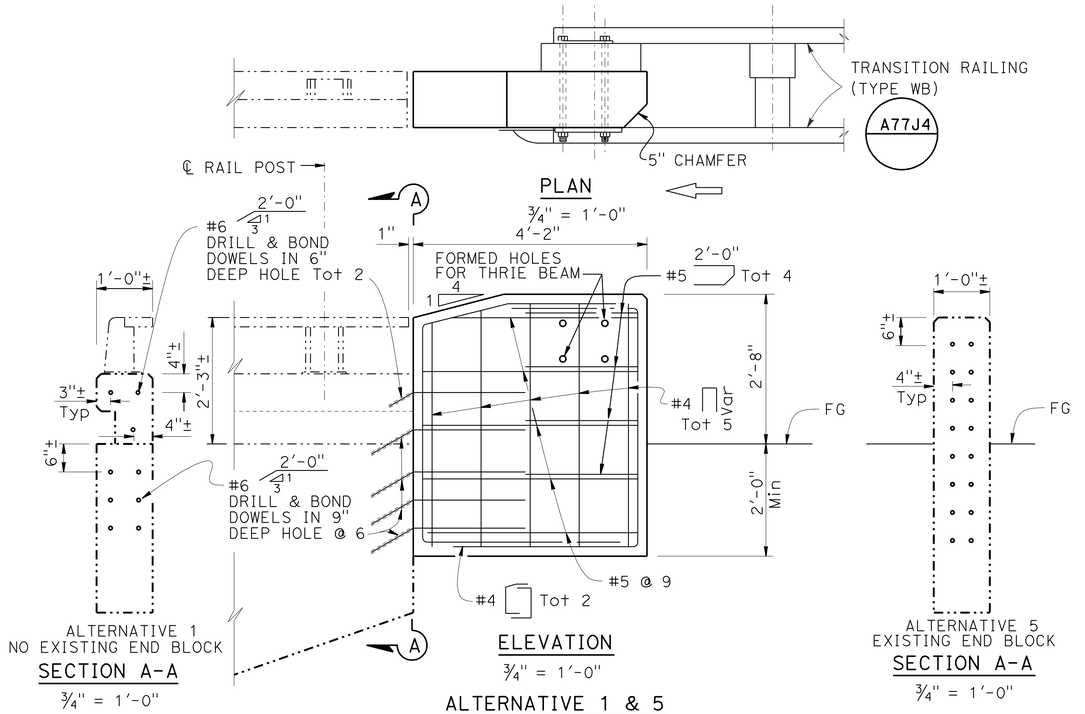

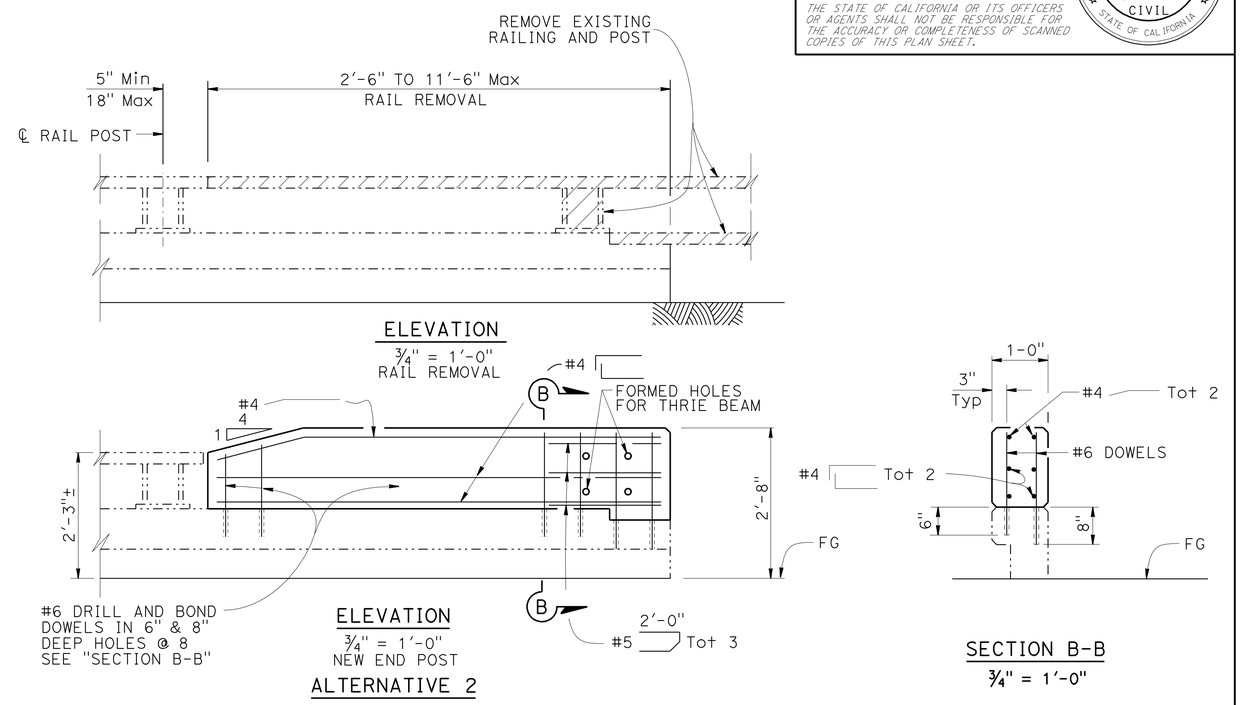

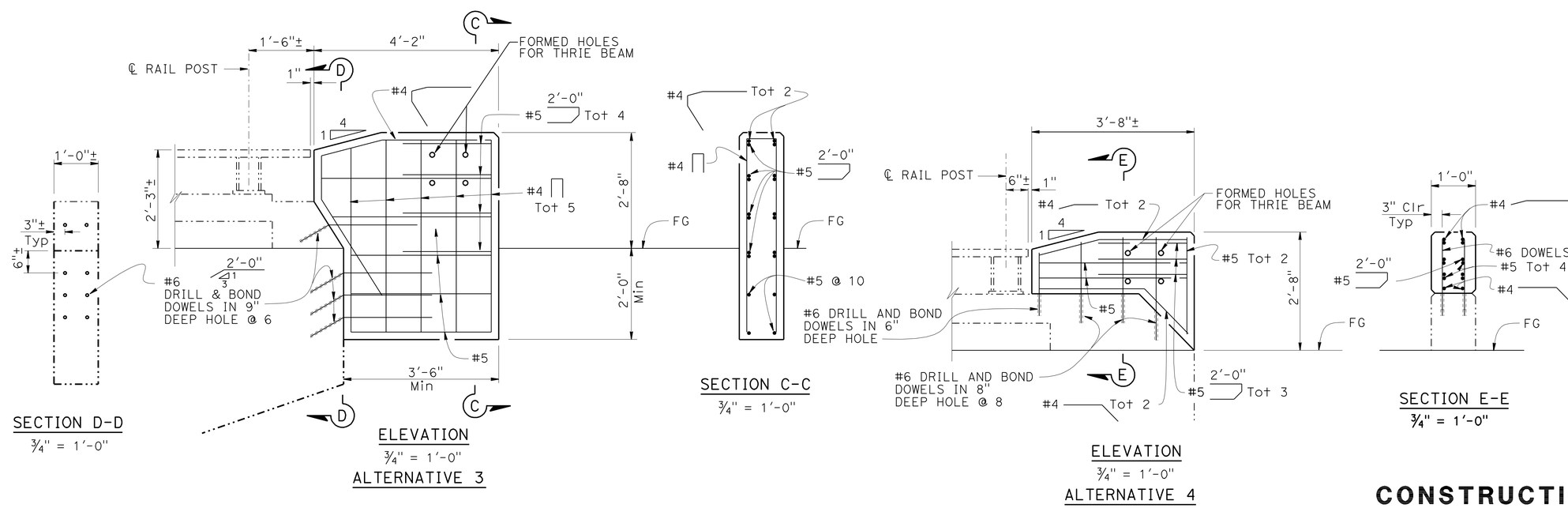

BRIDGE RAILING CONNECTION - ANCHOR BLOCK TO TYPE 9 CONCRETE BARRIER

CONSTRUCTION DETAILS
NO SCALE
C-10

STATE OF CALIFORNIA - DEPARTMENT OF TRANSPORTATION
Caltrans
06-DESIGN

FUNCTIONAL SUPERVISOR: THANH NGUYEN
CALCULATED-DESIGNED BY: AMIT NIJHAWAN
CHECKED BY: HARPREET BINNING
REVISED BY
DATE REVISED

LAST REVISION 01-26-12
DATE PLOTTED => 22-JUN-2012
TIME PLOTTED => 06:41

Dist	COUNTY	ROUTE	POST MILES TOTAL PROJECT	SHEET No.	TOTAL SHEETS
04	SM	101,280	Var	13	43

REGISTERED CIVIL ENGINEER 03-15-12 DATE

6-11-12
PLANS APPROVAL DATE

REGISTERED PROFESSIONAL ENGINEER HARPREET BINNING No. 68470 Exp. 9/30/13 CIVIL STATE OF CALIFORNIA

THE STATE OF CALIFORNIA OR ITS OFFICERS OR AGENTS SHALL NOT BE RESPONSIBLE FOR THE ACCURACY OR COMPLETENESS OF SCANNED COPIES OF THIS PLAN SHEET.

NOTES: (THIS SHEET)

1. THE CONTRACTOR SHALL VERIFY ALL CONTROLLING FIELD DIMENSIONS BEFORE ORDERING OR FABRICATING ANY MATERIAL.
2. EXISTING UTILITY FACILITIES ARE NOT SHOWN ON THE PLANS.
3. FOR LOCATIONS, SEE Q-SHEETS.

LEGEND:

-·-·-·- INDICATES EXISTING STUCTURE

——— INDICATES NEW STRUCTURE

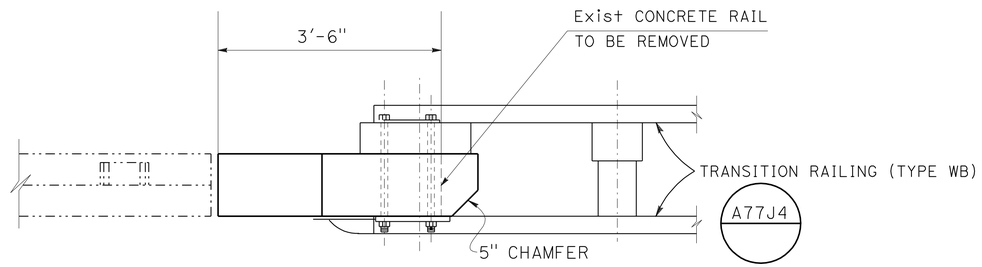

PLAN

¾" = 1'-0"

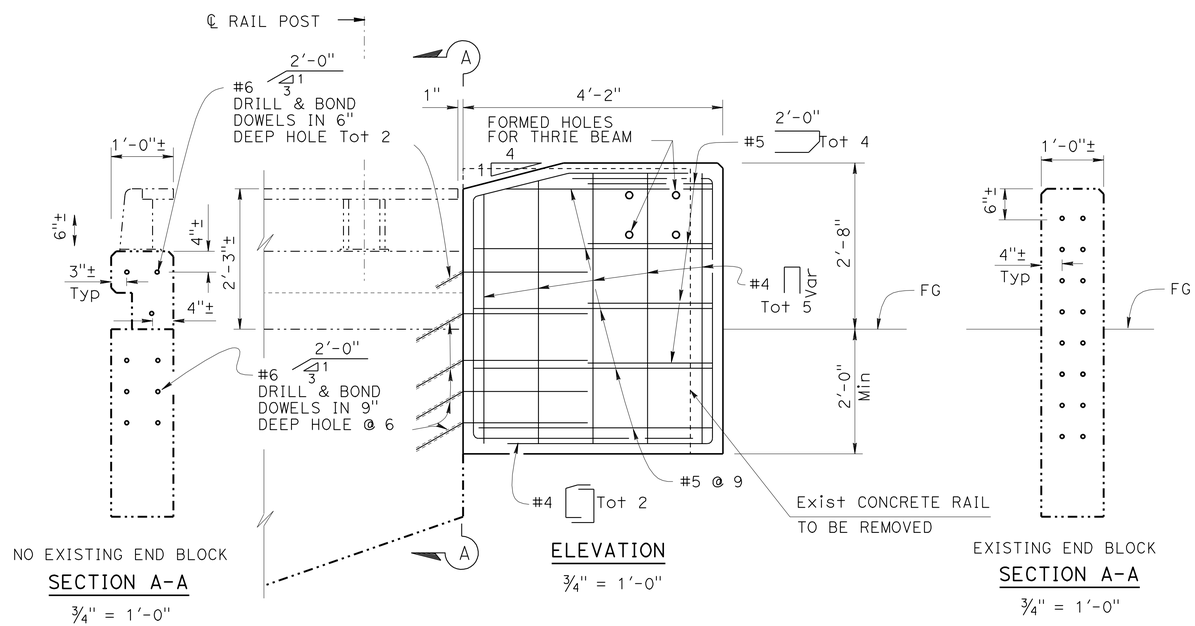

NO EXISTING END BLOCK

SECTION A-A

¾" = 1'-0"

ELEVATION

¾" = 1'-0"

EXISTING END BLOCK

SECTION A-A

¾" = 1'-0"

BRIDGE RAILING CONNECTION - ANCHOR BLOCK TO TYPE 9M CONCRETE BARRIER

CONSTRUCTION DETAILS

NO SCALE

C-11

STATE OF CALIFORNIA - DEPARTMENT OF TRANSPORTATION

Caltrans® 06-DESIGN

FUNCTIONAL SUPERVISOR: THANH NGUYEN

CALCULATED-DESIGNED BY: AMIT NIJHAWAN

CHECKED BY: HARPREET BINNING

REVISED BY

DATE REVISED

LAST REVISION 01-26-12 | DATE PLOTTED => 11-JUN-2012 | TIME PLOTTED => 11:17

Dist	COUNTY	ROUTE	POST MILES TOTAL PROJECT	SHEET No.	TOTAL SHEETS
04	SM	101,280	Var	14	43

REGISTERED CIVIL ENGINEER 03-15-12 DATE

6-11-12
PLANS APPROVAL DATE

REGISTERED PROFESSIONAL ENGINEER HARPREET BINNING No. 68470 Exp. 9/30/13 STATE OF CALIFORNIA

THE STATE OF CALIFORNIA OR ITS OFFICERS OR AGENTS SHALL NOT BE RESPONSIBLE FOR THE ACCURACY OR COMPLETENESS OF SCANNED COPIES OF THIS PLAN SHEET.

NOTES (THIS SHEET):

1. LOCATIONS OF NESTED MBGR AS DIRECTED BY THE ENGINEER.
2. OFFSET THE ADDITIONAL METAL BEAM GUARD RAILING SPLICES 6'-3" FROM THE BASE METAL BEAM GUARD RAILING SPLICES.
3. FOR DIKE POSITIONING WITH GUARD RAILING INSTALLATIONS, SEE STANDARD PLAN A77C4.
4. EXISTING UTILITY FACILITIES ARE NOT SHOWN ON THE PLANS.

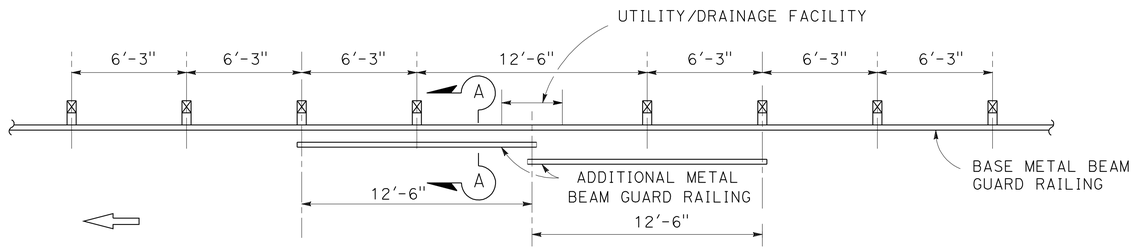

CASE 1
ONE POST OMITTED (SPLICE IN CENTER)

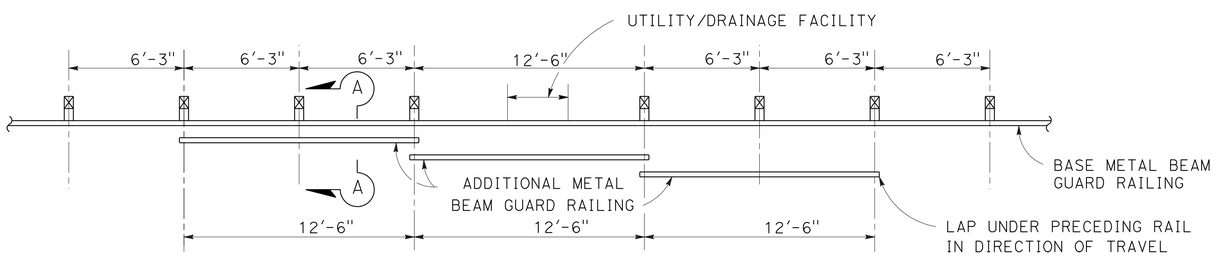

CASE 2
ONE POST OMITTED (SPLICE AT POSTS)

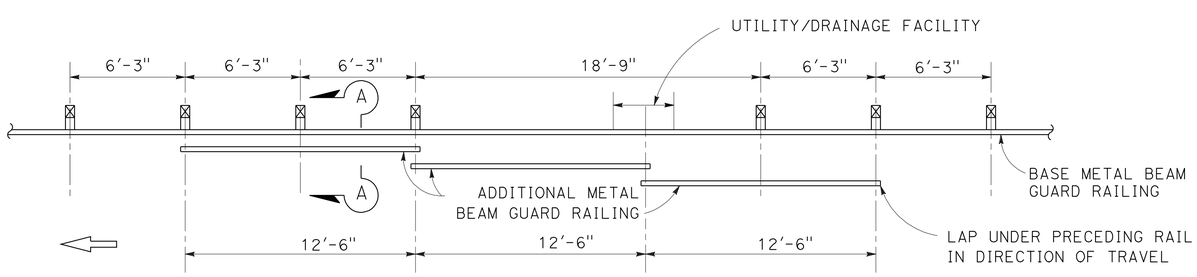

CASE 3
TWO POSTS OMITTED

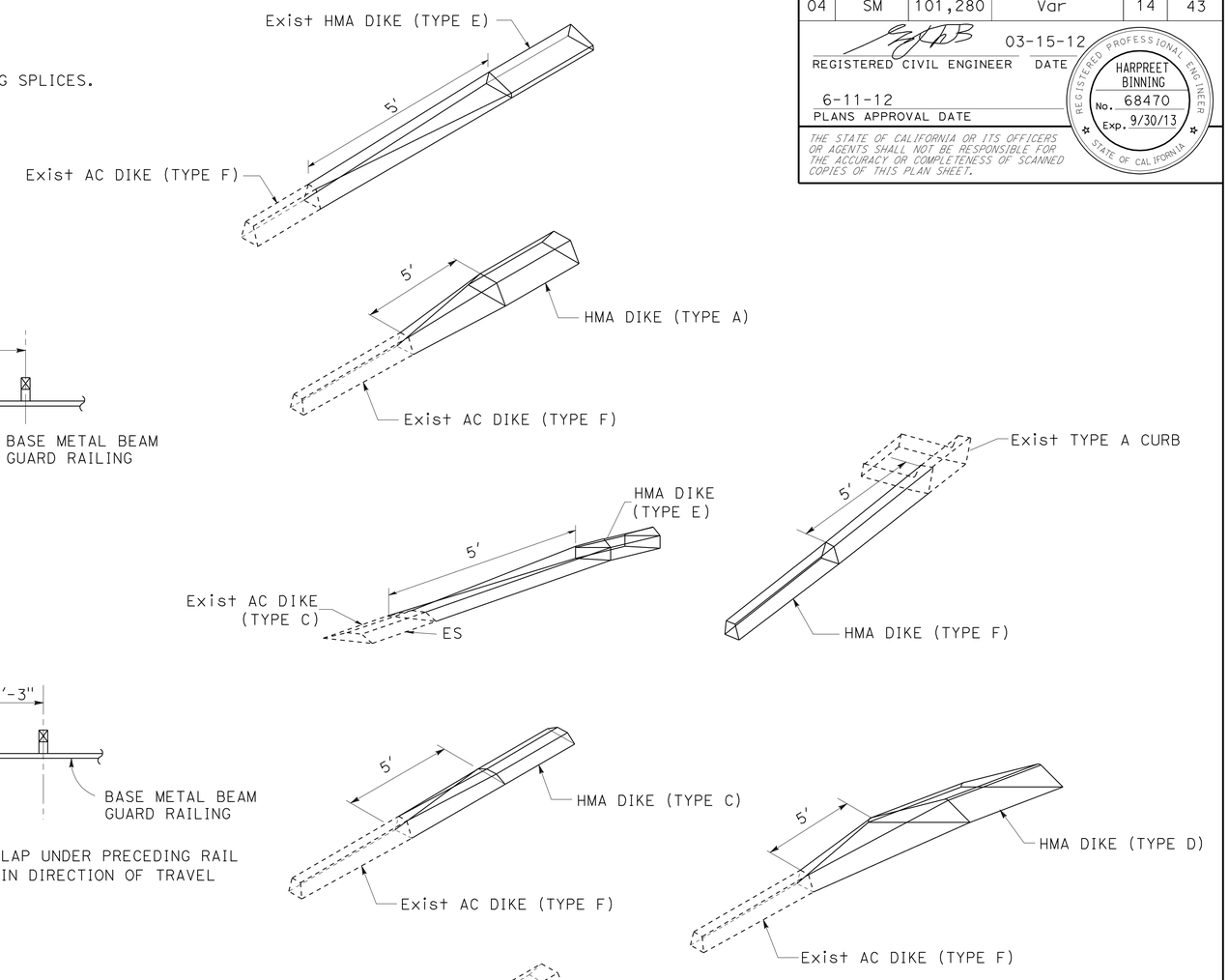

HMA DIKE TRANSITION DETAILS

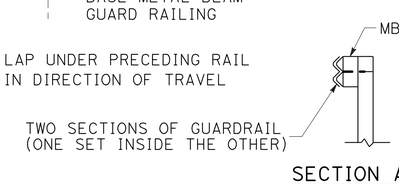

SECTION A-A

NESTED METAL BEAM GUARD RAILING

CONSTRUCTION DETAILS

NO SCALE

C-12

STATE OF CALIFORNIA - DEPARTMENT OF TRANSPORTATION
Caltrans 06-DESIGN

FUNCTIONAL SUPERVISOR: THANH NGUYEN
CALCULATED-DESIGNED BY: AMIT NIJHAWAN
CHECKED BY: HARPREET BINNING
REVISED BY
DATE REVISED

LAST REVISION 12-12-11
DATE PLOTTED => 11-JUN-2012
TIME PLOTTED => 11:17

Dist	COUNTY	ROUTE	POST MILES TOTAL PROJECT	SHEET No.	TOTAL SHEETS
04	SM	101,280	Var	15	43

REGISTERED CIVIL ENGINEER 03-15-12 DATE

6-11-12
PLANS APPROVAL DATE

REGISTERED PROFESSIONAL ENGINEER
HARPREET BINNING
No. 68470
Exp. 9/30/13
CIVIL
STATE OF CALIFORNIA

THE STATE OF CALIFORNIA OR ITS OFFICERS OR AGENTS SHALL NOT BE RESPONSIBLE FOR THE ACCURACY OR COMPLETENESS OF SCANNED COPIES OF THIS PLAN SHEET.

NOTE: (THIS SHEET)

INSTALLATION TO COMPLY WITH MANUFACTURER'S INSTRUCTIONS.
FOR ADDITIONAL INFORMATION AND ALL ACCESSORIES FOR TAU-II SYSTEM, SEE MANUFACTURER'S DETAILS. TO GET TO THE MANUFACTURER'S WEB SITE, GO TO : HTTP://WWW.BARRIERSYSTEMSINC.COM/.

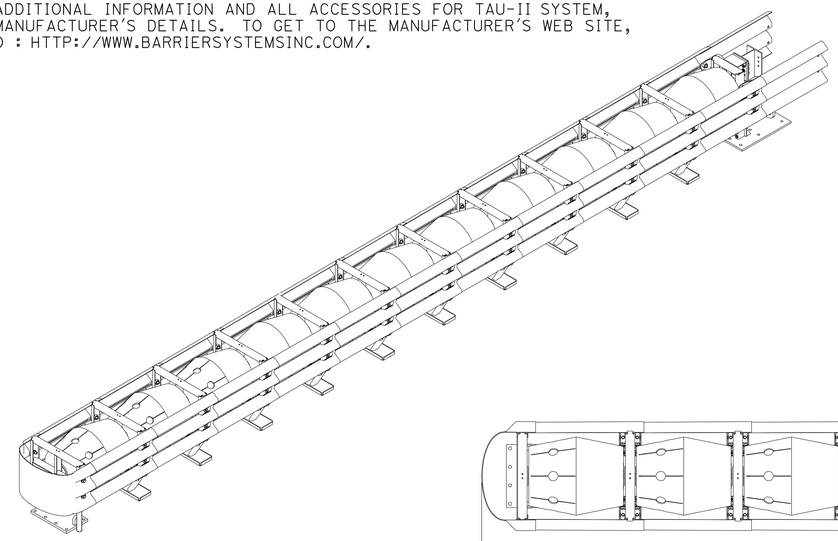

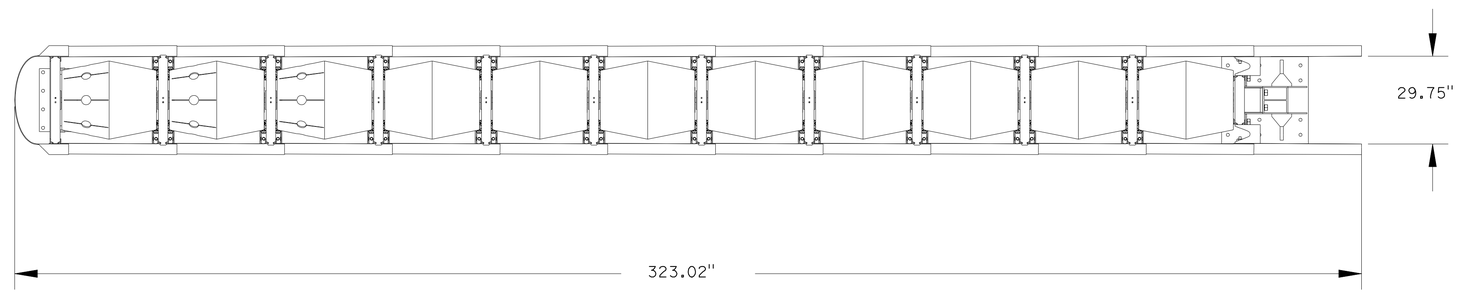

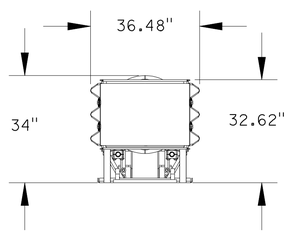

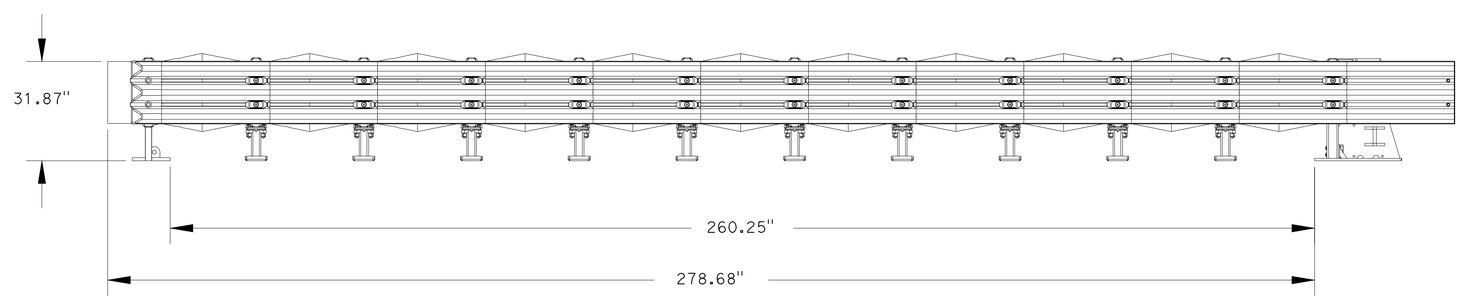

CRASH CUSHION (TYPE TAU-II) AT LOCATION 19

NO SCALE

CONSTRUCTION DETAILS

C-13

STATE OF CALIFORNIA - DEPARTMENT OF TRANSPORTATION
Caltrans 06-DESIGN

FUNCTIONAL SUPERVISOR: THANH NGUYEN
CALCULATED-DESIGNED BY: AMIT NIJHAWAN
CHECKED BY: HARPREET BINNING
REVISED BY
DATE REVISED

LAST REVISION 01-26-12
DATE PLOTTED => 12-JUN-2012
TIME PLOTTED => 05:47

Dist	COUNTY	ROUTE	POST MILES TOTAL PROJECT	SHEET No.	TOTAL SHEETS
04	SM	101,280	Var	16	43

REGISTERED CIVIL ENGINEER 03-15-12 DATE

6-11-12
PLANS APPROVAL DATE

REGISTERED PROFESSIONAL ENGINEER HARPREET BINNING No. 68470 Exp. 9/30/13 CIVIL STATE OF CALIFORNIA

THE STATE OF CALIFORNIA OR ITS OFFICERS OR AGENTS SHALL NOT BE RESPONSIBLE FOR THE ACCURACY OR COMPLETENESS OF SCANNED COPIES OF THIS PLAN SHEET.

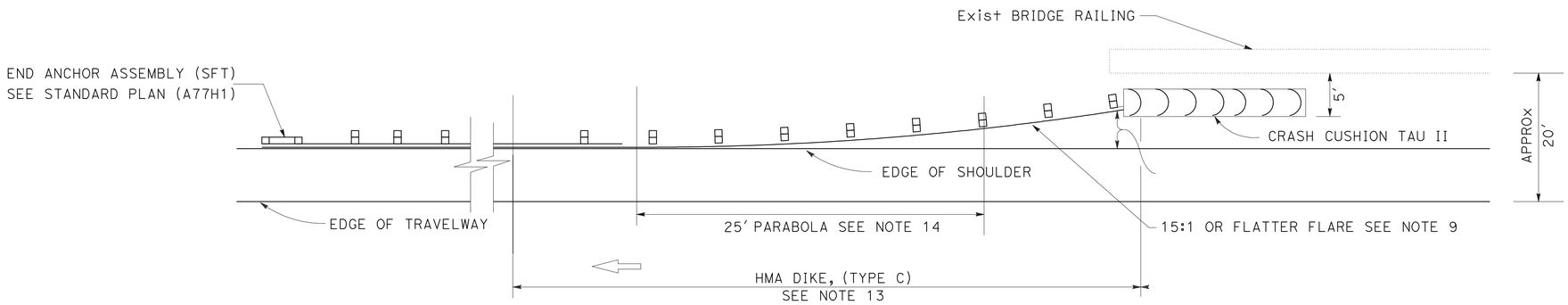

LOCATION 19 - KING DRIVE BRIDGE

(GUARD RAILING INSTALLATION AT ROADSIDE FIXED OBJECT OR OBJECTS WITH A FLARED END TREATMENT AT TRAFFIC APPROACH END OF RAILING)
SEE NOTES 11 AND 12

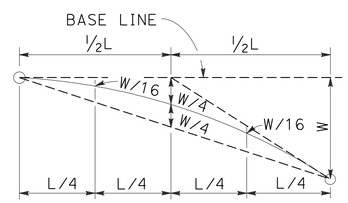

TYPICAL PARABOLIC LAYOUT

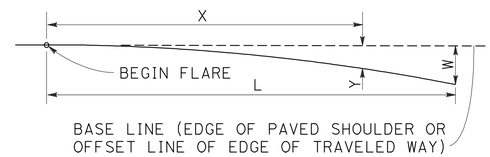

BASE LINE (EDGE OF PAVED SHOULDER OR OFFSET LINE OF EDGE OF TRAVELED WAY)

$$Y = \frac{WX^2}{L^2}$$

Y = OFFSET FROM BASE LINE
W = MAXIMUM OFFSET
X = DISTANCE ALONG BASE LINE
L = LENGTH OF FLARE

PARABOLIC FLARE OFFSETS

NOTES: (THIS SHEET)

1. LINE POST, BLOCKS AND HARDWARE TO BE USED ARE SHOWN ON STANDARD PLANS A77A2 AND A77B1.
2. GUARD RAILING POST SPACING TO BE 6'-3" CENTER TO CENTER, EXCEPT AS OTHERWISE NOTED.
3. EXCEPT AS NOTED, LINE POSTS ARE W6 x 9 STEEL POSTS, 6'-0" IN LENGTH, WITH 6" x 8" x 1'-2" NOTCHED WOOD BLOCKS OR NOTCHED RECYCLED PLASTIC BLOCKS.
4. A 4'-0" MINIMUM CLEARANCE IS REQUIRED BETWEEN THE FACE OF THE RAILING AND THE FACE OF A FIXED OBJECT LOCATED DIRECTLY BEHIND STANDARD GUARD RAILING SECTIONS WITH POST SPACING OF 6'-3". CONSTRUCT GUARD RAILING AS SHOWN IN THE DETAIL "STRENGTHENED RAILING SECTIONS FOR FIXED OBJECTS" ON THIS PLAN, WHERE THE CLEARANCE BETWEEN THE FACE OF THE RAILING AND THE FACE OF A FIXED OBJECT IS LESS THAN 4'-0", BUT NOT LESS THAN 2'-3". WHERE THE CLEARANCE IS LESS THAN 2'-3", A CONCRETE WALL OR BARRIER SHOULD BE CONSTRUCTED TO SHIELD THE FIXED OBJECT(S).
5. EXISTING UTILITY FACILITIES ARE NOT SHOWN ON THE PLANS.
6. FOR END ANCHOR ASSEMBLY (TYPE SFT) DETAILS, SEE STANDARD PLAN A77H1.
7. IN-LINE TERMINAL SYSTEM END TREATMENTS ARE USED WHERE SITE CONDITIONS WILL NOT ACCOMMODATE A FLARED END TREATMENT.
8. THE TYPE OF TERMINAL SYSTEM TO BE USED WILL BE SHOWN ON THE PROJECT PLANS.
9. THE 15:1 OR FLATTER FLARE USED WITH TYPE 16C LAYOUT IS BASED ON THE EDGE OF THE PAVED SHOULDER OR OFFSET LINE OF EDGE OF THE TRAVELED WAY. THE LENGTH OF GUARD RAILING WITHIN THE 15:1 OR FLATTER FLARE IS BASED ON SITE CONDITIONS AND SHOULD BE A LENGTH EQUAL TO MULTIPLES OF 12'-6".
10. FOR DETAILS OF THE BURIED POST END ANCHOR USED WITH TYPE 16C LAYOUT, SEE STANDARD PLAN A77I2.
11. AS SITE CONDITIONS DICTATE, CONSTRUCT ADDITIONAL GUARD RAILING TO SHIELD FIXED OBJECT(S). ADDITIONAL GUARD RAILING LENGTH EQUAL TO MULTIPLES OF 12'-6". POST SPACING AT 6'-3" EXCEPT AS SPECIFIED IN NOTE 4.
12. LAYOUT TYPES 16A, 16B OR 16C ARE TYPICALLY USED WHERE GUARD RAILING IS RECOMMENDED TO SHIELD ROADSIDE FIXED OBJECT(S) AND A CRASHWORTHY END TREATMENT IS REQUIRED FOR ONLY ONE DIRECTION OF TRAFFIC.
13. WHERE PLACEMENT OF DIKE IS REQUIRED WITH GUARD RAILING, SEE STANDARD PLAN A77C4 FOR DIKE POSITIONING DETAILS.
14. FOR TYPICAL FLARE OFFSETS FOR 25'-0" LENGTH PARABOLA WITH MAXIMUM OFFSET OF 1'-0", SEE STANDARD PLAN A77E1.
15. W6 x 15 STEEL POST, 8'-0" IN LENGTH, WITH 8" x 8" x 1'-2" NOTCHED WOOD BLOCK OR NOTCHED RECYCLED PLASTIC BLOCKS MAY BE USED IN PLACE OF THE 10" x 10" x 8'-0" WOOD POST WITH 8" x 8" x 1'-2" WOOD BLOCK SHOWN IN THE "STRENGTHENED RAILING SECTIONS DETAIL".

CRASH CUSHION (TYPE TAU-II)

NO SCALE

CONSTRUCTION DETAILS
C-14

REVISED BY | DATE REVISED
AMIT NIJHAWAN | HARPREET BINNING
CALCULATED-DESIGNED BY | CHECKED BY
FUNCTIONAL SUPERVISOR: THANH NGUYEN

STATE OF CALIFORNIA - DEPARTMENT OF TRANSPORTATION
Caltrans 06-DESIGN

LAST REVISION 03-26-12 | DATE PLOTTED => 18-JUN-2012 | TIME PLOTTED => 13:25

Dist	COUNTY	ROUTE	POST MILES TOTAL PROJECT	SHEET No.	TOTAL SHEETS
04	SM	101,280	Var	17	43

REGISTERED CIVIL ENGINEER 03-15-12 DATE

6-11-12
PLANS APPROVAL DATE

REGISTERED PROFESSIONAL ENGINEER HARPREET BINNING No. 68470 Exp. 9/30/13 CIVIL STATE OF CALIFORNIA

THE STATE OF CALIFORNIA OR ITS OFFICERS OR AGENTS SHALL NOT BE RESPONSIBLE FOR THE ACCURACY OR COMPLETENESS OF SCANNED COPIES OF THIS PLAN SHEET.

NOTE:

EXISTING UTILITY FACILITIES ARE NOT SHOWN ON THE PLANS.

LEGEND:

- Exist LIGHT POLE

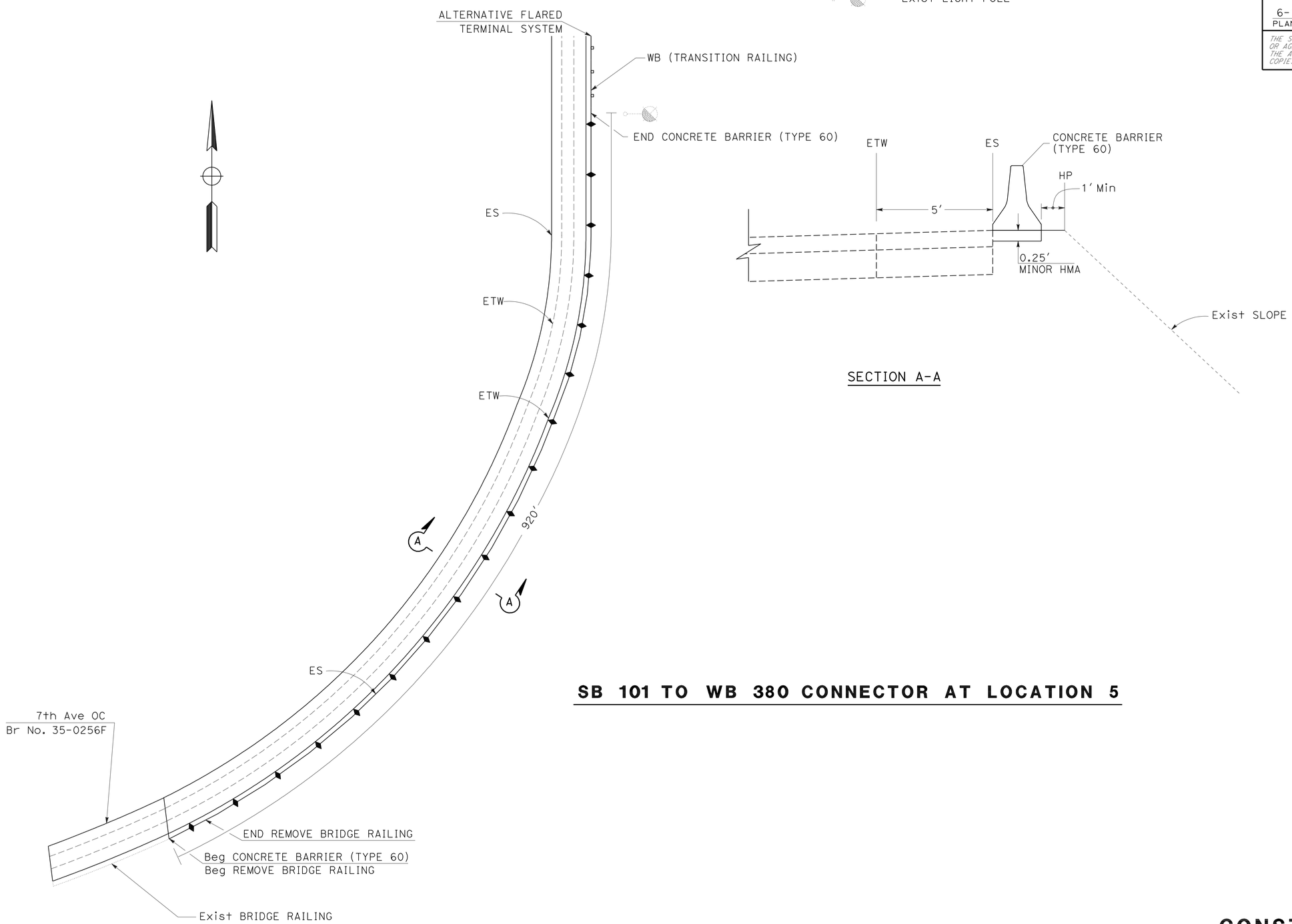

SECTION A-A

SB 101 TO WB 380 CONNECTOR AT LOCATION 5

NO SCALE

CONSTRUCTION DETAILS
C-15

STATE OF CALIFORNIA - DEPARTMENT OF TRANSPORTATION
Caltrans 06-DESIGN

FUNCTIONAL SUPERVISOR: THANH NGUYEN

CALCULATED-DESIGNED BY: AMIT NIJHAWAN
CHECKED BY: HARPREET BINNING

REVISED BY | DATE REVISED

LAST REVISION 03-26-12 | DATE PLOTTED => 11-JUN-2012 | TIME PLOTTED => 11:32

Dist	COUNTY	ROUTE	POST MILES TOTAL PROJECT	SHEET No.	TOTAL SHEETS
04	SM	101,280	Var	18	43

REGISTERED CIVIL ENGINEER 03-15-12 DATE

6-11-12
PLANS APPROVAL DATE

REGISTERED PROFESSIONAL ENGINEER HARPREET BINNING No. 68470 Exp. 9/30/13 CIVIL STATE OF CALIFORNIA

THE STATE OF CALIFORNIA OR ITS OFFICERS OR AGENTS SHALL NOT BE RESPONSIBLE FOR THE ACCURACY OR COMPLETENESS OF SCANNED COPIES OF THIS PLAN SHEET.

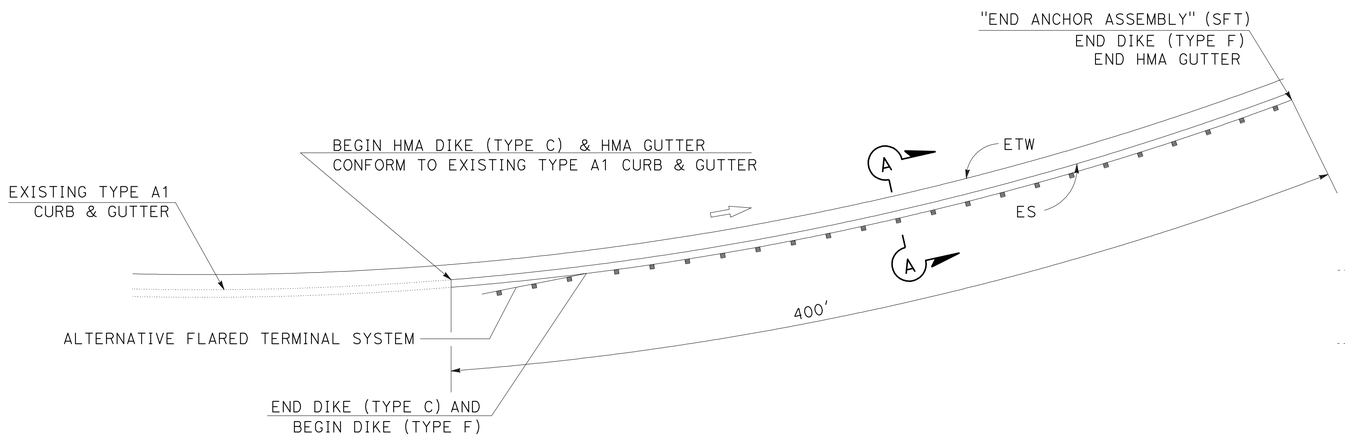

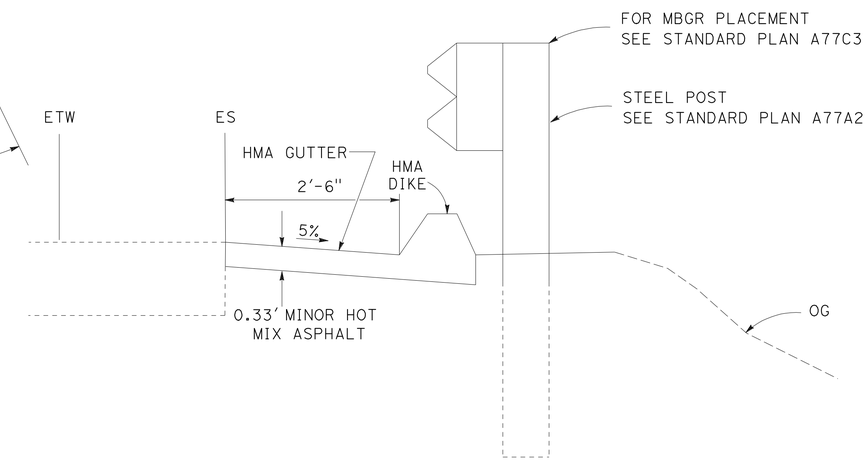

SECTION A-A

LOCATION 41

NOTES:

1. LINE POST, BLOCKS AND HARDWARE TO BE USED ARE SHOWN ON STANDARD PLANS A77A2 AND A77B1.
2. GUARD RAILING POST SPACING TO BE 6'-3" CENTER TO CENTER, EXCEPT AS OTHERWISE NOTED.
3. EXCEPT AS NOTED, LINE POSTS ARE W6 x 9 STEEL POSTS, 6'-0" IN LENGTH, WITH 6" x 8" x 1'-2" NOTCHED WOOD BLOCKS OR NOTCHED RECYCLED PLASTIC BLOCKS.
4. A 4'-0" MINIMUM CLEARANCE IS REQUIRED BETWEEN THE FACE OF THE RAILING AND THE FACE OF A FIXED OBJECT LOCATED DIRECTLY BEHIND STANDARD GUARD RAILING SECTIONS WITH POST SPACING OF 6'-3". CONSTRUCT GUARD RAILING AS SHOWN IN THE DETAIL "STRENGTHENED RAILING SECTIONS FOR FIXED OBJECTS" ON THIS PLAN, WHERE THE CLEARANCE BETWEEN THE FACE OF THE RAILING AND THE FACE OF A FIXED OBJECT IS LESS THAN 4'-0", BUT NOT LESS THAN 2'-3". WHERE THE CLEARANCE IS LESS THAN 2'-3", A CONCRETE WALL OR BARRIER SHOULD BE CONSTRUCTED TO SHIELD THE FIXED OBJECT(S).
5. EXISTING UTILITY FACILITIES ARE NOT SHOWN ON THE PLANS.
6. FOR END ANCHOR ASSEMBLY (TYPE SFT) DETAILS, SEE STANDARD PLAN A77H1.
7. IN-LINE TERMINAL SYSTEM END TREATMENTS ARE USED WHERE SITE CONDITIONS WILL NOT ACCOMMODATE A FLARED END TREATMENT.
8. THE 15:1 OR FLATTER FLARE USED WITH TYPE 16C LAYOUT IS BASED ON THE EDGE OF THE PAVED SHOULDER OR OFFSET LINE OF EDGE OF THE TRAVELED WAY. THE LENGTH OF GUARD RAILING WITHIN THE 15:1 OR FLATTER FLARE IS BASED ON SITE CONDITIONS AND SHOULD BE A LENGTH EQUAL TO MULTIPLES OF 12'-6".
9. FOR DETAILS OF THE BURIED POST END ANCHOR USED WITH TYPE 16C LAYOUT, SEE STANDARD PLAN A77I2.
10. AS SITE CONDITIONS DICTATE, CONSTRUCT ADDITIONAL GUARD RAILING TO SHIELD FIXED OBJECT(S). ADDITIONAL GUARD RAILING LENGTH EQUAL TO MULTIPLES OF 12'-6". POST SPACING AT 6'-3" EXCEPT AS SPECIFIED IN NOTE 4.
11. LAYOUT TYPES 16A, 16B OR 16C ARE TYPICALLY USED WHERE GUARD RAILING IS RECOMMENDED TO SHIELD ROADSIDE FIXED OBJECT(S) AND A CRASHWORTHY END TREATMENT IS REQUIRED FOR ONLY ONE DIRECTION OF TRAFFIC.
12. WHERE PLACEMENT OF DIKE IS REQUIRED WITH GUARD RAILING, SEE STANDARD PLAN A77C4 FOR DIKE POSITIONING DETAILS.
13. FOR TYPICAL FLARE OFFSETS FOR 25'-0" LENGTH PARABOLA WITH MAXIMUM 1'-0" OFFSET, SEE STANDARD PLAN A77E1.
14. W6 x 15 STEEL POST, 8'-0" IN LENGTH, WITH 8" x 8" x 1'-2" NOTCHED WOOD BLOCK OR NOTCHED RECYCLED PLASTIC BLOCKS MAY BE USED IN PLACE OF THE 10" x 10" x 8'-0" WOOD POST WITH 8" x 8" x 1'-2" WOOD BLOCK SHOWN IN THE "STRENGTHENED RAILING SECTIONS DETAIL".

MBGR LAYOUT
ANCHOR ASSEMBLY

NO SCALE

CONSTRUCTION DETAILS
C-16

STATE OF CALIFORNIA - DEPARTMENT OF TRANSPORTATION
Caltrans® 06-DESIGN

FUNCTIONAL SUPERVISOR: THANH NGUYEN
CALCULATED-DESIGNED BY: AMIT NIJHAWAN
CHECKED BY: HARPREET BINNING
REVISED BY
DATE REVISED

LAST REVISION 03-26-12
DATE PLOTTED => 22-JUN-2012
TIME PLOTTED => 06:41

Dist	COUNTY	ROUTE	POST MILES TOTAL PROJECT	SHEET No.	TOTAL SHEETS
04	SM	101,280	Var	19	43

REGISTERED CIVIL ENGINEER 03-15-12 DATE

6-11-12
PLANS APPROVAL DATE

REGISTERED PROFESSIONAL ENGINEER HARPREET BINNING No. 68470 Exp. 9/30/13 CIVIL STATE OF CALIFORNIA

THE STATE OF CALIFORNIA OR ITS OFFICERS OR AGENTS SHALL NOT BE RESPONSIBLE FOR THE ACCURACY OR COMPLETENESS OF SCANNED COPIES OF THIS PLAN SHEET.

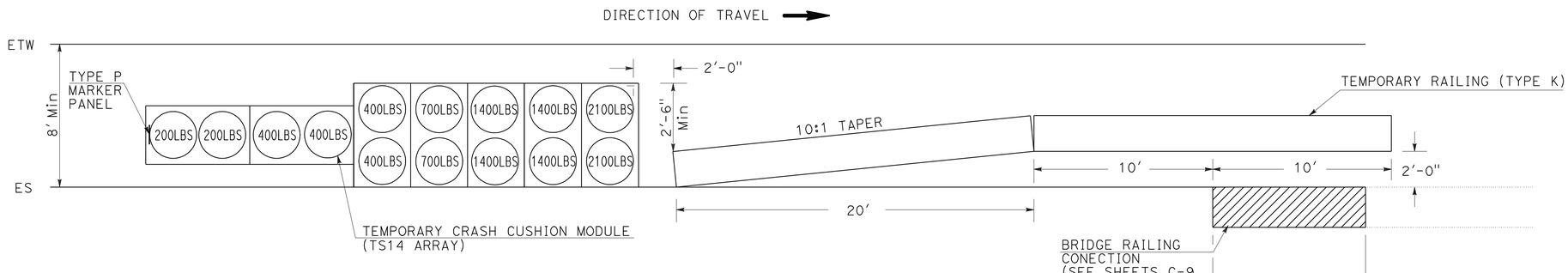

BRIDGE RAILING END PROTECTION

CONSTRUCTION DETAIL

NO SCALE

C-17

STATE OF CALIFORNIA - DEPARTMENT OF TRANSPORTATION
Caltrans® 06-DESIGN

FUNCTIONAL SUPERVISOR: THANH NGUYEN
CALCULATED-DESIGNED BY: SHAKILA HANIF
CHECKED BY: HARPREET BINNING
REVISED BY
DATE REVISED

LAST REVISION 03-26-12 | DATE PLOTTED => 11-JUN-2012 | TIME PLOTTED => 12:41

Dist	COUNTY	ROUTE	POST MILES TOTAL PROJECT	SHEET No.	TOTAL SHEETS
04	SM	101,280	Var	20	43

LICENSED LANDSCAPE ARCHITECT

6-11-12
PLANS APPROVAL DATE

LICENSED LANDSCAPE ARCHITECT MICHAEL W. MILLS No. 4770 STATE OF CALIFORNIA
SIGNED 11/30/12
RETIREMENT DATE 03/19/12
DATE

THE STATE OF CALIFORNIA OR ITS OFFICERS OR AGENTS SHALL NOT BE RESPONSIBLE FOR THE ACCURACY OR COMPLETENESS OF SCANNED COPIES OF THIS PLAN SHEET.

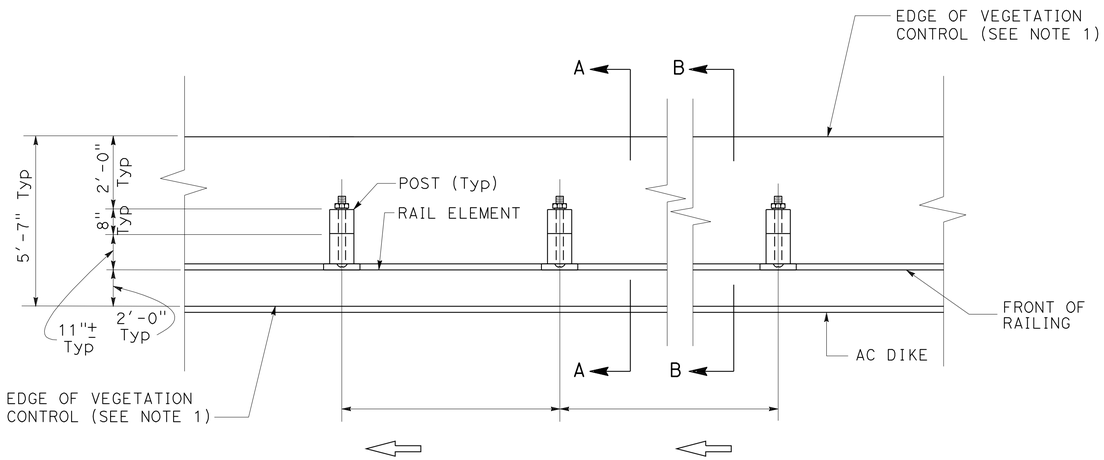

PLAN

LEGEND:

KEY EDGE DETAIL (SEE SHEET C-19)

NOTES: (THIS SHEET)

1. THE WIDTH OF THE VEGETATION BARRIER SHOWN IS TYPICAL 24 INCHES MAXIMUM, FROM RAILING IN FRONT AND FROM POST IN THE BACK. GRUBBED SMOOTH SURFACE FREE OF VEGETATION IS REQUIRED PRIOR TO INSTALLATION.
2. IF THERE IS AN EXISTING DIKE UNDER THE RAILING OR LESS THAN 24'' FROM THE FRONT OF THE RAILING, THE SEAMLESS COMPOSITE SHALL BE INSTALLED UP TO THE TOP 2 INCHES OF THE INSIDE WALL OF THE DIKE TO PROVIDE SOLID ANCHORAGE, AND PREVENT A GAP AT THE JUNCTION OF THE VEGETATION BARRIER AND DIKE.
3. WHERE PAVED SHOULDER EXISTS WITHIN 24'' IN FRONT OF THE RAILING, INSTALL VEGETATION CONTROL BARRIER UP TO THE EDGE OF PAVED SHOULDER. SEAMLESS ASPHALT COMPOSITE IS NOT INTENDED FOR VEHICLE TRAFFIC.

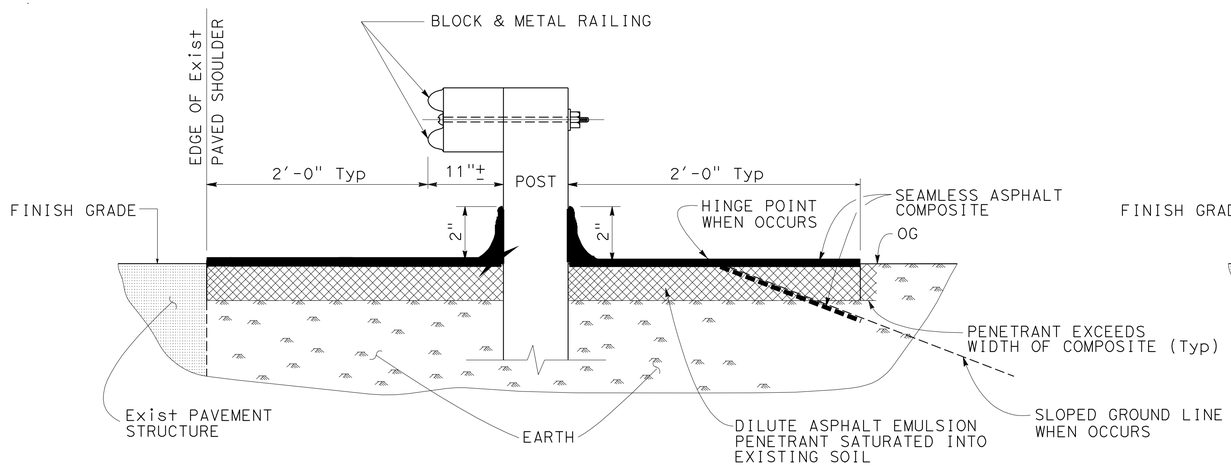

SECTION A-A
(WITHOUT DIKE)

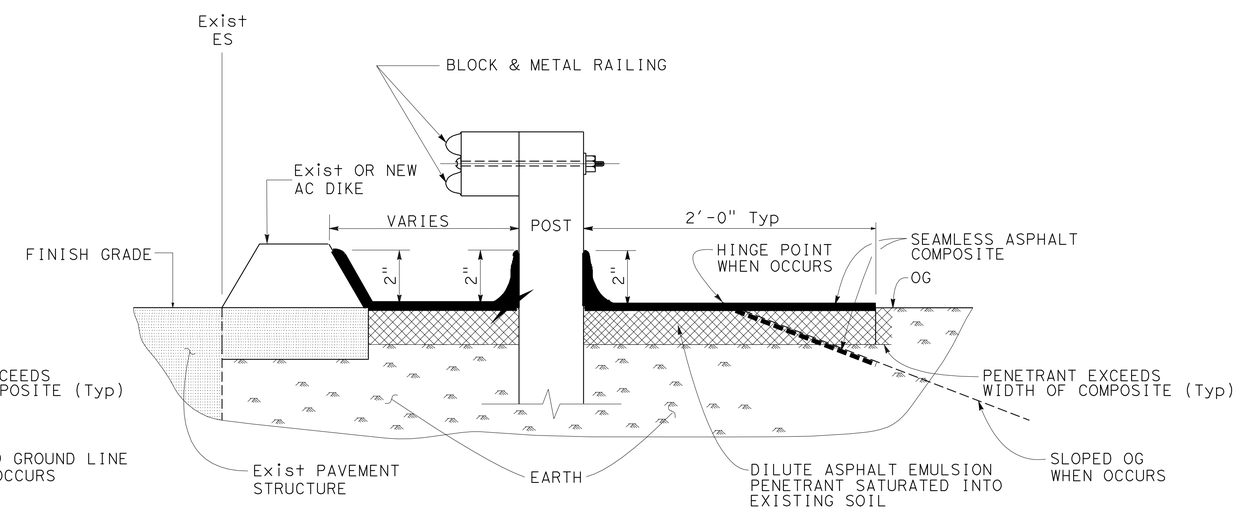

SECTION B-B
(WITH DIKE)

METAL BEAM GUARD RAILING
VEGETATION CONTROL (ASPHALT COMPOSITE)
CROSS SECTIONS

NO SCALE

CONSTRUCTION DETAILS

C-18

STATE OF CALIFORNIA - DEPARTMENT OF TRANSPORTATION
Caltrans 06-LANDSCAPE ARCHITECTURE

SENIOR LANDSCAPE ARCHITECT: BRAD COLE
CALCULATED-DESIGNED BY: CHARLES LaRUE
CHECKED BY: MIKE MILLS
REVISED BY:
DATE REVISED:

LAST REVISION 03-26-12
DATE PLOTTED => 11-JUN-2012
TIME PLOTTED => 12:41

Dist	COUNTY	ROUTE	POST MILES TOTAL PROJECT	SHEET No.	TOTAL SHEETS
04	SM	101,280	Var	21	43

LICENSED LANDSCAPE ARCHITECT

6-11-12
PLANS APPROVAL DATE

LICENSED LANDSCAPE ARCHITECT
MICHAEL W. MILLS No. 4778
11/30/12
03/19/12
STATE OF CALIFORNIA

THE STATE OF CALIFORNIA OR ITS OFFICERS OR AGENTS SHALL NOT BE RESPONSIBLE FOR THE ACCURACY OR COMPLETENESS OF SCANNED COPIES OF THIS PLAN SHEET.

NOTES: (THIS SHEET)

1. SEE SHEET C18 FOR ADDITIONAL VEGETATION CONTROL DETAILS.
2. WHERE THE DISTANCE BETWEEN BACK OF POST OR FIXED OBJECT AND HINGE POINT IS LESS THAN 24", VEGETATION CONTROL TO BE CONSTRUCTED 6" BEYOND THE HINGE POINT WITH THE EDGE KEYED IN.
3. WHERE DIKE IS CONSTRUCTED UNDER RAILING, CONSTRUCT VEGETATION CONTROL TO BACK EDGE OF DIKE. WHERE PAVED SHOULDER IS CONSTRUCTED WITHIN 24" IN FRONT OF THE POST, CONSTRUCT VEGETATION CONTROL TO THE EDGE OF PAVED SHOULDER.
4. FEATHER EDGE OF ASPHALT COMPOSITE TRANSITION UP POSTS AND BACK OF CURBS AND DIKES. TRANSITION LINE SHALL FORM A REASONABLY STRAIGHT LINE, HORIZONTALLY FROM POST TO POST OR ALONG TOP EDGE OF CURB OR DIKE.
5. EXISTING UTILITY FACILITIES ARE NOT SHOWN ON THE PLANS.

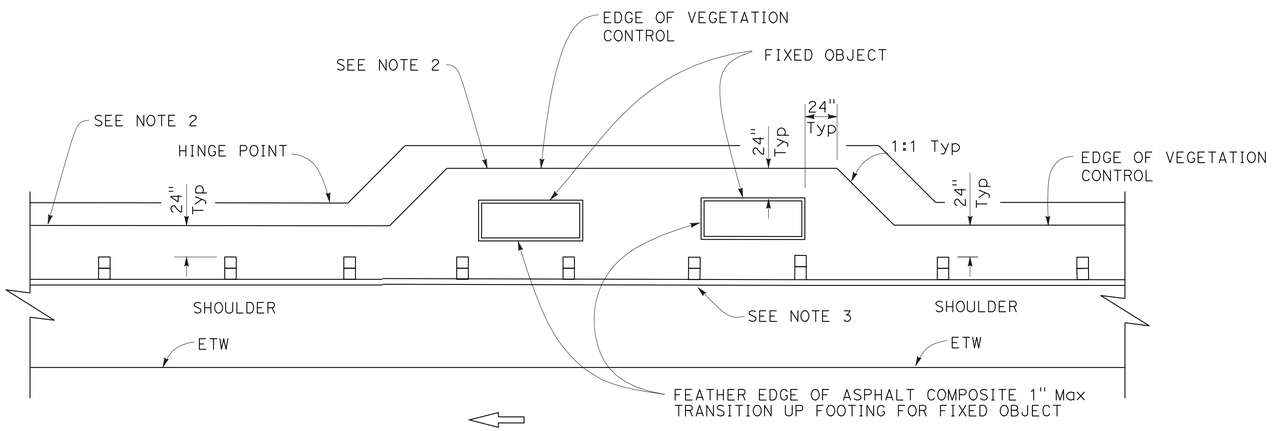

PLAN

FIXED OBJECT(S) ON SHOULDER

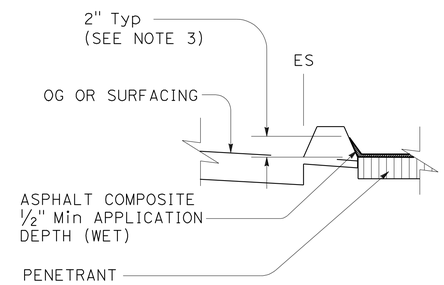

VEGETATION CONTROL AT DIKE

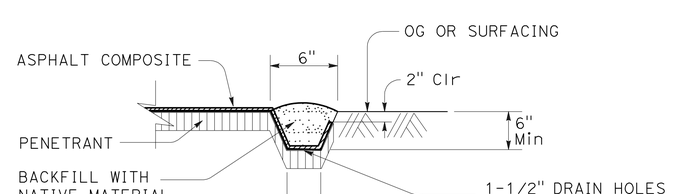

KEY EDGE

METAL BEAM GUARD RAILING
VEGETATION CONTROL (ASPHALT COMPOSITE)
AT FIXED OBJECT

NO SCALE

CONSTRUCTION DETAILS

C-19

STATE OF CALIFORNIA - DEPARTMENT OF TRANSPORTATION
Caltrans 06-LANDSCAPE ARCHITECTURE

SENIOR LANDSCAPE ARCHITECT: BRAD COLE
CALCULATED-DESIGNED BY: CHARLES LaRUE
CHECKED BY: MIKE MILLS
REVISED BY
DATE REVISED

LAST REVISION 03-26-12
DATE PLOTTED => 11-JUN-2012
TIME PLOTTED => 12:41

Dist	COUNTY	ROUTE	POST MILES TOTAL PROJECT	SHEET No.	TOTAL SHEETS
04	SM	101,280	Var	22	43

LICENSED LANDSCAPE ARCHITECT

6-11-12
PLANS APPROVAL DATE

LICENSED LANDSCAPE ARCHITECT
MICHAEL W. MILLS No. 4770
Expiration Date 11/30/12
Renewal Date 03/19/12
Date
STATE OF CALIFORNIA

THE STATE OF CALIFORNIA OR ITS OFFICERS OR AGENTS SHALL NOT BE RESPONSIBLE FOR THE ACCURACY OR COMPLETENESS OF SCANNED COPIES OF THIS PLAN SHEET.

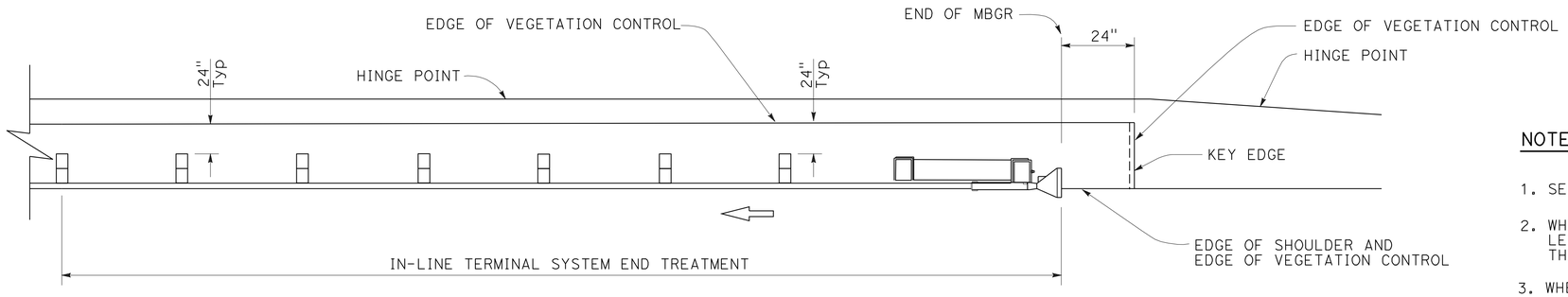

PLAN

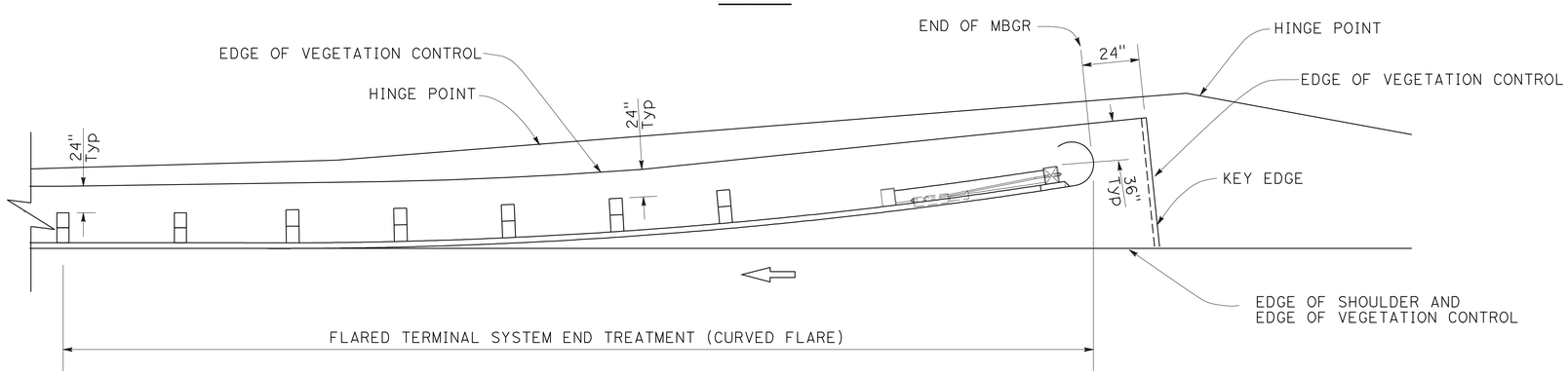

PLAN

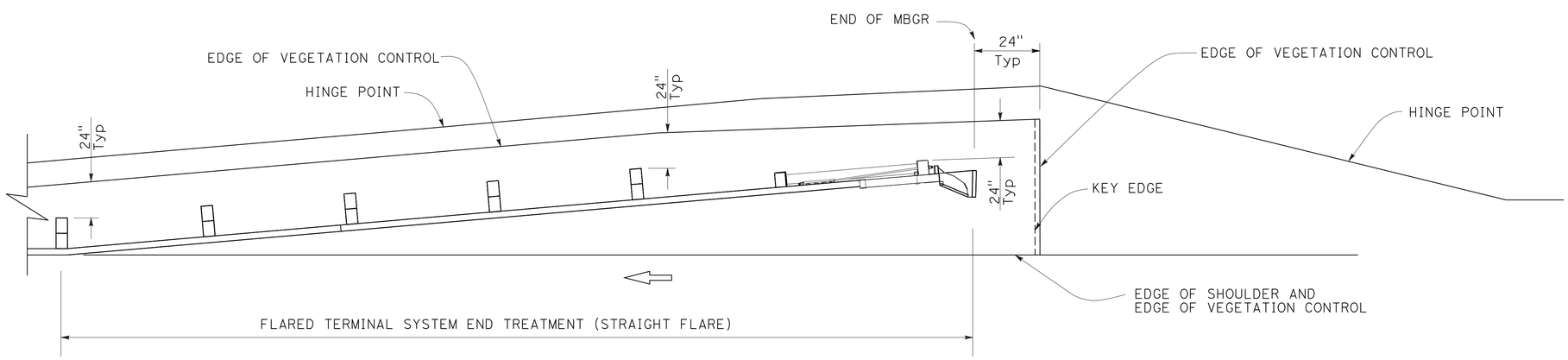

PLAN

NOTES: (THIS SHEET)

1. SEE SHEET C18 FOR ADDITIONAL VEGETATION CONTROL DETAILS.
2. WHERE THE DISTANCE BETWEEN BACK OF POST AND HINGE POINT IS LESS THAN 24", VEGETATION CONTROL TO BE CONSTRUCTED 6" BEYOND THE HINGE POINT WITH THE EDGE KEYED IN.
3. WHERE DIKE IS CONSTRUCTED UNDER RAILING, CONSTRUCT VEGETATION CONTROL TO BACK EDGE OF CURB OR DIKE. WHERE PAVED SHOULDER IS CONSTRUCTED WITHIN 24" IN FRONT OF THE POST, CONSTRUCT VEGETATION CONTROL TO THE EDGE OF PAVED SHOULDER.
4. EXISTING UTILITY FACILITIES ARE NOT SHOWN ON THE PLANS.

METAL BEAM GUARD RAILING
VEGETATION CONTROL (ASPHALT COMPOSITE)
FOR TERMINAL SYSTEM END TREATMENTS

NO SCALE

CONSTRUCTION DETAILS
C-20

REVISED BY | DATE REVISED
CHARLES LaRUE | MIKE MILLS
CALCULATED-DESIGNED BY | CHECKED BY
SENIOR LANDSCAPE ARCHITECT | BRAD COLE

STATE OF CALIFORNIA - DEPARTMENT OF TRANSPORTATION
Caltrans 06-LANDSCAPE ARCHITECTURE

LAST REVISION 03-26-12 | DATE PLOTTED => 11-JUN-2012 | TIME PLOTTED => 12:41

Dist	COUNTY	ROUTE	POST MILES TOTAL PROJECT	SHEET No.	TOTAL SHEETS
04	SM	101,280	Var	23	43

LICENSED LANDSCAPE ARCHITECT

6-11-12
PLANS APPROVAL DATE

LICENSED LANDSCAPE ARCHITECT
MICHAEL W. MILLS No. 4770
11/30/12
03/19/12
STATE OF CALIFORNIA

THE STATE OF CALIFORNIA OR ITS OFFICERS OR AGENTS SHALL NOT BE RESPONSIBLE FOR THE ACCURACY OR COMPLETENESS OF SCANNED COPIES OF THIS PLAN SHEET.

NOTES: (THIS SHEET)

1. SEE SHEET C18 FOR ADDITIONAL VEGETATION CONTROL DETAILS.
2. WHERE THE DISTANCE BETWEEN BACK OF POST AND HINGE POINT IS LESS THAN 24", VEGETATION CONTROL TO BE CONSTRUCTED 6" BEYOND THE HINGE POINT WITH THE EDGE KEYED IN.
3. WHERE DIKE IS CONSTRUCTED UNDER RAILING, CONSTRUCT VEGETATION CONTROL TO BACK EDGE OF CURB OR DIKE. WHERE PAVED SHOULDER IS CONSTRUCTED WITHIN 24" IN FRONT OF THE POST, CONSTRUCT VEGETATION CONTROL TO THE EDGE OF PAVED SHOULDER.
4. EXISTING UTILITY FACILITIES ARE NOT SHOWN ON THE PLANS.

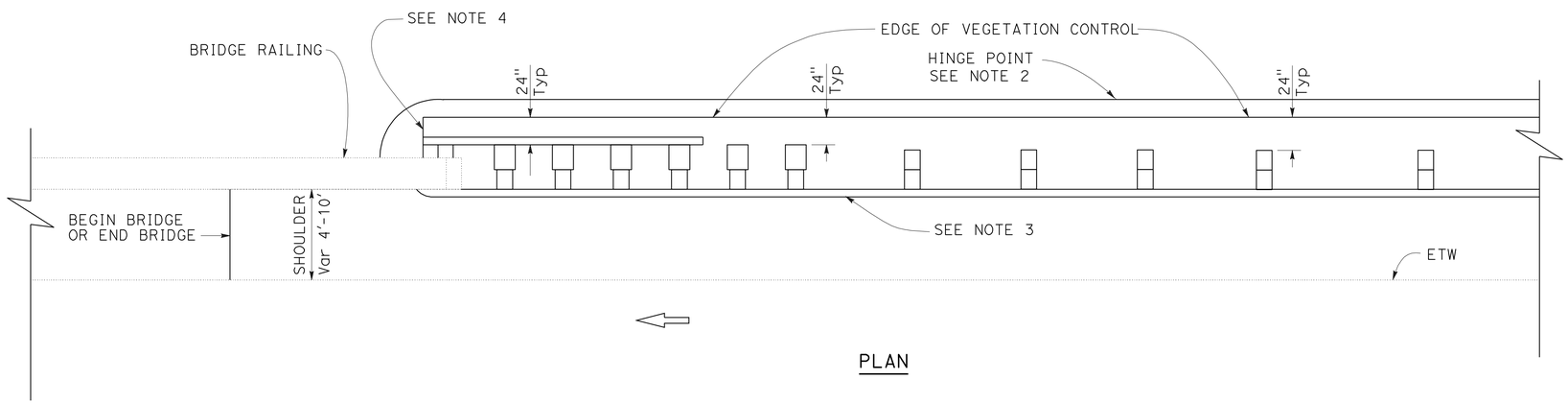

PLAN

METAL BEAM GUARD RAILING
VEGETATION CONTROL (ASPHALT COMPOSITE)
AT STRUCTURE APPROACH AND DEPARTURE

NO SCALE

CONSTRUCTION DETAILS

C-21

STATE OF CALIFORNIA - DEPARTMENT OF TRANSPORTATION
Caltrans 06-LANDSCAPE ARCHITECTURE

SENIOR LANDSCAPE ARCHITECT: BRAD COLE
CALCULATED-DESIGNED BY: CHARLES LoRUE
CHECKED BY: MIKE MILLS
REVISED BY
DATE REVISED

LAST REVISION 03-26-12
DATE PLOTTED => 27-JUN-2012
TIME PLOTTED => 06:47

Dist	COUNTY	ROUTE	POST MILES TOTAL PROJECT	SHEET No.	TOTAL SHEETS
04	SM	101,280	Var	24	43

LICENSED CIVIL ENGINEER 03-15-12

6-11-12
PLANS APPROVAL DATE

REGISTERED PROFESSIONAL ENGINEER HARPREET BINNING No. 68470 Exp. 9/30/13 CIVIL STATE OF CALIFORNIA

THE STATE OF CALIFORNIA OR ITS OFFICERS OR AGENTS SHALL NOT BE RESPONSIBLE FOR THE ACCURACY OR COMPLETENESS OF SCANNED COPIES OF THIS PLAN SHEET.

TABLE A

POST OFFSET DIMENSIONS		
POST No.	3'-0" SYSTEM END OFFSET	3'-6" SYSTEM END OFFSET
1	36"	42"
2	22¼"	27¾"
3	11¾"	16¼"
4	6¾"	10⅝"
5	3"	6"
6	¾"	2¾"
7	0"	¾"
8	0"	0"

SEE NOTE 12

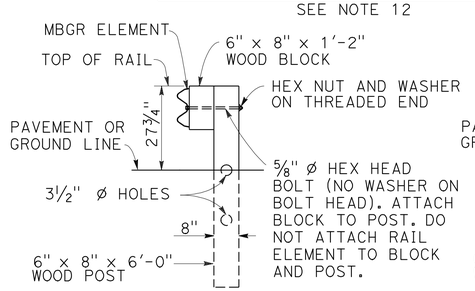

SECTION A-A

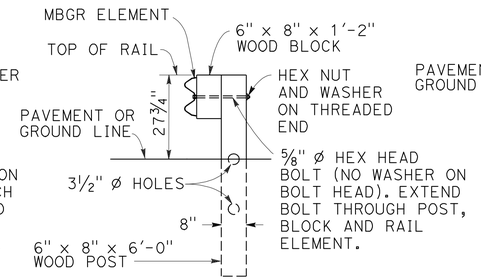

SECTION B-B

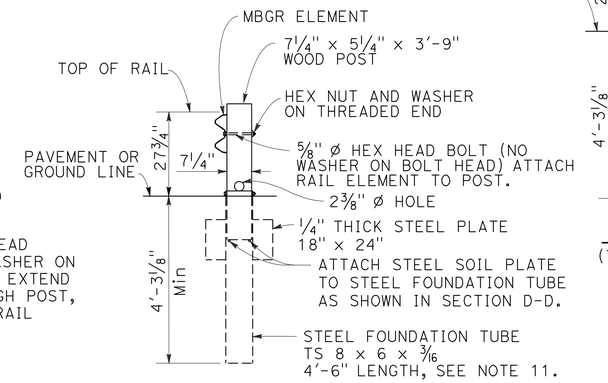

SECTION C-C

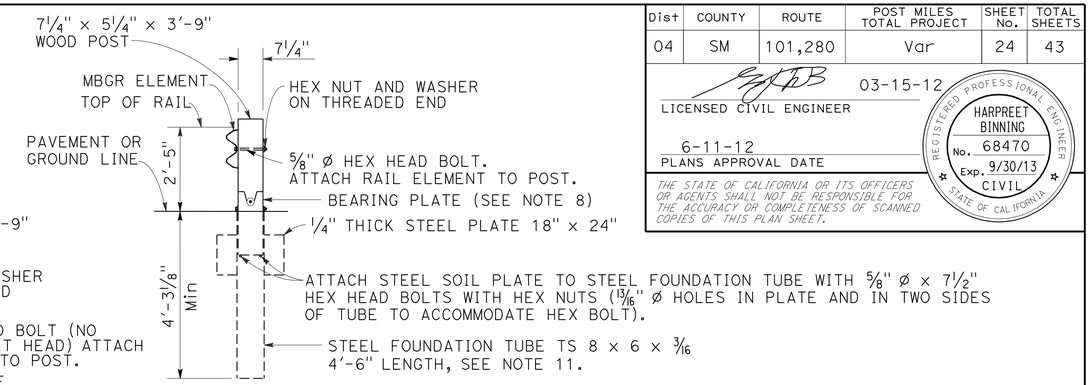

SECTION D-D

(TERMINAL SECTION NOT SHOWN)

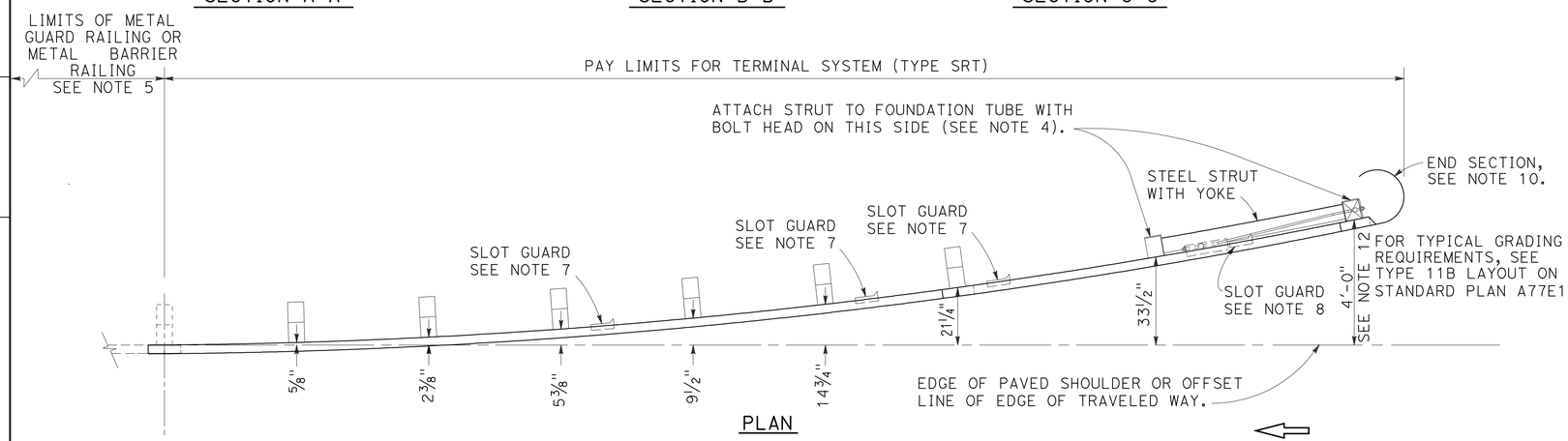

PLAN

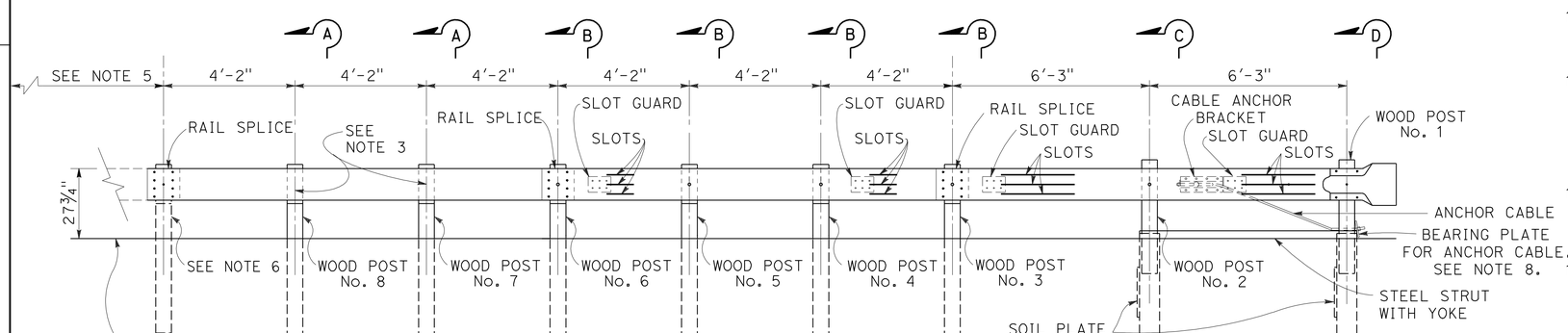

ELEVATION

(8 POST SYSTEM)
SEE NOTE 9

METAL BEAM RAILING TERMINAL SYSTEM (TYPE SRT)

NO SCALE

NOTES: (THIS SHEET)

1. FOR ADDITIONAL DETAILS OF TERMINAL SYSTEM (TYPE SRT), REFER TO THE MANUFACTURER'S INSTALLATION INSTRUCTIONS.
2. THE POST OFFSET DIMENSIONS ARE GIVEN TO THE CENTER OF THE TRAFFIC FACE OF THE BLOCK, EXCEPT AT THE FIRST TWO POSTS, WHERE THE DIMENSION IS TO THE CENTER OF THE TRAFFIC FACE OF THE POST. OFFSET POINTS ARE TO BE LOCATED BY CHORD MEASUREMENTS AT THE BACK OF THE RAIL EQUAL TO THE NOMINAL POST SPACINGS SHOWN. POSTS ARE TO BE SET APPROXIMATELY RADIAL TO THE RAILING AT EACH POST LOCATIONS.
3. DO NOT ATTACH RAIL ELEMENTS TO POSTS 7 AND 8.
4. ATTACH STRUT TO POST Nos. 1 AND 2 FOUNDATION TUBES WITH ⅝" ø HEX HEAD BOLTS, WASHERS AND HEX NUTS. BOLTS EXTEND THROUGH THE STRUT, STEEL FOUNDATION TUBE, AND WOOD POSTS.
5. FOR THE LENGTH OF METAL BEAM GUARD RAILING, SEE THE SUMMARY OF QUANTITIES SHEETS.
6. ATTACH RAIL ELEMENT TO THIS POST AND BLOCK. PAYMENT FOR THIS POST, BLOCK AND HARDWARE IS INCLUDED IN PAYMENT FOR THE TYPE OF RAILING OR BARRIER THE TERMINAL SYSTEM IS ATTACHED TO, NOT PART OF PAYMENT FOR TERMINAL SYSTEM (TYPE SRT).
7. THE DEFLECTOR ANGLE OF THE SLOT GUARD IS TO BE POSITIONED IMMEDIATLEY DOWNSTREAM OF THE SLOTS.
8. FOR BEARING PLATE ORIENTATION, REFER TO THE MANUFACTURER'S INSTALLATION INSTRUCTIONS.
9. FOR TYPICAL USE OF THIS TERMINAL SYSTEM WITH GUARD RAILING, SEE THE A77E, A77F AND A77G SERIES OF STANDARD PLANS. SEE STANDARD PLAN A78E FOR TYPICAL USE OF THIS TERMINAL SYSTEM WITH SINGLE THRIE BEAM BARRIER.
10. A COMPLETE WRAP AROUND END SECTION MAY CONTINUED TO BE USED IN EXISTING INSTALLATIONS. NEW INSTALLATIONS SHALL BE CONSTRUCTED WITH THE ¾ WRAP END SECTION SHOWN.
11. A 6'-0" LENGTH STEEL FOUNDATION TUBE, TS 8 x 6 x 3/16 WITHOUT A SOIL PLATE, MAY BE FURNISHED AND INSTALLED IN PLACE OF THE 4'-6" LENGTH STEEL FOUNDATION TUBE AND SOIL PLATE SHOWN. MINIMUM EMBEDMENT OF THE 6'-0" LENGTH TUBE SHALL BE 5'-9". A ⅝" ø HEX HEAD BOLT AND NUT SHALL BE INSTALLED IN THE HOLE IN 6'-0" LENGTH TUBE TO KEEP THE WOOD POST FROM DROPPING INTO THE TUBE.
12. WHERE SITE CONDITIONS WILL NOT ACCOMMODATE USE OF THE STANDARD 4'-0" SYSTEM END OFFSET, 3'-6" OR 3'-0" SYSTEM END OFFSETS, AS APPLICABLE, MAY BE USED. SEE TABLE A FOR POST OFFSET DIMENSIONS FOR 3'-6" AND 3'-0" SYSTEM END OFFSETS.
13. EXISTING UTILITY FACILITIES ARE NOT SHOWN ON THE PLANS.

CONSTRUCTION DETAILS

C-22

REVISED BY | DATE REVISED
SHAKILA HANIF | HARPREET BINNING
CALCULATED-DESIGNED BY | CHECKED BY
SENIOR LANDSCAPE ARCHITECT | THANH NGUYEN

STATE OF CALIFORNIA - DEPARTMENT OF TRANSPORTATION
Caltrans 06-DESIGN

LAST REVISION 03-26-12 | DATE PLOTTED => 11-JUN-2012 | TIME PLOTTED => 13:35

Dist	COUNTY	ROUTE	POST MILES TOTAL PROJECT	SHEET No.	TOTAL SHEETS
04	SM	101,280	Var	25	43

REGISTERED CIVIL ENGINEER 03/21/12 DATE

6-11-12
PLANS APPROVAL DATE

REGISTERED PROFESSIONAL ENGINEER HUE NGUYEN No. 74484 Exp. 12/31/13 CIVIL STATE OF CALIFORNIA

THE STATE OF CALIFORNIA OR ITS OFFICERS OR AGENTS SHALL NOT BE RESPONSIBLE FOR THE ACCURACY OR COMPLETENESS OF SCANNED COPIES OF THIS PLAN SHEET.

STATIONARY MOUNTED CONSTRUCTION AREA SIGNS

SIGN No.	SIGN CODE FEDERAL	SIGN CODE CALIFORNIA	SIGN MESSAGE	PANEL SIZE	NUMBER OF POST AND SIZE	No. OF SIGNS
A	G20-1		ROAD WORK AHEAD	36" x 36"	1 - 4" x 4"	7
B	G20-2	C14	END ROAD WORK	36" x 18"	1 - 4" x 4"	3
C		C40	TRAFFIC FINES DOUBLED IN CONSTRUCTION ZONES	72" x 36"	2 - 4" x 6"	2

NOTES:

1. EXACT SIGN LOCATION TO BE DETERMINED BY THE ENGINEER.
2. FOR ADDITIONAL CONSTRUCTION AREA SIGNS SEE DETOUR PLAN SHEETS.

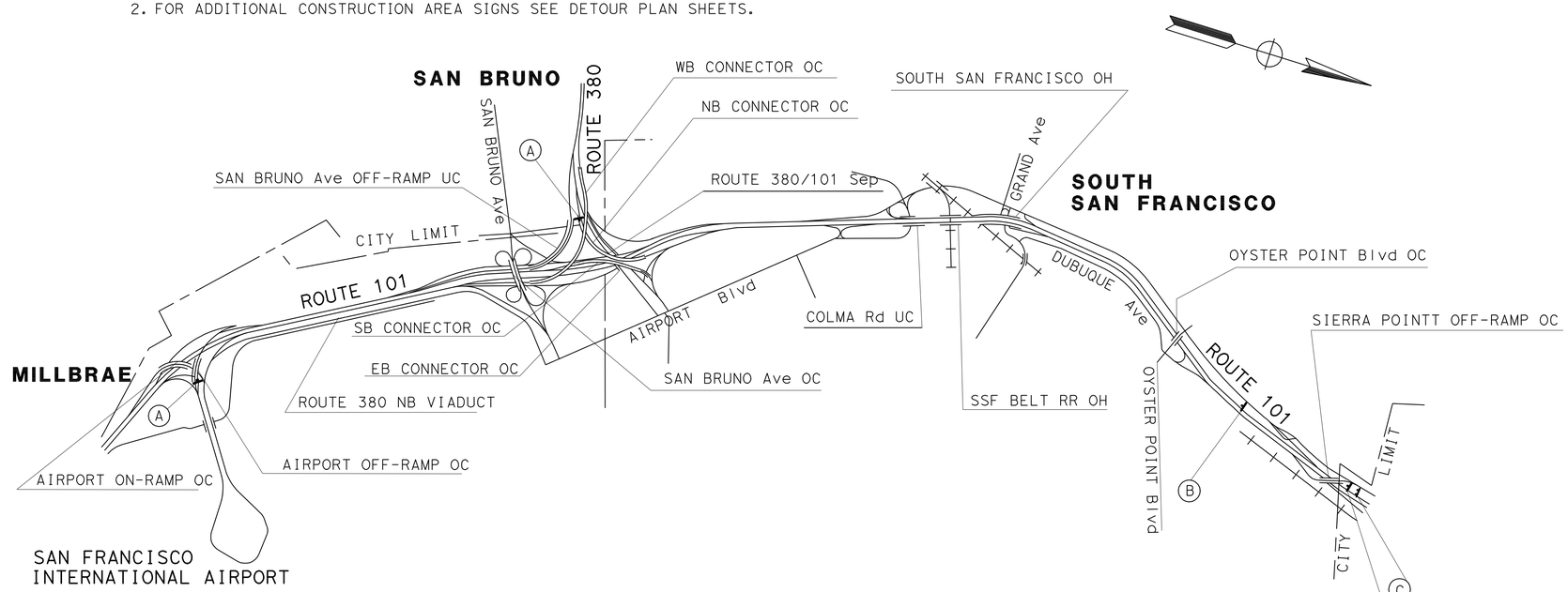

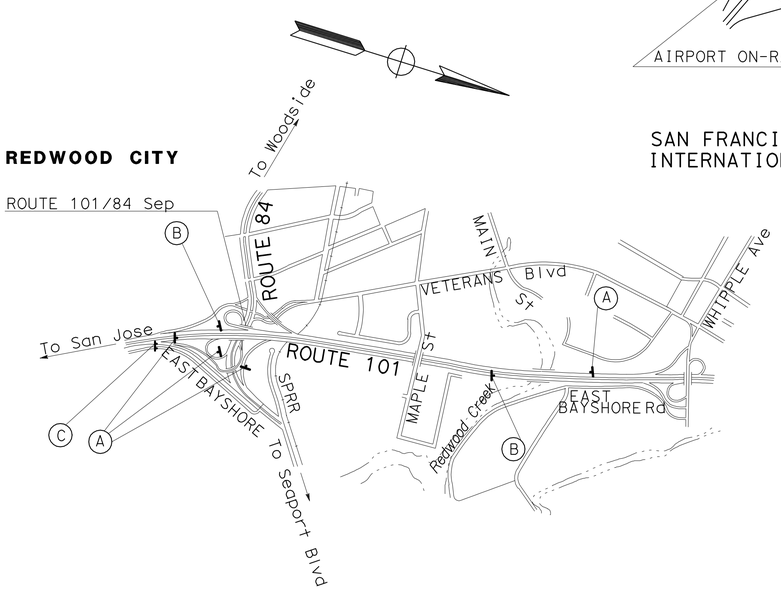

APPROVED FOR CONSTRUCTION AREA SIGN WORK ONLY

CONSTRUCTION AREA SIGNS

NO SCALE

CS-1

STATE OF CALIFORNIA - DEPARTMENT OF TRANSPORTATION
Caltrans 06-TRAFFIC DESIGN

FUNCTIONAL SUPERVISOR: MOHAMMED QATAMI
CALCULATED-DESIGNED BY: FERNANDO LOPEZ
CHECKED BY: HUE NGUYEN
REVISED BY
DATE REVISED

LAST REVISION 03-15-12
DATE PLOTTED => 11-JUN-2012
TIME PLOTTED => 13:35

Dist	COUNTY	ROUTE	POST MILES TOTAL PROJECT	SHEET No.	TOTAL SHEETS
04	SM	101,280	Var	26	43

REGISTERED CIVIL ENGINEER 03/21/12 DATE

6-11-12
PLANS APPROVAL DATE

REGISTERED PROFESSIONAL ENGINEER HUE NGUYEN No. 74484 Exp. 12/31/13 CIVIL STATE OF CALIFORNIA

THE STATE OF CALIFORNIA OR ITS OFFICERS OR AGENTS SHALL NOT BE RESPONSIBLE FOR THE ACCURACY OR COMPLETENESS OF SCANNED COPIES OF THIS PLAN SHEET.

STATIONARY MOUNTED CONSTRUCTION AREA SIGNS

SIGN No.	SIGN CODE FEDERAL	SIGN CODE CALIFORNIA	SIGN MESSAGE	PANEL SIZE	No. OF POST AND SIZE	No. OF SIGNS
A	G20-1		ROAD WORK NEXT 7 MILES	90" x 48"	1 - 4" x 6"	2
B	G20-2	C14	END ROAD WORK	36" x 18"	1 - 4" x 4"	2
C		C40	TRAFFIC FINES DOUBLED IN CONSTRUCTION ZONES	72" x 36"	2 - 4" x 6"	2
D		CPFIS	CONSTRUCTION PROJECT FUNDING IDENTIFICATION SIGN	90" x 60"	2 - 6" x 8"	2

NOTE:

1. EXACT SIGN LOCATION TO BE DETERMINED BY THE ENGINEER.
2. FOR ADDITIONAL CONSTRUCTION AREA SIGNS SEE DETOURS PLAN SHEETS.

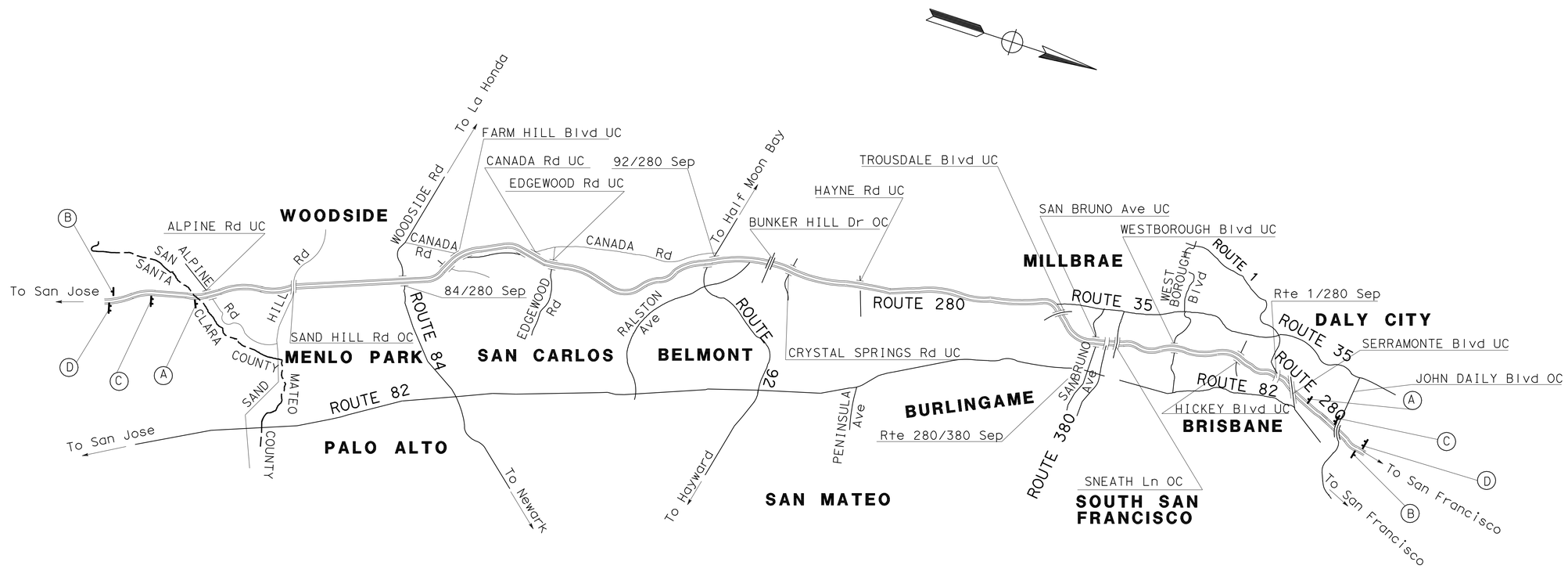

APPROVED FOR CONSTRUCTION AREA SIGN WORK ONLY

CONSTRUCTION AREA SIGNS

NO SCALE

CS-2

STATE OF CALIFORNIA - DEPARTMENT OF TRANSPORTATION
Caltrans® 06-TRAFFIC DESIGN

FUNCTIONAL SUPERVISOR: MOHAMMED QATAMI
CALCULATED-DESIGNED BY: FERNANDO LOPEZ
CHECKED BY: HUE NGUYEN
REVISED BY
DATE REVISED

LAST REVISION 02-28-12 | DATE PLOTTED => 11-JUN-2012 | TIME PLOTTED => 13:35

Dist	COUNTY	ROUTE	POST MILES TOTAL PROJECT	SHEET No.	TOTAL SHEETS
04	SM	101,280	Var	27	43

REGISTERED CIVIL ENGINEER 03/21/12 DATE

6-11-12
PLANS APPROVAL DATE

REGISTERED PROFESSIONAL ENGINEER HUE NGUYEN No. 74484 Exp 12/31/13 CIVIL STATE OF CALIFORNIA

THE STATE OF CALIFORNIA OR ITS OFFICERS OR AGENTS SHALL NOT BE RESPONSIBLE FOR THE ACCURACY OR COMPLETENESS OF SCANNED COPIES OF THIS PLAN SHEET.

LEGEND:

- ○ CONSTRUCTION AREA SIGN No.
- ⇨ DIRECTION OF TRAVEL
- PORTABLE CHANGEABLE MESSAGE SIGN (PCMS)

(A) SC7 (CA) (SPECIAL)

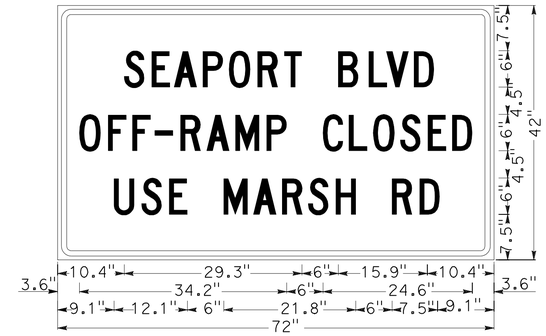

2.3" RADIUS, 0.9" BORDER, 0.6" INDENT, BLACK ON ORANGE;
[SEAPORT BLVD] C; [OFF-RAMP CLOSED] C; [USE MARSH RD] C;

NOTES:

1. DURING THE EB OFF-RAMP CLOSURE THE MESSAGE AT PCMS (M) SHOULD READ

SEAPORT EXIT CLOSED	→	USE MARSH RD EXIT
1ST FRAME		2ND FRAME

2. DURING THE EB OFF-RAMP CLOSURE THE MESSAGE AT PCMS (N) SHOULD READ

FOR SEAPORT DETOUR	→	USE NEXT EXIT
1ST FRAME		2ND FRAME

NOTES:

1. BLACK ON ORANGE.
2. USE CALTRANS ALPHABET, SERIES C FOR LETTERING.
3. FOR ADDITIONAL CONSTRUCTION AREA SIGNS, SEE CONSTRUCTION AREA SIGNS PLANS.
4. EXACT SIGN LOCATIONS TO BE DETERMINED BY THE ENGINEER.
5. COVER ALL CONFLICTING SIGNS.
6. SIGN MOUNTING TO BE APPROVED BY THE ENGINEER.

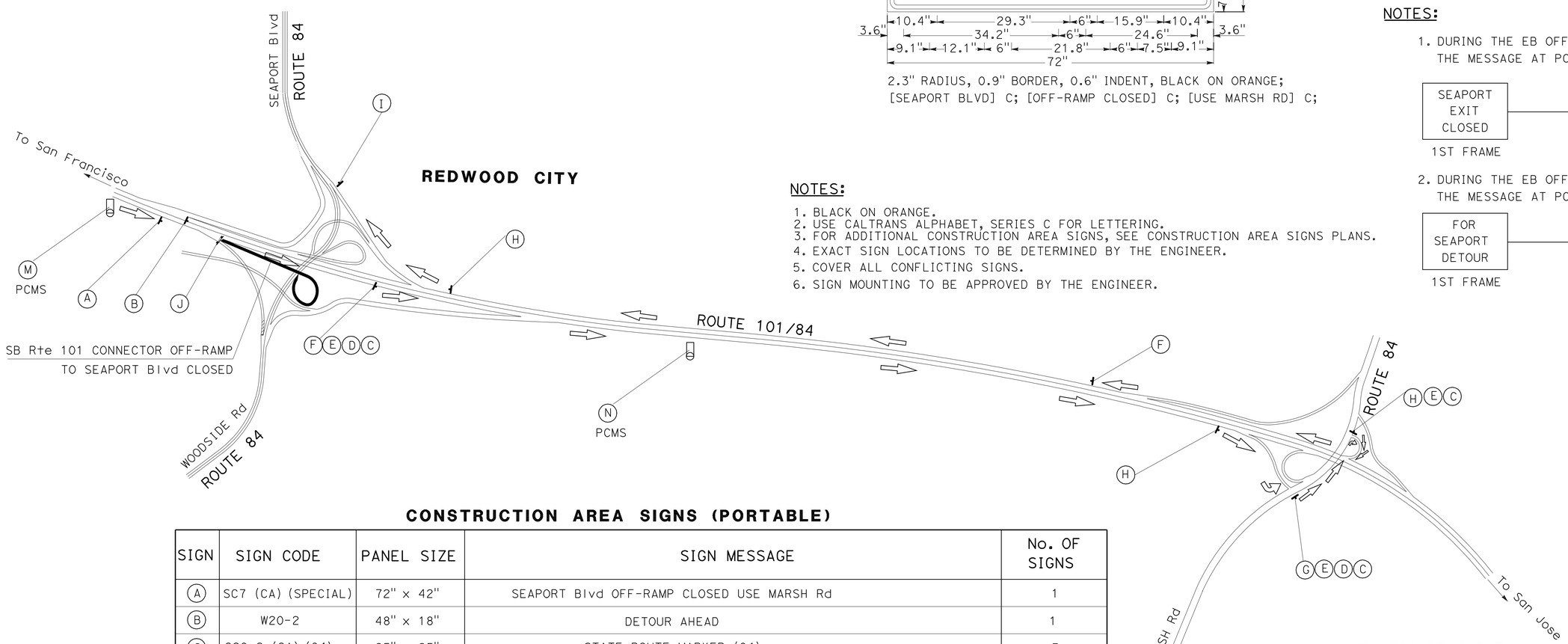

TRAFFIC DETOUR PLAN
(VIA SB Rte 101)

OFF-RAMP TO MARSH Rd
NB MARSH Rd
LOOP ON-RAMP TO NB ROUTE 101
OFF-RAMP TO SEAPORT Blvd

CONSTRUCTION AREA SIGNS (PORTABLE)

SIGN	SIGN CODE	PANEL SIZE	SIGN MESSAGE	No. OF SIGNS
(A)	SC7 (CA) (SPECIAL)	72" x 42"	SEAPORT Blvd OFF-RAMP CLOSED USE MARSH Rd	1
(B)	W20-2	48" x 18"	DETOUR AHEAD	1
(C)	G28-2 (CA) (84)	25" x 25"	STATE ROUTE MARKER (84)	3
(D)	M3-2	24" x 18"	EAST	2
(E)	M4-5	30" x 15"	TO	3
(F)	SC3 (CA)	48" x 18"	DETOUR WITH ARROW	2
(G)	M4-10 (Lt)	36" x 36"	DETOUR ARROW	1
(H)	M4-10 (Rt)	24" x 18"	DETOUR ARROW	3
(I)	M4-8a	48" x 18"	END DETOUR	1
(J)	SC6-3(CA)	48" x 48"	RAMP CLOSED	1

SB Rte 101 OFF-RAMP TO NB Rte 84/SEAPORT Blvd CLOSURE (LOCATION 3)

APPROVED FOR DETOUR CONSTRUCTION WORK ONLY

NO SCALE

DETOUR PLAN
RAMP CLOSURE
DE-1

REVISED BY | DATE REVISED
FERNANDO LOPEZ | HUE NGUYEN
CALCULATED-DESIGNED BY | CHECKED BY
FUNCTIONAL SUPERVISOR | MOHAMMED QATAMI

STATE OF CALIFORNIA - DEPARTMENT OF TRANSPORTATION
Caltrans 06-TRAFFIC DESIGN

LAST REVISION 02-27-12 | DATE PLOTTED => 26-JUN-2012 | TIME PLOTTED => 06:11

Dist	COUNTY	ROUTE	POST MILES TOTAL PROJECT	SHEET No.	TOTAL SHEETS
04	SM	101,280	Var	28	43

REGISTERED CIVIL ENGINEER 03/21/12 DATE

6-11-12
PLANS APPROVAL DATE

REGISTERED PROFESSIONAL ENGINEER HUE NGUYEN No. 74484 Exp. 12/31/13 CIVIL STATE OF CALIFORNIA

THE STATE OF CALIFORNIA OR ITS OFFICERS OR AGENTS SHALL NOT BE RESPONSIBLE FOR THE ACCURACY OR COMPLETENESS OF SCANNED COPIES OF THIS PLAN SHEET.

NOTES:

1. DURING THE EB RTE 380 ON-RAMP CLOSURE THE PCMS MESSAGE AT (M) SHOULD READ

ACCESS RD EXIT CLOSED	→	USE SAN BRUNO AVE EXIT
1ST FRAME		2ND FRAME

2. DURING THE EB RTE 380 ON-RAMP CLOSURE THE PCMS MESSAGE AT (N) SHOULD READ

FOR ACCESS RD DETOUR	→	USE NEXT EXIT
1ST FRAME		2ND FRAME

(A) SC7 (CA) (SPECIAL)

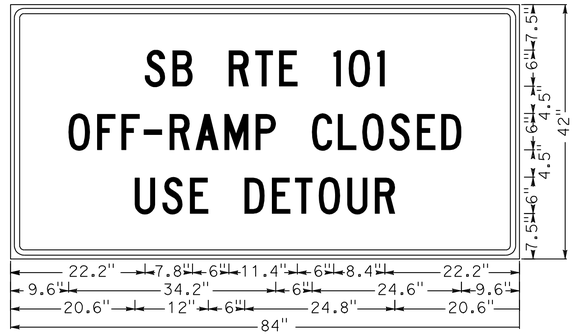

2.3" RADIUS, 0.9" BORDER, 0.6" INDENT, BLACK ON ORANGE;
[SB RTE 101] C; [OFF-RAMP CLOSED] C; [USE DETOUR] C;

NOTES:

1. BLACK ON ORANGE.
2. USE CALTRANS ALPHABET, SERIES C FOR LETTERING.
3. FOR ADDITIONAL CONSTRUCTION AREA SIGNS, SEE CONSTRUCTION AREA SIGNS PLANS.
4. EXACT SIGN LOCATIONS TO BE DETERMINED BY THE ENGINEER.
5. COVER ALL CONFLICTING SIGNS.
6. SIGN MOUNTING TO BE APPROVED BY THE ENGINEER.

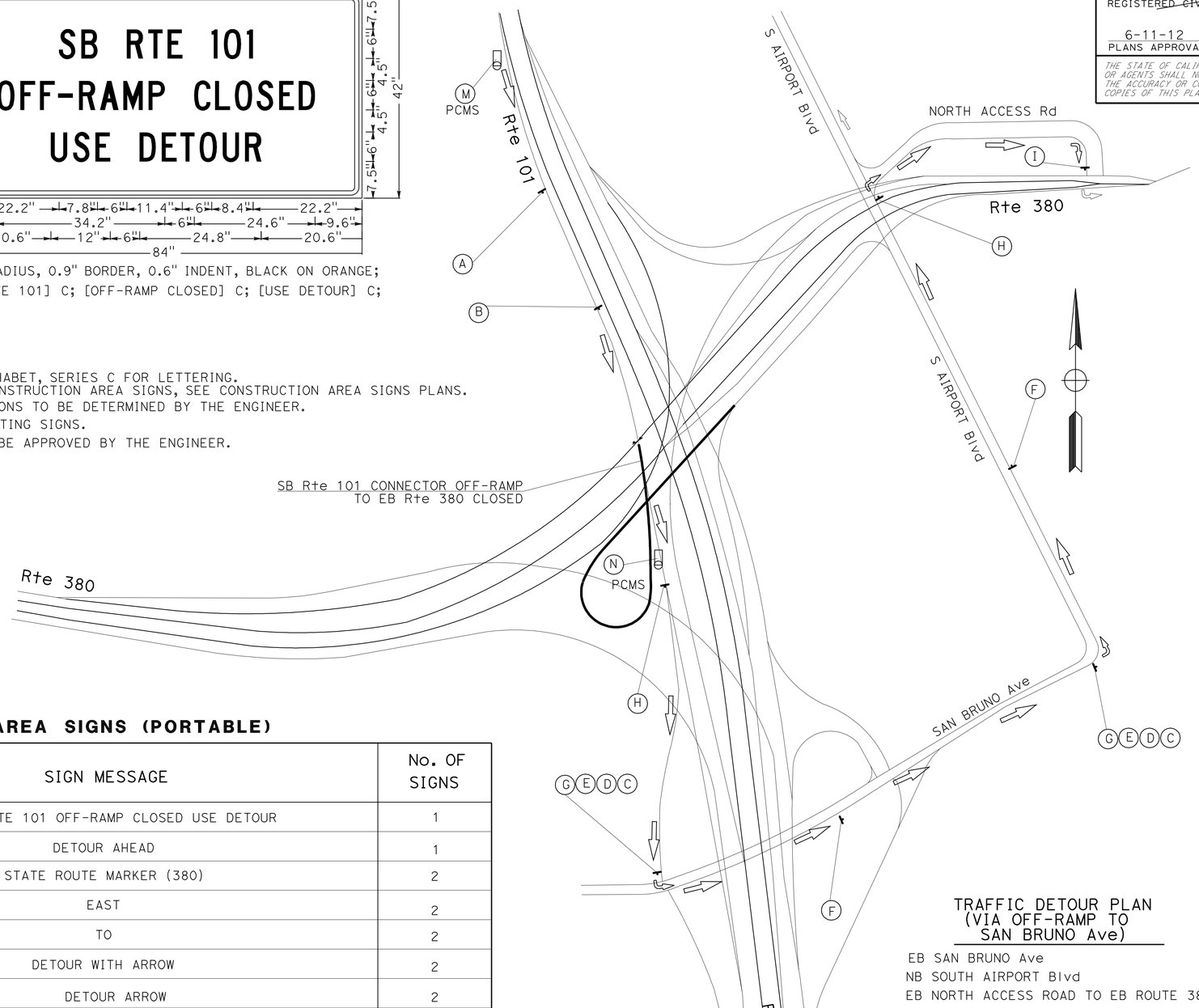

TRAFFIC DETOUR PLAN
(VIA OFF-RAMP TO
SAN BRUNO Ave)

EB SAN BRUNO Ave
NB SOUTH AIRPORT Blvd
EB NORTH ACCESS ROAD TO EB ROUTE 380

CONSTRUCTION AREA SIGNS (PORTABLE)

SIGN	SIGN CODE	PANEL SIZE	SIGN MESSAGE	No. OF SIGNS
(A)	SC7 (CA) (SPECIAL)	84" x 42"	SB RTE 101 OFF-RAMP CLOSED USE DETOUR	1
(B)	W20-2	48" x 18"	DETOUR AHEAD	1
(C)	G28-2 (CA) (380)	25" x 25"	STATE ROUTE MARKER (380)	2
(D)	M3-2	24" x 18"	EAST	2
(E)	M4-5	30" x 15"	TO	2
(F)	SC3 (CA)	48" x 18"	DETOUR WITH ARROW	2
(G)	M4-10 (Lt)	36" x 36"	DETOUR ARROW	2
(H)	M4-10 (Rt)	24" x 18"	DETOUR ARROW	2
(I)	M4-8a	48" x 18"	END DETOUR	1
(J)	R11-2(CA)	48" x 30"	RAMP CLOSED	1

SB Rte 101 CONNECTOR OFF-RAMP TO EB Rte 380 CLOSURE (LOCATION 7)

APPROVED FOR DETOUR CONSTRUCTION WORK ONLY

NO SCALE

DETOUR PLAN
RAMP CLOSURE

DE-2

STATE OF CALIFORNIA - DEPARTMENT OF TRANSPORTATION
Caltrans® 06-TRAFFIC DESIGN

FUNCTIONAL SUPERVISOR: MOHAMMED QATAMI
CALCULATED-DESIGNED BY: FERNANDO LOPEZ
CHECKED BY: HUE NGUYEN
REVISED BY
DATE REVISED

LAST REVISION 03-15-12 | DATE PLOTTED => 26-JUN-2012 | TIME PLOTTED => 06:11

Dist	COUNTY	ROUTE	POST MILES TOTAL PROJECT	SHEET No.	TOTAL SHEETS
04	SM	101,280	Var	29	43

REGISTERED CIVIL ENGINEER 03/21/12 DATE

6-11-12
PLANS APPROVAL DATE

REGISTERED PROFESSIONAL ENGINEER HUE NGUYEN No. 74484 Exp. 12/31/13 CIVIL STATE OF CALIFORNIA

THE STATE OF CALIFORNIA OR ITS OFFICERS OR AGENTS SHALL NOT BE RESPONSIBLE FOR THE ACCURACY OR COMPLETENESS OF SCANNED COPIES OF THIS PLAN SHEET.

(A) SC7 (CA) (SPECIAL)

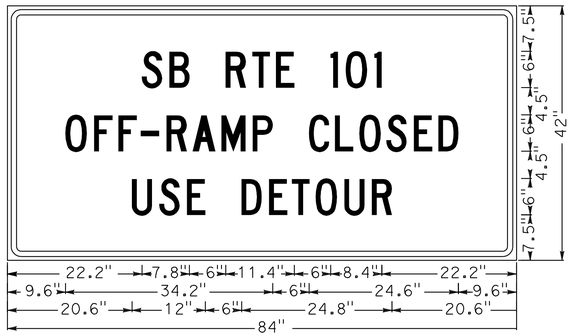

2.3" RADIUS, 0.9" BORDER, 0.6" INDENT, BLACK ON ORANGE;
[SB RTE 101] C; [OFF-RAMP CLOSED] C; [USE DETOUR] C;

NOTES:

1. DURING THE WB Rte 380 ON-RAMP CLOSURE THE PCMS MESSAGE AT (M) SHOULD READ

WB 380 EXIT CLOSED	→	USE ACCESS RD EXIT
1ST FRAME		2ND FRAME

NOTES:

1. BLACK ON ORANGE.
2. USE CALTRANS ALPHABET, SERIES C FOR LETTERING.
3. FOR ADDITIONAL CONSTRUCTION AREA SIGNS, SEE CONSTRUCTION AREA SIGNS PLANS.
4. EXACT SIGN LOCATIONS TO BE DETERMINED BY THE ENGINEER.
5. COVER ALL CONFLICTING SIGNS.
6. SIGN MOUNTING TO BE APPROVED BY THE ENGINEER.

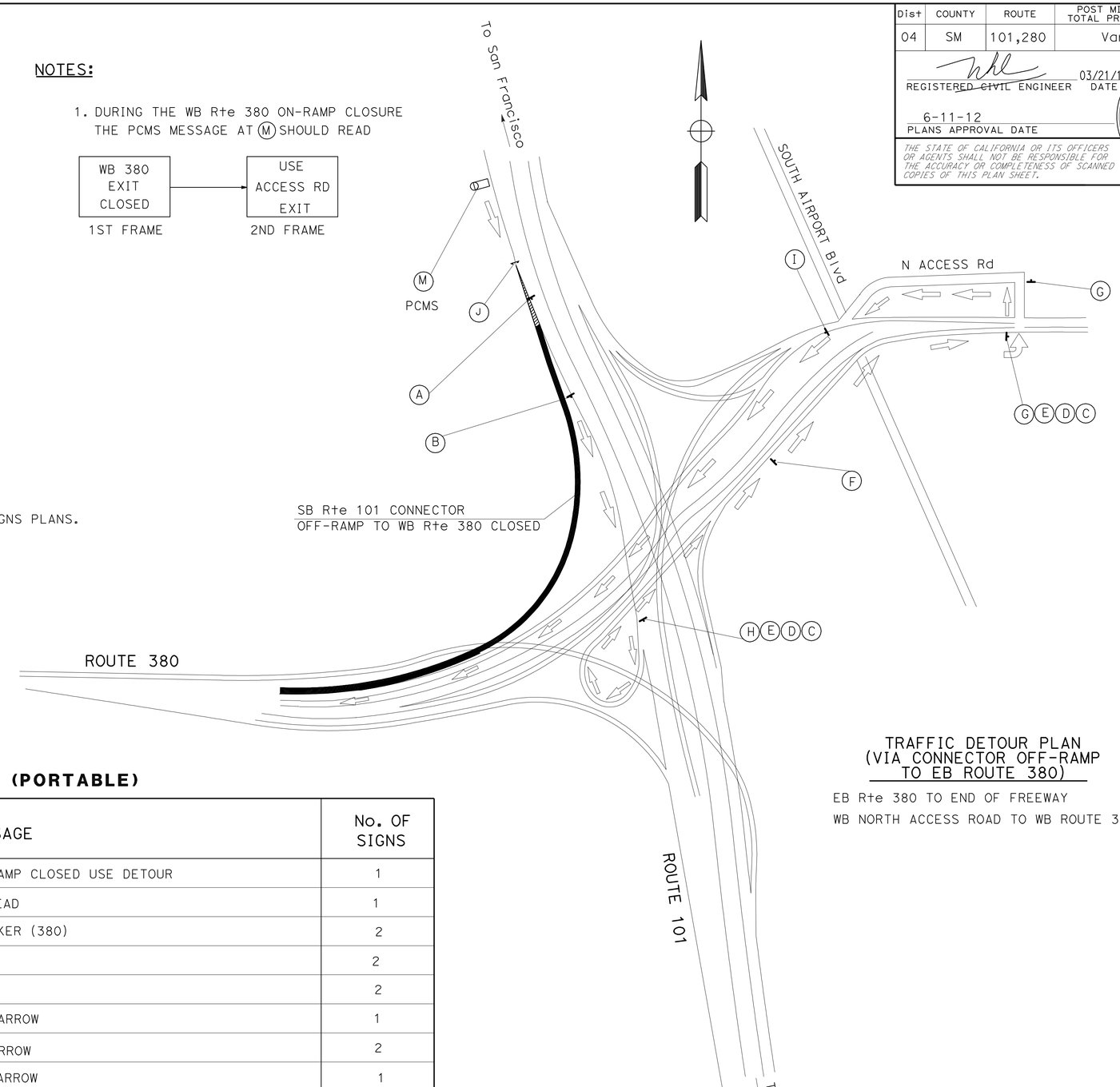

TRAFFIC DETOUR PLAN
(VIA CONNECTOR OFF-RAMP
TO EB ROUTE 380)

EB Rte 380 TO END OF FREEWAY
WB NORTH ACCESS ROAD TO WB ROUTE 380 ON-RAMP

CONSTRUCTION AREA SIGNS (PORTABLE)

SIGN	SIGN CODE	PANEL SIZE	SIGN MESSAGE	No. OF SIGNS
(A)	SC7 (CA) (SPECIAL)	84" x 42"	SB RTE 101 OFF-RAMP CLOSED USE DETOUR	1
(B)	W20-2	48" x 18"	DETOUR AHEAD	1
(C)	G28-2 (CA) (380)	25" x 25"	STATE ROUTE MARKER (380)	2
(D)	M3-4	24" x 18"	WEST	2
(E)	M4-5	30" x 15"	TO	2
(F)	SC3 (CA)	48" x 18"	DETOUR WITH ARROW	1
(G)	M4-10 (Lt)	36" x 36"	DETOUR ARROW	2
(H)	M4-10 (Rt)	24" x 18"	DETOUR ARROW	1
(I)	M4-8a	48" x 18"	END DETOUR	1
(J)	SC6-3(CA)	48" x 48"	RAMP CLOSED	1

SB Rte 101 CONNECTOR OFF-RAMP TO WB Rte 380 CLOSURE (LOCATION 5)

APPROVED FOR DETOUR CONSTRUCTION WORK ONLY

NO SCALE

DETOUR PLAN
RAMP CLOSURE

DE-3

STATE OF CALIFORNIA - DEPARTMENT OF TRANSPORTATION
Caltrans 06-TRAFFIC DESIGN

FUNCTIONAL SUPERVISOR: MOHAMMED QATAMI
CALCULATED-DESIGNED BY: FERNANDO LOPEZ
CHECKED BY: HUE NGUYEN
REVISED BY
DATE REVISED

LAST REVISION 02-28-12 | DATE PLOTTED => 26-JUN-2012 | TIME PLOTTED => 06:11

Dist	COUNTY	ROUTE	POST MILES TOTAL PROJECT	SHEET No.	TOTAL SHEETS
04	SM	101,280	Var	30	43

REGISTERED CIVIL ENGINEER 03/21/12 DATE

6-11-12
PLANS APPROVAL DATE

REGISTERED PROFESSIONAL ENGINEER HUE NUYEN No. 74484 Exp. 12/31/13 CIVIL STATE OF CALIFORNIA

THE STATE OF CALIFORNIA OR ITS OFFICERS OR AGENTS SHALL NOT BE RESPONSIBLE FOR THE ACCURACY OR COMPLETENESS OF SCANNED COPIES OF THIS PLAN SHEET.

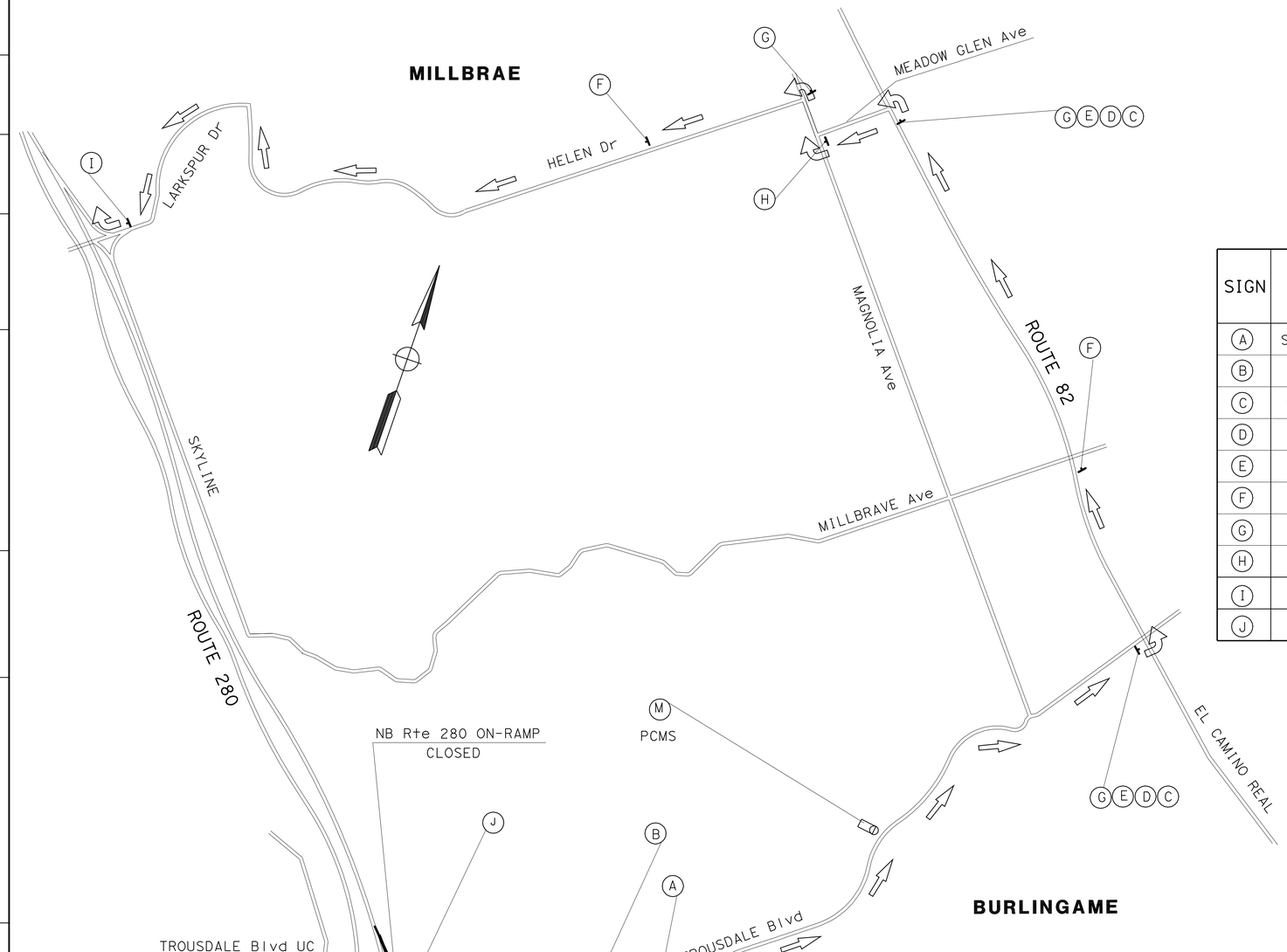

CONSTRUCTION AREA SIGNS (PORTABLE)

SIGN	SIGN CODE	PANEL SIZE	SIGN MESSAGE	No. OF SIGNS
A	SC7 (CA) (SPECIAL)	78" x 42"	NB 280 ON-RAMP CLOSED USE DETOUR	1
B	W20-2	48" x 18"	DETOUR AHEAD	1
C	G28-2 (CA) (280)	25" x 25"	STATE ROUTE MARKER (280)	2
D	M3-1	24" x 18"	NORTH	2
E	M4-5	30" x 15"	TO	2
F	SC3 (CA)	48" x 18"	DETOUR WITH ARROW	3
G	M4-10 (Lt)	36" x 36"	DETOUR ARROW	5
H	M4-10 (Rt)	24" x 18"	DETOUR ARROW	1
I	M4-8a	48" x 18"	END DETOUR	1
J	SC6-3(CA)	48" x 48"	RAMP CLOSED	1

A SC7 (CA) (SPECIAL)

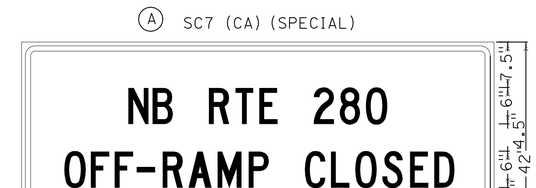

2.3" RADIUS, 0.9" BORDER, 0.6" INDENT, BLACK ON ORANGE;
[EB Rte 380] C; [ON-RAMP CLOSED] C; [USE DETOUR] C;

NOTE:

DURING THE NB Rte 280 ON-RAMP CLOSURE THE PCMS MESSAGE AT (M) SHOULD READ

NB RTE 280 ON-RAMP CLOSED	→	USE DETOUR
1ST FRAME		2ND FRAME

NOTES:

1. BLACK ON ORANGE.
2. USE CALTRANS ALPHABET, SERIES C FOR LETTERING.
3. FOR ADDITIONAL CONSTRUCTION AREA SIGNS, SEE CONSTRUCTION AREA SIGNS PLANS.
4. EXACT SIGN LOCATIONS TO BE DETERMINED BY THE ENGINEER.
5. COVER ALL CONFLICTING SIGNS.
6. SIGN MOUNTING TO BE APPROVED BY THE ENGINEER.

TRAFFIC DETOUR PLAN
(VIA EB TROUSDALE Dr)

NB ROUTE 82
WB MEADOW GLEN Ave
NB MAGNOLIA Ave
WB HELEN Dr
SB LARKSPUR Dr
ON-RAMP TO NB Rte 280

NB Rte 280 ON-RAMP CLOSURE (LOCATION 16)

APPROVED FOR DETOUR CONSTRUCTION WORK ONLY

NO SCALE

DETOUR PLAN
RAMP CLOSURE

DE-4

STATE OF CALIFORNIA - DEPARTMENT OF TRANSPORTATION
Caltrans
06-TRAFFIC DESIGN

FUNCTIONAL SUPERVISOR: MOHAMMED QATAMI
CALCULATED-DESIGNED BY: FERNANDO LOPEZ
CHECKED BY: HUE NUYEN
REVISED BY
DATE REVISED

LAST REVISION 02-29-12
DATE PLOTTED => 26-JUN-2012
TIME PLOTTED => 06:11

Dist	COUNTY	ROUTE	POST MILES TOTAL PROJECT	SHEET No.	TOTAL SHEETS
04	SM	101,280	Var	31	43

REGISTERED CIVIL ENGINEER 03/21/12 DATE

6-11-12
PLANS APPROVAL DATE

REGISTERED PROFESSIONAL ENGINEER HUE NGUYEN No. 74484 Exp. 12/31/13 CIVIL STATE OF CALIFORNIA

THE STATE OF CALIFORNIA OR ITS OFFICERS OR AGENTS SHALL NOT BE RESPONSIBLE FOR THE ACCURACY OR COMPLETENESS OF SCANNED COPIES OF THIS PLAN SHEET.

Ⓐ SC7 (CA) (SPECIAL)

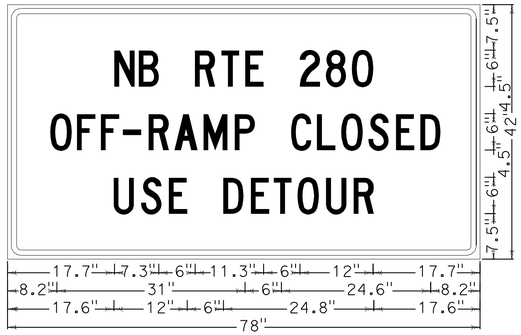

2.3" RADIUS, 0.9" BORDER, 0.6" INDENT, BLACK ON ORANGE;
[EB Rte 380] C; [ON-RAMP CLOSED] C; [USE DETOUR] C;

TRAFFIC DETOUR PLAN

NB ROUE 280
OFF-RAMP TO AVALON Dr
WB AVALON Dr TO ON-RAMP SB ROUTE 280
CONNECTOR OFF-RAMP TO EB ROUTE 380

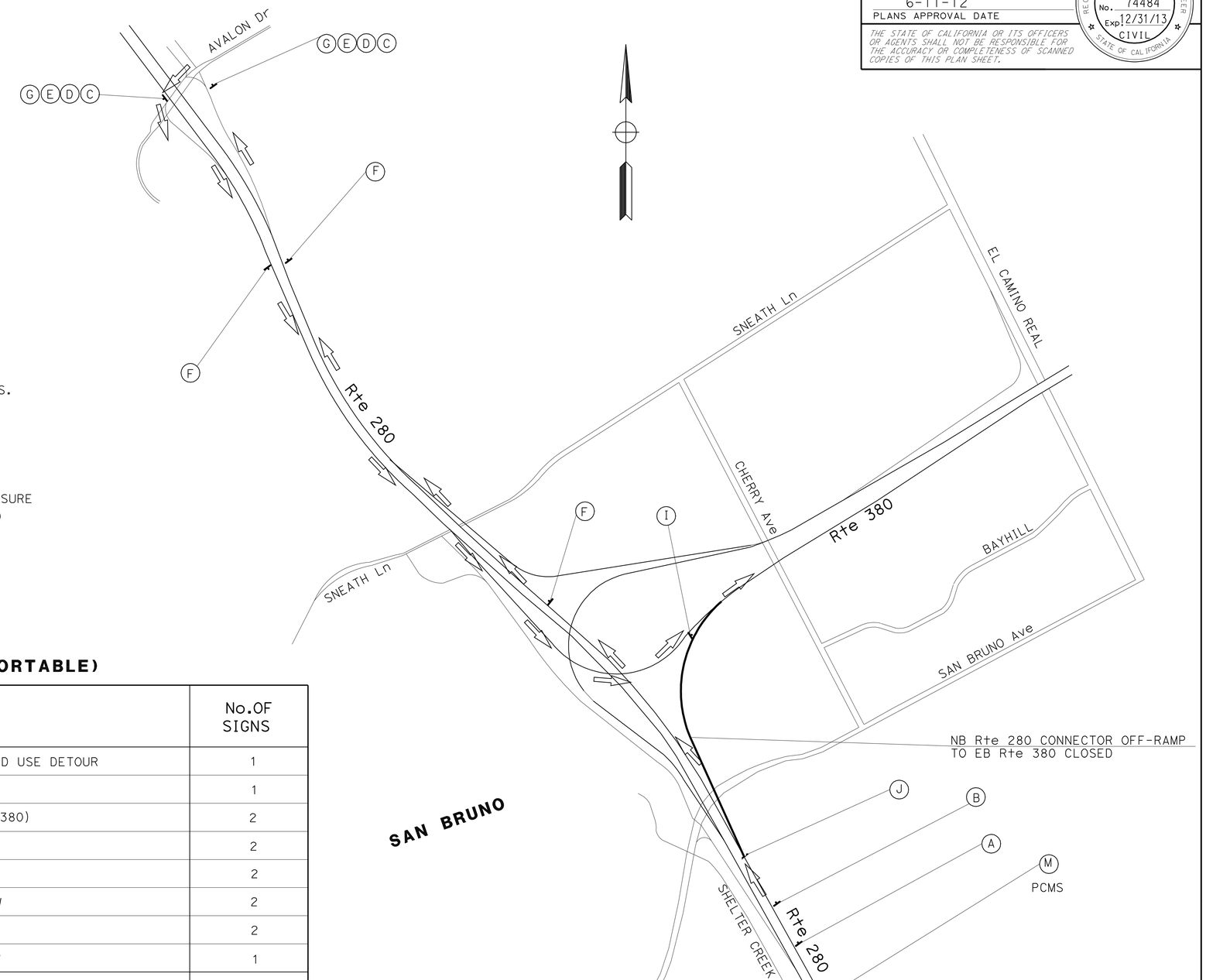

NOTES:

1. BLACK ON ORANGE.
2. USE CALTRANS ALPHABET, SERIES C FOR LETTERING.
3. FOR ADDITIONAL CONSTRUCTION AREA SIGNS, SEE CONSTRUCTION AREA SIGNS PLANS.
4. EXACT SIGN LOCATIONS TO BE DETERMINED BY THE ENGINEER.
5. COVER ALL CONFLICTING SIGNS.
6. SIGN MOUNTING TO BE APPROVED BY THE ENGINEER.

NOTE:

DURING THE EB Rte 380 ON-RAMP CLOSURE
THE PCMS MESSAGE AT Ⓜ SHOULD READ

EB 380 EXIT CLOSED	→	USE DETOUR
1ST FRAME		2ND FRAME

CONSTRUCTION AREA SIGNS (PORTABLE)

SIGN	SIGN CODE	PANEL SIZE	SIGN MESSAGE	No.OF SIGNS
Ⓐ	SC7 (CA) (SPECIAL)	78" x 42"	EB Rte 380 ON-RAMP CLOSED USE DETOUR	1
Ⓑ	W20-2	48" x 18"	DETOUR AHEAD	1
Ⓒ	G28-2 (CA) (380)	25" x 25"	STATE ROUTE MARKER (380)	2
Ⓓ	M3-2	24" x 18"	EAST	2
Ⓔ	M4-5	30" x 15"	TO	2
Ⓕ	SC3 (CA)	48" x 18"	DETOUR WITH ARROW	2
Ⓖ	M4-10 (Lt)	36" x 36"	DETOUR ARROW	2
Ⓗ	M4-10 (Rt)	24" x 18"	DETOUR ARROW	1
Ⓘ	M4-8a	48" x 18"	END DETOUR	1
Ⓙ	SC6-3(CA)	48" x 48"	RAMP CLOSED	1

NB Rte 280 CONNECTOR OFF-RAMP TO EB Rte 380 CLOSURE (LOCATION 17)

APPROVED FOR DETOUR CONSTRUCTION WORK ONLY

NO SCALE

DETOUR PLAN
RAMP CLOSURE

DE-5

STATE OF CALIFORNIA - DEPARTMENT OF TRANSPORTATION
Caltrans 06-TRAFFIC DESIGN

FUNCTIONAL SUPERVISOR: MOHAMMED QATAMI
CALCULATED-DESIGNED BY: FERNANDO LOPEZ
CHECKED BY: HUE NGUYEN
REVISED BY / DATE REVISED

LAST REVISION 02-29-12 | DATE PLOTTED => 26-JUN-2012 | TIME PLOTTED => 06:11

Dist	COUNTY	ROUTE	POST MILES TOTAL PROJECT	SHEET No.	TOTAL SHEETS
04	SM	101,280	Var	32	43

REGISTERED CIVIL ENGINEER 03/21/12 DATE

6-11-12
PLANS APPROVAL DATE

REGISTERED PROFESSIONAL ENGINEER HUE NGUYEN No. 74484 Exp. 12/31/13 CIVIL STATE OF CALIFORNIA

THE STATE OF CALIFORNIA OR ITS OFFICERS OR AGENTS SHALL NOT BE RESPONSIBLE FOR THE ACCURACY OR COMPLETENESS OF SCANNED COPIES OF THIS PLAN SHEET.

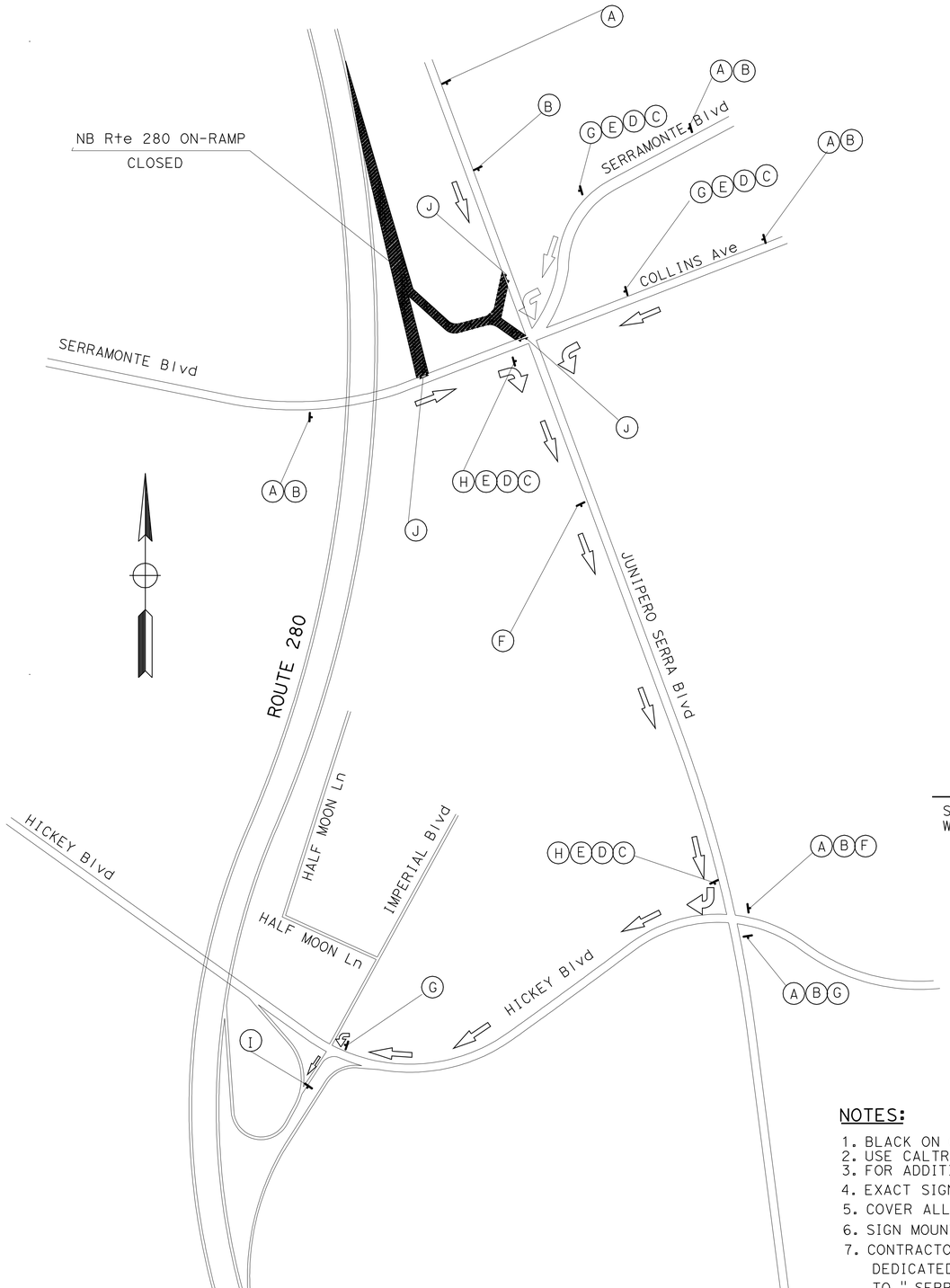

CONSTRUCTION AREA SIGNS (PORTABLE)

SIGN	SIGN CODE	PANEL SIZE	SIGN MESSAGE	No. OF SIGNS
A	SC7 (CA) (SPECIAL)	78" x 42"	NB Rte 280 ON-RAMP CLOSED USE DETOUR	4
B	W20-2	48" x 18"	DETOUR AHEAD	4
C	G28-2 (CA) (280)	25" x 25"	STATE ROUTE MARKER (280)	4
D	M3-1	24" x 18"	NORTH	4
E	M4-5	30" x 15"	TO	4
F	SC3 (CA)	48" x 18"	DETOUR WITH ARROW	1
G	M4-10 (Lt)	36" x 36"	DETOUR ARROW	2
H	M4-10 (Rt)	24" x 18"	DETOUR ARROW	2
I	M4-8a	48" x 18"	END DETOUR	1
J	SC6-3(CA)	48" x 48"	RAMP CLOSED	3

TRAFFIC DETOUR PLAN
(VIA EB SERRAMONTE Blvd)

SB JUNIPERO SERRA Blvd
WB HICKEY Blvd TO NB Rte 280 LOOP ON-RAMP

(A) SC7 (CA) (SPECIAL)

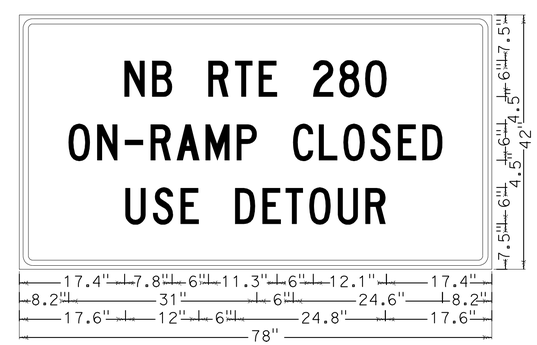

2.3" RADIUS, 0.9" BORDER, 0.6" INDENT, BLACK ON ORANGE;
[NB Rte 280] C; [ON-RAMP CLOSED] C; [USE DETOUR] C;

NOTES:

1. BLACK ON ORANGE.
2. USE CALTRANS ALPHABET, SERIES C FOR LETTERING.
3. FOR ADDITIONAL CONSTRUCTION AREA SIGNS, SEE CONSTRUCTION AREA SIGNS PLANS.
4. EXACT SIGN LOCATIONS TO BE DETERMINED BY THE ENGINEER.
5. COVER ALL CONFLICTING SIGNS.
6. SIGN MOUNTING TO BE APPROVED BY THE ENGINEER.
7. CONTRACTOR IS RESPONSIBLE TO CLOSE ALL DEDICATED LANES FROM "JUNIPERO SERRA BLVD" TO " SERRAMONTE BLVD ON-RAMP".
8. CONTRACTOR IS RESPONSIBLE TO OBTAIN ENCROACHMENT PERMITS FROM CITY AND/OR COUNTY.

NB Rte 280 ON-RAMP CLOSURE (LOCATION 22)

APPROVED FOR DETOUR CONSTRUCTION WORK ONLY

NO SCALE

DETOUR PLAN
RAMP CLOSURE

DE-6

STATE OF CALIFORNIA - DEPARTMENT OF TRANSPORTATION
Caltrans® 06-TRAFFIC DESIGN

FUNCTIONAL SUPERVISOR: MOHAMMED QATAMI
CALCULATED-DESIGNED BY: FERNANDO LOPEZ
CHECKED BY: HUE NGUYEN
REVISED BY
DATE REVISED

LAST REVISION 02-15-12
DATE PLOTTED => 26-JUN-2012
TIME PLOTTED => 06:11

Dist	COUNTY	ROUTE	POST MILES TOTAL PROJECT	SHEET No.	TOTAL SHEETS
04	SM	101,280	Var	33	43

REGISTERED CIVIL ENGINEER 03/21/12 DATE

6-11-12
PLANS APPROVAL DATE

REGISTERED PROFESSIONAL ENGINEER HUE NGUYEN No. 74484 Exp. 12/31/13 CIVIL STATE OF CALIFORNIA

THE STATE OF CALIFORNIA OR ITS OFFICERS OR AGENTS SHALL NOT BE RESPONSIBLE FOR THE ACCURACY OR COMPLETENESS OF SCANNED COPIES OF THIS PLAN SHEET.

Ⓐ SC7 (CA) (SPECIAL)

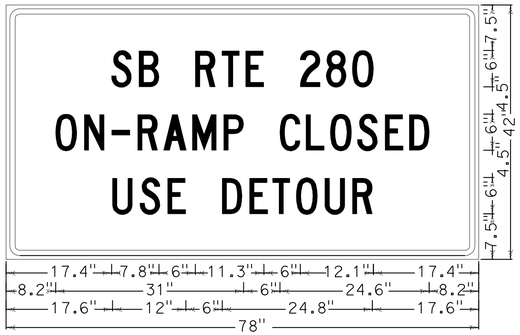

2.3" Radius, 0.9" Border, 0.6" Indent, Black on Orange;
[NB Rte 280] C; [ON-RAMP CLOSED] C; [USE DETOUR] C;

TRAFFIC DETOUR PLAN
(VIA ON-RAMP TO NB ROUTE 280)

NB ROUTE 280 TO EB ROUTE 92 CONNECTOR
EB ROUTE 92 OFF-RAMP TO RALSTON Ave.
NB RALSTON Ave ON-RAMP TO WB ROUTE 92
WB ROUTE 92 TO SB ROUTE 280 CONNECTOR

CONSTRUCTION AREA SIGNS (PORTABLE)

SIGN	SIGN CODE	PANEL SIZE	SIGN MESSAGE	No. OF SIGNS
Ⓐ	SC7 (CA) (SPECIAL)	78" x 42"	SB Rte 280 ON-RAMP CLOSED USE DETOUR	2
Ⓑ	W20-2	48" x 18"	DETOUR AHEAD	1
Ⓒ	G28-2 (CA) (280)	25" x 25"	STATE ROUTE MARKER (280)	4
Ⓓ	M3-3	24" x 18"	SOUTH	4
Ⓔ	M4-5	30" x 15"	TO	3
Ⓕ	SC3 (CA)	48" x 18"	DETOUR WITH ARROW	2
Ⓖ	M4-10 (Lt)	36" x 36"	DETOUR ARROW	2
Ⓗ	M4-10 (Rt)	24" x 18"	DETOUR ARROW	3
Ⓘ	M4-8a	48" x 18"	END DETOUR	1
Ⓙ	SC6-3(CA)	48" x 48"	RAMP CLOSED	1

NOTES:

1. BLACK ON ORANGE.
2. USE CALTRANS ALPHABET, SERIES C FOR LETTERING.
3. FOR ADDITIONAL CONSTRUCTION AREA SIGNS, SEE CONSTRUCTION AREA SIGNS PLANS.
4. EXACT SIGN LOCATIONS TO BE DETERMINED BY THE ENGINEER.
5. COVER ALL CONFLICTING SIGNS.
6. SIGN MOUNTING TO BE APPROVED BY THE ENGINEER.

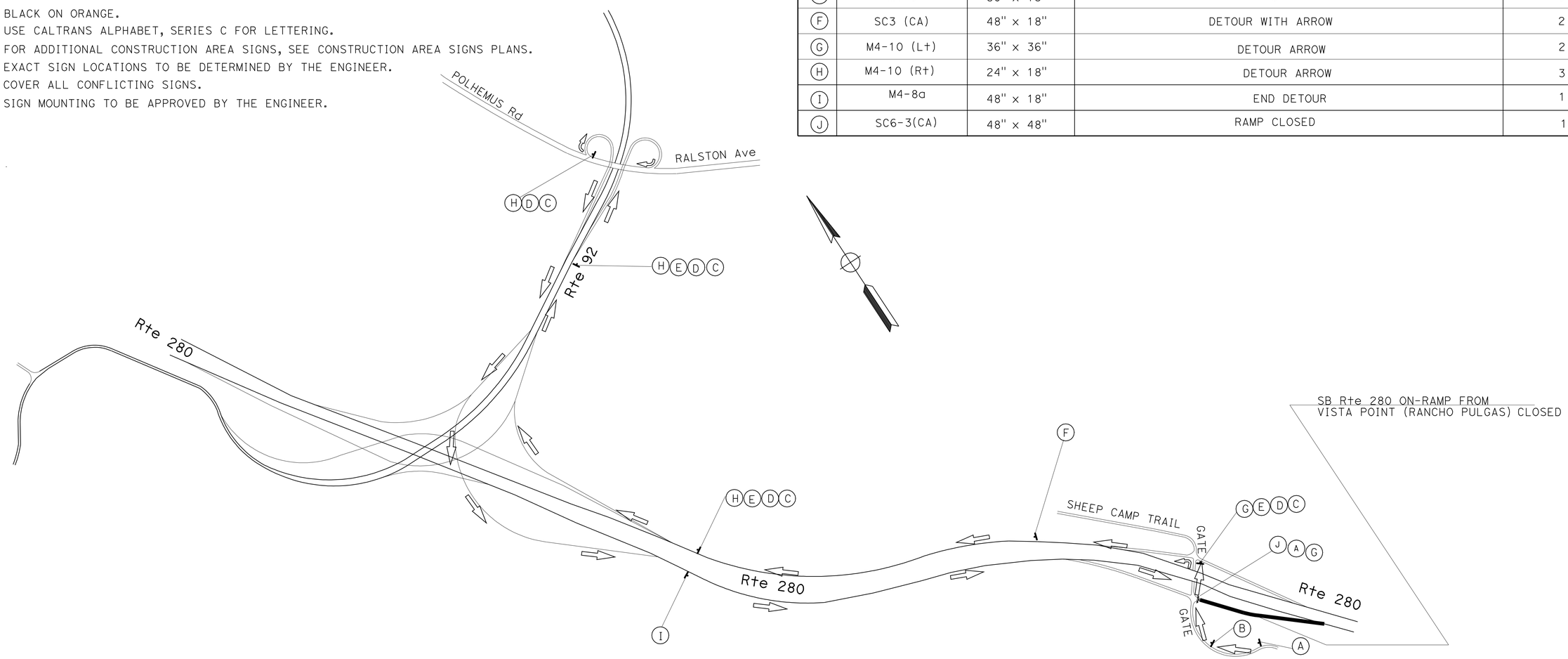

SB Rte 280 ON-RAMP CLOSURE
(LOCATION 41)

APPROVED FOR DETOUR CONSTRUCTION WORK ONLY

NO SCALE

DETOUR PLAN
RAMP CLOSURE

DE-7

STATE OF CALIFORNIA - DEPARTMENT OF TRANSPORTATION
Caltrans® 06-TRAFFIC DESIGN

FUNCTIONAL SUPERVISOR: MOHAMMED QATAMI
CALCULATED-DESIGNED BY: FERNANDO LOPEZ
CHECKED BY: HUE NGUYEN
REVISED BY
DATE REVISED

LAST REVISION 02-15-12
DATE PLOTTED => 26-JUN-2012
TIME PLOTTED => 06:11

Dist	COUNTY	ROUTE	POST MILES TOTAL PROJECT	SHEET No.	TOTAL SHEETS
04	SM	101,280	Var	34	43

REGISTERED CIVIL ENGINEER 03/21/12 DATE

6-11-12
PLANS APPROVAL DATE

REGISTERED PROFESSIONAL ENGINEER HUE NGUYEN No. 74484 Exp. 12/31/13 CIVIL STATE OF CALIFORNIA

THE STATE OF CALIFORNIA OR ITS OFFICERS OR AGENTS SHALL NOT BE RESPONSIBLE FOR THE ACCURACY OR COMPLETENESS OF SCANNED COPIES OF THIS PLAN SHEET.

NOTES:

DURING THE SB Rte 280 ON-RAMP CLOSURE THE MESSAGE AT PCMS (M) SHOULD READ

SB 280 ON-RAMP CLOSED	→	USE DETOUR
1ST FRAME		2ND FRAME

(A) SC7 (CA) (SPECIAL)

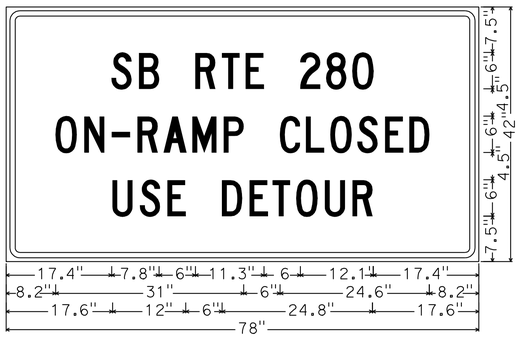

2.3" RADIUS, 0.9" BORDER, 0.6" INDENT, BLACK ON ORANGE;
[SB Rte 280] C; [ON-RAMP CLOSED] C; [USE DETOUR] C;

NOTES:

1. BLACK ON ORANGE.
2. USE CALTRANS ALPHABET, SERIES C FOR LETTERING.
3. FOR ADDITIONAL CONSTRUCTION AREA SIGNS, SEE CONSTRUCTION AREA SIGNS PLANS.
4. EXACT SIGN LOCATIONS TO BE DETERMINED BY THE ENGINEER.
5. COVER ALL CONFLICTING SIGNS.
6. SIGN MOUNTING TO BE APPROVED BY THE ENGINEER.

CONSTRUCTION AREA SIGNS (PORTABLE)

SIGN	SIGN CODE	PANEL SIZE	SIGN MESSAGE	No. OF SIGNS
(A)	SC7 (CA) (SPECIAL)	78" x 42"	SB RTE 280 ON-RAMP CLOSED USE DETOUR	1
(B)	W20-2	48" x 18"	DETOUR AHEAD	1
(C)	G28-2 (CA) (280)	25" x 25"	STATE ROUTE MARKER (280)	3
(D)	M3-3	24" x 18"	SOUTH	3
(E)	M4-5	30" x 15"	TO	2
(F)	SC3 (CA)	48" x 18"	DETOUR WITH ARROW	2
(G)	M4-10 (Lt)	36" x 36"	DETOUR ARROW	3
(H)	M4-10 (Rt)	24" x 18"	DETOUR ARROW	2
(I)	M4-8a	48" x 18"	END DETOUR	1
(J)	SC6-3(CA)	48" x 48"	RAMP CLOSED	1

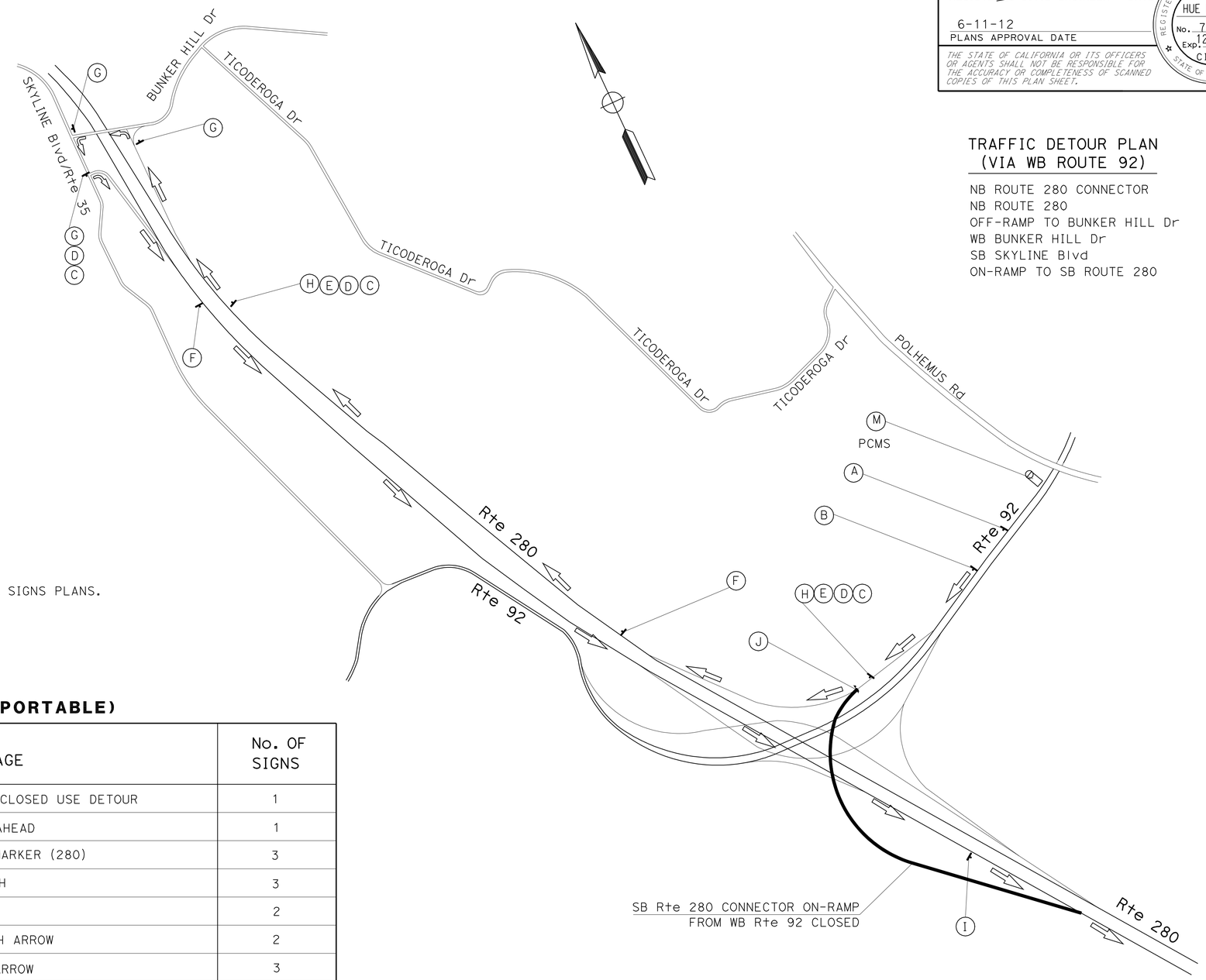

TRAFFIC DETOUR PLAN (VIA WB ROUTE 92)

NB ROUTE 280 CONNECTOR
NB ROUTE 280
OFF-RAMP TO BUNKER HILL Dr
WB BUNKER HILL Dr
SB SKYLINE Blvd
ON-RAMP TO SB ROUTE 280

SB Rte 280 CONNECTOR ON-RAMP FROM ROUTE 92 CLOSURE (LOCATION 39)

DETOUR PLAN
RAMP CLOSURE
NO SCALE

DE-8

APPROVED FOR DETOUR CONSTRUCTION WORK ONLY

STATE OF CALIFORNIA - DEPARTMENT OF TRANSPORTATION
Caltrans® 06-TRAFFIC DESIGN
FUNCTIONAL SUPERVISOR: MOHAMMED QATAMI
CALCULATED-DESIGNED BY: FERNANDO LOPEZ
CHECKED BY: HUE NGUYEN
REVISED BY
DATE REVISED

LAST REVISION 02-15-12
DATE PLOTTED => 26-JUN-2012
TIME PLOTTED => 06:12

Dist	COUNTY	ROUTE	POST MILES TOTAL PROJECT	SHEET No.	TOTAL SHEETS
04	SM	101,280	Var	35	43

REGISTERED CIVIL ENGINEER 03/21/12 DATE

6-11-12
PLANS APPROVAL DATE

REGISTERED PROFESSIONAL ENGINEER HUE NGUYEN No. 74484 Exp. 12/31/13 CIVIL STATE OF CALIFORNIA

THE STATE OF CALIFORNIA OR ITS OFFICERS OR AGENTS SHALL NOT BE RESPONSIBLE FOR THE ACCURACY OR COMPLETENESS OF SCANNED COPIES OF THIS PLAN SHEET.

CONSTRUCTION AREA SIGNS (PORTABLE)

SIGN	SIGN CODE	PANEL SIZE	SIGN MESSAGE	No. OF SIGNS
A	SC7 (CA) (SPECIAL)	78" x 42"	SB RTE 280 ON-RAMP CLOSED USE DETOUR	4
B	W20-2	48" x 18"	DETOUR AHEAD	1
C	G28-2 (CA) (280)	25" x 25"	STATE ROUTE MARKER (280)	2
D	M3-3	24" x 18"	SOUTH	2
E	M4-5	30" x 15"	TO	2
F	SC3 (CA)	48" x 18"	DETOUR WITH ARROW	3
G	M4-10 (Lt)	36" x 36"	DETOUR ARROW	2
H	M4-10 (Rt)	24" x 18"	DETOUR ARROW	3
I	M4-8a	48" x 18"	END DETOUR	1
J	SC6-3(CA)	48" x 48"	RAMP CLOSED	1

(A) SC7 (CA) (SPECIAL)

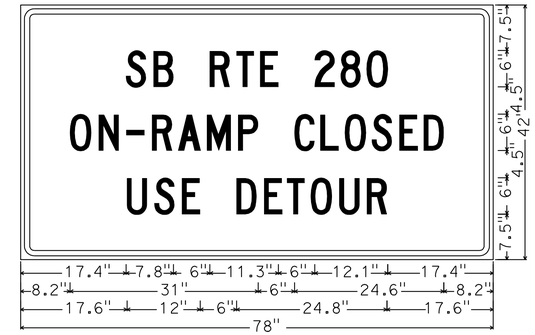

2.3" RADIUS, 0.9" BORDER, 0.6" INDENT, BLACK ON ORANGE;
[SB Rte 280] C; [ON-RAMP CLOSED] C; [USE DETOUR] C;

NOTES:

1. BLACK ON ORANGE.
2. USE CALTRANS ALPHABET, SERIES C FOR LETTERING.
3. FOR ADDITIONAL CONSTRUCTION AREA SIGNS, SEE CONSTRUCTION AREA SIGNS PLANS.
4. EXACT SIGN LOCATIONS TO BE DETERMINED BY THE ENGINEER.
5. COVER ALL CONFLICTING SIGNS.
6. SIGN MOUNTING TO BE APPROVED BY THE ENGINEER.

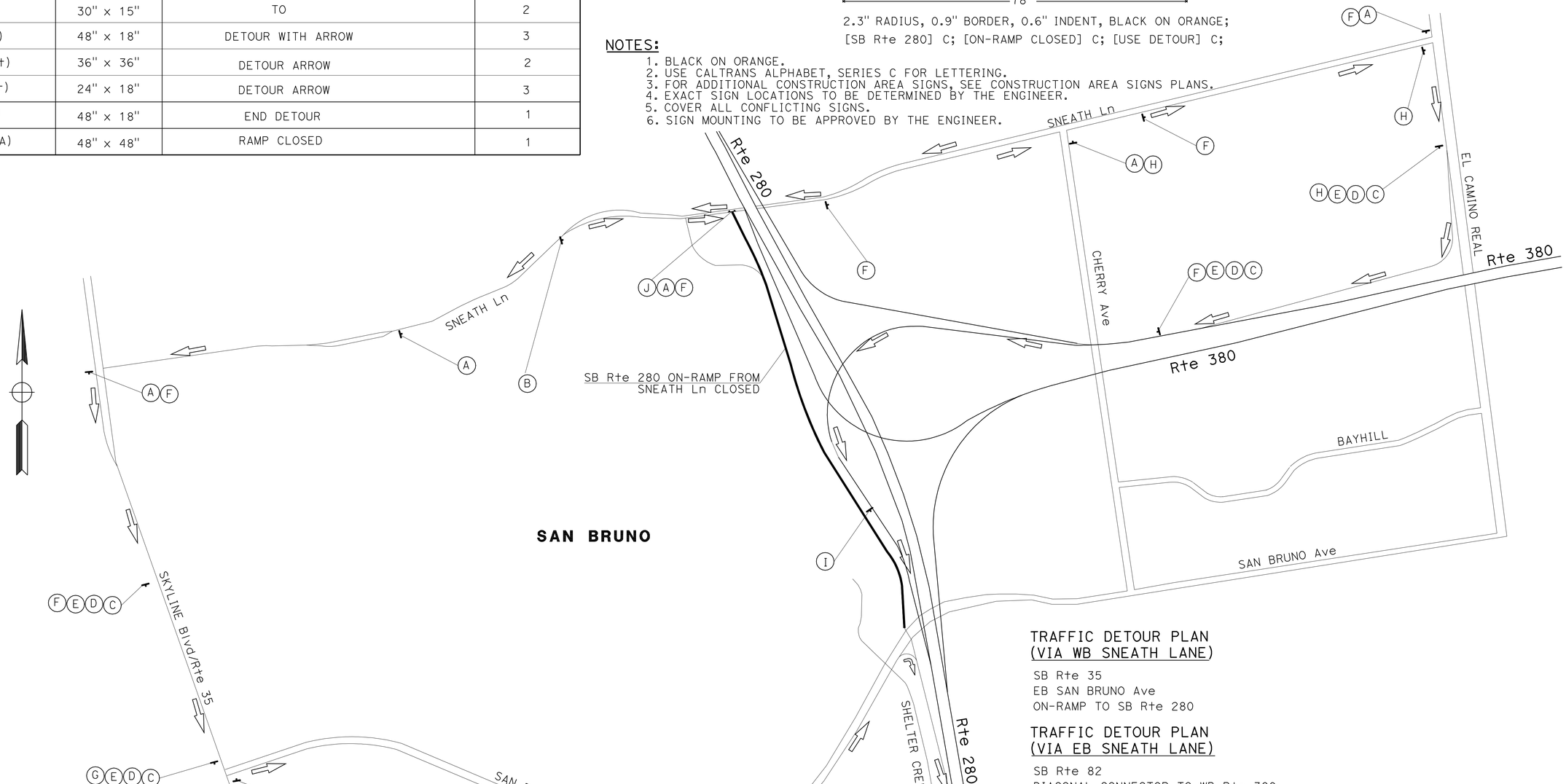

TRAFFIC DETOUR PLAN
(VIA WB SNEATH LANE)

SB Rte 35
EB SAN BRUNO Ave
ON-RAMP TO SB Rte 280

TRAFFIC DETOUR PLAN
(VIA EB SNEATH LANE)

SB Rte 82
DIAGONAL CONNECTOR TO WB Rte 380
TO SB Rte 280 CONNECTOR ON-RAMP

SB Rte 280 ON-RAMP CLOSURE
(LOCATION 27)

APPROVED FOR DETOUR CONSTRUCTION WORK ONLY

DETOUR PLAN
RAMP CLOSURE
NO SCALE

DE-9

STATE OF CALIFORNIA - DEPARTMENT OF TRANSPORTATION
Caltrans® 06-TRAFFIC DESIGN

FUNCTIONAL SUPERVISOR: MOHAMMED QATAMI
CALCULATED-DESIGNED BY: FERNANDO LOPEZ
CHECKED BY: HUE NGUYEN
REVISED BY
DATE REVISED

LAST REVISION 02-15-12
DATE PLOTTED => 06-JUL-2012
TIME PLOTTED => 06:42

Dist	COUNTY	ROUTE	POST MILES TOTAL PROJECT	SHEET No.	TOTAL SHEETS
04	SM	101,280	Var	36	43

REGISTERED CIVIL ENGINEER 03-15-12 DATE

6-11-12
PLANS APPROVAL DATE

REGISTERED PROFESSIONAL ENGINEER HARPREET BINNING No. 68470 Exp. 9/30/13 CIVIL STATE OF CALIFORNIA

THE STATE OF CALIFORNIA OR ITS OFFICERS OR AGENTS SHALL NOT BE RESPONSIBLE FOR THE ACCURACY OR COMPLETENESS OF SCANNED COPIES OF THIS PLAN SHEET.

NOTE:
ALL MBGR TO BE CONSTRUCTED ON RIGHT SIDE OF THE TRAVEL WAY UNLESS NOTED OTHERWISE.

METAL BEAM GUARD RAILING QUANTITIES

LOCATION No.	MBGR (STEEL POST)	END TREATMENT TYPE: NORTH END OF MBGR		END TREATMENT TYPE: SOUTH END OF MBGR		ALTERNATIVE FLARED TERMINAL SYSTEM *	ALTERNATIVE IN-LINE TERMINAL SYSTEM *	TERMINAL SYSTEM (TYPE X-TENSION) *	END ANCHOR ASSEMBELY (SFT) *	TRANSITION RAILING TYPE (WB) *	REMOVE MBGR	TREATED WOOD WASTE	REMOVE END ANCHOR ASSEMBLY (N)	No. OF TREES/SHRUBS REQUIRE TRIMMING (N)	VEGETATION CONTROL (ASPHALT COMPOSITE)	REMOVE AC DIKE	PLACE: HMA DIKE (TYPE F)	PLACE: HMA DIKE (TYPE C)	MINOR HOT MIX ASPHALT	CONCRETE BARRIER (BRIDGE RAILING CONNECTION-ANCHOR BLOCK)	BRIDGE RAILING CONNECTION TYPE (N)	Temp RAILING (TYPE K)	TEMPORARY CRASH CUSHION MODULE	Temp DRAINAGE INLET PROTECTION	REMARKS
	LF	LAYOUT TYPE/ CONNECTION TYPE	STANDARD PLAN No./ CONSTRUCTION DETAIL SHEET No.	LAYOUT TYPE/ CONNECTION TYPE	STANDARD PLAN No./ CONSTRUCTION DETAIL SHEET No.	EA	EA	EA	EA	EA	LF	LB	EA	EA	SQYD	LF	LF	LF	TON	LF		LF	EA	EA	
1	800	12A	A77F1 , A77J3	12A	A77F1 , C-8			1		1	125	1584	2		320	75		75	0.58	10.5	Conc WALL ABUTMENT	40	14	2	SEE DETAIL DD ON A77J3 SEE MVP DETAIL, SHEET C-2
2	1600		A77J4		A77J3					1	456.25	5782	3		534						Conc WALL ABUTMENT				SEE "LONG SPAN NESTING" DETAIL FOR EXISTING 18' CULVERT (TWO POST OMITTED) SEE MVP DETAIL ON SHEET C-2. SEE DETAIL EE ON A77J3
3	425	12 DD & BLOCK	A77F5 , C-10		A77F5				1					6	152	475	425	50	6.06	3.5	9	40	14		SOUTH OF Br No. 35-0083
48	600	12 DD & BLOCK	A77F5 , C-10	BLOCK	A77J4 , C-10					1	60.0	760			158	500	425	75	6.26	7.0	9	40	14	1	NORTH OF Br No. 35-0083 TO OVERHEAD STRUCTURE (No. 35-0065)
4	750	TO Exist MBGR	C-3		A77J4					1	56.25	713	1	1	264						9				
5**		12B	A77F1			1				1				1					35		TYPE 9M BARRIER	160	56		EAST OF Br No. 35-0256F INSTALL CONCRETE BARRIER ON LEFT EDGE OF PAVEMENT PER DETAIL SHEET C-15
6	425	12A	A77F1	BLOCK	A77F1 , A77J4 , C-10	1	1			1	37.5	475		10	168	525	450	75	6.59	3.5	9	40	14	4	
7	337.5	BLOCK	A77F1 , A77J4 , C-10		A77F1	1				1	37.5	475		4	138	435	360	75	5.39	3.5	9	40	14	1	
SHEET SUBTOTAL	4937.5					3	1	1	1	7	772.5	9789	6	22	1734	2010	1660	350	59.88	28.0		360	126	8	

(N) - NOT A SEPARATE PAY ITEM, FOR INFORMATION ONLY.
* - STAIN GALVANIZED METAL BEAM GUARD RAILING SURFACES ONLY AT LOCATIONS ON ROUTE 280.
** - INDICATES CONCRETE BARRIER ON LEFT SIDE OF TRAVEL WAY.

SUMMARY OF QUANTITIES
Q-1

STATE OF CALIFORNIA - DEPARTMENT OF TRANSPORTATION
Caltrans 06-DESIGN
FUNCTIONAL SUPERVISOR: THANH NGUYEN
CALCULATED-DESIGNED BY: SHAKILA HANIF
CHECKED BY: HARPREET BINNING
REVISED BY
DATE REVISED

LAST REVISION 03-26-12
DATE PLOTTED => 22-JUN-2012
TIME PLOTTED => 06:41

Dist	COUNTY	ROUTE	POST MILES TOTAL PROJECT	SHEET No.	TOTAL SHEETS
04	SM	101,280	Var	37	43

REGISTERED CIVIL ENGINEER 03-15-12 DATE

6-11-12
PLANS APPROVAL DATE

REGISTERED PROFESSIONAL ENGINEER HARPREET BINNING No. 68470 Exp. 9/30/13 CIVIL STATE OF CALIFORNIA

THE STATE OF CALIFORNIA OR ITS OFFICERS OR AGENTS SHALL NOT BE RESPONSIBLE FOR THE ACCURACY OR COMPLETENESS OF SCANNED COPIES OF THIS PLAN SHEET.

METAL BEAM GUARD RAILING QUANTITIES

LOCATION No.	MBGR (STEEL POST) *	END TREATMENT TYPE: NORTH END OF MBGR		END TREATMENT TYPE: SOUTH END OF MBGR		ALTERNATIVE FLARED TERMINAL SYSTEM *	ALTERNATIVE IN-LINE TERMINAL SYSTEM *	TERMINAL SYSTEM (TYPE X-TENSION) *	END ANCHOR ASSEMBELY (SFT) *	TRANSITION RAILING TYPE (WB) *	REMOVE MBGR	TREATED WOOD WASTE	REMOVE END ANCHOR ASSEMBLY (N)	No. OF TREES/SHRUBS REQUIRE TRIMMING (N)	VEGETATION CONTROL (ASPHALT COMPOSITE)	REMOVE AC DIKE	PLACE: HMA DIKE (TYPE F)	PLACE: HMA DIKE (TYPE C)	MINOR HOT MIX ASPHALT	CONCRETE BARRIER (BRIDGE RAILING CONNECTION-ANCHOR BLOCK)	BRIDGE RAILING CONNECTION TYPE (N)	Temp RAILING (TYPE K)	TEMPORARY CRASH CUSHION MODULE	Temp DRAINAGE INLET PROTECTION	REMARKS
	LF	LAYOUT TYPE/ CONNECTION TYPE	STANDARD PLAN No./ CONSTRUCTION DETAIL SHEET No.	LAYOUT TYPE/ CONNECTION TYPE	STANDARD PLAN No./ CONSTRUCTION DETAIL SHEET No.	EA	EA	EA	EA	EA	LF	LB	EA	EA	SQYD	LF	LF	LF	TON	LF		LF	EA	EA	
8	237.5	12A & BLOCK	A77F1 , A77J4 , C-9	12A	A77F1, C-9			1		1	60	760		3	105	335	260	75	4.05	3.5	TYPE 1M BARRIER	40	14	2	SOUTH OF Br No. 35-0234R
49	775	12DD	A77F5	12DD	A77F5				1					2		775	775		10.36		TYPE 1M BARRIER			1	NORTH OF Br No. 35-0234R
9	3,550	11A	A77E1	11A	A77E1		1		1					11	1204	2730	2680	75	36.40					6	5 LOCATIONS WITH DOWN DRAIN INLET PROTECTION
10	645	12A & BLOCK	A77F1 , A77J4 , C-9	12A	A77F1		1			1	80	1014		1		745	670	75	9.53	3.5	TYPE 1M BARRIER	40	14	2	SOUTH OF Br No. 35-0232R
50	500	12DD	A77F5	12DD	A77F5				1					1		500	500		6.68		TYPE 1M BARRIER			2	NORTH OF Br No. 35-0232R
11	625	12A & BLOCK	A77F1 , A77J4 , C-11	12A	A77F1		1			1	325	4119		1	235	725	650	75	9.26	3.5	TYPE 9M BARRIER	40	14	3	SOUTH OF Br No. 35-0247R
12	325	12DD	A77F5	12DD & BLOCK	A77F5 , C-11				1		120	1521	1	1	127					3.5	TYPE 9M BARRIER	40	14		NORTH OF Br No. 35-0247R
13	287.5	12B & BLOCK	A77F1 , A77J4 , C-9	12B	A77F1	1				1	37.5	475		3	118	375	312.5	62.5	4.66	3.5	TYPE 1M BARRIER	40	14		SOUTH OF Br No. 35-0210R
51	1100	12DD	A77F5	12DD	A77F5				1					18	367	1100	1100		14.70		TYPE 1M BARRIER			3	NORTH OF Br No. 35-0210R
14	1075	11B	A77E1	11B	A77E1	1			1		50	634		7	375	525	487.5	62.5	7.00					1	
15	1075	12B & BLOCK	A77F1 , A77J4 , C-9	12B	A77F1	1				1	100	1267		8	380	180	180		2.41	3.5	TYPE 1M BARRIER	40	14	1	SOUTH OF Br No. 35-0215R
52	425	12DD	A77F5	12DD	A77F5				1					7	145	430	430		5.75		TYPE 1M BARRIER			1	NORTH OF Br No. 35-0215R LONG SPAN NESTED RAILING AT CALL BOX
SHEET SUBTOTAL	10,620					3	3	1	7	5	772.5	9790	1	63	3056	8420	8045	425	110.80	21.0		240	84	22	

(N) - NOT A SEPARATE PAY ITEM, FOR INFORMATION ONLY.
* - STAIN GALVANIZED METAL BEAM GUARD RAILING SURFACES ONLY AT LOCATIONS ON ROUTE 280.

SUMMARY OF QUANTITIES
Q-2

STATE OF CALIFORNIA - DEPARTMENT OF TRANSPORTATION
Caltrans 06-DESIGN

SHAKILA HANIF — REVISED BY
HARPREET BINNING — DATE REVISED
CALCULATED-DESIGNED BY
CHECKED BY
FUNCTIONAL SUPERVISOR
THANH NGUYEN

LAST REVISION 03-26-12 | DATE PLOTTED => 22-JUN-2012 | TIME PLOTTED => 06:41

Dist	COUNTY	ROUTE	POST MILES TOTAL PROJECT	SHEET No.	TOTAL SHEETS
04	SM	101,280	Var	38	43

REGISTERED CIVIL ENGINEER 03-15-12 DATE

6-11-12
PLANS APPROVAL DATE

REGISTERED PROFESSIONAL ENGINEER HARPREET BINNING No. 68470 Exp. 9/30/13 CIVIL STATE OF CALIFORNIA

THE STATE OF CALIFORNIA OR ITS OFFICERS OR AGENTS SHALL NOT BE RESPONSIBLE FOR THE ACCURACY OR COMPLETENESS OF SCANNED COPIES OF THIS PLAN SHEET.

METAL BEAM GUARD RAILING QUANTITIES

LOCATION No.	MBGR (STEEL POST) *	END TREATMENT TYPE				ALTERNATIVE FLARED TERMINAL SYSTEM *	ALTERNATIVE IN-LINE TERMINAL SYSTEM *	TERMINAL SYSTEM (TYPE X-TENSION)*	END ANCHOR ASSEMBELY (SFT) *	TRANSITION RAILING TYPE (WB) *	REMOVE MBGR	TREATED WOOD WASTE	REMOVE END ANCHOR ASSEMBLY (N)	No. OF TREES/SHRUBS REQUIRE TRIMMING (N)	VEGETATION CONTROL (ASPHALT COMPOSITE)	REMOVE AC DIKE	PLACE		MINOR HOT MIX ASPHALT	CONCRETE BARRIER (BRIDGE RAILING CONNECTION-ANCHOR BLOCK)	BRIDGE RAILING CONNECTION TYPE (N)	Temp RAILING (TYPE K)	TEMPORARY CRASH CUSHION MODULE	Temp DRAINAGE INLET PROTECTION	REMARKS
		NORTH END OF MBGR		SOUTH END OF MBGR													HMA DIKE (TYPE F)	HMA DIKE (TYPE C)							
	LF	LAYOUT TYPE/ CONNECTION TYPE	STANDARD PLAN No./ CONSTRUCTION DETAIL SHEET No.	LAYOUT TYPE/ CONNECTION TYPE	STANDARD PLAN No./ CONSTRUCTION DETAIL SHEET No.	EA	EA	EA	EA	EA	LF	LB	EA	EA	SQYD	LF	LF	LF	TON	LF		LF	EA	EA	
16	575	TO EXIST MBGR	C-3	16B (MODIFIED)	C-4	1					37.5	475		7											BEGIN NORTH OF EXISTING MVP
17	275	12A & BLOCK	A77F1 , A77J4 , C-9	12A	A77F1		1			1	70	887		1		365	290	75	4.45	3.5	TYPE 1M BARRIER	40	14		SOUTH OF Br No. 35-0227
53	375	12D & BLOCK	A77F2 , A77J4 , C-9	12D	A77F2					1	70	887		2		405	405		5.41	3.5	TYPE 1M BARRIER	40	14		SOUTH OF Br No. 35-0062G
54	550	12DD	A77F5	12DD	A77F5				1					2	185										
18	2700	12DD	A77F5	12DD	A77F5				1		80	1014		9		1585	1585		21.18		TYPE 1M BARRIER			5	NORTH OF Br No. 35-0228R LONG SPAN NESTED RAIL AT CALL BOX
55	125	12B & BLOCK	A77F1 , A77J4 , C-9	12B	A77F1	1				1	37.5	475								3.5	TYPE 1M BARRIER	40	14		SOUTH OF Br No. 35-0228R
19	1150		A77H1	TAU II	C-13				1						384	1150	1150		15.37		TYPE 1M BARRIER			1	SEE MVP DETAIL, SHEET C-2 NORTH OF Br No. 35-0202R
20	1370	12DD	A77F5	12DD	A77F5				1					13	458	1370	1370		18.31		TYPE 1M BARRIER			2	SEE MVP DETAIL, SHEET C-2 SEE SPECIAL DETAIL ON SHEET C-14
21	500	12DD	A77F5	12DD	A77F5				1						167						TYPE 1M BARRIER				
22	700	TO Exist MBGR	C-3	16B (MODIFIED)	C-4	1					37.5	475		3	234	500	500		6.68						
23	800		A77H1	TO Exist MBGR	C-3				1		80	1014	1	3	267	800	800		10.69		TYPE 1M BARRIER			2	SOUTH OF KINGS DRIVE UC NORTH END TO BE FREESTANDING
SHEET SUBTOTAL	9120					3	1		6	3	412.5	5227	1	40	1695	6175	6100	75	82.09	10.5		120	42	10	

(N) - NOT A SEPARATE PAY ITEM, FOR INFORMATION ONLY.
* - STAIN GALVANIZED METAL BEAM GUARD RAILING SURFACES ONLY AT LOCATIONS ON ROUTE 280.

SUMMARY OF QUANTITIES
Q-3

STATE OF CALIFORNIA - DEPARTMENT OF TRANSPORTATION
Caltrans 06-DESIGN

SHAKILA HANIF — REVISED BY
HARPREET BINNING — DATE REVISED
CALCULATED-DESIGNED BY
CHECKED BY
FUNCTIONAL SUPERVISOR
THANH NGUYEN

LAST REVISION 03-20-12 | DATE PLOTTED => 22-JUN-2012 | TIME PLOTTED => 06:41

Dist	COUNTY	ROUTE	POST MILES TOTAL PROJECT	SHEET No.	TOTAL SHEETS
04	SM	101,280	Var	39	43

REGISTERED CIVIL ENGINEER 03-15-12 DATE

6-11-12
PLANS APPROVAL DATE

REGISTERED PROFESSIONAL ENGINEER HARPREET BINNING No. 68470 Exp. 9/30/13 CIVIL STATE OF CALIFORNIA

THE STATE OF CALIFORNIA OR ITS OFFICERS OR AGENTS SHALL NOT BE RESPONSIBLE FOR THE ACCURACY OR COMPLETENESS OF SCANNED COPIES OF THIS PLAN SHEET.

METAL BEAM GUARD RAILING QUANTITIES

LOCATION No.	MBGR (STEEL POST) *	END TREATMENT TYPE: NORTH END OF MBGR		END TREATMENT TYPE: SOUTH END OF MBGR		ALTERNATIVE FLARED TERMINAL SYSTEM *	ALTERNATIVE IN-LINE TERMINAL SYSTEM *	TERMINAL SYSTEM (TYPE X-TENSION)*	END ANCHOR ASSEMBELY (SFT) *	TRANSITION RAILING TYPE (WB) *	REMOVE MBGR	TREATED WOOD WASTE	REMOVE END ANCHOR ASSEMBLY (N)	No. OF TREES/SHRUBS REQUIRE TRIMMING (N)	VEGETATION CONTROL (ASPHALT COMPOSITE)	REMOVE AC DIKE	PLACE: HMA DIKE (TYPE F)	PLACE: HMA DIKE (TYPE C)	MINOR HOT MIX ASPHALT	CONCRETE BARRIER (BRIDGE RAILING CONNECTION-ANCHOR BLOCK)	BRIDGE RAILING CONNECTION TYPE (N)	Temp RAILING (TYPE K)	TEMPORARY CRASH CUSHION MODULE	Temp DRAINAGE INLET PROTECTION	REMARKS
	LF	LAYOUT TYPE/ CONNECTION TYPE	STANDARD PLAN No./ CONSTRUCTION DETAIL SHEET No.	LAYOUT TYPE/ CONNECTION TYPE	STANDARD PLAN No./ CONSTRUCTION DETAIL SHEET No.	EA	EA	EA	EA	EA	LF	LB	EA	EA	SQYD	LF	LF	LF	TON	LF		LF	EA	EA	
24	580	12A	A77F1	12A & BLOCK	A77F1, A77J4 , C-9		1			1	37.5	475			210	102	102		1.36	3.5	TYPE 1M BARRIER	40	14	1	NORTH OF Br No. 35-0116L
56	80	TO Exist MBGR	C-3		A77H1				1		6.25	79	1		167						TYPE 1M BARRIER				SOUTH OF Br No. 35-0116L
25	1200	12A	A77F1	12A & BLOCK	A77F1 , A77J4 , C-9		1			1	320	4055			400	590	540	75	7.79	3.5	TYPE 1M BARRIER	40	14		NORTH OF Br No. 35-0212L
57	150	12DD	A77F5	12DD	A77F5				1					2	50						TYPE 1M BARRIER				SOUTH OF Br No. 35-0212L
26	325	12DD	A77F5	12DD	A77F5				1					1	110	325	325		4.34		TYPE 1M BARRIER			1	SOUTH OF Br No. 35-0228L
27	615	16A (MODIFIED)	C-4	TO Exist MBGR	C-3		1				530	6717	3		210	650	575	75	8.26					1	PLACE MBGR AT EDGE OF SHOULDER
28	1750	11B	A77E1	11B	A77E1	1			1		80	1014		21	587	1750	1675	75	22.96					5	NORTH OF Br No. 35-0197L
29	340	12DD	A77F5	12DD	A77F5				1						115	340	290	75	4.45		TYPE 1M BARRIER			1	
30	525	12B	A77F1	12B & BLOCK	A77F1 , A77J4 , C-9	1				1	62.5	792			177	550	475	75	6.93	3.5	TYPE 1M BARRIER	40	14	1	NORTH OF Br No. 35-0215L
58	460	12DD	A77F5	12DD	A77F5				1					1	157	460	460		6.15		TYPE 1M BARRIER				SOUTH OF Br No. 35-0215L
31	1500	16C (MODIFIED)	C-4	TO Exist MBGR	C-3	1					65	824	1	1	503	1500	1450	50	19.76						
32	620	TO Exist MBGR	C-3		A77H1				1						210										
33	400	11B	A77E1	11B	A77E1	1			1						137	425	350	75	5.25						
SHEET SUBTOTAL	8545					4	3		8	3	1101.25	13956	5	26	3033	6692	6242	500	87.25	10.5		120	42	10	

* - STAIN GALVANIZED METAL BEAM GUARD RAILING SURFACES ONLY AT LOCATIONS ON ROUTE 280.
(N) - NOT A SEPARATE PAY ITEM, FOR INFORMATION ONLY.

SUMMARY OF QUANTITIES
Q-4

STATE OF CALIFORNIA - DEPARTMENT OF TRANSPORTATION
Caltrans 06-DESIGN
FUNCTIONAL SUPERVISOR: THANH NGUYEN
CALCULATED-DESIGNED BY: SHAKILA HANIF
CHECKED BY: HARPREET BINNING
REVISED BY / DATE REVISED

LAST REVISION 03-26-12
DATE PLOTTED => 22-JUN-2012
TIME PLOTTED => 06:42

Dist	COUNTY	ROUTE	POST MILES TOTAL PROJECT	SHEET No.	TOTAL SHEETS
04	SM	101,280	Var	40	43

REGISTERED CIVIL ENGINEER 03-15-12 DATE

6-11-12
PLANS APPROVAL DATE

REGISTERED PROFESSIONAL ENGINEER HARPREET BINNING No. 68470 Exp. 9/30/13 CIVIL STATE OF CALIFORNIA

THE STATE OF CALIFORNIA OR ITS OFFICERS OR AGENTS SHALL NOT BE RESPONSIBLE FOR THE ACCURACY OR COMPLETENESS OF SCANNED COPIES OF THIS PLAN SHEET.

METAL BEAM GUARD RAILING QUANTITIES

LOCATION No.	MBGR (STEEL POST) *	END TREATMENTS: NORTH END OF MBGR		END TREATMENTS: SOUTH END OF MBGR		ALTERNATIVE FLARED TERMINAL SYSTEM *	ALTERNATIVE IN-LINE TERMINAL SYSTEM *	TERMINAL SYSTEM (TYPE X-TENSION)*	END ANCHOR ASSEMBELY (SFT) *	TRANSITION RAILING TYPE (WB) *	REMOVE MBGR	TREATED WOOD WASTE	REMOVE END ANCHOR ASSEMBLY (N)	No. OF TREES/SHRUBS REQUIRE TRIMMING (N)	VEGETATION CONTROL (ASPHALT COMPOSITE)	REMOVE AC DIKE	PLACE: HMA DIKE (TYPE F)	PLACE: HMA DIKE (TYPE C)	MINOR HOT MIX ASPHALT	CONCRETE BARRIER (BRIDGE RAILING CONNECTION-ANCHOR BLOCK)	BRIDGE RAILING CONNECTION TYPE (N)	Temp RAILING (TYPE K)	TEMPORARY CRASH CUSHION MODULE	Temp DRAINAGE INLET PROTECTION	REMARKS
	LF	LAYOUT TYPE/ CONNECTION TYPE	STANDARD PLAN No./ CONSTRUCTION DETAIL SHEET No.	LAYOUT TYPE/ CONNECTION TYPE	STANDARD PLAN No./ CONSTRUCTION DETAIL SHEET No.	EA	EA	EA	EA	EA	LF	LB	EA	EA	SQYD	LF	LF	LF	TON	LF		LF	EA	EA	
34	2100	11A	A77E1	11A	A77E1		1		1							2125	2050	75	27.98						
35	800	12B	A77F1	12B & BLOCK	A77F1 , A77J4 , C-9	1				1	50	634		5	268	825	750	75	10.60	3.5	TYPE 1M BARRIER	40	14	1	NORTH OF Br No. 35-0210L
59	330	12DD	A77F5	12DD	A77F5				1					1	112	330	330		4.41		TYPE 1M BARRIER				SOUTH OF Br No. 35-0210L
36	700	11B	A77E1	11B	A77E1	1			1		80	1014				725	650	75	9.26					2	LONG SPAN NESTED RAIL AT CALL BOX
37	450	TO Exist MBGR	C-3		A77H1				1		6.25	80	1		153	450	450		6.01					2	
38	250	12DD & BLOCK	A77F5 , C-9	12DD	A77F5				1	1					85	250	250		3.34	3.5	TYPE 1M BARRIER	40	14		SOUTH OF Br No. 35-0228L
39	950	11B	A77E1	11B	A77E1	1			1						318										
40	520	12B	A77F1	12B & BLOCK	A77F1 , A77J4 , C-11	1				1	130	1647		1	175	545	470	75	6.86	3.5	TYPE 9M BARRIER	40	14	3	NORTH OF Br No. 35-0247L
60	750	12DD & BLOCK	A77F5 , C-11	12DD	A77F5				1		265	3358	1		252	750	750		10.02	3.5	TYPE 9M BARRIER	40	14	2	SOUTH OF Br No. 35-0247L
SHEET SUBTOTAL	6850					4	1		7	3	531.25	6733	2	7	1363	6000	5700	300	78.48	14.0		160	56	10	SOUTH OF Br No. 35-0247L

* - STAIN GALVANIZED METAL BEAM GUARD RAILING SURFACES ONLY AT LOCATIONS ON ROUTE 280.
(N) - NOT A SEPARATE PAY ITEM, FOR INFORMATION ONLY.

SUMMARY OF QUANTITIES
Q-5

STATE OF CALIFORNIA - DEPARTMENT OF TRANSPORTATION
Caltrans 06-DESIGN

SHAKILA HANIF — REVISED BY
HARPREET BINNING — DATE REVISED
CALCULATED-DESIGNED BY
CHECKED BY
FUNCTIONAL SUPERVISOR
THANH NGUYEN

LAST REVISION 03-26-12
DATE PLOTTED => 22-JUN-2012
TIME PLOTTED => 06:42

Dist	COUNTY	ROUTE	POST MILES TOTAL PROJECT	SHEET No.	TOTAL SHEETS
04	SM	101,280	Var	41	43

REGISTERED CIVIL ENGINEER 03-15-12 DATE

6-11-12
PLANS APPROVAL DATE

REGISTERED PROFESSIONAL ENGINEER HARPREET BINNING No. 68470 Exp. 9/30/13 CIVIL STATE OF CALIFORNIA

THE STATE OF CALIFORNIA OR ITS OFFICERS OR AGENTS SHALL NOT BE RESPONSIBLE FOR THE ACCURACY OR COMPLETENESS OF SCANNED COPIES OF THIS PLAN SHEET.

METAL BEAM GUARD RAILING QUANTITIES

LOCATION No.	MBGR (STEEL POST) *	END TREATMENT TYPE: NORTH END OF MBGR		END TREATMENT TYPE: SOUTH END OF MBGR		ALTERNATIVE FLARED TERMINAL SYSTEM *	ALTERNATIVE IN-LINE TERMINAL SYSTEM *	TERMINAL SYSTEM (TYPE X-TENSION) *	END ANCHOR ASSEMBELY (SFT) *	TRANSITION RAILING TYPE (WB) *	REMOVE MBGR	TREATED WOOD WASTE	REMOVE END ANCHOR ASSEMBLY (N)	No. OF TREES/SHRUBS REQUIRE TRIMMING (N)	VEGETATION CONTROL (ASPHALT COMPOSITE)	REMOVE AC DIKE	PLACE: HMA DIKE (TYPE F)	PLACE: HMA DIKE (TYPE C)	MINOR HOT MIX ASPHALT	CONCRETE BARRIER (BRIDGE RAILING CONNECTION-ANCHOR BLOCK)	BRIDGE RAILING CONNECTION TYPE (N)	Temp RAILING (TYPE K)	TEMPORARY CRASH CUSHION MODULE	Temp DRAINAGE INLET PROTECTION	REMARKS
	LF	LAYOUT TYPE/ CONNECTION TYPE	STANDARD PLAN No./ CONSTRUCTION DETAIL SHEET No.	LAYOUT TYPE/ CONNECTION TYPE	STANDARD PLAN No./ CONSTRUCTION DETAIL SHEET No.	EA	EA	EA	EA	EA	LF	LB	EA	EA	SQYD	LF	LF	LF	TON	LF		LF	EA	EA	
41	375	11B	A77E1	11B	A77E1	1			1						234	500	425	75	31.26						SEE DETAIL SHEET C-16
42	450	12DD& BLOCK	A77F5 , C-11	12DD	A77F5				1		102	1293	1	1						3.5	TYPE 9M BARRIER	40	14		SOUTH OF Br No. 35-0276L
61	400	12B	A77F1	12B & BLOCK	A77F1 , A77J4 , C-11	1			1	1	293.75	3723		6	135					3.5	TYPE 9M BARRIER	40	14		NORTH OF Br No. 35-0276L
43	1800	12A	A77F1	12A & BLOCK	A77F1 , A77J4 , C-9		1			1	165	2091		3	384	1150	1150		15.37	3.5	TYPE 1M BARRIER	40	14		Br No. 35-0231L
44	500	12A	A77F1	12A & BLOCK	A77F1 , A77J4 , C-9		1			1	110	1394			170		500	75	7.26	3.5	TYPE 1M BARRIER	40	14		NORTH OF Br No. 35-02307L
62	430	12DD	A77F5	12DD	A77F5				2						145		430		5.75		TYPE 1M BARRIER				SOUTH OF Br No. 35-0230L
45	780	12B	A77F1	12B & BLOCK	A77F1 , A77J4 , C-9	1				1	50	634			263	450	400	75	5.92	3.5	TYPE 1M BARRIER	40	14	2	NORTH OF Br No. 35-0232L
63	600	12DD	A77F5	12DD	A77F5				1		20	253	1		203	600	600		8.02		TYPE 1M BARRIER			1	SOUTH OF Br No. 35-0232L
46	1050	11A	A77E1	11A	A77E1		1		1						354	500	450	75	6.59						
47	2100	11B	A77E1	11B	A77E1	1			1					1	700	1300	1250	75	17.28					2	
SHEET SUBTOTAL	8085					4	3		8	4	740.75	9388	2	11	2588	4500	5205	375	97.45	17.5		200	70	5	
SHEET Q-1 SUBTOTAL	4937.5					3	1	1	1	7	772.5	9789	6	22	1734	2010	1660	350	59.88	28.0		360	126	8	
SHEET Q-2 SUBTOTAL	10,620					3	3	1	7	5	772.5	9790	1	63	3056	8420	8045	425	110.80	21.0		240	84	22	
SHEET Q-3 SUBTOTAL	9120					3	1		6	3	412.5	5227	1	40	1695	6175	6100	75	82.09	10.5		120	42	10	
SHEET Q-4 SUBTOTAL	8545					4	3		8	3	1101.25	13956	5	26	3033	6692	6242	500	87.25	10.5		120	42	10	
SHEET Q-5 SUBTOTAL	6850					4	1		7	3	531.25	6733	2	7	1363	6000	5700	300	78.48	14.0		160	56	10	
TOTAL	48,157.5					21	12	2	37	25	4,330.75	54,883	17	169	13,469	33,797	32,952	2,025	515.95	101.5		1,200	420	65	

* - STAIN GALVANIZED METAL BEAM GUARD RAILING SURFACES ONLY AT LOCATIONS ON ROUTE 280.

(N) - NOT A SEPARATE PAY ITEM, FOR INFORMATION ONLY.

SUMMARY OF QUANTITIES

Q-6

STATE OF CALIFORNIA - DEPARTMENT OF TRANSPORTATION
Caltrans 06-DESIGN

FUNCTIONAL SUPERVISOR: THANH NGUYEN
CALCULATED-DESIGNED BY: SHAKILA HANIF
CHECKED BY: HARPREET BINNING
REVISED BY
DATE REVISED

LAST REVISION 03-26-12 DATE PLOTTED => 26-JUN-2012 TIME PLOTTED => 06:12

Dist	COUNTY	ROUTE	POST MILES TOTAL PROJECT	SHEET No.	TOTAL SHEETS
04	SM	101,280	Var	42	43

REGISTERED CIVIL ENGINEER 03-15-12 DATE

6-11-12
PLANS APPROVAL DATE

REGISTERED PROFESSIONAL ENGINEER HARPREET BINNING No. 68470 Exp. 9/30/13 CIVIL STATE OF CALIFORNIA

THE STATE OF CALIFORNIA OR ITS OFFICERS OR AGENTS SHALL NOT BE RESPONSIBLE FOR THE ACCURACY OR COMPLETENESS OF SCANNED COPIES OF THIS PLAN SHEET.

OBJECT MARKER

LOCATION No.	OBJECT MARKER (TYPE L-1) **	OBJECT MARKER (TYPE P) * (RIGHT)
	EA	EA
1	1	1
2		1
3	1	1
4	1	1
5	1	1
6	1	1
7	1	1
8	1	1
9	1	
10	1	1
11	1	1
12	1	
13	1	1
14	1	
15	1	1
16	1	
17	1	1
54		
18	1	1
19	1	
21	1	
22	1	
23	1	
24	1	1
25	1	1
27	1	
28	1	
30	1	1
31	1	
32	1	
33	1	
34	1	
35	1	1
36	1	
37	1	
38	1	1
39	1	
40	1	1
41	1	
43	1	1
44	1	1
45	1	1
46	1	
47	1	
TOTAL	42	23

RESET ROADSIGN SIGN

LOCATION No.	QUANTITY
	EA
1	2
2	4
3	1
5	1
8	3
9	4
12	1
14	2
15	3
17	1
54	1
19	1
20	1
22	1
23	2
24	2
25	3
26	1
28	1
30	3
34	1
37	1
43	1
44	1
45	1
47	6
TOTAL	49

REMOVE BRIDGE RAILING

LOCATION No.	QUANTITY
	LF
3	4
5	40
6	4
7	4
8	8
10	8
11	4
13	8
15	8
17	16
18	8
24	8
25	8
30	8
35	8
38	8
40	8
41	8
43	8
44	8
45	8
TOTAL	156

CONCRETE BARRIER (TYPE 60)

LOCATION No.	QUANTITY
	LF
5	920

CRASH CUSHION (TYPE TAU-II)

LOCATION No.	QUANTITY
	EA
19	1

* TYPE P OBJECT MARKERS (PER CA MUTCD) TO BE INSTALLED AT APPROACH END OF EACH BRIDGE RAILING.

** TYPE L-1 OBJECT MARKERS (PER CA MUTCD) TO BE INSTALLED AT APPROACH END OF EACH TERMINAL SYSTEM.

SUMMARY OF QUANTITIES
Q-7

STATE OF CALIFORNIA - DEPARTMENT OF TRANSPORTATION
Caltrans 06-DESIGN

FUNCTIONAL SUPERVISOR: THANH NGUYEN
CALCULATED-DESIGNED BY: SHAKILA HANIF
CHECKED BY: HARPREET BINNING
REVISED BY
DATE REVISED

LAST REVISION 03-26-12 | DATE PLOTTED => 12-JUN-2012 | TIME PLOTTED => 06:44

Dist	COUNTY	ROUTE	POST MILES TOTAL PROJECT	SHEET No.	TOTAL SHEETS
04	SM	101,280	Var	43	43

REGISTERED CIVIL ENGINEER 03-15-12 DATE

6-11-12
PLANS APPROVAL DATE

REGISTERED PROFESSIONAL ENGINEER HARPREET BINNING No. 68470 Exp. 9/30/13 CIVIL STATE OF CALIFORNIA

THE STATE OF CALIFORNIA OR ITS OFFICERS OR AGENTS SHALL NOT BE RESPONSIBLE FOR THE ACCURACY OR COMPLETENESS OF SCANNED COPIES OF THIS PLAN SHEET.

GUARD RAILING DELINEATOR

Loc	ROUTE	DIRECTION	QUANTITY
			EA
1	101	NB	46
2	101	NB	22
3	101	SB	10
4	101	SB	17
5	101	SB	13
6	101	SB	10
7	101	SB	9
8	280	NB	46
9	280	NB	75
10	280	NB	31
11	280	NB	15
12	280	NB	8
13	280	NB	31
14	280	NB	23
15	280	NB	23
16	280	NB	12
17	280	NB	46
18	280	NB	56
19	280	NB	24
20	280	NB	29
21	280	NB	11
22	280	NB	12
23	280	NB	18
24	280	SB	8
25	280	SB	28
26	280	SB	7
27	280	SB	12
28	280	SB	36
29	280	SB	7
30	280	SB	21
31	280	SB	30
32	280	SB	13
33	280	SB	12
34	280	SB	44
35	280	SB	23
36	280	SB	18
37	280	SB	10
38	280	SB	5
39	280	SB	20
40	280	SB	26
41	280	SB	8
42	280	SB	9
43	280	SB	94
44	280	SB	30
45	280	SB	22
46	280	SB	48
		TOTAL	1118

LOCATIONS OF MAINTAIN EXISITNG PLANTED AREAS AND PRUNE EXISTING PLANTS (N)

LOCATION	MAINTAIN EXISTING PLANTED AREA	PRUNE EXISTING PLANTS
	AC	LF
1	1.06	
2	1.35	
3	1.60	95
4	0.88	40
5	0.01	200
6	2.53	
7	1.51	275
24	1.30	
25	1.97	80
26	0.37	10
27	0.85	40
28	2.04	490
29	0.36	60
30	0.54	200
31	1.38	20
32	0.19	
33	0.45	
34	0.48	
35		80
36		40
37	0.43	
42	0.00	20
43	0.00	20
44	3.14	10
45	1.24	
46	0.00	20
47	0.00	10
8	0.63	20
9	4.22	180
10	2.88	30
11		10
12		20
13	1.08	550
14	1.63	100
15	2.33	100
16	0.77	300
17	0.96	30
54	0.88	90
18	4.50	
19	0.47	
20	1.08	110
21	0.84	
22	2.09	10
23	0.31	20
TOTAL	50.51	3280

(N) - NOT A SEPARATE PAY ITEM, FOR INFORMATION ONLY.

SUMMARY OF QUANTITIES
Q-8

STATE OF CALIFORNIA - DEPARTMENT OF TRANSPORTATION
Caltrans® 06-DESIGN

FUNCTIONAL SUPERVISOR: THANH NGUYEN
CALCULATED-DESIGNED BY: SHAKILA HANIF
CHECKED BY: HARPREET BINNING
REVISED BY
DATE REVISED

LAST REVISION 03-26-12 | DATE PLOTTED => 11-JUN-2012 | TIME PLOTTED => 13:13