Dist	COUNTY	ROUTE	POST MILES TOTAL PROJECT	SHEET No.	TOTAL SHEETS
04	Ala	13	4.4/8.6	1	53

ACHSSTPG-S013(023)E

STATE OF CALIFORNIA
DEPARTMENT OF TRANSPORTATION

PROJECT PLANS FOR CONSTRUCTION ON
STATE HIGHWAY
IN ALAMEDA COUNTY
IN OAKLAND
AT VARIOUS LOCATIONS
FROM 0.6 MILE SOUTH OF CARSON STREET UNDERCROSSING TO 0.3 MILE NORTH OF MORAGA AVENUE UNDERCROSSING

TO BE SUPPLEMENTED BY STANDARD PLANS DATED MAY 2006

INDEX OF PLANS

SHEET No.	DESCRIPTION
1	TITLE AND LOCATION MAP
2 - 4	LAYOUTS
5	CONSTRUCTION DETAILS
6	EROSION CONTROL DETAILS
7 - 10	CONSTRUCTION AREA SIGNS
11 & 12	TRAFFIC HANDLING DETAILS
13 - 17	SIGN PLAN, DETAILS AND QUANTITIES
18	SUMMARY OF QUANTITIES
19 - 21	LOG OF TEST BORINGS
22	IRRIGATION PLAN
23 - 25	MODIFY SIGN ILLUMINATION
26 - 51	REVISED AND NEW STANDARD PLANS

STRUCTURE PLANS

52	THRIE BEAM CONNECTION DETAILS
53	SQUARE PEDESTAL PILE FOUNDATION (Mod)

THE STANDARD PLANS LIST APPLICABLE TO THIS CONTRACT IS INCLUDED IN THE NOTICE TO BIDDERS AND SPECIAL PROVISIONS BOOK.

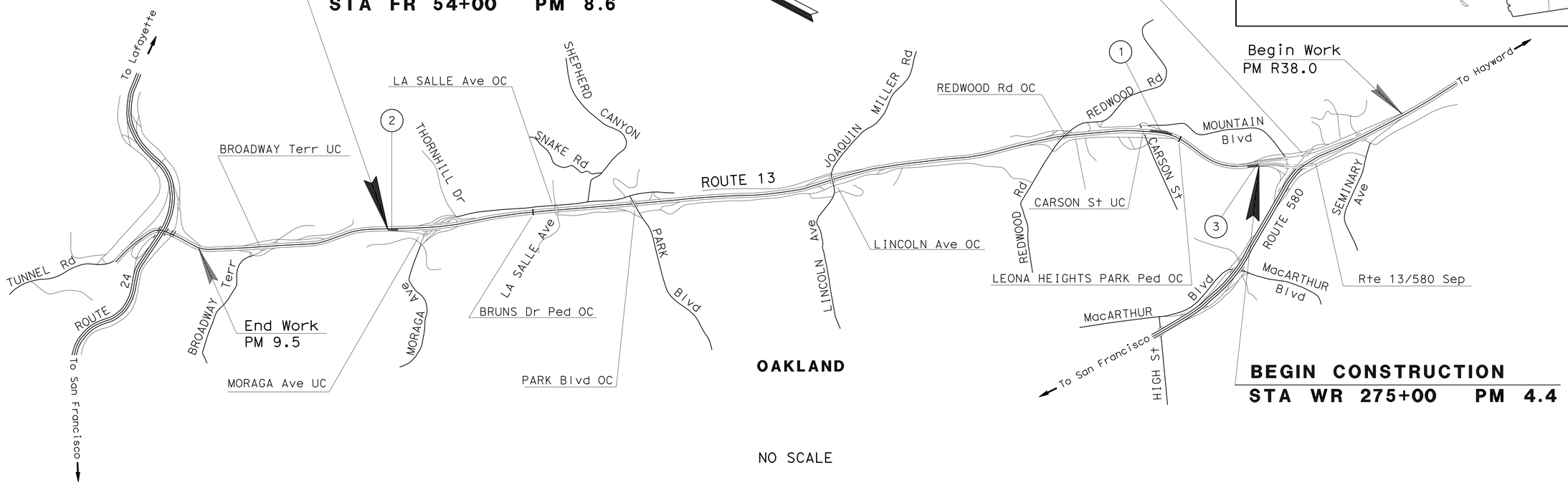

LOCATIONS OF CONSTRUCTION

LOCATION No.	ROUTE	PM	SIGN TYPE	DESCRIPTION
1	13	5.0	ONE-POST CANTILEVER	NB OFF TO CARSON St
2	13	8.6	ONE-POST CANTILEVER	SB OFF TO MORAGA Ave
3	13	4.4	TWO-POST OVERHEAD	SB OFF TO MOUNTAIN Blvd

THE CONTRACTOR SHALL POSSESS THE CLASS (OR CLASSES) OF LICENSE AS SPECIFIED IN THE "NOTICE TO BIDDERS."

Paul Snyder 7-28-10
PROJECT ENGINEER DATE
REGISTERED CIVIL ENGINEER

August 2, 2010
PLANS APPROVAL DATE

REGISTERED PROFESSIONAL ENGINEER Paul A. Snyder No. 41128 Exp. 3-31-11 CIVIL STATE OF CALIFORNIA

THE STATE OF CALIFORNIA OR ITS OFFICERS OR AGENTS SHALL NOT BE RESPONSIBLE FOR THE ACCURACY OR COMPLETENESS OF SCANNED COPIES OF THIS PLAN SHEET.

PROJECT MANAGER VAL IGNACIO
DESIGN ENGINEER ALBERT J. ZEPEDA

CONTRACT No.	04-4A3414
PROJECT ID	0400020161

LAST REVISION 07-29-10
DATE PLOTTED => 08-NOV-2010
TIME PLOTTED => 13:12

Dist	COUNTY	ROUTE	POST MILES TOTAL PROJECT	SHEET No.	TOTAL SHEETS
04	Ala	13	4.4/8.6	2	53

Paul Snyder 7-28-10
REGISTERED CIVIL ENGINEER DATE

8-2-10
PLANS APPROVAL DATE

REGISTERED PROFESSIONAL ENGINEER
Paul A. Snyder
No. 41128
Exp. 3-31-11
CIVIL
STATE OF CALIFORNIA

THE STATE OF CALIFORNIA OR ITS OFFICERS OR AGENTS SHALL NOT BE RESPONSIBLE FOR THE ACCURACY OR COMPLETENESS OF SCANNED COPIES OF THIS PLAN SHEET.

FOR ACCURATE RIGHT OF WAY AND
ACCESS DATA, CONTACT RIGHT OF WAY
ENGINEERING AT THE DISTRICT OFFICE.

EXISTING UTILITY FACILITIES HAVE NOT BEEN POSITIVELY IDENTIFIED. THE IDENTIFICATION OF EXISTING UTILITY FACILITIES WILL BE CONCURRENT WITH CONSTRUCTION.

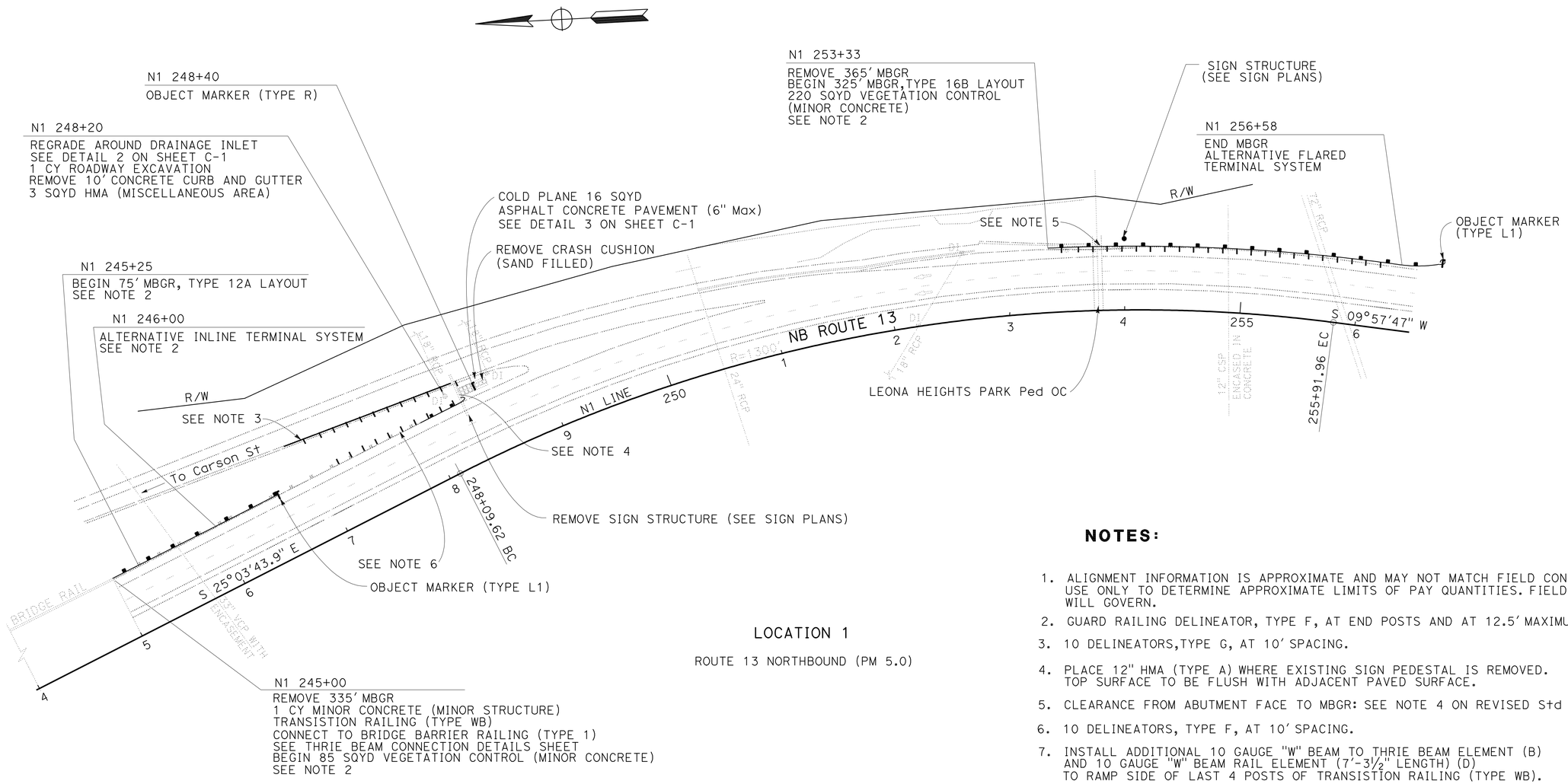

LOCATION 1

ROUTE 13 NORTHBOUND (PM 5.0)

NOTES:

1. ALIGNMENT INFORMATION IS APPROXIMATE AND MAY NOT MATCH FIELD CONDITIONS. USE ONLY TO DETERMINE APPROXIMATE LIMITS OF PAY QUANTITIES. FIELD CONDITIONS WILL GOVERN.
2. GUARD RAILING DELINEATOR, TYPE F, AT END POSTS AND AT 12.5' MAXIMUM SPACING BETWEEN.
3. 10 DELINEATORS,TYPE G, AT 10' SPACING.
4. PLACE 12" HMA (TYPE A) WHERE EXISTING SIGN PEDESTAL IS REMOVED. TOP SURFACE TO BE FLUSH WITH ADJACENT PAVED SURFACE.
5. CLEARANCE FROM ABUTMENT FACE TO MBGR: SEE NOTE 4 ON REVISED Std PLAN RSP A77G3.
6. 10 DELINEATORS, TYPE F, AT 10' SPACING.
7. INSTALL ADDITIONAL 10 GAUGE "W" BEAM TO THRIE BEAM ELEMENT (B) AND 10 GAUGE "W" BEAM RAIL ELEMENT (7'-3½" LENGTH) (D) TO RAMP SIDE OF LAST 4 POSTS OF TRANSISTION RAILING (TYPE WB).
8. 5 DELINEATORS, TYPE F, AT 10' SPACING.

LEGEND:

| - DELINEATOR

LAYOUT

SCALE: 1'' = 50'

L-1

STATE OF CALIFORNIA - DEPARTMENT OF TRANSPORTATION
Caltrans
DESIGN

FUNCTIONAL SUPERVISOR: ALBERT J. ZEPEDA
CALCULATED-DESIGNED BY: PAUL A. SNYDER
CHECKED BY: BEHROUZ IRAVANCHY
REVISED BY: PS
DATE REVISED: 7/10

LAST REVISION 07-29-10 | DATE PLOTTED => 08-NOV-2010 | TIME PLOTTED => 13:13

Dist	COUNTY	ROUTE	POST MILES TOTAL PROJECT	SHEET No.	TOTAL SHEETS
04	Ala	13	4.4/8.6	3	53

Paul Snyder 7-28-10
REGISTERED CIVIL ENGINEER DATE

8-2-10
PLANS APPROVAL DATE

REGISTERED PROFESSIONAL ENGINEER
Paul A. Snyder
No. 41128
Exp. 3-31-11
CIVIL
STATE OF CALIFORNIA

THE STATE OF CALIFORNIA OR ITS OFFICERS OR AGENTS SHALL NOT BE RESPONSIBLE FOR THE ACCURACY OR COMPLETENESS OF SCANNED COPIES OF THIS PLAN SHEET.

FOR ACCURATE RIGHT OF WAY AND ACCESS DATA, CONTACT RIGHT OF WAY ENGINEERING AT THE DISTRICT OFFICE.

EXISTING UTILITY FACILITIES HAVE NOT BEEN POSITIVELY IDENTIFIED. THE IDENTIFICATION OF EXISTING UTILITY FACILITIES WILL BE CONCURRENT WITH CONSTRUCTION.

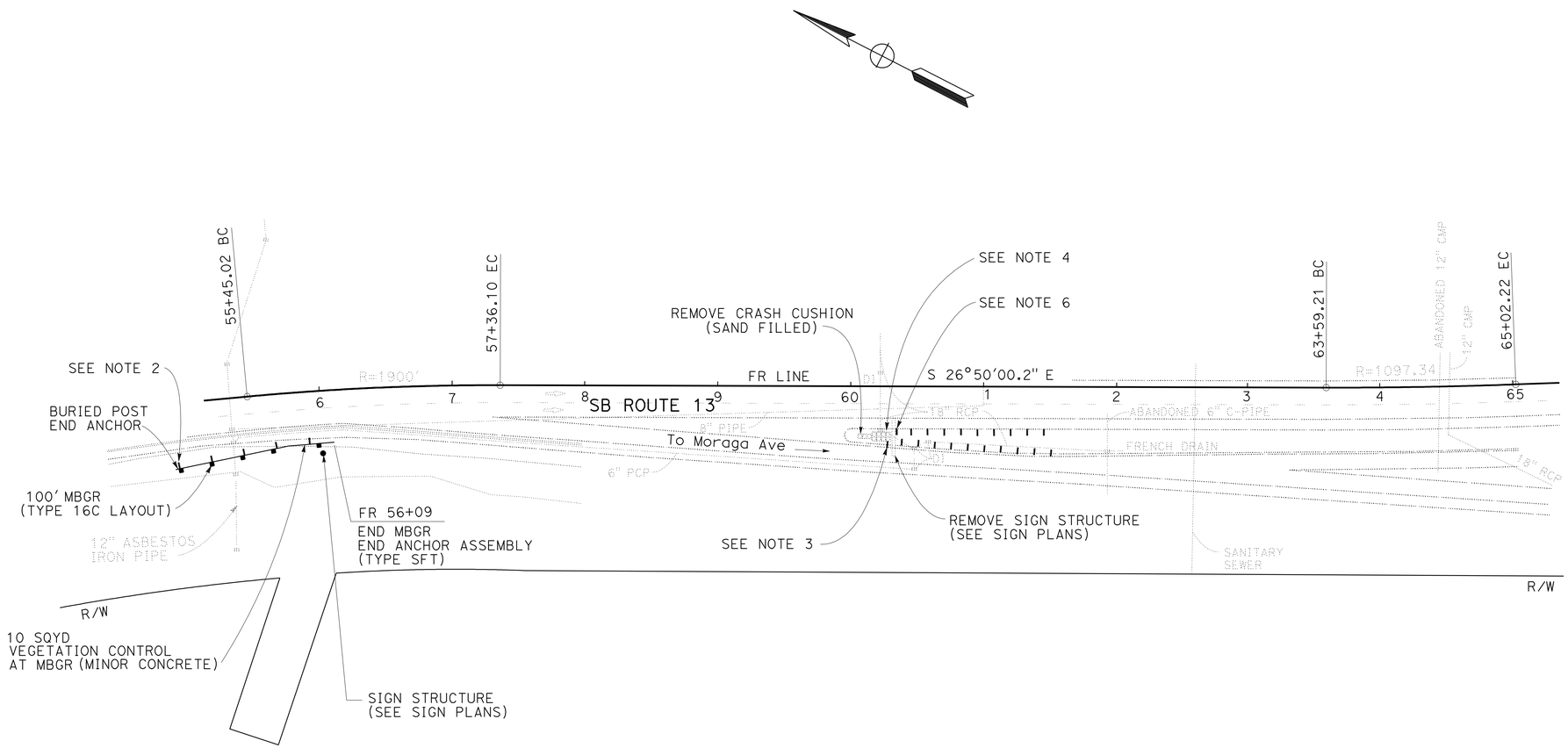

LOCATION 2
ROUTE 13 SOUTHBOUND
(PM 8.6)

FOR NOTES AND LEGEND SEE SHEET L-1

LAYOUT
SCALE: 1'' = 50'

L-2

STATE OF CALIFORNIA - DEPARTMENT OF TRANSPORTATION
Caltrans
DESIGN

FUNCTIONAL SUPERVISOR: ALBERT J. ZEPEDA
CALCULATED-DESIGNED BY: PAUL A. SNYDER
CHECKED BY: BEHROUZ IRAVANCHY
REVISED BY: PS
DATE REVISED: 7/10

LAST REVISION 07-29-10
DATE PLOTTED => 08-NOV-2010
TIME PLOTTED => 13:13

Dist	COUNTY	ROUTE	POST MILES TOTAL PROJECT	SHEET No.	TOTAL SHEETS
04	Ala	13	4.4/8.6	4	53

Paul Snyder 7-28-10
REGISTERED CIVIL ENGINEER DATE

8-2-10
PLANS APPROVAL DATE

REGISTERED PROFESSIONAL ENGINEER
Paul A. Snyder
No. 41128
Exp. 3-31-11
CIVIL
STATE OF CALIFORNIA

THE STATE OF CALIFORNIA OR ITS OFFICERS OR AGENTS SHALL NOT BE RESPONSIBLE FOR THE ACCURACY OR COMPLETENESS OF SCANNED COPIES OF THIS PLAN SHEET.

FOR ACCURATE RIGHT OF WAY AND ACCESS DATA, CONTACT RIGHT OF WAY ENGINEERING AT THE DISTRICT OFFICE.

EXISTING UTILITY FACILITIES HAVE NOT BEEN POSITIVELY IDENTIFIED. THE IDENTIFICATION OF EXISTING UTILITY FACILITIES WILL BE CONCURRENT WITH CONSTRUCTION.

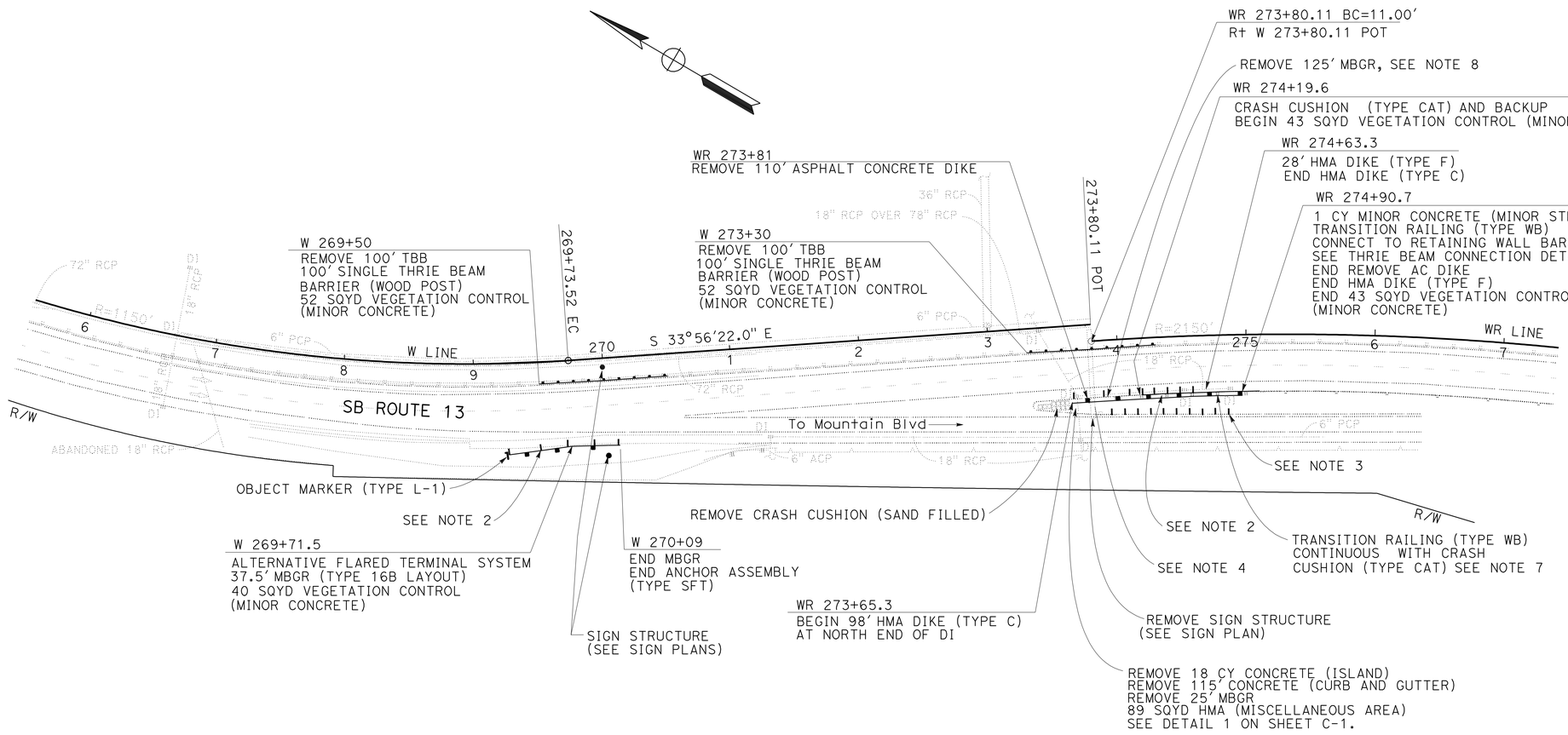

LOCATION 3
ROUTE 13 SOUTHBOUND
(PM 4.4)

FOR NOTES AND LEGEND
SEE SHEET L-1

LAYOUT
SCALE: 1'' = 50'

L-3

STATE OF CALIFORNIA - DEPARTMENT OF TRANSPORTATION
Caltrans
DESIGN

FUNCTIONAL SUPERVISOR: ALBERT J. ZEPEDA
CALCULATED-DESIGNED BY: PAUL A. SNYDER
CHECKED BY: BEHROUZ IRAVANCHY
REVISED BY: PS
DATE REVISED: 7/10

LAST REVISION: 07-29-10
DATE PLOTTED => 08-NOV-2010
TIME PLOTTED => 13:13

Dist	COUNTY	ROUTE	POST MILES TOTAL PROJECT	SHEET No.	TOTAL SHEETS
04	Ala	13	4.4/8.6	5	53

Paul Snyder 7-28-10
REGISTERED CIVIL ENGINEER DATE

8-2-10
PLANS APPROVAL DATE

REGISTERED PROFESSIONAL ENGINEER
Paul Alan Snyder
No. 41128
Exp. 3-31-11
CIVIL
STATE OF CALIFORNIA

THE STATE OF CALIFORNIA OR ITS OFFICERS OR AGENTS SHALL NOT BE RESPONSIBLE FOR THE ACCURACY OR COMPLETENESS OF ELECTRONIC COPIES OF THIS PLAN SHEET.

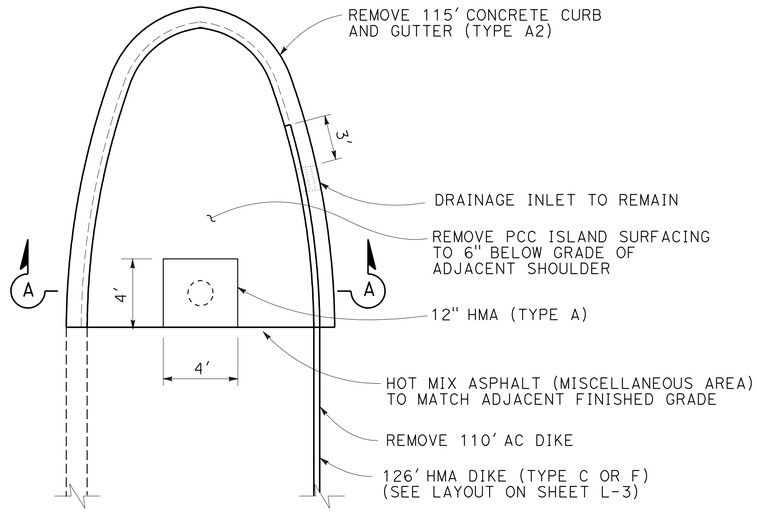

PLAN

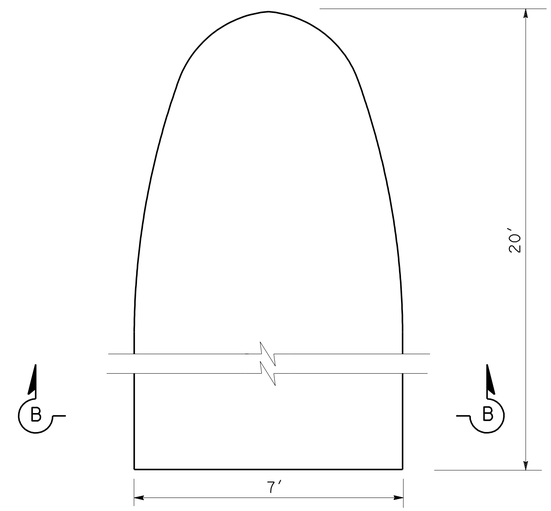

PLAN

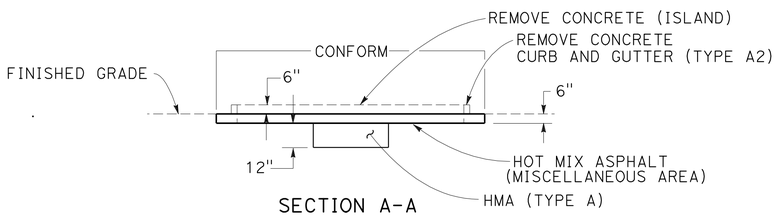

SECTION A-A

DETAIL 1
REMOVE AND RESURFACE GORE ISLAND
LOCATION 3

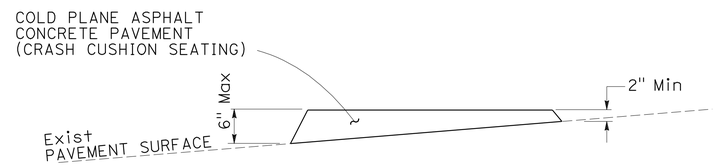

SECTION B-B

DETAIL 3
COLD PLANE ASPHALT CONCRETE PAVEMENT
LOCATION 1

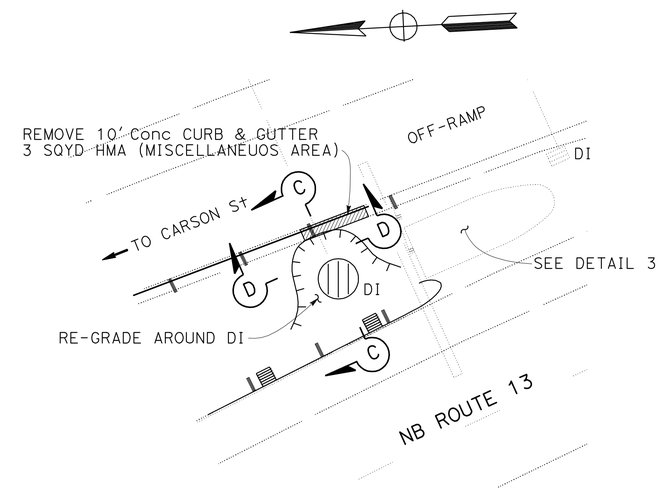

DETAIL 2
(PARTIAL PLAN)
LOCATION 1

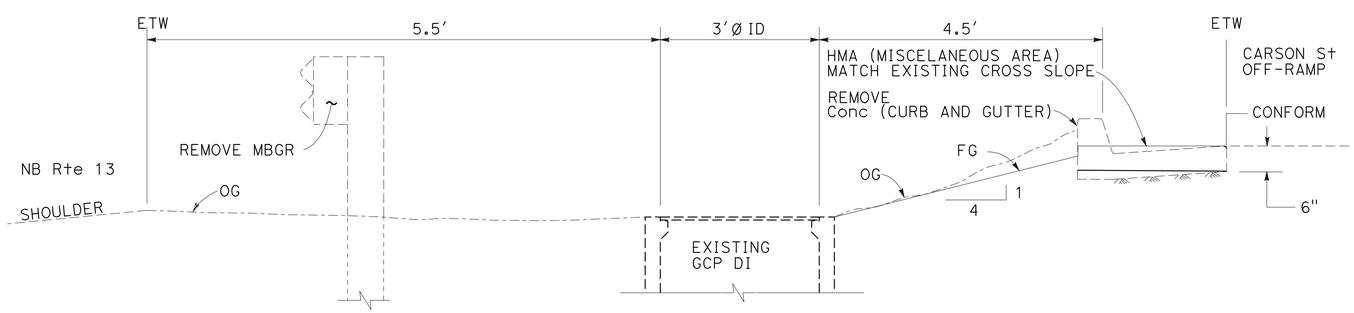

SECTION C-C

REPLACE CONCRETE CURB AND GUTTER WITH HMA
LOCATION 1

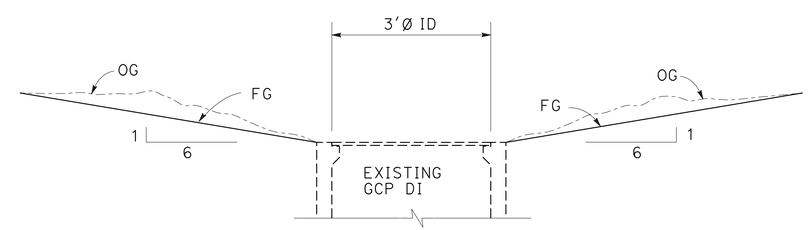

SECTION D-D

CONSTRUCTION DETAILS
NO SCALE

C-1

REVISED BY	DATE REVISED
PS	7/10

PAUL A. SNYDER — BEHROUZ IRAVANCHY — CALCULATED-DESIGNED BY — CHECKED BY

FUNCTIONAL SUPERVISOR: ALBERT J. ZEPEDA

STATE OF CALIFORNIA - DEPARTMENT OF TRANSPORTATION
Caltrans DESIGN

LAST REVISION 07-29-10 | DATE PLOTTED => 08-NOV-2010 | TIME PLOTTED => 13:13

Dist	COUNTY	ROUTE	POST MILES TOTAL PROJECT	SHEET No.	TOTAL SHEETS
04	Ala	13	4.4/8.6	6	53

LICENSED LANDSCAPE ARCHITECT

8-2-10
PLANS APPROVAL DATE

LICENSED LANDSCAPE ARCHITECT — SALLY BANG No.5086 — Expiration Date 11-30-11 — Renewal Date — Date — STATE OF CALIFORNIA

THE STATE OF CALIFORNIA OR ITS OFFICERS OR AGENTS SHALL NOT BE RESPONSIBLE FOR THE ACCURACY OR COMPLETENESS OF SCANNED COPIES OF THIS PLAN SHEET.

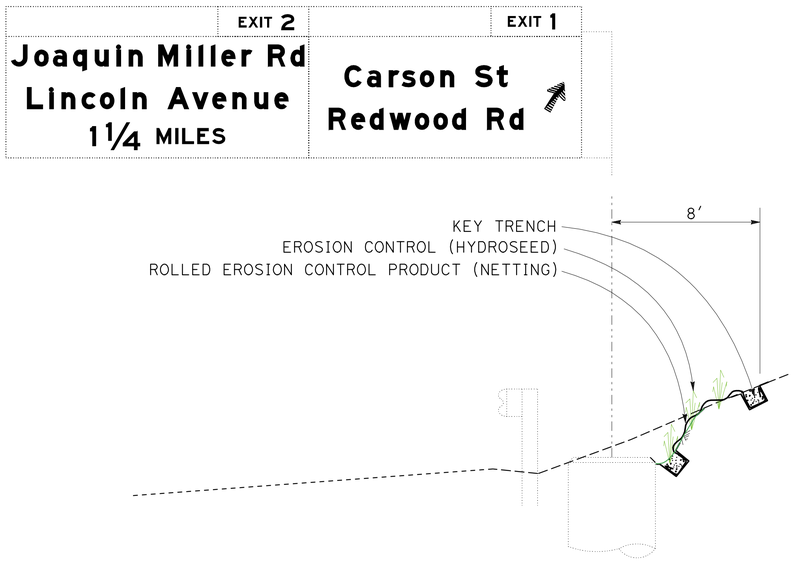

A INSTALL EROSION CONTROL AT STA N1 254 + 00 (FNBT)

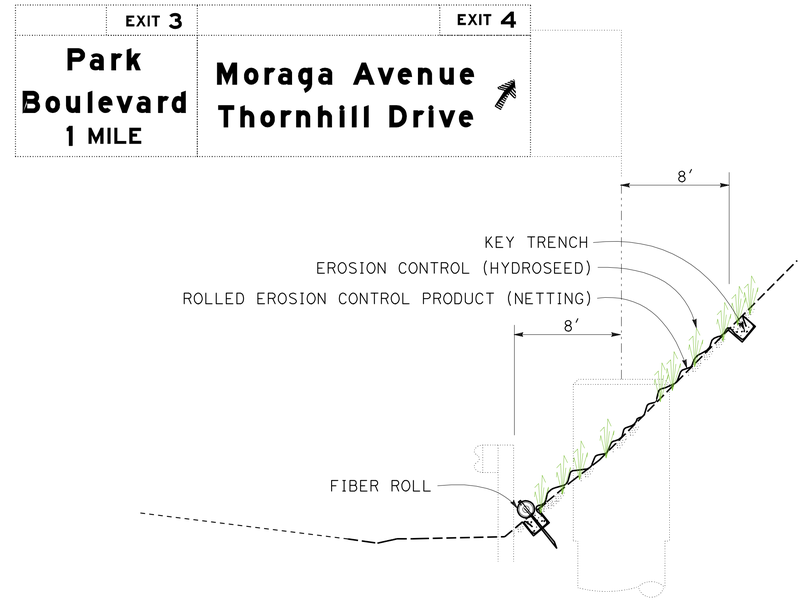

C INSTALL EROSION CONTROL AT STA FR 56+ 00 (FSBT)

EROSION CONTROL QUANTITIES

LOCATION	ROLLED EROSION CONTROL PRODUCT (NETTING) SQFT	EROSION CONTROL (HYDROSEED) SQFT	FIBER ROLL LF
A	120	120	-
C	230	230	20
TOTAL	350	350	20

EROSION CONTROL DETAILS

NO SCALE

ECD-1

STATE OF CALIFORNIA - DEPARTMENT OF TRANSPORTATION
Caltrans® WATER QUALITY

SENIOR LANDSCAPE ARCHITECT: DAVID W YAM
CALCULATED-DESIGNED BY: VIRGIL FRANCISCO
CHECKED BY: SALLY BANG
REVISED BY
DATE REVISED

LAST REVISION 07-29-10
DATE PLOTTED => 08-NOV-2010
TIME PLOTTED => 13:13

Dist	COUNTY	ROUTE	POST MILES TOTAL PROJECT	SHEET No.	TOTAL SHEETS
04	Ala	13	4.4/8.6	7	53

REGISTERED CIVIL ENGINEER 7-28-10 DATE

8-2-10
PLANS APPROVAL DATE

REGISTERED PROFESSIONAL ENGINEER Florante P. Perez No. 41030 Exp. 3-31-11 CIVIL STATE OF CALIFORNIA

THE STATE OF CALIFORNIA OR ITS OFFICERS OR AGENTS SHALL NOT BE RESPONSIBLE FOR THE ACCURACY OR COMPLETENESS OF SCANNED COPIES OF THIS PLAN SHEET.

LEGEND:

→ TRAFFIC FLOW

S DENOTES STATIONARY MOUNTED SIGN

X RAMP CLOSED

(No.) LOCATION OF CONSTRUCTION

[L] CONSTRUCTION AREA SIGN

NOTES:

1. LOCATION OF CONSTRUCTION AREA SIGNS SHOWN ARE APPROXIMATE, EXACT LOCATION TO BE DETERMINED BY THE ENGINEER.
2. ALL CONSTRUCTION AREA SIGNS SHALL BE STATIONARY MOUNTED, UNLESS OTHERWISE INDICATED.
3. SIGN LETTER [J] TO BE INSTALLED AT LEAST 72 Hrs, PRIOR TO THE ROAD CLOSURE.

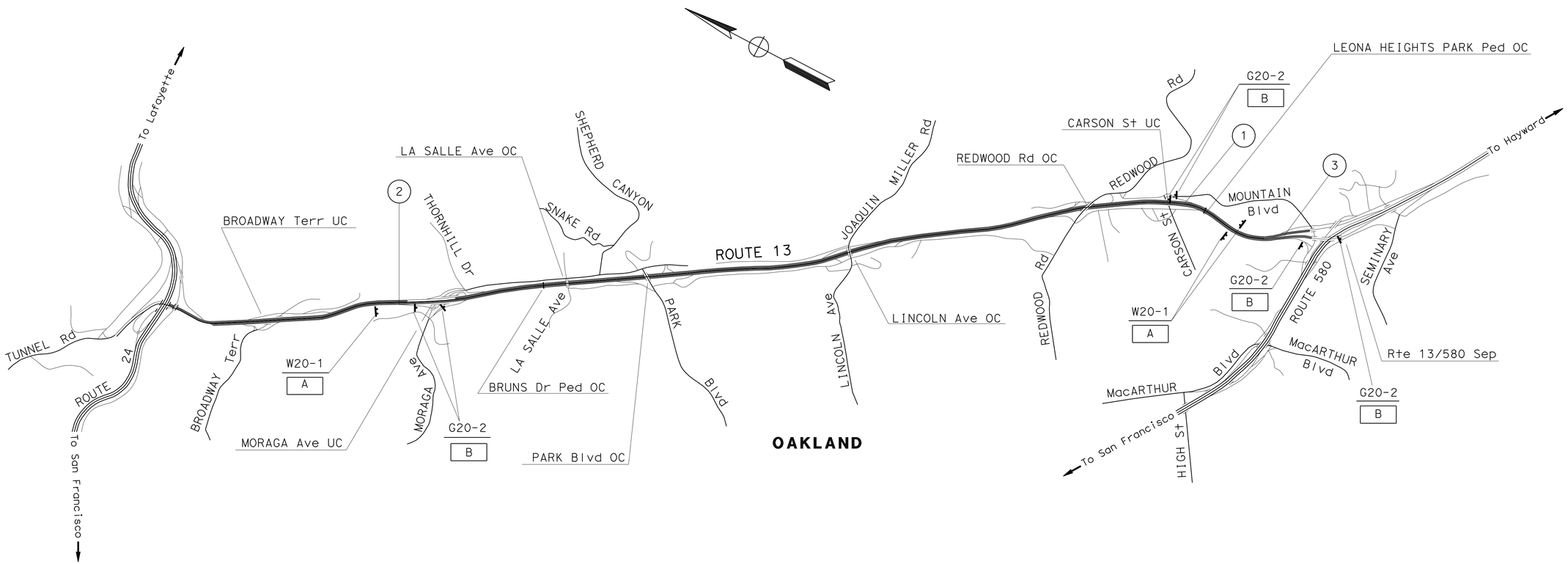

CONSTRUCTION AREA SIGNS

NO SCALE

THIS PLAN ACCURATE FOR CONSTRUCTION AREA SIGN WORK ONLY

CS-1

STATE OF CALIFORNIA - DEPARTMENT OF TRANSPORTATION

Caltrans

TRAFFIC

FUNCTIONAL SUPERVISOR: LOURDES DAVID

CALCULATED-DESIGNED BY: LEOPOLDO G. BONGATO

CHECKED BY: FLORANTE P. PEREZ

REVISED BY: FPP

DATE REVISED: 7/10

LAST REVISION 07-29-10

DATE PLOTTED => 08-NOV-2010

TIME PLOTTED => 13:14

BORDER LAST REVISED 4/11/2008

RELATIVE BORDER SCALE IS IN INCHES 0 1 2 3

USERNAME => s123043

DGN FILE => 44a3411a001.dgn

CU 04250

EA 4A3411

Dist	COUNTY	ROUTE	POST MILES TOTAL PROJECT	SHEET No.	TOTAL SHEETS
04	Ala	13	4.4/8.6	8	53

REGISTERED CIVIL ENGINEER 7-28-10 DATE

8-2-10
PLANS APPROVAL DATE

Florante P. Perez No. 41030 Exp. 3-31-11 CIVIL — REGISTERED PROFESSIONAL ENGINEER — STATE OF CALIFORNIA

THE STATE OF CALIFORNIA OR ITS OFFICERS OR AGENTS SHALL NOT BE RESPONSIBLE FOR THE ACCURACY OR COMPLETENESS OF SCANNED COPIES OF THIS PLAN SHEET.

DETOUR

WB Rte 580/NB Rte 13 CONNECTOR TRAFFIC
→ VIA: WB Rte 580; OFF-RAMP TO SEMINARY Ave/KUHNLE Ave; NB MOUNTAIN Blvd; WB REDWOOD Rd TO NB Rte 13 ON-RAMP

NB MOUNTAIN Blvd ON-RAMP TRAFFIC
→ VIA: WB CALAVERAS; NB DAVEPORT Ave; EB CARSON St; NB MOUNTAIN Blvd; WB REDWOOD Rd; ON-RAMP TO NB Rte 13

EB Rte 580 TO NB Rte 13 TRAFFIC
→ VIA: SEMINARY OFF-RAMP; NB DAVEPORT Ave; SB CARSON St; NB MOUNTAIN Blvd; WB REDWOOD Rd; ON-RAMP TO NB Rte 13

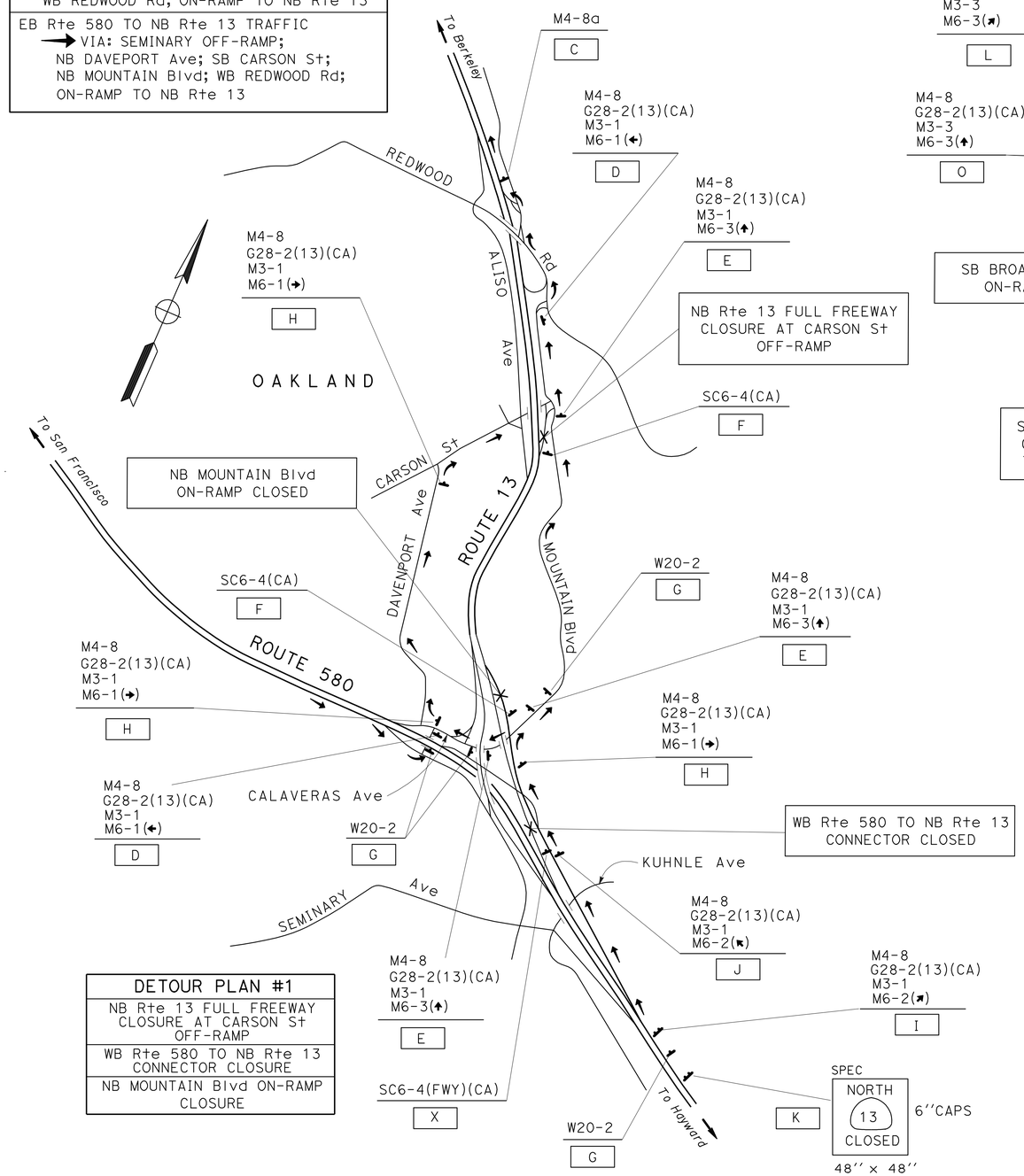

DETOUR PLAN #1

NB Rte 13 FULL FREEWAY CLOSURE AT CARSON St OFF-RAMP

WB Rte 580 TO NB Rte 13 CONNECTOR CLOSURE

NB MOUNTAIN Blvd ON-RAMP CLOSURE

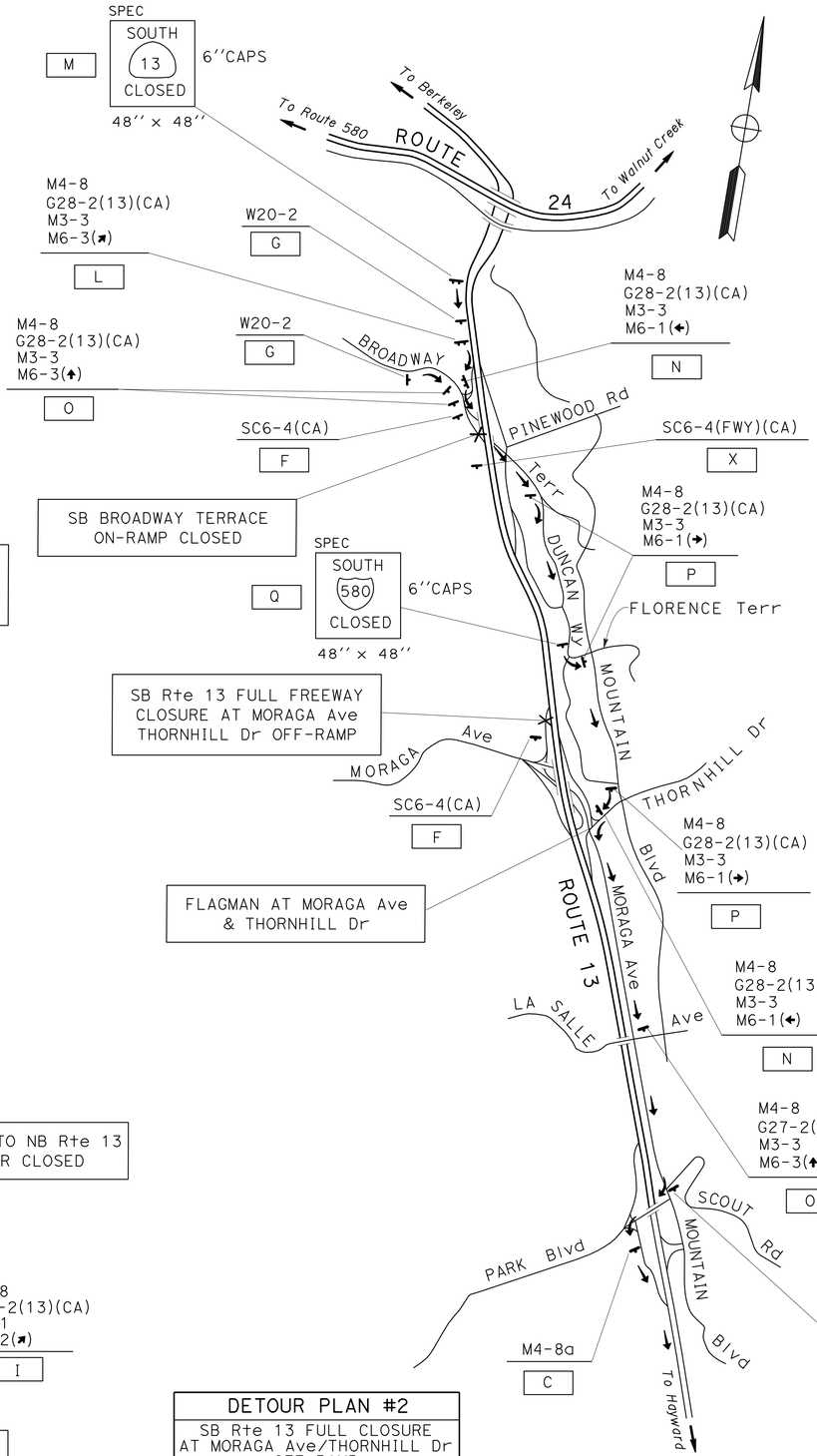

DETOUR

MAINLINE TRAFFIC
→ VIA: SB Rte 13; OFF-RAMP TO BROADWAY TERRACE; EB BROADWAY TERRACE; SB DUNCAN Wy; EB FLORENCE TERRACE; SB MOUNTAIN Blvd; WB THORNHILL Dr; SB MORAGA Ave; WB PARK Blvd; ON-RAMP TO SB Rte 13

SB BROADWAY TERRACE ON-RAMP TRAFFIC
→ VIA: EB BROADWAY TERRACE; SB DUNCAN Wy; EB FLORENCE TERRACE; SB MOUNTAIN Blvd; WB THORNHILL Dr; SB MORAGA Ave; WB PARK Blvd; ON-RAMP TO SB Rte 13

DETOUR PLAN #2

SB Rte 13 FULL CLOSURE AT MORAGA Ave/THORNHILL Dr OFF-RAMP

FOR NOTES AND LEGEND, SEE SHEET CS-1

THIS PLAN ACCURATE FOR CONSTRUCTION AREA SIGN WORK ONLY

CONSTRUCTION AREA SIGNS

NO SCALE

CS-2

STATE OF CALIFORNIA - DEPARTMENT OF TRANSPORTATION
Caltrans®
TRAFFIC

FUNCTIONAL SUPERVISOR: LOURDES DAVID
CALCULATED-DESIGNED BY: LEOPOLDO G. BONGATO
CHECKED BY: FLORANTE P. PEREZ
REVISED BY: FPP
DATE REVISED: 7/10

LAST REVISION | DATE PLOTTED => 08-NOV-2010
07-29-10 | TIME PLOTTED => 13:14

Dist	COUNTY	ROUTE	POST MILES TOTAL PROJECT	SHEET No.	TOTAL SHEETS
04	Ala	13	4.4/8.6	9	53

REGISTERED CIVIL ENGINEER 7-28-10 DATE

8-2-10
PLANS APPROVAL DATE

REGISTERED PROFESSIONAL ENGINEER Florante P. Perez No. 41030 Exp. 3-31-11 CIVIL STATE OF CALIFORNIA

THE STATE OF CALIFORNIA OR ITS OFFICERS OR AGENTS SHALL NOT BE RESPONSIBLE FOR THE ACCURACY OR COMPLETENESS OF SCANNED COPIES OF THIS PLAN SHEET.

DETOUR

MAINLINE TRAFFIC TO EB Rte 580
→ VIA: SB Rte 13; OFF-RAMP TO REDWOOD Rd SB ALISO Ave; EB CARSON St; SB MOUNTAIN Blvd; WB KUHNLE Ave; SEMINARY ON-RAMP TO EB Rte 580
MAINLINE TRAFFIC TO WB Rte 580
→ VIA: SB Rte 13; OFF-RAMP TO REDWOOD Rd; SB ALISO Ave; EB CARSON St; SB MOUNTAIN Blvd; WB CALAVERAS Ave; TO WB Rte 580 ON-RAMP
CARSON St; ON-RAMP TRAFFIC
→ VIA: EB CARSON St; SB MOUNTAIN Blvd; FOLLOW DETOUR TO EB & WB Rte 580

DETOUR

MAINLINE TRAFFIC
→ VIA: EB Rte 24; OFF-RAMP TO BROADWAY; EB BROADWAY; ON-RAMP TO EB Rte 24
NB Rte 13 TO EB Rte 24
→ VIA: NB Rte 13 TO WB Rte 24 WB Rte 24; OFF-RAMP TO COLLEGE Ave; SB PRESLEY Wy; EB KEITH Ave TO EB BROADWAY; EB BROADWAY; ON-RAMP TO EB Rte 24

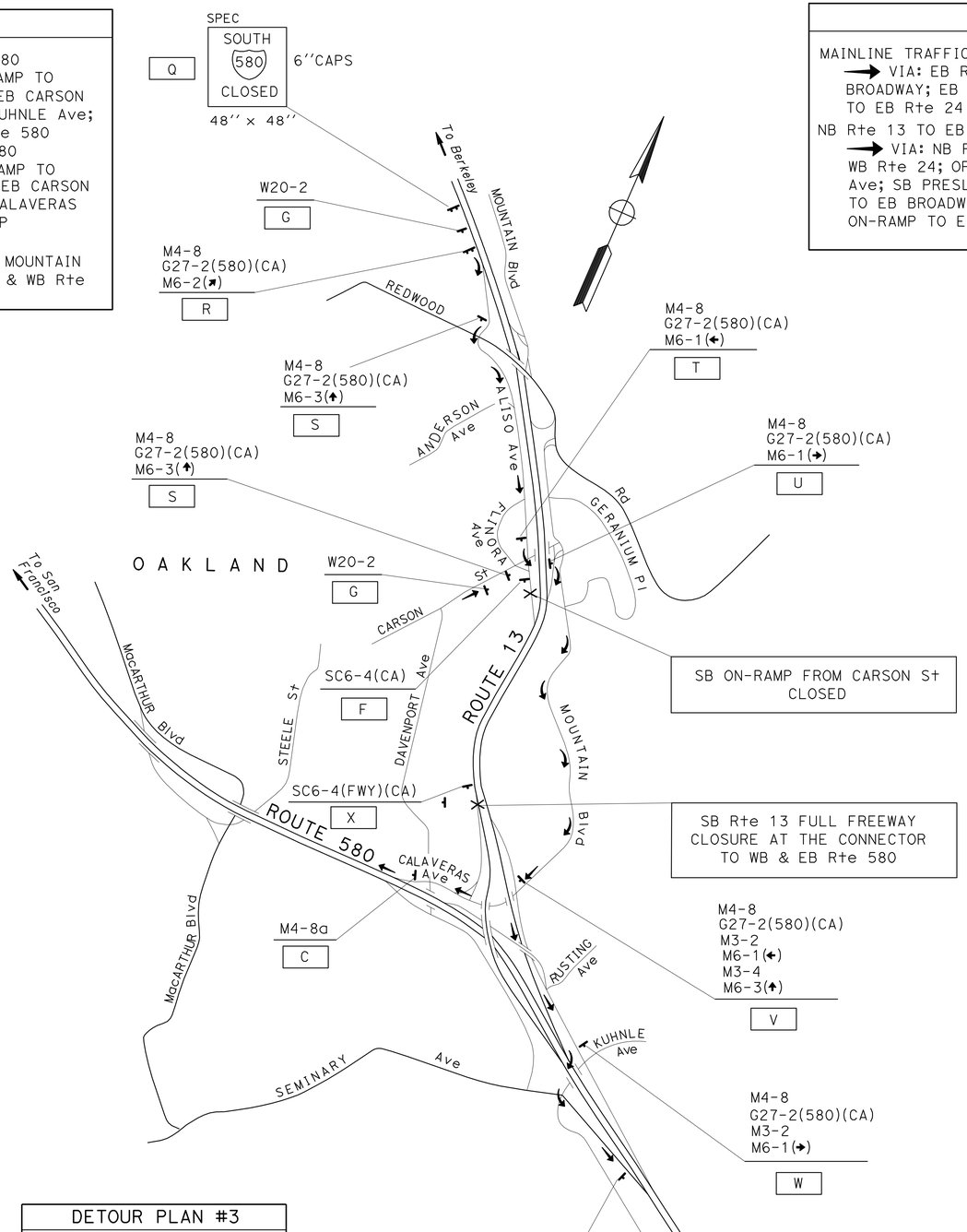

SB ON-RAMP FROM CARSON St CLOSED

SB Rte 13 FULL FREEWAY CLOSURE AT THE CONNECTOR TO WB & EB Rte 580

DETOUR PLAN #3

WB Rte 13 FULL FREEWAY CLOURE AT THE CONNECTOR TO WB & EB Rte 580

FOR NOTES AND LEGEND, SEE SHEET CS-1

THIS PLAN ACCURATE FOR CONSTRUCTION AREA SIGN WORK ONLY

CONSTRUCTION AREA SIGNS

NO SCALE

CS-3

STATE OF CALIFORNIA - DEPARTMENT OF TRANSPORTATION
Caltrans
TRAFFIC

CALCULATED-DESIGNED BY	LEOPOLDO G. BONGATO
CHECKED BY	FLORANTE P. PEREZ
FUNCTIONAL SUPERVISOR	LOURDES DAVID
REVISED BY	FPP
DATE REVISED	7/10

LAST REVISION 07-29-10 | DATE PLOTTED => 08-NOV-2010 | TIME PLOTTED => 13:14

BORDER LAST REVISED 4/11/2008 | RELATIVE BORDER SCALE IS IN INCHES 0 1 2 3 | USERNAME => s123043 | DGN FILE => 44a3411a003.dgn | CU 04250 | EA 4A3411

Dist	COUNTY	ROUTE	POST MILES TOTAL PROJECT	SHEET No.	TOTAL SHEETS
04	Ala	13	4.4/8.6	10	53

Florante P. Perez 7-28-10
REGISTERED CIVIL ENGINEER DATE

8-2-10
PLANS APPROVAL DATE

REGISTERED PROFESSIONAL ENGINEER
Florante P. Perez
No. 41030
Exp. 3-31-11
CIVIL
STATE OF CALIFORNIA

THE STATE OF CALIFORNIA OR ITS OFFICERS OR AGENTS SHALL NOT BE RESPONSIBLE FOR THE ACCURACY OR COMPLETENESS OF SCANNED COPIES OF THIS PLAN SHEET.

STATIONARY MOUNTED CONSTRUCTION AREA SIGNS

SIGN	CODE	MESSAGE	PANEL SIZE (INCH x INCH)	NUMBER OF POST AND SIZE (EA-INCH x INCH)	QUANTITY (EACH)	REMARKS
A	W20-1	ROAD WORK AHEAD	60 x 60	2 - 4 x 6	3	
B	G20-2	END ROAD WORK	36 x 18	1 - 4 x 4	6	
C	M4-8a	END DETOUR	30 x 18	1 - 4 x 4	4	
D	M4-8	DETOUR	24 x 12	1 - 4 x 6	2	
	G28-2(13)(CA)	ROUTE 13	24 x 25			
	M3-1	NORTH	24 x 12			
	M6-1(←)	LEFT ARROW	21 x 15			
E	M4-8	DETOUR	24 x 12	1 - 4 x 6	3	
	G28-2(13)(CA)	ROUTE 13	24 x 25			
	M3-1	NORTH	24 x 12			
	M6-1(↑)	UP ARROW	21 x 15			
F	SC6-4(CA)	RAMP CLOSURE NOTICE	48 x 60	1 - 4 x 6	5	RAMP
G	W20-2	DETOUR AHEAD	48 x 48	1 - 4 x 6	8	
H	M4-8	DETOUR	24 x 12	1 - 4 x 6	3	
	G28-2(13)(CA)	ROUTE 13	24 x 25			
	M3-1	NORTH	24 x 12			
	M6-1(→)	RIGHT ARROW	21 x 15			
I	M4-8	DETOUR	24 x 12	1 - 4 x 6	1	
	G28-2(13)(CA)	ROUTE 13	24 x 25			
	M3-1	NORTH	24 x 12			
	M6-2(↗)	UP-RIGHT ARROW	21 x 15			
J	M4-8	DETOUR	24 x 12	1 - 4 x 6	1	
	G28-2(13)(CA)	ROUTE 13	24 x 25			
	M3-1	NORTH	24 x 12			
	M6-2(↖)	UP-LEFT ARROW	21 x 15			
K	SPECIAL	NORTH ROUTE 13 CLOSED	48 x 48	1 - 4 x 4	1	
L	M4-8	DETOUR	24 x 12	1 - 4 x 6	1	
	G28-2(13)(CA)	ROUTE 13	24 x 25			
	M3-3	SOUTH	24 x 12			
	M6-2(↗)	UP RIGHT ARROW	21 x 15			
M	SPECIAL	SOUTH ROUTE 13 CLOSED	48 x 48	1 - 4 x 4	1	
N	M4-8	DETOUR	24 x 12	1 - 4 x 6	2	
	G28-2(13)(CA)	ROUTE 13	24 x 25			
	M3-3	SOUTH	24 x 12			
	M6-1(←)	LEFT ARROW	21 x 15			
O	M4-8	DETOUR	24 x 12	1 - 4 x 6	3	
	G28-2(13)(CA)	ROUTE 13	24 x 25			
	M3-3	SOUTH	24 x 12			
	M6-3(↑)	UP ARROW	21 x 15			

STATIONARY MOUNTED CONSTRUCTION AREA SIGNS

SIGN	CODE	MESSAGE	PANEL SIZE (INCH x INCH)	NUMBER OF POST AND SIZE (EA-INCH x INCH)	QUANTITY (EACH)	REMARKS
P	M4-8	DETOUR	24 x 12	1 - 4 x 6	4	
	G28-2(13)(CA)	ROUTE 13	24 x 25			
	M3-3	SOUTH	24 x 12			
	M6-1(→)	RIGHT ARROW	21 x 15			
Q	SPECIAL	ROUTE 580 CLOSED	48 x 48	1 - 4 x 4	2	
R	M4-8	DETOUR	24 x 12	1 - 4 x 6	1	
	G27-2(580)(CA)	ROUTE 580	30 x 25			
	M6-2(↗)	UP RIGHT ARROW	21 x 15			
S	M4-8	DETOUR	24 x 12	1 - 4 x 6	2	
	G27-2(580)(CA)	ROUTE 580	30 x 25			
	M6-3(↑)	UP ARROW	21 x 15			
T	M4-8	DETOUR	24 x 25	1 - 4 x 6	1	
	G27-2(580)(CA)	ROUTE 580	30 x 25			
	M6-1(←)	LEFT ARROW	21 x 15			
U	M4-8	DETOUR	24 x 12	1 - 4 x 6	1	
	G27-2(580)(CA)	ROUTE 580	30 x 25			
	M6-1(→)	RIGHT ARROW	21 x 15			
V	M4-8	DETOUR	24 x 12	1 - 4 x 6	1	
	G27-2(580)(CA)	ROUTE 580	30 x 25			
	M3-2	EAST	24 x 12			
	M6-1(←)	LEFT ARROW	21 x 15			
	M3-4	WEST	24 x 12			
	M6-3(↑)	UP ARROW	21 x 15			
W	M4-8	DETOUR	24 x 12	1 - 4 x 6	1	
	G27-2(580)(CA)	ROUTE 580	30 x 25			
	M3-2	EAST	24 x 12			
	M6-1(→)	RIGHT ARROW	21 x 15			
X	SC6-4(FWY)(CA)	FWY CLOSURE NOTICE	48 x 60	1 - 4 x 6	3	FWY
Y	W21-5bR	RIGHT SHOULDER CLOSED AHEAD	48 x 48	1 - 4 x 4	3	SEE Sht THD-1
Z	W21-5bL	LEFT SHOULDER CLOSED AHEAD	48 x 48	1 - 4 x 4	1	SEE Sht THD-2

CONSTRUCTION AREA SIGNS

THIS PLAN ACCURATE FOR
CONSTRUCTION AREA SIGN WORK ONLY

CS-4

REVISED BY	DATE REVISED
FPP	7/10

CALCULATED-DESIGNED BY: LEOPOLDO G. BONGATO
CHECKED BY: FLORANTE P. PEREZ
FUNCTIONAL SUPERVISOR: LOURDES DAVID

STATE OF CALIFORNIA - DEPARTMENT OF TRANSPORTATION
Caltrans
TRAFFIC

LAST REVISION 07-29-10
DATE PLOTTED => 08-NOV-2010
TIME PLOTTED => 13:14

(New IV-A1a-13)

FED. ROAD DIST. NO.	STATE	PROJ. No.	FISCAL YEAR	SHEET NO.	TOTAL SHEETS
7	CAL.				

DIST.	COUNTY	ROUTE	SECTION	SHEET NO.	TOTAL SHEETS
7	ALA	880	9.6L	182	182

BRIDGE ENGINEER — CIVIL ENGINEER IN RESPONSIBLE CHARGE

Approved June 8, 1964

AS BUILT PLANS
Contract No. 04-125324
Date Completed 11-15-66
Document No. 4000091

INFORMATION ON ACTUAL FOUNDATION CONDITIONS ENCOUNTERED IS ON FILE IN BRIDGE GEOLOGY SECTION

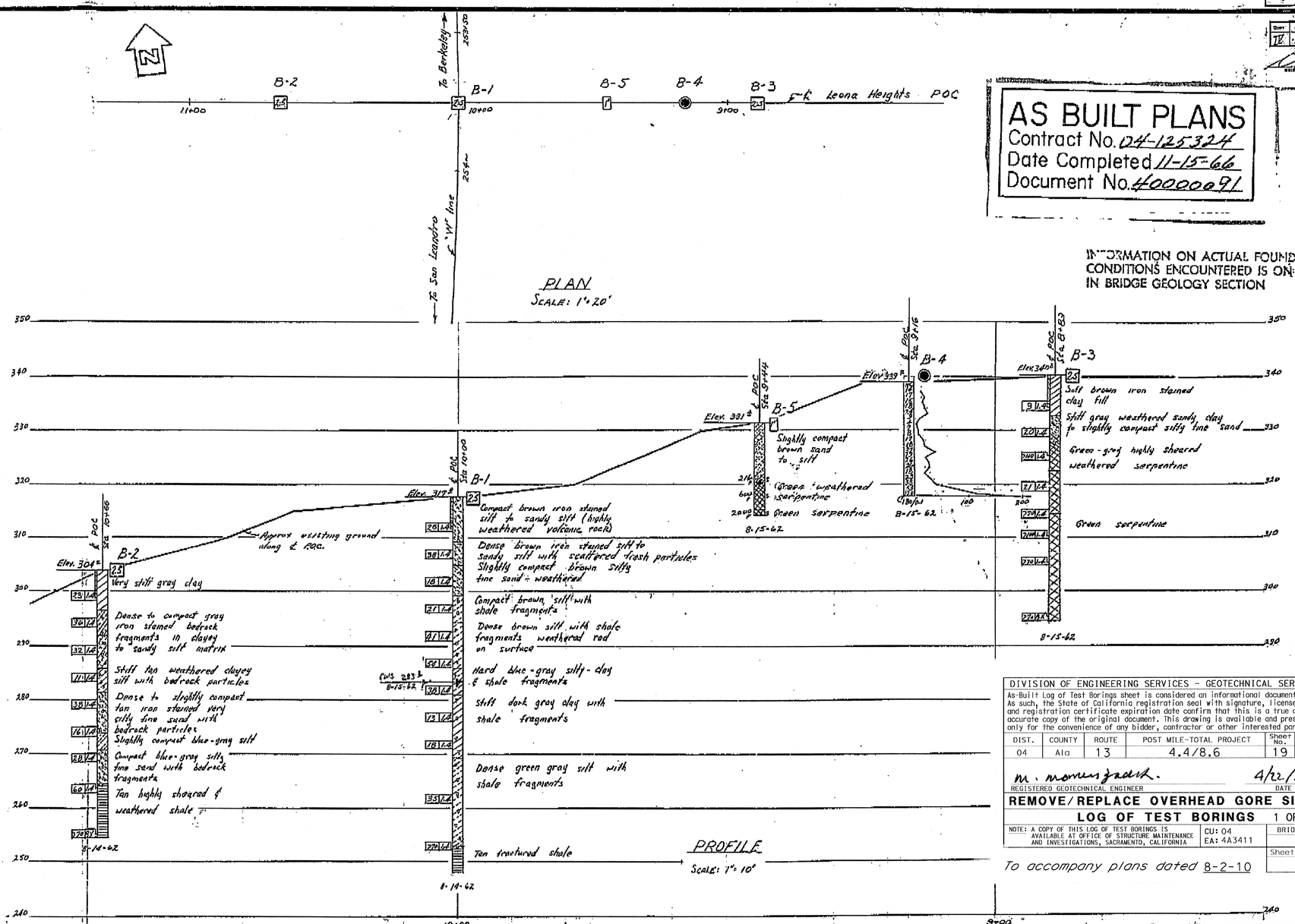

INFORMATION ON ACTUAL FOUNDATION CONDITIONS ENCOUNTERED IS ON FILE IN BRIDGE GEOLOGY SECTION

DIVISION OF ENGINEERING SERVICES - GEOTECHNICAL SERVICES

As-Built Log of Test Borings sheet is considered an informational document only. As such, the State of California registration seal with signature, license number and registration certificate expiration date confirm that this is a true and accurate copy of the original document. This drawing is available and presented only for the convenience of any bidder, contractor or other interested party.

DIST.	COUNTY	ROUTE	POST MILE-TOTAL PROJECT	Sheet No.	Total Sheets
04	Ala	13	4.4/8.6	19	53

M. Momenzadeh — 4/22/2010
REGISTERED GEOTECHNICAL ENGINEER — DATE

REGISTERED PROFESSIONAL ENGINEER Mahmood Momenzadeh No. 2685 Exp. 12-31-11 GEOTECHNICAL STATE OF CALIFORNIA

REMOVE/REPLACE OVERHEAD GORE SIGNS

LOG OF TEST BORINGS 1 OF 3

NOTE: A COPY OF THIS LOG OF TEST BORINGS IS AVAILABLE AT OFFICE OF STRUCTURE MAINTENANCE AND INVESTIGATIONS, SACRAMENTO, CALIFORNIA

CU: 04 EA: 4A3411 — BRIDGE No. — Sheet of

To accompany plans dated 8-2-10

SHEET 13 OF 13

BRIDGE DEPARTMENT

DRAWN: W. Patterson 9-14-62
CHECKED: R.E. Hazel 12/62
Approval Recommended by: Chief Bridge Engineer

CLASSIFICATION OF MATERIAL BASED ON STANDARD GRADE SIZE LIMITS

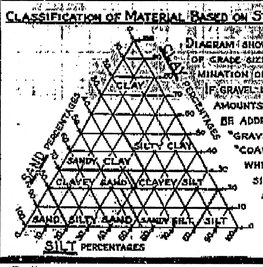

DIAGRAM SHOWING THE BASIS FOR ESTIMATES OF GRADE SIZE DISTRIBUTION USED IN DETERMINATION OF CLASS NAMES. IF GRAVEL IS PRESENT IN APPRECIABLE AMOUNTS THE TERM "GRAVELLY" MAY BE ADDED TO THE CLASS NAME, VIZ. "GRAVELLY SAND". THE TERMS "COARSE", "MEDIUM" AND "FINE" WHEN USED TO DESCRIBE SAND, SILT AND GRAVEL REFER TO STANDARD GRADE SIZE LIMITS.

LEGEND OF EARTH MATERIALS

- GRAVEL
- SAND
- SILT
- CLAY
- SANDY CLAY OR CLAYEY SAND
- SANDY SILT OR SILTY SAND
- SILTY CLAY OR CLAYEY SILT
- PEAT AND/OR ORGANIC MATTER
- FILL MATERIAL
- IGNEOUS ROCK
- SEDIMENTARY ROCK
- METAMORPHIC ROCK

LEGEND OF BORING OPERATIONS

- PENETROMETER
- 2¼" CONE PENETROMETER
- SAMPLER BORING (DRY)
- ROTARY BORING (WET)
- AUGER BORING (DRY)
- JET BORING
- CORE BORING
- TEST PIT

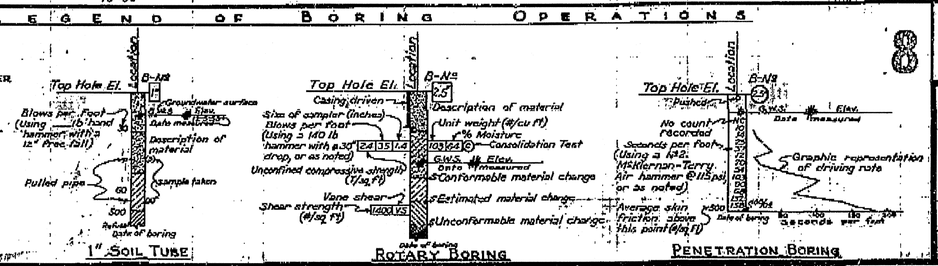

NOTE

Classification of earth material as shown on this sheet is based upon field inspection and is not to be construed to imply mechanical analysis.

STATE OF CALIFORNIA
DEPARTMENT OF PUBLIC WORKS
DIVISION OF HIGHWAYS

LEONA HEIGHTS PARK P.O.C.

LOG OF TEST BORINGS

SCALE: As Shown — BRIDGE 33 3/61 — FILE — DRAWING 33 3/61-13

61-04T10H1253.2

PREL. DRAWING NO. P-

FED. ROAD DIV. NO.	STATE	PROJ. NO.	FISCAL YEAR	SHEET NO.	TOTAL SHEETS
7	CAL.				

DIST.	COUNTY	ROUTE	SECTION	SHEET NO.	TOTAL SHEETS
IX	Ala	13	4.4/8.6	20A	25

October 16 1961

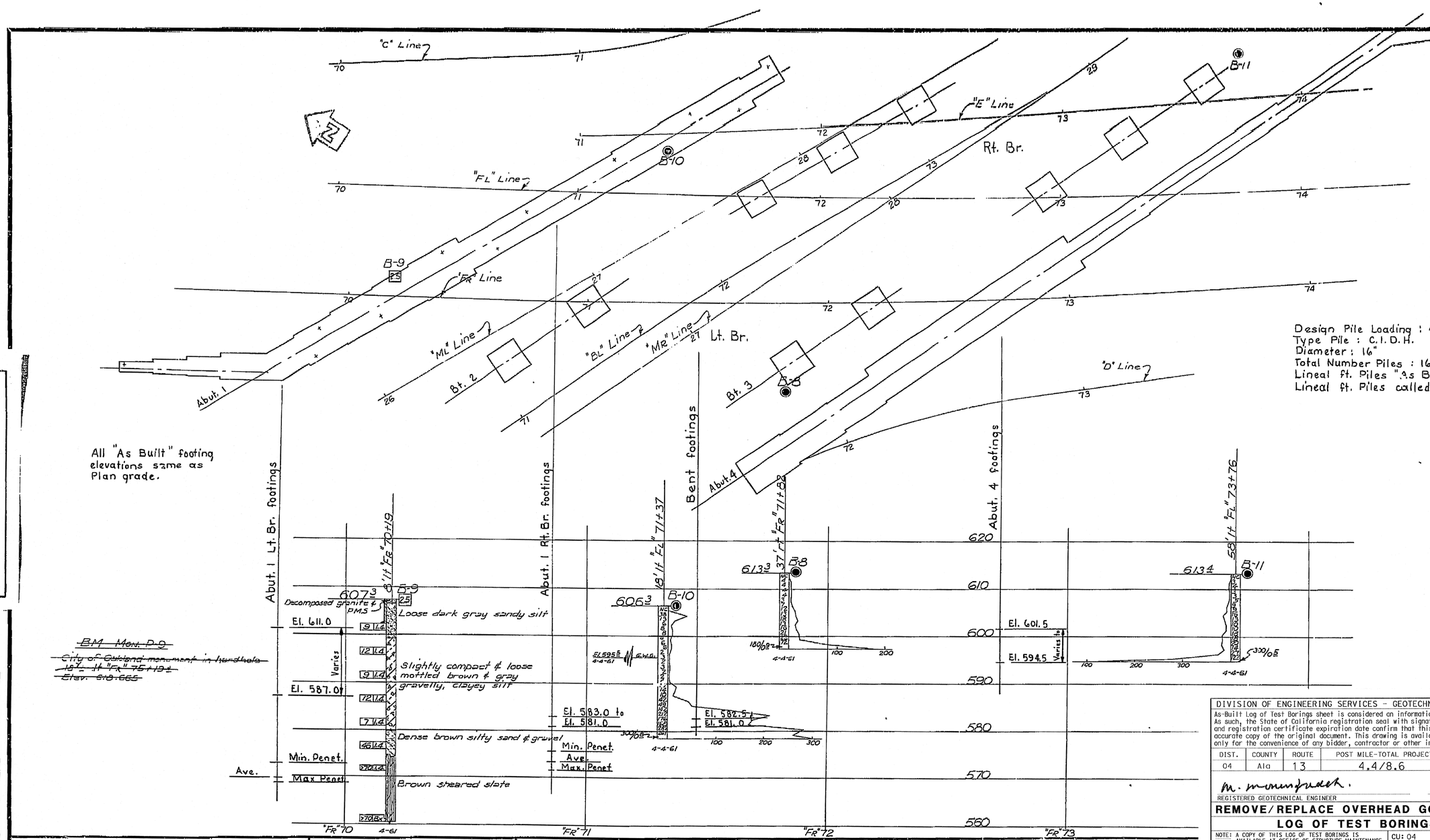

Design Pile Loading : 45 T
Type Pile : C.I.D.H.
Diameter : 16"
Total Number Piles : 166
Lineal ft. Piles "As Built": 2721.7
Lineal ft. Piles called for on plans: 2,575

DIVISION OF ENGINEERING SERVICES - GEOTECHNICAL SERVICES

As-Built Log of Test Borings sheet is considered an informational document only. As such, the State of California registration seal with signature, license number and registration certificate expiration date confirm that this is a true and accurate copy of the original document. This drawing is available and presented only for the convenience of any bidder, contractor or other interested party.

DIST.	COUNTY	ROUTE	POST MILE-TOTAL PROJECT	Sheet No.	Total Sheets
04	Ala	13	4.4/8.6	20	53

M. Momenzadeh. 4/22/2010
REGISTERED GEOTECHNICAL ENGINEER DATE

REGISTERED PROFESSIONAL ENGINEER Mahmood Momenzadeh No. 2685 Exp. 12-31-11 GEOTECHNICAL STATE OF CALIFORNIA

REMOVE/REPLACE OVERHEAD GORE SIGNS

LOG OF TEST BORINGS 2 OF 3

NOTE: A COPY OF THIS LOG OF TEST BORINGS IS AVAILABLE AT OFFICE OF STRUCTURE MAINTENANCE AND INVESTIGATIONS, SACRAMENTO, CALIFORNIA

CU: 04
EA: 4A3411

BRIDGE No.
Sheet of

To accompany plans dated 8-2-10

STATE OF CALIFORNIA
DEPARTMENT OF PUBLIC WORKS
DIVISION OF HIGHWAYS

MORAGA AVENUE UNDERCROSSING

LOG OF TEST BORINGS

SCALE Horiz: 1"=20' Vert: 1"=10' | BRIDGE 33-227 R/L | FILE | DRAWING C-33227-44

PHEL. DRAWING NO. P-33227-44

PR-33227-6

FIELD STUDY by Nelson 4-61
FIELD SUPERV. by Nelson 5-61
CHECKED by Nelson 5-61
Approved & Recommended by: Chief, Soil Mechanics Unit (Geotechnical) Chief, Bridge Design Branch

Contract No. 62-4T1351
Date Completed
Document No. 4000250?

CLASSIFICATION OF MATERIAL BASED ON STANDARD GRADE SIZE LIMITS

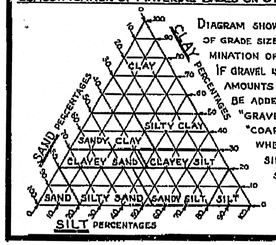

DIAGRAM SHOWING THE BASIS FOR ESTIMATES OF GRADE SIZE DISTRIBUTION USED IN DETERMINATION OF CLASS NAMES. IF GRAVEL IS PRESENT IN APPRECIABLE AMOUNTS THE TERM "GRAVELLY" MAY BE ADDED TO THE CLASS NAME, VIZ. "GRAVELLY SAND". THE TERMS "COARSE", "MEDIUM" AND "FINE" WHEN USED TO DESCRIBE SAND, SILT AND GRAVEL REFER TO STANDARD GRADE SIZE LIMITS.

LEGEND OF EARTH MATERIALS

- GRAVEL
- SAND
- SILT
- CLAY
- SANDY CLAY OR CLAYEY SAND
- SANDY SILT OR SILTY SAND
- SILTY CLAY OR CLAYEY SILT
- PEAT AND/OR ORGANIC MATTER
- FILL MATERIAL
- IGNEOUS ROCK
- SEDIMENTARY ROCK
- METAMORPHIC ROCK

LEGEND OF BORING OPERATIONS

- PEN. PENETROMETER
- 2¼" CONE PENETROMETER
- SAMPLER BORING (DRY)
- ROTARY BORING (WET)
- AUGER BORING (DRY)
- JET BORING
- CORE BORING
- TEST PIT

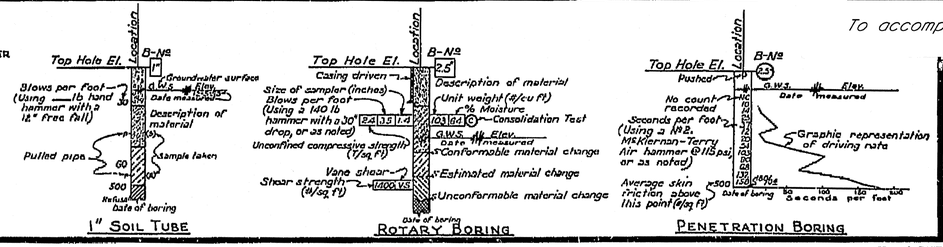

129

FED. ROAD DIV No.	STATE	PROJ. No.	FISCAL YEAR	SHEET No.	TOTAL SHEETS
7	CAL.			357	506

DIST.	COUNTY	ROUTE	SECTION	SHEET No.	TOTAL SHEETS
IV	Ala	~~22~~	~~Oak~~	~~9~~	~~9~~

BRIDGE ENGINEER — CIVIL ENGINEER — LICENSE NUMBER

DATE APPROVED NOVEMBER 17 1961

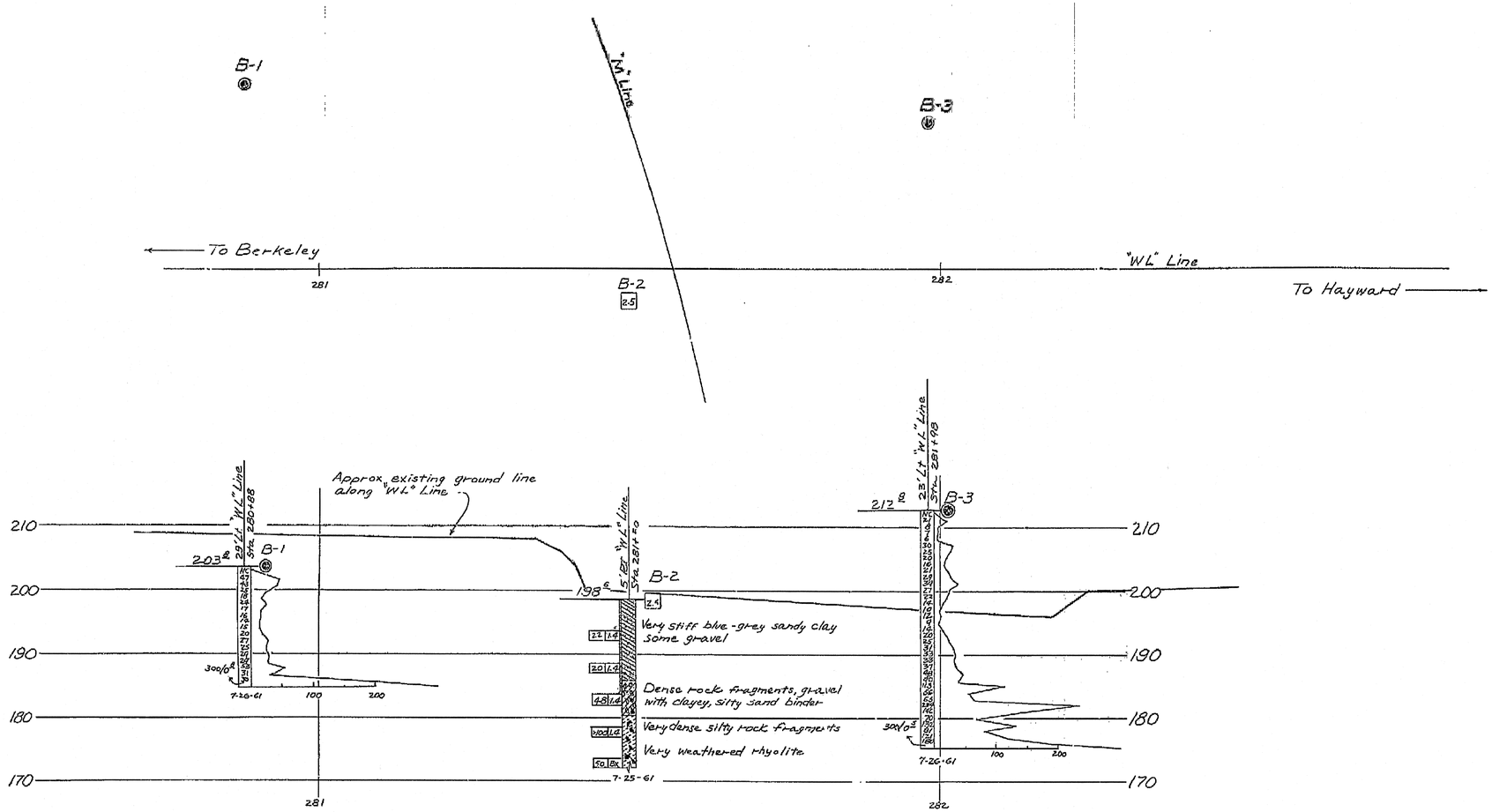

B.M.
Point on concrete foundation
58' Lt "WL" Line sta. 281+90
Elev. 206.82

NO GROUND WATER ENCOUNTERED DURING THIS INVESTIGATION BY BRIDGE DEPT. GEOLOGY SECTION
DATE 7-26-61

AS BUILT PLANS
Contract No. 04-122024
Date Completed
Document No. 4000254

BRIDGE DEPARTMENT

DRAWN	N. P. Schneider 9-61
CHECKED	H. Dev. Shawver 10-61

Approval Recommended by: [signature] Bridge Engineer
[signature] Assistant Bridge Engineer

DIVISION OF ENGINEERING SERVICES - GEOTECHNICAL SERVICES

As-Built Log of Test Borings sheet is considered an informational document only. As such, the State of California registration seal with signature, license number and registration certificate expiration date confirm that this is a true and accurate copy of the original document. This drawing is available and presented only for the convenience of any bidder, contractor or other interested party.

DIST.	COUNTY	ROUTE	POST MILE-TOTAL PROJECT	Sheet No.	Total Sheets
04	Ala	13	4.4/8.6	21	53

M. Momenzadeh — 4/22/2010
REGISTERED GEOTECHNICAL ENGINEER — DATE

REGISTERED PROFESSIONAL ENGINEER — Mahmood Momenzadeh — No. 2685 — Exp. 12-31-11 — GEOTECHNICAL — STATE OF CALIFORNIA

REMOVE/REPLACE OVERHEAD GORE SIGNS

LOG OF TEST BORINGS 3 OF 3

NOTE: A COPY OF THIS LOG OF TEST BORINGS IS AVAILABLE AT OFFICE OF STRUCTURE MAINTENANCE AND INVESTIGATIONS, SACRAMENTO, CALIFORNIA

CU: 04
EA: 4A3411

BRIDGE No.
Sheet of

To accompany plans dated 8-2-10

CLASSIFICATION OF MATERIAL BASED ON STANDARD GRADE SIZE LIMITS

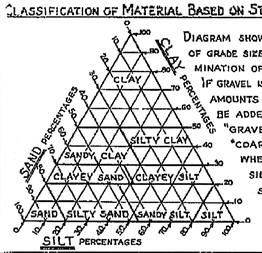

DIAGRAM SHOWING THE BASIS FOR ESTIMATES OF GRADE SIZE DISTRIBUTION USED IN DETERMINATION OF CLASS NAMES.

IF GRAVEL IS PRESENT IN APPRECIABLE AMOUNTS THE TERM "GRAVELLY" MAY BE ADDED TO THE CLASS NAME, VIZ. "GRAVELLY SAND." THE TERMS "COARSE", "MEDIUM" AND "FINE" WHEN USED TO DESCRIBE SAND, SILT AND GRAVEL. REFER TO STANDARD GRADE SIZE LIMITS.

LEGEND OF EARTH MATERIALS

- GRAVEL
- SAND
- SILT
- CLAY
- SANDY CLAY OR CLAYEY SAND
- SANDY SILT OR SILTY SAND
- SILTY CLAY OR CLAYEY SILT
- PEAT AND/OR ORGANIC MATTER
- FILL MATERIAL
- IGNEOUS ROCK
- SEDIMENTARY ROCK
- METAMORPHIC ROCK

LEGEND OF BORING OPERATIONS

- PEN — PENETROMETER
- 2¼" CONE PENETROMETER
- SB — SAMPLER BORING (DRY)
- RB — ROTARY BORING (WET)
- AB — AUGER BORING (DRY)
- JB — JET BORING
- CB — CORE BORING
- TP — TEST PIT

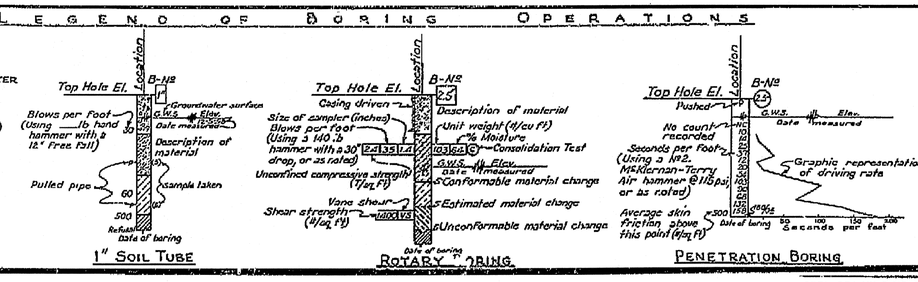

NOTE

Classification of earth material as shown on this sheet is based upon field inspection and is not to be construed to imply mechanical analysis.

STATE OF CALIFORNIA
DEPARTMENT OF PUBLIC WORKS
DIVISION OF HIGHWAYS

MOUNTAIN BLVD UC

LOG OF TEST BORINGS

SCALE 1" = 10'	BRIDGE 33-348	FILE	DRAWING C-33348-9

PREL. DRAWING NO. P-33348-14 1/31/62

PR-33348-4

Dist	COUNTY	ROUTE	POST MILES TOTAL PROJECT	SHEET No.	TOTAL SHEETS
04	Ala	13	4.4/8.6	11	53

Paul Snyder 7-28-10
REGISTERED CIVIL ENGINEER DATE

8-2-10
PLANS APPROVAL DATE

REGISTERED PROFESSIONAL ENGINEER
Paul Alan Snyder
No. 41128
Exp. 3-31-11
CIVIL
STATE OF CALIFORNIA

THE STATE OF CALIFORNIA OR ITS OFFICERS OR AGENTS SHALL NOT BE RESPONSIBLE FOR THE ACCURACY OR COMPLETENESS OF SCANNED COPIES OF THIS PLAN SHEET.

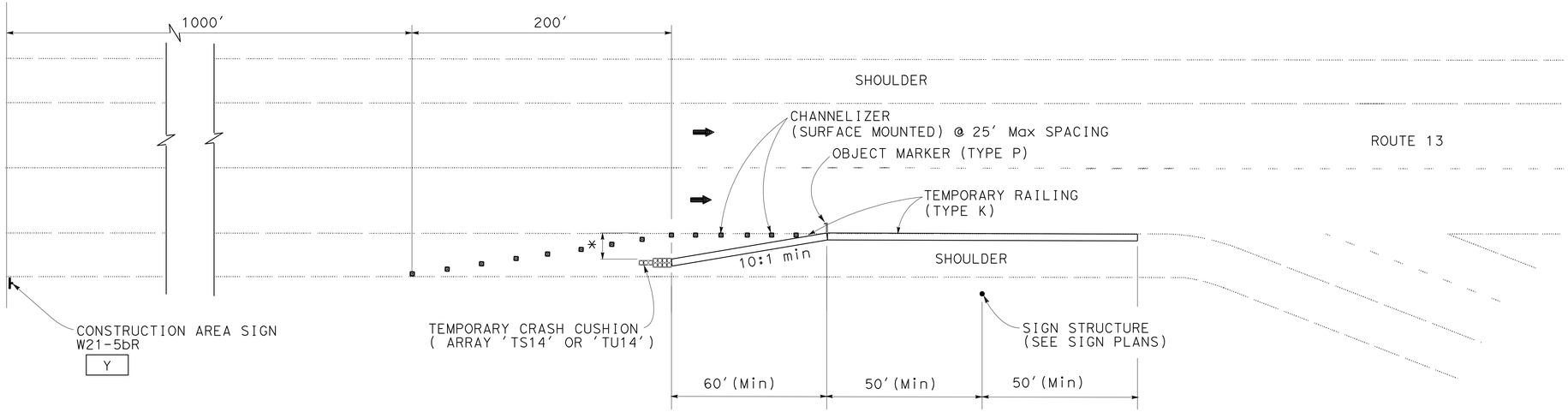

DETAIL 1 (TYPICAL AT NEW SIGN)

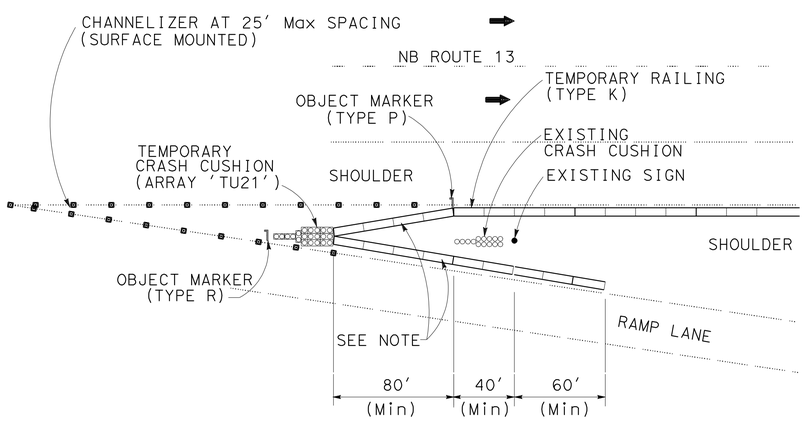

DETAIL 2 (TYPICAL AT EXISTING SIGN)

NOTE: TAPER 10:1 MINIMUM

* CRASH CUSHION REQUIRED IF UPSTREAM END OF TEMPORARY RAILING (TYPE K) IS LESS THAN 15′ FROM ETW

TEMPORARY RAILING (TYPE K) AND TEMPORARY CRASH CUSHIONS

LOCATION	TEMPORARY CRASH CUSHION ARRAY TYPE [N]	TEMPORARY CRASH CUSHION MODULE	TEMPORARY RAILING (TYPE K)	CHANNELIZER (SURFACE MOUNTED)	OBJECT MARKER TYPE P [N]	OBJECT MARKER TYPE R [N]
		EA	LF	EA		
1	TU14 & TU21	35	680	26	2	1
2	TS14 & TU21	35	540	28	2	1
3	TU14, TS14 & TU21	63	1000	54	4	1
TOTAL		133	2220	108	8	3

[N] NOT A SEPARATE PAY ITEM, FOR INFORMATION ONLY.

TRAFFIC HANDLING DETAILS

NO SCALE

THIS PLAN ACCURATE FOR TRAFFIC HANDLING ONLY

THD-1

STATE OF CALIFORNIA - DEPARTMENT OF TRANSPORTATION
Caltrans
DESIGN

FUNCTIONAL SUPERVISOR: ALBERT J. ZEPEDA
CALCULATED-DESIGNED BY: PAUL A. SNYDER
CHECKED BY: BEHROUZ IRAVANCHY
REVISED BY: PS
DATE REVISED: 7/10

LAST REVISION 07-29-10
DATE PLOTTED => 08-NOV-2010
TIME PLOTTED => 13:15

BORDER LAST REVISED 4/11/2008
RELATIVE BORDER SCALE IS IN INCHES 0 1 2 3
USERNAME => s123043
DGN FILE => 44a341me001.dgn
CU 04250
EA 4A3411

Dist	COUNTY	ROUTE	POST MILES TOTAL PROJECT	SHEET No.	TOTAL SHEETS
04	Ala	13	4.4/8.6	12	53

Paul Snyder 7-28-10
REGISTERED CIVIL ENGINEER DATE

8-2-10
PLANS APPROVAL DATE

REGISTERED PROFESSIONAL ENGINEER
Paul Alan Snyder
No. 41128
Exp. 3-31-11
CIVIL
STATE OF CALIFORNIA

THE STATE OF CALIFORNIA OR ITS OFFICERS OR AGENTS SHALL NOT BE RESPONSIBLE FOR THE ACCURACY OR COMPLETENESS OF SCANNED COPIES OF THIS PLAN SHEET.

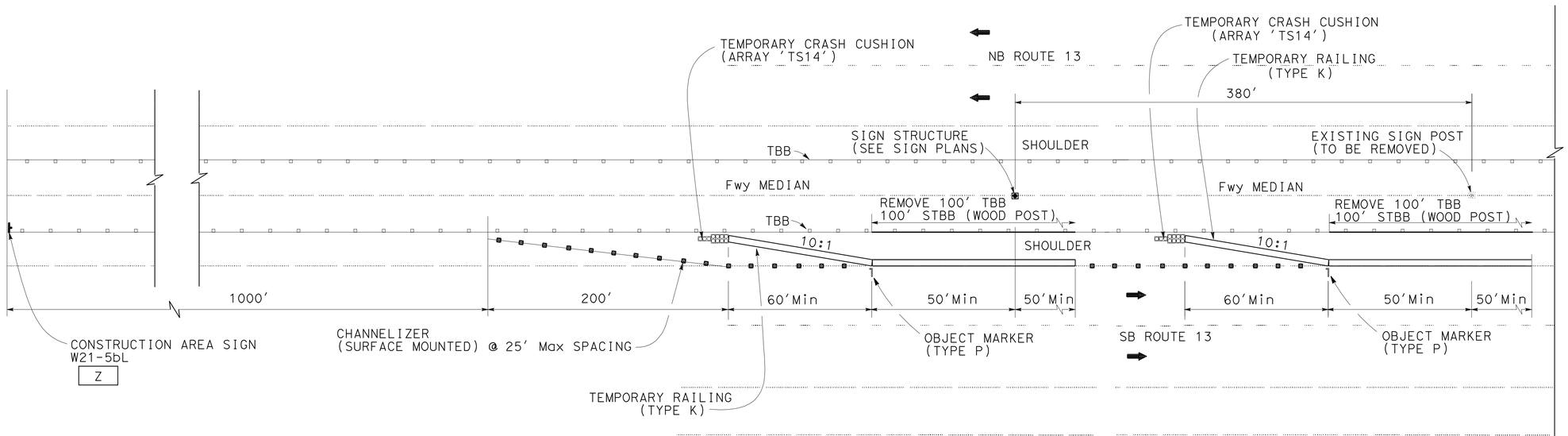

DETAIL 3 (LOCATION 3, IN MEDIAN)

TRAFFIC HANDLING DETAILS

NO SCALE

THIS PLAN ACCURATE FOR
TRAFFIC HANDLING ONLY

THD-2

STATE OF CALIFORNIA - DEPARTMENT OF TRANSPORTATION
Caltrans **DESIGN**

FUNCTIONAL SUPERVISOR: ALBERT J. ZEPEDA
CALCULATED-DESIGNED BY: PAUL A. SNYDER
CHECKED BY: BEHROUZ IRAVANCHY
REVISED BY: PS
DATE REVISED: 7/10

LAST REVISION 07-29-10
DATE PLOTTED => 08-NOV-2010
TIME PLOTTED => 13:15

Dist	COUNTY	ROUTE	POST MILES TOTAL PROJECT	SHEET No.	TOTAL SHEETS
04	Ala	13	4.4/8.6	13	53

Florante P. Perez 7-28-10
REGISTERED CIVIL ENGINEER DATE

8-2-10
PLANS APPROVAL DATE

REGISTERED PROFESSIONAL ENGINEER
Florante P. Perez
No. 41030
Exp. 3-31-11
CIVIL
STATE OF CALIFORNIA

THE STATE OF CALIFORNIA OR ITS OFFICERS OR AGENTS SHALL NOT BE RESPONSIBLE FOR THE ACCURACY OR COMPLETENESS OF SCANNED COPIES OF THIS PLAN SHEET.

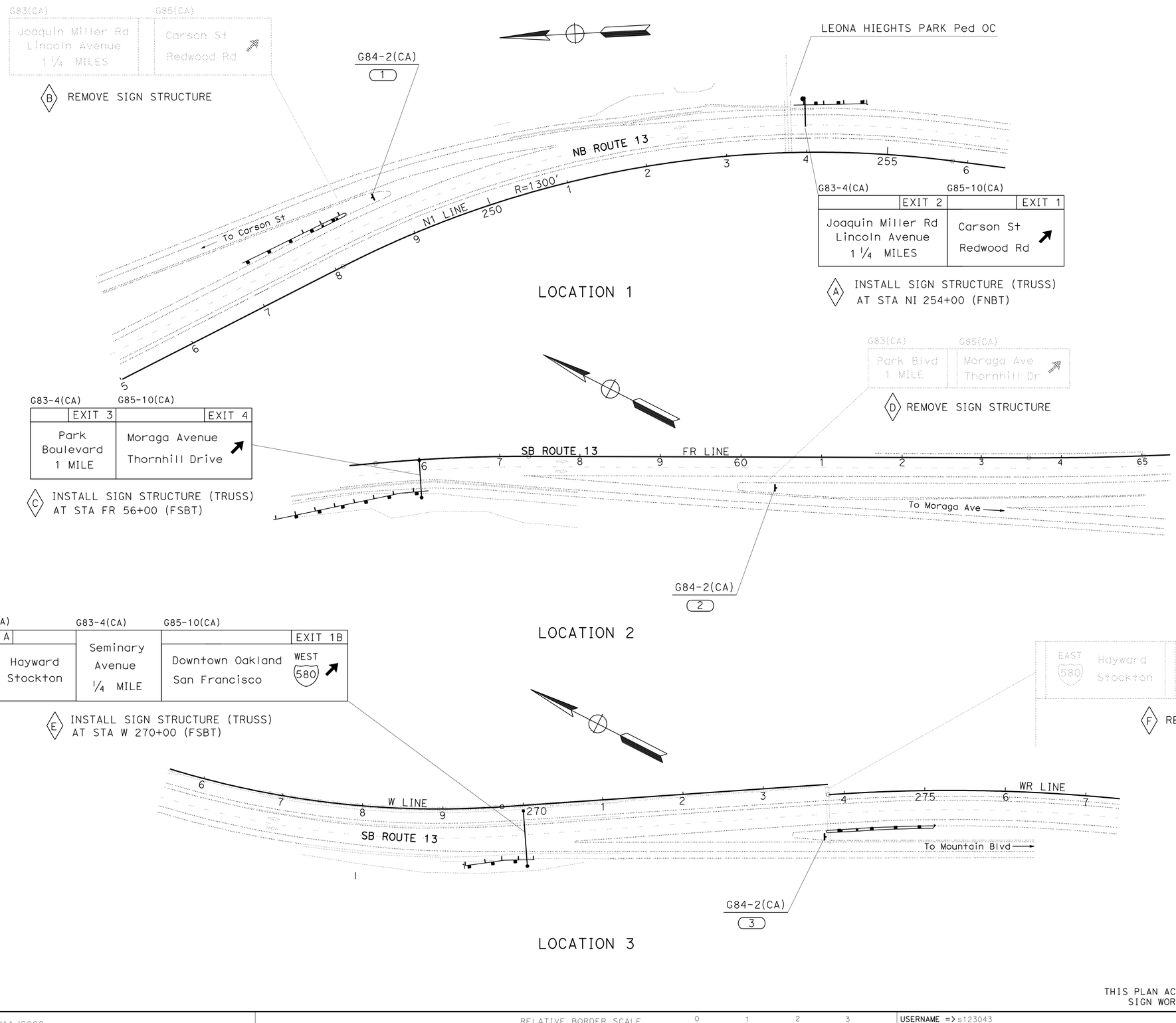

LEGEND:

(No.) ROADSIDE SIGN NUMBER

◇ OVERHEAD SIGN LETTER

NOTES:

1. EXACT LOCATION AND POSITION OF ROADSIDE SIGNS TO BE DETERMINED BY THE ENGINEER.
2. EXISTING SIGNS ARE SHOWN IN DROP OUT.

SIGN PLAN

NO SCALE

THIS PLAN ACCURATE FOR SIGN WORK ONLY

S-1

CALCULATED-DESIGNED BY	LEOPOLDO G. BONGATO
CHECKED BY	FLORANTE P. PEREZ
REVISED BY	FPP
DATE REVISED	7/10
FUNCTIONAL SUPERVISOR	LOURDES DAVID

STATE OF CALIFORNIA - DEPARTMENT OF TRANSPORTATION
Caltrans
TRAFFIC

LAST REVISION 07-29-10
DATE PLOTTED => 08-NOV-2010
TIME PLOTTED => 13:15

Dist	COUNTY	ROUTE	POST MILES TOTAL PROJECT	SHEET No.	TOTAL SHEETS
04	Ala	13	4.4/8.6	14	53

REGISTERED CIVIL ENGINEER 7-28-10 DATE

8-2-10
PLANS APPROVAL DATE

REGISTERED PROFESSIONAL ENGINEER Florante P. Perez No. 41030 Exp. 3-31-11 CIVIL STATE OF CALIFORNIA

THE STATE OF CALIFORNIA OR ITS OFFICERS OR AGENTS SHALL NOT BE RESPONSIBLE FOR THE ACCURACY OR COMPLETENESS OF SCANNED COPIES OF THIS PLAN SHEET.

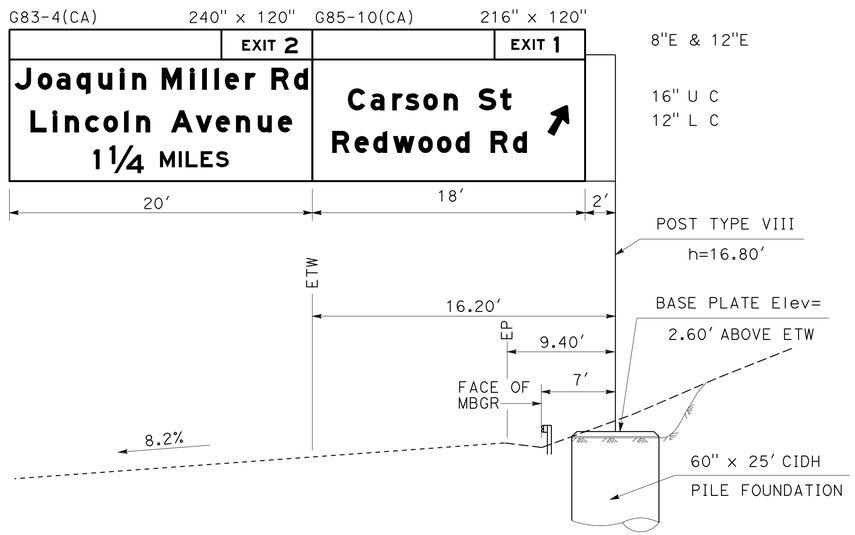

(A) INSTALL SIGN STRUCTURE (TRUSS)
AT STA N1 254 + 00 (FNBT)

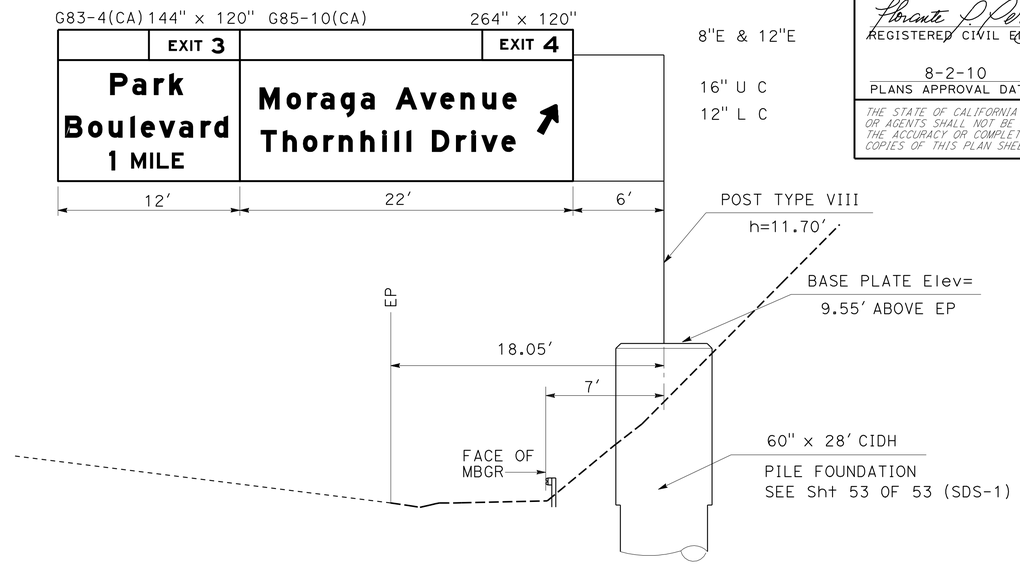

(C) INSTALL SIGN STRUCTURE (TRUSS)
AT STA FR 56+ 00 (FSBT)

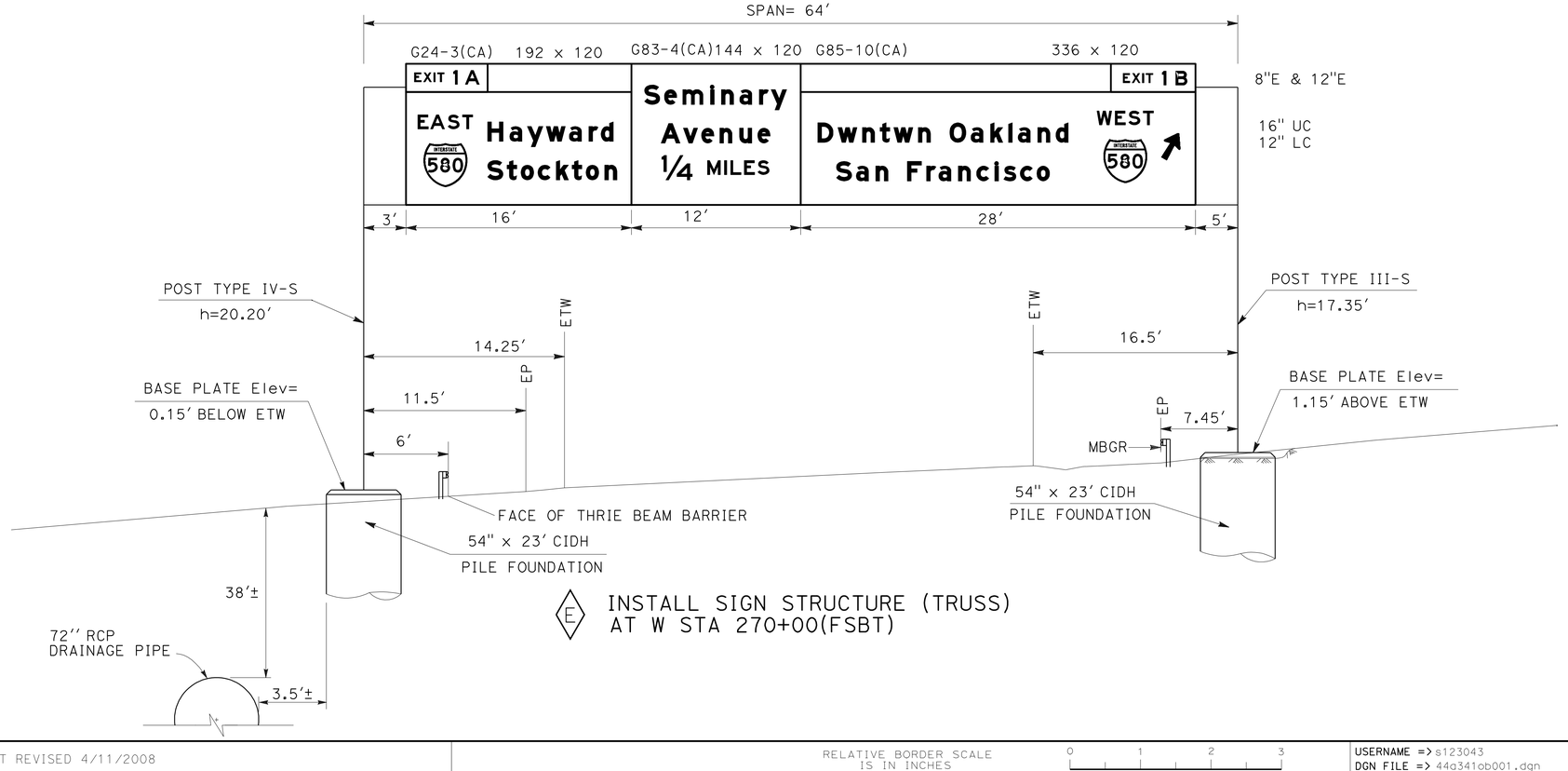

(E) INSTALL SIGN STRUCTURE (TRUSS)
AT W STA 270+00(FSBT)

SIGN DETAILS

NO SCALE

SD-1

STATE OF CALIFORNIA - DEPARTMENT OF TRANSPORTATION
Caltrans®
TRAFFIC

FUNCTIONAL SUPERVISOR: LOURDES DAVID
CALCULATED-DESIGNED BY: LEOPOLDO G. BONGATO
CHECKED BY: FLORANTE P. PEREZ
REVISED BY: FPP
DATE REVISED: 7/10

LAST REVISION 07-29-10
DATE PLOTTED => 08-NOV-2010
TIME PLOTTED => 13:16

BORDER LAST REVISED 4/11/2008
RELATIVE BORDER SCALE IS IN INCHES 0 1 2 3
USERNAME => s123043
DGN FILE => 44a341ob001.dgn
CU 04250
EA 4A3411

Dist	COUNTY	ROUTE	POST MILES TOTAL PROJECT	SHEET No.	TOTAL SHEETS
04	Ala	13	4.4/8.6	15	53

REGISTERED CIVIL ENGINEER 7-28-10 DATE

8-2-10
PLANS APPROVAL DATE

Florante P. Perez No. 41030 Exp. 3-31-11 CIVIL — REGISTERED PROFESSIONAL ENGINEER — STATE OF CALIFORNIA

THE STATE OF CALIFORNIA OR ITS OFFICERS OR AGENTS SHALL NOT BE RESPONSIBLE FOR THE ACCURACY OR COMPLETENESS OF SCANNED COPIES OF THIS PLAN SHEET.

NOTE:
DIMENSIONS ARE IN INCHES UNLESS NOTED OTHERWISE.

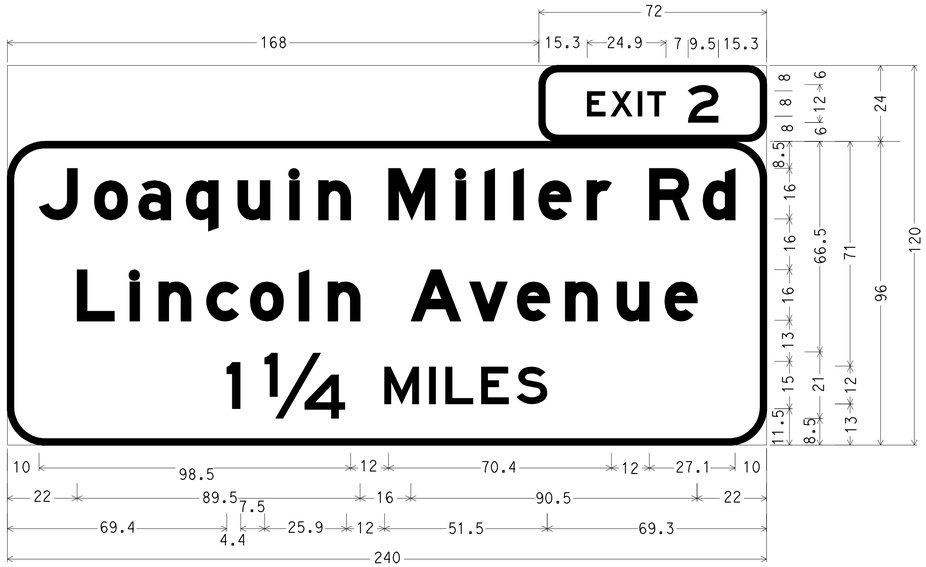

6.0" Radius, 2.0" Border, White on Green;
[EXIT] E; [2] E;
12.0" Radius, 2.0" Border, White on Green;
[Joaquin] E Mod; [Miller] E Mod; [Rd] E Mod; [Lincoln Avenue] E Mod; [1] E; [¼] E;
[MILES] E;

(A) SEE SHEET S-1

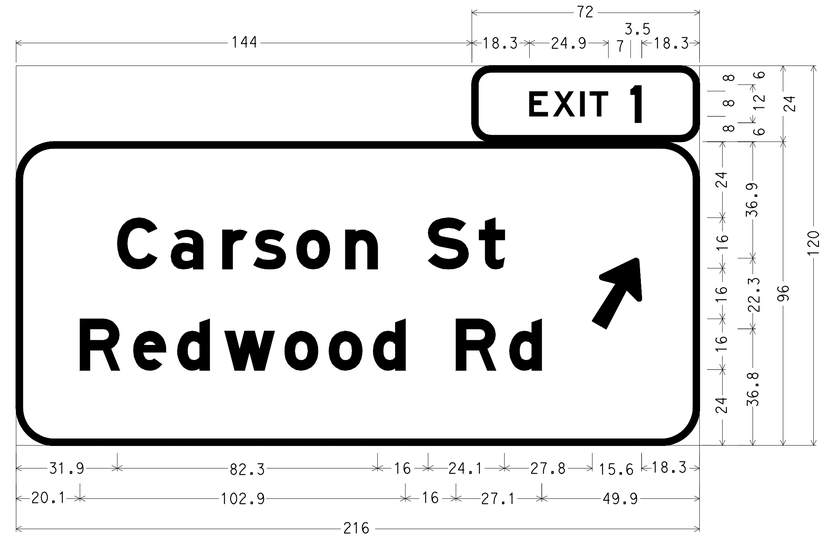

6.0" Radius, 2.0" Border, White on Green;
[EXIT] E; [1] E;
12.0" Radius, 2.0" Border, White on Green;
[Carson St] E Mod; [Redwood Rd] E Mod; Arrow 10.67UC-2LV - 24.3" 60°;

(A) SEE SHEET S-1

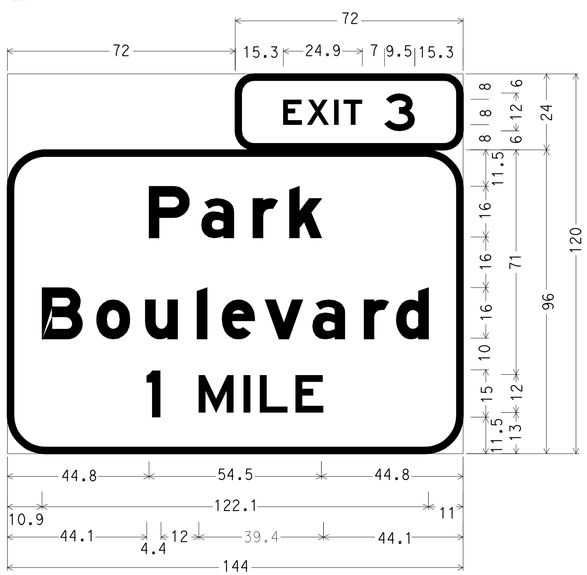

6.0" Radius, 2.0" Border, White on Green;
[EXIT] E; [3] E;
12.0" Radius, 2.0" Border, White on Green;
[Park] E Mod; [Boulevard] E Mod; [1] E; [MILE] E;

(C) SEE SHEET S-1

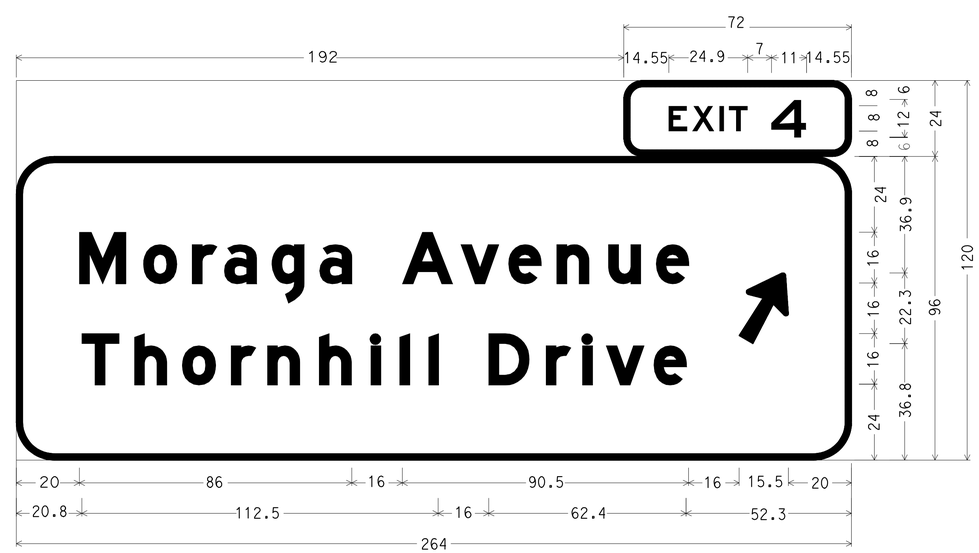

6.0" Radius, 2.0" Border, White on Green;
[EXIT] E; [4] E;
12.0" Radius, 2.0" Border, White on Green;
[Moraga Avenue] E Mod; [Thornhill Drive] E Mod; Arrow 10.67UC-2LV - 24.3" 60°;

(C) SEE SHEET S-1

SIGN PANEL DETAILS
NO SCALE

SD-2

STATE OF CALIFORNIA - DEPARTMENT OF TRANSPORTATION
Caltrans®
TRAFFIC

FUNCTIONAL SUPERVISOR: LOURDES DAVID
CALCULATED-DESIGNED BY: LEOPOLDO G. BONGATO
CHECKED BY: FLORANTE P. PEREZ
REVISED BY: FPP
DATE REVISED: 7/10

LAST REVISION 07-29-10
DATE PLOTTED => 08-NOV-2010
TIME PLOTTED => 13:18

Dist	COUNTY	ROUTE	POST MILES TOTAL PROJECT	SHEET No.	TOTAL SHEETS
04	Ala	13	4.4/8.6	16	53

REGISTERED CIVIL ENGINEER 7-28-10 DATE

8-2-10
PLANS APPROVAL DATE

REGISTERED PROFESSIONAL ENGINEER
Florante P. Perez
No. 41030
Exp. 3-31-11
CIVIL
STATE OF CALIFORNIA

THE STATE OF CALIFORNIA OR ITS OFFICERS OR AGENTS SHALL NOT BE RESPONSIBLE FOR THE ACCURACY OR COMPLETENESS OF SCANNED COPIES OF THIS PLAN SHEET.

NOTE:

DIMENSIONS ARE IN INCHES UNLESS NOTED OTHERWISE.

6.0" Radius, 2.0" Border, White on Green;
[EXIT] E; [1B] E;
12.0" Radius, 2.0" Border, White on Green;
[Dwntwn Oakland] E Mod; [San Francisco] E Mod;
[WEST] E; Arrow 10.67UC-2LV - 24.3" 60°;

E SEE SHEET S-1

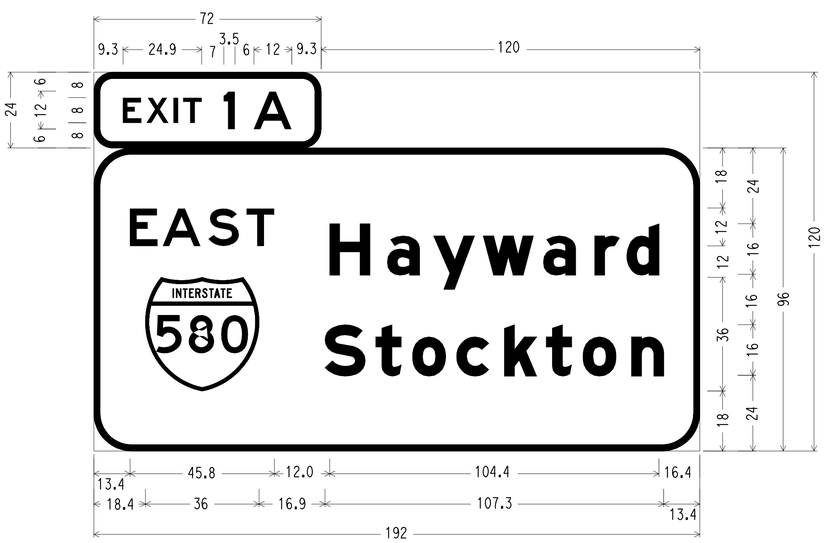

6.0" Radius, 2.0" Border, White on Green;
[EXIT] E; [1] E; [A] E;
12.0" Radius, 2.0" Border, White on Green;
[EAST] E; [Hayward] E Mod; [Stockton] E Mod;

E SEE SHEET S-1

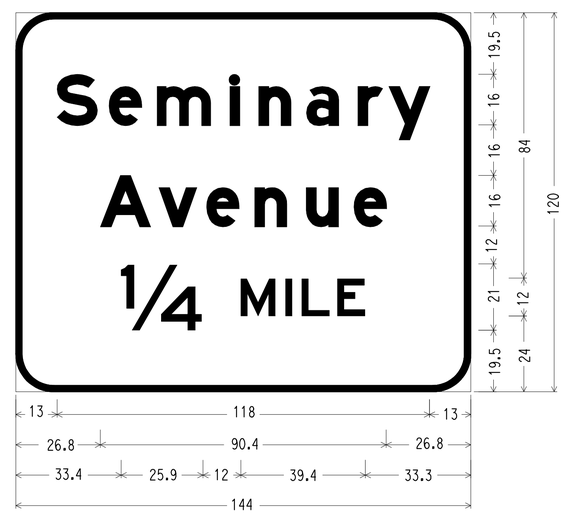

12.0" Radius, 2.0" Border, White on Green;
[Seminary] E Mod; [Avenue] E Mod; [1/4] E; [MILE] E;

E SEE SHEET S-1

SIGN DETAILS
NO SCALE

SD-3

STATE OF CALIFORNIA - DEPARTMENT OF TRANSPORTATION
Caltrans
TRAFFIC

CALCULATED-DESIGNED BY	LEOPOLDO G. BONGATO
CHECKED BY	FLORANTE P. PEREZ
REVISED BY	FPP
DATE REVISED	7/10
FUNCTIONAL SUPERVISOR	LOURDES DAVID

LAST REVISION 07-29-10 | DATE PLOTTED => 08-NOV-2010 | TIME PLOTTED => 13:20

Dist	COUNTY	ROUTE	POST MILES TOTAL PROJECT	SHEET No.	TOTAL SHEETS
04	Ala	13	4.4/8.6	17	53

REGISTERED CIVIL ENGINEER 7-28-10 DATE

8-2-10
PLANS APPROVAL DATE

REGISTERED PROFESSIONAL ENGINEER Florante P. Perez No. 41030 Exp. 3-31-11 CIVIL STATE OF CALIFORNIA

THE STATE OF CALIFORNIA OR ITS OFFICERS OR AGENTS SHALL NOT BE RESPONSIBLE FOR THE ACCURACY OR COMPLETENESS OF SCANNED COPIES OF THIS PLAN SHEET.

ROADSIDE SIGN QUANTITIES

SIGN (No.)	SIGN CODE	PANEL SIZE (INCHES x INCHES)	WOOD POST SIZE & LENGTH 4" x 6" FEET	ROADSIDE SIGN ONE POST (EA)	SINGLE FACE	DOUBLE FACE	BACKGROUND SHEETING COLOR	BACKGROUND RETROREFLECTIVE ASTM TYPE	LEGEND SHEETING COLOR	LEGEND RETROREFLECTIVE ASTM TYPE	PROTECTIVE FILM STANDARD	PROTECTIVE FILM PREMIUM	FURNISH SINGLE SHEET ALUMINUM SIGN 0.080" UNFRAMED SQ FT	REMARKS
1	G84-2(CA)	54 x 48	15.5	1	X		GREEN	IV	WHITE	IV		X	18	EXIT 1
2	G84-2(CA)	54 x 48	15.5	1	X		GREEN	IV	WHITE	IV		X	18	EXIT 4
3	G84-2(CA)	54 x 48	15.5	1	X		GREEN	IV	WHITE	IV		X	18	EXIT 1B
TOTAL				3									54	

OVERHEAD SIGN QUANTITIES

SIGN ◇	SIGN CODE	PANEL SIZE (INCHES x INCHES)	FURNISH SIGN STRUCTURE (TRUSS) LBS	INSTALL SIGN STRUCTURE (TRUSS) LBS	REMOVE SIGN STRUCTURE EA	CIDH CONCRETE PILE (SIGN FOUNDATION) 54" LF	CIDH CONCRETE PILE (SIGN FOUNDATION) 60" LF	SINGLE FACE	DOUBLE FACE	BACKGROUND SHEETING COLOR	BACKGROUND RETROREFLECTIVE ASTM TYPE	LEGEND SHEETING COLOR	LEGEND RETROREFLECTIVE ASTM TYPE	PROTECTIVE FILM STANDARD	PROTECTIVE FILM PREMIUM	FURNISH FORMED PANEL SIGN (OVERHEAD) w/o RSPF SQ FT	REMARKS
A	G83-4(CA)	240 x 120	22,096	22,096			25	X		GREEN	IV	WHITE	IX		X	200	EXIT 2
	G85-10(CA)	216 x 120						X		GREEN	IV	WHITE	IX		X	180	EXIT 1
B					1												
C	G83-4(CA)	144 x 120	20,760	20,760			28	X		GREEN	IV	WHITE	IX		X	120	EXIT 3
	G83-4(CA)	264 x 120						X		GREEN	IV	WHITE	IX		X	220	EXIT 4
D					1												
E	G24-3(CA)	192 x 120	26,415	26,415		46		X		GREEN	IV	WHITE	IX		X	160	EXIT 1A
	G83-4(CA)	144 x 120						X		GREEN	IV	WHITE	IX		X	120	-
	G85-10(CA)	336 x 120						X		GREEN	IV	WHITE	IX		X	280	EXIT 1B
F					1												
TOTAL			69,271	69,271	3	46	53									1,280	

SIGN QUANTITIES

SQ-1

STATE OF CALIFORNIA - DEPARTMENT OF TRANSPORTATION
Caltrans
TRAFFIC

FUNCTIONAL SUPERVISOR: LOURDES DAVID
CALCULATED-DESIGNED BY: FPP
CHECKED BY: FLORANTE P. PEREZ
REVISED BY: LEOPOLDO G. BONGATO
DATE REVISED: 7/10

LAST REVISION 07-29-10
DATE PLOTTED => 08-NOV-2010
TIME PLOTTED => 13:25

Dist	COUNTY	ROUTE	POST MILES TOTAL PROJECT	SHEET No.	TOTAL SHEETS
04	Ala	13	4.4/8.6	18	53

Paul Snyder 7-28-10
REGISTERED CIVIL ENGINEER DATE

8-2-10
PLANS APPROVAL DATE

REGISTERED PROFESSIONAL ENGINEER Paul Alan Snyder No. 41128 Exp. 3-31-11 CIVIL STATE OF CALIFORNIA

THE STATE OF CALIFORNIA OR ITS OFFICERS OR AGENTS SHALL NOT BE RESPONSIBLE FOR THE ACCURACY OR COMPLETENESS OF SCANNED COPIES OF THIS PLAN SHEET.

REMOVE AC DIKE AND CONCRETE

LOCATION	REMOVE ASPHALT CONCRETE DIKE	REMOVE CONCRETE (CURB AND GUTTER)	REMOVE CONCRETE (ISLAND)
	LF		CY
1		10	
3	110	-	
3, ISLAND		115	18
TOTAL	110	125	18

HOT MIX ASPHALT DIKE AND HOT MIX ASPHALT (Misc AREA)

LOCATION	HMA (MISCELLANEOUS AREAS)		HMA DIKE			
			(TYPE C)		(TYPE F)	
	SQYD	TON	LF	TON	LF	TON
1	3	0.9	-	-		
3	-	-	98	0.7	28	0.4
3, ISLAND	89	27.9				
TOTAL	92	28.8*	98	0.7*	28	0.4*

* SEE HMA QUANTITIES TABLE FOR TOTAL

METAL BEAM GUARD RAILING (MBGR), OBJECT MARKERS AND DELINEATORS

LOCATION	MBGR	LAYOUT [N]	END ANCHOR ASSEMBLY (TYPE SFT)	BURIED POST END ANCHOR [N*]	ALTERNATIVE IN-LINE TERMINAL SYSTEM	ALTERNATIVE FLARED TERMINAL SYSTEM	CRASH CUSHION (TYPE CAT)	CRASH CUSHION (TYPE CAT) BACKUP	DELINEATOR (CLASS 1)		OBJECT MARKER		GUARD RAILING DELINEATOR	SINGLE THRIE BEAM BARRIER (WOOD POST)
									(TYPE G)	(TYPE F)	(TYPE L-1)	(TYPE R)		
	LF		EA											LF
1	400	12A,16B	1		1	1	-	-	10	10	2	1	43	
2	100	16 C	1	1					10	10			9	
3	37.5	16 B	1			1	1	1	10	5	1		14	200
SUBTOTAL									30	25				
TOTAL	537.50		3	1	1	2	1	1	55		3	1	66	200

[N] NOT A SEPARATE PAY ITEM, FOR INFORMATION ONLY.
[N*] NOT A SEPARATE PAY ITEM, QUANTITY INCLUDED IN MBGR.

MBGR TRANSITION RAILING

LOCATION	TRANSITION RAILING (TYPE WB)
	EA
1	1
3	1
TOTAL	2

ROADWAY EXCAVATION

LOCATION	ROADWAY EXCAVATION
	CY
1 RE-GRADE AROUND DI	1
TOTAL	1

COLD PLANE AC PAVEMENT

LOCATION	COLD PLANE AC PAVEMENT MAXIMUM 6"
	SQYD
1	16
TOTAL	16

HOT MIX ASPHALT

LOCATION	HOT MIX ASPHALT (TYPE A)
	TON
1	0.5
2	0.5
3	0.5
HMA DIKE(TYPE C&F)	1.1
HMA (Misc AREA)	28.8
TOTAL	31.4

REMOVE CRASH CUSHION, REMOVE MBGR

LOCATION	REMOVE CRASH CUSHION (SAND FILLED)	REMOVE MBGR	REMOVE TERMINAL SECTION [N]	REMOVE THRIE BEAM BARRIER
	EA	LF	EA	LF
1	1	700	2	
2	1			
3	1	150	2	200
TOTAL	3	850	4	200

[N] NOT A SEPARATE PAY ITEM, FOR INFORMATION ONLY.

MINOR CONCRETE

LOCATION	VEGETATION CONTROL	MINOR STRUCTURE
	SQYD	CY
1 WBTR/MBGR/AITS	85	1
1 MBGR/AFTS	220	
2 MBGR	10	
3 AFTS/MBGR	63	
3 CAT/WBTR	43	1
3 MEDIAN TBB	104	
TOTAL	525	2

ROADWAY EXCAVATION (TYPE Z-2)

LOCATION	ROADWAY EXCAVATION (TYPE Z-2) (AERIALLY DEPOSITED LEAD)
	CY
1	2.7
2	2.7
3	4.6
TOTAL	10

SUMMARY OF QUANTITIES

Q-1

STATE OF CALIFORNIA - DEPARTMENT OF TRANSPORTATION
Caltrans DESIGN
FUNCTIONAL SUPERVISOR: ALBERT J. ZEPEDA
CALCULATED-DESIGNED BY: PAUL A. SNYDER
CHECKED BY: BEHROUZ IRAVANCHY
REVISED BY: PS
DATE REVISED: 7/10

LAST REVISION DATE PLOTTED => 08-NOV-2010
07-29-10 TIME PLOTTED => 13:25

Dist	COUNTY	ROUTE	POST MILES TOTAL PROJECT	SHEET No.	TOTAL SHEETS
04	Ala	13	4.4/8.6	22	53

LICENSED LANDSCAPE ARCHITECT

8-2-10
PLANS APPROVAL DATE

LICENSED LANDSCAPE ARCHITECT — DENNIS CALLOWAY No. 3597 — Signature — 11-30-11 Renewal Date — 5-6-10 Date — STATE OF CALIFORNIA

THE STATE OF CALIFORNIA OR ITS OFFICERS OR AGENTS SHALL NOT BE RESPONSIBLE FOR THE ACCURACY OR COMPLETENESS OF SCANNED COPIES OF THIS PLAN SHEET.

SPRINKLER SCHEDULE

SYMBOL	TYPE	DESCRIPTION	SPRAY PATTERN	OPERATING PRESSURE (PSI)	PRESSURE COMPENSATING	PLUS/MINUS 5% ② DISCHARGE: GALLONS PER MINUTE (GPM)	GALLONS PER HOUR (GPH)	RADIUS (Ft)	WIDTH x LENGTH (Ft)	MATERIAL	INLET CONNECTION (NPT INCH)	POSITIVE-LOCKING Adj ARC STOP	BACKSPLASH PREVENTER	DIFFUSER PIN	DISTANCE CONTROL FLAP	ADJ DISCHARGE	RISER: TYPE	MATERIAL: PLASTIC	GALVANIZED	SIZE (IPS INCH)	HEIGHT (INCH)	FLOW SHUTOFF DEVICE	⑤ SWING JOINT (TYPE)	RISER SUPPORT	SPRINKLER PROTECTOR (TYPE)	REMARKS
⑤	A-5	GEAR DRIVEN	P	35	—	0.92	—	21	—	PL	½"	—	—	—	—	X	IV	—	X	½"	18"	X	I	X	—	4'' POP-UP

X IN BOX DENOTES REQUIREMENT

APPLICABLE WHEN CIRCLED BELOW:

1 - See Special Provisions.
② - If a pressure compensating device is specified, the discharge and radii shown reflect its use.
3 - Arc Stop shall be fitted with a nut and bolt.
4 - Vinyl-coated cast iron housing.
⑤ - Swing Joints required adjacent to shoulders, curbs, sidewalks, and dikes.
6 - Unless otherwise shown on plans.

ABBREVIATIONS:

F — full circle
P — part circle
F/P — full/part circle
Q — quarter circle
T — third circle
H — half circle
TT — two third circle
TQ — three quarter circle
CST — center strip
SST — side strip
EST — end strip
Ft — feet/foot
GPM — gallons per minute
GPH — gallons per hour
Adj — adjustable
PL — plastic
B/B — brass/bronze
B/PL — brass/plastic
B/B/PL — brass/bronze/plastic
NPT — national pipe thread
IPS — iron pipe size
PSI — pounds per square inch

IRRIGATION NOTES:

1. Unlabeled plastic pipe (supply line) (lateral) downstream of ball valve shall be ¾", (PR 200).

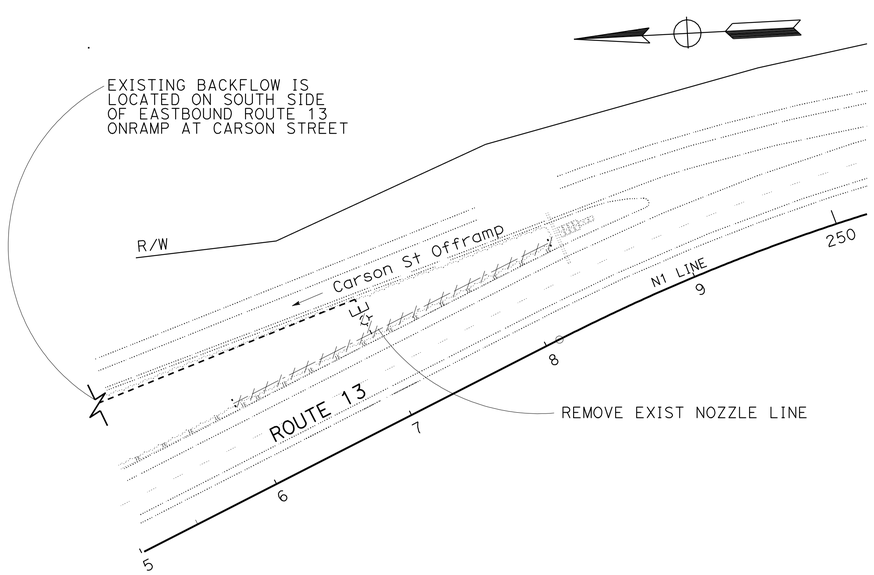

PLAN

IRRIGATION REMOVAL

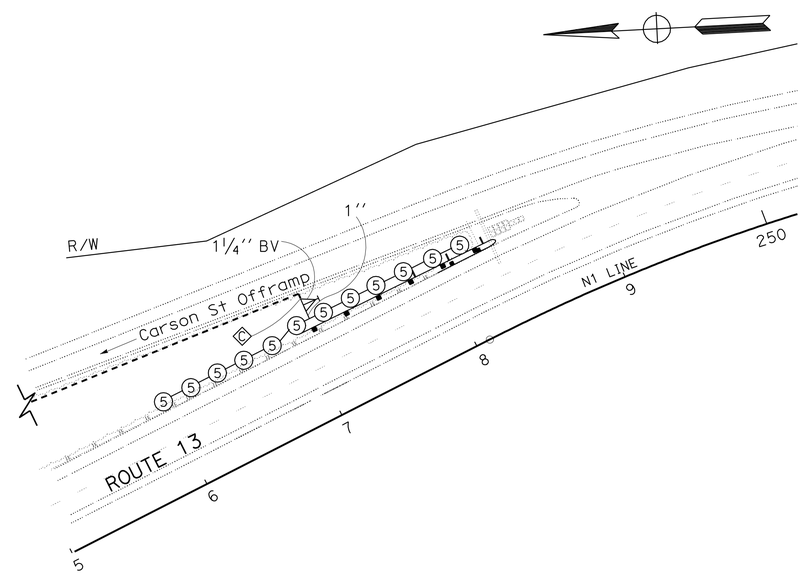

PLAN

IRRIGATION PLAN
SCALE: 1'' = 50'
IP-1

STATE OF CALIFORNIA - DEPARTMENT OF TRANSPORTATION
Caltrans LANDSCAPE ARCHITECTURE
SENIOR LANDSCAPE ARCHITECT: BRYAN WALKER
CALCULATED-DESIGNED BY: DENNIS CALLOWAY
CHECKED BY: DAVID ENG
REVISED BY
DATE REVISED

LAST REVISION 06-30-10
DATE PLOTTED => 08-NOV-2010
TIME PLOTTED => 13:26

Dist	COUNTY	ROUTE	POST MILES TOTAL PROJECT	SHEET No.	TOTAL SHEETS
04	Ala	13	4.4/8.6	23	53

REGISTERED ELECT ENGINEER 7-27-10 DATE

8-2-10
PLANS APPROVAL DATE

REGISTERED PROFESSIONAL ENGINEER Mahmood Noii No. 13717 Exp. 6-30-11 ELECT STATE OF CALIFORNIA

THE STATE OF CALIFORNIA OR ITS OFFICERS OR AGENTS SHALL NOT BE RESPONSIBLE FOR THE ACCURACY OR COMPLETENESS OF SCANNED COPIES OF THIS PLAN SHEET.

FOR ACCURATE RIGHT OF WAY AND ACCESS DATA, CONTACT RIGHT OF WAY ENGINEERING AT THE DISTRICT OFFICE.

PROJECT NOTES

1. REMOVE AND SALVAGE EXISTING SIGN LIGHTING FIXTURES. EXISTING SIGN SWITCH, CONDUIT AND CONDUCTORS ON THE SIGN STRUCTURE INSTALLED AS PART OF THE SIGN ILLUMINATION EQUIPMENT SHALL BE REMOVED AND BECOME THE PROPERTY OF THE CONTRACTOR. THE NUMBER AND TYPE OF FIXTURES SHALL BE AS INDICATED ON THE PLAN.
2. INSTALL 2"C, 2 #8 (240 V SIGN LIGHTING)
3. INSTALL 85 W, 240 V INDUCTION SIGN FIXTURES AND SIGN CONTROL. THE NUMBER OF FIXTURES AND TYPE OF SIGN CONTROL SHALL BE AS INDICATED ON THE PLAN.
4. EXISTING FLOURESCENT SIGN LIGHTING FIXTURES (FL) AND SIGN CONTROL, INCLUDING CONDUITS AND CONDUCTORS ON THE SIGN STRUCTURE INSTALLED AS PART OF THE SIGN ILLUMINATION EQUIPMENT SHALL BE REMOVED AND BECOME THE PROPERTY OF THE CONTRACTOR. THE NUMBER OF FIXTURES SHALL BE AS INDICATED ON THE PLAN.

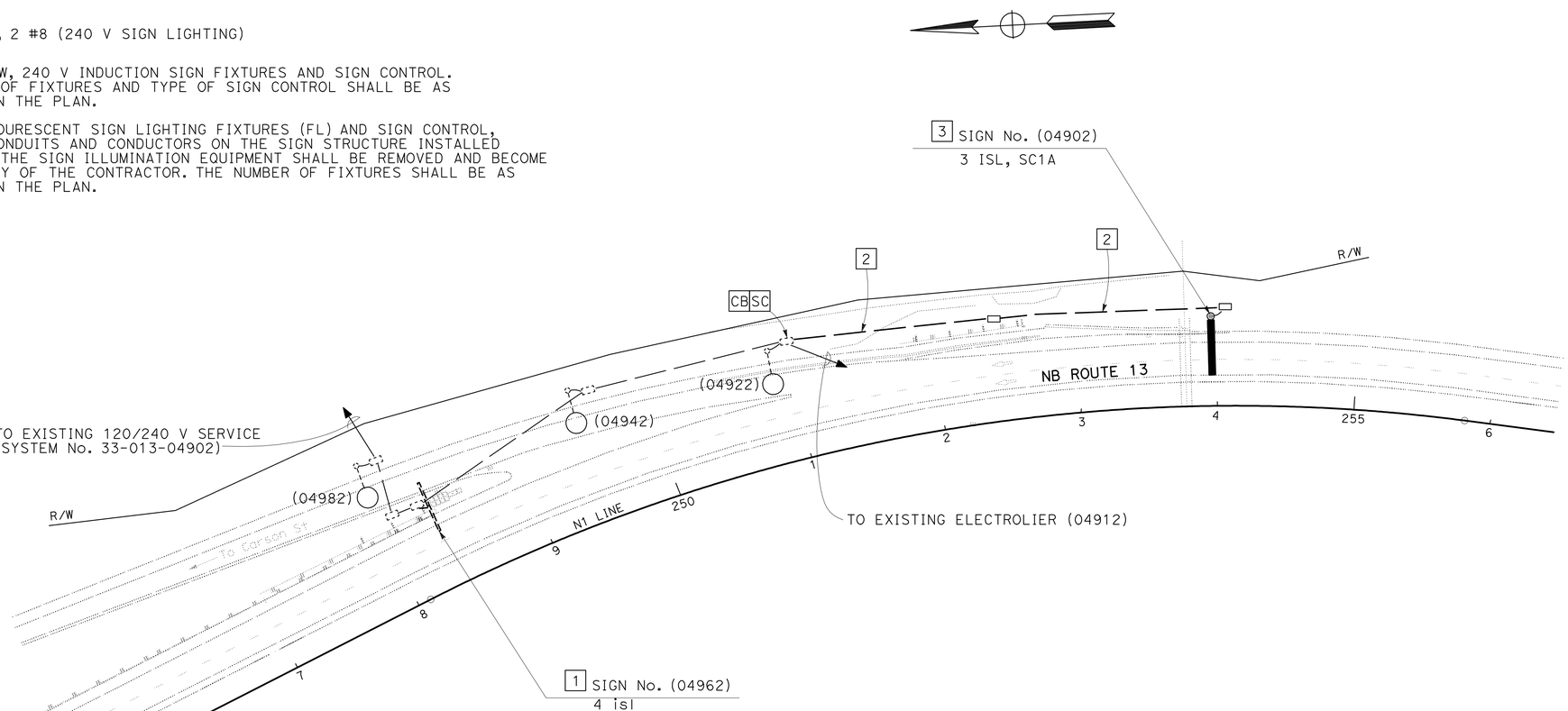

LOCATION 1

THIS PLAN IS ACCURATE FOR ELECTRICAL WORK ONLY

MODIFY SIGN ILLUMINATION

SCALE: 1'' = 50'

E-1

STATE OF CALIFORNIA - DEPARTMENT OF TRANSPORTATION
Caltrans
ELECTRICAL

FUNCTIONAL SUPERVISOR: LAI HONG CHIU

CALCULATED-DESIGNED BY: GUILLERMO F. BAUTISTA
CHECKED BY: MAHMOOD NOII

REVISED BY: GFB
DATE REVISED: 7/10

LAST REVISION 07-29-10 | DATE PLOTTED => 08-NOV-2010 | TIME PLOTTED => 13:26

Dist	COUNTY	ROUTE	POST MILES TOTAL PROJECT	SHEET No.	TOTAL SHEETS
04	Ala	13	4.4/8.6	24	53

REGISTERED ELECT ENGINEER 7-27-10 DATE

8-2-10
PLANS APPROVAL DATE

REGISTERED PROFESSIONAL ENGINEER Mahmood Noii No. 13717 Exp. 6-30-11 ELECT STATE OF CALIFORNIA

THE STATE OF CALIFORNIA OR ITS OFFICERS OR AGENTS SHALL NOT BE RESPONSIBLE FOR THE ACCURACY OR COMPLETENESS OF SCANNED COPIES OF THIS PLAN SHEET.

FOR ACCURATE RIGHT OF WAY AND ACCESS DATA, CONTACT RIGHT OF WAY ENGINEERING AT THE DISTRICT OFFICE.

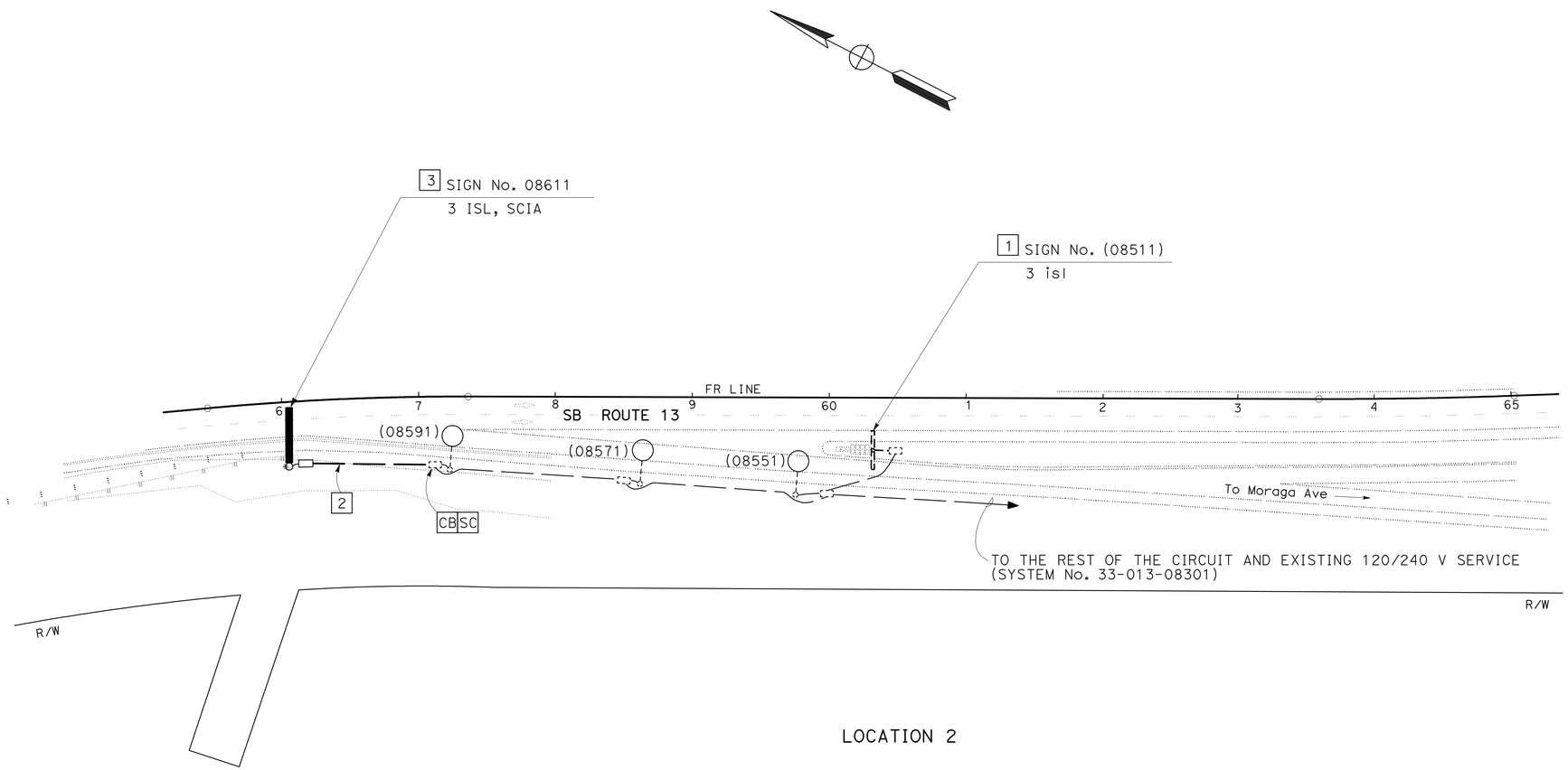

LOCATION 2

MODIFY SIGN ILLUMINATION

SCALE: 1'' = 50'

THIS PLAN IS ACCURATE FOR ELECTRICAL WORK ONLY

FOR NOTES SEE SHEEET E-1

E-2

GUILLERMO F. BAUTISTA	REVISED BY: GFB
MAHMOOD NOII	DATE REVISED: 7/10
CALCULATED-DESIGNED BY	
CHECKED BY	
FUNCTIONAL SUPERVISOR: LAI HONG CHIU	

STATE OF CALIFORNIA - DEPARTMENT OF TRANSPORTATION

Caltrans **ELECTRICAL**

LAST REVISION 07-29-10 | DATE PLOTTED => 08-NOV-2010 | TIME PLOTTED => 13:26

Dist	COUNTY	ROUTE	POST MILES TOTAL PROJECT	SHEET No.	TOTAL SHEETS
04	Ala	13	4.4/8.6	25	53

REGISTERED ELECT ENGINEER 7-27-10

8-2-10
PLANS APPROVAL DATE

REGISTERED PROFESSIONAL ENGINEER Mahmood Noii No. 13717 Exp. 6-30-11 ELECT STATE OF CALIFORNIA

THE STATE OF CALIFORNIA OR ITS OFFICERS OR AGENTS SHALL NOT BE RESPONSIBLE FOR THE ACCURACY OR COMPLETENESS OF SCANNED COPIES OF THIS PLAN SHEET.

FOR ACCURATE RIGHT OF WAY AND ACCESS DATA, CONTACT RIGHT OF WAY ENGINEERING AT THE DISTRICT OFFICE.

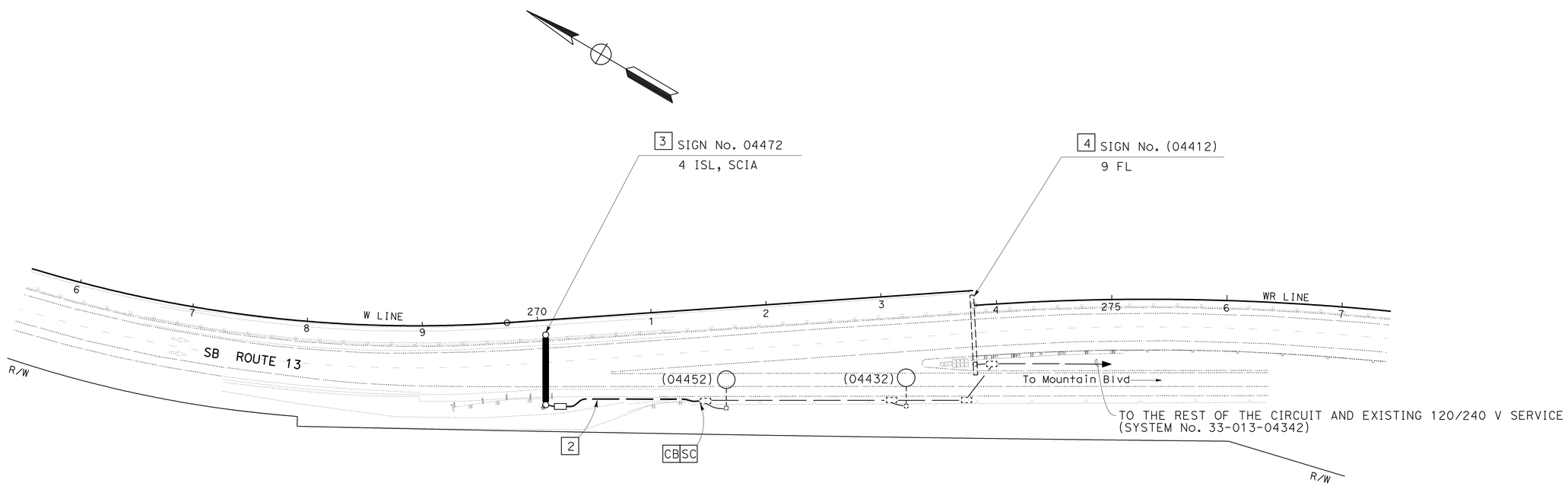

LOCATION 3

MODIFY SIGN ILLUMINATION

SCALE: 1'' = 50'

THIS PLAN IS ACCURATE FOR ELECTRICAL WORK ONLY

FOR NOTES SEE SHEET E-1

E-3

STATE OF CALIFORNIA - DEPARTMENT OF TRANSPORTATION
Caltrans
ELECTRICAL

FUNCTIONAL SUPERVISOR: LAI HONG CHIU

CALCULATED-DESIGNED BY: GUILLERMO F. BAUTISTA
CHECKED BY: MAHMOOD NOII

REVISED BY: GFB
DATE REVISED: 7/10

LAST REVISION 07-29-10
DATE PLOTTED => 08-NOV-2010
TIME PLOTTED => 13:26

BORDER LAST REVISED 4/11/2008
RELATIVE BORDER SCALE IS IN INCHES 0 1 2 3
USERNAME => s123043
DGN FILE => 44a341ua003.dgn
CU 04250
EA 4A3411

DIST	COUNTY	ROUTE	POST MILES TOTAL PROJECT	SHEET NO.	TOTAL SHEETS
04	Ala	13	4.4/8.6	26	53

Randell D. Hiatt
REGISTERED CIVIL ENGINEER

June 6, 2008
PLANS APPROVAL DATE

REGISTERED PROFESSIONAL ENGINEER
Randell D. Hiatt
No. C50200
Exp. 6-30-09
CIVIL
STATE OF CALIFORNIA

The State of California or its officers or agents shall not be responsible for the accuracy or completeness of electronic copies of this plan sheet.

To accompany plans dated 8-2-10

NOTES:

1. When necessary to place dike in front of face of guard railing, only Type C dike may be used. For dike details, see Standard Plan A87B.
2. For standard railing post embedment, see Standard Plans A77C3.
3. Guard railing delineation to be used where shown on the Project Plans.
4. When dike or curb is placed under guard railing, the maximum height of the dike or curb shall be 4". Mountable dike should not be used. For dike and curb details, see Revised Standard Plans RSP A87A and Standard Plan A87B.
5. For details of typical distance between the face of rail and hinge point, see Standard Plan A77C3.

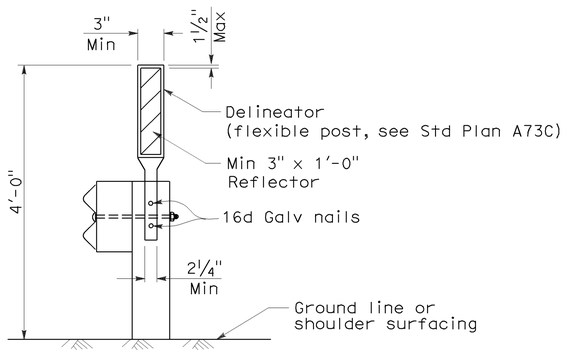

GUARD RAILING DELINEATION

See Note 3

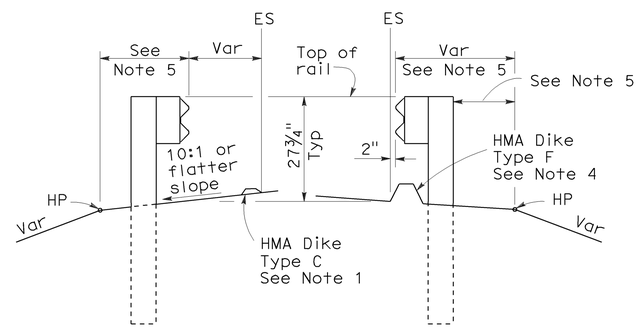

DIKE POSITIONING

See Note 1

STATE OF CALIFORNIA
DEPARTMENT OF TRANSPORTATION

METAL BEAM GUARD RAILING TYPICAL RAILING DELINEATION AND DIKE POSITIONING DETAILS

NO SCALE

RSP A77C4 DATED JUNE 6, 2008 SUPERSEDES STANDARD PLAN A77C4
DATED MAY 1, 2006 - PAGE 47 OF THE STANDARD PLANS BOOK DATED MAY 2006.

REVISED STANDARD PLAN RSP A77C4

2006 REVISED STANDARD PLAN RSP A77C4

12-10-07

DIST	COUNTY	ROUTE	POST MILES TOTAL PROJECT	SHEET NO.	TOTAL SHEETS
04	Ala	13	4.4/8.6	27	53

Randell D. Hiatt
REGISTERED CIVIL ENGINEER

June 6, 2008
PLANS APPROVAL DATE

REGISTERED PROFESSIONAL ENGINEER
Randell D. Hiatt
No. C50200
Exp. 6-30-09
CIVIL
STATE OF CALIFORNIA

The State of California or its officers or agents shall not be responsible for the accuracy or completeness of electronic copies of this plan sheet.

To accompany plans dated 8-2-10

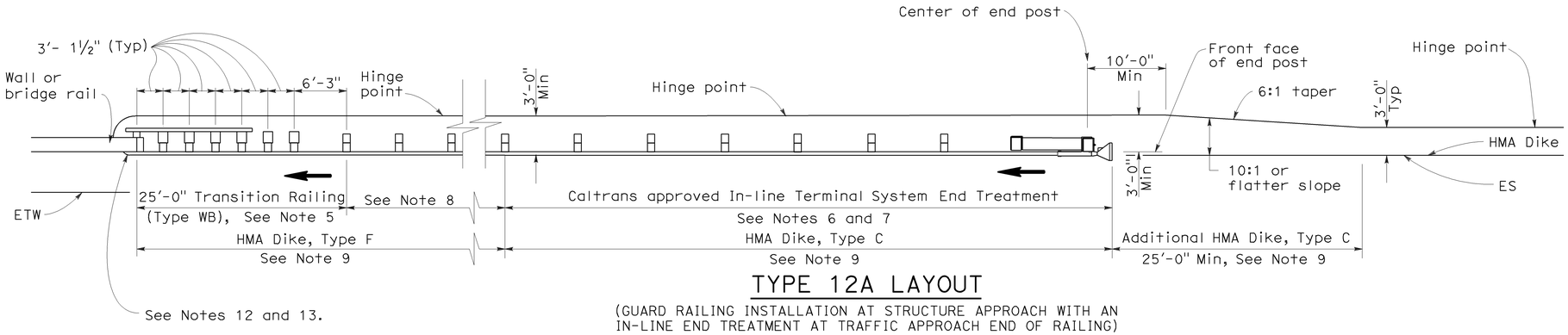

TYPE 12A LAYOUT

(GUARD RAILING INSTALLATION AT STRUCTURE APPROACH WITH AN IN-LINE END TREATMENT AT TRAFFIC APPROACH END OF RAILING)
See Notes 10

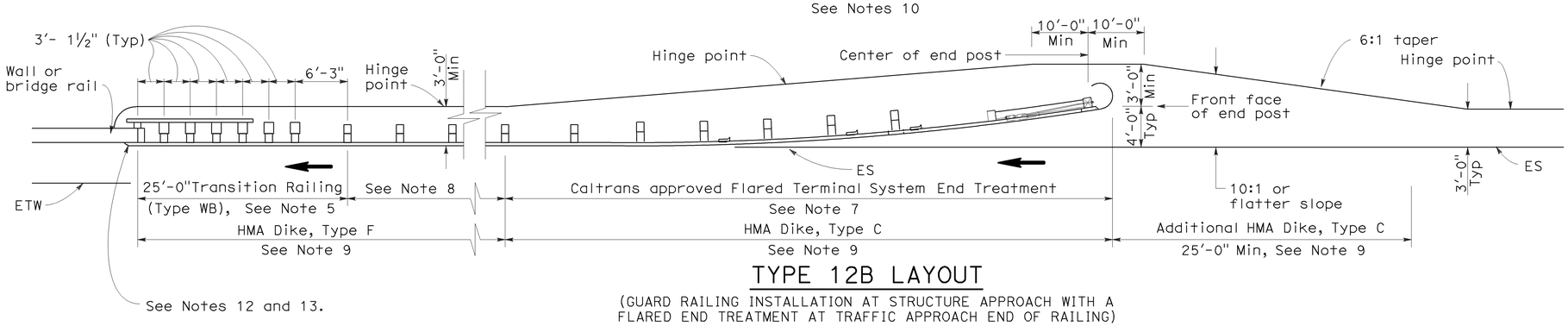

TYPE 12B LAYOUT

(GUARD RAILING INSTALLATION AT STRUCTURE APPROACH WITH A FLARED END TREATMENT AT TRAFFIC APPROACH END OF RAILING)
See Notes 10

NOTES:

1. Line post, blocks and hardware to be used are shown on Standard Plans A77A1, A77A2, A77B1, A77C1 and A77C2.
2. Guard rail post spacing to be 6'-3" center to center, except as otherwise noted.
3. Except as noted, line posts are 6" x 8" x 6'-0" wood with 6" x 8" x 1'-2" wood blocks. W6 x 9 steel posts, 6'-0" in length, with 6" x 8" x 1'-2" notched wood blocks or plastic blocks may be used for 6" x 8" x 6'-0" wood posts with 6" x 8" x 1'-2" wood blocks where applicable and when specified.
4. Direction of adjacent traffic indicated by ➡.
5. For Transition Railing (Type WB) details for Types 12A and 12B Layouts, see Standard Plan A77J4.
6. In-line Terminal System End Treatments are used where site conditions will not accommodate a flared end treatment.
7. The type of terminal system end treatment to be used will be shown on the Project Plans.
8. Dependent on site conditions (embankment height, side slopes, or other fixed objects), it may be advisable to construct additional guard railing (a length equal to multiples of 12'-6" with 6'-3" post spacing) between the transition railing and end treatment.
9. Where placement of dike is required with guard railing installations, see Revised Standard Plan RSP A77C4 for dike positioning details.
10. Type 12A or Type 12B Layouts are typically used:
    a. To the right of approaching traffic, at the end of a structure, on two-lane conventional highway where the roadbed width across the structure is less than 40 feet.
    b. To the left of approaching traffic, at the end of a structure, on two-lane conventional highway where the roadbed width across the structure is less than 40 feet.
    c. To the right of approaching traffic at the end of each structure on multilane freeways or expressways with separate adjacent or parallel bridges.
    d. To the right of approaching traffic at the end of the structure on multilane freeways or expressways with decked median on the bridge.
11. See Revised Standard Plan RSP A77F3 for typical layout used left of approaching traffic at the ends of each structure on multilane freeways or expressways with separate adjacent or parallel bridges.
12. For additional details of typical connections to bridge rail, see Connection Detail AA on Revised Standard Plans RSP A77J1 and RSP A77J2 and Connection Detail FF on Standard Plans A77K1 and A77K2.
13. For additional details of a typical connection to walls or abutments, see Standard Plan A77J3.

STATE OF CALIFORNIA
DEPARTMENT OF TRANSPORTATION

METAL BEAM GUARD RAILING TYPICAL LAYOUTS FOR STRUCTURE APPROACH

NO SCALE

RSP A77F1 DATED JUNE 6, 2008 SUPERSEDES STANDARD PLAN A77F1
DATED MAY 1, 2006 - PAGE 54 OF THE STANDARD PLANS BOOK DATED MAY 2006.

REVISED STANDARD PLAN RSP A77F1

2006 REVISED STANDARD PLAN RSP A77F1

12-10-07

DIST	COUNTY	ROUTE	POST MILES TOTAL PROJECT	SHEET NO.	TOTAL SHEETS
04	Ala	13	4.4/8.6	28	53

Randell D. Hiatt
REGISTERED CIVIL ENGINEER

June 6, 2008
PLANS APPROVAL DATE

REGISTERED PROFESSIONAL ENGINEER Randell D. Hiatt No. C50200 Exp. 6-30-09 CIVIL STATE OF CALIFORNIA

The State of California or its officers or agents shall not be responsible for the accuracy or completeness of electronic copies of this plan sheet.

To accompany plans dated 8-2-10

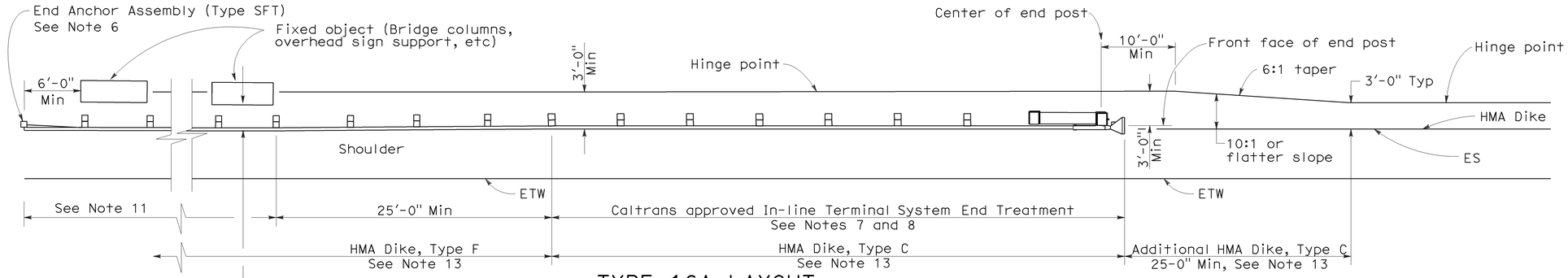

TYPE 16A LAYOUT

(GUARD RAILING INSTALLATION AT ROADSIDE FIXED OBJECT OR OBJECTS WITH AN IN-LINE END TREATMENT AT TRAFFIC APPROACH END OF RAILING)
See Notes 12 and 13

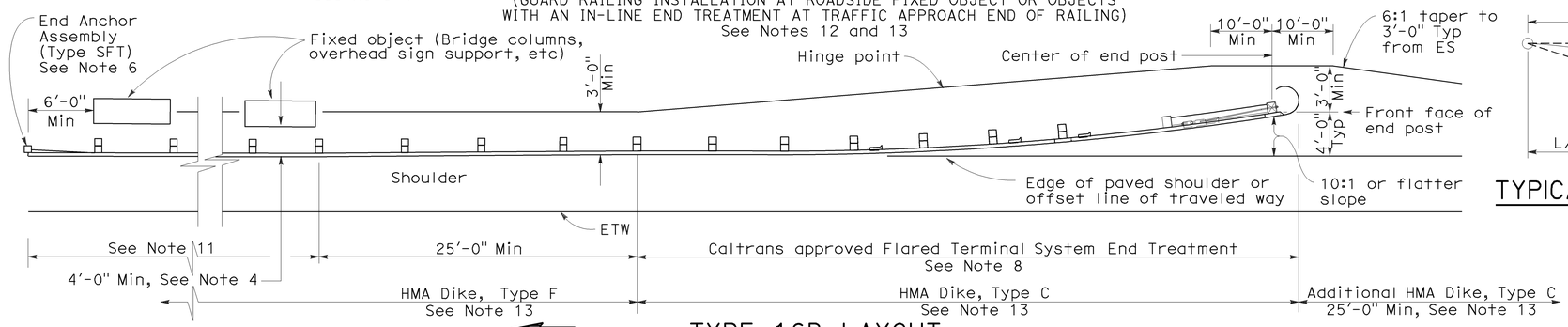

TYPE 16B LAYOUT

(GUARD RAILING INSTALLATION AT ROADSIDE FIXED OBJECT OR OBJECTS WITH A FLARED END TREATMENT AT TRAFFIC APPROACH END OF RAILING)
See Notes 12 and 13

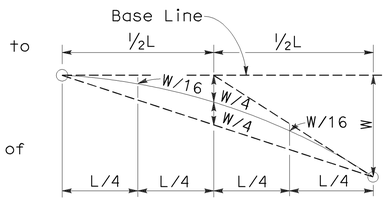

TYPICAL PARABOLIC LAYOUT

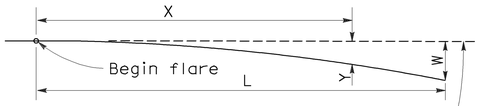

Base Line (Edge of paved shoulder or offset line of edge of traveled way)

$$Y = \frac{WX^2}{L^2}$$

Y = Offset from base line
W = Maximum offset
X = Distance along base line
L = Length of flare

PARABOLIC FLARE OFFSETS

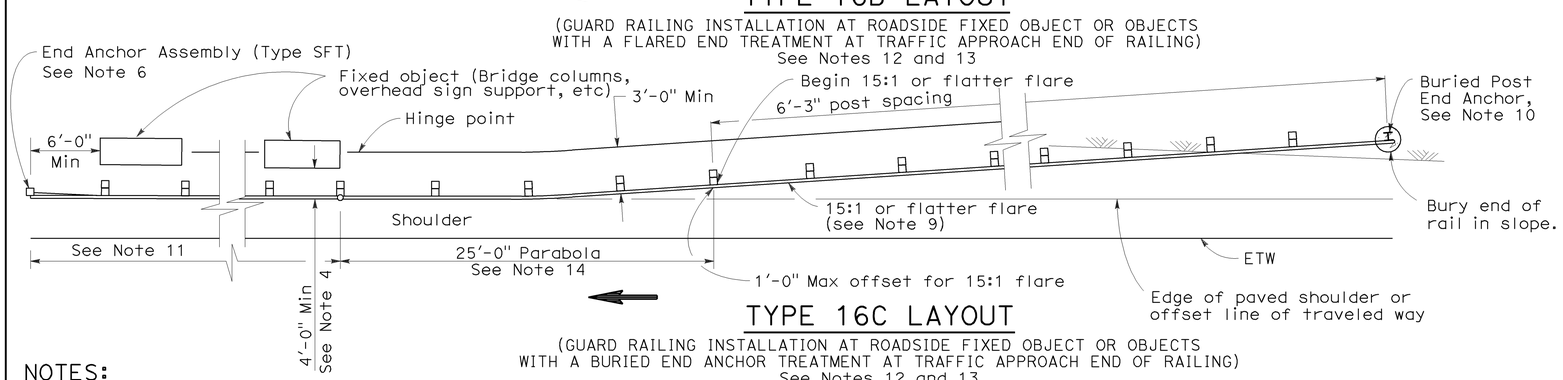

TYPE 16C LAYOUT

(GUARD RAILING INSTALLATION AT ROADSIDE FIXED OBJECT OR OBJECTS WITH A BURIED END ANCHOR TREATMENT AT TRAFFIC APPROACH END OF RAILING)
See Notes 12 and 13

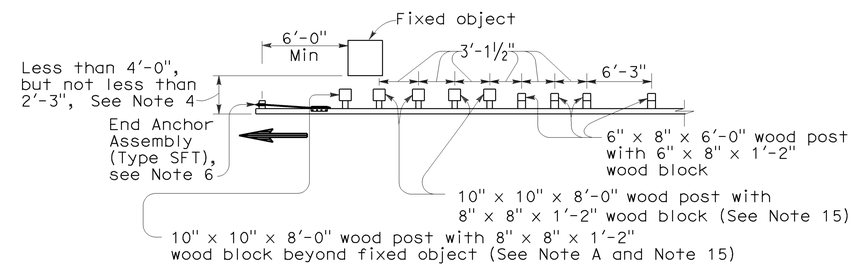

NOTE A: For a series of fixed objects (bridge columns, overhead sign supports, etc.) additional 10" x 10" x 8'-0" wood post with 8" x 8" x 1'-2" wood blocks at 3'-1½" center to center spacing are to be used between fixed objects.

STRENGTHENED RAILING SECTIONS FOR FIXED OBJECT

Use strengthened railing sections with Types 16A, 16B or 16C Layouts where minimum clearance between the face of the guard railing and fixed object(s) is less than 4'-0", but not less than 2'-3". See Note 4

NOTES:

1. Line post, blocks and hardware to be used are shown on Revised Standard Plans A77A1, A77A2, A77B1, A77C1 and A77C2.
2. Guard railing post spacing to be 6'-3" center to center, except as otherwise noted.
3. Except as noted, line posts are 6" x 8" x 6'-0" wood with 6" x 8" x 1'-2" wood blocks. W6 x 9 steel posts, 6'-0" in length, with 6" x 8" x 1'-2" notched wood blocks or notched recycled plastic blocks may be used for 6" x 8" x 6'-0" wood line posts with 6" x 8" x 1'-2" wood blocks where applicable and when specified.
4. A 4'-0" minimum clearance is required between the face of the railing and the face of a fixed object located directly behind standard guard railing sections with post spacing of 6'-3". Construct guard railing as shown in the detail "Strengthened Railing Sections for Fixed Objects" on this plan, where the clearance between the face of the railing and the face of a fixed object is less than 4'-0", but not less than 2'-3". Where the clearance is less than 2'-3", a concrete wall or barrier should be constructed to shield the fixed object(s).
5. Direction of adjacent traffic indicated by ⟶.
6. For End Anchor Assembly (Type SFT) details, see Standard Plan A77H1.
7. In-line Terminal System End Treatments are used where site conditions will not accommodate a flared end treatment.
8. The type of terminal system to be used will be shown on the Project Plans.
9. The 15:1 or flatter flare used with Type 16C Layout is based on the edge of the paved shoulder or offset line of edge of the traveled way. The length of guard railing within the 15:1 or flatter flare is based on site conditions and should be a length equal to multiples of 12'-6".
10. For details of the Buried Post End Anchor used with Type 16C Layout, see Standard Plan A77I2.
11. As site conditions dictate, construct additional guard railing to shield fixed object(s). Additional guard railing length equal to multiples of 12'-6". Post spacing at 6'-3" except as specified in Note 4.
12. Layout Types 16A, 16B or 16C are typically used where guard railing is recommended to shield roadside fixed object(s) and a crashworthy end treatment is required for only one direction of traffic.
13. Where placement of dike is required with guard railing, see Revised Standard Plan RSP A77C4 for dike positioning details.
14. For typical flare offsets for 25'-0" length parabola with maximum offset of 1'-0", see Revised Standard Plan RSP A77E1.
15. W6 x 15 steel post, 8'-0" in length, with 8" x 8" x 1'-2" notched wood block or notched recycled plastic blocks may be used in place of the 10" x 10" x 8'-0" wood post with 8" x 8" x 1'-2" wood block shown in the "Strengthened Railing Sections Detail".

STATE OF CALIFORNIA
DEPARTMENT OF TRANSPORTATION

METAL BEAM GUARD RAILING TYPICAL LAYOUTS FOR ROADSIDE FIXED OBJECTS

NO SCALE

RSP A77G3 DATED JUNE 6, 2008 SUPERSEDES STANDARD PLAN A77G3 DATED MAY 1, 2006 - PAGE 61 OF THE STANDARD PLANS BOOK DATED MAY 2006.

REVISED STANDARD PLAN RSP A77G3

2006 REVISED STANDARD PLAN RSP A77G3

12-10-07

DIST	COUNTY	ROUTE	POST MILES TOTAL PROJECT	SHEET NO.	TOTAL SHEETS
04	Ala	13	4.4/8.6	29	53

Randell D. Hiatt
REGISTERED CIVIL ENGINEER

June 5, 2009
PLANS APPROVAL DATE

REGISTERED PROFESSIONAL ENGINEER Randell D. Hiatt No. C50200 Exp. 6-30-09 CIVIL STATE OF CALIFORNIA

The State of California or its officers or agents shall not be responsible for the accuracy or completeness of electronic copies of this plan sheet.

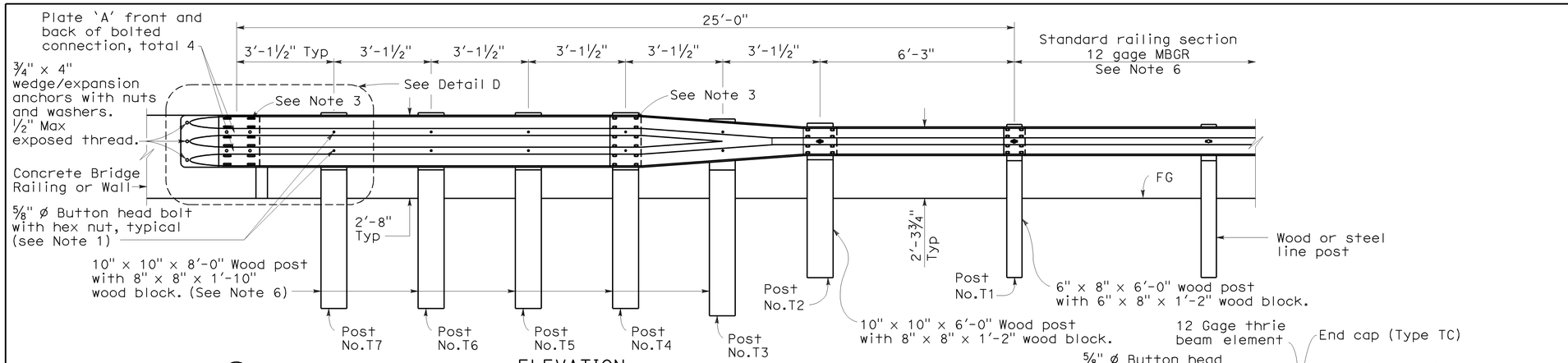

ELEVATION

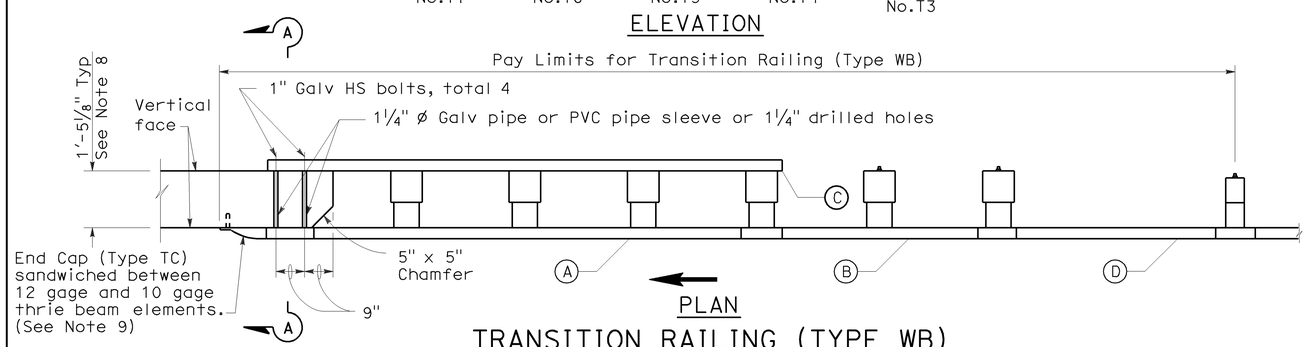

PLAN

TRANSITION RAILING (TYPE WB)

(No Blockout Attachment)

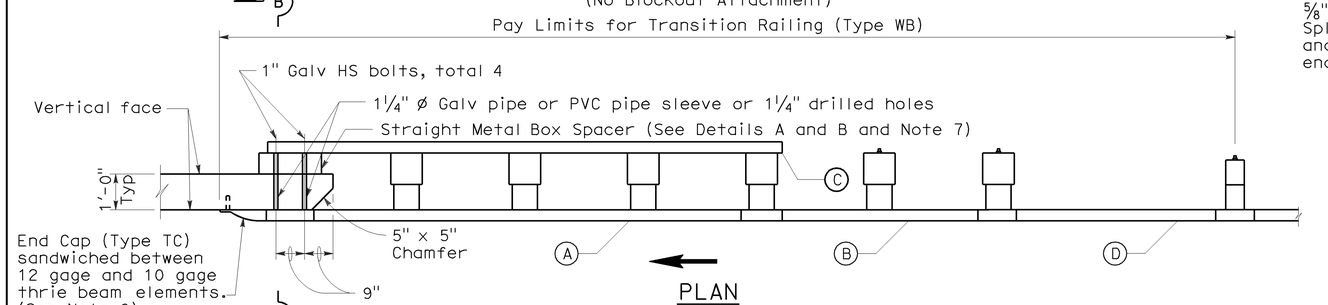

PLAN

TRANSITION RAILING (TYPE WB)

(Blockout Attachment)

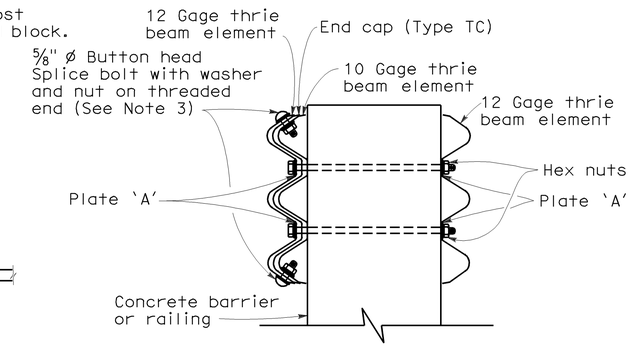

SECTION A-A

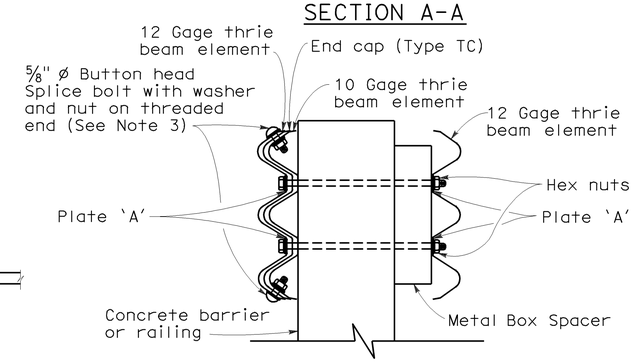

SECTION B-B

LEGEND

(A) Nested thrie beam elements (one 12 gage element nested over one 10 gage element).

(B) One 10 gage "W" beam to thrie beam element.

(C) One 12 gage thrie beam element.

(D) One 10 gage "W" beam rail element (7'-3½" length)

10 gage = 0.135" thick

12 gage = 0.108" thick

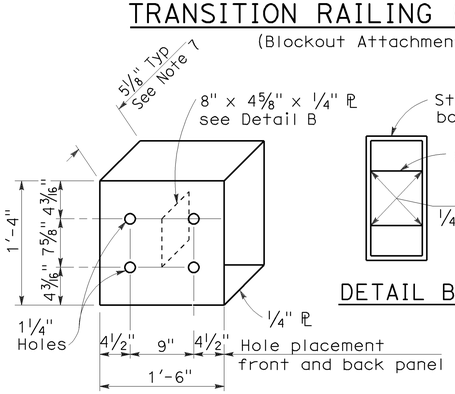

DETAIL A

STRAIGHT METAL BOX SPACER

DETAIL B

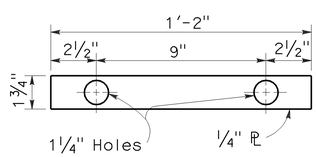

DETAIL C

PLATE 'A'

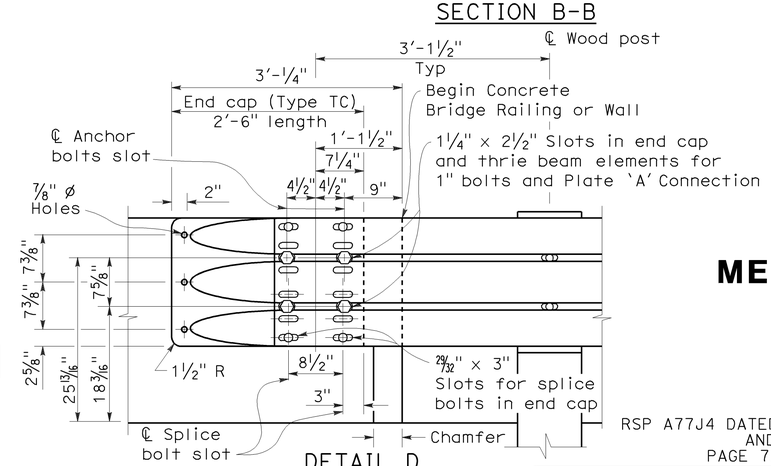

DETAIL D

NOTES:

To accompany plans dated 8-2-10

1. Use 5/8 " ø Button head bolts and hex nuts for connections to posts. No washer on rail face for bolted connections to post.
2. The nested rail elements, end cap, and 'W' beam to thrie beam element may be spliced together prior to bolting the elements to the wood post and concrete barrier or railing.
3. Exterior splice bolt holes for rail element splices at Post No.T4 and the connection to the concrete barrier or railing shall be the standard 29/32 " x 1 1/8 " slot size. Interior splice bolt holes at these locations may be increased up to 1 1/4 " ø. Only the top 2 and the bottom 2 splice bolts with washers and nuts are required for rail splices at Post No.T4 and the connection to the concrete barrier or railing.
4. Direction of adjacent traffic indicated by ⟶.
5. The top elevation of Post Nos.T2 through T7 shall not project more than 1" above the top elevation of the rail element.
6. Typically, the railing connected to Transition Railing (Type WB) will be either standard railing section of metal beam guard railing or an approved Caltrans end treatment attached to Post No.T1.
7. The depth of the metal box spacer varies from the 5 1/8 " to 1 1/2 " and is dependent on the width of the concrete railing or wall. The combined dimension for the depth of the metal box spacer plus the width of railing or wall is typically 17 1/8 ". Where the space between the backside of the concrete railing or wall and the rear thrie beam element is less than 1 1/2 ", metal plates similar to Plate 'A' are to be used as spacers.
8. Where the width of the concrete railing or wall is greater than 17 1/8 ", wood blocks are to be used to fill the space created between the backside of Posts No.4 through No.7 and the rear thrie beam element. These wood blocks shall be 8" in width and 1'-2" in length. The dimension between the front thrie beam element and the rear thrie beam element is to match the width of the concrete railing or wall.
9. End cap may be installed over 12 gage and 10 gage thrie beam elements where transition railing is installed on the departure end of bridge railing.

STATE OF CALIFORNIA
DEPARTMENT OF TRANSPORTATION

METAL BEAM GUARD RAILING TRANSITION RAILING (TYPE WB)

NO SCALE

RSP A77J4 DATED JUNE 5, 2009 SUPERSEDES RSP A77J4 DATED JUNE 6, 2008 AND STANDARD PLAN A77J4 DATED MAY 1, 2006 - PAGE 75 OF THE STANDARD PLANS BOOK DATED MAY 2006.

REVISED STANDARD PLAN RSP A77J4

2006 REVISED STANDARD PLAN RSP A77J4

5-14-09

DIST	COUNTY	ROUTE	POST MILES TOTAL PROJECT	SHEET No.	TOTAL SHEETS
04	Ala	13	4.4/8.6	30	53

Randell D. Hiatt
REGISTERED CIVIL ENGINEER

June 6, 2008
PLANS APPROVAL DATE

REGISTERED PROFESSIONAL ENGINEER
Randell D. Hiatt
No. C50200
Exp. 6-30-09
CIVIL
STATE OF CALIFORNIA

The State of California or its officers or agents shall not be responsible for the accuracy or completeness of electronic copies of this plan sheet.

To accompany plans dated 8-2-10

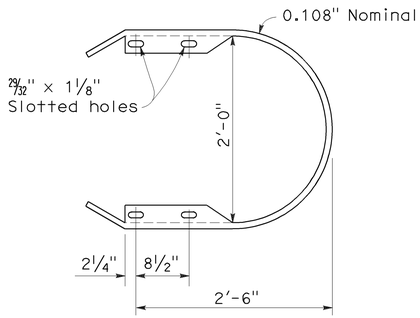

RETURN CAP
(TYPE TA)

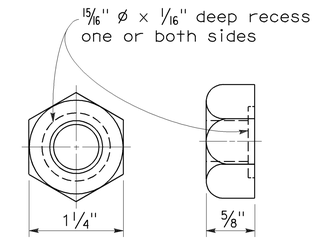

5/8" ø RECESS NUT

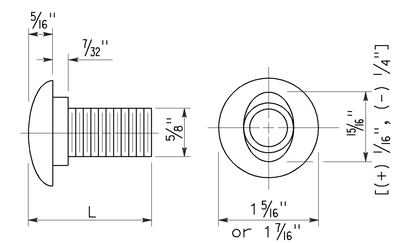

5/8" ø BUTTON HEAD BOLT

L	THREAD LENGTH
1 1/4"	full thread length
2"	full thread length
9 1/2"	4" Min thread length
18"	4" Min thread length

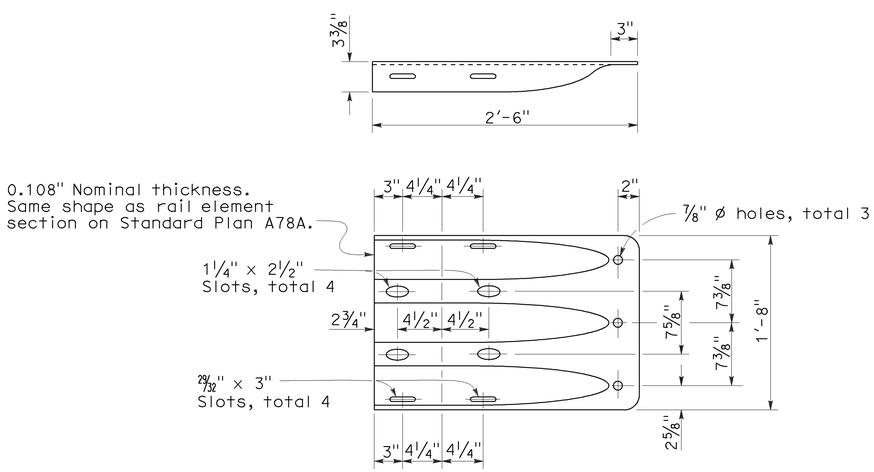

END CAP
(TYPE TC)

STATE OF CALIFORNIA
DEPARTMENT OF TRANSPORTATION

THRIE BEAM BARRIER STANDARD HARDWARE DETAILS

NO SCALE

RSP A78C1 DATED JUNE 6, 2008 SUPERSEDES STANDARD PLAN A78C1
DATED MAY 1, 2006 - PAGE 85 OF THE STANDARD PLANS BOOK DATED MAY 2006.

REVISED STANDARD PLAN RSP A78C1

2006 REVISED STANDARD PLAN RSP A78C1

4-21-08

DIST	COUNTY	ROUTE	POST MILES TOTAL PROJECT	SHEET NO.	TOTAL SHEETS
04	Ala	13	4.4/8.6	31	53

LICENSED LANDSCAPE ARCHITECT

June 5, 2009
PLANS APPROVAL DATE

LICENSED LANDSCAPE ARCHITECT
Gregory A. Balzer 2576
10-31-09 Expiration Date
2-28-11 Renewal Date
5-14-09 Date
STATE OF CALIFORNIA

The State of California or its officers or agents shall not be responsible for the accuracy or completeness of electronic copies of this plan sheet.

To accompany plans dated 8-2-10

A

AB	aggregate base
ABS	acrylonitrile-butadiene-styrene
AC	asphalt concrete
Adj	adjacent/adjustable
AIC	auxiliary irrigation controller
Alt	alternative
AMEND	amendment
ARV	air release valve
AUTO	automatic
AUX	auxiliary
AVB	atmospheric vacuum breaker

B

B&B	balled and burlapped
B/B	brass/bronze
B/B/PL	brass/bronze/plastic
B/PL	brass/plastic
BFM	bonded fiber matrix
Bit Ctd	bituminous coated
BP	booster pump
BPA	backflow preventer assembly
BPAE	backflow preventer assembly in enclosure
BPE	backflow preventer enclosure
BV	ball valve

C

CAP	corrugated aluminum pipe
CARV	combination air release valve
CCA	cam coupler assembly
CEC	controller enclosure cabinet
CHDPE	corrugated high density polyethylene
CL	chain link
CNC	control and neutral conductors
Conc	concrete
Cond	conduit
CSP	corrugated steel pipe
CST	center strip
CV	check valve

D

Dia	diameter
DIP	ductile iron pipe
DN	diameter nominal

E

EA	each
Elect	electric/electrical
Elev	elevation
ENCL	enclosure
EP	edge of pavement
ES	edge of shoulder
EST	end strip
ESTB	establishment
ETW	edge of traveled way

F

F	full circle
F/P	full/part circle
FAU	filter assembly unit
FCV	flow control valve
FERT	fertilizer
FG	finished grade
FIPT	female iron pipe thread
FIS	fertilizer injector system
FL	flow line
FM	flow monitor
FS	flow sensor
Ft	foot/feet
FV	flush valve

G

GAL	Gallon(s)
Galv	galvanized
GARV	garden valve
GPH	gallons per hour
GPM	gallons per minute
GSP	galvanized steel pipe
GV	gate valve

H

H	half circle
HB	hose bib
HDPE	high density polyethylene
HP	horsepower/hinge point
HPL	high pressure line
Hwy	highway

I

IC	irrigation controller
ICC	irrigation controller(s) in controller enclosure cabinet
ID	inside diameter
In	inches
IFS	irrigation filtration system
IPS	iron pipe size
IPT	iron pipe thread
Irr	irrigation

L

L	length
LF	linear foot

M

Max	maximum
MBGR	metal beam guard railing
MCV	manual control valve
MIC	master irrigation controller
Min	minimum
MIPT	male iron pipe thread
Misc	miscellaneous
Mtl	material
MVP	maintenance vehicle pullout

N

NCN	no common name
NL	nozzle line
No.	number
NPT	national pipe thread

O

O/C	on center
OD	outside diameter
Oz	ounce

P

P	part circle
PB	pull box
PCC	portland cement concrete
PE	polyethylene
Pkt	packet
PL	plastic
PLT	plant/planting
PLT ESTB	plant establishment
PM	post mile
PR	pressure rated
PRLV	pressure relief valve
PSFM	polymer stabilized fiber matrix
PSI	pounds per square inch
PRV	pressure reducing valve
PVC	polyvinyl chloride
Pvmt	pavement

Q

Q	quarter circle
QCV	quick coupling valve

R

R	radius
RCP	reinforced concrete pipe
RCV	remote control valve
RCVM	remote control valve (master)
RCVMF	remote control valve (master) w/ flow meter
RCW	recycled/reclaimed water
RECP	rolled erosion control product
REQ	required
R/W	right of way

S

S	slip
SCC	sprinkler control conduit
SCH	schedule
SF	state-furnished
Shld	shoulder
SQFT	square foot/feet
SQYD	square yard(s)
SST	side strip
Sta	station
Std	standard
SW	sidewalk/sound wall

T

T	third circle/thread
TLS	truck loading standpipe
TQ	three quarter circle
TRM	turf reinforcement mat
TRVD	traveled
TT	two third circle
Typ	typical

U

UG	underground

V

VAU	valve assembly unit

W

W	width
W/	with
WM	water meter
WS	wye strainer
WSP	welded steel pipe
WWM	welded wire mesh

NOTE:

FOR ADDITIONAL ABBREVIATIONS, SEE STANDARD PLANS A10A AND A10B.

STATE OF CALIFORNIA
DEPARTMENT OF TRANSPORTATION

PLANTING AND IRRIGATION ABBREVIATIONS

NO SCALE

RSP H1 DATED JUNE 5, 2009 SUPERSEDES STANDARD PLAN H1
DATED MAY 1, 2006 - PAGE 201 OF THE STANDARD PLANS BOOK DATED MAY 2006.

REVISED STANDARD PLAN RSP H1

2006 REVISED STANDARD PLAN RSP H1

5-28-09

DIST	COUNTY	ROUTE	POST MILES TOTAL PROJECT	SHEET NO.	TOTAL SHEETS
04	Ala	13	4.4/8.6	32	53

LICENSED LANDSCAPE ARCHITECT

June 5, 2009
PLANS APPROVAL DATE

The State of California or its officers or agents shall not be responsible for the accuracy or completeness of electronic copies of this plan sheet.

LICENSED LANDSCAPE ARCHITECT — Gregory A. Balzer — 2576 — Expiration Date 2-28-11 — Renewal Date 5-14-09 — Date — STATE OF CALIFORNIA

To accompany plans dated 8-2-10

EXISTING	PROPOSED	ITEM DESCRIPTION
		WATER METER (WM)
		BACKFLOW PREVENTER ASSEMBLY (BPA)
		BACKFLOW PREVENTER ASSEMBLY IN ENCLOSURE (BPAE)
		BACKFLOW PREVENTER ENCLOSURE (BPE)
		BOOSTER PUMP (BP)
		TRUCK LOADING STANDPIPE (TLS)
	FS	FLOW SENSOR (FS)
X	X	MASTER IRRIGATION CONTROLLER (MIC)
		AUXILIARY IRRIGATION CONTROLLER (AIC)
		IRRIGATION CONTROLLER (IC)/ IRRIGATION CONTROLLER (IC) (BATTERY) IRRIGATION CONTROLLER (IC) (SOLAR)
		IRRIGATION CONTROLLER(S) IN CONTROLLER ENCLOSURE CABINET (ICC)
		CONTROL AND NEUTRAL CONDUCTORS (CNC)
SCC	SCC	SPRINKLER CONTROL CONDUIT (SCC)
		IRRIGATION CROSSOVER
		EXTEND IRRIGATION CROSSOVER
		IRRIGATION SLEEVE
dip	DIP	DUCTILE IRON PIPE (SUPPLY LINE) (MAIN) (DIP)
		GALVANIZED STEEL PIPE (SUPPLY LINE) (MAIN) (GSP)
		GALVANIZED STEEL PIPE (SUPPLY LINE) (LATERAL) (GSP)
		PLASTIC PIPE (PR 200) (SUPPLY LINE) (MAIN)
		PLASTIC PIPE (PR 200) (SUPPLY LINE) (LATERAL)
		PLASTIC PIPE (IRRIGATION LINE)
		REMOTE CONTROL VALVE (RCV) REMOTE CONTROL VALVE (MASTER) (RCVM) REMOTE CONTROL VALVE (MASTER) W/FLOW METER (RCVMF)
		MANUAL CONTROL VALVE (MCV)
		VALVE ASSEMBLY UNIT (VAU)
		WYE STRAINER (WS)
		FILTER ASSEMBLY UNIT (FAU)
		GATE VALVE (GV)
		BALL VALVE (BV)

EXISTING	PROPOSED	ITEM DESCRIPTION
		QUICK COUPLING VALVE (QCV)
		CAM COUPLER ASSEMBLY (CCA)
		PRESSURE REDUCING VALVE (PRV)
		PRESSURE RELIEF VALVE (PRLV)
		FLOW CONTROL VALVE (FCV)
		COMBINATION AIR RELEASE VALVE (CARV)
		CHECK VALVE (CV)
		FLUSH VALVE (FV)
		NOZZLE LINE W/TURNING UNION
		IRRIGATION SYSTEM
		IRRIGATION SYSTEM TO BE REMOVED
		CHAIN LINK GATE
		QUICK COUPLING VALVE W/SPRINKLER PROTECTOR
3	3	SPRINKLER W/SPRINKLER PROTECTOR
	C	CONNECT TO EXISTING SYSTEM
		CAP
		CAP EXISTING

VALVE CODE

RCV SIZE
IRRIGATION CONTROLLER
CONTROLLER STATION
VALVE IN PARALLEL (IF APPLICABLE)
GPM
QUANTITY OF SPRINKLERS (WHEN SHOWN)

* 2½"-A-2b-40 -60

MCV SIZE
VALVE NUMBER
GPM
QUANTITY OF TYPE SPRINKLERS (WHEN SHOWN)

* 2"-3-30 -50

* VALVE CODES FOR EXISTING VALVES ARE SHOWN IN A DASHED ENCLOSURE.

STATE OF CALIFORNIA
DEPARTMENT OF TRANSPORTATION

PLANTING AND IRRIGATION SYMBOLS

NO SCALE

RSP H2 DATED JUNE 5, 2009 SUPERSEDES RSP H2 DATED MARCH 7, 2008 AND STANDARD PLAN H2 DATED MAY 1, 2006 - PAGE 202 OF THE STANDARD PLANS BOOK DATED MAY 2006.

REVISED STANDARD PLAN RSP H2

2006 REVISED STANDARD PLAN RSP H2

5-11-09

DIST	COUNTY	ROUTE	POST MILES TOTAL PROJECT	SHEET NO.	TOTAL SHEETS
04	Ala	13	4.4/8.6	33	53

LICENSED LANDSCAPE ARCHITECT

June 5, 2009
PLANS APPROVAL DATE

The State of California or its officers or agents shall not be responsible for the accuracy or completeness of electronic copies of this plan sheet.

LICENSED LANDSCAPE ARCHITECT — Gregory A. Balzer 2576 — 10-28-10 Expiration Date — 2-28-11 Renewal Date — 5-14-09 Date — STATE OF CALIFORNIA

To accompany plans dated 8-2-10

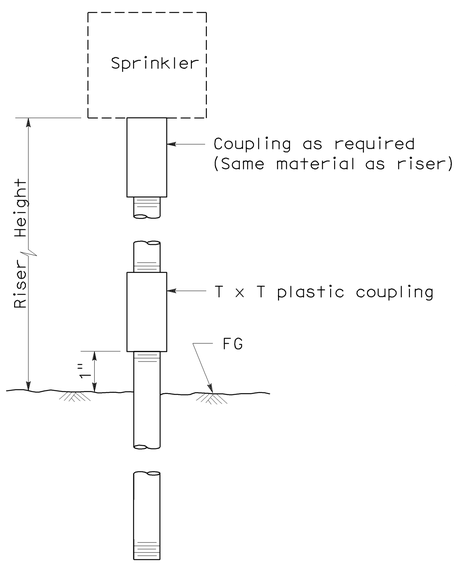

ELEVATION
RISER TYPE I

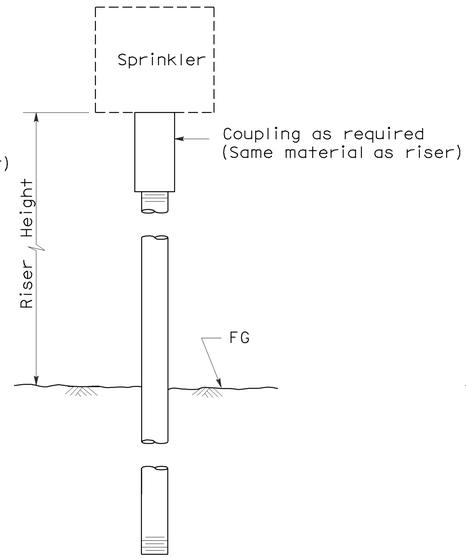

ELEVATION
RISER TYPE II

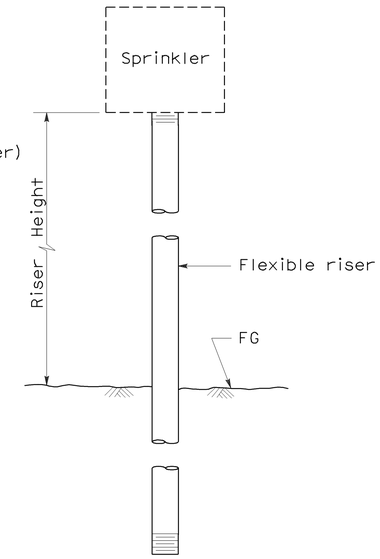

ELEVATION
RISER TYPE III

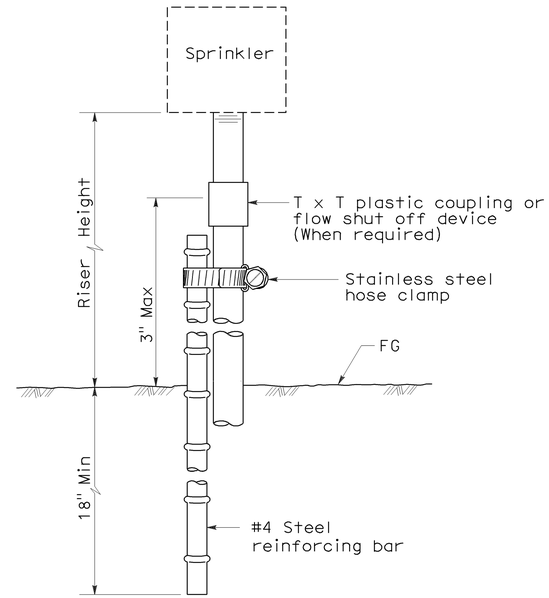

ELEVATION
RISER TYPE IV

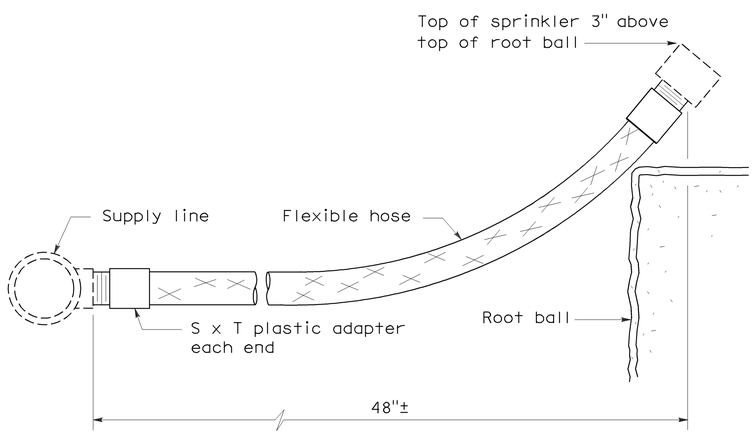

ELEVATION
RISER TYPE V

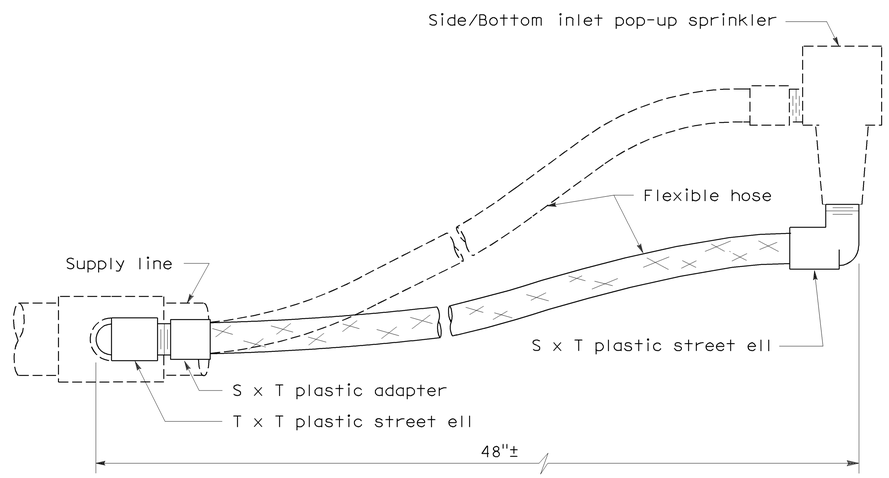

ELEVATION
RISER TYPE VI

STATE OF CALIFORNIA
DEPARTMENT OF TRANSPORTATION

PLANTING AND IRRIGATION DETAILS

NO SCALE

RSP H5 DATED JUNE 5, 2009 SUPERSEDES STANDARD PLAN H5
DATED MAY 1, 2006 - PAGE 205 OF THE STANDARD PLANS BOOK DATED MAY 2006.

REVISED STANDARD PLAN RSP H5

2006 REVISED STANDARD PLAN RSP H5

5-28-09

DIST	COUNTY	ROUTE	POST MILES TOTAL PROJECT	SHEET NO.	TOTAL SHEETS
04	Ala	13	4.4/8.6	34	53

LICENSED LANDSCAPE ARCHITECT

June 5, 2009
PLANS APPROVAL DATE

The State of California or its officers or agents shall not be responsible for the accuracy or completeness of electronic copies of this plan sheet.

LICENSED LANDSCAPE ARCHITECT — Gregory A. Balzer — 2576 — Expiration Date 2-28-11 — Renewal Date 5-14-09 — Date — STATE OF CALIFORNIA

To accompany plans dated 8-2-10

2006 REVISED STANDARD PLAN RSP H7

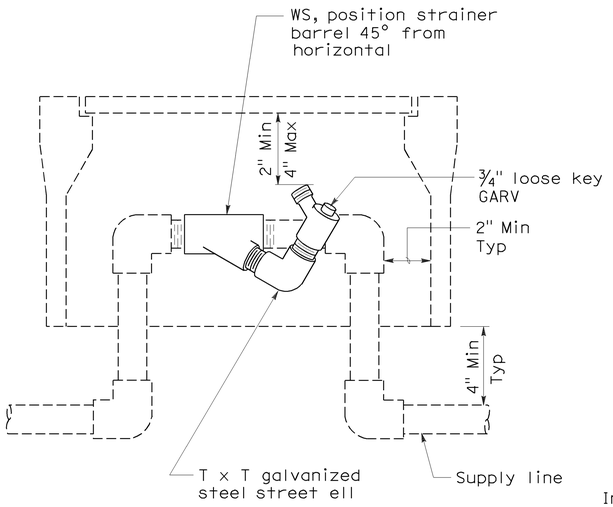

ELEVATION
WYE STRAINER

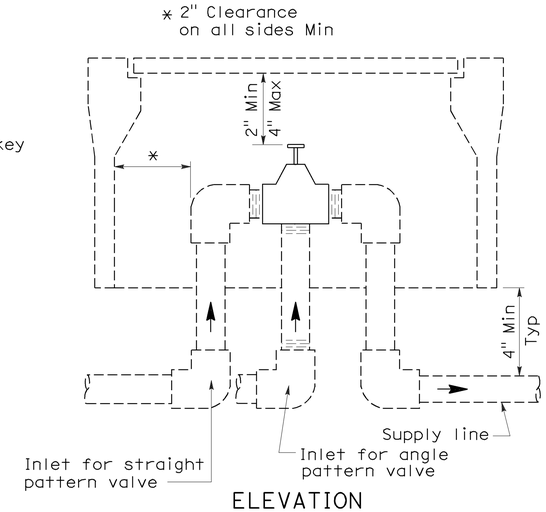

ELEVATION
VALVE

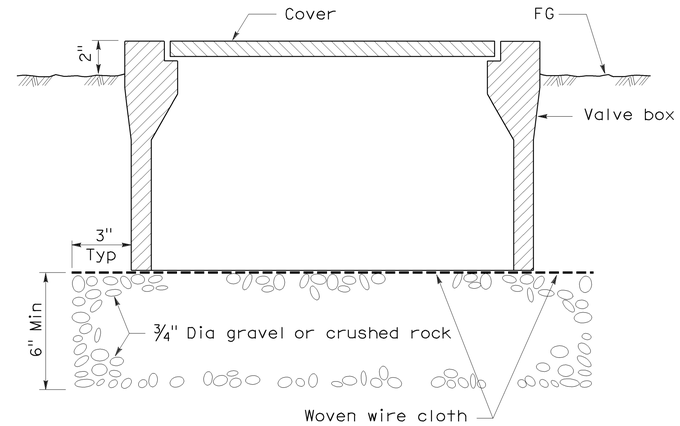

SECTION
VALVE BOX

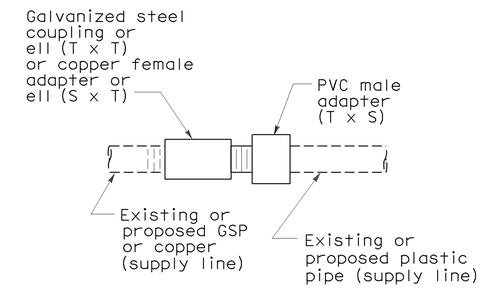

PLAN
GALVANIZED OR COPPER PIPE CONNECTION TO PLASTIC PIPE

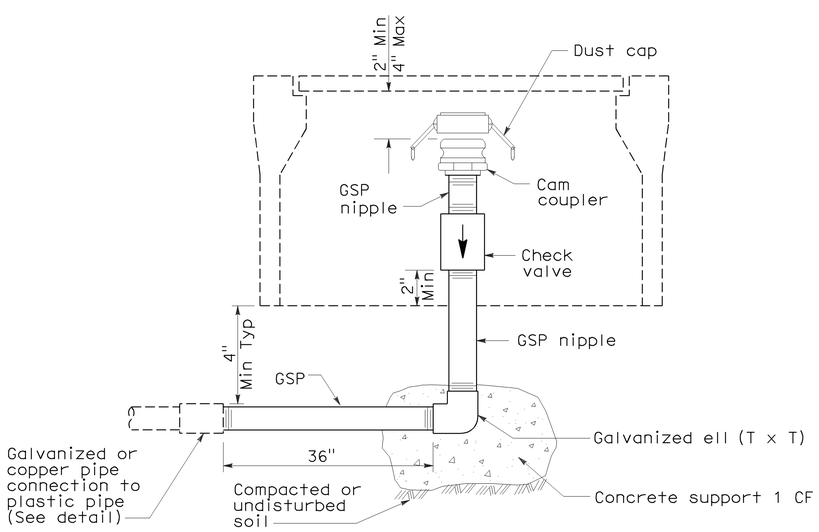

ELEVATION
CAM COUPLER ASSEMBLY

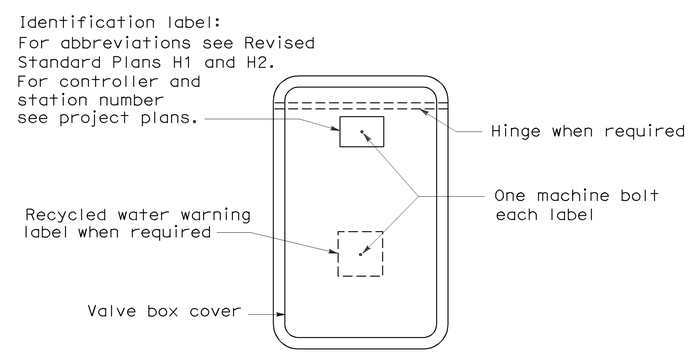

PLAN

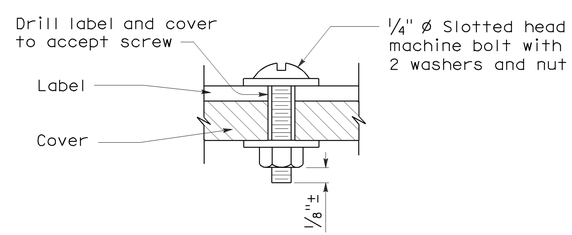

SECTION
VALVE BOX IDENTIFICATION

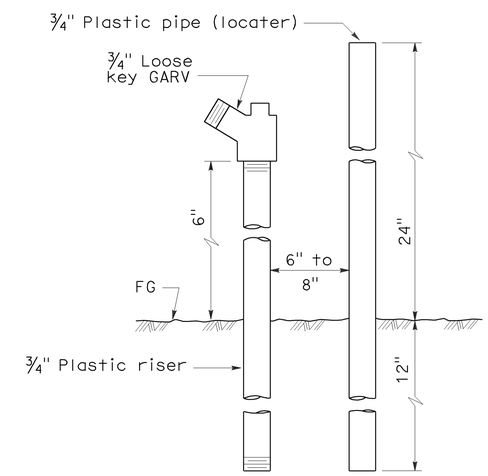

ELEVATION
FLUSH VALVE

STATE OF CALIFORNIA
DEPARTMENT OF TRANSPORTATION

PLANTING AND IRRIGATION DETAILS

NO SCALE

RSP H7 DATED JUNE 5, 2009 SUPERSEDES STANDARD PLAN H7
DATED MAY 1, 2006 - PAGE 207 OF THE STANDARD PLANS BOOK DATED MAY 2006.

REVISED STANDARD PLAN RSP H7

5-28-09

DIST	COUNTY	ROUTE	POST MILES TOTAL PROJECT	SHEET NO.	TOTAL SHEETS
04	Ala	13	4.4/8.6	35	53

LICENSED LANDSCAPE ARCHITECT

April 3, 2009
PLANS APPROVAL DATE

The State of California or its officers or agents shall not be responsible for the accuracy or completeness of electronic copies of this plan sheet.

LICENSED LANDSCAPE ARCHITECT — Gregory A. Balzer — 02-28-11 Renewal Date — 03-04-09 Date — STATE OF CALIFORNIA

To accompany plans dated 8-2-10

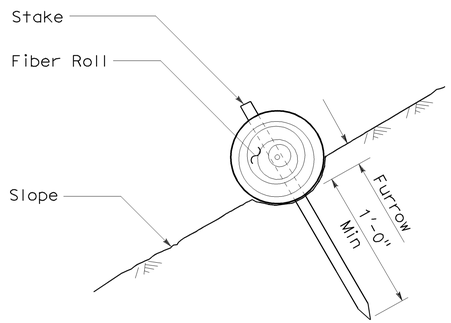

SECTION

FIBER ROLL (TYPE 1)

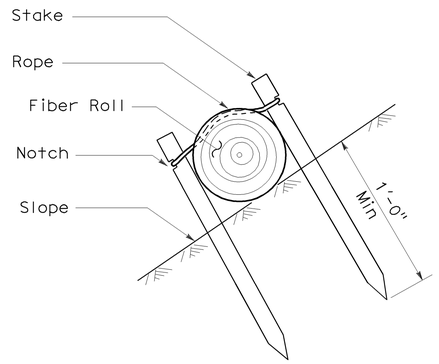

SECTION

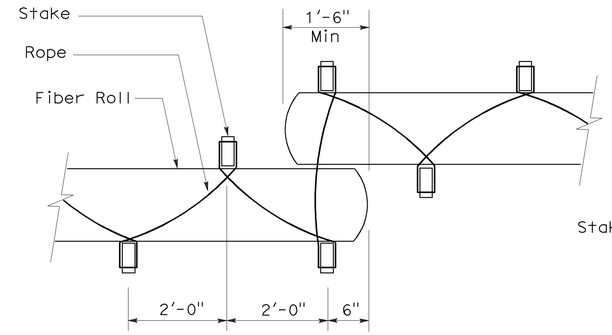

PLAN

FIBER ROLL (TYPE 2)

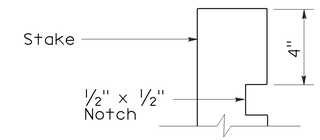

ELEVATION

STAKE NOTCH DETAIL

NOTES:

1. Fiber roll spacing varies depending upon slope inclination.
2. Installations shown in the perspectives are for slope inclination of 10:1 and steeper.

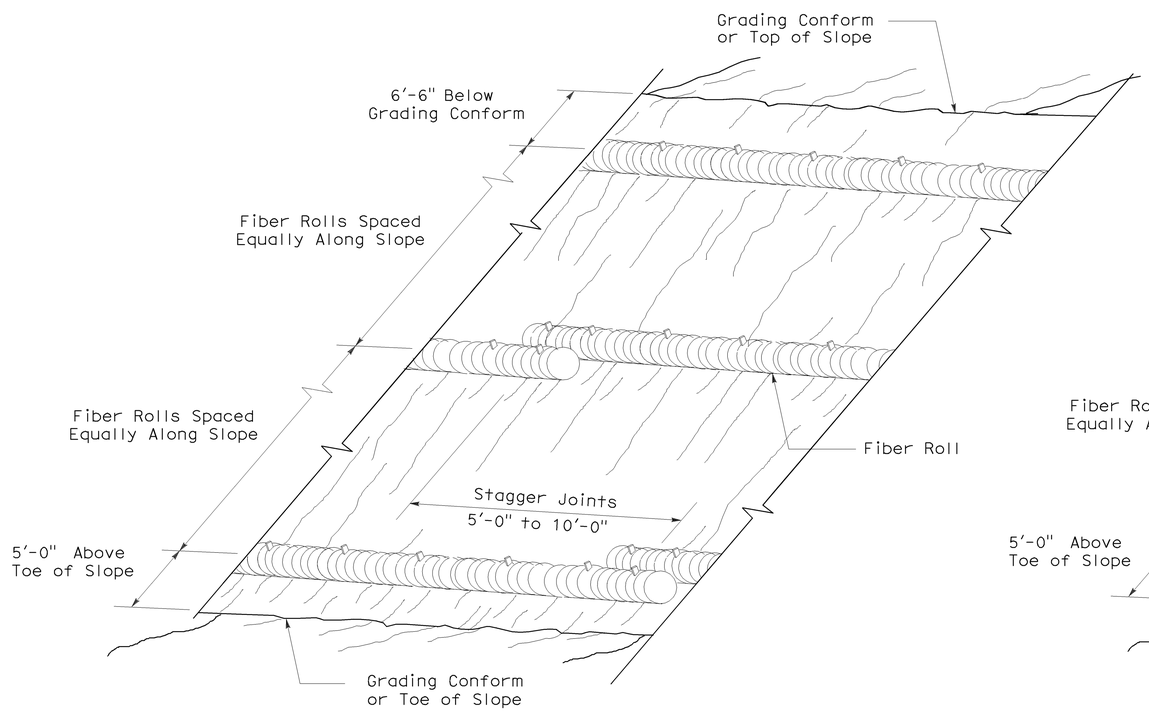

PERSPECTIVE

FIBER ROLL (TYPE 1)

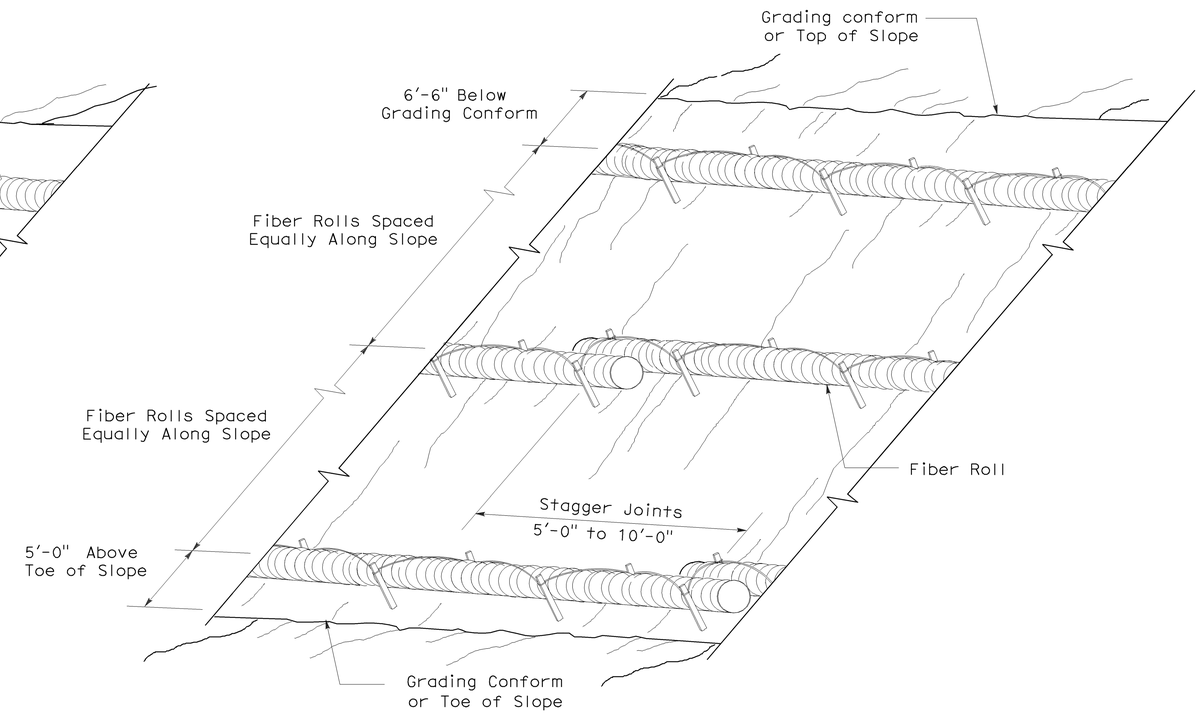

PERSPECTIVE

FIBER ROLL (TYPE 2)

STATE OF CALIFORNIA
DEPARTMENT OF TRANSPORTATION

EROSION CONTROL DETAILS (FIBER ROLL)

NO SCALE

RNSP H51 DATED APRIL 3, 2009 SUPERSEDES NSP H51 DATED DECEMBER 1, 2006 THAT SUPPLEMENTS THE STANDARD PLANS BOOK DATED MAY 2006.

REVISED NEW STANDARD PLAN RNSP H51

2006 REVISED NEW STANDARD PLAN RNSP H51

3-4-09

DIST	COUNTY	ROUTE	POST MILES TOTAL PROJECT	SHEET NO.	TOTAL SHEETS
04	Ala	13	4.4/8.6	36	53

Randell D. Hiatt
REGISTERED CIVIL ENGINEER

June 6, 2008
PLANS APPROVAL DATE

REGISTERED PROFESSIONAL ENGINEER
Randell D. Hiatt
No. C50200
Exp. 6-30-09
CIVIL
STATE OF CALIFORNIA

The State of California or its officers or agents shall not be responsible for the accuracy or completeness of electronic copies of this plan sheet.

To accompany plans dated 8-2-10

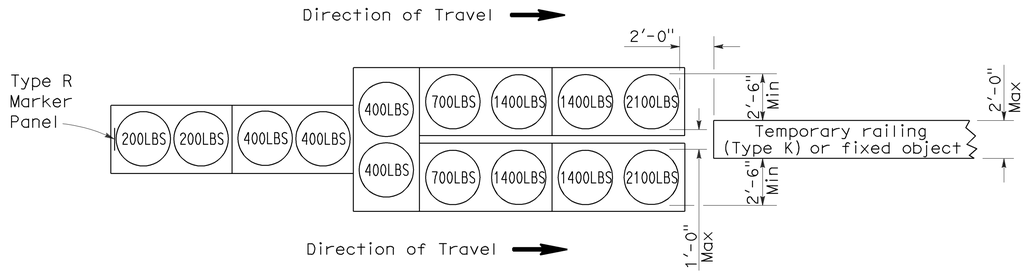

ARRAY 'TU14'

Approach speed 45 mph or more

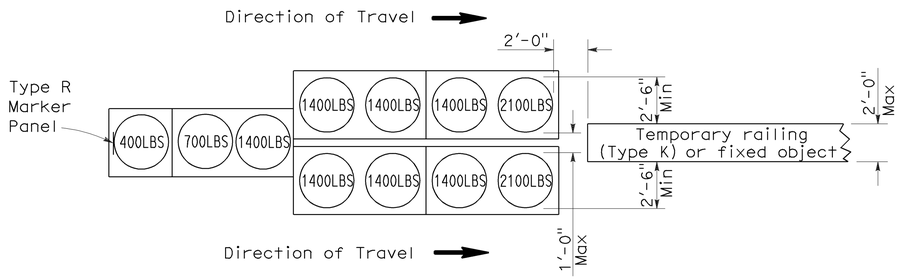

ARRAY 'TU11'

Approach speed less than 45 mph

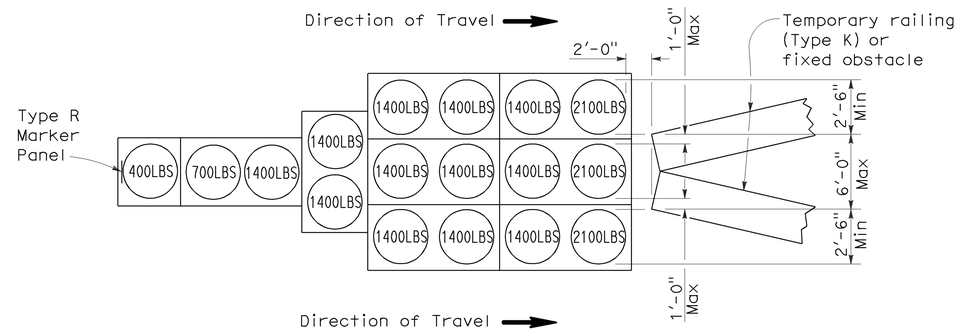

ARRAY 'TU17'

Approach speed less than 45 mph

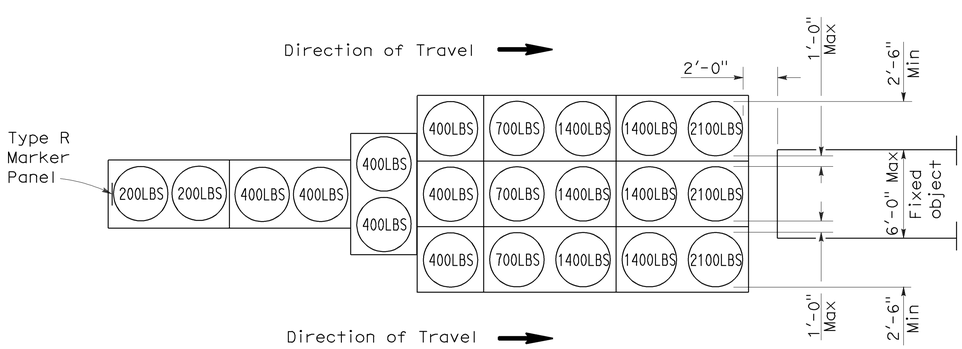

ARRAY 'TU21'

Approach speed 45 mph or more

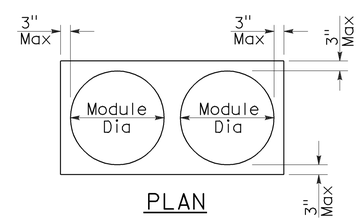

PLAN

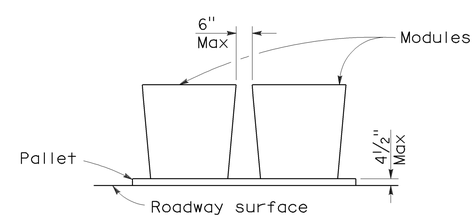

ELEVATION

CRASH CUSHION PALLET DETAIL

See Note 7

NOTES:

1. (XXX) Indicates sand filled module location and weight of sand in pounds for each module. Module spacing is based on the greater diameter of the module.
2. All sand weights are nominal.
3. Temporary crash cushion arrays shall not encroach on the traveled way.
4. Place the top of Type R marker panel 1" below the module lid.
5. Refer to Standard Plan A73B for marker details.
6. Approach speeds indicated conform to NCHRP 350 Report criteria.
7. Use of pallets is optional.

STATE OF CALIFORNIA
DEPARTMENT OF TRANSPORTATION

TEMPORARY CRASH CUSHION, SAND FILLED (UNIDIRECTIONAL)

NO SCALE

RSP T1A DATED JUNE 6, 2008 SUPERSEDES STANDARD PLAN T1A
DATED MAY 1, 2006 - PAGE 211 OF THE STANDARD PLANS BOOK DATED MAY 2006.

REVISED STANDARD PLAN RSP T1A

2006 REVISED STANDARD PLAN RSP T1A

DIST	COUNTY	ROUTE	POST MILES TOTAL PROJECT	SHEET NO.	TOTAL SHEETS
04	Ala	13	4.4/8.6	37	53

Randell D. Hiatt
REGISTERED CIVIL ENGINEER

June 6, 2008
PLANS APPROVAL DATE

REGISTERED PROFESSIONAL ENGINEER
Randell D. Hiatt
No. C50200
Exp. 6-30-09
CIVIL
STATE OF CALIFORNIA

The State of California or its officers or agents shall not be responsible for the accuracy or completeness of electronic copies of this plan sheet.

To accompany plans dated 8-2-10

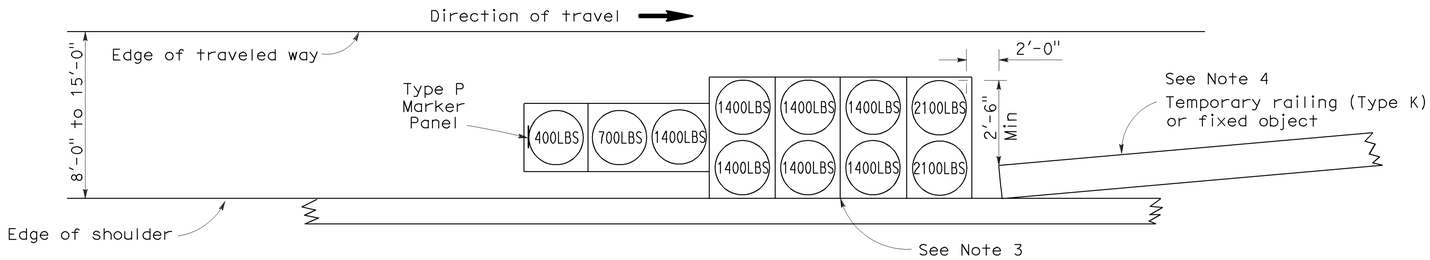

ARRAY 'TS11'

Approach speed less than 45 mph
See Note 9

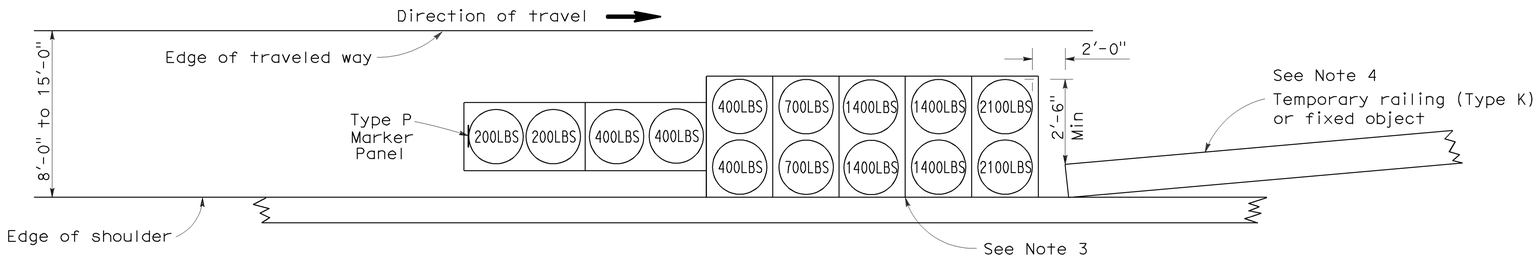

ARRAY 'TS14'

Approach speed 45 mph or more
See Note 9

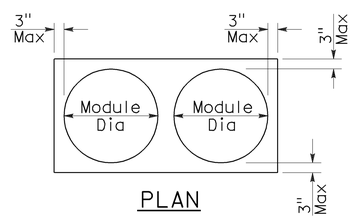

PLAN

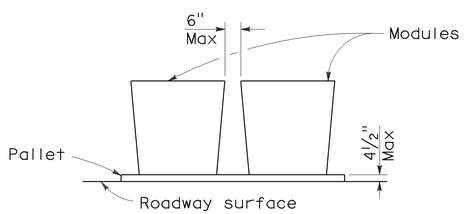

ELEVATION

CRASH CUSHION PALLET DETAIL

See Note 11

NOTES:

1. (XXX) Indicates sand filled module location and weight of sand in pounds for each module. Module spacing is based on the greater diameter of the module.
2. All sand weights are nominal.
3. The temporary crash cushion arrays shown on this plan shall be used only in locations where there will be traffic on one side of the temporary crash cushion array.
4. If the fixed object or approach end of the temporary railing is less than 15'-0" from the edge of traveled way, a temporary crash cushion is required in a construction or work zone.
5. Temporary crash cushion arrays shall not encroach on the traveled way.
6. Arrays for median shoulders shall conform to details shown on this plan for outside shoulders.
7. Place the Type P marker panel so that the bottom of the panel rests upon the pallet and faces traffic.
8. Refer to Standard Plan A73B for marker details.
9. For shoulder widths less than 8'-0", appropriate approved crash cushion protection, other than sand filled modules, shall be provided at fixed objects and at approach ends of temporary railing. The specific type of crash cushion shall be as shown on the project plans or as specified in the Special Provisions, or if not shown on the project plans or specified in the Special Provisions, shall be as approved by the Engineer.
10. Approach speeds indicated conform to NCHRP 350 Report criteria.
11. Use of pallets is optional.

STATE OF CALIFORNIA
DEPARTMENT OF TRANSPORTATION

TEMPORARY CRASH CUSHION, SAND FILLED (SHOULDER INSTALLATIONS)

NO SCALE

RSP T2 DATED JUNE 6, 2008 SUPERSEDES STANDARD PLAN T2
DATED MAY 1, 2006 - PAGE 213 OF THE STANDARD PLANS BOOK DATED MAY 2006.

REVISED STANDARD PLAN RSP T2

2006 REVISED STANDARD PLAN RSP T2

5-15-08

DIST	COUNTY	ROUTE	POST MILES TOTAL PROJECT	SHEET NO.	TOTAL SHEETS
04	Ala	13	4.4/8.6	38	53

REGISTERED ELECTRICAL ENGINEER

October 5, 2007
PLANS APPROVAL DATE

REGISTERED PROFESSIONAL ENGINEER Jeffery G. McRae No. E14512 Exp. 6-30-08 ELECTRICAL STATE OF CALIFORNIA

The State of California or its officers or agents shall not be responsible for the accuracy or completeness of electronic copies of this plan sheet.

To accompany plans dated 8-2-10

ELECTROLIERS

STANDARD TYPES
15, 15D
15 STRUCTURE
21, 21D STRUCTURE
30
31
32
35
36-20A

High mast light pole

Double Arm lighting standard

Existing electrolier

Electrolier foundation (Future installation)

NOTES:

1. Luminaires shall be 310 W HPS when installed on Type 21, 21D, 30, 31, 32, 35 and 36-20A Standards, unless otherwise specified. Luminaires shall be 200 W HPS when installed on other type standards or poles, unless otherwise specified.
2. Luminaires shall be the cutoff type, ANSI Type III medium cutoff lighting distribution, unless otherwise specified.
3. Variations noted adjacent to symbol on project plans.

Electrolier (see project notes or project plans)

Luminaire on wood pole

STANDARD NOTES:

- AB — Abandon. If applied to conduit, remove conductors.
- BC — Install pull box in existing conduit run.
- BP — Pedestrian barricade, type as indicated on plan.
- CB — Install conduit into existing pull box.
- CC — Connect new and existing conduit. Remove existing conductors and install conductors as indicated.
- CF — Conduit to remain for future use. Remove conductors. Install pull wire or rope.
- DH — Detector handhole.
- FA — Foundation to be abandoned.
- IS — Install sign on signal mast arm.
- NS — No slip base on standard.
- PEC — Photoelectric control.
- PEU — Photoelectric unit.
- RC — Equipment or material to be removed and become the property of the Contractor.
- RE — Remove electrolier, fuses and ballast. Tape ends of conductors.
- RL — Relocate equipment.
- RR — Remove and reuse equipment.
- RS — Remove and salvage equipment.
- SC — Splice new to existing conductors.
- SD — Service disconnect.
- SF — Standard to remain for future use. Remove luminaire, pole conductors, fuses and ballast.
- TSP — Telephone service point.

ABBREVIATIONS AND EQUIPMENT DESIGNATIONS

PROPOSED	EXISTING	
BBS	bbs	Battery backup system
BC	bc	Bolt circle
C	C	Conduit
CCTV	cctv	Closed circuit television
CKT	ckt	Circuit
CMS	cms	Changeable message sign
DLC	dlc	Loop detector lead-in cable
EMS	ems	Extinguishable message sign
EVC	evc	Emergency vehicle cable
EVD	evd	Emergency vehicle detector
FB	fb	Flashing beacon
FBCA	fbca	Flashing beacon control assembly
FBS	fbs	Flashing beacon with slip base
FO	fo	Fiber optic
G	G	Ground (Equipment Grounding Conductor)
GFCI	GFCI	Ground fault circuit interrupt
HAR	har	Highway advisory radio
HEX	hex	Hexagonal
HPS	hps	High pressure sodium
IISNS	iisns	Internally illuminated street name sign
ISL	isl	Induction sign lighting
LED	led	Light emitting diode
LMA	lma	Luminaire mast arm
LPS	lps	Low pressure sodium
LTG	ltg	Lighting
LUM	lum	Luminaire
MAT	mat	Mast arm mounting vehicle signal faces, top attachment
MAS	mas	Mast arm mounting vehicle signal faces, side attachment
MAS-4A	mas-4A	Mast arm mounting vehicle signal faces, side attachment - 4 signal section
MAS-4B	mas-4B	
MAS-4C	mas-4C	
MAS-5A	mas-5A	Mast arm mounting vehicle signal faces, side attachment - 5 signal section
MAS-5B	mas-5B	
MC	mc	Mercury contactor
M/M	m/m	Multiple to multiple transformer
MT	mt	Conduit with pull wire or rope only
MTG	mtg	Mounting
	mv	Mercury vapor lighting fixture
N	N	Neutral (Grounded Conductor)
NC	NC	Normally closed
NO	NO	Normally open
PB	pb	Pull box
PEC	pec	Photoelectric control (Type I, II, III, IV or V as shown)
PED	ped	Pedestrian
PEU	peu	Photoelectric unit
PPB	ppb	Pedestrian push button
RL		Relocated equipment
RM	rm	Ramp metering
SB	sb	Slip base
SIC	sic	Signal interconnect cable
SIG	sig	Signal
SMA	sma	Signal mast arm
SNS	sns	Street name sign
SP	sp	Service point
TDC	tdc	Telephone demarcation cabinet
TMS	tms	Traffic monitoring station
TOS	tos	Traffic Operations System
VEH	veh	Vehicle
XFMR	xfmr	Transformer
COMM	comm	Communication
RWIS	rwis	Roadway weather information system

SOFFIT AND WALL MOUNTED LUMINAIRES

Pendant, 70 W HPS unless otherwise specified.

Flush, 70 W HPS unless otherwise specified.

Wall surface, 70 W HPS unless otherwise specified.

Existing soffit or wall luminaire to remain unmodified.

Existing soffit or wall luminaire to be modified as specified.

NOTE:

Arrow indicates "street side" of luminaire.

STATE OF CALIFORNIA
DEPARTMENT OF TRANSPORTATION

ELECTRICAL SYSTEMS (SYMBOLS AND ABBREVIATIONS)

NO SCALE

RSP ES-1A DATED OCTOBER 5, 2007 SUPERSEDES STANDARD PLAN ES-1A DATED MAY 1, 2006 - PAGE 400 OF THE STANDARD PLANS BOOK DATED MAY 2006.

REVISED STANDARD PLAN RSP ES-1A

2006 REVISED STANDARD PLAN RSP ES-1A

DIST	COUNTY	ROUTE	POST MILES TOTAL PROJECT	SHEET NO.	TOTAL SHEETS
04	Ala	13	4.4/8.6	39	53

REGISTERED ELECTRICAL ENGINEER

October 5, 2007
PLANS APPROVAL DATE

REGISTERED PROFESSIONAL ENGINEER Jeffery G. McRae No. E14512 Exp. 6-30-08 ELECTRICAL STATE OF CALIFORNIA

The State of California or its officers or agents shall not be responsible for the accuracy or completeness of electronic copies of this plan sheet.

To accompany plans dated 8-2-10

CONDUIT

PROPOSED	EXISTING	
		Lighting Conduit, unless otherwise indicated or noted
		Traffic signal conduit
C	c	Communication conduit
T	t	Telephone conduit
F	f	Fire alarm conduit
FO	fo	Fiber optic conduit
		Conduit termination (RSP ES-9A C)
R	r	Conduit riser in/on structure or service pole

SERVICE EQUIPMENT

PROPOSED	EXISTING	
OH	oh	Overhead lines
U	U	Wood pole "U" indicates utility owned
		Pole guy with anchor
		Utility transformer - ground mounted
III		Service equipment enclosure type
		Service equipment enclosure door indicates front of enclosure
T	t	Telephone demarcation cabinet

POLE-MOUNTED SERVICE DESIGNATION

Type of installation

TYPE H SERVICE - 28'-10" ← Pole height above grade

ILLUMINATED OVERHEAD SIGN

PROPOSED	EXISTING	
		Overhead sign - Single post
		Overhead sign - Two post
		Overhead sign - Mounted on structure
		Overhead sign with electrolier

SIGNAL EQUIPMENT

PROPOSED	EXISTING	
		Pedestrian signal face
		Pedestrian push button post
		Pedestrian barricade
		Vehicle signal face (with backplate, 3-Section: red, yellow and green)
		Vehicle signal face with angle visors
PV	PV	Modifications of basic symbols: "L" indicates all non-arrow sections louvered "LG" indicates louvered green section only "PV" indicates 12" programmed visibility sections "8" indicates all 8" sections (only when specified)
		Type 15TS and Vehicle signal face
		Vehicle signal face with red, yellow and green left arrow sections
		Vehicle signal face with red and yellow sections and up green arrow
		Vehicle signal face (5 Section) with red, yellow and green sections and yellow and green right arrows
		Type 1 Standard and attached vehicle signal faces
		Standard with signal mast arm only and attached vehicle signal faces and internally illuminated street name sign
		Type 33 Standard, Left-turn vehicle signal face and sign
		Standard with luminaire and signal mast arms and attached vehicle signal faces
		Cantilever flashing beacon Type 9 Frame, with a sign unless otherwise specified or indicated
		Type 15-FBS Standard with two vehicle signal face sections with lens, backplate and visor with a sign
R	Y	Flashing beacon. One vehicle signal face section with lens, backplate and visor. "R" indicates red indication, "Y" indicates yellow indication
		Controller assembly. Door indicates front of cabinet

SIGNAL EQUIPMENT Cont

PROPOSED	EXISTING	
		Guard post
		Type 1 Standard with "Meter On" sign
		Emergency Vehicle detector

NOTES:

1. All signal sections shall be 12" unless shown otherwise.
2. Signal heads shall be provided with backplates unless shown otherwise.
3. Signal indication shall be LED.

STATE OF CALIFORNIA
DEPARTMENT OF TRANSPORTATION

ELECTRICAL SYSTEMS (SYMBOLS AND ABBREVIATIONS)

NO SCALE

RSP ES-1B DATED OCTOBER 5, 2007 SUPERCEDES STANDARD PLAN ES-1B DATED MAY 1, 2006 - PAGE 401 OF THE STANDARD PLANS BOOK DATED MAY 2006.

REVISED STANDARD PLAN RSP ES-1B

2006 REVISED STANDARD PLAN RSP ES-1B

7-10-07

DIST	COUNTY	ROUTE	POST MILES TOTAL PROJECT	SHEET NO.	TOTAL SHEETS
04	Ala	13	4.4/8.6	40	53

REGISTERED ELECTRICAL ENGINEER

October 5, 2007
PLANS APPROVAL DATE

REGISTERED PROFESSIONAL ENGINEER
Jeffery G. McRae
No. E14512
Exp. 6-30-08
ELECTRICAL
STATE OF CALIFORNIA

The State of California or its officers or agents shall not be responsible for the accuracy or completeness of electronic copies of this plan sheet.

To accompany plans dated 8-2-10

EQUIPMENT IDENTIFICATION

ILLUMINATED SIGN IDENTIFICATION NUMBER:

Sign No. 12345 — Sign number - Place on post or structure

10 ISL SCI 1.0

- 1.0 — Transformer rating (kVA)
- SCI — Lighting control type
- ISL — Number and type of fixtures

Do NOT place on standard or structure

ELECTROLIER OR EQUIPMENT IDENTIFICATION NUMBER:

12345 - 15'-0"

- 15'-0" — Mast arm length, if shown. Do not place on standard or structure.
- 12345 — Equipment number - Place on standard or structure. Existing equipment numbers are shown in parenthesis

CONDUIT AND CONDUCTOR IDENTIFICATION:

1½"C, 2#10, 15#14, 2 DLC

- 2#10, 15#14, 2 DLC — Number and size of conductors and cables
- 1½"C — Size of conduit in inches

Ø1, Ø2, Ø2P, etc.	Traffic phase identification for signal faces, detectors and phase diagrams
1 2 3	Project note numbers
A B C	Equipment description, installation or item numbers
1 2 3	Conduit run numbers

SIGNAL AND LIGHTING STANDARD (TYPICAL DESIGNATION):

19A - 3 - 100

- 100 — Wind velocity = 100 mph
- 3 — Case 3 arm loading
- 19A — Standard type
- Standard Plan sheet number
- Detail number or letter

MISCELLANEOUS EQUIPMENT

PROPOSED	EXISTING	
CMS	cms	Changeable message sign
		Closed circuit television camera
		Highway advisory radio pole and antenna
EMS	ems	Extinguishable message sign
M V	m v	Detection device M = Microwave sensor V = Video image sensor

WIRING DIAGRAM LEGEND

P	Pole
CB	Circuit breaker
A	Ampere
V	Volt
M	Metered
UM	Unmetered
NB	Neutral bus
GB	Ground bus
G	Equipment grounding conductor
N	Grounded conductor (Neutral)

- External conductor
- Conductor or bus
- Tie point
- Contactor coil
- Contactor, Contact NO
- Terminal blocks
- Contactor, Contact NC
- Enclosure bond
- Grounding electrode
- Circuit breaker
- Receptacle

PULL BOXES

PROPOSED EXISTING

Pull box-No. 5 unless otherwise indicated or noted.

3 — 9A(21)

Pull box-Additional designations or descriptions

3 = No. 3½ pull box
5 = No. 5 pull box
6 = No. 6 pull box
7 = No. 7 (Ceiling pull box)
8 = No. 8 (Pendant soffit pull box)
9 = No. 9 pull box
9A = No. 9A pull box

(C) = Communications pull box
(E) = Pull box with extension
(S) = Sprinkler control pull box
(21) = Anchor bolts and conduit for future installation of Type 21 Standard
(T) = Traffic pull box

VEHICLE DETECTORS

5 J 9 U

- U = Upper
- L = Lower
- Slot number in input file
- Input file (I or J)
- Phase

PROPOSED	EXISTING	
		Type A detector loop. Outline of sawcut shown.
		Type B detector loop. Outline of sawcut shown.
		Type C detector loop. Outline of sawcut shown.
		Type D detector loop. Outline of sawcut shown.
		Type E detector loop. Outline of sawcut shown.
		Type Q detector loop. Outline of sawcut shown.
		Magnetic detector
DH	dh	Detector handhole
		Microwave or video detection zone

STATE OF CALIFORNIA
DEPARTMENT OF TRANSPORTATION

ELECTRICAL SYSTEMS (SYMBOLS AND ABBREVIATIONS)

NO SCALE

RSP ES-1C DATED OCTOBER 5, 2007 SUPERCEDES STANDARD PLAN ES-1C DATED MAY 1, 2006 - PAGE 402 OF THE STANDARD PLANS BOOK DATED MAY 2006.

REVISED STANDARD PLAN RSP ES-1C

2006 REVISED STANDARD PLAN RSP ES-1C

7-10-07

DIST	COUNTY	ROUTE	POST MILES TOTAL PROJECT	SHEET NO.	TOTAL SHEETS
04	Ala	13	4.4/8.6	41	53

REGISTERED ELECTRICAL ENGINEER

October 5, 2007
PLANS APPROVAL DATE

REGISTERED PROFESSIONAL ENGINEER
Jeffery G. McRae
No. E14512
Exp. 6-30-08
ELECTRICAL
STATE OF CALIFORNIA

The State of California or its officers or agents shall not be responsible for the accuracy or completeness of electronic copies of this plan sheet.

To accompany plans dated 8-2-10

2006 REVISED STANDARD PLAN RSP ES-15D

NOTES: (FOR LIGHTING AND SIGN ILLUMINATION CONTROL)

1. The ballast voltages of lighting fixtures and luminaires shall match line service voltages.
2. Voltage rating of photoelectric controls shall conform to the service voltage indicated on the plans.
3. Terminal strip shall be provided for wiring to fixtures.
4. Type SC1A, SC2A, SC3A controls are similar to Types SC1, SC2 and SC3 controls respectively except test switch and wiring are not required.

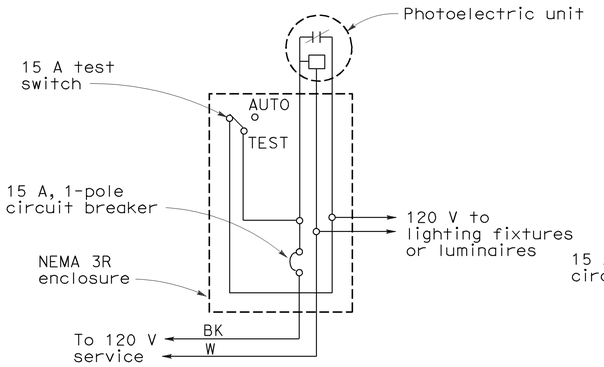

TYPE LC1 CONTROL

For 120 V unswitched circuit with no more than 800 W load.

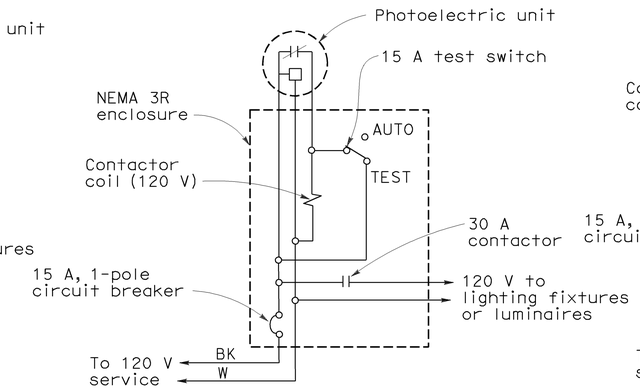

TYPE LC2 CONTROL

For 120 V unswitched circuit

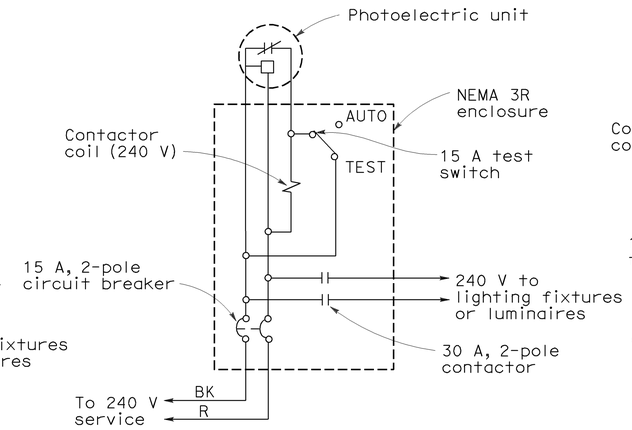

TYPE LC3 CONTROL

For 240 V and 480 V unswitched circuits

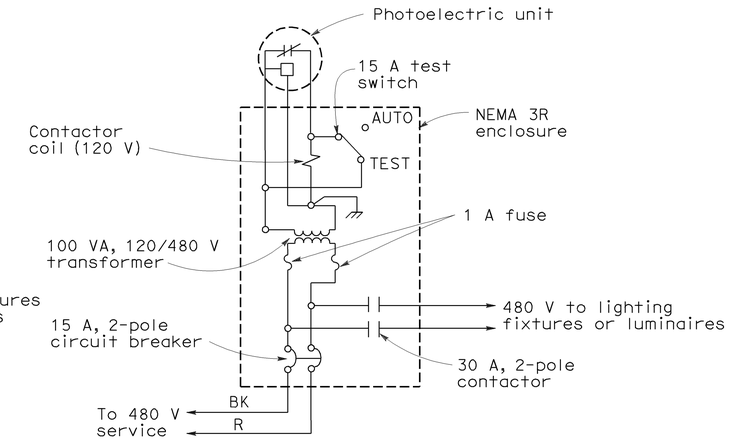

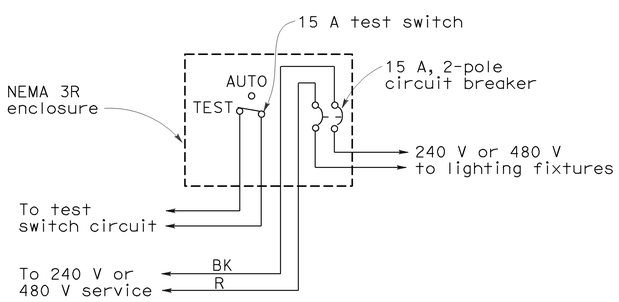

TYPE SC1 CONTROL

For 240 V or 480 V switched circuit, see Note 4 for Type SC1A

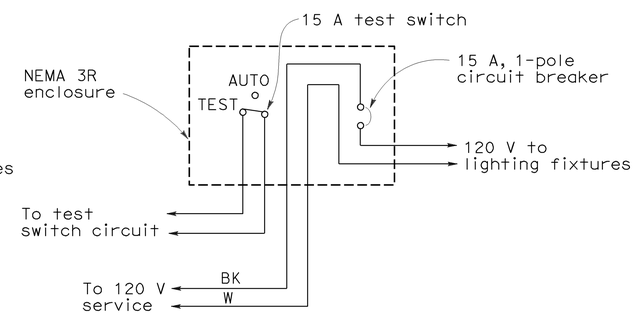

TYPE SC2 CONTROL

For 120 V switched circuit, see Note 4 for Type SC2A

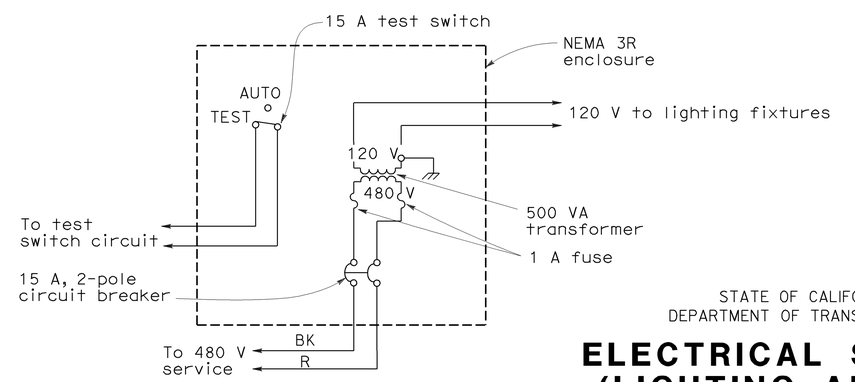

TYPE SC3 CONTROL

For 480 V switched sign circuit, see Note 4 for Type SC3A

STATE OF CALIFORNIA
DEPARTMENT OF TRANSPORTATION

ELECTRICAL SYSTEMS (LIGHTING AND SIGN ILLUMINATION CONTROL)

NO SCALE

RSP ES-15D DATED OCTOBER 5, 2007 SUPERCEDES STANDARD PLAN ES-15D DATED MAY 1, 2006 - PAGE 472 OF THE STANDARD PLANS BOOK DATED MAY 2006.

REVISED STANDARD PLAN RSP ES-15D

9-10-07

DIST	COUNTY	ROUTE	POST MILES TOTAL PROJECT	SHEET NO.	TOTAL SHEETS
04	Ala	13	4.4/8.6	42	53

Randell D. Hiatt
REGISTERED CIVIL ENGINEER

October 20, 2006
PLANS APPROVAL DATE

REGISTERED PROFESSIONAL ENGINEER
Randell D. Hiatt
No. C50200
Exp. 6-30-07
CIVIL
STATE OF CALIFORNIA

The State of California or its officers or agents shall not be responsible for the accuracy or completeness of electronic copies of this plan sheet.

To accompany plans dated 8-2-10

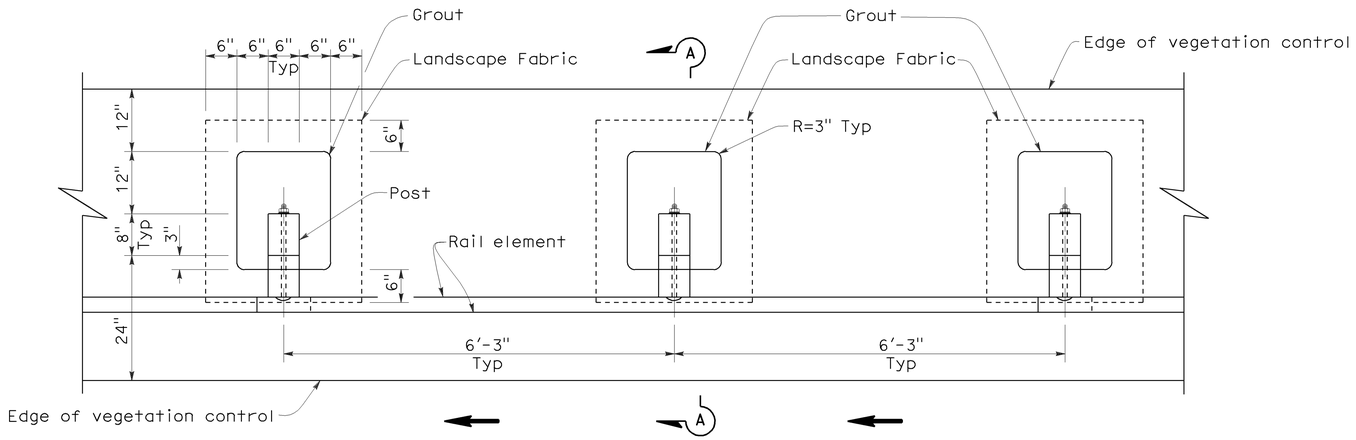

PLAN

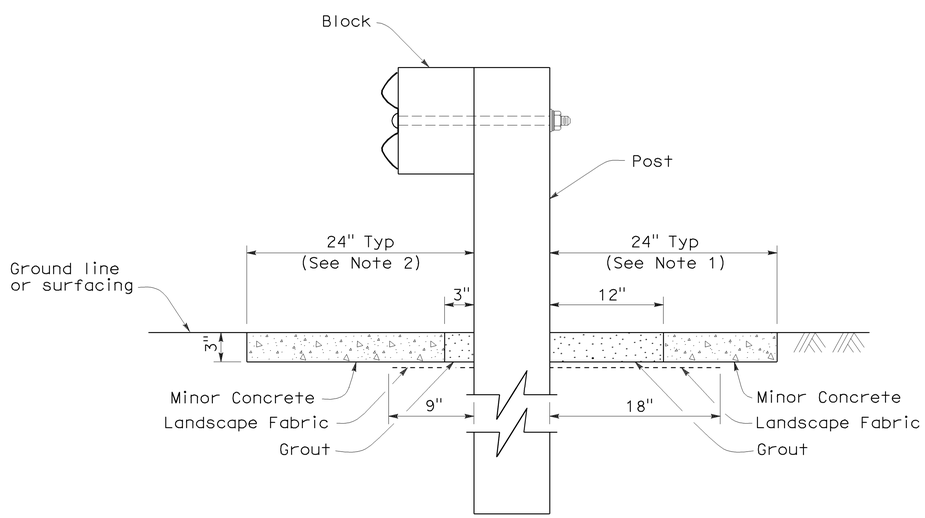

SECTION A-A

NOTES:

1. Where the distance between back of post and hinge point is less than 24", vegetation control to be constructed flush with the back edge of the post.
2. Where dike is constructed under railing, construct vegetation control to back edge of dike. Where paved shoulder is constructed within 24" in front of the post, construct vegetation control to the edge of paved shoulder.
3. Direction of adjacent traffic indicated by ← .

STATE OF CALIFORNIA
DEPARTMENT OF TRANSPORTATION

METAL BEAM GUARD RAILING TYPICAL VEGETATION CONTROL STANDARD RAILING SECTION

NO SCALE

NSP A77C5 DATED OCTOBER 20, 2006 SUPPLEMENTS THE STANDARD PLANS BOOK DATED MAY 2006.

NEW STANDARD PLAN NSP A77C5

2006 NEW STANDARD PLAN NSP A77C5

7-17-06

DIST	COUNTY	ROUTE	POST MILES TOTAL PROJECT	SHEET NO.	TOTAL SHEETS
04	Ala	13	4.4/8.6	43	53

Randell D. Hiatt
REGISTERED CIVIL ENGINEER

October 20, 2006
PLANS APPROVAL DATE

REGISTERED PROFESSIONAL ENGINEER
Randell D. Hiatt
No. C50200
Exp. 6-30-07
CIVIL
STATE OF CALIFORNIA

The State of California or its officers or agents shall not be responsible for the accuracy or completeness of electronic copies of this plan sheet.

To accompany plans dated 8-2-10

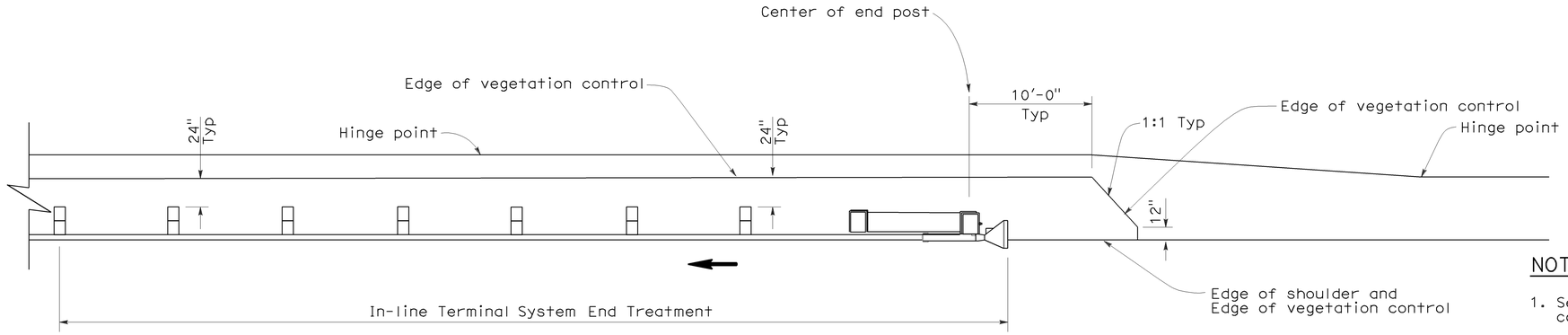

PLAN

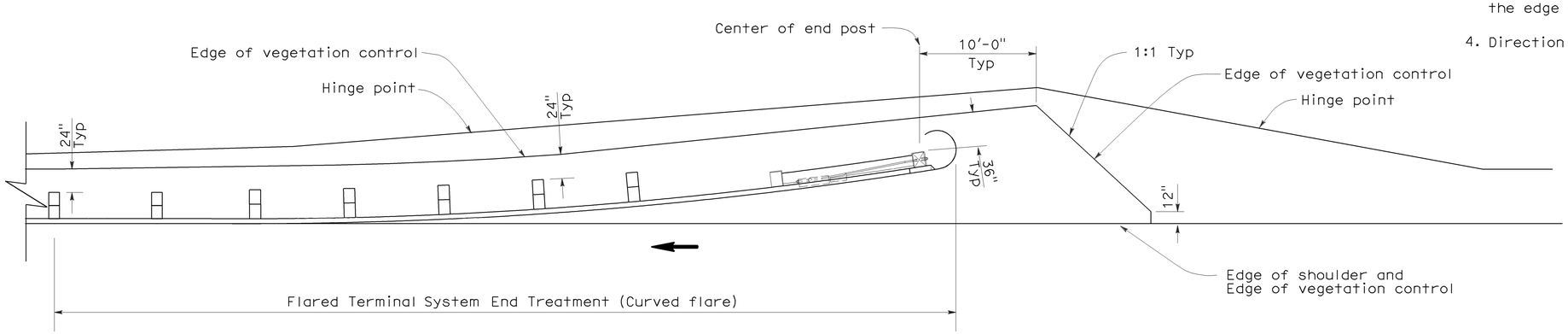

PLAN

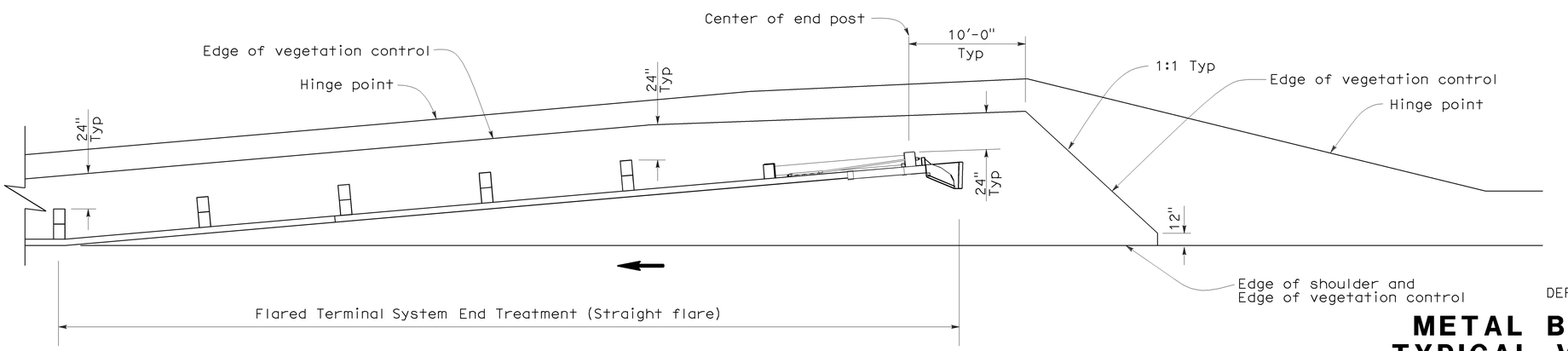

PLAN

NOTES:

1. See New Standard Plan NSP A77C5 for additional vegetation control details.
2. Where the distance between back of post and hinge point is less than 24", vegetation control to be constructed flush with the back edge of the post.
3. Where dike is constructed under railing, construct vegetation control to back edge of dike. Where paved shoulder is constructed within 24" in front of the post, construct vegetation control to the edge of paved shoulder.
4. Direction of adjacent traffic indicated by ←.

STATE OF CALIFORNIA
DEPARTMENT OF TRANSPORTATION

METAL BEAM GUARD RAILING TYPICAL VEGETATION CONTROL FOR TERMINAL SYSTEM END TREATMENTS

NO SCALE

NSP A77C6 DATED OCTOBER 20, 2006 SUPPLEMENTS THE STANDARD PLANS BOOK DATED MAY 2006.

NEW STANDARD PLAN NSP A77C6

2006 NEW STANDARD PLAN NSP A77C6

7-17-06

DIST	COUNTY	ROUTE	POST MILES TOTAL PROJECT	SHEET NO.	TOTAL SHEETS
04	Ala	13	4.4/8.6	44	53

Randell D. Hiatt
REGISTERED CIVIL ENGINEER

October 20, 2006
PLANS APPROVAL DATE

REGISTERED PROFESSIONAL ENGINEER
Randell D. Hiatt
No. C50200
Exp. 6-30-07
CIVIL
STATE OF CALIFORNIA

The State of California or its officers or agents shall not be responsible for the accuracy or completeness of electronic copies of this plan sheet.

To accompany plans dated 8-2-10

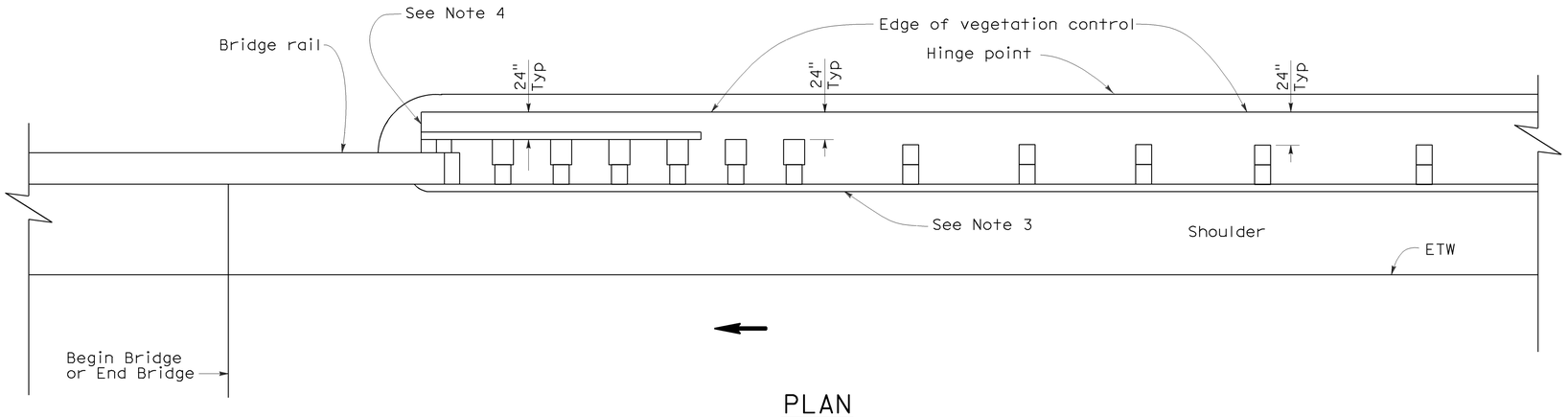

PLAN

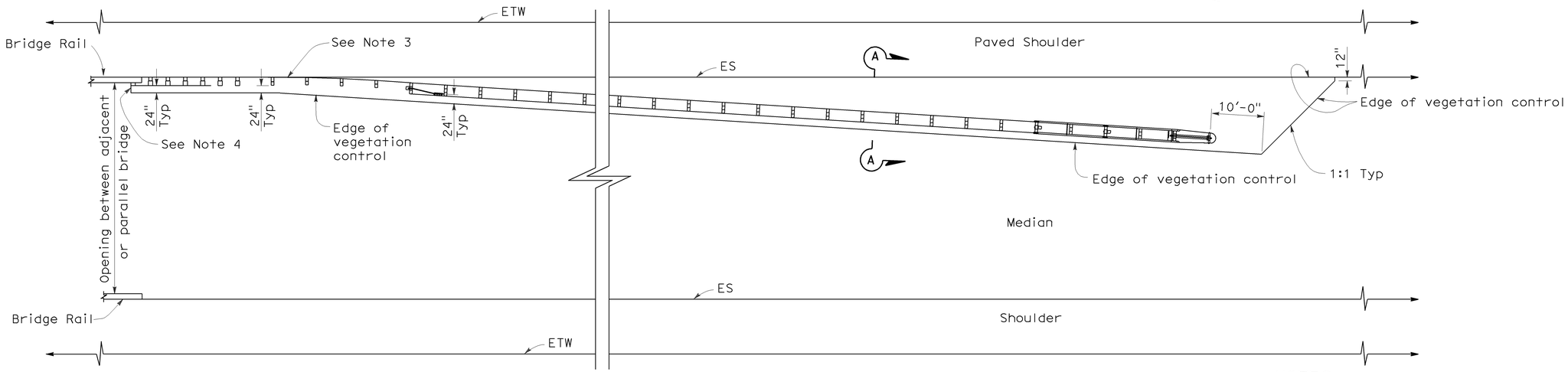

PLAN

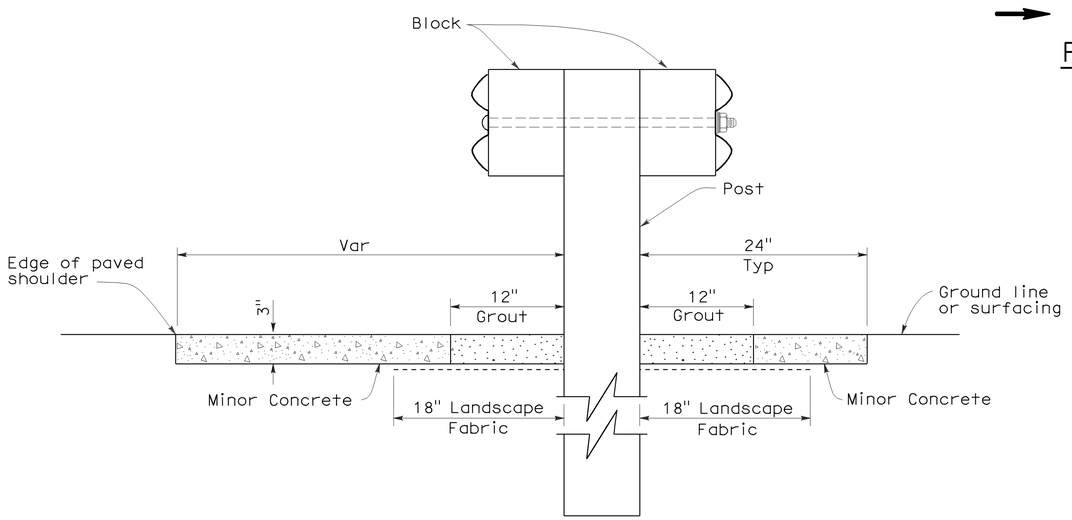

SECTION A-A

NOTES:

1. See New Standard Plan NSP A77C5 for additional vegetation control details.
2. Where the distance between back of post and hinge point is less than 24", vegetation control to be constructed flush with the back edge of the post.
3. Where dike is constructed under railing, construct vegetation control to back edge of dike. Where paved shoulder is constructed within 24" in front of the post, construct vegetation control to the edge of paved shoulder.
4. End vegetation control at end of backside rail element.
5. Direction of adjacent traffic indicated by ←.

STATE OF CALIFORNIA
DEPARTMENT OF TRANSPORTATION

METAL BEAM GUARD RAILING TYPICAL VEGETATION CONTROL AT STRUCTURE APPROACH AND DEPARTURE

NO SCALE

NSP A77C7 DATED OCTOBER 20, 2006 SUPPLEMENTS THE STANDARD PLANS BOOK DATED MAY 2006.

NEW STANDARD PLAN NSP A77C7

2006 NEW STANDARD PLAN NSP A77C7

7-17-06

DIST	COUNTY	ROUTE	POST MILES TOTAL PROJECT	SHEET NO.	TOTAL SHEETS
04	Ala	13	4.4/8.6	45	53

Randell D. Hiatt
REGISTERED CIVIL ENGINEER

October 20, 2006
PLANS APPROVAL DATE

REGISTERED PROFESSIONAL ENGINEER
Randell D. Hiatt
No. C50200
Exp. 6-30-07
CIVIL
STATE OF CALIFORNIA

The State of California or its officers or agents shall not be responsible for the accuracy or completeness of electronic copies of this plan sheet.

To accompany plans dated 8-2-10

NOTES:

1. See New Standard Plan NSP A77C5 for additional vegetation control details.
2. Where the distance between back of post and hinge point is less than 24", vegetation control to be constructed flush with the back edge of the post.
3. Where dike is constructed under railing, construct vegetation control to back edge of dike. Where paved shoulder is constructed within 24" in front of the post, construct vegetation control to the edge of paved shoulder.
4. Direction of adjacent traffic indicated by ←.

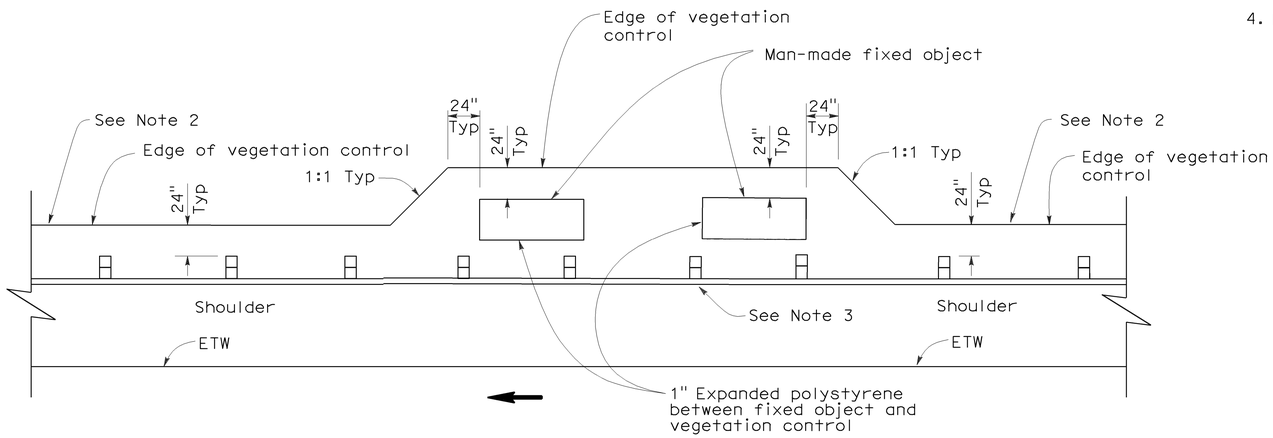

PLAN

FIXED OBJECT(S) ON SHOULDER

STATE OF CALIFORNIA
DEPARTMENT OF TRANSPORTATION

METAL BEAM GUARD RAILING TYPICAL VEGETATION CONTROL AT FIXED OBJECT

NO SCALE

NSP A77C8 DATED OCTOBER 20, 2006 SUPPLEMENTS THE STANDARD PLANS BOOK DATED MAY 2006.

NEW STANDARD PLAN NSP A77C8

2006 NEW STANDARD PLAN NSP A77C8

7-17-06

DIST	COUNTY	ROUTE	POST MILES TOTAL PROJECT	SHEET NO.	TOTAL SHEETS
04	Ala	13	4.4/8.6	46	53

Randell D. Hiatt
REGISTERED CIVIL ENGINEER

October 20, 2006
PLANS APPROVAL DATE

REGISTERED PROFESSIONAL ENGINEER
Randell D. Hiatt
No. C50200
Exp. 6-30-07
CIVIL
STATE OF CALIFORNIA

The State of California or its officers or agents shall not be responsible for the accuracy or completeness of electronic copies of this plan sheet.

To accompany plans dated 8-2-10

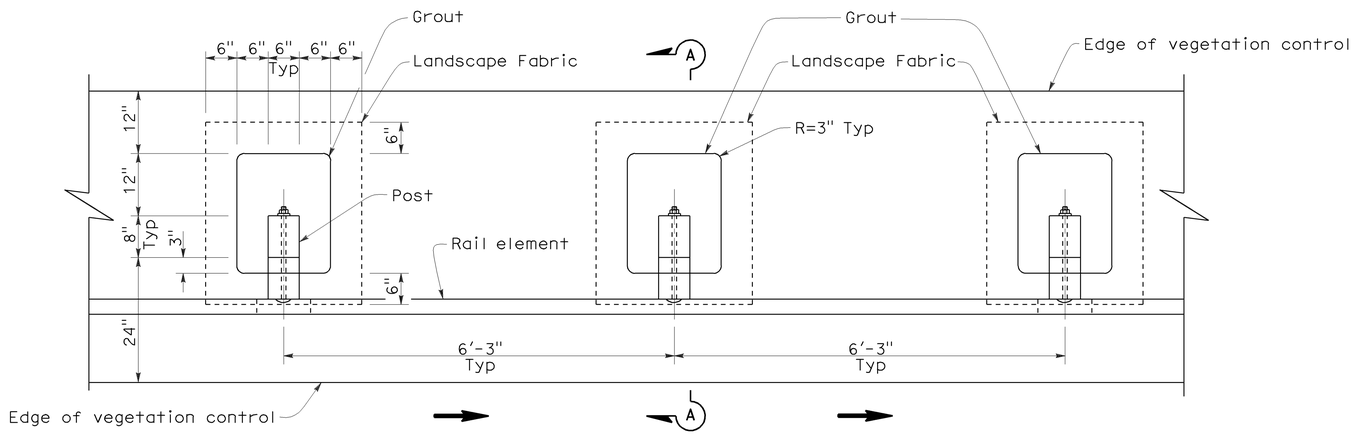

PLAN

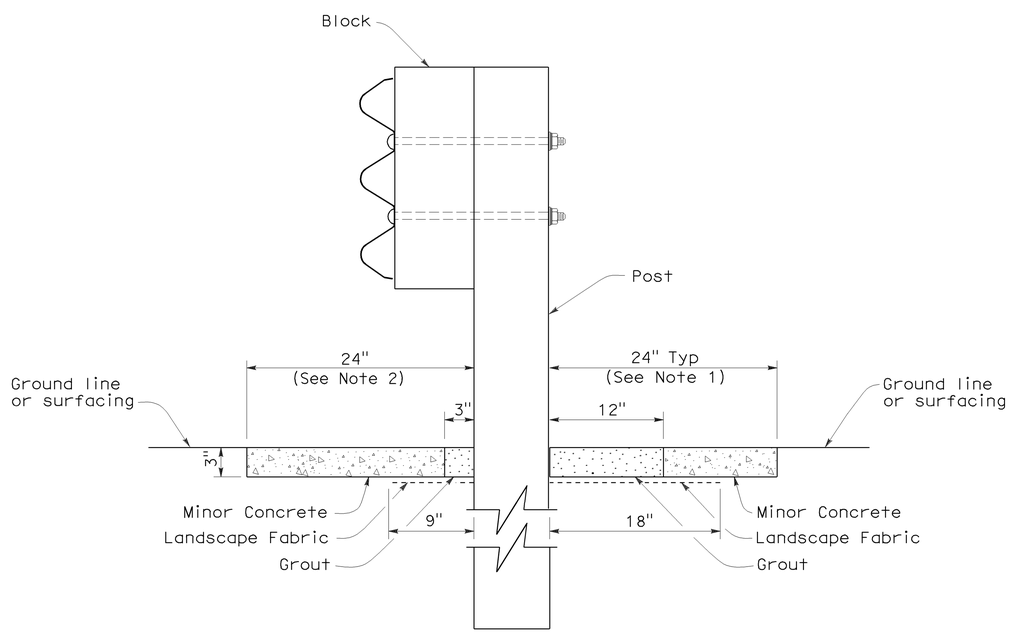

SECTION A-A

NOTES:

1. Where the distance between back of post and hinge point is less than 24", vegetation control to be constructed flush with the back edge of the post.
2. Where dike is constructed under barrier, construct vegetation control to back edge of dike. Where paved shoulder is constructed within 24" in front of the post, construct vegetation control to the edge of paved shoulder.
3. Direction of adjacent traffic indicated by ⟶ .

STATE OF CALIFORNIA
DEPARTMENT OF TRANSPORTATION

SINGLE THRIE BEAM BARRIER TYPICAL VEGETATION CONTROL STANDARD BARRIER RAILING SECTION

NO SCALE

NSP A78C3 DATED OCTOBER 20, 2006 SUPPLEMENTS THE STANDARD PLANS BOOK DATED MAY 2006.

NEW STANDARD PLAN NSP A78C3

2006 NEW STANDARD PLAN NSP A78C3

7-17-06

DIST	COUNTY	ROUTE	POST MILES TOTAL PROJECT	SHEET NO.	TOTAL SHEETS
04	Ala	13	4.4/8.6	47	53

Gregory A. Balzer
LICENSED LANDSCAPE ARCHITECT

June 5, 2009
PLANS APPROVAL DATE

LICENSED LANDSCAPE ARCHITECT
Gregory A. Balzer 2576
Expiration Date 2-28-11
Renewal Date 5-14-09
Date
STATE OF CALIFORNIA

The State of California or its officers or agents shall not be responsible for the accuracy or completeness of electronic copies of this plan sheet.

To accompany plans dated 8-2-10

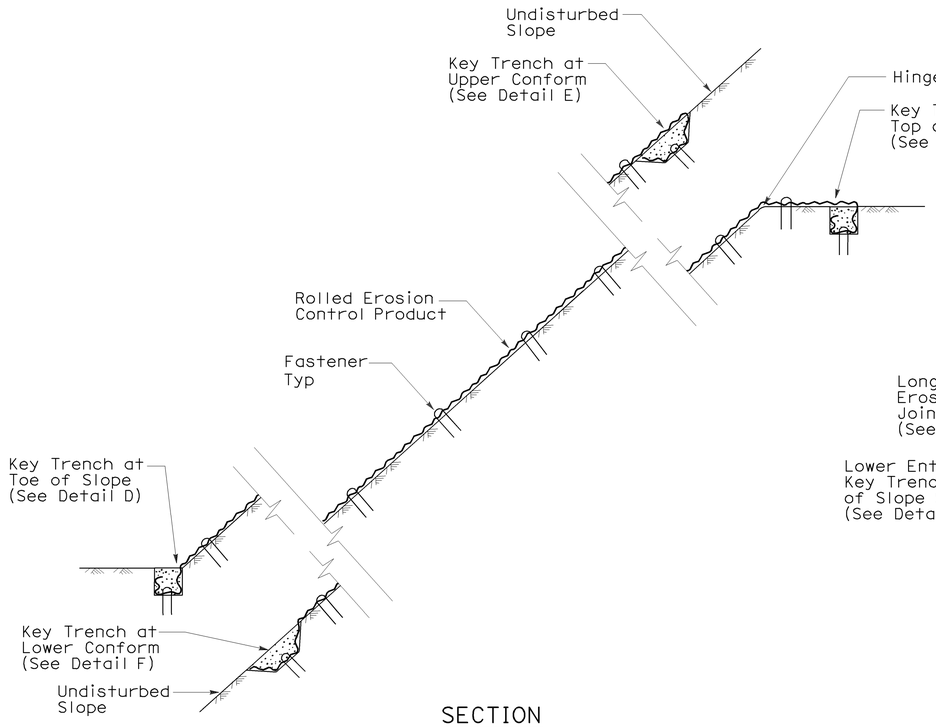

SECTION

ROLLED EROSION CONTROL PRODUCT ON SLOPE WITH VARIOUS KEY ENTRENCHMENTS

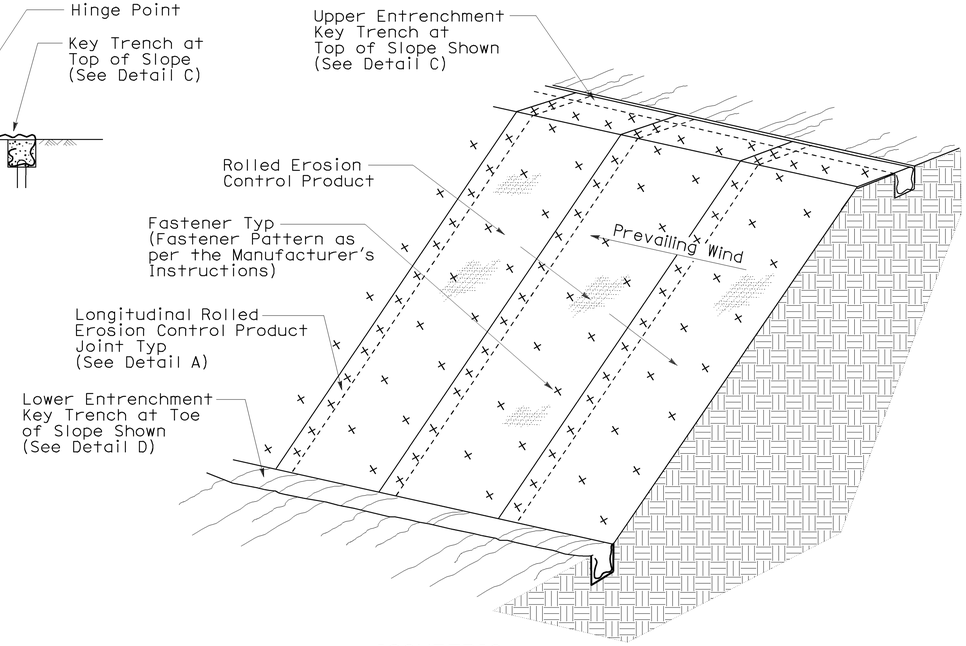

ISOMETRIC

ROLLED EROSION CONTROL PRODUCT ON SLOPE

NOTE:

1. Fiber Roll/Compost Sock shown for reference purposes only.
2. If transverse rolled erosion control product joints are required on slopes, see Detail B.

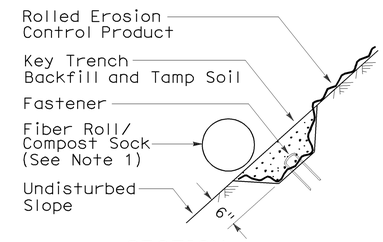

SECTION

DETAIL F
KEY TRENCH AT LOWER CONFORM

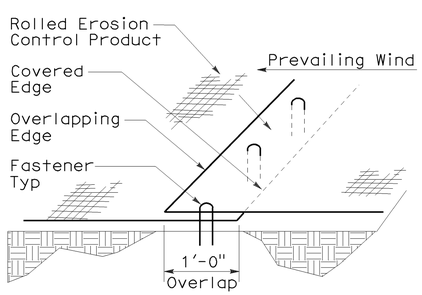

PERSPECTIVE

DETAIL A
LONGITUDINAL ROLLED EROSION CONTROL PRODUCT JOINT

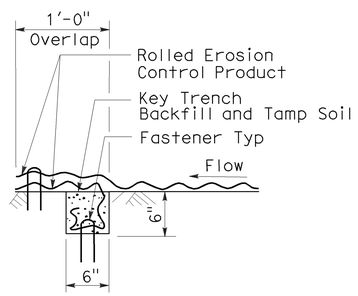

SECTION

DETAIL B
TRANSVERSE ROLLED EROSION CONTROL PRODUCT JOINT

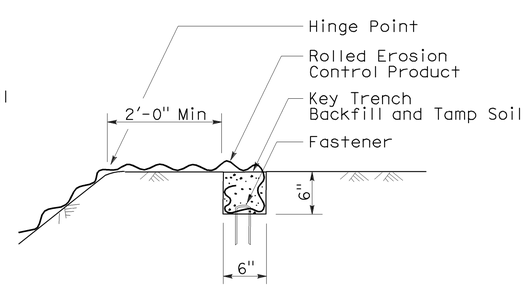

SECTION

DETAIL C
KEY TRENCH AT TOP OF SLOPE

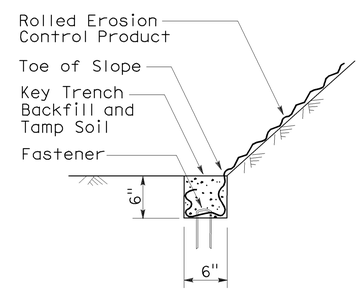

SECTION

DETAIL D
KEY TRENCH AT TOE OF SLOPE

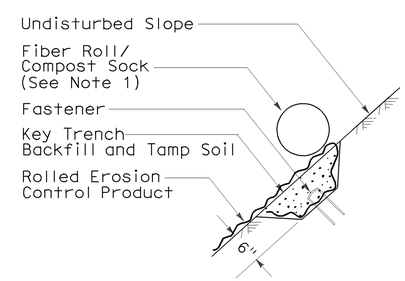

SECTION

DETAIL E
KEY TRENCH AT UPPER CONFORM

STATE OF CALIFORNIA
DEPARTMENT OF TRANSPORTATION

ROLLED EROSION CONTROL PRODUCT

NO SCALE

NSP H53 DATED JUNE 5, 2009 SUPPLEMENTS THE STANDARD PLANS BOOK DATED MAY 2006.

NEW STANDARD PLAN NSP H53

2006 NEW STANDARD PLAN NSP H53

3-4-09

DIST	COUNTY	ROUTE	POST MILES TOTAL PROJECT	SHEET NO.	TOTAL SHEETS
04	Ala	13	4.4/8.6	48	53

LICENSED LANDSCAPE ARCHITECT

August 15, 2008
PLANS Approval DATE

The State of California or its officers or agents shall not be responsible for the accuracy or completeness of electronic copies of this plan sheet.

LICENSED LANDSCAPE ARCHITECT Robert B. Schott 3635 Signature 11-04-08 Renewal Date 08-11-08 Date STATE OF CALIFORNIA

To accompany plans dated 8-2-10

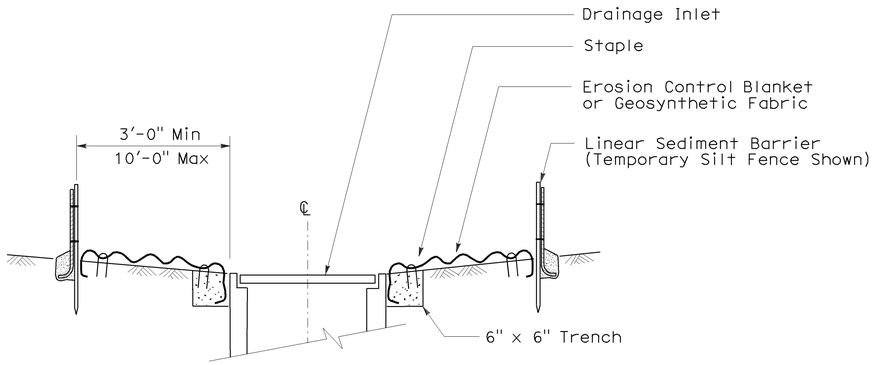

SECTION A-A

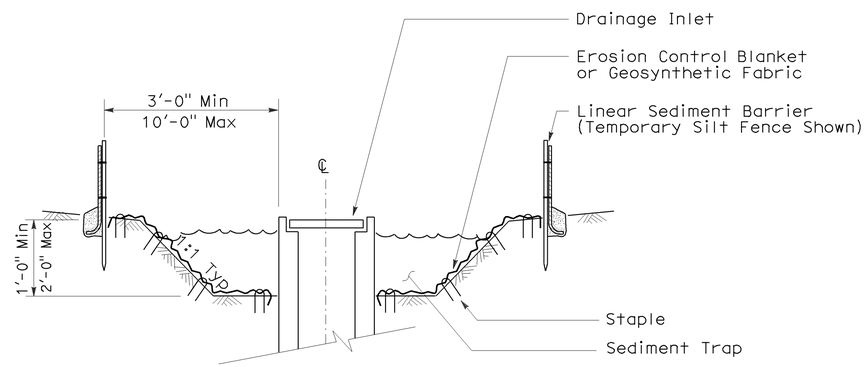

SECTION B-B

NOTES:

1. See Standard Plan T51 for Temporary Silt Fence.
2. Dimensions may vary to fit field conditions.

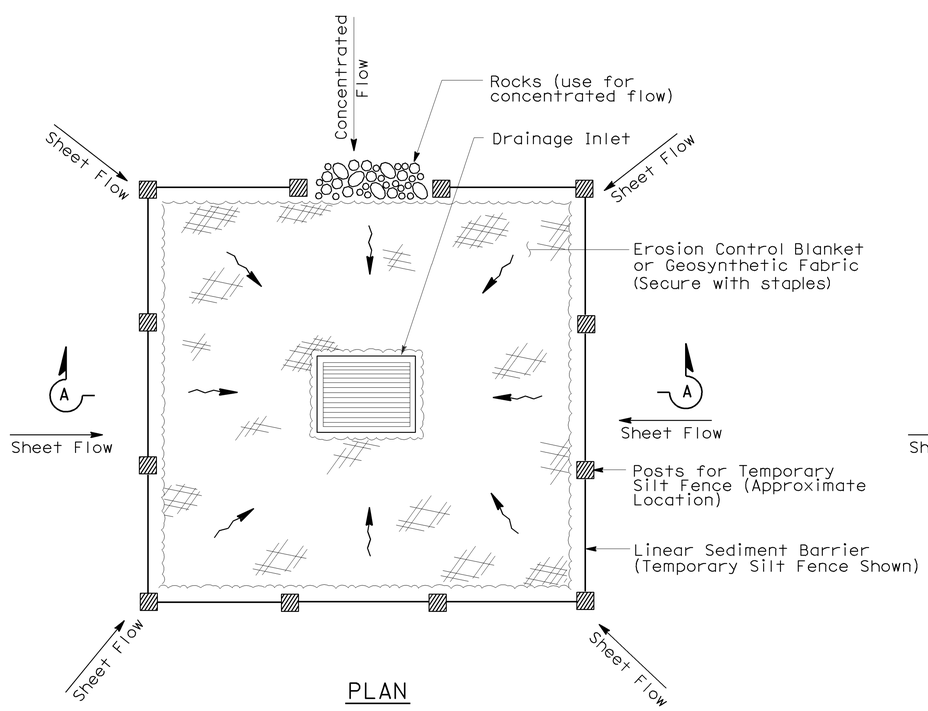

PLAN

TEMPORARY DRAINAGE INLET PROTECTION (TYPE 1)

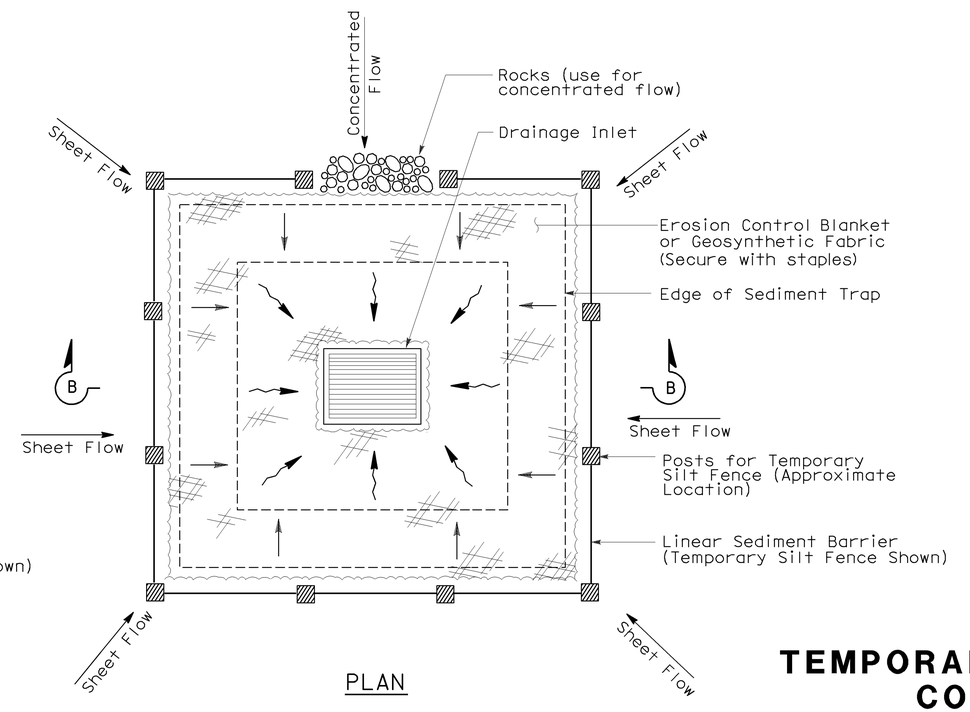

PLAN

TEMPORARY DRAINAGE INLET PROTECTION (TYPE 2) (EXCAVATED SEDIMENT TRAP)

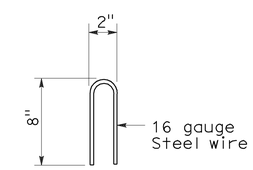

STAPLE DETAIL

STATE OF CALIFORNIA
DEPARTMENT OF TRANSPORTATION

TEMPORARY WATER POLLUTION CONTROL DETAILS (TEMPORARY DRAINAGE INLET PROTECTION)

NO SCALE

Nsp t61 dated august 15, 2008 supplements the standard plans book dated may 2006.

NEW STANDARD PLAN NSP T61

2006 NEW STANDARD PLAN NSP T61

7-11-08

DIST	COUNTY	ROUTE	POST MILES TOTAL PROJECT	SHEET NO.	TOTAL SHEETS
04	Ala	13	4.4/8.6	49	53

LICENSED LANDSCAPE ARCHITECT

August 15, 2008
PLANS APPROVAL DATE

The State of California or its officers or agents shall not be responsible for the accuracy or completeness of electronic copies of this plan sheet.

LICENSED LANDSCAPE ARCHITECT — Robert B. Schott — 3635 — Signature — 11-04-08 Renewal Date — 08-11-08 Date — STATE OF CALIFORNIA

To accompany plans dated 8-2-10

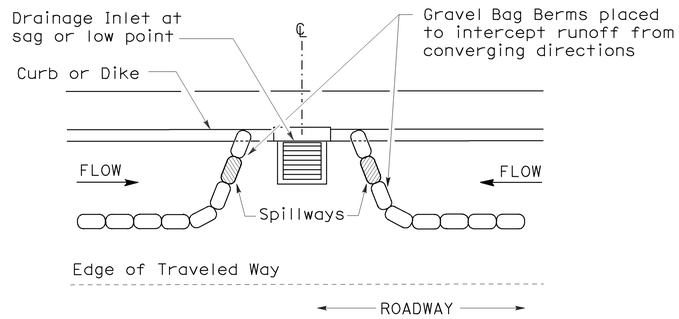

PLAN

CONFIGURATION FOR SAG POINT INLET (GRAVEL BAG BERM)

GRAVEL BAG BERM (TYPE 3A) SPACING TABLE

SLOPE OF ROADWAY (PERCENT)	1 to 3.9	4 to 5.9	6 to 7.9	8 to 10	10+
INTERVAL BETWEEN BERM	100′	75′	50′	25′	12′

For slope of less than 1%, install barriers only if erosion/sediment is prevalent

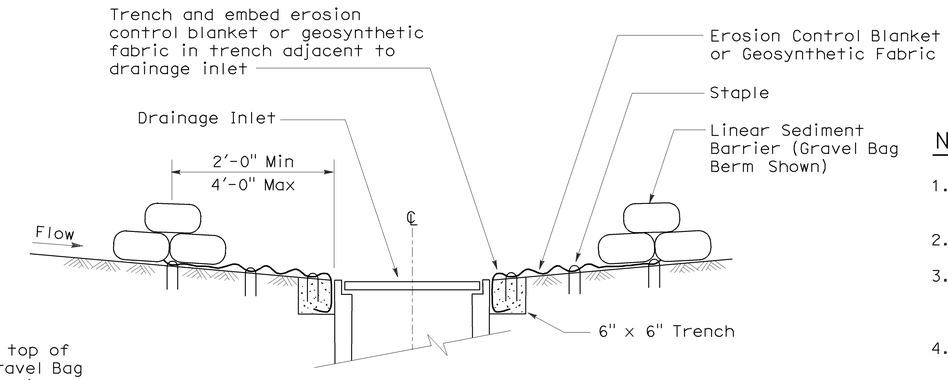

SECTION A-A

NOTES:

1. Place safety cones adjacent to drainage inlet protection.
2. Dimensions may vary to fit field conditions.
3. Install a minimum of 3 gravel bag berms upstream of each drainage inlet to be protected.
4. Position erosion control blanket or geosynthetic fabric at edge of concrete apron and secure in trench.
5. Erosion control blanket or geosynthetic fabric is not required if the area adjacent to the drainage inlet is vegetated or paved.

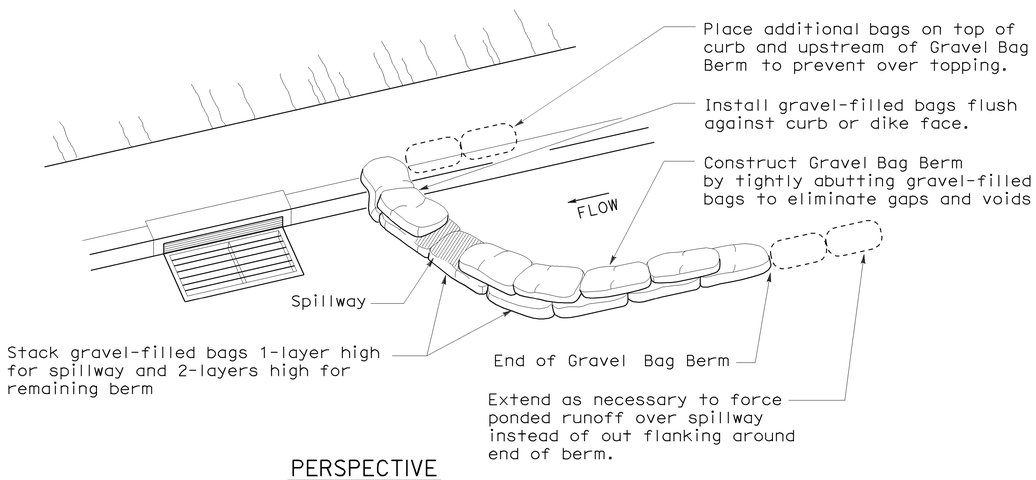

PERSPECTIVE

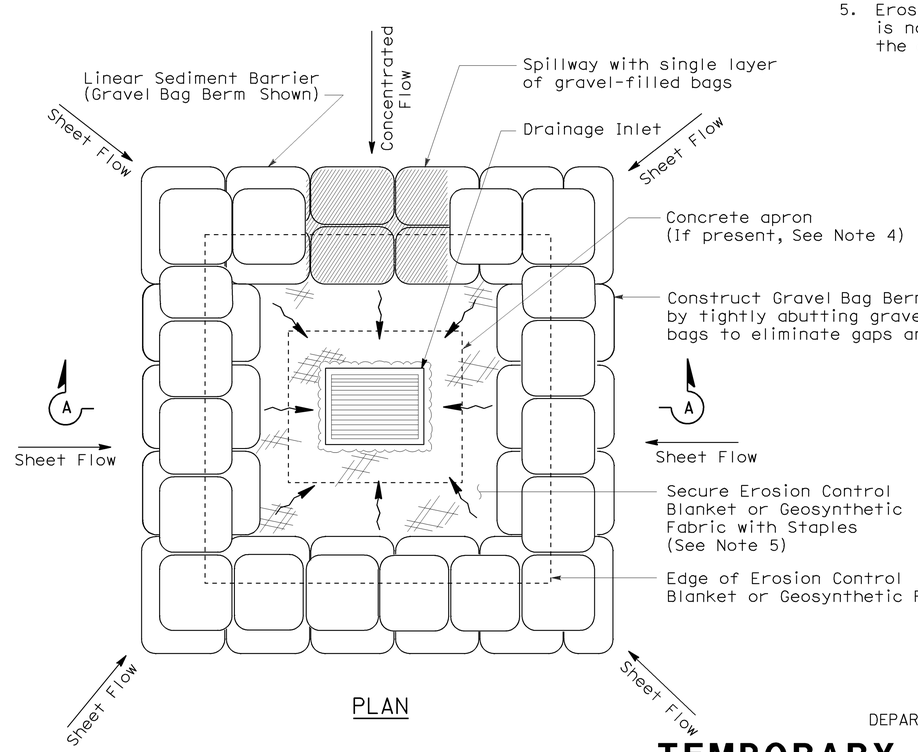

PLAN

TEMPORARY DRAINAGE INLET PROTECTION (TYPE 3B)

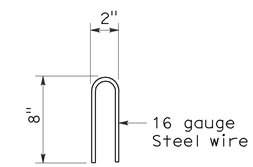

STAPLE DETAIL

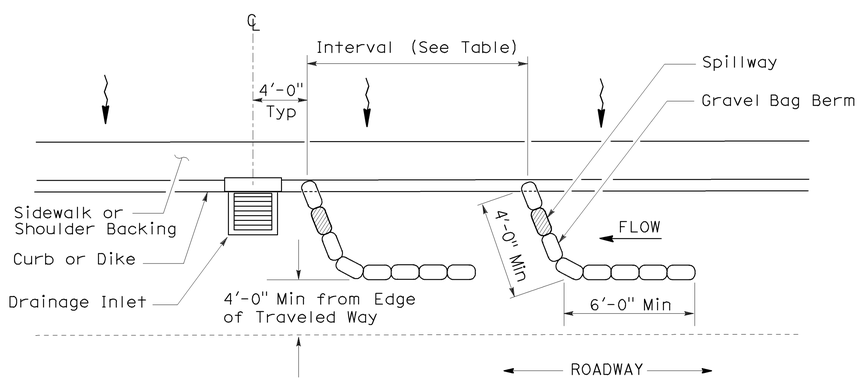

PLAN

TEMPORARY DRAINAGE INLET PROTECTION (TYPE 3A) (GRAVEL BAG BERM)

STATE OF CALIFORNIA
DEPARTMENT OF TRANSPORTATION

TEMPORARY WATER POLLUTION CONTROL DETAILS (TEMPORARY DRAINAGE INLET PROTECTION)

NO SCALE

NSP T62 DATED AUGUST 15, 2008 SUPPLEMENTS THE STANDARD PLANS BOOK DATED MAY 2006.

NEW STANDARD PLAN NSP T62

2006 NEW STANDARD PLAN NSP T62

7-11-08

DIST	COUNTY	ROUTE	POST MILES TOTAL PROJECT	SHEET NO.	TOTAL SHEETS
04	Ala	13	4.4/8.6	50	53

Robert B Schott
LICENSED LANDSCAPE ARCHITECT

August 15, 2008
PLANS APPROVAL DATE

LICENSED LANDSCAPE ARCHITECT Robert B. Schott 3895 Signature 11-04-08 Renewal Date 08-11-08 Date STATE OF CALIFORNIA

The State of California or its officers or agents shall not be responsible for the accuracy or completeness of electronic copies of this plan sheet.

To accompany plans dated 8-2-10

FLEXIBLE SEDIMENT BARRIER SPACING TABLE

SLOPE OF ROADWAY (PERCENT)	0 to 0.9	1 to 1.9	2 to 2.9	3 to 4	5+
INTERVAL BETWEEN BARRIERS	50′	35′	30′	25′	20′
ANGLE FROM FACE OF CURB	70°	70°	70°	45°	45°
SUGGESTED BARRIER LENGTH	6′	6′	6′	6′	6′

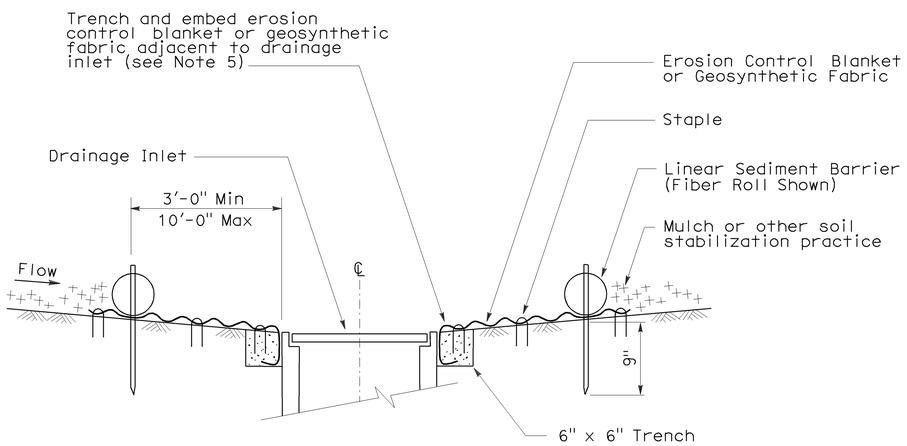

SECTION A-A

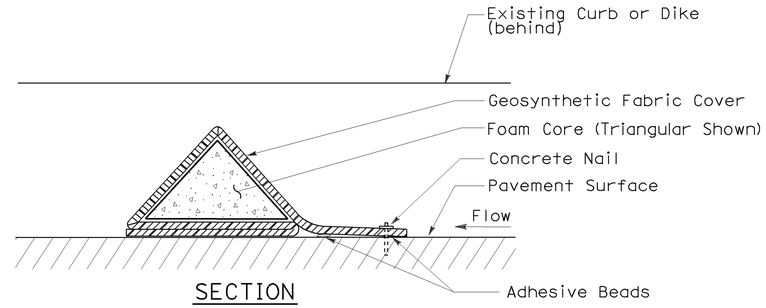

SECTION

FLEXIBLE SEDIMENT BARRIER DETAIL (FOAM BARRIER SHOWN)

NOTES:

1. See Standard Plan T51 for Temporary Silt Fence.
2. Dimensions may vary to fit field conditions.
3. Install a minimum of 3 flexible sediment barriers upstream of each drainage inlet to be protected.
4. Position erosion control blanket or geosynthetic fabric at edge of concrete apron and secure in trench.
5. Erosion control blanket or geosynthetic fabric is not required if the area adjacent to the drainage inlet is vegetated.

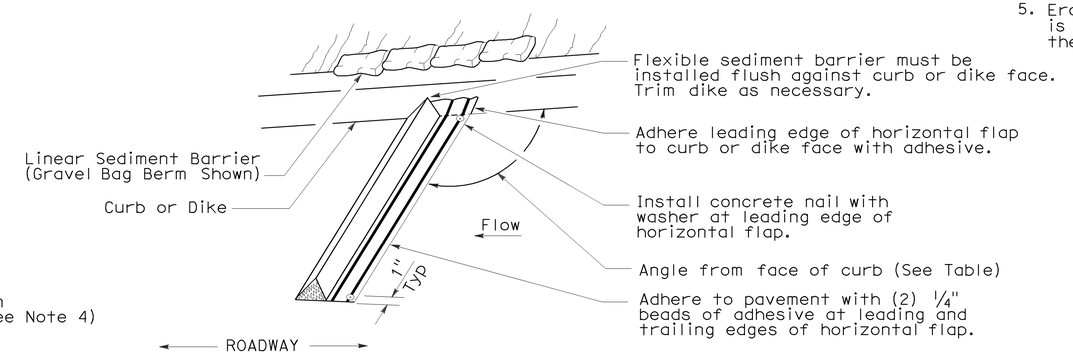

PERSPECTIVE

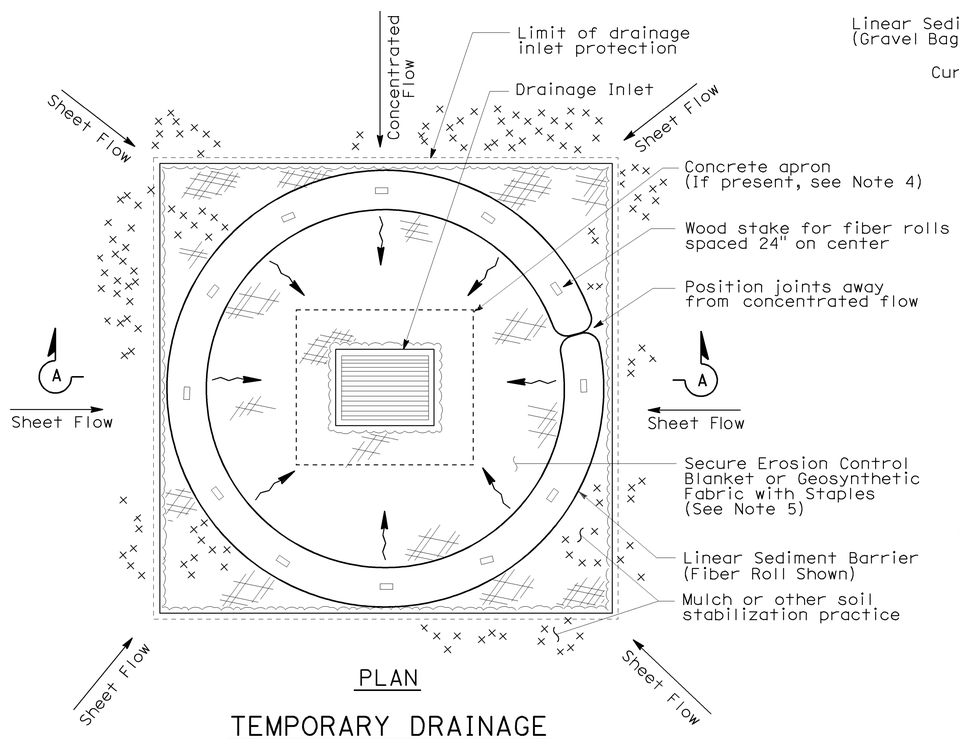

PLAN

TEMPORARY DRAINAGE INLET PROTECTION (TYPE 4A)

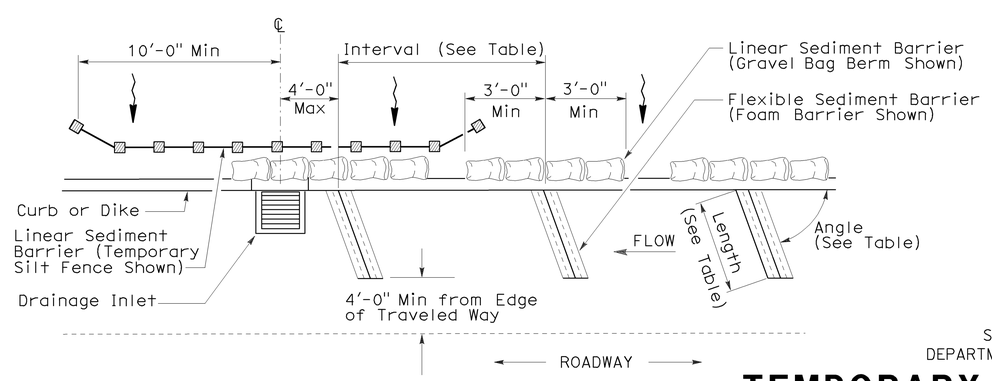

PLAN

TEMPORARY DRAINAGE INLET PROTECTION (TYPE 4B) FLEXIBLE SEDIMENT BARRIER

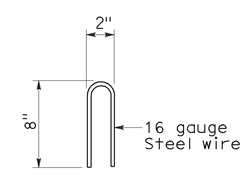

STAPLE DETAIL

STATE OF CALIFORNIA
DEPARTMENT OF TRANSPORTATION

TEMPORARY WATER POLLUTION CONTROL DETAILS (TEMPORARY DRAINAGE INLET PROTECTION)

NO SCALE

NSP T63 DATED AUGUST 15, 2008 SUPPLEMENTS THE STANDARD PLANS BOOK DATED MAY 2006.

NEW STANDARD PLAN NSP T63

2006 NEW STANDARD PLAN NSP T63

7-11-08

DIST	COUNTY	ROUTE	POST MILES TOTAL PROJECT	SHEET NO.	TOTAL SHEETS
04	Ala	13	4.4/8.6	51	53

LICENSED LANDSCAPE ARCHITECT

August 15, 2008
PLANS APPROVAL DATE

The State of California or its officers or agents shall not be responsible for the accuracy or completeness of electronic copies of this plan sheet.

LICENSED LANDSCAPE ARCHITECT — Robert B. Schott — 3635 — Signature — 11-04-08 Renewal Date — 08-11-08 Date — STATE OF CALIFORNIA

To accompany plans dated 8-2-10

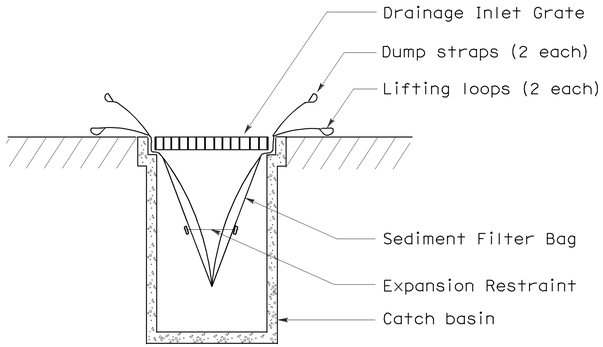

SECTION B-B

SEDIMENT FILTER BAG DETAIL

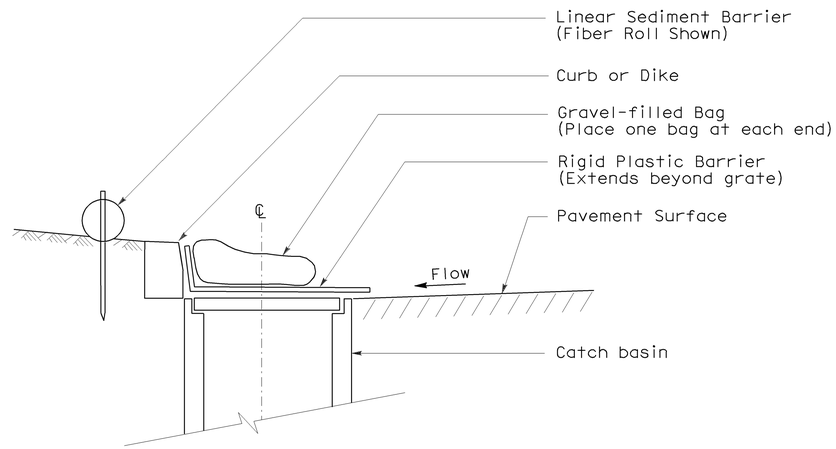

SECTION

TEMPORARY DRAINAGE INLET PROTECTION (TYPE 6A) (CATCH BASIN WITH GRATE)

NOTES:

1. See Standard Plan T51 for Temporary Silt Fence.
2. Dimensions may vary to fit field conditions.

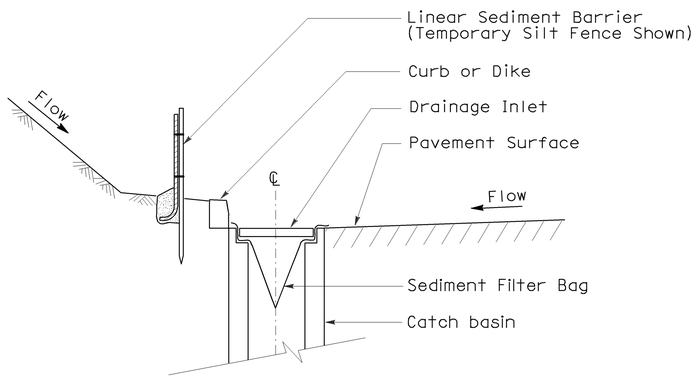

SECTION A-A

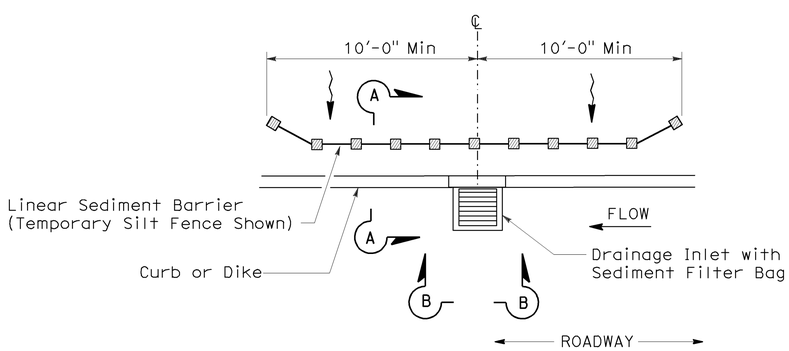

PLAN

TEMPORARY DRAINAGE INLET PROTECTION (TYPE 5) (SEDIMENT FILTER BAG)

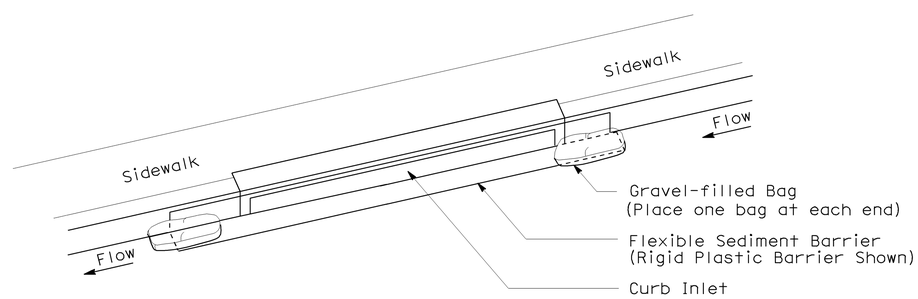

PERSPECTIVE

TEMPORARY DRAINAGE INLET PROTECTION (TYPE 6B) (CURB INLET WITHOUT GRATE)

STATE OF CALIFORNIA
DEPARTMENT OF TRANSPORTATION

TEMPORARY WATER POLLUTION CONTROL DETAILS (TEMPORARY DRAINAGE INLET PROTECTION)

NO SCALE

NSP T64 DATED AUGUST 15, 2008 SUPPLEMENTS THE STANDARD PLANS BOOK DATED MAY 2006.

NEW STANDARD PLAN NSP T64

2006 NEW STANDARD PLAN NSP T64

7-11-08

DIST.	COUNTY	ROUTE	POST MILES TOTAL PROJECT	SHEET NO.	TOTAL SHEETS
04	Ala	13	4.4/8.6	52	53

REGISTERED ENGINEER - CIVIL

8-2-10

PLANS APPROVAL DATE

Paul A. Snyder No. 41128 Exp 3-31-11 CIVIL

REGISTERED PROFESSIONAL ENGINEER STATE OF CALIFORNIA

The State of California or its officers or agents shall not be responsible for the accuracy or completeness of electronic copies of this plan sheet.

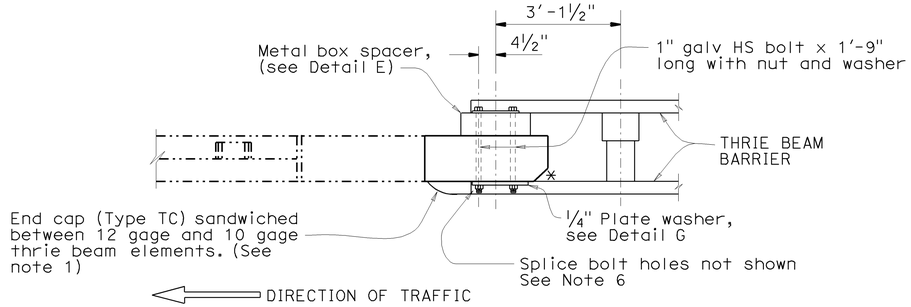

PLAN

* 5" x 5" chamfer

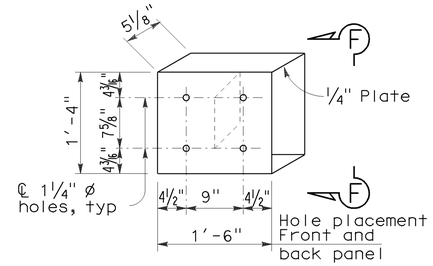

DETAIL E

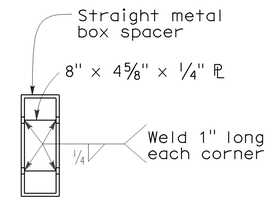

VIEW F-F

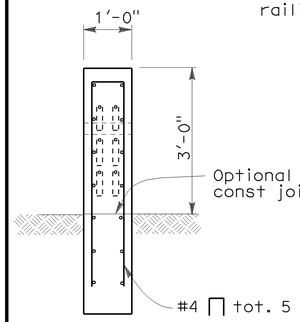

SECTION A-A

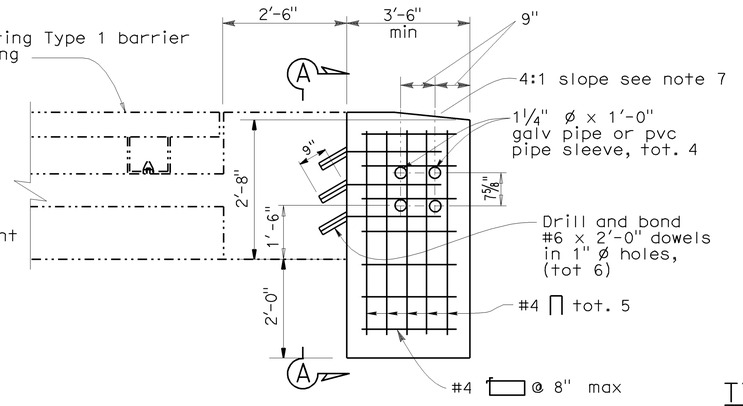

ELEVATION

TYPE I

TYPICAL SECTION

(TYPE 1 BARRIER)

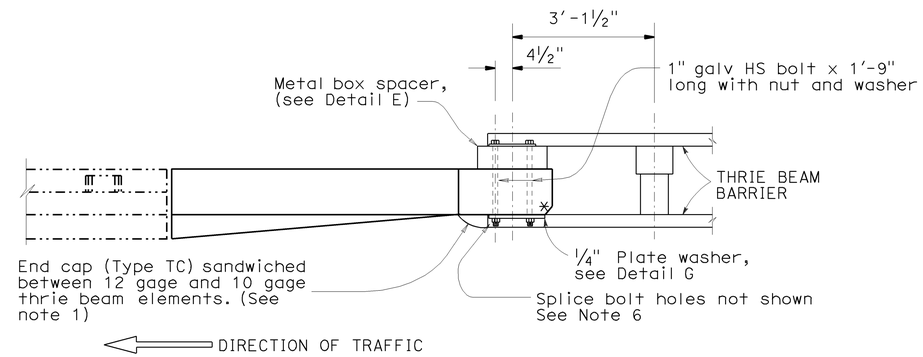

PLAN

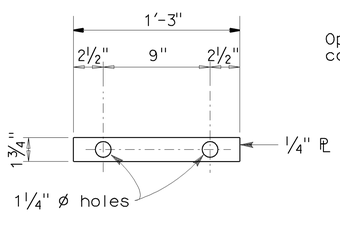

DETAIL G

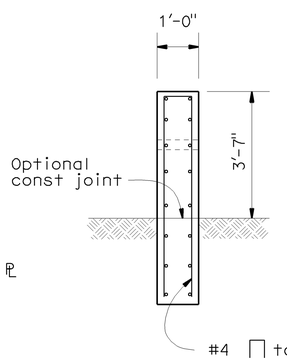

SECTION B-B

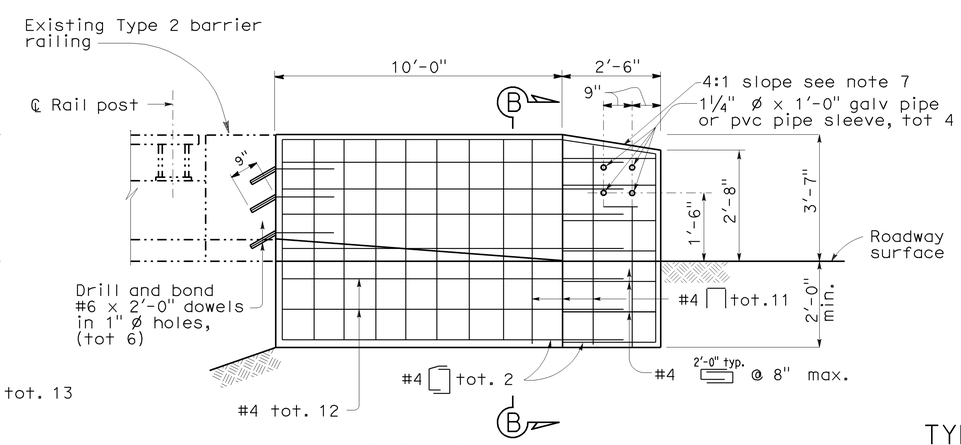

ELEVATION

TYPE 2

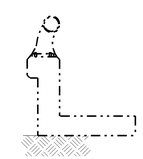

TYPICAL SECTION

(TYPE 2 BARRIER)

NOTES:

1. For details not shown, see Standard Plans, July 2006.
2. Dependent dimensions will be verified in the field before fabricating any end connection to conform with existing paved conditions.
3. When end section is called for, modify typical terminal section to fit. See Detail E
4. All plates and bolts are galvanized.
5. Cut and remove portion of Type 1, 2 and BAGR as required.
6. Exterior splice bolt holes shall be the standard ⅞" x 1⅛"slot size for rail splices at post #T4 and the connection to the concrete barrier or railing. Interior splice bolt holes may be increased up to 1¼" dia. Washers shall be used with splice bolts on back side of rail element at post #T4 and connection to the concrete barrier or railing.
7. Taper the top of the end of the bridge railing at 4:1 to match the top elevation of the thrie beam rail element.

STANDARD DRAWING

FILE NO. xs16-400e

APPROVED BY T SATTER — RESPONSIBLE TECHNICAL SPECIALIST

APPROVAL DATE 4-15-08

RELEASED BY ROBERTO LACALLE — RESPONSIBLE OFFICE CHIEF

RELEASE DATE 4-15-08

STATE OF CALIFORNIA DEPARTMENT OF TRANSPORTATION

DIVISION OF ENGINEERING SERVICES

BRIDGE NO.

POST MILE

THRIE BEAM CONNECTION DETAILS

BARRIER RAILING TYPE 1 & TYPE 2

DS OSD 2147A (ENGLISH STANDARD DRAWING "XS" BORDER REV. 01/11/08)

ORIGINAL SCALE IN INCHES FOR REDUCED PLANS 0 1 2 3

CU EA

DISREGARD PRINTS BEARING EARLIER REVISION DATES

REVISION DATES (PRELIMINARY STAGE ONLY) SHEET OF

USERNAME => s123043

WBTR Anchor Block, St

DATE PLOTTED => 02-AUG-2010 TIME PLOTTED => 12:53

DIST	COUNTY	ROUTE	POST MILES TOTAL PROJECT	SHEET No	TOTAL SHEETS
04	Ala	13	4.4/8.6	53	53

REGISTERED CIVIL ENGINEER 7/29/10 DATE

8-2-10
PLANS APPROVAL DATE

REGISTERED PROFESSIONAL ENGINEER ANDREW BUI No. C63560 Exp. 9/30/10 CIVIL STATE OF CALIFORNIA

The State of California or its officers or agents shall not be responsible for the accuracy or completeness of electronic copies of this plan sheet.

To get to the Caltrans web site, go to: http://www.dot.ca.gov

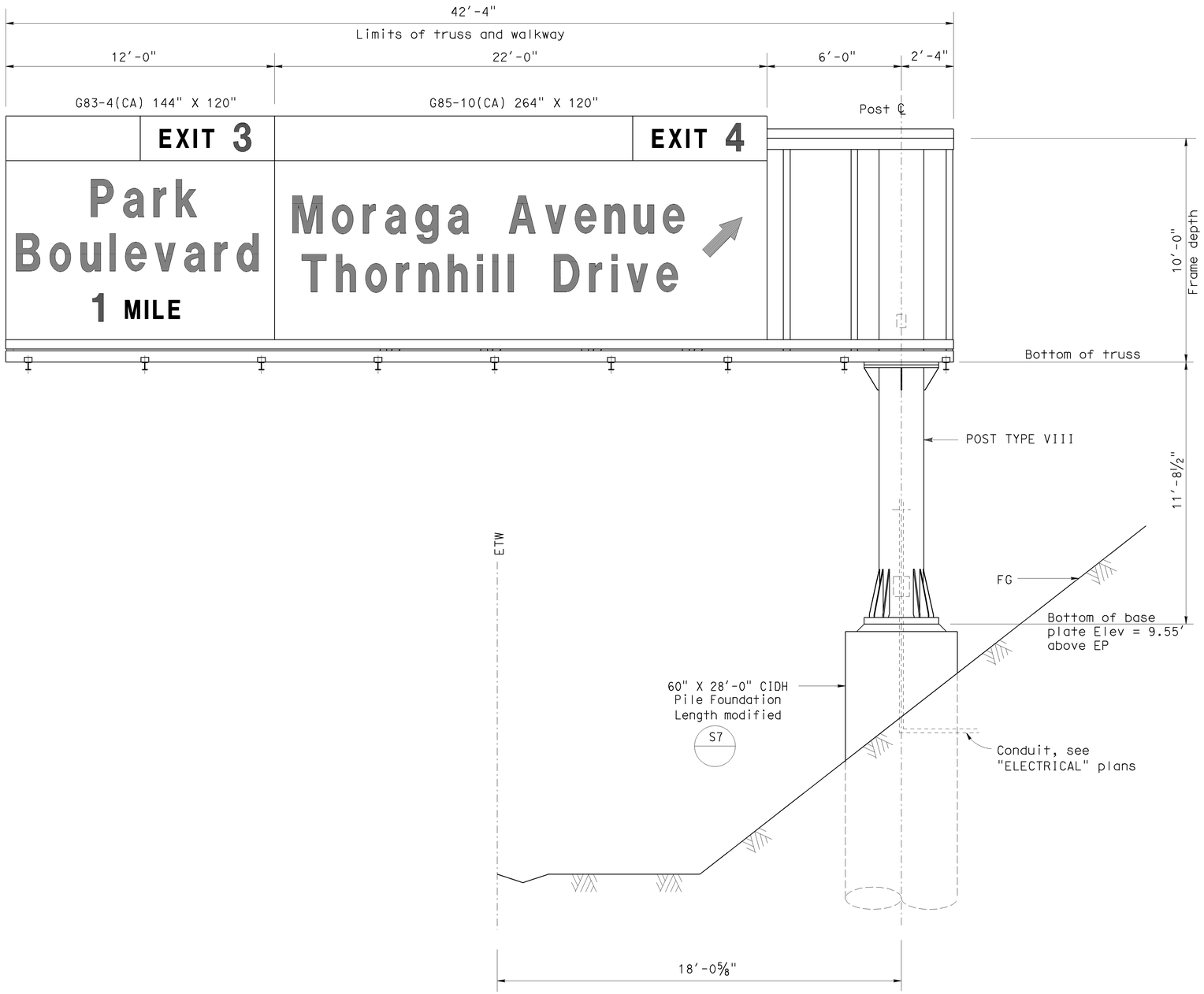

ELEVATION
NO SCALE

Standard Plan Sheet No.
Detail No.

DESIGN NOTES:

SPECIFICATIONS

Design : AASHTO Standard Specifications for Structural Supports for Highway Signs, Luminaires and Traffic Signals dated 2001.

LOADING

Wind Loadings : 100 mph

NOTES:

1. For details not shown, see 2006 "STANDARD PLANS" and 2006 "Revised Standard Plans".
2. For sign structure location see "Sign Plans".
3. For sign panel type, dimensions, and mounting locations, see "Sign Details".
4. Foundation design is based on AASHTO 2001 article 13.6 Broms' approximate procedure.

NOTE:
THE CONTRACTOR SHALL VERIFY ALL CONTROLLING FIELD DIMENSIONS BEFORE ORDERING OR FABRICATING ANY MATERIAL.

BRANCH CHIEF Jeffrey B Woody

	BY	CHECKED
DESIGN	J DATILES	A BUI
DETAILS	A R DUDSAK	J DATILES
QUANTITIES	J DATILES	A BUI

STATE OF CALIFORNIA
DEPARTMENT OF TRANSPORTATION

DIVISION OF ENGINEERING SERVICES
DESIGN AND TECHNICAL SERVICES
SPECIAL DESIGNS BRANCH
A

BRIDGE NO.
POST MILE 4.4/8.6

SIGN STRUCTURE (TRUSS)
SQUARE PEDESTAL PILE FOUNDATION (MOD)

SDS-1

(ENGLISH) SPECIAL DESIGNS BRANCH BORDER SHEET (REV. 7-1-09)

ORIGINAL SCALE IN INCHES FOR REDUCED PLANS 0 1 2 3

CU 04
EA 4A3411

DISREGARD PRINTS BEARING EARLIER REVISION DATES → 7/30/10 7/30/10

REVISION DATES

SHEET 1 OF 1

FILE => spec_des_br_prj/2010sd/04-4A3411/04-4a3411_sds-1.dgn

USERNAME => ryee DATE PLOTTED => 30-JUL-2010 TIME PLOTTED => 11:26