Dist	COUNTY	ROUTE	POST MILES TOTAL PROJECT	SHEET No.	TOTAL SHEETS
04	Nap	29	38.1/48.6	1	30

STATE OF CALIFORNIA

DEPARTMENT OF TRANSPORTATION

STP-P029(108)E

PROJECT PLANS FOR CONSTRUCTION ON

STATE HIGHWAY

IN NAPA COUNTY
NEAR CALISTOGA
FROM 0.2 MILE NORTH OF SILVERADO TRAIL TO LAKE COUNTY LINE

TO BE SUPPLEMENTED BY STANDARD PLANS DATED MAY 2006

INDEX OF PLANS

SHEET No.	DESCRIPTION
1	TITLE SHEET AND LOCATION MAP
2	TYPICAL CROSS SECTIONS
3 & 4	CONSTRUCTION DETAILS
5 & 6	DRAINAGE DETAILS & DRAINAGE QUANTITIES
7	CONSTRUCTION AREA SIGNS
8 & 9	PAVEMENT DELINEATION QUANTITIES
10 - 20	SUMMARY OF QUANTITIES
21 - 30	REVISED AND NEW STANDARD PLANS

THE STANDARD PLANS LIST APPLICABLE TO THIS CONTRACT IS INCLUDED IN THE NOTICE TO BIDDERS AND SPECIAL PROVISIONS BOOK.

LOCATION MAP

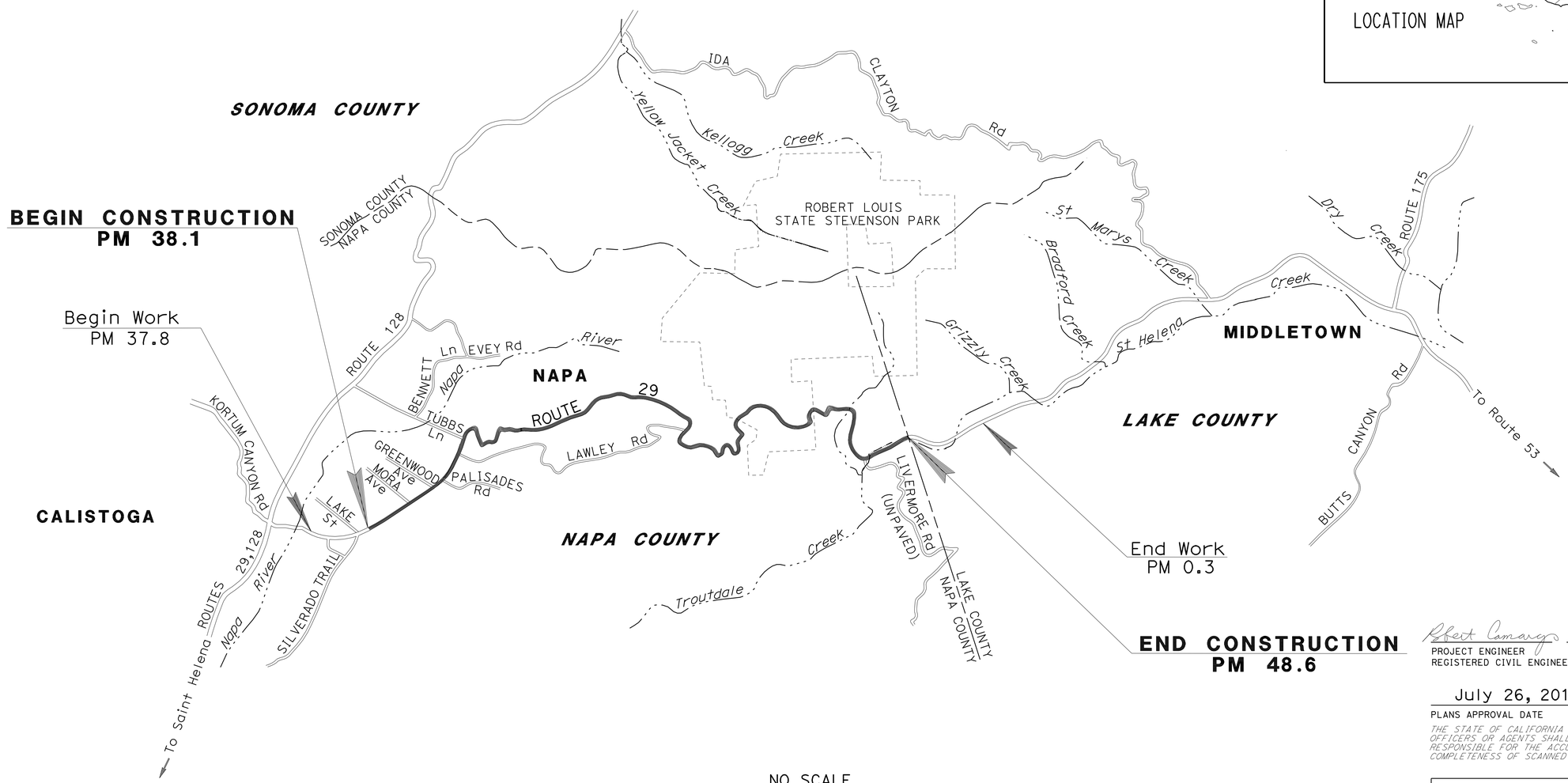

NO SCALE

THE CONTRACTOR SHALL POSSESS THE CLASS (OR CLASSES) OF LICENSE AS SPECIFIED IN THE "NOTICE TO BIDDERS."

Robert Camargo 7-30-10
PROJECT ENGINEER DATE
REGISTERED CIVIL ENGINEER

July 26, 2010
PLANS APPROVAL DATE

REGISTERED PROFESSIONAL ENGINEER
Robert Camargo
No. 34402
Exp. 9-30-11
CIVIL
STATE OF CALIFORNIA

THE STATE OF CALIFORNIA OR ITS OFFICERS OR AGENTS SHALL NOT BE RESPONSIBLE FOR THE ACCURACY OR COMPLETENESS OF SCANNED COPIES OF THIS PLAN SHEET.

CONTRACT No.	04-4C1404
PROJECT ID	0400020062

PROJECT MANAGER: RAMSES SARGISS
DESIGN ENGINEER: ROBERT CAMARGO

LAST REVISION 07-26-01
DATE PLOTTED => 14-OCT-2010
TIME PLOTTED => 14:18

Dist	COUNTY	ROUTE	POST MILES TOTAL PROJECT	SHEET No.	TOTAL SHEETS
04	Nap	29	38.1/48.6	2	30

Robert Camargo 7-30-10
REGISTERED CIVIL ENGINEER DATE

7-26-10
PLANS APPROVAL DATE

REGISTERED PROFESSIONAL ENGINEER Robert Camargo No. 34402 Exp. 9-30-11 CIVIL STATE OF CALIFORNIA

THE STATE OF CALIFORNIA OR ITS OFFICERS OR AGENTS SHALL NOT BE RESPONSIBLE FOR THE ACCURACY OR COMPLETENESS OF SCANNED COPIES OF THIS PLAN SHEET.

NOTES:

1. DIMENSIONS OF THE PAVEMENT STRUCTURES (STRUCTURAL SECTIONS) ARE SUBJECT TO TOLERANCES SPECIFIED IN THE STANDARD SPECIFICATIONS.
2. SUPERELEVATION AS SHOWN OR AS DIRECTED BY THE ENGINEER.
3. EXISTING UTILITY FACILITIES ARE NOT PLOTTED ON THESE PLANS.

ABBREVIATION:

RHMA (G) RUBBERIZED HOT MIX ASPHALT (TYPE G)

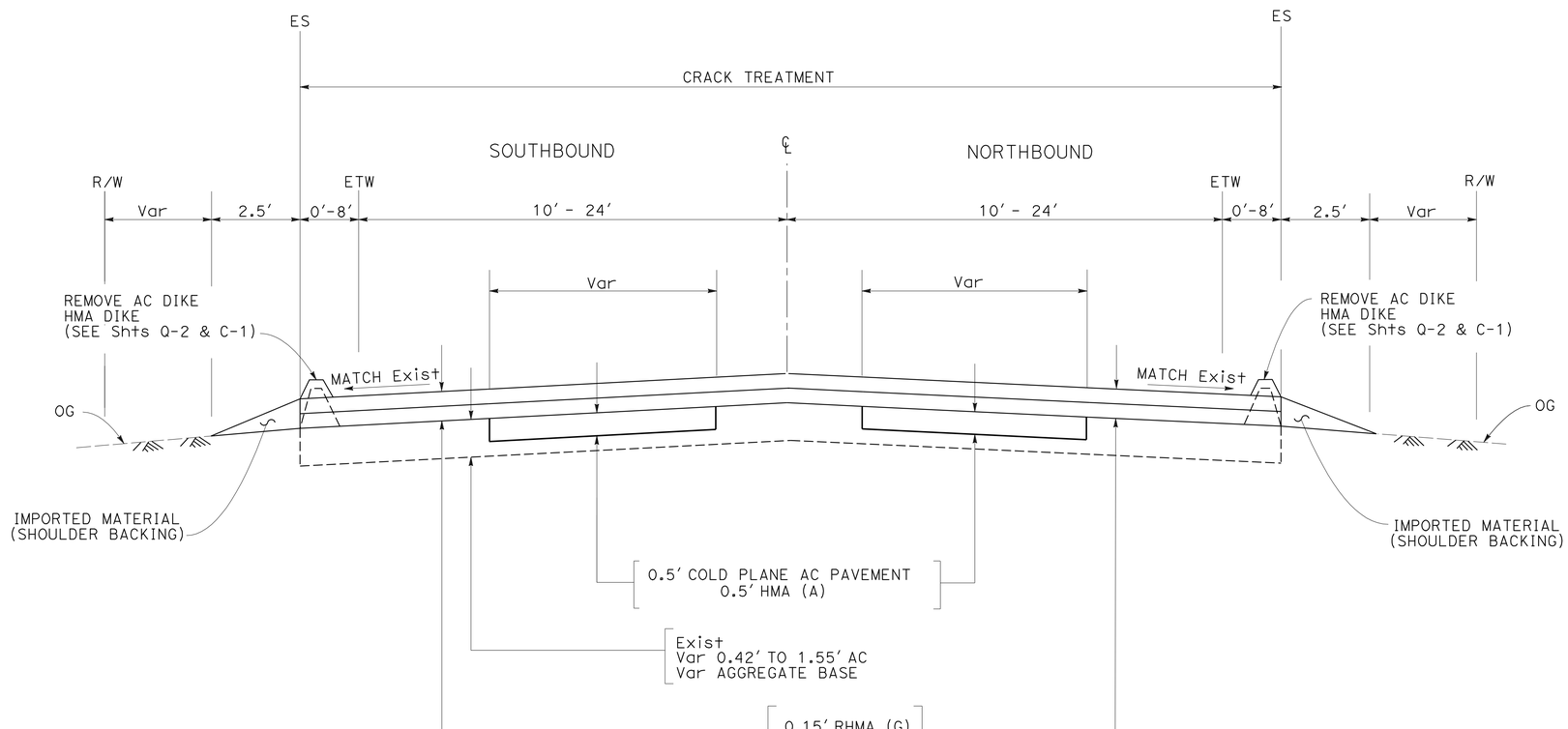

PM 38.1/48.6

TYPICAL CROSS SECTIONS

NO SCALE

X-1

STATE OF CALIFORNIA - DEPARTMENT OF TRANSPORTATION
Caltrans
DESIGN

FUNCTIONAL SUPERVISOR: RAMSES SARGISS
CALCULATED-DESIGNED BY: ROBERT CAMARGO
CHECKED BY: KARIN SERITIS
REVISED BY: RC
DATE REVISED: 7/19/10

LAST REVISION 07-26-10 | DATE PLOTTED => 14-OCT-2010 | TIME PLOTTED => 14:18

Dist	COUNTY	ROUTE	POST MILES TOTAL PROJECT	SHEET No.	TOTAL SHEETS
04	Nap	29	38.1/48.6	3	30

Robert Camargo 7-30-10
REGISTERED CIVIL ENGINEER DATE

7-26-10
PLANS APPROVAL DATE

REGISTERED PROFESSIONAL ENGINEER
Robert Camargo
No. 34402
Exp. 9-30-11
CIVIL
STATE OF CALIFORNIA

THE STATE OF CALIFORNIA OR ITS OFFICERS OR AGENTS SHALL NOT BE RESPONSIBLE FOR THE ACCURACY OR COMPLETENESS OF SCANNED COPIES OF THIS PLAN SHEET.

LEGEND:

HMA SURFACING

COLD PLANE ASPHALT CONCRETE PAVEMENT

ABBREVIATION:

RHMA (G) RUBBERIZED HOT MIX ASPHALT (TYPE G)

NOTE:

LENGTH OF CONFORM TO BE 45′ ON MAINLINE AT END OF PROJECT AND AT BRIDGE APPROACHES. FOR DRIVEWAYS AND CROSS STREETS, CONFORM SHALL BE 10′.

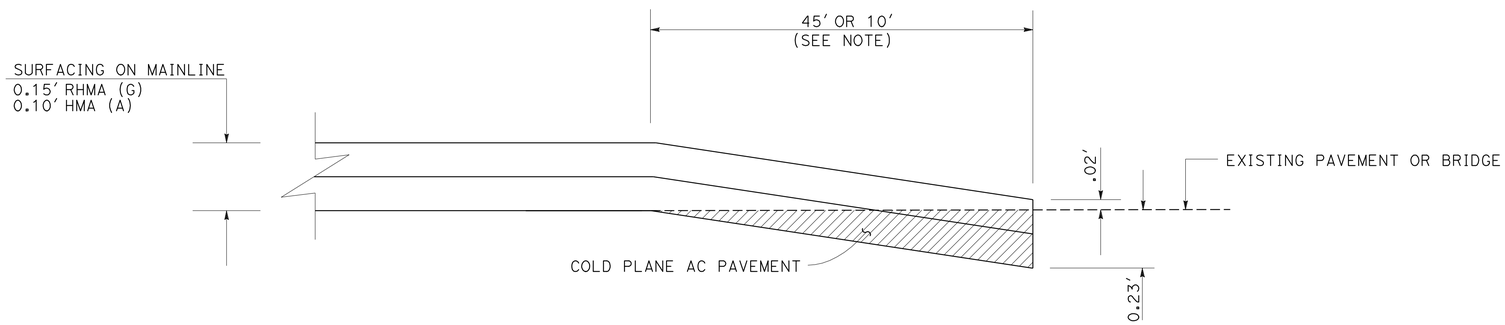

PAVING CONFORM AT PROJECT LIMITS, BRIDGE APPROACHES, AT INTERSECTIONS AND DRIVEWAYS

DETAIL A

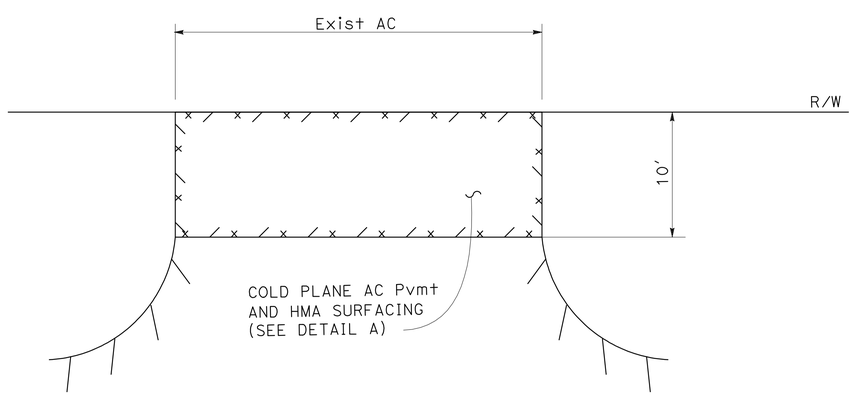

ROUTE 29

DRIVEWAY AND ROAD CONNECTION
TYPICAL PAVING CONFORM

DETAIL B

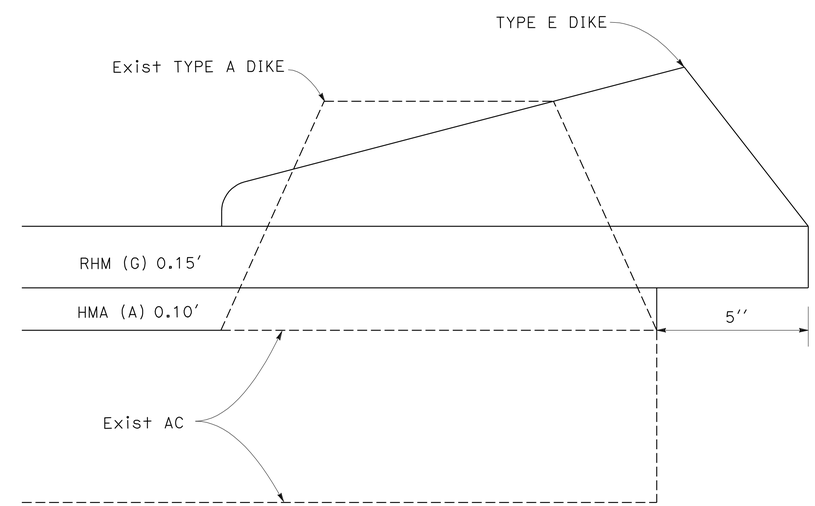

REPLACEMENT OF Exist TYPE A DIKE WITH TYPE E

DETAIL C

CONSTRUCTION DETAILS

NO SCALE

C-1

STATE OF CALIFORNIA - DEPARTMENT OF TRANSPORTATION
Caltrans®
DESIGN

FUNCTIONAL SUPERVISOR: RAMSES SARGISS
CALCULATED-DESIGNED BY: ROBERT CAMARGO
CHECKED BY: KARIN SERITIS
REVISED BY: RC
DATE REVISED: 7/19/10

LAST REVISION 07-26-10
DATE PLOTTED => 14-OCT-2010
TIME PLOTTED => 14:18

Dist	COUNTY	ROUTE	POST MILES TOTAL PROJECT	SHEET No.	TOTAL SHEETS
04	Nap	29	38.1/48.6	4	30

Robert Camargo 7-30-10
REGISTERED CIVIL ENGINEER DATE

7-26-10
PLANS APPROVAL DATE

REGISTERED PROFESSIONAL ENGINEER
Robert Camargo
No. 34402
Exp. 9-30-11
CIVIL
STATE OF CALIFORNIA

THE STATE OF CALIFORNIA OR ITS OFFICERS OR AGENTS SHALL NOT BE RESPONSIBLE FOR THE ACCURACY OR COMPLETENESS OF SCANNED COPIES OF THIS PLAN SHEET.

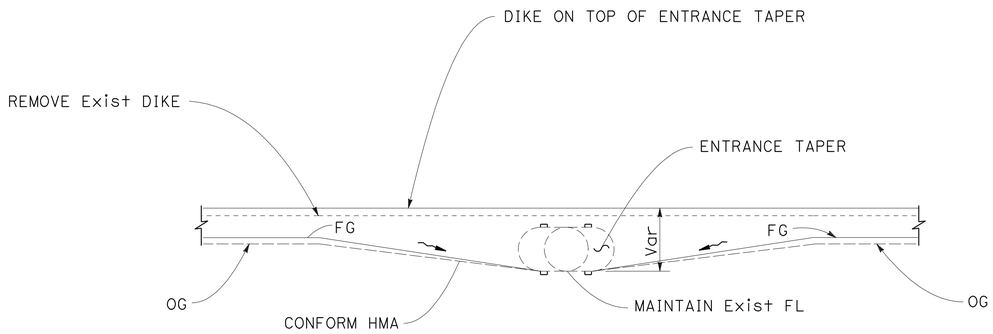

SECTION A-A

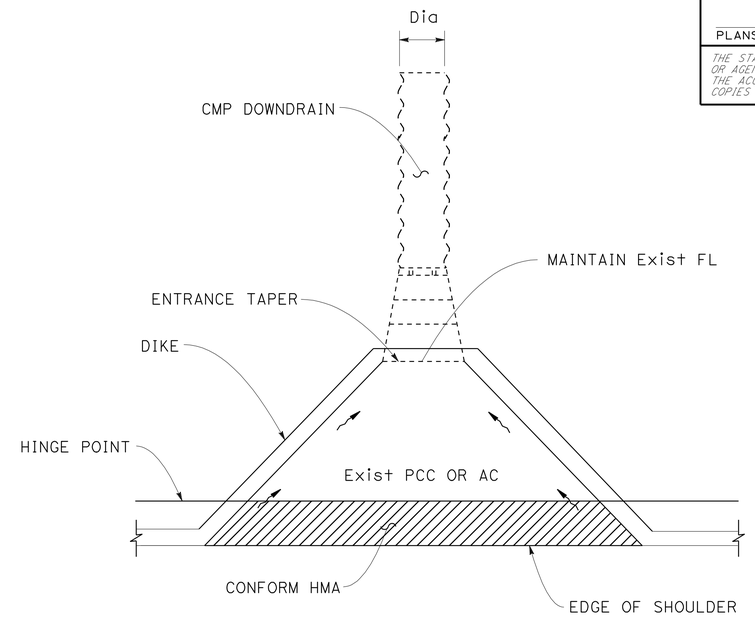

PLAN

PAVING CONFORM AT DOWNDRAINS (TYPE B)

PM 46.04, 46.40

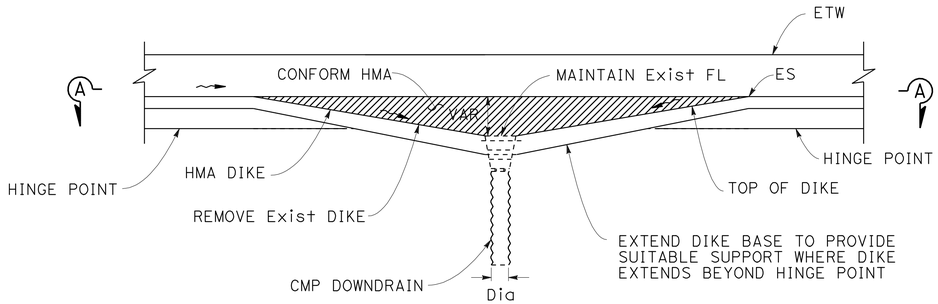

PLAN

PAVING CONFORM AT DOWNDRAINS (TYPE A)

PM 45.22, 45.90, 46.47, 46.48

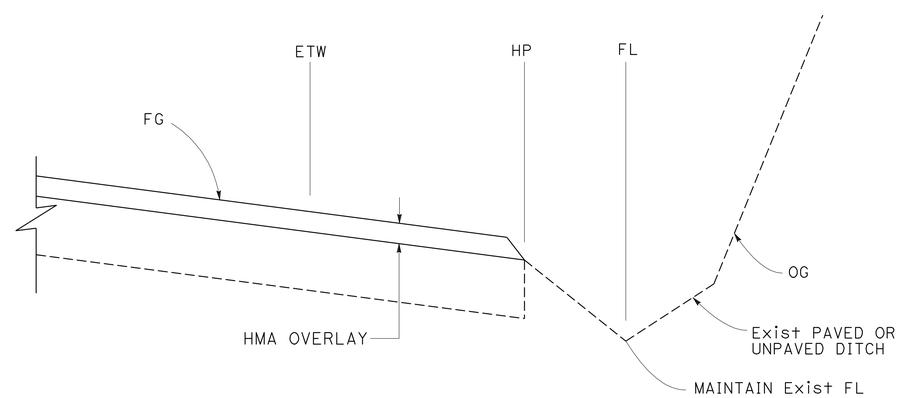

CROSS SECTION TYPICAL

PAVING ADJACENT TO DITCH

CONSTRUCTION DETAILS

NO SCALE

C-2

REVISED BY	DATE REVISED
RC	7/19/10

ROBERT CAMARGO
KARIN SERITIS

CALCULATED-DESIGNED BY
CHECKED BY

FUNCTIONAL SUPERVISOR
RAMSES SARGISS

STATE OF CALIFORNIA - DEPARTMENT OF TRANSPORTATION
Caltrans
DESIGN

LAST REVISION 07-26-10
DATE PLOTTED => 14-OCT-2010
TIME PLOTTED => 14:18

Dist	COUNTY	ROUTE	POST MILES TOTAL PROJECT	SHEET No.	TOTAL SHEETS
04	Nap	29	38.1/48.6	5	30

REGISTERED CIVIL ENGINEER 7-30-10 DATE

7-26-10
PLANS APPROVAL DATE

REGISTERED PROFESSIONAL ENGINEER Robert Camargo No. 34402 Exp. 9-30-11 CIVIL STATE OF CALIFORNIA

THE STATE OF CALIFORNIA OR ITS OFFICERS OR AGENTS SHALL NOT BE RESPONSIBLE FOR THE ACCURACY OR COMPLETENESS OF SCANNED COPIES OF THIS PLAN SHEET.

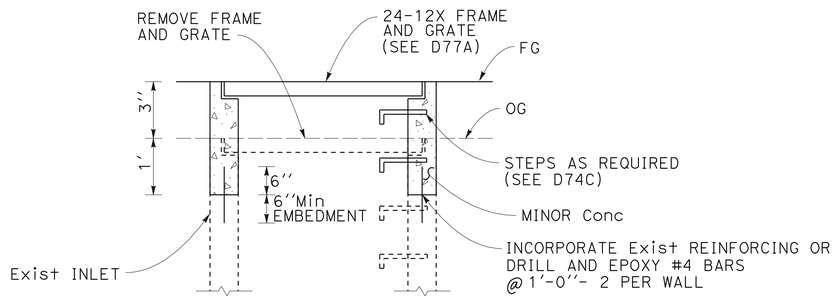

SECTIONAL VIEW

ADJUST DRAINAGE INLET TYPE G1 AND G2
PM 45.90, 45.93, 46.10

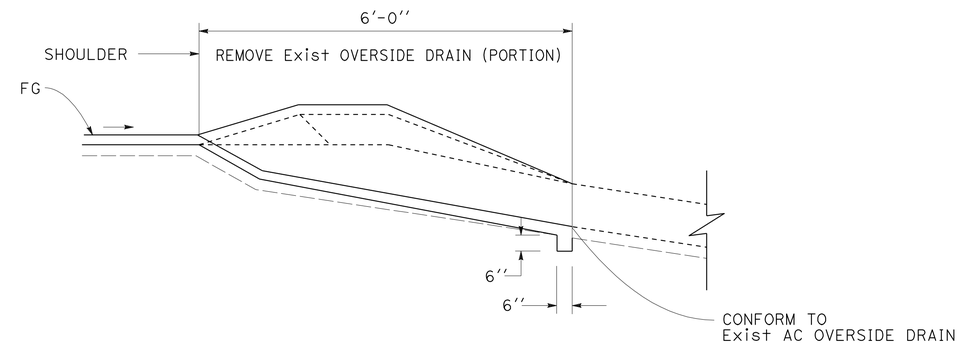

ELEVATION VIEW

HOT MIX ASPHALT OVERSIDE DRAIN CONFORM

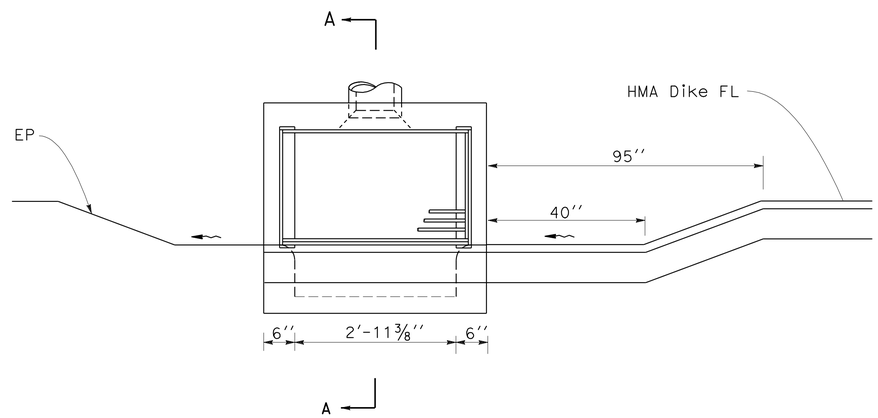

PLAN

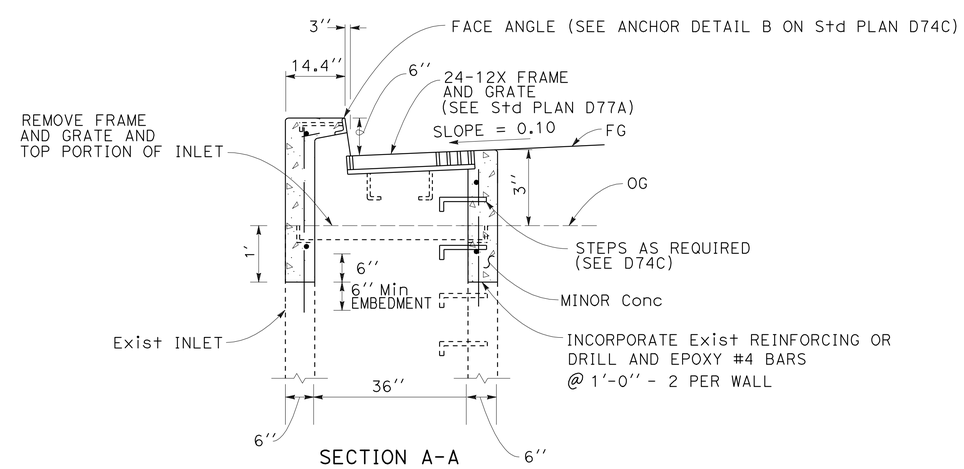

SECTION A-A

ADJUST DRAINAGE INLET TYPE GOM (PM 46.04)

FOR DETAILS NOT SHOWN SEE Std PLANS D74B(GO)

DRAINAGE DETAILS

NO SCALE

DD-1

REVISED BY	DATE REVISED
TJ	7/19/10

CALCULATED-DESIGNED BY: TOM JIANG
CHECKED BY: KATHLEEN REILLY
FUNCTIONAL SUPERVISOR: KATHLEEN REILLY

STATE OF CALIFORNIA - DEPARTMENT OF TRANSPORTATION
Caltrans
DESIGN

LAST REVISION 07-26-10
DATE PLOTTED => 14-OCT-2010
TIME PLOTTED => 14:18

Dist	COUNTY	ROUTE	POST MILES TOTAL PROJECT	SHEET No.	TOTAL SHEETS
04	Nap	29	38.1/48.6	6	30

Robert Camargo 7-30-10
REGISTERED CIVIL ENGINEER DATE

7-26-10
PLANS APPROVAL DATE

REGISTERED PROFESSIONAL ENGINEER Robert Camargo No. 34402 Exp. 9-30-11 CIVIL STATE OF CALIFORNIA

THE STATE OF CALIFORNIA OR ITS OFFICERS OR AGENTS SHALL NOT BE RESPONSIBLE FOR THE ACCURACY OR COMPLETENESS OF SCANNED COPIES OF THIS PLAN SHEET.

DRAINAGE QUANTITIES

DIRECTION	PM	DESCRIPTION	ADJUST INLET	FRAME AND GRATE (24-12X) (N)	Misc IRON AND STEEL	REMOVE AC OVERSIDE DRAIN	HMA (TYPE A) *	PLACE HMA (Misc AREA)
			EA		LBS	EA	TON	SQYD
NORTHBOUND	40.4	REMOVE AND REPLACE AC OVERSIDE DRAIN				1	0.4	2.2
	40.7					1	0.4	2.2
	41.7					1	0.4	2.2
	41.9					1	0.4	2.2
	42.0					1	0.4	2.2
	43.7					1	0.4	2.2
	43.7					1	0.4	2.2
	43.9					1	0.4	2.2
	44.6					1	0.4	2.2
	44.8					1	0.4	2.2
	44.9					1	0.4	2.2
	45.2					1	0.4	2.2
	45.3					1	0.4	2.2
	46.7					1	0.4	2.2
	47.1					1	0.4	2.2
	47.2					1	0.4	2.2
	47.3					1	0.4	2.2
	47.8					1	0.4	2.2
	47.9					1	0.4	2.2
TOTAL (NORTHBOUND)						19	7.6	41.8
SOUTHBOUND	42.2	REMOVE AND REPLACE AC OVERSIDE DRAIN				1	0.4	2.2
	42.3					1	0.4	2.2
	43.7					1	0.4	2.2
	44.6					1	0.4	2.2
	45.8					1	0.4	2.2
	45.90	ADJUST G2 DI TO GRADE	1	1	239			
	45.93	ADJUST G1 DI TO GRADE	1	1	239			
	46.0	REMOVE AND REPLACE AC OVERSIDE DRAIN				1	0.4	2.2
	46.04	ADJUST GOM DI TO GRADE	1	1	239			
	46.10	ADJUST G1 DI TO GRADE	1	1	239			
	46.5	REMOVE AND REPLACE AC OVERSIDE DRAIN				1	0.4	2.2
	46.7					1	0.4	2.2
	46.8					1	0.4	2.2
	46.9					1	0.4	2.2
	46.9					1	0.4	2.2
	47.3					1	0.4	2.2
	48.2					1	0.4	2.2
TOTAL (SOUTHBOUND)			4	4	956	13	5.2	28.6
TOTAL (NORTHBOUND)						19	7.6	41.8
TOTAL			4	4	956	32	12.8	70.4

(N) NOT A SEPARATE PAY ITEM, FOR INFORMATION ONLY.

* QUANTITY INCLUDED ON Q-1, TABLE FOR RHMA (G) / HMA (TYPE A) / TACK COAT

DRAINAGE QUANTITIES
NO SCALE

DQ-1

STATE OF CALIFORNIA - DEPARTMENT OF TRANSPORTATION
Caltrans DESIGN

FUNCTIONAL SUPERVISOR: KATHLEEN REILLY
CALCULATED-DESIGNED BY: TOM JIANG
CHECKED BY: KATHLEEN REILLY
REVISED BY: TJ
DATE REVISED: 7/19/10

LAST REVISION 07-26-10 | DATE PLOTTED => 14-OCT-2010 | TIME PLOTTED => 14:18

Dist	COUNTY	ROUTE	POST MILES TOTAL PROJECT	SHEET No.	TOTAL SHEETS
04	Nap	29	38.1/48.6	7	30

Robert Camargo 7-30-10
REGISTERED CIVIL ENGINEER DATE

7-26-10
PLANS APPROVAL DATE

REGISTERED PROFESSIONAL ENGINEER Robert Camargo No. 34402 Exp. 9-30-11 CIVIL STATE OF CALIFORNIA

THE STATE OF CALIFORNIA OR ITS OFFICERS OR AGENTS SHALL NOT BE RESPONSIBLE FOR THE ACCURACY OR COMPLETENESS OF SCANNED COPIES OF THIS PLAN SHEET.

LEGEND:

[No.] CONSTRUCTION AREA SIGN NUMBER

NOTES:

1. EXACT LOCATION AND POSITION OF CONSTRUCTION AREA SIGNS TO BE DETERMINED BY THE ENGINEER.
2. CONSTRUCTION AREA SIGNS TO BE STATIONARY MOUNTED.

CONSTRUCTION AREA SIGNS

SIGN No.	MUTCD CODE	MESSAGE	PANEL SIZE	NUMBER OF POST AND SIZE	QUANTITY
1	G20-1	ROAD WORK__MILES	36'' x 18''	(ONE) 4'' x 4''	2
2	G20-2	END ROAD WORK	36'' x 18''	(ONE) 4'' x 4''	9
3	W20-1	ROAD WORK AHEAD	30'' x 30''	(ONE) 4'' x 4''	7

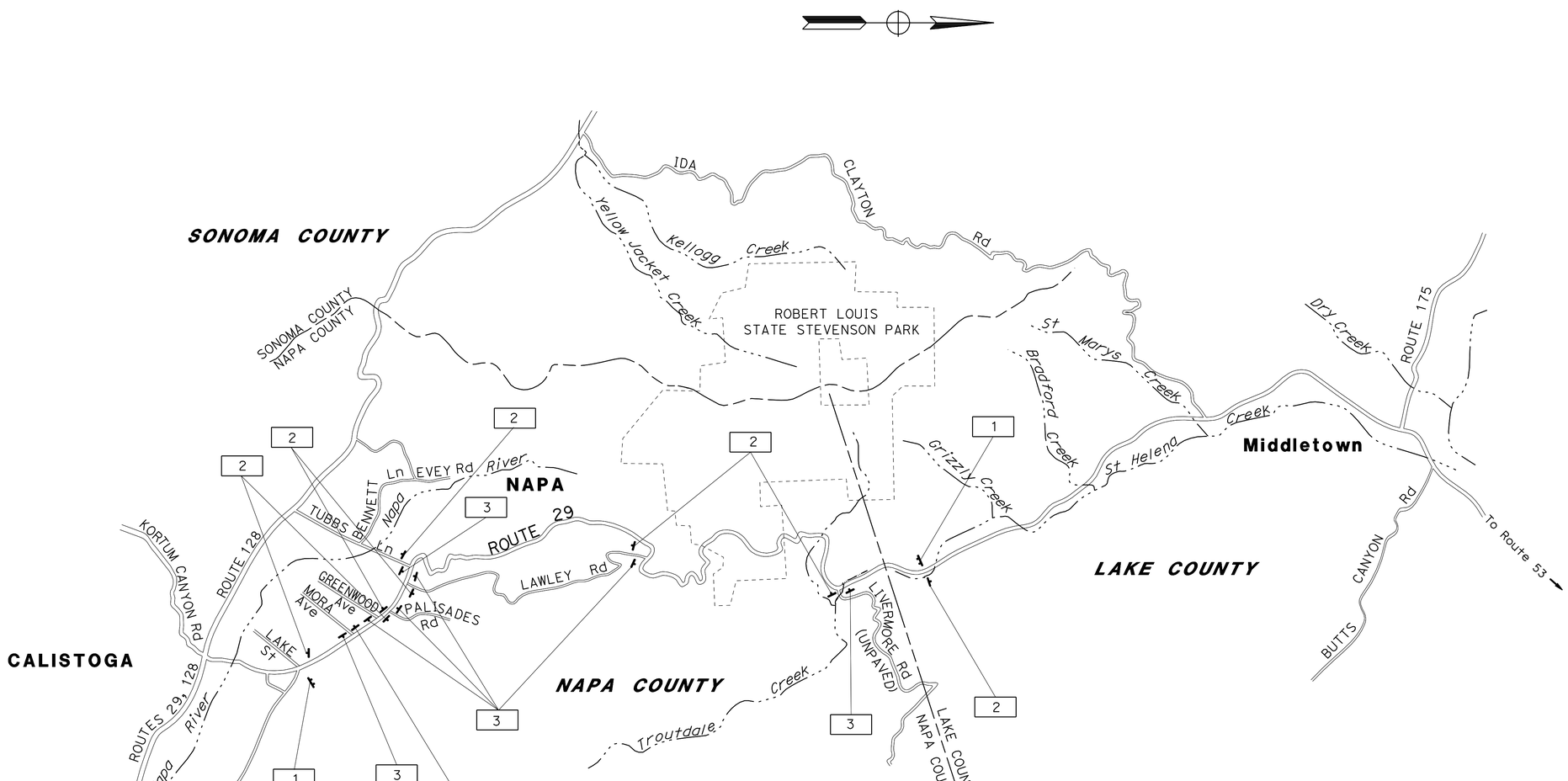

CONSTRUCTION AREA SIGNS

NO SCALE

THIS PLAN ACCURATE FOR CONSTRUCTION AREA SIGN WORK ONLY

CS-1

STATE OF CALIFORNIA - DEPARTMENT OF TRANSPORTATION
DESIGN

FUNCTIONAL SUPERVISOR: ROLAND AU-YEUNG
CALCULATED-DESIGNED BY: STEVEN LAU
CHECKED BY: JERILYN L. STRUVEN
REVISED BY: SL
DATE REVISED: 7/19/10

LAST REVISION 07-26-10
DATE PLOTTED => 14-OCT-2010
TIME PLOTTED => 14:19

Dist	COUNTY	ROUTE	POST MILES TOTAL PROJECT	SHEET No.	TOTAL SHEETS
04	Nap	29	38.1/48.6	8	30

Robert Camargo 7-30-10
REGISTERED CIVIL ENGINEER DATE

7-26-10
PLANS APPROVAL DATE

REGISTERED PROFESSIONAL ENGINEER Robert Camargo No. 34402 Exp. 9-30-11 CIVIL STATE OF CALIFORNIA

THE STATE OF CALIFORNIA OR ITS OFFICERS OR AGENTS SHALL NOT BE RESPONSIBLE FOR THE ACCURACY OR COMPLETENESS OF SCANNED COPIES OF THIS PLAN SHEET.

TRAFFIC STRIPES, PAVEMENT MARKINGS AND PAVEMENT MARKERS

LOCATION	DETAIL No. OR Pvmt MARKING	THERMOPLASTIC TRAFFIC STRIPE 4'' WHITE	THERMOPLASTIC TRAFFIC STRIPE 4'' YELLOW	THERMOPLASTIC TRAFFIC STRIPE 4'' WHITE (BROKEN (17-7)	THERMOPLASTIC TRAFFIC STRIPE 4'' WHITE (BROKEN (12-3)	PAVEMENT MARKER RETROREFLECTIVE RECESSED (TYPE D)	PAVEMENT MARKER RETROREFLECTIVE RECESSED (TYPE G)	THERMOPLASTIC PAVEMENT MARKING (WHITE)	REMOVE THERMOPLASTIC TRAFFIC STRIPE 4'' WHITE	REMOVE THERMOPLASTIC TRAFFIC STRIPE 4'' YELLOW	REMOVE THERMOPLASTIC PAVEMENT MARKING	REMOVE PAVEMENT MARKERS
		LF				EA		SQFT	LF		SQFT	EA
START JOB												
(PM 38.1)	22		3168			134				3168		134
TO	27B	3168							3168			
MORA AVENUE												
(PM 38.4)												
MORA AVENUE												
(PM 38.4)	22		2027			86				2027		86
TO	27B	1954							1954			
GREENWOOD AVENUE												
(PM 38.6)												
GREENWOOD AVENUE												
(PM 38.6)	22		4164			176				4164		176
TO	27B	4073							4073			
PALISADES ROAD	27C				151				31			
(PM 39.0)												
PALISADES ROAD												
(PM 39.0)	22		1056			46				1056		46
TO	27B	1056							1056			
GARNETT CREEK Br												
(PM 39.1)												
GARNETT CREEK Br												
(PM 39.1)	22		4183			176				4183		176
TO	27B	4170							4170			
TUBBS LANE	LIMIT LINE							29			29	
(PM 39.5)												
TUBBS LANE												
(PM 39.5)	22		5280			222				5280		222
TO	27B	5280							5280			
PM 40.0												
PM 40.0	9			1354			29		395			29
TO	22		13306			556				13306		556
PM 41.26	27B	13306							13306			
	TYPE VI ARROW							168			168	
TOTAL		33007	33184	1354	151	1396	29	197	33433	33184	197	1425

PAVEMENT DELINEATION QUANTITIES

PDQ-1

STATE OF CALIFORNIA - DEPARTMENT OF TRANSPORTATION
Caltrans DESIGN

FUNCTIONAL SUPERVISOR: RAMSES SARGISS
CALCULATED-DESIGNED BY: ROBERT CAMARGO
CHECKED BY: KARIN SERITIS
REVISED BY: RC
DATE REVISED: 7/19/10

LAST REVISION DATE PLOTTED => 14-OCT-2010
TIME PLOTTED => 14:19

Dist	COUNTY	ROUTE	POST MILES TOTAL PROJECT	SHEET No.	TOTAL SHEETS
04	Nap	29	38.1/48.6	9	30

Robert Camargo 7-30-10
REGISTERED CIVIL ENGINEER DATE

7-26-10
PLANS APPROVAL DATE

REGISTERED PROFESSIONAL ENGINEER Robert Camargo No. 34402 Exp. 9-30-11 CIVIL STATE OF CALIFORNIA

THE STATE OF CALIFORNIA OR ITS OFFICERS OR AGENTS SHALL NOT BE RESPONSIBLE FOR THE ACCURACY OR COMPLETENESS OF SCANNED COPIES OF THIS PLAN SHEET.

TRAFFIC STRIPES, PAVEMENT MARKINGS AND PAVEMENT MARKERS

LOCATION	DETAIL No. OR Pvmt MARKING	THERMOPLASTIC TRAFFIC STRIPE 4'' WHITE	THERMOPLASTIC TRAFFIC STRIPE 4'' YELLOW	THERMOPLASTIC TRAFFIC STRIPE 4'' WHITE (BROKEN (17-7)	THERMOPLASTIC TRAFFIC STRIPE 4'' WHITE (BROKEN (12-3)	PAVEMENT MARKER RETROREFLECTIVE RECESSED (TYPE D)	PAVEMENT MARKER RETROREFLECTIVE RECESSED (TYPE G)	THERMOPLASTIC PAVEMENT MARKING (WHITE)	REMOVE THERMOPLASTIC TRAFFIC STRIPE 4'' WHITE	REMOVE THERMOPLASTIC TRAFFIC STRIPE 4'' YELLOW	REMOVE THERMOPLASTIC PAVEMENT MARKING	REMOVE PAVEMENT MARKERS
		LF				EA		SQFT	LF		SQFT	EA
PM 41.26 TO PM 42.33	9			2791			59		814			59
	22		11300			472				11300		472
	27B	11300							11300			
	TYPE VI ARROW							168			168	
PM 42.33 TO PM 43.60	9			909			20		265			20
	22		13412			560				13412		560
	27B	13412							13412			
	TYPE VI ARROW							168			168	
PM 43.60 TO PM 44.62	9			2263			49		658			49
	22		9292			390				9292		390
	29		2960			64				2960		64
	27B	10772							10772			
	TYPE VI ARROW							168			168	
PM 44.62 TO PM 45.60	9			5678			122		1652			122
	22		10349			434				10349		434
	27B	10348							10348			
	TYPE VI ARROW							336			336	
PM 45.60 TO PM 46.60	9			2143			46		623			46
	22		10560			442				10560		442
	27B	10560							10560			
	TYPE VI ARROW							168			168	
	DIAGONAL STRIPE							204			204	
PM 46.60 TO PM 47.60	9			2949			67		854			67
	22		10560			442				10560		442
	27B	10560							10560			
	TYPE VI ARROW							168			168	
	DIAGONAL STRIPE							96			96	
PM 47.60 TO PM 48.60	9			1159			26		336			26
	22		10560			442				10560		442
	27B	10560							10560			
	TYPE VI ARROW							168			168	
	DIAGONAL STRIPE							72			72	
TOTAL		77512	78993	17892		3246	389	1716	82714	78993	1716	3635
TOTAL FROM SHEET PDQ-1		33007	33184	1354	151	1396	29	197	33433	33184	197	1425
GRAND TOTAL		110519	112177	19246	151	4642	418	1913	116147	112177	1913	5060

PAVEMENT DELINEATION QUANTITIES

PDQ-2

REVISED BY	DATE REVISED
RC	7/19/10

ROBERT CAMARGO — KARIN SERITIS — CALCULATED-DESIGNED BY — CHECKED BY — FUNCTIONAL SUPERVISOR — RAMSES SARGISS

STATE OF CALIFORNIA - DEPARTMENT OF TRANSPORTATION
Caltrans
DESIGN

LAST REVISION 07-22-10 | DATE PLOTTED => 14-OCT-2010 | TIME PLOTTED => 14:19

Dist	COUNTY	ROUTE	POST MILES TOTAL PROJECT	SHEET No.	TOTAL SHEETS
04	Nap	29	38.1/48.6	10	30

Robert Camargo 7-30-10
REGISTERED CIVIL ENGINEER DATE

7-26-10
PLANS APPROVAL DATE

REGISTERED PROFESSIONAL ENGINEER Robert Camargo No. 34402 Exp. 9-30-11 CIVIL STATE OF CALIFORNIA

THE STATE OF CALIFORNIA OR ITS OFFICERS OR AGENTS SHALL NOT BE RESPONSIBLE FOR THE ACCURACY OR COMPLETENESS OF SCANNED COPIES OF THIS PLAN SHEET.

RHMA (G)/HMA (TYPE A)/TACK COAT

NORTHBOUND

LOCATION	START	END	LANE No.	LANE LENGTH	LANE WIDTH	SHOULDER WIDTH	RHMA (G)	HMA (TYPE A)	TACK COAT
	PM			FT			TONS		
START OF PROJECT	38.1	39.1	1	5370	12	0	701	470	4
GARNETT CREEK 21-0005	39.1	39.1	BRIDGE						
	39.1	39.5	1	2144	12	0	280	188	1
TUBBS LANE	39.5	44.5	1	26405	13	0	3733	2506	19
	44.5	44.8	1,2	1500	24	2	424	285	2
	44.8	45.0	1,2	1135	24	2	321	215	2
	45.0	45.3	1,2	1536	24	2	434	292	2
	45.3	45.7	1	2160	10	4	329	221	2
	45.7	46.1	1	2112	10	2	276	185	1
	46.1	46.6	1	2814	10	4	428	288	2
	46.6	46.7	1	364	12	3	59	40	0
	46.7	46.9	1	1278	10	2	167	112	1
	46.9	47.1	1	887	10	4	135	91	1
TROUTDALE CREEK 21-0004	47.1	47.1	BRIDGE						
	47.1	47.2	1	539	13	0	76	51	0
	47.2	47.4	1,2	729	24	0	190	128	1
	47.4	47.4	1	333	13	0	47	32	0
	47.4	47.9	1	2856	13	0	404	271	2
	47.9	48.2	1,2	1172	13	3	204	137	1
END OF PROJECT / COUNTY LINE	48.2	48.6	1	2107	13	0	298	200	2
TOTAL (NORTHBOUND)							8506	5710	43

SOUTHBOUND

LOCATION	START	END	LANE No.	LANE LENGTH	LANE WIDTH	SHOULDER WIDTH	RHMA (G)	HMA (TYPE A)	TACK COAT
	PM			FT			TONS		
START OF PROJECT	38.1	39.1	1	5370	12	0	701	470	4
GARNETT CREEK 21-0005	39.1	39.1	BRIDGE						
	39.1	39.5	1	2144	12	0	280	188	1
TUBBS LANE	39.5	44.5	1	26405	13	0	3733	2506	19
	44.5	44.8	1	1500	16	0	261	175	1
	44.8	45.0	1,2	1135	24	0	296	199	2
	45.0	45.3	1	1536	10	0	167	112	1
	45.3	45.7	1	2160	10	0	235	158	1
	45.7	46.1	1,2	2112	24	0	551	370	3
	46.1	46.6	1	2814	10	0	306	205	2
	46.6	46.7	1	364	12	0	48	32	0
	46.7	46.9	1,2	1278	24	0	333	224	2
	46.9	47.1	1	887	10	0	96	65	0
TROUTDALE CREEK 21-0004	47.1	47.1	BRIDGE						
	47.1	47.2	1	539	13	0	76	51	0
	47.2	47.4	1,2	729	24	0	190	128	1
	47.4	47.4	1,2	333	24	0	87	58	0
	47.4	47.9	1	2856	13	0	404	271	2
	47.9	48.2	1,2	1172	24	0	306	205	2
END OF PROJECT / COUNTY LINE	48.2	48.6	1	2107	13	0	298	200	2
TOTAL (SOUTHBOUND)							8368	5617	43
TOTAL (NORTHBOUND)							8506	5710	43
TOTAL FROM Q-2 TABLE FOR HMA DIKE							0	554	0
TOTAL FROM Q-10 TABLE FOR COLD PLANE AC PAVEMENT							0	13815	12
HMA (A) TOTAL FROM DQ-1								13	
GRAND TOTAL							16874	25709	98

(N) NOT A SEPARATE PAY ITEM, FOR INFORMATION ONLY.

ADJUST METAL BEAM GUARD RAIL

LOCATION PM	LOCATION DESCRIPTION	DIRECTION NB	DIRECTION SB	ADJUST METAL BEAM GUARD RAIL (WOOD POST) FT
38.8	0.2 MILE SOUTH OF PALISADES ROAD		X	414
39.0	SOUTH OF PALISADES ROAD	X		175
39.0	"		X	175
39.1	AT GARNETT CREEK	X		63
39.1	"	X		63
39.1	"		X	63
39.1	"		X	63
42.0	1.0 MILE SOUTH OF LAWLEY RD (NORTH Jct)	X		160
42.1	0.9 MILE SOUTH OF LAWLEY RD (NORTH Jct)		X	1100
43.6	0.6 MILE NORTH OF LAWLEY RD (NORHT Jct)	X		270
43.7	0.7 MILE NORTH OF LAWLEY RD (NORTH Jct)		X	390
46.5	0.6 MILE SOUTH OF TROUTDALE CREEK	X		50
46.5	"	X		100
46.5	"		X	160
46.6	0.5 MILE SOUTH OF TROUTDALE CREEK	X		215
47.1	AT TROUTDALE CREEK	X		165
47.1	"		X	150
47.5	0.4 MILE NORTH OF TROUTDALE CREEK	X		685
48.2	0.4 MILE SOUTH OF LAKE COUNTY LINE	X		845
TOTAL				5306

IMPORTED MATERIAL (SHOULDER BACKING)

LOCATION (PM)	LENGTH (FT)	TONS
38.1 TO 48.6	110880	2512

SUMMARY OF QUANTITIES

Q-1

RC	7/19/10
REVISED BY	DATE REVISED
ROBERT CAMARGO	KARIN SERITIS
CALCULATED-DESIGNED BY	CHECKED BY
FUNCTIONAL SUPERVISOR	RAMSES SARGISS

STATE OF CALIFORNIA - DEPARTMENT OF TRANSPORTATION
Caltrans
DESIGN

LAST REVISION 07-26-10 | DATE PLOTTED => 14-OCT-2010 | TIME PLOTTED => 14:19

Dist	COUNTY	ROUTE	POST MILES TOTAL PROJECT	SHEET No.	TOTAL SHEETS
04	Nap	29	38.1/48.6	11	30

Robert Camargo 7-30-10
REGISTERED CIVIL ENGINEER DATE

7-26-10
PLANS APPROVAL DATE

REGISTERED PROFESSIONAL ENGINEER Robert Camargo No. 34402 Exp. 9-30-11 CIVIL STATE OF CALIFORNIA

THE STATE OF CALIFORNIA OR ITS OFFICERS OR AGENTS SHALL NOT BE RESPONSIBLE FOR THE ACCURACY OR COMPLETENESS OF SCANNED COPIES OF THIS PLAN SHEET.

HMA DIKE, HMA (TYPE A) AND REMOVE AC DIKE

NORTHBOUND					
LOCATION	REMOVE AC DIKE	HMA DIKE (TYPE E)	HMA DIKE (TYPE F)	HMA DIKE (TYPE A)	HMA (TYPE A)
	FT				TONS
PM 38.06 (START) - PM 38.6	2356	1156		1200	61.6
PM 40.0	336	336			8.6
PM 40.2	445	445			11.4
PM 40.4	325	325			8.3
PM 40.7	341	341			8.7
PM 40.8	565	565			14.5
PM 40.9	221	221			5.7
PM 41.0	679	679			17.4
PM 41.4	145	145			3.7
PM 41.7	108	108			2.8
PM 41.8	522	522			13.4
PM 41.9	405	300	105		9.1
PM 42.7	514	514			13.2
PM 42.8	79	79			2.0
PM 42.9	74	74			1.9
PM 43.0	111	0		111	3.0
PM 43.2	283	283			7.3
PM 43.7	480	480			12.3
PM 43.8	370	370			9.5
PM 44.5	470	470			12.0
PM 44.7	580			580	15.4
PM 44.9 TO 45.1	1165			1165	31.0
PM 45.1	265			265	7.1
PM 45.4	50	50			1.3
PM 45.5	150	150			3.8
PM 45.9	100	100	0		2.6
PM 46.0	300	300			7.7
PM 46.1	200	200			5.1
PM 46.4	60	60			1.5
PM 46.5	300	200	100		6.4
PM 46.7	580	580			14.9
PM 46.9	200	200			5.1
PM 47.2	800	800			20.5
PM 47.3	420	420			10.8
PM 47.6	490	430	60		11.8
PM 47.9	520	520			13.3
PM 48.0	70	70			1.8
PM 48.1	100			100	2.7
PM 48.2	370	50		320	9.8
TOTAL (NORTHBOUND)	15549	11543	265	3741	398.8

HMA DIKE, HMA (TYPE A) AND REMOVE AC DIKE

SOUTHBOUND					
LOCATION	REMOVE AC DIKE	HMA DIKE (TYPE E)	HMA DIKE (TYPE F)	HMA DIKE (TYPE A)	HMA * (TYPE A)
	FT				TONS
PM 40.4	194	194			5.0
PM 41.4	112			112	3.0
PM 41.7	64			64	1.7
PM 42.0	265		265		3.4
PM 42.1	305		305		4.0
PM 42.3	279	279			7.1
PM 43.6	106	106			2.7
PM 43.7	420		320	100	6.8
PM 43.9	150			150	4.0
PM 44.6	400	400			10.2
PM 44.7	100	100			2.6
PM 45.0	370	370			9.5
PM 45.2	580	580			14.9
PM 45.4	20	20			0.5
PM 45.8	210			210	5.6
PM 46.0	945	265		680	24.9
PM 46.1	211			211	5.6
PM 46.5	310			310	8.2
PM 46.7	230	230			5.9
PM 46.8	200			200	5.3
PM 46.9	670			670	17.8
PM 47.3	110	110			
PM 47.8	20	20			
PM 48.0	110			110	2.9
PM 48.1	150			150	4.0
TOTAL (SOUTHBOUND)	6531	2674	890	2967	155.7
TOTAL (NORTHBOUND)	15549	11543	265	3741	398.8
TOTAL NB & SB	22080	14217	1155	6708	554

* QUANTITY INCLUDED ON Q-1, TABLE FOR RHMA (G) / HMA (TYPE A) / TACK COAT

SUMMARY OF QUANTITIES

Q-2

STATE OF CALIFORNIA - DEPARTMENT OF TRANSPORTATION
Caltrans
DESIGN

FUNCTIONAL SUPERVISOR: RAMSES SARGISS
CALCULATED-DESIGNED BY: ROBERT CAMARGO
CHECKED BY: KARIN SERITIS
REVISED BY: RC
DATE REVISED: 7/19/10

LAST REVISION 07-26-10
DATE PLOTTED => 14-OCT-2010
TIME PLOTTED => 14:20

Dist	COUNTY	ROUTE	POST MILES TOTAL PROJECT	SHEET No.	TOTAL SHEETS
04	Nap	29	38.1/48.6	12	30

Robert Camargo 7-30-10
REGISTERED CIVIL ENGINEER DATE

7-26-10
PLANS APPROVAL DATE

REGISTERED PROFESSIONAL ENGINEER Robert Camargo No. 34402 Exp. 9-30-11 CIVIL STATE OF CALIFORNIA

THE STATE OF CALIFORNIA OR ITS OFFICERS OR AGENTS SHALL NOT BE RESPONSIBLE FOR THE ACCURACY OR COMPLETENESS OF SCANNED COPIES OF THIS PLAN SHEET.

COLD PLANE AC PAVEMENT, HMA (A) & TACK COAT

LOCATION	DIRECTION NB	DIRECTION SB	WIDTH (FT)	LENGTH (FT)	DEPTH (FT)	COLD PLANE ASPHALT CONCRETE SQYD	HOT MIX ASPHALT (TYPE A) TONS	TACK COAT (N)
START JOB (PM 38.1) TO MORA AVENUE (PM 38.4)	X		5	275	0.5	152.8	50.2	0.046
	X		8	182	0.5	161.8	53.1	0.046
	X		10	4	0.5	4.4	1.5	0.002
	X		4	32	0.5	14.2	4.7	0.005
	X		5	38	0.5	21.1	6.9	0.006
	X		5	6	0.5	3.3	1.1	0.001
	X		10	450	0.5	500.0	164.3	0.138
	X		8	50	0.5	44.4	14.6	0.013
	X		6	7	0.5	4.7	1.5	0.002
	X		6	132	0.5	88.0	28.9	0.026
	X		10	22	0.5	24.4	8.0	0.007
		X	6	38	0.5	25.3	8.3	0.008
		X	7	23	0.5	17.9	5.9	0.005
		X	4	50	0.5	22.2	7.3	0.007
		X	9	15	0.5	15.0	4.9	0.004
		X	8	12	0.5	10.7	3.5	0.003
		X	4	19	0.5	8.4	2.8	0.003
		X	11	19	0.5	23.2	7.6	0.007
		X	11	16	0.5	19.6	6.4	0.006
		X	11	9	0.5	11.0	3.6	0.003
		X	4	7	0.5	3.1	1.0	0.001
		X	4	34	0.5	15.1	5.0	0.005
		X	6	18	0.5	12.0	3.9	0.004
		X	10	51	0.5	56.7	18.6	0.016
MORA AVENUE (PM 38.4) TO GREENWOOD AVENUE (PM 38.6)	X		4	47	0.5	20.9	6.9	0.007
	X		4	4	0.5	1.8	0.6	0.001
	X		12	19	0.5	25.3	8.3	0.007
	X		8	9	0.5	8.0	2.6	0.002
	X		4	37	0.5	16.4	5.4	0.005
	X		10	36	0.5	40.0	13.1	0.011
GREENWOOD AVENUE (PM 38.6) TO PALISADES ROAD (PM 39.0)	X		4	15	0.5	6.7	2.2	0.002
	X		4	15	0.5	6.7	2.2	0.002
	X		12	90	0.5	120.0	39.4	0.033
	X		4	32	0.5	14.2	4.7	0.005
	X		6	4	0.5	2.7	0.9	0.001
	X		4	43	0.5	19.1	6.3	0.006
		X	20	8	0.5	17.8	5.8	0.005
	X		4	4	0.5	1.8	0.6	0.001
	X		11	12	0.5	14.7	4.8	0.004
	X		9	24	0.5	24.0	7.9	0.007
	X		10	207	0.5	230.0	75.6	0.064
	X		4	21	0.5	9.3	3.1	0.003
	X		9	118	0.5	118.0	38.8	0.033
	X		6	140	0.5	93.3	30.7	0.027
		X	4	126	0.5	56.0	18.4	0.018
		X	4	25	0.5	11.1	3.7	0.004
		X	9	370	0.5	370.0	121.5	0.103
		X	10	118	0.5	131.1	43.1	0.036
		X	11	4	0.5	4.9	1.6	0.002
		X	4	6	0.5	2.7	0.9	0.001
		X	9	4	0.5	4.0	1.3	0.001
		X	4	9	0.5	4.0	1.3	0.001
		X	4	16	0.5	7.1	2.3	0.002
		X	12	122	0.5	162.7	53.4	0.044
		X	5	112	0.5	62.2	20.4	0.019
TOTAL						2865.9	941.5	0.82

NOTES:

1. EXACT LOCATION AND DIMENSIONS OF THE COLD PLANE AC PAVEMENT, HMA (A), SHALL BE DETERMINED BY THE ENGINEER.
2. (N) NOT A SEPARATE PAY ITEM, FOR INFORMATION ONLY.

SUMMARY OF QUANTITIES

Q-3

STATE OF CALIFORNIA - DEPARTMENT OF TRANSPORTATION
Caltrans® DESIGN

FUNCTIONAL SUPERVISOR: RAMSES SARGISS
CALCULATED-DESIGNED BY: ROBERT CAMARGO
CHECKED BY: KARIN SERITIS
REVISED BY: RC
DATE REVISED: 7/19/10

LAST REVISION 07-26-10
DATE PLOTTED => 14-OCT-2010
TIME PLOTTED => 14:20

Dist	COUNTY	ROUTE	POST MILES TOTAL PROJECT	SHEET No.	TOTAL SHEETS
04	Nap	29	38.1/48.6	13	30

Robert Camargo 7-30-10
REGISTERED CIVIL ENGINEER DATE

7-26-10
PLANS APPROVAL DATE

REGISTERED PROFESSIONAL ENGINEER Robert Camargo No. 34402 Exp. 9-30-11 CIVIL STATE OF CALIFORNIA

THE STATE OF CALIFORNIA OR ITS OFFICERS OR AGENTS SHALL NOT BE RESPONSIBLE FOR THE ACCURACY OR COMPLETENESS OF SCANNED COPIES OF THIS PLAN SHEET.

COLD PLANE AC PAVEMENT, HMA (A) & TACK COAT

LOCATION	DIRECTION NB	DIRECTION SB	WIDTH (FT)	LENGTH (FT)	DEPTH (FT)	COLD PLANE ASPHALT CONCRETE SQYD	HOT MIX ASPHALT (TYPE A) TONS	TACK COAT TONS
			(N)					
PALISADES ROAD	X		4	13	0.5	5.8	1.9	0.002
(PM 39.0)	X		10	84	0.5	93.3	30.7	0.026
TO	X		11	16	0.5	19.6	6.4	0.006
GARNETT CREEK Br		X	7	50	0.5	38.9	12.8	0.011
(PM 39.1)		X	4	65	0.5	28.9	9.5	0.009
	X		8	1454	0.5	1292.4	424.6	0.364
	X		8	196	0.5	174.2	57.2	0.049
		X	10	604	0.5	671.1	220.5	0.185
		X	6	28	0.5	18.7	6.1	0.006
GARNETT CREEK Br		X	12	46	0.5	61.3	20.1	0.017
(PM 39.1)		X	7	62	0.5	48.2	15.8	0.014
TO		X	12	17	0.5	22.7	7.4	0.006
TUBBS LANE		X	9	320	0.5	320.0	105.1	0.089
(PM 39.5)		X	13	43	0.5	62.1	20.4	0.017
		X	8	80	0.5	71.1	23.4	0.020
		X	12	14	0.5	18.7	6.1	0.005
		X	12	88	0.5	117.3	38.5	0.032
		X	6	77	0.5	51.3	16.9	0.015
	X		10	101	0.5	112.2	36.9	0.031
	X		10	270	0.5	300.0	98.6	0.083
	X		7	108	0.5	84.0	27.6	0.024
	X		12	469	0.5	625.3	205.4	0.170
	X		11	22	0.5	26.9	8.8	0.008
	X		12	578	0.5	770.7	253.2	0.209
	X		4	210	0.5	93.3	30.7	0.029
	X		6	30	0.5	20.0	6.6	0.006
	X		9	90	0.5	90.0	29.6	0.025
	X		11	50	0.5	61.1	20.1	0.017
	X		11	129	0.5	157.7	51.8	0.043
	X		12	24	0.5	32.0	10.5	0.009
TUBBS LANE		X	6	91	0.5	60.7	19.9	0.018
(PM 39.5)		X	13	251	0.5	362.6	119.1	0.098
TO		X	8	56	0.5	49.8	16.4	0.014
PM 40.0		X	12	5	0.5	6.7	2.2	0.002
		X	7	155	0.5	120.6	39.6	0.035
		X	12	246	0.5	328.0	107.7	0.089
		X	12	266	0.5	354.7	116.5	0.096
		X	11	184	0.5	224.9	73.9	0.062
		X	12	340	0.5	453.3	148.9	0.123
		X	5	67	0.5	37.2	12.2	0.011
		X	11	52	0.5	63.6	20.9	0.018
		X	11	132	0.5	161.3	53.0	0.044
		X	4	6	0.5	2.7	0.9	0.001
		X	4	11	0.5	4.9	1.6	0.002
		X	4	31	0.5	13.8	4.5	0.004
TOTAL						7733.4	2540.4	2.15

NOTES:

1. EXACT LOCATION AND DIMENSIONS OF THE COLD PLANE AC PAVEMENT, HMA (A), SHALL BE DETERMINED BY THE ENGINEER.
2. (N) NOT A SEPARATE PAY ITEM, FOR INFORMATION ONLY.

SUMMARY OF QUANTITIES

Q-4

STATE OF CALIFORNIA - DEPARTMENT OF TRANSPORTATION
Caltrans DESIGN
FUNCTIONAL SUPERVISOR: RAMSES SARGISS
CALCULATED-DESIGNED BY: ROBERT CAMARGO
CHECKED BY: KARIN SERITIS
REVISED BY: RC
DATE REVISED: 7/19/10

LAST REVISION 07-26-10
DATE PLOTTED => 14-OCT-2010
TIME PLOTTED => 14:20

Dist	COUNTY	ROUTE	POST MILES TOTAL PROJECT	SHEET No.	TOTAL SHEETS
04	Nap	29	38.1/48.6	14	30

Robert Camargo 7-30-10
REGISTERED CIVIL ENGINEER DATE

7-26-10
PLANS APPROVAL DATE

REGISTERED PROFESSIONAL ENGINEER Robert Camargo No. 34402 Exp. 9-30-11 CIVIL STATE OF CALIFORNIA

THE STATE OF CALIFORNIA OR ITS OFFICERS OR AGENTS SHALL NOT BE RESPONSIBLE FOR THE ACCURACY OR COMPLETENESS OF SCANNED COPIES OF THIS PLAN SHEET.

COLD PLANE AC PAVEMENT, HMA (A) & TACK COAT

LOCATION	DIRECTION NB	DIRECTION SB	WIDTH (FT)	LENGTH (FT)	DEPTH (FT)	COLD PLANE ASPHALT CONCRETE (N) SQYD	HOT MIX ASPHALT (TYPE A) (N) TONS	TACK COAT (N)
PM 40.0 TO PM 41.3	X		14	304	0.5	472.9	155.3	0.127
	X		7	39	0.5	30.3	10.0	0.009
	X		4	9	0.5	4.0	1.3	0.001
	X		11	64	0.5	78.2	25.7	0.022
	X		8	118	0.5	104.9	34.5	0.030
	X		5	7	0.5	3.9	1.3	0.001
	X		11	37	0.5	45.2	14.9	0.013
	X		5	110	0.5	61.1	20.1	0.018
	X		6	151	0.5	100.7	33.1	0.030
	X		9	214	0.5	214.0	70.3	0.060
	X		12	105	0.5	140.0	46.0	0.038
	X		13	35	0.5	50.6	16.6	0.014
	X		18	295	0.5	590.0	193.8	0.156
	X		10	117	0.5	130.0	42.7	0.036
	X		20	30	0.5	66.7	21.9	0.018
	X		11	164	0.5	200.4	65.8	0.055
	X		21	92	0.5	214.7	70.5	0.057
	X		11	69	0.5	84.3	27.7	0.023
	X		4	46	0.5	20.4	6.7	0.007
	X		12	365	0.5	486.7	159.9	0.132
	X		11	137	0.5	167.4	55.0	0.046
	X		4	9	0.5	4.0	1.3	0.001
	X		12	173	0.5	230.7	75.8	0.063
	X		4	28	0.5	12.4	4.1	0.004
		X	11	297	0.5	363.0	119.2	0.099
		X	5	295	0.5	163.9	53.8	0.049
		X	4	7	0.5	3.1	1.0	0.001
		X	4	43	0.5	19.1	6.3	0.006
		X	9	277	0.5	277.0	91.0	0.077
		X	10	19	0.5	21.1	6.9	0.006
		X	4	20	0.5	8.9	2.9	0.003
		X	11	310	0.5	378.9	124.5	0.104
		X	13	740	0.5	1068.9	351.1	0.288
		X	11	110	0.5	134.4	44.2	0.037
		X	12	24	0.5	32.0	10.5	0.009
		X	6	118	0.5	78.7	25.8	0.023
		X	10	32	0.5	35.6	11.7	0.010
		X	5	24	0.5	13.3	4.4	0.004
		X	5	9	0.5	5.0	1.6	0.002
		X	5	24	0.5	13.3	4.4	0.004
		X	5	30	0.5	16.7	5.5	0.005
		X	5	23	0.5	12.8	4.2	0.004
		X	4	4	0.5	1.8	0.6	0.001
		X	4	42	0.5	18.7	6.1	0.006
		X	4	20	0.5	8.9	2.9	0.003
		X	5	26	0.5	14.4	4.7	0.004
		X	11	158	0.5	193.1	63.4	0.053
TOTAL						6396.1	2101.1	1.76

NOTES:

1. EXACT LOCATION AND DIMENSIONS OF THE COLD PLANE AC PAVEMENT, HMA (A), SHALL BE DETERMINED BY THE ENGINEER.
2. (N) NOT A SEPARATE PAY ITEM, FOR INFORMATION ONLY.

SUMMARY OF QUANTITIES

Q-5

STATE OF CALIFORNIA - DEPARTMENT OF TRANSPORTATION
Caltrans DESIGN

FUNCTIONAL SUPERVISOR: RAMSES SARGISS
CALCULATED-DESIGNED BY: ROBERT CAMARGO
CHECKED BY: KARIN SERITIS
REVISED BY: RC
DATE REVISED: 7/19/10

LAST REVISION 07-26-10
DATE PLOTTED => 14-OCT-2010
TIME PLOTTED => 14:20

Dist	COUNTY	ROUTE	POST MILES TOTAL PROJECT	SHEET No.	TOTAL SHEETS
04	Nap	29	38.1/48.6	15	30

REGISTERED CIVIL ENGINEER 7-30-10 DATE

7-26-10
PLANS APPROVAL DATE

REGISTERED PROFESSIONAL ENGINEER Robert Camargo No. 34402 Exp. 9-30-11 CIVIL STATE OF CALIFORNIA

THE STATE OF CALIFORNIA OR ITS OFFICERS OR AGENTS SHALL NOT BE RESPONSIBLE FOR THE ACCURACY OR COMPLETENESS OF SCANNED COPIES OF THIS PLAN SHEET.

COLD PLANE AC PAVEMENT, HMA (A) & TACK COAT

LOCATION	DIRECTION NB	DIRECTION SB	WIDTH (FT) (N)	LENGTH (FT) (N)	DEPTH (FT) (N)	COLD PLANE ASPHALT CONCRETE SQYD	HOT MIX ASPHALT (TYPE A) TONS	TACK COAT TONS
PM 41.3 TO PM 42.3	X		5	37	0.5	20.6	6.8	0.006
	X		11	161	0.5	196.8	64.6	0.054
	X		11	97	0.5	118.6	38.9	0.033
	X		5	83	0.5	46.1	15.1	0.014
	X		4	34	0.5	15.1	5.0	0.005
	X		4	80	0.5	35.6	11.7	0.011
	X		4	11	0.5	4.9	1.6	0.002
	X		4	54	0.5	24.0	7.9	0.008
	X		4	47	0.5	20.9	6.9	0.007
	X		4	11	0.5	4.9	1.6	0.002
	X		4	9	0.5	4.0	1.3	0.001
	X		11	315	0.5	385.0	126.5	0.105
	X		11	18	0.5	22.0	7.2	0.006
	X		8	52	0.5	46.2	15.2	0.013
	X		21.5	1028	0.5	2455.8	806.7	0.643
	X		5	40	0.5	22.2	7.3	0.007
	X		7	41	0.5	31.9	10.5	0.009
	X		10	515	0.5	572.2	188.0	0.158
	X		21	718	0.5	1675.3	550.3	0.439
		X	11	84	0.5	102.7	33.7	0.028
		X	5	40	0.5	22.2	7.3	0.007
		X	13	122	0.5	176.2	57.9	0.048
		X	10	16	0.5	17.8	5.8	0.005
		X	4	13	0.5	5.8	1.9	0.002
		X	5	17	0.5	9.4	3.1	0.003
		X	5	52	0.5	28.9	9.5	0.009
		X	4	49	0.5	21.8	7.2	0.007
		X	4	25	0.5	11.1	3.7	0.004
		X	5	17	0.5	9.4	3.1	0.003
		X	11	500	0.5	611.1	200.8	0.167
		X	4	108	0.5	48.0	15.8	0.015
		X	10	116	0.5	128.9	42.3	0.036
		X	11	153	0.5	187.0	61.4	0.051
		X	11	247	0.5	301.9	99.2	0.083
		X	10	206	0.5	228.9	75.2	0.063
		X	11	4	0.5	4.9	1.6	0.002
		X	21	110	0.5	256.7	84.3	0.068
		X	12	52	0.5	69.3	22.8	0.019
		X	12	150	0.5	200.0	65.7	0.055
		X	11	100	0.5	122.2	40.2	0.034
		X	4	4	0.5	1.8	0.6	0.001
		X	11	95	0.5	116.1	38.1	0.032
		X	10	117	0.5	130.0	42.7	0.036
		X	10	40	0.5	44.4	14.6	0.013
		X	11	8	0.5	9.8	3.2	0.003
		X	5	105	0.5	58.3	19.2	0.018
		X	10	279	0.5	310.0	101.8	0.086
TOTAL						8936.7	2935.7	2.42

NOTES:

1. EXACT LOCATION AND DIMENSIONS OF THE COLD PLANE AC PAVEMENT, HMA (A), SHALL BE DETERMINED BY THE ENGINEER.
2. (N) NOT A SEPARATE PAY ITEM, FOR INFORMATION ONLY.

SUMMARY OF QUANTITIES

Q-6

STATE OF CALIFORNIA - DEPARTMENT OF TRANSPORTATION
Caltrans DESIGN

FUNCTIONAL SUPERVISOR: RAMSES SARGISS
CALCULATED-DESIGNED BY: ROBERT CAMARGO
CHECKED BY: KARIN SERITIS
REVISED BY: RC
DATE REVISED: 7/19/10

LAST REVISION 07-26-10
DATE PLOTTED => 14-OCT-2010
TIME PLOTTED => 14:21

Dist	COUNTY	ROUTE	POST MILES TOTAL PROJECT	SHEET No.	TOTAL SHEETS
04	Nap	29	38.1/48.6	16	30

REGISTERED CIVIL ENGINEER 7-30-10 DATE

7-26-10
PLANS APPROVAL DATE

Robert Camargo No. 34402 Exp. 9-30-11 CIVIL
REGISTERED PROFESSIONAL ENGINEER STATE OF CALIFORNIA

THE STATE OF CALIFORNIA OR ITS OFFICERS OR AGENTS SHALL NOT BE RESPONSIBLE FOR THE ACCURACY OR COMPLETENESS OF SCANNED COPIES OF THIS PLAN SHEET.

COLD PLANE AC PAVEMENT, HMA (A) & TACK COAT

LOCATION	DIRECTION NB	DIRECTION SB	WIDTH (FT) (N)	LENGTH (FT) (N)	DEPTH (FT) (N)	COLD PLANE ASPHALT CONCRETE SQYD	HOT MIX ASPHALT (TYPE A) TONS	TACK COAT TONS
PM 42.3 TO PM 43.6	X		16	267	0.5	474.7	155.9	0.127
	X		12	766	0.5	1021.3	335.5	0.277
	X		10	80	0.5	88.9	29.2	0.025
	X		8	90	0.5	80.0	26.3	0.023
	X		20	66	0.5	146.7	48.2	0.039
	X		10.5	75	0.5	87.5	28.7	0.024
	X		4	71	0.5	31.6	10.4	0.010
	X		4	21	0.5	9.3	3.1	0.003
	X		22	210	0.5	513.3	168.6	0.135
	X		20	200	0.5	444.4	146.0	0.117
	X		17	204	0.5	385.3	126.6	0.102
	X		12	358	0.5	477.3	156.8	0.130
	X		12	228	0.5	304.0	99.9	0.083
	X		6	11	0.5	7.3	2.4	0.002
	X		12	163	0.5	217.3	71.4	0.059
	X		4	39	0.5	17.3	5.7	0.006
	X		13	293	0.5	423.2	139.0	0.114
	X		13	102	0.5	147.3	48.4	0.040
	X		4	113	0.5	50.2	16.5	0.016
		X	12	158	0.5	210.7	69.2	0.057
		X	4	10	0.5	4.4	1.5	0.002
		X	12	112	0.5	149.3	49.1	0.041
		X	6	220	0.5	146.7	48.2	0.043
		X	12	84	0.5	112.0	36.8	0.031
		X	12	14	0.5	18.7	6.1	0.005
		X	8	5	0.5	4.4	1.5	0.001
		X	4	4	0.5	1.8	0.6	0.001
		X	6	8	0.5	5.3	1.8	0.002
		X	12	566	0.5	754.7	247.9	0.205
		X	15	112	0.5	186.7	61.3	0.050
		X	7	16	0.5	12.4	4.1	0.004
		X	14	16	0.5	24.9	8.2	0.007
		X	5	10	0.5	5.6	1.8	0.002
		X	13	44	0.5	63.6	20.9	0.017
		X	4	44	0.5	19.6	6.4	0.006
		X	4	111	0.5	49.3	16.2	0.016
		X	4	79	0.5	35.1	11.5	0.011
		X	6	22	0.5	14.7	4.8	0.004
		X	4	159	0.5	70.7	23.2	0.022
		X	9	18	0.5	18.0	5.9	0.005
		X	7	83	0.5	64.6	21.2	0.019
		X	8	24	0.5	21.3	7.0	0.006
		X	7	67	0.5	52.1	17.1	0.015
		X	6	104	0.5	69.3	22.8	0.020
		X	4	40	0.5	17.8	5.8	0.006
		X	4	15	0.5	6.7	2.2	0.002
		X	12	97	0.5	129.3	42.5	0.035
TOTAL						7196.7	2364.1	1.97

NOTES:

1. EXACT LOCATION AND DIMENSIONS OF THE COLD PLANE AC PAVEMENT, HMA (A), SHALL BE DETERMINED BY THE ENGINEER.
2. (N) NOT A SEPARATE PAY ITEM, FOR INFORMATION ONLY.

SUMMARY OF QUANTITIES

Q-7

STATE OF CALIFORNIA - DEPARTMENT OF TRANSPORTATION
Caltrans DESIGN

FUNCTIONAL SUPERVISOR: RAMSES SARGISS
CALCULATED-DESIGNED BY: ROBERT CAMARGO
CHECKED BY: KARIN SERITIS
REVISED BY: RC
DATE REVISED: 7/19/10

LAST REVISION 07-26-10
DATE PLOTTED => 14-OCT-2010
TIME PLOTTED => 14:21

Dist	COUNTY	ROUTE	POST MILES TOTAL PROJECT	SHEET No.	TOTAL SHEETS
04	Nap	29	38.1/48.6	17	30

Robert Camargo 7-30-10
REGISTERED CIVIL ENGINEER DATE

7-26-10
PLANS APPROVAL DATE

REGISTERED PROFESSIONAL ENGINEER Robert Camargo No. 34402 Exp. 9-30-11 CIVIL STATE OF CALIFORNIA

THE STATE OF CALIFORNIA OR ITS OFFICERS OR AGENTS SHALL NOT BE RESPONSIBLE FOR THE ACCURACY OR COMPLETENESS OF SCANNED COPIES OF THIS PLAN SHEET.

COLD PLANE AC PAVEMENT, HMA (A) & TACK COAT

LOCATION	DIRECTION NB	DIRECTION SB	WIDTH (FT) (N)	LENGTH (FT) (N)	DEPTH (FT) (N)	COLD PLANE ASPHALT CONCRETE SQYD	HOT MIX ASPHALT (TYPE A) TONS	TACK COAT TONS
PM 43.6 TO PM 44.6	X		8	25	0.5	22.2	7.3	0.006
	X		12	300	0.5	400.0	131.4	0.109
	X		8	150	0.5	133.3	43.8	0.038
	X		6	25	0.5	16.7	5.5	0.005
	X		12	250	0.5	333.3	109.5	0.091
	X		12	240	0.5	320.0	105.1	0.087
	X		12	50	0.5	66.7	21.9	0.018
	X		12	24	0.5	32.0	10.5	0.009
	X		8	25	0.5	22.2	7.3	0.006
	X		8	30	0.5	26.7	8.8	0.008
	X		12	40	0.5	53.3	17.5	0.015
	X		6	20	0.5	13.3	4.4	0.004
	X		8	175	0.5	155.6	51.1	0.044
	X		8	300	0.5	266.7	87.6	0.075
	X		8	100	0.5	88.9	29.2	0.025
		X	8	50	0.5	44.4	14.6	0.013
		X	10	225	0.5	250.0	82.1	0.069
		X	8	50	0.5	44.4	14.6	0.013
		X	12	50	0.5	66.7	21.9	0.018
		X	10	50	0.5	55.6	18.3	0.016
		X	4	150	0.5	66.7	21.9	0.021
		X	10	80	0.5	88.9	29.2	0.025
		X	6	100	0.5	66.7	21.9	0.020
		X	12	50	0.5	66.7	21.9	0.018
		X	8	20	0.5	17.8	5.8	0.005
		X	6	20	0.5	13.3	4.4	0.004
		X	12	50	0.5	66.7	21.9	0.018
PM 44.6 TO PM 45.6	X		12	50	0.5	66.7	21.9	0.018
	X		12	100	0.5	133.3	43.8	0.036
	X		6	40	0.5	26.7	8.8	0.008
	X		12	100	0.5	133.3	43.8	0.036
	X		12	200	0.5	266.7	87.6	0.073
	X		12	200	0.5	266.7	87.6	0.073
	X		8	200	0.5	177.8	58.4	0.050
	X		12	300	0.5	400.0	131.4	0.109
	X		8	60	0.5	53.3	17.5	0.015
	X		12	140	0.5	186.7	61.3	0.051
	X		12	40	0.5	53.3	17.5	0.015
	X		10	45	0.5	50.0	16.4	0.014
	X		8	50	0.5	44.4	14.6	0.013
	X		6	40	0.5	26.7	8.8	0.008
	X		12	200	0.5	266.7	87.6	0.073
		X	12	40	0.5	53.3	17.5	0.015
		X	8	60	0.5	53.3	17.5	0.015
		X	12	30	0.5	40.0	13.1	0.011
		X	6	20	0.5	13.3	4.4	0.004
		X	6	50	0.5	33.3	11.0	0.010
		X	6	40	0.5	26.7	8.8	0.008
		X	6	12	0.5	8.0	2.6	0.003
		X	8	40	0.5	35.6	11.7	0.010
		X	12	40	0.5	53.3	17.5	0.015
		X	12	80	0.5	106.7	35.0	0.029
		X	12	60	0.5	80.0	26.3	0.022
		X	8	30	0.5	26.7	8.8	0.008
		X	6	300	0.5	200.0	65.7	0.059
TOTAL						5681.1	1866.2	1.58

NOTES:

1. EXACT LOCATION AND DIMENSIONS OF THE COLD PLANE AC PAVEMENT, HMA (A), SHALL BE DETERMINED BY THE ENGINEER.
2. (N) NOT A SEPARATE PAY ITEM, FOR INFORMATION ONLY.

SUMMARY OF QUANTITIES

Q-8

STATE OF CALIFORNIA - DEPARTMENT OF TRANSPORTATION
Caltrans DESIGN

FUNCTIONAL SUPERVISOR: RAMSES SARGISS
CALCULATED-DESIGNED BY: ROBERT CAMARGO
CHECKED BY: KARIN SERITIS
REVISED BY: RC
DATE REVISED: 7/19/10

LAST REVISION 07-26-10 | DATE PLOTTED => 14-OCT-2010 | TIME PLOTTED => 14:21

Dist	COUNTY	ROUTE	POST MILES TOTAL PROJECT	SHEET No.	TOTAL SHEETS
04	Nap	29	38.1/48.6	18	30

Robert Camargo 7-30-10
REGISTERED CIVIL ENGINEER DATE

7-26-10
PLANS APPROVAL DATE

REGISTERED PROFESSIONAL ENGINEER
Robert Camargo
No. 34402
Exp. 9-30-11
CIVIL
STATE OF CALIFORNIA

THE STATE OF CALIFORNIA OR ITS OFFICERS OR AGENTS SHALL NOT BE RESPONSIBLE FOR THE ACCURACY OR COMPLETENESS OF SCANNED COPIES OF THIS PLAN SHEET.

COLD PLANE AC PAVEMENT, HMA (A) & TACK COAT

LOCATION	DIRECTION NB	DIRECTION SB	WIDTH (FT) (N)	LENGTH (FT) (N)	DEPTH (FT) (N)	COLD PLANE ASPHALT CONCRETE SQYD	HOT MIX ASPHALT (TYPE A) TONS	TACK COAT
PM 45.6 TO PM 46.6	X		6	20	0.5	13.3	4.4	0.004
	X		12	20	0.5	26.7	8.8	0.008
	X		6	30	0.5	20.0	6.6	0.006
	X		8	25	0.5	22.2	7.3	0.006
	X		8	15	0.5	13.3	4.4	0.004
	X		6	15	0.5	10.0	3.3	0.003
	X		6	20	0.5	13.3	4.4	0.004
	X		8	20	0.5	17.8	5.8	0.005
	X		6	40	0.5	26.7	8.8	0.008
	X		6	20	0.5	13.3	4.4	0.004
		X	12	40	0.5	53.3	17.5	0.015
		X	12	25	0.5	33.3	11.0	0.009
		X	12	50	0.5	66.7	21.9	0.018
		X	10	30	0.5	33.3	11.0	0.009
		X	10	30	0.5	33.3	11.0	0.009
		X	10	20	0.5	22.2	7.3	0.006
		X	10	20	0.5	22.2	7.3	0.006
		X	10	50	0.5	55.6	18.3	0.016
		X	12	20	0.5	26.7	8.8	0.008
		X	12	60	0.5	80.0	26.3	0.022
		X	12	40	0.5	53.3	17.5	0.015
		X	12	40	0.5	53.3	17.5	0.015
		X	12	50	0.5	66.7	21.9	0.018
PM 46.6 TO PM 47.6	X		10	20	0.5	22.2	7.3	0.006
	X		8	20	0.5	17.8	5.8	0.005
	X		6	25	0.5	16.7	5.5	0.005
	X		8	20	0.5	17.8	5.8	0.005
	X		8	30	0.5	26.7	8.8	0.008
	X		8	100	0.5	88.9	29.2	0.025
	X		8	30	0.5	26.7	8.8	0.008
	X		8	30	0.5	26.7	8.8	0.008
	X		8	20	0.5	17.8	5.8	0.005
	X		10	40	0.5	44.4	14.6	0.013
	X		10	20	0.5	22.2	7.3	0.006
	X		12	20	0.5	26.7	8.8	0.008
		X	6	30	0.5	20.0	6.6	0.006
		X	12	250	0.5	333.3	109.5	0.091
		X	6	20	0.5	13.3	4.4	0.004
		X	6	20	0.5	13.3	4.4	0.004
		X	6	20	0.5	13.3	4.4	0.004
		X	12	130	0.5	173.3	56.9	0.047
		X	12	80	0.5	106.7	35.0	0.029
		X	12	60	0.5	80.0	26.3	0.022
		X	10	20	0.5	22.2	7.3	0.006
		X	8	25	0.5	22.2	7.3	0.006
		X	12	60	0.5	80.0	26.3	0.022
		X	6	20	0.5	13.3	4.4	0.004
TOTAL						2022.2	664.3	0.57

NOTES:

1. EXACT LOCATION AND DIMENSIONS OF THE COLD PLANE AC PAVEMENT, HMA (A), SHALL BE DETERMINED BY THE ENGINEER.
2. (N) NOT A SEPARATE PAY ITEM, FOR INFORMATION ONLY.

SUMMARY OF QUANTITIES

Q-9

REVISED BY	DATE REVISED
RC	7/19/10

ROBERT CAMARGO — KARIN SERITIS — CALCULATED-DESIGNED BY — CHECKED BY

FUNCTIONAL SUPERVISOR: RAMSES SARGISS

STATE OF CALIFORNIA - DEPARTMENT OF TRANSPORTATION
Caltrans® DESIGN

LAST REVISION 07-26-10 — DATE PLOTTED => 14-OCT-2010 — TIME PLOTTED => 14:21

Dist	COUNTY	ROUTE	POST MILES TOTAL PROJECT	SHEET No.	TOTAL SHEETS
04	Nap	29	38.1/48.6	19	30

Robert Camargo 7-30-10
REGISTERED CIVIL ENGINEER DATE

7-26-10
PLANS APPROVAL DATE

REGISTERED PROFESSIONAL ENGINEER
Robert Camargo
No. 34402
Exp. 9-30-11
CIVIL
STATE OF CALIFORNIA

THE STATE OF CALIFORNIA OR ITS OFFICERS OR AGENTS SHALL NOT BE RESPONSIBLE FOR THE ACCURACY OR COMPLETENESS OF SCANNED COPIES OF THIS PLAN SHEET.

COLD PLANE AC PAVEMENT, HMA (A) & TACK COAT

LOCATION	DIRECTION NB	DIRECTION SB	WIDTH (FT)	LENGTH (FT)	DEPTH (FT)	COLD PLANE ASPHALT CONCRETE (N) SQYD	HOT MIX ASPHALT (TYPE A) * TONS	TACK COAT*
PM 47.6 TO PM 48.6 END JOB	X		6	20	0.5	13.3	4.4	0.004
	X		6	30	0.5	20.0	6.6	0.006
	X		12	40	0.5	53.3	17.5	0.015
	X		8	25	0.5	22.2	7.3	0.006
	X		10	20	0.5	22.2	7.3	0.006
	X		8	20	0.5	17.8	5.8	0.005
	X		8	25	0.5	22.2	7.3	0.006
	X		12	20	0.5	26.7	8.8	0.008
	X		6	20	0.5	13.3	4.4	0.004
	X		12	30	0.5	40.0	13.1	0.011
	X		10	30	0.5	33.3	11.0	0.009
		X	12	30	0.5	40.0	13.1	0.011
		X	12	20	0.5	26.7	8.8	0.008
		X	12	100	0.5	133.3	43.8	0.036
		X	6	10	0.5	6.7	2.2	0.002
		X	10	20	0.5	22.2	7.3	0.006
		X	12	40	0.5	53.3	17.5	0.015
		X	6	10	0.5	6.7	2.2	0.002
		X	10	30	0.5	33.3	11.0	0.009
		X	12	40	0.5	53.3	17.5	0.015
		X	12	20	0.5	26.7	8.8	0.008
		X	12	60	0.5	80.0	26.3	0.022
		X	12	30	0.5	40.0	13.1	0.011
		X	10	40	0.5	44.4	14.6	0.013
		X	12	40	0.5	53.3	17.5	0.015
		X	12	40	0.5	53.3	17.5	0.015
		X	12	80	0.5	106.7	35.0	0.029
		X	6	40	0.5	26.7	8.8	0.008
		X	8	20	0.5	17.8	5.8	0.005
		X	8	60	0.5	53.3	17.5	0.015
		X	6	30	0.5	20.0	6.6	0.006
		X	6	60	0.5	40.0	13.1	0.012
TOTAL						1222.2	401.5	0.35
TOTAL FROM SHEET Q-3						2865.9	941.5	0.82
TOTAL FROM SHEET Q-4						7733.4	2540.4	2.15
TOTAL FROM SHEET Q-5						6396.1	2101.1	1.76
TOTAL FROM SHEET Q-6						8936.7	2935.7	2.42
TOTAL FROM SHEET Q-7						7196.7	2364.1	1.97
TOTAL FROM SHEET Q-8						5681.1	1866.2	1.58
TOTAL FROM SHEET Q-9						2022.2	664.3	0.57
SUBTOTALS FROM SHEET Q-11 COLD PLANE AC PAVEMENT (CONFORM)						3861.0	0	0
TOTAL						45915.3	13814.8	12

NOTES:

1. EXACT LOCATION AND DIMENSIONS OF THE COLD PLANE AC PAVEMENT, HMA (A), SHALL BE DETERMINED BY THE ENGINEER.
2. (N) NOT A SEPARATE PAY ITEM, FOR INFORMATION ONLY.

* QUANTITY INCLUDED ON Q-1, TABLE FOR RHMA (G) / HMA (TYPE A) / TACK COAT

SUMMARY OF QUANTITIES

Q-10

STATE OF CALIFORNIA - DEPARTMENT OF TRANSPORTATION
Caltrans
DESIGN

FUNCTIONAL SUPERVISOR: RAMSES SARGISS
CALCULATED-DESIGNED BY: ROBERT CAMARGO
CHECKED BY: KARIN SERITIS
REVISED BY: RC
DATE REVISED: 7/19/10

LAST REVISION 07-26-10
DATE PLOTTED => 14-OCT-2010
TIME PLOTTED => 14:21

Dist	COUNTY	ROUTE	POST MILES TOTAL PROJECT	SHEET No.	TOTAL SHEETS
04	Nap	29	38.1/48.6	20	30

Robert Camargo 7-30-10
REGISTERED CIVIL ENGINEER DATE

7-26-10
PLANS APPROVAL DATE

REGISTERED PROFESSIONAL ENGINEER Robert Camargo No. 34402 Exp. 9-30-11 CIVIL STATE OF CALIFORNIA

THE STATE OF CALIFORNIA OR ITS OFFICERS OR AGENTS SHALL NOT BE RESPONSIBLE FOR THE ACCURACY OR COMPLETENESS OF SCANNED COPIES OF THIS PLAN SHEET.

COLD PLANE AC PAVEMENT (CONFORM)

DIRECTION	PM	LOCATION	* COLD PLANE AC PAVEMENT (CONFORM) SQYD
NORTHBOUND	38.1	BEGIN CONSTRUCTION	60
	38.1	DRIVEWAY	37
	38.2	DRIVEWAY	22
	38.3	DRIVEWAY	22
	38.7	DRIVEWAY	42
	39.0	PALISADES ROAD	72
	39.1	AT CARNET CREEK BRIDGE	111
	39.1	DRIVEWAY	33
	39.2	DRIVEWAY	54
	39.3	OLD TOLL ROAD	148
	39.4	DRIVEWAY	28
	41.4	DRIVEWAY	33
	41.5	DRIVEWAY	71
	42.1	PRIVATE ROAD	37
	42.3	DRIVEWAY	56
	42.9	DRIVEWAY	94
	43.6	DRIVEWAY	102
	43.7	DRIVEWAY	64
	43.8	DRIVEWAY	72
	44.2	DRIVEWAY	39
	44.2	DRIVEWAY	44
	44.5	DRIVEWAY	44
	44.5	DRIVEWAY, #4562	61
	45.2	DRIVEWAY, #4660	50
	45.5	DRIVEWAY	183
	47.1	TROUTDALE CREEK BRIDGE	135
	47.2	DRIVEWAY, #5750	44
	47.7	DRIVEWAY	67
	47.7	DRIVEWAY, #5500 MONTESOL	111
	48.1	DRIVEWAY	139
	48.2	DRIVEWAY	114
	48.6	DRIVEWAY	65
TOTAL (NORTHBOUND)			2258
SOUTHBOUND	38.1	BEGIN CONSTRUCTION	60
	38.4	MORA AVENUE	96
	38.6	GREENWOOD AVENUE	78
	39.0	DRIVEWAY	56
	39.4	DRIVEWAY	167
	39.5	TUBBS LANE	129
	39.7	DRIVEWAY	58
	40.0	DRIVEWAY	67
	41.4	DRIVEWAY	78
	42.2	DRIVEWAY	53
	43.1	DRIVEWAY	44
	43.9	DRIVEWAY	72
	44.1	DRIVEWAY	81
	44.1	DRIVEWAY	66
	44.2	DRIVEWAY	56
	44.4	DRIVEWAY	33
	44.5	DRIVEWAY	44
	44.9	DRIVEWAY	100
	45.4	DRIVEWAY	67
	47.1	TROUTDALE CREEK BRIDGE	135
	48.6	END CONSTRUCTION	65
TOTAL (SOUTHBOUND)			1603
TOTAL (NORTHBOUND)			2258
TOTAL			3861

* QUANTITY INCLUDED ON Q-10, TABLE FOR COLD PLANE AC PAVEMENT, HMA (TYPE A) & TACK COAT

SUMMARY OF QUANTITIES

Q-11

STATE OF CALIFORNIA - DEPARTMENT OF TRANSPORTATION
Caltrans® DESIGN

FUNCTIONAL SUPERVISOR: RAMSES SARGISS
CALCULATED-DESIGNED BY: ROBERT CAMARGO
CHECKED BY: KARIN SERITIS
REVISED BY: RC
DATE REVISED: 7/19/10

LAST REVISION 07-26-10
DATE PLOTTED => 14-OCT-2010
TIME PLOTTED => 14:21

DIST	COUNTY	ROUTE	POST MILES TOTAL PROJECT	SHEET NO.	TOTAL SHEETS
04	Nap	29	38.1/48.6	21	30

Randell D. Hiatt
REGISTERED CIVIL ENGINEER

June 6, 2008
PLANS APPROVAL DATE

REGISTERED PROFESSIONAL ENGINEER
Randell D. Hiatt
No. C50200
Exp. 6-30-09
CIVIL
STATE OF CALIFORNIA

The State of California or its officers or agents shall not be responsible for the accuracy or completeness of electronic copies of this plan sheet.

To accompany plans dated 7-26-10

NOTES:

1. When necessary to place dike in front of face of guard railing, only Type C dike may be used. For dike details, see Standard Plan A87B.
2. For standard railing post embedment, see Standard Plans A77C3.
3. Guard railing delineation to be used where shown on the Project Plans.
4. When dike or curb is placed under guard railing, the maximum height of the dike or curb shall be 4". Mountable dike should not be used. For dike and curb details, see Revised Standard Plans RSP A87A and Standard Plan A87B.
5. For details of typical distance between the face of rail and hinge point, see Standard Plan A77C3.

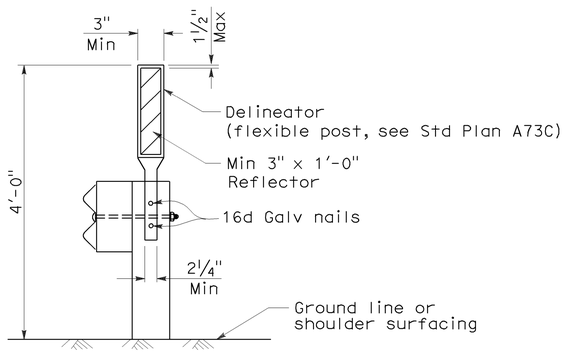

GUARD RAILING DELINEATION

See Note 3

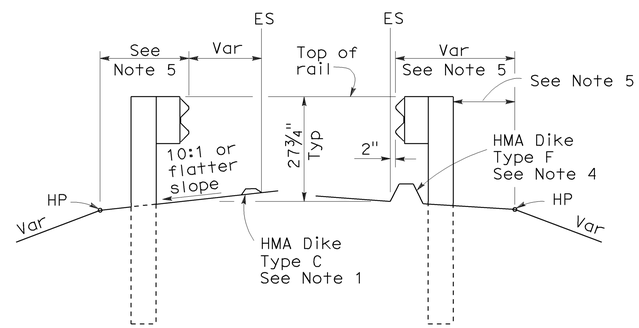

DIKE POSITIONING

See Note 1

STATE OF CALIFORNIA
DEPARTMENT OF TRANSPORTATION

METAL BEAM GUARD RAILING TYPICAL RAILING DELINEATION AND DIKE POSITIONING DETAILS

NO SCALE

RSP A77C4 DATED JUNE 6, 2008 SUPERSEDES STANDARD PLAN A77C4
DATED MAY 1, 2006 - PAGE 47 OF THE STANDARD PLANS BOOK DATED MAY 2006.

REVISED STANDARD PLAN RSP A77C4

2006 REVISED STANDARD PLAN RSP A77C4

12-10-07

DIST	COUNTY	ROUTE	POST MILES TOTAL PROJECT	SHEET NO.	TOTAL SHEETS
04	Nap	29	38.1/48.6	22	30

REGISTERED CIVIL ENGINEER

June 15, 2007
PLANS APPROVAL DATE

REGISTERED PROFESSIONAL ENGINEER Glenn DeCou No. C34547 Exp. 9-30-07 CIVIL STATE OF CALIFORNIA

The State of California or its officers or agents shall not be responsible for the accuracy or completeness of electronic copies of this plan sheet.

To accompany plans dated 7-26-10

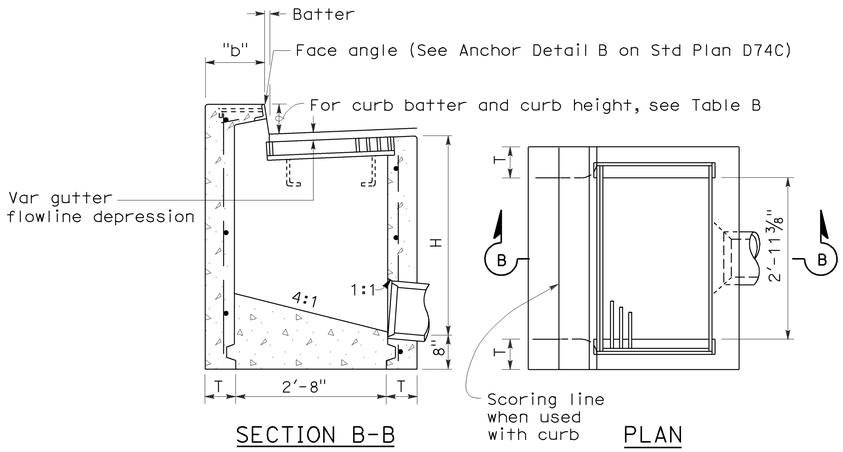

SECTION B-B PLAN

TYPE GO

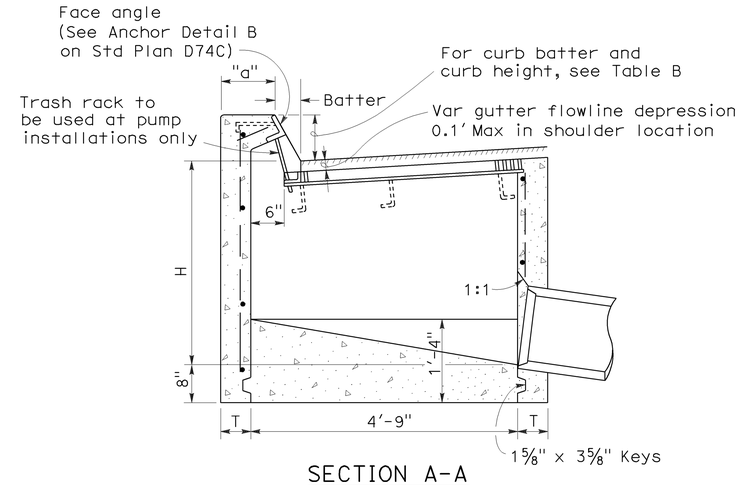

SECTION A-A

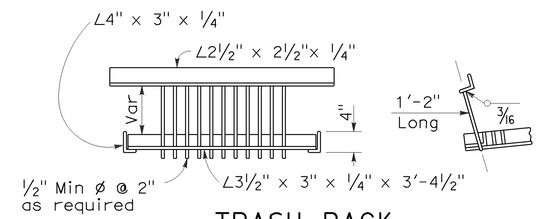

TRASH RACK

(For use with pump installation)

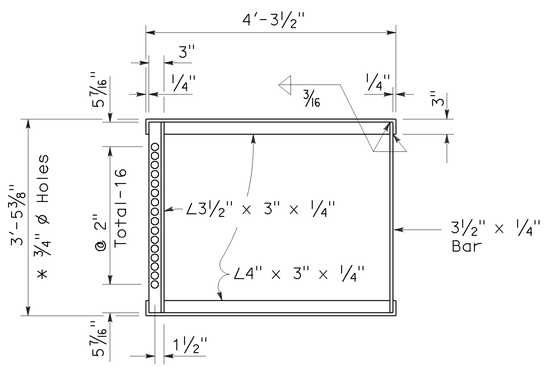

* 3/4" ø Holes required only with trash rack

GRATE FRAME FOR TYPE GDO INLET

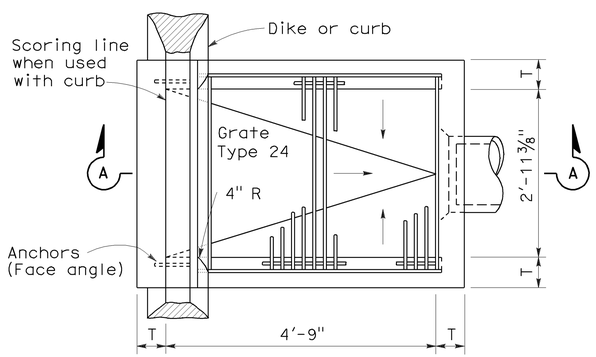

PLAN

TYPE GDO

TABLE A

CONCRETE QUANTITIES				
	H=3'-0" TO 8'-0" (T=6")		H=8'-1" TO 20'-0" (T=8")	
TYPE	H=3'-0" (CY)	ADDITIONAL PCC PER FOOT (CY)	H=8'-1" (CY)	ADDITIONAL PCC PER FOOT (CY)
GO	1.24	0.245	3.39	0.346
GDO	1.62	0.322	4.36	0.446

Table based on 8" floor slab, no deduction for pipe openings, and curb type giving highest quantity of concrete. No deductions or adjustments are to be made to these quantities because of pipe openings, different floor alternatives or different curb type.

TABLE B

CURB TYPE	NORMAL CURB HEIGHT	CURB BATTER	"a" DIMENSION	"b" DIMENSION
A1-6	6"	1 1/2"	T+7 1/2"	T+6 1/2"
A1-8	8"	2"	T+7"	T+6"
B1-6	6"	4"	T+5"	T+4"
Type A Dike	6"	3"	T+6"	T+5"

NOTES:

1. "H" is the difference in elevation between the outlet pipe flow line and the normal gutter grade line undepressed.
2. For "T" wall thickness, see Table A below.
3. Wall reinforcing not required when "H" is 8'-0" or less and the unsupported width or length is 7'-0" or less. Walls exceeding these limits shall be reinforced with #4 @ 18"± centers placed 1 1/2" clear to inside of box unless otherwise shown.
4. Inlet bottom reinforcing not required. See Standard Plan D74C for alternative reinforced bottom.
5. Steps - None required where "H" is less than 2'-6" Where "H" is 2'-6" or more, install steps with lowest rung 1'-0" above the floor and highest rung not more than 6" below top of inlet. The distance between steps shall not exceed 1'-0" and shall be uniform throughout the length of the wall. Place steps in the wall without an opening. Step inserts may be substituted for the bar steps. Step Inserts shall comply with State Industrial Safety requirements. See Standard Plan D74C for step details.
6. When shown on the project plans, place a 3/4" plain round protection bar horizontally across the length of the opening and bend back 4" into the inlet wall on each side.
7. Pipe(s) can be placed in any wall.
8. Curb section shall match adjacent curb.
9. Basin floors shall have wood trowel finish and shall slope toward the outlet pipe as shown.
10. Galvanizing - See Standard Specifications or Special Provisions.
11. See Standard Plan D77A and D77B for grate and frame details and weights of miscellaneous iron and Steel.
12. See Standard Plan D78A for gutter depression details.
13. Full penetration butt welds may be substituted for the fillet welds on all anchors.
14. Standard square, hexagon, round or equivalent headed anchors may be substituted for the right angle hooks on the anchors shown on this plan.
15. Cast-in-place or precast alternative is optional with contractor. See Standard Specifications.
16. Cast-in-place inlets to be formed around all pipes/stubs intersecing the inlet and concrete poured in one continuous operation. Precast inlets shall have mortared pipe connections conforming to details for Type GCP inlets on Standard Plan D75B. See Standard Specifications for mortar composition.

STATE OF CALIFORNIA
DEPARTMENT OF TRANSPORTATION

DRAINAGE INLETS

NO SCALE

RSP D74B DATED JUNE 15, 2007 SUPERSEDES STANDARD PLAN D74B DATED MAY 1, 2006 - PAGE 150 OF THE STANDARD PLANS BOOK DATED MAY 2006.

REVISED STANDARD PLAN RSP D74B

2006 REVISED STANDARD PLAN RSP D74B

4-16-07

DIST	COUNTY	ROUTE	POST MILES TOTAL PROJECT	SHEET NO.	TOTAL SHEETS
04	Nap	29	38.1/48.6	23	30

Raymond Don Tsztoo
REGISTERED CIVIL ENGINEER

January 18, 2008
PLANS APPROVAL DATE

REGISTERED PROFESSIONAL ENGINEER
Raymond Don Tsztoo
No. C37332
Exp. 6-30-08
CIVIL
STATE OF CALIFORNIA

The State of California or its officers or agents shall not be responsible for the accuracy or completeness of electronic copies of this plan sheet.

To accompany plans dated 7-26-10

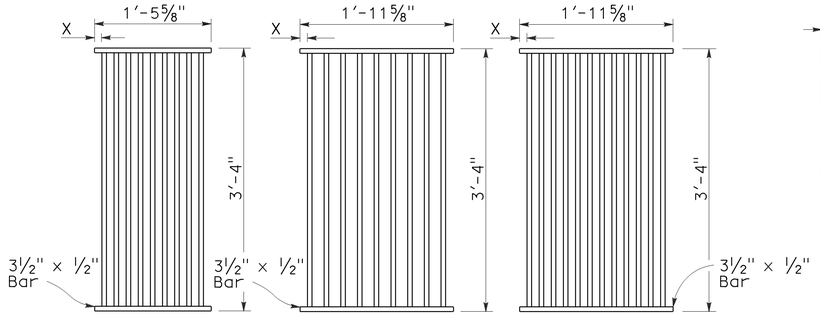

TYPE 18-9

1⅜" Clear spacing. Use within the roadbed on highways where bicycles and pedestrians are excluded.

TYPE 24-9

2" Clear spacing. Use in locations off the roadbed on all types of highways.

TYPE 24-12

1⅜" Clear spacing. Use within the roadbed on highways where bicycles and pedestrians are excluded.

RECTANGULAR GRATE DETAILS

(See table below)

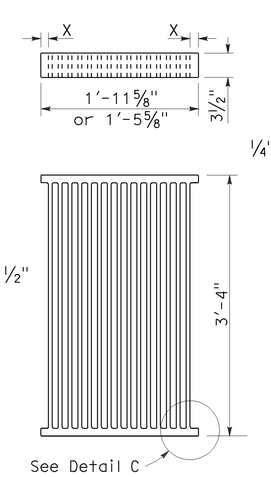

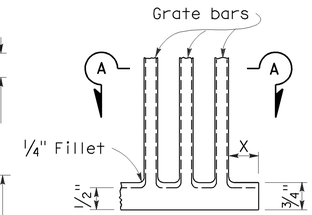

DETAIL C

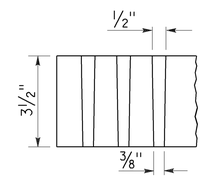

SECTION A-A

ALTERNATIVE CAST NODULAR IRON GRATE OR CAST STEEL GRATE

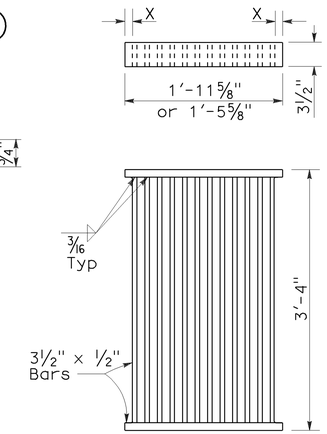

ALTERNATIVE WELDED GRATE

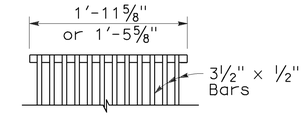

CAST END BLOCK

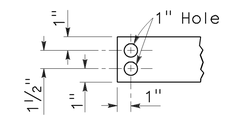

END OF BAR

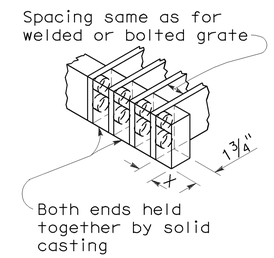

ALTERNATIVE CAST NODULAR IRON OR CAST STEEL END BLOCK GRATE

NOTES:

1. Grate type numbers refer to approximate width of grate in inches and number of bars, respectively.
2. Contractor has the option of using cast nodular iron, cast steel, welded, bolted, or cast end block grate.
3. See Special Provisions for requirements pertaining to galvanizing or asphalt dipping of grates and frames.
4. Rounded top of bars optional on all grates.
5. Pipe inlets with a grate shall be placed so that bars parallel direction of principle surface flow.
6. Full penetration butt welds may be substituted for the fillet welds on all anchors.
7. Standard square, hexagon, round or equivalent headed anchors may be substituted for the right angle hooks on the anchors shown on this plan.
8. Grate and frame weights are based on welded grates (weights of face angles, steps, protection bars, etc. are not included).

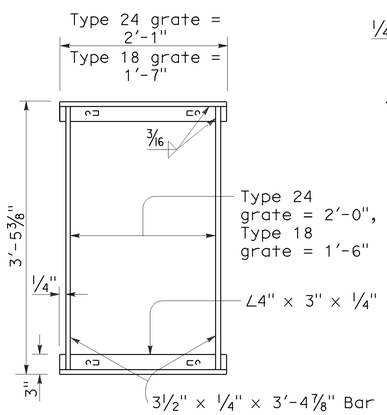

TYPICAL FRAME

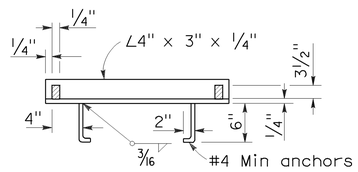

CROSS SECTION

(Thru frame)

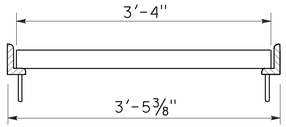

LONGITUDINAL SECTION

(Thru frame and grate)

RECTANGULAR FRAME DETAILS

(For all rectangular grates)

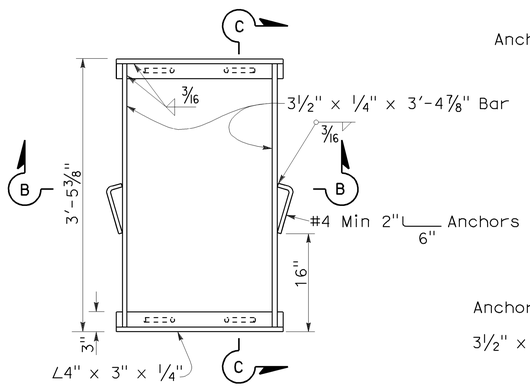

TYPICAL FRAME

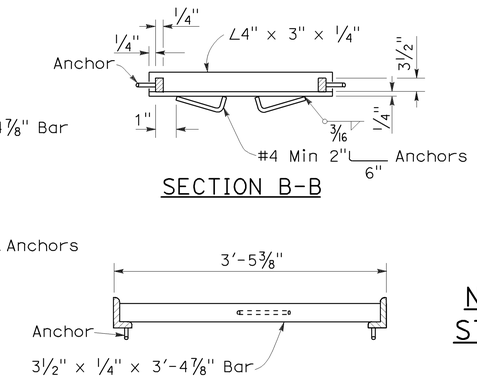

SECTION B-B

SECTION C-C

ALTERNATIVE ANCHOR FOR RECTANGULAR FRAME

(For details not shown, See Rectangular Frame Details)

INLET TYPE	GRATE TYPE	No. OF GRATES	WEIGHT LB
GDO	24-12	2	634
GOL-7	24-12	1	326
GOL-10	24-12	1	326
GO,G1,G2,G3,G4 (TYPE 24)	24-9	1	263
	24-12	1	326
G4 (TYPE 18),G5,G6	18-9	1	249
GT1	18-9	2	498
GT2	18-9	2	498
GT3	24-12	2	652
GT4	24-12	2	652
TRASH RACK			22

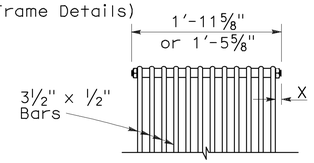

BOLTED END BLOCK

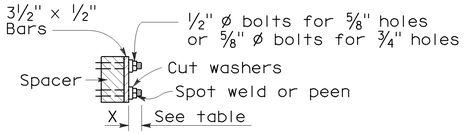

BOLTING DETAIL

ALTERNATIVE BOLTED GRATE

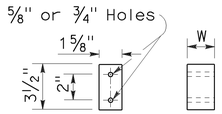

BAR SPACER

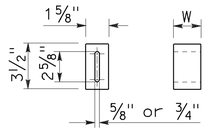

ALTERNATIVE SPACER

W = 1⅜" or 2"

GRATE BAR SPACING TABLE

TYPE	No. OF BARS	CLEAR BAR SPACING	X
18-9	9	1⅜"	1 1/16"
24-9	9	2"	1 9/16"
24-12	12	1⅜"	1¼"

INLET TYPE	COVER TYPE	WEIGHT LB
OS	PLATE	174
OL-7	PLATE	170
OL-10	PLATE	170
OL-14	PLATE	170
OL-21	PLATE	170
OCP	PLATE	112
OCPI	PLATE	112
OCPI	REDWOOD	42
OMP	PLATE	177
OMPI	PLATE	177

BASIS FOR MISC IRON & STEEL FINAL PAY WEIGHTS FOR DRAINAGE INLETS

(See General Notes, No 8)

STATE OF CALIFORNIA
DEPARTMENT OF TRANSPORTATION

GRATE DETAILS

NO SCALE

RSP D77A DATED JANUARY 18, 2008 SUPERSEDES STANDARD PLAN D77A DATED MAY 1, 2006 - PAGE 155 OF THE STANDARD PLANS BOOK DATED MAY 2006.

REVISED STANDARD PLAN RSP D77A

2006 REVISED STANDARD PLAN RSP D77A

12-14-07

DIST	COUNTY	ROUTE	POST MILES TOTAL PROJECT	SHEET NO.	TOTAL SHEETS
04	Nap	29	38.1/48.6	24	30

Randell D. Hiatt
REGISTERED CIVIL ENGINEER

June 6, 2008
PLANS APPROVAL DATE

REGISTERED PROFESSIONAL ENGINEER
Randell D. Hiatt
No. C50200
Exp. 6-30-09
CIVIL
STATE OF CALIFORNIA

The State of California or its officers or agents shall not be responsible for the accuracy or completeness of electronic copies of this plan sheet.

To accompany plans dated 7-26-10

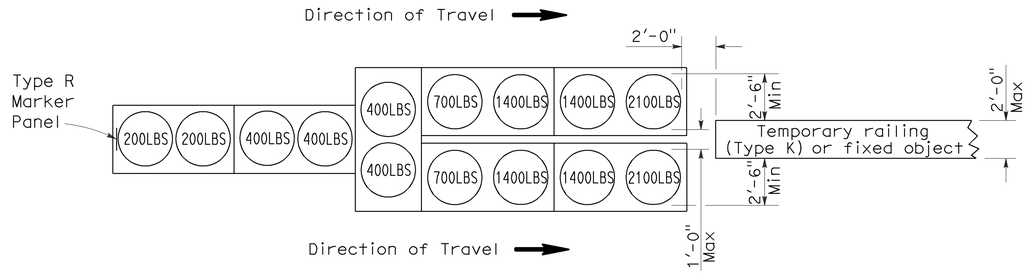

ARRAY 'TU14'

Approach speed 45 mph or more

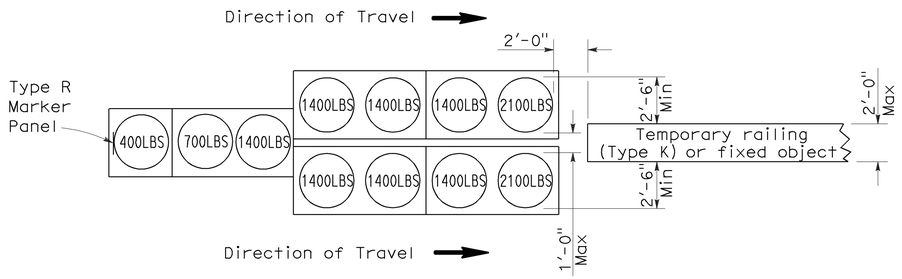

ARRAY 'TU11'

Approach speed less than 45 mph

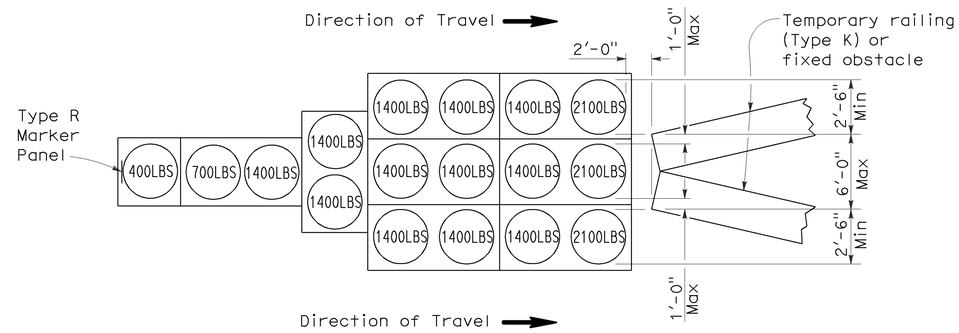

ARRAY 'TU17'

Approach speed less than 45 mph

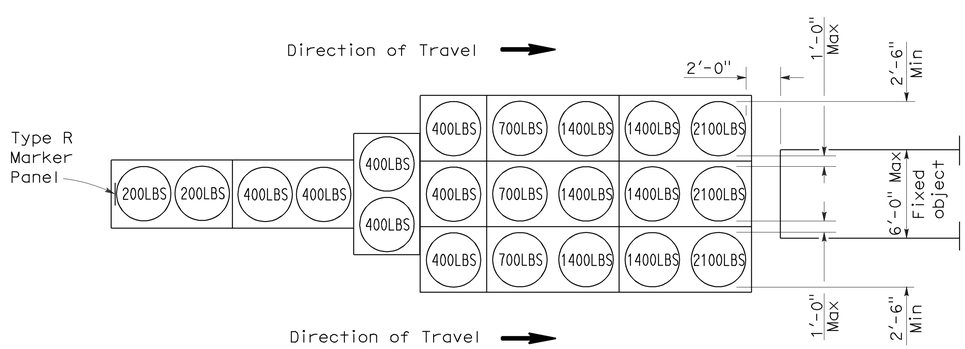

ARRAY 'TU21'

Approach speed 45 mph or more

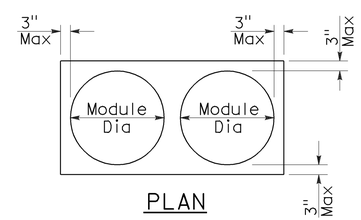

PLAN

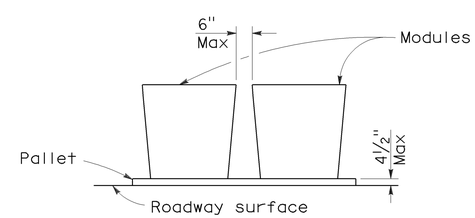

ELEVATION

CRASH CUSHION PALLET DETAIL

See Note 7

NOTES:

1. (XXX) Indicates sand filled module location and weight of sand in pounds for each module. Module spacing is based on the greater diameter of the module.
2. All sand weights are nominal.
3. Temporary crash cushion arrays shall not encroach on the traveled way.
4. Place the top of Type R marker panel 1" below the module lid.
5. Refer to Standard Plan A73B for marker details.
6. Approach speeds indicated conform to NCHRP 350 Report criteria.
7. Use of pallets is optional.

STATE OF CALIFORNIA
DEPARTMENT OF TRANSPORTATION

TEMPORARY CRASH CUSHION, SAND FILLED (UNIDIRECTIONAL)

NO SCALE

RSP T1A DATED JUNE 6, 2008 SUPERSEDES STANDARD PLAN T1A
DATED MAY 1, 2006 - PAGE 211 OF THE STANDARD PLANS BOOK DATED MAY 2006.

REVISED STANDARD PLAN RSP T1A

2006 REVISED STANDARD PLAN RSP T1A

DIST	COUNTY	ROUTE	POST MILES TOTAL PROJECT	SHEET NO.	TOTAL SHEETS
04	Nap	29	38.1/48.6	25	30

Randell D. Hiatt
REGISTERED CIVIL ENGINEER

June 6, 2008
PLANS APPROVAL DATE

REGISTERED PROFESSIONAL ENGINEER
Randell D. Hiatt
No. C50200
Exp. 6-30-09
CIVIL
STATE OF CALIFORNIA

The State of California or its officers or agents shall not be responsible for the accuracy or completeness of electronic copies of this plan sheet.

To accompany plans dated 7-26-10

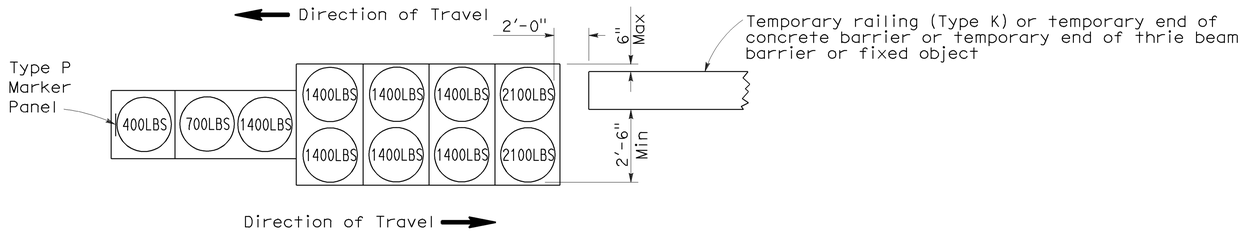

ARRAY 'TB11'

Approach speed less than 45 mph

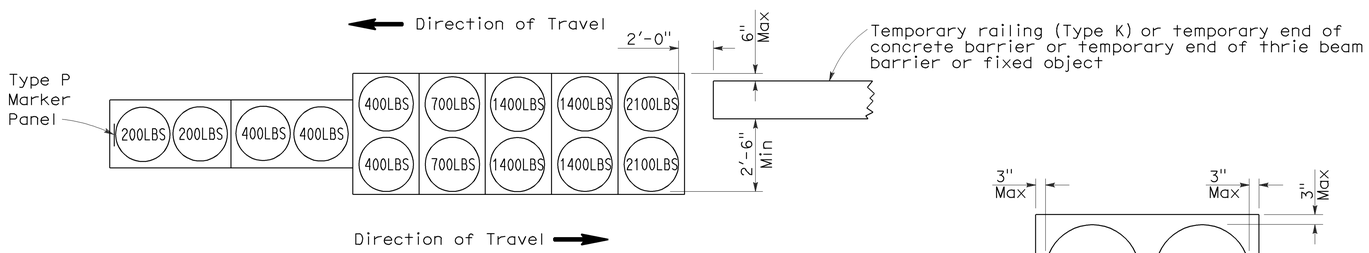

ARRAY 'TB14'

Approach speed 45 mph or more

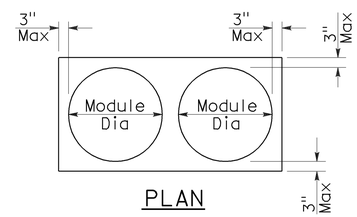

PLAN

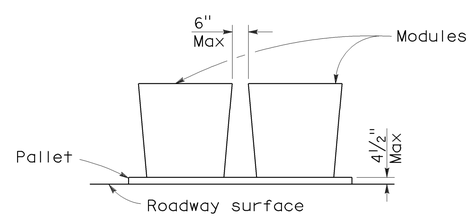

ELEVATION

CRASH CUSHION PALLET DETAIL

See Note 7

NOTES:

1. (XXX) Indicates sand filled module location and weight of sand in pounds for each module. Module spacing is based on the greater diameter of the module.
2. All sand weights are nominal.
3. Temporary crash cushion arrays shall not encroach on the traveled way.
4. Place the Type P marker panel so that the bottom of the panel rests upon the pallet.
5. Refer to Standard Plan A73B for marker details.
6. Approach speeds indicated conform to NCHRP 350 Report criteria.
7. Use of pallets is optional.

STATE OF CALIFORNIA
DEPARTMENT OF TRANSPORTATION

TEMPORARY CRASH CUSHION, SAND FILLED (BIDIRECTIONAL)

NO SCALE

RSP T1B DATED JUNE 6, 2008 SUPERSEDES STANDARD PLAN T1B
DATED MAY 1, 2006 - PAGE 212 OF THE STANDARD PLANS BOOK DATED MAY 2006.

REVISED STANDARD PLAN RSP T1B

2006 REVISED STANDARD PLAN RSP T1B

5-15-08

DIST	COUNTY	ROUTE	POST MILES TOTAL PROJECT	SHEET NO.	TOTAL SHEETS
04	Nap	29	38.1/48.6	26	30

Randell D. Hiatt
REGISTERED CIVIL ENGINEER

June 6, 2008
PLANS APPROVAL DATE

REGISTERED PROFESSIONAL ENGINEER
Randell D. Hiatt
No. C50200
Exp. 6-30-09
CIVIL
STATE OF CALIFORNIA

The State of California or its officers or agents shall not be responsible for the accuracy or completeness of electronic copies of this plan sheet.

To accompany plans dated 7-26-10

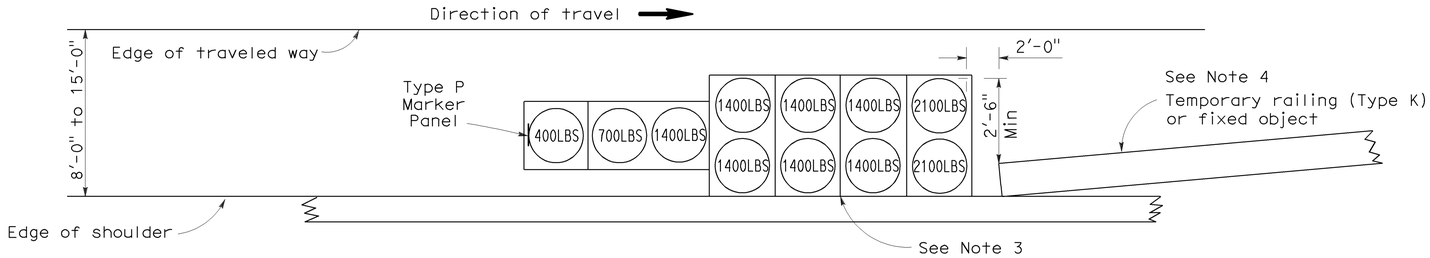

ARRAY 'TS11'

Approach speed less than 45 mph
See Note 9

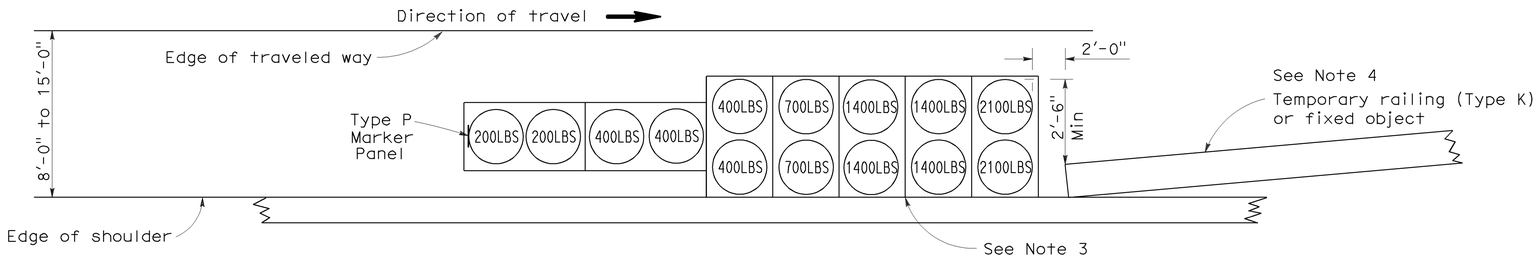

ARRAY 'TS14'

Approach speed 45 mph or more
See Note 9

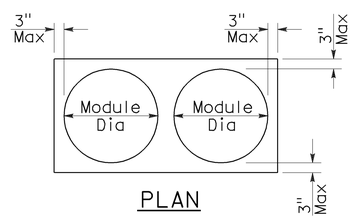

PLAN

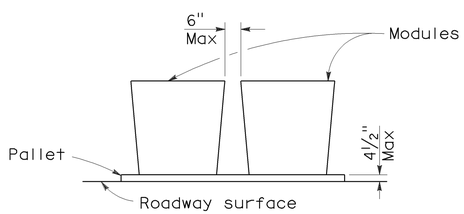

ELEVATION

CRASH CUSHION PALLET DETAIL

See Note 11

NOTES:

1. (XXX) Indicates sand filled module location and weight of sand in pounds for each module. Module spacing is based on the greater diameter of the module.
2. All sand weights are nominal.
3. The temporary crash cushion arrays shown on this plan shall be used only in locations where there will be traffic on one side of the temporary crash cushion array.
4. If the fixed object or approach end of the temporary railing is less than 15'-0" from the edge of traveled way, a temporary crash cushion is required in a construction or work zone.
5. Temporary crash cushion arrays shall not encroach on the traveled way.
6. Arrays for median shoulders shall conform to details shown on this plan for outside shoulders.
7. Place the Type P marker panel so that the bottom of the panel rests upon the pallet and faces traffic.
8. Refer to Standard Plan A73B for marker details.
9. For shoulder widths less than 8'-0", appropriate approved crash cushion protection, other than sand filled modules, shall be provided at fixed objects and at approach ends of temporary railing. The specific type of crash cushion shall be as shown on the project plans or as specified in the Special Provisions, or if not shown on the project plans or specified in the Special Provisions, shall be as approved by the Engineer.
10. Approach speeds indicated conform to NCHRP 350 Report criteria.
11. Use of pallets is optional.

STATE OF CALIFORNIA
DEPARTMENT OF TRANSPORTATION

TEMPORARY CRASH CUSHION, SAND FILLED (SHOULDER INSTALLATIONS)

NO SCALE

RSP T2 DATED JUNE 6, 2008 SUPERSEDES STANDARD PLAN T2
DATED MAY 1, 2006 - PAGE 213 OF THE STANDARD PLANS BOOK DATED MAY 2006.

REVISED STANDARD PLAN RSP T2

2006 REVISED STANDARD PLAN RSP T2

5-15-08

DIST	COUNTY	ROUTE	POST MILES TOTAL PROJECT	SHEET NO.	TOTAL SHEETS
04	Nap	29	38.1/48.6	27	30

LICENSED LANDSCAPE ARCHITECT

August 15, 2008
PLANS Approval DATE

The State of California or its officers or agents shall not be responsible for the accuracy or completeness of electronic copies of this plan sheet.

LICENSED LANDSCAPE ARCHITECT Robert B. Schott 3635 Signature 11-04-08 Renewal Date 08-11-08 Date STATE OF CALIFORNIA

To accompany plans dated 7-26-10

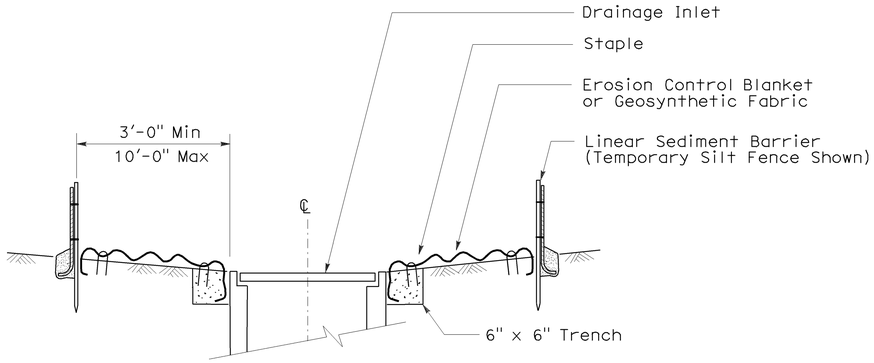

SECTION A-A

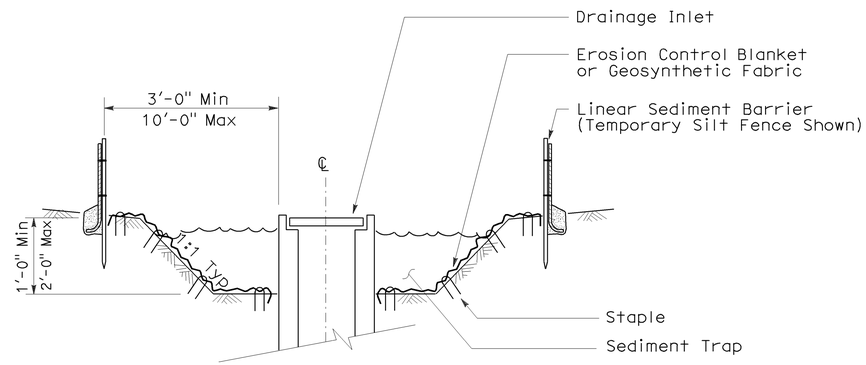

SECTION B-B

NOTES:

1. See Standard Plan T51 for Temporary Silt Fence.
2. Dimensions may vary to fit field conditions.

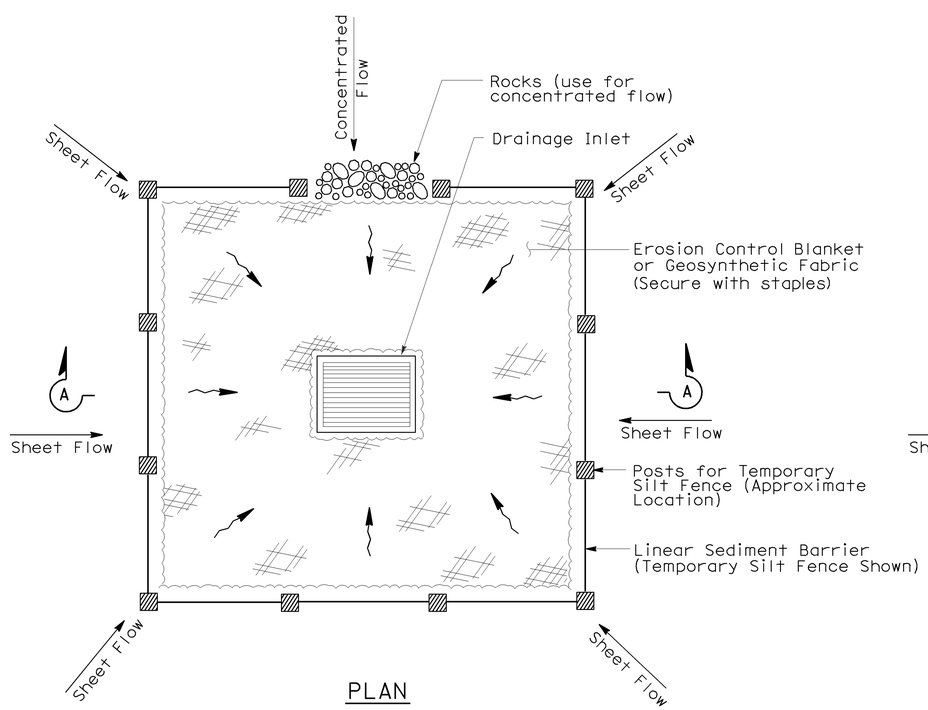

PLAN

TEMPORARY DRAINAGE INLET PROTECTION (TYPE 1)

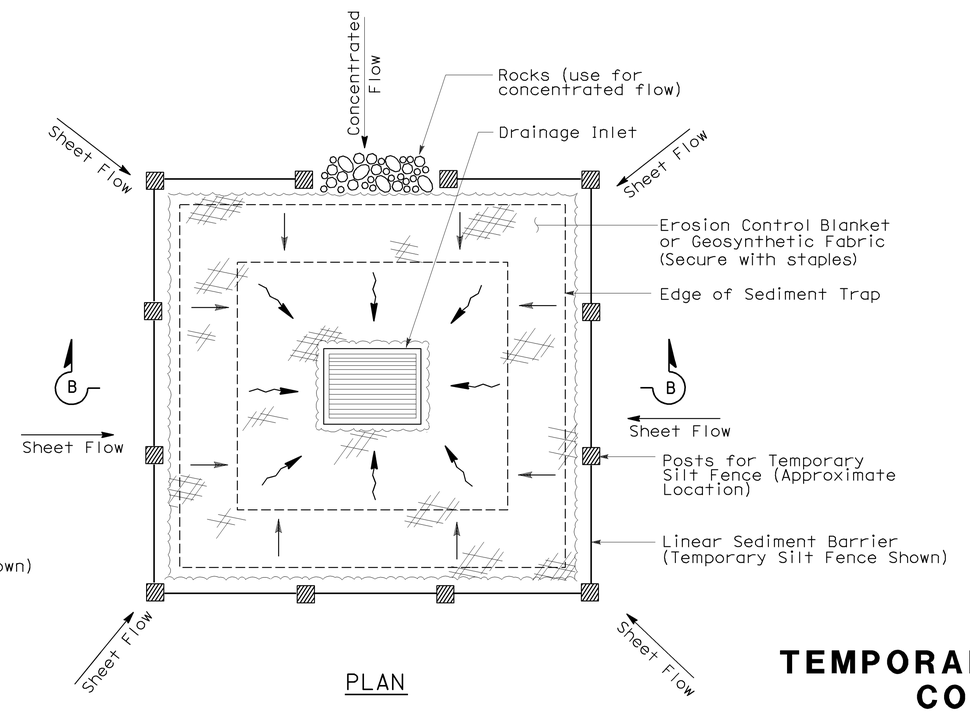

PLAN

TEMPORARY DRAINAGE INLET PROTECTION (TYPE 2) (EXCAVATED SEDIMENT TRAP)

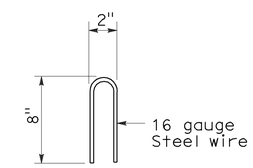

STAPLE DETAIL

STATE OF CALIFORNIA
DEPARTMENT OF TRANSPORTATION

TEMPORARY WATER POLLUTION CONTROL DETAILS (TEMPORARY DRAINAGE INLET PROTECTION)

NO SCALE

Nsp t61 dated august 15, 2008 supplements the standard plans book dated may 2006.

NEW STANDARD PLAN NSP T61

2006 NEW STANDARD PLAN NSP T61

7-11-08

DIST	COUNTY	ROUTE	POST MILES TOTAL PROJECT	SHEET NO.	TOTAL SHEETS
04	Nap	29	38.1/48.6	28	30

LICENSED LANDSCAPE ARCHITECT

August 15, 2008
PLANS APPROVAL DATE

The State of California or its officers or agents shall not be responsible for the accuracy or completeness of electronic copies of this plan sheet.

LICENSED LANDSCAPE ARCHITECT — Robert B. Schott — 3635 — Signature — 11-04-08 Renewal Date — 08-11-08 Date — STATE OF CALIFORNIA

To accompany plans dated 7-26-10

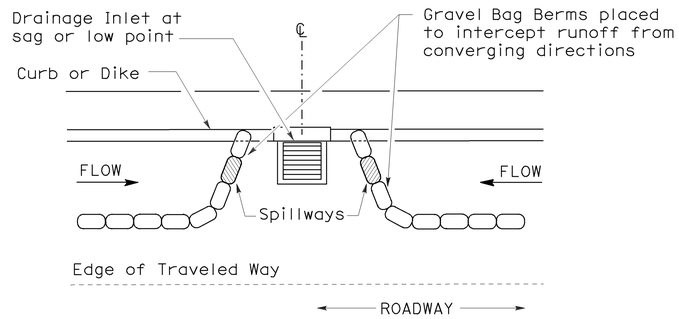

PLAN

CONFIGURATION FOR SAG POINT INLET (GRAVEL BAG BERM)

GRAVEL BAG BERM (TYPE 3A) SPACING TABLE

SLOPE OF ROADWAY (PERCENT)	1 to 3.9	4 to 5.9	6 to 7.9	8 to 10	10+
INTERVAL BETWEEN BERM	100′	75′	50′	25′	12′

For slope of less than 1%, install barriers only if erosion/sediment is prevalent

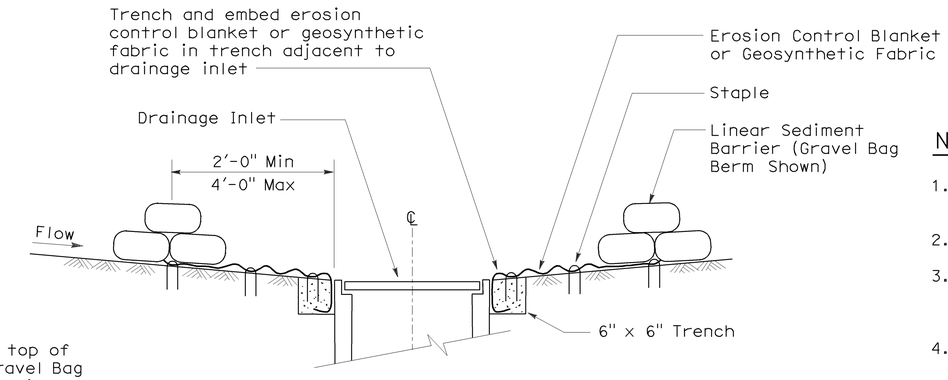

SECTION A-A

NOTES:

1. Place safety cones adjacent to drainage inlet protection.
2. Dimensions may vary to fit field conditions.
3. Install a minimum of 3 gravel bag berms upstream of each drainage inlet to be protected.
4. Position erosion control blanket or geosynthetic fabric at edge of concrete apron and secure in trench.
5. Erosion control blanket or geosynthetic fabric is not required if the area adjacent to the drainage inlet is vegetated or paved.

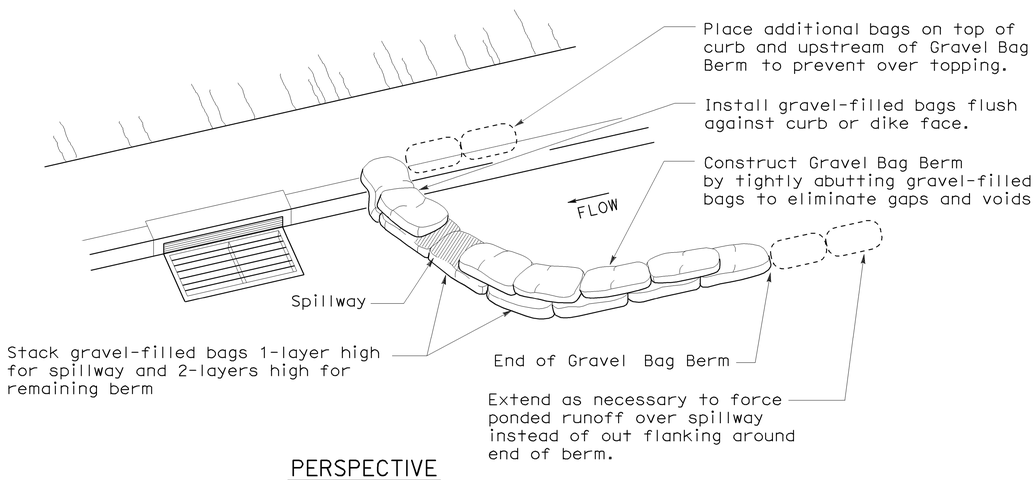

PERSPECTIVE

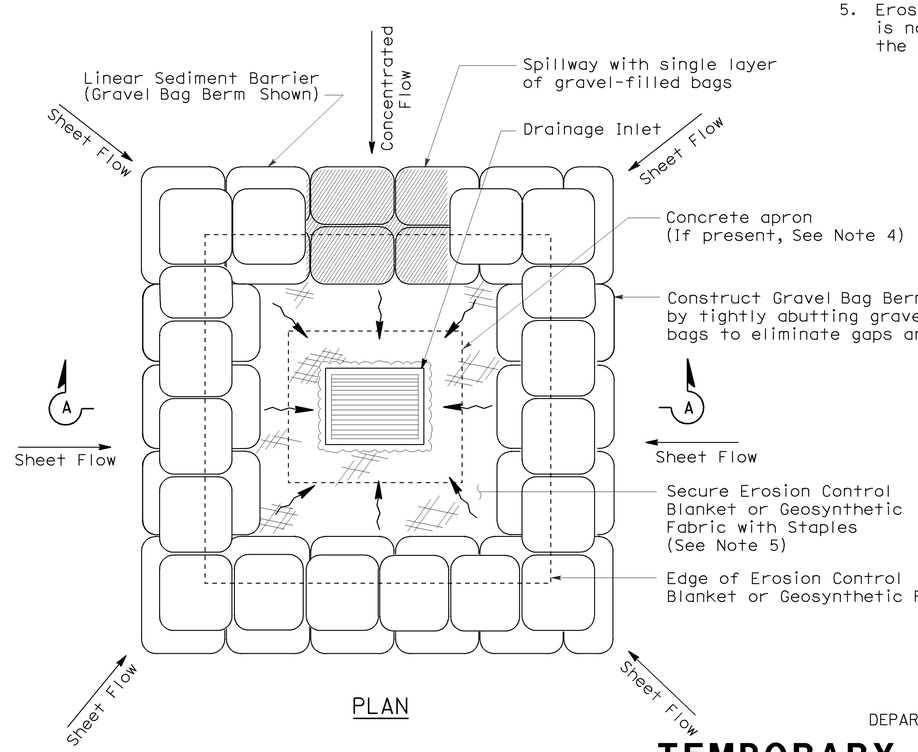

PLAN

TEMPORARY DRAINAGE INLET PROTECTION (TYPE 3B)

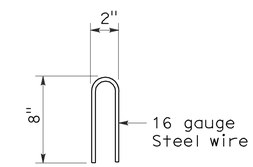

STAPLE DETAIL

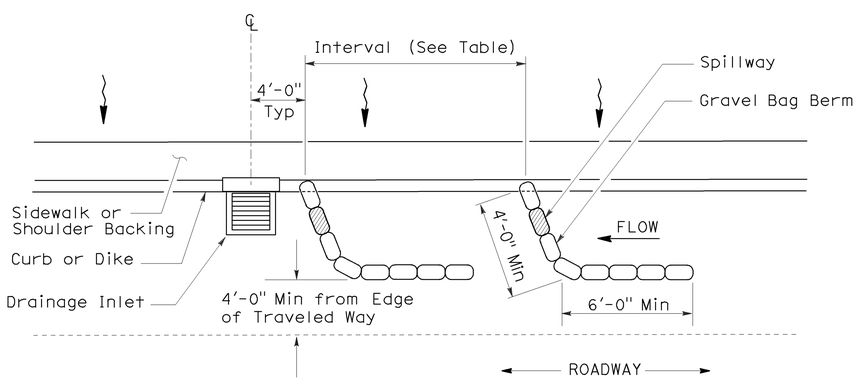

PLAN

TEMPORARY DRAINAGE INLET PROTECTION (TYPE 3A) (GRAVEL BAG BERM)

STATE OF CALIFORNIA
DEPARTMENT OF TRANSPORTATION

TEMPORARY WATER POLLUTION CONTROL DETAILS (TEMPORARY DRAINAGE INLET PROTECTION)

NO SCALE

NSP T62 DATED AUGUST 15, 2008 SUPPLEMENTS THE STANDARD PLANS BOOK DATED MAY 2006.

NEW STANDARD PLAN NSP T62

2006 NEW STANDARD PLAN NSP T62

DIST	COUNTY	ROUTE	POST MILES TOTAL PROJECT	SHEET NO.	TOTAL SHEETS
04	Nap	29	38.1/48.6	29	30

LICENSED LANDSCAPE ARCHITECT

August 15, 2008
PLANS APPROVAL DATE

The State of California or its officers or agents shall not be responsible for the accuracy or completeness of electronic copies of this plan sheet.

LICENSED LANDSCAPE ARCHITECT — Robert B. Schott — 3695 — Signature — 11-04-08 Renewal Date — 08-11-08 Date — STATE OF CALIFORNIA

To accompany plans dated 7-26-10

FLEXIBLE SEDIMENT BARRIER SPACING TABLE

SLOPE OF ROADWAY (PERCENT)	0 to 0.9	1 to 1.9	2 to 2.9	3 to 4	5+
INTERVAL BETWEEN BARRIERS	50′	35′	30′	25′	20′
ANGLE FROM FACE OF CURB	70°	70°	70°	45°	45°
SUGGESTED BARRIER LENGTH	6′	6′	6′	6′	6′

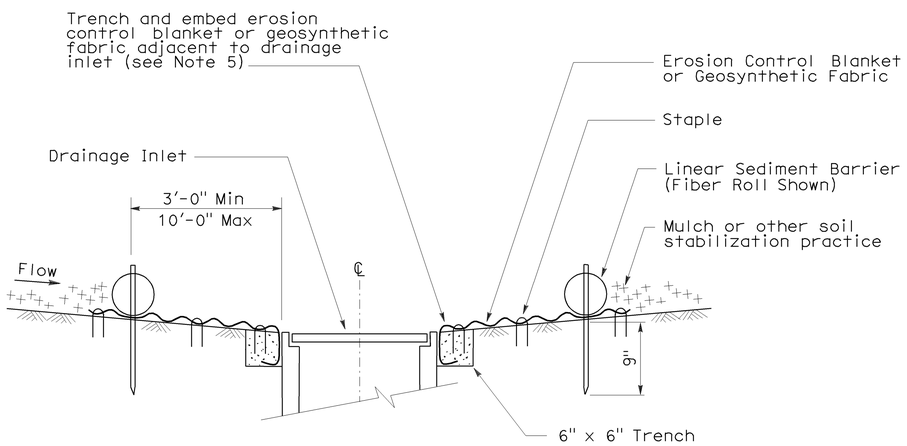

SECTION A-A

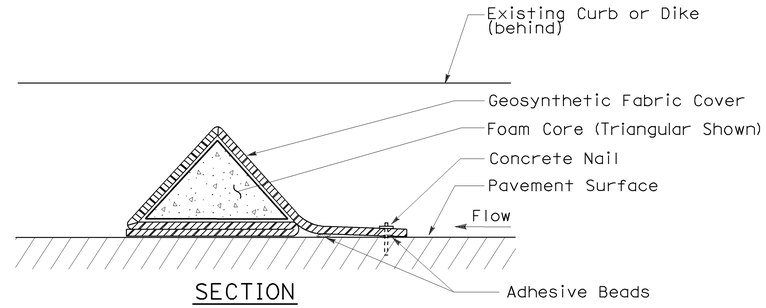

SECTION

FLEXIBLE SEDIMENT BARRIER DETAIL (FOAM BARRIER SHOWN)

NOTES:

1. See Standard Plan T51 for Temporary Silt Fence.
2. Dimensions may vary to fit field conditions.
3. Install a minimum of 3 flexible sediment barriers upstream of each drainage inlet to be protected.
4. Position erosion control blanket or geosynthetic fabric at edge of concrete apron and secure in trench.
5. Erosion control blanket or geosynthetic fabric is not required if the area adjacent to the drainage inlet is vegetated.

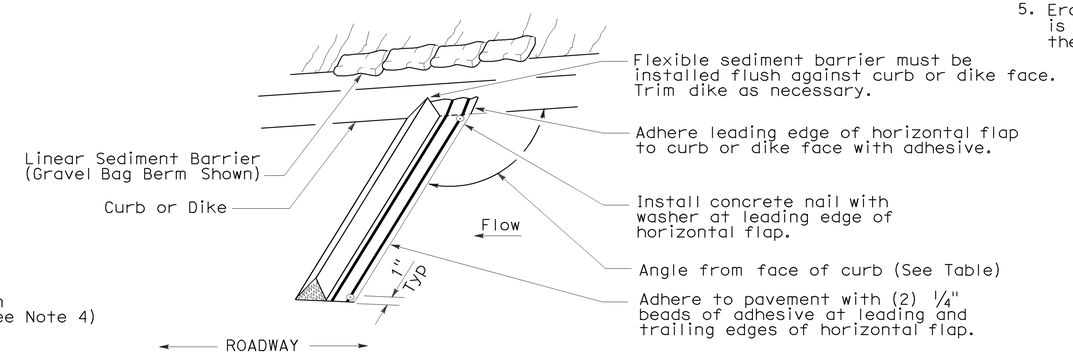

PERSPECTIVE

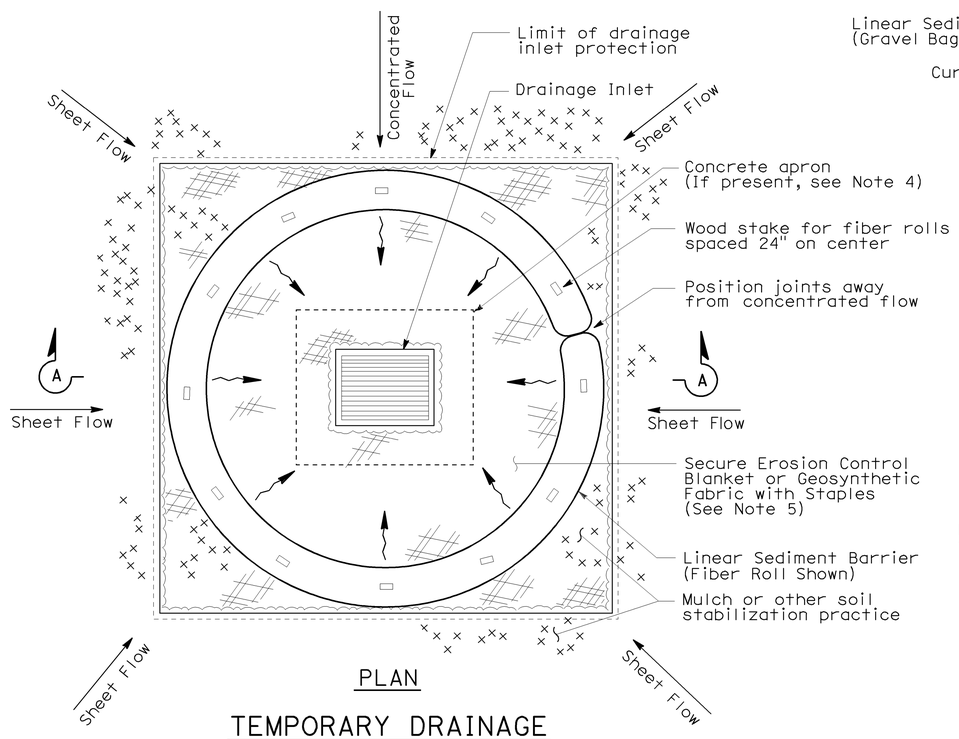

PLAN

TEMPORARY DRAINAGE INLET PROTECTION (TYPE 4A)

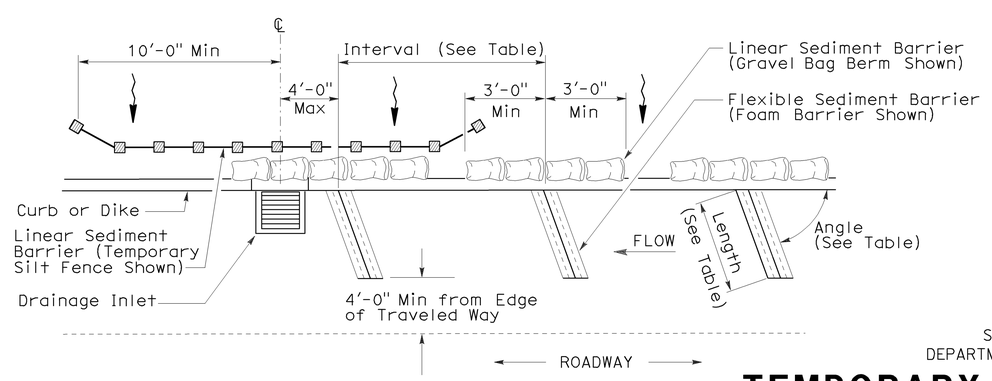

PLAN

TEMPORARY DRAINAGE INLET PROTECTION (TYPE 4B) FLEXIBLE SEDIMENT BARRIER

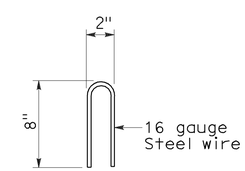

STAPLE DETAIL

STATE OF CALIFORNIA
DEPARTMENT OF TRANSPORTATION

TEMPORARY WATER POLLUTION CONTROL DETAILS (TEMPORARY DRAINAGE INLET PROTECTION)

NO SCALE

NSP T63 DATED AUGUST 15, 2008 SUPPLEMENTS THE STANDARD PLANS BOOK DATED MAY 2006.

NEW STANDARD PLAN NSP T63

2006 NEW STANDARD PLAN NSP T63

7-11-08

DIST	COUNTY	ROUTE	POST MILES TOTAL PROJECT	SHEET NO.	TOTAL SHEETS
04	Nap	29	38.1/48.6	30	30

LICENSED LANDSCAPE ARCHITECT

August 15, 2008
PLANS APPROVAL DATE

LICENSED LANDSCAPE ARCHITECT
Robert B. Schott 3635
Signature
11-04-08
Renewal Date
08-11-08
Date
STATE OF CALIFORNIA

The State of California or its officers or agents shall not be responsible for the accuracy or completeness of electronic copies of this plan sheet.

To accompany plans dated 7-26-10

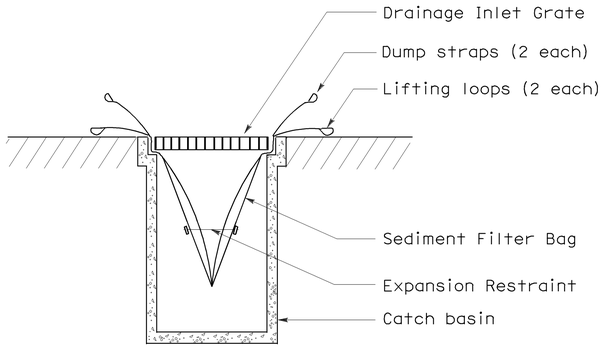

SECTION B-B

SEDIMENT FILTER BAG DETAIL

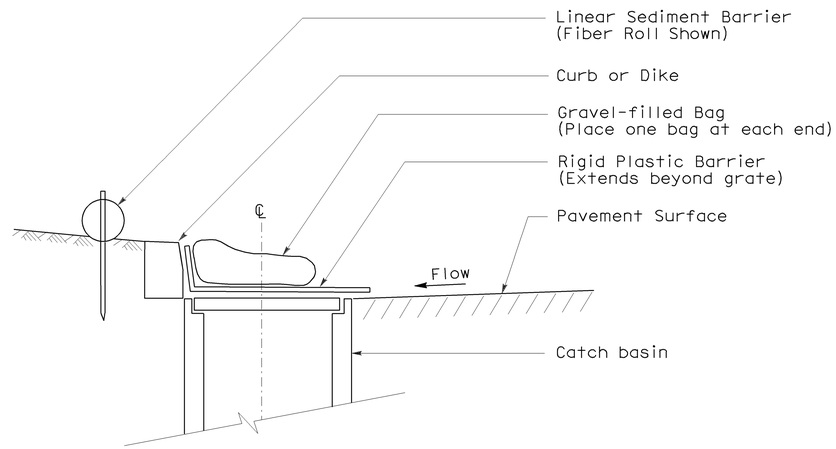

SECTION

TEMPORARY DRAINAGE INLET PROTECTION (TYPE 6A) (CATCH BASIN WITH GRATE)

NOTES:

1. See Standard Plan T51 for Temporary Silt Fence.
2. Dimensions may vary to fit field conditions.

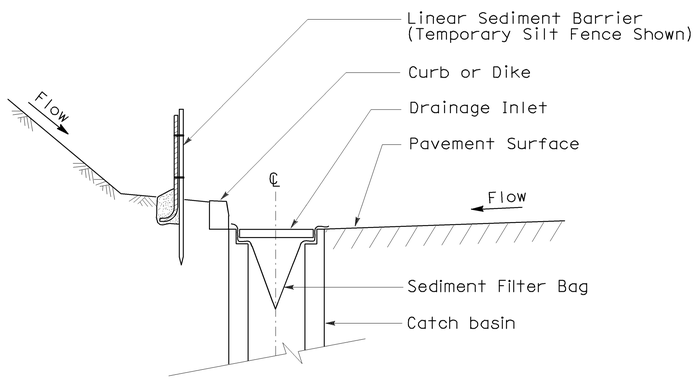

SECTION A-A

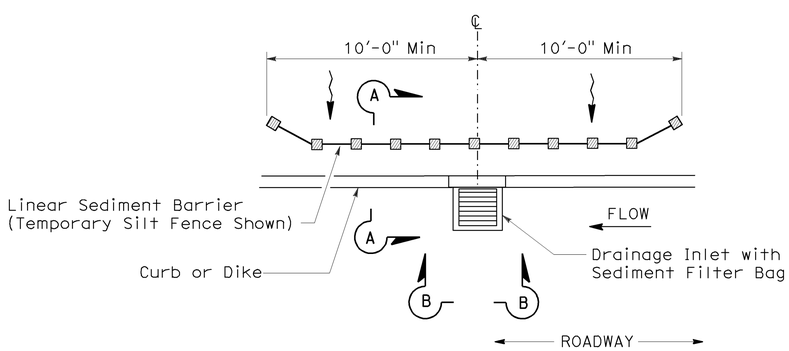

PLAN

TEMPORARY DRAINAGE INLET PROTECTION (TYPE 5) (SEDIMENT FILTER BAG)

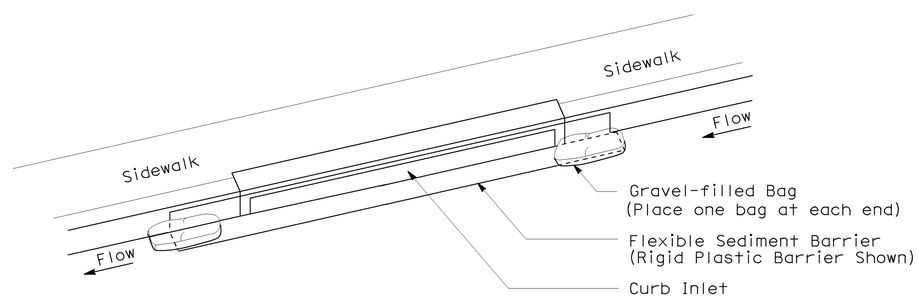

PERSPECTIVE

TEMPORARY DRAINAGE INLET PROTECTION (TYPE 6B) (CURB INLET WITHOUT GRATE)

STATE OF CALIFORNIA
DEPARTMENT OF TRANSPORTATION

TEMPORARY WATER POLLUTION CONTROL DETAILS (TEMPORARY DRAINAGE INLET PROTECTION)

NO SCALE

NSP T64 DATED AUGUST 15, 2008 SUPPLEMENTS
THE STANDARD PLANS BOOK DATED MAY 2006.

NEW STANDARD PLAN NSP T64

2006 NEW STANDARD PLAN NSP T64

7-11-08