ACSTP-P001(589)E

Dist	COUNTY	ROUTE	POST MILES TOTAL PROJECT	SHEET No.	TOTAL SHEETS
04	Mrn	1	11.0	1	76

STATE OF CALIFORNIA

DEPARTMENT OF TRANSPORTATION

PROJECT PLANS FOR CONSTRUCTION ON

STATE HIGHWAY

IN MARIN COUNTY NEAR STINSON BEACH AT 1.2 MILES SOUTH OF NORTH PANORAMIC HIGHWAY

TO BE SUPPLEMENTED BY STANDARD PLANS DATED 2010

INDEX OF PLANS

SHEET No.	DESCRIPTION
1	TITLE AND LOCATION MAP
2	TYPICAL CROSS SECTIONS
3	LAYOUTS
4	PROFILES AND SUPERELEVATION DIAGRAMS
5-6	TEMPORARY WATER POLLUTION CONTROL PLANS
7-13	DRAINAGE PLANS, PROFILES, DETAILS, AND QUANTITIES
14	CONSTRUCTION AREA SIGNS
15-17	TRAFFIC HANDLING PLANS AND QUANTITIES
18	PAVEMENT DELINEATION PLANS, DETAILS AND QUANTITIES
19	SUMMARY OF QUANTITIES
20-26	LANDSCAPE PLANS
27-33	ELECTRICAL PLANS
34-38	SPECIAL ELECTRICAL STRUCTURES
39-62	REVISED STANDARD PLANS

STRUCTURE PLANS

63-76	DIPSEA TRAIL RETAINING WALL, Br No. 27E0028

THE STANDARD PLANS LIST APPLICABLE TO THIS CONTRACT IS INCLUDED IN THE NOTICE TO BIDDERS AND SPECIAL PROVISIONS BOOK.

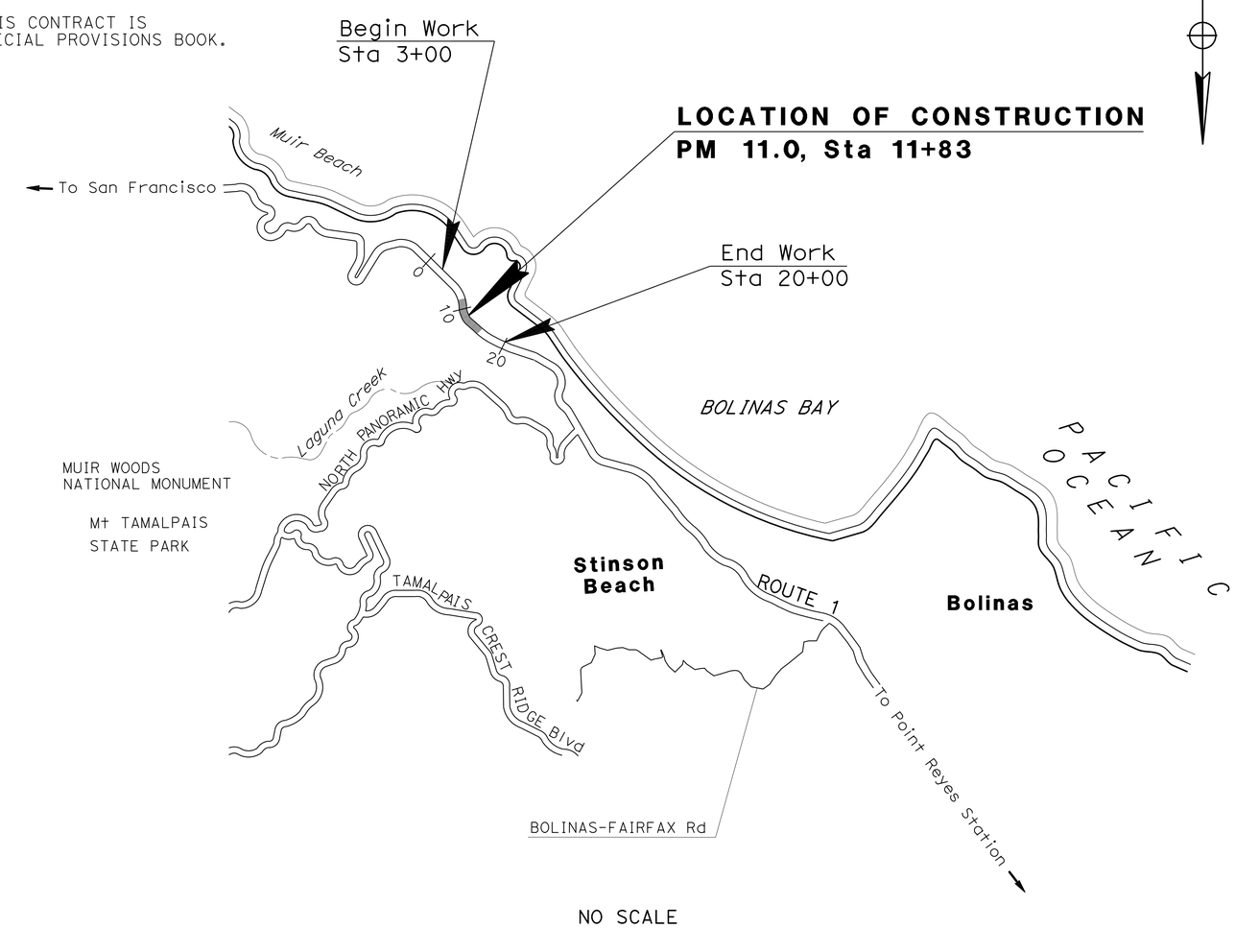

NO SCALE

THE CONTRACTOR SHALL POSSESS THE CLASS (OR CLASSES) OF LICENSE AS SPECIFIED IN THE "NOTICE TO BIDDERS."

PROJECT MANAGER JAY HAGHPARAST

DESIGN MANAGER ALI ALQATAMI

A Ahmad 10/01/14
PROJECT ENGINEER DATE
REGISTERED CIVIL ENGINEER

January 12, 2015
PLANS APPROVAL DATE

REGISTERED PROFESSIONAL ENGINEER AHMAD K. AHMAD No. 69064 Exp. 6-30-16 CIVIL STATE OF CALIFORNIA

THE STATE OF CALIFORNIA OR ITS OFFICERS OR AGENTS SHALL NOT BE RESPONSIBLE FOR THE ACCURACY OR COMPLETENESS OF SCANNED COPIES OF THIS PLAN SHEET.

CONTRACT No.	04-4S2204
PROJECT ID	0400001217

LAST REVISION 01-07-15 DATE PLOTTED => 20-FEB-2015 TIME PLOTTED => 10:57

Dist	COUNTY	ROUTE	POST MILES TOTAL PROJECT	SHEET No.	TOTAL SHEETS
04	Mrn	1	11.0	2	76

A Ahmad 10/01/14
REGISTERED CIVIL ENGINEER DATE

1-12-15
PLANS APPROVAL DATE

REGISTERED PROFESSIONAL ENGINEER
AHMAD K. AHMAD
No. 69064
Exp. 6-30-16
CIVIL
STATE OF CALIFORNIA

THE STATE OF CALIFORNIA OR ITS OFFICERS OR AGENTS SHALL NOT BE RESPONSIBLE FOR THE ACCURACY OR COMPLETENESS OF SCANNED COPIES OF THIS PLAN SHEET.

NOTES:

1. DIMENSIONS OF THE PAVEMENT STRUCTURES (STRUCTURAL SECTIONS) ARE SUBJECT TO TOLERANCES SPECIFIED IN THE STANDARD SPECIFICATIONS.
2. SUPERELEVATIONS AS SHOWN OR AS DIRCTED BY THE ENGINEER.

ABBREVIATION:

SE SAFETY EDGE

DESIGN DESIGNATION

2015 ADT	2707	T	1.52%
2025 ADT	2874	TI	6.0
DHV	246	V	40 MPH

CLIMATE REGION

NORTH COAST

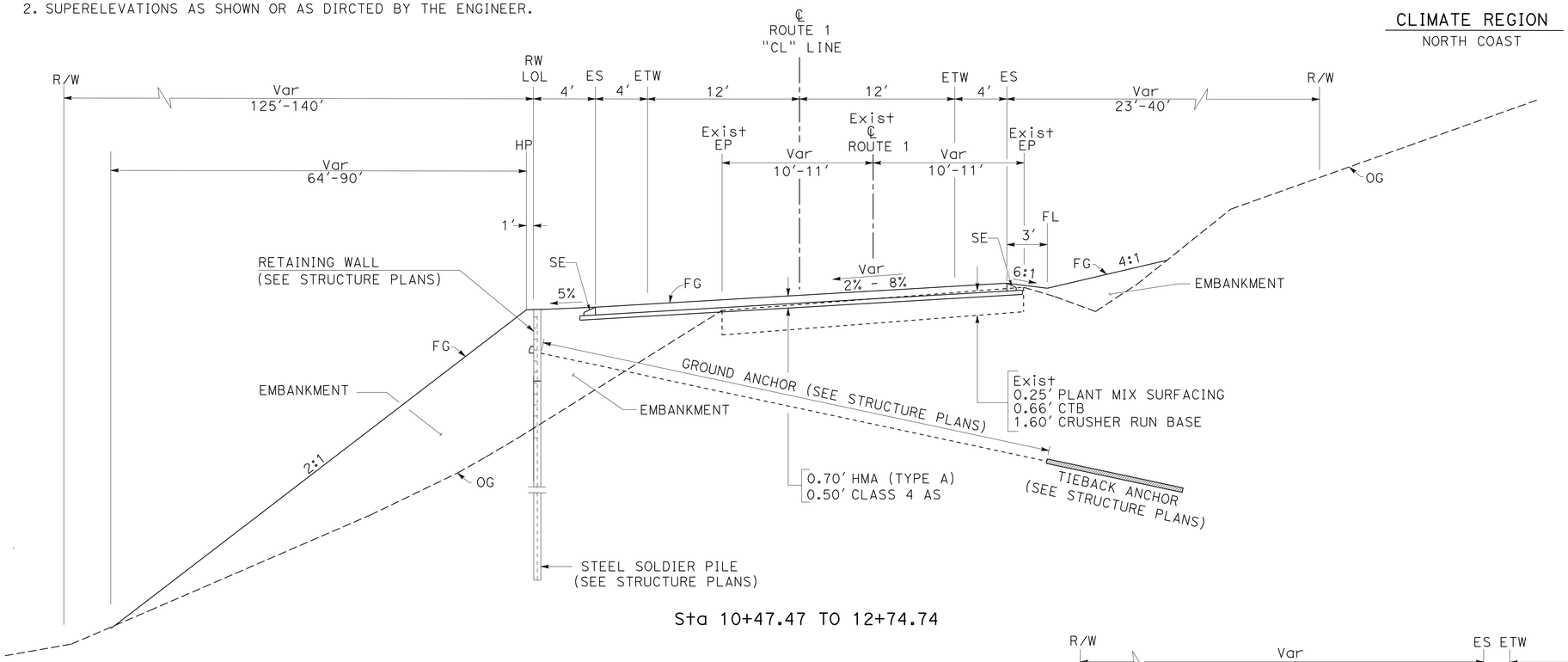

Sta 10+47.47 TO 12+74.74

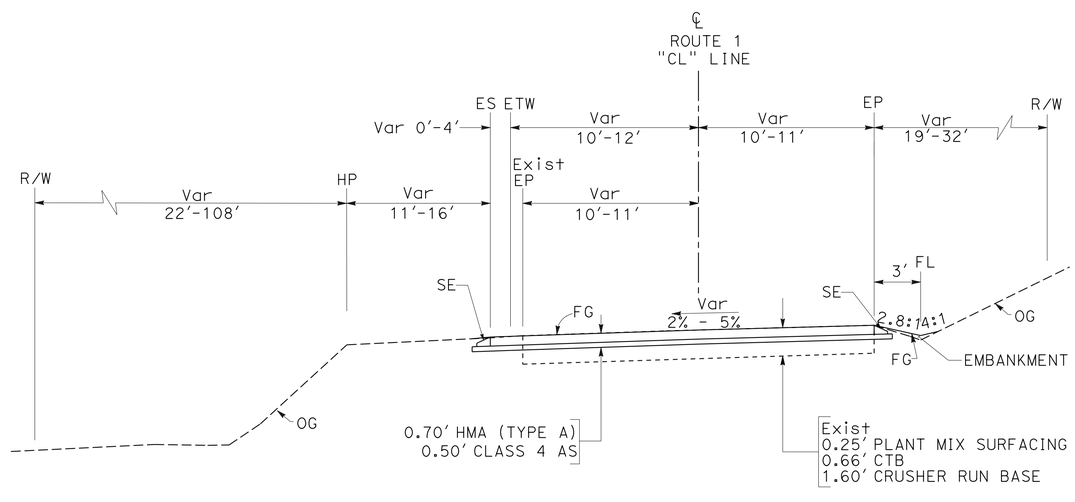

Sta 9+55.96 TO 10+47.47

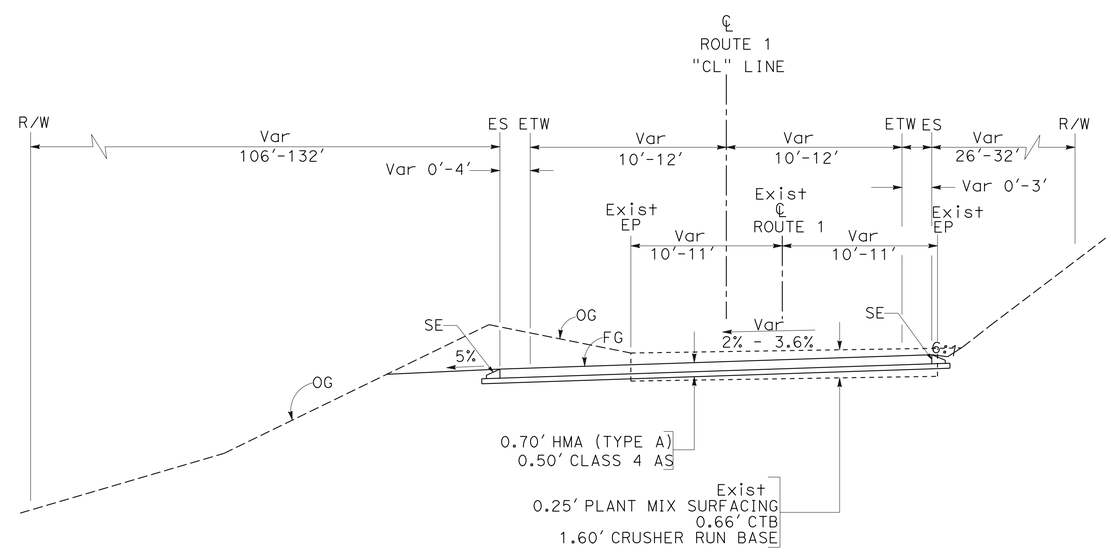

Sta 12+74.74 TO 14+09.89

ROUTE 1

TYPICAL CROSS SECTIONS X-1

NO SCALE

REVISED BY	DATE REVISED
RF	12-29-14

CALCULATED-DESIGNED BY: RITCHIE FERRER
CHECKED BY: AHMAD AHMAD
FUNCTIONAL SUPERVISOR: ALI ALQATAMI

STATE OF CALIFORNIA - DEPARTMENT OF TRANSPORTATION
Caltrans
06-DESIGN

LAST REVISION 12-29-14 | DATE PLOTTED => 15-JAN-2015 | TIME PLOTTED => 13:19

Dist	COUNTY	ROUTE	POST MILES TOTAL PROJECT	SHEET No.	TOTAL SHEETS
04	Mrn	1	11.0	3	76

A Ahmad 10/01/14
REGISTERED CIVIL ENGINEER DATE

1-12-15
PLANS APPROVAL DATE

REGISTERED PROFESSIONAL ENGINEER
AHMAD K. AHMAD
No. 69064
Exp 6-30-16
CIVIL
STATE OF CALIFORNIA

THE STATE OF CALIFORNIA OR ITS OFFICERS OR AGENTS SHALL NOT BE RESPONSIBLE FOR THE ACCURACY OR COMPLETENESS OF SCANNED COPIES OF THIS PLAN SHEET.

NOTE:

FOR ACCURATE RIGHT OF WAY DATA, CONTACT RIGHT OF WAY ENGINEERING AT THE DISTRICT OFFICE.

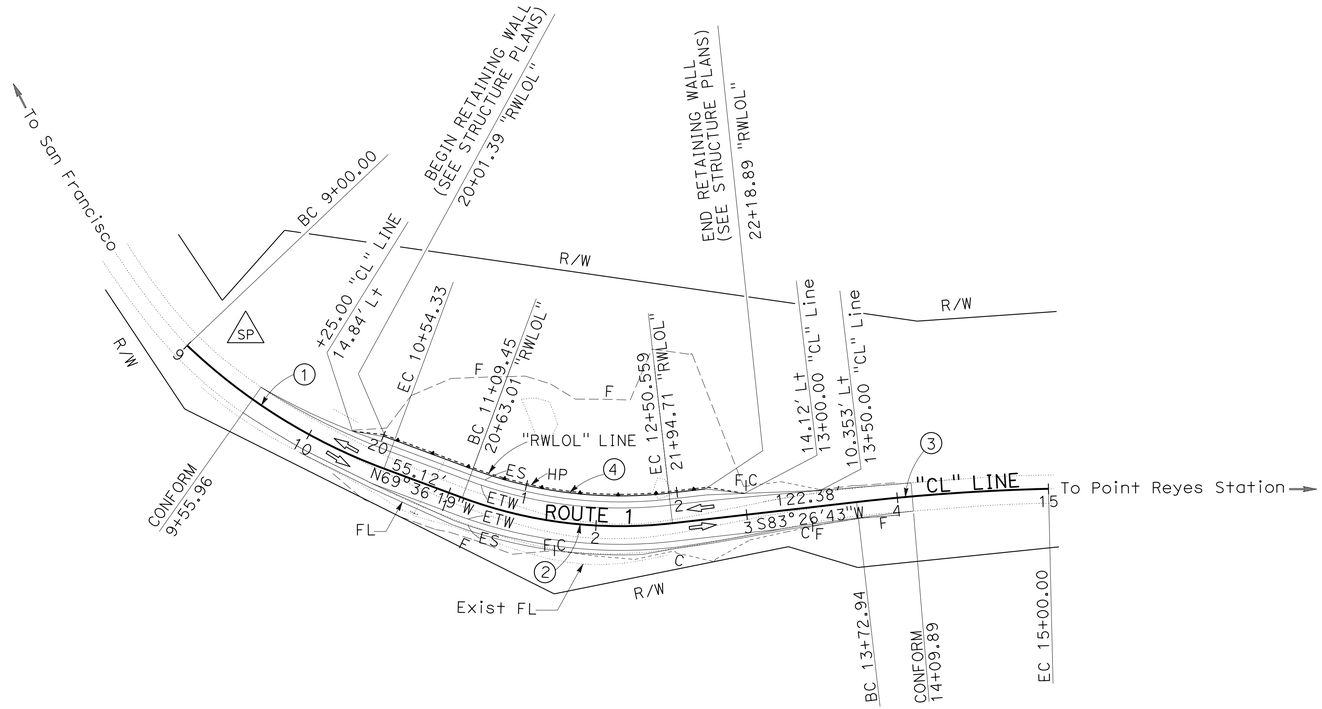

CURVE DATA

No.	R	Δ	T	L
1	380′	23°16′13"	78.25′	154.33′
2	300′	26°56′57"	71.88′	141.11′
3	1399′	05°12′19"	63.57′	127.06′
4	280′	26°56′58"	67.09′	131.70′

LAYOUT

SCALE: 1"=50′ **L-1**

STATE OF CALIFORNIA - DEPARTMENT OF TRANSPORTATION
Caltrans
06-DESIGN

FUNCTIONAL SUPERVISOR: ALI ALQATAMI
CALCULATED-DESIGNED BY: RITCHIE FERRER
CHECKED BY: AHMAD AHMAD
REVISED BY: RF
DATE REVISED: 12-29-14

LAST REVISION 12-29-14 | DATE PLOTTED => 15-JAN-2015 | TIME PLOTTED => 13:19

BORDER LAST REVISED 7/2/2010 | USERNAME => s113541 | DGN FILE => 0400001217ea001.dgn | RELATIVE BORDER SCALE IS IN INCHES 0 1 2 3 | UNIT 1458 | PROJECT NUMBER & PHASE 04000012171

Dist	COUNTY	ROUTE	POST MILES TOTAL PROJECT	SHEET No.	TOTAL SHEETS
04	Mrn	1	11.0	4	76

A Ahmad 10/01/14
REGISTERED CIVIL ENGINEER DATE

1-12-15
PLANS APPROVAL DATE

REGISTERED PROFESSIONAL ENGINEER
AHMAD K. AHMAD
No. 69064
Exp. 6-30-12
CIVIL
STATE OF CALIFORNIA

THE STATE OF CALIFORNIA OR ITS OFFICERS OR AGENTS SHALL NOT BE RESPONSIBLE FOR THE ACCURACY OR COMPLETENESS OF SCANNED COPIES OF THIS PLAN SHEET.

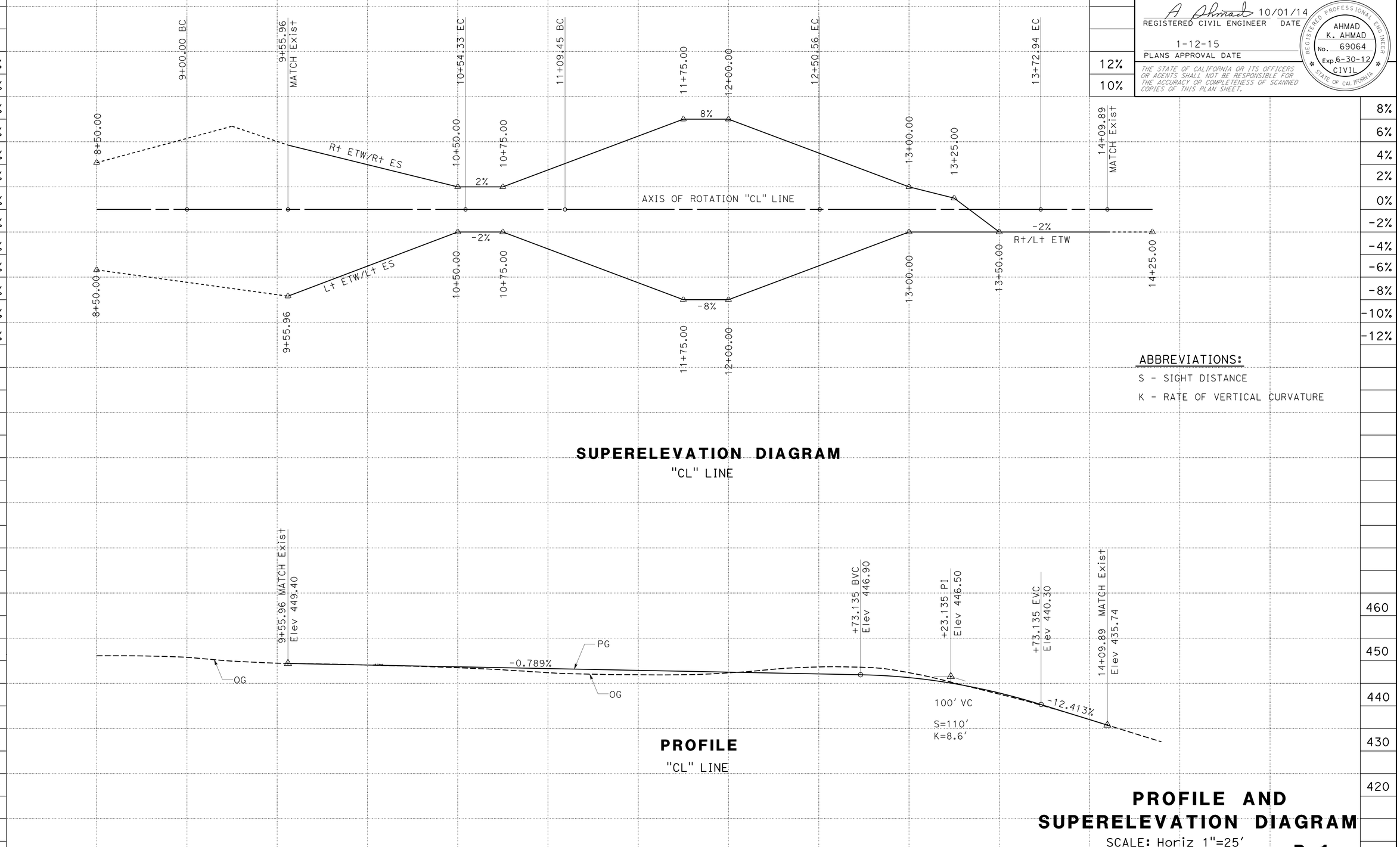

STATION		9+55.96	10+00	1	2	3	14+09.89	TOTAL
CY	Exc			143		368		380
	Emb			2413		1867		4280

REVISED BY	RF
DATE REVISED	11-17-14
CALCULATED-DESIGNED BY	RITCHIE FERRER
CHECKED BY	AHMAD AHMAD
FUNCTIONAL SUPERVISOR	ALI ALQATAMI

STATE OF CALIFORNIA - DEPARTMENT OF TRANSPORTATION
Caltrans
06-DESIGN

LAST REVISION 11-17-14
DATE PLOTTED => 15-JAN-2015
TIME PLOTTED => 13:19

Dist	COUNTY	ROUTE	POST MILES TOTAL PROJECT	SHEET No.	TOTAL SHEETS
04	Mrn	1	11.0	5	76

REGISTERED CIVIL ENGINEER 9-16-14 DATE

1-12-15
PLANS APPROVAL DATE

REGISTERED PROFESSIONAL ENGINEER Jeng G. Tsai No. 62753 Exp. 6-30-16 CIVIL STATE OF CALIFORNIA

THE STATE OF CALIFORNIA OR ITS OFFICERS OR AGENTS SHALL NOT BE RESPONSIBLE FOR THE ACCURACY OR COMPLETENESS OF SCANNED COPIES OF THIS PLAN SHEET.

NOTES:

1. FOR ACCURATE RIGHT OF WAY DATA, CONTACT RIGHT OF WAY ENGINEERING AT THE DISTRICT OFFICE.
2. TEMPORARY BMP LOCATIONS ARE APPROXIMATE, EXACT LOCATIONS TO BE DETERMINED IN THE FIELD.

LEGEND:

-xx-TRSF- TEMPORARY REINFORCED SILT FENCE

TEMPORARY HYDRAULIC MULCH (BONDED FIBER MATRIX)

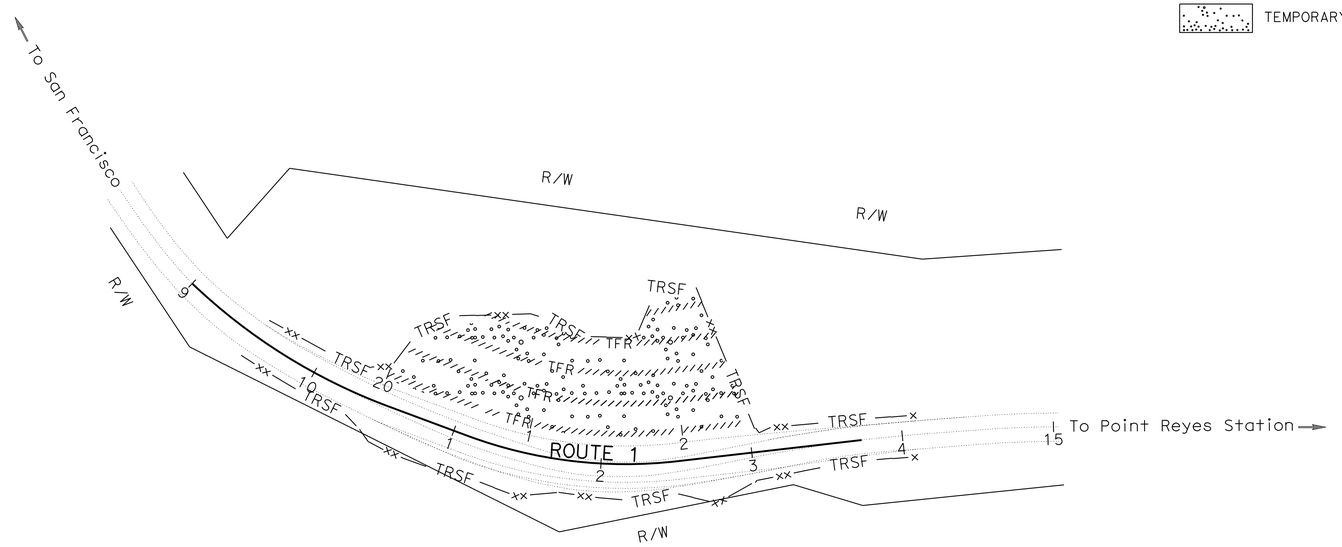

TEMPORARY WATER POLLUTION CONTROL QUANTITIES

TEMPORARY CONSTRUCTION ENTRANCE	TEMPORARY DRAINAGE INLET PROTECTION	TEMPORARY CHECK DAM	TEMPORARY REINFORCED SILT FENCE TYPE 1	TEMPORARY FIBER ROLL	TEMPORARY HYDRAULIC MULCH (BONDED FIBER MATRIX)
EA	EA	LF	LF	LF	SQYD
2	5	150	1025	860	1790

APPROVED FOR TEMPORARY WATER POLLUTION CONTROL WORK ONLY

TEMPORARY WATER POLLUTION CONTROL (SEASON 1)

WPC-1

SCALE: 1"=50'

STATE OF CALIFORNIA - DEPARTMENT OF TRANSPORTATION

Caltrans WATER POLLUTION CONTROL

FUNCTIONAL SUPERVISOR: KAMRAN NAKHJIRI

CALCULATED-DESIGNED BY: JENG TSAI

CHECKED BY: KAMRAN NAKHJIRI

REVISED BY: JT

DATE REVISED: 12-29-14

LAST REVISION DATE PLOTTED => 15-JAN-2015
TIME PLOTTED => 13:19
01-07-15

Dist	COUNTY	ROUTE	POST MILES TOTAL PROJECT	SHEET No.	TOTAL SHEETS
04	Mrn	1	11.0	6	76

REGISTERED CIVIL ENGINEER 9-16-14 DATE

1-12-15
PLANS APPROVAL DATE

REGISTERED PROFESSIONAL ENGINEER Jeng G. Tsai No. 62753 Exp. 6-30-16 CIVIL STATE OF CALIFORNIA

THE STATE OF CALIFORNIA OR ITS OFFICERS OR AGENTS SHALL NOT BE RESPONSIBLE FOR THE ACCURACY OR COMPLETENESS OF SCANNED COPIES OF THIS PLAN SHEET.

NOTES:

1. FOR ACCURATE RIGHT OF WAY DATA, CONTACT RIGHT OF WAY ENGINEERING AT THE DISTRICT OFFICE.

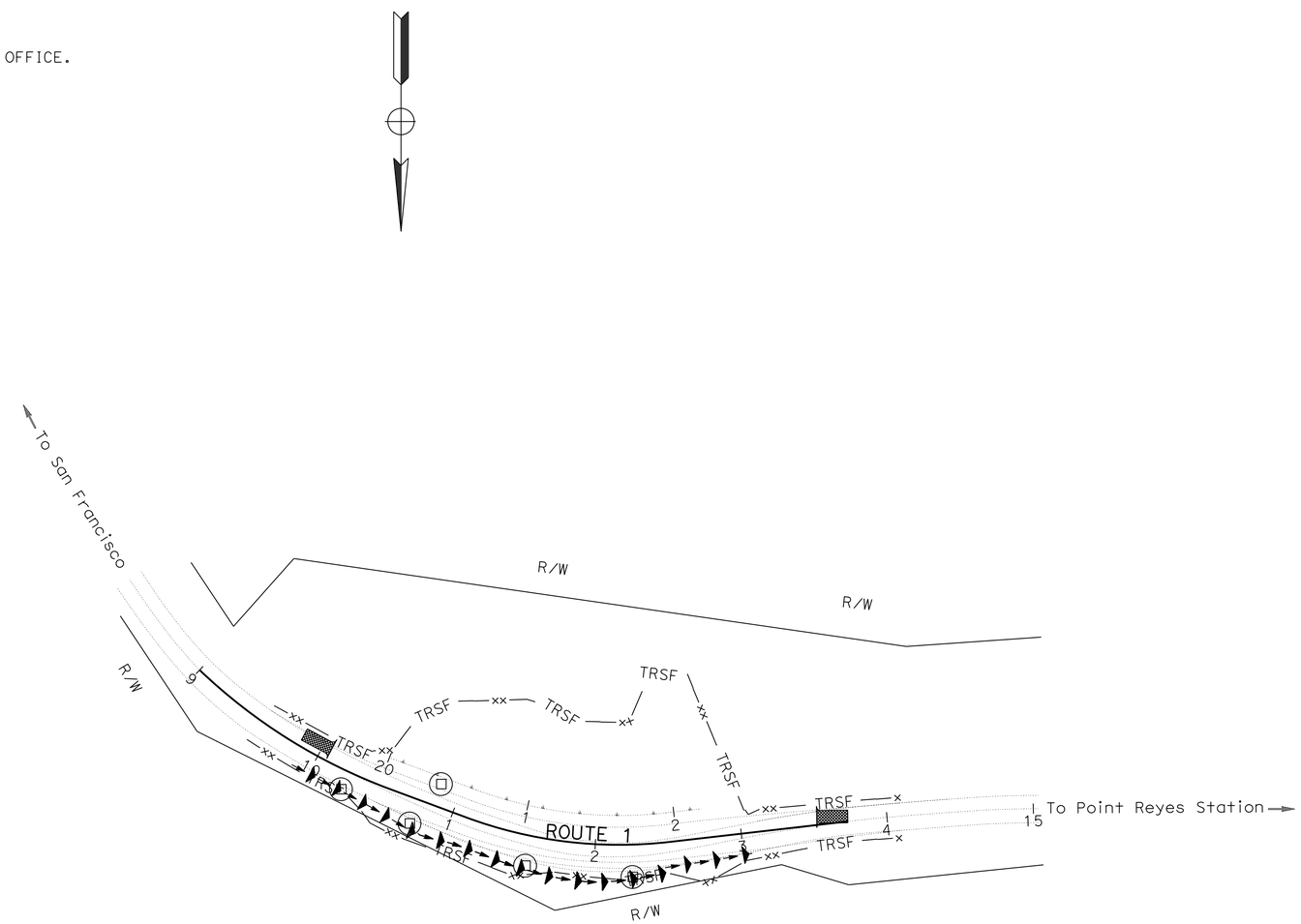

TEMPORARY WATER POLLUTION CONTROL (SEASON 2) WPC-2

APPROVED FOR TEMPORARY WATER POLLUTION CONTROL WORK ONLY

SCALE: 1"=50'

STATE OF CALIFORNIA - DEPARTMENT OF TRANSPORTATION
Caltrans WATER POLLUTION CONTROL

FUNCTIONAL SUPERVISOR: KAMRAN NAKHJIRI

CALCULATED-DESIGNED BY: JENG TSAI
CHECKED BY: KAMRAN NAKHJIRI

REVISED BY: JT
DATE REVISED: 12-29-14

LAST REVISION: DATE PLOTTED => 15-JAN-2015 01-07-15 TIME PLOTTED => 13:19

Dist	COUNTY	ROUTE	POST MILES TOTAL PROJECT	SHEET No.	TOTAL SHEETS
04	Mrn	1	11.0	7	76

A Ahmad 10/01/14
REGISTERED CIVIL ENGINEER DATE

1-12-15
PLANS APPROVAL DATE

REGISTERED PROFESSIONAL ENGINEER
AHMAD K. AHMAD No. 69064 Exp. 6-30-16 CIVIL
STATE OF CALIFORNIA

THE STATE OF CALIFORNIA OR ITS OFFICERS OR AGENTS SHALL NOT BE RESPONSIBLE FOR THE ACCURACY OR COMPLETENESS OF SCANNED COPIES OF THIS PLAN SHEET.

NOTE:

FOR ACCURATE RIGHT OF WAY DATA, CONTACT RIGHT OF WAY ENGINEERING AT THE DISTRICT OFFICE.

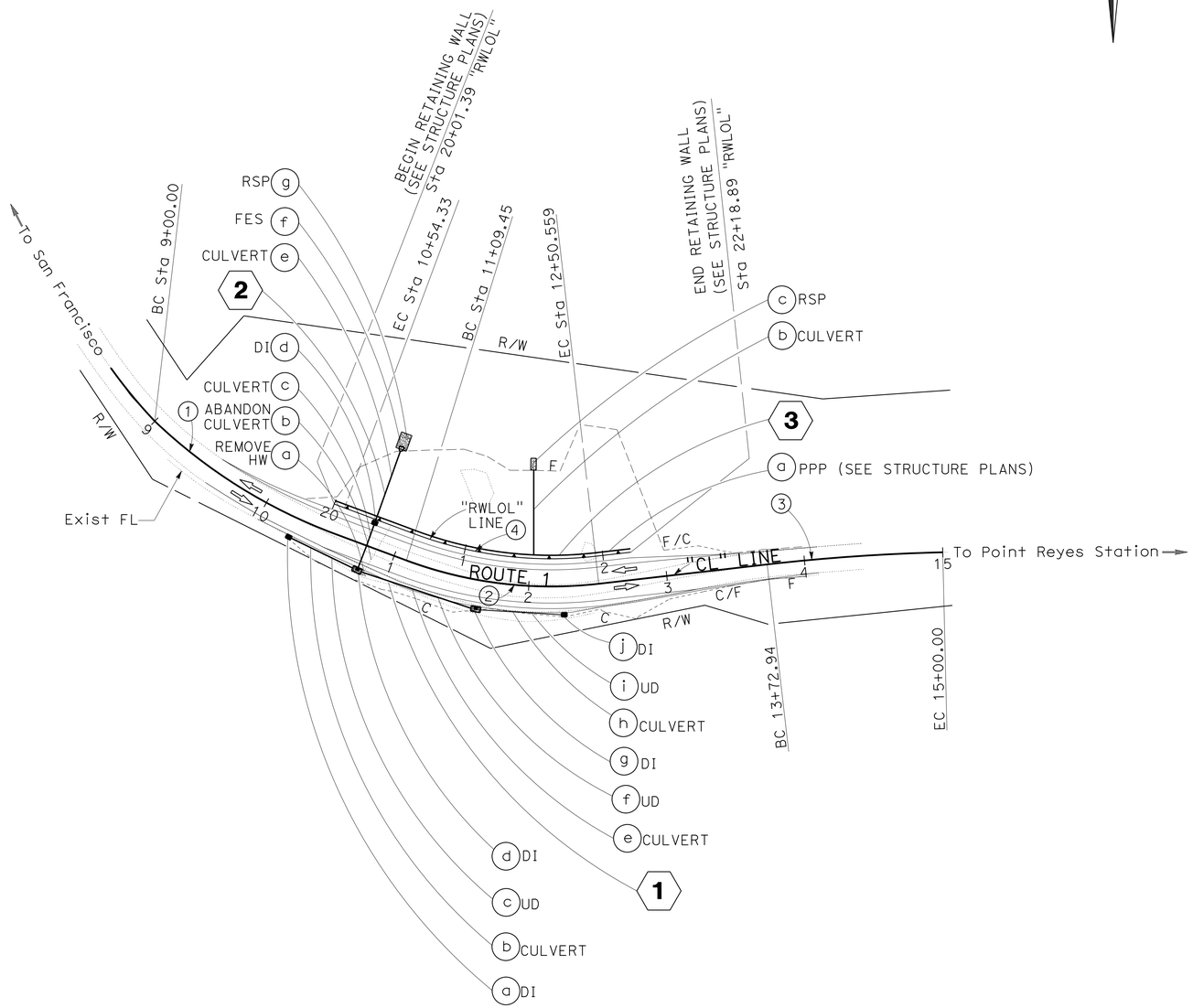

APPROVED FOR DRAINAGE WORK ONLY

DRAINAGE PLAN

SCALE: 1"=50' **D-1**

STATE OF CALIFORNIA - DEPARTMENT OF TRANSPORTATION
Caltrans
06-DESIGN

FUNCTIONAL SUPERVISOR: ALI ALQATAMI

CALCULATED-DESIGNED BY: RITCHIE FERRER
CHECKED BY: AHMAD AHMAD

REVISED BY: RF
DATE REVISED: 12-29-14

LAST REVISION 12-29-14 | DATE PLOTTED => 15-JAN-2015 | TIME PLOTTED => 13:19

Dist	COUNTY	ROUTE	POST MILES TOTAL PROJECT	SHEET No.	TOTAL SHEETS
04	Mrn	1	11.0	8	76

A Ahmad 10/01/14
REGISTERED CIVIL ENGINEER DATE

1-12-15
PLANS APPROVAL DATE

REGISTERED PROFESSIONAL ENGINEER
AHMAD K. AHMAD
No. 69064
Exp. 6-30-16
CIVIL
STATE OF CALIFORNIA

THE STATE OF CALIFORNIA OR ITS OFFICERS OR AGENTS SHALL NOT BE RESPONSIBLE FOR THE ACCURACY OR COMPLETENESS OF SCANNED COPIES OF THIS PLAN SHEET.

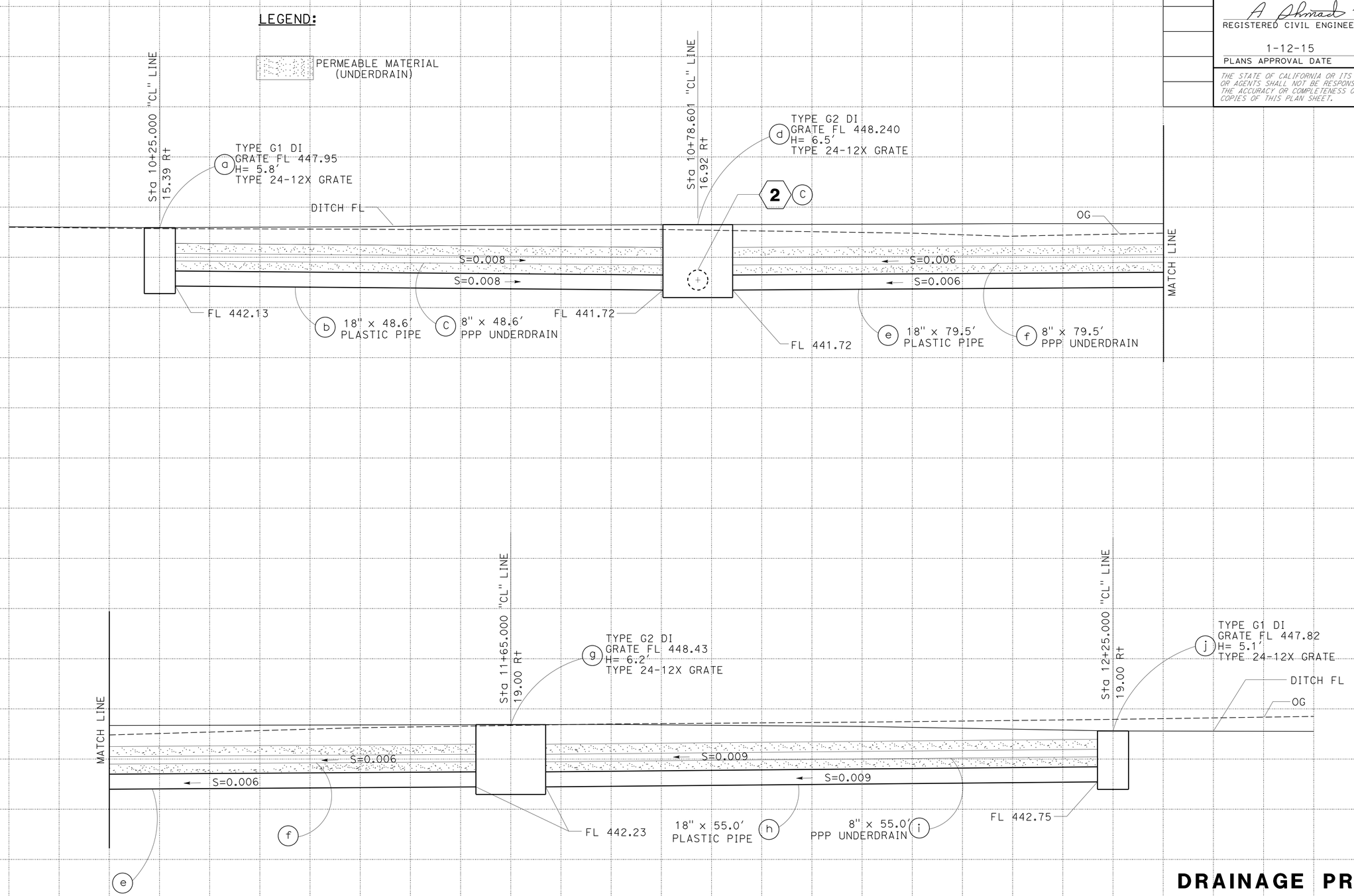

DRAINAGE SYSTEM No. 1

Sta 10+25.00 TO Sta 12+25.00

DRAINAGE PROFILES
DP-1

SCALE: Horiz 1"=5'
Vert 1"=5'

REVISED BY	DATE REVISED
RF	12-29-14

CALCULATED-DESIGNED BY: RITCHIE FERRER
CHECKED BY: AHMAD AHMAD
FUNCTIONAL SUPERVISOR: ALI ALQATAMI

STATE OF CALIFORNIA - DEPARTMENT OF TRANSPORTATION
Caltrans
06-DESIGN

LAST REVISION DATE PLOTTED => 15-JAN-2015
12-29-14 TIME PLOTTED => 13:19

Dist	COUNTY	ROUTE	POST MILES TOTAL PROJECT	SHEET No.	TOTAL SHEETS
04	Mrn	1	11.0	9	76

A Ahmad 11/03/14
REGISTERED CIVIL ENGINEER DATE

1-12-15
PLANS APPROVAL DATE

REGISTERED PROFESSIONAL ENGINEER
AHMAD K. AHMAD
No. 69064
Exp. 6-30-16
CIVIL
STATE OF CALIFORNIA

THE STATE OF CALIFORNIA OR ITS OFFICERS OR AGENTS SHALL NOT BE RESPONSIBLE FOR THE ACCURACY OR COMPLETENESS OF SCANNED COPIES OF THIS PLAN SHEET.

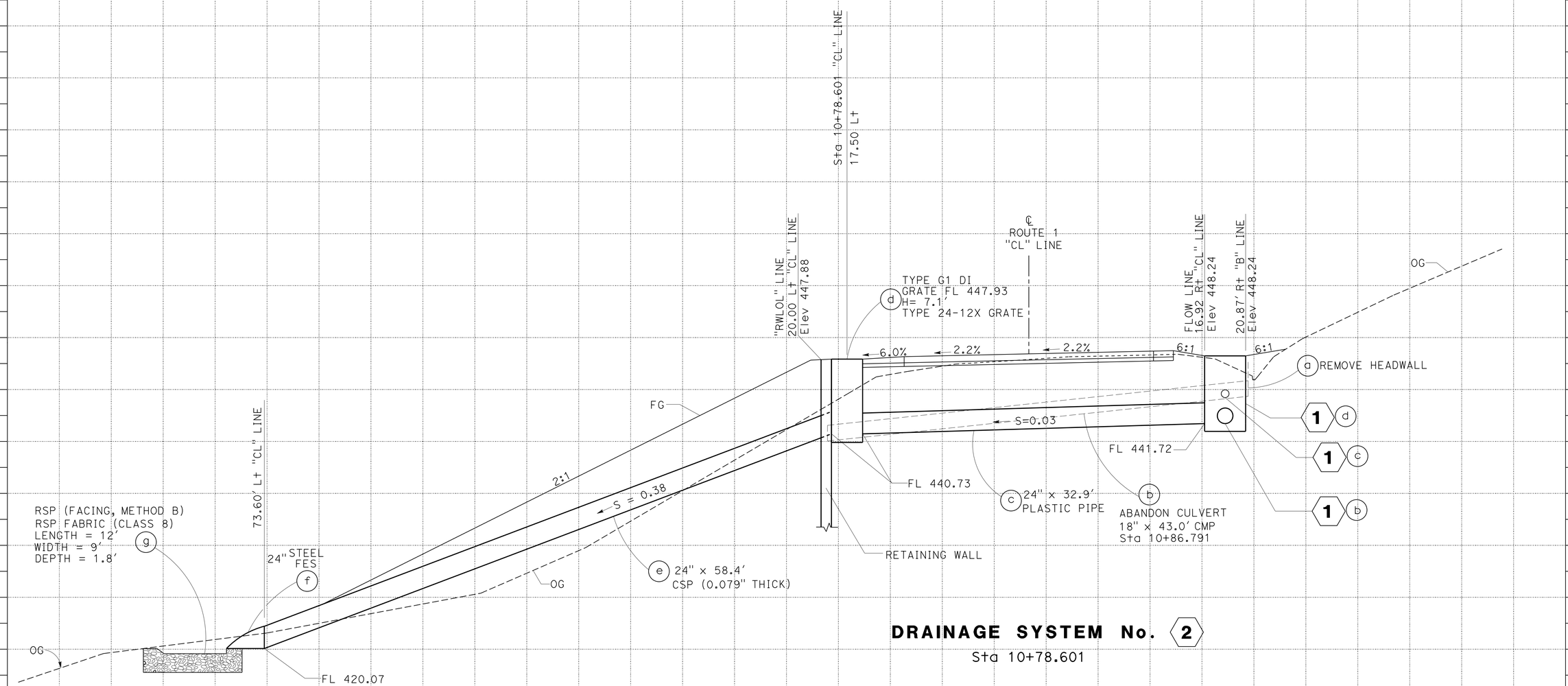

DRAINAGE SYSTEM No. 2

Sta 10+78.601

DRAINAGE PROFILES
DP-2

SCALE: Horiz 1"=5'
Vert 1"=5'

REVISED BY	RF
DATE REVISED	11-17-14
CALCULATED-DESIGNED BY	RITCHIE FERRER
CHECKED BY	AHMAD AHMAD
FUNCTIONAL SUPERVISOR	ALI ALQATAMI

STATE OF CALIFORNIA - DEPARTMENT OF TRANSPORTATION
Caltrans
06-DESIGN

LAST REVISION 11-17-14 DATE PLOTTED => 15-JAN-2015 TIME PLOTTED => 13:20

Dist	COUNTY	ROUTE	POST MILES TOTAL PROJECT	SHEET No.	TOTAL SHEETS
04	Mrn	1	11.0	10	76

A Ahmad 10/01/14
REGISTERED CIVIL ENGINEER DATE

1-12-15
PLANS APPROVAL DATE

REGISTERED PROFESSIONAL ENGINEER
AHMAD K. AHMAD No. 69064 Exp. 6-30-16 CIVIL
STATE OF CALIFORNIA

THE STATE OF CALIFORNIA OR ITS OFFICERS OR AGENTS SHALL NOT BE RESPONSIBLE FOR THE ACCURACY OR COMPLETENESS OF SCANNED COPIES OF THIS PLAN SHEET.

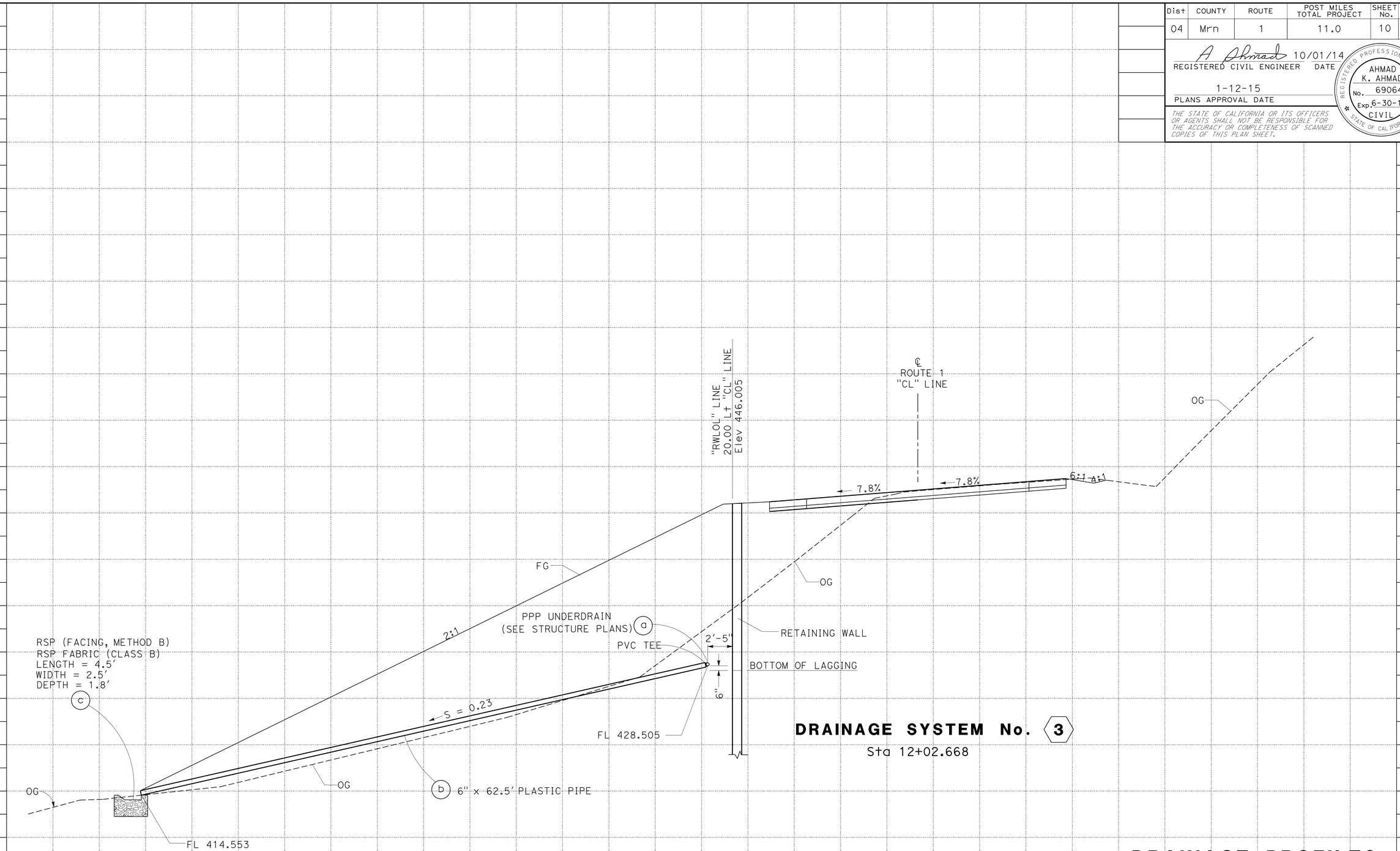

DRAINAGE SYSTEM No. 3
Sta 12+02.668

DRAINAGE PROFILES
DP-3

SCALE: Horiz 1"=5'
Vert 1"=5'

REVISED BY	RF
DATE REVISED	12-29-14
CALCULATED-DESIGNED BY	RITCHIE FERRER
CHECKED BY	AHMAD AHMAD
FUNCTIONAL SUPERVISOR	ALI ALQATAMI

STATE OF CALIFORNIA - DEPARTMENT OF TRANSPORTATION
Caltrans
06-DESIGN

LAST REVISION 12-29-14
DATE PLOTTED => 15-JAN-2015
TIME PLOTTED => 13:20

Dist	COUNTY	ROUTE	POST MILES TOTAL PROJECT	SHEET No.	TOTAL SHEETS
04	Mrn	1	11.0	11	76

A Ahmad 10-01-14
REGISTERED CIVIL ENGINEER DATE

1-12-15
PLANS APPROVAL DATE

REGISTERED PROFESSIONAL ENGINEER
AHMAD
K. AHMAD
No. 69064
Exp. 6-30-16
CIVIL
STATE OF CALIFORNIA

THE STATE OF CALIFORNIA OR ITS OFFICERS OR AGENTS SHALL NOT BE RESPONSIBLE FOR THE ACCURACY OR COMPLETENESS OF SCANNED COPIES OF THIS PLAN SHEET.

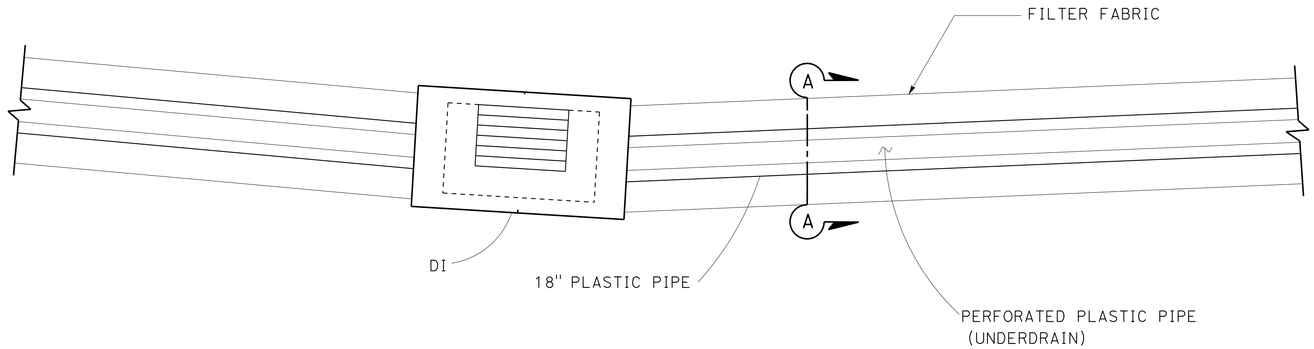

PLAN

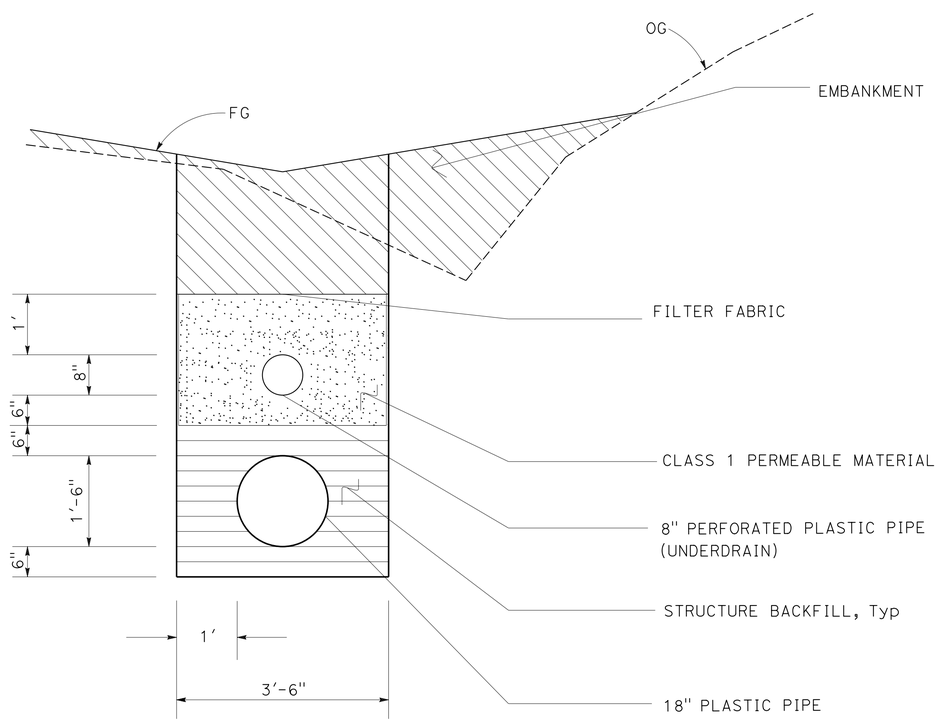

SECTION A-A

UNDERDRAIN DETAILS

DRAINAGE DETAILS

NO SCALE

DD-1

STATE OF CALIFORNIA - DEPARTMENT OF TRANSPORTATION
Caltrans
06-DESIGN

FUNCTIONAL SUPERVISOR: ALI ALQATAMI
CALCULATED-DESIGNED BY: RITCHIE FERRER
CHECKED BY: AHMAD AHMAD
REVISED BY: RF
DATE REVISED: 12-29-14

LAST REVISION 12-29-14 | DATE PLOTTED => 15-JAN-2015 | TIME PLOTTED => 13:20

Dist	COUNTY	ROUTE	POST MILES TOTAL PROJECT	SHEET No.	TOTAL SHEETS
04	Mrn	1	11.0	12	76

A Ahmad 10/01/14
REGISTERED CIVIL ENGINEER DATE

1-12-15
PLANS APPROVAL DATE

REGISTERED PROFESSIONAL ENGINEER
AHMAD K. AHMAD
No. 69064
Exp. 6-30-16
CIVIL
STATE OF CALIFORNIA

THE STATE OF CALIFORNIA OR ITS OFFICERS OR AGENTS SHALL NOT BE RESPONSIBLE FOR THE ACCURACY OR COMPLETENESS OF SCANNED COPIES OF THIS PLAN SHEET.

NOTES:

1. "D" REPRESENTS THE OUTSIDE DIAMETER OF THE PIPE CONNECTED TO THE FLARED-END SECTION.
2. FLARED END SECTION NOT REQUIRED AT STATION 12+02.668 (SEE DRAINAGE PROFILE SHEET DP-3).

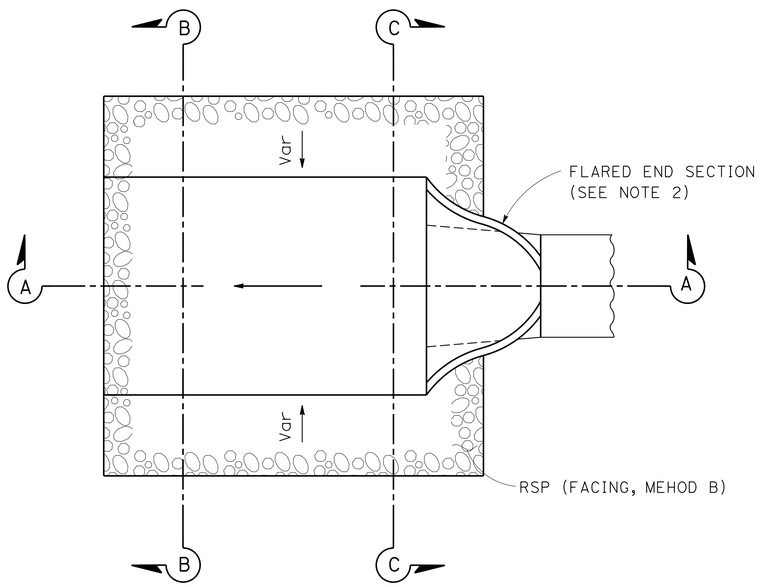

PLAN

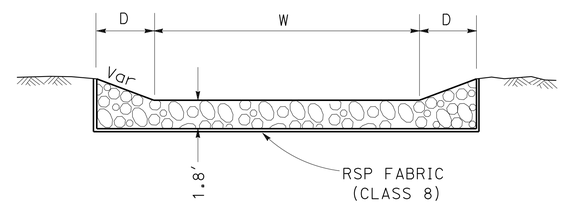

SECTION B-B

RSP DIMENSIONS

DRAINAGE PLAN SHEET No.	STATION	D	W
		ft	ft
DP-2	10+78.601	2.0	5.0
DP-3	12+02.668	0.5	1.5

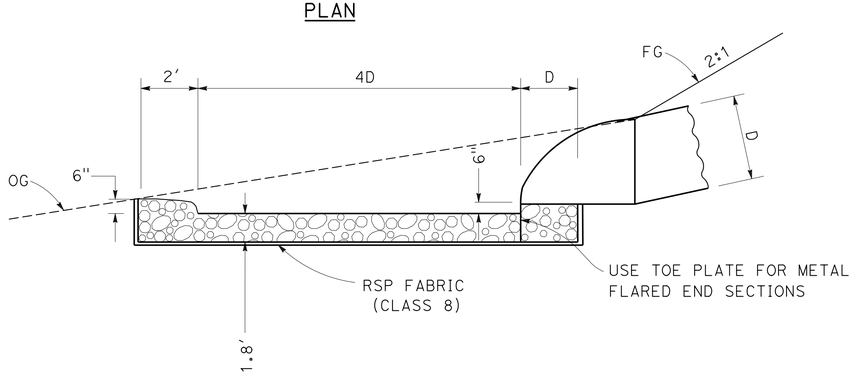

SECTION A-A

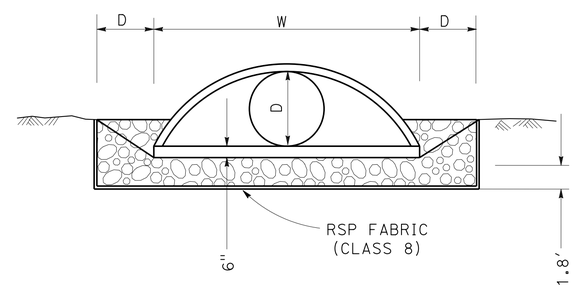

SECTION C-C

ROCK SLOPE PROTECTION DETAILS

DRAINAGE DETAILS
NO SCALE
DD-2

REVISED BY	RF
DATE REVISED	11-17-14
CALCULATED-DESIGNED BY	RITCHIE FERRER
CHECKED BY	AHMAD AHMAD
FUNCTIONAL SUPERVISOR	ALI ALQATAMI

STATE OF CALIFORNIA - DEPARTMENT OF TRANSPORTATION
Caltrans
06-DESIGN

LAST REVISION 11-17-14
DATE PLOTTED => 15-JAN-2015
TIME PLOTTED => 13:20

Dist	COUNTY	ROUTE	POST MILES TOTAL PROJECT	SHEET No.	TOTAL SHEETS
04	Mrn	1	11.0	13	76

A Ahmad 10/01/14
REGISTERED CIVIL ENGINEER DATE

1-12-15
PLANS APPROVAL DATE

REGISTERED PROFESSIONAL ENGINEER
AHMAD K. AHMAD
No. 69064
Exp. 6-30-16
CIVIL
STATE OF CALIFORNIA

THE STATE OF CALIFORNIA OR ITS OFFICERS OR AGENTS SHALL NOT BE RESPONSIBLE FOR THE ACCURACY OR COMPLETENESS OF SCANNED COPIES OF THIS PLAN SHEET.

NOTES:

ALUMINIZED COATINGS ARE NOT ALLOWED FOR CORRUGATED STEEL PIPE AND STEEL FLARED END SECTION.

DRAINAGE QUANTITIES

DRAINAGE PLAN SHEET No.	DRAINAGE SYSTEM No. ⬡	DRAINAGE UNIT ○	6" PLASTIC PIPE	PVC TEE (N)	18" PLASTIC PIPE	24" PLASTIC PIPE	8" PERFORATED PLASTIC PIPE UNDERDRAIN	24" CSP (.079" THICK)	24" STEEL FES	FRAME & GRATE	RSP (FACING, METHOD B)	ROCK STAIN	RSP FABRIC (CLASS 8)	HEIGHT OF INLET "H" (N)	MINOR CONCRETE (MINOR STRUCTURE)	ABANDON CULVERT	REMOVE HEADWALL	STRUCTURE BACKFILL (CULVERT) (N)	CLASS 1 PERMEABLE MATERIAL (BLANKET)	FILTER FABRIC (N)	PIPE JOINT CLASSIFICATION (N)	DESCRIPTION	STATION	DRAINAGE PLAN SHEET No.	DRAINAGE SYSTEM No. ⬡	DRAINAGE UNIT ○
			LF	EA	LF	LF	LF	LF	EA	EA	CY	SQFT	SQYD	FT	CY	LF	EA	CY	CY	SQYD						
D-1	1	a								1				5.8	1.6							TYPE G1 DI, TYPE 24-12X GRATE	"CL" LINE 10+25.000	D-1	1	a
		b			48.6													12.6			POSITIVE	18" PLASTIC PIPE				b
		c					48.6												16.7	51.3		8" PERFORATED PLASTIC PIPE UNDERDRAIN				c
		d								1				6.5	2.2							TYPE G2 DI, TYPE 24-12X GRATE	"CL" LINE 10+78.601			d
		e			79.5													20.6			POSITIVE	18" PLASTIC PIPE				e
		f					79.5												27.3	83.9		8" PERFORATED PLASTIC PIPE UNDERDRAIN				f
		g								1				6.2	2.1							TYPE G2 DI, TYPE 24-12X GRATE	"CL" LINE 11+65.000			g
		h			55.0													14.2			POSITIVE	18" PLASTIC PIPE				h
		i					55.0												18.9	58.1		8" PERFORATED PLASTIC PIPE UNDERDRAIN				i
	1	j								1				5.1	1.4							TYPE G1 DI, TYPE 24-12X GRATE	"CL" LINE 12+25.000		1	j
D-1	2	a															1					REMOVE HEADWALL (3.5′ x 6′)	"CL" LINE 10+86.970	D-1	2	a
		b														43.0						ABANDON 18" CULVERT	"CL" LINE 10+86.970			b
		c				32.9												12.2			POSITIVE	24" PLASTIC PIPE				c
		d								1				7.1	1.9							TYPE G1 DI, TYPE 24-12X GRATE	"CL" LINE 10+78.601			d
		e						58.4										16.8			POSITIVE	24" CSP (.079" THICK)				e
		f							1													24" STEEL FES				f
	2	g									7.2	108	25.1									RSP (FACING, METHOD B) 12′ x 9′ x 1.8′			2	g
D-1	3	a																				STRUCTURE ITEM. SEE STRUCTURE PLANS.		D-1	3	a
		b	62.5	1																		6" PLASTIC PIPE	"CL" LINE 12+02.668			b
	3	c									0.8	12	7.2									RSP (FACING, METHOD B) 4.5′ x 2.5′ x 1.8′			3	c
			62.5		183.1	32.9	183.1	58.4	1	5	8.0	120	32.3		9.2	43.0	1		62.9			TOTAL				

(N) NOT A SEPARATE PAY ITEM, FOR INFORMATION ONLY.

DRAINAGE QUANTITIES
DQ-1

REVISED BY	RF
DATE REVISED	12-29-14

CALCULATED-DESIGNED BY: RITCHIE FERRER
CHECKED BY: AHMAD AHMAD
FUNCTIONAL SUPERVISOR: ALI ALQATAMI

STATE OF CALIFORNIA - DEPARTMENT OF TRANSPORTATION
Caltrans®
06-DESIGN

LAST REVISION 01-07-15 | DATE PLOTTED => 15-JAN-2015 | TIME PLOTTED => 13:20

Dist	COUNTY	ROUTE	POST MILES TOTAL PROJECT	SHEET No.	TOTAL SHEETS
04	Mrn	1	11.0	14	76

Hassan Taha 12-29-14
REGISTERED CIVIL ENGINEER DATE

1-12-15
PLANS APPROVAL DATE

REGISTERED PROFESSIONAL ENGINEER
HASSAN M. TAHA
No. 60130
Exp. 06/30/16
CIVIL
STATE OF CALIFORNIA

THE STATE OF CALIFORNIA OR ITS OFFICERS OR AGENTS SHALL NOT BE RESPONSIBLE FOR THE ACCURACY OR COMPLETENESS OF SCANNED COPIES OF THIS PLAN SHEET.

NOTES:

1. EXACT SIGN LOCATIONS TO BE DETERMINED BY THE ENGINEER.
2. FOR ADDITIONAL CONSTRUCTION AREA SIGNS, REFER TO TRAFFIC HANDLING PLAN SHEETS.

STATIONARY MOUNTED CONSTRUCTION AREA SIGNS

SIGN No.	SIGN CODE	SIGN MESSAGE	PANEL SIZE	No. OF POST AND SIZE	No. OF SIGNS
A	W20-1	ROAD WORK AHEAD	48" x 48"	1 - 6" x 6"	2
B	G20-2	END ROAD WORK	36" x 18"	1 - 4" x 4"	2

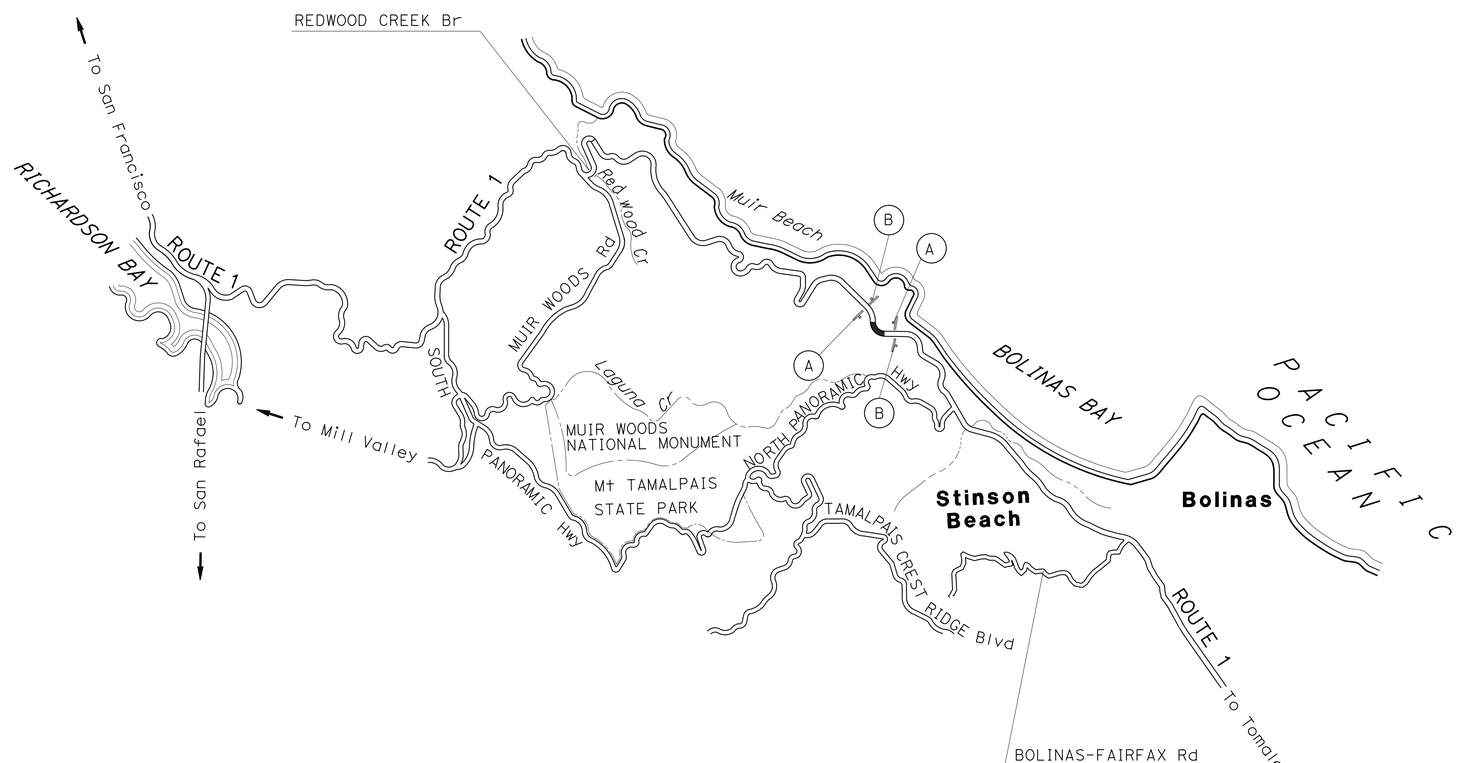

APPROVED FOR CONSTRUCTION AREA SIGN WORK ONLY

CONSTRUCTION AREA SIGNS

NO SCALE

CS-1

VP	12-29-14		
REVISED BY	DATE REVISED		
VANIK POGOSYAN		CALCULATED-DESIGNED BY	
HASSAN TAHA		CHECKED BY	
FUNCTIONAL SUPERVISOR			
MOHAMMED QATAMI			

STATE OF CALIFORNIA - DEPARTMENT OF TRANSPORTATION
Caltrans
06-TRAFFIC DESIGN

LAST REVISION 12-29-14 | DATE PLOTTED => 15-JAN-2015 | TIME PLOTTED => 13:20

Dist	COUNTY	ROUTE	POST MILES TOTAL PROJECT	SHEET No.	TOTAL SHEETS
04	Mrn	1	11.0	15	76

REGISTERED CIVIL ENGINEER 12-10-14 DATE

1-12-15
PLANS APPROVAL DATE

REGISTERED PROFESSIONAL ENGINEER HASSAN M. TAHA No. 60130 Exp. 06/30/16 CIVIL STATE OF CALIFORNIA

THE STATE OF CALIFORNIA OR ITS OFFICERS OR AGENTS SHALL NOT BE RESPONSIBLE FOR THE ACCURACY OR COMPLETENESS OF SCANNED COPIES OF THIS PLAN SHEET.

LEGEND:

- Temp RAILING (TYPE K)
- CHANNELIZERS (SURFACE MOUNTED)
- (X) TEMPORARY ROADSIDE SIGN No.
- Temp CRASH CUSHION

NOTES:

1. FOR ADDITIONAL CONSTRUCTION AREA SIGNS REFER TO SHEET CS-1.
2. EXACT SIGN LOCATIONS TO BE DETERMINED BY THE ENGINEER.

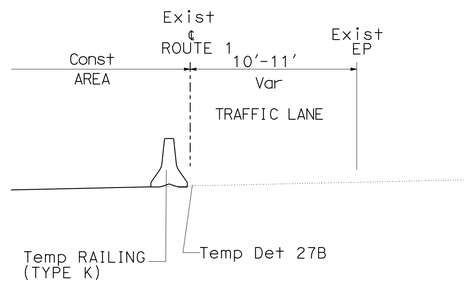

SECTION A-A

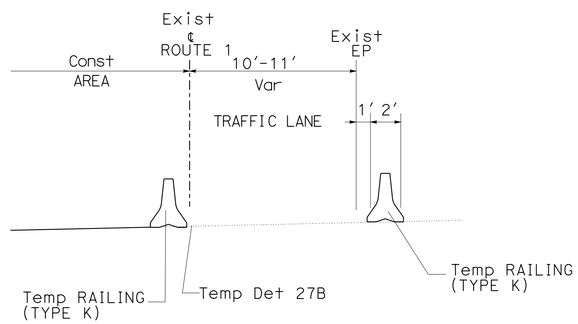

SECTION B-B

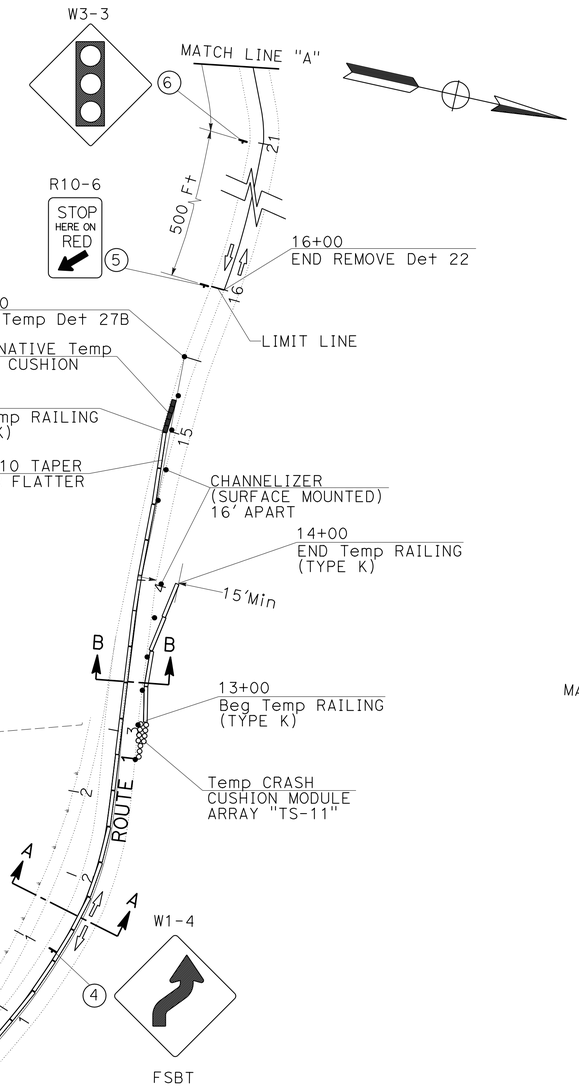

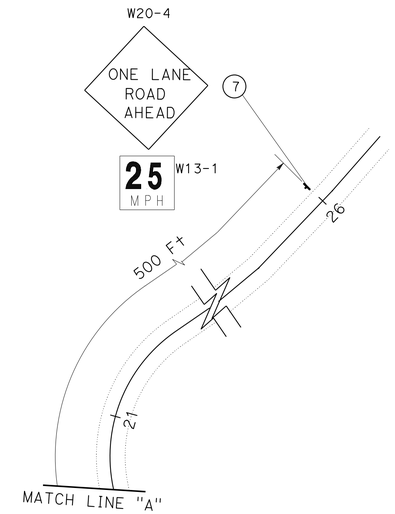

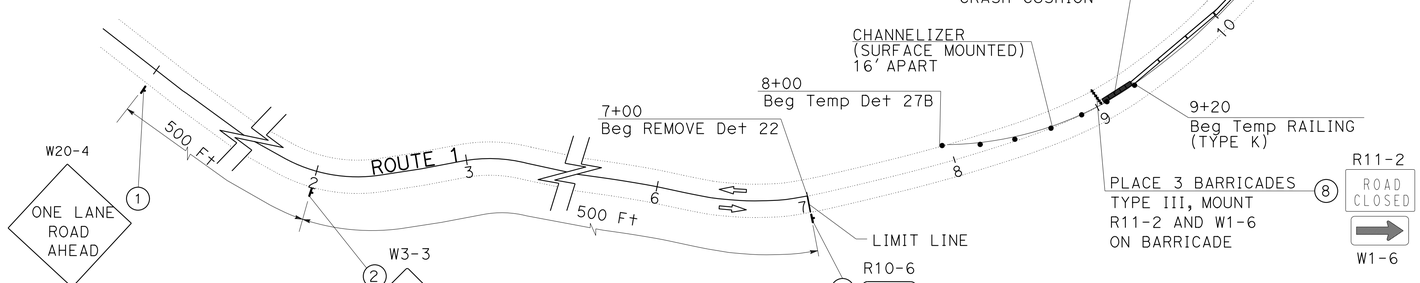

APPROVED FOR TRAFFIC HANDLING WORK ONLY

TRAFFIC HANDLING PLAN
(STAGE 1)

SCALE: 1"=50'

TH-1

STATE OF CALIFORNIA - DEPARTMENT OF TRANSPORTATION
Caltrans® 06-TRAFFIC DESIGN

FUNCTIONAL SUPERVISOR: MOHAMMED QATAMI
CALCULATED-DESIGNED BY: VANIK POGOSYAN
CHECKED BY: HASSAN TAHA
REVISED BY: VP
DATE REVISED: 12-29-14

LAST REVISION 12-29-14 | DATE PLOTTED => 15-JAN-2015 | TIME PLOTTED => 13:20

Dist	COUNTY	ROUTE	POST MILES TOTAL PROJECT	SHEET No.	TOTAL SHEETS
04	Mrn	1	11.0	16	76

REGISTERED CIVIL ENGINEER 12-10-14 DATE

1-12-15
PLANS APPROVAL DATE

REGISTERED PROFESSIONAL ENGINEER HASSAN M. TAHA No. 60130 Exp. 06/30/16 CIVIL STATE OF CALIFORNIA

THE STATE OF CALIFORNIA OR ITS OFFICERS OR AGENTS SHALL NOT BE RESPONSIBLE FOR THE ACCURACY OR COMPLETENESS OF SCANNED COPIES OF THIS PLAN SHEET.

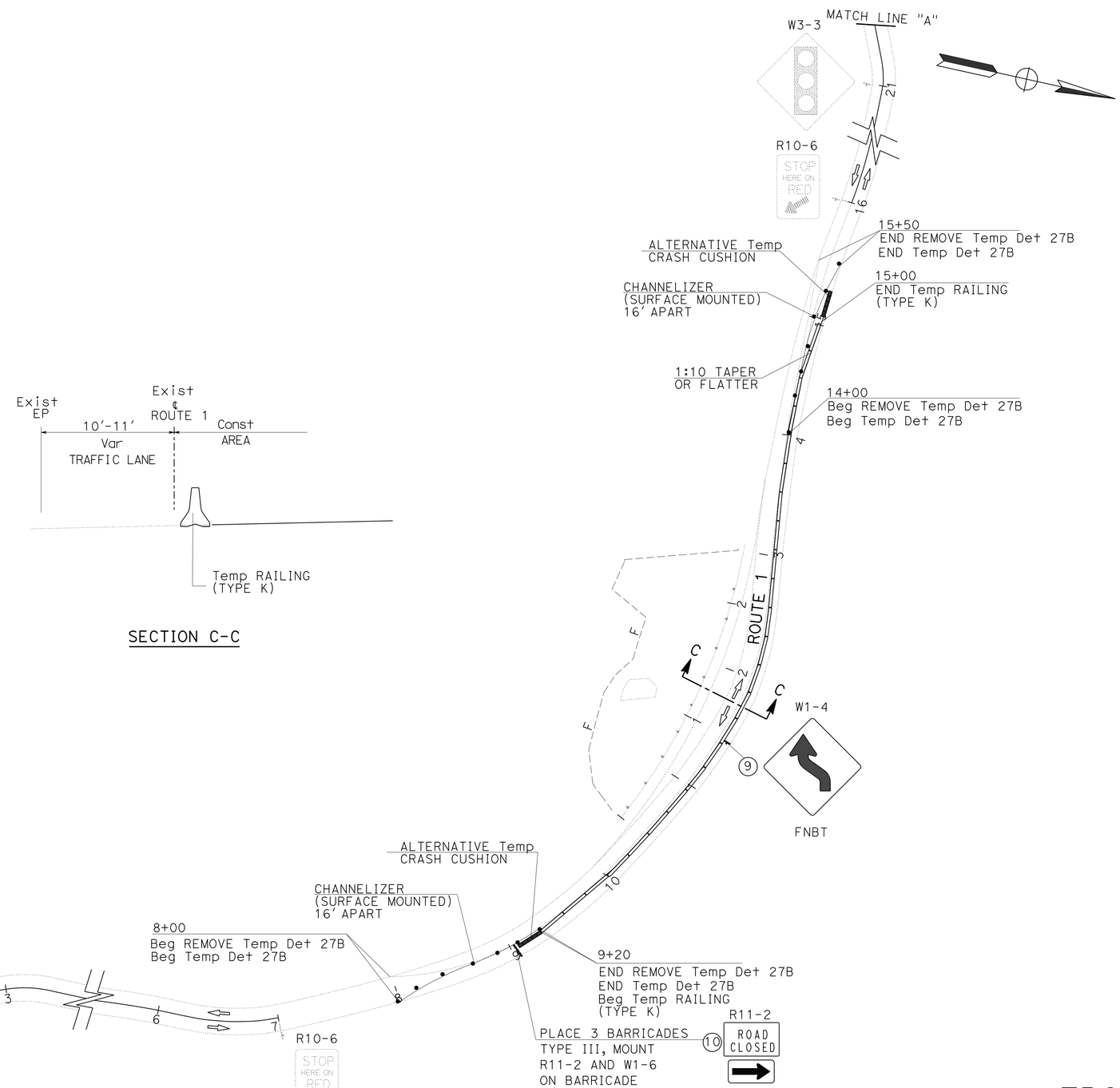

SECTION C-C

APPROVED FOR TRAFFIC HANDLING WORK ONLY

TRAFFIC HANDLING PLAN
(STAGE 2)

SCALE: 1"=50'

TH-2

STATE OF CALIFORNIA - DEPARTMENT OF TRANSPORTATION
Caltrans 06-TRAFFIC DESIGN

FUNCTIONAL SUPERVISOR: MOHAMMED QATAMI
CALCULATED-DESIGNED BY: VANIK POGOSYAN
CHECKED BY: HASSAN TAHA
REVISED BY: VP
DATE REVISED: 12-29-14

LAST REVISION 12-29-14 | DATE PLOTTED => 15-JAN-2015 | TIME PLOTTED => 13:20

BORDER LAST REVISED 7/2/2010 | USERNAME => s113541 | DGN FILE => 0400001217md002.dgn | RELATIVE BORDER SCALE IS IN INCHES 0 1 2 3 | UNIT 1513 | PROJECT NUMBER & PHASE 04000012171

Dist	COUNTY	ROUTE	POST MILES TOTAL PROJECT	SHEET No.	TOTAL SHEETS
04	Mrn	1	11.0	17	76

REGISTERED CIVIL ENGINEER 12-10-14 DATE

1-12-15
PLANS APPROVAL DATE

REGISTERED PROFESSIONAL ENGINEER HASSAN M. TAHA No. 60130 Exp. 06/30/16 CIVIL STATE OF CALIFORNIA

THE STATE OF CALIFORNIA OR ITS OFFICERS OR AGENTS SHALL NOT BE RESPONSIBLE FOR THE ACCURACY OR COMPLETENESS OF SCANNED COPIES OF THIS PLAN SHEET.

STATIONARY MOUNTED CONSTRUCTION AREA SIGNS (TRAFFIC HANDLING)

SHEET No.	SIGN No.	SIGN CODE	SIGN MESSAGE	PANEL SIZE	No. OF POST AND SIZE	No. OF SIGNS
TH-1	1	W20-4	AS SHOWN ON PLAN	36" x 36"	1-4" x 4"	1
		W13-1	AS SHOWN ON PLAN	36" x 24"		
	2	W3-3	AS SHOWN ON PLAN	36" x 36"	MOUNT ON POLE	1
	3	R10-6	AS SHOWN ON PLAN	36" x 24"	1-4" x 4"	1
	4	W1-4	AS SHOWN ON PLAN	30" x 30"	1-4" x 4"	1
	5	R10-6	AS SHOWN ON PLAN	36" x 24"	1-4" x 4"	1
	6	W3-3	AS SHOWN ON PLAN	36" x 36"	MOUNT ON POLE	1
	7	W20-4	AS SHOWN ON PLAN	36" x 36"	1-4" x 4"	1
		W13-1	AS SHOWN ON PLAN	36" x 24"		
	8	R11-2	AS SHOWN ON PLAN	48" x 30"	ON BARRICADE	1
		W1-6	AS SHOWN ON PLAN	48" x 18"		
TH-2	9	W1-4	AS SHOWN ON PLAN	30" x 30"	1-4" x 4"	1
	10	R11-2	AS SHOWN ON PLAN	48" x 30"	ON BARRICADE	1
		W1-6	AS SHOWN ON PLAN	48" x 18"		

ALTERNATIVE TEMPORARY CRASH CUSHION

SHEET No.	EA
TH-1	2
TH-2	2
TOTAL	4

TEMPORARY CRASH CUSHION MODULE

SHEET No.	ARRAY "TS-11"
	EA
TH-1	11

CHANNELIZER (SURFACE MOUNTED)

SHEET No.	EA
TH-1	22
TH-2	14
TOTAL	36

TYPE III BARRICADE

SHEET No.	EA
TH-1	3
TH-2	3
TOTAL	6

TEMPORARY RAILING (TYPE K)

SHEET No.	STA TO STA	LF
TH-1	9+20 TO 15+00	580
	13+00 TO 14+00	100
TH-2	9+20 TO 15+00	580
TOTAL		1260

TEMPORARY PAVEMENT DELINEATION

SHEET No.	LOCATION STA TO STA	DETAIL No.	REMOVE PAVEMENT MARKER	REMOVE YELLOW THERMOPLASTIC TRAFFIC STRIPE (HAZARDOUS WASTE)	TEMPORARY TRAFFIC STRIPE (PAINT)	REMOVE PAINTED TRAFFIC STRIPE	TEMPORARY PAVEMENT MARKING (PAINT)		REMOVE PAINTED PAVEMENT MARKING
			EA	LF	LF	LF	DESCRIPTION	SQFT	SQFT
TH-1	7+00 TO 16+00	22	78	1800			2-LIMIT LINE	24	24
	8+00 TO 15+50	27B			750				
	8+00 TO 9+20	27B				120			
	14+00 TO 15+50	27B				150			
TH-2	8+00 TO 9+20	27B			120				
	14+00 TO 15+50	27B			150				
	8+00 TO 15+50	27B				750			
TOTAL			78	1800	1020	1020		24	24

TRAFFIC HANDLING QUANTITIES

THQ-1

REVISED BY	DATE REVISED
VP	12-10-14

CALCULATED-DESIGNED BY	CHECKED BY
VANIK POGOSYAN	HASSAN TAHA

FUNCTIONAL SUPERVISOR: MOHAMMED QATAMI

STATE OF CALIFORNIA - DEPARTMENT OF TRANSPORTATION
Caltrans 06-TRAFFIC DESIGN

LAST REVISION 12-10-14 | DATE PLOTTED => 15-JAN-2015 | TIME PLOTTED => 13:20

Dist	COUNTY	ROUTE	POST MILES TOTAL PROJECT	SHEET No.	TOTAL SHEETS
04	Mrn	1	11.0	18	76

Hassan Taha 12-10-14
REGISTERED CIVIL ENGINEER DATE

1-12-15
PLANS APPROVAL DATE

REGISTERED PROFESSIONAL ENGINEER
HASSAN M. TAHA
No. 60130
Exp. 06/30/16
CIVIL
STATE OF CALIFORNIA

THE STATE OF CALIFORNIA OR ITS OFFICERS OR AGENTS SHALL NOT BE RESPONSIBLE FOR THE ACCURACY OR COMPLETENESS OF SCANNED COPIES OF THIS PLAN SHEET.

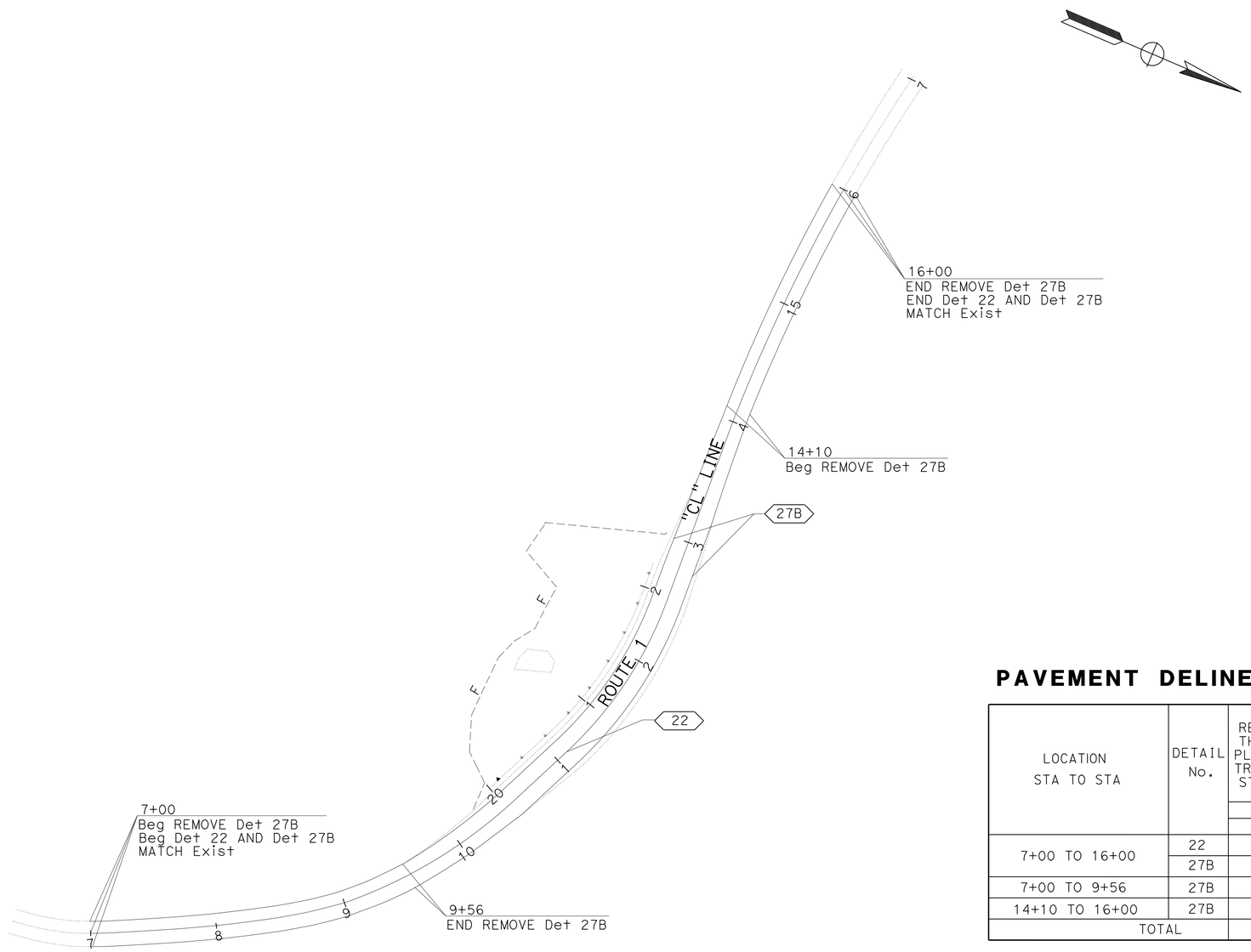

PAVEMENT DELINEATION QUANTITIES

LOCATION STA TO STA	DETAIL No.	REMOVE THERMO PLASTIC TRAFFIC STRIPE	PAVEMENT MARKER (RETRO-REFLECTIVE)	THERMOPLASTIC TRAFFIC STRIPE
		4"	TYPE D	4"
		LF	EA	LF
7+00 TO 16+00	22		78	1800
	27B			1800
7+00 TO 9+56	27B	256		
14+10 TO 16+00	27B	190		
TOTAL		446	78	3600

PAVEMENT DELINEATION PLAN AND QUANTITIES

SCALE: 1"=50'

PD-1

APPROVED FOR PAVEMENT DELINEATION WORK ONLY

STATE OF CALIFORNIA - DEPARTMENT OF TRANSPORTATION
Caltrans® 06-TRAFFIC DESIGN

FUNCTIONAL SUPERVISOR: MOHAMMED QATAMI
CALCULATED-DESIGNED BY: VANIK POGOSYAN
CHECKED BY: HASSAN TAHA
REVISED BY: VP
DATE REVISED: 12-10-14

LAST REVISION 12-15-14 | DATE PLOTTED => 15-JAN-2015 | TIME PLOTTED => 13:20

Dist	COUNTY	ROUTE	POST MILES TOTAL PROJECT	SHEET No.	TOTAL SHEETS
4	Mrn	1	11.0	19	76

A Ahmad 10/01/14
REGISTERED CIVIL ENGINEER DATE

1-12-15
PLANS APPROVAL DATE

REGISTERED PROFESSIONAL ENGINEER
AHMAD K. AHMAD
No. 69064
Exp. 6-30-16
CIVIL
STATE OF CALIFORNIA

THE STATE OF CALIFORNIA OR ITS OFFICERS OR AGENTS SHALL NOT BE RESPONSIBLE FOR THE ACCURACY OR COMPLETENESS OF SCANNED COPIES OF THIS PLAN SHEET.

EARTHWORK QUANTITIES

DIRECTION	Sta TO Sta	ROADWAY EXCAVATION (NATURALLY OCCURRING ASBESTOS)	EMBANKMENT (N)	IMPORTED BORROW
		CY	CY	CY
NB/SB	9+55.96 TO 14+09.89	380	4,280	3,780

(N) NOT A SEPARATE PAY ITEM, FOR INFORMATION ONLY.

ROADWAY QUANTITIES

DIRECTION	Sta TO Sta	REMOVE ASPHALT CONCRETE PAVEMENT	CLASS 4 AGGREGATE SUBBASE	HOT MIX ASPHALT (TYPE A)	TACK COAT	PRIME COAT
		CY	CY	TON	TON	TON
NB/SB	9+55.96 TO 14+09.89	130	249	684 *	1.0	0.5

* QUANTITY INCLUDES SAFETY EDGE TREATMENT.

SUMMARY OF QUANTITIES

Q-1

REVISED BY	DATE REVISED
RF	12-29-14

CALCULATED-DESIGNED BY: RITCHIE FERRER
CHECKED BY: AHMAD AHMAD
FUNCTIONAL SUPERVISOR: ALI ALQATAMI

STATE OF CALIFORNIA - DEPARTMENT OF TRANSPORTATION
Caltrans
06-DESIGN

LAST REVISION 01-07-15
DATE PLOTTED => 15-JAN-2015
TIME PLOTTED => 13:20

Dist	COUNTY	ROUTE	POST MILES TOTAL PROJECT	SHEET No.	TOTAL SHEETS
04	Mrn	1	11.0	20	76

LICENSED LANDSCAPE ARCHITECT

1-12-15
PLANS APPROVAL DATE

LICENSED LANDSCAPE ARCHITECT — DAVID WARREN YAM No. 1929 — Signature — 11-30-15 Renewal Date — 12-15-14 Date — STATE OF CALIFORNIA

THE STATE OF CALIFORNIA OR ITS OFFICERS OR AGENTS SHALL NOT BE RESPONSIBLE FOR THE ACCURACY OR COMPLETENESS OF SCANNED COPIES OF THIS PLAN SHEET.

PLANTING LEGEND

PLANT GROUP	PLANT No.	SYMBOL	BOTANICAL NAME	COMMON NAME	SIZE	QUANTITY EACH	HOLE SIZE (INCH) Dia	HOLE SIZE (INCH) DEPTH	BASIN TYPE	SOIL AMENDMENT TYPE	SOIL AMENDMENT RATE	IRON SULFATE RATE	ORGANIC FERTILIZER (1) PLANTING	ORGANIC FERTILIZER (1) PLT ESTB	BASIN MULCH TYPE	BASIN MULCH CY	STAKING	PLANTING LIMITS MINIMUM DISTANCE (ft) FROM ETW	Pvmt	FENCE	WALL	PAVED DITCH	EARTH DITCH	ON CENTER (ft)	REMARKS
M	1		ACHILLEA MILLEFOLIUM	WHITE YARROW	LINER	145	(3)	(3)	(4)	—	—	—	—	28LBS/ 1000 SQFT	—	—	—	—	6	3	3	4	3	3	(12) 2"Dia. X 7"LONG
	2		ARTEMISIA CALIFORNICA	CALIFORNIA SAGEBRUSH	LINER	215	(3)	(3)	(4)	—	—	—	—	28LBS/ 1000 SQFT	—	—	—	—	8	6	6	5	6	6	(12) 2"Dia. X 7"LONG
	3		BACCHARIS PILULARIS	COYOTE BRUSH	LINER	210	(3)	(3)	(4)	—	—	—	—	28LBS/ 1000 SQFT	—	—	—	—	8	6	6	5	6	6	(12) 2"Dia. X 7"LONG
	4		BROMUS CARINATUS	COASTAL CALIFORNIA BROME	LINER	210	(3)	(3)	(4)	—	—	—	—	28LBS/ 1000 SQFT	—	—	—	—	4	3	3	3	3	3	(12) 2"Dia. X 7"LONG
	5		ELYMUS GLAUCUS	BLUE WILDRYE	LINER	175	(3)	(3)	(4)	—	—	—	—	28LBS/ 1000 SQFT	—	—	—	—	4	3	3	3	3	3	(12) 2"Dia. X 7"LONG
	6		MIMULUS AURANTIACUS	STICKY MONKEY FLOWER	LINER	135	(3)	(3)	(4)	—	—	—	—	28LBS/ 1000 SQFT	—	—	—	—	4	3	3	3	3	3	(12) 2"Dia. X 7"LONG

APPLICABLE WHEN CIRCLED:

(1) - QUANTITIES SHOWN ARE "PER PLANT" UNLESS SHOWN AS SQFT OR SQYD APPLICATION RATES
2 - BASIN MULCH IS INCLUDED WITH MULCH QUANTITIES SHOWN ON PLANTING PLAN
(3) - SUFFICIENT TO RECEIVE ROOT BALL AND AMENDMENTS IF REQUIRED
(4) - SEE DETAIL
5 - SEE SPECIAL PROVISIONS
6 - SEE STANDARD SPECIFICATIONS
7 - AS SHOWN ON PLANS
8 - UNLESS OTHERWISE SHOWN ON PLANS
9 - FOLIAGE PROTECTOR REQUIRED
10 - ROOT PROTECTOR REQUIRED
11 - ROOT BARRIER REQUIRED
(12) - DEPARTMENT-FURNISHED

ABBREVIATIONS:

S - SPHAGNUM PEAT MOSS
N - NITROLIZED FIR BARK
V - VERMICULITE
P - PERLITE
TB - TREE BARK
WC - WOOD CHIP
SB - SHREDDED BARK
TT - TREE TRIMMING

NOTE:

UNDERLINED PORTIONS OF BOTANICAL NAME INDICATE ABBREVIATIONS USED ON PLANTING PLANS.

REVISED BY: AKWAN — DATE REVISED: 10/31/14
ANGELA KWAN — DAVID YAM
CALCULATED-DESIGNED BY — CHECKED BY
SENIOR LANDSCAPE ARCHITECT: DAVID YAM

STATE OF CALIFORNIA - DEPARTMENT OF TRANSPORTATION
Caltrans
WATER QUALITY

PLANT LEGEND
PL-1

LAST REVISION 12-15-14 | DATE PLOTTED => 15-JAN-2015 | TIME PLOTTED => 13:20

Dist	COUNTY	ROUTE	POST MILES TOTAL PROJECT	SHEET No.	TOTAL SHEETS
04	Mrn	1	11.0	21	76

LICENSED LANDSCAPE ARCHITECT

1-12-15

PLANS APPROVAL DATE

LICENSED LANDSCAPE ARCHITECT
DAVID WARREN YAM No. 1929
Expiration Date
11-30-15
Renewal Date
12-15-14
Date
STATE OF CALIFORNIA

THE STATE OF CALIFORNIA OR ITS OFFICERS OR AGENTS SHALL NOT BE RESPONSIBLE FOR THE ACCURACY OR COMPLETENESS OF SCANNED COPIES OF THIS PLAN SHEET.

NOTE:

1. FOR ACCURATE RIGHT OF WAY DATA, CONTACT RIGHT OF WAY ENGINEERING AT THE DISTRICT OFFICE.
2. INDIVIDUAL PLANT LOCATIONS WITHIN PLANTING AREAS ARE APPROXIMATE AND MAY BE ADJUSTED WHEN APPROVED BY THE ENGINEER.

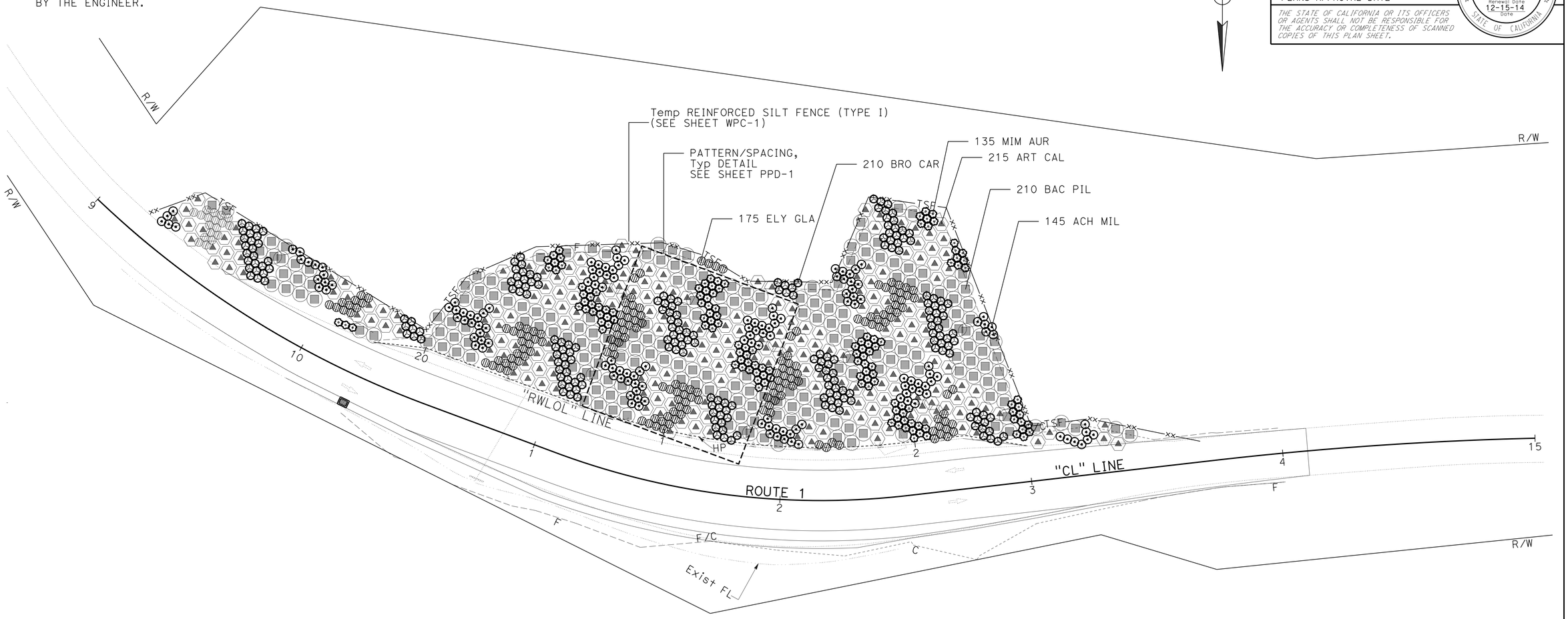

APPROVED FOR PLANTING WORK ONLY

PLANTING PLAN

SCALE: 1"=20'

PP-1

STATE OF CALIFORNIA - DEPARTMENT OF TRANSPORTATION

Caltrans®

WATER QUALITY

SENIOR LANDSCAPE ARCHITECT: DAVID YAM

CALCULATED-DESIGNED BY: ANGELA KWAN

CHECKED BY: DAVID YAM

REVISED BY: AKWAN

DATE REVISED: 12/29/14

LAST REVISION: 12-29-14

DATE PLOTTED => 15-JAN-2015

TIME PLOTTED => 13:20

Dist	COUNTY	ROUTE	POST MILES TOTAL PROJECT	SHEET No.	TOTAL SHEETS
04	Mrn	1	11.0	22	76

LICENSED LANDSCAPE ARCHITECT

1-12-15
PLANS APPROVAL DATE

LICENSED LANDSCAPE ARCHITECT
DAVID WARREN YAM No. 1929
Expiration Date
11-30-15
Renewal Date
12-15-14
Date
STATE OF CALIFORNIA

THE STATE OF CALIFORNIA OR ITS OFFICERS OR AGENTS SHALL NOT BE RESPONSIBLE FOR THE ACCURACY OR COMPLETENESS OF SCANNED COPIES OF THIS PLAN SHEET.

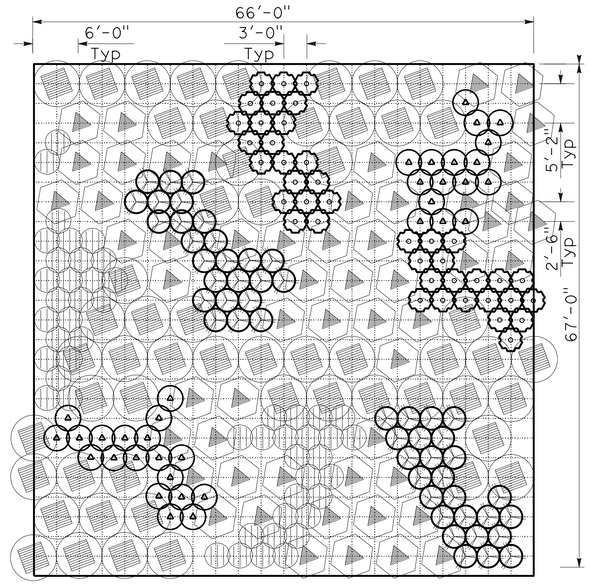

PLAN

PATTERN/ SPACING, Typ DETAIL

LEGEND

SYMBOL	BOTANICAL NAME	APPROXIMATE QUANTITY
	ACHILLEA MILLEFOLIUM	35
	ARTEMISIA CALIFORNICA	55
	BACCHARIS PILULARIS	55
	BROMUS CARINATUS	50
	ELYMUS GLAUCUS	50
	MIMULUS AURANTIACUS	40

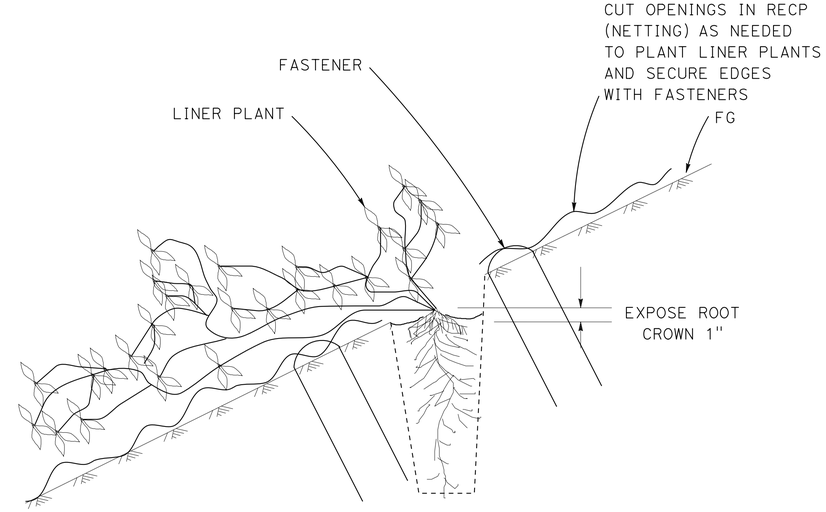

SECTION

LINER PLANTING DETAIL

PLANTING PLAN DETAILS
PPD-1

ANGELA KWAN	AKWAN
DAVID YAM	12/29/14
REVISED BY	DATE REVISED
CALCULATED-DESIGNED BY	
CHECKED BY	
SENIOR LANDSCAPE ARCHITECT	
DAVID YAM	

STATE OF CALIFORNIA - DEPARTMENT OF TRANSPORTATION
Caltrans®
WATER QUALITY

LAST REVISION 12-29-14
DATE PLOTTED => 20-FEB-2015
TIME PLOTTED => 12:50

Dist	COUNTY	ROUTE	POST MILES TOTAL PROJECT	SHEET No.	TOTAL SHEETS
04	Mrn	1	11.0	23	76

LICENSED LANDSCAPE ARCHITECT

1-12-15
PLANS APPROVAL DATE

LICENSED LANDSCAPE ARCHITECT
DAVID WARREN YAM No. 1929
11-30-15
Renewal Date
12-15-14
Date
STATE OF CALIFORNIA

THE STATE OF CALIFORNIA OR ITS OFFICERS OR AGENTS SHALL NOT BE RESPONSIBLE FOR THE ACCURACY OR COMPLETENESS OF SCANNED COPIES OF THIS PLAN SHEET.

EROSION CONTROL TYPE 1

SEQUENCE	ITEM	MATERIAL		APPLICATION RATE	REMARKS
		DESCRIPTION	TYPE		
STEP 1	FIBER ROLLS	FIBER ROLL	8" TO 10" DIA. AND 1.1LB/FT	-	TYPE 1 FIBER ROLL INSTALLATION
STEP 2	HYDROSEED	FERTILIZER	ORGANIC	1,200 LB/ACRE	-
		SEED	SEED MIX	44.15 LB/ACRE	
		FIBER	WOOD	500 LB/ACRE	
STEP 3	HYDROMULCH	FIBER	WOOD	1,500 LB/ACRE	-
		TACKIFIER	GUAR	125 LB/ACRE	

EROSION CONTROL TYPE 2

SEQUENCE	ITEM	MATERIAL		APPLICATION RATE	REMARKS
		DESCRIPTION	TYPE		
STEP 1	TOPSOIL	TOPSOIL	IMPORTED	1,610 CY/ACRE	12" DEPTH
STEP 2	ROLLED EROSION CONTROL PRODUCT	NETTING	TYPE B	-	
STEP 3	FIBER ROLLS	FIBER ROLL	8" TO 10" DIA. AND 1.1LB/FT	-	TYPE 1 FIBER ROLL INSTALLATION
STEP 4	HYDROSEED	FERTILIZER	ORGANIC	1,200 LB/ACRE	-
		SEED	SEED MIX	44.15 LB/ACRE	
		FIBER	WOOD	500 LB/ACRE	
STEP 5	HYDROMULCH	FIBER	WOOD	1,500 LB/ACRE	-
		TACKIFIER	GUAR	125 LB/ACRE	

SEED MIX

BOTANICAL NAME (COMMON NAME)	PERCENT GERMINATION (MINIMUM)	POUNDS PURE LIVE SEED PER ACRE (SLOPE MEASUREMENT)
LUPINUS BICOLOR [1] (PYGMY LEAF LUPINE)	50	4
ACHILLEA MILLEFOLIUM [1] (WHITE YARROW)	50	1
ARTEMISIA CALIFORNICA [1] (CALIFORNIA SAGEBRUSH)	35	1.5
BACCHARIS PILULARIS [1] (COYOTE BRUSH)	20	0.15
BROMUS CARINATUS var MARITIMUS [1] (COASTAL CALIFORNIA BROME)	65	11
MIMULUS AURANTIACUS [1] (STICKY MONKEY FLOWER)	35	0.5
ELYMUS GLAUCUS [1] (BLUE WILDRYE)	50	10
HORDEUM BRACHYANTHERUM [1] (MEADOW BARLEY)	47	11
VULPIA MICROSTACHYS [1] (SMALL FESCUE)	50	5
	TOTAL	44.15

[1] DEPARTMENT FURNISHED.

EROSION CONTROL LEGEND
ECL-1

STATE OF CALIFORNIA - DEPARTMENT OF TRANSPORTATION
Caltrans
WATER QUALITY

SENIOR LANDSCAPE ARCHITECT: DAVID YAM
CALCULATED-DESIGNED BY: ANGELA KWAN
CHECKED BY: DAVID YAM
REVISED BY: AKWAN
DATE REVISED: 10/31/14

LAST REVISION 12-15-14
DATE PLOTTED => 15-JAN-2015
TIME PLOTTED => 13:20

Dist	COUNTY	ROUTE	POST MILES TOTAL PROJECT	SHEET No.	TOTAL SHEETS
04	Mrn	1	11.0	24	76

LICENSED LANDSCAPE ARCHITECT

1-12-15
PLANS APPROVAL DATE

LICENSED LANDSCAPE ARCHITECT
DAVID WARREN YAM No. 1429
LICENSE EXPIRES
11-30-15
Renewal Date
12-15-14
Date
STATE OF CALIFORNIA

THE STATE OF CALIFORNIA OR ITS OFFICERS OR AGENTS SHALL NOT BE RESPONSIBLE FOR THE ACCURACY OR COMPLETENESS OF SCANNED COPIES OF THIS PLAN SHEET.

NOTE:

FOR ACCURATE RIGHT OF WAY DATA, CONTACT
RIGHT OF WAY ENGINEERING AT THE DISTRICT OFFICE.

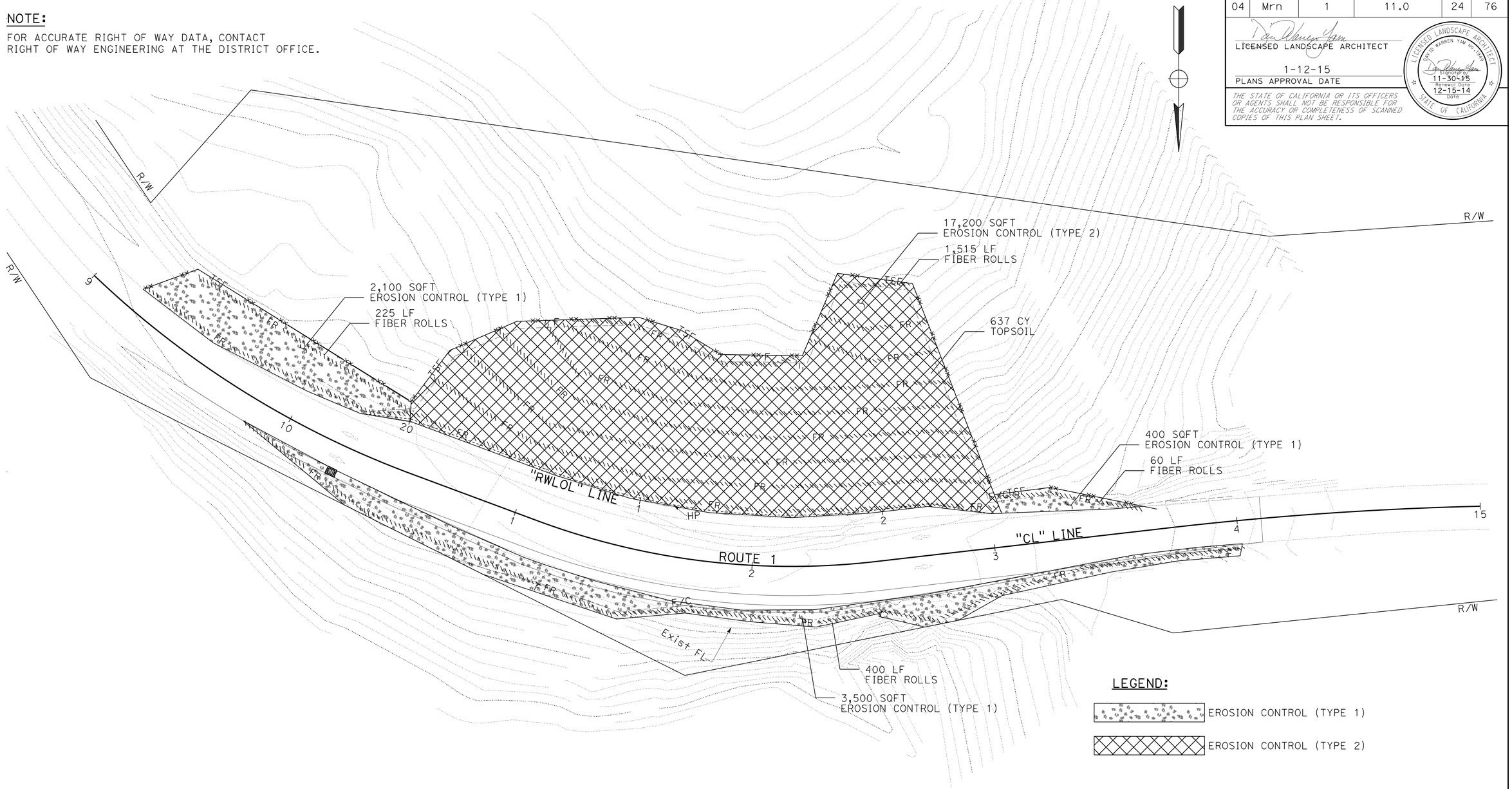

APPROVED FOR EROSION CONTROL WORK ONLY

EROSION CONTROL PLAN

SCALE: 1"=20'

EC-1

REVISED BY	DATE REVISED
AKWAN	11/05/14

CALCULATED-DESIGNED BY: ANGELA KWAN
CHECKED BY: DAVID YAM

SENIOR LANDSCAPE ARCHITECT: DAVID YAM

STATE OF CALIFORNIA - DEPARTMENT OF TRANSPORTATION
Caltrans®
WATER QUALITY

LAST REVISION 12-15-14
DATE PLOTTED => 15-JAN-2015
TIME PLOTTED => 13:20

Dist	COUNTY	ROUTE	POST MILES TOTAL PROJECT	SHEET No.	TOTAL SHEETS
04	Mrn	1	11.0	25	76

LICENSED LANDSCAPE ARCHITECT

1-12-15
PLANS APPROVAL DATE

LICENSED LANDSCAPE ARCHITECT
DAVID WARREN YAM No. 1049
11-30-15
Renewal date
12-15-14
Date
STATE OF CALIFORNIA

THE STATE OF CALIFORNIA OR ITS OFFICERS OR AGENTS SHALL NOT BE RESPONSIBLE FOR THE ACCURACY OR COMPLETENESS OF SCANNED COPIES OF THIS PLAN SHEET.

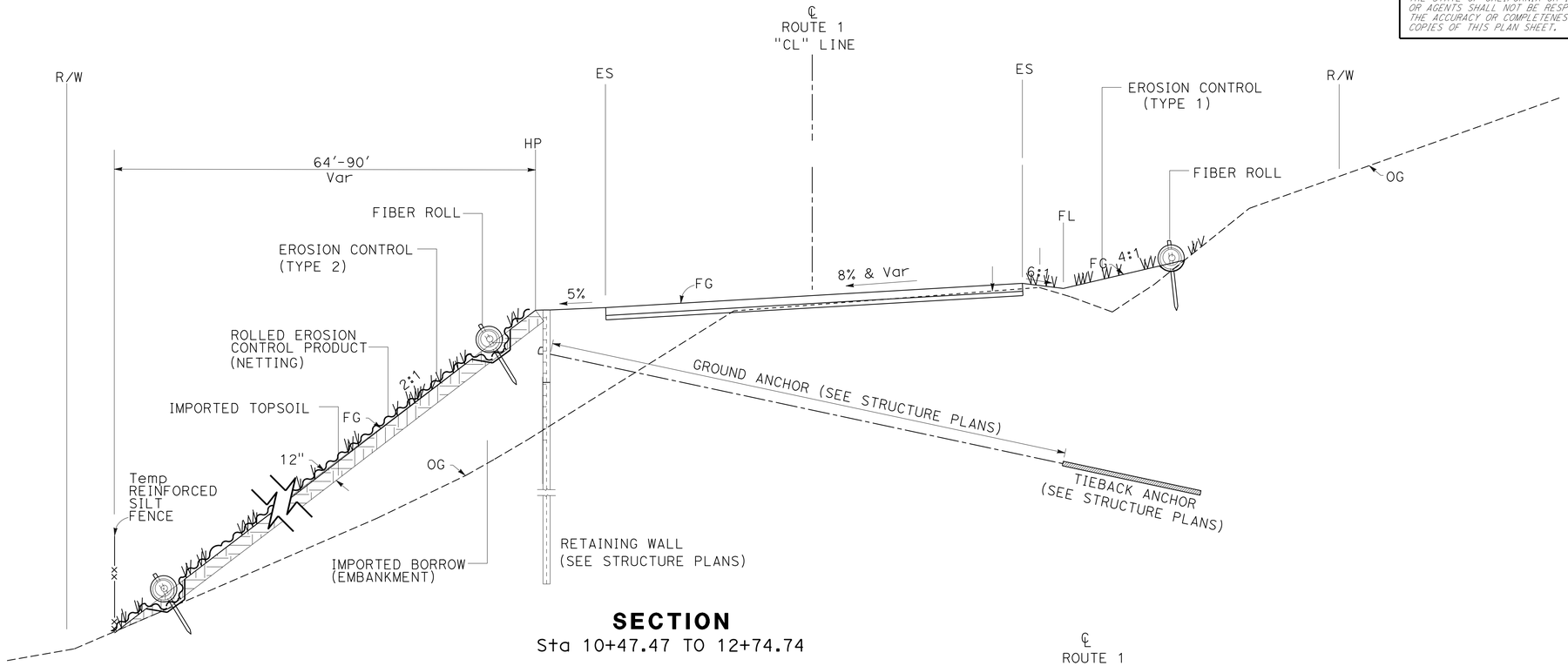

SECTION
Sta 10+47.47 TO 12+74.74

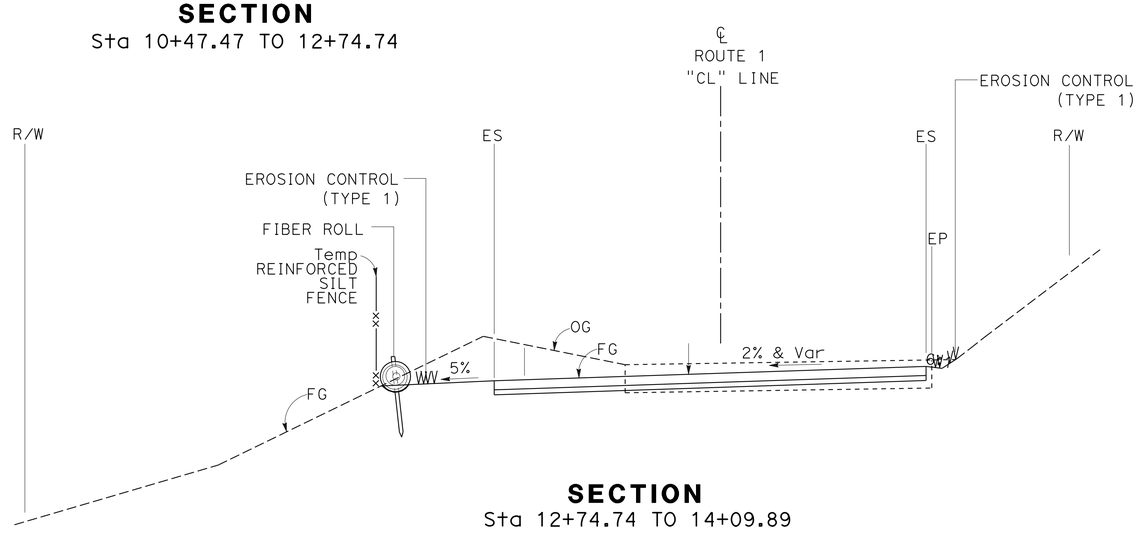

SECTION
Sta 12+74.74 TO 14+09.89

EROSION CONTROL DETAILS

NO SCALE

ECD-1

STATE OF CALIFORNIA - DEPARTMENT OF TRANSPORTATION
Caltrans®
WATER QUALITY

SENIOR LANDSCAPE ARCHITECT: DAVID YAM
CALCULATED-DESIGNED BY: ANGELA KWAN
CHECKED BY: DAVID YAM
REVISED BY: AKWAN
DATE REVISED: 10/31/14

LAST REVISION 01-07-15
DATE PLOTTED => 15-JAN-2015
TIME PLOTTED => 13:20

Dist	COUNTY	ROUTE	POST MILES TOTAL PROJECT	SHEET No.	TOTAL SHEETS
04	Mrn	1	11.0	26	76

LICENSED LANDSCAPE ARCHITECT

1-12-15

PLANS APPROVAL DATE

LICENSED LANDSCAPE ARCHITECT
DAVID WARREN YAM No. 1049
Expiration Date
11-30-15
Renewal Date
12-15-14
Date
STATE OF CALIFORNIA

THE STATE OF CALIFORNIA OR ITS OFFICERS OR AGENTS SHALL NOT BE RESPONSIBLE FOR THE ACCURACY OR COMPLETENESS OF SCANNED COPIES OF THIS PLAN SHEET.

EROSION CONTROL QUANTITIES

SHEET No.	DESCRIPTION	IMPORTED TOPSOIL	ROLLED EROSION CONTROL PRODUCT (NETTING)	FIBER ROLLS	HYDROSEED	HYDROMULCH
		CY	SQFT	LF	SQFT	SQFT
EC-1	EROSION CONTROL (TYPE 1)	-	-	685	6,000	6,000
	EROSION CONTROL (TYPE 2)	637	17,200	1,515	17,200	17,200
	TOTAL	637	17,200	2,200	23,200	23,200

STATE OF CALIFORNIA - DEPARTMENT OF TRANSPORTATION
Caltrans®
WATER QUALITY

SENIOR LANDSCAPE ARCHITECT
DAVID YAM

CALCULATED-DESIGNED BY ANGELA KWAN
CHECKED BY DAVID YAM

REVISED BY AKWAN
DATE REVISED 12/29/14

EROSION CONTROL QUANTITIES
ECQ-1

LAST REVISION 12-29-14
DATE PLOTTED => 15-JAN-2015
TIME PLOTTED => 13:34

Dist	COUNTY	ROUTE	POST MILES TOTAL PROJECT	SHEET No.	TOTAL SHEETS
04	Mrn	1	11.0	27	76

REGISTERED ELECTRICAL ENGINEER 12-15-14 DATE

1-12-15
PLANS APPROVAL DATE

REGISTERED PROFESSIONAL ENGINEER
MONA N. ATTALLAH
No. 18407
Exp. 6/30/16
ELECTRICAL
STATE OF CALIFORNIA

THE STATE OF CALIFORNIA OR ITS OFFICERS OR AGENTS SHALL NOT BE RESPONSIBLE FOR THE ACCURACY OR COMPLETENESS OF SCANNED COPIES OF THIS PLAN SHEET.

NOTES:

1. LOWEST SAG POINT OF MESSENGER WIRE MUST HAVE 25′ MINIMUM CLEARANCE FROM FINISHED GRADE/ROADWAY.
2. OVERHEAD ENTRANCE CONDUIT FITTING MUST BE INSTALLED SO THAT RAINWATER WILL NOT SEEP INTO ELECTRICAL EQUIPMENT THROUGH THE ENTRANCE FITTING. FORM A DRIP LOOP AT ENTRANCE FITTING.
3. ESTABLISH CONTINUOUS GROUND WITH SYSTEM GROUND TO ALL METAL PARTS IN SYSTEM BY BONDING JUMPERS AND CONDUITS.
4. GROUNDING ELECTRODE MUST BE INSTALLED IN PULL BOX ADJACENT TO WOOD POLES AND BOND TO RIGID METAL CONDUIT, UNLESS OTHERWISE NOTED.
5. SIGNS SHOWN ARE "CONSTRUCTION AREA SIGNS". SEE TRAFFIC HANDLING PLANS FOR DETAILS.
6. LOOP DETECTORS MUST BE CONNECTED IN PB AS SHOWN IN DETAIL I FOR 1 TYPE D AND 3 TYPE A LOOPS (ON ONE SENSOR UNIT CHANNEL).

LEGEND:

1. POWER MUST BE PROVIDED BY A GENERATOR WITH BACKUP GENERATOR SYSTEM. SEE DETAIL D ON E-5.
2. INSTALL DEPARTMENT-FURNISHED MODEL 170E CONTROLLER ASSEMBLY.
   FURNISH AND INSTALL UPS IN CONTROLLER CABINET AND TEMPORARY FOUNDATION PLATFORM PER DETAIL E ON SHEET E-5.
3. 2"C, 3#4, 1#8 (G)
4. 2"C, 2#6 (Sig), 2#8 (L+g)
   2#10 (NB FB),
   2#10 (SB FB), 1#8 (G)
5. 2"C, 2#6 (Sig),
   6#14 (SPARE), 4 DLC,
   2#14 (PBA Ø1), 3#14 (Sig Ø1),
   2#14 (PBA Ø2), 3#14 (Sig Ø2),
   2#10 (Sig NEUTRAL), 1#8 (G)
6. 2"C, 6#14 (SPARE), 4 DLC,
   2#14 (PBA Ø1), 3#14 (Sig Ø1),
   2#14 (PBA Ø2), 3#14 (Sig Ø2),
   2#10 (Sig NEUTRAL), 2#8 (L+g),
   2#10 (NB FB),
   2#10 (SB FB), 1#8 (G)
7. 3#14 (SPARE), 2 DLC,
   2#14 (PBA Ø1), 3#14 (Sig Ø1),
   1#10 (Sig NEUTRAL), 2#8 (L+g),
   2#10 (SB FB), 1#8 (G)
8. 1 DLC,
   2#10 (SB FB), 1#8 (G)
9. 3#14 (SPARE), 2 DLC,
   2#14 (PBA Ø2), 3#14 (Sig Ø2),
   1#10 (Sig NEUTRAL), 2#8 (L+g),
   2#10 (NB FB), 1#8 (G)
10. 1 DLC,
    2#10 (NB FB), 1#8 (G)
11. 2#10 (NB FB), 1#8 (G)
12. 2#10 (SB FB), 1#8 (G)
13. LOOPS MUST HAVE 5 TURNS.
14. 3#14 (Sig Ø2), 1#10 (Sig NEUTRAL)
15. TEMPORARY WOOD POLE Sig,
    SEE DETAIL C ON SHEET E-5.
16. TEMPORARY WOOD POLE Sig AND L+g,
    SEE DETAIL B ON SHEET E-5.
17. TEMPORARY WOOD POLE PBA,
    SEE DETAIL F ON SHEET E-5.
18. TEMPORARY WOOD POLE,
    SEE DETAIL K ON SHEET E-6.

INDEX TO ELECTRICAL PLANS:

DRAWING No.	TITLE
E-1	INDEX, NOTES, LEGEND, SYMBOLS, AND ABBREVIATIONS
E-2 TO E-4	TEMPORARY SIGNAL SYSTEM
E-5 TO E-6	ELECTRICAL DETAILS
E-7	ELECTRICAL QUANTITIES

ABBREVIATION:

UPS UNINTERRUPTIBLE POWER SUPPLY

SYMBOLS:

PROPOSED

- Y / Y — TEMPORARY WOOD POLE FB
- TEMPORARY WOOD POLE Sig AND L+g
- TEMPORARY WOOD POLE
- (G) — GENERATOR WITH BACKUP GENERATOR SYSTEM
- OH — 3/8" Ø, 7 STRAND GALVANIZED MESSENGER WIRE WITH CONDUCTORS AS NOTED UNLESS OTHERWISE SPECIFIED
- FUEL — FUEL TANK
- —X—X— TEMPORARY CHAIN LINK FENCE (TYPE CL-6) WITH 4′ CHAIN LINK GATE (TYPE CL-6).
- —F— FUEL LINE

INDEX, NOTES, LEGEND, SYMBOLS, AND ABBREVIATIONS

E-1

STATE OF CALIFORNIA - DEPARTMENT OF TRANSPORTATION
Caltrans 06-ELECTRICAL DESIGN

FUNCTIONAL SUPERVISOR: ALI BAKHDOUD
CALCULATED-DESIGNED BY: MONA ATTALLAH
CHECKED BY: DANIEL VO
REVISED BY: MA
DATE REVISED: 12-29-14

LAST REVISION 12-15-14
DATE PLOTTED => 15-JAN-2015
TIME PLOTTED => 13:20

Dist	COUNTY	ROUTE	POST MILES TOTAL PROJECT	SHEET No.	TOTAL SHEETS
04	Mrn	1	11.0	28	76

Mona Attallah 12-15-14
REGISTERED ELECTRICAL ENGINEER DATE

1-12-15
PLANS APPROVAL DATE

REGISTERED PROFESSIONAL ENGINEER
MONA N. ATTALLAH
No. 18407
Exp. 6/30/16
ELECTRICAL
STATE OF CALIFORNIA

THE STATE OF CALIFORNIA OR ITS OFFICERS OR AGENTS SHALL NOT BE RESPONSIBLE FOR THE ACCURACY OR COMPLETENESS OF SCANNED COPIES OF THIS PLAN SHEET.

NOTE:

FOR ACCURATE RIGHT OF WAY DATA, CONTACT
RIGHT OF WAY ENGINEERING AT THE DISTRICT OFFICE.

→Ø2 Ø1←

PHASE DIAGRAM
STEADY DEMAND SEQUENCE

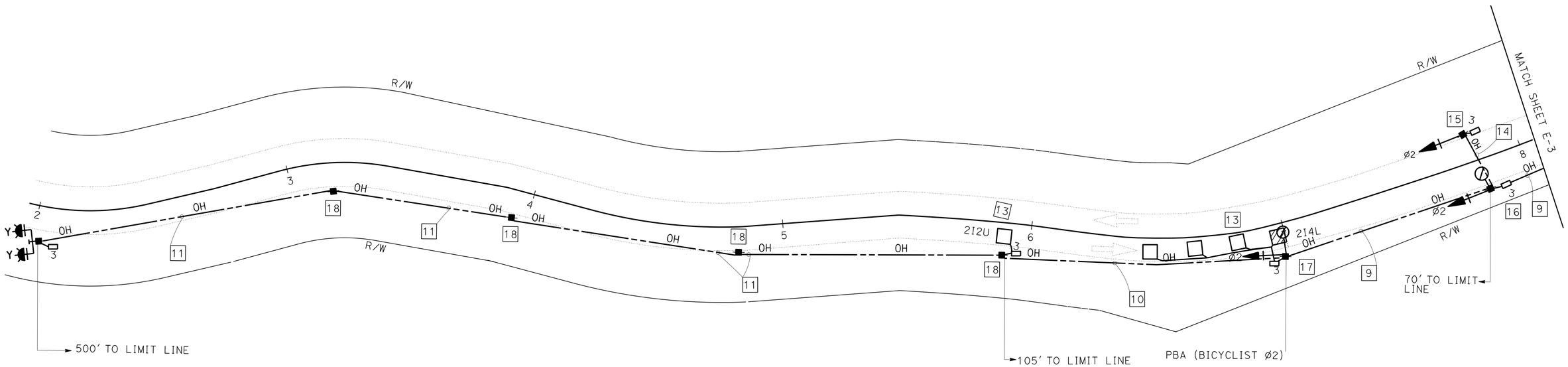

TEMPORARY SIGNAL SYSTEM

APPROVED FOR ELECTRICAL WORK ONLY

SCALE: 1"=20'

E-2

STATE OF CALIFORNIA - DEPARTMENT OF TRANSPORTATION
Caltrans 06-ELECTRICAL DESIGN

FUNCTIONAL SUPERVISOR: ALI BAKHDOUD
CALCULATED-DESIGNED BY: MONA ATTALLAH
CHECKED BY: DANIEL VO
REVISED BY: MA
DATE REVISED: 12-29-14

LAST REVISION 12-15-14
DATE PLOTTED => 15-JAN-2015
TIME PLOTTED => 13:20

Dist	COUNTY	ROUTE	POST MILES TOTAL PROJECT	SHEET No.	TOTAL SHEETS
04	Mrn	1	11.0	29	76

REGISTERED ELECTRICAL ENGINEER 12-15-14 DATE

1-12-15
PLANS APPROVAL DATE

REGISTERED PROFESSIONAL ENGINEER
MONA N. ATTALLAH
No. 18407
Exp. 6/30/16
ELECTRICAL
STATE OF CALIFORNIA

THE STATE OF CALIFORNIA OR ITS OFFICERS OR AGENTS SHALL NOT BE RESPONSIBLE FOR THE ACCURACY OR COMPLETENESS OF SCANNED COPIES OF THIS PLAN SHEET.

NOTE:

FOR ACCURATE RIGHT OF WAY DATA, CONTACT
RIGHT OF WAY ENGINEERING AT THE DISTRICT OFFICE.

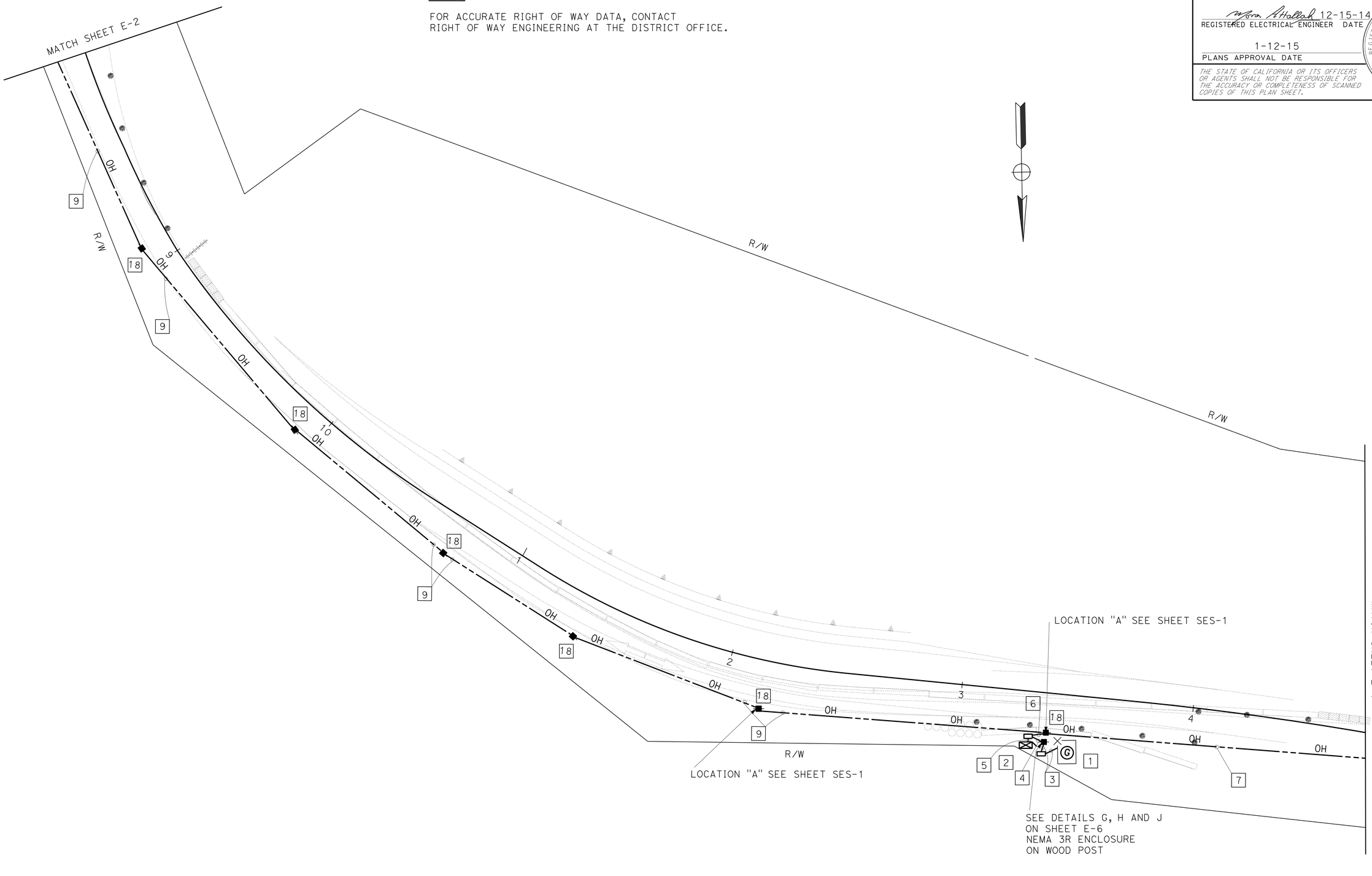

TEMPORARY SIGNAL SYSTEM

APPROVED FOR ELECTRICAL WORK ONLY

SCALE: 1"=20'

E-3

REVISED BY	MA
DATE REVISED	12-29-14
CALCULATED-DESIGNED BY	MONA ATTALLAH
CHECKED BY	DANIEL VO
FUNCTIONAL SUPERVISOR	ALI BAKHDOUD

STATE OF CALIFORNIA - DEPARTMENT OF TRANSPORTATION
Caltrans 06-ELECTRICAL DESIGN

LAST REVISION 12-15-14
DATE PLOTTED => 15-JAN-2015
TIME PLOTTED => 13:20

Dist	COUNTY	ROUTE	POST MILES TOTAL PROJECT	SHEET No.	TOTAL SHEETS
04	Mrn	1	11.0	30	76

Mona Attallah 12-15-14
REGISTERED ELECTRICAL ENGINEER DATE

1-12-15
PLANS APPROVAL DATE

REGISTERED PROFESSIONAL ENGINEER
MONA N. ATTALLAH
No. 18407
Exp. 6/30/16
ELECTRICAL
STATE OF CALIFORNIA

THE STATE OF CALIFORNIA OR ITS OFFICERS OR AGENTS SHALL NOT BE RESPONSIBLE FOR THE ACCURACY OR COMPLETENESS OF SCANNED COPIES OF THIS PLAN SHEET.

NOTE:

FOR ACCURATE RIGHT OF WAY DATA, CONTACT
RIGHT OF WAY ENGINEERING AT THE DISTRICT OFFICE.

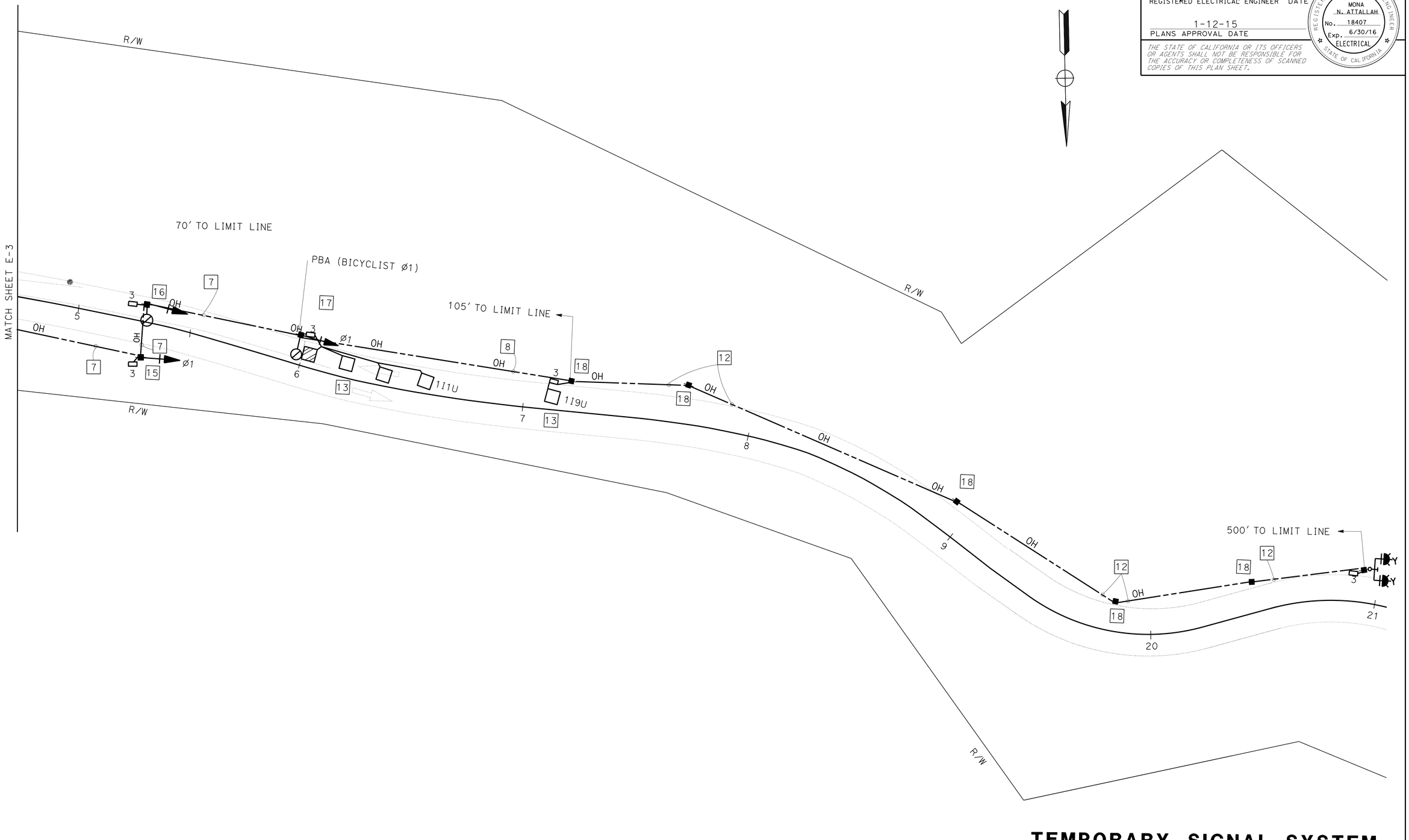

TEMPORARY SIGNAL SYSTEM

APPROVED FOR ELECTRICAL WORK ONLY

SCALE: 1"=20'

E-4

REVISED BY	MA
DATE REVISED	12-29-14
CALCULATED-DESIGNED BY	MONA ATTALLAH
CHECKED BY	DANIEL VO
FUNCTIONAL SUPERVISOR	ALI BAKHDOUD

STATE OF CALIFORNIA - DEPARTMENT OF TRANSPORTATION
Caltrans 06-ELECTRICAL DESIGN

LAST REVISION 12-15-14 | DATE PLOTTED => 15-JAN-2015 | TIME PLOTTED => 13:20

Dist	COUNTY	ROUTE	POST MILES TOTAL PROJECT	SHEET No.	TOTAL SHEETS
04	Mrn	1	11.0	31	76

REGISTERED ELECTRICAL ENGINEER 12-15-14 DATE

1-12-15
PLANS APPROVAL DATE

REGISTERED PROFESSIONAL ENGINEER MONA N. ATTALLAH No. 18407 Exp. 6/30/16 ELECTRICAL STATE OF CALIFORNIA

THE STATE OF CALIFORNIA OR ITS OFFICERS OR AGENTS SHALL NOT BE RESPONSIBLE FOR THE ACCURACY OR COMPLETENESS OF SCANNED COPIES OF THIS PLAN SHEET.

NOTE:
FOR POLE DETAILS, SEE SHEETS SES-1 THRU SES-5.

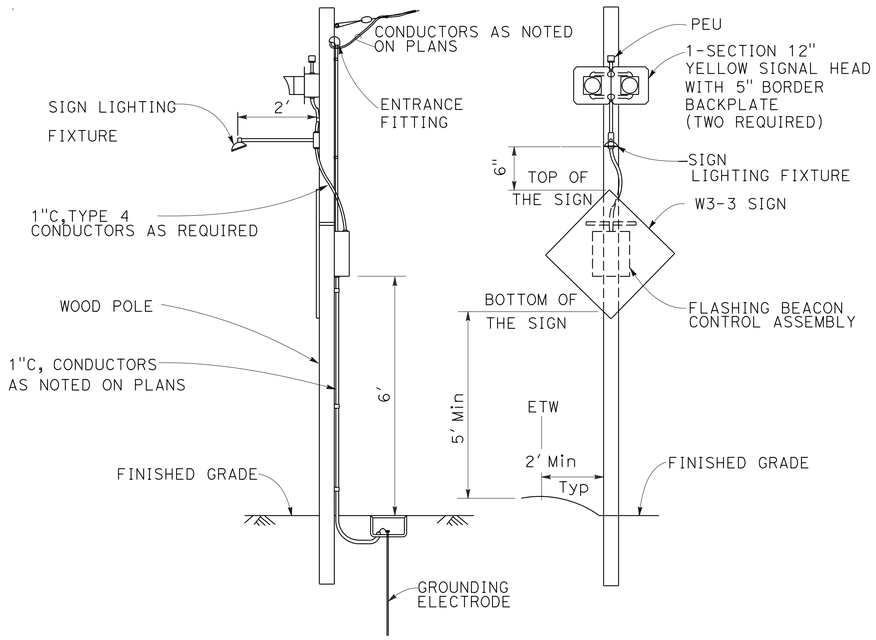

TEMPORARY WOOD POLE FB
DETAIL A

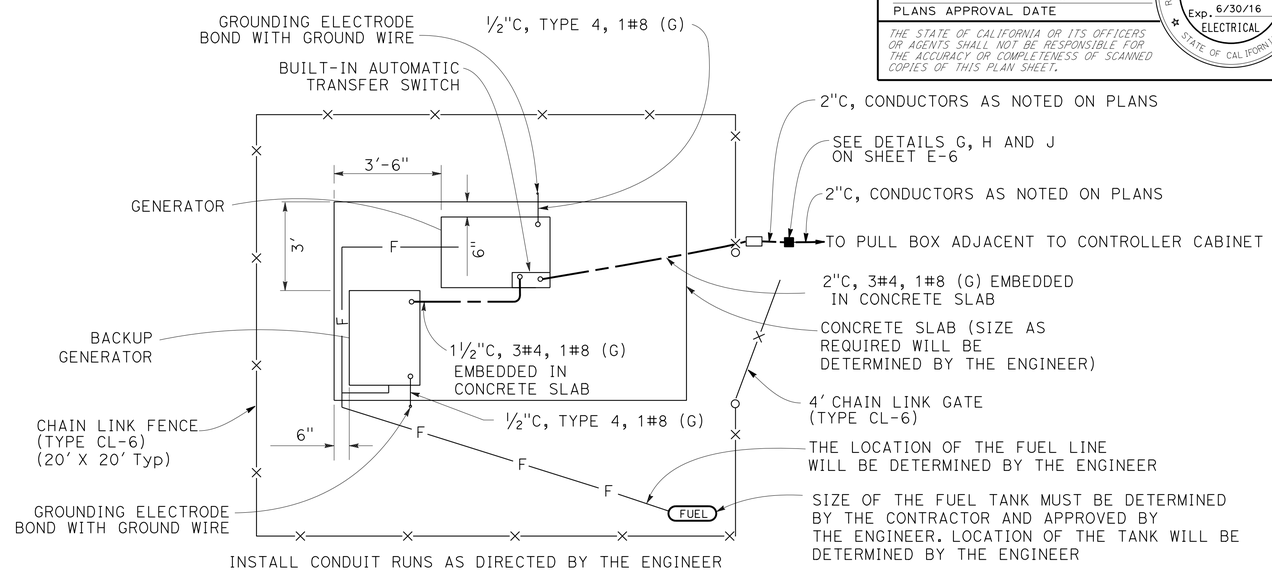

GENERATOR SYSTEM
DETAIL D

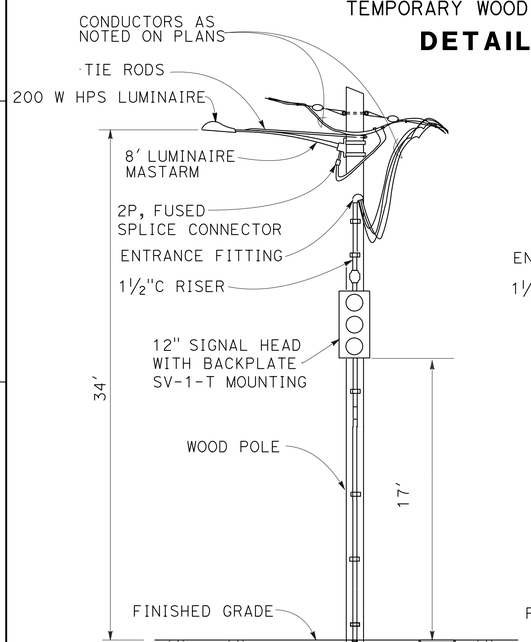

TEMPORARY WOOD POLE Sig AND Ltg
DETAIL B

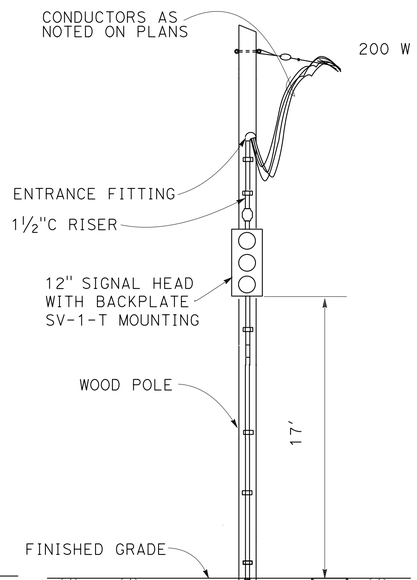

TEMPORARY WOOD POLE Sig
DETAIL C

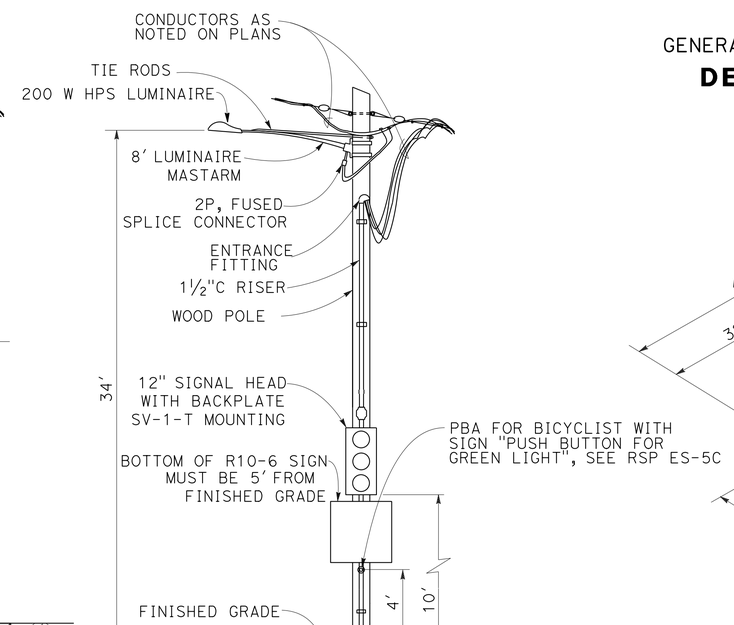

TEMPORARY WOOD POLE PBA
DETAIL F

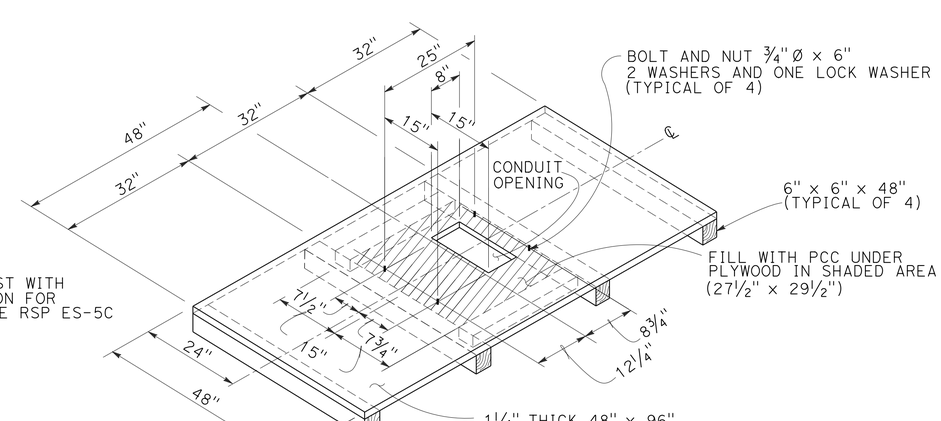

TEMPORARY FOUNDATION PLATFORM
DETAIL E

ELECTRICAL DETAILS

NO SCALE

E-5

REVISED BY	DATE REVISED
MA	12-29-14

MONA ATTALLAH — DANIEL VO — CALCULATED-DESIGNED BY — CHECKED BY

FUNCTIONAL SUPERVISOR: ALI BAKHDOUD

STATE OF CALIFORNIA - DEPARTMENT OF TRANSPORTATION
Caltrans 06-ELECTRICAL DESIGN

LAST REVISION 12-15-14 | DATE PLOTTED => 15-JAN-2015 | TIME PLOTTED => 13:20

Dist	COUNTY	ROUTE	POST MILES TOTAL PROJECT	SHEET No.	TOTAL SHEETS
04	Mrn	1	11.0	32	76

REGISTERED ELECTRICAL ENGINEER 12-15-14 DATE

1-12-15
PLANS APPROVAL DATE

REGISTERED PROFESSIONAL ENGINEER MONA N. ATTALLAH No. 18407 Exp. 6/30/16 ELECTRICAL STATE OF CALIFORNIA

THE STATE OF CALIFORNIA OR ITS OFFICERS OR AGENTS SHALL NOT BE RESPONSIBLE FOR THE ACCURACY OR COMPLETENESS OF SCANNED COPIES OF THIS PLAN SHEET.

NOTE:

FOR POLE DETAILS, SEE SHEETS SES-1 THRU SES-5.

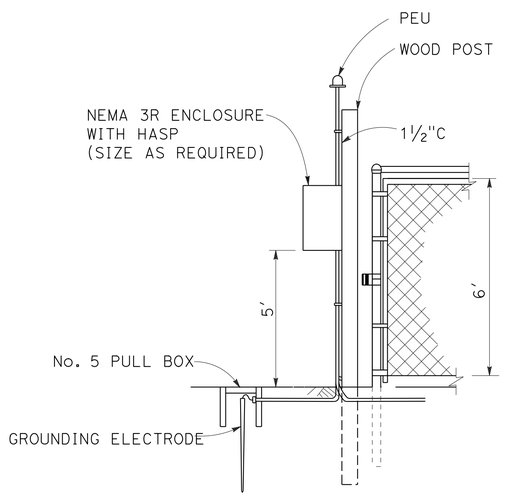

TEMPORARY WOOD POLE SERVICE SIDE VIEW

DETAIL G

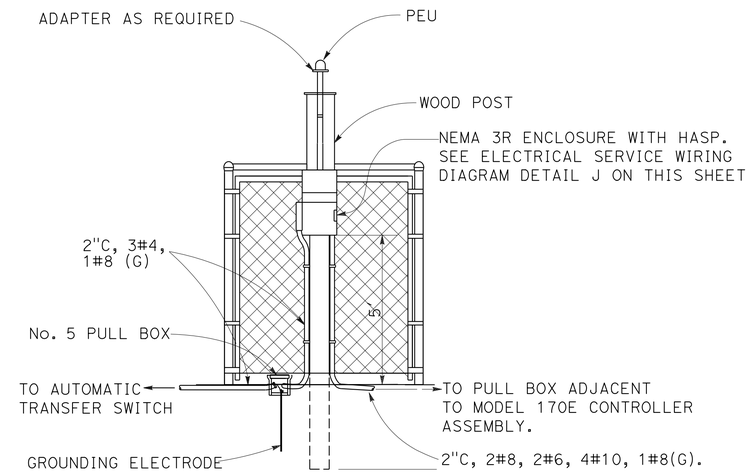

TEMPORARY WOOD POLE SERVICE FRONT VIEW

DETAIL H

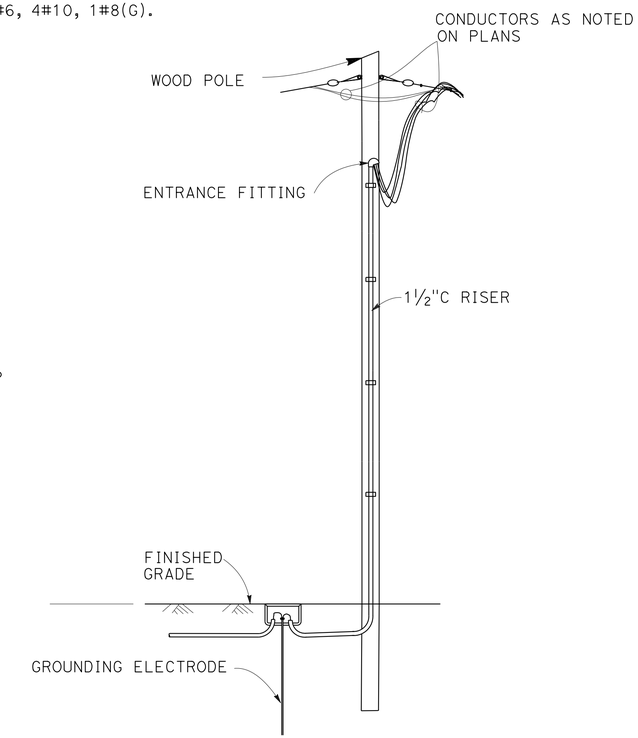

TEMPORARY WOOD POLE

DETAIL K

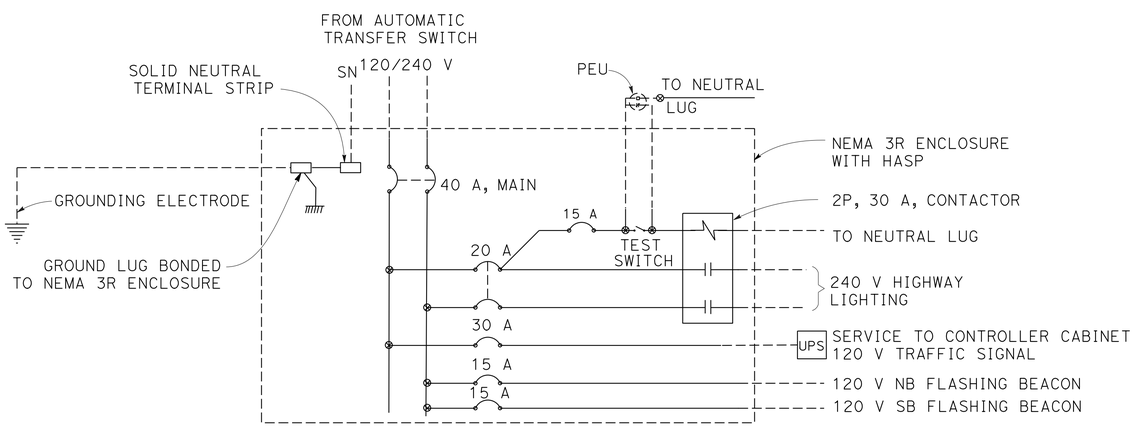

PROVIDE ITEMS SHOWN IN THIS DIAGRAM
SEE REVISED STANDARD PLANS RSP ES-2C AND RSP ES-2D FOR MORE INFORMATION

ELECTRICAL SERVICE WIRING DIAGRAM

DETAIL J

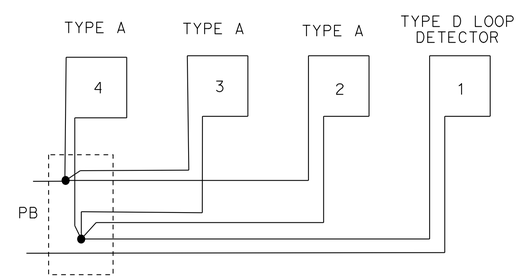

1D + 3A LOOP CONNECTION

DETAIL I

ELECTRICAL DETAILS

E-6

NO SCALE

REVISED BY	DATE REVISED
MA	12-29-14

CALCULATED-DESIGNED BY	CHECKED BY
MONA ATTALLAH	DANIEL VO

FUNCTIONAL SUPERVISOR: ALI BAKHDOUD

STATE OF CALIFORNIA - DEPARTMENT OF TRANSPORTATION
Caltrans 06-ELECTRICAL DESIGN

LAST REVISION 12-15-14 | DATE PLOTTED => 15-JAN-2015 | TIME PLOTTED => 13:20

Dist	COUNTY	ROUTE	POST MILES TOTAL PROJECT	SHEET No.	TOTAL SHEETS
04	Mrn	1	11.0	33	76

Mona Attallah 12-15-14
REGISTERED ELECTRICAL ENGINEER DATE

1-12-15
PLANS APPROVAL DATE

REGISTERED PROFESSIONAL ENGINEER
MONA N. ATTALLAH
No. 18407
Exp. 6/30/16
ELECTRICAL
STATE OF CALIFORNIA

THE STATE OF CALIFORNIA OR ITS OFFICERS OR AGENTS SHALL NOT BE RESPONSIBLE FOR THE ACCURACY OR COMPLETENESS OF SCANNED COPIES OF THIS PLAN SHEET.

NOTE:

THE QUANTITIES SHOWN IN THE TABLE ARE NOT SEPARATE PAY ITEMS, FOR INFORMATION ONLY.
FOR COMPLETE ELECTRICAL WORK, SEE ELECTRICAL PLAN SHEETS.

TEMPORARY SIGNAL SYSTEM

SHEET No.	TTEMPORARY WOOD POLE FB	4' CHAIN LINK GATE (TYPE CL-6)	TEMPORARY WOOD POLE	TEMPORARY WOOD POLE Sig AND Ltg	TEMPORARY WOOD POLE SERVICE	No. 5 PULL BOX	No. 3 PULL BOX	TEMPORARY WOOD POLE PBA	UPS	TEMPORARY WOOD POLE Sig	TEMPORARY FOUNDATION PLATFORM	TYPE D LOOP	TYPE A LOOP	GENERATOR WITH BACK UP GENERATOR SYSTEM	No. 6 CONDUCTOR	No. 8 CONDUCTOR	No. 8(G) CONDUCTOR	No. 10 CONDUCTOR	No. 14 CONDUCTOR	DETECTOR LEAD-IN CABLE	No. 4 CONDUCTOR	MESSENGER CABLE	2"C, TYPE 3	CHAIN LINK FENCE (TYPE CL-6)
	EA														LF									
E-2	1		4	1			5	1		1		1	4			70	610	1255	280	185		610		
E-3		1	6		1	2			1		1			1	20	1380	710	2115	5675	1400	45	705	30	80
E-4	1		5	1			5	1		1		1	4			60	530	1090	240	280		530		

ELECTRICAL QUANTITIES
E-7

STATE OF CALIFORNIA - DEPARTMENT OF TRANSPORTATION
Caltrans 06-ELECTRICAL DESIGN

FUNCTIONAL SUPERVISOR: ALI BAKHOUD
CALCULATED-DESIGNED BY: MONA ATTALLAH
CHECKED BY: DANIEL VO
REVISED BY: MA
DATE REVISED: 11-5-14

LAST REVISION 12-15-14 | DATE PLOTTED => 15-JAN-2015 | TIME PLOTTED => 13:21

DIST	COUNTY	ROUTE	POST MILES TOTAL PROJECT	SHEET No	TOTAL SHEETS
04	Mrn	1	11.0	34	76

REGISTERED CIVIL ENGINEER 1-8-15 DATE

1-12-15
PLANS APPROVAL DATE

REGISTERED PROFESSIONAL ENGINEER TAMARA S. MARCHENKO No. C76837 Exp. 12/31/16 CIVIL STATE OF CALIFORNIA

The State of California or its officers or agents shall not be responsible for the accuracy or completeness of electronic copies of this plan sheet.

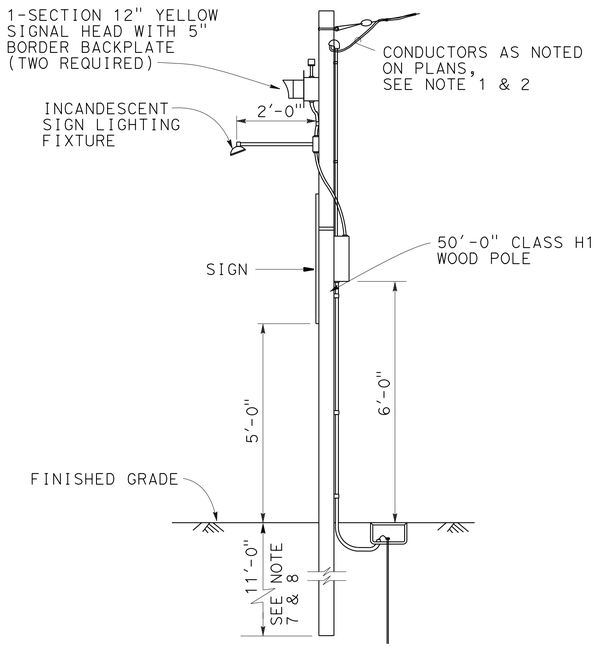

WOOD POLE SUPPORT WITHOUT LUMINAIRE

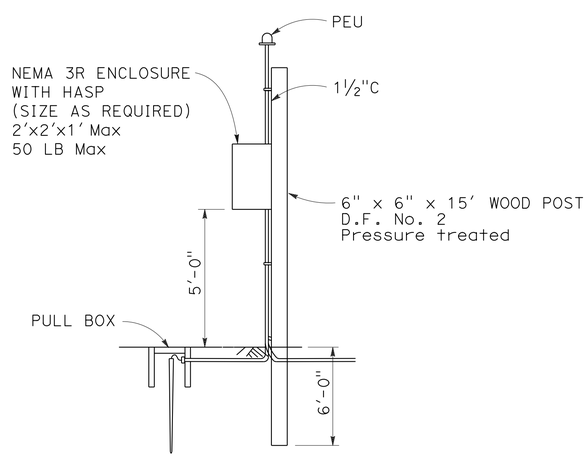

TEMPORARY WOOD POST DETAIL

NOTE:
THE CONTRACTOR MUST VERIFY ALL CONTROLLING FIELD DIMENSIONS BEFORE ORDERING OR FABRICATING ANY MATERIAL.

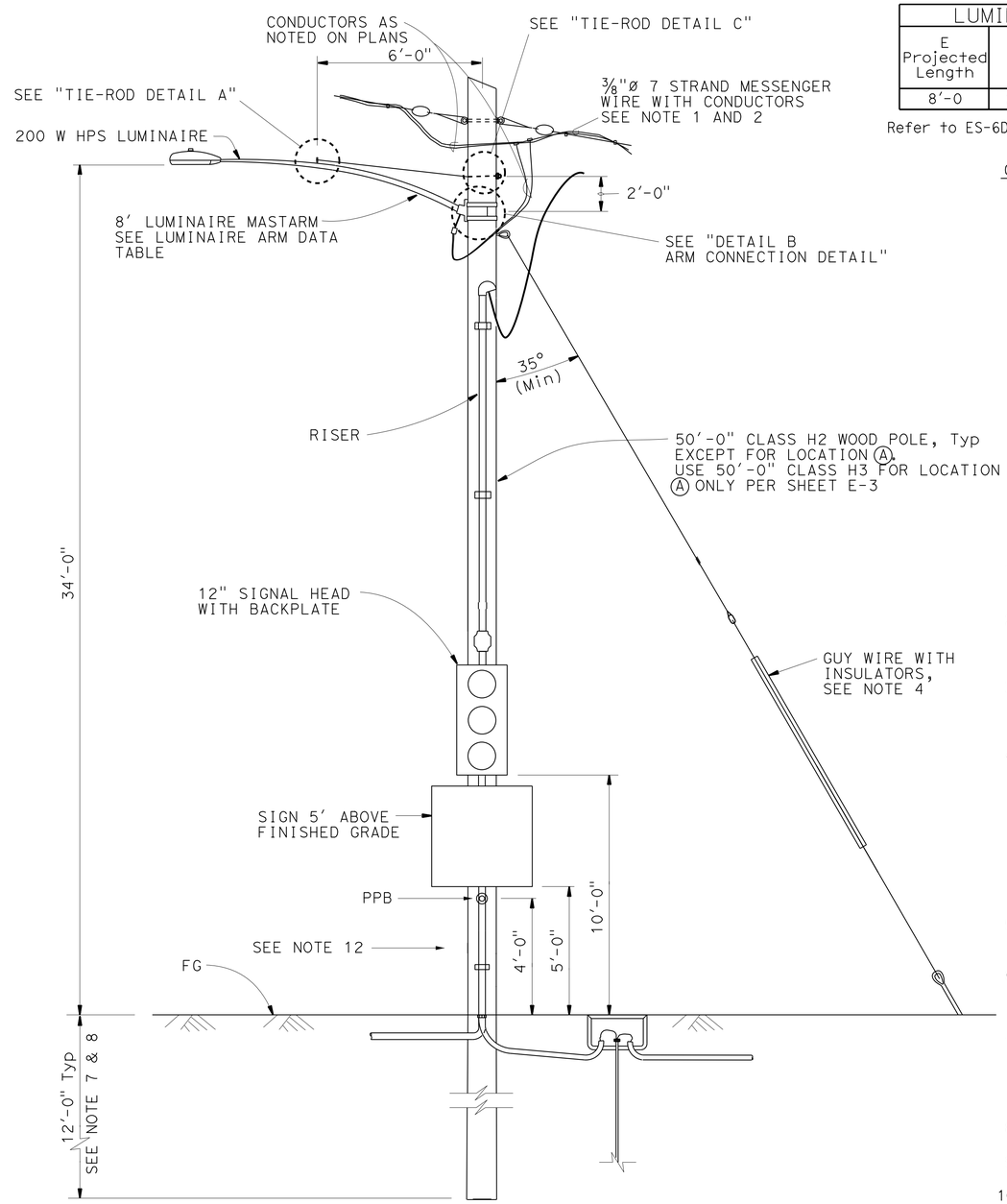

TYPICAL WOOD POLE SUPPORT WITH LUMINAIRE

NO SCALE

LUMINAIRE ARM DATA			
E Projected Length	N Rise	Min OD At Pole	Thickness
8'-0	2'-6"	3½"	0.1196"

Refer to ES-6D for Luminaire arm details

GENERAL NOTES:

SPECIFICATIONS

Design: AASHTO Standard Specifications for Structural Supports for Highway Signs, Luminaires and Traffic Signals dated 2009 and 2010 Interim Revisions.

LOADING

Wind Loadings: 85 MPH

UNIT STRESSES

Timber Poles: Fb = 1850 Tapered treated round pole
Fv = 110 psi ASTM D2899 Standard
E = 1500 x 10^3 psi

TREATMENT

To conform with Section 86 Standard Specifications

SPECIFICATIONS

Caltrans Standard Specifications 2010
ANSI Wood Poles
Utility Grade Wires

NOTES:

1. All overhead cables must be slack spanned with 25'-0" minimum overhead clearance.
2. Conductors must be suspended from span-wire as follows: A) Main run ⅜" span-wire with 4.5% sag. No spare conductors allowed except as noted.
3. Overhead line construction not specifically covered here must conform with the provisions of General Order No. 95 of Public Utilities Commission.
4. Wood poles must be stabilized using guy wires, breast blocks or rakes at each dead end, corner, drop or line deviation more than 15° from straight line. The direction of the guy must counteract the resultant of unbalanced force applied to pole. Where space or conflict prevent guy installation, a diagonal brace must be used. The brace must be wood and must be connected to the pole by means to satisfy structural and electrical requirements. The direction of the brace must counteract the resultant of unbalanced horizontal force of 4000 pounds (Min) applied to the pole.
5. Guy must be attached to pole as nearly as practical to the center of conductors load, or 4'-0" Max otherwise, See Note 4.
6. All attachments must be mounted with stainless steel straps or other manufacturers methods without drilling holes in pole, except as shown. Drilling through pole will require the Engineer's approval.
7. Foundation design is based on AASHTO 2009 and 2010 Interim Revisions article 13.6 Broms' approximate procedure assuming a cohessionless material. The angle of Internal friction used is 30° and unit weight of soil used is 120 lb/ft^3. The Contractor to verify actual soil condition.
8. If pole is located on a steep slope add 2 feet extra for embedment.
9. See Sheets SES-2 thru SES-5 for details.
10. For details not shown, see "2010 STANDARD PLANS" and "2010 REVISED STANDARD PLANS"
11. All temporary poles support OH Conductors. Attach luminaire mast arm and/or combination of attachments as specified at locations where indicated on Electrical Sheets.
12. Wood Poles must be protected from traffic by means according to California Department of Transportation Highway Design Manual Requirements. See Roadway Plans.

BRANCH CHIEF DAVID NEUMANN

	BY	CHECKED
DESIGN	TAMARA MARCHENKO	VICTOR LOPEZ
DETAILS	HUNG NGUYEN	VICTOR LOPEZ
QUANTITIES		

STATE OF CALIFORNIA
DEPARTMENT OF TRANSPORTATION

DIVISION OF ENGINEERING SERVICES
DESIGN AND TECHNICAL SERVICES
SPECIAL DESIGNS BRANCH
B

BRIDGE NO. N/A
POST MILE 11.0

TEMPORARY SIGNAL SYSTEM
TEMPORARY WOOD POLE

SES-1

STRUCTURES DESIGN SPECIAL DESIGN SHEET (ENGLISH) (REV. 09-01-10)

ORIGINAL SCALE IN INCHES FOR REDUCED PLANS 0 1 2 3

UNIT: 3619
PROJECT NUMBER & PHASE: 04000012171
CONTRACT NO.: 04-4S2201

DISREGARD PRINTS BEARING EARLIER REVISION DATES

REVISION DATES 4-18-11 9-11-14 1-5-15 1-8-15

SHEET 1 OF 5

FILE => 04-4s2201-ses1.dgn

USERNAME => s113541 DATE PLOTTED => 15-JAN-2015 TIME PLOTTED => 15:43

DIST	COUNTY	ROUTE	POST MILES TOTAL PROJECT	SHEET No	TOTAL SHEETS
04	Mrn	1	11.0	35	76

REGISTERED CIVIL ENGINEER 1-8-15 DATE

1-12-15
PLANS APPROVAL DATE

REGISTERED PROFESSIONAL ENGINEER TAMARA S. MARCHENKO No. C76837 Exp. 12/31/16 CIVIL STATE OF CALIFORNIA

The State of California or its officers or agents shall not be responsible for the accuracy or completeness of electronic copies of this plan sheet.

To get to the Caltrans web site, go to: http://www.dot.ca.gov

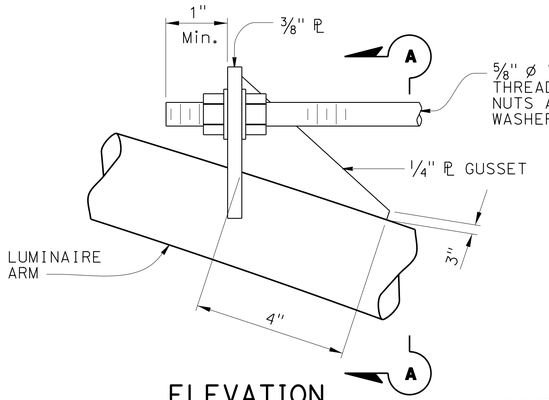

ELEVATION

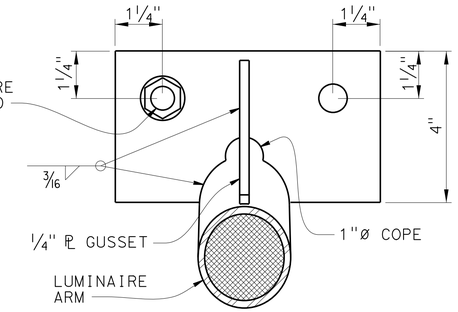

SECTION A-A

DETAIL A
TIE-ROD AT LUMINAIRE ARM
NO SCALE

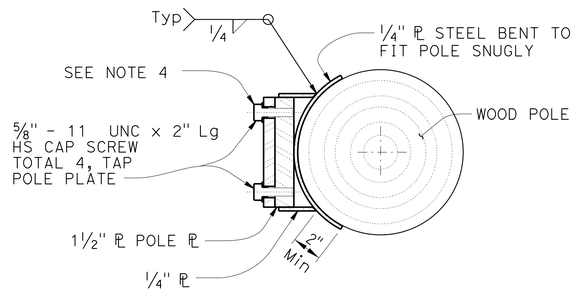

SECTION E-E

NOTES:

1. Luminaire mast arms must be in compliance with Standard Plan ES-6D with noted modifications.
2. Verify pole dimensions at tie-rod attachment height. Fabricate 8" flat bar with "L" Dimension to maintain an open gap between flanges in finished installation.
3. Not all screw heads and bolt heads are shown for clarity.
4. Mast arm not shown for clarity.

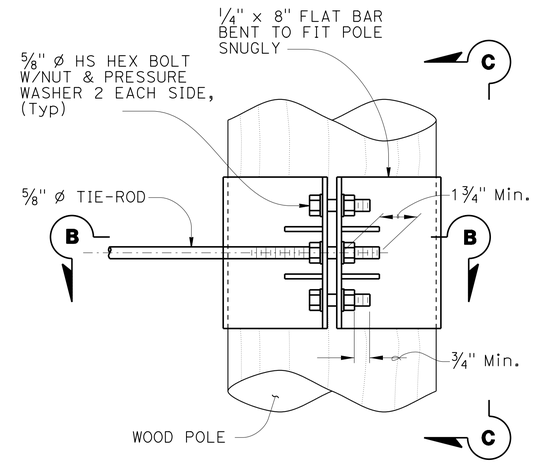

ELEVATION

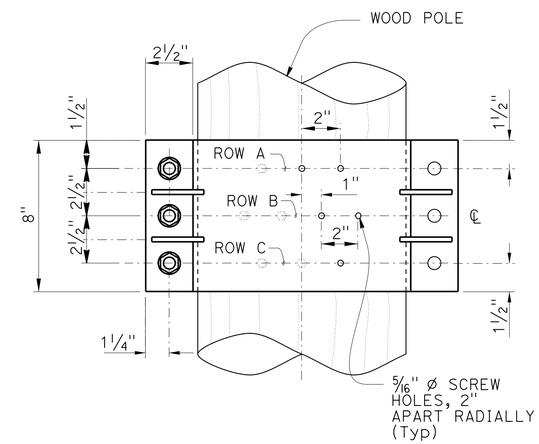

VIEW C-C

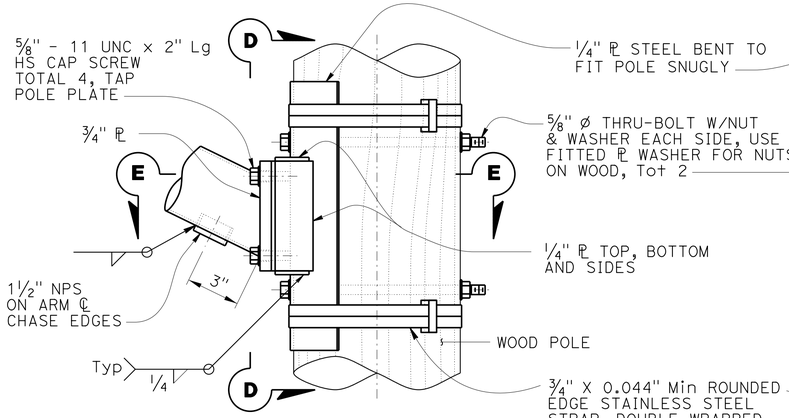

ELEVATION

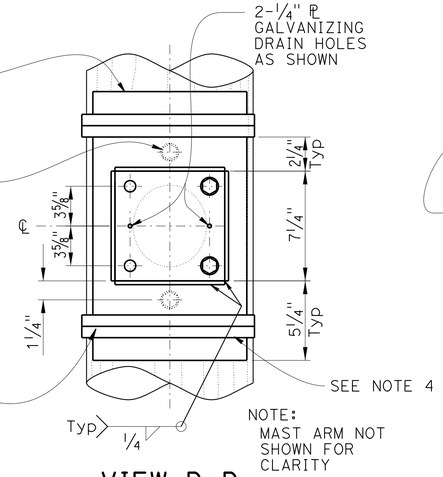

VIEW D-D

DETAIL B
ARM CONNECTION DETAILS
NO SCALE

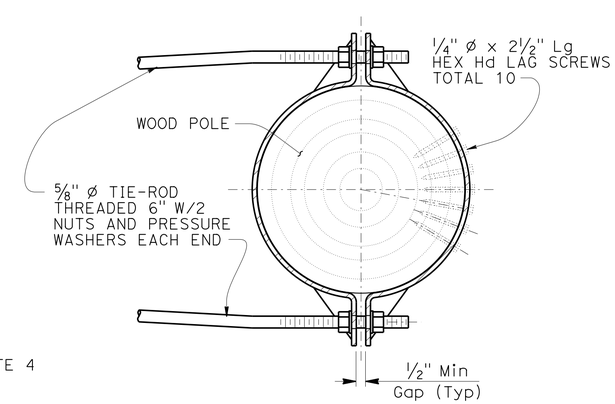

SECTION B-B

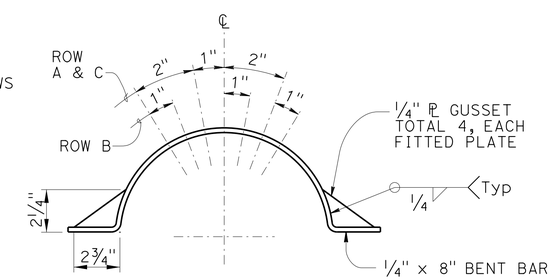

LAG SCREW AND
GUSSET PLATE LAYOUT

DETAIL C
TIE-ROD AT POLE
NO SCALE

NO SCALE

NOTE:
THE CONTRACTOR MUST VERIFY ALL CONTROLLING FIELD DIMENSIONS BEFORE ORDERING OR FABRICATING ANY MATERIAL.

BRANCH CHIEF DAVID NEUMANN	DESIGN	BY TAMARA MARCHENKO	CHECKED VICTOR LOPEZ
	DETAILS	BY HUNG NGUYEN	CHECKED VICTOR LOPEZ
	QUANTITIES	BY	CHECKED

STATE OF CALIFORNIA
DEPARTMENT OF TRANSPORTATION

DIVISION OF ENGINEERING SERVICES
DESIGN AND TECHNICAL SERVICES
SPECIAL DESIGNS BRANCH
B

BRIDGE NO. N/A
POST MILE 11.0

TEMPORARY SIGNAL SYSTEM
WOOD POLE MOUNTING DETAILS

SES-2

STRUCTURES DESIGN SPECIAL DESIGN SHEET (ENGLISH) (REV. 09-01-10)

ORIGINAL SCALE IN INCHES FOR REDUCED PLANS 0 1 2 3

UNIT: 3619
PROJECT NUMBER & PHASE: 04000012171
CONTRACT NO.: 04-4S2201

DISREGARD PRINTS BEARING EARLIER REVISION DATES

REVISION DATES 4-18-11 9-16-14 1-5-15 1-8-15

SHEET 2 OF 5

FILE => spec_des_br_prj/2011sd/04-4s2201-ses2.dgn

USERNAME => s113541 DATE PLOTTED => 15-JAN-2015 TIME PLOTTED => 15:43

DIST	COUNTY	ROUTE	POST MILES TOTAL PROJECT	SHEET No	TOTAL SHEETS
04	Mrn	1	11.0	36	76

REGISTERED CIVIL ENGINEER 1-8-15 DATE

1-12-15
PLANS APPROVAL DATE

REGISTERED PROFESSIONAL ENGINEER TAMARA S. MARCHENKO No. C76837 Exp. 12/31/16 CIVIL STATE OF CALIFORNIA

The State of California or its officers or agents shall not be responsible for the accuracy or completeness of electronic copies of this plan sheet.

To get to the Caltrans web site, go to: http://www.dot.ca.gov

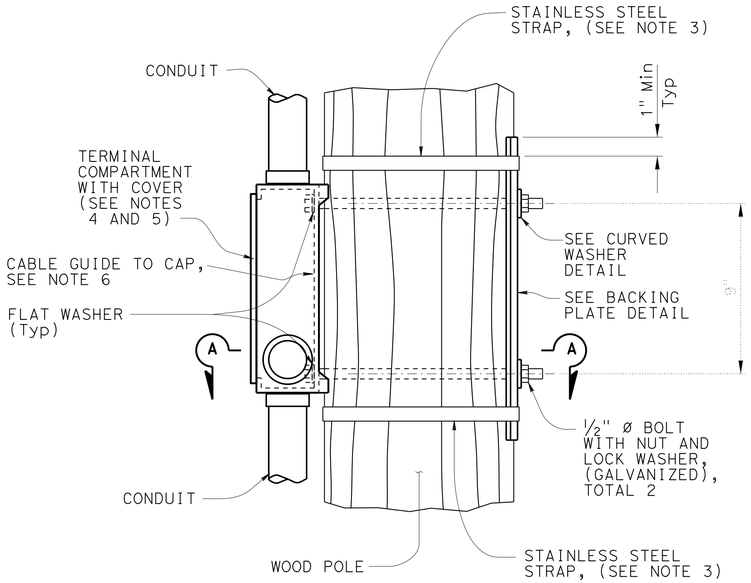

ELEVATION

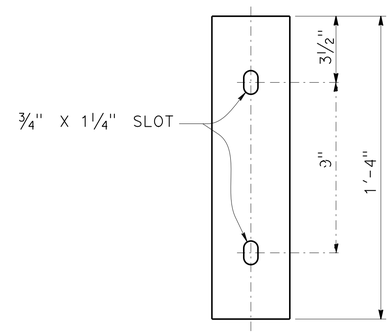

ELEVATION

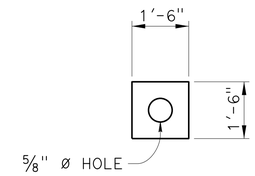

ELEVATION

PLAN

BACKING PLATE DETAIL

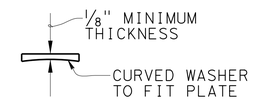

PLAN

CURVED WASHER DETAIL

NOTES:

1. Verify pole dimensions at terminal compartment for fabrication of backing plate and curved washer.
2. Backing plate to be galvanized after fabrication.
3. ¾" x 0.044" minimum, rounded edge stainless steel straps, double wrapped with 2" long bend under stainless steel strap buckle.
4. For miscellaneous details for signal mounting not shown see Standard Plan ES-4D.
5. If the terminal compartment has a cable entry guide on the rear face, remove the cable entry guide to a level that will not interfere with the wood post. Close any unused cable entry locations with raintight cap.
6. Use weather tight cap for cable guide if it is occurs in a terminal compartment plate.

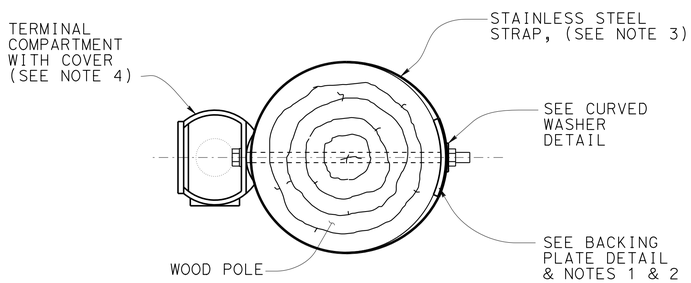

SECTION A-A

SIDE MOUNTING
TERMINAL COMPARTMENT

NOTE:
THE CONTRACTOR MUST VERIFY ALL CONTROLLING FIELD DIMENSIONS BEFORE ORDERING OR FABRICATING ANY MATERIAL.

NO SCALE

BRANCH CHIEF DAVID NEUMANN	DESIGN	BY TAMARA MARCHENKO	CHECKED VICTOR LOPEZ
	DETAILS	BY HUNG NGUYEN	CHECKED VICTOR LOPEZ
	QUANTITIES	BY	CHECKED

STATE OF CALIFORNIA
DEPARTMENT OF TRANSPORTATION

DIVISION OF ENGINEERING SERVICES
DESIGN AND TECHNICAL SERVICES
SPECIAL DESIGNS BRANCH B

BRIDGE NO. N/A
POST MILE 11.0

TEMPORARY SIGNAL SYSTEM
SIGNAL MOUNTING DETAILS

SES-3

STRUCTURES DESIGN SPECIAL DESIGN SHEET (ENGLISH) (REV. 09-01-10)

ORIGINAL SCALE IN INCHES FOR REDUCED PLANS 0 1 2 3

UNIT: 3619
PROJECT NUMBER & PHASE: 04000012171
CONTRACT NO.: 04-4S2201

DISREGARD PRINTS BEARING EARLIER REVISION DATES

REVISION DATES 6-18-11 9-18-14 1-5-15 1-8-15

SHEET 3 OF 5

FILE => spec_des_br_prj/2011sd/04-4s2201-ses3.dgn

USERNAME => s113541 DATE PLOTTED => 15-JAN-2015 TIME PLOTTED => 15:43

DIST	COUNTY	ROUTE	POST MILES TOTAL PROJECT	SHEET No	TOTAL SHEETS
04	Mrn	1	11.0	37	76

REGISTERED CIVIL ENGINEER 1-8-15 DATE

1-12-15
PLANS APPROVAL DATE

REGISTERED PROFESSIONAL ENGINEER TAMARA S. MARCHENKO No. C76837 Exp. 12/31/16 CIVIL STATE OF CALIFORNIA

The State of California or its officers or agents shall not be responsible for the accuracy or completeness of electronic copies of this plan sheet.

To get to the Caltrans web site, go to: http://www.dot.ca.gov

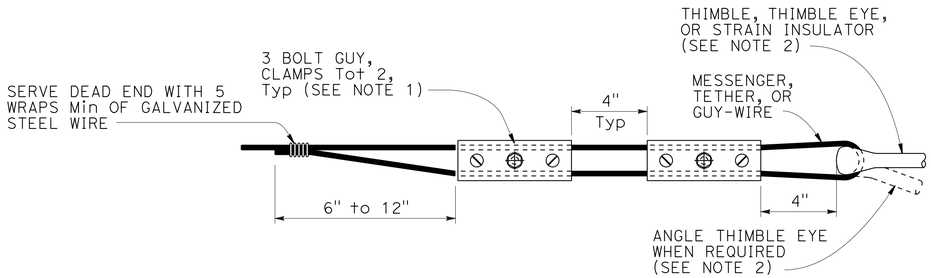

ALTERNATIVE TERMINATION OF MESSENGER WIRES USING GUY CLAMPS

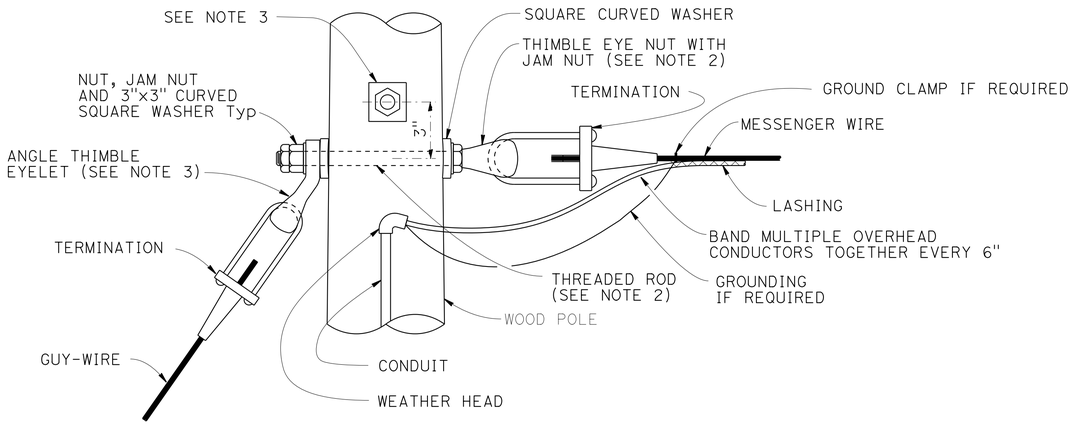

POLE AT DEAD END WITH GUY-WIRE CONNECTION

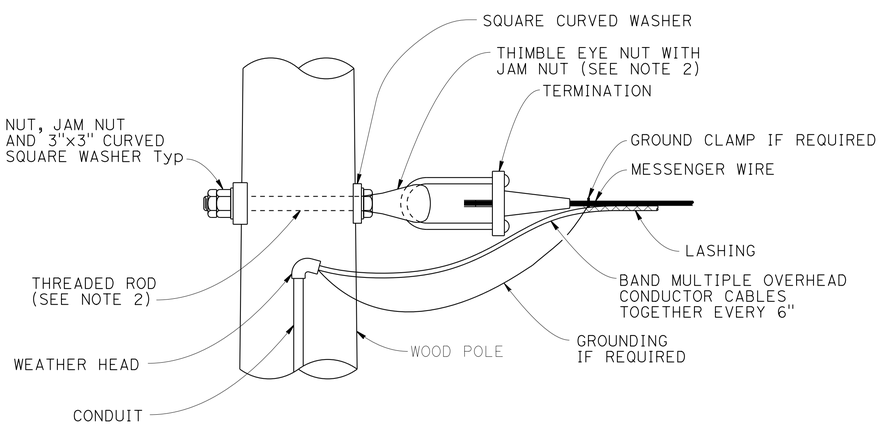

POLE AT DEAD END CONNECTION

NOTE:
THE CONTRACTOR MUST VERIFY ALL CONTROLLING FIELD DIMENSIONS BEFORE ORDERING OR FABRICATING ANY MATERIAL.

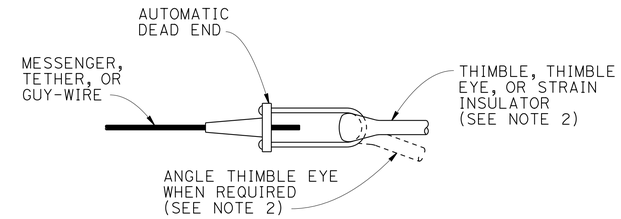

TERMINATION OF WIRES USING AUTOMATIC DEAD END

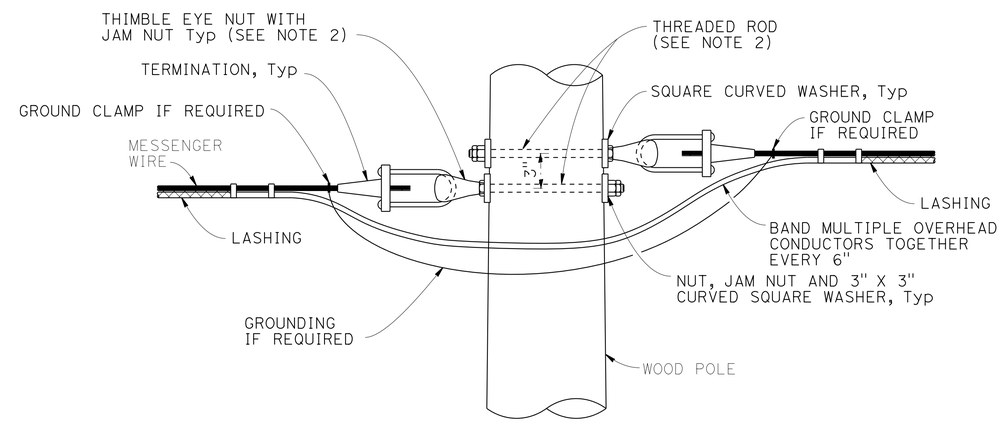

POLE AT TANGENT OR CORNER CONNECTION

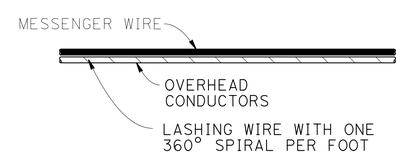

TYPICAL LASHING DETAIL

USE IF d_p IS 1½" OR LESS

NOTES:

1. For guy wires use 3 clamps.
2. Use ⅝" ø except ¾" ø at guyed wires
3. Install additional angle thimble eyelet at poles with two guy wires.

NO SCALE

BRANCH CHIEF DAVID NEUMANN	DESIGN	BY TAMARA MARCHENKO	CHECKED VICTOR LOPEZ
	DETAILS	BY HUNG NGUYEN	CHECKED VICTOR LOPEZ
	QUANTITIES	BY	CHECKED

STATE OF CALIFORNIA DEPARTMENT OF TRANSPORTATION

DIVISION OF ENGINEERING SERVICES DESIGN AND TECHNICAL SERVICES SPECIAL DESIGNS BRANCH B

BRIDGE NO. N/A
POST MILE 11.0

TEMPORARY SIGNAL SYSTEM CONNECTION DETAILS

SES-4

STRUCTURES DESIGN SPECIAL DESIGN SHEET (ENGLISH) (REV. 09-01-10)

ORIGINAL SCALE IN INCHES FOR REDUCED PLANS 0 1 2 3

UNIT: 3619
PROJECT NUMBER & PHASE: 04000012171
CONTRACT NO.: 04-4S2201

DISREGARD PRINTS BEARING EARLIER REVISION DATES 4-18-11 9-15-14 1-5-15 1-8-15

SHEET 4 OF 5

FILE => spec_des_br_prj/2011sd/04-4s2201-ses4.dgn

USERNAME => s113541 DATE PLOTTED => 15-JAN-2015 TIME PLOTTED => 15:43

DIST	COUNTY	ROUTE	POST MILES TOTAL PROJECT	SHEET No	TOTAL SHEETS
04	Mrn	1	11.0	38	76

REGISTERED CIVIL ENGINEER 1-8-15 DATE

1-12-15
PLANS APPROVAL DATE

REGISTERED PROFESSIONAL ENGINEER TAMARA S. MARCHENKO No. C76837 Exp. 12/31/16 CIVIL STATE OF CALIFORNIA

The State of California or its officers or agents shall not be responsible for the accuracy or completeness of electronic copies of this plan sheet.

To get to the Caltrans web site, go to: http://www.dot.ca.gov

NOTE:

1. Guy wire anchor minimum allowable tension capacity, Qa = 8,900 lbs.

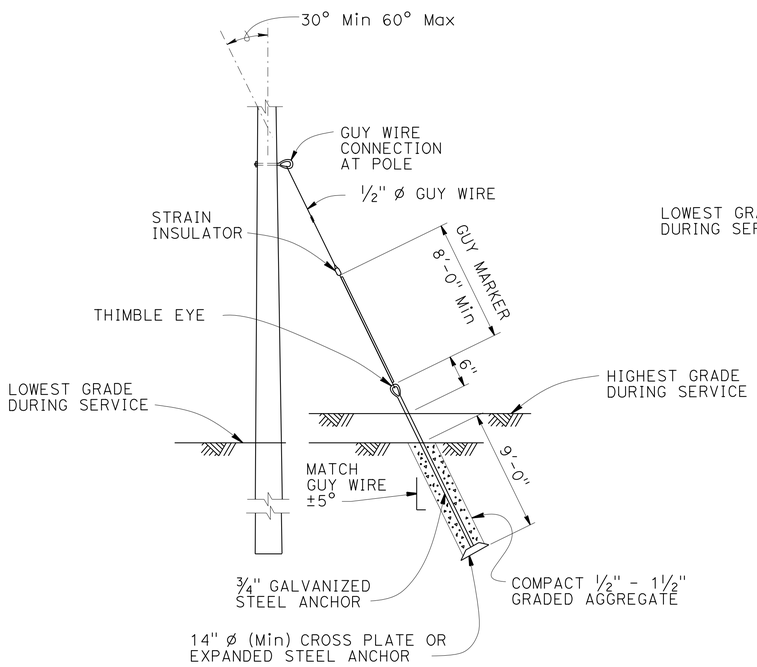

NOTE:

Helical anchor detail may be used in place of expanded steel anchors.

EXPANDED STEEL ANCHOR DETAIL

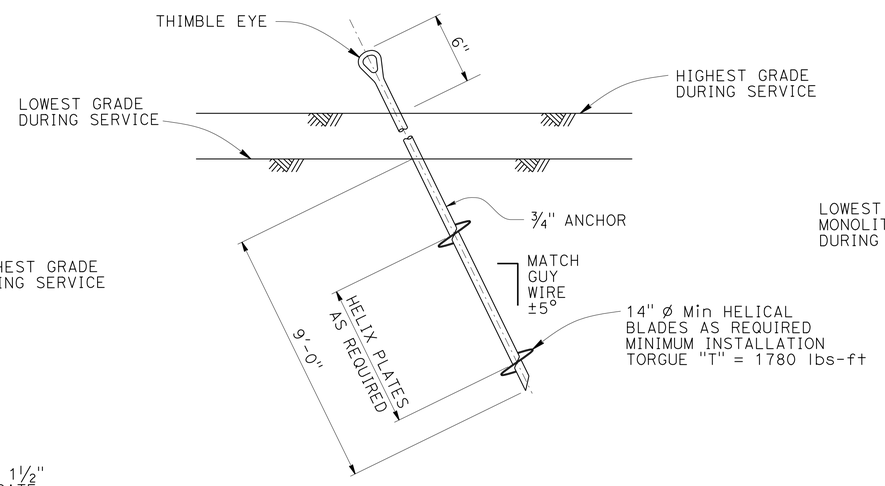

HELICAL ANCHOR DETAIL

(OPTIONAL)

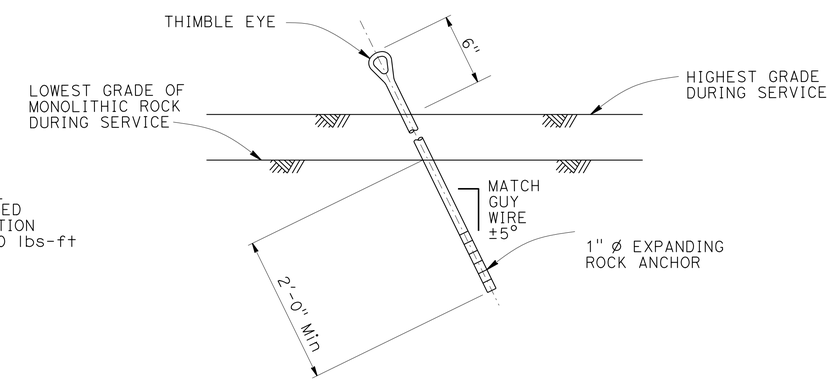

EXPANDING ROCK ANCHOR DETAIL

(OPTIONAL)

NOTE:
THE CONTRACTOR MUST VERIFY ALL CONTROLLING FIELD DIMENSIONS BEFORE ORDERING OR FABRICATING ANY MATERIAL.

NO SCALE

BRANCH CHIEF DAVID NEUMANN	DESIGN	BY TAMARA MARCHENKO	CHECKED VICTOR LOPEZ
	DETAILS	BY HUNG NGUYEN	CHECKED VICTOR LOPEZ
	QUANTITIES	BY	CHECKED

STATE OF CALIFORNIA
DEPARTMENT OF TRANSPORTATION

DIVISION OF ENGINEERING SERVICES
DESIGN AND TECHNICAL SERVICES
SPECIAL DESIGNS BRANCH B

BRIDGE NO. N/A
POST MILE 11.0

TEMPORARY SIGNAL SYSTEM
WOOD POLE ANCHORING DETAILS

SES-5

STRUCTURES DESIGN SPECIAL DESIGN SHEET (ENGLISH) (REV. 09-01-10)

ORIGINAL SCALE IN INCHES FOR REDUCED PLANS 0 1 2 3

UNIT: 3619
PROJECT NUMBER & PHASE: 04000012171
CONTRACT NO.: 04-4S2201

DISREGARD PRINTS BEARING EARLIER REVISION DATES

REVISION DATES 4-18-11 9-15-14 1-6-15 1-8-15

SHEET 5 OF 5

FILE => spec_des_br_prj/2011sd/04-4s2201-ses5.dgn

USERNAME => s113541 DATE PLOTTED => 15-JAN-2015 TIME PLOTTED => 15:43

M

Maint	MAINTENANCE
Max	MAXIMUM
MB	METAL BEAM
MBB	METAL BEAM BARRIER
MBGR	METAL BEAM GUARD RAILING
Med	MEDIAN
MGS	MIDWEST GUARDRAIL SYSTEM
MH	MANHOLE
Min	MINIMUM
Misc	MISCELLANEOUS
Misc I & S	MISCELLANEOUS IRON AND STEEL
Mkr	MARKER
Mod	MODIFIED, MODIFY
Mon	MONUMENT
MP	METAL PLATE
MPGR	METAL PLATE GUARD RAILING
MR	MOVEMENT RATING
MSE	MECHANICALLY STABILIZED EMBANKMENT
Mt	MOUNTAIN, MOUNT
Mtl	MATERIAL
MVP	MAINTENANCE VEHICLE PULLOUT

N

N	NORTH
NB	NORTHBOUND
No.	NUMBER (MUST HAVE PERIOD)
Nos.	NUMBERS (MUST HAVE PERIOD)
NPS	NOMINAL PIPE SIZE
NS	NEAR SIDE
NSP	NEW STANDARD PLAN
NTS	NOT TO SCALE

O

Oblr	OBLITERATE
OC	OVERCROSSING
OD	OUTSIDE DIAMETER
OF	OUTSIDE FACE
OG	ORIGINAL GROUND
OGAC	OPEN GRADED ASPHALT CONCRETE
OGFC	OPEN GRADED FRICTION COURSE
OH	OVERHEAD
OHWM	ORDINARY HIGH WATER MARK
O-O	OUT TO OUT
Opp	OPPOSITE
OSD	OVERSIDE DRAIN

P

P	PAGE
PAP	PERFORATED ALUMINUM PIPE
PB	PULL BOX
PC	POINT OF CURVATURE, PRECAST
PCC	POINT OF COMPOUND CURVE, PORTLAND CEMENT CONCRETE
PCMS	PORTABLE CHANGEABLE MESSAGE SIGN
PCP	PERFORATED CONCRETE PIPE, PRESTRESSED CONCRETE PIPE
PCVC	POINT OF COMPOUND VERTICAL CURVE
PEC	PERMIT TO ENTER AND CONSTRUCT
Ped	PEDESTRIAN
Ped OC	PEDESTRIAN OVERCROSSING
Ped UC	PEDESTRIAN UNDERCROSSING
Perm Mtl	PERMEABLE MATERIAL

P continued

PG	PROFILE GRADE
PI	POINT OF INTERSECTION
PJP	PARTIAL JOINT PENETRATION
Pkwy	PARKWAY
ℙL,PL	PLATE
P/L	PROPERTY LINE
PM	POST MILE, TIME FROM NOON TO MIDNIGHT
PN	PAVING NOTCH
POC	POINT OF HORIZONTAL CURVE
POT	POINT OF TANGENT
POVC	POINT OF VERTICAL CURVE
PP	PIPE PILE, PLASTIC PIPE, POWER POLE
PPL	PREFORMED PERMEABLE LINER
PPP	PERFORATED PLASTIC PIPE
PRC	POINT OF REVERSE CURVE
PRF	PAVEMENT REINFORCING FABRIC
PRVC	POINT OF REVERSE VERTICAL CURVE
PS&E	PLANS, SPECIFICATIONS AND ESTIMATES
PS, P/S	PRESTRESSED
PSP	PERFORATED STEEL PIPE
PT	POINT OF TANGENCY
PVC	POLYVINYL CHLORIDE
Pvmt	PAVEMENT

Q

Qty	QUANTITY

R

R	RADIUS
R & D	REMOVE AND DISPOSE
R & S	REMOVE AND SALVAGE
R/C	RATE OF CHANGE
RCA	REINFORCED CONCRETE ARCH
RCB	REINFORCED CONCRETE BOX
RCP	REINFORCED CONCRETE PIPE
RCPA	REINFORCED CONCRETE PIPE ARCH
Rd	ROAD
Reinf	REINFORCED, REINFORCEMENT, REINFORCING
Rel	RELOCATE
Repl	REPLACEMENT
Ret	RETAINING
Rev	REVISED, REVISION
Rdwy	ROADWAY
RHMA	RUBBERIZED HOT MIX ASPHALT
Riv	RIVER
RM	ROAD-MIXED
RP	RADIUS POINT, REFERENCE POINT
RR	RAILROAD
RSP	ROCK SLOPE PROTECTION, REVISED STANDARD PLAN
Rt	RIGHT
Rte	ROUTE
RW	REDWOOD, RETAINING WALL
R/W	RIGHT OF WAY
Rwy	RAILWAY

S

S	SOUTH, SUPPLEMENT
SAE	STRUCTURE APPROACH EMBANKMENT
Salv	SALVAGE
SAPP	STRUCTURAL ALUMINUM PLATE PIPE
SB	SOUTHBOUND
SC	SAND CUSHION
SCSP	SLOTTED CORRUGATED STEEL PIPE
SD	STORM DRAIN
Sec	SECOND, SECTION
Sep	SEPARATION
SG	SUBGRADE
Shld	SHOULDER
Sht	SHEET
Sim	SIMILAR
℄	STATION LINE
SM	SELECTED MATERIAL
Spec	SPECIAL, SPECIFICATIONS
SPP	SLOTTED PLASTIC PIPE
SS	SLOPE STAKE
SSBM	STRAP AND SADDLE BRACKET METHOD
SSD	STRUCTURAL SECTION DRAIN
SSPA	STRUCTURAL STEEL PLATE ARCH
SSPP	STRUCTURAL STEEL PLATE PIPE
SSPPA	STRUCTURAL STEEL PLATE PIPE ARCH
SSRP	STEEL SPIRAL RIB PIPE
St	STREET
Sta	STATION
STBB	SINGLE THRIE BEAM BARRIER
Std	STANDARD
Str	STRUCTURE
Surf	SURFACING
SW	SIDEWALK, SOUND WALL
Swr	SEWER
Sym	SYMMETRICAL
S4S	SURFACE 4 SIDES

T

T	SEMI-TANGENT
Tan	TANGENT
TBB	THRIE BEAM BARRIER
Tbr	TIMBER
TC	TOP OF CURB
TCB	TRAFFIC CONTROL BOX
TCE	TEMPORARY CONSTRUCTION EASEMENT
Tel	TELEPHONE
Temp	TEMPORARY
TG	TOP OF GRADE
Tot	TOTAL
TP	TELEPHONE POLE
TPB	TREATED PERMEABLE BASE
TPM	TREATED PERMEABLE MATERIAL
Trans	TRANSITION

T continued

TS	TRANSVERSE, TRAFFIC SIGNAL, TUBULAR STEEL
Typ	TYPICAL

U

UC	UNDERCROSSING
UD	UNDERDRAIN
UG	UNDERGROUND
UON	UNLESS OTHERWISE NOTED
UP	UNDERPASS

V

V	VALVE, DESIGN SPEED
Var	VARIABLE, VARIES
VC	VERTICAL CURVE
VCP	VITRIFIED CLAY PIPE
Vert	VERTICAL
Via	VIADUCT
Vol	VOLUME

W

W	WEST, WIDTH
WB	WESTBOUND
WH	WEEP HOLE
WM	WIRE MESH
WS	WATER SURFACE
WSP	WELDED STEEL PIPE
Wt	WEIGHT
WV	WATER VALVE
WW	WINGWALL
WWLOL	WINGWALL LAYOUT LINE

X

X Sec	CROSS SECTION
Xing	CROSSING

Y

Yr	YEAR
Yrs	YEARS

Dist	COUNTY	ROUTE	POST MILES TOTAL PROJECT	SHEET No.	TOTAL SHEETS
04	Mrn	1	11.0	39	76

Grace M. Tsushima
REGISTERED CIVIL ENGINEER

July 19, 2013
PLANS APPROVAL DATE

REGISTERED PROFESSIONAL ENGINEER
Grace M. Tsushima
No. C49814
Exp. 9-30-14
CIVIL
STATE OF CALIFORNIA

THE STATE OF CALIFORNIA OR ITS OFFICERS OR AGENTS SHALL NOT BE RESPONSIBLE FOR THE ACCURACY OR COMPLETENESS OF SCANNED COPIES OF THIS PLAN SHEET.

TO ACCOMPANY PLANS DATED 1-12-15

2010 REVISED STANDARD PLAN RSP A10B

UNIT OF MEASUREMENT SYMBOLS:

Some of the symbols used in the project plan quantity tables and in the Bid Item List are:

TABLE A

SYMBOL USED	DEFINITIONS
ACRE	ACRE
CF	CUBIC FOOT
CY	CUBIC YARD
EA	EACH
GAL	GALLON
LB	POUND
LF	LINEAR FOOT
SQFT	SQUARE FOOT
SQYD	SQUARE YARD
STA	100 FEET
TAB	TABLET
TON	2,000 POUNDS

Some of the symbols used in the plans other than in the project plan quantity tables are:

TABLE B

SYMBOL USED	DEFINITIONS
ksi	KIPS PER SQUARE INCH
ksf	KIPS PER SQUARE FOOT
psi	POUNDS PER SQUARE INCH
psf	POUNDS PER SQUARE FOOT
lb/ft^3, pcf	POUNDS PER CUBIC FOOT
tsf	TONS PER SQUARE FOOT
mph, MPH *	MILES PER HOUR
ø	NOMINAL DIAMETER
oz	OUNCE
lb	POUND
kip	1,000 POUNDS
cal	CALORIE
ft	FOOT OR FEET
gal	GALLON

* For use on a sign panel only

STATE OF CALIFORNIA
DEPARTMENT OF TRANSPORTATION

ABBREVIATIONS (SHEET 2 OF 2)

NO SCALE

RSP A10B DATED JULY 19, 2013 SUPERSEDES STANDARD PLAN A10B DATED MAY 20, 2011 - PAGE 2 OF THE STANDARD PLANS BOOK DATED 2010.

REVISED STANDARD PLAN RSP A10B

6-7-13

Dist	COUNTY	ROUTE	POST MILES TOTAL PROJECT	SHEET No.	TOTAL SHEETS
04	Mrn	1	11.0	40	76

REGISTERED CIVIL ENGINEER

July 20, 2012
PLANS APPROVAL DATE

REGISTERED PROFESSIONAL ENGINEER
Roberta L. McLaughlin
No. C40375
Exp. 3-31-13
CIVIL
STATE OF CALIFORNIA

THE STATE OF CALIFORNIA OR ITS OFFICERS OR AGENTS SHALL NOT BE RESPONSIBLE FOR THE ACCURACY OR COMPLETENESS OF SCANNED COPIES OF THIS PLAN SHEET.

TO ACCOMPANY PLANS DATED 1-12-15

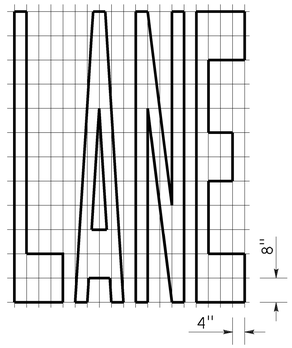

A=24 ft²

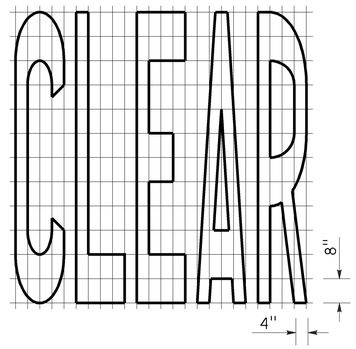

A=27 ft²

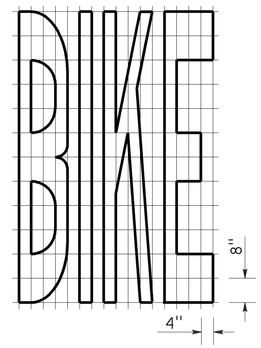

A=21 ft²

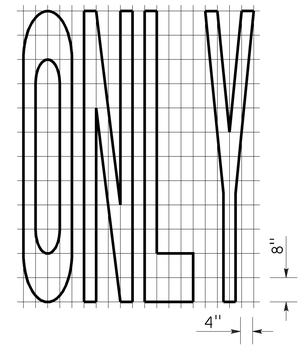

A=22 ft²

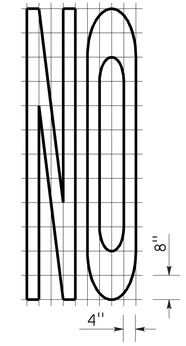

A=14 ft²

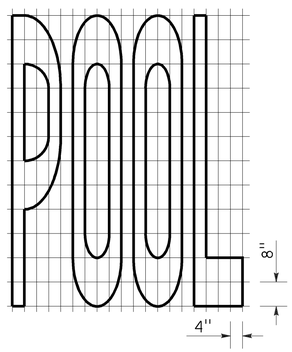

A=23 ft²

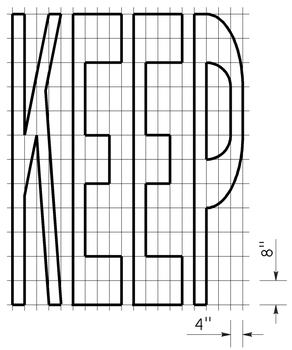

A=24 ft²

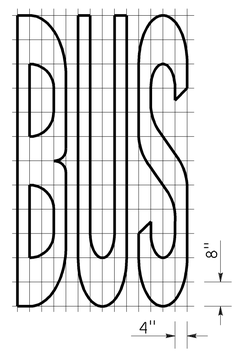

A=20 ft²

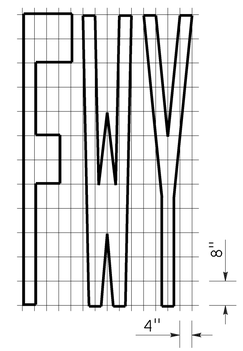

A=16 ft²

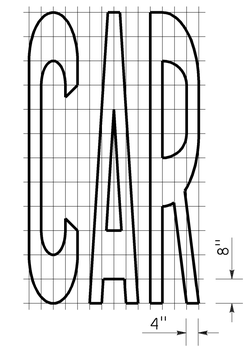

A=17 ft²

WORD MARKINGS			
ITEM	ft²	ITEM	ft²
LANE	24	NO	14
POOL	23	BIKE	21
CAR	17	BUS	20
CLEAR	27	ONLY	22
KEEP	24	FWY	16

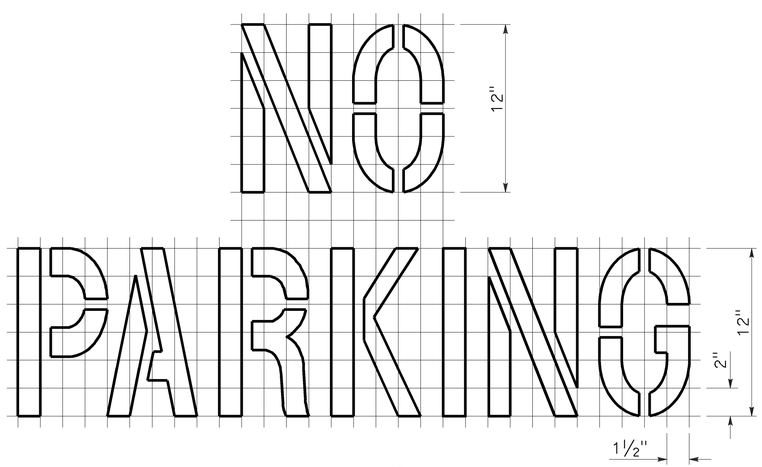

A=2 ft²
See Notes 6 and 7

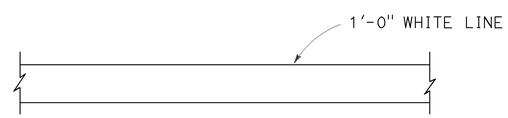

LIMIT LINE (STOP LINE)

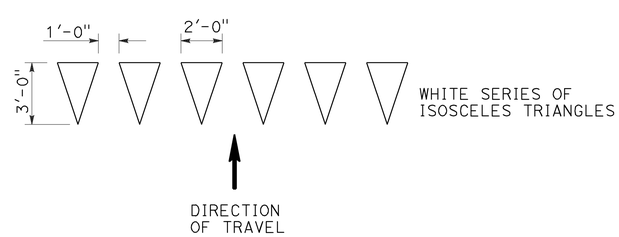

YIELD LINE

NOTES:

1. If a message consists of more than one word, it should read "UP", i.e., the first word should be nearest the driver.
2. The space between words should be at least four times the height of the characters for low speed roads, but not more than ten times the height of the characters. The space may be reduced appropriately where there is limited space because of local conditions.
3. Minor variations in dimensions may be accepted by the Engineer.
4. Portions of a letter, number or symbol may be separated by connecting segments not to exceed 2" in width.
5. The words "NO PARKING" pavement marking is to be used for parking facilities. For typical locations of markings, see Standard Plans A90A and A90B.
6. The words "NO PARKING", shall be painted in white letters no less than 1'-0" high on a contrasting background and located so that it is visible to traffic enforcement officials.

STATE OF CALIFORNIA
DEPARTMENT OF TRANSPORTATION

PAVEMENT MARKINGS WORDS, LIMIT AND YIELD LINES

NO SCALE

RSP A24E DATED JULY 20, 2012 SUPERSEDES STANDARD PLAN A24E
DATED MAY 20, 2011 - PAGE 17 OF THE STANDARD PLANS BOOK DATED 2010.

REVISED STANDARD PLAN RSP A24E

2010 REVISED STANDARD PLAN RSP A24E

6-12-12

Dist	COUNTY	ROUTE	POST MILES TOTAL PROJECT	SHEET No.	TOTAL SHEETS
04	Mrn	1	11.0	41	76

REGISTERED CIVIL ENGINEER

July 18, 2014
PLANS APPROVAL DATE

REGISTERED PROFESSIONAL ENGINEER Glenn DeCou No. C34547 Exp. 9-30-15 CIVIL STATE OF CALIFORNIA

THE STATE OF CALIFORNIA OR ITS OFFICERS OR AGENTS SHALL NOT BE RESPONSIBLE FOR THE ACCURACY OR COMPLETENESS OF SCANNED COPIES OF THIS PLAN SHEET.

TO ACCOMPANY PLANS DATED 1-12-15

2010 REVISED STANDARD PLAN RSP A85

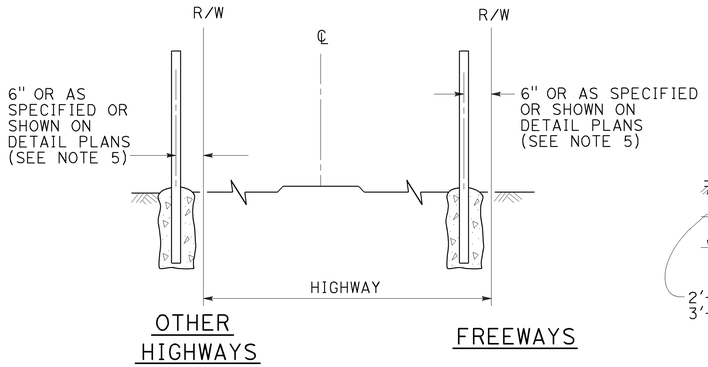

FENCE LOCATION

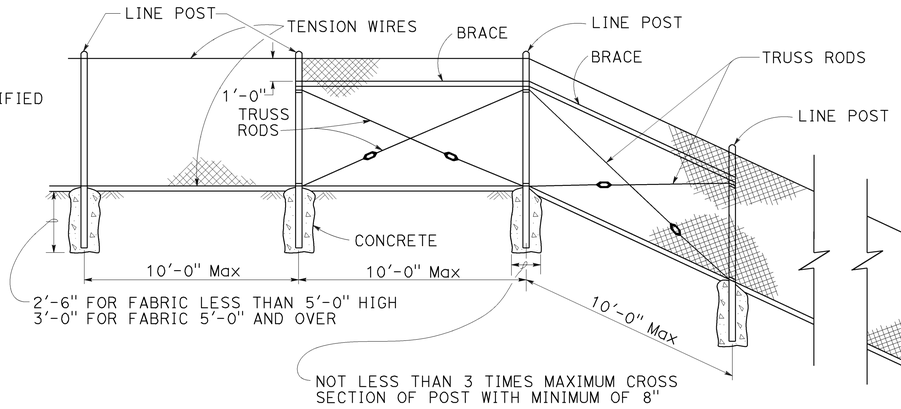

CHAIN LINK FENCE ON SHARP BREAK IN GRADE

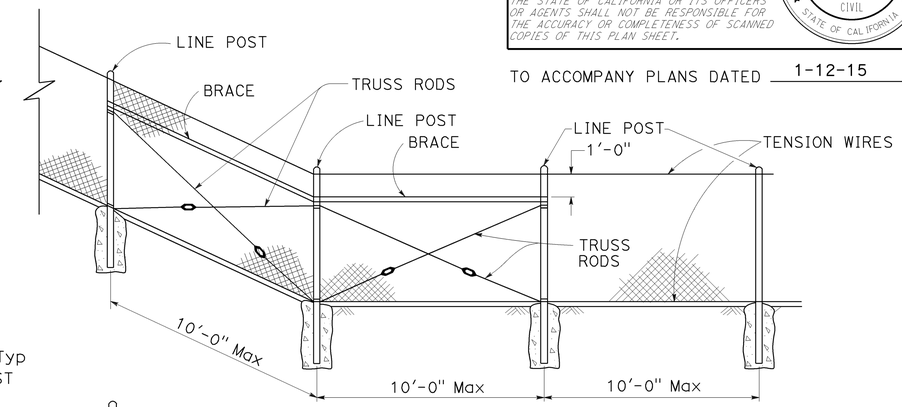

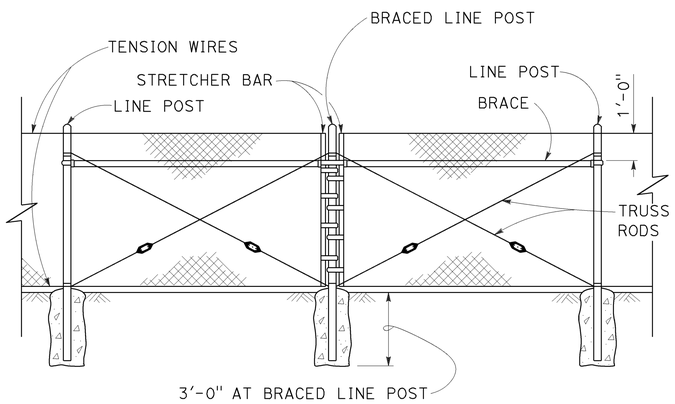

BRACED LINE POST INSTALLATION

Braced line post at intervals not exceeding 1000'

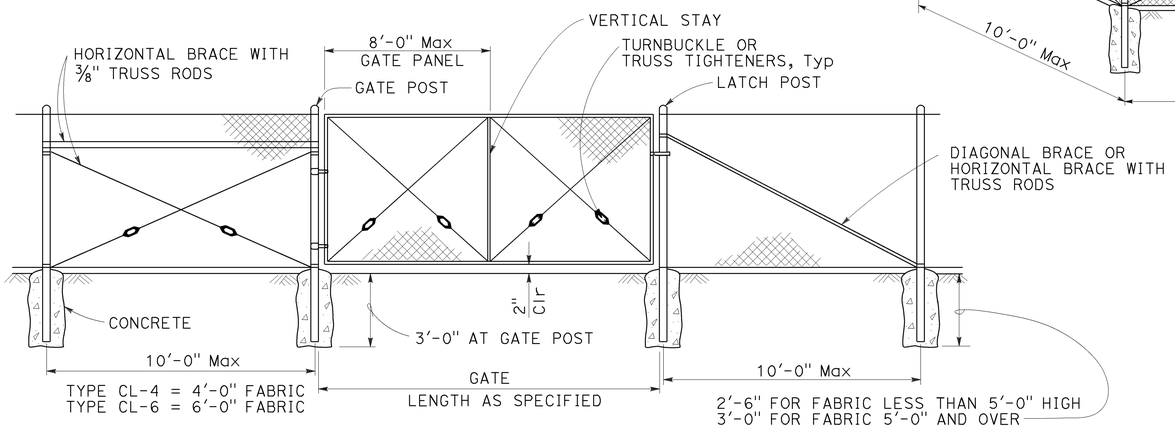

CHAIN LINK GATE INSTALLATION

GATE POST			
FENCE HEIGHT	GATE WIDTHS	ROUND OD PIPE	WEIGHT (lb/ft)
6'-0" AND LESS	UP THRU 6'-0"	2.875"	5.80
	OVER 6'-0" THRU 12'-0"	4.500"	10.80
	OVER 12'-0" THRU 18'-0"	5.563"	14.63
	OVER 18'-0" TO 24'-0" Max	6.625"	18.99
OVER 6'-0" TO 8'-0" Max	UP THRU 6'-0"	3.500"	7.58
	OVER 6'-0" THRU 12'-0"	5.563"	14.63
	OVER 12'-0" THRU 18'-0"	6.625"	18.99
	OVER 18'-0" TO 24'-0" Max	8.625"	28.58

Above post dimensions and weights are minimums. Larger sizes may be used upon approval.

NOTES:

1. The table below shows minimum sized posts and braces complying with the specifications. Larger or heavier post and brace sizes may be used upon approval.
2. Sections shown in the tables must also comply with the strength requirements and other provisions of the Specifications.
3. Other sections which comply with the strength requirements and other provisions of the Specifications may be used upon approval.
4. Options exercised shall be uniform on any one project.
5. Offset to be 2'-0" at monument locations, measured at right angles to R/W lines. Taper to achieve offset to be at least 20'-0" long.
6. See Revised Standard Plan RSP A85B for Brace, Stretcher Bar, and Truss Tightener Details.

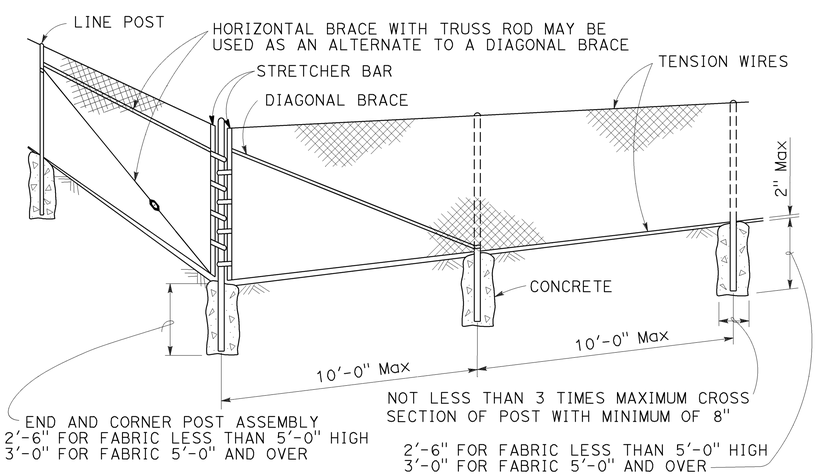

CORNER POST

TYPICAL MEMBER DIMENSIONS (See Notes)										
FENCE HEIGHT	LINE POSTS				END, LATCH AND CORNER POSTS		BRACES			
	ROUND OD PIPE	WEIGHT (lb/ft)	ROLL FORMED		ROUND OD PIPE	WEIGHT (lb/ft)	ROUND OD PIPE	WEIGHT (lb/ft)	ROLL FORMED	
			SECTION	WEIGHT (lb/ft)					SECTION	WEIGHT (lb/ft)
6'-0" AND LESS	1.900"	2.72	1.875" x 1.625"	1.85	2.375"	3.65	1.66"	2.27	1.625" x 1.25"	1.35
OVER 6'-0" TO 8'-0" Max	2.375"	3.65	2.25" x 1.70"	2.78	2.875"	5.80	1.66"	2.27	1.625" x 1.25"	1.35

STATE OF CALIFORNIA
DEPARTMENT OF TRANSPORTATION

CHAIN LINK FENCE

NO SCALE

RSP A85 DATED JULY 18, 2014 SUPERSEDES STANDARD PLAN A85
DATED MAY 20, 2011 - PAGE 112 OF THE STANDARD PLANS BOOK DATED 2010.

REVISED STANDARD PLAN RSP A85

7-1-14

Dist	COUNTY	ROUTE	POST MILES TOTAL PROJECT	SHEET No.	TOTAL SHEETS
04	Mrn	1	11.0	42	76

Glenn DeCou
REGISTERED CIVIL ENGINEER

October 19, 2012
PLANS APPROVAL DATE

REGISTERED PROFESSIONAL ENGINEER
Glenn DeCou
No. C34547
Exp. 9-30-13
CIVIL
STATE OF CALIFORNIA

THE STATE OF CALIFORNIA OR ITS OFFICERS OR AGENTS SHALL NOT BE RESPONSIBLE FOR THE ACCURACY OR COMPLETENESS OF SCANNED COPIES OF THIS PLAN SHEET.

TO ACCOMPANY PLANS DATED 1-12-15

2010 REVISED STANDARD PLAN RSP A85B

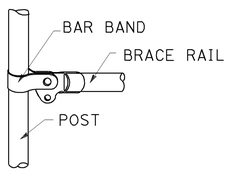

BRACE RAIL

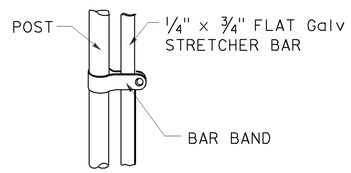

STRETCHER BAR

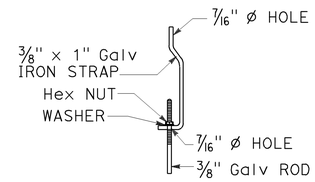

TRUSS TIGHTENER

NOTES:

1. All material for abutment connection to be galvanized.
2. The chain link fabric shall be replaced by barbed wire strands at 12" maximum centers between the double posts.
3. When the width of the culvert makes it necessary to anchor a post to the top of the culvert, a cast iron shoe or other device approved by the Engineer shall be used.
4. Fencing over stream and around headwall may also use Barbed Wire or Wire Mesh fencing with either wood post or steel post installation.
5. See Standard Plan A85 for Chain Link fence dimensions. See Standard Plan A86 for Barbed Wire and Wire Mesh fence dimensions and for wood post and steel post installation.

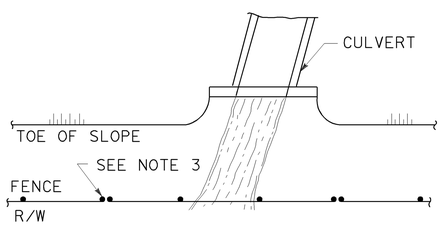

PLAN

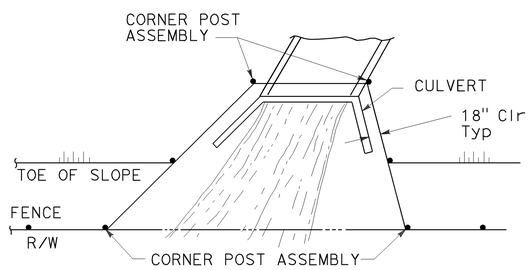

PLAN

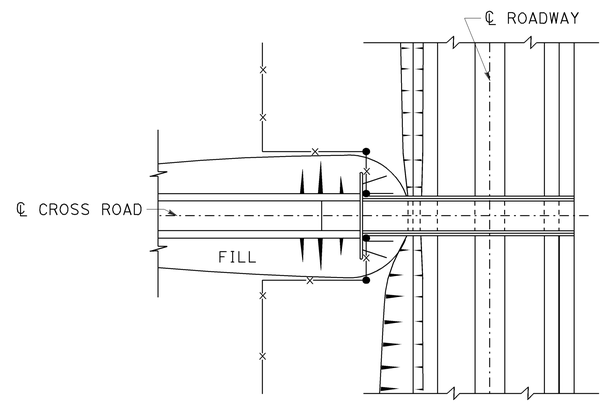

PLAN OF ROADWAY - OVERCROSSING

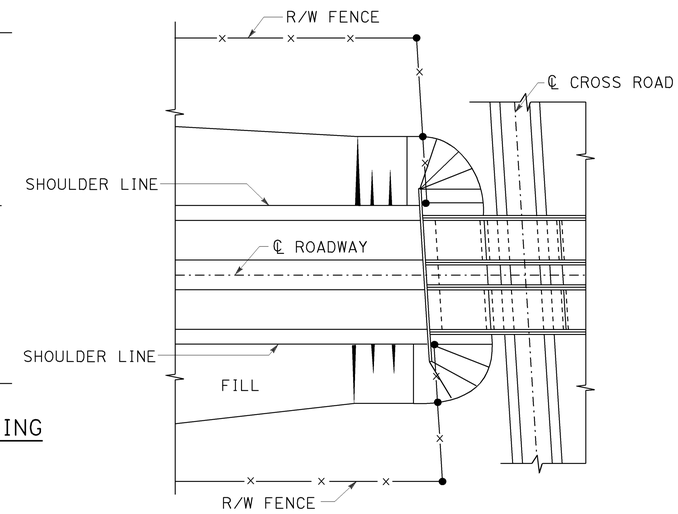

PLAN OF ROADWAY - UNDERCROSSING

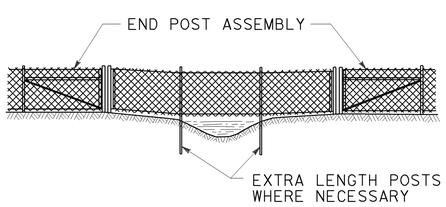

ELEVATION

INSTALLATION OVER STREAM

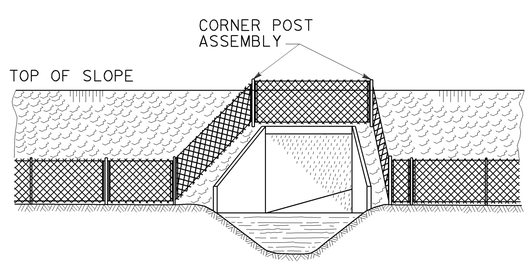

ELEVATION

INSTALLATION AROUND HEADWALL

See Note 4

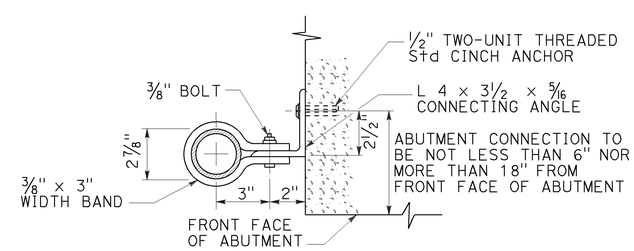

ABUTMENT CONNECTION

TYPICAL INSTALLATION AT BRIDGES

STATE OF CALIFORNIA
DEPARTMENT OF TRANSPORTATION

CHAIN LINK FENCE DETAILS

NO SCALE

RSP A85B DATED OCTOBER 19, 2012 SUPERSEDES STANDARD PLAN A85B
DATED MAY 20, 2011 - PAGE 114 OF THE STANDARD PLANS BOOK DATED 2010.

REVISED STANDARD PLAN RSP A85B

7-19-12

DIST	COUNTY	ROUTE	POST MILES TOTAL PROJECT	SHEET No.	TOTAL SHEETS
04	Mrn	1	11.0	43	76

REGISTERED CIVIL ENGINEER

November 15, 2013
PLANS APPROVAL DATE

REGISTERED PROFESSIONAL ENGINEER Cornelis M. Hakim No. C55610 Exp. 12-31-14 CIVIL STATE OF CALIFORNIA

THE STATE OF CALIFORNIA OR ITS OFFICERS OR AGENTS SHALL NOT BE RESPONSIBLE FOR THE ACCURACY OR COMPLETENESS OF SCANNED COPIES OF THIS PLAN SHEET.

TO ACCOMPANY PLANS DATED 1-12-15

2010 REVISED STANDARD PLAN RSP P74

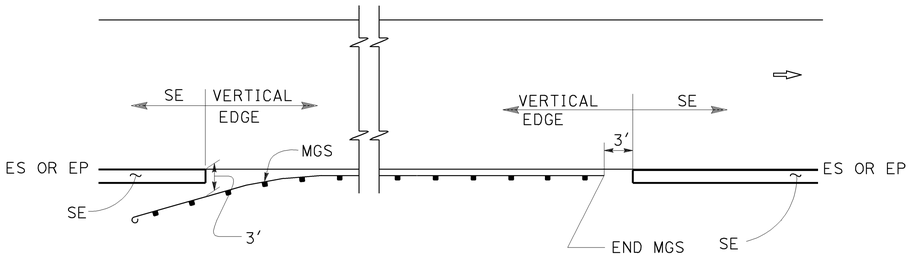

MGS

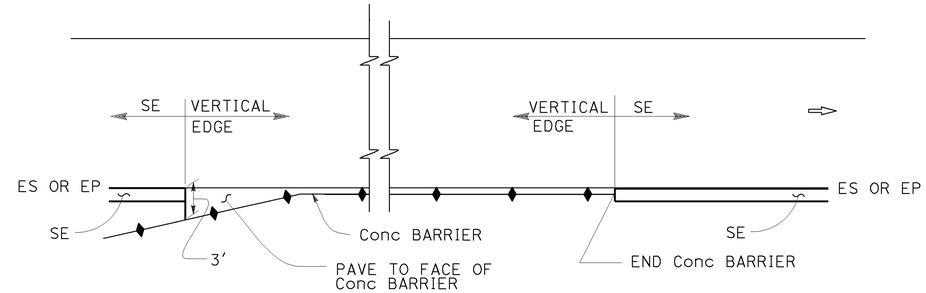

CONCRETE BARRIER

ABBREVIATIONS:

SE SAFETY EDGE

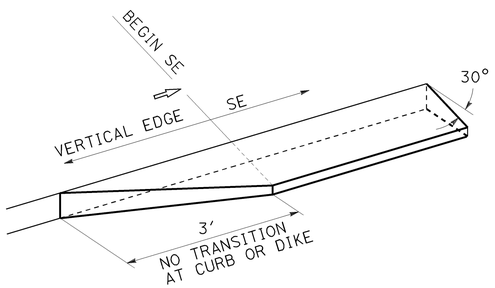

TRANSITION DETAIL FOR CONCRETE ONLY

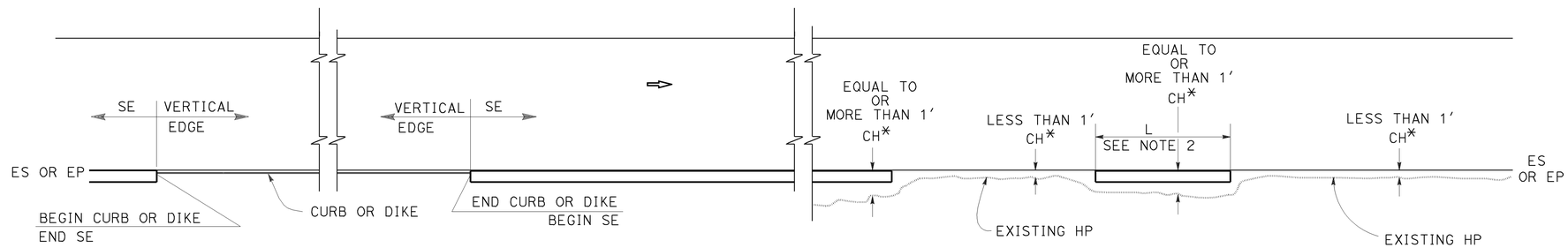

CURB OR DIKE

NARROW SIDE SLOPE

* CH = Distance from ES or EP to existing HP.

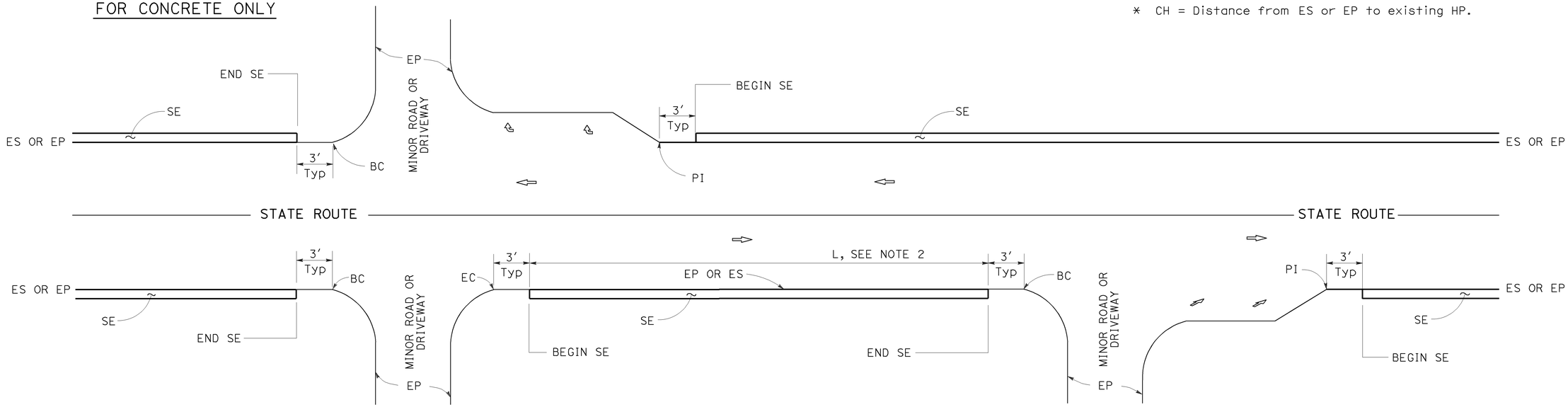

INTERSECTION

MINOR ROADWAY OR DRIVEWAY

DRIVEWAY AND INTERSECTION

STATE OF CALIFORNIA
DEPARTMENT OF TRANSPORTATION

PAVEMENT EDGE TREATMENTS

NO SCALE

RSP P74 DATED NOVEMBER 15, 2013 SUPERSEDES RSP P74 DATED JANUARY 20, 2012 THAT SUPPLEMENTS THE STANDARD PLANS BOOK DATED 2010.

REVISED STANDARD PLAN RSP P74

NOTES:

1. For details not shown, see Revised Standard Plans RSP P75 and RSP P76.
2. Safety edge is optional when L is less than 30′.

10-11-13

DIST	COUNTY	ROUTE	POST MILES TOTAL PROJECT	SHEET No.	TOTAL SHEETS
04	Mrn	1	11.0	44	76

REGISTERED CIVIL ENGINEER

November 15, 2013
PLANS APPROVAL DATE

REGISTERED PROFESSIONAL ENGINEER
Cornelis M. Hakim
No. C55610
Exp. 12-31-14
CIVIL
STATE OF CALIFORNIA

THE STATE OF CALIFORNIA OR ITS OFFICERS OR AGENTS SHALL NOT BE RESPONSIBLE FOR THE ACCURACY OR COMPLETENESS OF SCANNED COPIES OF THIS PLAN SHEET.

TO ACCOMPANY PLANS DATED 1-12-15

LEGEND:

- HMA PAVEMENT
- HMA OR CONCRETE PAVEMENT
- CONCRETE PAVEMENT

ABBREVIATIONS:

SE SAFETY EDGE
TT TOTAL THICKNESS OF SE
HW HINGE WIDTH, DISTANCE FROM ES OR EP TO HP

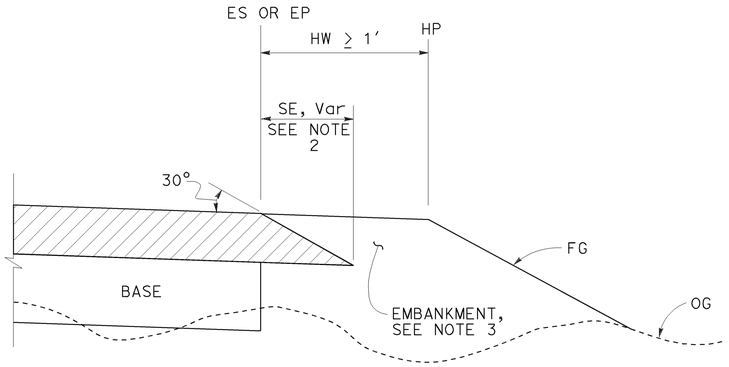

CASE K
Safety Edge - Fill Section, HW ≥ 1′

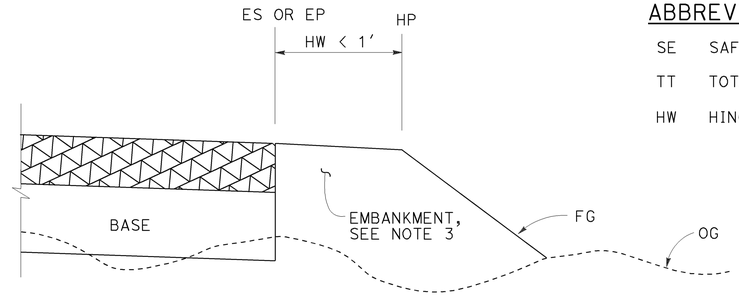

CASE L
Vertical Edge - Fill Section, HW < 1′

FILL SECTION

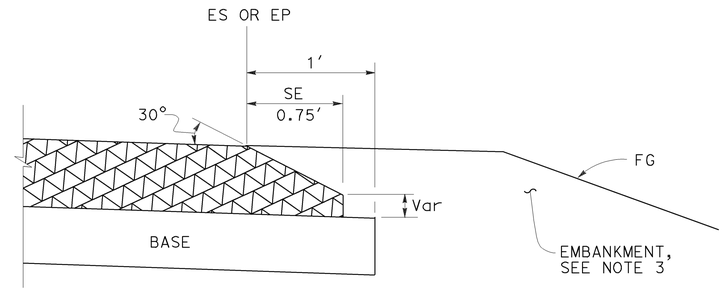

DETAIL "B"
For HMA pavement thickness more than 0.43′ or concrete pavement

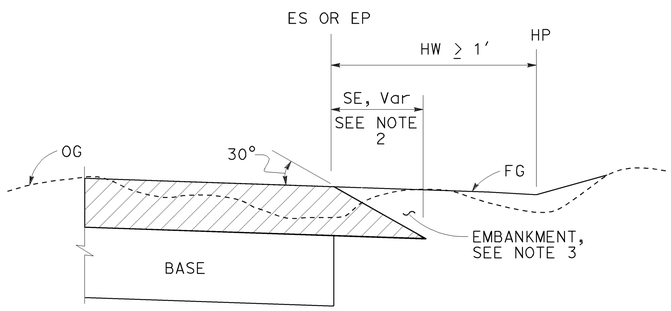

CASE M
Safety Edge - Cut Section, HW ≥ 1′

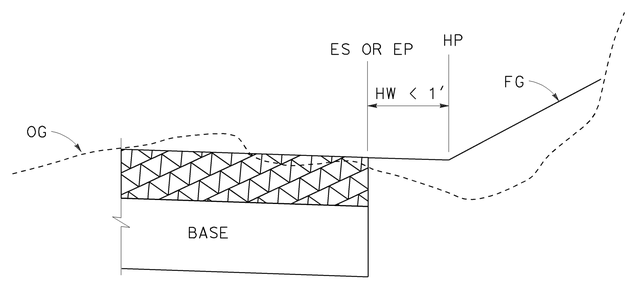

CASE N
Vertical Edge - Cut Section, HW < 1′

CUT SECTION

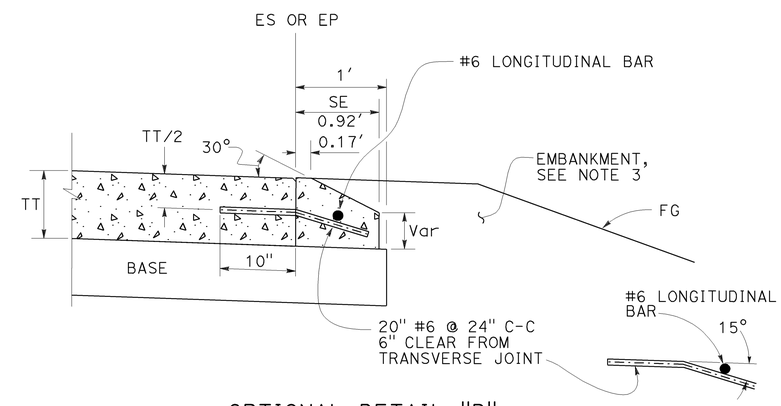

OPTIONAL DETAIL "B"
For concrete pavement
See Note 4

NOTES:

1. For limits of safety edge and vertical edge treatments, see Revised Standard Plan RSP P74
2. Details shown for HMA pavement thickness less than 0.43′. See Detail "B" for HMA pavement thickness more than 0.43′ or concrete pavement.
3. For locations and limits of embankment see project plans.
4. Safety edge transverse joint must match pavement transverse joint. End of #6 longitudinal bar must be 2" ±½" clear from transverse joint.
5. Safety edge is not needed in the area of MGS, barrier, right turn lane and acceleration lane. See Revised Standard Plan RSP P74.

STATE OF CALIFORNIA
DEPARTMENT OF TRANSPORTATION

PAVEMENT EDGE TREATMENTS-NEW CONSTRUCTION

NO SCALE

RSP P76 DATED NOVEMBER 15, 2013 SUPERSEDES RSP P76 DATED JANUARY 20, 2012 THAT SUPPLEMENTS THE STANDARD PLANS BOOK DATED 2010.

REVISED STANDARD PLAN RSP P76

2010 REVISED STANDARD PLAN RSP P76

10-4-13

TO ACCOMPANY PLANS DATED 1-12-15

Dist	COUNTY	ROUTE	POST MILES TOTAL PROJECT	SHEET No.	TOTAL SHEETS
04	Mrn	1	11.0	45	76

REGISTERED CIVIL ENGINEER

October 19, 2012
PLANS APPROVAL DATE

REGISTERED PROFESSIONAL ENGINEER Glenn DeCou No. C34547 Exp. 9-30-13 CIVIL STATE OF CALIFORNIA

THE STATE OF CALIFORNIA OR ITS OFFICERS OR AGENTS SHALL NOT BE RESPONSIBLE FOR THE ACCURACY OR COMPLETENESS OF SCANNED COPIES OF THIS PLAN SHEET.

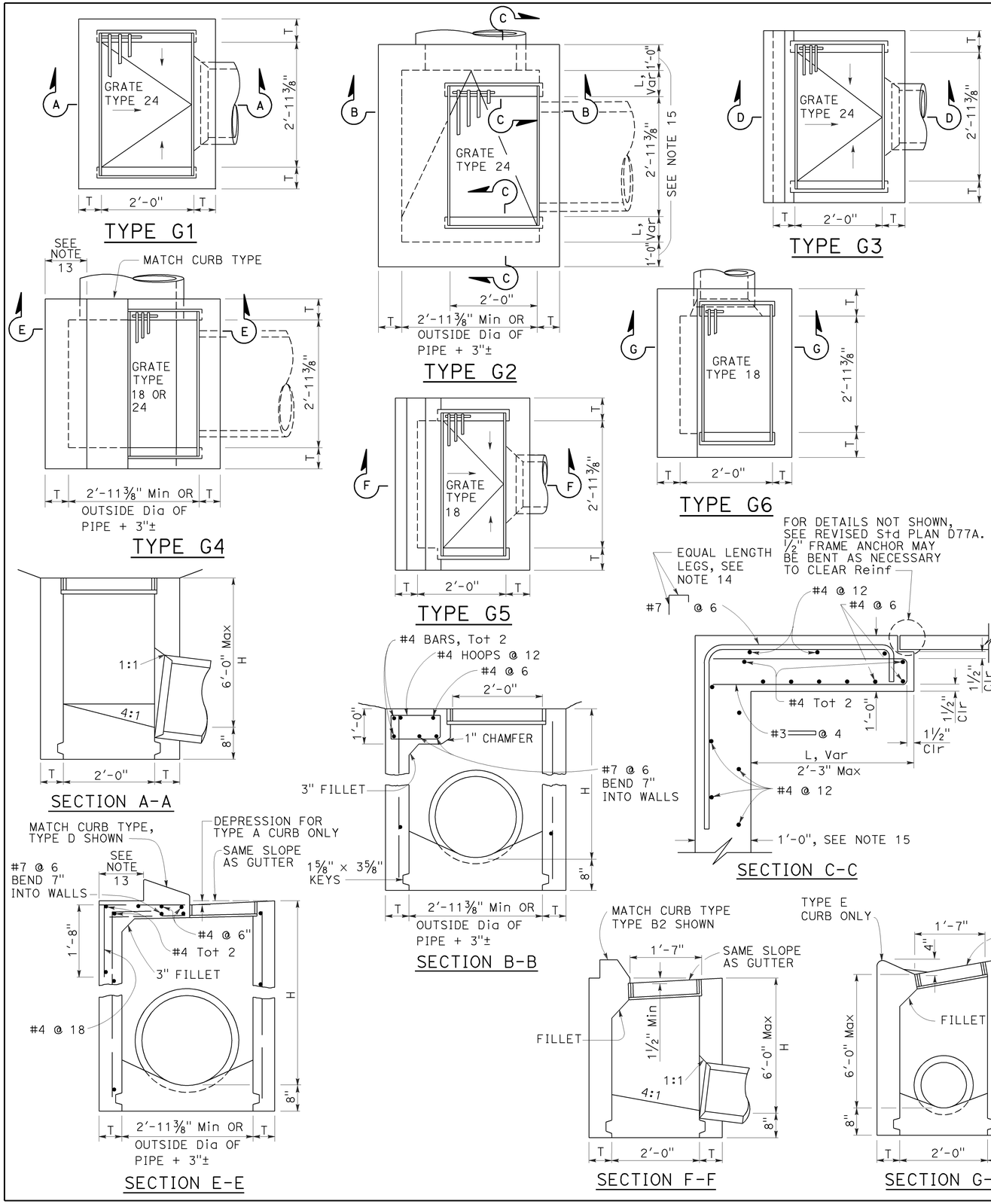

NOTES:

1. "H" is the difference in elevation between the outlet pipe flow line and the normal gutter grade line undepressed.
2. For "T" wall thickness, see Table A below.
3. Wall reinforcing not required when "H" is 8'-0" or less and the unsupported width or length is 7'-0" or less. Walls exceeding these limits shall be reinforced with #4 bars @ 1'-6" ± centers placed 1½" clear to inside of box unless otherwise shown.
4. Inlet bottom reinforcing not required. See Standard Plan D74C for alternative reinforced bottom and alternative half round bottom.
5. Steps-None required where "H" is less than 2'-6". Where "H" is 2'-6" or more, install steps with lowest rung 1'-0" above the floor and highest rung not more than 6" below top of inlet. The distance between steps shall not exceed 1'-0" and shall be uniform throughout the length of the wall. Place steps in the wall without an opening. Steps inserts may be substituted for the bar steps. Step inserts shall comply with State Industrial Safety requirements. See Standard Plan D74C for step details.
6. Details shown apply to both metal and concrete pipe.
7. Pipe(s) can be placed in any wall.
8. Curb section shall match adjacent curb.
9. Basin floors shall have wood trowel finish and a minimum slope of 12:3 from all directions toward outlet pipe.
10. Set inlet so that grate bars are parallel to direction of principal surface flow.
11. See Revised Standard Plans D77A and D77B for grate and frame details and weights of miscellaneous iron and steel.
12. See Standard Plan D78A for gutter depression details.
13. This dimenison will vary with different grates, curbs types, box width and wall thickness.
14. Bar may be rotated as necessary to clear opening. Where "L" is 6" or less, bar may be omitted.
15. Where "L" is 6" or less, wall thickness shall be as shown in Table A.
16. Cast-in-place inlets to be formed around all pipes/stubs intersecting the inlet, and concrete poured in one continuous operation. Precast inlets shall have mortared connections conforming to details for Type GCP Inlet shown on Standard Plan D75B. See Standard Specifications for mortar composition.

TABLE A

CONCRETE QUANTITIES				
TYPE	H=3'-0" TO 8'-0" (T=6")		H=8'-1" TO 20'-0" (T=8")	
	H=3'-0" (CY)	ADDITIONAL PCC PER FOOT (CY)	H=8'-1" (CY)	ADDITIONAL PCC PER FOOT (CY)
G-1	0.95	0.220	See Note A	SEE NOTE A
G-2*	1.31	0.255	3.50	0.357
G-3	1.03	0.220	See Note A	SEE NOTE A
G-4* (TYPE 24)	1.27	0.255	3.48	0.357
G-4* (TYPE 18)	1.30	0.255	3.50	0.357
G-5	1.02	0.220	SEE NOTE A	SEE NOTE A
G-6	1.04	0.220	SEE NOTE A	SEE NOTE A

TABLE BASED ON 8" FLOOR SLAB. NO DEDUCTIONS ARE TO BE MADE TO THESE QUANTITIES BECAUSE OF PIPE OPENINGS, DIFFERENT FLOOR ALTERNATIVES OR DIFFERENT CURB TYPES. * QUANTITIES FOR TYPE G-2 AND G-4 INLETS BASED ON THE MINIMUM INTERIOR DIMENSIONS.

NOTE A:

Maximum allowable height 6'-0".

STATE OF CALIFORNIA
DEPARTMENT OF TRANSPORTATION

DRAINAGE INLETS

NO SCALE

RSP D73 DATED OCTOBER 19, 2012 SUPERSEDES STANDARD PLAN D73 DATED MAY 20, 2011 - PAGE 156 OF THE STANDARD PLANS BOOK DATED 2010.

REVISED STANDARD PLAN RSP D73

2010 REVISED STANDARD PLAN RSP D73

7-19-12

Dist	COUNTY	ROUTE	POST MILES TOTAL PROJECT	SHEET No.	TOTAL SHEETS
04	Mrn	1	11.0	46	76

Raymond Don Tsztoo
REGISTERED CIVIL ENGINEER

April 19, 2013
PLANS APPROVAL DATE

REGISTERED PROFESSIONAL ENGINEER
Raymond Don Tsztoo
No. C37332
Exp. 6-30-14
CIVIL
STATE OF CALIFORNIA

THE STATE OF CALIFORNIA OR ITS OFFICERS OR AGENTS SHALL NOT BE RESPONSIBLE FOR THE ACCURACY OR COMPLETENESS OF SCANNED COPIES OF THIS PLAN SHEET.

TO ACCOMPANY PLANS DATED 1-12-15

2010 REVISED STANDARD PLAN RSP D77B

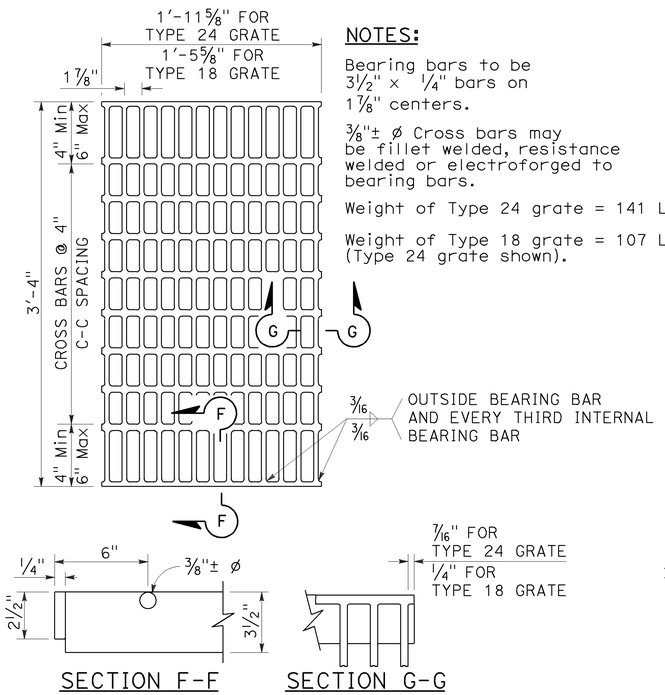

SECTION F-F SECTION G-G

TYPE 18-10 AND 24-13 GRATE

(Welded Steel)

NOTES:

Bearing bars to be 3½" × ¼" bars on 1⅞" centers.

⅜"± ø Cross bars may be fillet welded, resistance welded or electroforged to bearing bars.

Weight of Type 24 grate = 141 LBS.

Weight of Type 18 grate = 107 LBS. (Type 24 grate shown).

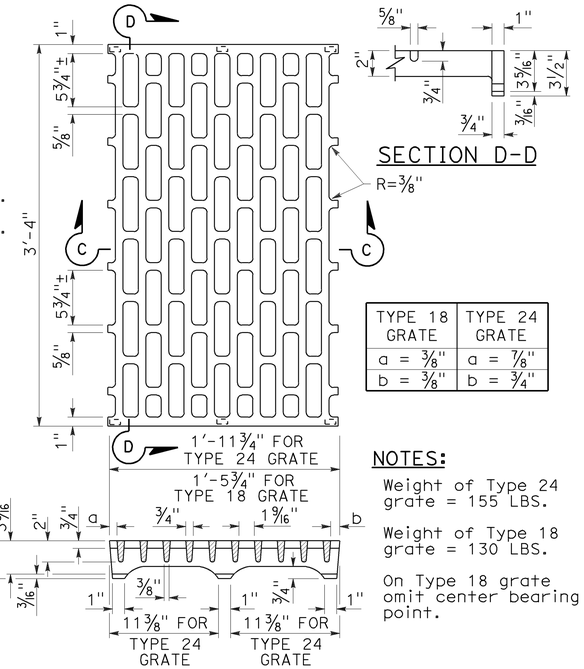

SECTION D-D

TYPE 18 GRATE	TYPE 24 GRATE
a = ⅜"	a = ⅞"
b = ⅜"	b = ¾"

NOTES:

Weight of Type 24 grate = 155 LBS.

Weight of Type 18 grate = 130 LBS.

On Type 18 grate omit center bearing point.

SECTION C-C

TYPE 18-8C AND 24-10C GRATE

(Cast ductile iron)

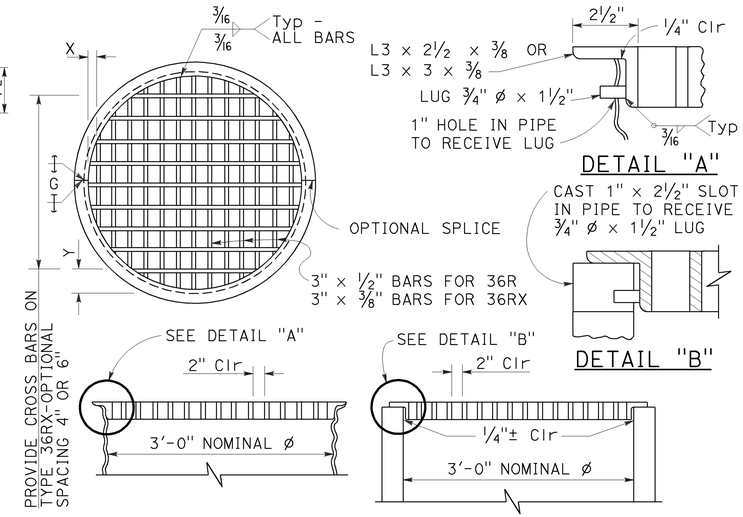

TYPE 36R AND 36RX GRATE DETAILS

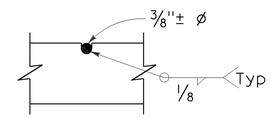

⅜"± ø Cross bars may be fillet welded, resistance welded or electroforged to bearing bars.

CROSS BAR DETAIL TYPE 36RX GRATE (WELDED STEEL)

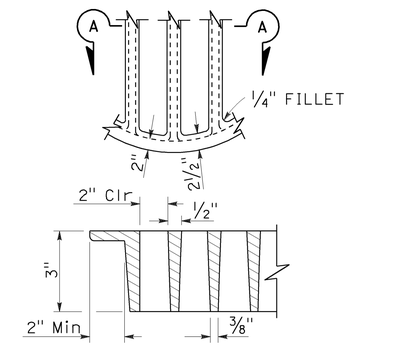

SECTION A-A

ALTERNATIVE CAST DUCTILE IRON GRATE OR CAST CARBON STEEL GRATE TYPE 36R AND 36RX

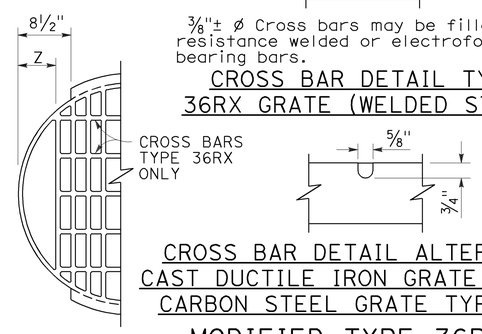

CROSS BAR DETAIL ALTERNATIVE CAST DUCTILE IRON GRATE OR CAST CARBON STEEL GRATE TYPE 36RX

MODIFIED TYPE 36R AND 36RX GRATE FOR ODI INLET

NOTES:

1. When alternative grates are allowed - Final pay based on alternative with the lesser weight.
2. Use frame shown on Standard Plan D74A, D74B or RSP D77A as appropriate.
3. When Type 24-10S, 24-12X or 24-13 grates are used with GDO Inlets, a ¼" × 3½" × 3'-4⅞" steel bar shall be welded across the center of inlet frame to separate the individual grates.
4. See Revised Standard Plan RSP D77A for connecting chain to welded grate and frame. When chain is required, do not use cast ductile iron grate.

BASIS FOR Misc IRON AND STEEL FINAL PAY WEIGHTS FOR DRAINAGE INLETS

INLET TYPE	GRATE TYPE	No. OF GRATES	WEIGHT LB
GDO (SEE NOTE 4)	24-10C	2	391
	24-10S	2	456
	24-12X	2	473
	24-13	2	374
G0,G0L,G1,G2, G3,G4 (TYPE 24)	24-10C	1	202
	24-10S	1	229
	24-12X	1	239
	24-13	1	188
G4 (TYPE 18) G5,G6	18-8S	1	187
	18-9X	1	187
	18-10	1	149
GT1,GT2	18-8S	2	374
	18-9X	2	374
	18-10	2	298
GT3,GT4	24-10C	2	404
	24-10S	2	458
	24-12X	2	478
	24-13	2	376
ODI	36RX (Mod)	1	196
GMP,GCP,GCPI	36RX	1	215
ODI	36R (Mod)	1	220
GMP,GCP,GCPI	36R	1	236
TRASH RACK			22
GRATE CHAIN			3

GRATE BAR SPACING TABLE

TYPE	No. OF BARS	CLEAR BAR SPACING	X	Y 4" SPACING	Y 6" SPACING	Z
36R	13	2"	2⅛"	-	-	-
36RX (STEEL)	15	2"	9/16"	3¾"	5¾"	-
36RX (CAST)	13	2"	2⅛"	3¾"	5¾"	-
36R Mod	12	2"	2⅛"	-	-	5"
36RX Mod (STEEL)	13	2"	9/16"	3¾"	5¾"	5 11/16"
36RX Mod (CAST)	12	2"	2⅛"	3¾"	5¾"	5"

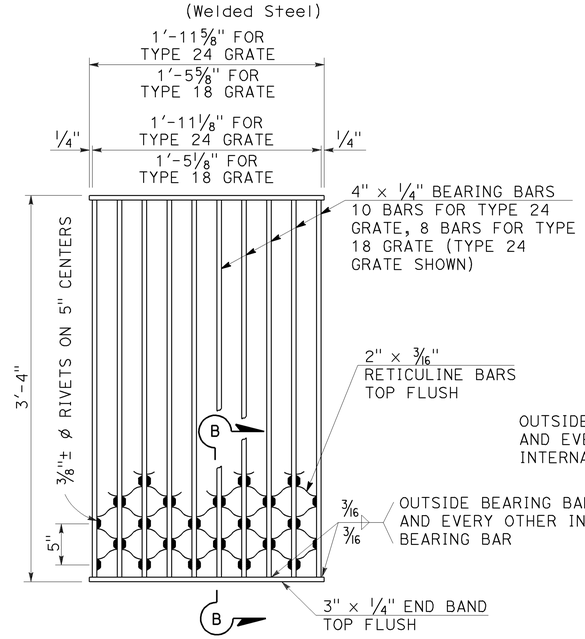

SECTION B-B

NOTES:

Weight of Type 24 grate = 182 LBS.
Weight of Type 18 grate = 145 LBS.

TYPE 18-8S AND 24-10S GRATE

(Welded Steel) Reticuline type

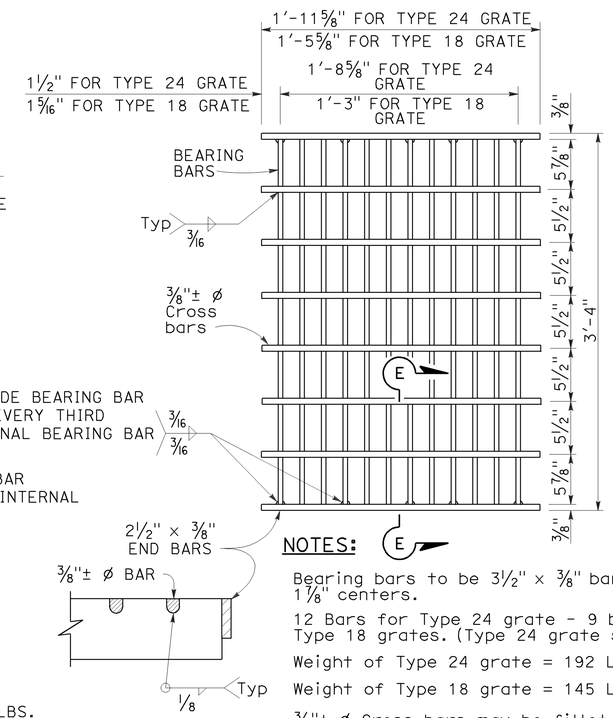

SECTION E-E

NOTES:

Bearing bars to be 3½" × ⅜" bars on 1⅞" centers.

12 Bars for Type 24 grate - 9 bars for Type 18 grates. (Type 24 grate shown).

Weight of Type 24 grate = 192 LBS.

Weight of Type 18 grate = 145 LBS.

⅜"± ø Cross bars may be fillet welded, resistance welded or electroforged to bearing bars.

TYPE 18-9X AND 24-12X GRATE

(Welded Steel)

STATE OF CALIFORNIA
DEPARTMENT OF TRANSPORTATION

GRATE DETAILS No. 2

NO SCALE

RSP D77B DATED APRIL 19, 2013 SUPERSEDES RSP D77B DATED JULY 20, 2012 AND STANDARD PLAN D77B DATED MAY 20, 2011 - PAGE 165 OF THE STANDARD PLANS BOOK DATED 2010.

REVISED STANDARD PLAN RSP D77B

4-4-13

Dist	COUNTY	ROUTE	POST MILES TOTAL PROJECT	SHEET No.	TOTAL SHEETS
04	Mrn	1	11.0	47	76

Gregory A. Balzer
LICENSED LANDSCAPE ARCHITECT

July 19, 2013
PLANS APPROVAL DATE

LICENSED LANDSCAPE ARCHITECT
Gregory A. Balzer 2516
Gregory A. Balzer
Renewal Date 2-28-15
Renewal Date 7-19-13
Date
STATE OF CALIFORNIA

THE STATE OF CALIFORNIA OR ITS OFFICERS OR AGENTS SHALL NOT BE RESPONSIBLE FOR THE ACCURACY OR COMPLETENESS OF SCANNED COPIES OF THIS PLAN SHEET.

TO ACCOMPANY PLANS DATED 1-12-15

2010 REVISED STANDARD PLAN RSP H1

A

AB	AGGREGATE BASE
ABS	ACRYLONITRILE-BUTADIENE-STYRENE
AC	ASPHALT CONCRETE
ACC	ARMOR-CLAD CONDUCTORS
Adj	ADJACENT/ADJUSTABLE
AIC	AUXILIARY IRRIGATION CONTROLLER
Alt	ALTERNATIVE
AMEND	AMENDMENT
ARV	AIR RELEASE VALVE
AUTO	AUTOMATIC
AUX	AUXILIARY
AVB	ATMOSPHERIC VACUUM BREAKER

B

B&B	BALLED AND BURLAPPED
B/B	BRASS/BRONZE
B/B/PL	BRASS/BRONZE/PLASTIC
B/PL	BRASS/PLASTIC
BFM	BONDED FIBER MATRIX
Bit Ctd	BITUMINOUS COATED
BP	BOOSTER PUMP
BPA	BACKFLOW PREVENTER ASSEMBLY
BPE	BACKFLOW PREVENTER ENCLOSURE
BV	BALL VALVE

C

C	CONDUIT
CAP	CORRUGATED ALUMINUM PIPE
CARV	COMBINATION AIR RELEASE VALVE
CB	COUPLING BAND
CCA	CAM COUPLER ASSEMBLY
CEC	CONTROLLER ENCLOSURE CABINET
CHDPE	CORRUGATED HIGH DENSITY POLYETHYLENE
CL	CHAIN LINK
CNC	CONTROL AND NEUTRAL CONDUCTORS
Conc	CONCRETE
CP	COPPER PIPE
CS	COMPOST SOCK
CSP	CORRUGATED STEEL PIPE
CST	CENTER STRIP
CV	CHECK VALVE

D

Dia	DIAMETER
DIP	DUCTILE IRON PIPE
DIT	DRIP IRRIGATION TUBING
DG	DECOMPOSED GRANITE
DN	DIAMETER NOMINAL
DVA	DRIP VALVE ASSEMBLY

E

EC	EROSION CONTROL
ECTC	EROSION CONTROL TECHNOLOGY COUNCIL
Elect	ELECTRIC/ELECTRICAL
Elev	ELEVATION
ELL	ELBOW
ENCL	ENCLOSURE
EP	EDGE OF PAVEMENT
ES	EDGE OF SHOULDER
EST	END STRIP
ESTB	ESTABLISHMENT
ETW	EDGE OF TRAVELED WAY

F

F	FULL CIRCLE
F/P	FULL/PART CIRCLE
FCV	FLOW CONTROL VALVE
FERT	FERTILIZER
FG	FINISHED GRADE
FH	FLEXIBLE HOSE
FIPT	FEMALE IRON PIPE THREAD
FIS	FERTILIZER INJECTOR SYSTEM
FL	FLOW LINE
FR	FIBER ROLL
FS	FLOW SENSOR
FSC	FLOW SENSOR CABLE
FV	FLUSH VALVE

G

Galv	GALVANIZED
GARV	GARDEN VALVE
GARVA	GARDEN VALVE ASSEMBLY
GM	GRAVEL MULCH
GPH	GALLONS PER HOUR
GPM	GALLONS PER MINUTE
GSP	GALVANIZED STEEL PIPE
GV	GATE VALVE

H

H	HALF CIRCLE
HDPE	HIGH DENSITY POLYETHYLENE
HP	HORSEPOWER/HINGE POINT
HPL	HIGH PRESSURE LINE
Hwy	HIGHWAY

I

IC	IRRIGATION CONTROLLER
ICC	IRRIGATION CONTROLLER(S) IN CONTROLLER ENCLOSURE CABINET
ID	INSIDE DIAMETER
IFS	IRRIGATION FILTRATION SYSTEM
IPS	IRON PIPE SIZE
IPT	IRON PIPE THREAD
Irr	IRRIGATION

L

L	LENGTH

M

Max	MAXIMUM
MBGR	METAL BEAM GUARD RAILING
MCV	MANUAL CONTROL VALVE
MIC	MASTER IRRIGATION CONTROLLER
Min	MINIMUM
MIPT	MALE IRON PIPE THREAD
Misc	MISCELLANEOUS
Mtl	MATERIAL
MVP	MAINTENANCE VEHICLE PULLOUT

N

NCN	NO COMMON NAME
NL	NOZZLE LINE
No.	NUMBER
NPT	NATIONAL PIPE THREAD

O

O/C	ON CENTER
OD	OUTSIDE DIAMETER
OL	OVERLAP

P

P	PART CIRCLE
PB	PULL BOX
PCC	PORTLAND CEMENT CONCRETE
PE	POLYETHYLENE
Pkt	PACKET
PL	PLASTIC
PLS	PURE LIVE SEED
PLT	PLANT/PLANTING
PLT ESTB	PLANT ESTABLISHMENT
PM	POST MILE
PR	PRESSURE RATED
PRLV	PRESSURE RELIEF VALVE
PRV	PRESSURE REGULATING VALVE
PVC	POLYVINYL CHLORIDE
Pvmt	PAVEMENT

Q

Q	QUARTER CIRCLE
QCV	QUICK COUPLING VALVE

R

R	RADIUS
RCP	REINFORCED CONCRETE PIPE
RCV	REMOTE CONTROL VALVE
RCVM	REMOTE CONTROL VALVE (MASTER)
RCVMF	REMOTE CONTROL VALVE (MASTER) W/FLOW SENSOR
RCVP	REMOTE CONTROL VALVE W/PRESSURE REGULATOR
RCW	RECYCLED WATER
RECP	ROLLED EROSION CONTROL PRODUCT
REQ	REQUIRED
RICS	REMOTE IRRIGATION CONTROL SYSTEM
R/W	RIGHT OF WAY

S

S	SLIP
SCH	SCHEDULE
SF	STATE-FURNISHED
Shld	SHOULDER
Sq	SQUARE
SST	SIDE STRIP
Sta	STATION
Std	STANDARD
SW	SIDEWALK/SOUND WALL

T

T	THIRD CIRCLE/THREAD
TLS	TRUCK LOADING STANDPIPE
TQ	THREE QUARTER CIRCLE
TRM	TURF REINFORCEMENT MAT
TT	TWO-THIRDS CIRCLE
TWSA	TREE WELL SPRINKLER ASSEMBLY
Typ	TYPICAL

U

UG	UNDERGROUND

W

W	WIDTH
W/	WITH
WM	WATER METER
WS	WYE STRAINER
WSA	WYE STRAINER ASSEMBLY
WSP	WELDED STEEL PIPE
WWM	WELDED WIRE MESH

NOTE:

For additional abbreviations, see Standard Plans A10A and A10B.

STATE OF CALIFORNIA
DEPARTMENT OF TRANSPORTATION

LANDSCAPE AND EROSION CONTROL ABBREVIATIONS

NO SCALE

RSP H1 DATED JULY 19, 2013 SUPERSEDES STANDARD PLAN H1 DATED MAY 20, 2011 - PAGE 218 OF THE STANDARD PLANS BOOK DATED 2010.

REVISED STANDARD PLAN RSP H1

6-28-13

Dist	COUNTY	ROUTE	POST MILES TOTAL PROJECT	SHEET No.	TOTAL SHEETS
04	Mrn	1	11.0	48	76

LICENSED LANDSCAPE ARCHITECT

November 15, 2013
PLANS APPROVAL DATE

LICENSED LANDSCAPE ARCHITECT — Gregory A. Balzer 2516 — Expiration Date 2-28-15 — Renewal Date 11-15-13 — Date — STATE OF CALIFORNIA

THE STATE OF CALIFORNIA OR ITS OFFICERS OR AGENTS SHALL NOT BE RESPONSIBLE FOR THE ACCURACY OR COMPLETENESS OF SCANNED COPIES OF THIS PLAN SHEET.

TO ACCOMPANY PLANS DATED 1-12-15

2010 REVISED STANDARD PLAN RSP H2

EXISTING	NEW	ITEM DESCRIPTION
		WATER METER (WM)
		BACKFLOW PREVENTER ASSEMBLY (BPA)
		BACKFLOW PREVENTER ENCLOSURE (BPE)
		BOOSTER PUMP (BP)
		TRUCK LOADING STANDPIPE (TLS)
	FS	FLOW SENSOR (FS)
		MASTER IRRIGATION CONTROLLER (MIC)
		AUXILIARY IRRIGATION CONTROLLER (AIC)
		IRRIGATION CONTROLLER (IC) IRRIGATION CONTROLLER (IC) (BATTERY) IRRIGATION CONTROLLER (IC) (SOLAR) IRRIGATION CONTROLLER (IC) (TWO WIRE) IRRIGATION CONTROLLER(S) IN CONTROLLER ENCLOSURE CABINET (ICC)
acc	ACC	ARMOR-CLAD CONDUCTORS (ACC)
cnc	CNC	CONTROL AND NEUTRAL CONDUCTORS (CNC)
		IRRIGATION CONDUIT
		EXTEND IRRIGATION CONDUIT
dip	DIP	DUCTILE IRON PIPE (SUPPLY LINE) (MAIN) (DIP)
		GALVANIZED STEEL PIPE (SUPPLY LINE) (MAIN) (GSP)
		GALVANIZED STEEL PIPE (SUPPLY LINE) (LATERAL) (GSP)
		PLASTIC PIPE (SUPPLY LINE) (MAIN)
		PLASTIC PIPE (SUPPLY LINE) (LATERAL)
cp	CP	COPPER PIPE (SUPPLY LINE)
dit	DIT	DRIP IRRIGATION TUBING
		REMOTE CONTROL VALVE (RCV) REMOTE CONTROL VALVE (MASTER) (RCVM) REMOTE CONTROL VALVE (MASTER) W/FLOW METER (RCVMF)
P	P	REMOTE CONTROL VALVE W/PRESSURE REGULATOR (RCVP)
		EXISTING MANUAL CONTROL VALVE (MCV)
	V	DRIP VALVE ASSEMBLY (DVA)
	Y	WYE STRAINER ASSEMBLY (WSA)

EXISTING	NEW	ITEM DESCRIPTION
		GATE VALVE (GV)
		BALL VALVE (BV)
		QUICK COUPLING VALVE (QCV)
		CAM COUPLER ASSEMBLY (CCA)
		GARDEN VALVE ASSEMBLY (GARVA)
		PRESSURE REGULATING VALVE (PRV)
		PRESSURE RELIEF VALVE (PRLV)
		FLOW CONTROL VALVE (FCV)
		COMBINATION AIR RELEASE VALVE (CARV)
		CHECK VALVE (CV)
		FLUSH VALVE (FV)
		EXISTING NOZZLE LINE W/TURNING UNION
		EXISTING IRRIGATION SYSTEM
		EXISTING IRRIGATION SYSTEM TO BE REMOVED
		CHAIN LINK GATE
		QUICK COUPLING VALVE W/SPRINKLER PROTECTOR
3	3	SPRINKLER W/SPRINKLER PROTECTOR
	C	CONNECT TO EXISTING SYSTEM
		CAP
		CAP EXISTING
	FR	FIBER ROLL
	CS	COMPOST SOCK

- RCV SIZE
- IRRIGATION CONTROLLER
- CONTROLLER STATION
- VALVE IN PARALLEL (IF APPLICABLE)
- GPM
- QUANTITY OF SPRINKLERS (WHEN SHOWN)

* 2½"-A-2b-40-60

VALVE CODE

* VALVE CODES FOR EXISTING VALVES ARE SHOWN IN A DASHED ENCLOSURE.

STATE OF CALIFORNIA
DEPARTMENT OF TRANSPORTATION

LANDSCAPE AND EROSION CONTROL SYMBOLS

NO SCALE

RSP H2 DATED NOVEMBER 15, 2013 SUPERSEDES RSP H2 DATED JULY 19, 2013 AND STANDARD PLAN H2 DATED MAY 20, 2011 - PAGE 219 OF THE STANDARD PLANS BOOK DATED 2010.

REVISED STANDARD PLAN RSP H2

10-9-13

Dist	COUNTY	ROUTE	POST MILES TOTAL PROJECT	SHEET No.	TOTAL SHEETS
04	Mrn	1	11.0	49	76

REGISTERED CIVIL ENGINEER

July 19, 2013
PLANS APPROVAL DATE

REGISTERED PROFESSIONAL ENGINEER
Gurinderpal Bhullar
No. C48815
Exp. 9-30-14
CIVIL
STATE OF CALIFORNIA

THE STATE OF CALIFORNIA OR ITS OFFICERS OR AGENTS SHALL NOT BE RESPONSIBLE FOR THE ACCURACY OR COMPLETENESS OF SCANNED COPIES OF THIS PLAN SHEET.

TO ACCOMPANY PLANS DATED 1-12-15

2010 REVISED STANDARD PLAN RSP T9

TABLE 1

TAPER LENGTH CRITERIA AND CHANNELIZING DEVICE SPACING

SPEED (S)	MINIMUM TAPER LENGTH * FOR WIDTH OF OFFSET 12 FEET (W)				MAXIMUM CHANNELIZING DEVICE SPACING		
					X	Y	Z **
	TANGENT 2L	MERGING L	SHIFTING L/2	SHOULDER L/3	TAPER	TANGENT	CONFLICT
mph	ft	ft	ft	ft	ft	ft	ft
20	160	80	40	27	20	40	10
25	250	125	63	42	25	50	12
30	360	180	90	60	30	60	15
35	490	245	123	82	35	70	17
40	640	320	160	107	40	80	20
45	1080	540	270	180	45	90	22
50	1200	600	300	200	50	100	25
55	1320	660	330	220	55	110	27
60	1440	720	360	240	60	120	30
65	1560	780	390	260	65	130	32
70	1680	840	420	280	70	140	35

* - For other offsets, use the following merging taper length formula for L:
For speed of 40 mph or less, $L = WS^2/60$
For speed of 45 mph or more, $L = WS$

Where: L = Taper length in feet
W = Width of offset in feet
S = Posted speed limit, off-peak 85th-percentile speed prior to work starting, or the anticipated operating speed in mph

** - Use for taper and tangent sections where there are no pavement markings or where there is a conflict between existing pavement markings and channelizers (CA).

TABLE 2

LONGITUDINAL BUFFER SPACE AND FLAGGER STATION SPACING

SPEED *	Min D **	DOWNGRADE Min D ***		
		-3%	-6%	-9%
mph	ft	ft	ft	ft
20	115	116	120	126
25	155	158	165	173
30	200	205	215	227
35	250	257	271	287
40	305	315	333	354
45	360	378	400	427
50	425	446	474	507
55	495	520	553	593
60	570	598	638	686
65	645	682	728	785
70	730	771	825	891

* - Speed is posted speed limit, off-peak 85th-percentile speed prior to work starting, or the anticipated operating speed in mph

** - Longitudinal buffer space or flagger station spacing

*** - Use on sustained downgrade steeper than -3 percent and longer than 1 mile.

TABLE 3

ADVANCE WARNING SIGN SPACING

ROAD TYPE	DISTANCE BETWEEN SIGNS *		
	A	B	C
	ft	ft	ft
URBAN - 25 mph OR LESS	100	100	100
URBAN - MORE THAN 25 mph TO 40 mph	250	250	250
URBAN - MORE THAN 40 mph	350	350	350
RURAL	500	500	500
EXPRESSWAY / FREEWAY	1000	1500	2640

* - The distances are approximate, are intended for guidance purposes only, and should be applied with engineering judgment. These distances should be adjusted by the Engineer for field conditions, if necessary, by increasing or decreasing the recommmended distances.

STATE OF CALIFORNIA
DEPARTMENT OF TRANSPORTATION

TRAFFIC CONTROL SYSTEM TABLES FOR LANE AND RAMP CLOSURES

NO SCALE

RSP T9 DATED JULY 19, 2013 SUPERSEDES RSP T9 DATED APRIL 19, 2013 THAT SUPPLEMENTS THE STANDARD PLANS BOOK DATED 2010.

REVISED STANDARD PLAN RSP T9

Dist	COUNTY	ROUTE	POST MILES TOTAL PROJECT	SHEET No.	TOTAL SHEETS
04	Mrn	1	11.0	50	76

Devinder Singh
REGISTERED CIVIL ENGINEER

October 17, 2014
PLANS APPROVAL DATE

REGISTERED PROFESSIONAL ENGINEER
Devinder Singh
No. C50470
Exp. 6-30-15
CIVIL
STATE OF CALIFORNIA

THE STATE OF CALIFORNIA OR ITS OFFICERS OR AGENTS SHALL NOT BE RESPONSIBLE FOR THE ACCURACY OR COMPLETENESS OF SCANNED COPIES OF THIS PLAN SHEET.

TO ACCOMPANY PLANS DATED 1-12-15

NOTES:

See Revised Standard Plan RSP T9 for tables.

Use cone spacing X for taper segment, Y for tangent segment or Z for conflict situations, as approriate, per Table 1, unless X, Y, or Z cone spacing is shown on this sheet.

Unless otherwise specified in the special provisions, all temporary warning signs shall have black legend on fluorescent orange background.

California codes are designated by (CA). Otherwise, Federal (MUTCD) codes are shown.

TYPICAL LANE CLOSURE WITH REVERSIBLE CONTROL

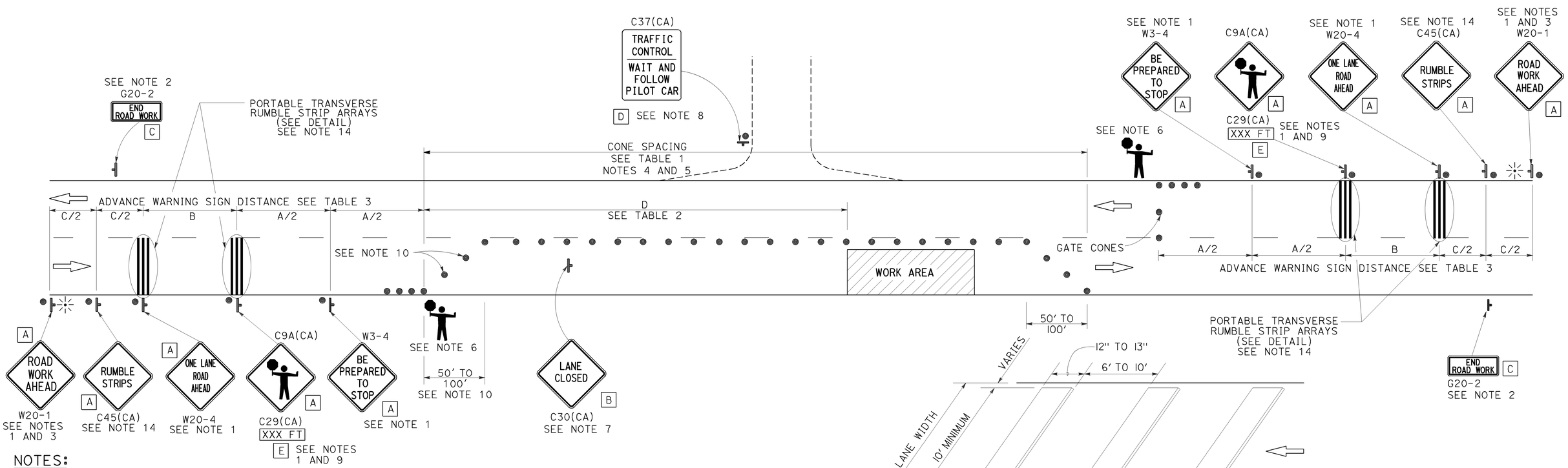

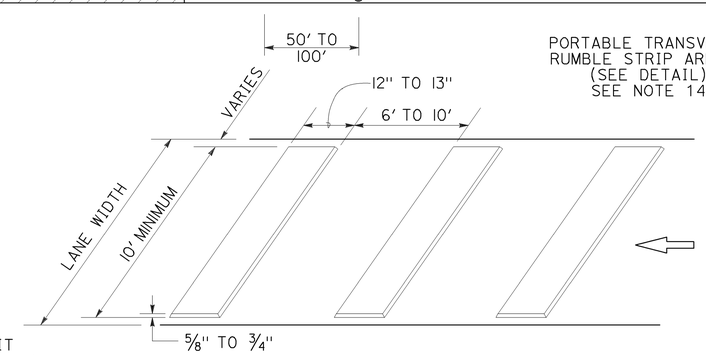

PORTABLE TRANSVERSE RUMBLE STRIP ARRAY DETAIL

NOTES:

1. Each advance warning sign in each direction of travel shall be equipped with at least two flags for daytime closure. Each flag shall be at least 16" x 16" in size and shall be orange or fluorescent red-orange in color. Flashing beacons shall be placed at the locations indicated for lane closure during hours of darkness.
2. A G20-2 "END ROAD WORK" sign, as appropriate, shall be placed at the end of the lane control unless the end of work area is obvious, or ends within a larger project's limits.
3. If the W20-1 sign would follow within 2000' of a stationary W20-1 or G20-1 "ROAD WORK NEXT _____ MILES", use a W20-4 sign for the first advance warning sign.
4. All cones used for lane closures during the hours of darkness shall be fitted with retroreflective bands (or sleeves) as specified in the specifications.
5. Portable delineators, placed at one-half the spacing indicated for traffic cones, may be used instead of cones for daytime closures only.
6. Additional advance flaggers may be required. Flagger should stand in a conspicuous place, be visible to approaching traffic as well as approaching vehicles after the first vehicle has stopped. During the hours of darkness, the flagging-station and flagger shall be illuminated and clearly visible to approaching traffic. The illumination footprint of the lighting on the ground shall be at least 20' in diameter. Place a minimum of four cones at 50' intervals in advance of flagger station as shown.
7. Place C30(CA) "LANE CLOSED" sign at 500' to 1000' intervals throughout extended work areas. They are optional if the work area is visible from the flagger station.
8. When a pilot car is used, place a C37(CA) "TRAFFIC CONTROL-WAIT AND FOLLOW PILOT CAR" sign with black legend on white background at all intersections, driveways and alleys without a flagger within traffic control area. Signs shall be clean and visible at all times. Where traffic can not be effectively self-regulated, at least one flagger shall be used at each intersection within traffic control area.
9. An optional C29(CA) sign may be placed below the C9A(CA) sign.
10. Either traffic cones or barricades shall be placed on the taper. Barricades shall be Type I, II, or III.
11. The color of the portable transverse rumble strips shall be black or orange. Use 2 arrays, each array shall consist of 3 rumble strips.
12. Portable transverse rumble strips shall not be placed on sharp horizontal or vertical curves nor shall they be placed through pedestrian crossings.
13. If the portable transverse rumble strips become out of alignment (skewed) by more than 6 inches, measured from one end to the other, they shall be readjusted to bring the placement back to the original location.
14. Portable transverse rumble strips are not required if any one of the following conditions is satisfied:
    A. Work duration occupies a location for four hours or less
    B. Posted speed limit is below 45 MPH
    C. Work is of emergency nature
    D. Work zone is in snow or icy weather conditions

LEGEND

- TRAFFIC CONE
- TEMPORARY TRAFFIC CONTROL SIGN
- PORTABLE FLASHING BEACON
- FLAGGER

SIGN PANEL SIZE (Min)

A	48" x 48"
B	30" x 30"
C	36" x 18"
D	36" x 42"
E	20" x 7"

STATE OF CALIFORNIA
DEPARTMENT OF TRANSPORTATION

TRAFFIC CONTROL SYSTEM FOR LANE CLOSURE ON TWO LANE CONVENTIONAL HIGHWAYS

NO SCALE

RSP T13 DATED OCTOBER 17, 2014 SUPERSEDES RSP T13 DATED JULY 18, 2014 AND RSP T13 DATED APRIL 19, 2013 AND STANDARD PLAN T13 DATED MAY 20, 2011 - PAGE 241 OF THE STANDARD PLANS BOOK DATED 2010.

REVISED STANDARD PLAN RSP T13

2010 REVISED STANDARD PLAN RSP T13

9-26-14

Dist	COUNTY	ROUTE	POST MILES TOTAL PROJECT	SHEET No.	TOTAL SHEETS
04	Mrn	1	11.0	51	76

REGISTERED CIVIL ENGINEER

April 19, 2013
PLANS APPROVAL DATE

REGISTERED PROFESSIONAL ENGINEER Gurinderpal Bhullar No. C48815 Exp. 9-30-14 CIVIL STATE OF CALIFORNIA

THE STATE OF CALIFORNIA OR ITS OFFICERS OR AGENTS SHALL NOT BE RESPONSIBLE FOR THE ACCURACY OR COMPLETENESS OF SCANNED COPIES OF THIS PLAN SHEET.

TO ACCOMPANY PLANS DATED 1-12-15

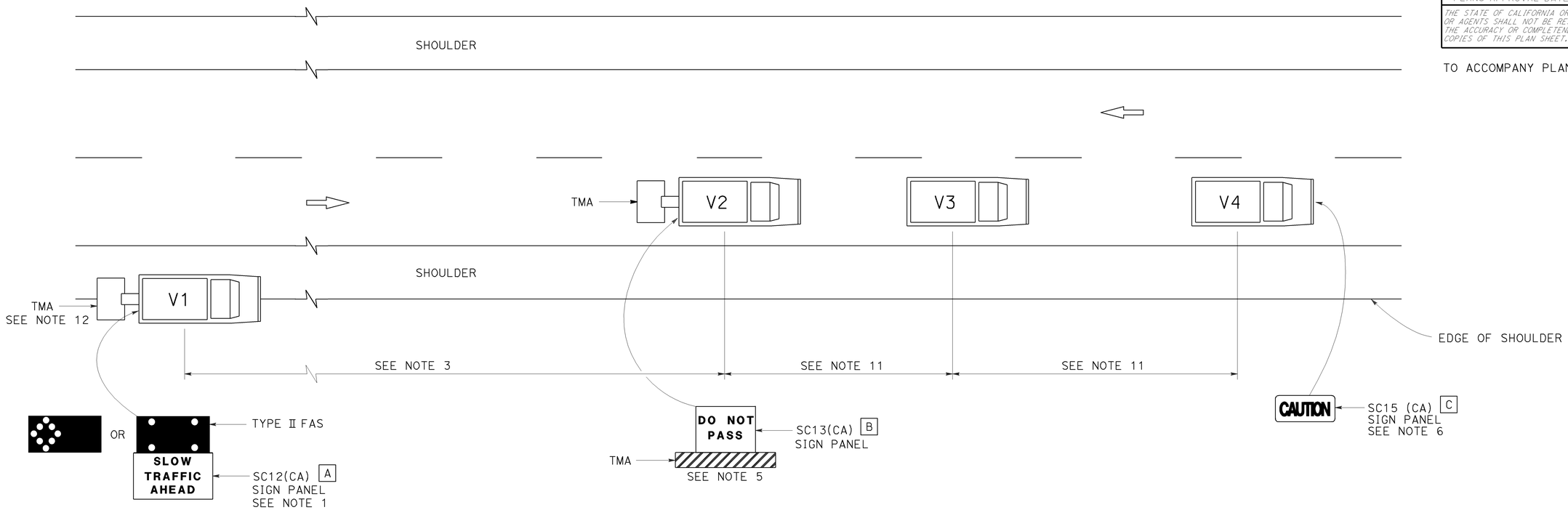

LEGEND

V1	SIGN VEHICLE
V2	SHADOW VEHICLE
V3	WORK/APPLICATION VEHICLE
V4	SIGN VEHICLE
TMA	TRUCK-MOUNTED ATTENUATOR
	FLASHING ARROW SIGN (FAS) IN FLASHING CAUTION MODE
	FLASHING ARROW SIGN (FAS) IN ALTERNATING DIAMOND CAUTION

SIGN PANEL SIZE (Min)

A	72" x 42"
B	54" x 42"
C	54" x 24"

NOTES:

1. Either a changeable message sign or a SC12(CA) "SLOW TRAFFIC AHEAD" sign shall be mounted on the rear of sign vehicle V1. The changeable message sign shall be sequenced to show the "CAUTION" message first, follow by the "SLOW TRAFFIC AHEAD" message. A Type II flashing arrow sign may be used with the SC12(CA) sign panel.
2. Sign vehicle V1 should be positioned where highly visible when shoulders are not available.
3. If traffic queues develop, sign vehicle V1 should be positioned upstream from the end of queue.
4. Vehicle-mounted sign panels shall have Type III or above retroreflective sheeting, black on white, or black on fluorescent orange, with 6" minimum series D letters per Caltrans sign specifications.
5. Shadow vehicle shall be equipped with a truck-mounted attenuator. The sign panel shown shall be mounted on the rear of shadow vehicle V2. The message "LANE CLOSED" may be used in place of the "DO NOT PASS" message.
6. The sign panel shown shall be mounted on the front of sign vehicle V4, facing opposing traffic.
7. All vehicles shall be equipped with flashing or rotating amber lights.
8. Sign vehicle V4 will not be required when the work and vehicles V2 and V3 are 2′ or more from the centerline of the highway during the work or application operations.
9. All vehicles used for lane closures shall be equipped with two-way radios and the vehicle operators shall maintain communication during the work or application operation.
10. This plan shall not be used where workers would be on foot in the work area. Use a stationary type lane closure (Revised Standard Plan T13) for this condition.
11. Minimize spacing between vehicles V2 and V3 and vehicles V3 and V4 to deter road users from driving in between them.
12. If sign vehicle V1 encroaches into the traffic lane due to insufficient shoulder width, sign vehicle V1 shall be equipped with a truck-mounted attenuator. Sign vehicle V1 shall stay as close to the edge of shoulder as practicable.

STATE OF CALIFORNIA
DEPARTMENT OF TRANSPORTATION

TRAFFIC CONTROL SYSTEM FOR MOVING LANE CLOSURE ON TWO LANE HIGHWAYS

NO SCALE

RSP T17 DATED APRIL 19, 2013 SUPERSEDES STANDARD PLAN T17
DATED MAY 20, 2011 - PAGE 245 OF THE STANDARD PLANS BOOK DATED 2010.

REVISED STANDARD PLAN RSP T17

2010 REVISED STANDARD PLAN RSP T17

12-18-12

Dist	COUNTY	ROUTE	POST MILES TOTAL PROJECT	SHEET No.	TOTAL SHEETS
04	Mrn	1	11.0	52	76

Theresa Gabriel
REGISTERED ELECTRICAL ENGINEER

July 19, 2013
PLANS APPROVAL DATE

REGISTERED PROFESSIONAL ENGINEER
Theresa Aziz Gabriel
No. E15129
Exp. 6-30-14
ELECTRICAL
STATE OF CALIFORNIA

THE STATE OF CALIFORNIA OR ITS OFFICERS OR AGENTS SHALL NOT BE RESPONSIBLE FOR THE ACCURACY OR COMPLETENESS OF SCANNED COPIES OF THIS PLAN SHEET.

TO ACCOMPANY PLANS DATED 1-12-15

LEGEND:

- AB — ABANDON. IF APPLIED TO CONDUIT, REMOVE CONDUCTORS
- BC — INSTALL PULL BOX IN EXISTING CONDUIT RUN
- BP — PEDESTRIAN BARRICADE, TYPE AS INDICATED ON PLAN
- CB — INSTALL CONDUIT INTO EXISTING PULL BOX
- CC — CONNECT NEW AND EXISTING CONDUIT. REMOVE EXISTING CONDUCTORS AND INSTALL CONDUCTORS AS INDICATED
- CF — CONDUIT TO REMAIN FOR FUTURE USE. REMOVE CONDUCTORS. INSTALL PULL TAPE
- DH — DETECTOR HANDHOLE
- FA — FOUNDATION TO BE ABANDONED
- IS — INSTALL SIGN ON SIGNAL MAST ARM
- NS — NO SLIP BASE ON STANDARD
- PEC — PHOTOELECTRIC CONTROL
- PEU — PHOTOELECTRIC UNIT
- RC — EQUIPMENT OR MATERIAL TO BE REMOVED AND BECOME THE PROPERTY OF THE CONTRACTOR
- RE — REMOVE ELECTROLIER, FUSES AND BALLAST. TAPE ENDS OF CONDUCTORS
- RL — RELOCATE EQUIPMENT
- RR — REMOVE AND REUSE EQUIPMENT
- RS — REMOVE AND SALVAGE EQUIPMENT
- SC — SPLICE NEW TO EXISTING CONDUCTORS
- SD — SERVICE DISCONNECT
- TSP — TELEPHONE SERVICE POINT

ABBREVIATIONS

APS	ACCESSIBLE PEDESTRIAN SIGNAL
BBS	BATTERY BACKUP SYSTEM
BC	BOLT CIRCLE
BPB	BICYCLE PUSH BUTTON
C	CONDUIT
CB	CIRCUIT BREAKER
CCTV	CLOSED CIRCUIT TELEVISION
Ckt	CIRCUIT
CMS	CHANGEABLE MESSAGE SIGN
Ctid	CALTRANS IDENTIFICATION
Comm	COMMUNICATION
DLC	LOOP DETECTOR LEAD-IN CABLE
EMS	EXTINGUISHABLE MESSAGE SIGN
EVUC	EMERGENCY VEHICLE UNIT CABLE
EVUD	EMERGENCY VEHICLE UNIT DETECTOR
FB	FLASHING BEACON
FBCA	FLASHING BEACON CONTROL ASSEMBLY
FBS	FLASHING BEACON WITH SLIP BASE
FO	FIBER OPTIC
G	EQUIPMENT GROUNDING CONDUCTOR
GB	GROUND BUS
GFCI	GROUND FAULT CIRCUIT INTERRUPTER
HAR	HIGHWAY ADVISORY RADIO
Hex	HEXAGONAL
HPS	HIGH PRESSURE SODIUM
IISNS	INTERNALLY ILLUMINATED STREET NAME SIGN
ISL	INDUCTION SIGN LIGHTING
LED	LIGHT EMITTING DIODE
LMA	LUMINAIRE MAST ARM
LPS	LOW PRESSURE SODIUM
Ltg	LIGHTING
Lum	LUMINAIRE
M	METERED
MAT	MAST ARM MOUNTING TOP ATTACHMENT
MAS	MAST ARM MOUNTING SIDE ATTACHMENT
M/M	MULTIPLE TO MULTIPLE TRANSFORMER
Mtg	MOUNTING
MV	MERCURY VAPOR LIGHTING FIXTURE
MVDS	MICROWAVE VEHICLE DETECTION SYSTEM
N	NEUTRAL (GROUNDED CONDUCTOR)
NB	NEUTRAL BUS
NC	NORMALLY CLOSE
NO	NORMALLY OPEN
P	CIRCUIT BREAKER'S POLE
PB	PULL BOX
PBA	PUSH BUTTON ASSEMBLY
PEC	PHOTOELECTRIC CONTROL
Ped	PEDESTRIAN
PEU	PHOTOELECTRIC UNIT
PT	CONDUIT WITH PULL TAPE
RE	RELOCATED EQUIPMENT
RM	RAMP METERING
RWIS	ROADSIDE WEATHER INFORMATION SYSTEM
SB	SLIP BASE
SIC	SIGNAL INTERCONNECT CABLE
Sig	SIGNAL
SMA	SIGNAL MAST ARM
SNS	STREET NAME SIGN
SP	SERVICE POINT
TDC	TELEPHONE DEMARCATION CABINET
TMS	TRAFFIC MONITORING STATION
TOS	TRAFFIC OPERATIONS SYSTEM
Veh	VEHICLE
VIVDS	VIDEO IMAGE VEHICLE DETECTION SYSTEM
WIM	WEIGH-IN-MOTION
Xfmr	TRANSFORMER

SOFFIT AND WALL MOUNTED LUMINAIRES

- PENDANT, 70 W HPS UNLESS OTHERWISE SPECIFIED
- FLUSH, 70 W HPS UNLESS OTHERWISE SPECIFIED
- WALL SURFACE, 70 W HPS UNLESS OTHERWISE SPECIFIED
- EXISTING SOFFIT OR WALL LUMINAIRE TO REMAIN UNMODIFIED
- EXISTING SOFFIT OR WALL LUMINAIRE TO BE MODIFIED AS SPECIFIED

NOTE:
Arrow indicates "street side" of luminaire.

MISCELLANEOUS ELECTROLIERS

NEW	EXISTING	
		LUMINAIRE ON WOOD POLE
		NON-STANDARD ELECTROLIER (SEE PROJECT NOTES OR PROJECT PLANS)
		CITY ELECTROLIER
		ELECTROLIER FOUNDATION (FUTURE INSTALLATION)

NOTES:

1. HPS luminaires shall be 310 W HPS when installed on Type 21, 21D, 30, 31 and 32 Standards, unless otherwise specified. HPS luminaires shall be 200 W when installed on other type standards or poles, unless otherwise specified.
2. LED luminaires shall be 235 W when installed on Type 21, 21D, 30, 31 and 32 Standards, unless otherwise specified. LED luminaires shall be 165 W when installed on other type standards or poles, unless otherwise specified.
3. Luminaires shall be the cutoff type, ANSI Type III medium cutoff lighting distribution, unless otherwise specified.

STANDARD ELECTROLIER

NEW	EXISTING	STANDARD TYPE
		15
		15D
		15 STRUCTURE
		15D STRUCTURE
		21
		21D
		21 STRUCTURE
		21D STRUCTURE
		30
		31
		32

COMMONLY USED SYMBOLS FOR UNITED STATES CUSTOMARY UNITS OF MEASUREMENT:

SYMBOL USED	DEFINITIONS
Ω	OHMS
min	MINUTE
s	SECOND
bps	BITS PER SECOND
Bps	BYTES PER SECOND
A	AMPERE
V	VOLT
V(dc)	VOLT (DIRECT CURRENT)
V(ac)	VOLT (ALTERNATING CURRENT)
FC	FOOT - CANDLE
W	WATTS
VA	VOLT-AMPERE
M	MEGA
k	KILO
m	MILLI
μ	MICRO
P	PICO
Hz	HERTZ

STATE OF CALIFORNIA
DEPARTMENT OF TRANSPORTATION

ELECTRICAL SYSTEMS (LEGEND AND ABBREVIATIONS)

NO SCALE

RSP ES-1A DATED JULY 19, 2013 SUPERSEDES STANDARD PLAN ES-1A DATED MAY 20, 2011 - PAGE 425 OF THE STANDARD PLANS BOOK DATED 2010.

REVISED STANDARD PLAN RSP ES-1A

2010 REVISED STANDARD PLAN RSP ES-1A

7-15-13

Dist	COUNTY	ROUTE	POST MILES TOTAL PROJECT	SHEET No.	TOTAL SHEETS
04	Mrn	1	11.0	53	76

Theresa Gabriel
REGISTERED ELECTRICAL ENGINEER

July 19, 2013
PLANS APPROVAL DATE

REGISTERED PROFESSIONAL ENGINEER Theresa Aziz Gabriel No. E15129 Exp. 6-30-14 ELECTRICAL STATE OF CALIFORNIA

THE STATE OF CALIFORNIA OR ITS OFFICERS OR AGENTS SHALL NOT BE RESPONSIBLE FOR THE ACCURACY OR COMPLETENESS OF SCANNED COPIES OF THIS PLAN SHEET.

TO ACCOMPANY PLANS DATED 1-12-15

CONDUIT

NEW	EXISTING	
		LIGHTING CONDUIT, UNLESS OTHERWISE INDICATED OR NOTED
		TRAFFIC SIGNAL CONDUIT
C	c	COMMUNICATION CONDUIT
T	t	TELEPHONE CONDUIT
F	f	FIRE ALARM CONDUIT
FO	fo	FIBER OPTIC CONDUIT
		CONDUIT TERMINATION
R	r	CONDUIT RISER ATTACHED TO THE STRUCTURE OR SERVICE POLE

SERVICE EQUIPMENT

NEW	EXISTING	
OH	oh	OVERHEAD LINES
U	U	WOOD POLE, "U" INDICATES UTILITY OWNED
		POLE GUY WITH ANCHOR
		UTILITY TRANSFORMER - GROUND MOUNTED
III	III	SERVICE EQUIPMENT ENCLOSURE TYPE. DOOR INDICATES FRONT OF ENCLOSURE
T	t	TELEPHONE DEMARCATION CABINET

POLE-MOUNTED SERVICE DESIGNATION

TYPE H SERVICE, 28'-10" — TYPE OF INSTALLATION AND POLE HEIGHT ABOVE GRADE

FLASHING BEACON

NEW	EXISTING	
R	R	FLASHING BEACON (ONE VEHICLE SIGNAL HEAD WITH BACKPLATE AND VISOR) "R" INDICATES RED INDICATION, "Y" INDICATES YELLOW INDICATION
Y Y	Y Y	FLASHING BEACON WITH TYPE 15-FBS STANDARD AND A SIGN.
R R	R R	FLASHING BEACON WITH TYPES 9, 9A OR 9B SIGN UNLESS OTHERWISE SPECIFIED OR INDICATED

SIGNAL EQUIPMENT

NEW	EXISTING	
C	C	PEDESTRIAN SIGNAL HEAD "C" INDICATES COUNTDOWN PEDESTRIAN HEAD
		PUSH BUTTON ASSEMBLY POST
		PEDESTRIAN BARRICADE
		VEHICLE SIGNAL HEAD (WITH BACKPLATE AND 3-SECTIONS: RED, YELLOW AND GREEN)
		VEHICLE SIGNAL HEAD WITH ANGLE VISOR
PV	PV	MODIFICATIONS OF BASIC SYMBOL: "L" INDICATES ALL NON-ARROW SECTIONS LOUVERED "LG" INDICATES LOUVERED GREEN SECTION ONLY "PV" INDICATES ALL 12" SECTIONS PROGRAMMED VISIBILITY "8" INDICATES ALL 8" SECTIONS (ONLY WHEN SPECIFIED)
		VEHICLE SIGNAL HEAD CONSISTING OF RED, YELLOW AND GREEN LEFT ARROW SECTIONS
		VEHICLE SIGNAL HEAD CONSISTING OF RED AND YELLOW SECTIONS WITH AN UP GREEN ARROW SECTION
		VEHICLE SIGNAL HEAD (5 SECTION) CONSISTING OF RED, YELLOW AND GREEN SECTIONS WITH YELLOW AND GREEN RIGHT ARROW SECTIONS
		TYPE 15TS STANDARD WITH VEHICLE SIGNAL HEAD AND LUMINAIRE
		TYPE 21TS STANDARD WITH VEHICLE SIGNAL HEAD AND LUMINAIRE
		STANDARD WITH LUMINAIRE AND SIGNAL MAST ARMS AND ATTACHED VEHICLE SIGNAL HEADS
		TYPE 1 STANDARD WITH ATTACHED VEHICLE SIGNAL HEADS
		STANDARD WITH A SIGNAL MAST ARM, ATTACHED VEHICLE SIGNAL HEADS AND INTERNALLY ILLUMINATED STREET NAME SIGN
		CONTROLLER ASSEMBLY. DOOR INDICATES FRONT OF CABINET

SIGNAL EQUIPMENT Cont

NEW	EXISTING	
		GUARD POST
		TYPE 1 STANDARD WITH RAMP METERING SIGN
		OPTICAL DETECTOR FOR THE EMERGENCY VEHICLE DETECTION SYSTEM

NOTES:

1. All signal sections shall be 12" unless shown otherwise.
2. Signal heads shall be provided with backplates unless shown otherwise.

ILLUMINATED OVERHEAD SIGN

NEW	EXISTING	
		SINGLE POST, SINGLE ILLUMINATED SIGN, BALANCED BUTTERFLY
		SINGLE POST, DOUBLE ILLUMINATED SIGN, BALANCED BUTTERFLY
		SINGLE POST, SINGLE ILLUMINATED SIGN, FULL CANTILEVER
		DOUBLE POST, SINGLE ILLUMINATED SIGN
		SINGLE ILLUMINATED SIGN MOUNTED ON STRUCTURE
		DOUBLE POST, SINGLE ILLUMINATED SIGN WITH ELECTROLIER

STATE OF CALIFORNIA
DEPARTMENT OF TRANSPORTATION

ELECTRICAL SYSTEMS (LEGEND AND ABBREVIATIONS)

NO SCALE

RSP ES-1B DATED JULY 19, 2013 SUPERSEDES STANDARD PLAN ES-1B DATED MAY 20, 2011 - PAGE 426 OF THE STANDARD PLANS BOOK DATED 2010.

REVISED STANDARD PLAN RSP ES-1B

2010 REVISED STANDARD PLAN RSP ES-1B

7-15-13

Dist	COUNTY	ROUTE	POST MILES TOTAL PROJECT	SHEET No.	TOTAL SHEETS
04	Mrn	1	11.0	54	76

Theresa Gabriel
REGISTERED ELECTRICAL ENGINEER

July 19, 2013
PLANS APPROVAL DATE

REGISTERED PROFESSIONAL ENGINEER
Theresa Aziz Gabriel
No. E15129
Exp. 6-30-14
ELECTRICAL
STATE OF CALIFORNIA

THE STATE OF CALIFORNIA OR ITS OFFICERS OR AGENTS SHALL NOT BE RESPONSIBLE FOR THE ACCURACY OR COMPLETENESS OF SCANNED COPIES OF THIS PLAN SHEET.

TO ACCOMPANY PLANS DATED 1-12-15

EQUIPMENT IDENTIFICATION

ILLUMINATED SIGN IDENTIFICATION NUMBER:

SIGN No. 12345

10 ISL SCI 1.0

- SIGN NUMBER - PLACE ON POST OR STRUCTURE
- TRANSFORMER RATING (kVA)
- LIGHTING CONTROL TYPE
- NUMBER AND TYPE OF FIXTURES

DO NOT PLACE ON STANDARD OR STRUCTURE

ELECTROLIER OR EQUIPMENT IDENTIFICATION NUMBER:

12345 - 15'-0"

- MAST ARM LENGTH, IF SHOWN. DO NOT PLACE ON STANDARD OR STRUCTURE
- EQUIPMENT NUMBER - PLACE ON STANDARD OR STRUCTURE. EXISTING EQUIPMENT NUMBERS ARE SHOWN IN PARENTHESIS

CONDUIT AND CONDUCTOR IDENTIFICATION:

1½"C, 2#10, 15#14, 2 DLC, 12P#18

- PAIR
- NUMBER AND SIZE OF CONDUCTORS AND CABLES
- SIZE OF CONDUIT IN INCHES

ø1, ø2, ø2P, etc.	TRAFFIC PHASE IDENTIFICATION FOR SIGNAL FACES, DETECTORS AND PHASE DIAGRAMS
1 2 3	LEGEND NUMBERS
A B C	EQUIPMENT, SIGNAL POLES, INSTALLATION OR ITEMS
1 2 3	CONDUIT RUN NUMBERS

SIGNAL AND LIGHTING STANDARD (TYPICAL DESIGNATION):

19A - 3 - 100

- WIND VELOCITY = 100 mph
- CASE 3 ARM LOADING
- STANDARD TYPE
- STANDARD PLAN SHEET NUMBER
- DETAIL, NUMBER, SECTION, TYPE OR ELEVATION

MISCELLANEOUS EQUIPMENT

NEW	EXISTING	
CMS	cms	CHANGEABLE MESSAGE SIGN
		CLOSED CIRCUIT TELEVISION CAMERA
		HIGHWAY ADVISORY RADIO POLE AND ANTENNA
EMS	ems	EXTINGUISHABLE MESSAGE SIGN
M V	m v	DETECTION DEVICE M = MICROWAVE SENSOR V = VIDEO IMAGE SENSOR

WIRING DIAGRAM LEGEND

- EXTERNAL CONDUCTOR
- CONDUCTOR OR BUS
- TIE POINT
- CONTACTOR COIL
- CONTACTOR, NO CONTACT
- TERMINAL BLOCKS
- CONTACTOR, NC CONTACT
- ENCLOSURE BOND
- GROUNDING ELECTRODE
- CIRCUIT BREAKER
- RECEPTACLE

PULL BOXES

NEW	EXISTING	
		PULL BOX, No. 5 UNLESS OTHERWISE INDICATED OR NOTED
3	9A(21)	PULL BOX, ADDITIONAL DESIGNATIONS OR DESCRIPTIONS

3 No. 3½ PULL BOX
5 No. 5 PULL BOX
6 No. 6 PULL BOX
7 No. 7 (CEILING PULL BOX)
8 No. 8 (PENDANT SOFFIT PULL BOX)
9 No. 9 PULL BOX
9A No. 9A PULL BOX

(C) COMMUNICATIONS PULL BOX
(E) PULL BOX WITH EXTENSION
(S) SPRINKLER CONTROL PULL BOX
(21) ANCHOR BOLTS AND CONDUIT FOR FUTURE INSTALLATION OF TYPE 21 STANDARD
(T) TRAFFIC PULL BOX

VEHICLE DETECTORS

5 J 9 U

- VEHICLE DETECTOR DESIGNATION
- U = UPPER
  L = LOWER
- SLOT NUMBER IN INPUT FILE
- INPUT FILE (I OR J)
- PHASE

NEW	EXISTING	
		TYPE A DETECTOR LOOP. OUTLINE OF SAWCUT SHOWN
		TYPE B DETECTOR LOOP. OUTLINE OF SAWCUT SHOWN
		TYPE C DETECTOR LOOP. OUTLINE OF SAWCUT SHOWN
		TYPE D DETECTOR LOOP. OUTLINE OF SAWCUT SHOWN
		TYPE E DETECTOR LOOP. OUTLINE OF SAWCUT SHOWN
		TYPE Q DETECTOR LOOP. OUTLINE OF SAWCUT SHOWN
		MAGNETIC DETECTOR
DH	dh	DETECTOR HANDHOLE
		MICROWAVE OR VIDEO DETECTION ZONE

STATE OF CALIFORNIA
DEPARTMENT OF TRANSPORTATION

ELECTRICAL SYSTEMS (LEGEND AND ABBREVIATIONS)

NO SCALE

RSP ES-1C DATED JULY 19, 2013 SUPERSEDES STANDARD PLAN ES-1C DATED MAY 20, 2011 - PAGE 427 OF THE STANDARD PLANS BOOK DATED 2010.

REVISED STANDARD PLAN RSP ES-1C

2010 REVISED STANDARD PLAN RSP ES-1C

7-11-13

Dist	COUNTY	ROUTE	POST MILES TOTAL PROJECT	SHEET No.	TOTAL SHEETS
04	Mrn	1	11.0	55	76

Theresa Gabriel
REGISTERED ELECTRICAL ENGINEER

July 19, 2013
PLANS APPROVAL DATE

REGISTERED PROFESSIONAL ENGINEER
Theresa Aziz Gabriel
No. E15129
Exp. 6-30-14
ELECTRICAL
STATE OF CALIFORNIA

THE STATE OF CALIFORNIA OR ITS OFFICERS OR AGENTS SHALL NOT BE RESPONSIBLE FOR THE ACCURACY OR COMPLETENESS OF SCANNED COPIES OF THIS PLAN SHEET.

TO ACCOMPANY PLANS DATED 1-12-15

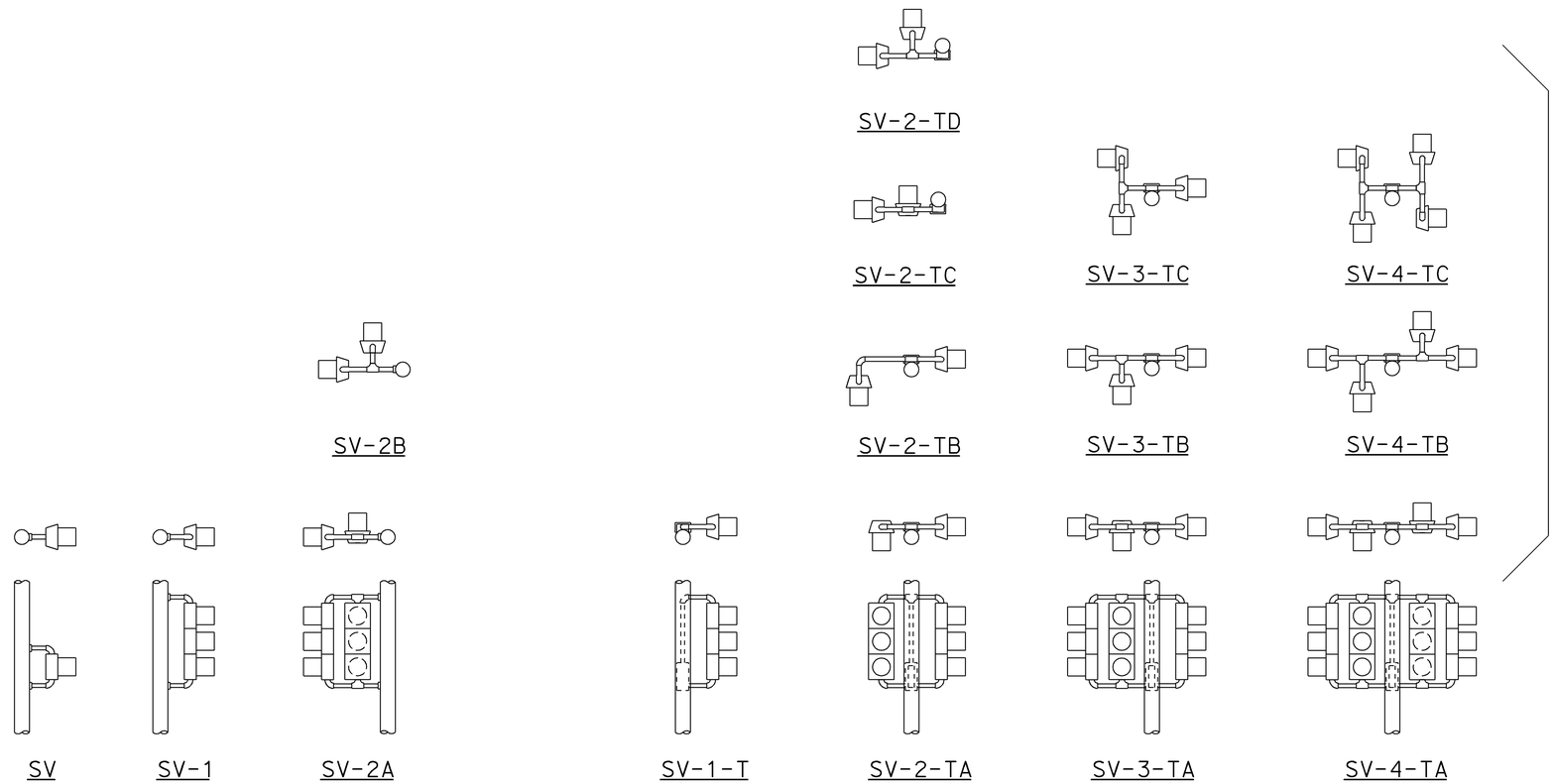

SIDE MOUNTINGS

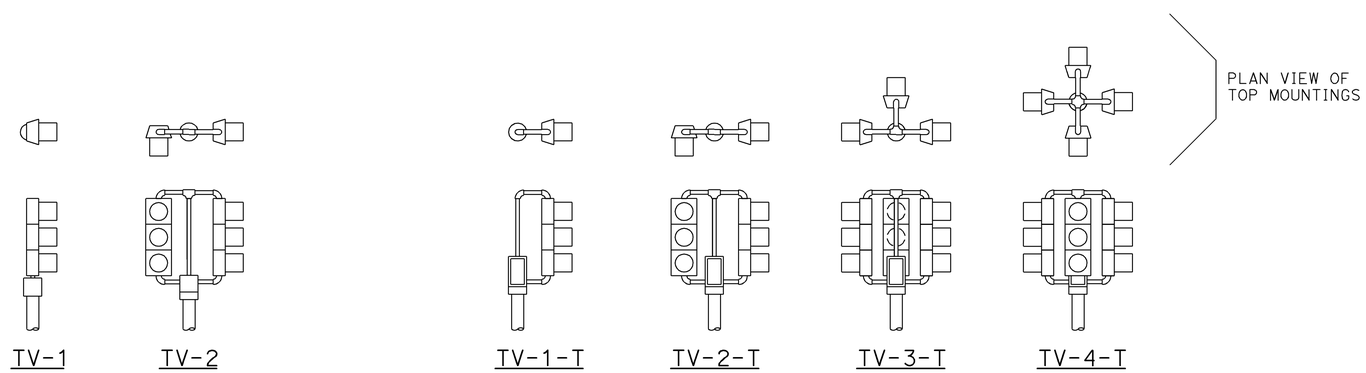

TOP MOUNTINGS

ABBREVIATIONS:

SV	SIDE MOUNTED VEHICLE SIGNALS
T	TERMINAL COMPARTMENT
TV	TOP MOUNTED VEHICLE SIGNALS
1, 2, 3, 4	NUMBER OF SIGNAL FACES (3 - SECTION, UNLESS OTHERWISE INDICATED)
A, B, C, D	CONFIGURATION OF SIGNALS

NOTES:

1. Mountings shall be oriented to provide maximum horizontal clearance to adjacent roadway.
2. Bracket arms shall be long enough to permit proper alignment of signals and backplate installation.
3. See Standard Plans ES-4D and ES-4E for attachment fitting details.

STATE OF CALIFORNIA
DEPARTMENT OF TRANSPORTATION

ELECTRICAL SYSTEMS (VEHICULAR SIGNAL HEADS AND MOUNTINGS)

NO SCALE

RSP ES-4A DATED JULY 19, 2013 SUPERSEDES STANDARD PLAN ES-4A DATED MAY 20, 2011 - PAGE 443 OF THE STANDARD PLANS BOOK DATED 2010.

REVISED STANDARD PLAN RSP ES-4A

2010 REVISED STANDARD PLAN RSP ES-4A

7-9-13

Dist	COUNTY	ROUTE	POST MILES TOTAL PROJECT	SHEET No.	TOTAL SHEETS
04	Mrn	1	11.0	56	76

Theresa Gabriel
REGISTERED ELECTRICAL ENGINEER

July 19, 2013
PLANS APPROVAL DATE

REGISTERED PROFESSIONAL ENGINEER
Theresa Aziz Gabriel
No. E15129
Exp. 6-30-14
ELECTRICAL
STATE OF CALIFORNIA

THE STATE OF CALIFORNIA OR ITS OFFICERS OR AGENTS SHALL NOT BE RESPONSIBLE FOR THE ACCURACY OR COMPLETENESS OF SCANNED COPIES OF THIS PLAN SHEET.

TO ACCOMPANY PLANS DATED 1-12-15

VISORS

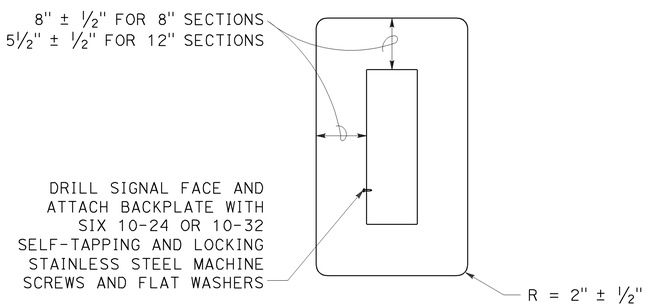

8" AND 12" SECTIONS

BACKPLATE

1/16" minimum thickness
3001-14 aluminum or plastic
when specified

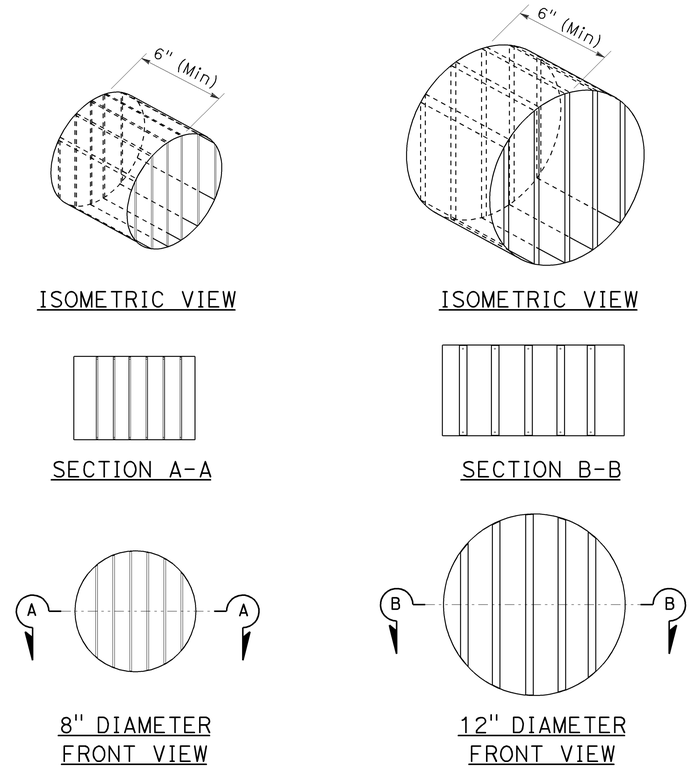

DIRECTIONAL LOUVER

Directional louvers shall be oriented as directed by the Engineer and secured in place with one plated brass machine screw and nut.

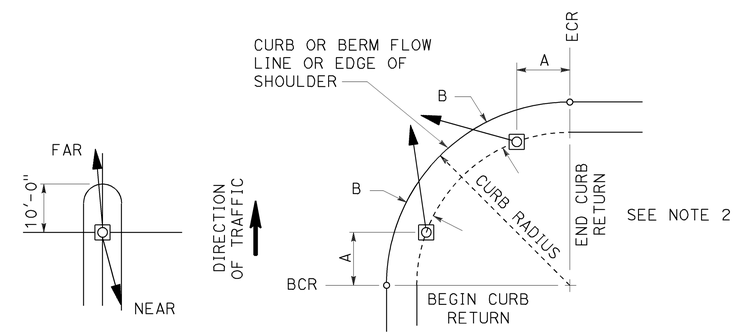

NOTES:

1. Typical signal pole placement unless dimensioned on plans.
2. For A and B dimensions, see Pole Schedule, or as directed by the Engineer.

SIGNAL STANDARD PLACEMENT DIMENSIONS AND EQUIPMENT LOCATIONS

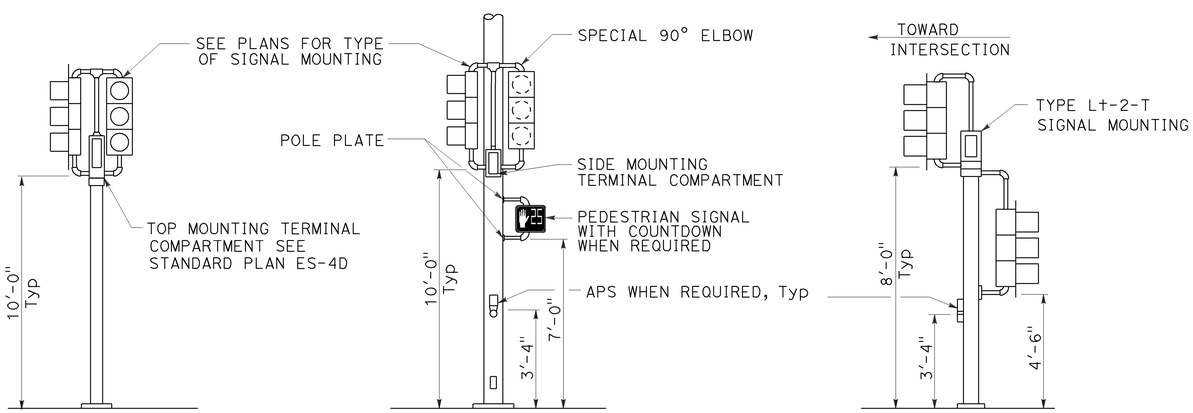

TOP MOUNTED SIGNALS (TV)
Type 1-A, 1-B, 1-C and 1-D standard as indicated on the plans

SIDE MOUNTED SIGNALS (SV AND SP)
Normally used on standards with luminaire or signal mast arm

LEFT TURN LANE SIGNAL
Type 1-A, 1-B, 1-C and 1-D standard as indicated on plans

TYPICAL SIGNAL INSTALLATIONS

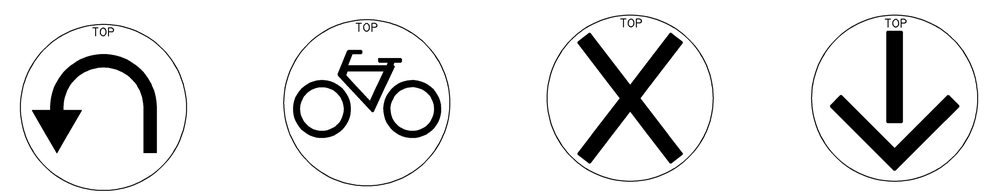

U-TURN | BICYCLE | LANE CONTROL | LANE CONTROL

SIGNAL FACES

STATE OF CALIFORNIA
DEPARTMENT OF TRANSPORTATION

ELECTRICAL SYSTEMS (VEHICULAR SIGNAL HEADS AND MOUNTINGS)

NO SCALE

RSP ES-4C DATED JULY 19, 2013 SUPERSEDES STANDARD PLAN ES-04C DATED MAY 20, 2011 - PAGE 445 OF THE STANDARD PLANS BOOK DATED 2010.

REVISED STANDARD PLAN RSP ES-4C

2010 REVISED STANDARD PLAN RSP ES-4C

7-10-13

Dist	COUNTY	ROUTE	POST MILES TOTAL PROJECT	SHEET No.	TOTAL SHEETS
04	Mrn	1	11.0	57	76

Theresa Gabriel
REGISTERED ELECTRICAL ENGINEER

July 19, 2013
PLANS APPROVAL DATE

REGISTERED PROFESSIONAL ENGINEER
Theresa Aziz Gabriel
No. E15129
Exp. 6-30-14
ELECTRICAL
STATE OF CALIFORNIA

THE STATE OF CALIFORNIA OR ITS OFFICERS OR AGENTS SHALL NOT BE RESPONSIBLE FOR THE ACCURACY OR COMPLETENESS OF SCANNED COPIES OF THIS PLAN SHEET.

TO ACCOMPANY PLANS DATED 1-12-15

2010 REVISED STANDARD PLAN RSP ES-4E

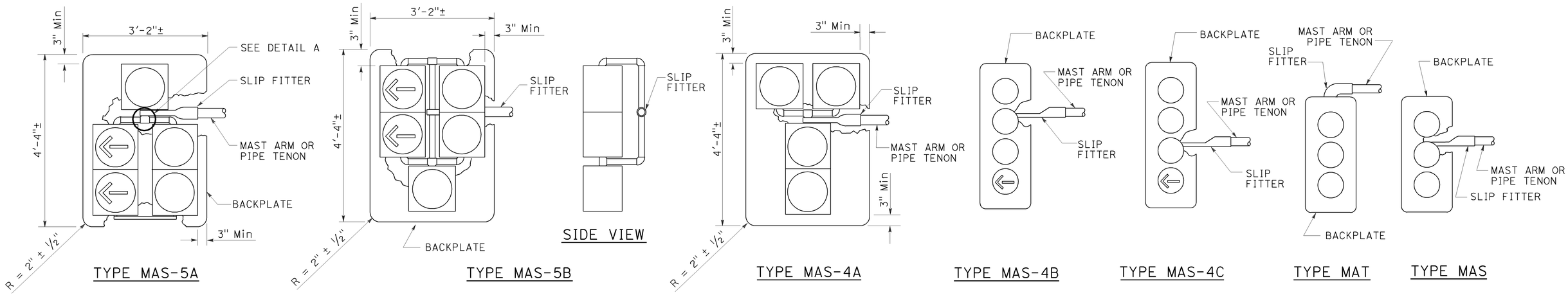

MAST ARM MOUNTINGS

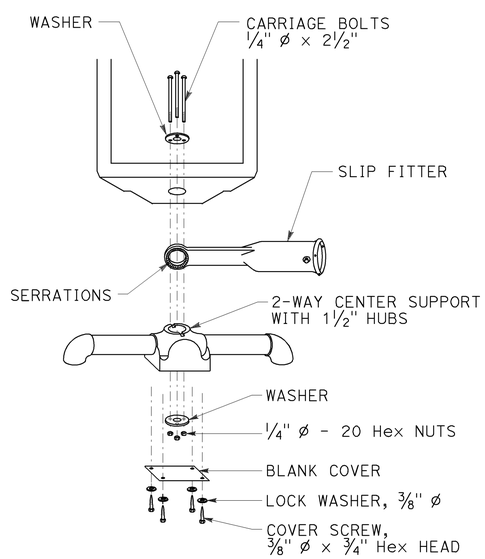

DETAIL A

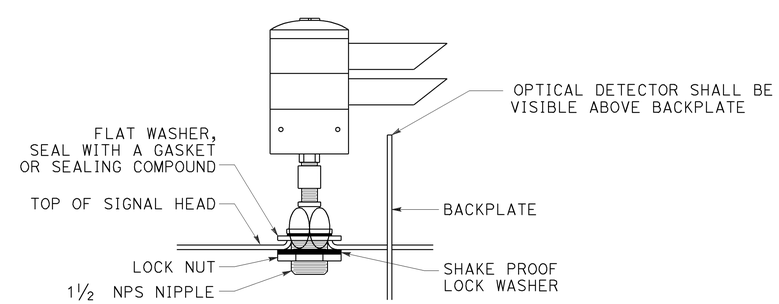

OPTICAL DETECTOR MOUNTING FOR EMERGENCY VEHICLE DETECTION SYSTEM

DETAIL B

STATE OF CALIFORNIA
DEPARTMENT OF TRANSPORTATION

ELECTRICAL SYSTEMS (VEHICULAR SIGNAL HEADS AND OPTICAL DETECTOR MOUNTING)

NO SCALE

RSP ES-4E DATED JULY 19, 2013 SUPERSEDES STANDARD PLAN ES-4E DATED MAY 20, 2011 - 447 OF THE STANDARD PLANS BOOK DATED 2010.

REVISED STANDARD PLAN RSP ES-4E

7-9-13

Dist	COUNTY	ROUTE	POST MILES TOTAL PROJECT	SHEET No.	TOTAL SHEETS
04	Mrn	1	11.0	58	76

Theresa Gabriel
REGISTERED ELECTRICAL ENGINEER

July 19, 2013
PLANS APPROVAL DATE

REGISTERED PROFESSIONAL ENGINEER
Theresa Aziz Gabriel
No. E15129
Exp. 6-30-14
ELECTRICAL
STATE OF CALIFORNIA

THE STATE OF CALIFORNIA OR ITS OFFICERS OR AGENTS SHALL NOT BE RESPONSIBLE FOR THE ACCURACY OR COMPLETENESS OF SCANNED COPIES OF THIS PLAN SHEET.

TO ACCOMPANY PLANS DATED 1-12-15

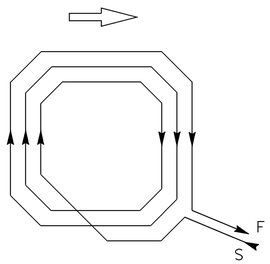

WINDING DETAIL

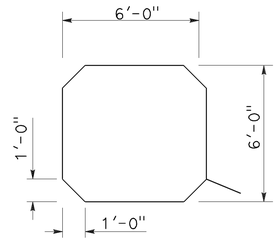

SAWCUT DETAIL

TYPE A LOOP DETECTOR CONFIGURATION

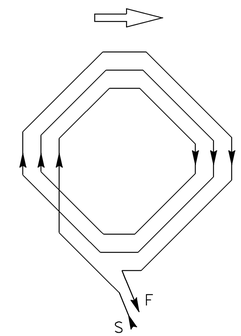

WINDING DETAIL

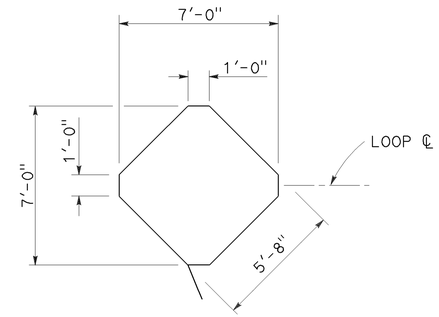

SAWCUT DETAIL

TYPE B LOOP DETECTOR CONFIGURATION

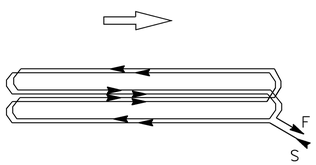

WINDING DETAIL

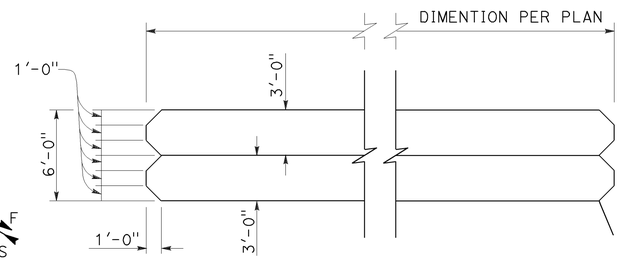

SAWCUT DETAIL

TYPE C LOOP DETECTOR CONFIGURATION

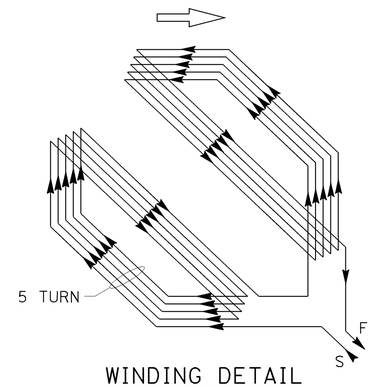

WINDING DETAIL

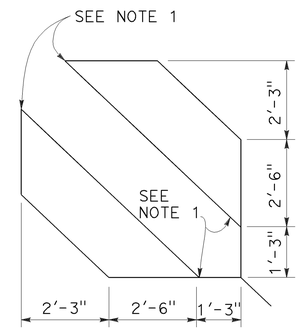

SAWCUT DETAIL

TYPE D LOOP DETECTOR CONFIGURATION

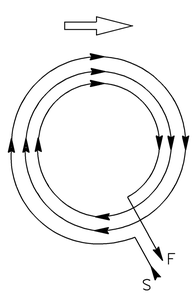

WINDING DETAIL

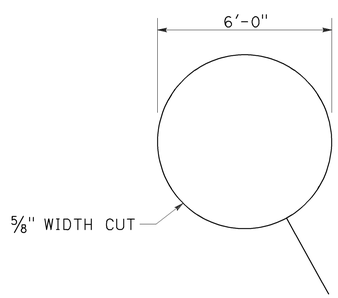

SAWCUT DETAIL

TYPE E LOOP DETECTOR CONFIGURATION

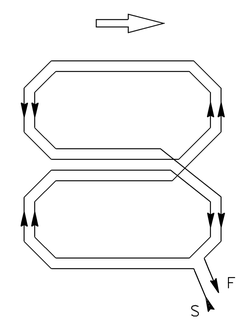

WINDING DETAIL

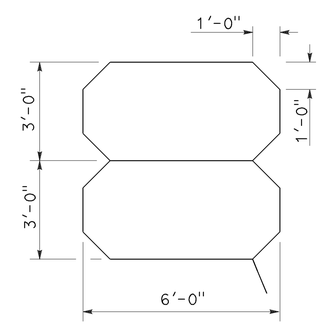

SAWCUT DETAIL

TYPE Q LOOP DETECTOR CONFIGURATION

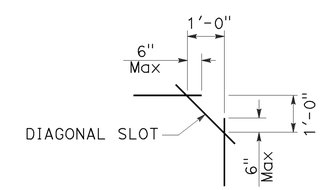

PLAN VIEW OF DIAGONAL SLOT AT CORNERS

NOTES:

1. Round corners of acute angle sawcuts to prevent damage to conductors.
2. Typical distance separating loops from edge to edge is 10' for Type A, B, D and E installation in single lane.

STATE OF CALIFORNIA
DEPARTMENT OF TRANSPORTATION

ELECTRICAL SYSTEMS (DETECTORS)

NO SCALE

RSP ES-5B DATED JULY 19, 2013 SUPERSEDES STANDARD PLAN ES-5B DATED MAY 20, 2011 - PAGE 449 OF THE STANDARD PLANS BOOK DATED 2010.

REVISED STANDARD PLAN RSP ES-5B

2010 REVISED STANDARD PLAN RSP ES-5B

7-9-13

Dist	COUNTY	ROUTE	POST MILES TOTAL PROJECT	SHEET No.	TOTAL SHEETS
04	Mrn	1	11.0	59	76

Theresa Gabriel
REGISTERED ELECTRICAL ENGINEER

July 19, 2013
PLANS APPROVAL DATE

REGISTERED PROFESSIONAL ENGINEER
Theresa Aziz Gabriel
No. E15129
Exp. 6-30-14
ELECTRICAL
STATE OF CALIFORNIA

THE STATE OF CALIFORNIA OR ITS OFFICERS OR AGENTS SHALL NOT BE RESPONSIBLE FOR THE ACCURACY OR COMPLETENESS OF SCANNED COPIES OF THIS PLAN SHEET.

TO ACCOMPANY PLANS DATED 1-12-15

2010 REVISED STANDARD PLAN RSP ES-5C

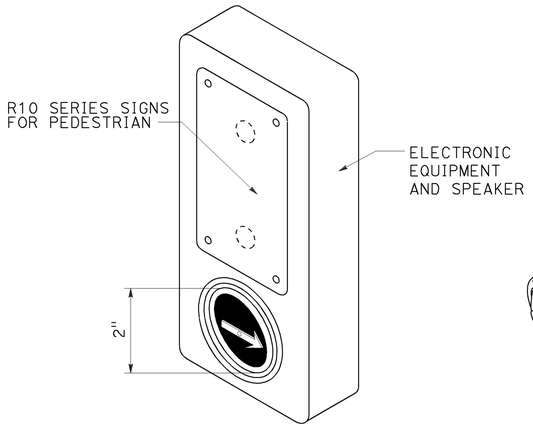

ACCESSIBLE PEDESTRIAN SIGNAL

DETAIL A
(See note 1 to 4)

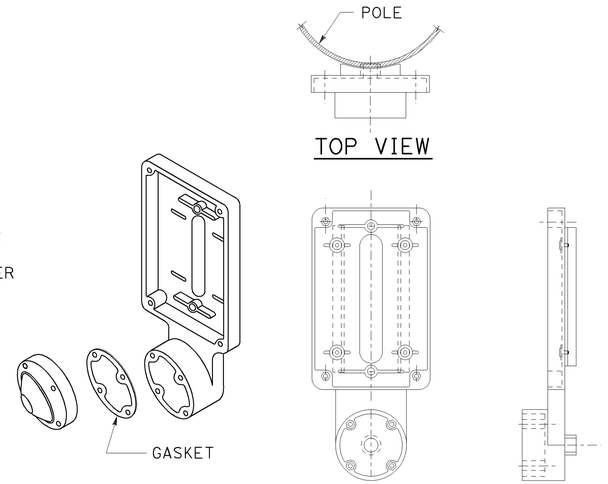

TYPE B PUSH BUTTON ASSEMBLY

DETAIL B
(See note 1 to 4)

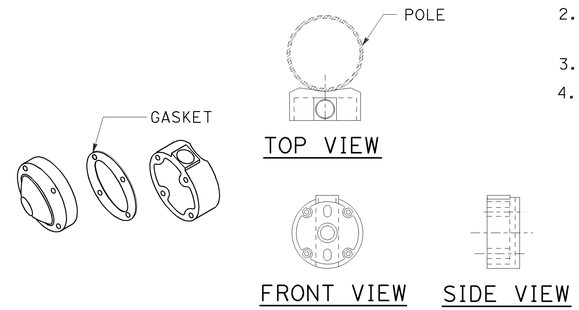

TYPE C PUSH BUTTON ASSEMBLY

DETAIL C
(See note 1 to 4)

NOTES:

1. Back casting shape to fit curvature of pole.
2. Provide cover fitting for top of post, when PBA is mounted on push button assembly post.
3. Install push button on crosswalk side of standard.
4. Use R10 series regulatory signs and plaques for pedestrian and bicycle facilities.

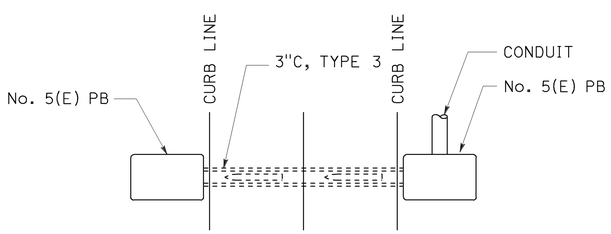

PLAN

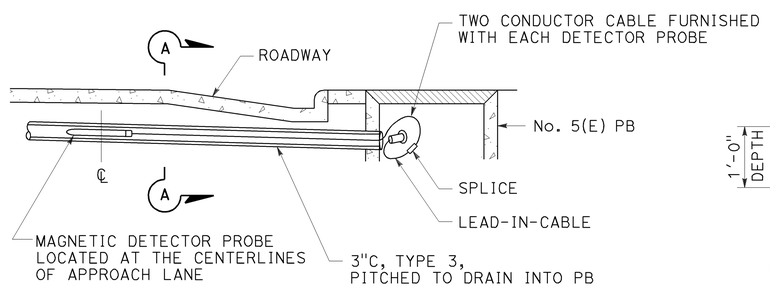

ELEVATION

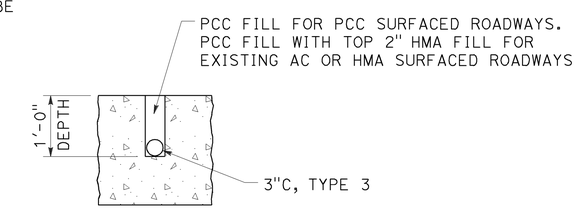

SECTION A-A

MAGNETIC VEHICLE DETECTOR INSTALLATION DETAILS

DETAIL D

STATE OF CALIFORNIA
DEPARTMENT OF TRANSPORTATION

ELECTRICAL SYSTEMS (ACCESSIBLE PEDESTRIAN SIGNAL, PUSH BUTTON ASSEMBLIES AND MAGNETIC VEHICLE DETECTOR)

NO SCALE

RSP ES-5C DATED JULY 19, 2013 SUPERSEDES STANDARD PLAN ES-5C
DATED MAY 20, 2011 - PAGE 450 OF THE STANDARD PLANS BOOK DATED 2010.

REVISED STANDARD PLAN RSP ES-5C

7-9-13

Dist	COUNTY	ROUTE	POST MILES TOTAL PROJECT	SHEET No.	TOTAL SHEETS
04	Mrn	1	11.0	60	76

Theresa Gabriel
REGISTERED ELECTRICAL ENGINEER

July 19, 2013
PLANS APPROVAL DATE

REGISTERED PROFESSIONAL ENGINEER Theresa Aziz Gabriel No. E15129 Exp. 6-30-14 ELECTRICAL STATE OF CALIFORNIA

THE STATE OF CALIFORNIA OR ITS OFFICERS OR AGENTS SHALL NOT BE RESPONSIBLE FOR THE ACCURACY OR COMPLETENESS OF SCANNED COPIES OF THIS PLAN SHEET.

TO ACCOMPANY PLANS DATED 1-12-15

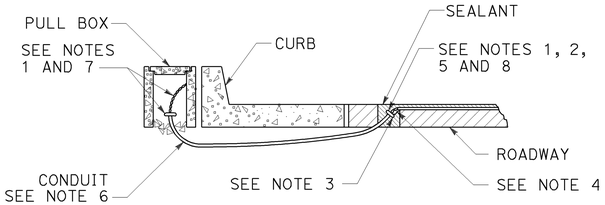

TYPE A
CURB TERMINATION DETAIL

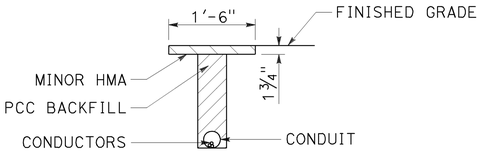

"T" TRENCH
DETAIL T

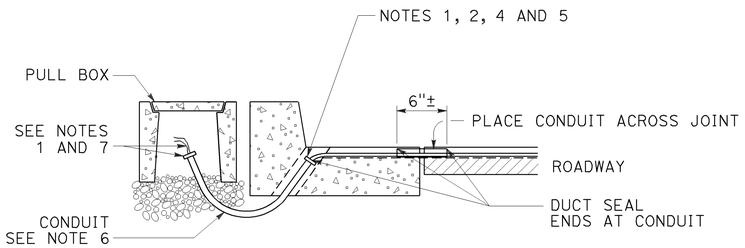

CROSS SECTION

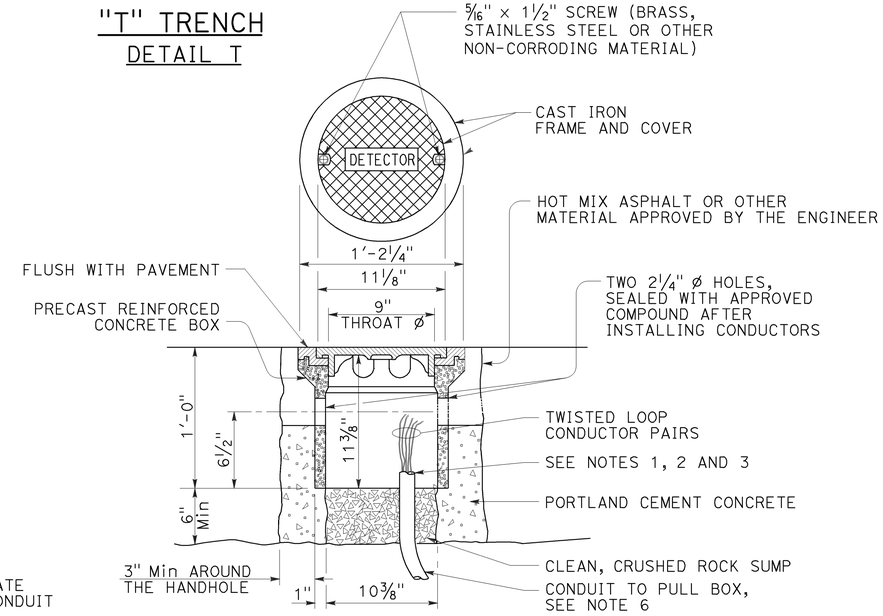

DETECTOR HANDHOLE DETAIL

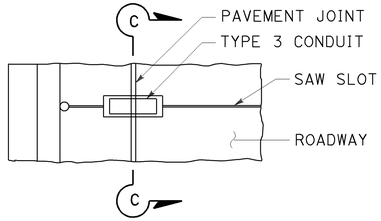

PLAN VIEW

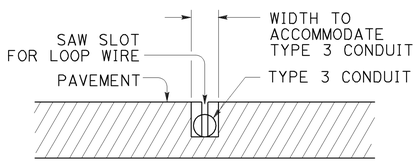

SECTION C-C

TYPE B
CURB TERMINATION DETAIL

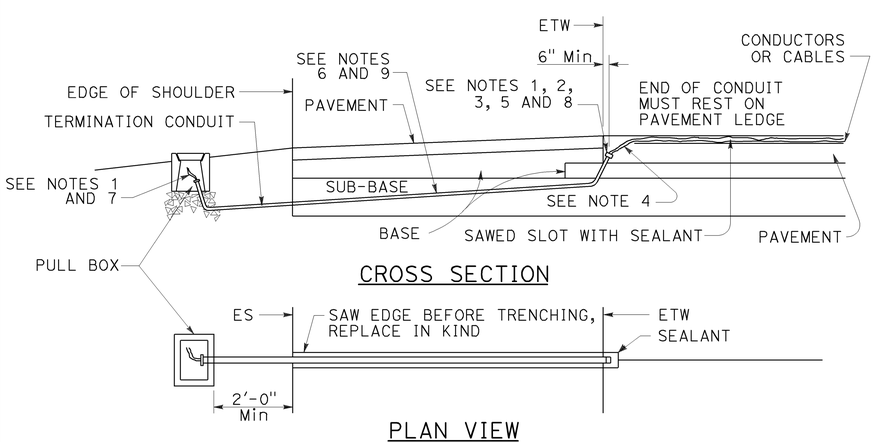

CROSS SECTION

PLAN VIEW

SHOULDER TERMINATION DETAILS

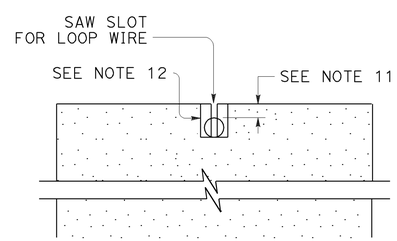

SECTION A-A

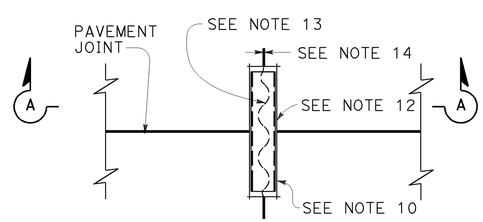

PLAN VIEW

TYPICAL LOOP LEAD-IN DETAIL
AT PAVEMENT JOINT

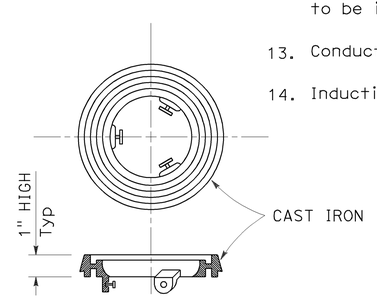

LOCKING GRADE RING

NOTES:

1. Bushing shall be used at end of conduit.
2. Tape detector conductors or cables 3" each side of bushings.
3. Install duct seal compound to each end of termination conduit before installing sealant.
4. Round all sharp edges where detector conductors or cables have to pass.
5. End of conduit shall be 3⅛" below roadway surface.
6.

Conduit size	Loop conductors
1"C minimum	1 to 2 pairs
1½"C minimum	3 to 4 pairs
2"C minimum	5 or more pairs

7. Splice detector conductors or cables to detector lead-in-cable.
8. Location of detector handhole when shown on plans.
9. When the shoulder and traveled way are paved with the same material and there is no joint between them, the conduit shall extend only 2'-0" into the shoulder pavement.
10. ¾"C, Type 3 conduit 6" long minimum, plug both ends with duct compound to keep out sealant.
11. ½" Minimum between top of conduit and pavement surface.
12. Sawcut shall not exceed 1" in width and ⅛" longer than conduit to be installed.
13. Conductors with ½" minimum slack inside conduit.
14. Inductive loop detector saw slot.

STATE OF CALIFORNIA
DEPARTMENT OF TRANSPORTATION

ELECTRICAL SYSTEMS (CURB TERMINATION AND HANDHOLE)

NO SCALE

RSP ES-5D DATED JULY 19, 2013 SUPERSEDES STANDARD PLAN ES-5D
DATED MAY 20, 2011 - PAGE 451 OF THE STANDARD PLANS BOOK DATED 2010.

REVISED STANDARD PLAN RSP ES-5D

2010 REVISED STANDARD PLAN RSP ES-5D

7-9-13

DIST	COUNTY	ROUTE	POST MILES TOTAL PROJECT	SHEET NO.	TOTAL SHEETS
04	Mrn	1	11.0	61	76

Theresa Gabriel
REGISTERED ELECTRICAL ENGINEER

July 19, 2013
PLANS APPROVAL DATE

REGISTERED PROFESSIONAL ENGINEER Theresa Aziz Gabriel No. E15129 Exp. 6-30-14 ELECTRICAL STATE OF CALIFORNIA

THE STATE OF CALIFORNIA OR ITS OFFICERS OR AGENTS SHALL NOT BE RESPONSIBLE FOR THE ACCURACY OR COMPLETENESS OF SCANNED COPIES OF THIS PLAN SHEET.

TO ACCOMPANY PLANS DATED 1-12-15

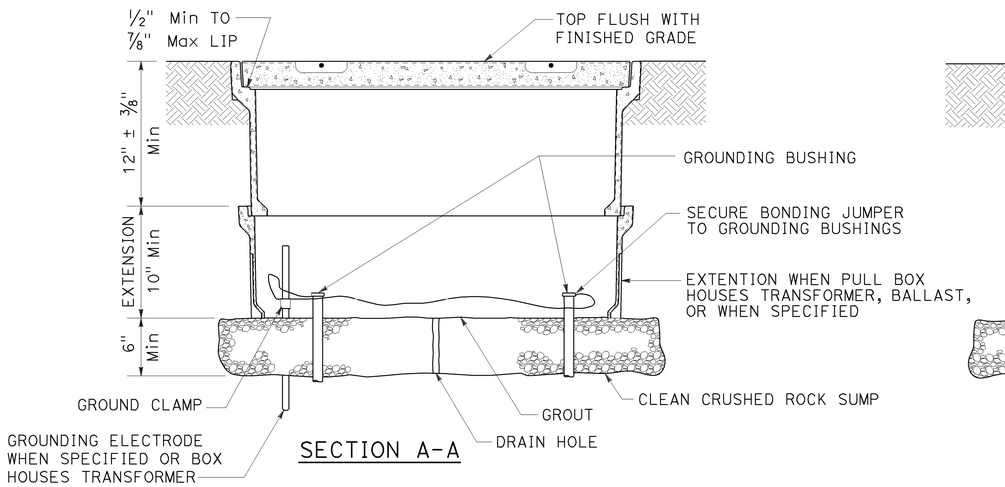

SECTION A-A

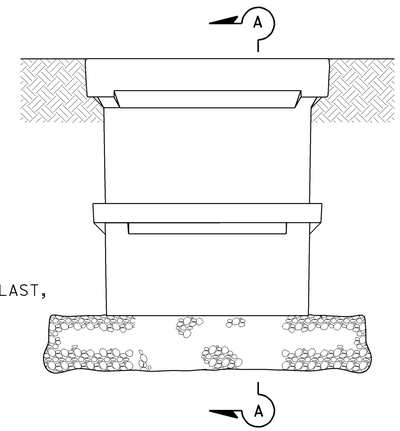

SIDE VIEW

INSTALLATION DETAILS

DETAIL A

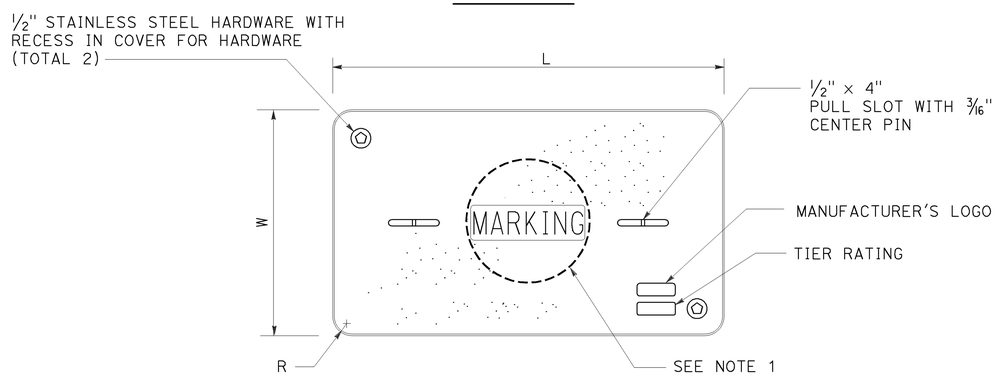

COVER TOP VIEW

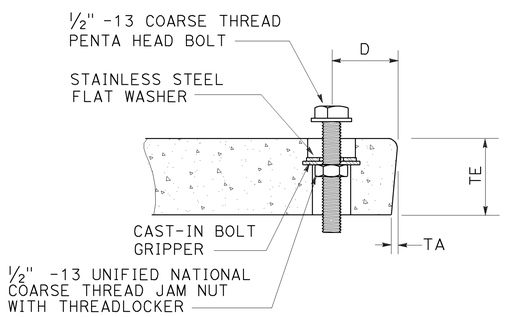

TYPICAL COVER CAPTIVE BOLT

OR SIMILAR

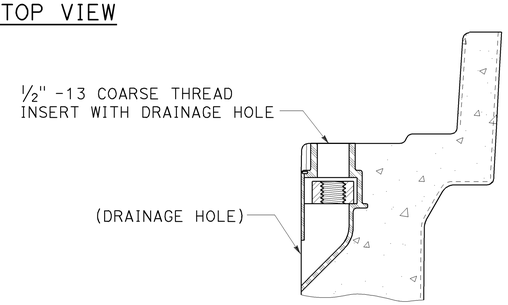

TYPICAL THREADED INSERT

OR SIMILAR

DIMENSION TABLE

PULL BOX	PULL BOX			COVER						
	MINIMUM DEPTH BOX	MINIMUM DEPTH EXTENSION	MAXIMUM WEIGHT	L	W	R	TE	TA	D	MAXIMUM WEIGHT
No. 3½	12"	N/A	40 lb	1′ - 3⅜"	10⅛"	1⅜"	2"	⅛"	1¾"	30 lb
No. 5	12"	10"	55 lb	1′ - 11¼"	1′ - 1¾"	1⅜"	2"	⅛"	1¾"	60 lb
No. 6	12"	10"	70 lb	2′ - 6½"	1′ - 5½"	1⅜"	2"	⅛"	2"	85 lb

NOTES:

1. Pull box covers shall be marked as follows: "SERVICE" Service circuits between service point and service disconnect; "SPRINKLER-CONTROL" sprinkler control circuits, 50 V or less; "CALTRANS" on all pull boxes, except pull boxes marked "SPRINKLER-CONTROL"; and "TELEPHONE" Telephone service;

   A) No. 3½ pull box.
      1) "SIGNAL" - Traffic signal circuits with or without lighting or sign lighting circuits.
      2) "LIGHTING" - Lighting or sign lighting circuits where voltage is under 600 V.

   B) No. 5, 6, 9 or 9A pull box.
      1) "TRAFFIC SIGNAL" - Traffic signal circuits with or without lighting or sign lighting circuits.
      2) "LIGHTING" - Lighting or sign lighting circuits where voltage is under 600 V.
      3) "LIGHTING-HIGH VOLTAGE" - Lighting or sign lighting circuits where voltage is above 600 V.
      4) "IRRIGATION" - Circuits to irrigation controller 120 V or more.
      5) "RAMP METER" - Ramp meter circuits.
      6) "COUNT STATION" - Count or speed monitor circuits.
      7) "COMMUNICATIONS" - Communication circuits.
      8) "TOS COMMUNICATIONS" - TOS communication line.
      9) "TOS POWER" - TOS power.
      10) "TDC POWER" - Telephone demarcation cabinet power.
      11) "CCTV" - Closed circuit television circuits.
      12) "TMS" - Traffic monitoring station circuits.
      13) "CMS" - Changeable message sign circuits.
      14) "HAR" - Highway advisory radio circuits.
      15) "BOOSTER PUMP" - Booster pump circuit.

2. The nominal dimensions of the opening in which the cover sets shall be the same as the cover dimensions except the length and width dimensions shall be ⅛" greater.

3. Covers and boxes shall be interchangeable with California standard male and female gages. When interchanged with a standard male or female gage, the top surfaces shall be flush within ⅛". Top outside radius of covers and pull boxes shall have a ⅛" radius.

4. Pull box extension may be another pull box as long as the bottom edge of the pull box can fit into the cover opening.

5. All dimensions for the cover for non-traffic pull box are nominal values.

STATE OF CALIFORNIA
DEPARTMENT OF TRANSPORTATION

ELECTRICAL SYSTEMS (NON-TRAFFIC PULL BOX)

NO SCALE

RSP ES-8A DATED JULY 19, 2013 SUPERSEDES RSP ES-8A DATED JANUARY 20, 2012 THAT SUPPLEMENTS THE STANDARD PLANS BOOK DATED 2010.

REVISED STANDARD PLAN RSP ES-8A

2010 REVISED STANDARD PLAN RSP ES-8A

7-15-13

Dist	COUNTY	ROUTE	POST MILES TOTAL PROJECT	SHEET No.	TOTAL SHEETS
04	Mrn	1	11.0	62	76

Theresa Gabriel
REGISTERED ELECTRICAL ENGINEER

July 19, 2013
PLANS APPROVAL DATE

REGISTERED PROFESSIONAL ENGINEER
Theresa Aziz Gabriel
No. E15129
Exp. 6-30-14
ELECTRICAL
STATE OF CALIFORNIA

THE STATE OF CALIFORNIA OR ITS OFFICERS OR AGENTS SHALL NOT BE RESPONSIBLE FOR THE ACCURACY OR COMPLETENESS OF SCANNED COPIES OF THIS PLAN SHEET.

TO ACCOMPANY PLANS DATED 1-12-15

ISOFOOTCANDLE CURVE - MINIMUM

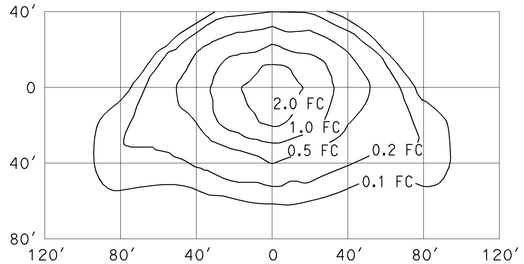

TYPE III MEDIUM CUTOFF

Cutoff Luminaire
34′ Mounting Height
Lamp operated at 22,000 lm
200-W high pressure sodium lamp
ANSI Designation S66

ISOFOOTCANDLE CURVE - MINIMUM

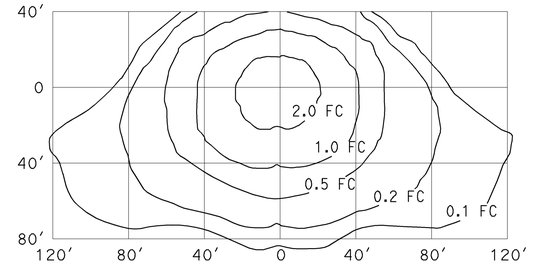

TYPE III MEDIUM CUTOFF

Cutoff Luminaire
40′ Mounting Height
Lamp operated at 37,000 lm
310-W high pressure sodium lamp
ANSI Designation S67

ISOFOOTCANDLE CURVE - MINIMUM

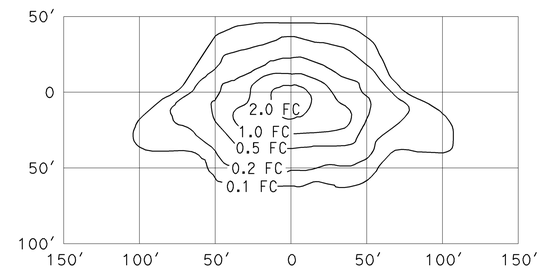

TYPE III MEDIUM CUTOFF

Cutoff Luminaire
30′ Mounting Height
Lamp operated at 16,000 lm
150-W high pressure sodium lamp
ANSI Designation S55

ISOFOOTCANDLE CURVE - MINIMUM

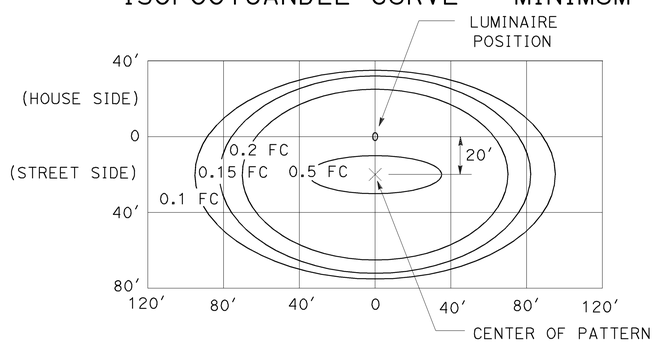

LED LUMINAIRE ROADWAY 1

165-W at 34′ Mounting Height

ISOFOOTCANDLE CURVE - MINIMUM

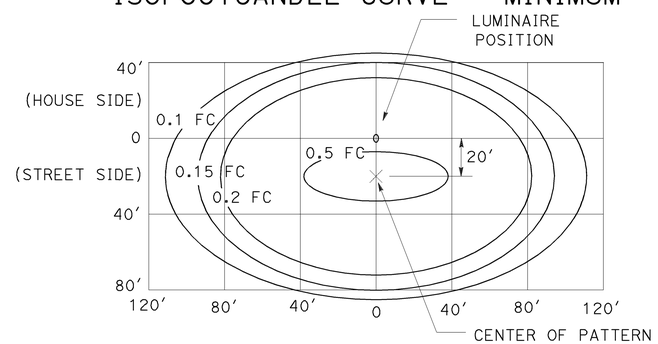

LED LUMINAIRE ROADWAY 2

235-W at 40′ Mounting Height

ISOFOOTCANDLE CURVE - MINIMUM

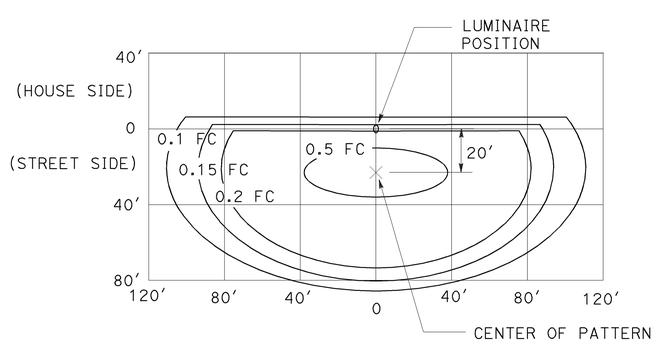

LED LUMINAIRE ROADWAY 3

235-W at 40′ Mounting Height
with back side control

ISOFOOTCANDLE CURVE - MINIMUM

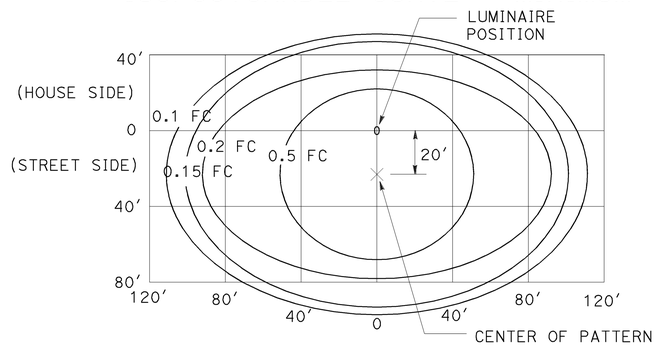

LED LUMINAIRE ROADWAY 4

300-W at 40′ Mounting Height

ISOFOOTCANDLE CURVE - MINIMUM

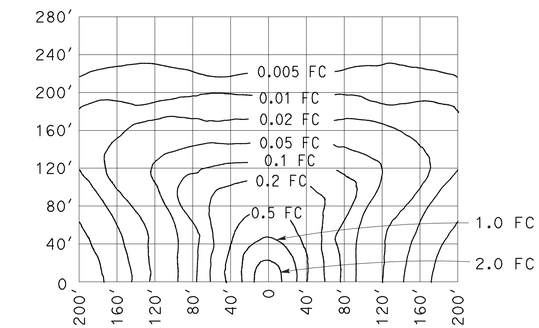

LOW PRESSURE SODIUM LUMINAIRE

40′ Mounting Height
Lamp operated at 33,000 lm
180-W low pressure sodium lamp

STATE OF CALIFORNIA
DEPARTMENT OF TRANSPORTATION

ELECTRICAL SYSTEMS (ISOFOOTCANDLE DIAGRAMS)

NO SCALE

RSP ES-10A DATED JULY 19, 2013 SUPERSEDES RSP ES-10A DATED JULY 20, 2012 THAT SUPPLEMENTS THE STANDARD PLANS BOOK DATED 2010.

REVISED STANDARD PLAN RSP ES-10A

2010 REVISED STANDARD PLAN RSP ES-10A

DIST	COUNTY	ROUTE	POST MILES TOTAL PROJECT	SHEET No.	TOTAL SHEETS
04	Mrn	1	11.0	63	76

REGISTERED CIVIL ENGINEER 1-9-15 DATE

1-12-15
PLANS APPROVAL DATE

REGISTERED PROFESSIONAL ENGINEER Philip E. Lutz No. C55839 Exp. 12-31-16 CIVIL STATE OF CALIFORNIA

The State of California or its officers or agents shall not be responsible for the accuracy or completeness of scanned copies of this plan sheet.

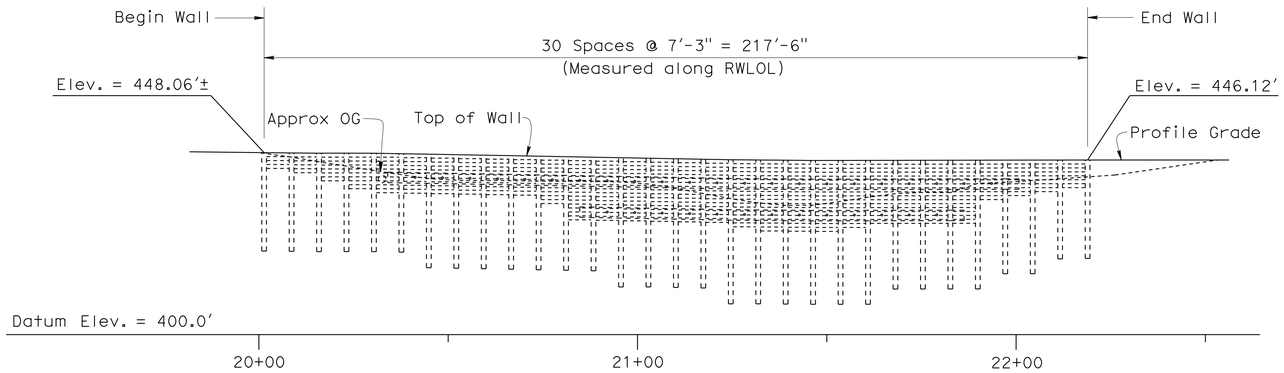

MIRRORED ELEVATION

1"=20'

QUANTITIES

STRUCTURE EXCAVATION (SOLDIER PILE WALL) (NATURALLY OCCURRING ASBESTOS)	265	CY
STRUCTURE BACKFILL (SOLDIER PILE WALL)	289	CY
CONCRETE BACKFILL (SOLDIER PILE WALL)	95	CY
LEAN CONCRETE BACKFILL	36	CY
GROUND ANCHOR (SUBHORIZONTAL)	35	EA
STEEL SOLDIER PILE (HP 14 X 117)	926	LF
30" DRILLED HOLE	712	LF
STRUCTURAL CONCRETE, RETAINING WALL	58	CY
BAR REINFORCING STEEL (EPOXY COATED)	12,804	LB
TIMBER LAGGING	18	MFBM
CLEAN AND PAINT STEEL SOLDIER PILING	LUMP	SUM
CLASS 3 PERMEABLE MATERIAL	170	CY

NOTES:

1. For placement of Temporary Railing (Type K), see "ROADWAY PLANS".
2. For Pile/Ground Anchor Data Table, General Notes, Standard Plans List and Index to Plans, see "INDEX TO PLANS" sheet.

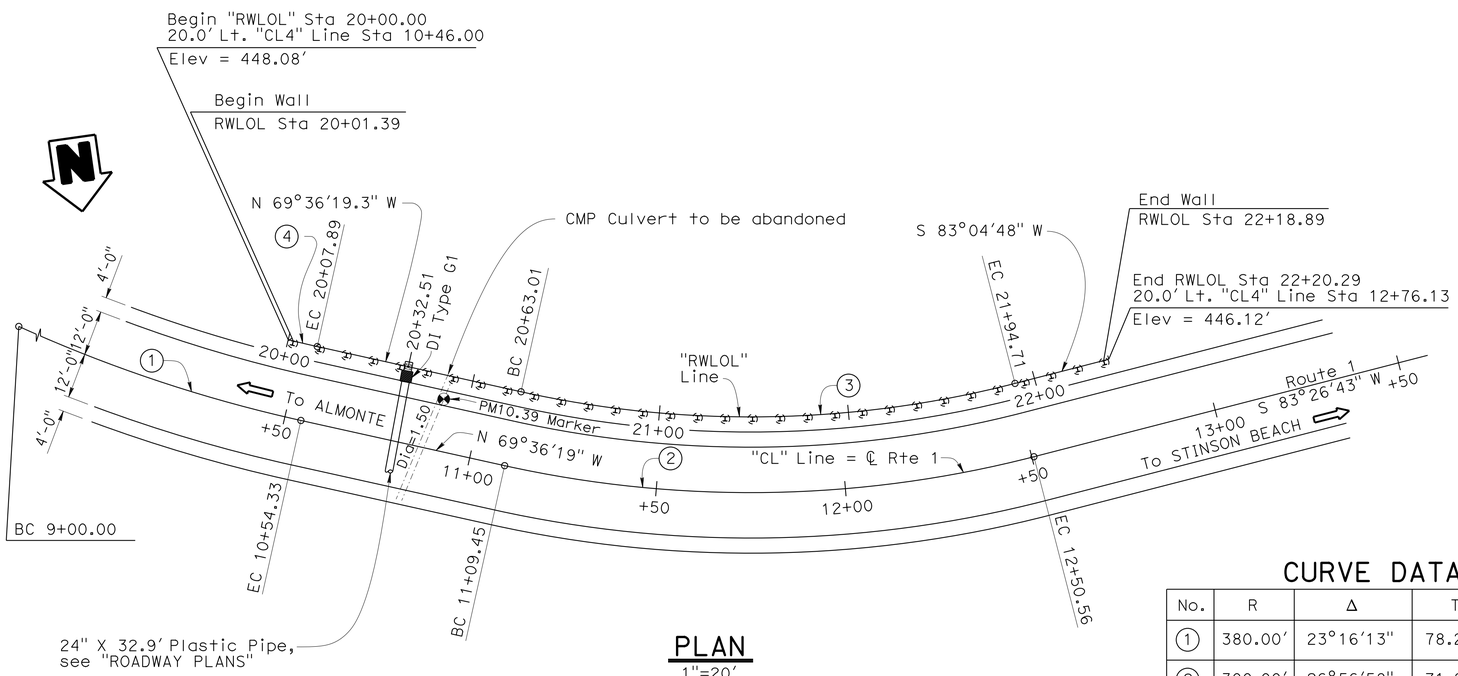

PLAN

1"=20'

CURVE DATA

No.	R	Δ	T	L
1	380.00'	23°16'13"	78.25'	154.33'
2	300.00'	26°56'58"	71.88'	141.11'
3	280.00'	26°56'58"	67.09'	131.70'
4	360.00'	01°15'23"	3.95'	7.89'

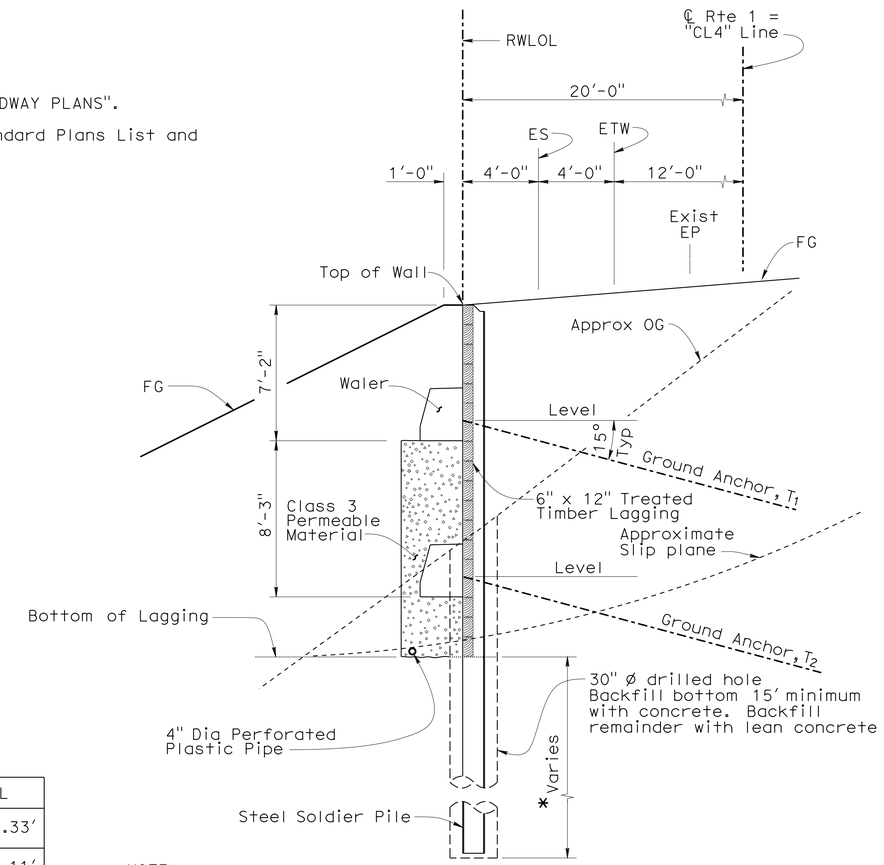

NOTE:

* - See Pile/Ground Anchor Data Table on "INDEX TO PLANS" sheet

TYPICAL SECTION

1/4"=1'-0"

DESIGN	BY P. Lutz	CHECKED R. Candiotti	LOAD & RESISTANCE FACTOR DESIGN	LIVE LOADING: HL93 W/"LOW-BOY"; PERMIT DESIGN VEHICLE
DETAILS	BY P. Lutz/D. Elliott	CHECKED R. Candiotti	LAYOUT BY P. Lutz	CHECKED R. Candiotti
QUANTITIES	BY P. Lutz	CHECKED R. Candiotti	SPECIFICATIONS BY J. Corrado	PLANS AND SPECS COMPARED J. Corrado

Gordon Danke
DESIGN ENGINEER

ORIGINAL SCALE IN INCHES FOR REDUCED PLANS 0 1 2 3

STATE OF CALIFORNIA
DEPARTMENT OF TRANSPORTATION

DIVISION OF ENGINEERING SERVICES
STRUCTURE DESIGN
DESIGN BRANCH 9

BRIDGE NO. 27E0028
POST MILE 10.95

DIPSEA TRAIL RETAINING WALL
GENERAL PLAN

UNIT: 3594
PROJECT NUMBER & PHASE: 04000012171
CONTRACT NO.: 04-4S2204

DISREGARD PRINTS BEARING EARLIER REVISION DATES

REVISION DATES: 10-8-14 12-23-14 6-30-14 9-4-14

SHEET 1 OF 14

USERNAME => s113541 DATE PLOTTED => 16-JAN-2015 TIME PLOTTED => 10:33

STRUCTURES DESIGN GENERAL PLAN SHEET (ENGLISH) (REV.09-01-10)

FILE => 27e0028-a-gp.dgn

DIST	COUNTY	ROUTE	POST MILES TOTAL PROJECT	SHEET No.	TOTAL SHEETS
04	Mrn	1	11.0	64	76

REGISTERED CIVIL ENGINEER 1-9-15 DATE

1-12-15
PLANS APPROVAL DATE

REGISTERED PROFESSIONAL ENGINEER Philip E. Lutz No. C55839 Exp. 12-31-16 CIVIL STATE OF CALIFORNIA

The State of California or its officers or agents shall not be responsible for the accuracy or completeness of scanned copies of this plan sheet.

PILE/GROUND ANCHOR DATA TABLE

Station	Pile No.	Top of Pile Elev.	Pile Length	Pile Section	Ground Anchors							
					T_1				T_2			
					FTL	FDL	LL	Unbonded Length	FTL	FDL	LL	Unbonded Length
		(Ft)	(Ft)		(Kips)	(Kips)	(Kips)	(Ft)	(Kips)	(Kips)	(Kips)	(Ft)
20+01.39	1	448.06	30.0	HP14x117	----	----	----	----	----	----	----	----
20+08.64	2	447.98	30.0	HP14x117								
20+15.89	3	447.92	30.0	HP14x117								
20+23.14	4	447.93	30.0	HP14x117								
20+30.39	5	447.91	30.0	HP14x117								
20+37.64	6	447.78	35.0	HP14x117	58.7	44.0	44.0	40.0				
20+44.89	7	447.66	35.0	HP14x117	58.7	44.0	44.0	40.0				
20+52.14	8	447.53	35.0	HP14x117	58.7	44.0	44.0	40.0				
20+59.39	9	447.40	35.0	HP14x117	58.7	44.0	44.0	40.0				
20+66.64	10	447.27	35.0	HP14x117	58.7	44.0	44.0	40.0				
20+73.89	11	447.13	35.0	HP14x117	58.7	44.0	44.0	40.0				
20+81.14	12	447.00	40.0	HP14x117	97.3	73.0	73.0	40.0				
20+88.39	13	446.86	40.0	HP14x117	73.3	55.0	55.0	40.0	40.0	30.0	30.0	40.0
20+95.64	14	446.73	40.0	HP14x117	73.3	55.0	55.0	40.0	40.0	30.0	30.0	40.0
21+02.89	15	446.59	40.0	HP14x117	73.3	55.0	55.0	40.0	40.0	30.0	30.0	40.0
21+10.14	16	446.46	40.0	HP14x117	73.3	55.0	55.0	40.0	40.0	30.0	30.0	40.0
21+17.39	17	446.32	40.0	HP14x117	73.3	55.0	55.0	40.0	80.0	60.0	60.0	40.0
21+24.64	18	446.19	40.0	HP14x117	93.3	70.0	70.0	40.0	80.0	60.0	60.0	40.0
21+31.89	19	446.13	40.0	HP14x117	110.6	83.0	83.0	40.0	106.6	80.0	80.0	40.0
21+39.14	20	446.07	40.0	HP14x117	110.6	83.0	83.0	40.0	106.6	80.0	80.0	40.0
21+46.39	21	446.00	40.0	HP14x117	110.6	83.0	83.0	40.0	106.6	80.0	80.0	40.0
21+53.64	22	446.01	40.0	HP14x117	110.6	83.0	83.0	40.0	106.6	80.0	80.0	40.0
21+60.89	23	446.02	40.0	HP14x117	73.3	55.0	55.0	40.0	80.0	60.0	60.0	40.0
21.68.14	24	446.03	40.0	HP14x117	73.3	55.0	55.0	40.0	40.0	30.0	30.0	40.0
21+75.39	25	446.05	40.0	HP14x117	73.3	73.0	73.0	40.0	46.7	35.0	35.0	40.0
21+82.64	26	446.06	35.0	HP14x117	74.7	56.0	56.0	40.0				
21+89.89	27	446.07	35.0	HP14x117	58.7	44.0	44.0	40.0				
21+97.14	28	446.09	30.0	HP14x117								
22+04.39	29	446.10	30.0	HP14x117								
22+11.64	30	446.11	30.0	HP14x117								
22+18.89	31	446.12	30.0	HP14x117	----	----	----	----	----	----	----	----

GENERAL NOTES

DESIGN:
AASHTO LRFD Bridge Design Specifications, 4th Edition with California Amendments.

LIVE LOAD:
240 psf equivalent to 2 feet soil weight

SOIL PARAMETERS:
(For determination of Design Lateral Earth Pressures)
Backfill soil weight = 130 lb/ft^3
Friction Angle = 24 ° C = 0
Active Pressure coefficent, Ka = 0.33
Bedrock Unit Weight = 135 lb/ft^3
Slope Angle = 30 °
C = 0

STRUCTURAL STEEL:
ASTM A709/A709M Grade 50 or 50W
fy = 50 ksi

STRUCTURAL TIMBER:
Treated Douglas Fir, Grade No. 1 or better.
Timber to be full sawn

PRESTRESSING STEEL (GROUND ANCHORS):
FDL = Factored Design Load on ground anchor (kips)
FTL = Factored Test Load (kips)
LL = Lock-Off Load (kips)
fpu = Minimum ultimate tensile strength of ground anchor steel (ksi)
As (Min) = Minimum cross sectional area of steel in ground anchor (square inches)
Steel = ASTM designation: A416 (High Strength Strands)

$$As\ (Min) = \frac{1.0\ FTL}{0.75\ fpu}$$

Steel = ASTM designation: A722 (High Strength Bars)

$$As\ (Min) = \frac{1.0\ FTL}{0.80\ fpu}$$

Steel = ASTM designation: A615 (Mild Steel Bars)

$$As\ (Min) = \frac{1.0\ FTL}{0.90\ fpu}$$

FDL = See Table
FTL = See Table
LL = See Table

Reinforced Concrete
fy = 60 ksi
f'c = 3.6 ksi
n = 8

STANDARD PLANS DATED 2010

A10A	Acronyms and Abbrevations (Sheet 1 of 2)
RSP - A10B	Acronyms and Abbrevations (Sheet 2 of 2)
B0-3	Bridge Details

STANDARD PLAN SHEET NO.

DETAIL NO.

INDEX TO PLANS

1. GENERAL PLAN
2. INDEX TO PLANS
3. STRUCTURE PLAN
4. FOUNDATION PLAN
5. TYPICAL SECTION NO. 1
6. TYPICAL SECTION NO. 2
7. WALL DETAILS
8. EXCAVATION AND BACKFILL DETAILS
9. SUB HORIZONTAL GROUND ANCHOR DETAILS
10. DRAINAGE PLAN
11. LOG OF TEST BORINGS 1 OF 4
12. LOG OF TEST BORINGS 2 OF 4
13. LOG OF TEST BORINGS 3 OF 4
14. LOG OF TEST BORINGS 4 OF 4

	BY	CHECKED
DESIGN	P. Lutz	R. Candiotti
DETAILS	P. Lutz/D. Elliott	R. Candiotti
QUANTITIES	P. Lutz	R. Candiotti

STATE OF CALIFORNIA
DEPARTMENT OF TRANSPORTATION

DIVISION OF ENGINEERING SERVICES
STRUCTURE DESIGN
DESIGN BRANCH 9

BRIDGE NO. 27E0028
POST MILE 10.95

DIPSEA TRAIL RETAINING WALL
INDEX TO PLANS

STRUCTURES DESIGN DETAIL SHEET (ENGLISH) (REV. 09-01-10)

ORIGINAL SCALE IN INCHES FOR REDUCED PLANS 0 1 2 3

UNIT: 3594
PROJECT NUMBER & PHASE: 04000012171
CONTRACT NO.: 04-4S2204

DISREGARD PRINTS BEARING EARLIER REVISION DATES

REVISION DATES: 6-24-14 6-30-14 9-4-14 ----- SHEET 2 OF 14

FILE => 27e0028-a-itp 02.dgn

USERNAME => s113541 DATE PLOTTED => 16-JAN-2015 TIME PLOTTED => 10:33

DIST	COUNTY	ROUTE	POST MILES TOTAL PROJECT	SHEET No.	TOTAL SHEETS
04	Mrn	1	11.0	65	76

REGISTERED CIVIL ENGINEER — DATE 1-9-15

1-12-15
PLANS APPROVAL DATE

REGISTERED PROFESSIONAL ENGINEER — Philip E. Lutz — No. C55839 — Exp. 12-31-16 — CIVIL — STATE OF CALIFORNIA

The State of California or its officers or agents shall not be responsible for the accuracy or completeness of scanned copies of this plan sheet.

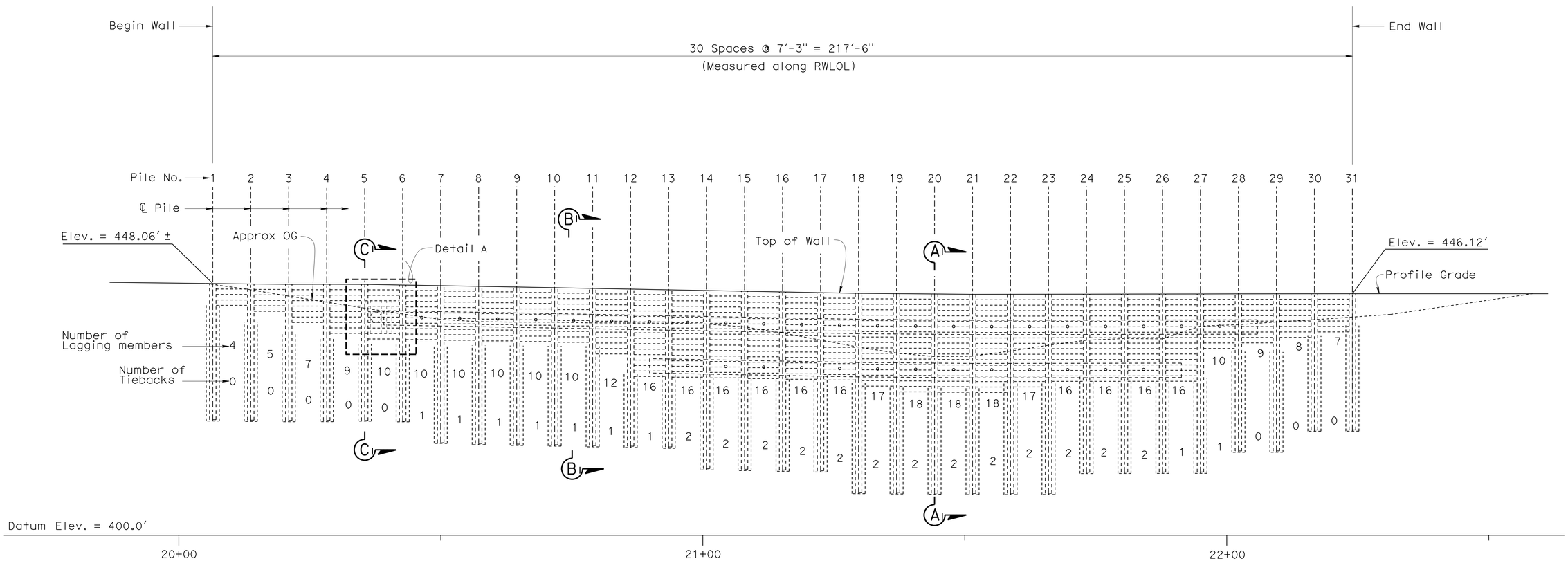

MIRRORED ELEVATION

1"=10'

NOTES:

1. For Section A-A, see "TYPICAL SECTION NO. 1" sheet.
2. For Section B-B and Section C-C, see "TYPICAL SECTION NO. 2" sheet.
3. For Detail A, see "WALL DETAILS" sheet.

	BY	CHECKED
DESIGN	P. Lutz	R. Candiotti
DETAILS	P.Lutz/D. Elliott	R. Candiotti
QUANTITIES	P. Lutz	R. Candiotti

STATE OF CALIFORNIA
DEPARTMENT OF TRANSPORTATION

DIVISION OF ENGINEERING SERVICES
STRUCTURE DESIGN
DESIGN BRANCH 9

BRIDGE NO. 27E0028
POST MILE 10.95

DIPSEA TRAIL RETAINING WALL
STRUCTURE PLAN

STRUCTURES DESIGN DETAIL SHEET (ENGLISH) (REV. 09-01-10)

ORIGINAL SCALE IN INCHES FOR REDUCED PLANS 0 1 2 3

UNIT: 3594
PROJECT NUMBER & PHASE: 04000012171
CONTRACT NO.: 04-4S2204

DISREGARD PRINTS BEARING EARLIER REVISION DATES

REVISION DATES: 01-03-14 2-12-14 2-20-14 3-24-14

SHEET 3 OF 14

FILE => 27e0028-c-sp 01.dgn

USERNAME => s113541 DATE PLOTTED => 16-JAN-2015 TIME PLOTTED => 10:33

DIST	COUNTY	ROUTE	POST MILES TOTAL PROJECT	SHEET No.	TOTAL SHEETS
4	Mrn	1	11.0	66	76

REGISTERED CIVIL ENGINEER — DATE 1-9-15

1-12-15
PLANS APPROVAL DATE

REGISTERED PROFESSIONAL ENGINEER — Philip E. Lutz — No. C55839 — Exp. 12-31-16 — CIVIL — STATE OF CALIFORNIA

The State of California or its officers or agents shall not be responsible for the accuracy or completeness of electronic copies of this plan sheet.

CURVE DATA

No.	R	Δ	T	L
A	357.00	08°01′28"	25.04	50.00
B	380.00	23°16′13"	78.25	154.33
C	300.00	26°56′58"	71.88	141.11
D	1398.60	05°12′19"	63.57	127.06
E	360.00	01°15′23"	3.95	7.89
F	280.00	26°56′58"	67.09	131.70

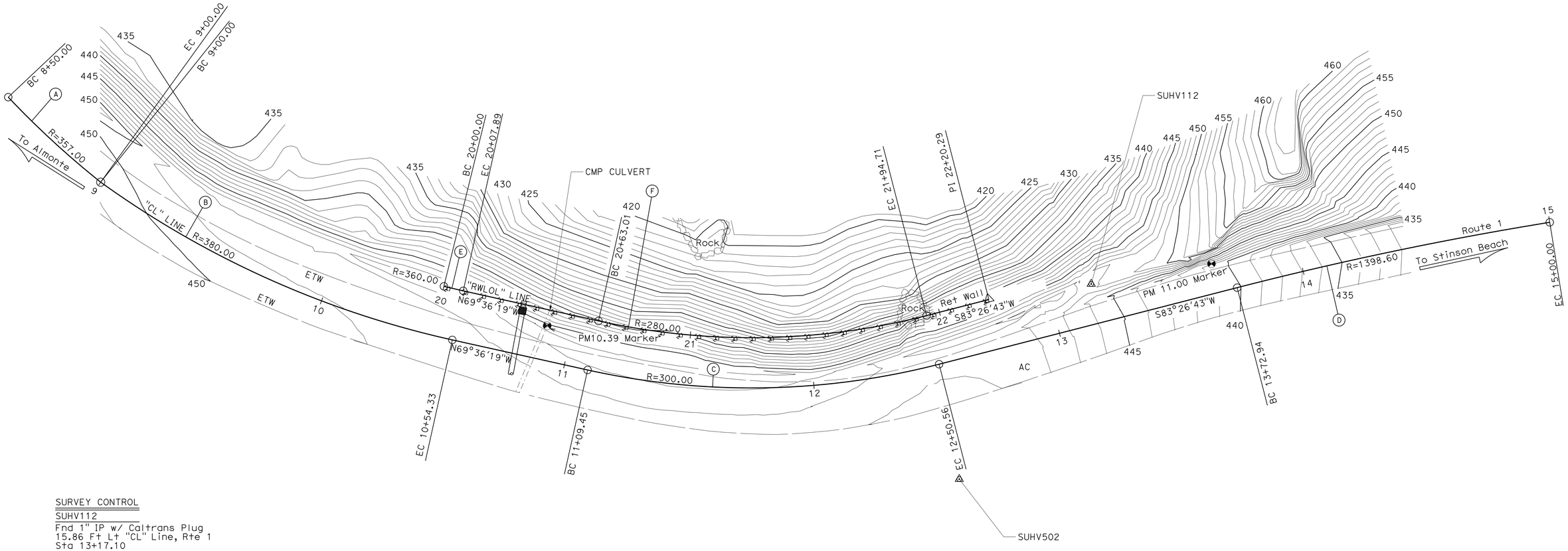

SURVEY CONTROL

SUHV112
Fnd 1" IP w/ Caltrans Plug
15.86 Ft Lt "CL" Line, Rte 1
Sta 13+17.10
N 2,152,279.11
E 5,948,640.87
Elev=448.01

SUHV502
Fnd 1" IP w/ Caltrans Plug
46.30 Ft Rt "CL" Line, Rte 1
Sta 12+47.43
N 2,152,348.86
E 5,948,703.47
Elev=481.58

PRELIMINARY INVESTIGATION SECTION

SCALE	VERT.DATUM NGVD29	PHOTOGRAMMETRY AS OF: X					
1"=20′	HORZ.DATUM NAD83 (1991.35)	SURVEYED	BY District	12/2008	CHECKED	BY J.Borden	08/2010
ALIGNMENT TIES Dist. Traverse Sheet		DRAFTED	BY J.Martinez	08/2010	CHECKED	BY T.Schmalz	08/2010

DESIGN	BY P. Lutz	CHECKED R. Candiotti
DETAILS	BY P. Lutz	CHECKED R. Candiotti
QUANTITIES	BY P. Lutz	CHECKED R. Candiotti

STATE OF CALIFORNIA
DEPARTMENT OF TRANSPORTATION

DIVISION OF ENGINEERING SERVICES
STRUCTURE DESIGN
DESIGN BRANCH 9

BRIDGE NO. 27E0028
POST MILE 10.95

DIPSEA TRAIL RETAINING WALL
FOUNDATION PLAN

STRUCTURES FOUNDATION PLAN SHEET (ENGLISH) (REV. 09-01-10)

ORIGINAL SCALE IN INCHES FOR REDUCED PLANS 0 1 2 3

UNIT: 06259
PROJECT NUMBER & PHASE: 04000012171
CONTRACT NO.: 04-4S2204

DISREGARD PRINTS BEARING EARLIER REVISION DATES

REVISION DATES: 08/19/10 10/28/10 3/10/14 3/12/14

SHEET 4 OF 14

FILE => 27e0028-e-fpl01.dgn

DIST	COUNTY	ROUTE	POST MILES TOTAL PROJECT	SHEET No.	TOTAL SHEETS
04	Mrn	1	11.0	67	76

REGISTERED CIVIL ENGINEER 1-9-15 DATE

1-12-15
PLANS APPROVAL DATE

REGISTERED PROFESSIONAL ENGINEER Philip E. Lutz No. C55839 Exp. 12-31-16 CIVIL STATE OF CALIFORNIA

The State of California or its officers or agents shall not be responsible for the accuracy or completeness of scanned copies of this plan sheet.

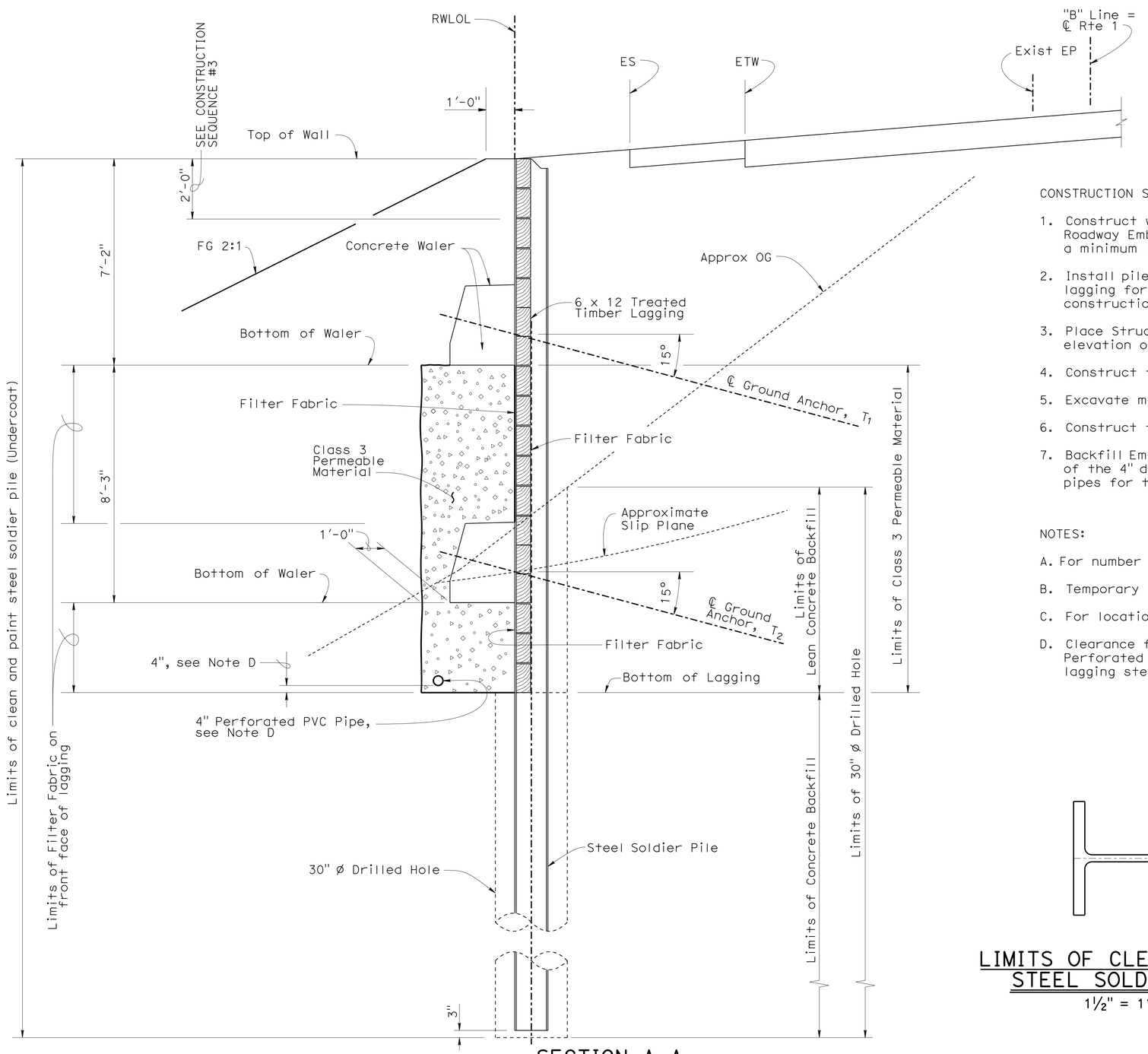

SECTION A-A

½" = 1'-0"

CONSTRUCTION SEQUENCE:

1. Construct working bench for pile installation. This includes compaction of Roadway Embankment in the area between RWLOL Station 21+00 and 22+00 to a minimum elevation of approximately the bottom of the T1 Waler.
2. Install piles and lagging for the top portion of the wall. The bottom of lagging for this initial installation should be low enough to allow for construction of the T1 Waler and extend to the top of wall.
3. Place Structure Backfill and Roadway Embankment behind the wall to an elevation of 2'-0" below the top of wall.
4. Construct the T1 Waler, install and stress the T1 Ground Anchors.
5. Excavate material from in front of the wall in lifts of 5'-0" and intsall lagging.
6. Construct the T2 Waler, install and stress the T2 Ground Anchors.
7. Backfill Embankment in front of wall to top of wall. This includes placement of the 4" diameter Perforated Plastic drain which parallels the face of wall, the outlet pipes for this drain, and the Class 3 Permeable Material.

NOTES:

A. For number and size of lagging members, see "GENERAL PLAN" and "STRUCTURE PLAN" sheets.

B. Temporary railing (Type K) not shown.

C. For location of "SECTION A-A", See "STRUCTURE PLAN" sheet.

D. Clearance from the bottom of Class 3 Permeable material to bottom edge of the 4" diameter Perforated Plastic pipe must be 6" where bottom of lagging provides a uniform grade. Where lagging steps occur, clearance to bottom of lagging is 6" and varies. See "DRAINAGE PLAN" sheet.

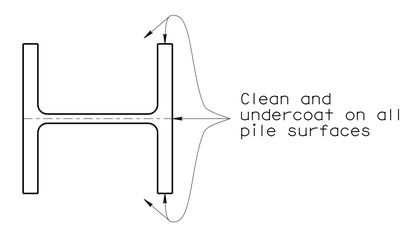

LIMITS OF CLEAN & PAINT STEEL SOLDIER PILE

1½" = 1'-0"

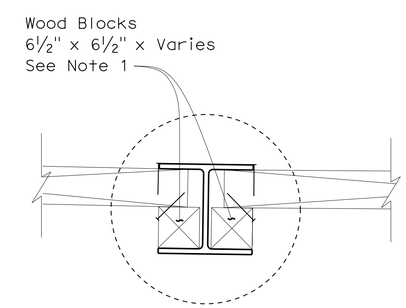

PART PLAN OF LAGGING MEMBER

1" = 1'-0"

	BY	CHECKED
DESIGN	P. Lutz	R. Candiotti
DETAILS	P. Lutz/D. Elliott	R. Candiotti
QUANTITIES	P. Lutz	R. Candiotti

STATE OF CALIFORNIA
DEPARTMENT OF TRANSPORTATION

DIVISION OF ENGINEERING SERVICES
STRUCTURE DESIGN
DESIGN BRANCH 9

BRIDGE NO. 27E0028
POST MILE 10.95

DIPSEA TRAIL RETAINING WALL
TYPICAL SECTION NO. 1

STRUCTURES DESIGN DETAIL SHEET (ENGLISH) (REV. 09-01-10)

ORIGINAL SCALE IN INCHES FOR REDUCED PLANS 0 1 2 3

UNIT: 3594
PROJECT NUMBER & PHASE: 04000012171
CONTRACT NO.: 04-4S2204

DISREGARD PRINTS BEARING EARLIER REVISION DATES

REVISION DATES 10-8-14 12-23-14 12-30-14 9-4-14

SHEET 5 OF 14

FILE => 27e0028-k-ts01.dgn

USERNAME => s113541 DATE PLOTTED => 16-JAN-2015 TIME PLOTTED => 10:33

NOTES:

1. For location of "Section B-B" and "Section C-C", see "STRUCTURE PLAN" sheet.
2. See "LIMITS OF CLEAN AND PAINT STEEL SOLDIER PILE" on "TYPICAL SECTION No. 1" Sheet.
3. Backfill to 2'-0" below top of wall prior to installation and stressing of T_1 ground anchors.
4. For drainage details, see "DRAINAGE PLAN" sheet.
5. Clearance from the bottom of Class 3 Permeable material to edge of 4" diameter Perforated Plastic pipe must be 6" where pipe runs horizontally. Clearance varies where the slope of pipe increases.

DIST	COUNTY	ROUTE	POST MILES TOTAL PROJECT	SHEET No.	TOTAL SHEETS
04	Mrn	1	11.0	68	76

REGISTERED CIVIL ENGINEER 1-9-15 DATE

1-12-15
PLANS APPROVAL DATE

REGISTERED PROFESSIONAL ENGINEER Philip E. Lutz No. C55839 Exp. 12-31-16 CIVIL STATE OF CALIFORNIA

The State of California or its officers or agents shall not be responsible for the accuracy or completeness of scanned copies of this plan sheet.

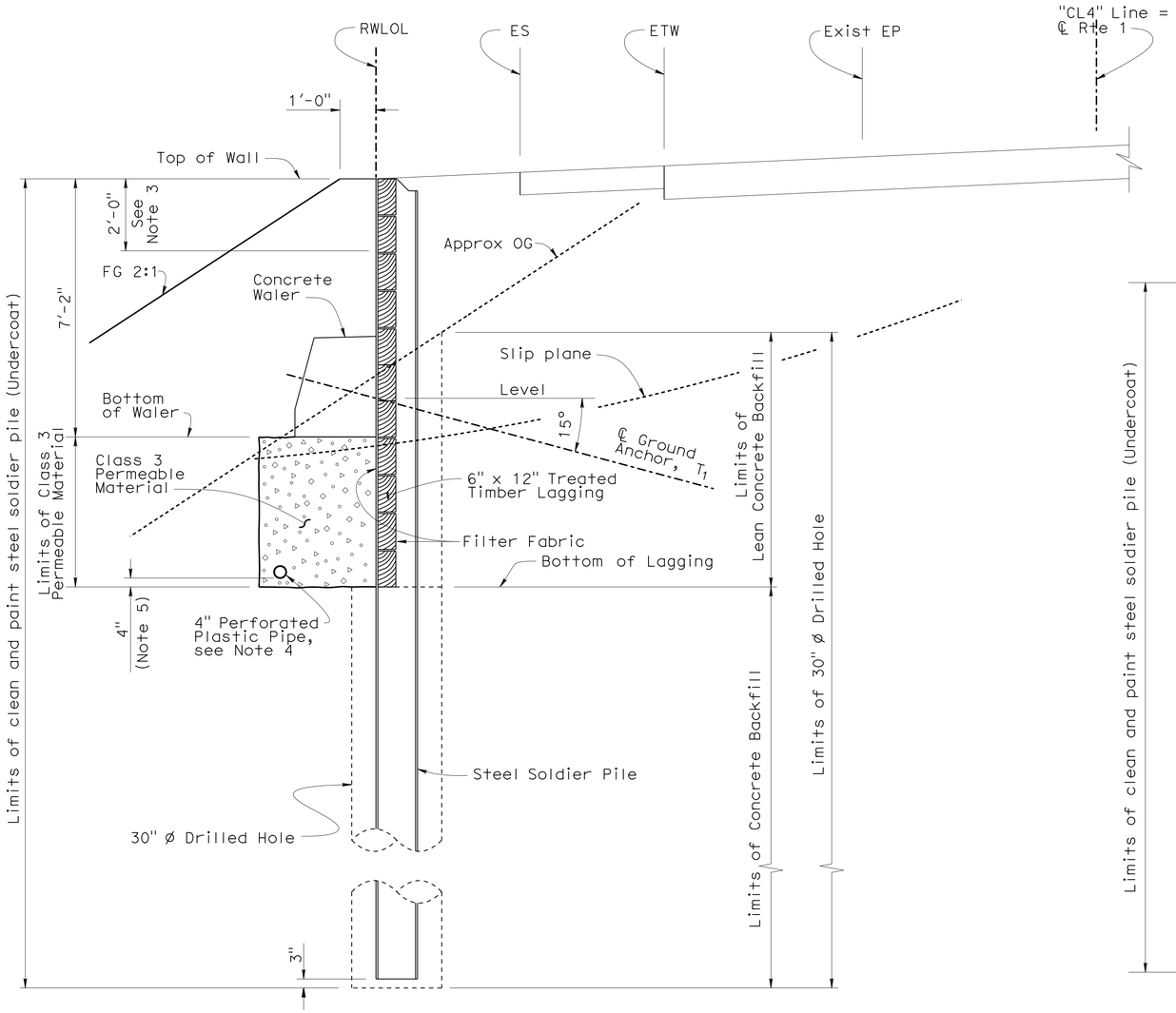

SECTION B-B

½" = 1'-0"

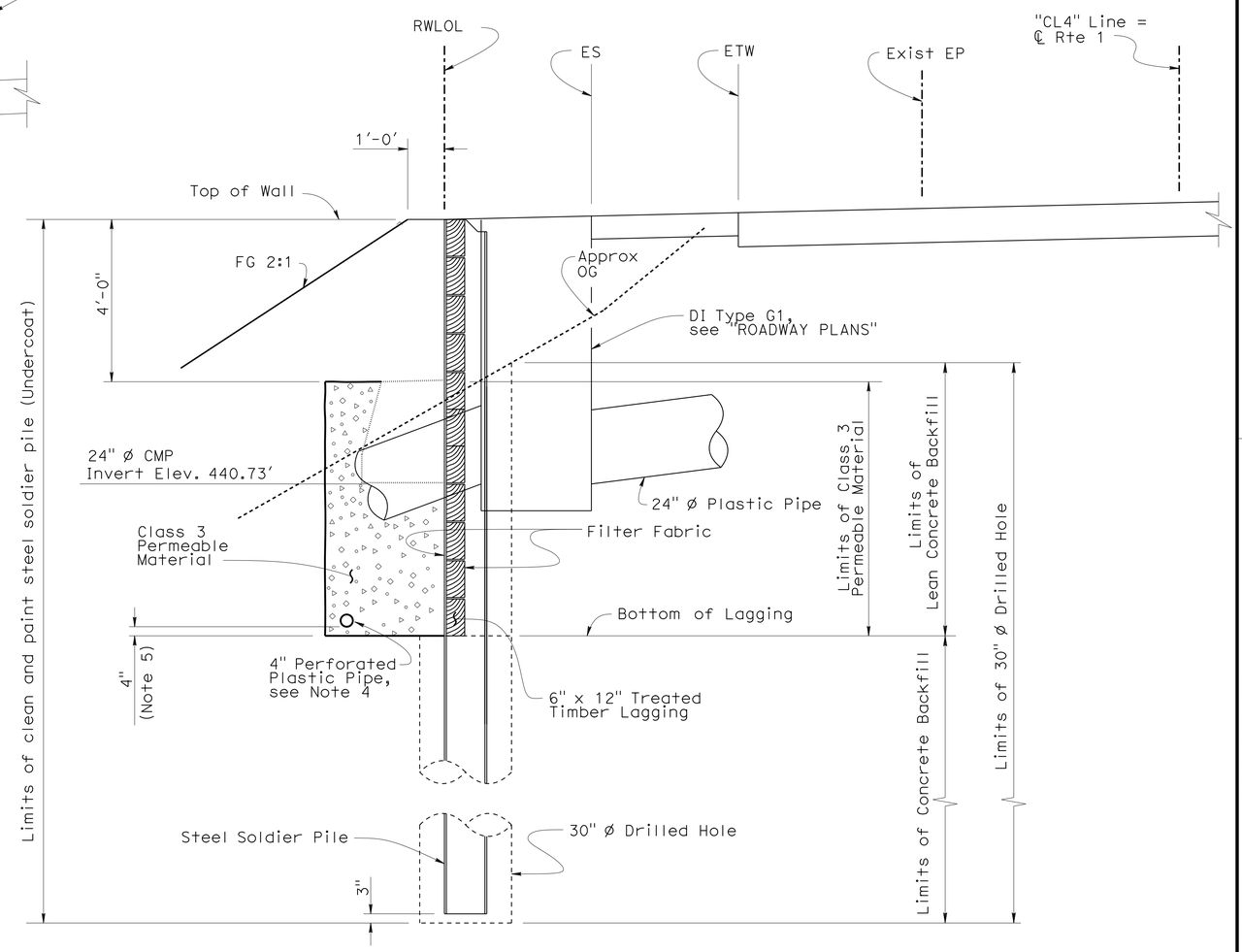

SECTION C-C

½" = 1'-0"

DESIGN	BY P. Lutz	CHECKED R. Candiotti	
DETAILS	BY P. Lutz/D. Elliott	CHECKED R. Candiotti	
QUANTITIES	BY P. Lutz	CHECKED R. Candiotti	

STATE OF CALIFORNIA
DEPARTMENT OF TRANSPORTATION

DIVISION OF ENGINEERING SERVICES
STRUCTURE DESIGN
DESIGN BRANCH 9

BRIDGE NO. 27E0028
POST MILE 10.95

DIPSEA TRAIL RETAINING WALL
TYPICAL SECTION NO. 2

STRUCTURES DESIGN DETAIL SHEET (ENGLISH) (REV. 09-01-10)

ORIGINAL SCALE IN INCHES FOR REDUCED PLANS 0 1 2 3

UNIT: 3594
PROJECT NUMBER & PHASE: 04000012171
CONTRACT NO.: 04-4S2204

DISREGARD PRINTS BEARING EARLIER REVISION DATES

REVISION DATES: 9-4-14 9-12-14 12-23-14 12-30-14

SHEET 6 OF 14

FILE => 27e0028-k-ts02.dgn

USERNAME => s113541 DATE PLOTTED => 16-JAN-2015 TIME PLOTTED => 10:33

DIST	COUNTY	ROUTE	POST MILES TOTAL PROJECT	SHEET No.	TOTAL SHEETS
04	Mrn	1	11.0	69	76

REGISTERED CIVIL ENGINEER 1-9-15 DATE

1-12-15
PLANS APPROVAL DATE

REGISTERED PROFESSIONAL ENGINEER Philip E. Lutz No. C55839 Exp. 12-31-16 CIVIL STATE OF CALIFORNIA

The State of California or its officers or agents shall not be responsible for the accuracy or completeness of scanned copies of this plan sheet.

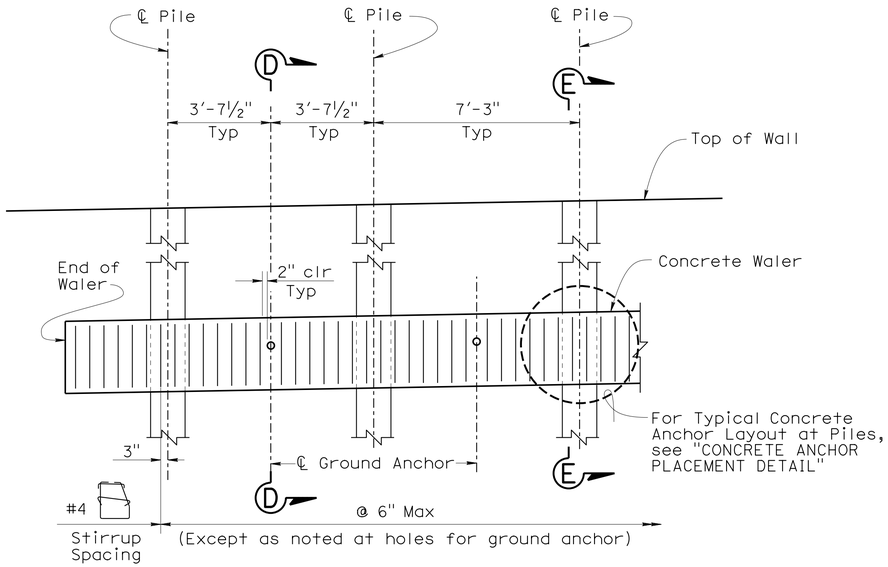

WALER PART ELEVATION

⅜" = 1'-0"

NOTE: Timber lagging not shown.

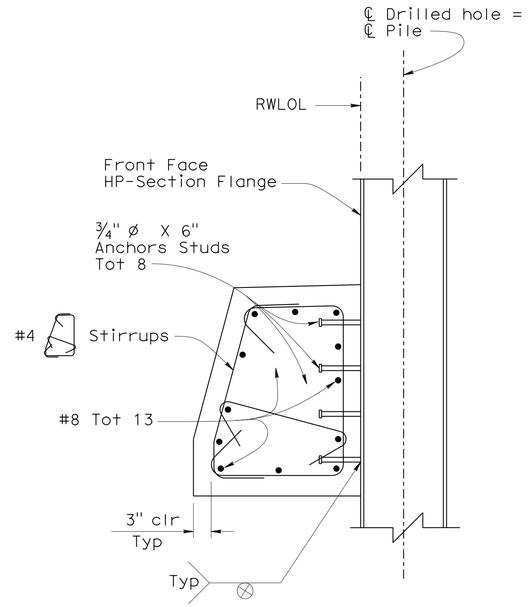

SECTION E-E

1" = 1'-0"

NOTE: For dimensions not shown, see "SECTION C-C"

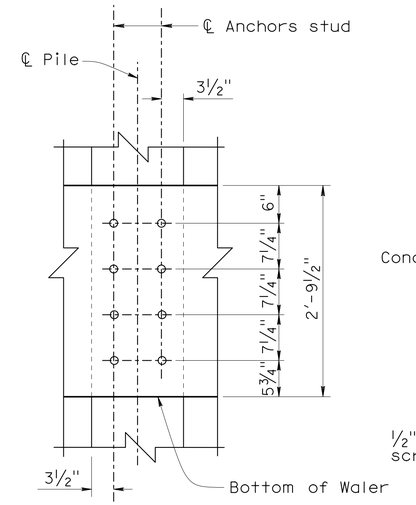

CONCRETE ANCHOR PLACEMENT DETAIL

1" = 1'-0"

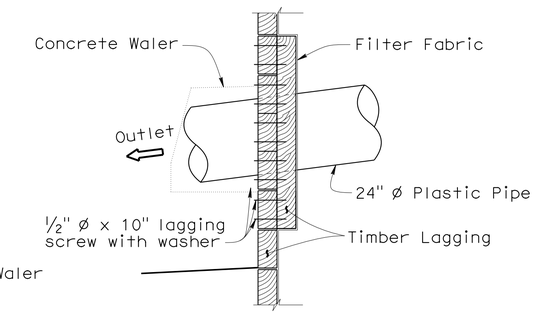

SECTION F-F

½" = 1'-0"

NOTE: For alignment and elevation of 24" ø Plastic Pipe, see "ROADWAY PLANS"

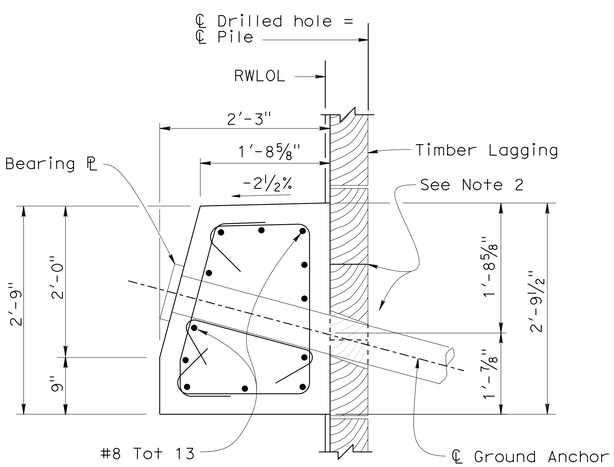

SECTION D-D

1" = 1'-0"

NOTES:

1. For reinf, see "SECTION E-E".
2. Omit gap between lagging members behind concrete waler.
3. All rebar to be epoxy coated.

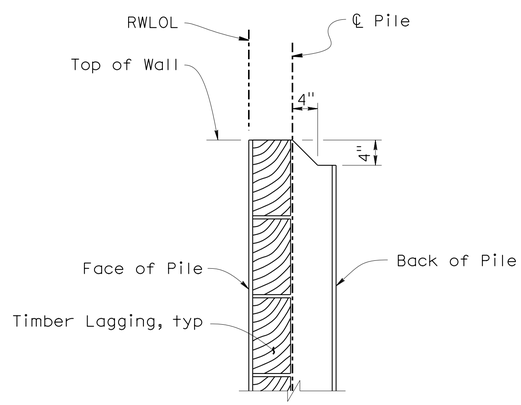

TOP OF PILE DETAIL

1" = 1'-0"

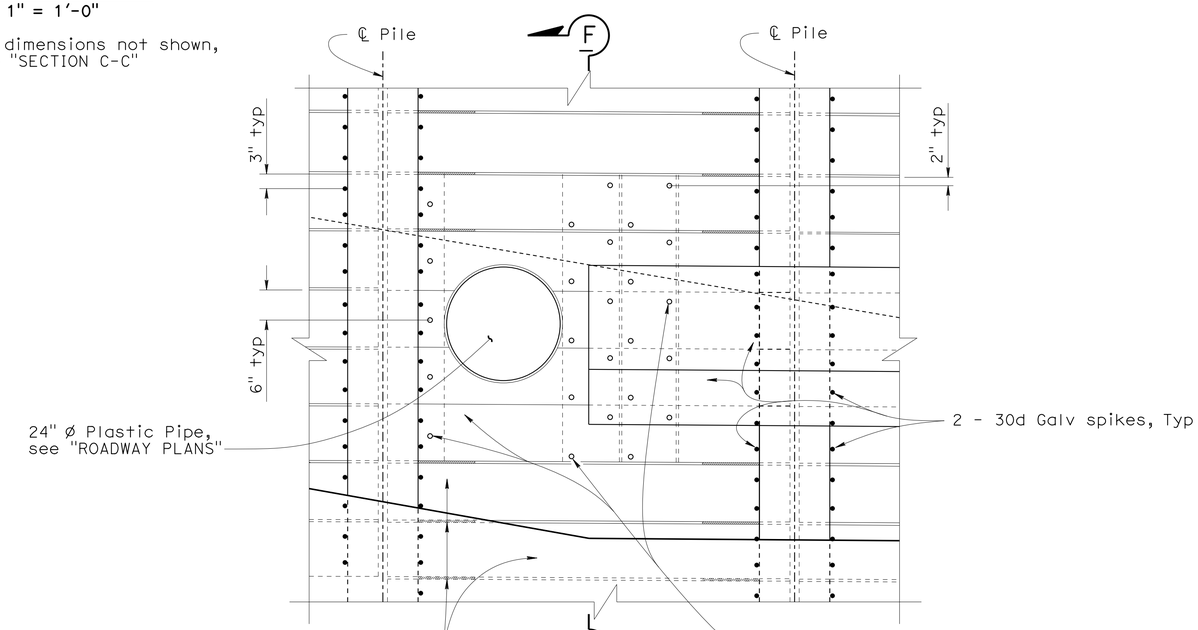

DETAIL A

¾" = 1'-0"

NOTE: For location of Detail A, see "STRUCTURE PLAN" sheet.

	BY	CHECKED
DESIGN	P. Lutz	R. Candiotti
DETAILS	P. Lutz/D. Elliott	R. Candiotti
QUANTITIES	P. Lutz	R. Candiotti

STATE OF CALIFORNIA
DEPARTMENT OF TRANSPORTATION

DIVISION OF ENGINEERING SERVICES
STRUCTURE DESIGN
DESIGN BRANCH 9

BRIDGE NO. 27E0028
POST MILE 10.95

DIPSEA TRAIL RETAINING WALL
WALL DETAILS

STRUCTURES DESIGN DETAIL SHEET (ENGLISH) (REV. 09-01-10)

ORIGINAL SCALE IN INCHES FOR REDUCED PLANS 0 1 2 3

UNIT: 3594
PROJECT NUMBER & PHASE: 04000012171
CONTRACT NO.: 04-4S2204

DISREGARD PRINTS BEARING EARLIER REVISION DATES

REVISION DATES: 6-30-14 10-6-14 ---- 6-24-14

SHEET 7 OF 14

FILE => 27e0028-u-wall_det.dgn

USERNAME => s113541 DATE PLOTTED => 16-JAN-2015 TIME PLOTTED => 10:33

DIST	COUNTY	ROUTE	POST MILES TOTAL PROJECT	SHEET No.	TOTAL SHEETS
04	Mrn	1	11.0	70	76

REGISTERED CIVIL ENGINEER 1-9-15 DATE

1-12-15
PLANS APPROVAL DATE

REGISTERED PROFESSIONAL ENGINEER
Philip E. Lutz
No. C55839
Exp. 12-31-16
CIVIL
STATE OF CALIFORNIA

The State of California or its officers or agents shall not be responsible for the accuracy or completeness of scanned copies of this plan sheet.

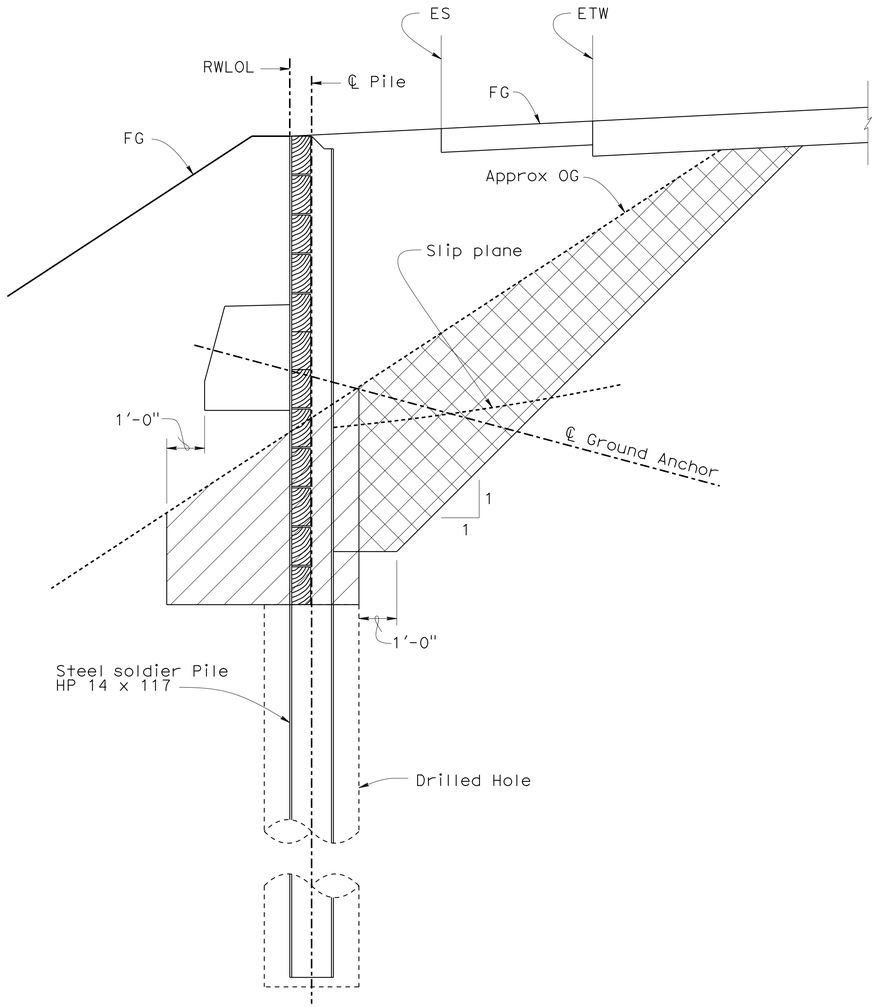

EXCAVATION
½" = 1'-0"

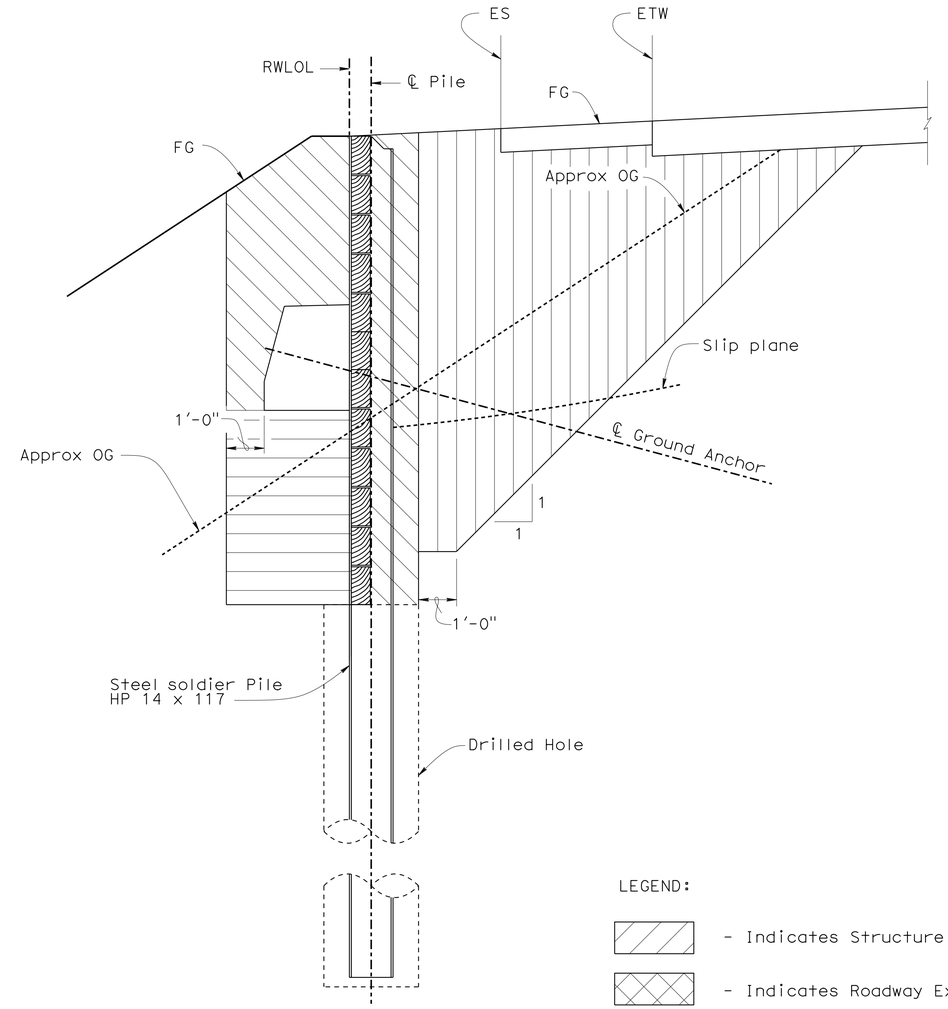

BACKFILL
½" = 1'-0"

LEGEND:

- Indicates Structure Excavation (Soldier Pile Wall)
- Indicates Roadway Excavation (See "ROADWAY PLANS")
- Indicates Roadway Embankment (See "ROADWAY PLANS")
- Indicates Structure Backfill (Soldier Pile Wall)
- Indicates Class 3 Permeable Material (Soldier Pile Wall)

LIMITS OF PAYMENT FOR EXCAVATION AND BACKFILL

½" = 1'-0"

	BY	CHECKED
DESIGN	P. Lutz	R. Candiotti
DETAILS	P. Lutz/D. Elliott	R. Candiotti
QUANTITIES	P. Lutz	R. Candiotti

STATE OF CALIFORNIA
DEPARTMENT OF TRANSPORTATION

DIVISION OF ENGINEERING SERVICES
STRUCTURE DESIGN
DESIGN BRANCH 9

BRIDGE NO. 27E0028
POST MILE 10.95

DIPSEA TRAIL RETAINING WALL
EXCAVATION AND BACKFILL DETAILS

STRUCTURES DESIGN DETAIL SHEET (ENGLISH) (REV. 09-01-10)

ORIGINAL SCALE IN INCHES FOR REDUCED PLANS 0 1 2 3

UNIT: 3594
PROJECT NUMBER & PHASE: 04000012171
CONTRACT NO.: 04-4S2204

DISREGARD PRINTS BEARING EARLIER REVISION DATES

REVISION DATES: 12-30-14 2-13-14 2-28-14 10-8-14

SHEET 8 OF 14

FILE => 27e0028-u-wall_exca_bkfill_det.dgn

USERNAME => s113541 DATE PLOTTED => 16-JAN-2015 TIME PLOTTED => 10:33

DIST	COUNTY	ROUTE	POST MILES TOTAL PROJECT	SHEET No.	TOTAL SHEETS
04	Mrn	1	11.0	71	76

REGISTERED CIVIL ENGINEER 1-9-15 DATE

1-12-15
PLANS APPROVAL DATE

REGISTERED PROFESSIONAL ENGINEER Philip E. Lutz No. C55839 Exp. 12-31-16 CIVIL STATE OF CALIFORNIA

The State of California or its officers or agents shall not be responsible for the accuracy or completeness of electronic copies of this plan sheet.

NOTES:

(A) Level of initial grouting for drilled hole 6" in diameter or smaller

(B) Level of secondary grouting

(C) Level of initial grouting inside corrugated sheathing

(D) Bonded length must be determined by the contractor

(E) For unbonded length, see "INDEX TO PLANS" sheet

(F) For inclination, see "TYPICAL SECTION NO. 1" and "TYPICAL SECTION NO. 2" sheets

(G) Face of Wall Excavation

NOTES:

1. Anchorage enclosure must only be used when anchor head assembly is not enclosed in concrete.
2. Anchorage enclosure must have provisions to allow injecting grout at low end and venting at high end. Galvanize after fabrication.
3. Silicone sealant to cover full width of flange.
4. Steel tube (Min thickness = 1/4") welded to bearing plate. Galvanize assembly after fabrication.
5. Steel tube welded to bearing plate. Inside diameter of steel tube (Min thickness = 1/4") to be 1" greater than outside diameter of smooth sheathing.
6. Galvanize assembly after fabrication.

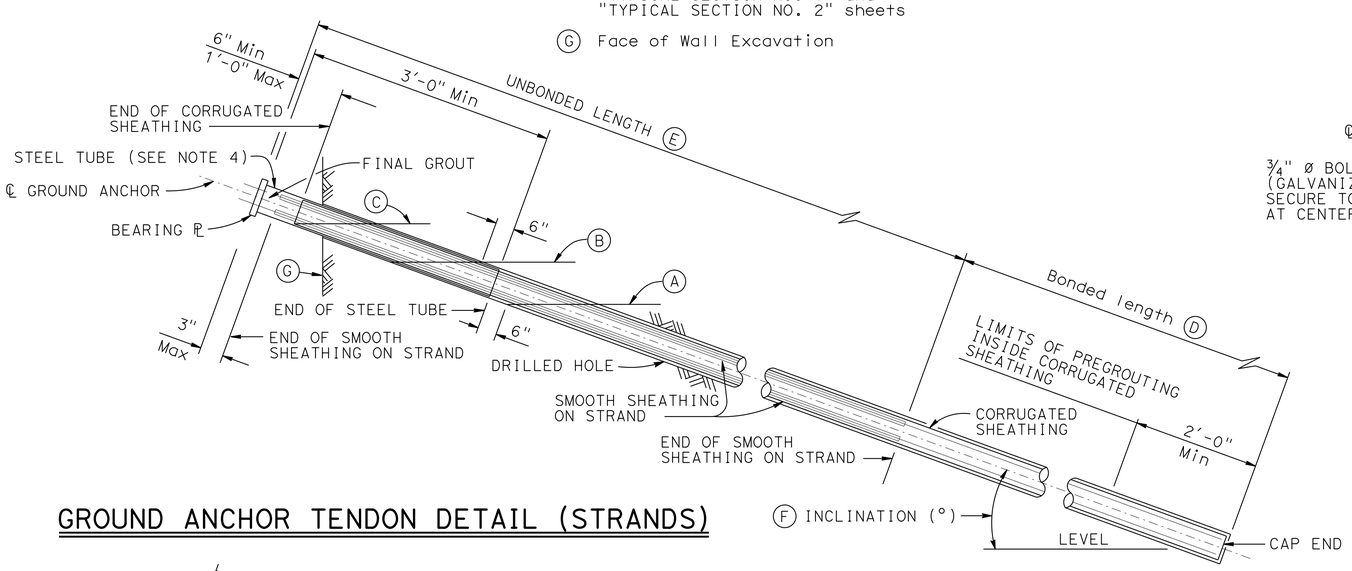

GROUND ANCHOR TENDON DETAIL (STRANDS)

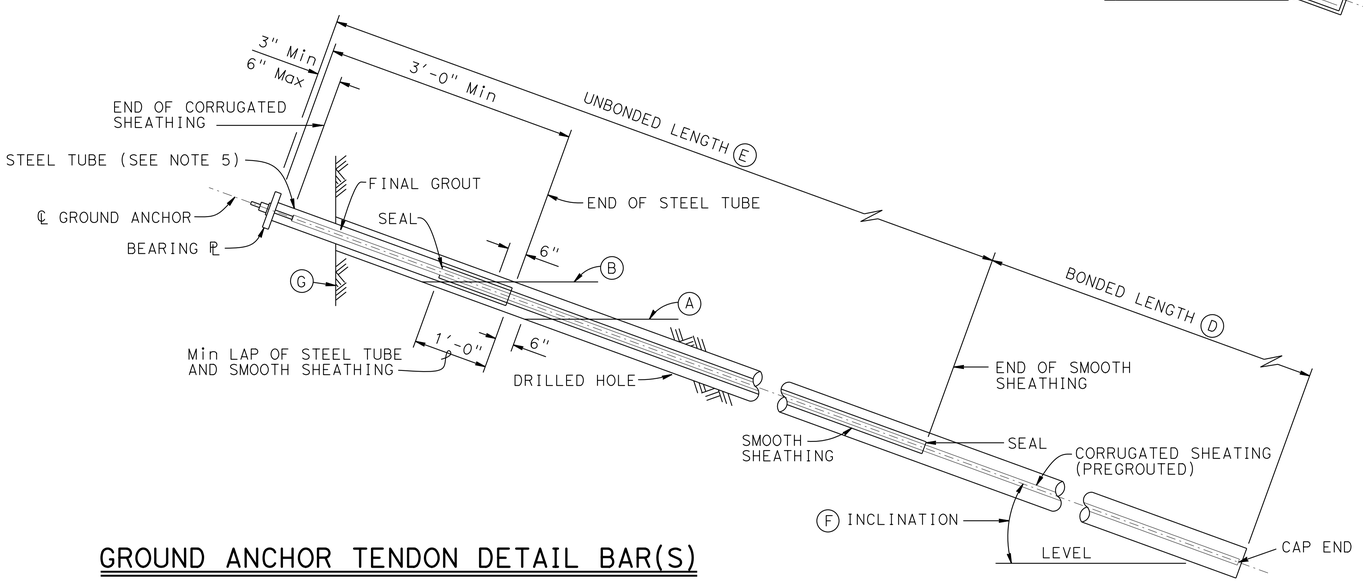

GROUND ANCHOR TENDON DETAIL BAR(S)

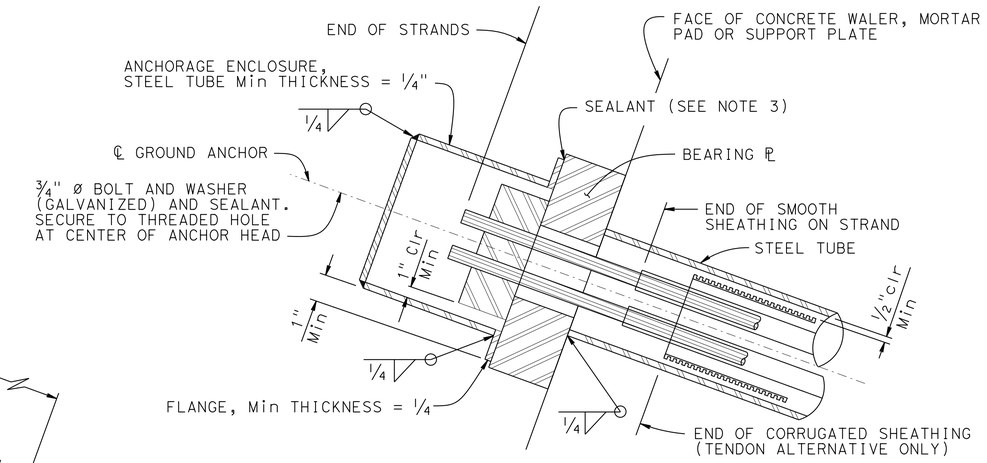

ALTERNATIVE X

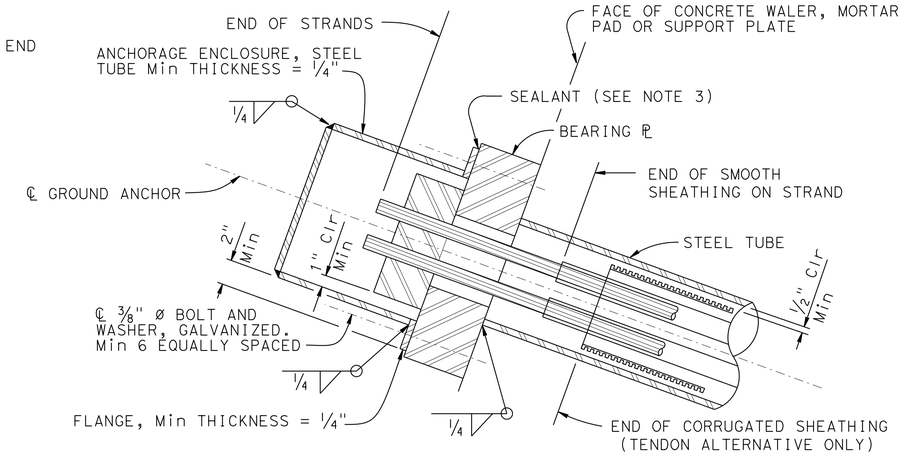

ALTERNATIVE Y

ANCHORAGE ENCLOSURE DETAILS

NO SCALE

STANDARD DRAWING		STATE OF CALIFORNIA DEPARTMENT OF TRANSPORTATION	DIVISION OF ENGINEERING SERVICES	BRIDGE NO. 27E0028	DIPSEA TRAIL RETAINING WALL
FILE NO. xs12-040	APPROVAL DATE January 2012			POST MILE 10.95	SUB HORIZONTAL GROUND ANCHOR DETAILS

DS OSD 2147A (ENGLISH STANDARD DRAWING "XS" BORDER REV. (02-02-11)

ORIGINAL SCALE IN INCHES FOR REDUCED PLANS 0 1 2 3

UNIT: 3594
PROJECT NUMBER & PHASE: 04000012171
CONTRACT NO.: 04-4S2204

DISREGARD PRINTS BEARING EARLIER REVISION DATES

REVISION DATES: 10-6-14 | 6-24-14 | 6-30-14

SHEET 9 OF 14

FILE => 27e0028-u-wall_ga_det.dgn

USERNAME => s113541 DATE PLOTTED => 16-JAN-2015 TIME PLOTTED => 10:33

DIST	COUNTY	ROUTE	POST MILES TOTAL PROJECT	SHEET No.	TOTAL SHEETS
04	MRN	1	11.0	72	76

REGISTERED CIVIL ENGINEER 1-9-15 DATE

1-12-15
PLANS APPROVAL DATE

REGISTERED PROFESSIONAL ENGINEER
Philip E. Lutz
No. C55839
Exp. 12-31-16
CIVIL
STATE OF CALIFORNIA

The State of California or its officers or agents shall not be responsible for the accuracy or completeness of scanned copies of this plan sheet.

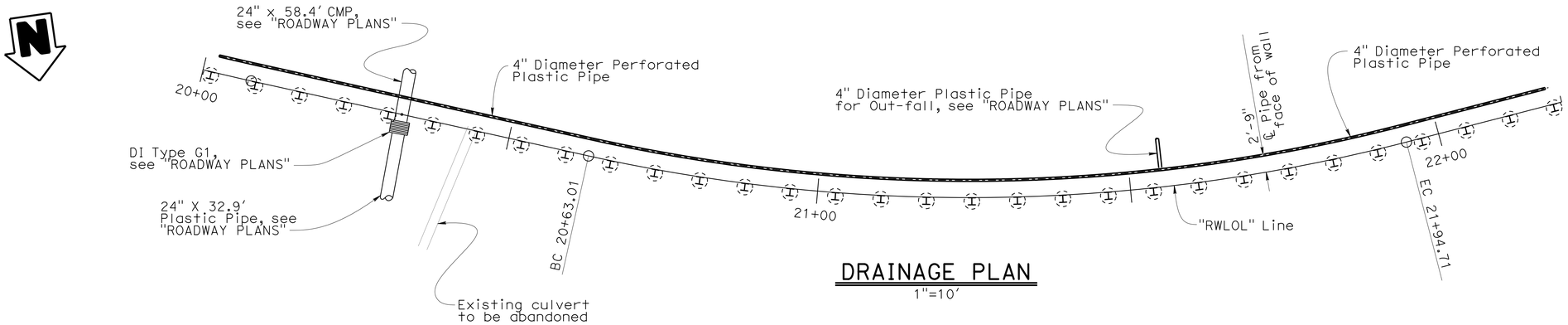

DRAINAGE PLAN

1"=10'

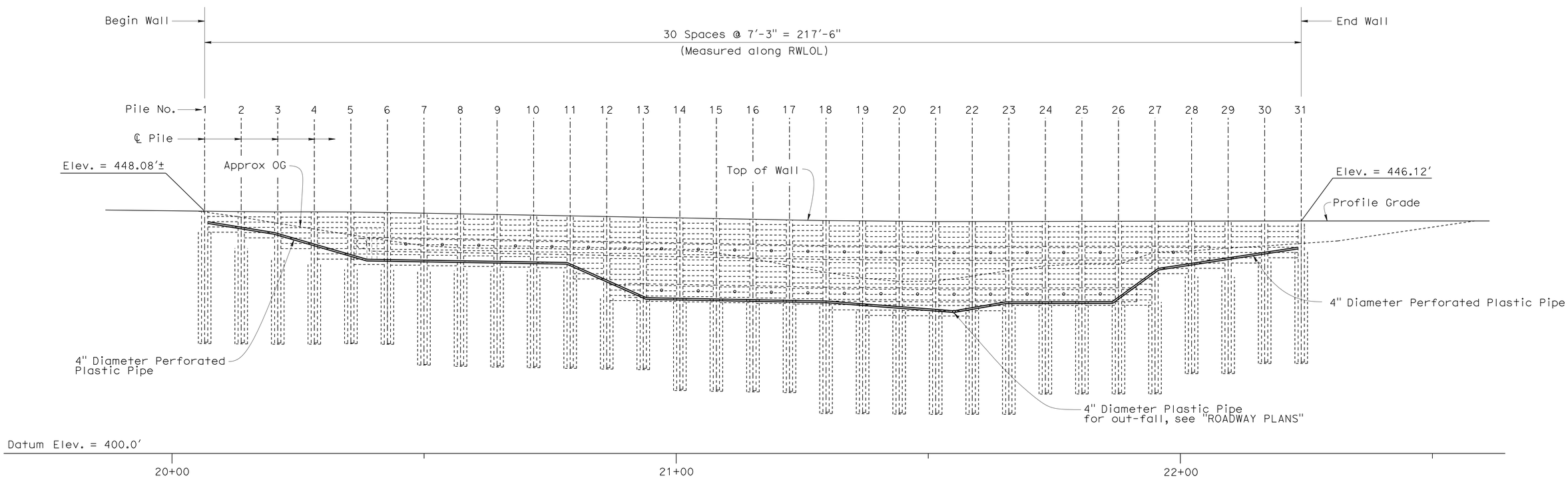

MIRRORED ELEVATION

1"=10'

NOTE: Permeable material to extend from bottom of lagging up to bottom of upper waler or 4' below top of wall.

DESIGN	BY P. Lutz	CHECKED R. Candiotti	
DETAILS	BY P. Lutz/D. Elliott	CHECKED R. Candiotti	
QUANTITIES	BY P. Lutz	CHECKED R. Candiotti	

STATE OF CALIFORNIA
DEPARTMENT OF TRANSPORTATION

DIVISION OF ENGINEERING SERVICES
STRUCTURE DESIGN
DESIGN BRANCH 9

BRIDGE NO. 27E0028
POST MILE 10.95

DIPSEA TRAIL RETAINING WALL
DRAINAGE PLAN

STRUCTURES DESIGN DETAIL SHEET (ENGLISH) (REV. 09-01-10)

ORIGINAL SCALE IN INCHES FOR REDUCED PLANS 0 1 2 3

UNIT: 3594
PROJECT NUMBER & PHASE: 04000012171
CONTRACT NO.: 04-4S2204

DISREGARD PRINTS BEARING EARLIER REVISION DATES

REVISION DATES: 2-13-14 9-17-14 10-6-14 12-23-14

SHEET 10 OF 14

FILE => 27e0028-v-drainage_plan.dgn

USERNAME => s113541 DATE PLOTTED => 16-JAN-2015 TIME PLOTTED => 10:33

DIST	COUNTY	ROUTE	POST MILES TOTAL PROJECT	SHEET No	TOTAL SHEETS
04	Mrn	1	11.0	73	76

REGISTERED CIVIL ENGINEER 12-14-10 DATE

1-12-15
PLANS APPROVAL DATE

REGISTERED PROFESSIONAL ENGINEER Eduardo Ortega No. 41012 Exp. 03-31-11 CIVIL STATE OF CALIFORNIA

The State of California or its officers or agents shall not be responsible for the accuracy or completeness of electronic copies of this plan sheet.

This LOTB sheet was prepared in accordance with the Caltrans Soil & Rock Logging, Classification, & Presentation Manual (2010 Edition).

BENCH MARK

PRHV 502
"Settlement Pin"
39.5 ft. Rt. Sta. 12+40
Elev. 481.58
N 2.152.348.8560
E 5.948.703.4650

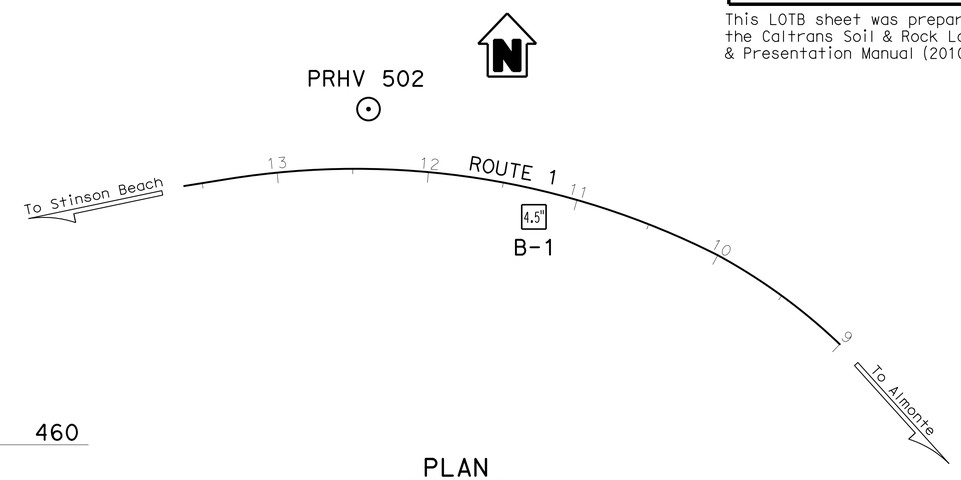

PLAN

1"=50'

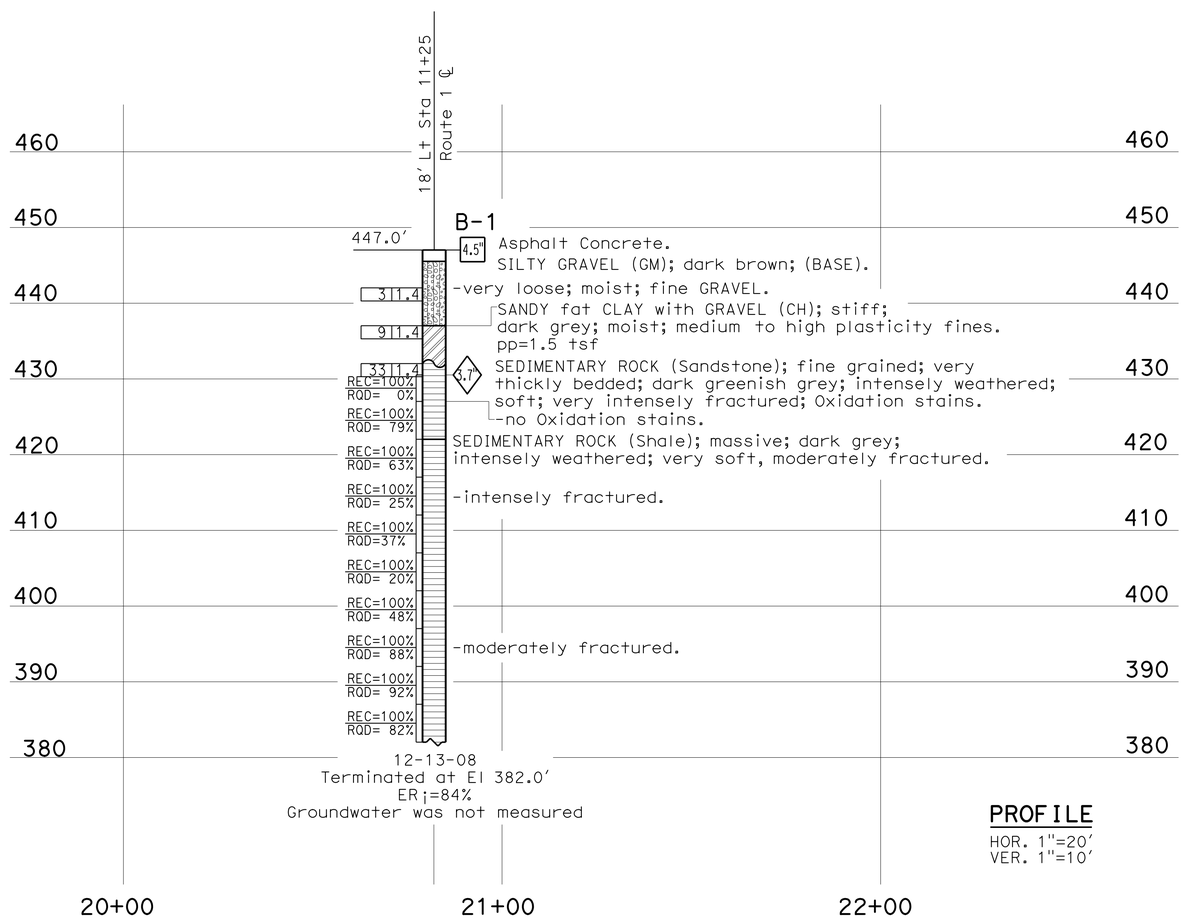

PROFILE

HOR. 1"=20'
VER. 1"=10'

GEOTECHNICAL SERVICES-DIVISION OF ENGINEERING SERVICES

As-Built Log of Test Borings sheet is considered an informational document only. As such, the State of California registration seal with signature, license number and registration certificate expiration date confirm that this is a true and accurate copy of the original document. It does not attest to the accuracy or validity of the information contained in the original document. This drawing is available and presented only for the convenience of any bidder, contractor or other interested party.

DIST.	COUNTY	ROUTE	POST MILES-TOTAL PROJECT	SHEET NO.	TOTAL SHEETS
04	Mrn	1	10.95		

REGISTERED ENGINEER - CIVIL 06-16-14 DATE

REGISTERED PROFESSIONAL ENGINEER Eduardo Ortega No. 41012 Exp. 03-31-15 CIVIL STATE OF CALIFORNIA

DIPSEA TRAIL

LOG OF TEST BORINGS 1 OF 1

NOTE: A COPY OF THIS LOG OF TEST BORINGS IS AVAILABLE AT OFFICE OF STRUCTURE MAINTENANCE AND INVESTIGATIONS, SACRAMENTO, CALIFORNIA.

CU: 04
EA: 4S2201

BRIDGE NO. 27E0028

ENGINEERING SERVICES			GEOTECHNICAL SERVICES
FUNCTIONAL SUPERVISOR	DRAWN BY: M. Reynolds 09/10		FIELD INVESTIGATION BY:
NAME: M. Momenzadeh	CHECKED BY: R. Nashed		E. Ortega

STATE OF CALIFORNIA DEPARTMENT OF TRANSPORTATION

DIVISION OF ENGINEERING SERVICES OFFICE OF GEOTECHNICAL DESIGN BRANCH

BRIDGE NO. 27E0028
POST MILES 10.95

DIPSEA TRAIL TIE BACK WALL

LOG OF TEST BORINGS 1 OF 4

OGS CIVIL LOG OF TEST BORINGS SHEET

ORIGINAL SCALE IN INCHES FOR REDUCED PLANS 0 1 2 3

UNIT: 3660
PROJECT NUMBER & PHASE: 04000012171 CONTRACT NO.: 044S2204

DISREGARD PRINTS BEARING EARLIER REVISION DATES

REVISION DATES 03-29-11 02-28-14

SHEET 11 OF 14

FILE => 27e0028-z-ltb_01.dgn

USERNAME => s113541 DATE PLOTTED => 16-JAN-2015 TIME PLOTTED => 10:33

DIST	COUNTY	ROUTE	POST MILES TOTAL PROJECT	SHEET No	TOTAL SHEETS
04	Mrn	1	11.0	74	76

REGISTERED CIVIL ENGINEER — DATE 12-14-10

1-12-15
PLANS APPROVAL DATE

REGISTERED PROFESSIONAL ENGINEER — Eduardo Ortega — No. 41012 — Exp. 03-31-11 — CIVIL — STATE OF CALIFORNIA

The State of California or its officers or agents shall not be responsible for the accuracy or completeness of electronic copies of this plan sheet.

REFERENCE: CALTRANS SOIL & ROCK LOGGING, CLASSIFICATION, AND PRESENTATION MANUAL (2010)

CEMENTATION

Description	Criteria
Weak	Crumbles or breaks with handling or little finger pressure.
Moderate	Crumbles or breaks with considerable finger pressure.
Strong	Will not crumble or break with finger pressure.

BOREHOLE IDENTIFICATION

Symbol	Hole Type	Description
Size	A	Auger Boring (hollow or solid stem bucket)
Size	R RW RC P	Rotary drilled boring (conventional) Rotary drilled with self-casing wire-line Rotary core with continuously-sampled, self-casing wire-line Rotary percussion boring (air)
Size	R	Rotary drilled diamond core
Size	HD HA	Hand driven (1-inch soil tube) Hand Auger
●	D	Dynamic Cone Penetration Boring
▲	CPT	Cone Penetration Test (ASTM D 5778)
⬚	O	Other (note on LOTB)

Note: Size in inches.

CONSISTENCY OF COHESIVE SOILS

Description	Shear Strength (tsf)	Pocket Penetrometer Measurement, PP, (tsf)	Torvane Measurement, TV, (tsf)	Vane Shear Measurement, VS, (tsf)
Very Soft	Less than 0.12	Less than 0.25	Less than 0.12	Less than 0.12
Soft	0.12 - 0.25	0.25 - 0.5	0.12 - 0.25	0.12 - 0.25
Medium Stiff	0.25 - 0.5	0.5 - 1	0.25 - 0.5	0.25 - 0.5
Stiff	0.5 - 1	1 - 2	0.5 - 1	0.5 - 1
Very Stiff	1 - 2	2 - 4	1 - 2	1 - 2
Hard	Greater than 2	Greater than 4	Greater than 2	Greater than 2

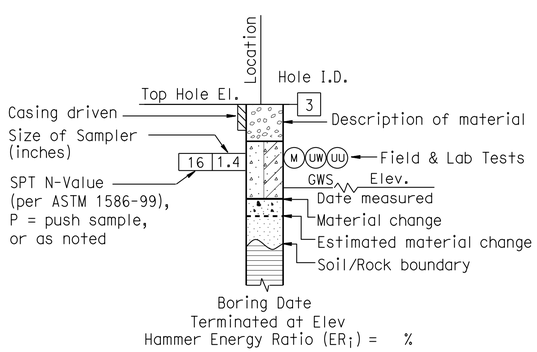

ROTARY BORING

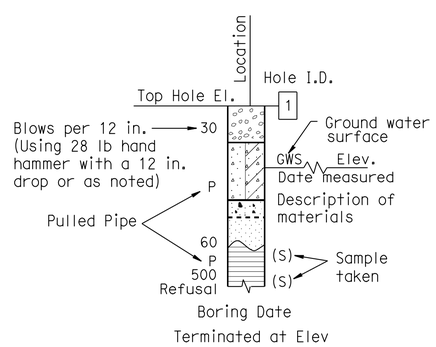

HAND BORING

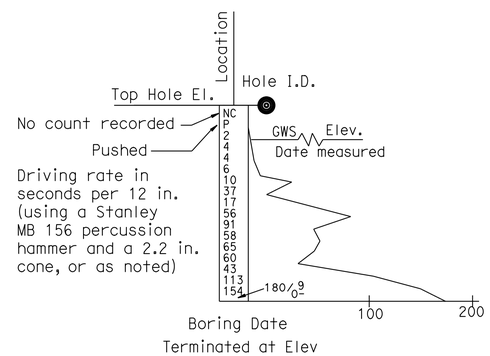

DYNAMIC CONE PENETRATION BORING

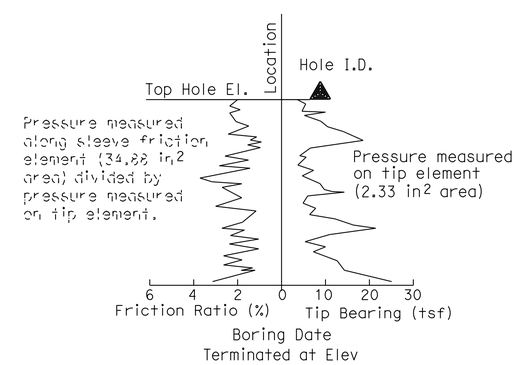

CONE PENETRATION TEST (CPT) BORING

ENGINEERING SERVICES	GEOTECHNICAL SERVICES	STATE OF CALIFORNIA DEPARTMENT OF TRANSPORTATION	DIVISION OF ENGINEERING SERVICES OFFICE OF GEOTECHNICAL DESIGN BRANCH	BRIDGE NO. 27E0028 / POST MILE 10.95	DIPSEA TRAIL TIE BACK WALL
	PREPARED BY: M. Reynolds 09/10				LOG OF TEST BORINGS 2 OF 4

GS LOTB SOIL LEGEND

ORIGINAL SCALE IN INCHES FOR REDUCED PLANS 0 1 2 3

UNIT: 3660
PROJECT NUMBER & PHASE: 04000012171 CONTRACT NO.: 044S2204

DISREGARD PRINTS BEARING EARLIER REVISION DATES

REVISION DATES: 03-29-11 02-28-14

SHEET 12 OF 14

FILE => 27e0028-z-ltb_02.dgn

USERNAME => s113541 DATE PLOTTED => 16-JAN-2015 TIME PLOTTED => 10:33

REFERENCE: CALTRANS SOIL & ROCK LOGGING, CLASSIFICATION, AND PRESENTATION MANUAL (2010)

DIST	COUNTY	ROUTE	POST MILES TOTAL PROJECT	SHEET No	TOTAL SHEETS
04	Mrn	1	11.0	75	76

Ed Ortega Jr. 12-14-10
REGISTERED CIVIL ENGINEER DATE

1-12-15
PLANS APPROVAL DATE

REGISTERED PROFESSIONAL ENGINEER Eduardo Ortega No. 41012 Exp. 03-31-11 CIVIL STATE OF CALIFORNIA

The State of California or its officers or agents shall not be responsible for the accuracy or completeness of electronic copies of this plan sheet.

GROUP SYMBOLS AND NAMES

Graphic/Symbol	Group Names	Graphic/Symbol	Group Names
GW	Well-graded GRAVEL Well-graded GRAVEL with SAND	CL	Lean CLAY Lean CLAY with SAND Lean CLAY with GRAVEL SANDY lean CLAY SANDY lean CLAY with GRAVEL GRAVELLY lean CLAY GRAVELLY lean CLAY with SAND
GP	Poorly-graded GRAVEL Poorly-graded GRAVEL with SAND		
GW-GM	Well-graded GRAVEL with SILT Well-graded GRAVEL with SILT and SAND	CL-ML	SILTY CLAY SILTY CLAY with SAND SILTY CLAY with GRAVEL SANDY SILTY CLAY SANDY SILTY CLAY with GRAVEL GRAVELLY SILTY CLAY GRAVELLY SILTY CLAY with SAND
GW-GC	Well-graded GRAVEL with CLAY (or SILTY CLAY) Well-graded GRAVEL with CLAY and SAND (or SILTY CLAY and SAND)		
GP-GM	Poorly-graded GRAVEL with SILT Poorly-graded GRAVEL with SILT and SAND	ML	SILT SILT with SAND SILT with GRAVEL SANDY SILT SANDY SILT with GRAVEL GRAVELLY SILT GRAVELLY SILT with SAND
GP-GC	Poorly-graded GRAVEL with CLAY (or SILTY CLAY) Poorly-graded GRAVEL with CLAY and SAND (or SILTY CLAY and SAND)		
GM	SILTY GRAVEL SILTY GRAVEL with SAND	OL	ORGANIC lean CLAY ORGANIC lean CLAY with SAND ORGANIC lean CLAY with GRAVEL SANDY ORGANIC lean CLAY SANDY ORGANIC lean CLAY with GRAVEL GRAVELLY ORGANIC lean CLAY GRAVELLY ORGANIC lean CLAY with SAND
GC	CLAYEY GRAVEL CLAYEY GRAVEL with SAND		
GC-GM	SILTY, CLAYEY GRAVEL SILTY, CLAYEY GRAVEL with SAND	OL	ORGANIC SILT ORGANIC SILT with SAND ORGANIC SILT with GRAVEL SANDY ORGANIC SILT SANDY ORGANIC SILT with GRAVEL GRAVELLY ORGANIC SILT GRAVELLY ORGANIC SILT with SAND
SW	Well-graded SAND Well-graded SAND with GRAVEL		
SP	Poorly-graded SAND Poorly-graded SAND with GRAVEL	CH	Fat CLAY Fat CLAY with SAND Fat CLAY with GRAVEL SANDY fat CLAY SANDY fat CLAY with GRAVEL GRAVELLY fat CLAY GRAVELLY fat CLAY with SAND
SW-SM	Well-graded SAND with SILT Well-graded SAND with SILT and GRAVEL		
SW-SC	Well-graded SAND with CLAY (or SILTY CLAY) Well-graded SAND with CLAY and GRAVEL (or SILTY CLAY and GRAVEL)	MH	Elastic SILT Elastic SILT with SAND Elastic SILT with GRAVEL SANDY elastic SILT SANDY elastic SILT with GRAVEL GRAVELLY elastic SILT GRAVELLY elastic SILT with SAND
SP-SM	Poorly-graded SAND with SILT Poorly-graded SAND with SILT and GRAVEL		
SP-SC	Poorly-graded SAND with CLAY (or SILTY CLAY) Poorly-graded SAND with CLAY and GRAVEL (or SILTY CLAY and GRAVEL)	OH	ORGANIC fat CLAY ORGANIC fat CLAY with SAND ORGANIC fat CLAY with GRAVEL SANDY ORGANIC fat CLAY SANDY ORGANIC fat CLAY with GRAVEL GRAVELLY ORGANIC fat CLAY GRAVELLY ORGANIC fat CLAY with SAND
SM	SILTY SAND SILTY SAND with GRAVEL		
SC	CLAYEY SAND CLAYEY SAND with GRAVEL	OH	ORGANIC elastic SILT ORGANIC elastic SILT with SAND ORGANIC elastic SILT with GRAVEL SANDY ORGANIC elastic SILT SANDY ORGANIC elastic SILT with GRAVEL GRAVELLY ORGANIC elastic SILT GRAVELLY ORGANIC elastic SILT with SAND
SC-SM	SILTY, CLAYEY SAND SILTY, CLAYEY SAND with GRAVEL		
PT	PEAT	OL/OH	ORGANIC SOIL ORGANIC SOIL with SAND ORGANIC SOIL with GRAVEL SANDY ORGANIC SOIL SANDY ORGANIC SOIL with GRAVEL GRAVELLY ORGANIC SOIL GRAVELLY ORGANIC SOIL with SAND
	COBBLES COBBLES and BOULDERS BOULDERS		

FIELD AND LABORATORY TESTING

- (C) Consolidation (ASTM D 2435)
- (CL) Collapse Potential (ASTM D 5333)
- (CP) Compaction Curve (CTM 216)
- (CR) Corrosivity Testing (CTM 643, CTM 422, CTM 417)
- (CU) Consolidated Undrained Triaxial (ASTM D 4767)
- (DS) Direct Shear (ASTM D 3080)
- (EI) Expansion Index (ASTM D 4829)
- (M) Moisture Content (ASTM D 2216)
- (OC) Organic Content-% (ASTM D 2974)
- (P) Permeability (CTM 220)
- (PA) Particle Size Analysis (ASTM D 422)
- (PI) Plasticity Index (AASHTO T 90) Liquid Limit (AASHTO T 89)
- (PL) Point Load Index (ASTM D 5731)
- (PM) Pressure Meter
- (R) R-Value (CTM 301)
- (SE) Sand Equivalent (CTM 217)
- (SG) Specific Gravity (AASHTO T 100)
- (SL) Shrinkage Limit (ASTM D 427)
- (SW) Swell Potential (ASTM D 4546)
- (UC) Unconfined Compression-Soil (ASTM D 2166) Unconfined Compression-Rock (ASTM D 2938)
- (UU) Unconsolidated Undrained Triaxial (ASTM D 2850)
- (UW) Unit Weight (ASTM D 4767)

APPARENT DENSITY OF COHESIONLESS SOILS

Description	SPT N_{60} (Blows / 12 in.)
Very Loose	0 - 5
Loose	5 - 10
Medium Dense	10 - 30
Dense	30 - 50
Very Dense	Greater than 50

MOISTURE

Description	Criteria
Dry	No discernable moisture
Moist	Moisture present, but no free water
Wet	Visible free water

PERCENT OR PROPORTION OF SOILS

Description	Criteria
Trace	Particles are present but estimated to be less than 5%
Few	5% - 10%
Little	15% - 25%
Some	30% - 45%
Mostly	50% - 100%

PARTICLE SIZE

Description		Size (in.)
Boulder		Greater than 12
Cobble		3 - 12
Gravel	Coarse	3/4 - 3
	Fine	1/5 - 3/4
Sand	Coarse	1/16 - 1/5
	Medium	1/64 - 1/16
	Fine	1/300 - 1/64
Silt and Clay		Less than 1/300

ENGINEERING SERVICES

GEOTECHNICAL SERVICES

PREPARED BY: M. Reynolds 09/10

STATE OF CALIFORNIA DEPARTMENT OF TRANSPORTATION

DIVISION OF ENGINEERING SERVICES OFFICE OF GEOTECHNICAL DESIGN BRANCH

BRIDGE NO. 27E0028

POST MILE 10.95

DIPSEA TRAIL TIE BACK WALL

LOG OF TEST BORINGS 3 OF 4

GS LOTB SOIL LEGEND

ORIGINAL SCALE IN INCHES FOR REDUCED PLANS 0 1 2 3

UNIT: 3660
PROJECT NUMBER & PHASE: 04000012171 CONTRACT NO.: 044S2204

DISREGARD PRINTS BEARING EARLIER REVISION DATES

REVISION DATES 03-29-11 02-28-14

SHEET 13 OF 14

FILE => 27e0028-z-lltb_03.dgn

USERNAME => s113541 DATE PLOTTED => 16-JAN-2015 TIME PLOTTED => 10:33

DIST	COUNTY	ROUTE	POST MILES TOTAL PROJECT	SHEET No	TOTAL SHEETS
04	Mrn	1	11.0	76	76

REGISTERED CIVIL ENGINEER 12-14-10 DATE

1-12-15
PLANS APPROVAL DATE

REGISTERED PROFESSIONAL ENGINEER Eduardo Ortega No. 41012 Exp. 03-31-11 CIVIL STATE OF CALIFORNIA

The State of California or its officers or agents shall not be responsible for the accuracy or completeness of electronic copies of this plan sheet.

REFERENCE: CALTRANS SOIL & ROCK LOGGING, CLASSIFICATION, AND PRESENTATION MANUAL (2010)

PERCENT CORE RECOVERY (REC) & ROCK QUALITY DESIGNATION (RQD)

$$REC = \frac{\sum \text{Length of the recovered core pieces (in.)}}{\text{Total length of core run (in.)}} \times 100\%$$

$$RQD = \frac{\sum \text{Length of intact core pieces} \geq 4 \text{ in.}}{\text{Total length of core run (in.)}} \times 100\%$$

RQD* Indicates soundness criteria not met.

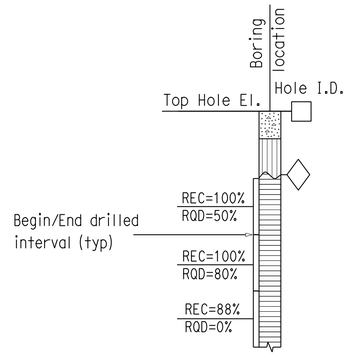

BEDDING SPACING

Description	Thickness / Spacing
Massive	Greater than 10 ft
Very Thickly Bedded	3 ft - 10 ft
Thickly Bedded	1 ft - 3 ft
Moderately Bedded	4 in. - 1 ft
Thinly Bedded	1 in. - 4 in.
Very Thinly Bedded	1/4 in. - 1 in.
Laminated	Less than 1/4 in.

LEGEND OF ROCK MATERIALS

- IGNEOUS ROCK
- SEDIMENTARY ROCK
- METAMORPHIC ROCK

ROCK HARDNESS

Description	Criteria
Extremely Hard	Cannot be scratched with a pocketknife or sharp pick. Can only be chipped with repeated heavy hammer blows.
Very Hard	Cannot be scratched with a pocketknife or sharp pick. Breaks with repeated heavy hammer blows.
Hard	Can be scratched with a pocketknife or sharp pick with difficulty (heavy pressure). Breaks with heavy hammer blows.
Moderately Hard	Can be scratched with pocketknife or sharp pick with light or moderate pressure. Breaks with moderate hammer blows.
Moderately Soft	Can be grooved 1/16 in. deep with a pocketknife or sharp pick with moderate or heavy pressure. Breaks with light hammer blow or heavy manual pressure.
Soft	Can be grooved or gouged easily by a pocketknife or sharp pick with light pressure, can be scratched with fingernail. Breaks with light to moderate manual pressure.
Very Soft	Can be readily indented, grooved or gouged with fingernail, or carved with a pocketknife. Breaks with light manual pressure.

FRACTURE DENSITY

Description	Observed Fracture Density
Unfractured	No fractures.
Very Slightly Fractured	Core lengths greater than 3 ft.
Slightly Fractured	Core lengths mostly from 1 to 3 ft.
Moderately Fractured	Core lengths mostly from 4 in. to 1 ft.
Intensely Fractured	Core lengths mostly from 1 to 4 in.
Very Intensely Fractured	Mostly chips and fragments.

WEATHERING DESCRIPTORS FOR INTACT ROCK

Description	Diagnostic Features					General Characteristics
	Chemical Weathering-Discoloration and/or Oxidation		Mechanical Weathering-Grain Boundary Conditions (Disaggregation) Primarily for Granitics and Some Coarse-Grained Sediments	Texture and Leaching		
	Body of Rock	Fracture Surfaces		Texture	Leaching	
Fresh	No discoloration, not oxidized.	No discoloration or oxidation.	No separation, intact (tight).	No change	No leaching	Hammer rings when crystalline rocks are struck.
Slightly Weathered	Discoloration or oxidation is limited to surface of, or short distance from, fractures; some feldspar crystals are dull.	Minor to complete discoloration or oxidation of most surfaces.	No visible separation, intact (tight).	Preserved	Minor leaching of some soluble minerals.	Hammer rings when crystalline rocks are struck. Body of rock not weakened.
Moderately Weathered	Discoloration or oxidation extends from fractures usually throughout; Fe-Mg minerals are "rusty," feldspar crystals are "cloudy."	All fracture surfaces are discolored or oxidized.	Partial separation of boundaries visible.	Generally preserved	Soluble minerals may be mostly leached.	Hammer does not ring when rock is struck. Body of rock is slightly weakened.
Intensely Weathered	Discoloration or oxidation throughout; all feldspars and Fe-Mg minerals are altered to clay to some extent; or chemical alteration produces in-situ disaggregation, see grain boundary conditions.	All fracture surfaces are discolored or oxidized, surfaces friable.	Partial separation, rock is friable; in semiarid conditions granitics are disaggregated.	Texture altered by chemical disintegration (hydration, argillation).	Leaching of soluble minerals may be complete.	Dull sound when struck with hammer, usually can be broken with moderate to heavy manual pressure or by light hammer blow without reference to planes of weakness such as incipient or hairline fractures, or veinlets. Rock is significantly weakened.
Decomposed	Discolored or oxidized throughout, but resistant minerals such as quartz may be unaltered; all feldspars and Fe-Mg minerals are completely altered to clay.		Complete separation of grain boundaries (disaggregated).	Resembles a soil, partial or complete remnant rock structure may be preserved; leaching of soluble minerals usually complete.		Can be granulated by hand. Resistant minerals such as quartz may be present as "stringers" or "dikes."

ENGINEERING SERVICES

GEOTECHNICAL SERVICES

PREPARED BY: M. Reynolds 09/10

STATE OF CALIFORNIA DEPARTMENT OF TRANSPORTATION

DIVISION OF ENGINEERING SERVICES OFFICE OF GEOTECHNICAL DESIGN BRANCH

BRIDGE NO. 27E0028

POST MILE 10.95

DIPSEA TRAIL TIE BACK WALL

LOG OF TEST BORINGS 4 OF 4

GS LOTB SOIL LEGEND

ORIGINAL SCALE IN INCHES FOR REDUCED PLANS 0 1 2 3

UNIT: 3660
PROJECT NUMBER & PHASE: 04000012171 CONTRACT NO.: 044S2204

DISREGARD PRINTS BEARING EARLIER REVISION DATES

REVISION DATES 03-29-11 02-28-28

SHEET 14 OF 14

FILE => 27e0028-z-lltb_04.dgn

USERNAME => s113541 DATE PLOTTED => 16-JAN-2015 TIME PLOTTED => 10:33