Dist	COUNTY	ROUTE	POST MILES TOTAL PROJECT	SHEET No.	TOTAL SHEETS
04	Son	1	57.2	1	23

INDEX OF PLANS

SHEET No.	DESCRIPTION
1	TITLE SHEET AND LOCATION MAP
2	EROSION CONTROL PLAN
3 - 4	DRAINAGE PLANS AND PROFILES
5	CONSTRUCTION AREA SIGNS
6	TRAFFIC HANDLING PLAN
7	PAVEMENT DELINEATION PLAN
8	SUMMARY OF QUANTITIES
9 - 12	ELECTRICAL PLANS
13 - 23	REVISED AND NEW STANDARD PLANS

THE STANDARD PLANS LIST APPLICABLE TO THIS CONTRACT IS INCLUDED IN THE NOTICE TO BIDDERS AND SPECIAL PROVISIONS BOOK.

STATE OF CALIFORNIA

DEPARTMENT OF TRANSPORTATION

PROJECT PLANS FOR CONSTRUCTION ON

STATE HIGHWAY

IN SONOMA COUNTY
NEAR
THE MENDOCINO COUNTY LINE
AT 0.2 MILE NORTH OF DEER TRAIL

TO BE SUPPLEMENTED BY STANDARD PLANS DATED MAY 2006

LOCATION MAP

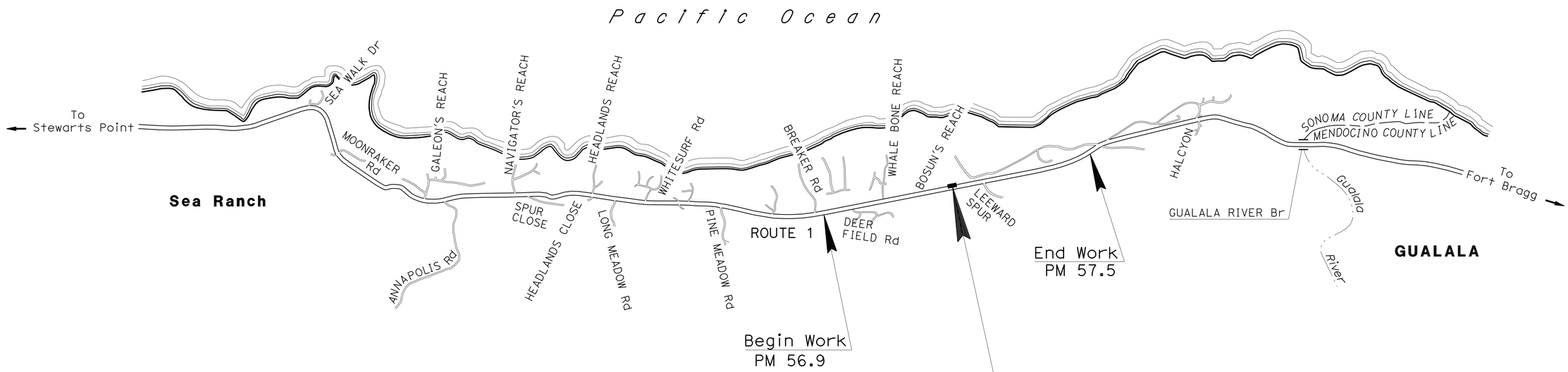

LOCATION OF CONSTRUCTION
PM 57.2

Peter Aguilera 4/28/10
PROJECT ENGINEER DATE
REGISTERED CIVIL ENGINEER

August 23, 2010
PLANS APPROVAL DATE

REGISTERED PROFESSIONAL ENGINEER
P. Aguilera
No. 55287
Exp. 12-31-10
CIVIL
STATE OF CALIFORNIA

THE STATE OF CALIFORNIA OR ITS OFFICERS OR AGENTS SHALL NOT BE RESPONSIBLE FOR THE ACCURACY OR COMPLETENESS OF SCANNED COPIES OF THIS PLAN SHEET.

PROJECT MANAGER: LARRY JONES

DESIGN ENGINEER: PETER AGUILERA

THE CONTRACTOR SHALL POSSESS THE CLASS (OR CLASSES) OF LICENSE AS SPECIFIED IN THE "NOTICE TO BIDDERS."

NO SCALE

CONTRACT No.	04-4S6304
PROJECT ID	0400001253

LAST REVISION 8-16-10

DATE PLOTTED => 22-SEP-2010
TIME PLOTTED => 15:45

Dist	COUNTY	ROUTE	POST MILES TOTAL PROJECT	SHEET No.	TOTAL SHEETS
04	Son	1	57.2	2	23

LICENSED LANDSCAPE ARCHITECT

8-23-10
PLANS APPROVAL DATE

LICENSED LANDSCAPE ARCHITECT
JENNIFER EGAWA No. 5066
Signature
7-31-12
Renewal Date
8-19-10
Date
STATE OF CALIFORNIA

THE STATE OF CALIFORNIA OR ITS OFFICERS OR AGENTS SHALL NOT BE RESPONSIBLE FOR THE ACCURACY OR COMPLETENESS OF SCANNED COPIES OF THIS PLAN SHEET.

FOR ACCURATE RIGHT OF WAY DATA, CONTACT RIGHT OF WAY ENGINEERING AT THE DISTRICT OFFICE.

LEGEND

- EROSION CONTROL (TYPE 1)
- EROSION CONTROL (TYPE 2)
- FIBER ROLLS
- TFESA — TEMPORARY FENCE (TYPE ESA)

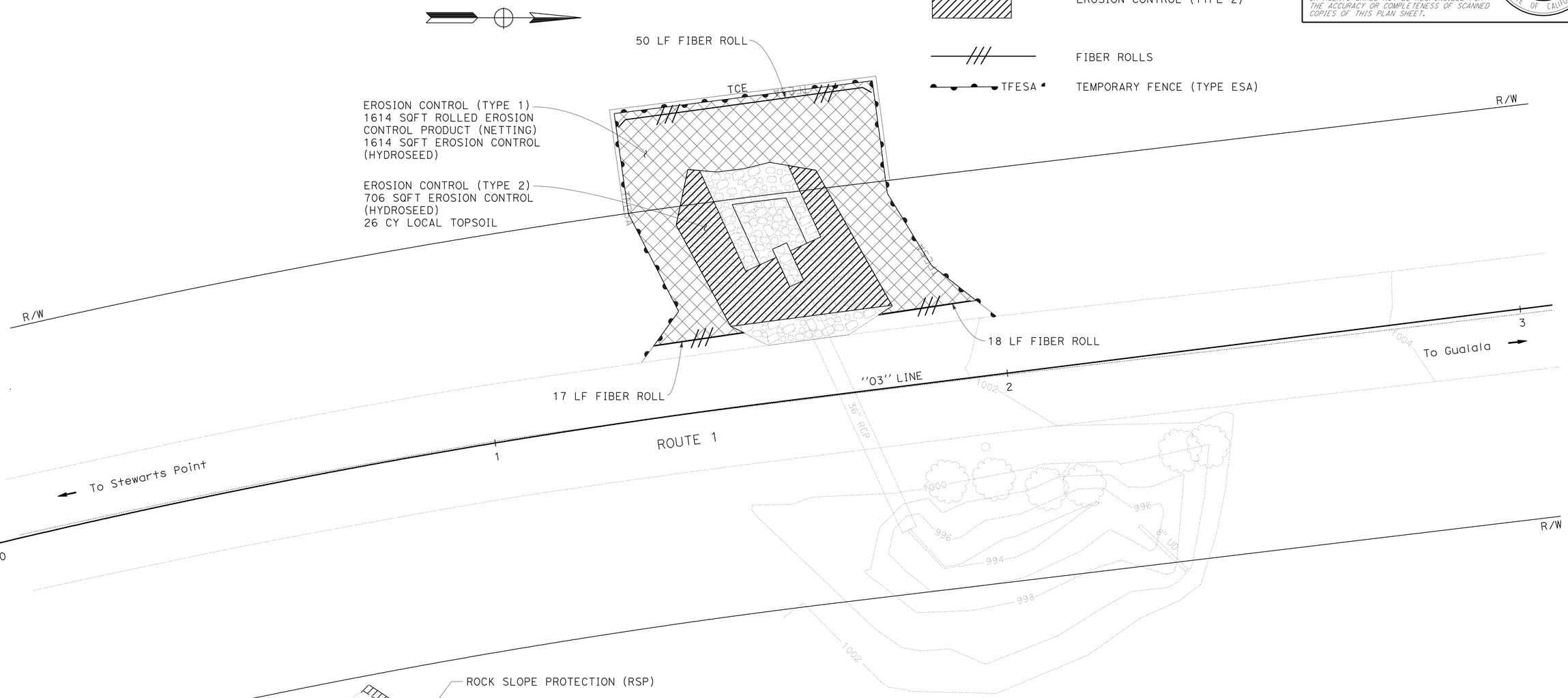

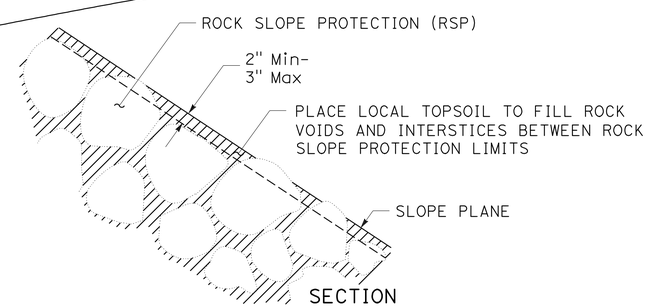

LOCAL TOPSOIL PLACEMENT WITH RSP

EROSION CONTROL PLAN AND DETAILS

SCALE 1'' = 10'

THIS PLAN ACCURATE FOR EROSION CONTROL WORK ONLY

EC-1

REVISED BY	DATE REVISED
JE	8/6/10
JE	4/21/10

JENNIFER EGAWA
ALEX MCDONALD
CALCULATED-DESIGNED BY
CHECKED BY
SENIOR LANDSCAPE ARCHITECT
DAVID W YAM

STATE OF CALIFORNIA - DEPARTMENT OF TRANSPORTATION
Caltrans® WATER QUALITY

LAST REVISION 08-19-10
DATE PLOTTED => 22-SEP-2010
TIME PLOTTED => 15:45

Dist	COUNTY	ROUTE	POST MILES TOTAL PROJECT	SHEET No.	TOTAL SHEETS
04	Son	1	57.2	3	23

Peter Aguilera 4/28/10
REGISTERED CIVIL ENGINEER DATE

8-23-10
PLANS APPROVAL DATE

REGISTERED PROFESSIONAL ENGINEER P. Aguilera No. 55287 Exp. 12-31-10 CIVIL STATE OF CALIFORNIA

THE STATE OF CALIFORNIA OR ITS OFFICERS OR AGENTS SHALL NOT BE RESPONSIBLE FOR THE ACCURACY OR COMPLETENESS OF SCANNED COPIES OF THIS PLAN SHEET.

NOTE:

FOR ACCURATE RIGHT OF WAY DATA, CONTACT RIGHT OF WAY ENGINEERING AT THE DISTRICT OFFICE.

LEGEND

- No. — DRAINAGE SYSTEM NUMBER
- X — DRAINAGE UNIT
- ROCK SLOPE PROTECTION (SEE EC-1)

SECTION A-A
NO SCALE

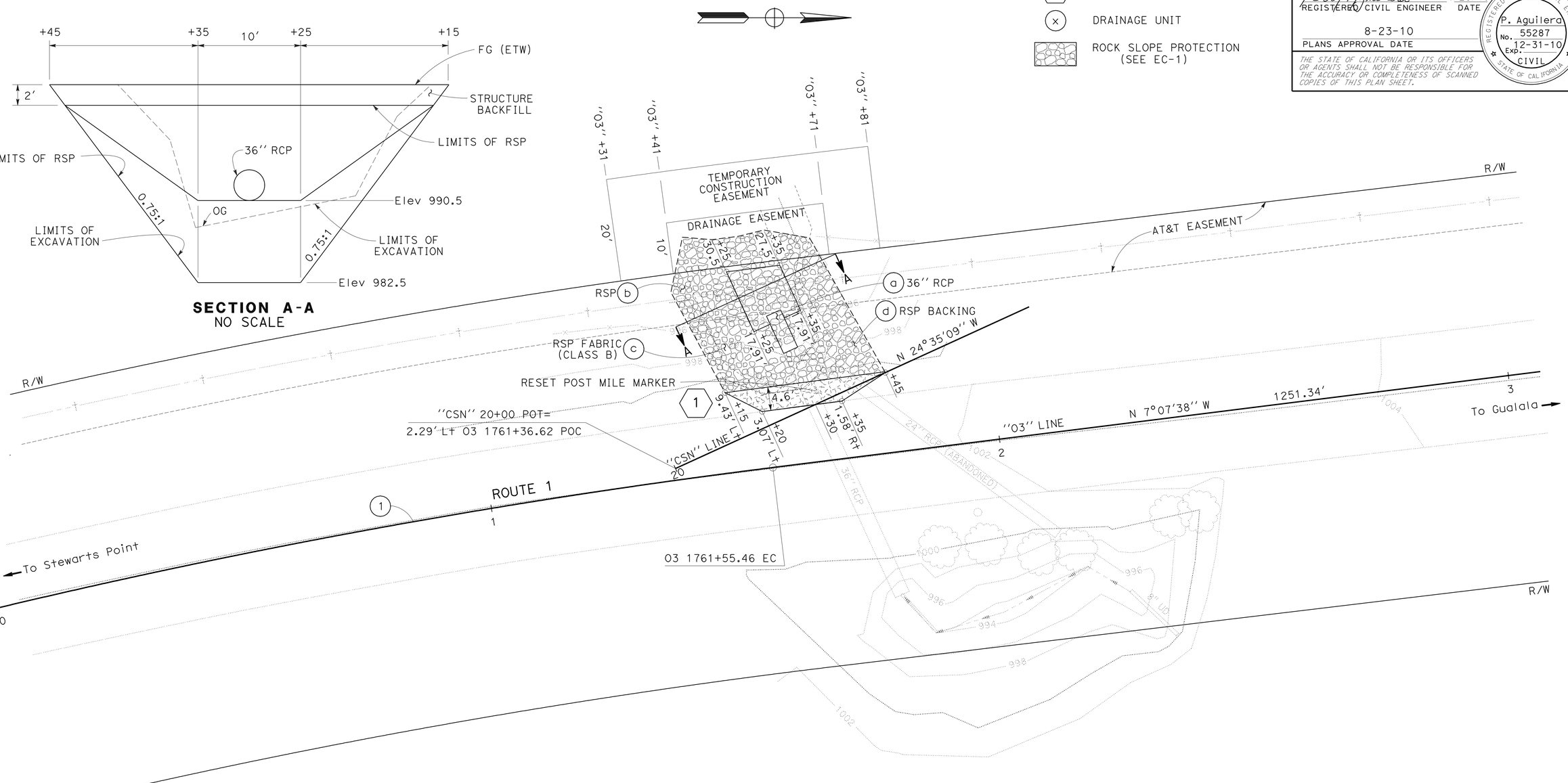

CURVE DATA

No. (X)	R	Δ	T	L
1	1400'	16° 03' 60''	197.59'	392.58'

THIS PLAN ACCURATE FOR DRAINAGE WORK ONLY

DRAINAGE PLAN

SCALE: 1'' = 10'

D-1

STATE OF CALIFORNIA - DEPARTMENT OF TRANSPORTATION
Caltrans® DESIGN

FUNCTIONAL SUPERVISOR: ARLISSA PANG
CALCULATED-DESIGNED BY: PETER AQUILERA
CHECKED BY: VAN HEW
REVISED BY: VH
DATE REVISED: 4/20/10

LAST REVISION 08-16-10 | DATE PLOTTED => 22-SEP-2010 | TIME PLOTTED => 15:46

Dist	COUNTY	ROUTE	POST MILES TOTAL PROJECT	SHEET No.	TOTAL SHEETS
04	Son	1	57.2	4	23

Peter Aguilera 4/28/10
REGISTERED CIVIL ENGINEER DATE

8-23-10
PLANS APPROVAL DATE

REGISTERED PROFESSIONAL ENGINEER P. Aguilera No. 55287 Exp. 12-31-10 CIVIL STATE OF CALIFORNIA

THE STATE OF CALIFORNIA OR ITS OFFICERS OR AGENTS SHALL NOT BE RESPONSIBLE FOR THE ACCURACY OR COMPLETENESS OF SCANNED COPIES OF THIS PLAN SHEET.

NOTE

LOCAL TOPSOIL SHALL BE PLACED WITHIN THE RSP AS SHOWN IN EC-1

ABBREVIATION

S STANDARD JOINT

DRAINAGE QUANTITIES

DRAINAGE SYSTEM No. ⬡	DRAINAGE UNIT ◯	36'' RCP (LF)	CLASS 3 CONCRETE (N) (CY)	RSP (1/4 TON, METHOD A) (CY)	RSP FABRIC (SQYD)	RSP (BACKING No. 1, METHOD B) (CY)	MAXIMUM COVER (N) (LF)	PIPE JOINT CLASSIFICATION (N) (LF)	DESCRIPTION	STATION
1	a	8	0.41				5	S	36'' RCP w/ Conc COLLAR	11.63' Lt "CSN" 20+30 TO 19.63' Lt "CSN" 20+30
	b			135					1/4 TON RSP	"CSN" 20+15 TO "CSN" 20+45
	c				130				RSP FABRIC (CLASS 8)	"CSN" 20+15 TO "CSN" 20+45
	d					32			RSP (BACKING No. 1, METHOD B)	"CSN" 20+15 TO "CSN" 20+45
TOTAL		8	0.41	135	130	32				

(N) = NOT A SEPARATE PAY ITEM, FOR INFORMATION ONLY.

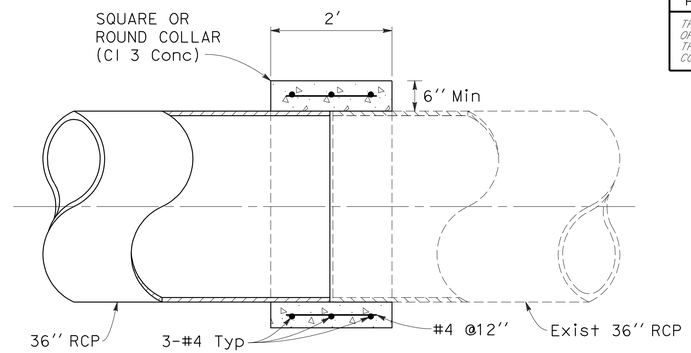

TYPICAL CONCRETE COLLAR DETAIL

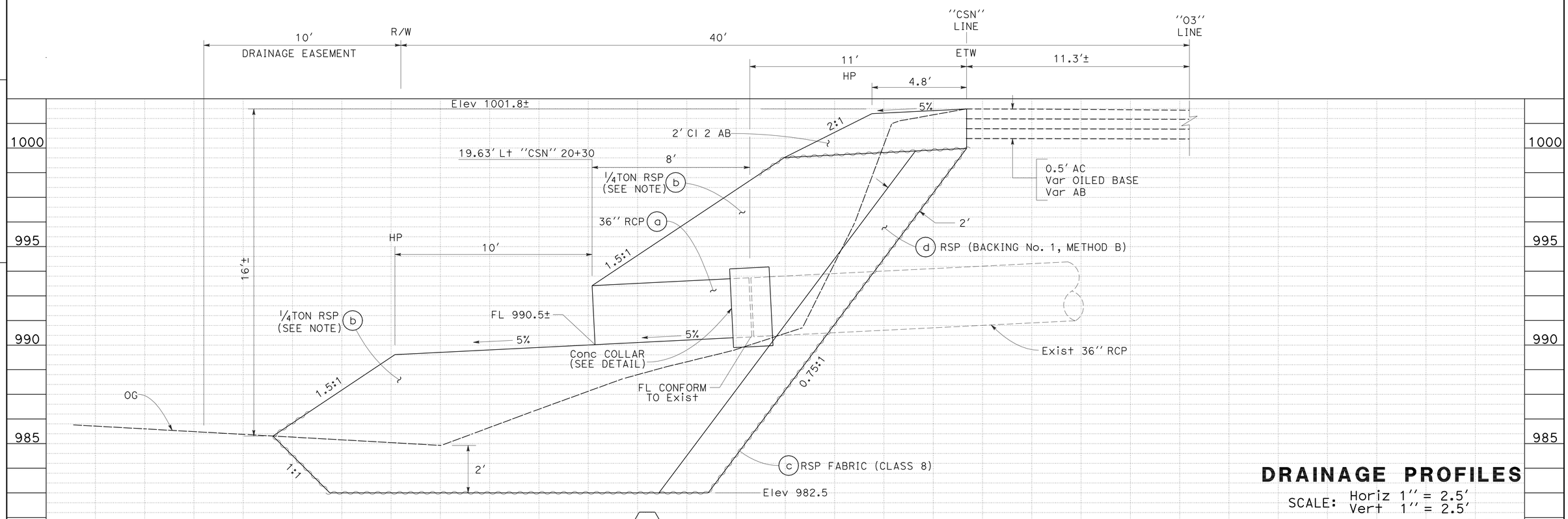

DRAINAGE SYSTEM No. 1

DRAINAGE PROFILES

SCALE: Horiz 1'' = 2.5'
Vert 1'' = 2.5'

DP-1

REVISED BY	DATE REVISED
VH	4/20/10

CALCULATED-DESIGNED BY: VAN HEW
CHECKED BY: PETER AQUILERA
FUNCTIONAL SUPERVISOR: ARLISSA PANG

STATE OF CALIFORNIA - DEPARTMENT OF TRANSPORTATION
Caltrans
DESIGN

LAST REVISION 08-16-10
DATE PLOTTED => 22-SEP-2010
TIME PLOTTED => 15:46

Dist	COUNTY	ROUTE	POST MILES TOTAL PROJECT	SHEET No.	TOTAL SHEETS
04	Son	1	57.2	5	23

REGISTERED CIVIL ENGINEER 4/28/10 DATE

8-23-10
PLANS APPROVAL DATE

REGISTERED PROFESSIONAL ENGINEER J.L.Struven No. 49964 Exp. 12-31-10 CIVIL STATE OF CALIFORNIA

THE STATE OF CALIFORNIA OR ITS OFFICERS OR AGENTS SHALL NOT BE RESPONSIBLE FOR THE ACCURACY OR COMPLETENESS OF SCANNED COPIES OF THIS PLAN SHEET.

NOTE

EXACT SIGN LOCATIONS TO BE DETERMINED BY THE ENGINEER

LEGEND

No. CONSTRUCTION AREA SIGN NUMBER

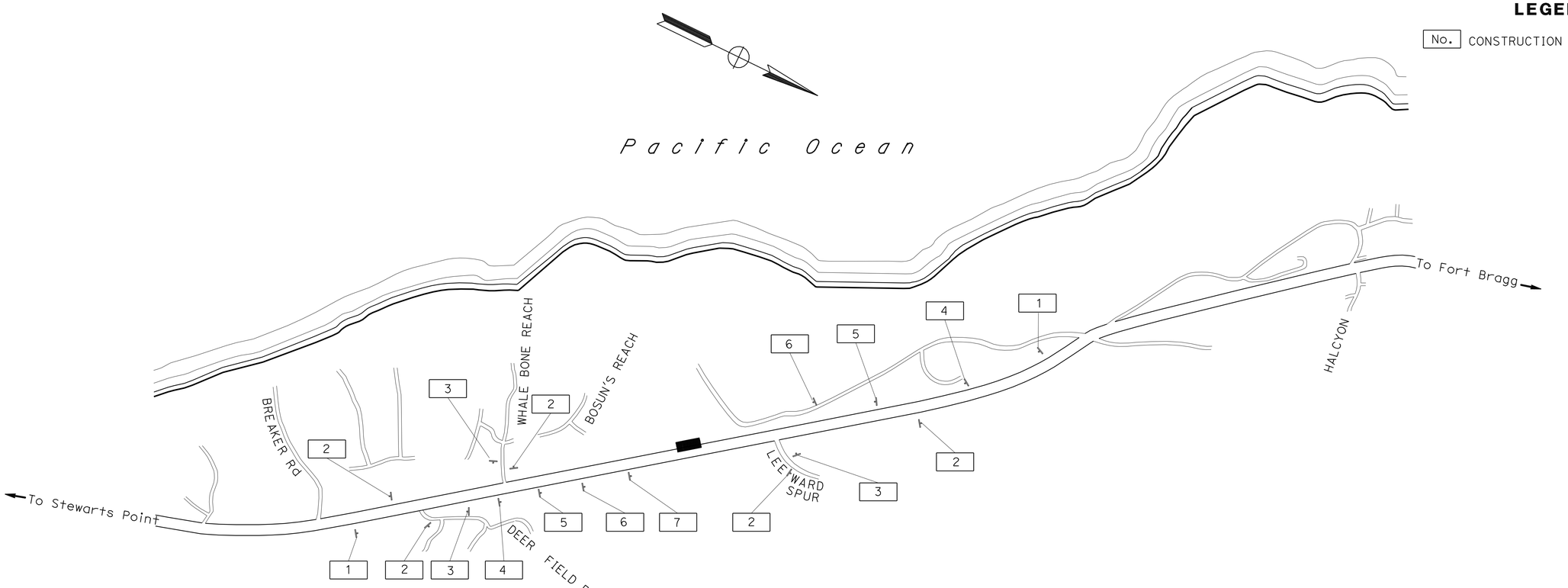

STATIONARY MOUNTED CONSTRUCTION AREA SIGNS

SIGN No.	MUTCD CODE	MESSAGE	PANEL SIZE	No. OF POSTS & SIZE	No. OF SIGNS
1	W20-1	ROAD WORK AHEAD	48'' x 48''	1 - 4'' x 6''	2
2	G20-2	END ROAD WORK	36'' x 18''	1 - 4'' x 4''	5
3	W20-1	ROAD WORK AHEAD	36'' x 36''	1 - 4'' x 4''	3
4	W20-4	ONE LANE ROAD AHEAD ↙	36'' x 36''	1 - 4'' x 4''	2
5	W3-3		36'' x 36''	1 - 4'' x 4''	2
6	R10-6 (L+)	STOP HERE ON RED	24'' x 36''	1 - 4'' x 4''	2
7	W1-4 (R+)		36'' x 36''	1 - 4'' x 4''	1

THIS PLAN ACCURATE FOR CONSTRUCTION AREA SIGN WORK ONLY

CONSTRUCTION AREA SIGNS

NO SCALE

CS-1

STATE OF CALIFORNIA - DEPARTMENT OF TRANSPORTATION
Caltrans
TRAFFIC

FUNCTIONAL SUPERVISOR: JERILYN L. STRUVEN

CALCULATED-DESIGNED BY: HERMINIO RUIDERA
CHECKED BY: JERILYN STRUVEN

REVISED BY: HR
DATE REVISED: 11/05/09

LAST REVISION DATE PLOTTED => 22-SEP-2010
TIME PLOTTED => 15:46
08-16-10

Dist	COUNTY	ROUTE	POST MILES TOTAL PROJECT	SHEET No.	TOTAL SHEETS
04	Son	1	57.2	6	23

Peter Aguilera 4/28/10
REGISTERED CIVIL ENGINEER DATE

8-23-10
PLANS APPROVAL DATE

REGISTERED PROFESSIONAL ENGINEER
P. Aguilera
No. 55287
Exp. 12-31-10
CIVIL
STATE OF CALIFORNIA

THE STATE OF CALIFORNIA OR ITS OFFICERS OR AGENTS SHALL NOT BE RESPONSIBLE FOR THE ACCURACY OR COMPLETENESS OF SCANNED COPIES OF THIS PLAN SHEET.

LEGEND

(No.) PAVEMENT DELINEATION DETAIL

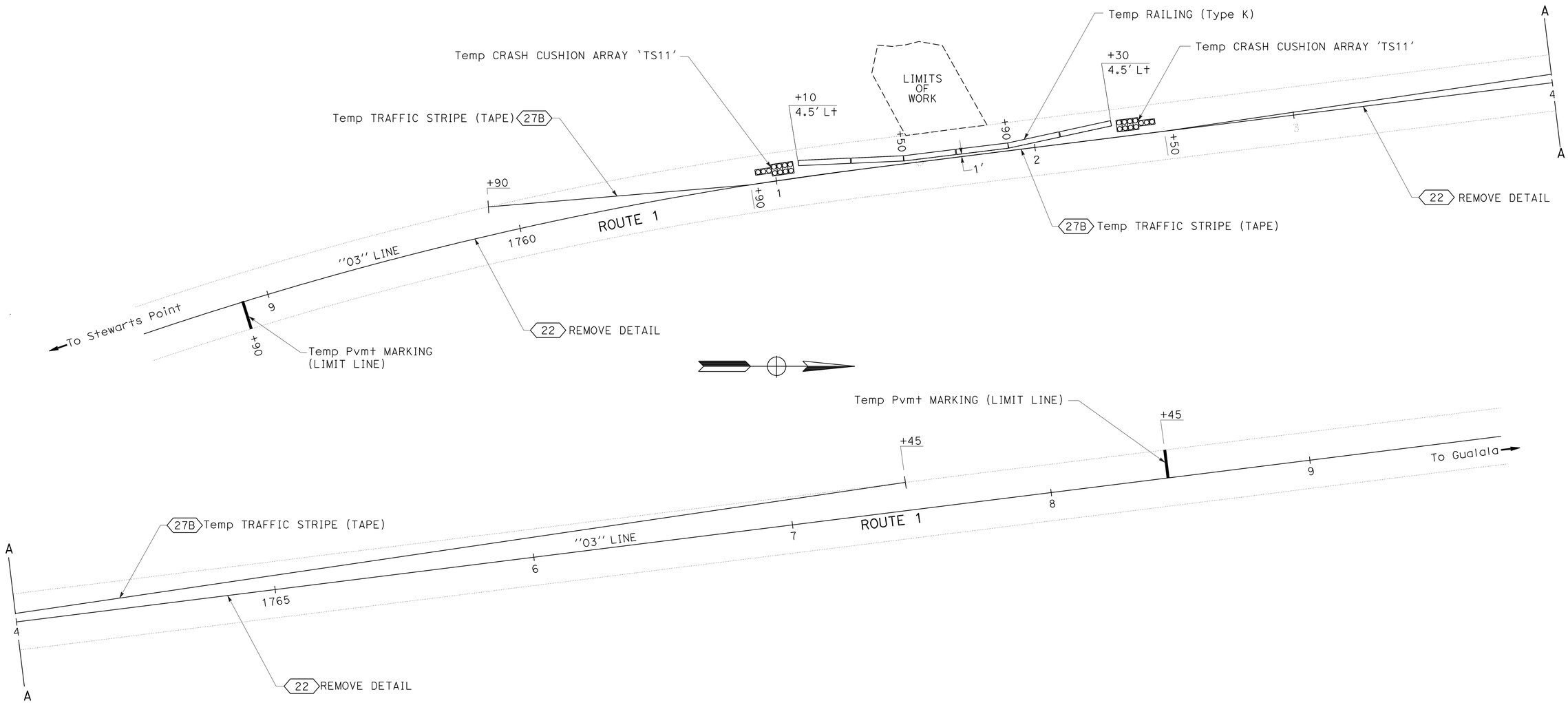

TRAFFIC HANDLING PLAN

SCALE: 1" = 20'

THIS PLAN ACCURATE FOR TRAFFIC HANDLING ONLY

TH-1

REVISED BY	DATE REVISED
PA	4/19/10

CALCULATED-DESIGNED BY: PETER AQUILERA
CHECKED BY: VAN HEW
FUNCTIONAL SUPERVISOR: ARLISSA PANG

STATE OF CALIFORNIA - DEPARTMENT OF TRANSPORTATION
Caltrans
DESIGN

LAST REVISION 08-16-10 | DATE PLOTTED => 22-SEP-2010 | TIME PLOTTED => 15:46

Dist	COUNTY	ROUTE	POST MILES TOTAL PROJECT	SHEET No.	TOTAL SHEETS
04	Son	1	57.2	7	23

Peter Aguilera 4/28/10
REGISTERED CIVIL ENGINEER DATE

8-23-10
PLANS APPROVAL DATE

REGISTERED PROFESSIONAL ENGINEER
P. Aguilera
No. 55287
Exp. 12-31-10
CIVIL
STATE OF CALIFORNIA

THE STATE OF CALIFORNIA OR ITS OFFICERS OR AGENTS SHALL NOT BE RESPONSIBLE FOR THE ACCURACY OR COMPLETENESS OF SCANNED COPIES OF THIS PLAN SHEET.

LEGEND

CONFORM OF PAVEMENT DELINEATION DETAIL

(No.) PAVEMENT DELINEATION DETAIL

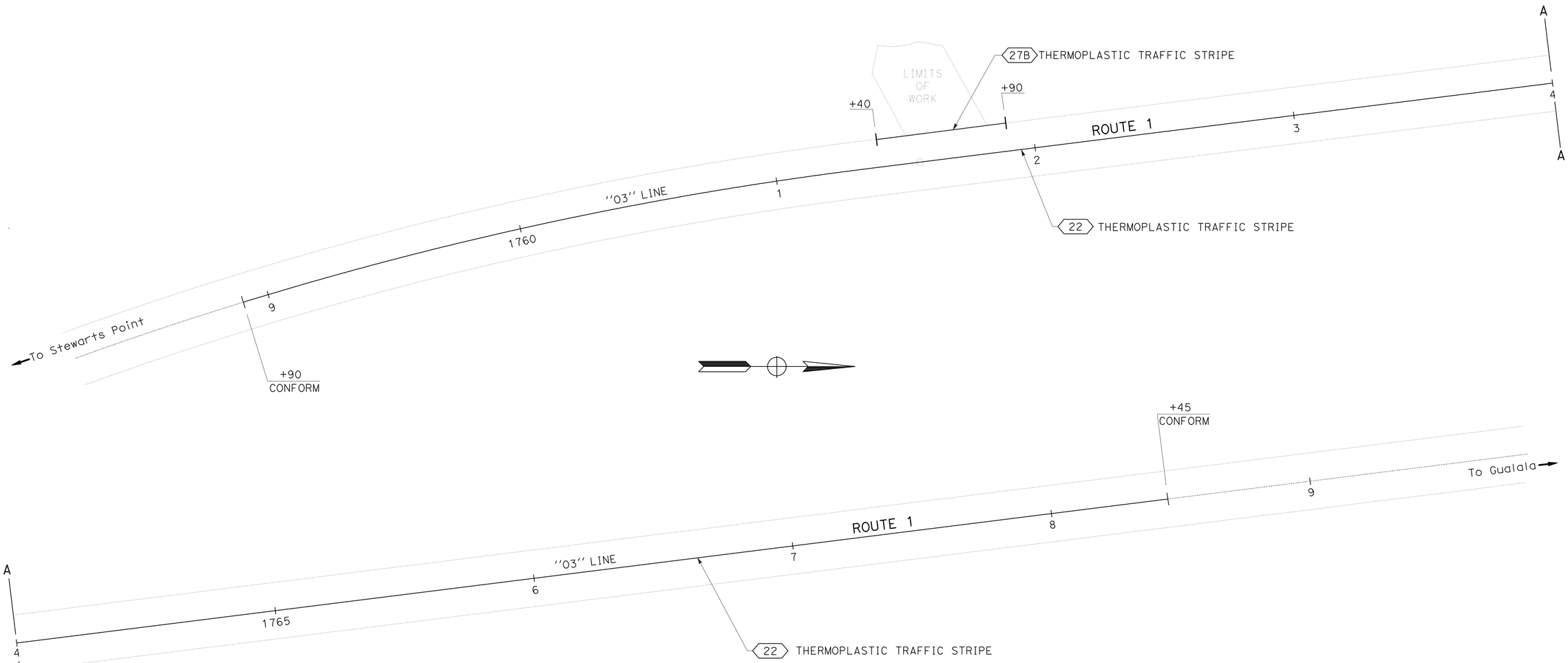

PAVEMENT DELINEATION PLAN

SCALE 1" = 20'

THIS PLAN ACCURATE FOR PAVEMENT DELINEATION WORK ONLY

PD-1

REVISED BY	VH
DATE REVISED	4/21/10
CALCULATED-DESIGNED BY	PETER AQUILERA
CHECKED BY	VAN HEW
FUNCTIONAL SUPERVISOR	ARLISSA PANG

STATE OF CALIFORNIA - DEPARTMENT OF TRANSPORTATION
Caltrans
DESIGN

LAST REVISION 08-16-10
DATE PLOTTED => 22-SEP-2010
TIME PLOTTED => 15:46

Dist	COUNTY	ROUTE	POST MILES TOTAL PROJECT	SHEET No.	TOTAL SHEETS
04	Son	1	57.2	8	23

Peter Aguilera 4/28/10
REGISTERED CIVIL ENGINEER DATE

8-23-10
PLANS APPROVAL DATE

REGISTERED PROFESSIONAL ENGINEER
P. Aguilera
No. 55287
Exp. 12-31-10
CIVIL
STATE OF CALIFORNIA

THE STATE OF CALIFORNIA OR ITS OFFICERS OR AGENTS SHALL NOT BE RESPONSIBLE FOR THE ACCURACY OR COMPLETENESS OF SCANNED COPIES OF THIS PLAN SHEET.

EARTHWORK QUANTITIES AND SUMMARY

STATION	LOCATION	ROADWAY EXCAVATION (N)	CI 2 AB
		CY	
''CSN'' 20+15 TO ''CSN'' 20+45	L+	107	17
TOTAL		107	17

(N) = NOT A SEPARATE PAY ITEM, FOR INFORMATION ONLY.

TRAFFIC HANDLING

STATION	LOCATION	TEMPORARY CRASH CUSHION MODULE	TEMPORARY RAILING (TYPE K)
		EA	LF
''03'' 1761+08	L+	11	
''03'' 1762+32	L+	11	
''03'' 1761+10 TO ''03'' 1762+30	L+		120
TOTAL		22	120

RESET POSTMILE MARKER

STATION	EA
''03'' 13.8' L+ TO ''03'' 1761+60	1
TOTAL	1

PAVEMENT DELINEATION QUANTITIES

SHEET No.	STATION	DETAIL No. AND Pvm+ MARKING	TEMPORARY PAVEMENT MARKING (TAPE)	TEMPORARY TRAFFIC STRIPE (TAPE)	REMOVE PAVEMENT MARKER	REMOVE YELLOW THERMO-PLASTIC TRAFFIC STRIPE (HAZARDOUS WASTE)	THERMOPLASTIC TRAFFIC STRIPE		PAVEMENT MARKER (RETROREFLECTIVE)
				4'' WHITE			4'' WHITE	4'' YELLOW	TYPE D
			SQFT	LF	EA	LF	LF		EA
TH-1	''03'' 1753+90 TO ''03'' 1784+55	22			119	1910			
	''03'' 1759+90 TO ''03'' 1767+45	27B		755					
	''03'' 1758+90	LIMIT LINE	11						
	''03'' 1769+55	LIMIT LINE	11						
PD-1	''03'' 1753+90 TO ''03'' 1784+55	22						1910	119
	''03'' 1761+40 TO ''03'' 1761+90	27B					50		
	TOTAL		22	755	119	1910	1960		119

SUMMARY OF QUANTITIES

Q-1

STATE OF CALIFORNIA - DEPARTMENT OF TRANSPORTATION
Caltrans
DESIGN

FUNCTIONAL SUPERVISOR: ARLISSA PANG
CALCULATED-DESIGNED BY: PETER AQUILERA
CHECKED BY: VAN HEW
REVISED BY: VH
DATE REVISED: 4/19/10

LAST REVISION 08-16-10
DATE PLOTTED => 22-SEP-2010
TIME PLOTTED => 15:46

Dist	COUNTY	ROUTE	POST MILES TOTAL PROJECT	SHEET No.	TOTAL SHEETS
04	Son	1	57.2	9	23

REGISTERED ELECTRICAL ENGINEER 4/28/10 DATE

8-23-10
PLANS APPROVAL DATE

REGISTERED PROFESSIONAL ENGINEER E.T. Wong No. 13753 Exp. 06-30-11 ELECT STATE OF CALIFORNIA

THE STATE OF CALIFORNIA OR ITS OFFICERS OR AGENTS SHALL NOT BE RESPONSIBLE FOR THE ACCURACY OR COMPLETENESS OF SCANNED COPIES OF THIS PLAN SHEET.

PROJECT NOTES

1. 7′ x 11′x 4′′ (W x L x D) CONCRETE SLAB FOR PORTABLE GENERATORS AND SERVICE EQUIPMENT ENCLOSURE MOUNTING. SEE DETAIL 5 ON E-3
2. STATE-FURNISHED MODEL 170 CONTROLLER ASSEMBLY WITH MODEL 332 CABINET. SEE TEMPORARY FOUNDATION PLATFORM DETAIL 6 ON E-3. FRONT DOOR SHALL FACE SOUTH.
3. 4′ TEMPORARY GATE (TYPE CL-6)
   40′ TEMPORARY FENCE (TYPE CL-6)
   PART OF ROADWAY PAY ITEM.
4. 6′(LONG) x 3′(DIA) FUEL STORAGE LIQUID PROPANE TANK. THE EXACT LOCATION TO BE DETERMINED BY THE ENGINEER.
5. INSTALL AN UPS IN THE CONTROLLER CABINET.

LEGEND, SYMBOLS AND ABBREVIATIONS

EXISTING	PROPOSED	
		TEMPORARY ELECTROLIER WITH 200 W HPS LUMINAIRE MOUNTED ON A WOOD POLE. SEE DETAIL 4 ON E-3
	Y Y	ADVANCE FLASHING BEACON WITH A W41 SIGN AND SIGN LIGHTING MOUNTED ON A WOOD POLE SEE DETAIL 2 ON E-3
		TEMPORARY SIGNAL STANDARD MOUNTED ON A WOOD POLE SEE DETAIL 3 ON E-3
	LPT	LIQUID PROPANE TANK
	LP	LIQUID PROPANE
	—X—X—	TEMPORARY FENCE AND GATE
	—— G ——	PROPANE GAS LINK
	—-—-—	5/8′′, 7 STRAND GALVANIZED MESSENGER WIRE, CONDUCTORS AS NOTED UNLESS OTHERWISE SPECIFIED
	UPS	UNINTERRUPTABLE POWER SUPPLY

GENERAL NOTES

1. THE LOWEST SAG POINT OF THE MESSENGER WIRE SHALL BE 25′ MINIMUM CLEARANCE FROM FINISHED GRADE/ROADWAY.
2. OVERHEAD CONDUCTORS SHALL BE TIED ON MESSENGER WIRE AT EVERY 3.3′ MAXIMUM WITH SELF-CLINGING NYLON TIES.
3. OVERHEAD ENTRANCE CONDUIT FITTING SHALL BE INSTALLED IN SUCH A WAY SO THAT RAINWATER SHALL NOT SEEP INTO THE ELECTRICAL EQUIPMENT THROUGH THE ENTRANCE FITTING. FORM A DRIP LOOP AT THE ENTRANCE FITTING.
4. PROVIDE GUY WIRE, GUY GUARDS AND ANCHOR AS REQUIRED POLE GUY SHALL BE INSTALLED AS DIRECTED BY THE ENGINEER.
5. ESTABLISH CONTINUOUS GROUND WITH THE SYSTEM GROUND TO ALL METAL PARTS IN THE SYSTEM BY BONDING JUMPERS AND CONDUITS.
6. THE SIGNS SHOWN ARE "CONSTRUCTION AREA SIGN". SEE PLAN SHEET CS-1.
7. A GROUND ROD SHALL BE INSTALLED IN THE PULL BOX ADJACENT TO WOOD POLES AND BOND TO RIGID METAL CONDUIT, UNLESS OTHERWISE NOTED.
8. WHERE ONE OR MORE TRAFFIC SIGNAL DETECTOR(S) CONSIST OF A SEQUENCE OF 4 LOOPS IN A SINGLE LANE, THE FRONT LOOP CLOSET TO THE LIMIT LINE OR CROSSWALK SHALL BE LOCATED 1′ FROM THE LINE. ALL FOUR LOOPS SHALL BE CONNECTED IN SERIES.
9. THE TWO GENERATORS SHALL BE FROM THE SAME MANUFACTURER. THE SECOND GENERATOR SHALL BE PROVIDED WITH AN AUTOMATIC TRANSFER SWITCH. GENERATORS SHALL BE PLACED IN AN ENCLOSURE FOR OUTDOOR USE.
10. THE FOLLOWING MATERIALS AND EQUIPMENT SHALL BE NEW: FUEL TANK, WOOD POLES, GENERATORS, SERVICE EQUIPMENT, UNINTERRUPTABLE POWER SUPPLY AND AUTOMATIC TRANSFER SWITCH

TEMPORARY SIGNAL SYSTEM
(TWO GENERATORS)
(PROJECT NOTES, SYMBOLS AND ABBREVIATIONS)

NO SCALE

THIS PLAN ACCURATE FOR ELECTRICAL WORK ONLY

E-1

STATE OF CALIFORNIA - DEPARTMENT OF TRANSPORTATION
Caltrans ELECTRICAL

FUNCTIONAL SUPERVISOR: ELAINE T. WONG
CALCULATED-DESIGNED BY: NASRIN GHARIB
CHECKED BY: ELAINE T. WONG
REVISED BY: NG
DATE REVISED: 4/21/10

LAST REVISION 08-16-10
DATE PLOTTED => 22-SEP-2010
TIME PLOTTED => 15:47

Dist	COUNTY	ROUTE	POST MILES TOTAL PROJECT	SHEET No.	TOTAL SHEETS
04	Son	1	57.2	10	23

REGISTERED ELECTRICAL ENGINEER 4/28/10 DATE

8-23-10
PLANS APPROVAL DATE

REGISTERED PROFESSIONAL ENGINEER
E.T. Wong
No. 13753
Exp. 06-30-11
ELECT
STATE OF CALIFORNIA

THE STATE OF CALIFORNIA OR ITS OFFICERS OR AGENTS SHALL NOT BE RESPONSIBLE FOR THE ACCURACY OR COMPLETENESS OF SCANNED COPIES OF THIS PLAN SHEET.

Ø6 → ← Ø8

TRAFFIC PHASE DIAGRAM

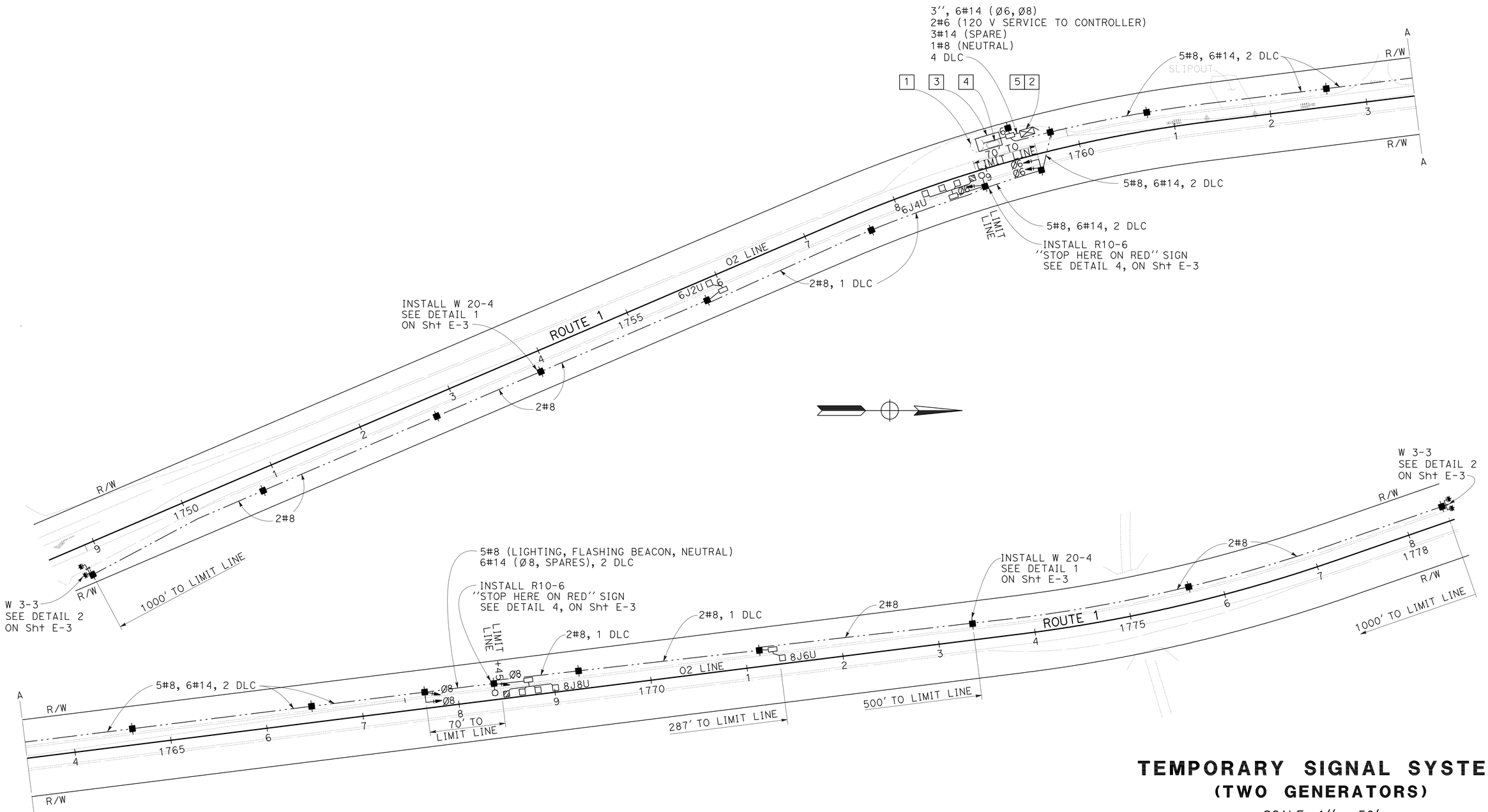

TEMPORARY SIGNAL SYSTEM
(TWO GENERATORS)

SCALE: 1'' = 50'

THIS PLAN ACCURATE FOR ELECTRICAL WORK ONLY

E-2

STATE OF CALIFORNIA - DEPARTMENT OF TRANSPORTATION
Caltrans
ELECTRICAL

CALCULATED-DESIGNED BY	NASRIN GHARIB	REVISED BY	NG
CHECKED BY	ELAINE T. WONG	DATE REVISED	4/21/10
FUNCTIONAL SUPERVISOR	ELAINE T. WONG		

LAST REVISION 08-16-10 | DATE PLOTTED => 22-SEP-2010 | TIME PLOTTED => 15:47

Dist	COUNTY	ROUTE	POST MILES TOTAL PROJECT	SHEET No.	TOTAL SHEETS
04	Son	1	57.2	11	23

REGISTERED ELECTRICAL ENGINEER 4/28/10 DATE

8-23-10
PLANS APPROVAL DATE

REGISTERED PROFESSIONAL ENGINEER E.T. Wong No. 13753 Exp. 06-30-11 ELECT STATE OF CALIFORNIA

THE STATE OF CALIFORNIA OR ITS OFFICERS OR AGENTS SHALL NOT BE RESPONSIBLE FOR THE ACCURACY OR COMPLETENESS OF SCANNED COPIES OF THIS PLAN SHEET.

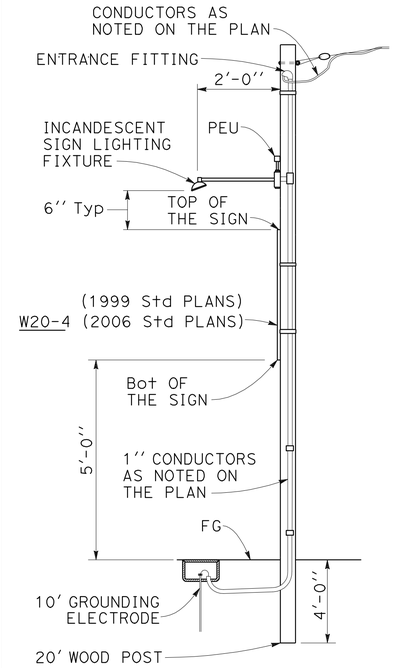

DETAIL 1

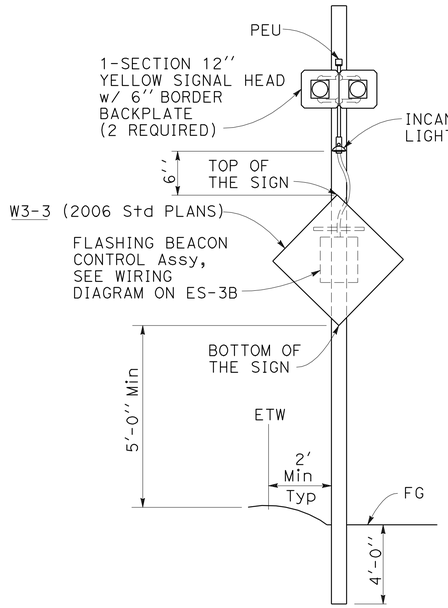

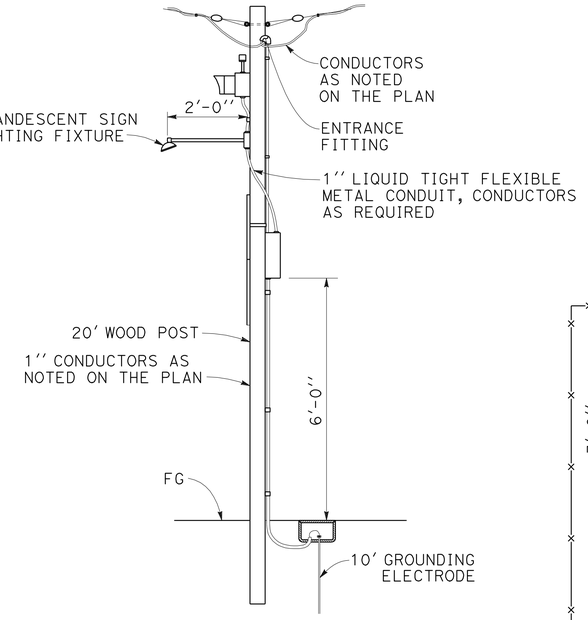

DETAIL 2

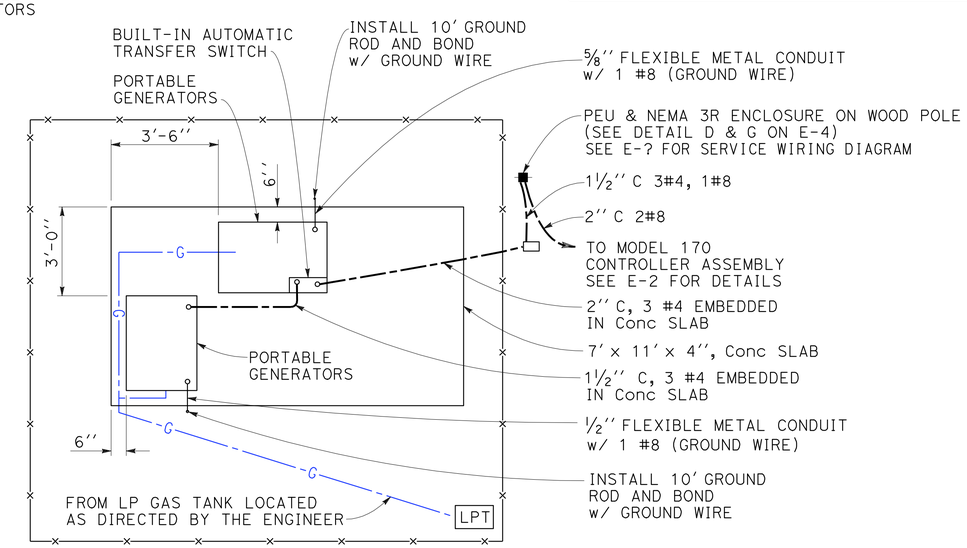

INSTALL CONDUIT RUNS AS DIRECTED BY THE ENGINEER

DETAIL 5

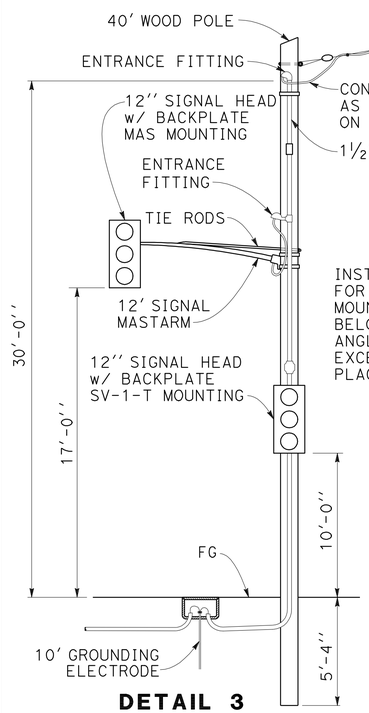

DETAIL 3

NOTE

INSTALL REDWOOD CLEATS FOR WOODPOLE w/ MASTARM MOUNTED SIGNALS 1'-7" BELOW GRADE AT RIGHT ANGLES TO THE MASTARM, EXCEPT WHEN POLE IS PLACE IN SOLID ROCK.

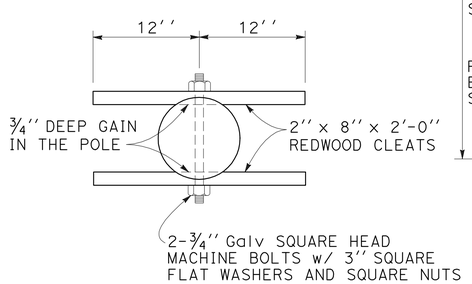

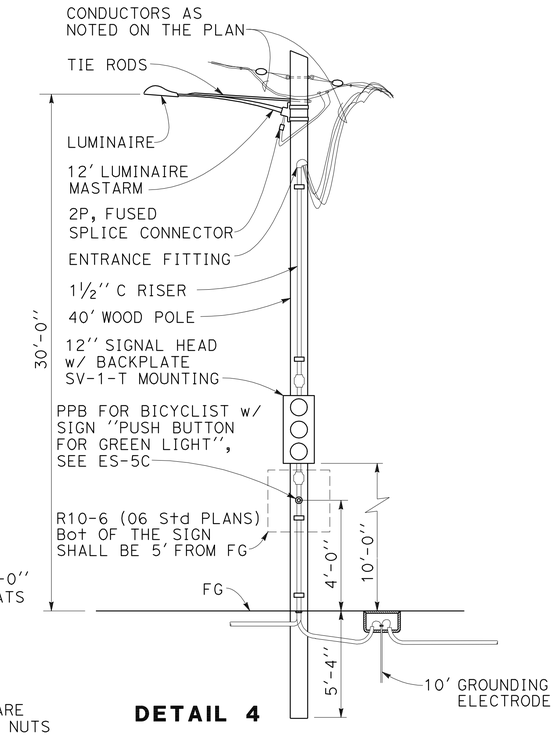

DETAIL 4

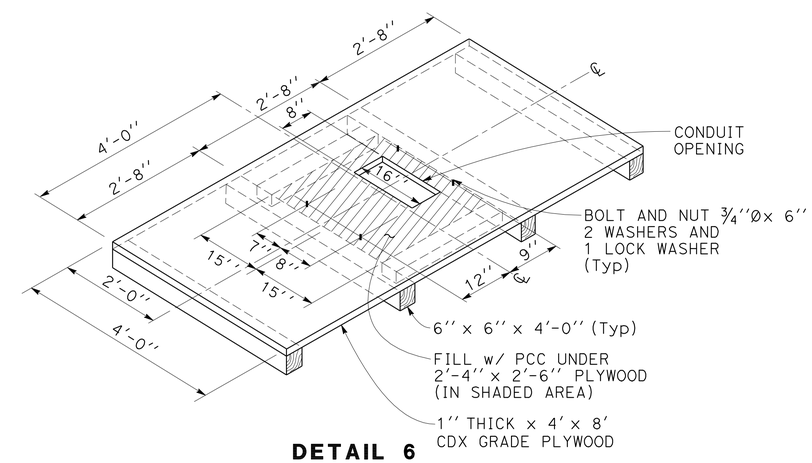

DETAIL 6

TEMPORARY TYPE 332 CABINET FOUNDATION PLATFORM

TEMPORARY SIGNAL SYSTEM
(TWO GENERATORS)
(ELECTICAL DETAILS)

THIS PLAN ACCURATE FOR ELECTRICAL WORK ONLY

NO SCALE

E-3

NG	4/21/10
REVISED BY	DATE REVISED
NASRIN GHARIB	ELAINE T. WONG
CALCULATED-DESIGNED BY	CHECKED BY
FUNCTIONAL SUPERVISOR	ELAINE T. WONG

STATE OF CALIFORNIA - DEPARTMENT OF TRANSPORTATION
Caltrans
ELECTRICAL

LAST REVISION 08-16-10 | DATE PLOTTED => 22-SEP-2010 | TIME PLOTTED => 15:47

Dist	COUNTY	ROUTE	POST MILES TOTAL PROJECT	SHEET No.	TOTAL SHEETS
04	Son	1	57.2	12	23

REGISTERED ELECTRICAL ENGINEER 4/28/10 DATE

8-23-10
PLANS APPROVAL DATE

REGISTERED PROFESSIONAL ENGINEER E.T. Wong No. 13753 Exp. 06-30-11 ELECT STATE OF CALIFORNIA

THE STATE OF CALIFORNIA OR ITS OFFICERS OR AGENTS SHALL NOT BE RESPONSIBLE FOR THE ACCURACY OR COMPLETENESS OF SCANNED COPIES OF THIS PLAN SHEET.

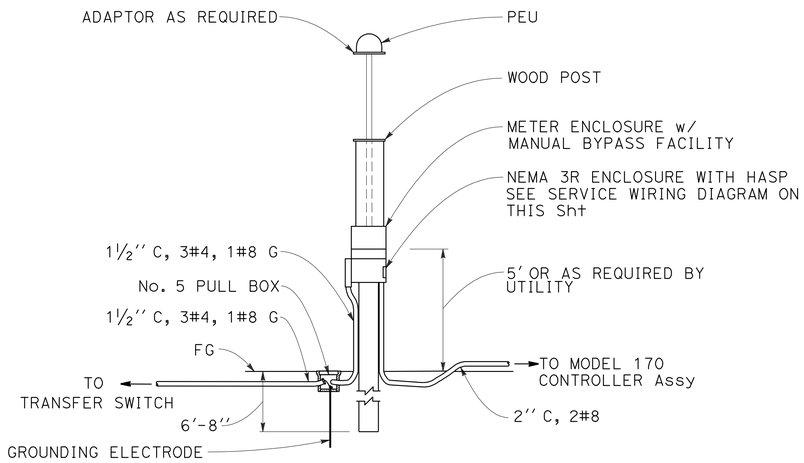

FRONT VIEW
DETAIL D

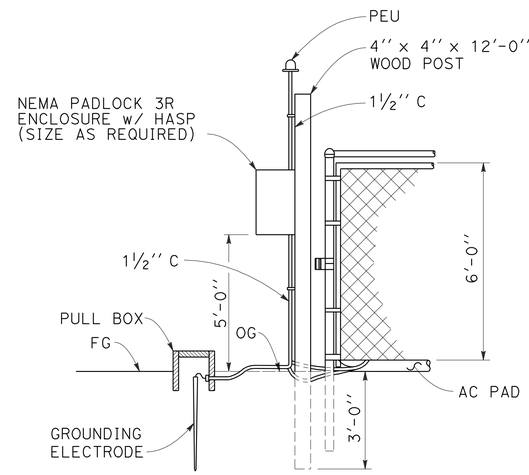

SIDE VIEW
DETAIL G

ELECTRICAL SERVICE ON WOOD POLE

UNINTERRUPTABLE POWER SUPPLY (UPS)

THE UPS SHALL BE A COMPUTER GRADE SYSTEM DESIGNED FOR 120 V, 60 Hz SINE WAVE INPUT/OUTPUT TO CARRY 1200 WATTS OF LOAD WITH 0.75 POWER FACTOR FOR NOT LESS THAN 10 MINUTES. IT SHALL INCLUDE ALL MECHANICAL, ELECTRICAL AND ELECTRONIC DEVICES AND RELATED CIRCUITRY TO AUTOMATICALLY PROVIDE A CONTINUOUS SUPPLY OF REGULATED ALTERNATING CURRENT POWER, FREE OF TRANSIENT DISTURBANCES AND WITHOUT ANY INTERRUPTION UPON FAILURE OR DEGENERATION OF THE NORMAL POWER SOURCE. WHEN THE SYSTEM IS OPERATING FROM THE NORMAL POWER SOURCE, THE RECTIFIER/CHARGER SHALL CONVERT THE ALTERNATING CURRENT AND SUPPLY THE BATTERY.

IF NORMAL POWER IS NOT AVAILABLE, THE STATIC TRANSFORMER SWITCH SHALL CONNECT THE STATIC INVERTER OUTPUT POWER TO THE CRITICAL LOAD. THE BATTERY SHALL MAINTAIN THE FLOW OF DIRECT CURRENT POWER TO THE INVERTER, AND THE INVERTER SHALL CONTINUE TO SUPPLY THE CRITICAL LOAD WITHOUT ANY INTERRUPTION FOR THE SPECIFIED DURATION. THE BATTERY SHALL BE AUTOMATICALLY EQUALIZED WHEN NORMAL POWER IS RESTORED.

THE STATIC INVERTER UNIT SHALL NOT BE OF FERRO-RESONANT DESIGN.

FRONT ACCESS TO MAINTAIN THE EQUIPMENT SHALL BE PROVIDED.

ALL METAL SURFACES, EXCLUDING HEAT SINKS AND BUS BARS, SHALL BE TREATED WITH A SUITABLE PERMANENT COATING.

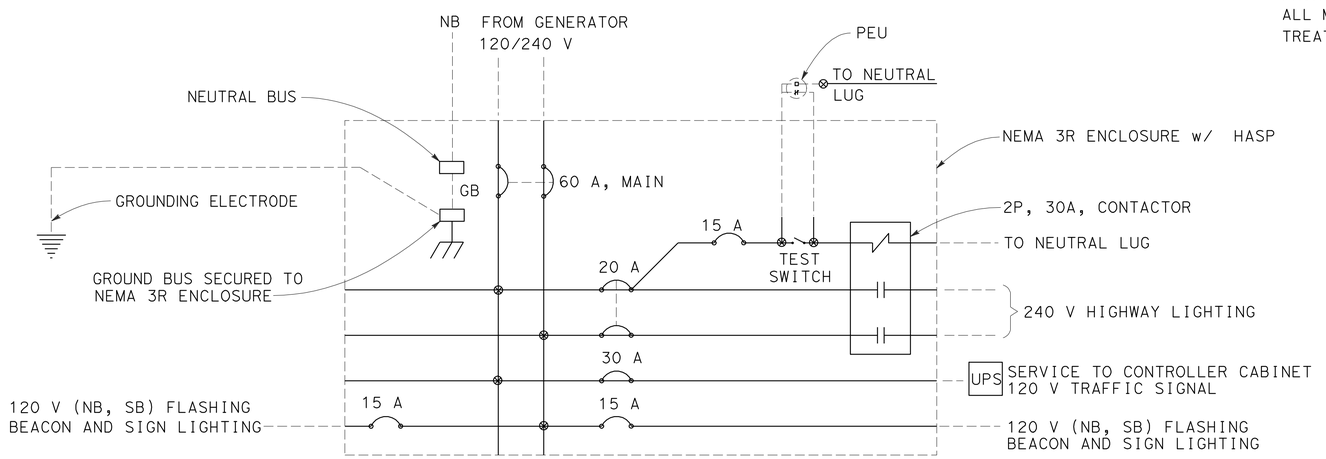

PROVIDE ITEMS SHOWN IN THIS DIAGRAM
SEE ES-2C AND ES-2D FOR MORE INFORMATION.

SERVICE WIRING DIAGRAM
120/240 V

TEMPORARY SIGNAL SYSTEM (TWO GENERATORS)
(ELECTICAL DETAILS)

NO SCALE

THIS PLAN ACCURATE FOR ELECTRICAL WORK ONLY

E-4

REVISED BY	DATE REVISED
NG	4/21/10

NASRIN GHARIB — ELAINE T. WONG — CALCULATED-DESIGNED BY — CHECKED BY

FUNCTIONAL SUPERVISOR: ELAINE T. WONG

STATE OF CALIFORNIA - DEPARTMENT OF TRANSPORTATION — Caltrans — ELECTRICAL

LAST REVISION 08-16-10 — DATE PLOTTED => 22-SEP-2010 — TIME PLOTTED => 15:47

DIST	COUNTY	ROUTE	POST MILES TOTAL PROJECT	SHEET NO.	TOTAL SHEETS
04	Son	1	57.2	13	23

REGISTERED ELECTRICAL ENGINEER

October 5, 2007
PLANS APPROVAL DATE

REGISTERED PROFESSIONAL ENGINEER Jeffery G. McRae No. E14512 Exp. 6-30-08 ELECTRICAL STATE OF CALIFORNIA

The State of California or its officers or agents shall not be responsible for the accuracy or completeness of electronic copies of this plan sheet.

To accompany plans dated 8-23-10

ELECTROLIERS

STANDARD TYPES
15, 15D
15 STRUCTURE
21, 21D STRUCTURE
30
31
32
35
36-20A

High mast light pole

Double Arm lighting standard

Existing electrolier

Electrolier foundation (Future installation)

NOTES:

1. Luminaires shall be 310 W HPS when installed on Type 21, 21D, 30, 31, 32, 35 and 36-20A Standards, unless otherwise specified. Luminaires shall be 200 W HPS when installed on other type standards or poles, unless otherwise specified.
2. Luminaires shall be the cutoff type, ANSI Type III medium cutoff lighting distribution, unless otherwise specified.
3. Variations noted adjacent to symbol on project plans.

Electrolier (see project notes or project plans)

Luminaire on wood pole

STANDARD NOTES:

- AB Abandon. If applied to conduit, remove conductors.
- BC Install pull box in existing conduit run.
- BP Pedestrian barricade, type as indicated on plan.
- CB Install conduit into existing pull box.
- CC Connect new and existing conduit. Remove existing conductors and install conductors as indicated.
- CF Conduit to remain for future use. Remove conductors. Install pull wire or rope.
- DH Detector handhole.
- FA Foundation to be abandoned.
- IS Install sign on signal mast arm.
- NS No slip base on standard.
- PEC Photoelectric control.
- PEU Photoelectric unit.
- RC Equipment or material to be removed and become the property of the Contractor.
- RE Remove electrolier, fuses and ballast. Tape ends of conductors.
- RL Relocate equipment.
- RR Remove and reuse equipment.
- RS Remove and salvage equipment.
- SC Splice new to existing conductors.
- SD Service disconnect.
- SF Standard to remain for future use. Remove luminaire, pole conductors, fuses and ballast.
- TSP Telephone service point.

ABBREVIATIONS AND EQUIPMENT DESIGNATIONS

PROPOSED	EXISTING	
BBS	bbs	Battery backup system
BC	bc	Bolt circle
C	C	Conduit
CCTV	cctv	Closed circuit television
CKT	ckt	Circuit
CMS	cms	Changeable message sign
DLC	dlc	Loop detector lead-in cable
EMS	ems	Extinguishable message sign
EVC	evc	Emergency vehicle cable
EVD	evd	Emergency vehicle detector
FB	fb	Flashing beacon
FBCA	fbca	Flashing beacon control assembly
FBS	fbs	Flashing beacon with slip base
FO	fo	Fiber optic
G	G	Ground (Equipment Grounding Conductor)
GFCI	GFCI	Ground fault circuit interrupt
HAR	har	Highway advisory radio
HEX	hex	Hexagonal
HPS	hps	High pressure sodium
IISNS	iisns	Internally illuminated street name sign
ISL	isl	Induction sign lighting
LED	led	Light emitting diode
LMA	lma	Luminaire mast arm
LPS	lps	Low pressure sodium
LTG	ltg	Lighting
LUM	lum	Luminaire
MAT	mat	Mast arm mounting vehicle signal faces, top attachment
MAS	mas	Mast arm mounting vehicle signal faces, side attachment
MAS-4A	mas-4A	Mast arm mounting vehicle signal faces, side attachment - 4 signal section
MAS-4B	mas-4B	
MAS-4C	mas-4C	
MAS-5A	mas-5A	Mast arm mounting vehicle signal faces, side attachment - 5 signal section
MAS-5B	mas-5B	
MC	mc	Mercury contactor
M/M	m/m	Multiple to multiple transformer
MT	mt	Conduit with pull wire or rope only
MTG	mtg	Mounting
	mv	Mercury vapor lighting fixture
N	N	Neutral (Grounded Conductor)
NC	NC	Normally closed
NO	NO	Normally open
PB	pb	Pull box
PEC	pec	Photoelectric control (Type I, II, III, IV or V as shown)
PED	ped	Pedestrian
PEU	peu	Photoelectric unit
PPB	ppb	Pedestrian push button
RL		Relocated equipment
RM	rm	Ramp metering
SB	sb	Slip base
SIC	sic	Signal interconnect cable
SIG	sig	Signal
SMA	sma	Signal mast arm
SNS	sns	Street name sign
SP	sp	Service point
TDC	tdc	Telephone demarcation cabinet
TMS	tms	Traffic monitoring station
TOS	tos	Traffic Operations System
VEH	veh	Vehicle
XFMR	xfmr	Transformer
COMM	comm	Communication
RWIS	rwis	Roadway weather information system

SOFFIT AND WALL MOUNTED LUMINAIRES

Pendant, 70 W HPS unless otherwise specified.

Flush, 70 W HPS unless otherwise specified.

Wall surface, 70 W HPS unless otherwise specified.

Existing soffit or wall luminaire to remain unmodified.

Existing soffit or wall luminaire to be modified as specified.

NOTE:

Arrow indicates "street side" of luminaire.

STATE OF CALIFORNIA
DEPARTMENT OF TRANSPORTATION

ELECTRICAL SYSTEMS (SYMBOLS AND ABBREVIATIONS)

NO SCALE

RSP ES-1A DATED OCTOBER 5, 2007 SUPERSEDES STANDARD PLAN ES-1A DATED MAY 1, 2006 - PAGE 400 OF THE STANDARD PLANS BOOK DATED MAY 2006.

REVISED STANDARD PLAN RSP ES-1A

2006 REVISED STANDARD PLAN RSP ES-1A

DIST	COUNTY	ROUTE	POST MILES TOTAL PROJECT	SHEET NO.	TOTAL SHEETS
04	Son	1	57.2	14	23

REGISTERED ELECTRICAL ENGINEER

October 5, 2007
PLANS APPROVAL DATE

REGISTERED PROFESSIONAL ENGINEER Jeffery G. McRae No. E14512 Exp. 6-30-08 ELECTRICAL STATE OF CALIFORNIA

The State of California or its officers or agents shall not be responsible for the accuracy or completeness of electronic copies of this plan sheet.

To accompany plans dated 8-23-10

CONDUIT

PROPOSED	EXISTING	
		Lighting Conduit, unless otherwise indicated or noted
		Traffic signal conduit
C	c	Communication conduit
T	t	Telephone conduit
F	f	Fire alarm conduit
FO	fo	Fiber optic conduit
		Conduit termination (RSP ES-9A C)
R	r	Conduit riser in/on structure or service pole

SERVICE EQUIPMENT

PROPOSED	EXISTING	
OH	oh	Overhead lines
U	U	Wood pole "U" indicates utility owned
		Pole guy with anchor
		Utility transformer - ground mounted
III		Service equipment enclosure type
		Service equipment enclosure door indicates front of enclosure
T	t	Telephone demarcation cabinet

POLE-MOUNTED SERVICE DESIGNATION

Type of installation

TYPE H SERVICE - 28'-10" ← Pole height above grade

ILLUMINATED OVERHEAD SIGN

PROPOSED	EXISTING	
		Overhead sign - Single post
		Overhead sign - Two post
		Overhead sign - Mounted on structure
		Overhead sign with electrolier

SIGNAL EQUIPMENT

PROPOSED	EXISTING	
		Pedestrian signal face
		Pedestrian push button post
		Pedestrian barricade
		Vehicle signal face (with backplate, 3-Section: red, yellow and green)
		Vehicle signal face with angle visors
PV	PV	Modifications of basic symbols: "L" indicates all non-arrow sections louvered "LG" indicates louvered green section only "PV" indicates 12" programmed visibility sections "8" indicates all 8" sections (only when specified)
		Type 15TS and Vehicle signal face
		Vehicle signal face with red, yellow and green left arrow sections
		Vehicle signal face with red and yellow sections and up green arrow
		Vehicle signal face (5 Section) with red, yellow and green sections and yellow and green right arrows
		Type 1 Standard and attached vehicle signal faces
		Standard with signal mast arm only and attached vehicle signal faces and internally illuminated street name sign
		Type 33 Standard, Left-turn vehicle signal face and sign
		Standard with luminaire and signal mast arms and attached vehicle signal faces
		Cantilever flashing beacon Type 9 Frame, with a sign unless otherwise specified or indicated
		Type 15-FBS Standard with two vehicle signal face sections with lens, backplate and visor with a sign
R	Y	Flashing beacon. One vehicle signal face section with lens, backplate and visor. "R" indicates red indication, "Y" indicates yellow indication
		Controller assembly. Door indicates front of cabinet

SIGNAL EQUIPMENT Cont

PROPOSED	EXISTING	
		Guard post
		Type 1 Standard with "Meter On" sign
		Emergency Vehicle detector

NOTES:

1. All signal sections shall be 12" unless shown otherwise.
2. Signal heads shall be provided with backplates unless shown otherwise.
3. Signal indication shall be LED.

STATE OF CALIFORNIA
DEPARTMENT OF TRANSPORTATION

ELECTRICAL SYSTEMS (SYMBOLS AND ABBREVIATIONS)

NO SCALE

RSP ES-1B DATED OCTOBER 5, 2007 SUPERCEDES STANDARD PLAN ES-1B DATED MAY 1, 2006 - PAGE 401 OF THE STANDARD PLANS BOOK DATED MAY 2006.

REVISED STANDARD PLAN RSP ES-1B

2006 REVISED STANDARD PLAN RSP ES-1B

7-10-07

DIST	COUNTY	ROUTE	POST MILES TOTAL PROJECT	SHEET NO.	TOTAL SHEETS
04	Son	1	57.2	15	23

REGISTERED ELECTRICAL ENGINEER

October 5, 2007
PLANS APPROVAL DATE

REGISTERED PROFESSIONAL ENGINEER Jeffery G. McRae No. E14512 Exp. 6-30-08 ELECTRICAL STATE OF CALIFORNIA

The State of California or its officers or agents shall not be responsible for the accuracy or completeness of electronic copies of this plan sheet.

To accompany plans dated 8-23-10

EQUIPMENT IDENTIFICATION

ILLUMINATED SIGN IDENTIFICATION NUMBER:

Sign No. 12345 — Sign number - Place on post or structure

10 ISL SCI 1.0

- 1.0 — Transformer rating (kVA)
- SCI — Lighting control type
- ISL — Number and type of fixtures

Do NOT place on standard or structure

ELECTROLIER OR EQUIPMENT IDENTIFICATION NUMBER:

12345 - 15'-0"

- 15'-0" — Mast arm length, if shown. Do not place on standard or structure.
- 12345 — Equipment number - Place on standard or structure. Existing equipment numbers are shown in parenthesis

CONDUIT AND CONDUCTOR IDENTIFICATION:

1½"C, 2#10, 15#14, 2 DLC

- 2#10, 15#14, 2 DLC — Number and size of conductors and cables
- 1½"C — Size of conduit in inches

Ø1, Ø2, Ø2P, etc.	Traffic phase identification for signal faces, detectors and phase diagrams
1 2 3	Project note numbers
A B C	Equipment description, installation or item numbers
1 2 3	Conduit run numbers

SIGNAL AND LIGHTING STANDARD (TYPICAL DESIGNATION):

19A - 3 - 100

- 100 — Wind velocity = 100 mph
- 3 — Case 3 arm loading
- 19A — Standard type
- Standard Plan sheet number
- Detail number or letter

MISCELLANEOUS EQUIPMENT

PROPOSED	EXISTING	
CMS	cms	Changeable message sign
		Closed circuit television camera
		Highway advisory radio pole and antenna
EMS	ems	Extinguishable message sign
M V	m v	Detection device M = Microwave sensor V = Video image sensor

WIRING DIAGRAM LEGEND

P	Pole
CB	Circuit breaker
A	Ampere
V	Volt
M	Metered
UM	Unmetered
NB	Neutral bus
GB	Ground bus
G	Equipment grounding conductor
N	Grounded conductor (Neutral)

- External conductor
- Conductor or bus
- Tie point
- Contactor coil
- Contactor, Contact NO
- Terminal blocks
- Contactor, Contact NC
- Enclosure bond
- Grounding electrode
- Circuit breaker
- Receptacle

PULL BOXES

PROPOSED EXISTING

Pull box-No. 5 unless otherwise indicated or noted.

3 — 9A(21)

Pull box-Additional designations or descriptions

- 3 = No. 3½ pull box
- 5 = No. 5 pull box
- 6 = No. 6 pull box
- 7 = No. 7 (Ceiling pull box)
- 8 = No. 8 (Pendant soffit pull box)
- 9 = No. 9 pull box
- 9A = No. 9A pull box

- (C) = Communications pull box
- (E) = Pull box with extension
- (S) = Sprinkler control pull box
- (21) = Anchor bolts and conduit for future installation of Type 21 Standard
- (T) = Traffic pull box

VEHICLE DETECTORS

5 J 9 U

- U = Upper
- L = Lower
- Slot number in input file
- Input file (I or J)
- Phase

PROPOSED	EXISTING	
		Type A detector loop. Outline of sawcut shown.
		Type B detector loop. Outline of sawcut shown.
		Type C detector loop. Outline of sawcut shown.
		Type D detector loop. Outline of sawcut shown.
		Type E detector loop. Outline of sawcut shown.
		Type Q detector loop. Outline of sawcut shown.
		Magnetic detector
DH	dh	Detector handhole
		Microwave or video detection zone

STATE OF CALIFORNIA
DEPARTMENT OF TRANSPORTATION

ELECTRICAL SYSTEMS (SYMBOLS AND ABBREVIATIONS)

NO SCALE

RSP ES-1C DATED OCTOBER 5, 2007 SUPERCEDES STANDARD PLAN ES-1C DATED MAY 1, 2006 - PAGE 402 OF THE STANDARD PLANS BOOK DATED MAY 2006.

REVISED STANDARD PLAN RSP ES-1C

2006 REVISED STANDARD PLAN RSP ES-1C

DIST	COUNTY	ROUTE	POST MILES TOTAL PROJECT	SHEET NO.	TOTAL SHEETS
04	Son	1	57.2	16	23

REGISTERED ELECTRICAL ENGINEER

October 5, 2007
PLANS APPROVAL DATE

REGISTERED PROFESSIONAL ENGINEER Jeffery G. McRae No. E14512 Exp. 6-30-08 ELECTRICAL STATE OF CALIFORNIA

The State of California or its officers or agents shall not be responsible for the accuracy or completeness of electronic copies of this plan sheet.

To accompany plans dated 8-23-10

LOOP INSTALLATION PROCEDURE

1. Loops shall be centered in lanes.
2. Saw slots in pavement for loop conductors as shown in details.
3. Distance between side of loop and a lead-in saw cut from adjacent detectors shall be 2'-0" minimum. Distance between lead-in saw cuts shall be 6" minimum.
4. Bottom of saw slot shall be smooth with no sharp edges.
5. Slots shall be washed until clean, blown out and thoroughly dried before installing loop conductors.
6. Adjacent loops on the same sensor unit channel shall be wound in opposite directions.
7. Identify and tag loop circuit pairs in the pull box with loop number, start (S) and finish (F) of conductor. Identify and tag lead-in-cable with sensor number and phase.
8. Install loop conductor in slot using a 3/16" to 1/4" thick wood paddle. Hold loop conductors with wood paddles (at the bottom of the sawed slot) during sealant placement.
9. No more than 2 twisted pairs shall be installed in one sawed slot.
10. Allow additional 5'-0" of slack length of conductor for the lead-in run to pull box.
11. The additional length of each conductor for each loop shall be twisted together into a pair (6 turns per 3'-4" minimum) before being placed in the slot and conduit leading to pull box.
12. Test each loop circuit for continuity, circuit resistance and insulation resistance at the pull box before filling slots.
13. Fill slots as shown in details.
14. Splice loop conductors to lead-in-cable. Splices shall be soldered.
15. End of lead-in-cable and Type 2 loop conductor shall be waterproofed prior to installing in conduit to prevent moisture from entering the cable.
16. Lead-in-cable shall not be spliced between the pull box and the controller cabinet terminals.
17. Test each loop circuit for continuity, circuit resistance and insulation resistance at the controller cabinet location.
18. Where loop conductors are not to be spliced to a lead-in-cable, the ends of the conductors shall be taped and waterproofed with electrical insulating coating.

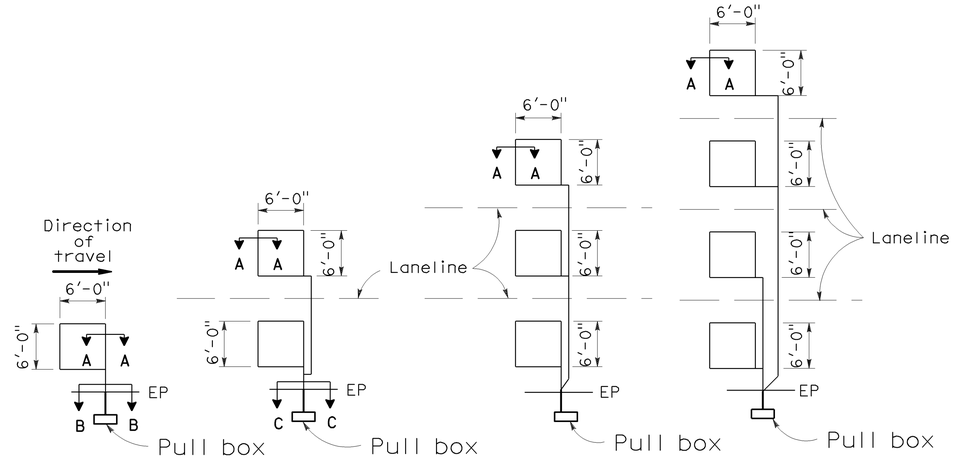

TYPE 1A INSTALLATION | TYPE 2A INSTALLATION | TYPE 3A INSTALLATION | TYPE 4A INSTALLATION

SAWCUT DETAILS

(Type A loop detector configurations illustrated)

1. 1A thru 4A = 1 Type A loop configuration in each lane.
2. 1B thru 4B = 1 Type B loop configuration in each lane.
3. 1C = 1 Type C loop configuration entering lanes as required.
4. 1D thru 4D = 1 Type D loop configuration in each lane.
5. 1E thru 4E = 1 Type E loop configuration in each lane.
6. 1Q thru 4Q = 1 Type Q loop configuration in each lane. (Use Type A, B, C, D, E or Q loop detector configurations only when specified or shown on plans)

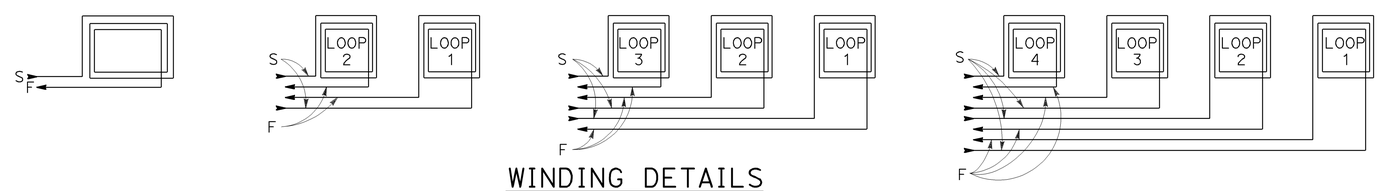

WINDING DETAILS

See Notes 6 and 7

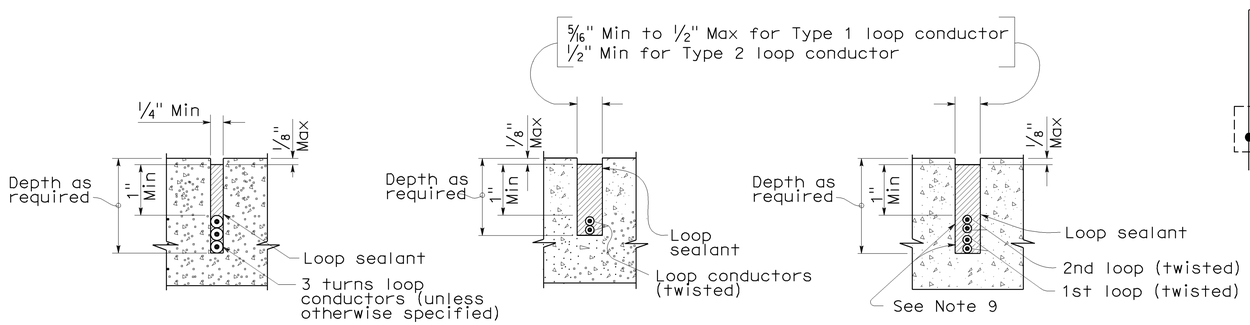

SECTION A-A | SECTION B-B | SECTION C-C

SLOT DETAILS - TYPE 1 AND TYPE 2 LOOP CONDUCTOR

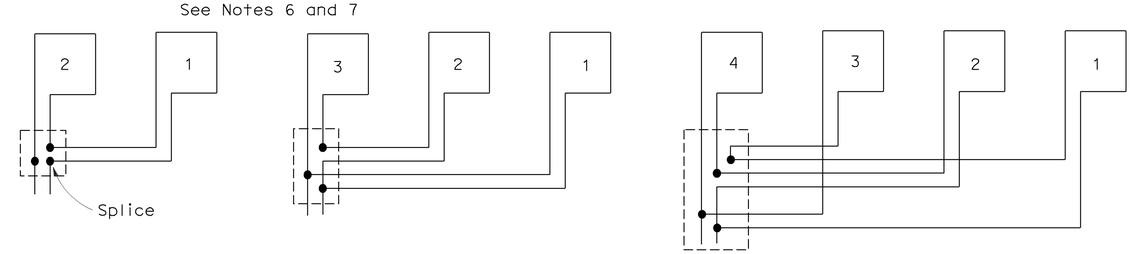

TYPICAL LOOP CONNECTIONS

(Dashed lines represent the pull box)

STATE OF CALIFORNIA
DEPARTMENT OF TRANSPORTATION

ELECTRICAL SYSTEMS (DETECTORS)

NO SCALE

RSP ES-5A DATED OCTOBER 5, 2007 SUPERCEDES STANDARD PLAN ES-5A DATED MAY 1, 2006 - PAGE 423 OF THE STANDARD PLANS BOOK DATED MAY 2006.

REVISED STANDARD PLAN RSP ES-5A

2006 REVISED STANDARD PLAN RSP ES-5A

8-17-07

DIST	COUNTY	ROUTE	POST MILES TOTAL PROJECT	SHEET NO.	TOTAL SHEETS
04	Son	1	57.2	17	23

Randell D. Hiatt
REGISTERED CIVIL ENGINEER

June 6, 2008
PLANS APPROVAL DATE

REGISTERED PROFESSIONAL ENGINEER
Randell D. Hiatt
No. C50200
Exp. 6-30-09
CIVIL
STATE OF CALIFORNIA

The State of California or its officers or agents shall not be responsible for the accuracy or completeness of electronic copies of this plan sheet.

To accompany plans dated 8-23-10

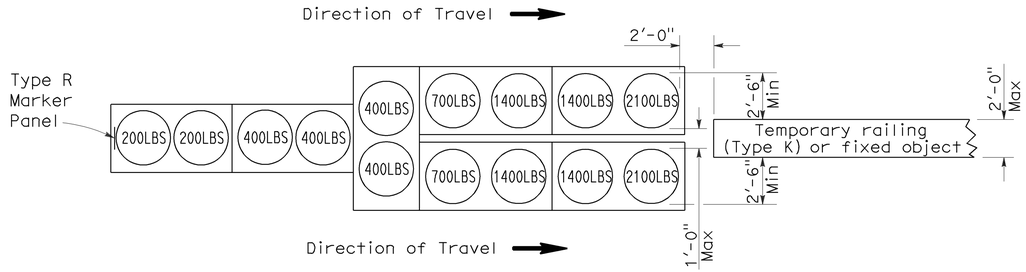

ARRAY 'TU14'

Approach speed 45 mph or more

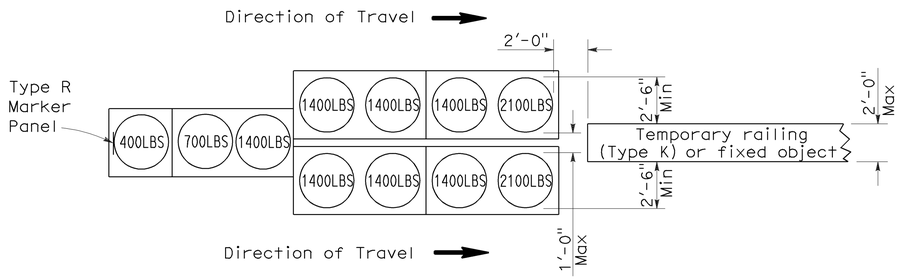

ARRAY 'TU11'

Approach speed less than 45 mph

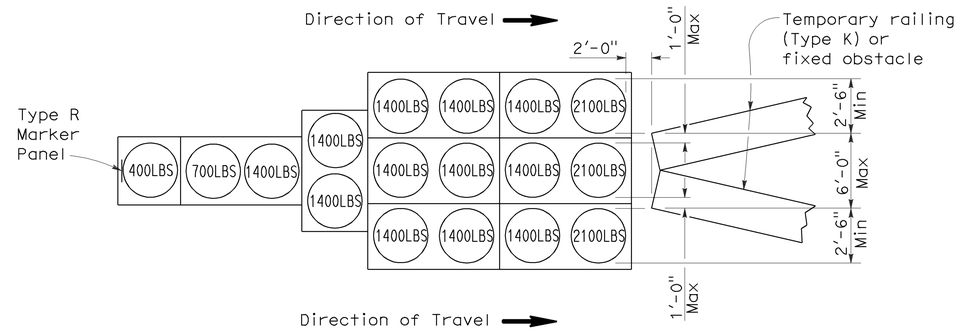

ARRAY 'TU17'

Approach speed less than 45 mph

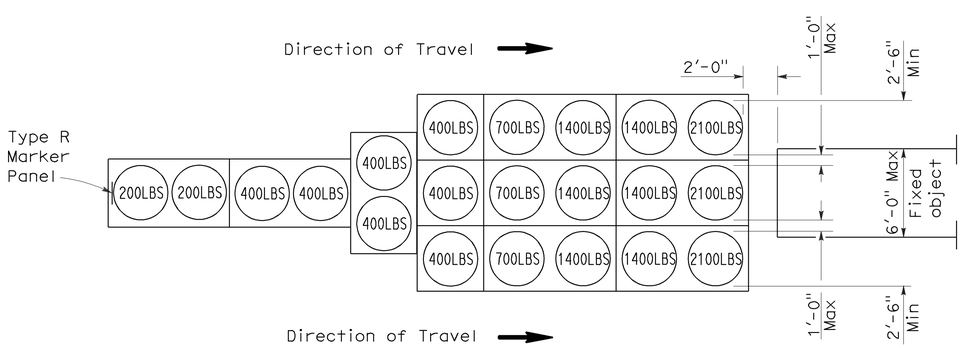

ARRAY 'TU21'

Approach speed 45 mph or more

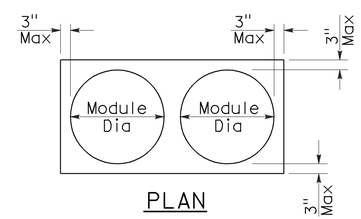

PLAN

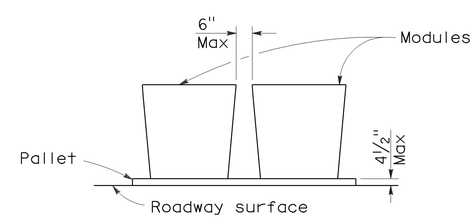

ELEVATION

CRASH CUSHION PALLET DETAIL

See Note 7

NOTES:

1. (XXX) Indicates sand filled module location and weight of sand in pounds for each module. Module spacing is based on the greater diameter of the module.
2. All sand weights are nominal.
3. Temporary crash cushion arrays shall not encroach on the traveled way.
4. Place the top of Type R marker panel 1" below the module lid.
5. Refer to Standard Plan A73B for marker details.
6. Approach speeds indicated conform to NCHRP 350 Report criteria.
7. Use of pallets is optional.

STATE OF CALIFORNIA
DEPARTMENT OF TRANSPORTATION

TEMPORARY CRASH CUSHION, SAND FILLED (UNIDIRECTIONAL)

NO SCALE

RSP T1A DATED JUNE 6, 2008 SUPERSEDES STANDARD PLAN T1A
DATED MAY 1, 2006 - PAGE 211 OF THE STANDARD PLANS BOOK DATED MAY 2006.

REVISED STANDARD PLAN RSP T1A

2006 REVISED STANDARD PLAN RSP T1A

5-15-08

DIST	COUNTY	ROUTE	POST MILES TOTAL PROJECT	SHEET NO.	TOTAL SHEETS
04	Son	1	57.2	18	23

Randell D. Hiatt
REGISTERED CIVIL ENGINEER

June 6, 2008
PLANS APPROVAL DATE

REGISTERED PROFESSIONAL ENGINEER
Randell D. Hiatt
No. C50200
Exp. 6-30-09
CIVIL
STATE OF CALIFORNIA

The State of California or its officers or agents shall not be responsible for the accuracy or completeness of electronic copies of this plan sheet.

To accompany plans dated 8-23-10

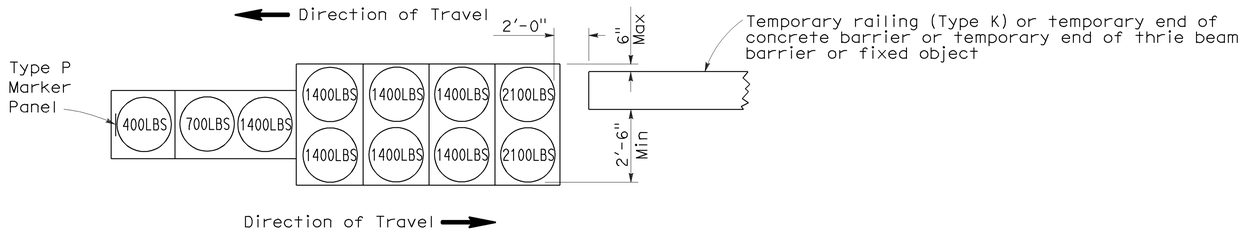

ARRAY 'TB11'

Approach speed less than 45 mph

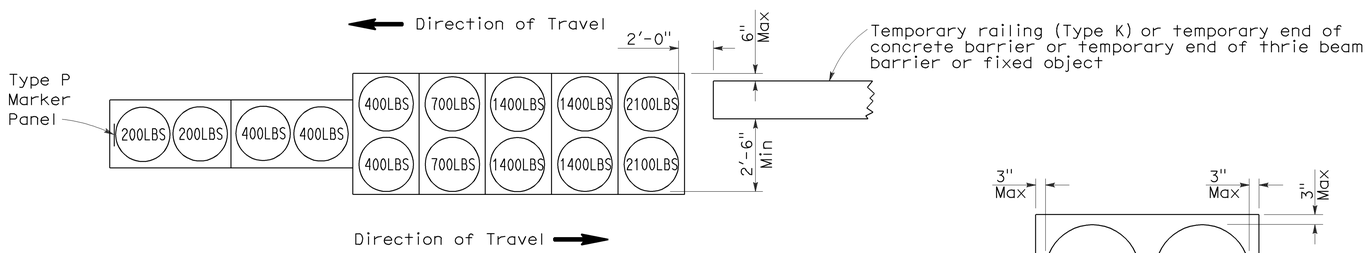

ARRAY 'TB14'

Approach speed 45 mph or more

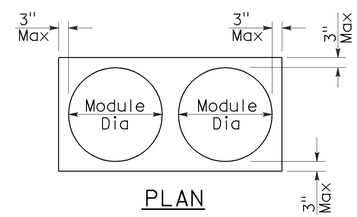

PLAN

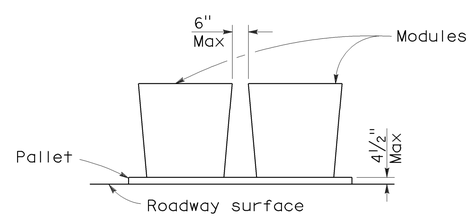

ELEVATION

CRASH CUSHION PALLET DETAIL

See Note 7

NOTES:

1. (XXX) Indicates sand filled module location and weight of sand in pounds for each module. Module spacing is based on the greater diameter of the module.
2. All sand weights are nominal.
3. Temporary crash cushion arrays shall not encroach on the traveled way.
4. Place the Type P marker panel so that the bottom of the panel rests upon the pallet.
5. Refer to Standard Plan A73B for marker details.
6. Approach speeds indicated conform to NCHRP 350 Report criteria.
7. Use of pallets is optional.

STATE OF CALIFORNIA
DEPARTMENT OF TRANSPORTATION

TEMPORARY CRASH CUSHION, SAND FILLED (BIDIRECTIONAL)

NO SCALE

RSP T1B DATED JUNE 6, 2008 SUPERSEDES STANDARD PLAN T1B
DATED MAY 1, 2006 - PAGE 212 OF THE STANDARD PLANS BOOK DATED MAY 2006.

REVISED STANDARD PLAN RSP T1B

2006 REVISED STANDARD PLAN RSP T1B

5-15-08

DIST	COUNTY	ROUTE	POST MILES TOTAL PROJECT	SHEET NO.	TOTAL SHEETS
04	Son	1	57.2	19	23

Randell D. Hiatt
REGISTERED CIVIL ENGINEER

June 6, 2008
PLANS APPROVAL DATE

REGISTERED PROFESSIONAL ENGINEER
Randell D. Hiatt
No. C50200
Exp. 6-30-09
CIVIL
STATE OF CALIFORNIA

The State of California or its officers or agents shall not be responsible for the accuracy or completeness of electronic copies of this plan sheet.

To accompany plans dated 8-23-10

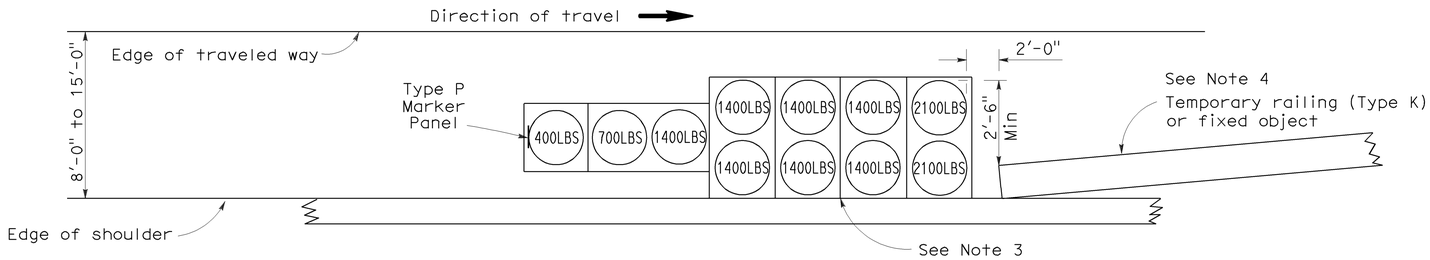

ARRAY 'TS11'

Approach speed less than 45 mph
See Note 9

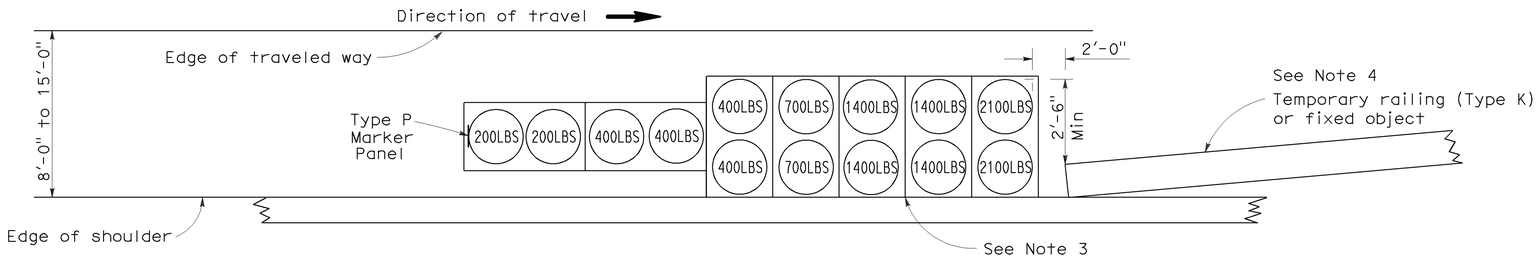

ARRAY 'TS14'

Approach speed 45 mph or more
See Note 9

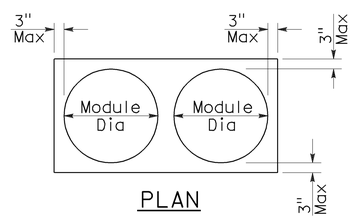

PLAN

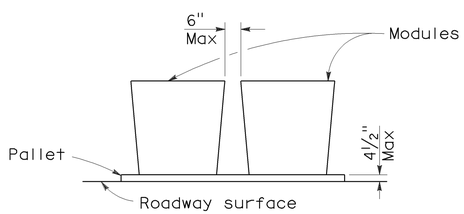

ELEVATION

CRASH CUSHION PALLET DETAIL

See Note 11

NOTES:

1. (XXX) Indicates sand filled module location and weight of sand in pounds for each module. Module spacing is based on the greater diameter of the module.
2. All sand weights are nominal.
3. The temporary crash cushion arrays shown on this plan shall be used only in locations where there will be traffic on one side of the temporary crash cushion array.
4. If the fixed object or approach end of the temporary railing is less than 15'-0" from the edge of traveled way, a temporary crash cushion is required in a construction or work zone.
5. Temporary crash cushion arrays shall not encroach on the traveled way.
6. Arrays for median shoulders shall conform to details shown on this plan for outside shoulders.
7. Place the Type P marker panel so that the bottom of the panel rests upon the pallet and faces traffic.
8. Refer to Standard Plan A73B for marker details.
9. For shoulder widths less than 8'-0", appropriate approved crash cushion protection, other than sand filled modules, shall be provided at fixed objects and at approach ends of temporary railing. The specific type of crash cushion shall be as shown on the project plans or as specified in the Special Provisions, or if not shown on the project plans or specified in the Special Provisions, shall be as approved by the Engineer.
10. Approach speeds indicated conform to NCHRP 350 Report criteria.
11. Use of pallets is optional.

STATE OF CALIFORNIA
DEPARTMENT OF TRANSPORTATION

TEMPORARY CRASH CUSHION, SAND FILLED (SHOULDER INSTALLATIONS)

NO SCALE

RSP T2 DATED JUNE 6, 2008 SUPERSEDES STANDARD PLAN T2
DATED MAY 1, 2006 - PAGE 213 OF THE STANDARD PLANS BOOK DATED MAY 2006.

REVISED STANDARD PLAN RSP T2

2006 REVISED STANDARD PLAN RSP T2

5-15-08

DIST	COUNTY	ROUTE	POST MILES TOTAL PROJECT	SHEET NO.	TOTAL SHEETS
04	Son	1	57.2	20	23

Robert B Schott
LICENSED LANDSCAPE ARCHITECT

April 3, 2009
PLANS APPROVAL DATE

LICENSED LANDSCAPE ARCHITECT
Robert B. Schott 3695
Robert B Schott
11-30-10
Renewal Date
2-25-09
Date
STATE OF CALIFORNIA

The State of California or its officers or agents shall not be responsible for the accuracy or completeness of electronic copies of this plan sheet.

To accompany plans dated 8-23-10

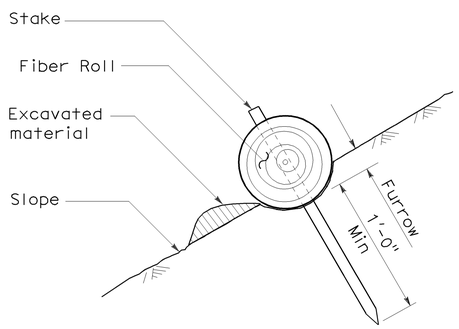

SECTION

TEMPORARY FIBER ROLL (TYPE 1)

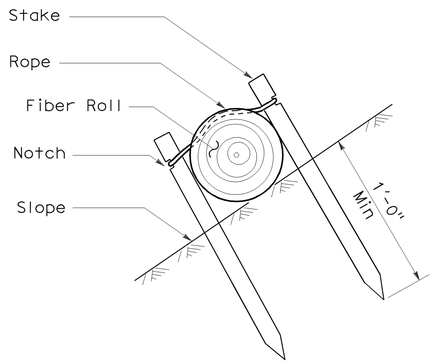

SECTION

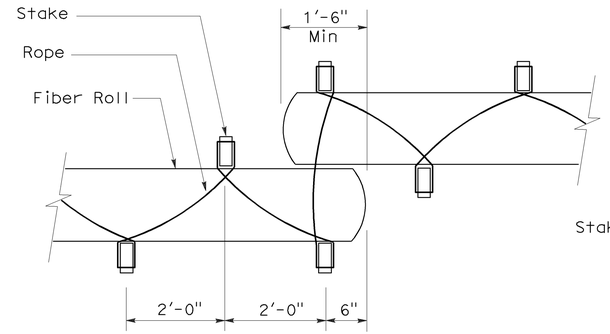

PLAN

TEMPORARY FIBER ROLL (TYPE 2)

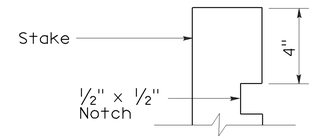

ELEVATION

STAKE NOTCH DETAIL

NOTES:

1. Temporary fiber roll spacing varies depending upon slope inclination.
2. Installations shown in the perspectives are for slope inclination of 10:1 and steeper.

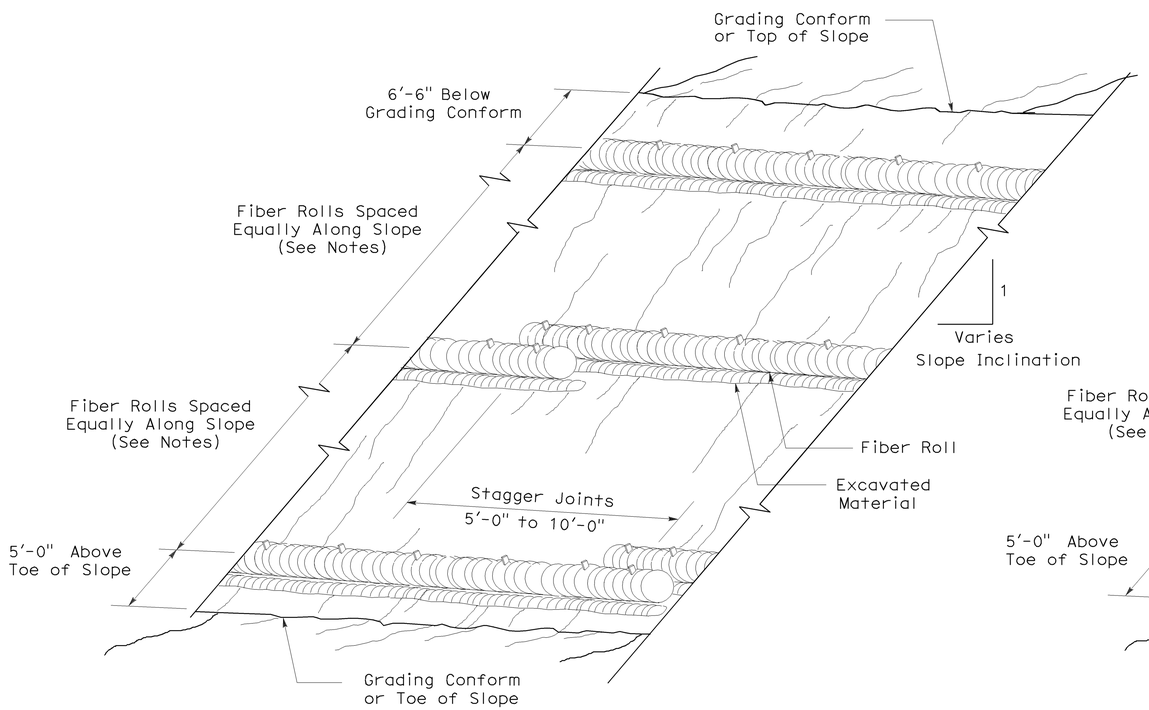

PERSPECTIVE

TEMPORARY FIBER ROLL (TYPE 1)

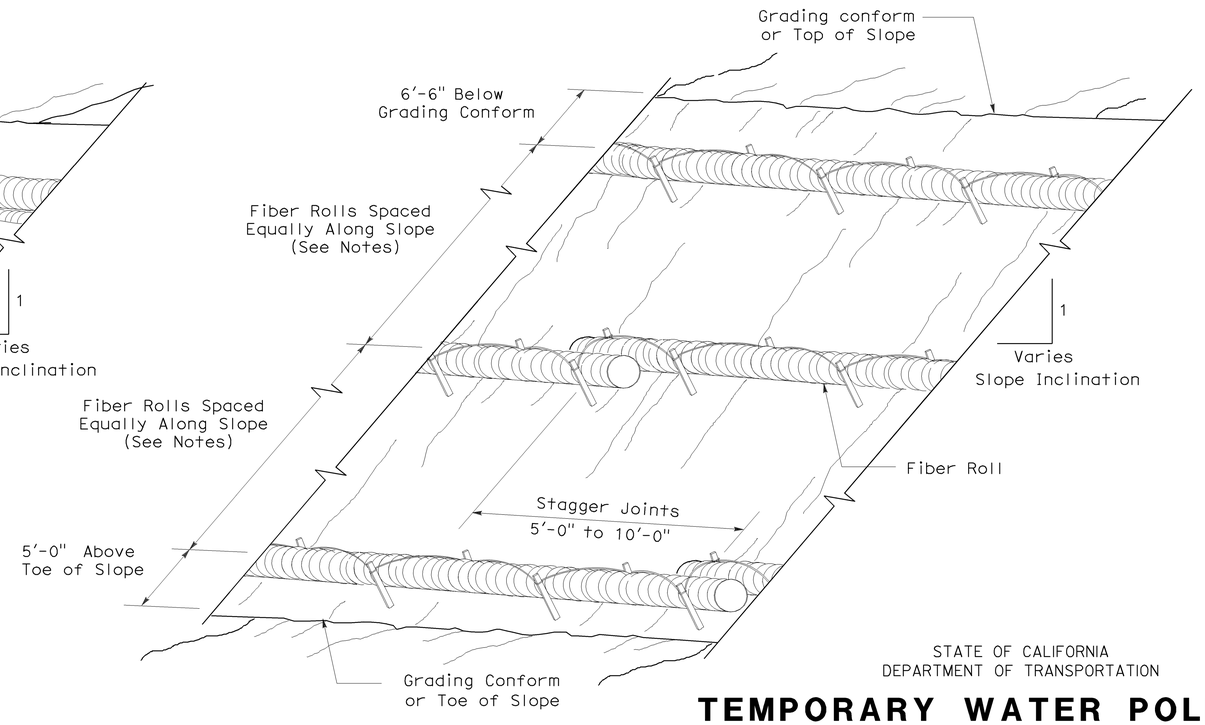

PERSPECTIVE

TEMPORARY FIBER ROLL (TYPE 2)

STATE OF CALIFORNIA
DEPARTMENT OF TRANSPORTATION

TEMPORARY WATER POLLUTION CONTROL DETAILS (TEMPORARY FIBER ROLL)

NO SCALE

RSP T56 DATED APRIL 3, 2009 SUPERSEDES STANDARD PLAN T56
DATED MAY 1, 2006 - PAGE 232 OF THE STANDARD PLANS BOOK DATED MAY 2006.

REVISED STANDARD PLAN RSP T56

2006 REVISED STANDARD PLAN RSP T56

2-23-09

DIST	COUNTY	ROUTE	POST MILES TOTAL PROJECT	SHEET NO.	TOTAL SHEETS
04	Son	1	57.2	21	23

Gregory A. Balzer
LICENSED LANDSCAPE ARCHITECT

April 3, 2009
PLANS APPROVAL DATE

LICENSED LANDSCAPE ARCHITECT
Gregory A. Balzer 2576
Signature
02-28-11
Renewal Date
03-04-09
Date
STATE OF CALIFORNIA

The State of California or its officers or agents shall not be responsible for the accuracy or completeness of electronic copies of this plan sheet.

To accompany plans dated 8-23-10

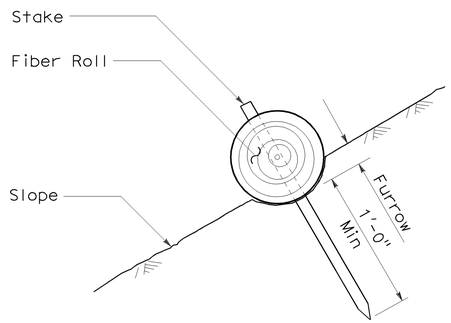

SECTION

FIBER ROLL (TYPE 1)

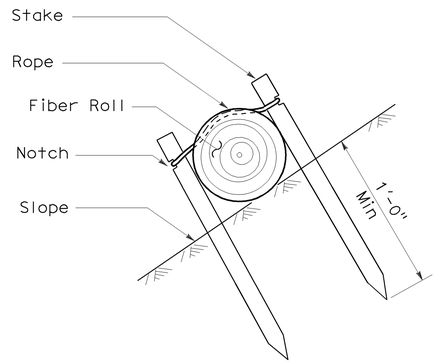

SECTION

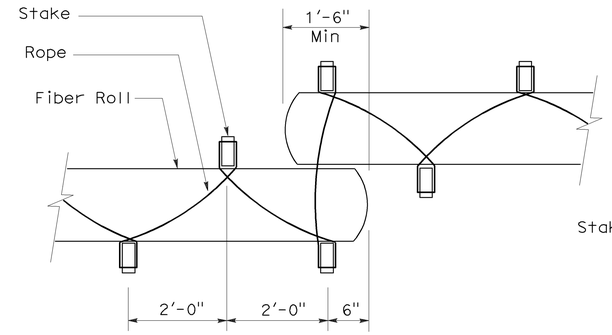

PLAN

FIBER ROLL (TYPE 2)

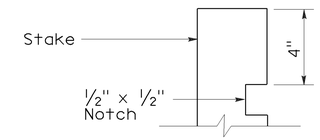

ELEVATION

STAKE NOTCH DETAIL

NOTES:

1. Fiber roll spacing varies depending upon slope inclination.
2. Installations shown in the perspectives are for slope inclination of 10:1 and steeper.

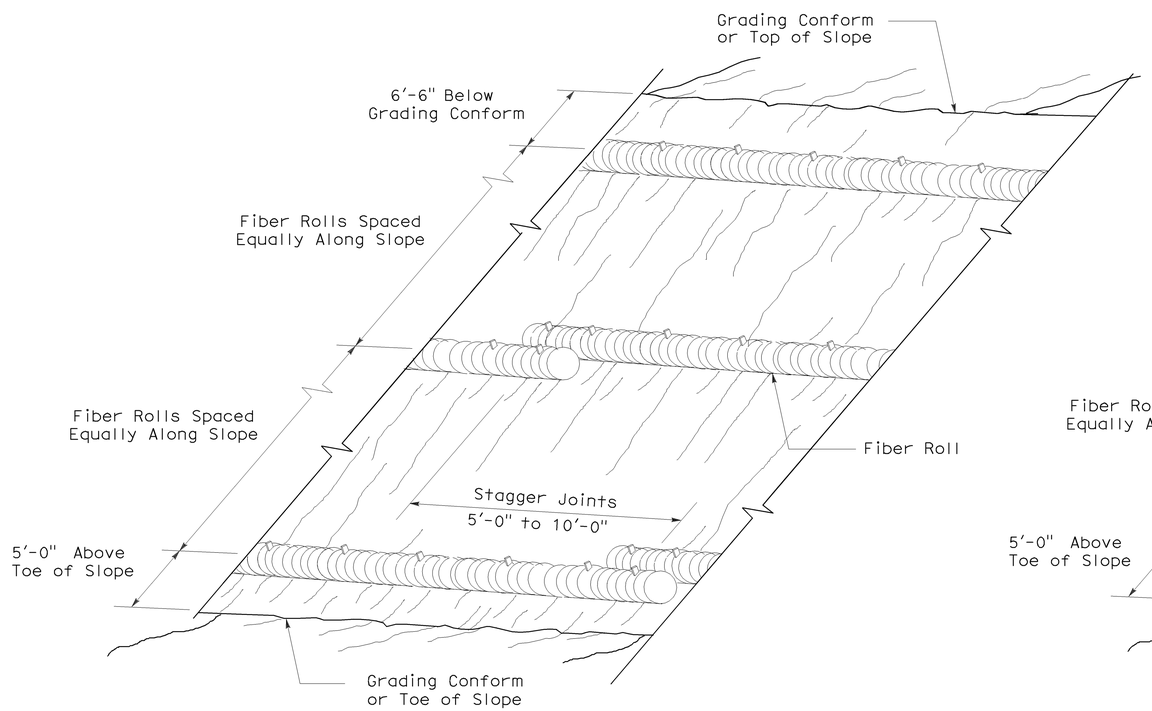

PERSPECTIVE

FIBER ROLL (TYPE 1)

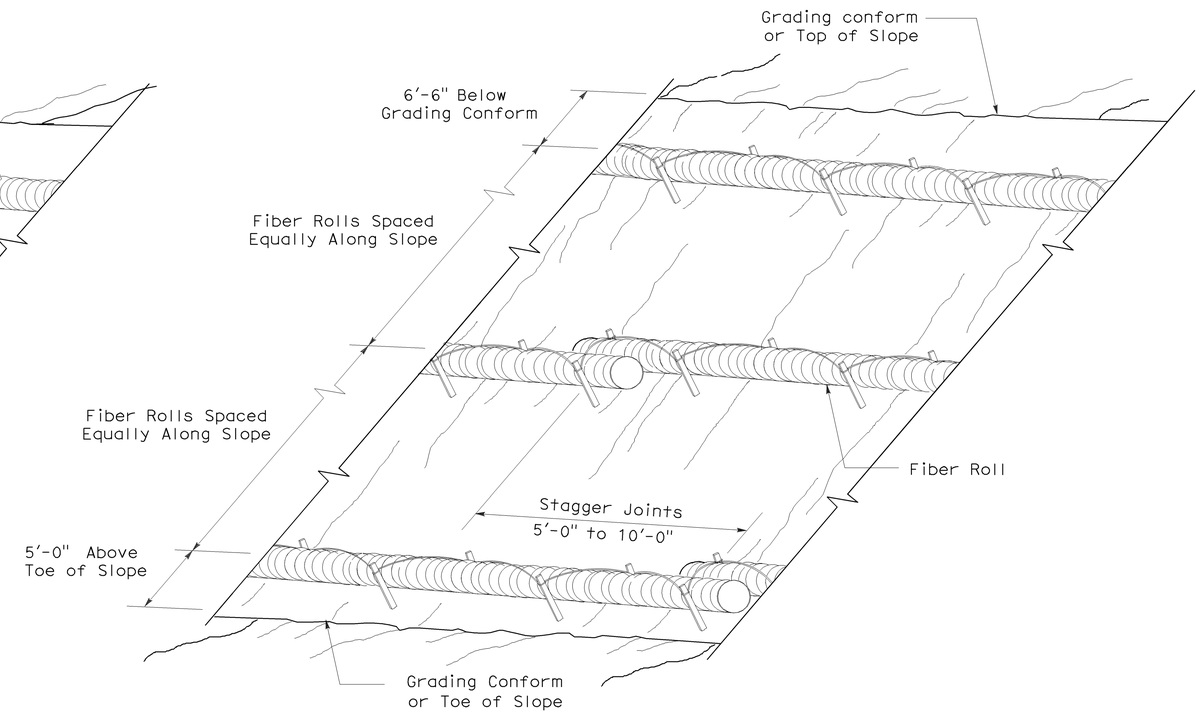

PERSPECTIVE

FIBER ROLL (TYPE 2)

STATE OF CALIFORNIA
DEPARTMENT OF TRANSPORTATION

EROSION CONTROL DETAILS (FIBER ROLL)

NO SCALE

RNSP H51 DATED APRIL 3, 2009 SUPERSEDES NSP H51 DATED DECEMBER 1, 2006 THAT SUPPLEMENTS THE STANDARD PLANS BOOK DATED MAY 2006.

REVISED NEW STANDARD PLAN RNSP H51

2006 REVISED NEW STANDARD PLAN RNSP H51

3-4-09

DIST	COUNTY	ROUTE	POST MILES TOTAL PROJECT	SHEET NO.	TOTAL SHEETS
04	Son	1	57.2	22	23

Gregory A. Balzer
LICENSED LANDSCAPE ARCHITECT

June 5, 2009
PLANS APPROVAL DATE

LICENSED LANDSCAPE ARCHITECT
Gregory A. Balzer 2576
Signature
2-28-11
Renewal Date
5-14-09
Date
STATE OF CALIFORNIA

The State of California or its officers or agents shall not be responsible for the accuracy or completeness of electronic copies of this plan sheet.

To accompany plans dated 8-23-10

NOTE:

1. Fiber Roll/Compost Sock shown for reference purposes only.
2. If transverse rolled erosion control product joints are required on slopes, see Detail B.

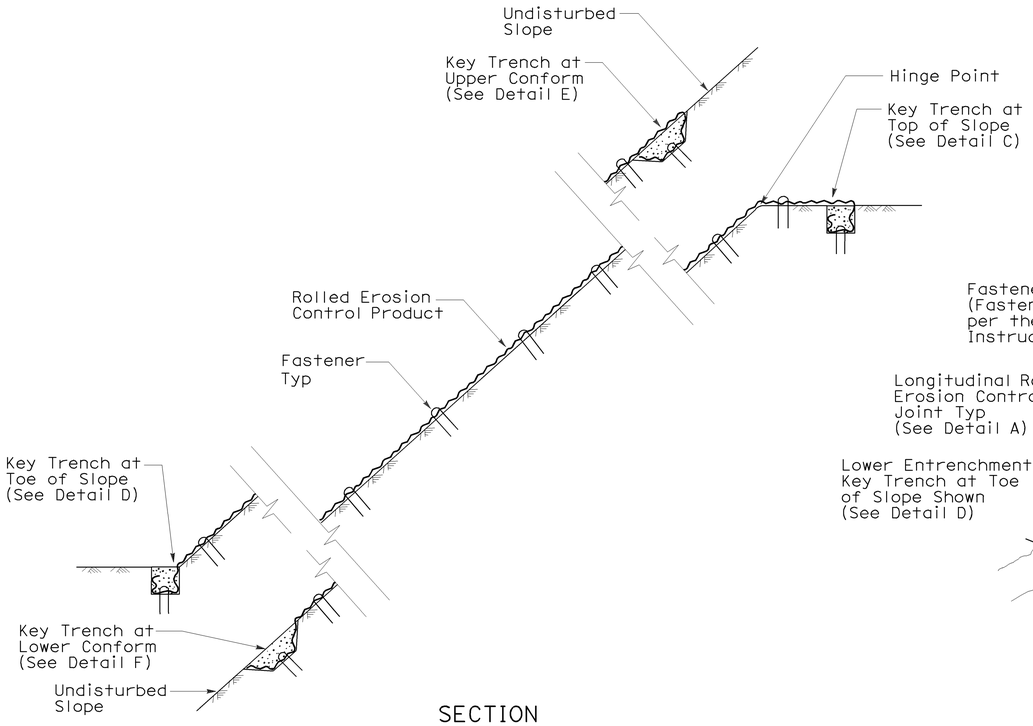

SECTION

ROLLED EROSION CONTROL PRODUCT
ON SLOPE WITH VARIOUS KEY ENTRENCHMENTS

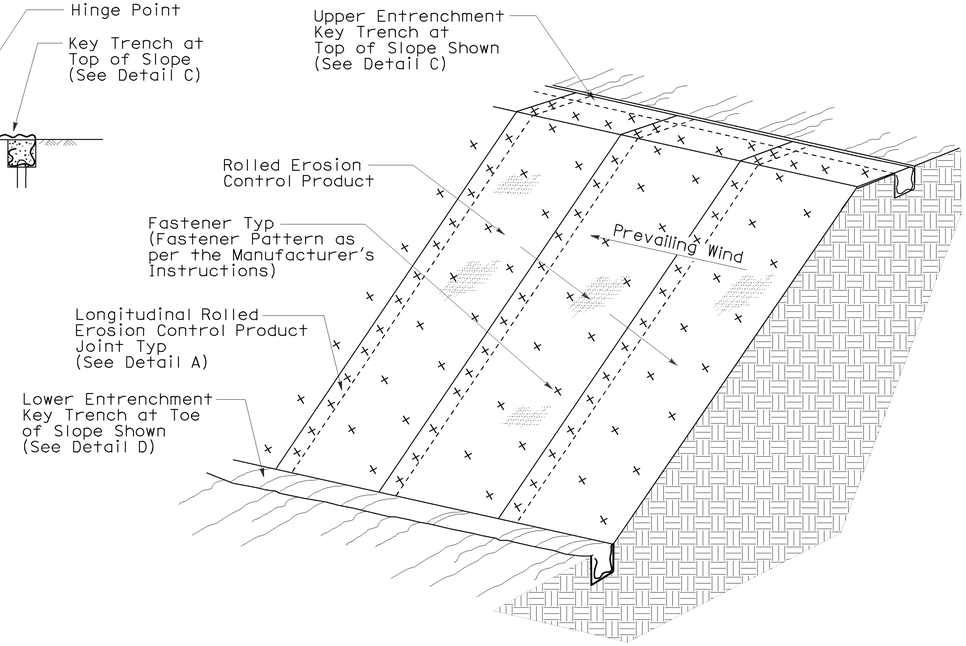

ISOMETRIC

ROLLED EROSION CONTROL PRODUCT
ON SLOPE

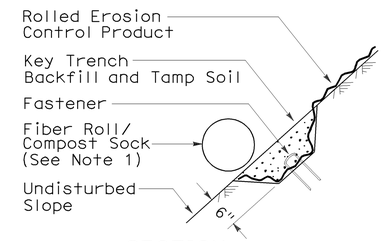

SECTION

DETAIL F
KEY TRENCH AT
LOWER CONFORM

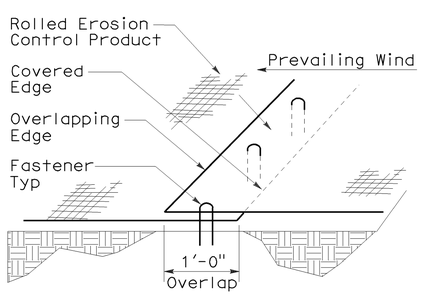

PERSPECTIVE

DETAIL A
LONGITUDINAL ROLLED EROSION
CONTROL PRODUCT JOINT

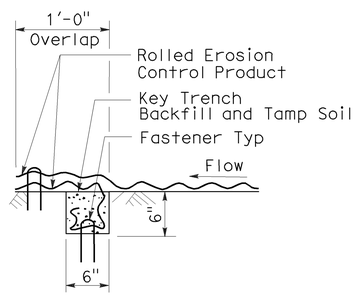

SECTION

DETAIL B
TRANSVERSE ROLLED EROSION
CONTROL PRODUCT JOINT

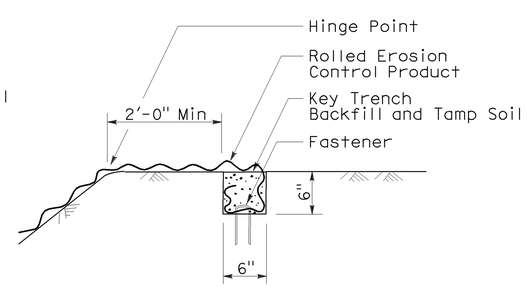

SECTION

DETAIL C
KEY TRENCH AT
TOP OF SLOPE

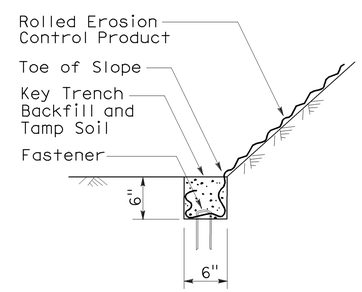

SECTION

DETAIL D
KEY TRENCH AT
TOE OF SLOPE

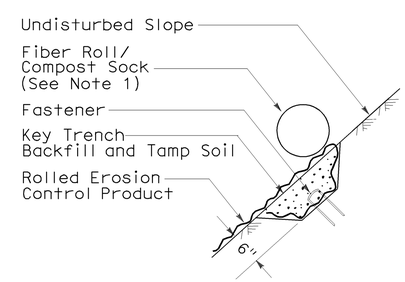

SECTION

DETAIL E
KEY TRENCH AT
UPPER CONFORM

STATE OF CALIFORNIA
DEPARTMENT OF TRANSPORTATION

ROLLED EROSION CONTROL PRODUCT

NO SCALE

NSP H53 DATED JUNE 5, 2009 SUPPLEMENTS
THE STANDARD PLANS BOOK DATED MAY 2006.

NEW STANDARD PLAN NSP H53

2006 NEW STANDARD PLAN NSP H53

3-4-09

DIST	COUNTY	ROUTE	POST MILES TOTAL PROJECT	SHEET NO.	TOTAL SHEETS
04	Son	1	57.2	23	23

LICENSED LANDSCAPE ARCHITECT

April 3, 2009
PLANS APPROVAL DATE

LICENSED LANDSCAPE ARCHITECT
Robert B. Schott 3695
Signature
11-30-10
Renewal Date
2-25-09
Date
STATE OF CALIFORNIA

The State of California or its officers or agents shall not be responsible for the accuracy or completeness of electronic copies of this plan sheet.

To accompany plans dated 8-23-10

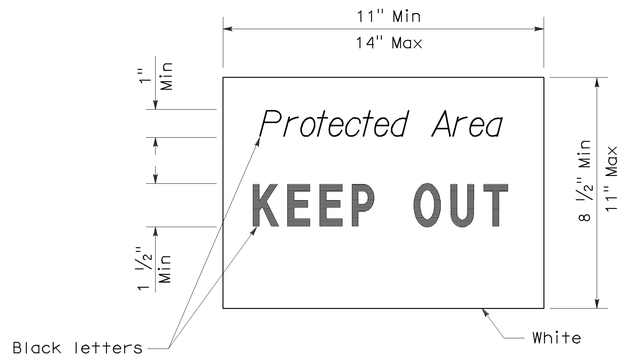

SIGN DETAIL

NOTE:

1. Temporary silt fence and temporary straw bale barrier shown for reference purposes only.

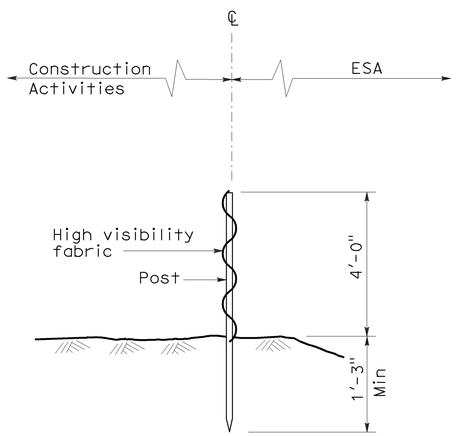

SECTION
TEMPORARY FENCE (TYPE ESA)

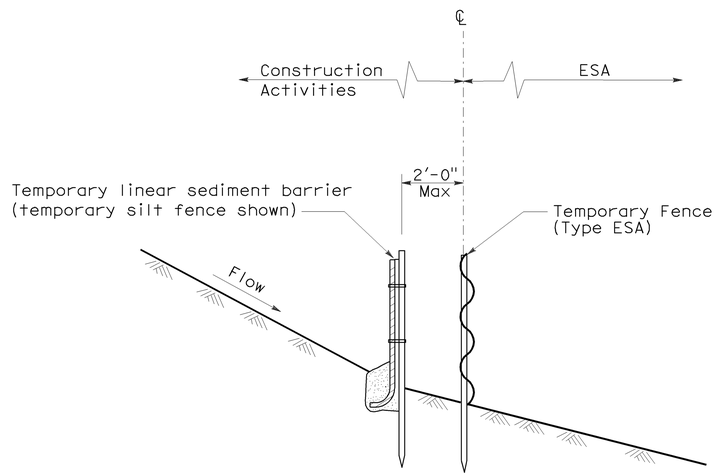

SECTION
PLACEMENT DETAIL
FOR TEMPORARY LINEAR SEDIMENT BARRIER
USED WITH TEMPORARY
FENCE (TYPE ESA)
(See Note 1)

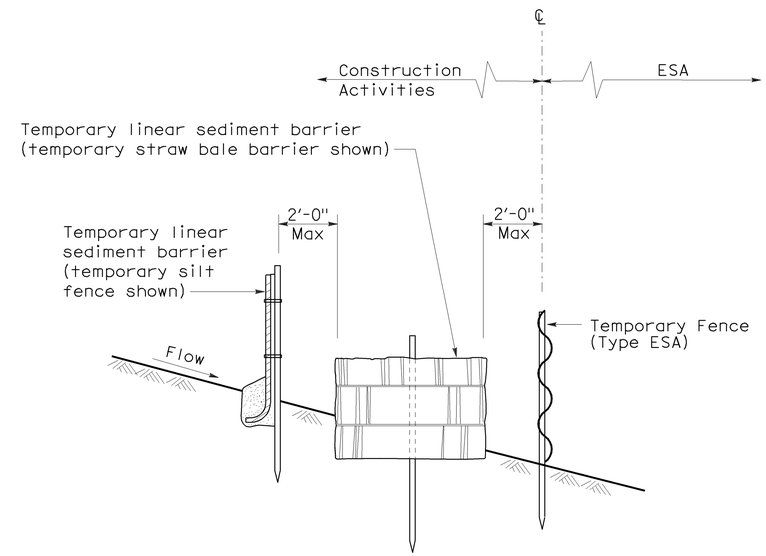

SECTION
PLACEMENT DETAIL
FOR TEMPORARY SILT FENCE
AND TEMPORARY STRAW BALE BARRIER
USED WITH TEMPORARY FENCE (TYPE ESA)
(See Note 1)

STATE OF CALIFORNIA
DEPARTMENT OF TRANSPORTATION

TEMPORARY WATER POLLUTION CONTROL DETAILS [TEMPORARY FENCE (TYPE ESA)]

NO SCALE

NSP T65 DATED APRIL 3, 2009 SUPPLEMENTS
THE STANDARD PLANS BOOK DATED MAY 2006.

NEW STANDARD PLAN NSP T65

2006 NEW STANDARD PLAN NSP T65