Dist	COUNTY	ROUTE	POST MILES TOTAL PROJECT	SHEET No.	TOTAL SHEETS
05	SLO,Mon	101	63.2/R69.3, R0.0/R1.9	2	858

Peter Chander 04-18-16
REGISTERED CIVIL ENGINEER DATE

5-02-16
PLANS APPROVAL DATE

REGISTERED PROFESSIONAL ENGINEER
PETER CHANDER
No. 63988
Exp. 9/30/16
CIVIL
STATE OF CALIFORNIA

THE STATE OF CALIFORNIA OR ITS OFFICERS OR AGENTS SHALL NOT BE RESPONSIBLE FOR THE ACCURACY OR COMPLETENESS OF SCANNED COPIES OF THIS PLAN SHEET.

INDEX OF PLANS

SHEET No.	DESCRIPTION
1	TITLE AND LOCATION MAP
2	INDEX OF PLANS
3-35	TYPICAL CROSS SECTIONS
36	KEY MAP AND LINE INDEX
37-67	LAYOUTS
68-128	PROFILES AND SUPERELEVATION DIAGRAMS
129-164	CONSTRUCTION DETAILS
165-178	DRAINAGE, CONTOUR GRADING AND UTILITY PLANS
179-236	DRAINAGE PROFILES, DETAILS AND QUANTITIES
237	CONSTRUCTION AREA SIGNS
238-240	MOTORIST INFORMATION PLAN AND QUANTITIES
241-300	STAGE CONSTRUCTION AND DETAILS
301-378	TRAFFIC HANDLING PLANS AND QUANTITIES
379-382	BICYCLE DETOUR PLANS AND QUANTITIES
383-414	PAVEMENT DELINEATION AND SIGN PLANS AND QUANTITIES
415-433	SIGN DETAILS AND QUANTITIES
434-452	SUMMARY OF QUANTITIES
453-456	RETAINING WALL PLAN AND QUANTITIES
457	EROSION CONTROL LEGEND
458-486	EROSION CONTROL PLAN
487	EROSION CONTROL DETAILS AND QUANTITIES
488-500	ELECTRICAL PLANS
501-629	REVISED STANDARD PLANS

1 STRUCTURE PLANS

630-645	SOUTH CAMP ROBERTS OH (WIDEN) Br No. 49-0078L/R
646-676	SOUTH SAN MIGUEL UC Br No. 49-0162L
677-709	SOUTH SAN MIGUEL UC (WIDEN) Br No. 49-0162R
710-740	10th STREET UC (WIDEN) Br No. 49-0163L/R
741-763	NORTH SAN MIGUEL UC (WIDEN) Br No. 49-0164L
764-779	NORTH SAN MIGUEL UC (WIDEN) Br No. 49-0164R
780-808	SAN MARCOS CREEK Br (REPLACE) Br No. 49-0263L
809-836	SAN MARCOS CREEK Br (REPLACE) Br No. 49-0263R
837-858	RETAINING WALL POST MILE 65.08 Br No. 49E0023

THE STANDARD PLANS LIST APPLICABLE TO THIS CONTRACT IS INCLUDED IN THE NOTICE TO BIDDERS AND SPECIAL PROVISIONS BOOK.

1 **REPLACED PER ADDENDUM No. 1 DATED SEPTEMBER 2, 2016**

INDEX OF PLANS

IOP-1

STATE OF CALIFORNIA - DEPARTMENT OF TRANSPORTATION
Caltrans® 06-DESIGN

FUNCTIONAL SUPERVISOR: ROBERTO BANDA
CALCULATED-DESIGNED BY: PETER CHANDER
CHECKED BY: HAL KENYON
REVISED BY / DATE REVISED

LAST REVISION 05-06-16 | DATE PLOTTED => 24-AUG-2016 | TIME PLOTTED => 16:55

Dist	COUNTY	ROUTE	POST MILES TOTAL PROJECT	SHEET No.	TOTAL SHEETS
05	SLO,Mon	101	63.2/R69.3, R0.0/R1.9	25	858

REGISTERED CIVIL ENGINEER 04-18-16 DATE

5-2-16
PLANS APPROVAL DATE

REGISTERED PROFESSIONAL ENGINEER PETER CHANDER No. 63988 Exp. 9/30/16 CIVIL STATE OF CALIFORNIA

THE STATE OF CALIFORNIA OR ITS OFFICERS OR AGENTS SHALL NOT BE RESPONSIBLE FOR THE ACCURACY OR COMPLETENESS OF SCANNED COPIES OF THIS PLAN SHEET.

EXISTING STRUCTURAL SECTION

[Ex] 0.40′ AC
0.50′ CTB
0.50′ AS

STRUCTURAL SECTIONS

[T] 0.20′ RHMA-G
0.30′ HMA (TYPE A)
0.50′ LCB
0.90′ Cl 1 AS

[S] 0.20′ RHMA-G
0.30′ HMA (TYPE A)
0.50′ Cl 2 AB
0.90′ Cl 1 AS

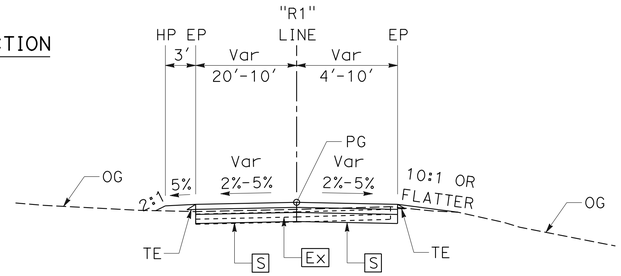

"R1" Sta 94+50 TO 98+50

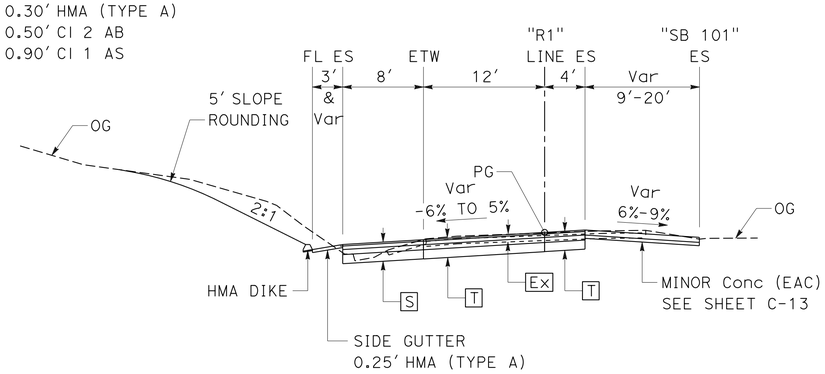

"R1" Sta 92+72 TO 94+50

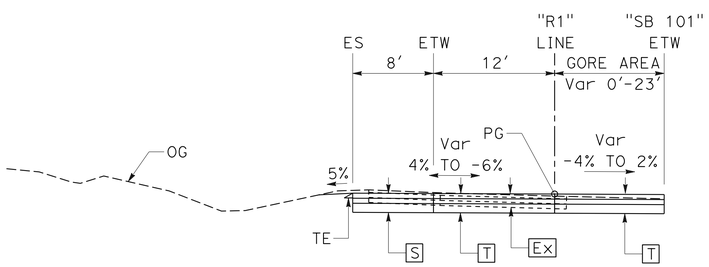

"R1" Sta 87+00 TO 92+72

RAMP R1
SB ON-RAMP FROM CEMETERY Rd

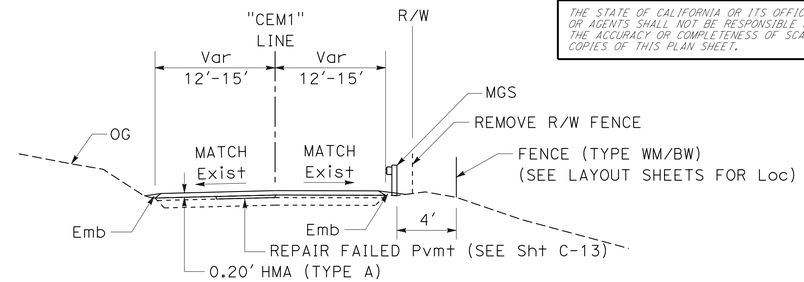

CEMETERY RD

"CEM1" Sta 89+03.83 TO 142+50.00

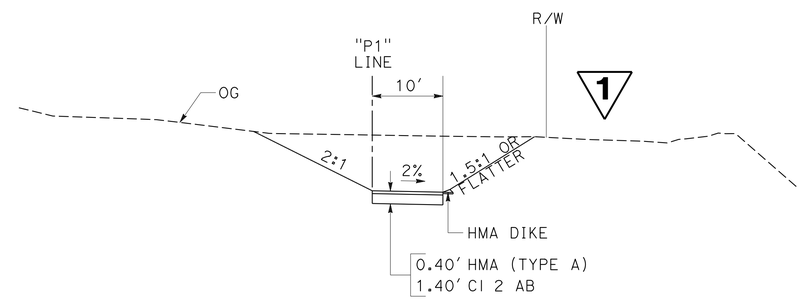

DRAINAGE OUTLET ACCESS ROAD

"P1" Sta 0+00 TO 1+85

(SEE SHEET L-3)

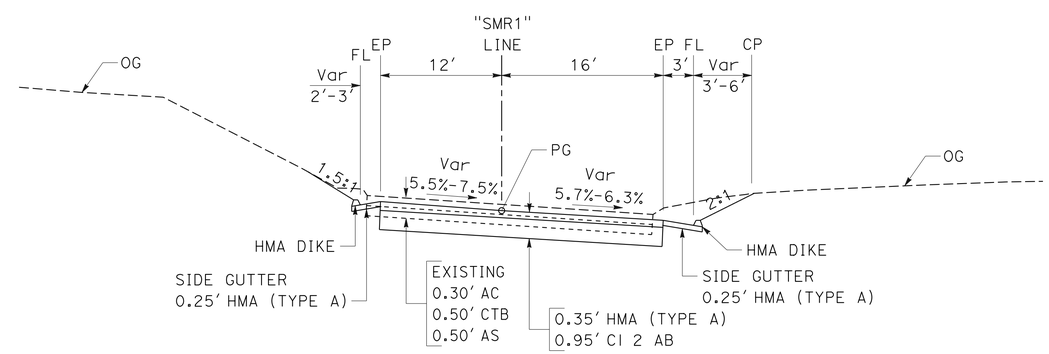

SAN MARCOS ROAD

"SMR1" Sta 53+00.00 TO 54+58.74

1 REPLACED PER ADDENDUM No. 1 DATED SEPTEMBER 2, 2016

TYPICAL CROSS SECTIONS

NO SCALE

X-23

STATE OF CALIFORNIA - DEPARTMENT OF TRANSPORTATION
Caltrans 06-DESIGN

FUNCTIONAL SUPERVISOR: ROBERTO BANDA
CALCULATED-DESIGNED BY: PETER CHANDER
CHECKED BY: HAL KENYON
REVISED BY / DATE REVISED

LAST REVISION 02-01-16
DATE PLOTTED => 24-AUG-2016
TIME PLOTTED => 16:55

Dist	COUNTY	ROUTE	POST MILES TOTAL PROJECT	SHEET No.	TOTAL SHEETS
05	SLO,Mon	101	63.2/R69.3, R0.0/R1.9	39	858

REGISTERED CIVIL ENGINEER 04-18-16 DATE

5-2-16
PLANS APPROVAL DATE

REGISTERED PROFESSIONAL ENGINEER PETER CHANDER No. 63988 Exp. 9/30/16 CIVIL STATE OF CALIFORNIA

THE STATE OF CALIFORNIA OR ITS OFFICERS OR AGENTS SHALL NOT BE RESPONSIBLE FOR THE ACCURACY OR COMPLETENESS OF SCANNED COPIES OF THIS PLAN SHEET.

NOTE:

FOR ACCURATE RIGHT OF WAY DATA, CONTACT RIGHT OF WAY ENGINEERING AT THE DISTRICT OFFICE.

CURVE DATA

No.	R	Δ	T	L
(4)	5000.00′	06°53′23.9″	301.00′	601.26′

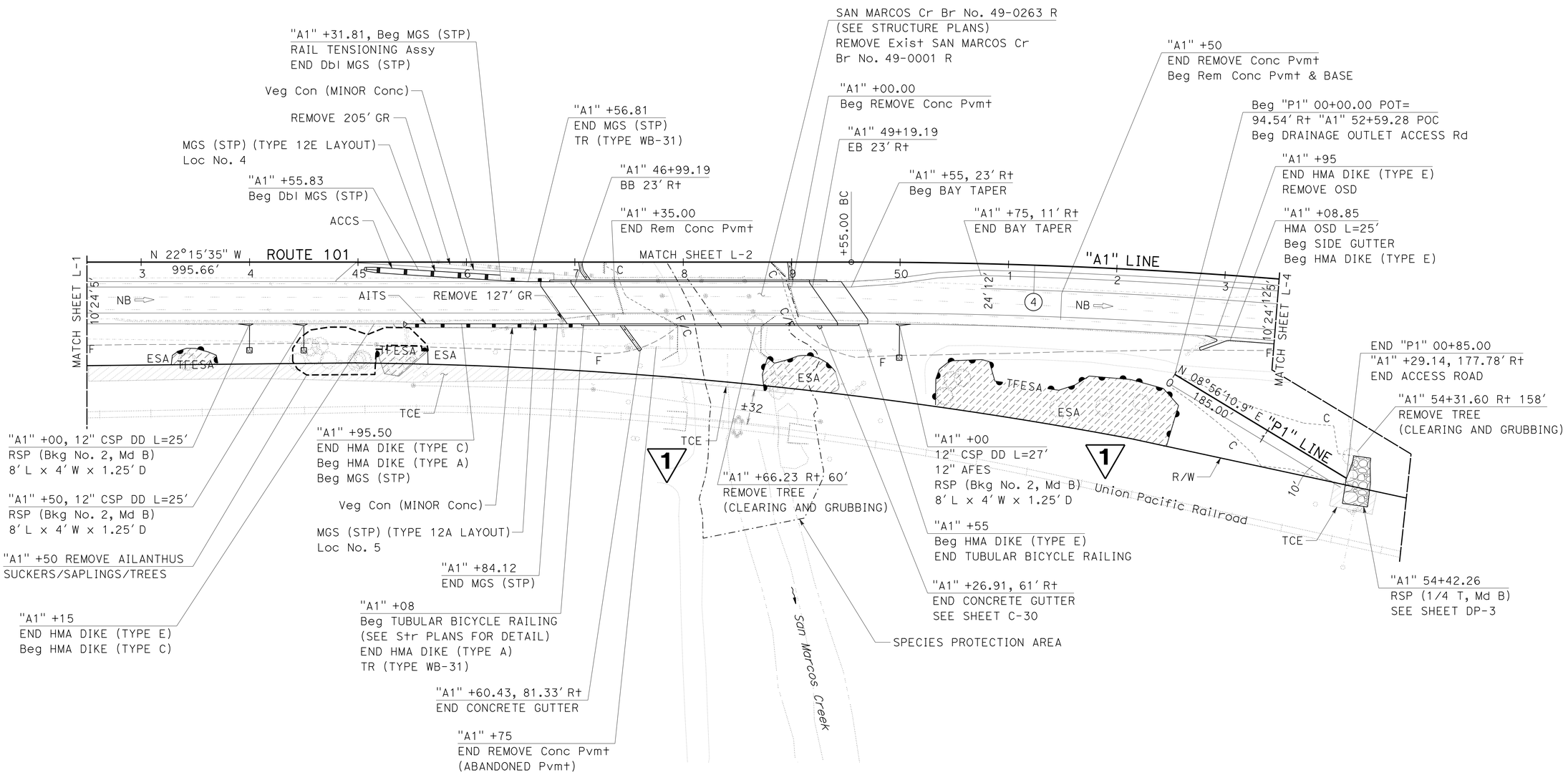

1 **REPLACED PER ADDENDUM No. 1 DATED SEPTEMBER 2, 2016**

LAYOUT
SCALE: 1" = 50′

L-3

STATE OF CALIFORNIA - DEPARTMENT OF TRANSPORTATION
Caltrans 06-DESIGN

FUNCTIONAL SUPERVISOR: ROBERTO BANDA
CALCULATED-DESIGNED BY: PETER CHANDER
CHECKED BY: HAL KENYON
REVISED BY / DATE REVISED

LAST REVISION 05-01-16 | DATE PLOTTED => 24-AUG-2016 | TIME PLOTTED => 16:55

Dist	COUNTY	ROUTE	POST MILES TOTAL PROJECT	SHEET No.	TOTAL SHEETS
05	SLO,Mon	101	63.2/R69.3, R0.0/R1.9	42	858

REGISTERED CIVIL ENGINEER 04-18-16 DATE

5-2-16
PLANS APPROVAL DATE

REGISTERED PROFESSIONAL ENGINEER PETER CHANDER No. 63988 Exp. 9/30/16 CIVIL STATE OF CALIFORNIA

THE STATE OF CALIFORNIA OR ITS OFFICERS OR AGENTS SHALL NOT BE RESPONSIBLE FOR THE ACCURACY OR COMPLETENESS OF SCANNED COPIES OF THIS PLAN SHEET.

NOTE:

FOR ACCURATE RIGHT OF WAY DATA, CONTACT RIGHT OF WAY ENGINEERING AT THE DISTRICT OFFICE.

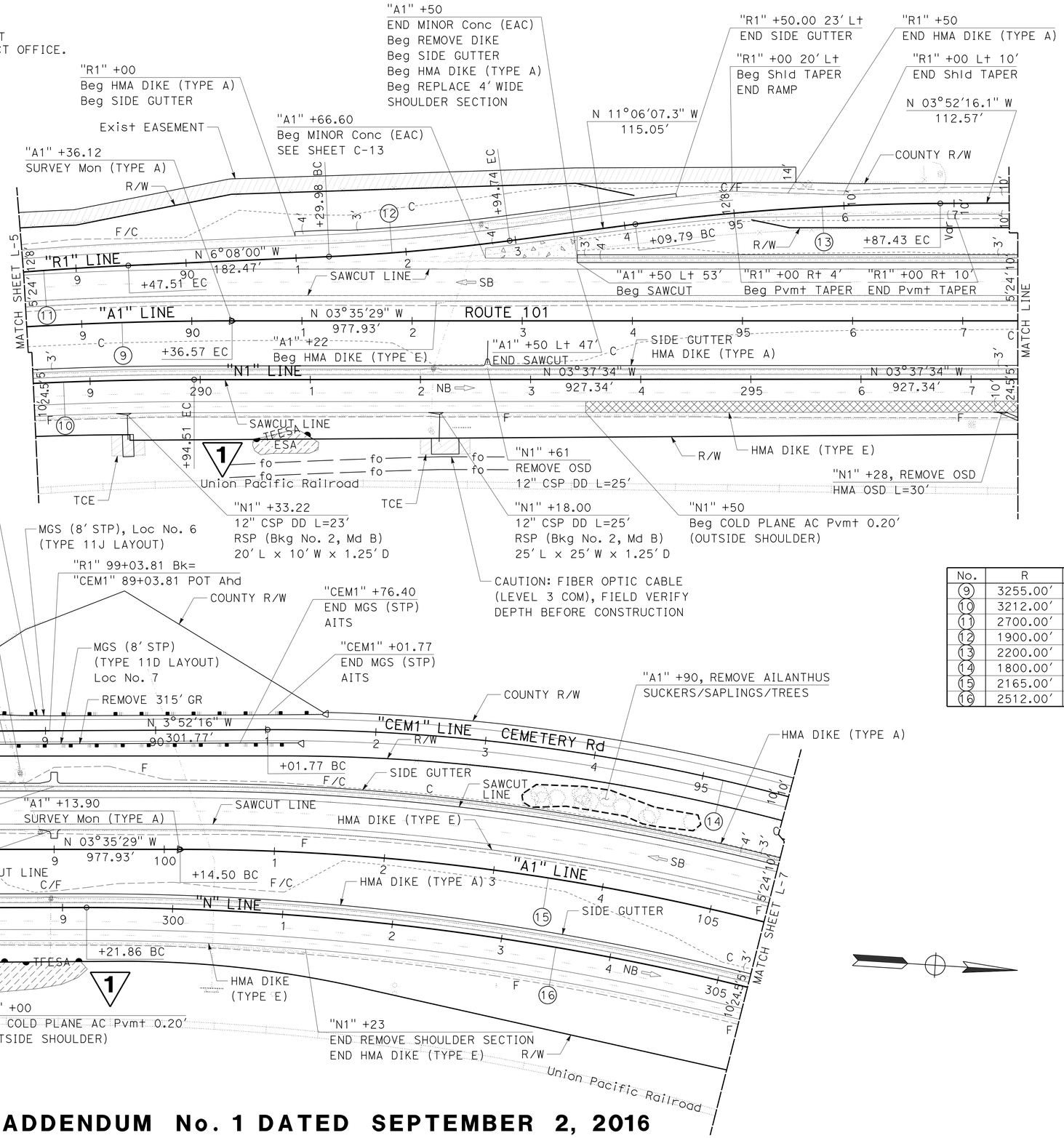

CURVE DATA

No.	R	Δ	T	L
9	3255.00'	17°00'13"	486.57'	965.98
10	3212.00'	15°55'05.6"	449.08'	892.37'
11	2700.00'	03°24'20.3"	80.27'	160.49'
12	1900.00'	04°58'07.1"	82.43'	164.77'
13	2200.00'	07°13'51.1"	139.01'	277.65'
14	1800.00'	22°44'40.8"	362.04'	714.54'
15	2165.00'	22°14'05.8"	425.44'	840.18'
16	2512.00'	20°56'53.6"	464.40'	918.43'

1 REPLACED PER ADDENDUM No. 1 DATED SEPTEMBER 2, 2016

LAYOUT

SCALE: 1" = 50'

L-6

REVISED BY | DATE REVISED
PETER CHANDER | HAL KENYON
CALCULATED-DESIGNED BY | CHECKED BY
FUNCTIONAL SUPERVISOR | ROBERTO BANDA

STATE OF CALIFORNIA - DEPARTMENT OF TRANSPORTATION
Caltrans® 06-DESIGN

LAST REVISION 05-01-16 | DATE PLOTTED => 24-AUG-2016 | TIME PLOTTED => 16:55

Dist	COUNTY	ROUTE	POST MILES TOTAL PROJECT	SHEET No.	TOTAL SHEETS
05	SLO,Mon	101	63.2/R69.3, R0.0/R1.9	51	858

REGISTERED CIVIL ENGINEER 04-18-16 DATE

5-2-16
PLANS APPROVAL DATE

REGISTERED PROFESSIONAL ENGINEER PETER CHANDER No. 63988 Exp. 9/30/16 CIVIL STATE OF CALIFORNIA

THE STATE OF CALIFORNIA OR ITS OFFICERS OR AGENTS SHALL NOT BE RESPONSIBLE FOR THE ACCURACY OR COMPLETENESS OF SCANNED COPIES OF THIS PLAN SHEET.

NOTE:

FOR ACCURATE RIGHT OF WAY DATA, CONTACT RIGHT OF WAY ENGINEERING AT THE DISTRICT OFFICE.

CURVE DATA

No.	R	Δ	T	L
32	3477.00′	41°45′15"	1326.14′	2533.86′
33	3500.00′	40°09′52.8"	1279.59′	2453.52′
34	6012.00′	4°27′40.5"	234.18′	468.12′

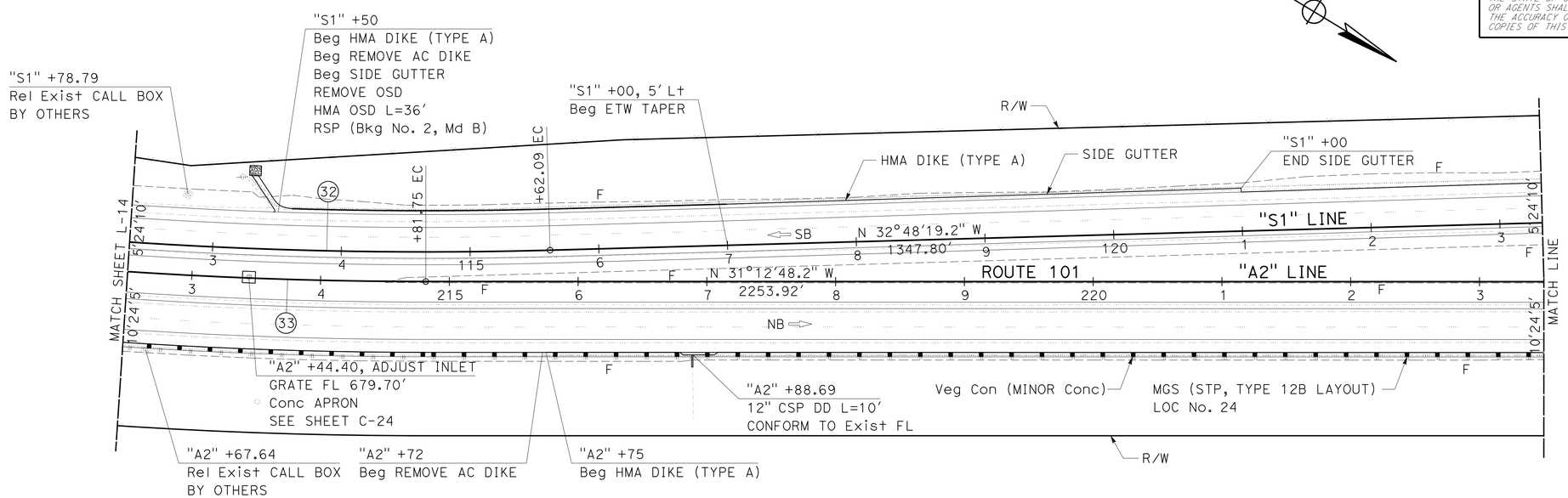

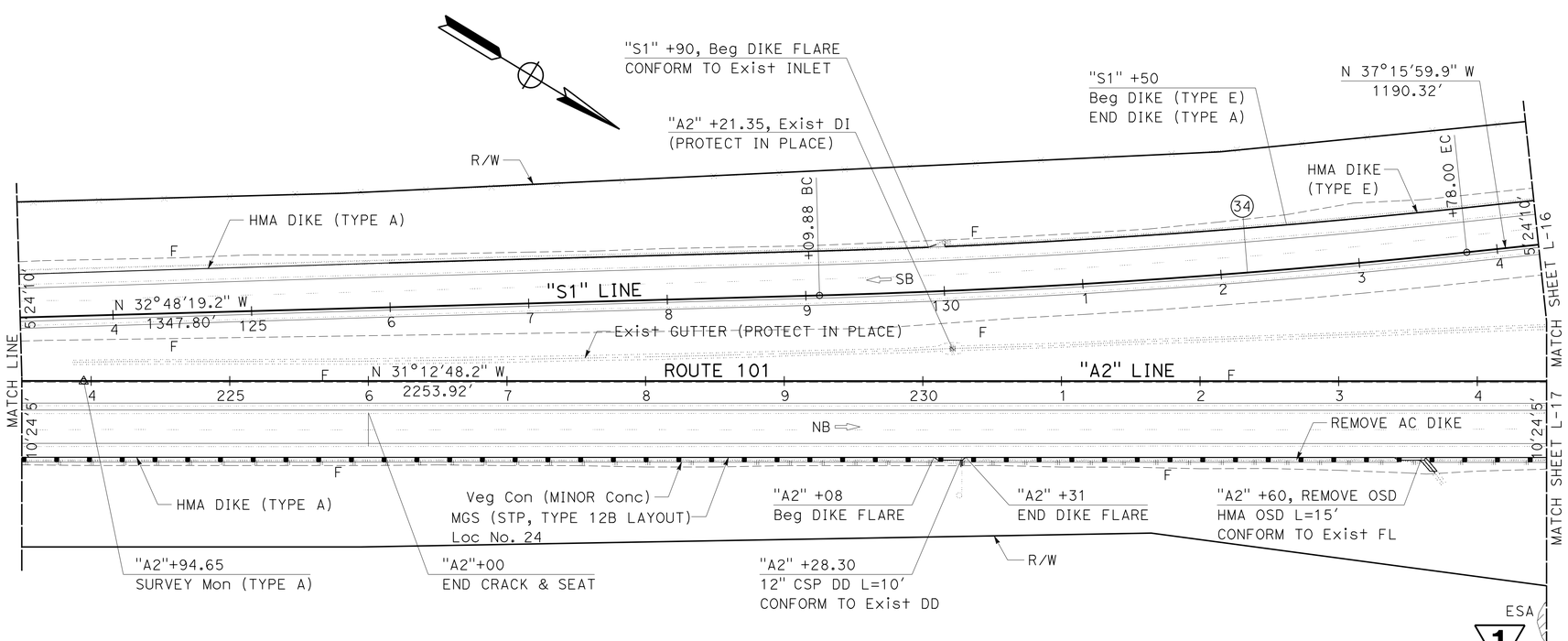

1 **REPLACED PER ADDENDUM No. 1 DATED SEPTEMBER 2, 2016**

LAYOUT
SCALE: 1" = 50′

L-15

STATE OF CALIFORNIA - DEPARTMENT OF TRANSPORTATION
Caltrans
06-DESIGN

FUNCTIONAL SUPERVISOR: ROBERTO BANDA
CALCULATED-DESIGNED BY: GILBERTO BACA
CHECKED BY: ALEJANDRO CORREA
REVISED BY
DATE REVISED

LAST REVISION 05-01-16
DATE PLOTTED => 24-AUG-2016
TIME PLOTTED => 16:55

Dist	COUNTY	ROUTE	POST MILES TOTAL PROJECT	SHEET No.	TOTAL SHEETS
05	SLO,Mon	101	63.2/R69.3, R0.0/R1.9	52	858

REGISTERED CIVIL ENGINEER — DATE 04-18-16

5-2-16
PLANS APPROVAL DATE

REGISTERED PROFESSIONAL ENGINEER — PETER CHANDER — No. 63988 — Exp. 9/30/16 — CIVIL — STATE OF CALIFORNIA

THE STATE OF CALIFORNIA OR ITS OFFICERS OR AGENTS SHALL NOT BE RESPONSIBLE FOR THE ACCURACY OR COMPLETENESS OF SCANNED COPIES OF THIS PLAN SHEET.

NOTE:

FOR ACCURATE RIGHT OF WAY DATA, CONTACT RIGHT OF WAY ENGINEERING AT THE DISTRICT OFFICE.

CURVE DATA

No.	R	Δ	T	L
35	3000.00′	18°40′49.7″	493.43′	978.11′
36	3012.00′	12°37′38.1″	333.25′	663.81′
37	300.00′	62°25′13.6″	181.76′	326.83′

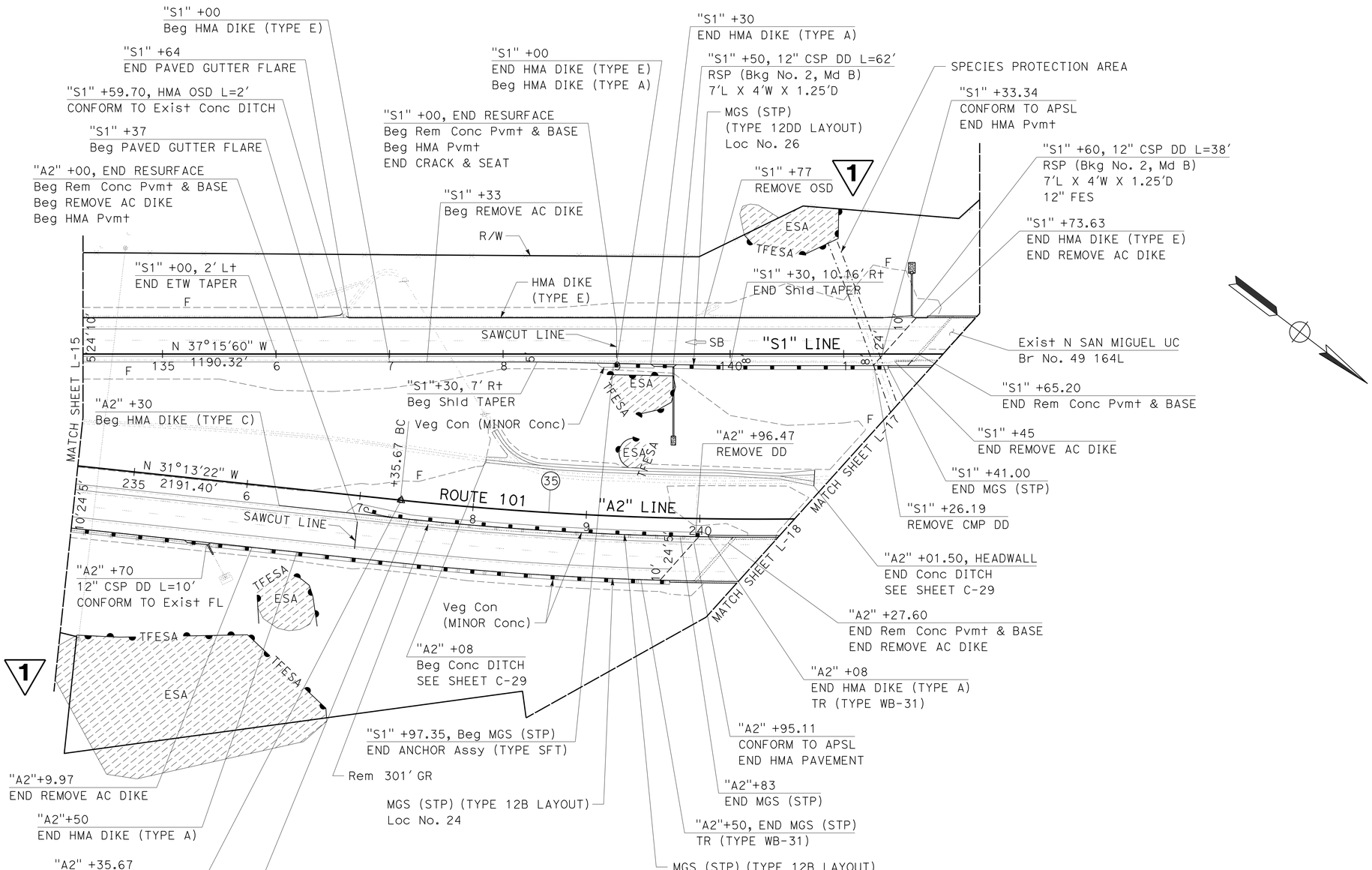

1 **REPLACED PER ADDENDUM No. 1 DATED SEPTEMBER 2, 2016**

LAYOUT
SCALE: 1" = 50′

L-16

REVISED BY	DATE REVISED
GILBERTO BACA	ALEJANDRO CORREA

CALCULATED-DESIGNED BY / CHECKED BY

FUNCTIONAL SUPERVISOR: ROBERTO BANDA

STATE OF CALIFORNIA - DEPARTMENT OF TRANSPORTATION — Caltrans — 06-DESIGN

LAST REVISION 05-01-16 | DATE PLOTTED => 24-AUG-2016 | TIME PLOTTED => 16:55

Dist	COUNTY	ROUTE	POST MILES TOTAL PROJECT	SHEET No.	TOTAL SHEETS
05	SLO,Mon	101	63.2/R69.3, R0.0/R1.9	60	858

REGISTERED CIVIL ENGINEER 04-18-16 DATE

5-2-16
PLANS APPROVAL DATE

REGISTERED PROFESSIONAL ENGINEER PETER CHANDER No. 63988 Exp. 9/30/16 CIVIL STATE OF CALIFORNIA

THE STATE OF CALIFORNIA OR ITS OFFICERS OR AGENTS SHALL NOT BE RESPONSIBLE FOR THE ACCURACY OR COMPLETENESS OF SCANNED COPIES OF THIS PLAN SHEET.

NOTE:

FOR ACCURATE RIGHT OF WAY DATA, CONTACT RIGHT OF WAY ENGINEERING AT THE DISTRICT OFFICE.

CURVE DATA

No.	R	Δ	T	L
52	3800.00′	20°19′33.7″	681.20′	1348.07′

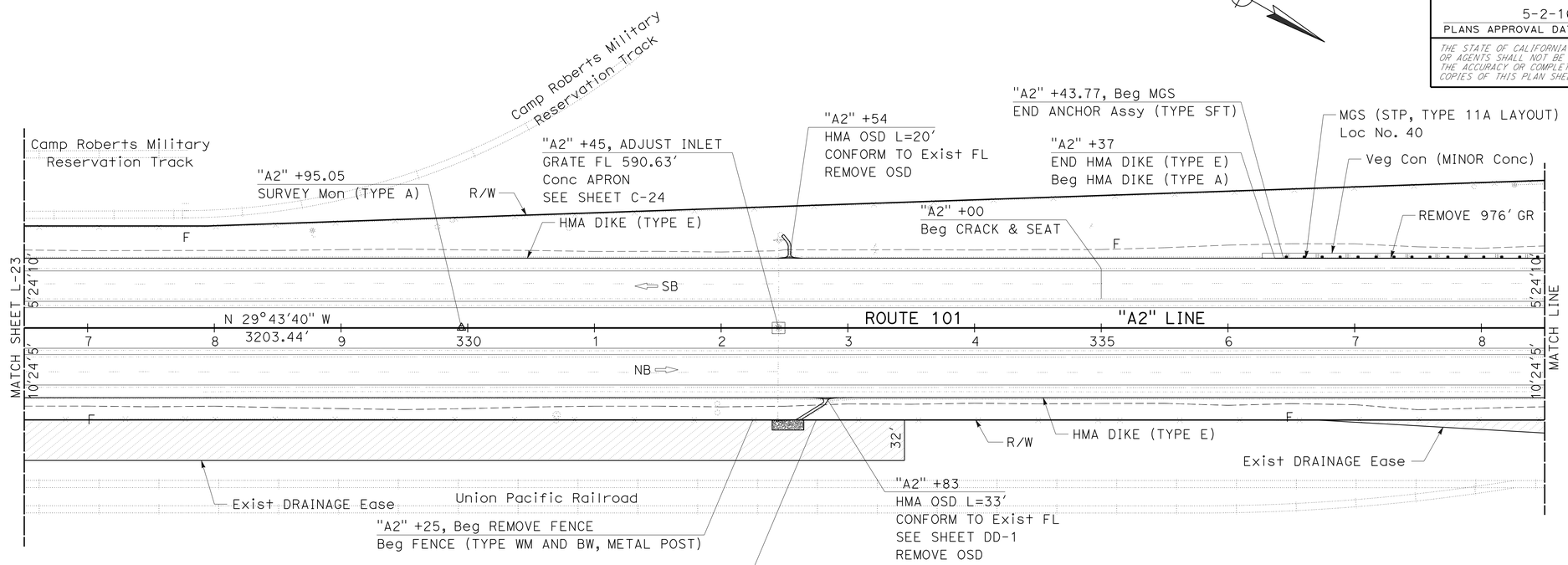

1 REPLACED PER ADDENDUM No. 1 DATED SEPTEMBER 2, 2016

LAYOUT
SCALE: 1" = 50′

L-24

STATE OF CALIFORNIA - DEPARTMENT OF TRANSPORTATION
Caltrans 06-DESIGN

FUNCTIONAL SUPERVISOR: ROBERTO BANDA
CALCULATED-DESIGNED BY: ALEJANDRO CORREA
CHECKED BY: GILBERTO BACA
REVISED BY / DATE REVISED

LAST REVISION 05-01-16
DATE PLOTTED => 24-AUG-2016
TIME PLOTTED => 16:55

Dist	COUNTY	ROUTE	POST MILES TOTAL PROJECT	SHEET No.	TOTAL SHEETS
05	SLO,Mon	101	63.2/R69.3, R0.0/R1.9	64	858

REGISTERED CIVIL ENGINEER 04-18-16 DATE

5-2-16
PLANS APPROVAL DATE

REGISTERED PROFESSIONAL ENGINEER PETER CHANDER No. 63988 Exp. 9/30/16 CIVIL STATE OF CALIFORNIA

THE STATE OF CALIFORNIA OR ITS OFFICERS OR AGENTS SHALL NOT BE RESPONSIBLE FOR THE ACCURACY OR COMPLETENESS OF SCANNED COPIES OF THIS PLAN SHEET.

NOTE:

FOR ACCURATE RIGHT OF WAY DATA, CONTACT RIGHT OF WAY ENGINEERING AT THE DISTRICT OFFICE.

CURVE DATA

No.	R	Δ	T	L
56	3000.00′	22°04′18.4"	585.09′	1155.68′
58	2020.00′	17°38′58.1"	313.61′	622.24′

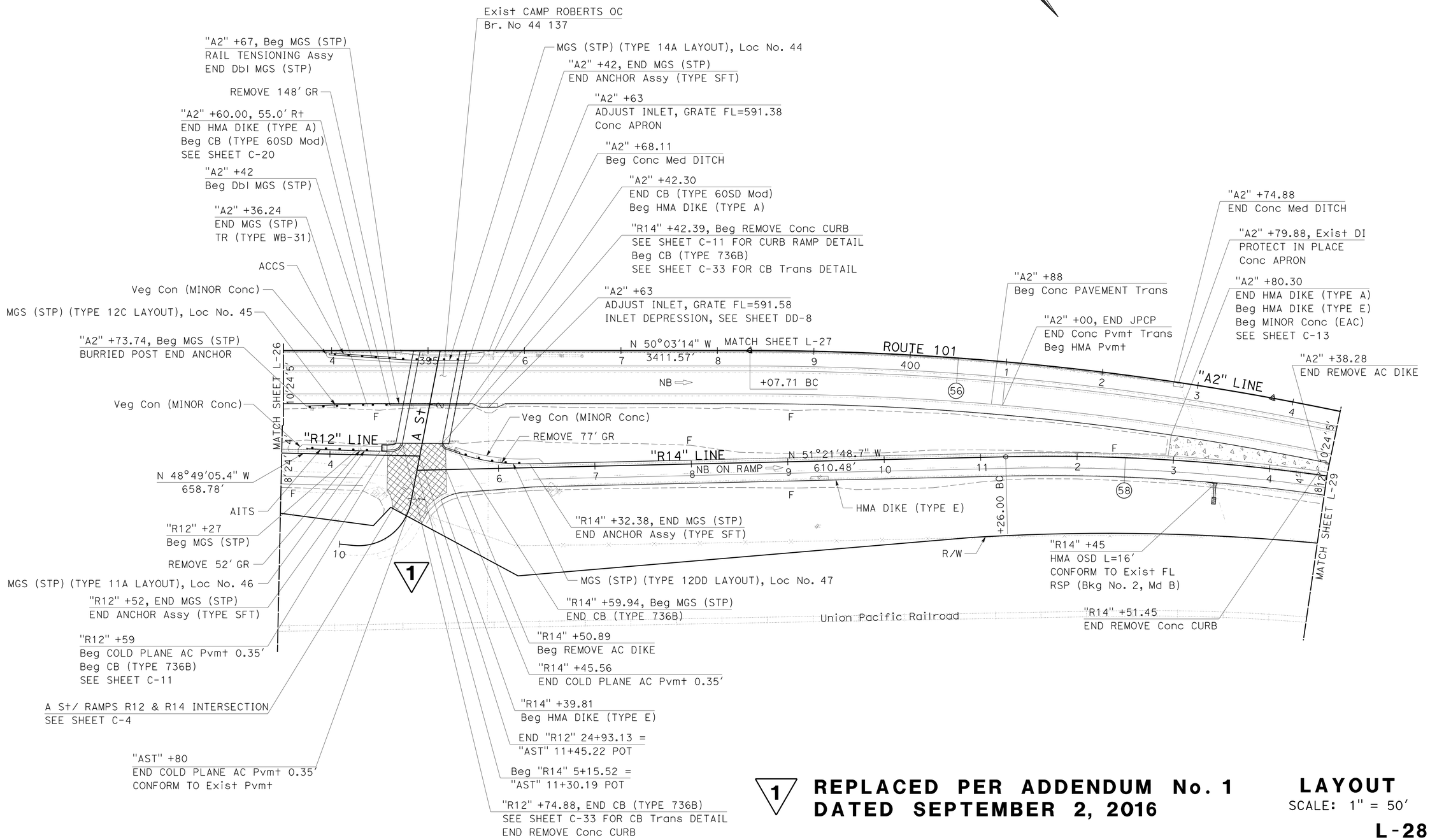

1 **REPLACED PER ADDENDUM No. 1 DATED SEPTEMBER 2, 2016**

LAYOUT
SCALE: 1" = 50′

L-28

STATE OF CALIFORNIA - DEPARTMENT OF TRANSPORTATION
Caltrans® 06-DESIGN

FUNCTIONAL SUPERVISOR: ROBERTO BANDA
CALCULATED-DESIGNED BY: ALEJANDRO CORREA
CHECKED BY: GILBERTO BACA
REVISED BY / DATE REVISED

LAST REVISION 05-01-16
DATE PLOTTED => 24-AUG-2016
TIME PLOTTED => 16:55

Dist	COUNTY	ROUTE	POST MILES TOTAL PROJECT	SHEET No.	TOTAL SHEETS
05	SLO,Mon	101	63.2/R69.3, R0.0/R1.9	132	858

REGISTERED CIVIL ENGINEER 04-18-16 DATE

5-2-16
PLANS APPROVAL DATE

REGISTERED PROFESSIONAL ENGINEER PETER CHANDER No. 63988 Exp. 9/30/16 CIVIL STATE OF CALIFORNIA

THE STATE OF CALIFORNIA OR ITS OFFICERS OR AGENTS SHALL NOT BE RESPONSIBLE FOR THE ACCURACY OR COMPLETENESS OF SCANNED COPIES OF THIS PLAN SHEET.

CURVE DATA

No.	R	Δ	T	L
1	10.00′	75°13′31.2"	7.70′	13.13′
2	5.00′	82°04′18.6"	4.35′	7.16′
3	50.00′	57°22′16.3"	27.36′	50.07′
4		(NOT USED)		
5	25.00′	179°08′06.3"	3312.11′	78.16′
6	50.00′	20°43′34.7"	9.14′	18.09′
7	50.00′	20°43′34.7"	9.14′	18.09′
8	200.00′	20°04′55.4"	35.41′	70.10′

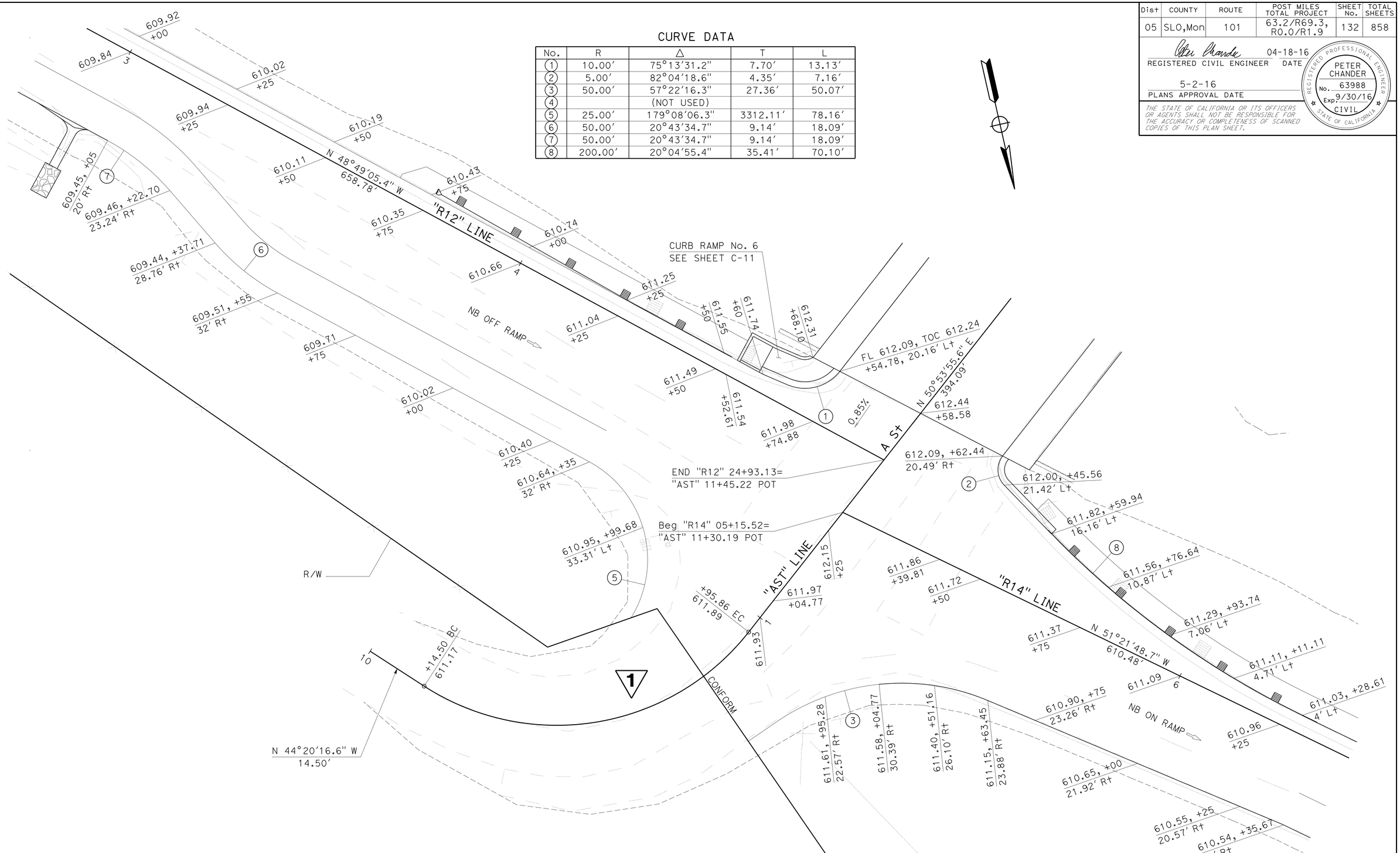

1 REPLACED PER ADDENDUM No. 1 DATED SEPTEMBER 2, 2016

CONSTRUCTION DETAILS
(CAMP ROBERTS OC)
SCALE: 1" = 10′

C-4

STATE OF CALIFORNIA - DEPARTMENT OF TRANSPORTATION
Caltrans 06-DESIGN

FUNCTIONAL SUPERVISOR: ROBERTO BANDA
CALCULATED-DESIGNED BY: ALEJANDRO CORREA
CHECKED BY: GILBERTO BACA
REVISED BY / DATE REVISED

LAST REVISION 05-01-16 | DATE PLOTTED => 24-AUG-2016 | TIME PLOTTED => 16:55

Dist	COUNTY	ROUTE	POST MILES TOTAL PROJECT	SHEET No.	TOTAL SHEETS
05	SLO,Mon	101	63.2/R69.3, R0.0/R1.9	226	858

Peter Chander 04-18-16
REGISTERED CIVIL ENGINEER DATE

5-2-16
PLANS APPROVAL DATE

REGISTERED PROFESSIONAL ENGINEER PETER CHANDER No. 63988 Exp. 9/30/16 CIVIL STATE OF CALIFORNIA

THE STATE OF CALIFORNIA OR ITS OFFICERS OR AGENTS SHALL NOT BE RESPONSIBLE FOR THE ACCURACY OR COMPLETENESS OF SCANNED COPIES OF THIS PLAN SHEET.

NOTES:

1. USE RGJ FOR ALL RCP'S, USE WTJ FOR ALL APC'S, USE Std Jt FOR CSP'S, AND USE DDJ WHERE SPECIFIED.
2. CSP SHALL BE MADE OF ONLY GALVANIZED STEEL.
3. SEE SHEET DQ-11 FOR APC ALLOWABLE MATERIALS.

ABBREVIATIONS

RGJ	RUBBER GASKET JOINT
WTJ	WATER TIGHT JOINT
DDJ	DOWNDRAIN JOINT
P P MH	PRECAST PIPE MANHOLE

ALTERNATIVE FLARED END SECTIONS

ALLOWABLE MATERIAL
PRECAST CONCRETE
PREFABRICATED STEEL

1

DRAINAGE QUANTITIES

(N) DESIGN HEIGHT "H" LF	MINOR Conc (MINOR Str) CY	Misc IRON & STEEL LB	CONCRETE (Conc APRON) CY	Conc STAINING SQYD	CONCRETE Bkf (PIPE TRENCH) CY	48" P P MH (CASE 1) EA	72" P P MH (CASE 2) EA	60" P P MH (CASE 3) EA	MANHOLE FRAME & COVER EA	MANHOLE FRAME & GRATE EA	36" PRECAST CONCRETE PIPE INLET EA	12" CSP RISER (.079" THICK) LF	18" CSP (.064" THICK) LF	AFES 18" EA	AFES 24" EA		ALTERNATIVE PIPE CULVERT 18" LF	ALTERNATIVE PIPE CULVERT 24" LF	ALTERNATIVE PIPE CULVERT 30" LF	ALTERNATIVE PIPE CULVERT 42" LF	RCP 14" OVAL LF	RCP 18" LF	RCP 24" LF	RCP 30" LF	RCP 36" LF	RCP 72" LF	WELDED STEEL PIPE (WSP) JACKED 48" LF	WELDED STEEL PIPE (WSP) JACKED 72" LF	BAR Reinf STEEL (BOX CULVERT) LB	STRUCTURAL CONCRETE, (BOX CULVERT) CY	MAXIMUM COVER (N) LF	RSP 300 lb, Class IV, METHOD B CY	RSP ¼ T, Class V, METHOD B CY	RSP FABRIC Cl 8 SQYD	ADJUST INLET EA	REMOVE FES EA	REMOVE JUNCTION BOX EA	REMOVE RCB CULVERT CY	REMOVE CULVERT LF	REMOVE HEADWALL EA	REMOVE INLET EA	ABANDON CULVERT EA	SAND BACKFILL CY	Temp STEEL COVER LB	CAP INLET EA	DESCRIPTION	STATION	DRAINAGE UNIT No.	DRAINAGE SYSTEM No.	DRAINAGE PLAN SHEET No.
4.80	1.77	263																																									G2 DI, 24-9 GRATE	"A1" 43+85	a		D-1
			0.80	7.3																																						Conc APRON		b		
																		21.0													3.3												24" APC		c		
5.00	1.82	263																																								G2 DI, 24-9 GRATE	"A1" 44+10	d		
			0.80	7.3																																						Conc APRON		e		
																		237.0													11.3												24" APC		f	1	
3.60	1.46	263																																								G2 DI, 24-9 GRATE	"A1" 50+00	g		
																																								1	Conc CAP		h		
																		102.2													12.7												24" APC		i		
																																						1				REMOVE HEADWALL		j		
																																					50.5					REMOVE 18" CMP		k		
3.60	2.40	526																																								GT4 (Mod) DI, 24-9 GRATE	"A1" 48+68.10	a		
																		52.6													4.1												24" APC		b		
																																					32.0					REMOVE 18" CMP		c		
																																							1	0.5		ABANDON 18" x 6' CMP		d		
																		21.3													7.2												24" APC		e		
																																						1				REMOVE HEADWALL		f		
6.20	2.13	263																																								G2 (Exp) DI, 24-9 GRATE	"A1" 48+98	g		
																		48.5													12.1												24" APC		h		
3.50	1.44	263																																	1							G2 DI, 24-9 GRATE	"A1" 49+50	i	2	
			0.80	7.3																																						Conc APRON		j		
																		47.0													8.4												24" APC		k		
3.5	1.44	263																																	1							G2 DI, 24-9 GRATE	"A1" 50+00	l		
			0.80	7.3																																						Conc APRON		m		
																		197.3													7.7												24" APC		n		
4.00	1.57	263																																							85	G2 DI, 24-9 GRATE	"A1" 52+00	o		
			0.80	7.3																																						Conc APRON		p		
																		297.4													2.7												24" APC		q		
4.00	1.57	263																																							85	G2 DI, 24-9 GRATE	"A1" 55+00	r		D-2
			0.80	7.3																																						Conc APRON		s		
																																					185.1					REMOVE 18" CMP		t		
																																				1						REMOVE FES		u	2	
																		197.1													3.6												24" APC		v		
																																				1						REMOVE FES		w		
4.50	2.10	263																																	1							GDO (Mod) DI, 24-9 GRATE	"A1" 57+00	x		
			0.80	7.3																																						Conc APRON		y		
																										4.0					13.2												36" RCP		a		
17.0		263																													0.5												JS No. 1, 24-9 GRATE	"A1" 53+98.27	b		
																																					35.0					REMOVE 36" RCP		c		
																																							1			REMOVE INLET		d	3	
																																								1	64.1		ABANDON 36" x 245' RCP		e		
																												269.0															JACKED 48" WSP		f		
																																						1				REMOVE HEADWALL		g		
	17.70	3,156	5.60	51.1														1,221.4								4.0			269.0						3	2			302.6	3	1	2	64.6	170	1	SHEET DQ-1 TOTAL				

(N) NOT A SEPARATE PAY ITEM, FOR INFORMATION ONLY.

1 REPLACED PER ADDENDUM No. 1 DATED SEPTEMBER 2, 2016

DRAINAGE QUANTITIES
DQ-1

STATE OF CALIFORNIA - DEPARTMENT OF TRANSPORTATION
06-DESIGN
Caltrans

FUNCTIONAL SUPERVISOR: ROBERTO BANDA
CALCULATED-DESIGNED BY: MICAELA GARCIA
CHECKED BY: GILBERTO BACA
REVISED BY / DATE REVISED

LAST REVISION 05-01-16
DATE PLOTTED => 24-AUG-2016
TIME PLOTTED => 16:55

Dist	COUNTY	ROUTE	POST MILES TOTAL PROJECT	SHEET No.	TOTAL SHEETS
05	SLO,Mon	101	63.2/R69.3, R0.0/R1.9	227	858

REGISTERED CIVIL ENGINEER 04-18-16 DATE

PLANS APPROVAL DATE 5-2-16

REGISTERED PROFESSIONAL ENGINEER PETER CHANDER No. 63988 Exp. 9/30/16 CIVIL STATE OF CALIFORNIA

THE STATE OF CALIFORNIA OR ITS OFFICERS OR AGENTS SHALL NOT BE RESPONSIBLE FOR THE ACCURACY OR COMPLETENESS OF SCANNED COPIES OF THIS PLAN SHEET.

DRAINAGE QUANTITIES

1

(N) DESIGN HEIGHT "H" LF	MINOR Conc (MINOR Str) CY	Misc IRON & STEEL LB	CONCRETE (Conc APRON) CY	Conc STAINING SQYD	CONCRETE Bkf (PIPE TRENCH) CY	48" P P MH (CASE 1) EA	72" P P MH (CASE 2) EA	60" P P MH (CASE 3) EA	MANHOLE FRAME & COVER EA	MANHOLE FRAME & GRATE EA	36" PRECAST CONCRETE PIPE INLET EA	12" CSP RISER (.079" THICK) LF	18" CSP (.064" THICK) LF	AFES 18" EA	AFES 24" EA		ALTERNATIVE PIPE CULVERT 18" LF	ALTERNATIVE PIPE CULVERT 24" LF	ALTERNATIVE PIPE CULVERT 30" LF	ALTERNATIVE PIPE CULVERT 42" LF	RCP 14" OVAL LF	RCP 18" LF	RCP 24" LF	RCP 30" LF	RCP 36" LF	RCP 72" LF	WELDED STEEL PIPE (WSP) JACKED 48" LF	WELDED STEEL PIPE (WSP) JACKED 72" LF	BAR Reinf STEEL (BOX CULVERT) LB	STRUCTURAL CONCRETE, (BOX CULVERT) CY	MAXIMUM COVER (N) LF	RSP 300 lb, Class IV, METHOD B CY	RSP 1/4 T, Class V, METHOD B CY	RSP FABRIC Cl 8 SQYD	ADJUST INLET EA	REMOVE FES EA	REMOVE JUNCTION BOX EA	REMOVE RCB CULVERT CY	REMOVE CULVERT LF	REMOVE HEADWALL EA	REMOVE INLET EA	ABANDON CULVERT EA	SAND BACKFILL CY	Temp STEEL COVER LB	CAP INLET EA	DESCRIPTION	STATION	DRAINAGE UNIT No. ○	DRAINAGE SYSTEM No. ⬡	DRAINAGE PLAN SHEET No.
																																	122.0	111.3												RSP		h	3	D-3
																			7.1												6.5														30" APC		a		
5.00	1.92	263																																											G2 (Exp) DI, 24-9 GRATE	"A1" 53+96	b		
																			159.6												5.1														30" APC		c		
5.50	3.14	478																																											GT4(Mod) DI, 24-12X GRATE	"A1" 55+56.27	d		
			2.81	28.1																																									Conc APRON		e		
																																							1						REMOVE HEADWALL		f		
																																											39.5		REMOVE 18" RCP		g		
																																								1						REMOVE INLET		h		
																			83.3												5.9														30" APC		i		
5.50	3.14	478																																											GT4 DI, 24-12X GRATE	"A1" 56+33.26	j		
			1.62	16.2																																									Conc APRON		k	4	
																		31.8													4.5														24" APC		l		
5.60	2.10	239																																											G2 (Exp) DI, 24-12X GRATE	"A1" 56+75.33	m		
																		171.5													4.4														24" APC		n		
5.50	1.95	239																																											G2 DI, 24-12X GRATE	"A1" 58+50	o		
																		97.0													3.5														24" APC		p		
5.00	1.82	239																																											G2 DI, 24-12X GRATE	"A1" 59+50	q		
																		97.0													3.0														24" APC		r		
4.50	1.69	239																																											G2 DI, 24-12X GRATE	"A1" 60+50	s		
																		97.0													2.5														24" APC		t		
4.00	1.57	239																																											G2 DI, 24-12X GRATE	"A1" 61+50	u		
5.00	1.82	263																																											G2 DI, 24-9 GRATE	"A1" 66+00	a		D-3
			0.80	7.3																																									Conc APRON		b		
																		94.0													4.6														24" APC		c		
6.30	2.15	263																																											G2 (Exp) DI, 24-9 GRATE	"A1" 66+98.70	d		
			0.80	7.3																																									Conc APRON		e		
																																							1						REMOVE INLET		f	5	
																		8.0													5.0														24" APC		g		
																		4.0													4.0														24" APC		h		
5.50	1.85	239																																											GO DI, 24-12X GRATE	"A1" 67+17.53	i		
																																							1						REMOVE INLET		j		
																		4.0													3.7														24" APC		k		
3.50	1.78	634																																											GDO DI, 24-9 GRATES	"R1" 90+50	a		D-4
			0.80	7.3																																									Conc APRON		b		
																		98.0													3.0														24" APC		c		
3.80	1.50	239																																											G2 DI, 24-12X GRATE	"R1" 91+50	d		
																		118.0													1.9														24" APC		e	6	
3.90	1.57	239																																											G2 (Exp) DI, 24-12X GRATE	"R1" 92+72.25	f		
																		7.9													3.0														24" APC		g		
																																							1						REMOVE INLET		h		
4.50	1.61	326																																											GO DI, 24-12 GRATE	"R2" 99+00	a	7	
																		55.7													3.6														24" APC		b		
	29.61	4,617	6.83	66.2														883.9	250.0													122.0	111.3					39.5	1	4					SHEET DQ-2 TOTAL				

(N) NOT A separate PAY ITEM, FOR INFORMATION ONLY.

1 REPLACED PER ADDENDUM No. 1 DATED SEPTEMBER 2, 2016

DRAINAGE QUANTITIES DQ-2

REVISED BY | DATE REVISED

MICAELA GARCIA | GILBERTO BACA | CALCULATED-DESIGNED BY | CHECKED BY | FUNCTIONAL SUPERVISOR ROBERTO BANDA

STATE OF CALIFORNIA - DEPARTMENT OF TRANSPORTATION 06-DESIGN Caltrans

LAST REVISION 05-01-16 | DATE PLOTTED => 24-AUG-2016 TIME PLOTTED => 16:55

Dist	COUNTY	ROUTE	POST MILES TOTAL PROJECT	SHEET No.	TOTAL SHEETS
05	SLO,Mon	101	63.2/R69.3, R0.0/R1.9	228	858

Peter Chander 04-18-16
REGISTERED CIVIL ENGINEER DATE

5-2-16
PLANS APPROVAL DATE

REGISTERED PROFESSIONAL ENGINEER PETER CHANDER No. 63988 Exp. 9/30/16 CIVIL STATE OF CALIFORNIA

THE STATE OF CALIFORNIA OR ITS OFFICERS OR AGENTS SHALL NOT BE RESPONSIBLE FOR THE ACCURACY OR COMPLETENESS OF SCANNED COPIES OF THIS PLAN SHEET.

DRAINAGE QUANTITIES

1

(N) DESIGN HEIGHT "H" LF	MINOR Conc (MINOR Str) CY	Misc IRON & STEEL LB	CONCRETE (Conc APRON) CY	Conc STAINING SQYD	CONCRETE Bkf (PIPE TRENCH) CY	48" P P MH (CASE 1) EA	72" P P MH (CASE 2) EA	60" P P MH (CASE 3) EA	MANHOLE FRAME & COVER EA	MANHOLE FRAME & GRATE EA	36" PRECAST CONCRETE PIPE INLET EA	12" CSP RISER (.079" THICK) LF	18" CSP (.064" THICK) LF	AFES 18" EA	AFES 24" EA		ALTERNATIVE PIPE CULVERT 18" LF	ALTERNATIVE PIPE CULVERT 24" LF	ALTERNATIVE PIPE CULVERT 30" LF	ALTERNATIVE PIPE CULVERT 42" LF	RCP 14" OVAL LF	RCP 18" LF	RCP 24" LF	RCP 30" LF	RCP 36" LF	RCP 72" LF	WELDED STEEL PIPE (WSP) JACKED 48" LF	WELDED STEEL PIPE (WSP) JACKED 72" LF	BAR Reinf STEEL (BOX CULVERT) LB	STRUCTURAL CONCRETE, (BOX CULVERT) CY	MAXIMUM COVER (N) LF	RSP 300 lb, Class IV, METHOD B CY	RSP ¼ T, Class V, METHOD B CY	RSP FABRIC Cl 8 SQYD	ADJUST INLET EA	REMOVE FES EA	REMOVE JUNCTION BOX EA	REMOVE RCB CULVERT CY	REMOVE CULVERT LF	REMOVE HEADWALL EA	REMOVE INLET EA	ABANDON CULVERT EA	SAND BACKFILL CY	Temp STEEL COVER LB	CAP INLET EA	DESCRIPTION	STATION	DRAINAGE UNIT No.	DRAINAGE SYSTEM No.	DRAINAGE PLAN SHEET No.
4.84	1.35	326																50.4													5.4														G1 DI, 24-12 GRATE	"A1" 99+00	c	7	D-4
																																												24" APC		d		
4.50	1.61	326																																										GO DI, 24-12 GRATE	"A1" 98+97	e		
																	7.0														3.0													18" APC		f	7	
																																							1					REMOVE INLET		g		
														1																														18" AFES		h		
4.00	1.94	473																155.9													3.2														GDO DI, 24-12X GRATE	"R2" 114+45	a		D-5
																																												24" APC		b		
5.00	2.26	473																																										GDO DI, 24-12X GRATE	"R2" 116+03.12	c		
																																						2.0					REMOVE CMP CULVERT		d		
																																							1					REMOVE INLET		e	8	
3.50	1.40	326																																										G1(Mod) DI, 24-12 GRATE	"R2" 116+03	f		
																	6.0														3.3													18" APC		g		
																		43.5													3.2														24" APC		h		
4.20	1.62	239																																										G2 DI, 24-12X GRATE	"R2" 116+50	i		
3.50	1.06	326																																										G1 DI, 24-12 GRATE	"A1" 116+05	a		
																		23.2													3.2													24" APC		b	9	
															1																													24" AFES		c		
11.00									1																						0.5													JS No. 2, MH F& C	"R2" 123+68.71	a		D-6
																																					1							REMOVE Jct BOX		b		
																																						76.0					REMOVE 36" RCP		c		
																																							1					REMOVE INLET		d		
		26										2.4																																12" CSP RISER, 12R GRATE		e	10	
					4.86																								2,882	24.56														2.5' x 4.0' x 73.9' RCB		f		
11.00									1																						0.5													JS No. 3, MH F& C	"R2" 123+51.21	g		
																		12.9													2.6													24" APC		h		
4.10	1.80	326																																										G2 (Exp) DI, 24-12 GRATE	"A1" 123+50	i		
3.00	0.26	236									3.3																																	OCP DI, 36" GRATE	"R2" 126+00	a		
																	105.1														1.8													18" APC		b		
3.50	1.44	263																																										G2 DI, 24-9 GRATE	"R2" 125+00	c	11	
			0.80	7.3																																								Conc APRON		d		
																		124.3													2.0													24" APC		e		
4.20	2.64	526																																										GT4 DI, 24-9 GRATE	"R2" 124+40	a		
																		38.5													2.6													24" APC		b		
4.00	1.94	263																																										GDO DI, 24-9 GRATE	"R2" 124+40	c		
			0.80	7.3																																								Conc APRON		d		
																		200.0													5.5													24" APC		e		
5.30	1.80	326																																										GO DI, 24-12 GRATE	"R2" 126+50	f	12	
																		22.0													3.4													24" APC		g		
4.90	1.71	326																																										GO DI, 24-12 GRATE	"R2" 126+50	h		
																		16.2													4.3													24" APC		i		
5.10	2.30	263																																										GDO DI, 24-9 GRATE	"R2" 126+50	j		
			0.80	7.3																																								Conc APRON		k		
	25.13	5,044	2.40	21.9	4.86				2		3.3	2.4		1	1		118.1	686.9											2,882	24.56							1		78.0		3					SHEET DQ-3 TOTAL				

(N) NOT A SEPARATE PAY ITEM, FOR INFORMATION ONLY.

1 **REPLACED PER ADDENDUM No. 1 DATED SEPTEMBER 2, 2016**

DRAINAGE QUANTITIES
DQ-3

REVISED BY | DATE REVISED

MICAELA GARCIA — GILBERTO BACA — CALCULATED-DESIGNED BY — CHECKED BY — ROBERTO BANDA — FUNCTIONAL SUPERVISOR

STATE OF CALIFORNIA - DEPARTMENT OF TRANSPORTATION
06-DESIGN
Caltrans

DATE PLOTTED => 24-AUG-2016
TIME PLOTTED => 16:55
LAST REVISION 05-01-16

Dist	COUNTY	ROUTE	POST MILES TOTAL PROJECT	SHEET No.	TOTAL SHEETS
05	SLO,Mon	101	63.2/R69.3, R0.0/R1.9	229	858

Peter Chander 04-18-16
REGISTERED CIVIL ENGINEER DATE

5-2-16
PLANS APPROVAL DATE

REGISTERED PROFESSIONAL ENGINEER PETER CHANDER No. 63988 Exp. 9/30/16 CIVIL STATE OF CALIFORNIA

THE STATE OF CALIFORNIA OR ITS OFFICERS OR AGENTS SHALL NOT BE RESPONSIBLE FOR THE ACCURACY OR COMPLETENESS OF SCANNED COPIES OF THIS PLAN SHEET.

DRAINAGE QUANTITIES

1

(N) DESIGN HEIGHT "H" LF	MINOR Conc (MINOR Str) CY	Misc IRON & STEEL LB	CONCRETE (Conc APRON) CY	Conc STAINING SQYD	CONCRETE Bkf (PIPE TRENCH) CY	48" P P MH (CASE 1) EA	72" P P MH (CASE 2) EA	60" P P MH (CASE 3) EA	MANHOLE FRAME & COVER EA	MANHOLE FRAME & GRATE EA	36" PRECAST CONCRETE PIPE INLET LF	12" CSP RISER (.079" THICK) LF	18" CSP (.064" THICK) LF	AFES 18" EA	AFES 24" EA		ALTERNATIVE PIPE CULVERT 18" LF	ALTERNATIVE PIPE CULVERT 24" LF	ALTERNATIVE PIPE CULVERT 30" LF	ALTERNATIVE PIPE CULVERT 42" LF	RCP 14" OVAL LF	RCP 18" LF	RCP 24" LF	RCP 30" LF	RCP 36" LF	RCP 72" LF	WELDED STEEL PIPE (WSP) JACKED 48" LF	WELDED STEEL PIPE (WSP) JACKED 72" LF	BAR Reinf STEEL (BOX CULVERT) LB	STRUCTURAL CONCRETE, (BOX CULVERT) CY	MAXIMUM COVER (N) LF	RSP 300 lb, Class IV, METHOD B CY	RSP 1/4 T, Class V, METHOD B CY	RSP FABRIC Cl 8 SQYD	ADJUST INLET EA	REMOVE FES EA	REMOVE JUNCTION BOX EA	REMOVE RCB CULVERT CY	REMOVE CULVERT LF	REMOVE HEADWALL EA	REMOVE INLET EA	ABANDON CULVERT EA	SAND BACKFILL CY	Temp STEEL COVER LB	CAP INLET EA	DESCRIPTION	STATION	DRAINAGE UNIT No.	DRAINAGE SYSTEM No.	DRAINAGE PLAN SHEET No.
																		91.4													3.6														24" APC		l		D-6
4.00	1.56								1																																			G2 (Exp) DI, MH F&C	"R2" 127+50	m		
																								125.0							3.0													30" RCP		n		
4.80								1	1																																			MH-3, 60" ID, MH F&C	"R2" 128+83.21	o		
																								12.9							2.3													30" RCP		p		
4.50	1.85	263																																										G2 (Exp) DI, 24-9 GRATE	"R2" 128+95.50	q	12	
			0.80	7.3																																								Conc APRON		r		
																								70.8							3.2													30" RCP		s		
					9.60																																							LOW Clr SLAB		t		
3.67	1.82	80																																										HW, L=12'		u		
3.70	2.45	526																																										GT4 DI, 24-9 GRATE (2)	"A1" 129+63.64	a		
			0.80	7.3																																								Conc APRON		b		
																		96.9													9.5													24" APC		c		
14.10							1			1																																		MH-2 72" ID, 36" GRATE	"A1" 129+65.27	d		
			0.80	7.3																																								Conc APRON		e	13	
																		170.1													22.2													24" APC		f		
5.20	3.03	526																																										GT4 DI, 24-9 GRATE (2)	"R2" 127+50	g		
			0.80	7.3																																								Conc APRON		h		
																													2,114	14.85	4.5													2' x 3' x 60.4' RCB		i		
3.10	1.26	326																																										GO DI, 24-12 GRATE	"R2" 128+50	a		
					3.77													18.2													1.4													24" APC		b		
3.32	1.32	326																																										GO DI, 24-12 GRATE	"R2" 128+71.17	c	14	
					5.35													25.8													1.6													24" APC		d		
3.64	1.40	326																																										GO DI, 24-12 GRATE	"R2" 129+00	e		
																		22.2													3.3													24" APC		f		
17.50							1			1																																		MH-2 72" ID, 36" GRATE	"A1" 133+06.87	a		
			0.80	7.3																																								Conc APRON		b		
																																							1					REMOVE HEADWALL		c		
																			124.1												21.4													42" APC		d	15	
																																							1					REMOVE HEADWALL		e		
20.10							1			1																																		MH-2 72" ID, 36" GRATE	"A1" 132+16.40	f		
			0.80	7.3																																								Conc APRON		g		
																																					5.0							REMOVE CULVERT 42" RCP		a		D-8
5.30	3.92								1																																			G2 (Exp) DI, F& C	"R4" 45+07.70	b		
			0.80	7.3																																								Conc APRON		c		
																		166.0													8.0													24" APC		d		
9.40						1			1																																			MH-1 48" ID, MH F& C	"R4" 46+82.11	e	16	
			0.80	7.3																																								Conc APRON		f		
																		186.0													6.7													24" APC		g		
9.00						1			1																																			MH-1 48" ID, MH F& C	"R4" 48+76.95	h		
			0.80	7.3																																								Conc APRON		i		
																		185.0													6.4													24" APC		j		
7.60						1			1																																			MH-1 48" ID, MH F& C	"R4" 50+66.80	k		
	18.61	2,373	7.20	65.7	18.72	3	3	1	6	3								961.6		124.1				208.7					2,114	14.85								5.0	2						SHEET DQ-4 TOTAL				

(N) NOT A SEPARATE PAY ITEM, FOR INFORMATION ONLY.

1 **REPLACED PER ADDENDUM No. 1 DATED SEPTEMBER 2, 2016**

DRAINAGE QUANTITIES
DQ-4

REVISED BY | DATE REVISED

MICAELA GARCIA — GILBERTO BACA — CALCULATED-DESIGNED BY — CHECKED BY — ROBERTO BANDA — FUNCTIONAL SUPERVISOR

STATE OF CALIFORNIA - DEPARTMENT OF TRANSPORTATION
06-DESIGN
Caltrans

LAST REVISION 05-01-16 | DATE PLOTTED => 24-AUG-2016 | TIME PLOTTED => 16:55

Dist	COUNTY	ROUTE	POST MILES TOTAL PROJECT	SHEET No.	TOTAL SHEETS
05	SLO,Mon	101	63.2/R69.3, R0.0/R1.9	230	858

Peter Chander 04-18-16
REGISTERED CIVIL ENGINEER DATE

5-2-16
PLANS APPROVAL DATE

REGISTERED PROFESSIONAL ENGINEER PETER CHANDER No. 63988 Exp. 9/30/16 CIVIL STATE OF CALIFORNIA

THE STATE OF CALIFORNIA OR ITS OFFICERS OR AGENTS SHALL NOT BE RESPONSIBLE FOR THE ACCURACY OR COMPLETENESS OF SCANNED COPIES OF THIS PLAN SHEET.

DRAINAGE QUANTITIES

1

(N) DESIGN HEIGHT "H" LF	MINOR Conc (MINOR Str) CY	Misc IRON & STEEL LB	CONCRETE (Conc APRON) CY	Conc STAINING SQYD	CONCRETE Bkf (PIPE TRENCH) CY	48" P P MH (CASE 1) EA	72" P P MH (CASE 2) EA	60" P P MH (CASE 3) EA	MANHOLE FRAME & COVER EA	MANHOLE FRAME & GRATE EA	36" PRECAST CONCRETE PIPE INLET EA	12" CSP RISER (.079" THICK) LF	18" CSP (.064" THICK) LF	AFES 18" EA	AFES 24" EA		ALTERNATIVE PIPE CULVERT 18" LF	ALTERNATIVE PIPE CULVERT 24" LF	ALTERNATIVE PIPE CULVERT 30" LF	ALTERNATIVE PIPE CULVERT 42" LF	RCP 14" OVAL LF	RCP 18" LF	RCP 24" LF	RCP 30" LF	RCP 36" LF	RCP 72" LF	WELDED STEEL PIPE (WSP) JACKED 48" LF	WELDED STEEL PIPE (WSP) JACKED 72" LF	BAR Reinf STEEL (BOX CULVERT) LB	STRUCTURAL CONCRETE, (BOX CULVERT) CY	MAXIMUM COVER (N) LF	RSP 300 lb, Class IV, METHOD B CY	RSP 1/4 T, Class V, METHOD B CY	RSP FABRIC Cl 8 SQYD	ADJUST INLET EA	REMOVE FES EA	REMOVE JUNCTION BOX EA	REMOVE RCB CULVERT CY	REMOVE CULVERT LF	REMOVE HEADWALL EA	REMOVE INLET EA	ABANDON CULVERT EA	SAND BACKFILL CY	Temp STEEL COVER LB	CAP INLET EA	DESCRIPTION	STATION	DRAINAGE UNIT No.	DRAINAGE SYSTEM No.	DRAINAGE PLAN SHEET No.
			0.80	7.3																																								Conc APRON		l		D-8
																		148.0													5.2													24" APC		m		
3.40	1.40	326																																										G2 DI, 24-12 GRATE	"R4" 52+10.14	n		
					13.47													116.0													2.5													24" APC		o		
3.00	1.31	326																																										G2 DI, 24-12 GRATE	"R5" 3+41.66	p		
					6.84													33.0													1.3													24" APC		q		
3.00	1.31	326																																										G2 DI, 24-12 GRATE	"R5" 3+41.66	r	16	
					7.31													35.3													1.6													24" APC		s		
3.20	1.36	326																																										G2 DI, 24-12 GRATE	"R4" 52+10.14	t		
																		40.0													3.9													24" APC		u		
3.50	1.54	174																																										OS DI, PLATE GRATE	"TEN" 15+61.24	v		
					8.29													40.0													1.8													24" APC		w		
3.30	1.48	174																																										OS DI, PLATE GRATE	"TEN" 15+58.39	x		
3.20	1.37	239																																										G2 DI, 24-12X GRATE	"TEN" 13+16.75	a		
					11.39													54.0													2.6													24" APC		b		
3.60	1.69	174																																										OS DI, PLATE GRATE	"TEN" 13+27.36	c	17	
																		17.8													2.5													24" APC		d		
															1																													24" AFES		e		
																																7.3		21.3											RSP		f		
																																						10.0						REMOVE 24" CULVERT		a		
																		20.0													1.5													24" APC		b		
																																							1					REMOVE INLET		c		
3.40	1.40	326																																										G2 DI, 24-12 GRATE	"R6" 4+12	d		
																																						49.0						REMOVE 24" CULVERT		e		
					8.08													39.0													1.5													24" APC		f		
3.00	1.83	326																																										G2 (Exp) DI, 24-12 GRATE	"R6" 3+71.21	g		
																																							1					REMOVE INLET		h		
																																						39.0						REMOVE 24" CULVERT		i	18	
																																							1					REMOVE INLET		j		
																																						114.0						REMOVE 18" CULVERT		k		
3.90	3.40	326																																										G2 (Exp) DI, 24-12 GRATE	"R6" 3+16.50	l		
					12.87													62.1													1.5													24" APC		m		
					13.26													79.8													2.1													24" APC		n		
															1																													24" AFES		o		
																																7.3		21.3											RSP		p		
																																						25.0						REMOVE 18" CMP		a		
																	24.5													5.3													18" APC		b		
																																							1					REMOVE INLET		c	19	
5.60	1.93	326																																										G1 DI, 24-12 GRATE	"R5" 7+61.17	d		
																																						18.0						REMOVE 18" RCP		e		
																																							1					REMOVE INLET		f		
																																						14.0						REMOVE 18" RCP		g		
																	38.0													4.2													18" APC		h		
	20.02	3,369	0.80	7.3	81.51										2		62.5	685.0														14.6		42.6					269.0		5				SHEET DQ-5 TOTAL				

(N) NOT A SEPARATE PAY ITEM, FOR INFORMATION ONLY.

1 **REPLACED PER ADDENDUM No. 1 DATED SEPTEMBER 2, 2016**

DRAINAGE QUANTITIES
DQ-5

REVISED BY | DATE REVISED

MICAELA GARCIA — GILBERTO BACA — CALCULATED-DESIGNED BY — CHECKED BY — FUNCTIONAL SUPERVISOR — ROBERTO BANDA

STATE OF CALIFORNIA - DEPARTMENT OF TRANSPORTATION
06-DESIGN
Caltrans

LAST REVISION 05-01-16 | DATE PLOTTED => 24-AUG-2016 | TIME PLOTTED => 16:55

Dist	COUNTY	ROUTE	POST MILES TOTAL PROJECT	SHEET No.	TOTAL SHEETS
05	SLO,Mon	101	63.2/R69.3, R0.0/R1.9	231	858

REGISTERED CIVIL ENGINEER 04-18-16 DATE

5-2-16
PLANS APPROVAL DATE

REGISTERED PROFESSIONAL ENGINEER PETER CHANDER No. 63988 Exp. 9/30/16 CIVIL STATE OF CALIFORNIA

THE STATE OF CALIFORNIA OR ITS OFFICERS OR AGENTS SHALL NOT BE RESPONSIBLE FOR THE ACCURACY OR COMPLETENESS OF SCANNED COPIES OF THIS PLAN SHEET.

DRAINAGE QUANTITIES

1

(N) DESIGN HEIGHT "H" LF	MINOR Conc (MINOR Str) CY	Misc IRON & STEEL LB	CONCRETE (Conc APRON) CY	Conc STAINING SQYD	CONCRETE Bkf (PIPE TRENCH) CY	48" P P MH (CASE 1) EA	72" P P MH (CASE 2) EA	60" P P MH (CASE 3) EA	MANHOLE FRAME & COVER EA	MANHOLE FRAME & GRATE EA	36" PRECAST CONCRETE PIPE INLET LF	12" CSP RISER (.079" THICK) LF	18" CSP (.064" THICK) LF	AFES 18" EA	AFES 24" EA		ALTERNATIVE PIPE CULVERT 18" LF	ALTERNATIVE PIPE CULVERT 24" LF	ALTERNATIVE PIPE CULVERT 30" LF	ALTERNATIVE PIPE CULVERT 42" LF	RCP 14" OVAL LF	RCP 18" LF	RCP 24" LF	RCP 30" LF	RCP 36" LF	RCP 72" LF	WELDED STEEL PIPE (WSP) JACKED 48" LF	WELDED STEEL PIPE (WSP) JACKED 72" LF	BAR Reinf STEEL (BOX CULVERT) LB	STRUCTURAL CONCRETE, (BOX CULVERT) CY	MAXIMUM COVER (N) LF	RSP 300 lb, Class IV, METHOD B CY	RSP 1/4 T, Class V, METHOD B CY	RSP FABRIC Cl 8 SQYD	ADJUST INLET EA	REMOVE FES EA	REMOVE JUNCTION BOX EA	REMOVE RCB CULVERT CY	REMOVE CULVERT LF	REMOVE HEADWALL EA	REMOVE INLET EA	ABANDON CULVERT EA	SAND BACKFILL CY	Temp STEEL COVER LB	CAP INLET EA	DESCRIPTION	STATION	DRAINAGE UNIT No.	DRAINAGE SYSTEM No.	DRAINAGE PLAN SHEET No.
																																								1					REMOVE INLET		i	19	D-8
5.40	1.88	249																																											G6 DI, 18-9 GRATE	"A2" 157+61	j		
					4.04												141.6														3.8														18" APC		k		
3.00	1.27	249																																											G6 DI, 18-9 GRATE	"A2" 159+05.80	l		
4.00	0.26	236									4.5																																		OCP DI, 36R GRATE	"MIS" 10+62.75	a		D-10
			0.80	7.3																																									Conc APRON		b		
																		7.6													2.9														24" APC		c		
																																						9.5							REMOVE 6′ x 6′ x 9.5′ RCB		d		
																													3,036	15.23																6′ x 6′ x 23′ RCB		e		
																		28.7													3.0														24" APC		f		
4.00	0.26	236									4.5																																		OCP DI, 36R GRATE	"MIS" 11+12.10	g		
			0.80	7.3																																									Conc APRON		h		
																																									1	119.7			ABANDON 66" x 136′ RCP		i		
9.50		263																													3.1														JS No. 4, 24-9 GRATE	"MIS" 10+97.13	j		
																												143.5			29.2														JACKED 72" WSP		k		
9.50		263																													2.0														JS No. 5, 24-9 GRATE	"R7" 41+02.12	l		
			0.80	7.3																																									Conc APRON		m		
																		90.0													10.9														24" APC		n		
																																							176.0						REMOVE 24" CMP		o		
4.70	2.55	239																																											G2 (Exp) DI, 24-12X GRATE	"R7" 42+00	p	20	
																		67.0													2.7														24" APC		q		
3.40	1.41	239																																											G2 DI, 24-12X GRATE	"R7" 42+70	r		
																																							27.0						REMOVE 24" CMP		s		
																																									1				REMOVE INLET		t		
																																									1				REMOVE INLET		u		
																																							8.0						REMOVE 24" CMP		v		
					4.79													23.1													2.1														24" APC		w		
4.00	2.08	478																																											GT3 DI, 24-12X GRATE	"R7" 42+70	x		
																																									1				REMOVE INLET		y		
					7.67													37.0													1.4														24" APC		z		
3.10	2.22	478																																											GT4 DI, 24-12X GRATE	"R7" 43+10	aa		
					17.73													85.6													1.1														24" APC		bb		
3.00	2.02	239																																											G2 (Exp) DI, 24-12X GRATE	"R7" 44+00	cc		
																		94.3													2.0														24" APC		dd		
															1																															24" FES		ee		
																																7.4		21.3												RSP		ff		
																																									1				REMOVE INLET		gg		
																																							68.0						REMOVE 30" RCP		hh		
																								69.4							8.9														36" RCP		ii		
4.40	3.36	239																																											G2 (Exp) DI, 24-12X GRATE	"R7" 40+57.00	jj		
																																								1				REMOVE HW		kk		
																								28.3							1.7														36" RCP		ll		
4.67	2.51	100																																											HW, L=14′		mm		
	19.82	3,508	2.40	21.9	34.23						9.0				1		141.6	433.3										143.5	3,036	15.23		97.7		7.4		21.3				9.5	279.0	1	5	1	119.7			SHEET DQ-6 TOTAL				

(N) NOT A SEPARATE PAY ITEM, FOR INFORMATION ONLY.

1 **REPLACED PER ADDENDUM No. 1 DATED SEPTEMBER 2, 2016**

DRAINAGE QUANTITIES
DQ-6

STATE OF CALIFORNIA - DEPARTMENT OF TRANSPORTATION
06-DESIGN
Caltrans

CALCULATED-DESIGNED BY MICAELA GARCIA
CHECKED BY GILBERTO BACA
FUNCTIONAL SUPERVISOR ROBERTO BANDA
REVISED BY
DATE REVISED

LAST REVISION 05-01-16
DATE PLOTTED => 24-AUG-2016
TIME PLOTTED => 16:55

Dist	COUNTY	ROUTE	POST MILES TOTAL PROJECT	SHEET No.	TOTAL SHEETS
05	SLO,Mon	101	63.2/R69.3, R0.0/R1.9	232	858

Peter Chander 04-18-16
REGISTERED CIVIL ENGINEER DATE

5-2-16
PLANS APPROVAL DATE

REGISTERED PROFESSIONAL ENGINEER PETER CHANDER No. 63988 Exp. 9/30/16 CIVIL STATE OF CALIFORNIA

THE STATE OF CALIFORNIA OR ITS OFFICERS OR AGENTS SHALL NOT BE RESPONSIBLE FOR THE ACCURACY OR COMPLETENESS OF SCANNED COPIES OF THIS PLAN SHEET.

DRAINAGE QUANTITIES

1

(N) DESIGN HEIGHT "H" LF	MINOR Conc (MINOR Str) CY	Misc IRON & STEEL LB	CONCRETE (Conc APRON) CY	Conc STAINING SQYD	CONCRETE Bkf (PIPE TRENCH) CY	48" P P MH (CASE 1) EA	72" P P MH (CASE 2) EA	60" P P MH (CASE 3) EA	MANHOLE FRAME & COVER EA	MANHOLE FRAME & GRATE EA	36" PRECAST CONCRETE PIPE INLET EA	12" CSP RISER (.079" THICK) LF	18" CSP (.064" THICK) LF	AFES 18" EA	AFES 24" EA		ALTERNATIVE PIPE CULVERT 18" LF	ALTERNATIVE PIPE CULVERT 24" LF	ALTERNATIVE PIPE CULVERT 30" LF	ALTERNATIVE PIPE CULVERT 42" LF	RCP 14" OVAL LF	RCP 18" LF	RCP 24" LF	RCP 30" LF	RCP 36" LF	RCP 72" LF	WELDED STEEL PIPE (WSP) JACKED 48" LF	WELDED STEEL PIPE (WSP) JACKED 72" LF	BAR Reinf STEEL (BOX CULVERT) LB	STRUCTURAL CONCRETE, (BOX CULVERT) CY	MAXIMUM COVER (N) LF	RSP 300 lb, Class IV, METHOD B CY	RSP 1/4 T, Class V, METHOD B CY	RSP FABRIC Cl 8 SQYD	ADJUST INLET EA	REMOVE FES EA	REMOVE JUNCTION BOX EA	REMOVE RCB CULVERT CY	REMOVE CULVERT LF	REMOVE HEADWALL EA	REMOVE INLET EA	ABANDON CULVERT EA	SAND BACKFILL CY	Temp STEEL COVER LB	CAP INLET EA	DESCRIPTION	STATION	DRAINAGE UNIT No.	DRAINAGE SYSTEM No.	DRAINAGE PLAN SHEET No.
																																												REMOVE 66" RCP		nn		D-10
					17.83																					64.4					7.1								75.0							72" RCP		oo	20	
10.70		263																													2.0														JS No. 6, 24-9 GRATE	"R7" 41+26.74	pp		
																																7.3		21.3											RSP		a		
															1																													24" AFES		b	21	
					4.97													36.8													1.7													24" APC		c		
3.00	1.31	239																																										G1 DI, 24-12X GRATE	"R7" 47+50	d		
3.80	1.51	239																																										G2 DI, 24-12X GRATE	"R7" 51+50	a		D-11
					6.22													30.0													1.9													24" APC		b		
3.90	1.54	239																																										G2 DI, 24-12X GRATE	"R7" 51+83	c		
																		30.0													2.2													24" APC		d		
4.00	1.57	239																																										G2 DI, 24-12X GRATE	"R7" 51+83	e		
																		161.2													2.1													24" APC		f	22	
4.20	1.62	239																																										G2 DI, 24-12X GRATE	"R7" 53+47.15	g		
					10.34													49.9													2.1													24" APC		h		
3.40	1.41	239																																										G2 DI, 24-12X GRATE	"R7" 54+00	i		
																																								1				REMOVE INLET		j		
																																							23.0					REMOVE 24" RCP		k		
																		22.3													2.6													24" APC		l		
3.70	1.10	239																																										G1 DI, 24-12X GRATE	"A2" 275+22.65	a		D-12
																		29.1													1.6													24" APC		b		
3.40	1.06	239																																										G1 DI, 24-12X GRATE	"R11" 75+25	c		
																		22.0													2.3													24" APC		d		
4.20	1.62	239																																										G2 DI, 24-12X GRATE	"R11" 75+25	e		
																		27.7													3.6													24" APC		f	23	
															1																													24" AFES		g		
																																7.3		21.3											RSP		h		
																		272.0													2.9													24" APC		i		
4.30	1.24	239																																										G1 DI, 24-12X GRATE	"A2" 277+73.92	j		
					6.51													36.7													2.1													24" APC		k		
3.50	1.44	239																																										G2 DI, 24-12X GRATE	"R11" 77+75	l		
																																								1				REMOVE HEADWALL		a		
																						3.5									1.3													24" RCP		b		
3.00	1.31	263																																										G2 DI, 24-9 GRATE	"R10" 66+60.50	c		
			0.80	7.3																																								Conc APRON		d	24	
																						36.0									2.9													24" RCP		e		
																																								1				REMOVE HEADWALL		f		
4.30	1.64	239																																										G2 (Mod) DI, 24-12X GRATE	"R10" 66+95	g		
																																								1				REMOVE INLET		a	25	
																						11.7									3.7													24" RCP		b		
3.30	1.02	239																																										G2 (Mod) DI, 24-12X GRATE	"R10" 74+87.50	c		
4.60	1.72	239																																										G2 DI, 24-12X GRATE	"R10" 80+80	a	26	D-13
																		19.0													2.4													24" APC		b		
	21.11	3,872	0.80	7.3	45.87										2			736.7				51.2			64.4							14.6		42.6					98.0	2	2				SHEET DQ-7 TOTAL				

(N) NOT A SEPARATE PAY ITEM, FOR INFORMATION ONLY.

1 **REPLACED PER ADDENDUM No. 1 DATED SEPTEMBER 2, 2016**

DRAINAGE QUANTITIES
DQ-7

REVISED BY | DATE REVISED

MICAELA GARCIA — GILBERTO BACA

CALCULATED-DESIGNED BY — CHECKED BY

FUNCTIONAL SUPERVISOR — ROBERTO BANDA

STATE OF CALIFORNIA - DEPARTMENT OF TRANSPORTATION

06-DESIGN

Caltrans

LAST REVISION 05-01-16

DATE PLOTTED => 24-AUG-2016
TIME PLOTTED => 16:55

Dist	COUNTY	ROUTE	POST MILES TOTAL PROJECT	SHEET No.	TOTAL SHEETS
05	SLO,Mon	101	63.2/R69.3, R0.0/R1.9	233	858

REGISTERED CIVIL ENGINEER 04-18-16 DATE

5-2-16
PLANS APPROVAL DATE

REGISTERED PROFESSIONAL ENGINEER PETER CHANDER No. 63988 Exp. 9/30/16 CIVIL STATE OF CALIFORNIA

THE STATE OF CALIFORNIA OR ITS OFFICERS OR AGENTS SHALL NOT BE RESPONSIBLE FOR THE ACCURACY OR COMPLETENESS OF SCANNED COPIES OF THIS PLAN SHEET.

DRAINAGE QUANTITIES

1

(N) DESIGN HEIGHT "H" LF	MINOR Conc (MINOR Str) CY	Misc IRON & STEEL LB	CONCRETE (Conc APRON) CY	Conc STAINING SQYD	CONCRETE Bkf (PIPE TRENCH) CY	MANHOLE CASE 1 EA	MANHOLE CASE 2 EA	MANHOLE CASE 3 EA	MANHOLE FRAME & COVER EA	MANHOLE FRAME & GRATE EA	36" PRECAST CONCRETE PIPE INLET LF	24" CSP LF	18" CSP(.064" THICK) LF	AFES 18" EA	AFES 24" EA	12" CSP RISER EA	ALTERNATIVE PIPE CULVERT 18" LF	ALTERNATIVE PIPE CULVERT 24" LF	ALTERNATIVE PIPE CULVERT 30" LF	ALTERNATIVE PIPE CULVERT 42" LF	RCP 14" OVAL LF	RCP 18" LF	RCP 24" LF	RCP 30" LF	RCP 36" LF	RCP 72" LF	WELDED STEEL PIPE (WSP) JACKED 48" LF	WELDED STEEL PIPE (WSP) JACKED 72" LF	BAR Reinf STEEL (BOX CULVERT) LB	STRUCTURAL CONCRETE, (BOX CULVERT) CY	MAXIMUM COVER (N) LF	RSP 300 lb, Class IV, METHOD B CY	RSP 1/4 T, Class V, METHOD B CY	RSP FABRIC Cl 8 SQYD	ADJUST INLET EA	REMOVE FES EA	REMOVE JUNCTION BOX EA	REMOVE RCB CULVERT CY	REMOVE CULVERT LF	REMOVE HEADWALL EA	REMOVE INLET EA	ABANDON CULVERT EA	SAND BACKFILL CY	Temp STEEL COVER LB	CAP INLET EA	DESCRIPTION	STATION	DRAINAGE UNIT No.	DRAINAGE SYSTEM No.	DRAINAGE PLAN SHEET No.
3.80	1.20	187																																									G5 DI, 18-9X GRATE	"R10" 80+80	c	26	D-13
																		349.4													2.4													24" APC		d		
3.90	1.56	239																																1									Adj. G2 DI, 24-12X GRATE	"R10" 84+31.60	e		
3.72	1.13	239																																									G1 DI, 24-12X GRATE	"R12" 19+35	a		D-14
																	33.5														2.7													18" APC		b	27	
														1																													18" AFES		c		
																																4.4		14.6									RSP		d		
																																						8.3					REMOVE 18" CSP		a		
																																								1			REMOVE INLET		b	28	
4.52	1.31	239																																									G1 DI, 24-12X GRATE	"R12" 9+32.50	c		
													5.0																		3.2													18" CMP		d		
																																						5.0					REMOVE 24" RCP		a		
																																								1			REMOVE INLET		b		
3.53	1.51	239																																									G2 DI, 24-12X GRATE	"A2" 395+50	c		
																						10.8									2.6													18" RCP		d		
3.83	1.58	239																																									G2 DI, 24-12X GRATE	"A2" 395+63.76	e	29	
																						8.3									2.6													18" RCP		f		
3.67	1.44	239																																									G2 DI, 24-12X GRATE	"A2" 395+75	g		
																							5.0								2.3													24" RCP		h		
																																						5.0					REMOVE 24" RCP		i		
																							5.0								1.9													24" RCP		j		
2.50	1.24	239																																									GO DI, 24-12X GRATE	"R3" 326+50	a		D-6
																					33.5										2.1													14" OVAL SHAPE RCP		b	30	
																																9.5		29.0									RSP		c		
					6.00																																						LOW CLEAR SLAB		d		
	10.97	1,860			6.00								5.0	1			33.5	349.4			33.5	19.1	10.0									13.9		43.6	1				18.3		2					SHEET DQ-8 TOTAL				

(N) NOT A SEPARATE PAY ITEM, FOR INFORMATION ONLY.

1 REPLACED PER ADDENDUM No. 1 DATED SEPTEMBER 2, 2016

DRAINAGE QUANTITIES
DQ-8

STATE OF CALIFORNIA - DEPARTMENT OF TRANSPORTATION
Caltrans 06-DESIGN

REVISED BY | DATE REVISED
MICAELA GARCIA | GILBERTO BACA
CALCULATED-DESIGNED BY | CHECKED BY
FUNCTIONAL SUPERVISOR | ROBERTO BANDA

LAST REVISION 05-01-16 | DATE PLOTTED => 24-AUG-2016 | TIME PLOTTED => 16:55

(N) NOT A SEPARATE PAY ITEM, FOR INFORMATION ONLY.

1

DRAINAGE QUANTITIES (Exist DRAINAGE FACILITY)

DRAINAGE PLAN SHEET No.	DRAINAGE SYSTEM No. ⬡	DRAINAGE UNIT No. ○	HEIGHT OF INLET (H) LF	MINOR CONCRETE (MINOR STRUCTURE) CY	MISCELLANEOUS IRON AND STEEL LB	CLASS 2 AGGREGATE BASE CY	APC 18" APC LF	APC 24" APC LF	RCP 18" RCP LF	RCP 24" RCP LF	RSP 300 lb, Class IV, METHOD B CY	RSP 60 lb, Class II, METHOD B CY	RSP FABRIC (CLASS 8) SQYD	REMOVE CULVERT LF	REMOVE HW EA	REMOVE INLET EA	(N) ABANDON CULVERT EA	SAND BACKFILLED CY	REMOVE Conc (Chnl) CY	DESCRIPTION	STATION
D-3	1x	a								6.0										24" RCP	"N1" 281+39.73
		b				0.4														COMPACTED CL-2 BASE	
		c										6.7	34.0							RSP	
D-4	2x	a	4.5	1.69																G2 DI, 24-9 GRATE REUSE FRAME & GRATE	"N1" 285+97.46
		b						4.0												24" APC	
		c														1				REMOVE INLET	
		d						4.0												24" APC	
		e										6.7	34.0							RSP	
	3x	a	5.2	1.87																G2 (Mod) DI, 24-9 GRATE REUSE FRAME & GRATE	"N1" 292+12.50
		b						4.0												24" APC	
		c														1				REMOVE INLET	
		d						4.0												24" APC	
	4x	a															1	5.0		ABANDON CULVERT 18" x 76' CSP	"A1" 98+69.15
		b														1				REMOVE INLET	
		c															1	3.7		ABANDON CULVERT 18" x 56' CSP	
		d														1				REMOVE INLET	
D-5	5x	a	3.0	1.31																G2 DI, 24-9 GRATE REUSE FRAME & GRATE	"A1" 109+41.47
		b														1				REMOVE INLET	
		c							4.0											18" RCP	
	6x	a	4.4	1.53	263															GO DI, 24-9 GRATE	"N1" 312+61.30
		b														1				REMOVE INLET	
		c							4.0											18" RCP	
	7x	a												39.1						REMOVE CULVERT	"A1" 119+95.84
		b														1				REMOVE INLET	
D-7	8x	a														1				REMOVE INLET	"R-3" 326+38.75
		b												34.0						REMOVE CULVERT	
	9x	a												63.8						REMOVE CULVERT	"A1" 127+95.43
		b														1				REMOVE INLET	
		c												90.5						REMOVE CULVERT	
		d												88.0						REMOVE CULVERT	
		e														1				REMOVE INLET	
		f																	7.7	REMOVE Conc V Chnl (H1' x W4.5' x D0.25')	
		g												84.6						REMOVE CULVERT	
		h													1					REMOVE HW	
	10x	a													1					REMOVE HW	"A1" 132+42.12
		b																	8.1	REMOVE Conc V Chnl (H2.75' x W7' x D0.25')	
		c													1					REMOVE HW	
D-9	11x	b					4.0													18" APC	"S1" 130+04.00
		c	3.8	1.44	239															GO DI, 24-12X GRATE	
		d														1				REMOVE INLET	
D-14	12x	a													1					REMOVE HW	
		b	3.67	1.20	75															HW, L=8.5	"R15" 5+64.67
		c												3.0						REMOVE CULVERT	
		d								3.0										24" RCP	
DD-1	13x	a													1					REMOVE HW	"A2" 332+50.00
		b	3.67	1.20	75															HW, L=8.5'	"A2" 332+50.00
		c												3.0						REMOVE CULVERT	
		d								3.0										24" RCP	
		e									18.5		40.6							RSP	
D-3	14x	a										6.6	34.0							RSP	"N1" 266+76.00
SHEET DQ-9 TOTAL				10.24	652	0.4	4.0	16.0	8.0	12.0	18.5	20.0	142.6	406.0	5	11	2	8.7	15.8		

Dist	COUNTY	ROUTE	POST MILES TOTAL PROJECT	SHEET No.	TOTAL SHEETS
05	SLO,Mon	101	63.2/R69.3, R0.0/R1.9	234	858

REGISTERED CIVIL ENGINEER 04-18-16 DATE

5-2-16
PLANS APPROVAL DATE

REGISTERED PROFESSIONAL ENGINEER PETER CHANDER No. 63988 Exp. 06/30/16 CIVIL STATE OF CALIFORNIA

THE STATE OF CALIFORNIA OR ITS OFFICERS OR AGENTS SHALL NOT BE RESPONSIBLE FOR THE ACCURACY OR COMPLETENESS OF SCANNED COPIES OF THIS PLAN SHEET.

1 **REPLACED PER ADDENDUM No. 1 DATED SEPTEMBER 2, 2016**

DRAINAGE QUANTITIES
DQ-9

REVISED BY | DATE REVISED
MICAELA GARCIA | GILBERTO BACA
CALCULATED-DESIGNED BY | CHECKED BY
FUNCTIONAL SUPERVISOR | ROBERTO BANDA
STATE OF CALIFORNIA - DEPARTMENT OF TRANSPORTATION
Caltrans 06-DESIGN

LAST REVISION 05-01-16 | DATE PLOTTED => 24-AUG-2016 | TIME PLOTTED => 16:55

Dist	COUNTY	ROUTE	POST MILES TOTAL PROJECT	SHEET No.	TOTAL SHEETS
05	SLO,Mon	101	63.2/R69.3, R0.0/R1.9	236	858

REGISTERED CIVIL ENGINEER 04-18-16 DATE

5-2-16
PLANS APPROVAL DATE

REGISTERED PROFESSIONAL ENGINEER PETER CHANDER No. 63988 Exp. 9/30/16 CIVIL STATE OF CALIFORNIA

THE STATE OF CALIFORNIA OR ITS OFFICERS OR AGENTS SHALL NOT BE RESPONSIBLE FOR THE ACCURACY OR COMPLETENESS OF SCANNED COPIES OF THIS PLAN SHEET.

ALTERNATIVE PIPE CULVERTS
STA 43+00 TO 120+00

ALLOWABLE MATERIAL	PIPE Dia
REINFORCED CONCRETE PIPE	18"/24"
HDPE CORRUGATED PLASTIC PIPE WITH SMOOTH INTERIOR	18"/24"
CSP (0.064" THICK) WITH POLYMERIZED ASPHALT INVERT	18"/24"
CSP (0.064" THICK) WITH POLYMERIC SHEET COATING	18"/24"
CSP (0.079" THICK) WITH HOT DIPPED BITUMINOUS COATING	24"
CSP (0.079" THICK)	24"
PVC CORRUGATED OR RIBBED PIPE	18"/24"

ALTERNATIVE PIPE CULVERTS
STA 120+00 TO 160+00

ALLOWABLE MATERIAL	PIPE Dia
REINFORCED CONCRETE PIPE	18"-42"
HDPE CORRUGATED PLASTIC PIPE WITH SMOOTH INTERIOR	18"-42"
CSP (0.064" THICK) WITH POLYMERIZED ASPHALT INVERT	18"-42"
CSP (0.064" THICK) WITH POLYMERIC SHEET COATING	18"-42"
CSP (0.138" THICK) WITH HOT DIPPED BITUMINOUS COATING	42"
PVC CORRUGATED OR RIBBED PIPE	18"/24"

ALTERNATIVE PIPE CULVERTS
STA 160+00 TO 400+00

ALLOWABLE MATERIAL	PIPE Dia
REINFORCED CONCRETE PIPE	18"/24"
HDPE CORRUGATED PLASTIC PIPE WITH SMOOTH INTERIOR	18"/24"
CSP (0.064" THICK) WITH POLYMERIZED ASPHALT INVERT	18"/24"
CSP (0.064" THICK) WITH POLYMERIC SHEET COATING	18"/24"
CSP (0.064" THICK) WITH HOT DIPPED BITUMINOUS COATING	18"/24"
CSP (0.064" THICK)	18"/24"
PVC CORRUGATED OR RIBBED PIPE	18"/24"

SUMMARY OF DRAINAGE QUANTITIES

1

DRAINAGE QUANTITY SHEET No.	MINOR Conc (MINOR Str)	Misc IRON & STEEL	CONCRETE (Conc APRON)	Conc STAINING **	CONCRETE Bkf (PIPE TRENCH)	CLASS 2 AGGREGATE BASE ***	48" PRECAST PIPE MANHOLE (CASE 1)	72" PRECAST PIPE MANHOLE (CASE 2)	60" PRECAST PIPE MANHOLE (CASE 3)	MANHOLE FRAME & COVER	MANHOLE FRAME & GRATE	36" PRECAST CONCRETE PIPE INLET	12" CSP RISER (.079" THICK)	18" CSP (.064" THICK)	AFES 18"	AFES 24"		ALTERNATIVE PIPE CULVERT 18"	ALTERNATIVE PIPE CULVERT 24"	ALTERNATIVE PIPE CULVERT 30"	ALTERNATIVE PIPE CULVERT 42"	RCP 14" x 23" OVAL	RCP 18"	RCP 24"	RCP 30"	RCP 36"	RCP 72"	WSP JACKED 48"	WSP JACKED 72"	BAR Reinf STEEL (BOX CULVERT)	STRUCTURAL CONCRETE, BOX CULVERT	RSP 60 lb, Class II, METHOD B *	RSP 300 lb, Class IV, METHOD B *	RSP ¼ T, Class V, METHOD B *	RSP FABRIC Cl 8 *	ADJUST INLET	REMOVE FES	REMOVE JUNCTION BOX	REMOVE RCB CULVERT	REMOVE CULVERT	REMOVE HEADWALL	REMOVE INLET	ABANDON CULVERT	SAND BACKFILL	REMOVE Conc (Chnl)	TEMPORARY STEEL COVER	CAP INLET
	CY	LB	CY	SQYD	CY	CY	EA	EA	EA	EA	EA	LF	LF	LF	EA	EA		LF	LF	LF	LF	LF	LF	LF	LF	LF	LF	LF	LF	LB	CY	CY	CY	CY	SQYD	EA	EA	EA	CY	LF	EA	EA	EA	CY	CY	LB	EA
DQ-1	17.70	3,156	5.60	51.1															1,221.4						4.0			269.0								3	2			302.6	3	1	2	64.6		170	1
DQ-2	29.61	4,617	6.83	66.2															883.9	250.0														122.0	111.3					39.5	1	4					
DQ-3	25.13	5,044	2.40	21.9	4.86					2		3.3	2.4		1	1		118.1	686.9											2,882	24.56							1		78.0		3					
DQ-4	18.61	2,373	7.20	65.7	18.72		3	3	1	6	3								961.6		124.1				208.7					2,114	14.85									5.0		2					
DQ-5	20.02	3,369	0.80	7.3	81.51											2		62.5	685.0														14.6		42.6					269.0		5					
DQ-6	19.82	3,508	2.40	21.9	34.23							9.0				1		141.6	433.3							97.7			143.5	3,036	15.23		7.4		21.3				9.5	279.0	1	5	1	119.7			
DQ-7	21.11	3,872	0.80	7.3	45.87											2			736.7					51.2			64.4						14.6		42.6					98.0	2	2					
DQ-8	10.97	1,860			6.00									5.0	1			33.5	349.4			33.5	19.1	10.0									13.9		43.6	1				18.3		2					
DQ-9	10.24	652				0.4												4.0	16.0				8.0	12.0								20.0	18.5		142.6					406.0	5	11	2	8.7	15.8		
DQ-10																																								70.0							
Q-18		5,019	41.70																																	47											
TOTAL	173.21	33,490	67.73	241.4	191.19	0.4	3	3	1	8	3	12.3	2.4	5.0	2	6		359.7	5,974.2	250.0	124.1	33.5	27.1	73.2	212.7	97.7	64.4	269.0	143.5	8,032	54.64	20.0	69.0	122.0	404.0	51	2	1	9.5	1,565.4	12	35	5	193.0	15.8	170	1

* INCLUDED IN ROCK SLOPE PROTECTION TABLE, SHEET Q-6.
** INCLUDED IN CONCRETE STAINING TABLE, SHEET Q-14.
*** INCLUDED IN PAVEMENT STRUCTURE QUANTITIES TABLE, SHEET Q-3.
(N) NOT A SEPARATE PAY ITEM, FOR INFORMATION ONLY.

1 REPLACED PER ADDENDUM No. 1 DATED SEPTEMBER 2, 2016

DRAINAGE QUANTITIES
DQ-11

STATE OF CALIFORNIA - DEPARTMENT OF TRANSPORTATION
Caltrans 06-DESIGN

FUNCTIONAL SUPERVISOR: ROBERTO BANDA
CALCULATED-DESIGNED BY: MICAELA GARCIA
CHECKED BY: GILBERTO BACA
REVISED BY
DATE REVISED

LAST REVISION 05-01-16
DATE PLOTTED => 24-AUG-2016
TIME PLOTTED => 16:55

Dist	COUNTY	ROUTE	POST MILES TOTAL PROJECT	SHEET No.	TOTAL SHEETS
05	SLO,Mon	101	63.2/R69.3, R0.0/R1.9	411	858

REGISTERED CIVIL ENGINEER 04-18-16 DATE

5-02-16
PLANS APPROVAL DATE

REGISTERED PROFESSIONAL ENGINEER FAWZI YAGHMOUR No. C-54750 Exp 12/31/17 CIVIL STATE OF CALIFORNIA

THE STATE OF CALIFORNIA OR ITS OFFICERS OR AGENTS SHALL NOT BE RESPONSIBLE FOR THE ACCURACY OR COMPLETENESS OF SCANNED COPIES OF THIS PLAN SHEET.

*LOL "A1, A2" = STRIPE DETAIL THAT CROSSES "A1" "A2" DIVIDE
LOL "A1" STA 29+00 TO 140+00
LOL "A2" STA 139+62.74 TO 455+50
LOL "A1" STA 140+00 = LOL"A2" 139+62.74
LOL "A1" STA 29+00 TO LOL"A2" 455+50 = 42,688'

PAVEMENT DELINEATION QUANTITIES 1

SHEET No.	LOCATION/STATION	DIRECTION	DETAIL No.	PAVEMENT MARKER (RETROREFLECTIVE) TYPE G	PAVEMENT MARKER (RETROREFLECTIVE) TYPE H	PAVEMENT MARKER (RETROREFLECTIVE) TYPE C	PAVEMENT MARKER (RETROREFLECTIVE) TYPE D	PAVEMENT MARKER (NON-REFLECTIVE) TYPE A	THERMOPLASTIC TRAFFIC STRIPE ~~(ENHANCED WET NIGHT VISIBILITY)~~ 8" WHITE SOLID	6" WHITE SOLID	4" YELLOW SOLID	4" WHITE SOLID	4" WHITE 36-12	4" WHITE 12-3	DELINEATOR (CLASS-1) TYPE F	DELINEATOR (CLASS-1) TYPE G	GUARD RAILING DELINEATOR TYPE F	GUARD RAILING DELINEATOR TYPE G	OBJECT MARKER TYPE L-1	OBJECT MARKER TYPE K-1
				EA	EA	EA	EA	EA	LF	LF	LF	LF	LF	LF	EA	EA	EA	EA	EA	EA
PD-1 to PD-28	LOL "A1, A2" STA 29+00 TO 455+50 *	NB	11/13	890		12		3,557					42,688		79	55	12	6	84	2
	LOL "A1, A2" STA 29+00 TO 455+50 *	SB	11/13	890		8		3,557					42,688		90	39	38	6	75	3
PD-1 to PD-4	LOL "A1" STA 29+00 TO 55+70	NB	25		59						2,748									
	LOL "A1" STA 29+00 TO 55+70	SB	25		58						2,710									
PD-4 TO PD-28	LOL "A1, A2" STA 57+57 TO 455+50 *	NB	25		831						39,830									
	LOL "A1, A2" STA 56+69 TO 455+50 *	SB	25		833						39,910									
PD-1 to PD-7	LOL "A1" STA 29+00 TO 119+77	NB	27B									9,078								
PD-7 TO PD-8	LOL "R3" STA 09+38 TO 20+69	NB	27B									1,124								
PD-8 TO PD-9	LOL "A1, A2" STA 122+39 TO 144+00 *	NB	27B									2,190								
PD-9 TO PD-11	LOL "R4" STA 44+00 TO 52+39	NB	27B									840								
	LOL "A2" STA 146+67 TO 155+81	NB	27B									903								
PD-11 TO PD-12	LOL "R5" STA 03+25 TO 12+49	NB	27B									921								
PD-12 TO PD-17	LOL "A2" STA 162+49 TO 248+90	NB	27B									8,641								
PD-17	LOL "R8" STA 48+90 TO 57+45	NB	27B									852								
PD-17 TO PD-20	LOL "A2" STA 252+38 TO 279+73	NB	27B									2,742								
PD-16 TO PD-19	LOL "MIS" STA 06+50 TO LOL "MIS" 39+92	NB	27B									3,342								
PD-19 TO PD-20	LOL "R10" STA 75+90 TO 84+20	NB	27B									830								
PD-20 TO PD-25	LOL "A2" STA 279+73 TO 380+23	NB	27B									10,050								
PD-24 TO PD-25	LOL "R12" STA 10+23 TO 24+69	NB	27B									1,446								
PD-25 TO PD-26	LOL "R14" STA 15+55 TO 21+50	NB	27B									595								
PD-24 TO PD-25	LOL "A2" STA 383+60 TO 404+76	NB	27B									2,116								
PD-26 TO PD-27	LOL "A2" STA 411+50 TO 449+03	NB	27B									3,753								
PD-27 TO PD-28	LOL "R16" STA 09+03 TO 12+34	NB	27B									331								
PD-27 TO PD-28	LOL "A2" STA 449+03 TO 452+35	NB	27B									332								
PD-28	LOL "A2" STA 450+69 TO 455+50	NB	27B									483								
PD-1 to PD-4	LOL "A1" STA 29+00 TO "R1" 55+35	SB	27B									2,681								
PD-4 TO PD-6	LOL "A1" STA 56+00 TO 96+50	SB	27B									4,335								
PD-6 TO PD-7	LOL "A1" STA 93+49 TO 117+13	SB	27B									2,382								
PD-7 TO PD-8	LOL "R2" STA 117+13 TO 130+22	SB	27B									1,319								
PD-7 TO PD-10	LOL "A1,A2" STA 119+77 TO 158+69 *	SB	27B									3,929								
PD-10 TO PD-17	LOL "A2" STA 153+05 TO 251+85	SB	27B									9,717								
PD-15 TO PD-18	LOL "R7" STA 36+50 TO "R9" 69+92	SB	27B									3,356								
PD-17 TO PD-20	LOL "A2" STA 261+51 TO 278+72	SB	27B									1,724								
PD-18 TO PD-25	LOL "A2" STA 270+31 TO 395+05	SB	27B									12,506								
PD-24 TO PD-25	LOL "A2" STA 386+17 TO 407+17	SB	27B									2,113								
PD-25 TO PD-28	LOL "A2" STA 395+89 TO 454+73	SB	27B									5,951								
PD-28	LOL "A2" STA 453+40 TO 455+50	SB	27B									213								
PD-4	LOL "A1" STA 55+35 TO 56+69	SB	27C											136						
PD-3 TO PD-4	LOL "A1" STA 50+74 TO 55+60	NB	38	21					480											
PD-11	LOL "R4" STA 51+83 TO 52+39	NB	38	4					56											
PD-25	LOL "R12" STA 23+51 TO 24+68	NB	38	6					114											
PD-4	LOL "A1" STA 56+69 TO 63+50	SB	38	30					681											
PD-10	LOL "R6" STA 3+05 TO 3+58	SB	38	4					54											
PD-25	LOL "R15" STA 5+31 TO 6+29	SB	38	5					98											
PD-17	LOL "SCR" STA 10+98 TO 13+62	NB	38B	23					527											
SUBTOTAL PDQ-1				1,873	1,781	20		7,114	2,010		85,198	100,795	85,376	136	169	94	50	12	159	5

1 REPLACED PER ADDENDUM No. 1 DATED SEPTEMBER 2, 2016

PAVEMENT DELINEATION AND QUANTITIES

PDQ-1

REVISED BY | DATE REVISED
DAVID BLACK | FAWZI YAGHMOUR
CALCULATED-DESIGNED BY | CHECKED BY
FUNCTIONAL SUPERVISOR: MOHAMMED QATAMI
STATE OF CALIFORNIA - DEPARTMENT OF TRANSPORTATION
Caltrans TRAFFIC DESIGN

LAST REVISION 04-18-16 | DATE PLOTTED => 24-AUG-2016 TIME PLOTTED => 16:55

Dist	COUNTY	ROUTE	POST MILES TOTAL PROJECT	SHEET No.	TOTAL SHEETS
05	SLO,Mon	101	63.2/R69.3, R0.0/R1.9	412	858

REGISTERED CIVIL ENGINEER 04-18-16 DATE

5-02-16
PLANS APPROVAL DATE

REGISTERED PROFESSIONAL ENGINEER FAWZI YAGHMOUR No. C-54750 Exp. 12/31/17 CIVIL STATE OF CALIFORNIA

THE STATE OF CALIFORNIA OR ITS OFFICERS OR AGENTS SHALL NOT BE RESPONSIBLE FOR THE ACCURACY OR COMPLETENESS OF SCANNED COPIES OF THIS PLAN SHEET.

*LOL "A1, A2" = STRIPE DETAIL THAT CROSSES "A1" "A2" DIVIDE
LOL "A1" STA 29+00 TO 140+00
LOL "A2" STA 139+62.74 TO 455+50
LOL "A1" STA 140+00 = LOL"A2" 139+62.74
LOL "A1" STA 29+00 TO LOL"A2" 455+50 = 42,688'

PAVEMENT DELINEATION QUANTITIES 1

SHEET No.	LOCATION/STATION	DIRECTION	DETAIL No.	PAVEMENT MARKERS (RETROREFLECTIVE) TYPE G	TYPE H	TYPE C	TYPE D	PAVEMENT MARKERS (NON-REFLECTIVE) TYPE A	THERMOPLASTIC TRAFFIC STRIPE ~~(ENHANCED WET NIGHT VISIBILITY)~~ 8" WHITE SOLID	6" WHITE SOLID	4" YELLOW SOLID	4" WHITE SOLID	4" WHITE 36-12	4" WHITE 12-3	DELINEATOR (CLASS-1) TYPE F	TYPE G	GUARD RAILING DELINEATOR TYPE F	TYPE G	OBJECT MARKER TYPE L-1	TYPE K-1
				EA	EA	EA	EA	EA	LF	LF	LF	LF	LF	LF	EA	EA	EA	EA	EA	EA
PD-7 TO PD-8	LOL "R3" STA 09+38 TO 12+07	NB	36	24					543						10	8				
PD-9	LOL "R4" STA 44+00 TO 46+67	NB	36	24					537											
PD-17	LOL "R8" STA 48+90 TO 52+38	NB	36	30					695											
PD-24	LOL "R12" STA 10+23 TO 13+60	NB	36	29					673											
PD-27 TO PD-28	LOL "A2" STA 449+03 TO 450+69	NB	36	15					333											
PD-10	LOL "R6" STA 8+69 TO 11+28	SB	36	23					516											
PD-17	LOL "R7" STA 51+85 TO 54+60	SB	36	24					552											
PD-20	LOL "R11" STA 78+72 TO 82+10	SB	36	29					668											
PD-25 TO PD-26	LOL "R15" STA 17+10 TO 20+18	SB	36	27					614											
PD-11	LOL "R5" STA 05+80 TO 09+90	NB	36A	18					813											
PD-20	LOL "R10" STA 79+73 TO 83+18	NB	36A	14					690											
PD-25 TO PD-26	LOL "R14" STA 14+76 TO 18+52	NB	36A	17					757											
PD-6	LOL "R1" STA 90+03 TO 93+55	SB	36A	16					703											
PD-7	LOL "R2" STA 117+12 TO 119+76	SB	36A	12					531											
PD-17	LOL "R9" STA 58+00 TO 61+51	SB	36A	16					703											
PD-24	LOL "R13" STA 12+45 TO 16+17	SB	36A	17					744											
PD-28	LOL "A2" STA 451+00 TO 453+40	SB	36A	11					477											
PD-11 TO PD-12	LOL "R5" STA 09+91 TO 12+49	NB	8										260							
PD-20	LOL "R10" STA 83+18 TO 84+20	NB	8										102							
PD-26	LOL "R14" STA 18+52 TO 21+50	NB	8										298							
PD-6	LOL "R1" STA 89+00 TO 90+04	SB	8										104							
PD-7	LOL "R2" STA 114+10 TO 117+13	SB	8										300							
PD-17	LOL "R9" STA 55+00 TO 58+00	SB	8										300							
PD-24	LOL "R13" STA 10+00 TO 12+45	SB	8										246							
PD-27 TO PD-28	LOL "R17" STA 08+80 TO 11+00	SB	8										221							
PD-4	LOL "SMR" STA 52+50 TO 55+35	SB	21								564									
PD-10 TO PD-11	LOL "TEN" STA 11+50 TO 17+50	NB	22				53				1,202									
PD-16	LOL "R7" STA 35+00 TO 37+03	NB	22				18				386									
PD-18 TO PD-19	LOL "MIS" STA 18+50 TO 24+92	NB	22				55				1,290									
PD-6 TO PD-9	LOL "CEM1" STA 89+03 TO 128+00	SB	22				334				8,000									
PD-9 TO PD-10	LOL "CEM1" STA 128+00 TO 142+99	SB	19		64		32				2,998									
PD-8	LOL "R3" STA 32+07 TO 39+60	NB	25A		37						858									
PD-9 TO PD-11	LOL "R4" STA 46+67 TO 52+39	NB	25A		13						572									
PD-11	LOL "R5" STA 03+29 TO 05+81	NB	25A		11						254									
PD-16 TO PD-17	LOL "MIS" STA 07+48 TO 25+97	NB	25A		78						1,849									
PD-17 TO PD-19	LOL "R8" STA 52+38 TO 61+32	NB	25A		39						894									
PD-17 TO PD-19	LOL "MIS" STA 29+88 TO 33+50	NB	25A		17						362									
PD-19 TO PD-20	LOL "R10" STA 66+10 TO 79+73	NB	25A		58						1,361									
PD-24 TO PD-25	LOL "R12" STA 13+60 TO 24+69	NB	25A		48						1,110									
PD-25	LOL "R14" STA 5+35 TO 14+76	NB	25A		41						944									
PD-28	LOL "R16" STA 10+69 TO 12+35	NB	25A		8						166									
PD-28	LOL "R17" STA 13+40 TO 14+83	NB	25A		7						143									
PD-6	LOL "R1" STA 93+55 TO 96+50	SB	25A		14						303									
PD-7 TO PD-8	LOL "R2" STA 119+77 TO 131+69	SB	25A		51						1,191									
			SUBTOTAL PDQ-2	346	486		492		10,549		24,447		1,831							

1 REPLACED PER ADDENDUM No. 1 DATED SEPTEMBER 2, 2016

PAVEMENT DELINEATION AND QUANTITIES
PDQ-2

STATE OF CALIFORNIA - DEPARTMENT OF TRANSPORTATION
Caltrans® TRAFFIC DESIGN

REVISED BY | DATE REVISED
DAVID BLACK | FAWZI YAGHMOUR
CALCULATED-DESIGNED BY | CHECKED BY
FUNCTIONAL SUPERVISOR: MOHAMMED QATAMI

LAST REVISION 04-18-16 | DATE PLOTTED => 24-AUG-2016 | TIME PLOTTED => 16:55

Dist	COUNTY	ROUTE	POST MILES TOTAL PROJECT	SHEET No.	TOTAL SHEETS
05	SLO,Mon	101	63.2/R69.3, R0.0/R1.9	413	858

REGISTERED CIVIL ENGINEER 04-18-16 DATE

5-02-16
PLANS APPROVAL DATE

REGISTERED PROFESSIONAL ENGINEER FAWZI YAGHMOUR No. C-54750 Exp. 12/31/17 CIVIL STATE OF CALIFORNIA

THE STATE OF CALIFORNIA OR ITS OFFICERS OR AGENTS SHALL NOT BE RESPONSIBLE FOR THE ACCURACY OR COMPLETENESS OF SCANNED COPIES OF THIS PLAN SHEET.

*LOL "A1, A2" = STRIPE DETAIL THAT CROSSES "A1" "A2" DIVIDE
LOL "A1" STA 29+00 TO 140+00
LOL "A2" STA 139+62.74 TO 455+50
LOL "A1" STA 140+00 = LOL"A2" 139+62.74
LOL "A1" STA 29+00 TO LOL"A2" 455+50 = 42,688′

PAVEMENT DELINEATION QUANTITIES (1)

SHEET No.	LOCATION/STATION	DIRECTION	DETAIL No.	PAVEMENT MARKERS (RETROREFLECTIVE) TYPE G	TYPE H	TYPE C	TYPE D	(NON-REFLECTIVE) TYPE A	THERMOPLASTIC TRAFFIC STRIPE ~~(ENHANCED WET NIGHT VISIBILITY)~~ 8" WHITE SOLID	6" WHITE SOLID	4" YELLOW SOLID	4" WHITE SOLID	36-12	12-3	DELINEATOR (CLASS-1) TYPE F	TYPE G	GUARD RAILING DELINEATOR TYPE F	TYPE G	OBJECT MARKER TYPE L-1	TYPE K-1
				EA	EA	EA	EA	EA	LF	LF	LF	LF	LF	LF	EA	EA	EA	EA	EA	EA
PD-10	LOL "R6" STA 03+05 TO 8+69	SB	25A		25						566									
PD-15 TO PD-17	LOL "R7" STA 37+42 TO 51+85	SB	25A		62						1,444									
PD-17 TO PD-18	LOL "R9" STA 61+51 TO 67+42	SB	25A		26						591									
PD-18, PD-20	LOL "R11" STA 69+82 TO 78+72	SB	25A		39						890									
PD-24 TO PD-25	LOL "R13" STA 16+17 TO 25+05	SB	25A		39						893									
PD-25	LOL "R15" STA 05+31 TO 17+10	SB	25A		51						1,183									
PD-16	LOL "R7" STA 35+00 TO 36+50	NB	39							144										
	LOL "R7" STA 35+00 TO 36+50	SB	39							150										
	LOL "R7" STA 7+03 TO 7+42	SB	29		6						88									
	LOL "R7" STA 7+03 TO 7+42	SB	29		6						90									
PD-4	LOL "A1" STA 56+96 TO 63+50 (DOUBLE LINE)	SB	39							1,308										
			SUBTOTAL PDQ-3		254					1,602	5,745									
			SUBTOTAL PDQ-2	346	486		492		10,549		24,447		1,831							
			SUBTOTAL PDQ-1	1,873	1,781	20		7,114	2,010		85,198	100,795	85,376	136	169	94	50	12	159	5
			TOTAL	5,252				7,114	12,559	1,602	216,185		87,207	136	263		62		164	

(1) REPLACED PER ADDENDUM No. 1 DATED SEPTEMBER 2, 2016

PAVEMENT DELINEATION AND QUANTITIES
PDQ-3

REVISED BY | DATE REVISED
DAVID BLACK | FAWZI YAGHMOUR
CALCULATED-DESIGNED BY | CHECKED BY
FUNCTIONAL SUPERVISOR: MOHAMMED QATAMI
STATE OF CALIFORNIA - DEPARTMENT OF TRANSPORTATION
Caltrans TRAFFIC DESIGN

LAST REVISION 04-18-16 | DATE PLOTTED => 24-AUG-2016 | TIME PLOTTED => 16:55

Dist	COUNTY	ROUTE	POST MILES TOTAL PROJECT	SHEET No.	TOTAL SHEETS
05	SLO,Mon	101	63.2/R69.3, R0.0/R1.9	414	858

04-18-16
REGISTERED CIVIL ENGINEER DATE

5-02-16
PLANS APPROVAL DATE

REGISTERED PROFESSIONAL ENGINEER
FAWZI YAGHMOUR
No. C-54750
Exp 12/31/17
CIVIL
STATE OF CALIFORNIA

THE STATE OF CALIFORNIA OR ITS OFFICERS OR AGENTS SHALL NOT BE RESPONSIBLE FOR THE ACCURACY OR COMPLETENESS OF SCANNED COPIES OF THIS PLAN SHEET.

PAVEMENT DELINEATION QUANTITIES 1

SHEET No.	LOCATION/STATION	DIRECTION	THERMOPLASTIC PAVEMENT MARKING ~~(ENHANCED WET NIGHT VISIBILITY)~~ DESCRIPTION	PLACE SQFT	REMOVE SQFT
PD-1 to PD-28	LOL "A1, A2" STA 29+00 TO 455+50 *	NB	CHP ARIAL MARKING-2	24	24
	LOL "A1, A2" STA 29+00 TO 455+50 *	SB	CHP ARIAL MARKING-2	24	24
PD-3 TO PD-4	LOL "A1" STA 51+00 TO 61+50	NB	TYPE III ARROW-3	126	126
			TYPE V ARROW-6	198	198
			TYPE VI ARROW-2	84	84
PD-4	LOL "A" STA 57+00 TO 63+50	SB	TYPE III ARROW-4	168	168
			TYPE V ARROW-8	264	264
			BIKE SYMBOL W/RIDER-2	14	14
			BIKE-2	10	10
			LANE-2	12	12
PD-6	LOL "R1" STA 25+00	SB	TYPE I ARROW-1 24'	31	31
PD-8	LOL "R3" STA 16+00 TO 18+00	NB	TYPE V ARROW-2	66	66
	LOL "R2" STA 9+70	SB	TYPE I ARROW-1 24'	31	31
PD-9 TO PD-11	LOL "R4" STA 46+00 TO 53+50	NB	STOP-3	66	66
			AHEAD-1	31	31
			LIMIT LINE	46	46
			TYPE V ARROW-1	33	33
			TYPE VII ARROW-1	27	27
			TYPE III ARROW-1	42	42
			TYPE I ARROW-1 24'	31	31
PD-10	LOL "R6" STA 3+00 TO 9+50	SB	STOP-3	66	66
			AHEAD-1	31	31
			LIMIT LINE	45	45
			TYPE V ARROW-1	33	33
			TYPE III ARROW-2	84	84
PD-16	MISSION STREET	NB	TYPE I ARROW-1 24'	31	31
	LOL "R7" STA 37+00 TO 39+00	SB	TYPE V ARROW-2	66	66
PD-17 TO PD-19	LOL "MIS" STA 13+50 TO 23+00	NB	TYPE V ARROW-2	66	66
			TYPE III ARROW-1	42	42
			RAILROAD CROSSING-2	140	140
			LIMIT LINE	60	60
			TYPE VII ARROW-1	27	27
			STOP-2	44	44
PD-18	LOL "R9" STA 67+80	SB	TYPE I ARROW-1 24'	31	31
PD-18 TO PD-20			STOP-2	44	44
			AHEAD-1	31	31
	LOL "R11" STA 70+50 TO 79+50	SB	LIMIT LINE	43	43
			RAILROAD CROSSING-1	70	70
			TYPE V ARROW-2	66	66
PD-19	LOL "R10" STA 66+50	NB	TYPE I ARROW-1 24'	31	31
PD-24 TO PD-25	LOL "R11" STA 70+50 TO 79+50	NB	STOP-3	66	66
			AHEAD-1	31	31
			LIMIT LINE	40	40
			TYPE VII ARROW-2	54	54
			TYPE III ARROW-2	84	84
PD-25	LOL "R14" STA 5+70	NB	TYPE I ARROW-1 24'	31	31
	LOL "R15" STA 5+20 TO 16+00	SB	STOP-3	66	66
			AHEAD-1	31	31
			LIMIT LINE	48	48
			TYPE VII ARROW-2	54	54
			TYPE III ARROW-2	84	84
	LOL "R13" STA 24+70	SB	TYPE I ARROW-1 24'	31	31
	TOTAL			2,999	2,999

*LOL "A1, A2" = STRIPE DETAIL THAT CROSSES "A1" "A2" DIVIDE
LOL "A1" STA 29+00 TO 140+00
LOL "A2" STA 139+62.74 TO 455+50
LOL "A1" STA 140+00 = LOL"A2" 139+62.74
LOL "A1" STA 29+00 TO LOL"A2" 455+50 = 42,688'

1 REPLACED PER ADDENDUM No. 1 DATED SEPTEMBER 2, 2016

PAVEMENT DELINEATION AND QUANTITIES
PDQ-4

STATE OF CALIFORNIA - DEPARTMENT OF TRANSPORTATION
Caltrans TRAFFIC DESIGN
FUNCTIONAL SUPERVISOR: MOHAMMED QATAMI
CALCULATED-DESIGNED BY: DAVID BLACK
CHECKED BY: FAWZI YAGHMOUR
REVISED BY
DATE REVISED

LAST REVISION 04-18-16 | DATE PLOTTED => 24-AUG-2016 | TIME PLOTTED => 16:55

Dist	COUNTY	ROUTE	POST MILES TOTAL PROJECT	SHEET No.	TOTAL SHEETS
05	SLO,Mon	101	63.2/R69.3, R0.0/R1.9	439	858

REGISTERED CIVIL ENGINEER 04-18-16 DATE

5-02-16
PLANS APPROVAL DATE

REGISTERED PROFESSIONAL ENGINEER PETER CHANDER No. 63988 Exp. 06/30/16 CIVIL STATE OF CALIFORNIA

THE STATE OF CALIFORNIA OR ITS OFFICERS OR AGENTS SHALL NOT BE RESPONSIBLE FOR THE ACCURACY OR COMPLETENESS OF SCANNED COPIES OF THIS PLAN SHEET.

PLACE HOT MIX ASPHALT (MISCELLANEOUS AREA)

LOCATION/STATION	AREA SQYD	* HMA (TYPE A) TON	DESCRIPTION
HMA OVERSIDE DRAINS (SHEET Q-8)	663.70	107.75	HMA OVERSIDE DRAINS
CORRUGATED METAL PIPE DOWNDRAINS (SHEET Q-16)	86.18	11.73	PIPE DOWNDRAINS
"A1" 39+83.00 L+ TO "A1" 40+62.00 L+	17.78	3.96	SIDE GUTTER
"SMR" 53+00.00 R+ TO "SMR" 54+95.80 R+	57.23	12.75	SIDE GUTTER
"SMR" 53+26.00 L+ TO "A1" 62+12.84 L+	251.89	56.11	SIDE GUTTER
"A1" 81+45.00 L+ TO "A1" 85+71.52 L+	199.78	44.50	SIDE GUTTER
"R1" 91+00.00 L+ TO "R1" 94+50.00 L+	120.56	26.86	SIDE GUTTER
"A1" 93+50.00 L+ TO "A1" 114+50.00 L+	725.67	161.65	SIDE GUTTER
"A1" 115+30.00 L+ TO "A1" 117+15.00 L+	58.78	13.10	SIDE GUTTER
"R2" 124+60.00 L+ TO "R2" 126+55.00 L+	122.78	27.35	SIDE GUTTER
"TEN" 11+68.06 L+ TO "R6" 7+15.00 L+	251.33	55.99	SIDE GUTTER
"R6" 7+35.50 L+ TO "S1" 98+00.00 L+	1523.45	339.35	SIDE GUTTER
"S1" 113+50.00 L+ TO "S1" 121+00.00 L+	265.44	59.13	SIDE GUTTER
"R7" 38+26.43 R+ TO "R7" 39+35.00 R+	58.89	13.12	SIDE GUTTER
"R7" 40+52.00 L+ TO "R7" 47+50.00 L+	227.78	50.74	SIDE GUTTER
"A2" 308+00.00 L+ TO "A2" 317+50.00 L+	327.11	72.87	SIDE GUTTER
"A2" 394+50.00 L+ TO "A2" 405+87.06 L+	379.12	84.45	SIDE GUTTER
"R15" 10+41.82 L+ TO "A2" 410+69.36 L+	343.22	76.45	SIDE GUTTER
"A2" 433+00.00 L+ TO "A2" 441+96.82 L+	301.67	67.20	SIDE GUTTER
"A1" 53+08.85 R+ TO "A1" 58+15.32 R+	165.33	36.83	SIDE GUTTER
"N1" 284+00.00 L+ TO "N1" 308+58.50 L+	848.22	188.95	SIDE GUTTER
"R3" 323+85.00 L+ TO "R3" 328+10.00 L+	85.56	19.06	SIDE GUTTER
"R3" 323+85.00 R+ TO "R3" 326+04.00 R+	71.67	15.97	SIDE GUTTER
"R4" 47+90.83 L+ TO "R4" 52+25.64 L+	142.67	31.78	SIDE GUTTER
"R5" 3+09.00 L+ TO "R5" 6+95.30 L+	129.89	28.93	SIDE GUTTER
"R9" 62+75.00 R+ TO "R9" 65+30.75 R+	114.42	23.13	SIDE GUTTER
"R10" 66+76.38 L+ TO "R10" 78+31.13 L+	386.00	85.98	SIDE GUTTER
"R11" 71+19.50 R+ TO "R11" 76+65.37 R+	190.18	32.31	SIDE GUTTER
TOTAL	8116.3	1,748.00*	

* QUANTITY INCLUDED IN PAVEMENT STRUCTURE QUANTITIES TABLE IN SHEET Q-3

INDIVIDUAL SLAB REPLACEMENT (RSC) - TYPE 1

LOCATION/STATION * FROM	TO	(N) SLABS 12'x15' EA	RAPID STRENGTH Conc CY	BASE BOND BREAKER SQYD
"A2" 158+00	"A2" 450+00	233	150	700
	TOTAL	233	150	700

(N) NOT A SEPARATE PAY ITEM, FOR INFORMATION ONLY.

* SLAB LOCATIONS TO BE DETERMINED IN THE FIELD BY THE ENGINEER.

REMOVE PLANTS

LOCATION/STATION	REMOVE AILANTHUS (N) SQFT	REMOVE TREE (N) EA
"A1" 42+38.00 TO 44+20.00 L+	3,088	
"A1" 44+40.00 TO 45+64.00 R+	3,823	
"A1" 48+66.23, 60' R+		1
"A1" 54+31.60, 158' R+		1
"A1" 103+16.00 TO 104+90.00 L+	2,940	
"A2" 152+25.00, 7' R+		1
TOTAL	9,851	3

(N) NOT A SEPARATE PAY ITEM, FOR INFORMATION ONLY.

ROCK SLOPE PROTECTION 1

LOCATION	RSP (300 lb, Class IV, METHOD B) CY	RSP FABRIC (CLASS 8) SQYD	RSP (1/4 TON, Class V, METHOD B) CY	RSP (60 lb, Class II, METHOD B) CY
DRAINAGE SYSTEMS (SHEET DQ-11)	69	404	122	20
HMA OVERSIDE DRAINS (SHEET Q-8)	135	392		
CORRUGATED STEEL PIPE DOWNDRAIN (SHEET Q-16)	50	198		
RETAINING WALL (SHEET R-4)	2	6		
TOTAL	256	1000	122	20

TREATED WOOD WASTE

DESCRIPTION	(N) EA	LB
ROADSIDE SIGN QUANTITIES (SHEET SQ-1)	159	13,035
MBGR WOOD POSTS	1,105	88,400
TOTAL		101,435

(N)-NOT A SEPARATE PAY ITEM, FOR INFORMATION ONLY.

1 REPLACED PER ADDENDUM No. 1 DATED SEPTEMBER 2, 2016

SUMMARY OF QUANTITIES

Q-6

STATE OF CALIFORNIA - DEPARTMENT OF TRANSPORTATION
Caltrans 06-DESIGN
FUNCTIONAL SUPERVISOR ROBERTO BANDA
CALCULATED-DESIGNED BY PETER CHANDER
CHECKED BY HAL KENYON
REVISED BY
DATE REVISED

LAST REVISION 01-08-16 | DATE PLOTTED => 24-AUG-2016 | TIME PLOTTED => 16:56

Dist	COUNTY	ROUTE	POST MILES TOTAL PROJECT	SHEET No.	TOTAL SHEETS
05	SLO,Mon	101	63.2/R69.3, R0.0/R1.9	440	858

REGISTERED CIVIL ENGINEER 04-18-16 DATE

5-02-16
PLANS APPROVAL DATE

REGISTERED PROFESSIONAL ENGINEER PETER CHANDER No. 63988 Exp. 06/30/16 CIVIL STATE OF CALIFORNIA

THE STATE OF CALIFORNIA OR ITS OFFICERS OR AGENTS SHALL NOT BE RESPONSIBLE FOR THE ACCURACY OR COMPLETENESS OF SCANNED COPIES OF THIS PLAN SHEET.

VEGETATION CONTROL (MINOR CONCRETE)

LAYOUT SHEET No.	MIDWEST GUARDRAIL SYSTEM LOCATION No.	QUANTITY	VEGETATION CONTROL MINOR CONCRETE (N)
		SQYD	CY
L-2	1	81.6	4.5
	2	248.6	13.8
	3	257.2	14.3
L-3	4	67.8	3.8
	5	263.1	14.6
L-8	9	47.0	2.6
	10	54.1	3.0
	11	149.1	8.3
	12	95.0	5.3
	13	353.7	19.7
	14	235	13.1
L-9	15	498.8	27.7
	16	141.4	7.9
	17	394.8	21.9
	18	47.0	2.6
L-10,11	19	411.1	22.8
	20	157.6	8.8
	21	129.2	7.2
L-12	22	218.2	12.1
	23	194.0	10.8
L-12,13 14,15, 16	24	3,213.9	178.6
	26	137.6	7.6
	27	187.0	10.4
L-17	28	189.3	10.5
	29	238.0	13.2
L-18	30	19.3	1.1
L-17	31	19.3	1.1
	32	90.6	5.0
	33	19.3	1.1
L-18	34	189.3	10.5
L-19,21	35	213.2	11.8
	36	114.8	6.4
	37	199.7	11.1
L-20	38	115.8	6.4
	39	208.9	11.6
L-24	40	443.1	24.6
L-27,28	41	49.2	2.7
	42	58.0	3.2
	43	42.6	2.4
	44	354.1	19.7
	45	42.6	2.4
	46	46.9	2.6
	47	49.7	2.8
L-29	48	108.4	6.0
	49	72.1	4.0
	TOTAL	10,467.0	581.6

(N) NOT A SEPARATE PAY ITEM, FOR INFORMATION ONLY.

TEMPORARY FENCE (TYPE ESA)

SHEET No.	LOCATION/STATION FROM			LOCATION/STATION TO			LF
L-1	"A1"	41+64.27	96.6′ R+	"A1"	41+98.97	96.8′ R+	68
L-1,2	"A1"	41+53.33	96.0′ L+	"A1"	46+00.50	146.0′ L+	483
L-3	"A1"	43+26.42	101.1′ R+	"A1"	43+72.00	95.6′ R+	71
	"A1"	45+11.89	92.9′ R+	"A1"	45+67.93	94.5′ R+	75
	"A1"	48+77.68	85.4′ R+	"A1"	48+85.40	144.3′ R+	60
	"A1"	50+34.75	131.3′ R+	"A1"	52+55.47	161.1′ R+	345
L-4	"A1"	56+03.51	201.3′ R+	"A1"	59+39.75	230.7′ R+	546
	"A1"	62+81.83	91.5′ R+	"A1"	62+81.83	91.5′ R+	170
	"A1"	63+06.02	198.7′ R+	"A1"	63+52.09	187.6′ R+	150
	"A1"	64+98.43	172.5′ R+	"A1"	65+45.27	174.3′ R+	150
L-5	"A1"	66+67.53	158.7′ R+	"A1"	68+00.17	141.1′ R+	352
L-6	"A1"	97+80.79	125.0′ R+	"A1"	99+30.79	108.3′ R+	160
L-7	"A1"	114+94.92	117.2′ L+	"A1"	116+47.28	118.7′ L+	155
L-7,9	"A1"	115+88.26	116.8′ R+	"A1"	120+07.29	143.5′ R+	679
L-16	"A2"	239+26.53	56.8′ L+	"A2"	239+52.91	56.8′ L+	83
	"A2"	239+15.55	119.5′ L+	"A2"	239+75.40	116.5′ L+	158
	"S1"	140+12.38	104.9′ L+	"S1"	139+95.21	127.9′ L+	118
L-17	"A2"	234+43.41	172.7′ R+	"A2"	236+91.67	200.2′ R+	556
	"A2"	236+23.13	121.2′ R+	"A2"	236+74.51	118.2′ R+	121
L-19	"MIS"	21+53.47	32.5′ R+	"MIS"	21+53.47	32.5′ R+	130
	"R9"	56+23.51	81.3′ L+	"R9"	56+57.13	71.6′ L+	132
L-24	"A2"	339+08.50	67.2′ R+	"A2"	339+37.76	67.4′ R+	90
						TOTAL	4,852

1

TEMPORARY WATER POLLUTION CONTROL QUANTITIES

LOCATION *	Temp CHECK DAM	Temp ** FIBER ROLL	Temp LARGE SEDIMENT BARRIER	Temp ** CONSTRUCTION ENTRANCE	Temp HYDRAULIC MULCH
	LF	LF	LF	EA	SQYD
WPC-1 TO WPC-29	1,200	40,000	10,000	6	350,000

* TEMPORARY WATER POLLUTION CONTROL PLANS (WPC) ARE IN THE INFORMATION HANDOUT.
** DESIGNATES TYPE 2 TEMPORARY FIBER ROLL AND TYPE 2 TEMPORARY CONSTRUCTION ENTRACE.

1

TEMPORARY DRAINAGE INLET PROTECTION

* SHEET No.	EA
WPC-1	7
WPC-2	5
WPC-3	5
WPC-4	4
WPC-5	1
WPC-6	5
WPC-7	6
WPC-8	2
WPC-9	10
WPC-10	4
WPC-11	2
WPC-12	2
WPC-13	1
WPC-14	2
WPC-15	6
WPC-16	2
WPC-17	4
WPC-18	3
WPC-19	4
WPC-20	4
WPC-21	2
WPC-23	3
WPC-24	2
WPC-25	5
WPC-26	2
WPC-27	2
WPC-28	4
WPC-29	3
TOTAL	102

* TEMPORARY WATER POLLUTION CONTROL PLANS (WPC) ARE IN THE INFORMATION HANDOUT.

1 **REPLACED PER ADDENDUM No. 1 DATED SEPTEMBER 2, 2016**

SUMMARY OF QUANTITIES
Q-7

STATE OF CALIFORNIA - DEPARTMENT OF TRANSPORTATION
Caltrans
06-DESIGN

FUNCTIONAL SUPERVISOR: ROBERTO BANDA
CALCULATED-DESIGNED BY: PETER CHANDER
CHECKED BY: HAL KENYON
REVISED BY
DATE REVISED

LAST REVISION 01-08-16
DATE PLOTTED => 24-AUG-2016
TIME PLOTTED => 16:56

Dist	COUNTY	ROUTE	POST MILES TOTAL PROJECT	SHEET No.	TOTAL SHEETS
05	SLO,Mon	101	63.2/R69.3, R0.0/R1.9	441	858

REGISTERED CIVIL ENGINEER 04-18-16 DATE

5-02-16
PLANS APPROVAL DATE

REGISTERED PROFESSIONAL ENGINEER PETER CHANDER No. 63988 Exp. 06/30/16 CIVIL STATE OF CALIFORNIA

THE STATE OF CALIFORNIA OR ITS OFFICERS OR AGENTS SHALL NOT BE RESPONSIBLE FOR THE ACCURACY OR COMPLETENESS OF SCANNED COPIES OF THIS PLAN SHEET.

HMA OVERSIDE DRAINS / HMA APRONS 1

LAYOUT SHEET No.	STATION	Lt/Rt	LENGTH (N)	* PLACE HMA (Misc AREA)	HMA * (TYPE A) 0.25'	RSP ** (300 lb, Class IV, METHOD B)	RSP ** FABRIC (Cl 8)	REMOVE OVERSIDE DRAIN
			LF	SQYD	TON	CY	SQYD	EA
L-1	"A1" 40+59.00	Lt	60.0	48.16	5.13	0.75	2.8	1
L-2	"A1" 49+00.00	Lt	48.0	69.00	11.65			1
L-3	"A1" 53+08.85	Rt	25.0	13.33	2.25			1
L-5	"A1" 81+57.00	Lt	19.0	21.11	1.95			1
	"A1" 85+88.00	Lt	18.0	13.45	2.27			1
	"A1" 86+25.00	Lt	65.0	26.70	4.51			1
L-6	"N1" 292+61.00	Lt						1
	"N1" 297+28.00	Rt	30.0	9.56	1.61			1
	"A1" 98+69.00	Lt	10.0					1
	"A1" 99+00.00 (APRONS)	Lt		15.00	2.50			
L-7	"N1" 308+64.00	Lt	50.0	32.67	5.52			1
L-9	"N1" 321+05.52	Lt	15.0	5.33	1.00			
	"R3" 326+16.00	Rt	27.0	12.78	2.16			1
	"R3" 327+72.00	Rt						1
	"R3" 328+00.00	Rt	21.0	10.00	1.69			
	"R2" 130+56.41	Lt	6.0	1.90	0.40			1
L-11	"TEN" 13+74.43	Rt						1
L-12	"R4" 50+40.00	Rt						1
	"R5" 4+36.00	Rt						1
L-14	"A2" 202+66.13	Lt	17.0	7.11	1.20	5.33	15.6	1
	"A2" 208+20.20	Lt	21.0	9.33	1.58	5.33	15.6	1
L-15	"S1" 113+50.00	Lt	36.0	19.11	3.23	5.33	15.6	1
	"A2" 233+60.00	Rt	15.0	9.78	1.65			1
L-16	"S1" 139+77.00							1
L-18	"A2" 243+98.00	Rt	36.0	13.67	2.31	5.33	15.6	1
	"A2" 246+50.00	Rt	27.0	12.00	2.03	5.33	15.6	
	"A2" 246+72.00	Rt						1
	"A2" 248+10.00	Rt	27.0	12.00	2.03	5.33	15.6	
	"R7" 38+26.43	Rt				5.33	15.6	
L-19	"S1" 148+30.00	Lt	20.0	8.00	1.35	5.33	15.6	1
	"MIS" 22+00.00	Rt				7.41	20.0	
	"A2" 257+51.00	Rt	31.0	11.89	2.01	5.33	15.6	1
	"A2" 262+65.00	Lt	25.0	22.23	3.75			1
L-20	"R11" 70+26.00	Lt	21.0	5.78	1.00			1
	"R11" 71+19.50	Rt	130.0	47.56	8.03			1
	"A2" 276+35.72	Lt						1
L-21	"R10" 66+76.38	Lt	8.0	3.11	0.53			
	"R10" 66+94.87	Rt	8.0	3.56	0.60			
	"A2" 277+50.00	Rt	27.0	7.78	1.32			1
	SUBTOTAL (1)		843.0	471.90	75.26	55.38	160.4	30

HMA OVERSIDE DRAINS / HMA APRONS 1

LAYOUT SHEET No.	STATION	Lt/Rt	LENGTH (N)	* PLACE HMA (Misc AREA)	HMA * (TYPE A) 0.25'	RSP ** (300 lb, Class, IV, METHOD B)	RSP ** FABRIC (Cl 8)	REMOVE OVERSIDE DRAIN
			LF	SQYD	TON	CY	SQYD	EA
L-22	"A2" 296+61.00	Lt	30.0	7.89	1.34			1
	"A2" 296+63.00	Rt	22.0	6.00	1.02			1
	"A2" 302+00.00	Lt	33.0	6.12	1.04	2.97	10.2	
	"A2" 302+69.00	Lt						1
L-23	"A2" 306+23.00	Rt	22.0	6.00	1.02			1
	"A2" 314+36.00	Rt	28.0	7.11	1.20			1
	"A2" 317+50.00	Lt	13.0	4.22	0.72			
	"A2" 317+95.00	Rt	10.0	3.67	0.62			1
	"A2" 319+50.00	Lt						1
	"A2" 322+23.00	Rt	25.0	6.00	1.02			1
L-24	"A2" 332+54.00	Lt	20.0	5.78	1.00			1
	"A2" 332+83.00	Rt	33.0	8.11	1.37			1
	"A2" 339+75.00	Rt				13.33	29.3	
	"A2" 345+42.00	Lt	70.0	16.33	2.76			1
L-25	"A2" 373+16.40	Lt	36.0	8.89	1.50	2.97	10.2	1
	"A2" 373+20.00	Rt	36.0	8.89	1.50	2.97	10.2	1
	"A2" 378+50.00	Rt	30.0	7.44	1.26	2.97	10.2	
L-26	"A2" 380+36.50	Lt	30.0	7.11	1.20	2.97	10.2	1
	"R13" 16+87.00	Lt						1
	"R13" 17+00.00	Lt	27.0	6.33	1.07	2.97	10.2	
	"R13" 21+12.00	Lt	22.0	5.23	0.89	2.97	10.2	
	"R12" 15+60.00	Rt	18.0	4.67	0.79	2.97	10.2	
	"R12" 15+82.00	Rt						1
	"R12" 22+97.00	Rt	12.0	3.33	0.57	2.97	10.2	
L-27	"R15" 5+65.00	Lt				2.97	10.2	
L-28	"R14" 13+45.00	Rt	16.0	4.44	0.75	2.97	10.2	
L-29	"R14" 15+50.00	Rt	15.0	4.67	0.79	2.97	10.2	
	"R15" 15+76.20	Rt	19.0	5.23	0.89			
	"A2" 410+69.36	Lt	20.0	8.33	1.41			
	"A2" 413+50.00	Lt	36.0	8.89	1.50	2.97	10.2	
L-30	"A2" 421+46.00	Rt	33.0	8.33	1.41	18.94	39.1	1
	"A2" 428+96.40	Rt	22.0	5.56	0.94	2.97	10.2	1
	"A2" 434+42.32	Rt	45.0	8.00	1.35			1
	"A2" 441+68.00	Rt	28.0	6.67	1.13	2.87	10.2	1
	"A2" 445+76.55	Rt	20.0	5.89	1.00	2.90	10.2	1
	SUBTOTAL (2)		771.0	191.80	32.49	79.62	231.6	21
	SUBTOTAL (1)		843.0	471.90	75.26	55.38	160.4	30
	TOTAL		1614.0	663.70	107.75	135.00	392.0	51

1 **REPLACED PER ADDENDUM No. 1 DATED SEPTEMBER 2, 2016**

(N) NOT A SEPARATE PAY ITEM, FOR INFORMATION ONLY.

* QUANTITY INCLUDED IN PLACE HMA (MISCELLANEOUS AREA) TABLE (SHEET Q-6).

** QUANTITY INCLUDED IN ROCK SLOPE PROTECTION QUANTITIES TABLE (SHEET Q-6).

SUMMARY OF QUANTITIES

Q-8

STATE OF CALIFORNIA - DEPARTMENT OF TRANSPORTATION
Caltrans
06-DESIGN

FUNCTIONAL SUPERVISOR: ROBERTO BANDA
CALCULATED-DESIGNED BY: PETER CHANDER
CHECKED BY: HAL KENYON
REVISED BY / DATE REVISED

LAST REVISION 01-08-16
DATE PLOTTED => 24-AUG-2016
TIME PLOTTED => 16:56

Dist	COUNTY	ROUTE	POST MILES TOTAL PROJECT	SHEET No.	TOTAL SHEETS
05	SLO,Mon	101	63.2/R69.3, R0.0/R1.9	449	858

Peter Chander 04-18-16
REGISTERED CIVIL ENGINEER DATE

5-02-16
PLANS APPROVAL DATE

REGISTERED PROFESSIONAL ENGINEER PETER CHANDER No. 63988 Exp. 06/30/16 CIVIL STATE OF CALIFORNIA

THE STATE OF CALIFORNIA OR ITS OFFICERS OR AGENTS SHALL NOT BE RESPONSIBLE FOR THE ACCURACY OR COMPLETENESS OF SCANNED COPIES OF THIS PLAN SHEET.

CORRUGATED STEEL PIPE DOWNDRAIN 1

LAYOUT SHEET No.	STATION	L+/R+	12" ENTRANCE TAPER	12" CSP DOWNDRAIN (.079" THICK)	12" ANCHOR ASSEMBLY	12" DOWN DRAIN SLIP JOINT	* PLACE HMA (Misc AREA)	* HMA (TYPE A) 0.20'	** RSP (300 lb, Class IV, METHOD B)	** RSP FABRIC (Cl 8)	12" STEEL FLARED END SECTION	REMOVE DOWNDRAIN
			EA	LF	EA	EA	SQYD	TON	CY	SQYD	EA	EA
L-2	"A1" 43+50.00	L+	1	28.0	1	1	2.78	0.38	1.85	7.2	1	1
	"A1" 44+50.00	L+	1	29.0	1	1	2.78	0.38	1.85	7.2	1	1
L-3	"A1" 44+00.00	R+	1	25.0	1	1	2.78	0.38	1.85	7.2	1	
	"A1" 44+50.00	R+	1	25.0	1	1	2.78	0.38	1.85	7.2	1	
	"A1" 50+00.00	R+	1	27.0	1	1	5.56	0.75	1.85	7.2	1	
L-5	"A1" 81+25.68	L+	1	36.0	1	1	2.78	0.38			1	1
	"N1" 281+41.98	R+							6.67	18.0		
	"N1" 282+95.29	R+	1	24.0	1	1	2.78	0.38	9.26	30.6	1	1
	"N1" 285+99.51	R+							6.67	18.0		
L-6	"N1" 289+33.22	R+	1	23.0	1	1	2.78	0.38	2.96	10.7	1	1
	"N1" 292+18.00	R+	1	25.0	1	1	2.78	0.38	2.96	10.7	1	1
	"N1" 292+61.00	L+	1	25.0	1	1	2.78	0.38			1	1
L-7	"A1" 110+35.00	L+	1	20.0	1	1	2.78	0.38			1	1
	"N1" 318+72.00	L+	1	16.0	1	1	2.78	0.38			1	1
L-9	"A1" 129+11.75	R+										1
	"A1" 132+47.02	R+										1
L-10	"A1" 137+46.89	R+										1
	"A1" 139+00.00	R+	1	41.0	1	1	5.56	0.75	1.85	7.2	1	
	"A2" 143+29.00	R+	1	34.0	1	1	2.78	0.38	1.30	10.2	1	1
L-13	"A2" 161+58.00	L+							3.88	15.8		
	"A2" 172+00.00	R+	1	17.0	1	1	2.78	0.38			1	1
	"A2" 182+04.00	R+	1	10.0			5.56	0.75				1
L-15	"A2" 216+88.69	R+	1	10.0			5.56	0.75				1
	"A2" 230+28.30	R+	1	10.0			5.56	0.75				1
L-16	"S1" 139+50.00	R+	1	62.0	1	1	2.78	0.38	1.30	10.2	1	
	"S1" 141+60.00	L+	1	37.0	1	1	2.78	0.38	1.30	10.2	1	1
L-17	"A2" 235+70.00	R+	1	10.0			2.78	0.38				1
	"A2" 239+96.47	R+										1
L-22	"A2" 290+23.50	R+	1	20.0	1	1	2.78	0.38			1	1
L-24	"A2" 339+64.00	L+	1	30.0	1	1	2.78	0.38			1	1
	"A2" 340+00.00	R+	1	22.0	1	1	2.78	0.38	1.30	10.2	1	1
L-29	"A2" 414+93.00	R+	1	30.0	1	1	2.78	0.38	1.30	10.2	1	1
L-30	"A2" 427+90.00	L+	1	25.0	1	1	2.78	0.38			1	1
	TOTAL		26	661.0	22	22	86.18	11.73	50.0	198.0	22	26

* QUANTITY INCLUDED IN PLACE HMA (MISCELLANEOUS AREA) TABLE IN SHEET Q-6

** QUANTITY INCLUDED IN ROCK SLOPE PROTECTION TABLE IN SHEET Q-6.

1 REPLACED PER ADDENDUM No. 1 DATED SEPTEMBER 2, 2016

SUMMARY OF QUANTITIES
Q-16

STATE OF CALIFORNIA - DEPARTMENT OF TRANSPORTATION
Caltrans 06-DESIGN

FUNCTIONAL SUPERVISOR: ROBERTO BANDA
CALCULATED-DESIGNED BY: PETER CHANDER
CHECKED BY: HAL KENYON
REVISED BY / DATE REVISED

LAST REVISION 01-08-16
DATE PLOTTED => 24-AUG-2016
TIME PLOTTED => 16:56

Dist	COUNTY	ROUTE	POST MILES TOTAL PROJECT	SHEET No.	TOTAL SHEETS
05	SLO,Mon	101	63.2/R69.3, R0.0/R1.9	456	858

REGISTERED CIVIL ENGINEER DATE 04-18-16

5-02-16
PLANS APPROVAL DATE

REGISTERED PROFESSIONAL ENGINEER PETER CHANDER No. 63988 Exp. 9/30/16 CIVIL STATE OF CALIFORNIA

THE STATE OF CALIFORNIA OR ITS OFFICERS OR AGENTS SHALL NOT BE RESPONSIBLE FOR THE ACCURACY OR COMPLETENESS OF SCANNED COPIES OF THIS PLAN SHEET.

RETAINING WALL QUANTITIES 1

LOCATION	(N) RETAINING WALL DESIGN H	BAR REINFORCING STEEL (RETAINING WALL)	STRUCTURAL CONCRETE (RETAINING WALL)	STRUCTURAL EXCAVATION (RETAINING WALL)	STRUCTURAL BACKFILL (RETAINING WALL)	** MINOR CONCRETE (Misc Const)	*** CABLE RAILING	ARCHITECTURAL TREATMENT	(N) WALL DRAIN WITH PIPE DOME (Mod)	* ROCK SLOPE PROTECTION (300 lb, Class 4, METHOD B)	* ROCK SLOPE PROTECTION FABRIC (CLASS 8)	DESCRIPTION
	LF	LB	CY	CY	CY	CY	LF	SQFT	LF	CY	SQFT	
"MIS" STA 23+18.05 TO 34+25.96							131					Exist CRIB WALL (SHEET L-21)
"RTW-2" STA 2+75.00 TO 2+90.00	3.5-6.7	1,127.8	11.79	38.73	31.51	0.53	15	64.47	8	1.0	3.0	RETURN WALL/DRAIN
"RTW-2" STA 2+90.00 TO 3+10.00	6.7-11	3,404.5	24.01	66.68	85.71	0.70	20	147.10				
"RTW-2" STA 3+10.00 TO 3+30.00	11	3,613.5	25.95	66.68	100.64	0.70	20	200.00				
"RTW-2" STA 3+30.00 TO 3+50.00	11-6.8	3,404.5	23.92	66.68	83.48	0.70	20	143.30				
"RTW-2" STA 3+50.00 TO 3+60.00	6.8-4.0	772.2	7.88	25.82	21.01	0.35	10	42.00	10	1.0	3.0	
TOTAL		12,323.0	93.55	264.59	322.35	2.98	216	596.86	18	2.0	6.0	RETURN WALL/DRAIN

(N) NOT A SEPERATE PAY ITEM, FOR INFORMATION ONLY
* INCLUDED IN RSP QUANTITIES TABLE, SHEET Q-6.
** INCLUDED IN MINOR CONCRETE QUANTITIES TABLE, SHEET Q-14.
***SEE STRUCTURE PLANS FOR ADDITIONAL QUANTITIES

1 REPLACED PER ADDENDUM No. 1 DATED SEPTEMBER 2, 2016

RETAINING WALL QUANTITIES
R-4

REVISED BY | DATE REVISED
MICAELA GARCIA | GILBERTO BACA
CALCULATED-DESIGNED BY | CHECKED BY
FUNCTIONAL SUPERVISOR: ROBERTO BANDA

STATE OF CALIFORNIA - DEPARTMENT OF TRANSPORTATION
Caltrans 06-DESIGN

LAST REVISION 05-01-16 | DATE PLOTTED => 24-AUG-2016 TIME PLOTTED => 16:56

Dist	COUNTY	ROUTE	POST MILES TOTAL PROJECT	SHEET No.	TOTAL SHEETS
05	SLO,Mon	101	63.2/R69.3, R0.0/R1.9	458	858

Linda Baker
LICENSED LANDSCAPE ARCHITECT

5-02-16
PLANS APPROVAL DATE

LICENSED LANDSCAPE ARCHITECT Linda S. Baker Lic. 4403 Linda Baker Signature 06/30/16 Renewal Date 05/02/16 Date STATE OF CALIFORNIA

THE STATE OF CALIFORNIA OR ITS OFFICERS OR AGENTS SHALL NOT BE RESPONSIBLE FOR THE ACCURACY OR COMPLETENESS OF SCANNED COPIES OF THIS PLAN SHEET.

NOTES:

1. FOR ACCURATE RIGHT OF WAY DATA, CONTACT RIGHT OF WAY ENGINEERING AT THE DISTRICT OFFICE.
2. SEE LAYOUTS FOR LOCATION OF TEMPORARY CONSTRUCTION EASEMENTS.

LEGEND

- EROSION CONTROL (TYPE 1)
- EROSION CONTROL (TYPE 2)
- EROSION CONTROL (TYPE 3)
- EROSION CONTROL (TYPE 4)
- COMPOST SOCK

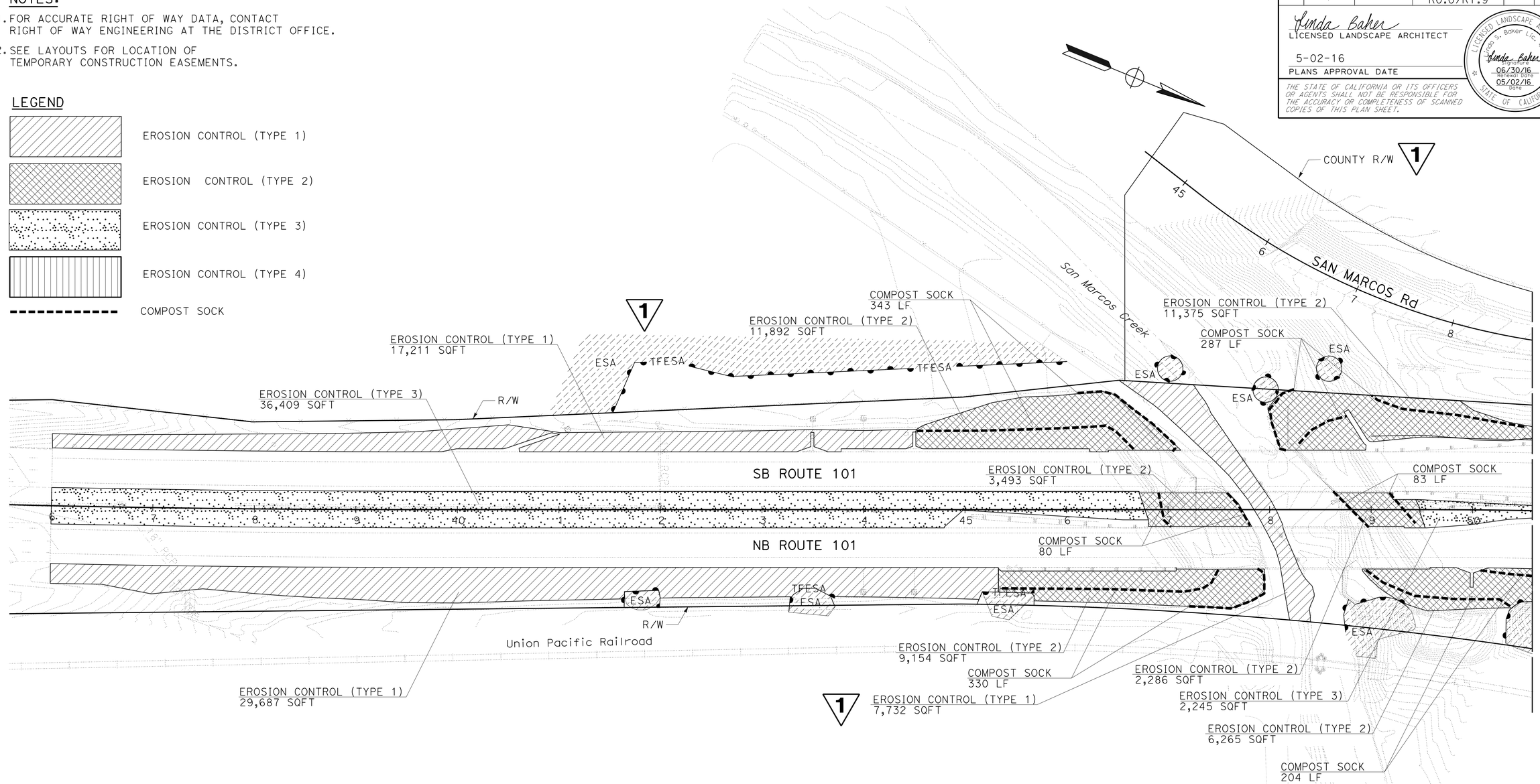

1 **REPLACED PER ADDENDUM No. 1 DATED SEPTEMBER 2, 2016**

APPROVED FOR EROSION CONTROL WORK ONLY

EROSION CONTROL PLAN

SCALE: 1'=50'

EC-1

REVISED BY	DATE REVISED
LINDA BAKER	JO JACKSON

CALCULATED-DESIGNED BY / CHECKED BY

SENIOR LANDSCAPE ARCHITECT: DENNIS REEVES

STATE OF CALIFORNIA - DEPARTMENT OF TRANSPORTATION
Caltrans® LANDSCAPE ARCHITECTURE

LAST REVISION 05-01-16 | DATE PLOTTED => 24-AUG-2016 | TIME PLOTTED => 17:07

Dist	COUNTY	ROUTE	POST MILES TOTAL PROJECT	SHEET No.	TOTAL SHEETS
05	SLO,Mon	101	63.2/R69.3, R0.0/R1.9	459	858

Linda Baker
LICENSED LANDSCAPE ARCHITECT

5-02-16
PLANS APPROVAL DATE

LICENSED LANDSCAPE ARCHITECT
Linda S. Baker Lic. 4403
Linda Baker
Signature
06/30/16
Renewal Date
05/02/16
Date
STATE OF CALIFORNIA

THE STATE OF CALIFORNIA OR ITS OFFICERS OR AGENTS SHALL NOT BE RESPONSIBLE FOR THE ACCURACY OR COMPLETENESS OF SCANNED COPIES OF THIS PLAN SHEET.

NOTE:

FOR ACCURATE RIGHT OF WAY DATA, CONTACT RIGHT OF WAY ENGINEERING AT THE DISTRICT OFFICE.

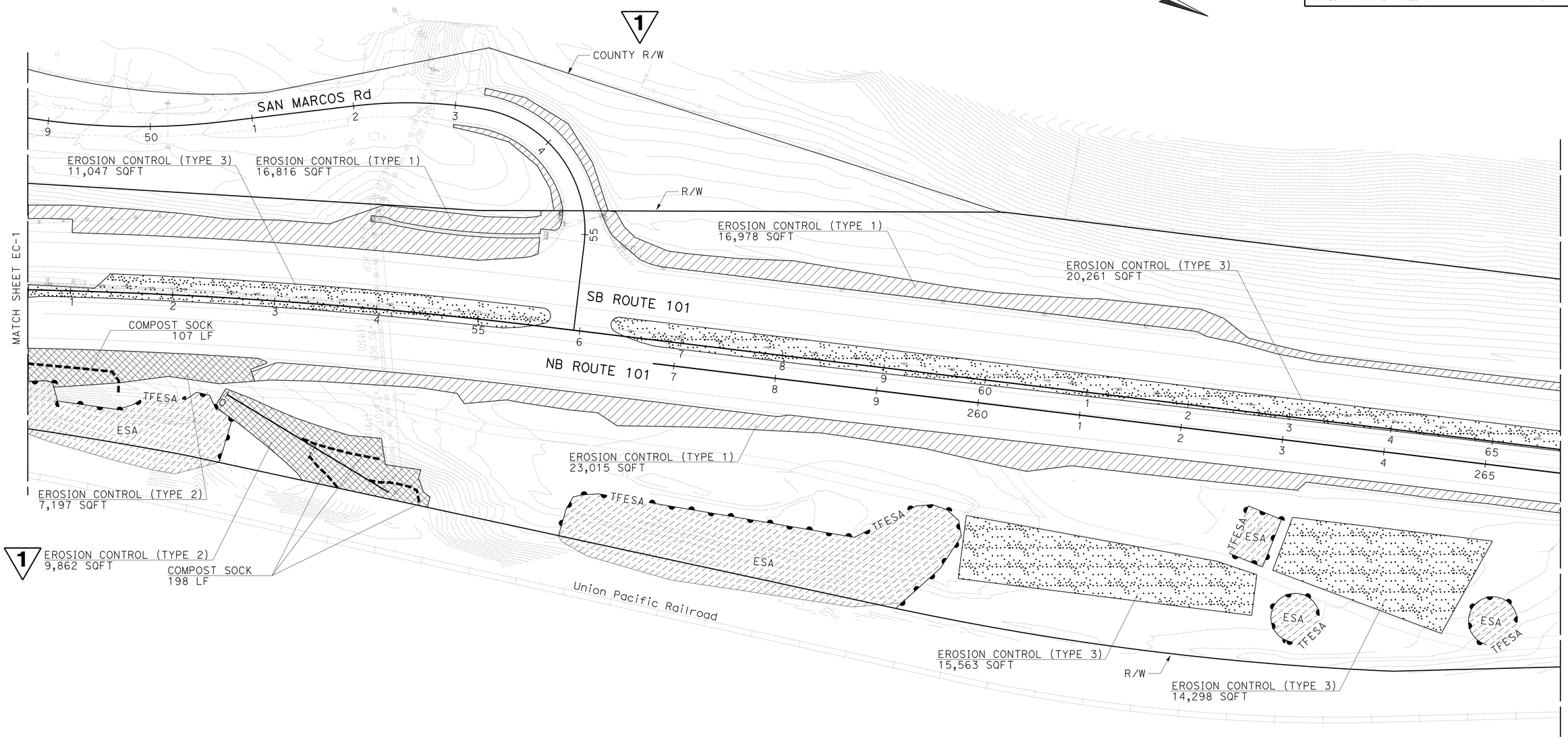

1 **REPLACED PER ADDENDUM No. 1 DATED SEPTEMBER 2, 2016**

APPROVED FOR EROSION CONTROL WORK ONLY

EROSION CONTROL PLAN
SCALE: 1"=50'

EC-2

STATE OF CALIFORNIA - DEPARTMENT OF TRANSPORTATION
Caltrans® LANDSCAPE ARCHITECTURE

SENIOR LANDSCAPE ARCHITECT: DENNIS REEVES
CALCULATED-DESIGNED BY: LINDA BAKER
CHECKED BY: JO JACKSON
REVISED BY
DATE REVISED

LAST REVISION 05-01-16
DATE PLOTTED => 24-AUG-2016
TIME PLOTTED => 17:08

Dist	COUNTY	ROUTE	POST MILES TOTAL PROJECT	SHEET No.	TOTAL SHEETS
05	SLO,Mon	101	63.2/R69.3, R0.0/R1.9	461	858

Linda Baker
LICENSED LANDSCAPE ARCHITECT

5-02-16
PLANS APPROVAL DATE

LICENSED LANDSCAPE ARCHITECT
Linda S. Baker Lic. 4401
Linda Baker
Signature
06/30/16
Renewal Date
05/02/16
Date
STATE OF CALIFORNIA

THE STATE OF CALIFORNIA OR ITS OFFICERS OR AGENTS SHALL NOT BE RESPONSIBLE FOR THE ACCURACY OR COMPLETENESS OF SCANNED COPIES OF THIS PLAN SHEET.

NOTE:

FOR ACCURATE RIGHT OF WAY DATA, CONTACT
RIGHT OF WAY ENGINEERING AT THE DISTRICT OFFICE.

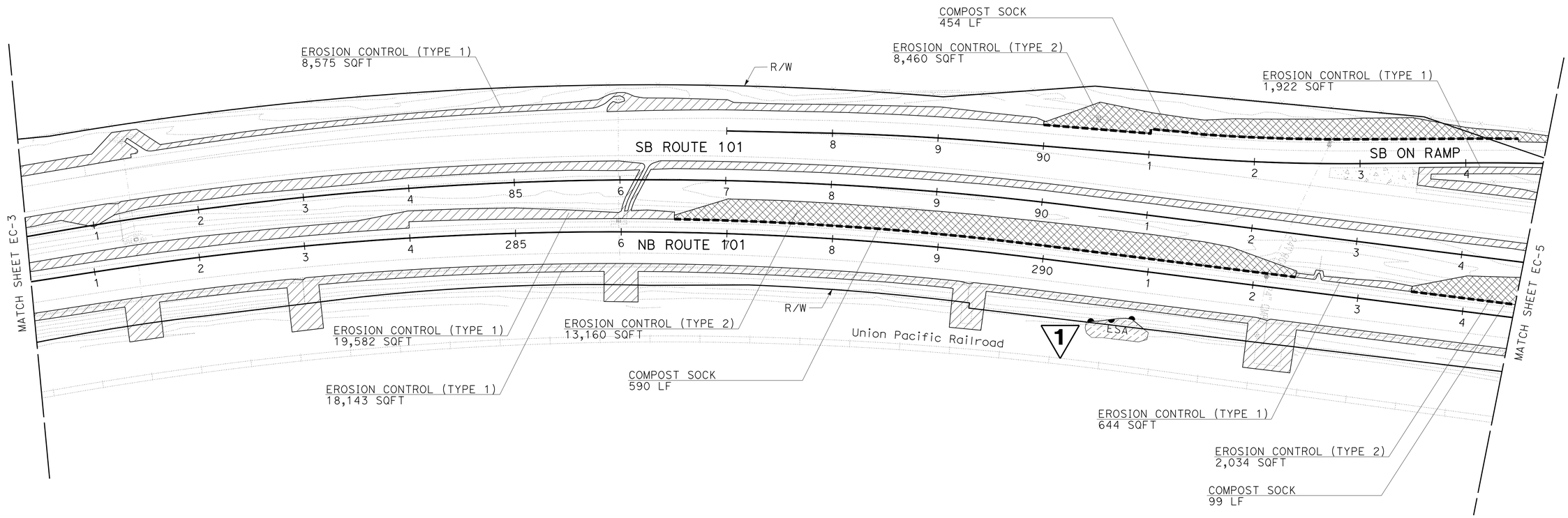

1 **REPLACED PER ADDENDUM No. 1 DATED SEPTEMBER 2, 2016**

APPROVED FOR EROSION CONTROL WORK ONLY

EROSION CONTROL PLAN
SCALE: 1"=50'

EC-4

STATE OF CALIFORNIA - DEPARTMENT OF TRANSPORTATION
Caltrans® LANDSCAPE ARCHITECTURE

SENIOR LANDSCAPE ARCHITECT: DENNIS REEVES
CALCULATED-DESIGNED BY: LINDA BAKER
CHECKED BY: JO JACKSON
REVISED BY
DATE REVISED

LAST REVISION 05-01-16
DATE PLOTTED => 25-AUG-2016
TIME PLOTTED => 15:34

Dist	COUNTY	ROUTE	POST MILES TOTAL PROJECT	SHEET No.	TOTAL SHEETS
05	SLO,Mon	101	63.2/R69.3, R0.0/R1.9	462	858

Linda Baker
LICENSED LANDSCAPE ARCHITECT

5-02-16
PLANS APPROVAL DATE

LICENSED LANDSCAPE ARCHITECT
Linda S. Baker Lic. 4403
Linda Baker
Signature
06/30/16
Renewal Date
05/02/16
Date
STATE OF CALIFORNIA

THE STATE OF CALIFORNIA OR ITS OFFICERS OR AGENTS SHALL NOT BE RESPONSIBLE FOR THE ACCURACY OR COMPLETENESS OF SCANNED COPIES OF THIS PLAN SHEET.

NOTE:

FOR ACCURATE RIGHT OF WAY DATA, CONTACT RIGHT OF WAY ENGINEERING AT THE DISTRICT OFFICE.

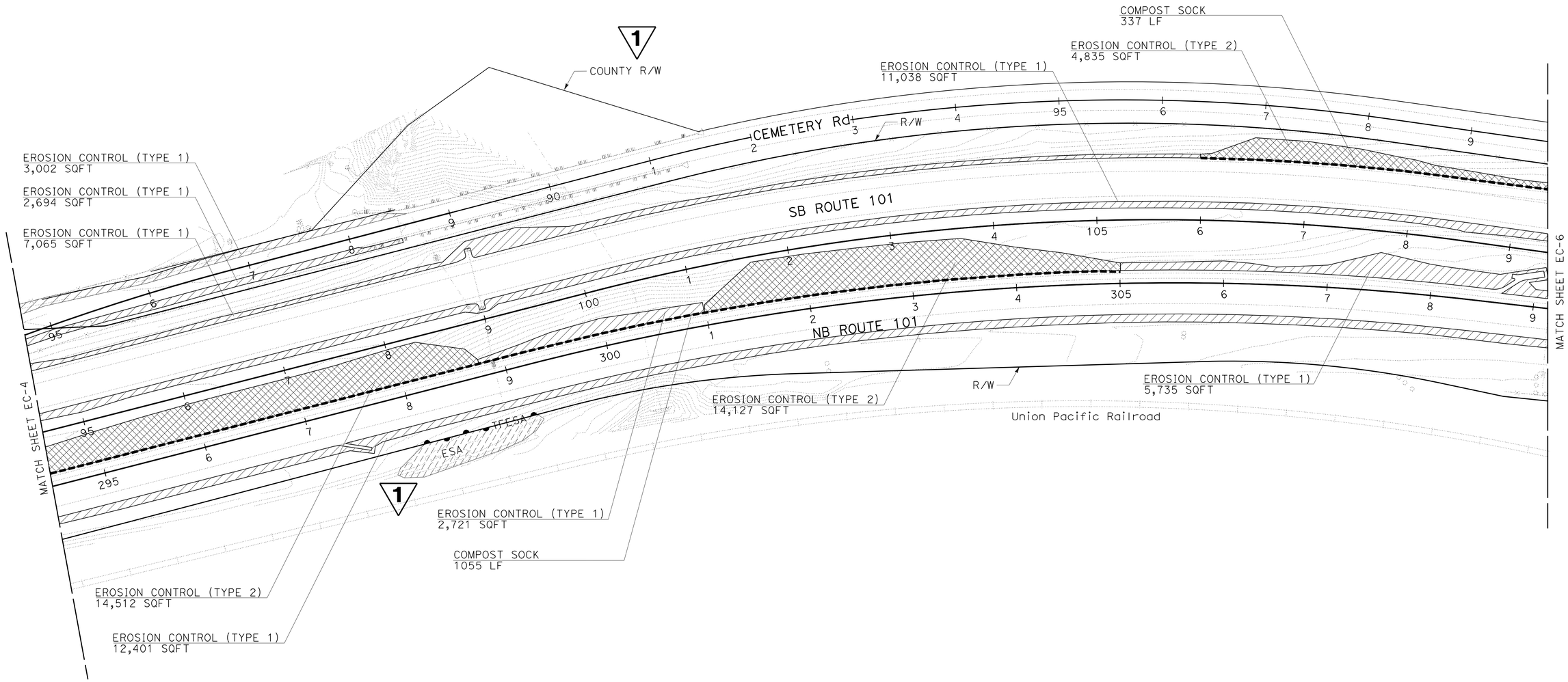

1 **REPLACED PER ADDENDUM No. 1 DATED SEPTEMBER 2, 2016**

APPROVED FOR EROSION CONTROL WORK ONLY

EROSION CONTROL PLAN
SCALE: 1"=50'

EC-5

STATE OF CALIFORNIA - DEPARTMENT OF TRANSPORTATION
Caltrans® LANDSCAPE ARCHITECTURE

SENIOR LANDSCAPE ARCHITECT: DENNIS REEVES
CALCULATED-DESIGNED BY: LINDA BAKER
CHECKED BY: JO JACKSON
REVISED BY
DATE REVISED

LAST REVISION 05-01-16
DATE PLOTTED => 24-AUG-2016
TIME PLOTTED => 16:56

Dist	COUNTY	ROUTE	POST MILES TOTAL PROJECT	SHEET No.	TOTAL SHEETS
05	SLO,Mon	101	63.2/R69.3, R0.0/R1.9	465	858

Linda Baker
LICENSED LANDSCAPE ARCHITECT

5-02-16
PLANS APPROVAL DATE

LICENSED LANDSCAPE ARCHITECT
Linda S. Baker Lic. 4403
Linda Baker
Signature
06/30/16
Renewal Date
05/02/16
Date
STATE OF CALIFORNIA

THE STATE OF CALIFORNIA OR ITS OFFICERS OR AGENTS SHALL NOT BE RESPONSIBLE FOR THE ACCURACY OR COMPLETENESS OF SCANNED COPIES OF THIS PLAN SHEET.

NOTE:

FOR ACCURATE RIGHT OF WAY DATA, CONTACT RIGHT OF WAY ENGINEERING AT THE DISTRICT OFFICE.

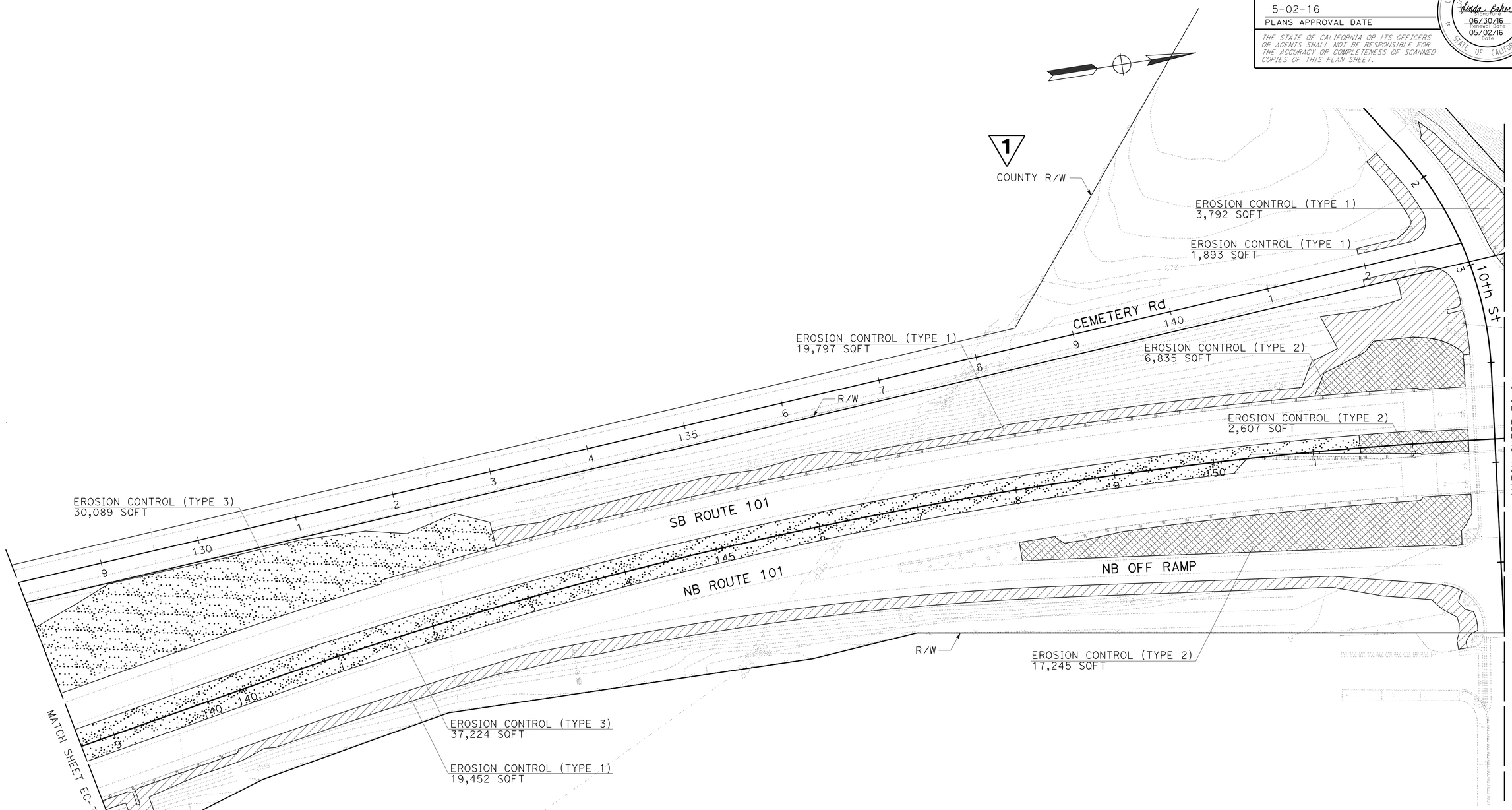

1 **REPLACED PER ADDENDUM No. 1 DATED SEPTEMBER 2, 2016**

APPROVED FOR EROSION CONTROL WORK ONLY

EROSION CONTROL PLAN

SCALE: 1"=50'

EC-8

STATE OF CALIFORNIA - DEPARTMENT OF TRANSPORTATION
Caltrans® LANDSCAPE ARCHITECTURE

SENIOR LANDSCAPE ARCHITECT: DENNIS REEVES
CALCULATED-DESIGNED BY: LINDA BAKER
CHECKED BY: JO JACKSON
REVISED BY
DATE REVISED

LAST REVISION 05-01-16
DATE PLOTTED => 24-AUG-2016
TIME PLOTTED => 16:56

Dist	COUNTY	ROUTE	POST MILES TOTAL PROJECT	SHEET No.	TOTAL SHEETS
05	SLO,Mon	101	63.2/R69.3, R0.0/R1.9	478	858

Linda Baker
LICENSED LANDSCAPE ARCHITECT

5-02-16
PLANS APPROVAL DATE

LICENSED LANDSCAPE ARCHITECT
Linda S. Baker Lic. 4403
Linda Baker
Signature
06/30/16
Renewal Date
05/02/16
Date
STATE OF CALIFORNIA

THE STATE OF CALIFORNIA OR ITS OFFICERS OR AGENTS SHALL NOT BE RESPONSIBLE FOR THE ACCURACY OR COMPLETENESS OF SCANNED COPIES OF THIS PLAN SHEET.

NOTE:

FOR ACCURATE RIGHT OF WAY DATA, CONTACT
RIGHT OF WAY ENGINEERING AT THE DISTRICT OFFICE.

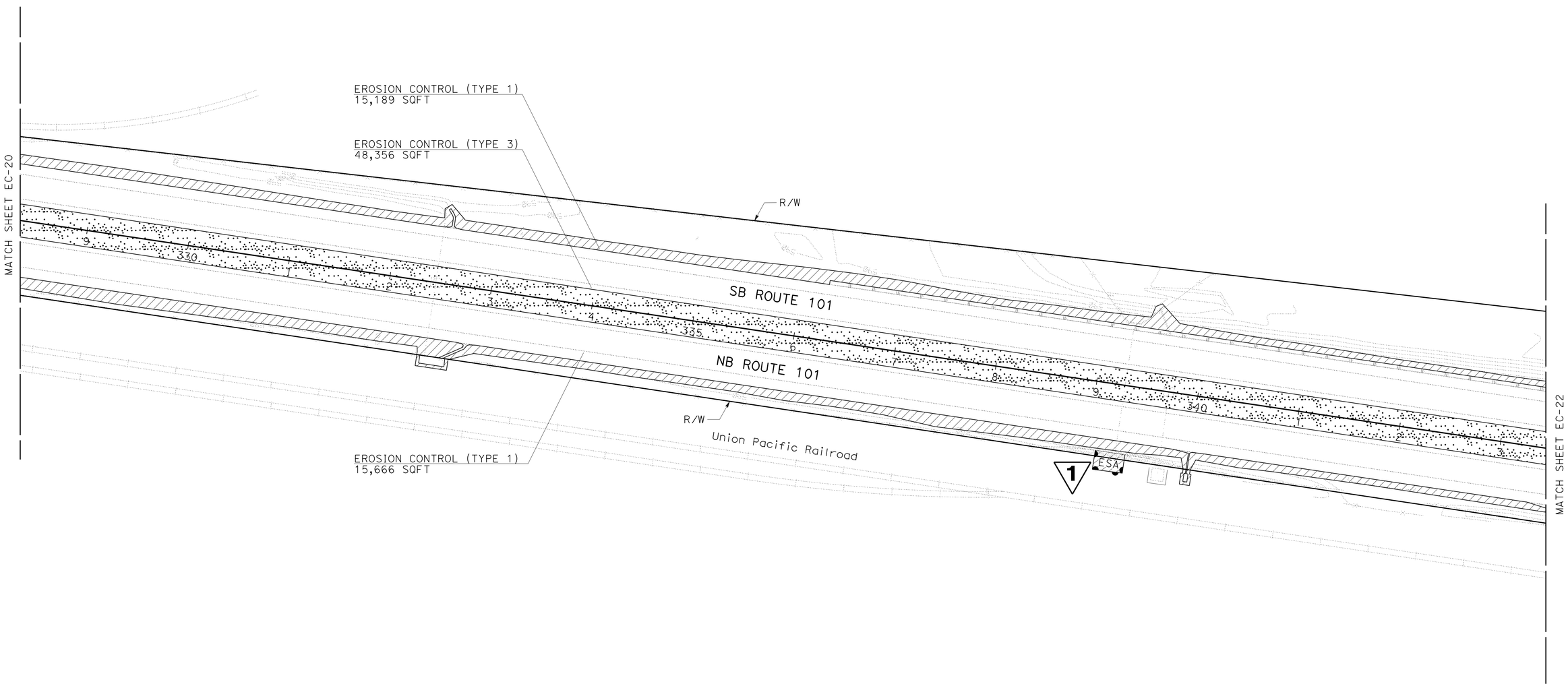

1 REPLACED PER ADDENDUM No. 1 DATED SEPTEMBER 2, 2016

APPROVED FOR EROSION CONTROL WORK ONLY

EROSION CONTROL PLAN
SCALE: 1"=50'
EC-21

STATE OF CALIFORNIA - DEPARTMENT OF TRANSPORTATION
Caltrans LANDSCAPE ARCHITECTURE
SENIOR LANDSCAPE ARCHITECT: DENNIS REEVES
CALCULATED-DESIGNED BY: LINDA BAKER
CHECKED BY: JO JACKSON
REVISED BY
DATE REVISED

LAST REVISION 05-01-16
DATE PLOTTED => 24-AUG-2016
TIME PLOTTED => 16:56

Dist	COUNTY	ROUTE	POST MILES TOTAL PROJECT	SHEET No.	TOTAL SHEETS
05	SLO,Mon	101	63.2/R69.3, R0.0/R1.9	481	858

Linda Baker
LICENSED LANDSCAPE ARCHITECT

5-02-16
PLANS APPROVAL DATE

LICENSED LANDSCAPE ARCHITECT
Linda S. Baker Lic. 4403
Linda Baker
Signature
06/30/16
Renewal Date
05/02/16
Date
STATE OF CALIFORNIA

THE STATE OF CALIFORNIA OR ITS OFFICERS OR AGENTS SHALL NOT BE RESPONSIBLE FOR THE ACCURACY OR COMPLETENESS OF SCANNED COPIES OF THIS PLAN SHEET.

NOTE:

FOR ACCURATE RIGHT OF WAY DATA, CONTACT
RIGHT OF WAY ENGINEERING AT THE DISTRICT OFFICE.

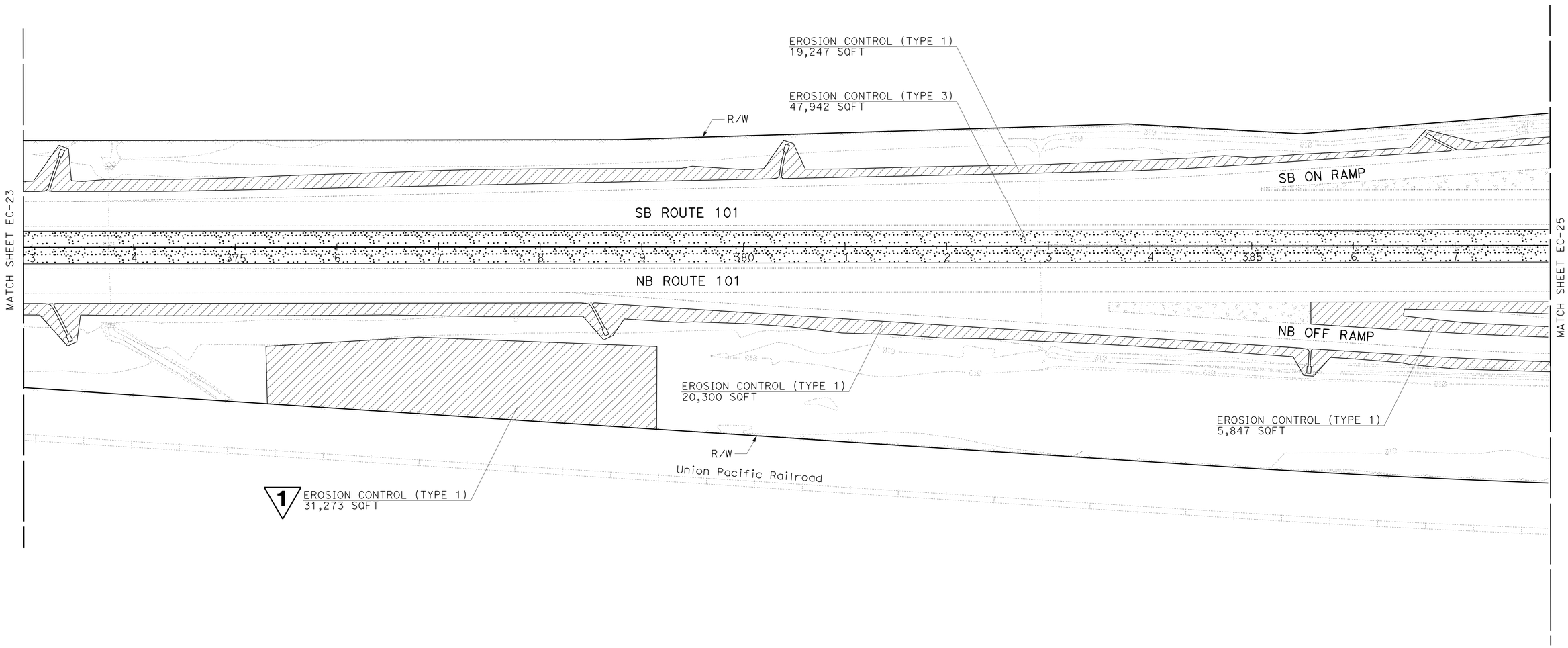

1 **REPLACED PER ADDENDUM No. 1 DATED SEPTEMBER 2, 2016**

APPROVED FOR EROSION CONTROL WORK ONLY

EROSION CONTROL PLAN

SCALE: 1"=50'

EC-24

STATE OF CALIFORNIA - DEPARTMENT OF TRANSPORTATION
Caltrans® LANDSCAPE ARCHITECTURE

SENIOR LANDSCAPE ARCHITECT: DENNIS REEVES
CALCULATED-DESIGNED BY: LINDA BAKER
CHECKED BY: JO JACKSON
REVISED BY
DATE REVISED

LAST REVISION 05-01-16
DATE PLOTTED => 24-AUG-2016
TIME PLOTTED => 16:56

Dist	COUNTY	ROUTE	POST MILES TOTAL PROJECT	SHEET No.	TOTAL SHEETS
05	SLO,Mon	101	63.2/R69.3, R0.0/R1.9	482	858

Linda Baker
LICENSED LANDSCAPE ARCHITECT

5-02-16
PLANS APPROVAL DATE

LICENSED LANDSCAPE ARCHITECT
Linda S. Baker Lic. 4403
Linda Baker
Signature
06/30/16
Renewal Date
05/02/16
Date
STATE OF CALIFORNIA

THE STATE OF CALIFORNIA OR ITS OFFICERS OR AGENTS SHALL NOT BE RESPONSIBLE FOR THE ACCURACY OR COMPLETENESS OF SCANNED COPIES OF THIS PLAN SHEET.

NOTE:

FOR ACCURATE RIGHT OF WAY DATA, CONTACT
RIGHT OF WAY ENGINEERING AT THE DISTRICT OFFICE.

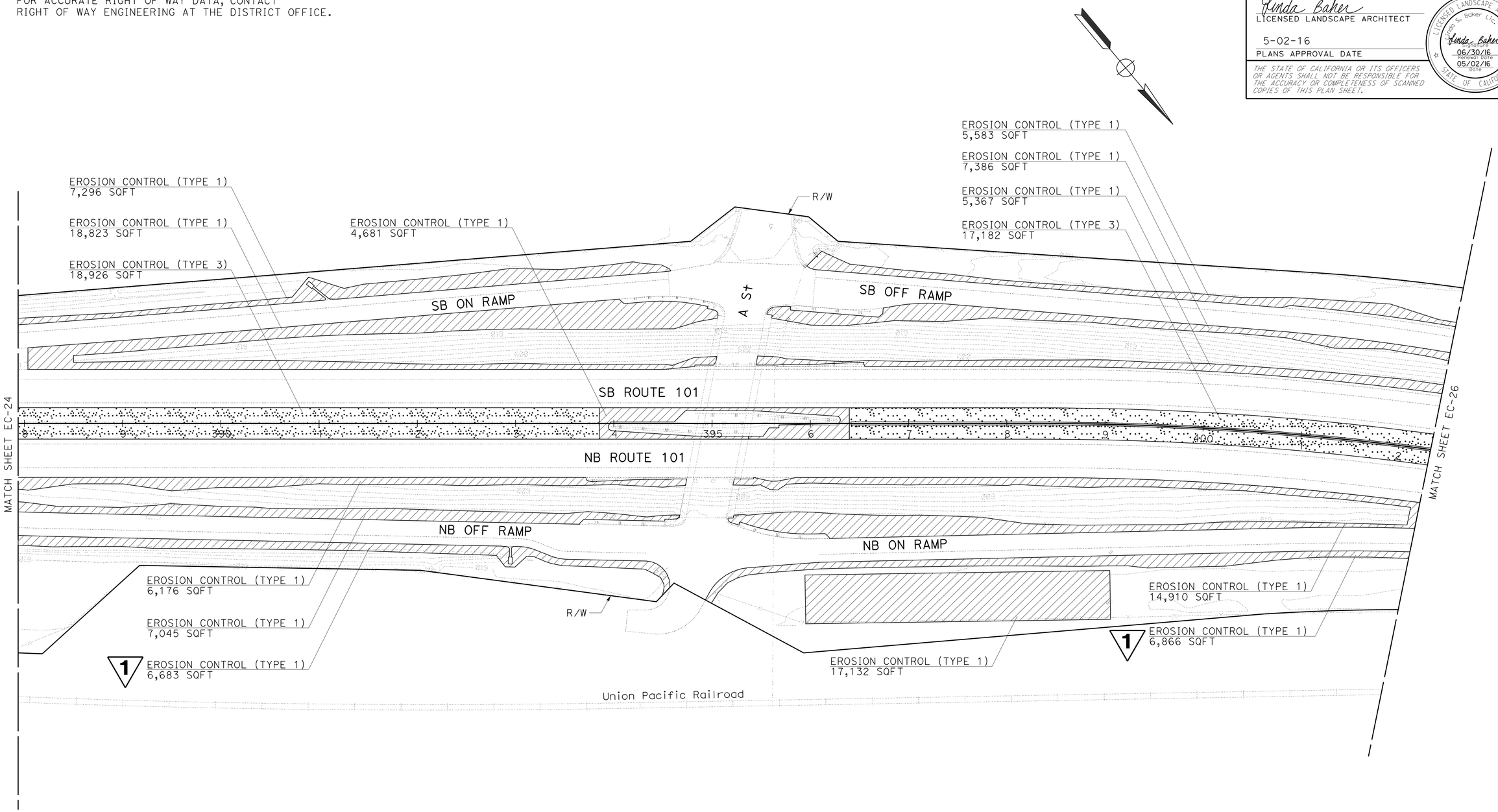

1 **REPLACED PER ADDENDUM No. 1 DATED SEPTEMBER 2, 2016**

APPROVED FOR EROSION CONTROL WORK ONLY

EROSION CONTROL PLAN

SCALE: 1"=50'

EC-25

STATE OF CALIFORNIA - DEPARTMENT OF TRANSPORTATION
Caltrans LANDSCAPE ARCHITECTURE

SENIOR LANDSCAPE ARCHITECT: DENNIS REEVES
CALCULATED-DESIGNED BY: LINDA BAKER
CHECKED BY: JO JACKSON
REVISED BY
DATE REVISED

LAST REVISION 05-01-16
DATE PLOTTED => 24-AUG-2016
TIME PLOTTED => 16:56

Dist	COUNTY	ROUTE	POST MILES TOTAL PROJECT	SHEET No.	TOTAL SHEETS
05	SLO,Mon	101	63.2/R69.3, R0.0/R1.9	483	858

Linda Baker
LICENSED LANDSCAPE ARCHITECT

5-02-16
PLANS APPROVAL DATE

LICENSED LANDSCAPE ARCHITECT
Linda S. Baker Lic. 4403
Linda Baker
Signature
06/30/16
Renewal Date
05/02/16
Date
STATE OF CALIFORNIA

THE STATE OF CALIFORNIA OR ITS OFFICERS OR AGENTS SHALL NOT BE RESPONSIBLE FOR THE ACCURACY OR COMPLETENESS OF SCANNED COPIES OF THIS PLAN SHEET.

NOTE:

FOR ACCURATE RIGHT OF WAY DATA, CONTACT
RIGHT OF WAY ENGINEERING AT THE DISTRICT OFFICE.

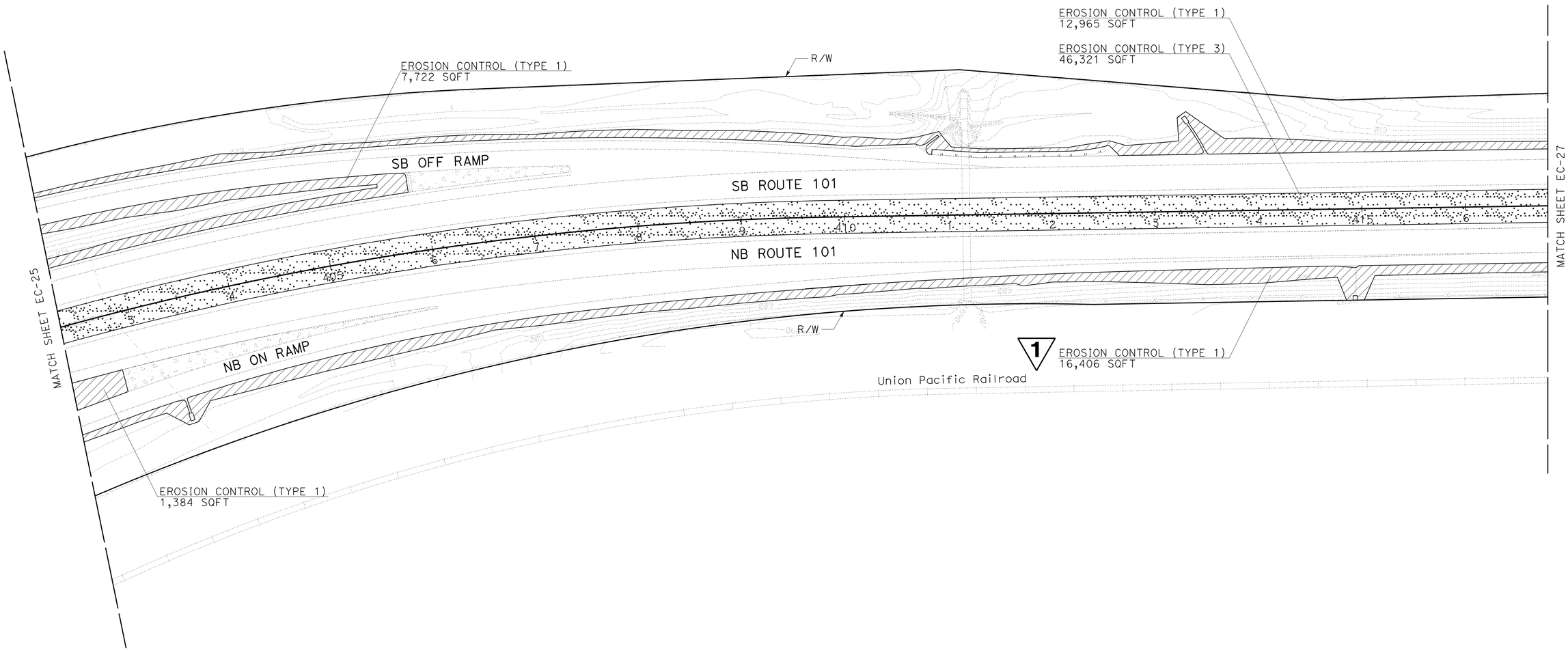

1 **REPLACED PER ADDENDUM No. 1 DATED SEPTEMBER 2, 2016**

APPROVED FOR EROSION CONTROL WORK ONLY

EROSION CONTROL PLAN
SCALE: 1"=50'

EC-26

STATE OF CALIFORNIA - DEPARTMENT OF TRANSPORTATION
Caltrans® LANDSCAPE ARCHITECTURE

SENIOR LANDSCAPE ARCHITECT: DENNIS REEVES
CALCULATED-DESIGNED BY: LINDA BAKER
CHECKED BY: JO JACKSON
REVISED BY
DATE REVISED

LAST REVISION 05-01-16
DATE PLOTTED => 24-AUG-2016
TIME PLOTTED => 16:56

Dist	COUNTY	ROUTE	POST MILES TOTAL PROJECT	SHEET No.	TOTAL SHEETS
05	SLO,Mon	101	63.2/R69.3, R0.0/R1.9	484	858

Linda Baker
LICENSED LANDSCAPE ARCHITECT

5-02-16
PLANS APPROVAL DATE

LICENSED LANDSCAPE ARCHITECT
Linda S. Baker Lic. 4403
Linda Baker
Signature
06/30/16
Renewal Date
05/02/16
Date
STATE OF CALIFORNIA

THE STATE OF CALIFORNIA OR ITS OFFICERS OR AGENTS SHALL NOT BE RESPONSIBLE FOR THE ACCURACY OR COMPLETENESS OF SCANNED COPIES OF THIS PLAN SHEET.

NOTE:

FOR ACCURATE RIGHT OF WAY DATA, CONTACT RIGHT OF WAY ENGINEERING AT THE DISTRICT OFFICE.

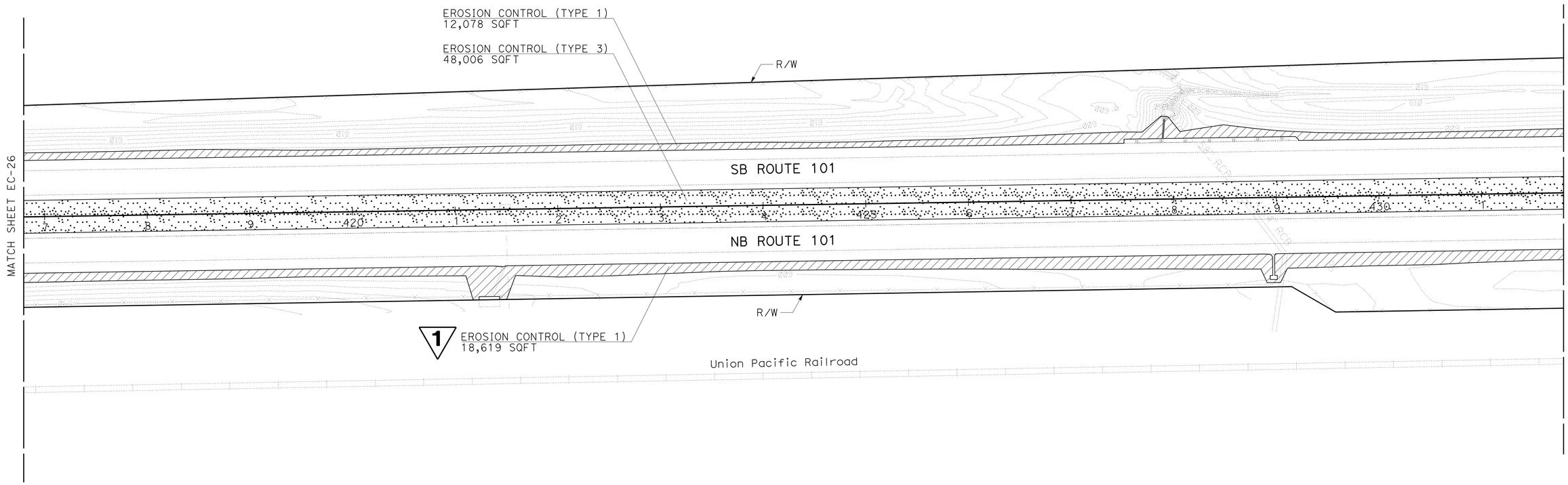

1 **REPLACED PER ADDENDUM No. 1 DATED SEPTEMBER 2, 2016**

APPROVED FOR EROSION CONTROL WORK ONLY

EROSION CONTROL PLAN
SCALE: 1"=50'

EC-27

REVISED BY | DATE REVISED
LINDA BAKER | JO JACKSON
CALCULATED-DESIGNED BY | CHECKED BY
SENIOR LANDSCAPE ARCHITECT | DENNIS REEVES
STATE OF CALIFORNIA - DEPARTMENT OF TRANSPORTATION
Caltrans® LANDSCAPE ARCHITECTURE

LAST REVISION | DATE PLOTTED => 24-AUG-2016 | TIME PLOTTED => 16:56
05-01-16

Dist	COUNTY	ROUTE	POST MILES TOTAL PROJECT	SHEET No.	TOTAL SHEETS
05	SLO,Mon	101	63.2/R69.3, R0.0/R1.9	487	858

Linda Baker
LICENSED LANDSCAPE ARCHITECT

5-02-16
PLANS APPROVAL DATE

LICENSED LANDSCAPE ARCHITECT
Linda S. Baker Lic. 4403
Linda Baker
Signature
06/30/16
Renewal Date
05/02/16
Date
STATE OF CALIFORNIA

THE STATE OF CALIFORNIA OR ITS OFFICERS OR AGENTS SHALL NOT BE RESPONSIBLE FOR THE ACCURACY OR COMPLETENESS OF SCANNED COPIES OF THIS PLAN SHEET.

EROSION CONTROL

SHEET	EROSION CONTROL TYPE	ROLLED EROSION CONTROL PRODUCT (NETTING)	HYDROMULCH	HYDROSEED	COMPOST (CY)	INCORPORATE MATERIALS	HYDRAULIC GROWTH MEDIUM	COMPOST SOCK
		SQFT	SQFT	SQFT	CY	SQFT	SQFT	LF
EC SHEETS	EROSION CONTROL TYPE 1			1,390,341	8,582			
	EROSION CONTROL TYPE 2	316,500		316,500	1,954			
	EROSION CONTROL TYPE 3			1,214,545	11,246	1,214,545		
	EROSION CONTROL TYPE 4		39,734	39,734			39,734	
	COMPOST SOCK							9,798
	TOTAL	316,500	39,734	2,961,120	21,782	1,214,545	39,734	9,798
		1		1	1			

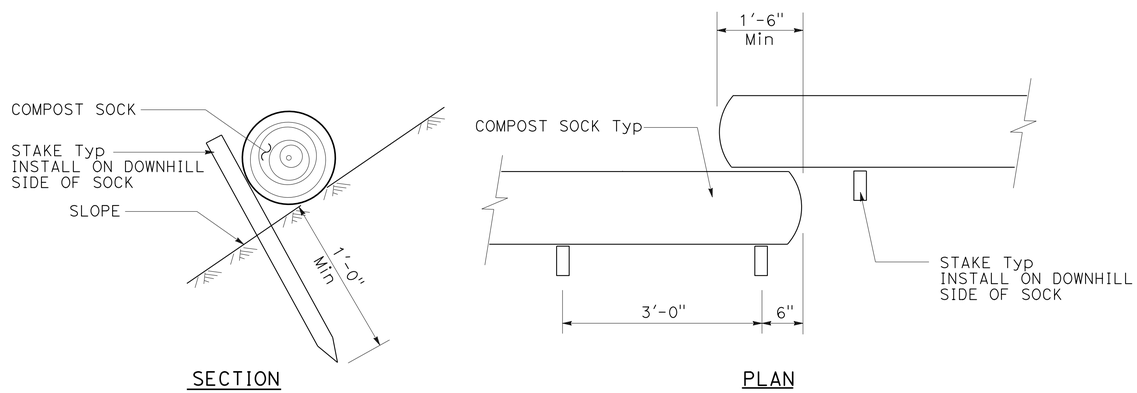

COMPOST SOCK

1 REPLACED PER ADDENDUM No. 1 DATED SEPTEMBER 2, 2016

EROSION CONTROL DETAILS AND QUANTITIES
ECQ-1

STATE OF CALIFORNIA - DEPARTMENT OF TRANSPORTATION
Caltrans® LANDSCAPE ARCHITECTURE

SENIOR LANDSCAPE ARCHITECT: DENNIS REEVES
CALCULATED-DESIGNED BY: LINDA BAKER
CHECKED BY: JO JACKSON
REVISED BY
DATE REVISED

LAST REVISION 09-18-15
DATE PLOTTED => 24-AUG-2016
TIME PLOTTED => 16:56