Dist	COUNTY	ROUTE	POST MILES TOTAL PROJECT	SHEET No.	TOTAL SHEETS
05	Mon	101	53.1/53.9	1	70

INDEX OF PLANS

SHEET No.	DESCRIPTION
1	TITLE AND LOCATION MAP
2-3	TYPICAL CROSS SECTIONS
4-6	LAYOUTS
7-18	CONSTRUCTION DETAILS
19	DRAINAGE PLAN
20-21	UTILITY PLANS
22	CONSTRUCTION AREA SIGNS
23-26	STAGE CONSTRUCTION PLANS AND QUANTITIES
27-30	PAVEMENT DELINEATION AND QUANTITIES
31-32	SUMMARY OF QUANTITIES
33-34	ELECTRICAL PLANS
35-49	REVISED AND NEW STANDARD PLANS

STRUCTURE PLANS

50-59	OAK AVENUE OC (MODIFY) Br No. 44-0134
60-70	WALNUT AVENUE OC (MODIFY) Br No. 44-0135

THE STANDARD PLANS LIST APPLICABLE TO THIS CONTRACT IS INCLUDED IN THE NOTICE TO BIDDERS AND SPECIAL PROVISIONS BOOK.

STATE OF CALIFORNIA

DEPARTMENT OF TRANSPORTATION

PROJECT PLANS FOR CONSTRUCTION ON

STATE HIGHWAY

IN MONTEREY COUNTY
IN GREENFIELD
AT VARIOUS LOCATIONS
FROM ELM AVENUE OVERCROSSING
TO WALNUT AVENUE OVERCROSSING

TO BE SUPPLEMENTED BY STANDARD PLANS DATED MAY 2006

LOCATION MAP

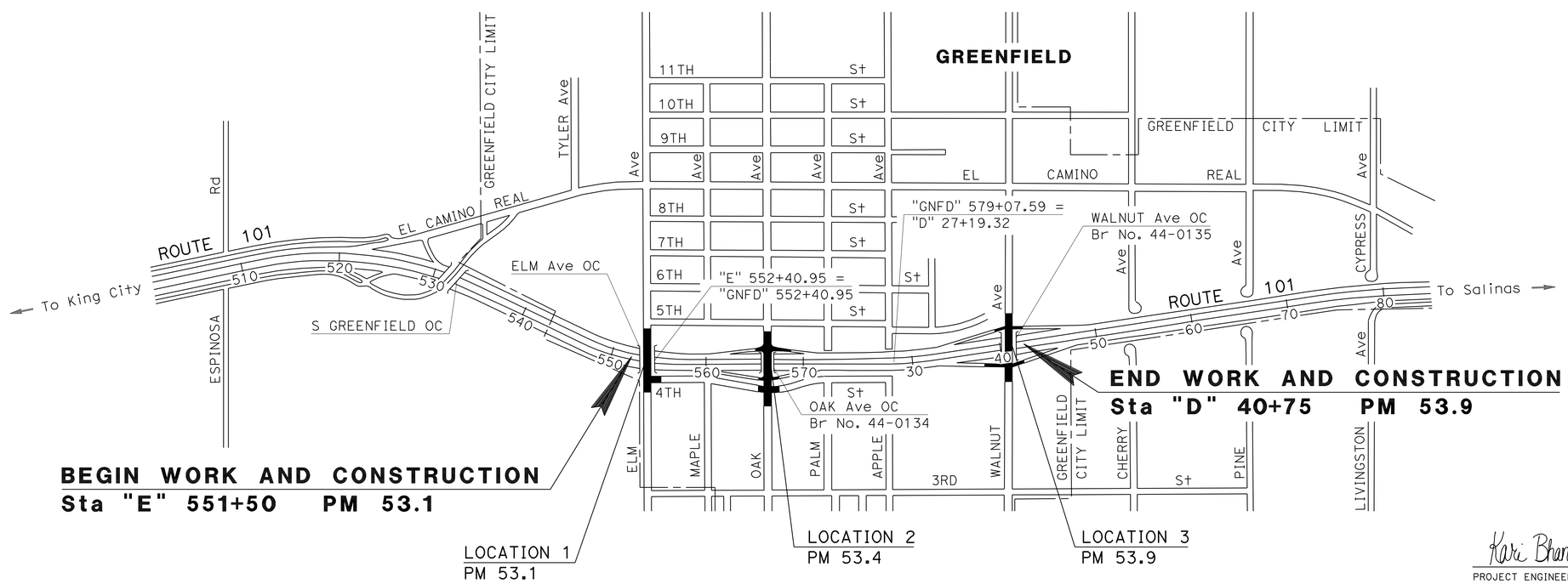

NO SCALE

THE CONTRACTOR SHALL POSSESS THE CLASS (OR CLASSES) OF LICENSE AS SPECIFIED IN THE "NOTICE TO BIDDERS."

Kari Bhana 8-2-10
PROJECT ENGINEER DATE
REGISTERED CIVIL ENGINEER

September 20, 2010
PLANS APPROVAL DATE

REGISTERED PROFESSIONAL ENGINEER KARI BHANA No. 65395 Exp. 9-30-11 CIVIL STATE OF CALIFORNIA

THE STATE OF CALIFORNIA OR ITS OFFICERS OR AGENTS SHALL NOT BE RESPONSIBLE FOR THE ACCURACY OR COMPLETENESS OF SCANNED COPIES OF THIS PLAN SHEET.

CONTRACT No.	05-0Q5604
PROJECT ID	0500000315

PROJECT MANAGER JOHN LUCHETTA
DESIGN ENGINEER RON R. KRAEMER

LAST REVISION 08-02-10 DATE PLOTTED => 22-SEP-2010 TIME PLOTTED => 07:24

Dist	COUNTY	ROUTE	POST MILES TOTAL PROJECT	SHEET No.	TOTAL SHEETS
05	Mon	101	53.1/53.9	2	70

Kari Bhana 8-2-10
REGISTERED CIVIL ENGINEER DATE

9-20-10
PLANS APPROVAL DATE

REGISTERED PROFESSIONAL ENGINEER
KARI BHANA
No. 65395
Exp. 9-30-11
CIVIL
STATE OF CALIFORNIA

THE STATE OF CALIFORNIA OR ITS OFFICERS OR AGENTS SHALL NOT BE RESPONSIBLE FOR THE ACCURACY OR COMPLETENESS OF SCANNED COPIES OF THIS PLAN SHEET.

NOTES:

1. DIMENSIONS OF THE PAVEMENT STRUCTURES (STRUCTURAL SECTIONS) ARE SUBJECT TO TOLERANCES SPECIFIED IN THE STANDARD SPECIFICATIONS.
2. SUPERELEVATION AS SHOWN OR AS DIRECTED BY THE ENGINEER.
3. SLURRY SEAL SHALL NOT BE PLACED ON CONCRETE CURB, GUTTER, DRAINAGE INLET APRONS, CONCRETE STRUCTURES, OR UTILITY COVERS.

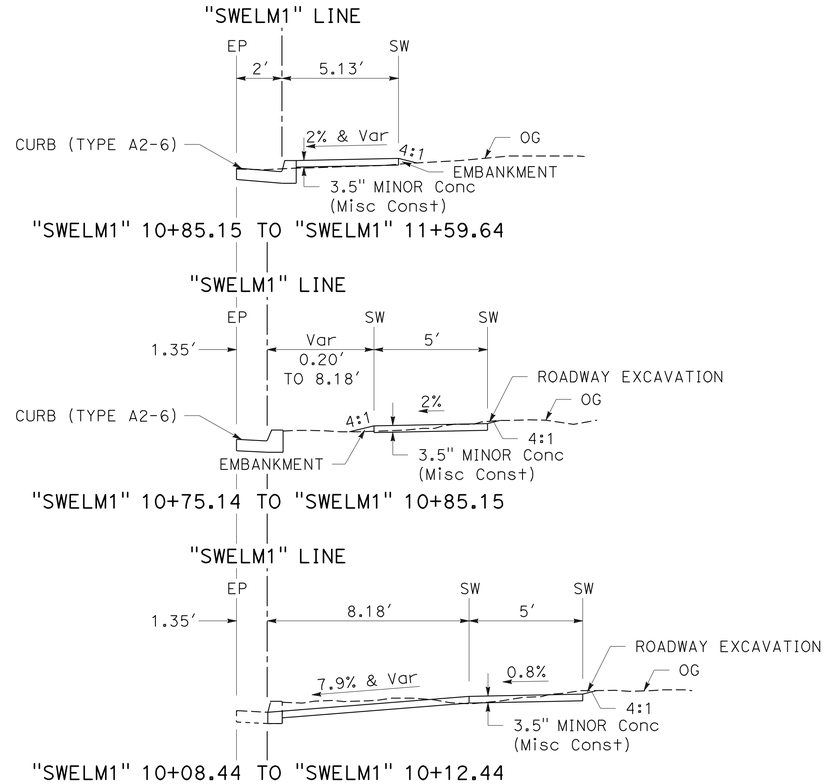

ELM AVENUE SIDEWALK

TYPICAL CROSS SECTIONS

NO SCALE

X-1

REVISED BY	DATE REVISED

CALCULATED-DESIGNED BY	CHECKED BY
KARI BHANA	RON R. KRAEMER

FUNCTIONAL SUPERVISOR: RON R. KRAEMER

STATE OF CALIFORNIA - DEPARTMENT OF TRANSPORTATION
Caltrans
DESIGN

LAST REVISION 08-02-10 | DATE PLOTTED => 22-SEP-2010 | TIME PLOTTED => 07:27

Dist	COUNTY	ROUTE	POST MILES TOTAL PROJECT	SHEET No.	TOTAL SHEETS
05	Mon	101	53.1/53.9	3	70

Kari Bhana 8-2-10
REGISTERED CIVIL ENGINEER DATE

9-20-10
PLANS APPROVAL DATE

REGISTERED PROFESSIONAL ENGINEER
KARI BHANA
No. 65395
Exp. 9-30-11
CIVIL
STATE OF CALIFORNIA

THE STATE OF CALIFORNIA OR ITS OFFICERS OR AGENTS SHALL NOT BE RESPONSIBLE FOR THE ACCURACY OR COMPLETENESS OF SCANNED COPIES OF THIS PLAN SHEET.

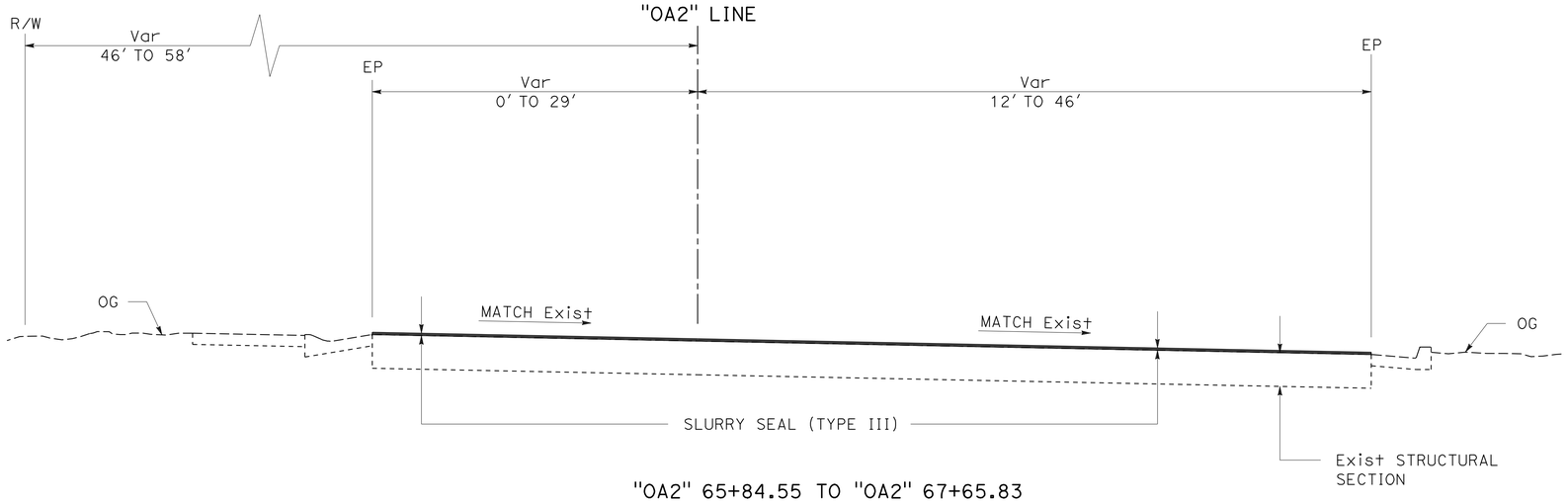

"OA2" 65+84.55 TO "OA2" 67+65.83

ROUTE 101 SB OFF-RAMP AT OAK AVENUE

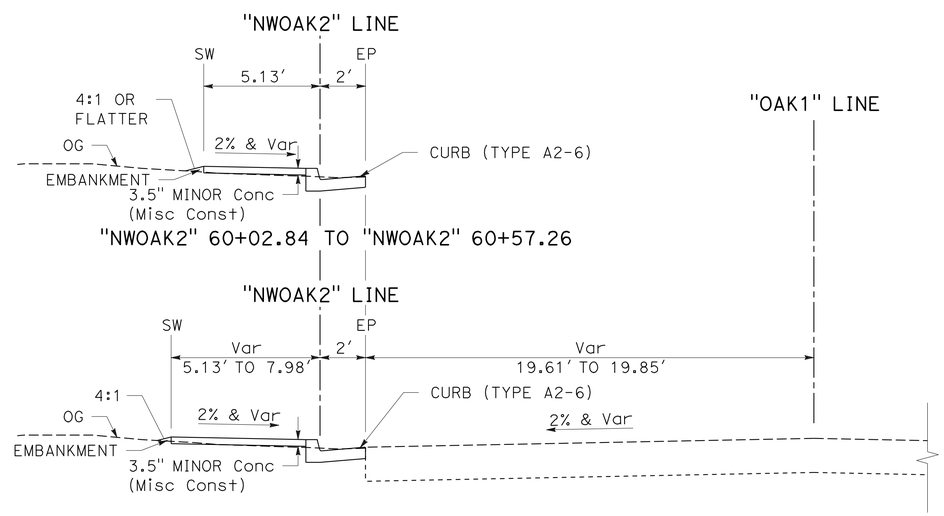

"NWOAK2" 60+00 TO "NWOAK2" 60+02.84

OAK AVENUE SIDEWALK

TYPICAL CROSS SECTIONS

NO SCALE

X-2

STATE OF CALIFORNIA - DEPARTMENT OF TRANSPORTATION
Caltrans®
DESIGN
FUNCTIONAL SUPERVISOR: RON R. KRAEMER
CALCULATED-DESIGNED BY: KARI BHANA
CHECKED BY: RON R. KRAEMER
REVISED BY
DATE REVISED

LAST REVISION 08-02-10
DATE PLOTTED => 22-SEP-2010
TIME PLOTTED => 07:27

Dist	COUNTY	ROUTE	POST MILES TOTAL PROJECT	SHEET No.	TOTAL SHEETS
05	Mon	101	53.1/53.9	4	70

Kari Bhana 8-2-10
REGISTERED CIVIL ENGINEER DATE

9-20-10
PLANS APPROVAL DATE

REGISTERED PROFESSIONAL ENGINEER
KARI BHANA
No. 65395
Exp. 9-30-11
CIVIL
STATE OF CALIFORNIA

THE STATE OF CALIFORNIA OR ITS OFFICERS OR AGENTS SHALL NOT BE RESPONSIBLE FOR THE ACCURACY OR COMPLETENESS OF SCANNED COPIES OF THIS PLAN SHEET.

NOTES:

1. FOR ACCURATE RIGHT OF WAY AND ACCESS DATA, CONTACT RIGHT OF WAY ENGINEERING AT THE DISTRICT OFFICE.
2. SEE CONSTRUCTION DETAIL SHEETS FOR CURB RAMP DETAILS NOT SHOWN, INCLUDING CURB RAMP ALIGNMENTS.
3. ALL CUT AND FILL SLOPES ARE 4:1 UNLESS DIRECTED BY THE ENGINEER.

LEGEND:

- TEMPORARY CONSTRUCTION EASEMENT (TCE)
- SLURRY SEAL
- (X) DRAINAGE SYSTEM No.
- (X) DRAINAGE UNIT No.

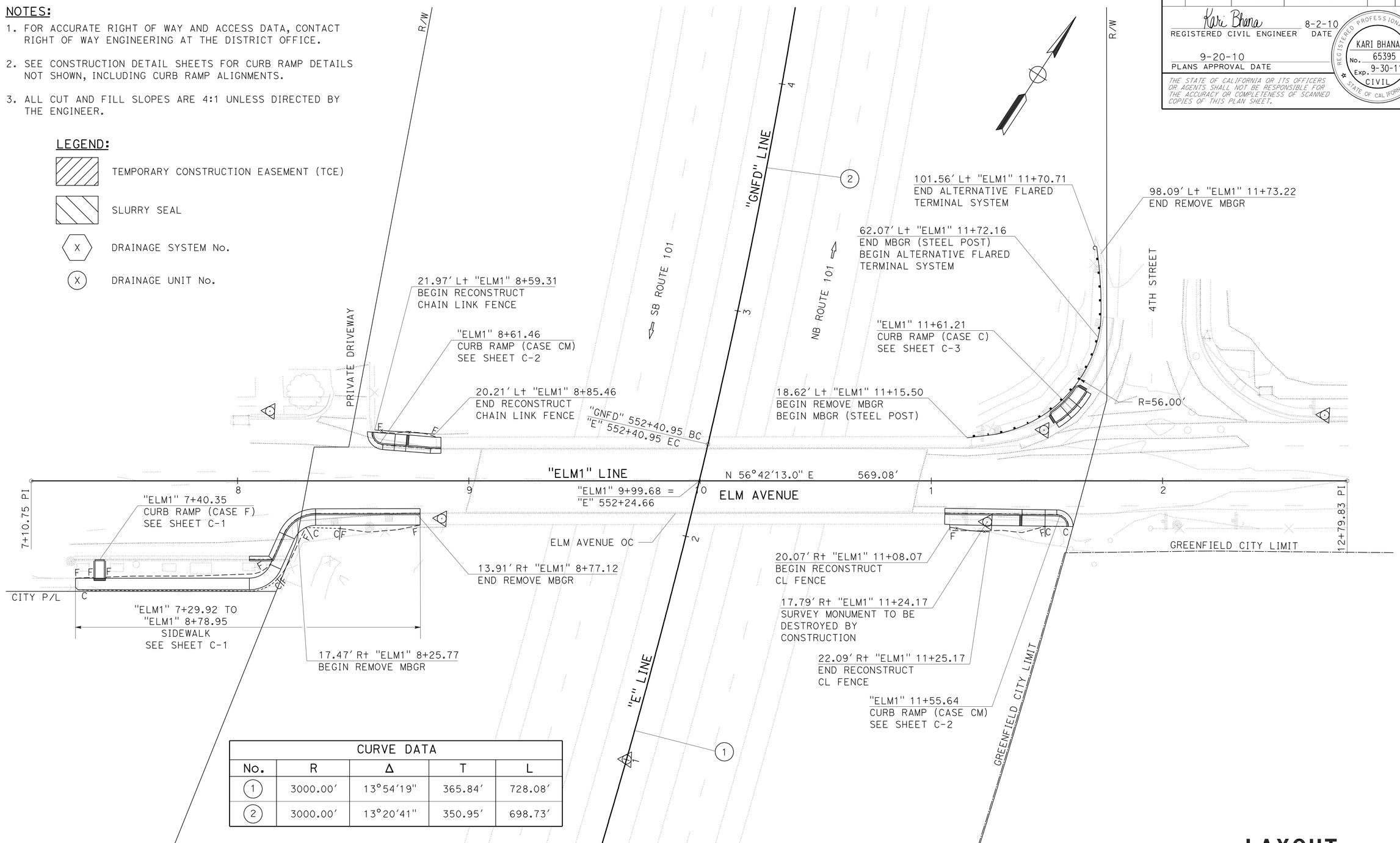

CURVE DATA				
No.	R	Δ	T	L
1	3000.00'	13°54'19"	365.84'	728.08'
2	3000.00'	13°20'41"	350.95'	698.73'

LAYOUT
(LOCATION 1)
SCALE: 1" = 20'

L-1

STATE OF CALIFORNIA - DEPARTMENT OF TRANSPORTATION
Caltrans
DESIGN
FUNCTIONAL SUPERVISOR: RON R. KRAEMER
CALCULATED-DESIGNED BY: KARI BHANA
CHECKED BY: RON R. KRAEMER
REVISED BY
DATE REVISED

LAST REVISION 08-02-10 | DATE PLOTTED => 22-SEP-2010 | TIME PLOTTED => 10:44

Dist	COUNTY	ROUTE	POST MILES TOTAL PROJECT	SHEET No.	TOTAL SHEETS
05	Mon	101	53.1/53.9	5	70

Kari Bhana 8-2-10
REGISTERED CIVIL ENGINEER DATE

9-20-10
PLANS APPROVAL DATE

REGISTERED PROFESSIONAL ENGINEER
KARI BHANA
No. 65395
Exp. 9-30-11
CIVIL
STATE OF CALIFORNIA

THE STATE OF CALIFORNIA OR ITS OFFICERS OR AGENTS SHALL NOT BE RESPONSIBLE FOR THE ACCURACY OR COMPLETENESS OF SCANNED COPIES OF THIS PLAN SHEET.

NOTE:
FOR ACCURATE RIGHT OF WAY AND ACCESS DATA, CONTACT RIGHT OF WAY ENGINEERING AT THE DISTRICT OFFICE.

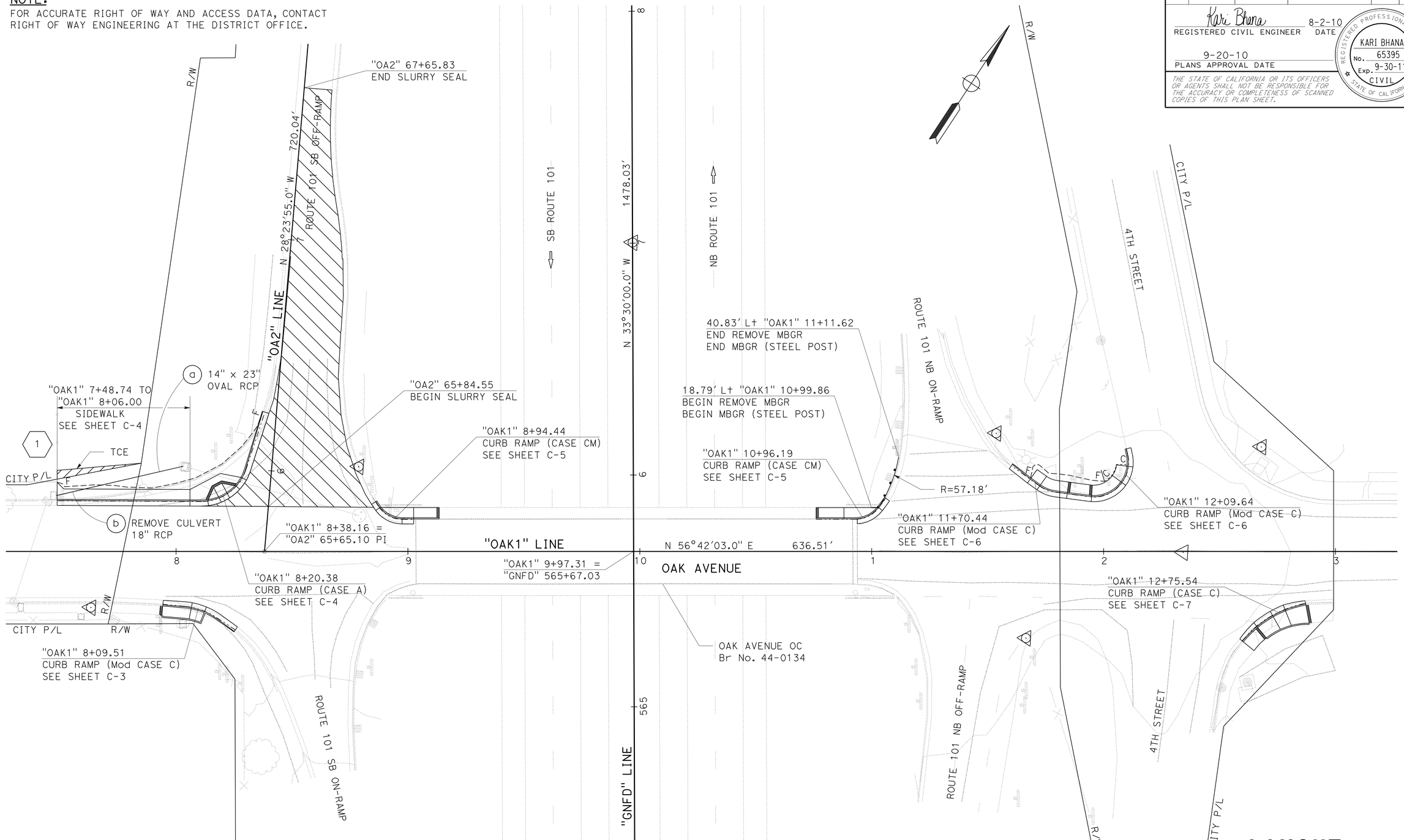

LAYOUT
(LOCATION 2)
SCALE: 1" = 20'

L-2

STATE OF CALIFORNIA - DEPARTMENT OF TRANSPORTATION
Caltrans®
DESIGN

FUNCTIONAL SUPERVISOR: RON R. KRAEMER
CALCULATED-DESIGNED BY: KARI BHANA
CHECKED BY: RON R. KRAEMER
REVISED BY
DATE REVISED

LAST REVISION 08-02-10
DATE PLOTTED => 22-SEP-2010
TIME PLOTTED => 10:45

Dist	COUNTY	ROUTE	POST MILES TOTAL PROJECT	SHEET No.	TOTAL SHEETS
05	Mon	101	53.1/53.9	6	70

Kari Bhana 8-2-10
REGISTERED CIVIL ENGINEER DATE

9-20-10
PLANS APPROVAL DATE

REGISTERED PROFESSIONAL ENGINEER
KARI BHANA
No. 65395
Exp. 9-30-11
CIVIL
STATE OF CALIFORNIA

THE STATE OF CALIFORNIA OR ITS OFFICERS OR AGENTS SHALL NOT BE RESPONSIBLE FOR THE ACCURACY OR COMPLETENESS OF SCANNED COPIES OF THIS PLAN SHEET.

NOTE:

FOR ACCURATE RIGHT OF WAY AND ACCESS DATA, CONTACT RIGHT OF WAY ENGINEERING AT THE DISTRICT OFFICE.

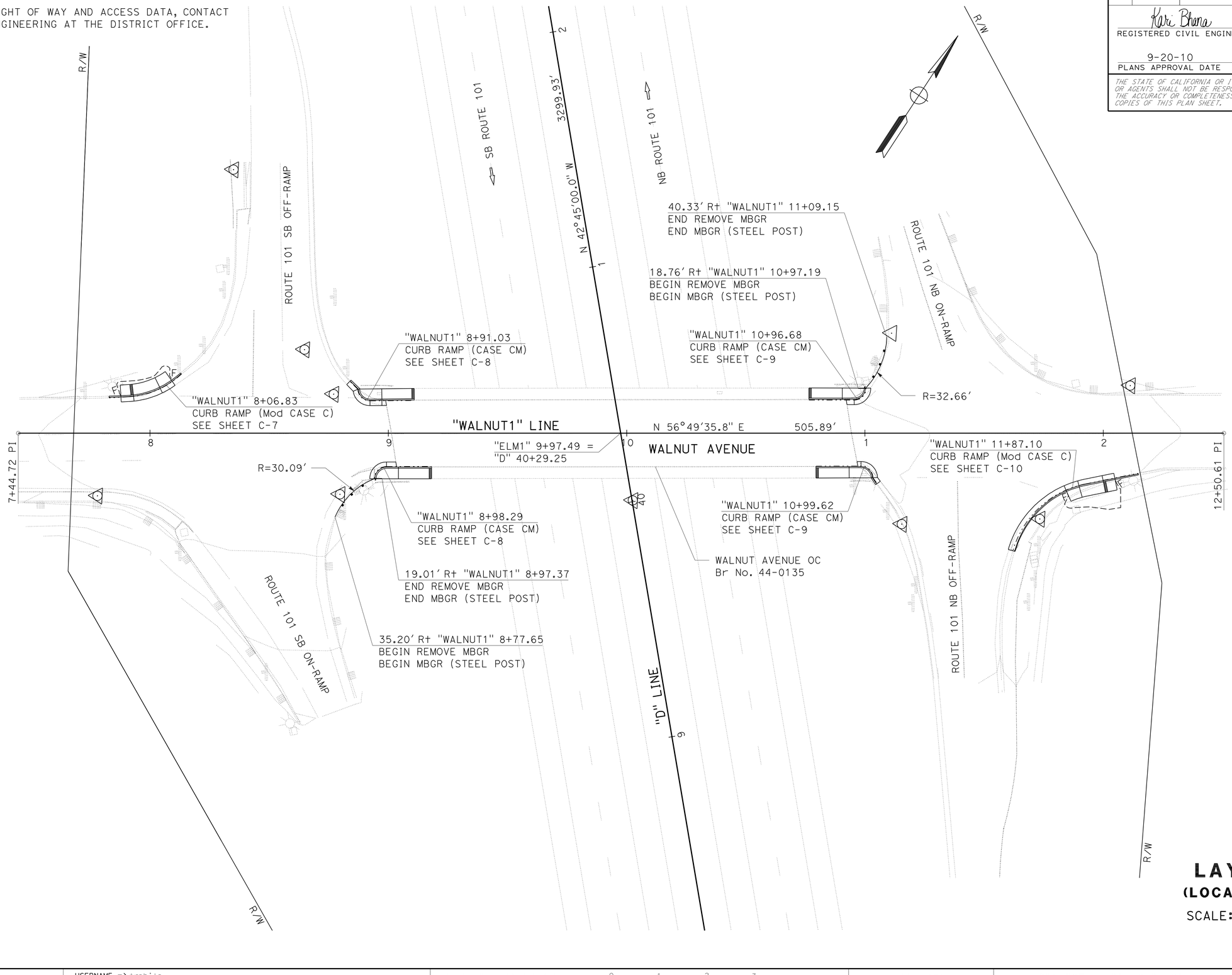

LAYOUT
(LOCATION 3)

SCALE: 1" = 20'

L-3

STATE OF CALIFORNIA - DEPARTMENT OF TRANSPORTATION
Caltrans
DESIGN

FUNCTIONAL SUPERVISOR: RON R. KRAEMER

CALCULATED-DESIGNED BY: KARI BHANA
CHECKED BY: RON R. KRAEMER

REVISED BY
DATE REVISED

LAST REVISION 08-02-10
DATE PLOTTED => 22-SEP-2010
TIME PLOTTED => 10:45

Dist	COUNTY	ROUTE	POST MILES TOTAL PROJECT	SHEET No.	TOTAL SHEETS
05	Mon	101	53.1/53.9	7	70

Kari Bhana 8-2-10
REGISTERED CIVIL ENGINEER DATE

9-20-10
PLANS APPROVAL DATE

REGISTERED PROFESSIONAL ENGINEER KARI BHANA No. 65395 Exp. 9-30-11 CIVIL STATE OF CALIFORNIA

THE STATE OF CALIFORNIA OR ITS OFFICERS OR AGENTS SHALL NOT BE RESPONSIBLE FOR THE ACCURACY OR COMPLETENESS OF SCANNED COPIES OF THIS PLAN SHEET.

NOTES:

1. FOR ACCURATE RIGHT OF WAY AND ACCESS DATA, CONTACT RIGHT OF WAY ENGINEERING AT THE DISTRICT OFFICE.
2. CURB RAMP ALIGNMENTS AND DISTANCES MEASURED ALONG CURBS ARE ALONG FLOWLINES.
3. ALL STATIONS AND OFFSETS REFER TO CURB RAMP ALIGNMENTS UNLESS OTHERWISE SHOWN.
4. WHERE CURB AND GUTTER ARE SHOWN, TYPE A2-6 CURB IS USED UNLESS OTHERWISE NOTED.
5. ALL CUT AND FILL SLOPES ARE 4:1 UNLESS DIRECTED BY THE ENGINEER.
6. ALL SIDEWALK AND CURB RAMP CONCRETE THICKNESSES ARE 3.5".
7. "TYPICAL CURB EXCAVATION DETAIL" ON SHEET C-11 APPLIES TO ALL CURB RAMP AND SIDEWALK LOCATIONS.

ABBREVIATIONS:

TOC	CURB TOP
FLC	CURB FL
LIP	CURB LIP
DIKT	DIKE TOP

LEGEND:

TEMPORARY CONSTRUCTION EASEMENT (TCE)

I_O OBJECT MARKER (TYPE L-2)

U_L UTILITY POLE OBJECT MARKER (TYPE L)

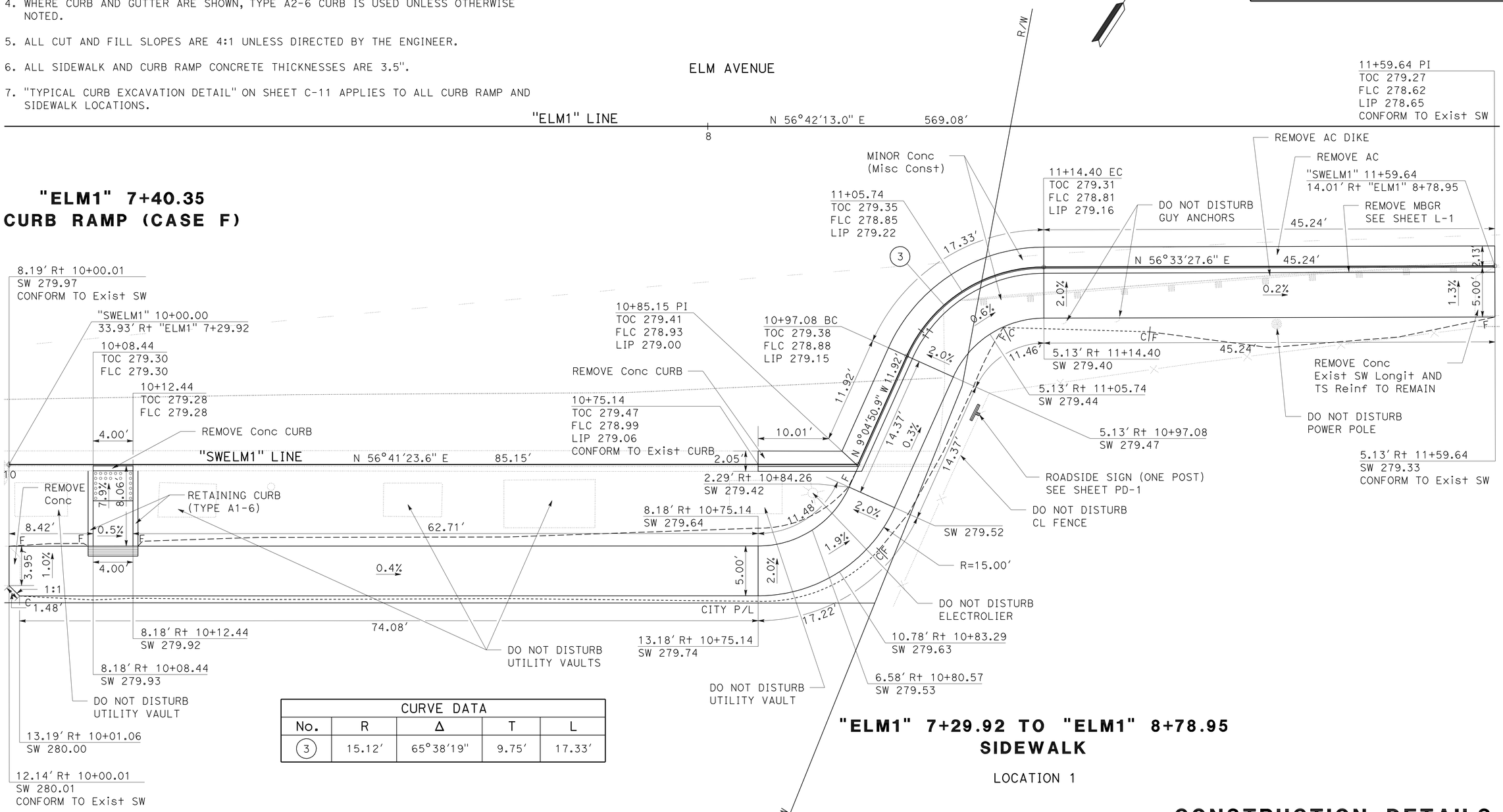

CURVE DATA				
No.	R	Δ	T	L
3	15.12'	65°38'19"	9.75'	17.33'

"ELM1" 7+40.35
CURB RAMP (CASE F)

"ELM1" 7+29.92 TO "ELM1" 8+78.95
SIDEWALK

LOCATION 1

CONSTRUCTION DETAILS

SCALE: 1" = 5'

C-1

STATE OF CALIFORNIA - DEPARTMENT OF TRANSPORTATION
Caltrans
DESIGN

FUNCTIONAL SUPERVISOR: RON R. KRAEMER
CALCULATED-DESIGNED BY: KARI BHANA
CHECKED BY: RON R. KRAEMER
REVISED BY
DATE REVISED

LAST REVISION 08-02-10
DATE PLOTTED => 22-SEP-2010
TIME PLOTTED => 10:45

Dist	COUNTY	ROUTE	POST MILES TOTAL PROJECT	SHEET No.	TOTAL SHEETS
05	Mon	101	53.1/53.9	8	70

Kari Bhana 8-2-10
REGISTERED CIVIL ENGINEER DATE

9-20-10
PLANS APPROVAL DATE

REGISTERED PROFESSIONAL ENGINEER
KARI BHANA
No. 65395
Exp. 9-30-11
CIVIL
STATE OF CALIFORNIA

THE STATE OF CALIFORNIA OR ITS OFFICERS OR AGENTS SHALL NOT BE RESPONSIBLE FOR THE ACCURACY OR COMPLETENESS OF SCANNED COPIES OF THIS PLAN SHEET.

NOTE:

FOR ACCURATE RIGHT OF WAY AND ACCESS DATA, CONTACT RIGHT OF WAY ENGINEERING AT THE DISTRICT OFFICE.

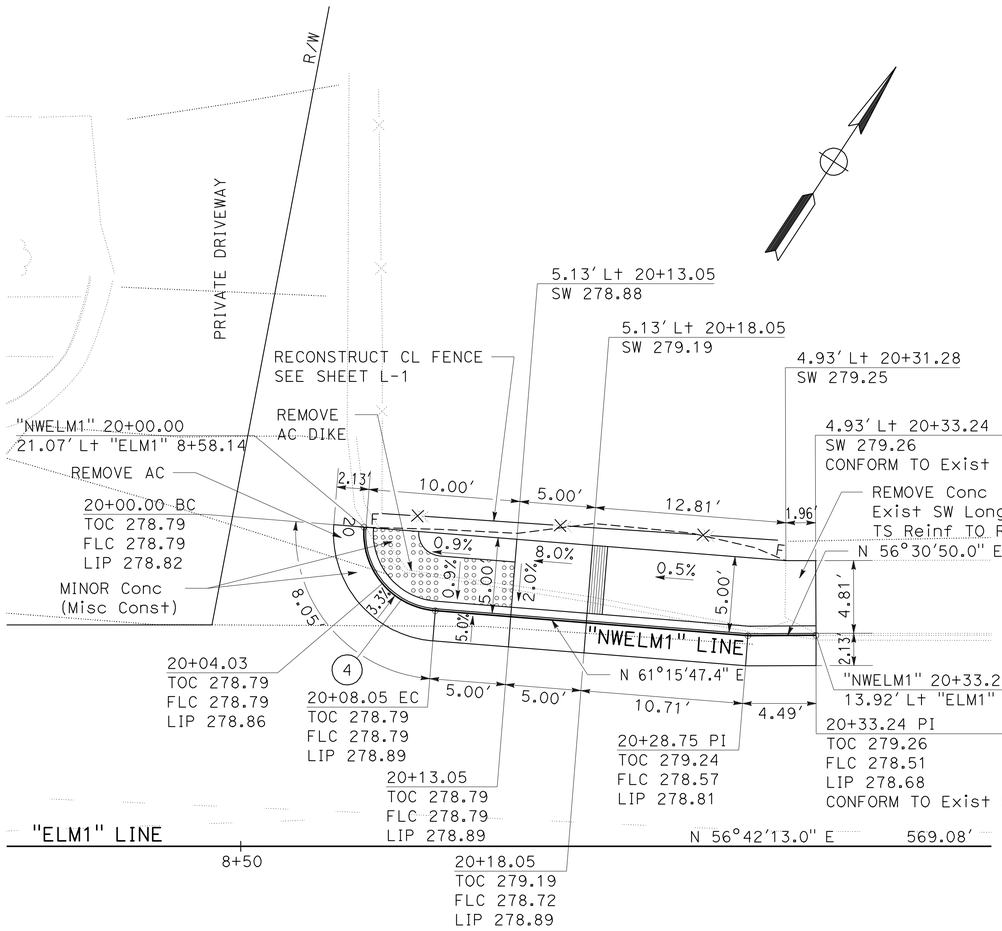

"ELM1" 8+61.46
CURB RAMP (CASE CM)

LOCATION 1

CURVE DATA				
No.	R	Δ	T	L
4	5.12′	90°00′01″	5.13′	8.05′
5	5.12′	90°00′01″	5.12′	8.05′

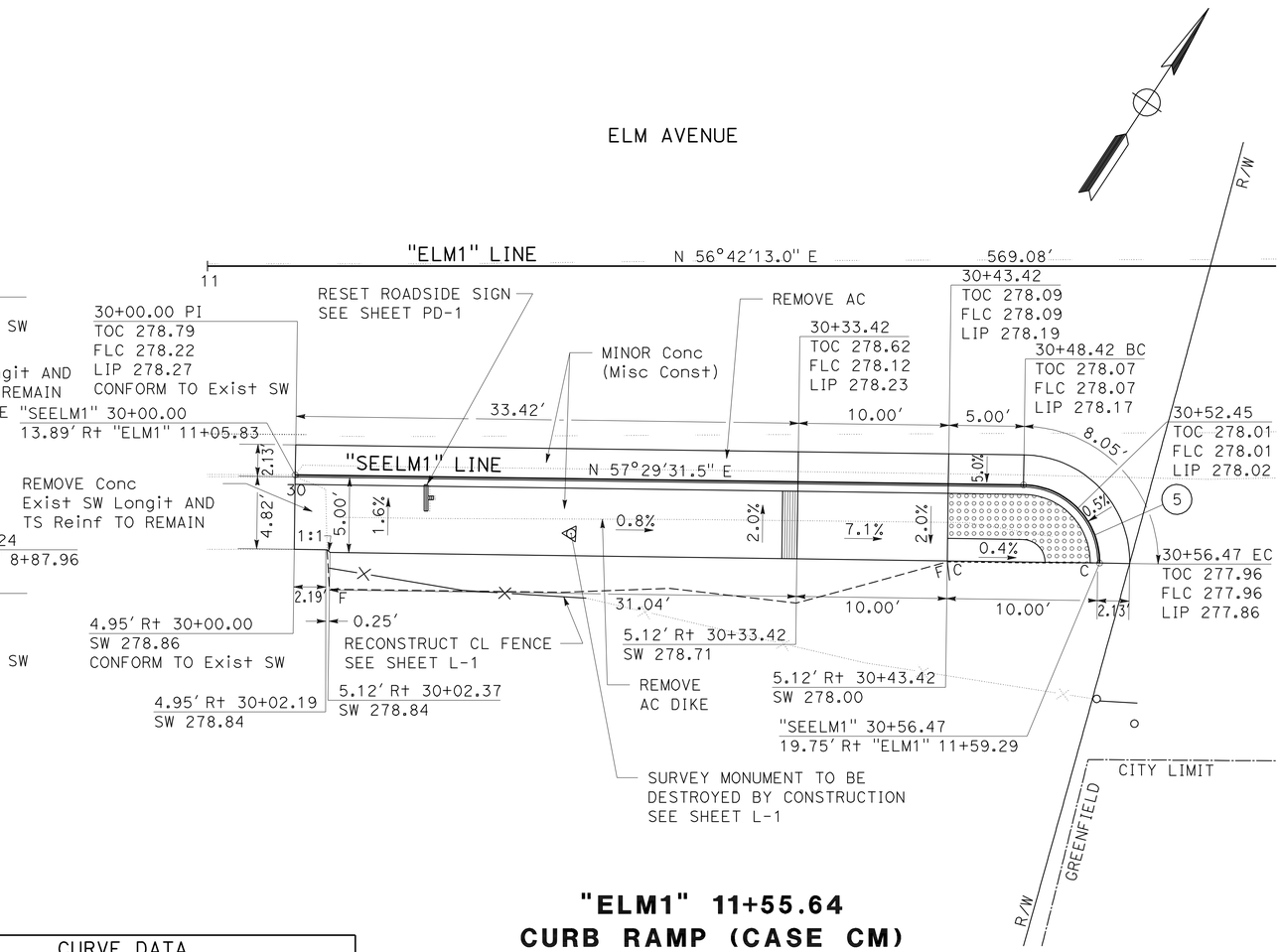

"ELM1" 11+55.64
CURB RAMP (CASE CM)

LOCATION 1

CONSTRUCTION DETAILS

SCALE: 1" = 5′

C-2

STATE OF CALIFORNIA - DEPARTMENT OF TRANSPORTATION
Caltrans
DESIGN

FUNCTIONAL SUPERVISOR: RON R. KRAEMER
CALCULATED-DESIGNED BY: KARI BHANA
CHECKED BY: RON R. KRAEMER
REVISED BY
DATE REVISED

LAST REVISION 08-02-10
DATE PLOTTED => 22-SEP-2010
TIME PLOTTED => 10:45

Dist	COUNTY	ROUTE	POST MILES TOTAL PROJECT	SHEET No.	TOTAL SHEETS
05	Mon	101	53.1/53.9	9	70

Kari Bhana 8-2-10
REGISTERED CIVIL ENGINEER DATE

9-20-10
PLANS APPROVAL DATE

REGISTERED PROFESSIONAL ENGINEER
KARI BHANA
No. 65395
Exp. 9-30-11
CIVIL
STATE OF CALIFORNIA

THE STATE OF CALIFORNIA OR ITS OFFICERS OR AGENTS SHALL NOT BE RESPONSIBLE FOR THE ACCURACY OR COMPLETENESS OF SCANNED COPIES OF THIS PLAN SHEET.

NOTE:

FOR ACCURATE RIGHT OF WAY AND ACCESS DATA, CONTACT RIGHT OF WAY ENGINEERING AT THE DISTRICT OFFICE.

CURVE DATA				
No.	R	Δ	T	L
6	39.63′	27°52′23"	9.83′	19.28′
7	30.00′	28°02′03"	7.49′	14.68′

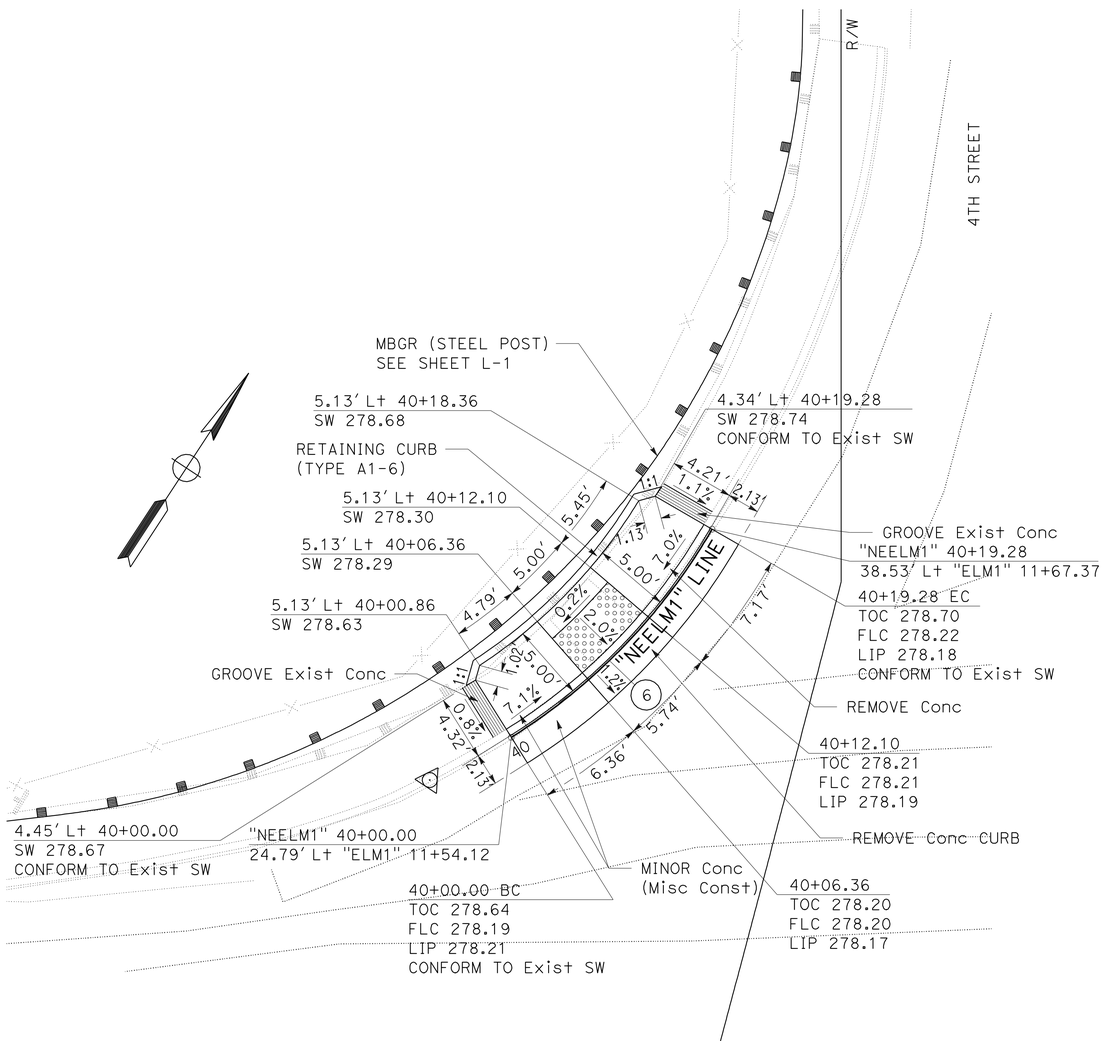

"ELM1" 11+61.21
CURB RAMP (CASE C)

LOCATION 1

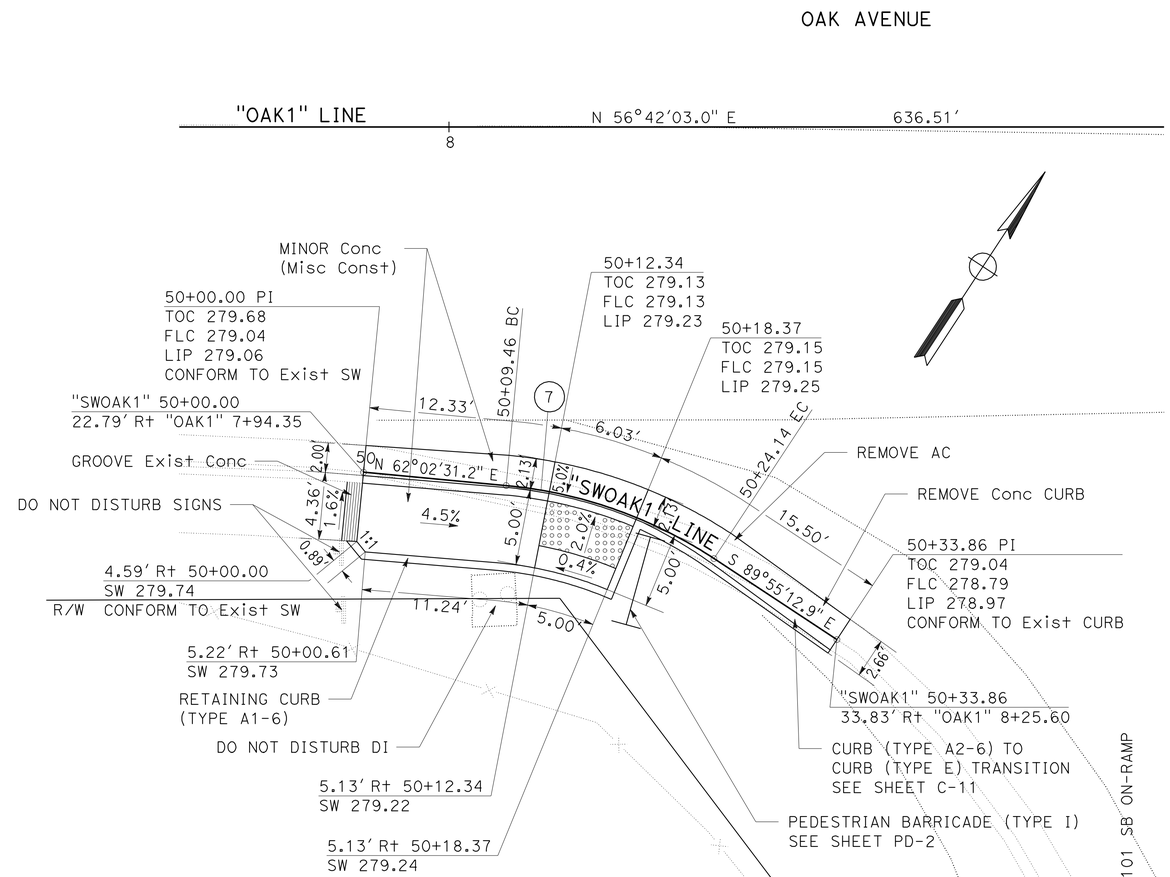

"OAK1" 8+09.51
CURB RAMP (Mod CASE C)

LOCATION 2

CONSTRUCTION DETAILS

SCALE: 1" = 5′

C-3

STATE OF CALIFORNIA - DEPARTMENT OF TRANSPORTATION
Caltrans®
DESIGN

FUNCTIONAL SUPERVISOR: RON R. KRAEMER
CALCULATED-DESIGNED BY: KARI BHANA
CHECKED BY: RON R. KRAEMER
REVISED BY
DATE REVISED

LAST REVISION 08-02-10
DATE PLOTTED => 22-SEP-2010
TIME PLOTTED => 10:45

Dist	COUNTY	ROUTE	POST MILES TOTAL PROJECT	SHEET No.	TOTAL SHEETS
05	Mon	101	53.1/53.9	10	70

Kari Bhana 8-2-10
REGISTERED CIVIL ENGINEER DATE

9-20-10
PLANS APPROVAL DATE

REGISTERED PROFESSIONAL ENGINEER
KARI BHANA
No. 65395
Exp. 9-30-11
CIVIL
STATE OF CALIFORNIA

THE STATE OF CALIFORNIA OR ITS OFFICERS OR AGENTS SHALL NOT BE RESPONSIBLE FOR THE ACCURACY OR COMPLETENESS OF SCANNED COPIES OF THIS PLAN SHEET.

NOTE:

FOR ACCURATE RIGHT OF WAY AND ACCESS DATA, CONTACT RIGHT OF WAY ENGINEERING AT THE DISTRICT OFFICE.

CURVE DATA				
No.	R	Δ	T	L
8	20.00′	71°58′31"	14.52′	25.12′

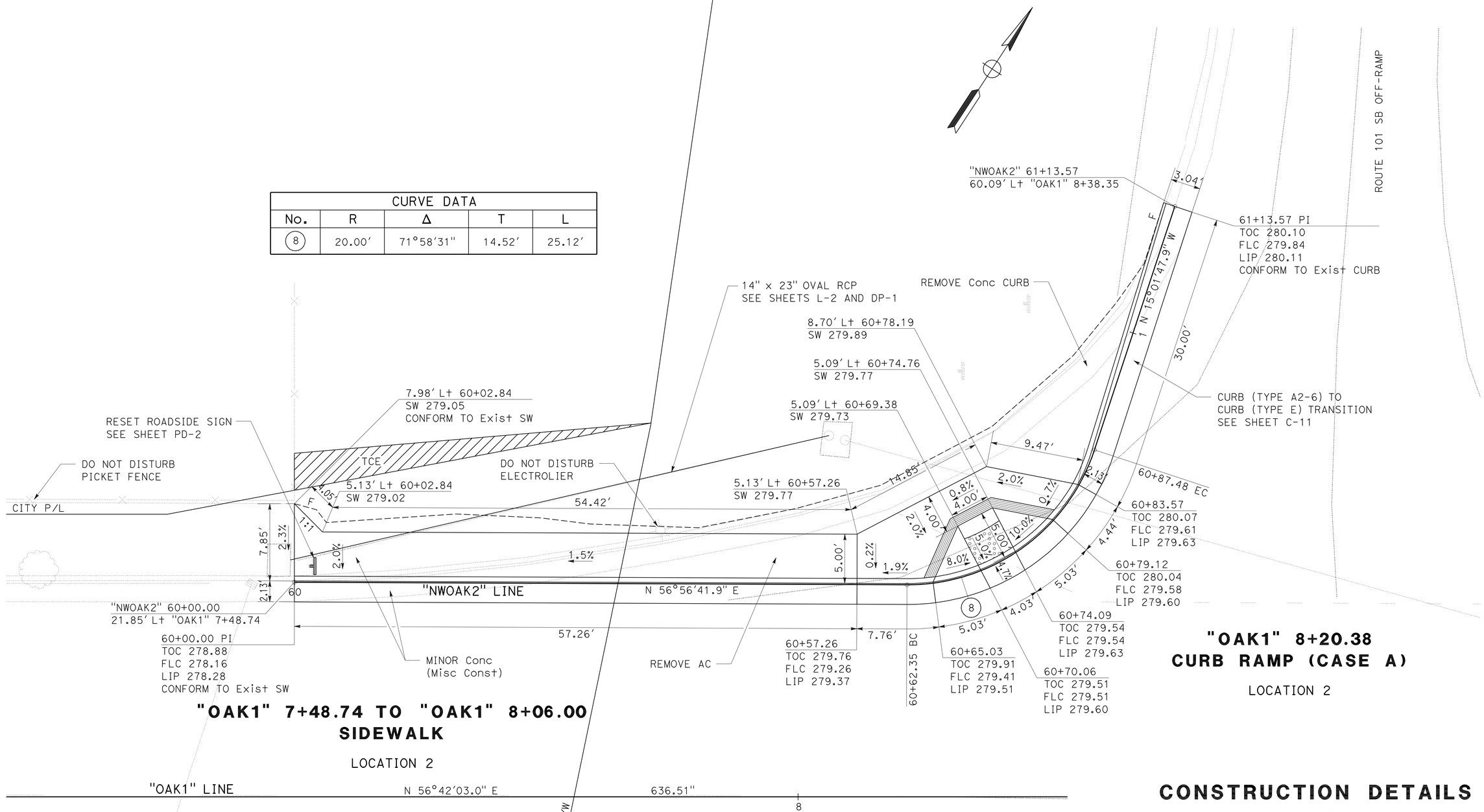

CONSTRUCTION DETAILS

SCALE: 1" = 5′

C-4

STATE OF CALIFORNIA - DEPARTMENT OF TRANSPORTATION
DESIGN
FUNCTIONAL SUPERVISOR: RON R. KRAEMER
CALCULATED-DESIGNED BY: KARI BHANA
CHECKED BY: RON R. KRAEMER
REVISED BY
DATE REVISED

LAST REVISION 08-02-10 | DATE PLOTTED => 22-SEP-2010 | TIME PLOTTED => 10:45

Dist	COUNTY	ROUTE	POST MILES TOTAL PROJECT	SHEET No.	TOTAL SHEETS
05	Mon	101	53.1/53.9	11	70

Kari Bhana 8-2-10
REGISTERED CIVIL ENGINEER DATE

9-20-10
PLANS APPROVAL DATE

REGISTERED PROFESSIONAL ENGINEER
KARI BHANA
No. 65395
Exp. 9-30-11
CIVIL
STATE OF CALIFORNIA

THE STATE OF CALIFORNIA OR ITS OFFICERS OR AGENTS SHALL NOT BE RESPONSIBLE FOR THE ACCURACY OR COMPLETENESS OF SCANNED COPIES OF THIS PLAN SHEET.

CURVE DATA				
No.	R	Δ	T	L
9	12.00′	56°02′16″	6.39′	11.74′
10	12.58′	53°09′17″	6.29′	11.67′

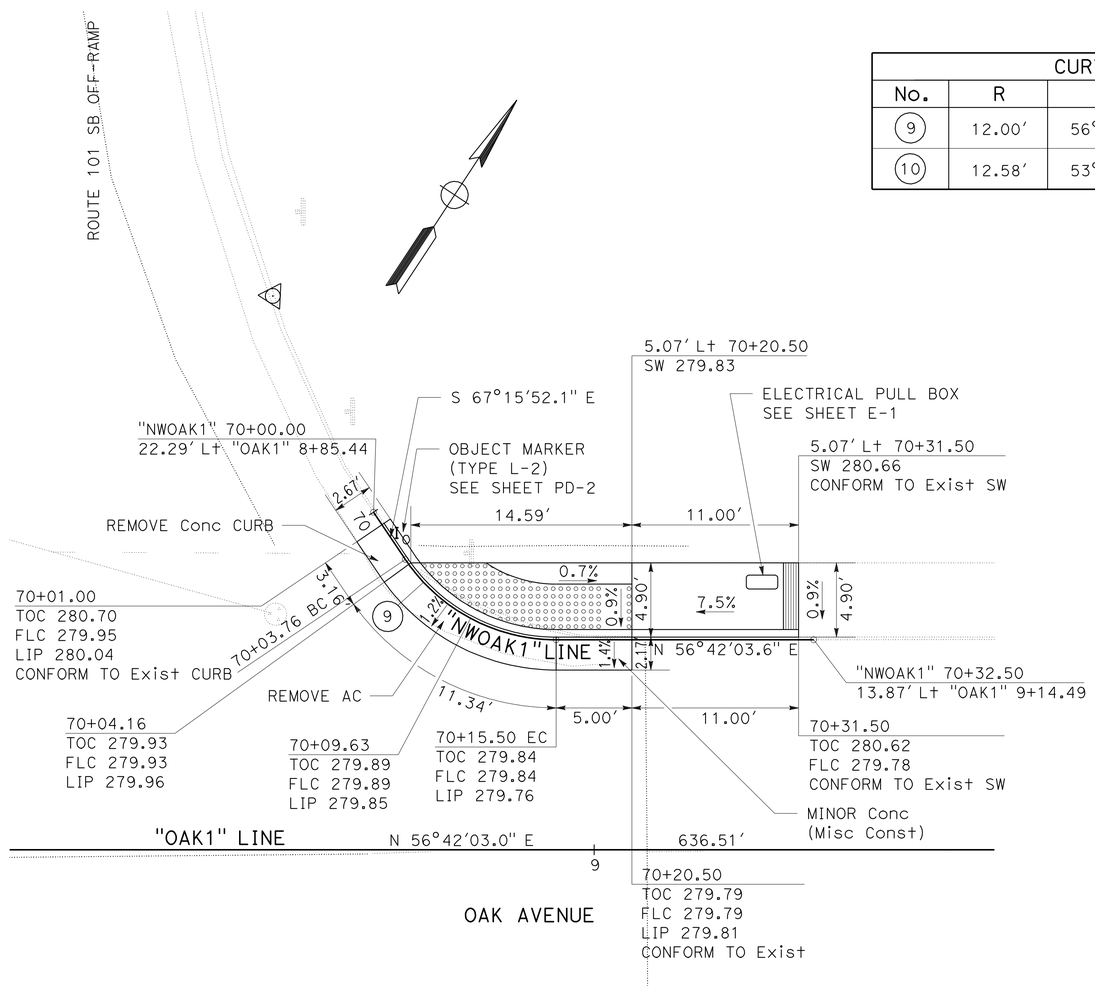

"OAK1" 8+94.44
CURB RAMP (CASE CM)

LOCATION 2

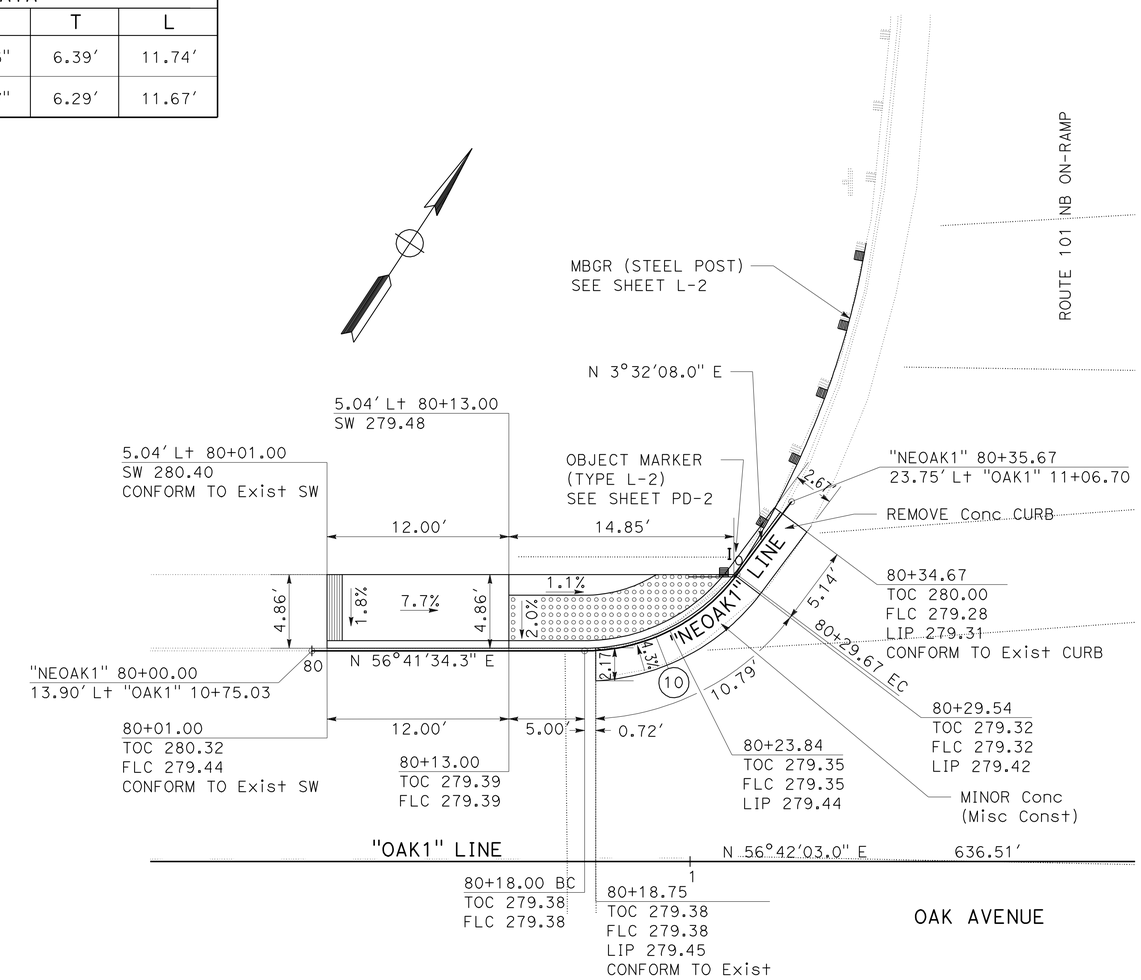

"OAK1" 10+96.19
CURB RAMP (CASE CM)

LOCATION 2

CONSTRUCTION DETAILS

SCALE: 1″ = 5′

C-5

STATE OF CALIFORNIA - DEPARTMENT OF TRANSPORTATION
DESIGN
FUNCTIONAL SUPERVISOR: RON R. KRAEMER
CALCULATED-DESIGNED BY: KARI BHANA
CHECKED BY: RON R. KRAEMER
REVISED BY
DATE REVISED

LAST REVISION 08-02-10
DATE PLOTTED => 22-SEP-2010
TIME PLOTTED => 07:28

Dist	COUNTY	ROUTE	POST MILES TOTAL PROJECT	SHEET No.	TOTAL SHEETS
05	Mon	101	53.1/53.9	12	70

Kari Bhana 8-2-10
REGISTERED CIVIL ENGINEER DATE

9-20-10
PLANS APPROVAL DATE

REGISTERED PROFESSIONAL ENGINEER
KARI BHANA
No. 65395
Exp. 9-30-11
CIVIL
STATE OF CALIFORNIA

THE STATE OF CALIFORNIA OR ITS OFFICERS OR AGENTS SHALL NOT BE RESPONSIBLE FOR THE ACCURACY OR COMPLETENESS OF SCANNED COPIES OF THIS PLAN SHEET.

NOTE:

FOR ACCURATE RIGHT OF WAY AND ACCESS DATA,
CONTACT RIGHT OF WAY ENGINEERING AT THE DISTRICT OFFICE.

CURVE DATA				
No.	R	Δ	T	L
11	15.00′	27°56′25"	3.73′	7.31′
12	15.00′	110°00′43"	21.43′	28.80′

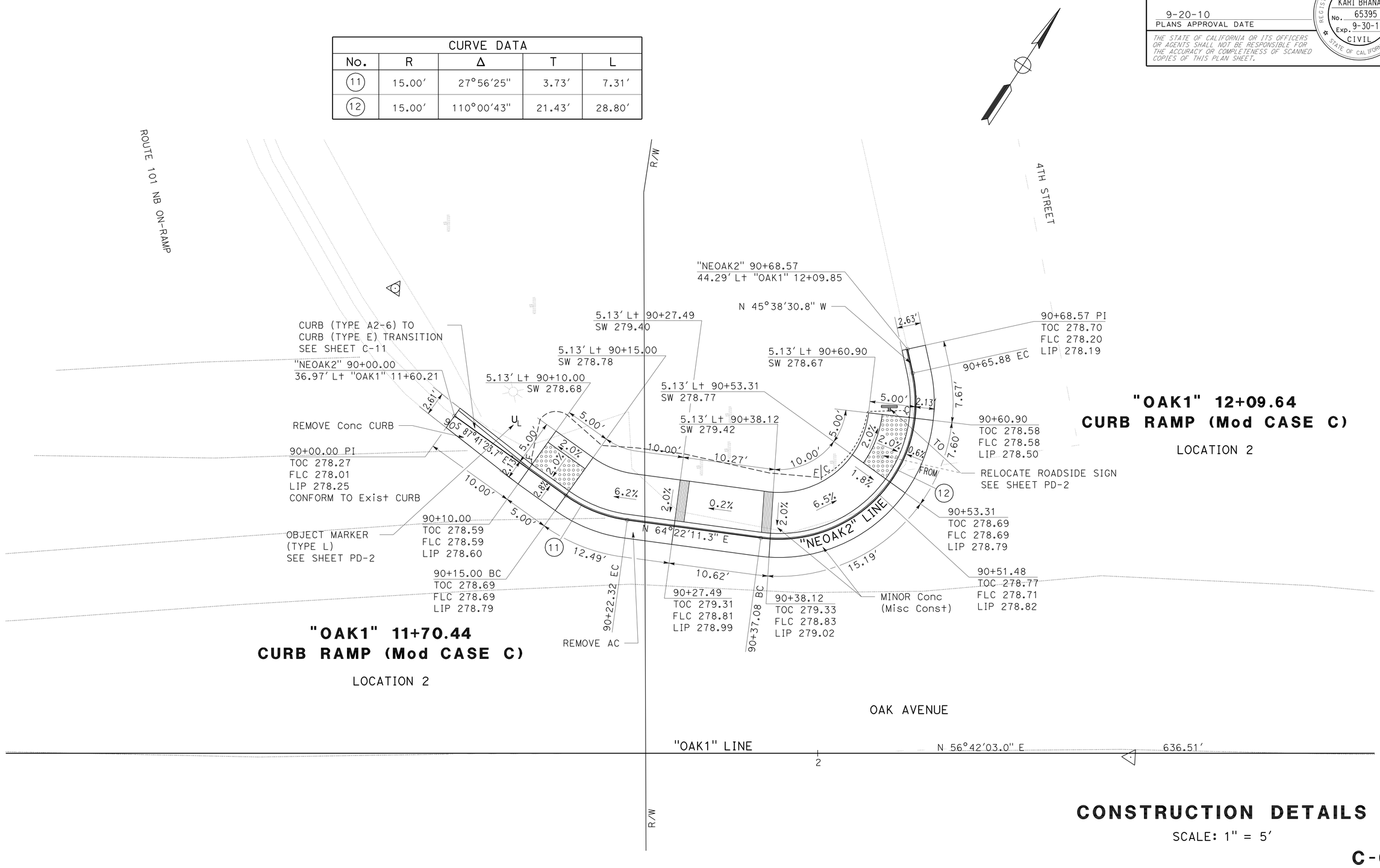

CONSTRUCTION DETAILS

SCALE: 1" = 5′

C-6

STATE OF CALIFORNIA - DEPARTMENT OF TRANSPORTATION
Caltrans
DESIGN

FUNCTIONAL SUPERVISOR: RON R. KRAEMER
CALCULATED-DESIGNED BY: KARI BHANA
CHECKED BY: RON R. KRAEMER
REVISED BY
DATE REVISED

LAST REVISION 08-02-10
DATE PLOTTED => 22-SEP-2010
TIME PLOTTED => 07:23

Dist	COUNTY	ROUTE	POST MILES TOTAL PROJECT	SHEET No.	TOTAL SHEETS
05	Mon	101	53.1/53.9	13	70

Kari Bhana 8-2-10
REGISTERED CIVIL ENGINEER DATE

9-20-10
PLANS APPROVAL DATE

REGISTERED PROFESSIONAL ENGINEER KARI BHANA No. 65395 Exp. 9-30-11 CIVIL STATE OF CALIFORNIA

THE STATE OF CALIFORNIA OR ITS OFFICERS OR AGENTS SHALL NOT BE RESPONSIBLE FOR THE ACCURACY OR COMPLETENESS OF SCANNED COPIES OF THIS PLAN SHEET.

NOTE:

FOR ACCURATE RIGHT OF WAY AND ACCESS DATA,
CONTACT RIGHT OF WAY ENGINEERING AT THE DISTRICT OFFICE.

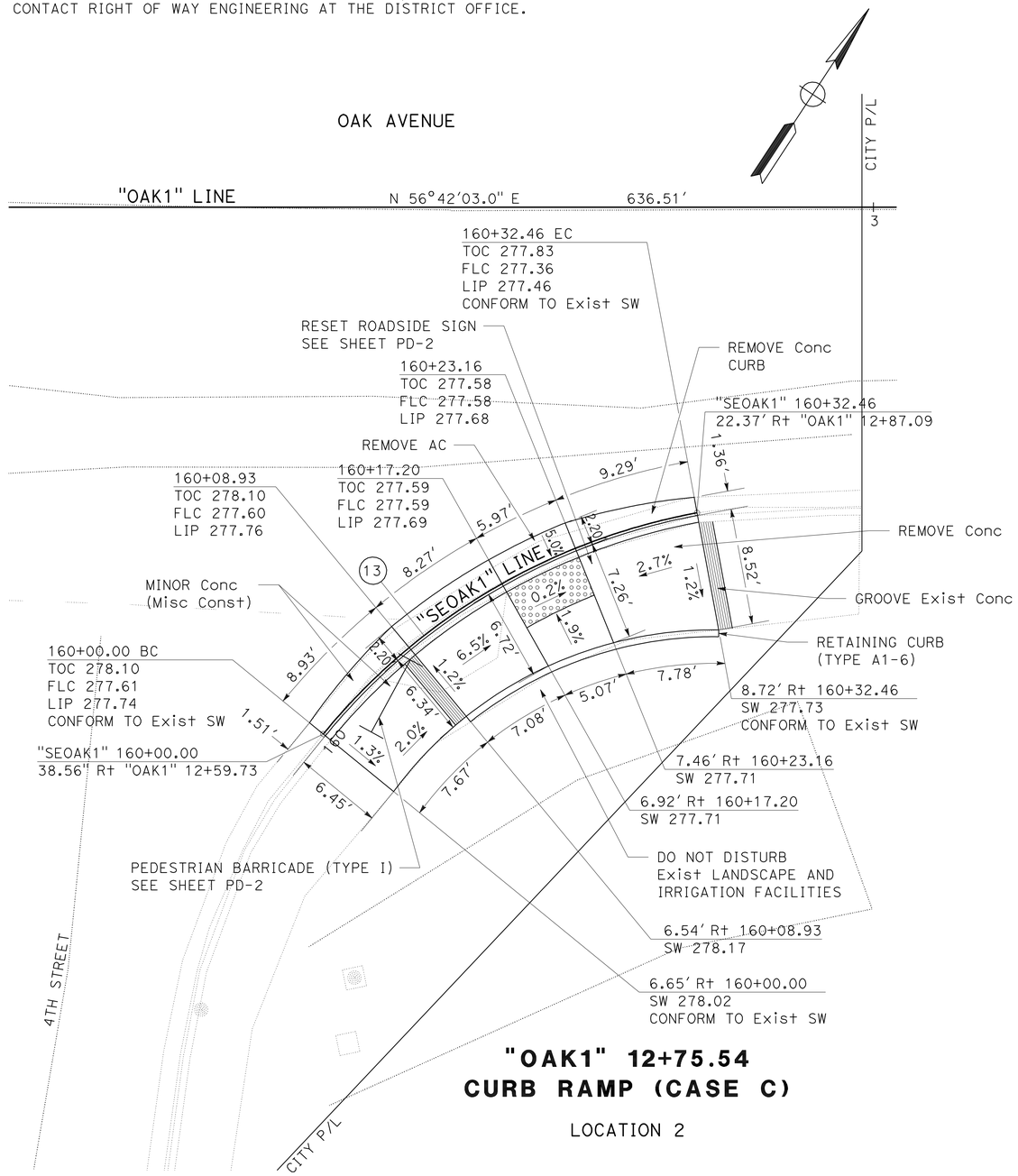

"OAK1" 12+75.54
CURB RAMP (CASE C)

LOCATION 2

CURVE DATA				
No.	R	Δ	T	L
13	46.22'	40°13'57"	16.93'	32.46'
14	35.00'	37°05'48"	11.74'	22.66'

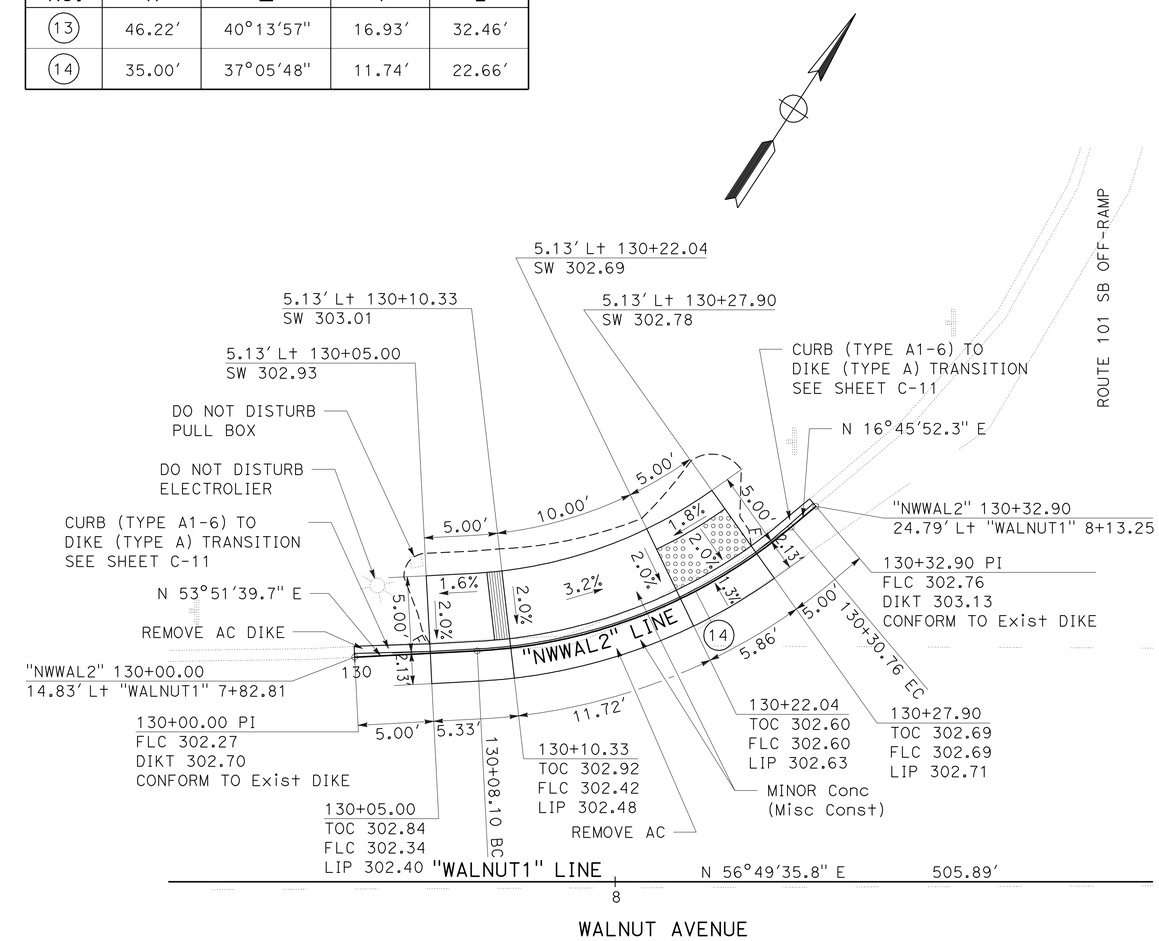

"WALNUT1" 8+06.83
CURB RAMP (Mod CASE C)

LOCATION 3

CONSTRUCTION DETAILS

SCALE: 1" = 5'

C-7

STATE OF CALIFORNIA - DEPARTMENT OF TRANSPORTATION
Caltrans® DESIGN
FUNCTIONAL SUPERVISOR: RON R. KRAEMER
CALCULATED-DESIGNED BY: KARI BHANA
CHECKED BY: RON R. KRAEMER
REVISED BY
DATE REVISED

LAST REVISION DATE PLOTTED => 22-SEP-2010
08-02-10 TIME PLOTTED => 07:23

Dist	COUNTY	ROUTE	POST MILES TOTAL PROJECT	SHEET No.	TOTAL SHEETS
05	Mon	101	53.1/53.9	14	70

Kari Bhana 8-2-10
REGISTERED CIVIL ENGINEER DATE

9-20-10
PLANS APPROVAL DATE

REGISTERED PROFESSIONAL ENGINEER
KARI BHANA
No. 65395
Exp. 9-30-11
CIVIL
STATE OF CALIFORNIA

THE STATE OF CALIFORNIA OR ITS OFFICERS OR AGENTS SHALL NOT BE RESPONSIBLE FOR THE ACCURACY OR COMPLETENESS OF SCANNED COPIES OF THIS PLAN SHEET.

CURVE DATA				
No.	R	Δ	T	L
15	5.04′	90°00′00"	5.04′	7.92′
16	5.07′	90°00′00"	5.07′	7.96′

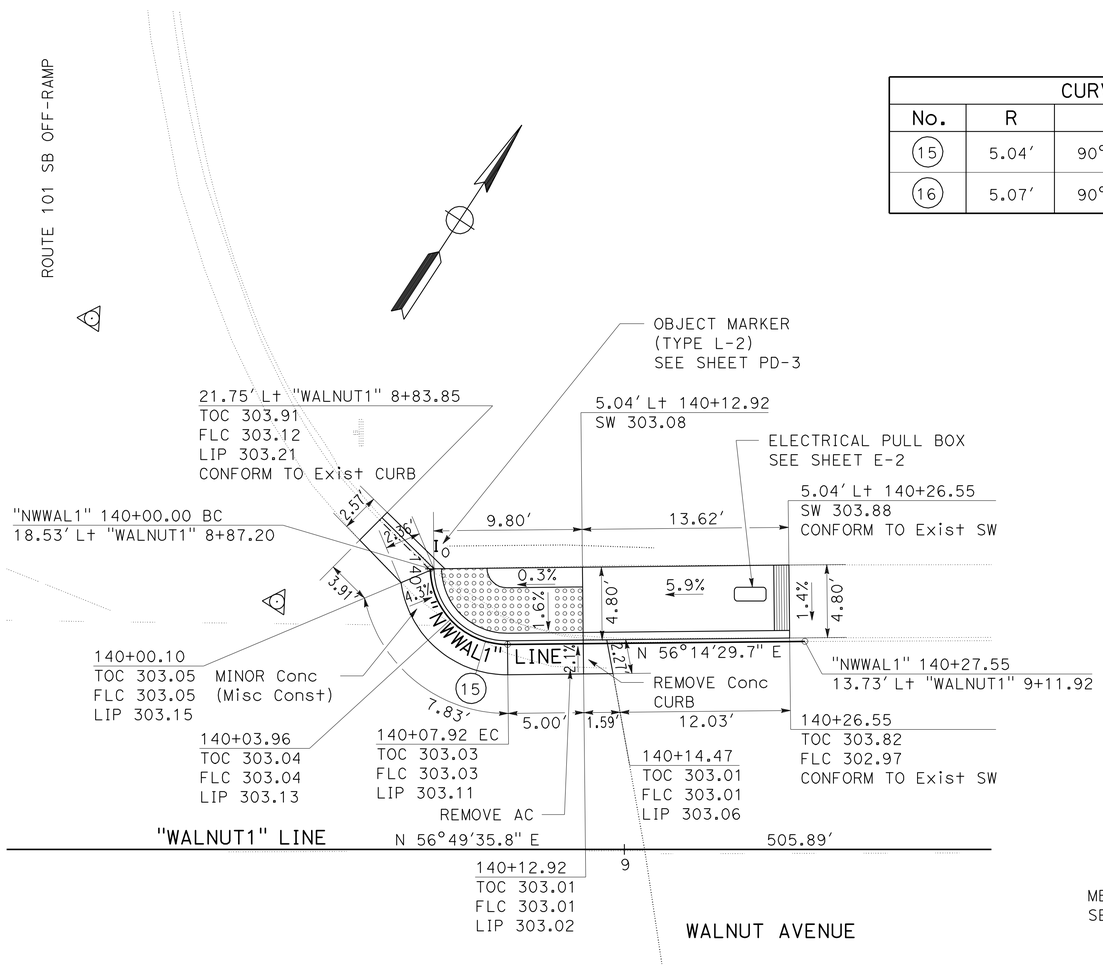

"WALNUT1" 8+91.03
CURB RAMP (CASE CM)

LOCATION 3

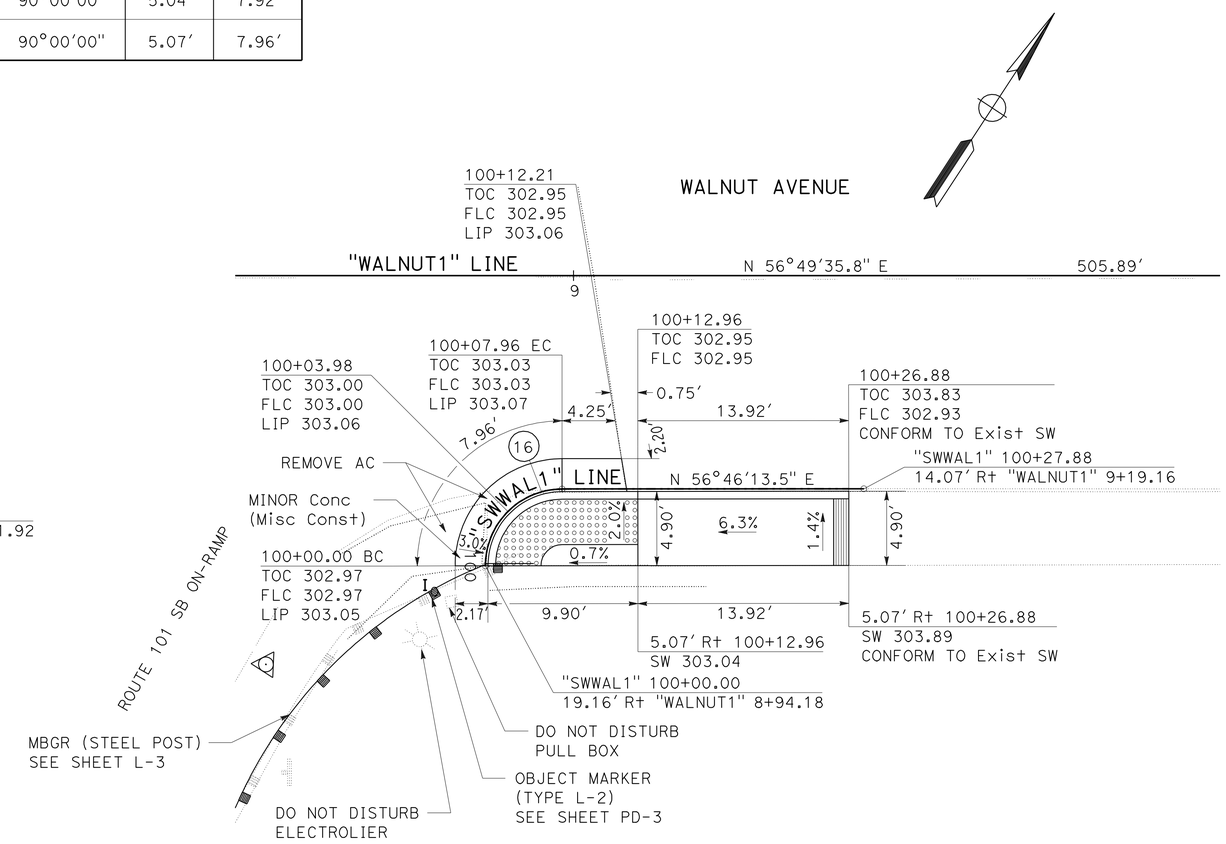

"WALNUT1" 8+98.29
CURB RAMP (CASE CM)

LOCATION 3

CONSTRUCTION DETAILS

SCALE: 1" = 5′

C-8

STATE OF CALIFORNIA - DEPARTMENT OF TRANSPORTATION
Caltrans®
DESIGN

FUNCTIONAL SUPERVISOR: RON R. KRAEMER
CALCULATED-DESIGNED BY: KARI BHANA
CHECKED BY: RON R. KRAEMER
REVISED BY
DATE REVISED

LAST REVISION 08-02-10
DATE PLOTTED => 22-SEP-2010
TIME PLOTTED => 07:23

Dist	COUNTY	ROUTE	POST MILES TOTAL PROJECT	SHEET No.	TOTAL SHEETS
05	Mon	101	53.1/53.9	15	70

Kari Bhana 8-2-10
REGISTERED CIVIL ENGINEER DATE

9-20-10
PLANS APPROVAL DATE

REGISTERED PROFESSIONAL ENGINEER
KARI BHANA
No. 65395
Exp. 9-30-11
CIVIL
STATE OF CALIFORNIA

THE STATE OF CALIFORNIA OR ITS OFFICERS OR AGENTS SHALL NOT BE RESPONSIBLE FOR THE ACCURACY OR COMPLETENESS OF SCANNED COPIES OF THIS PLAN SHEET.

CURVE DATA				
No.	R	Δ	T	L
17	4.96′	90°00′00″	4.96′	7.79′
18	4.90′	90°00′00″	4.90′	7.69′

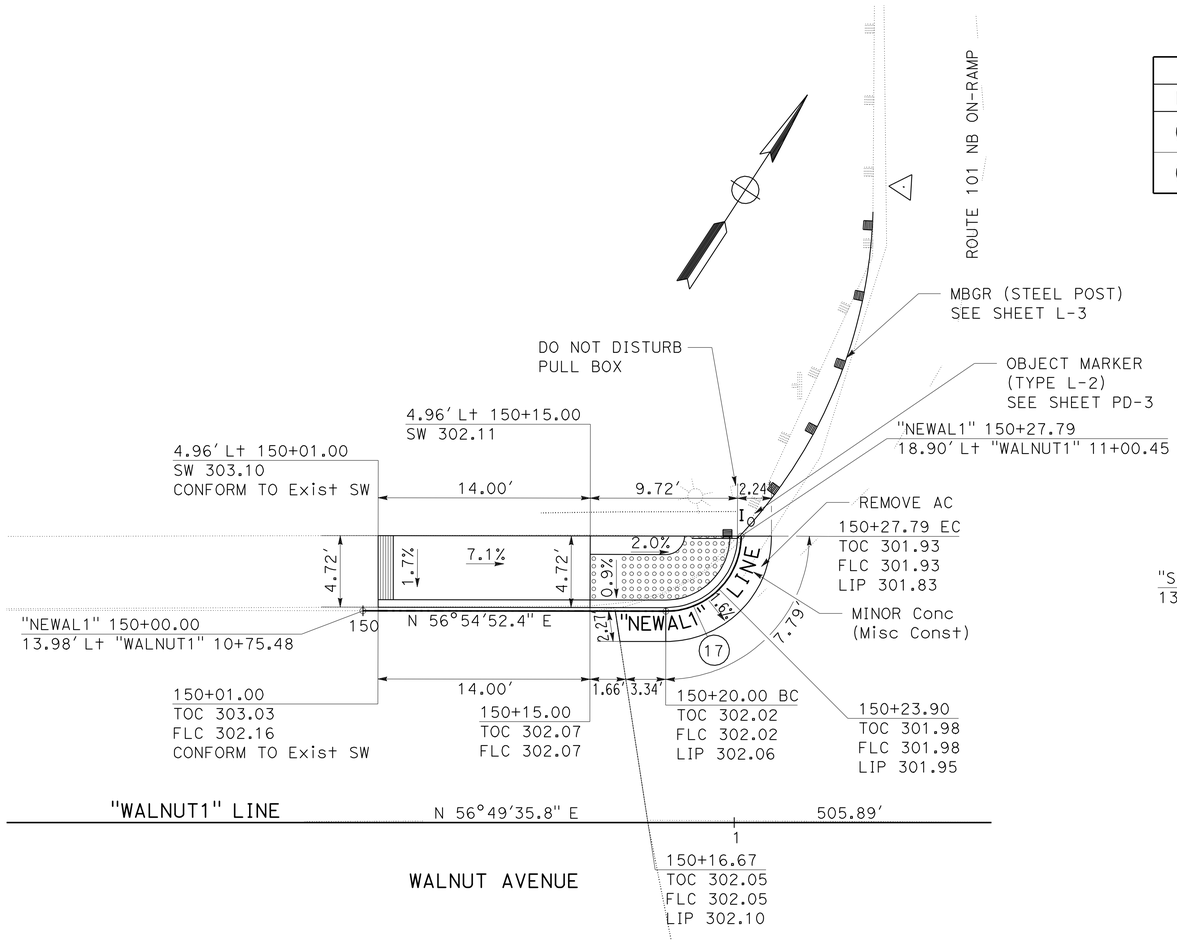

"WALNUT1" 10+96.68
CURB RAMP (CASE CM)

LOCATION 3

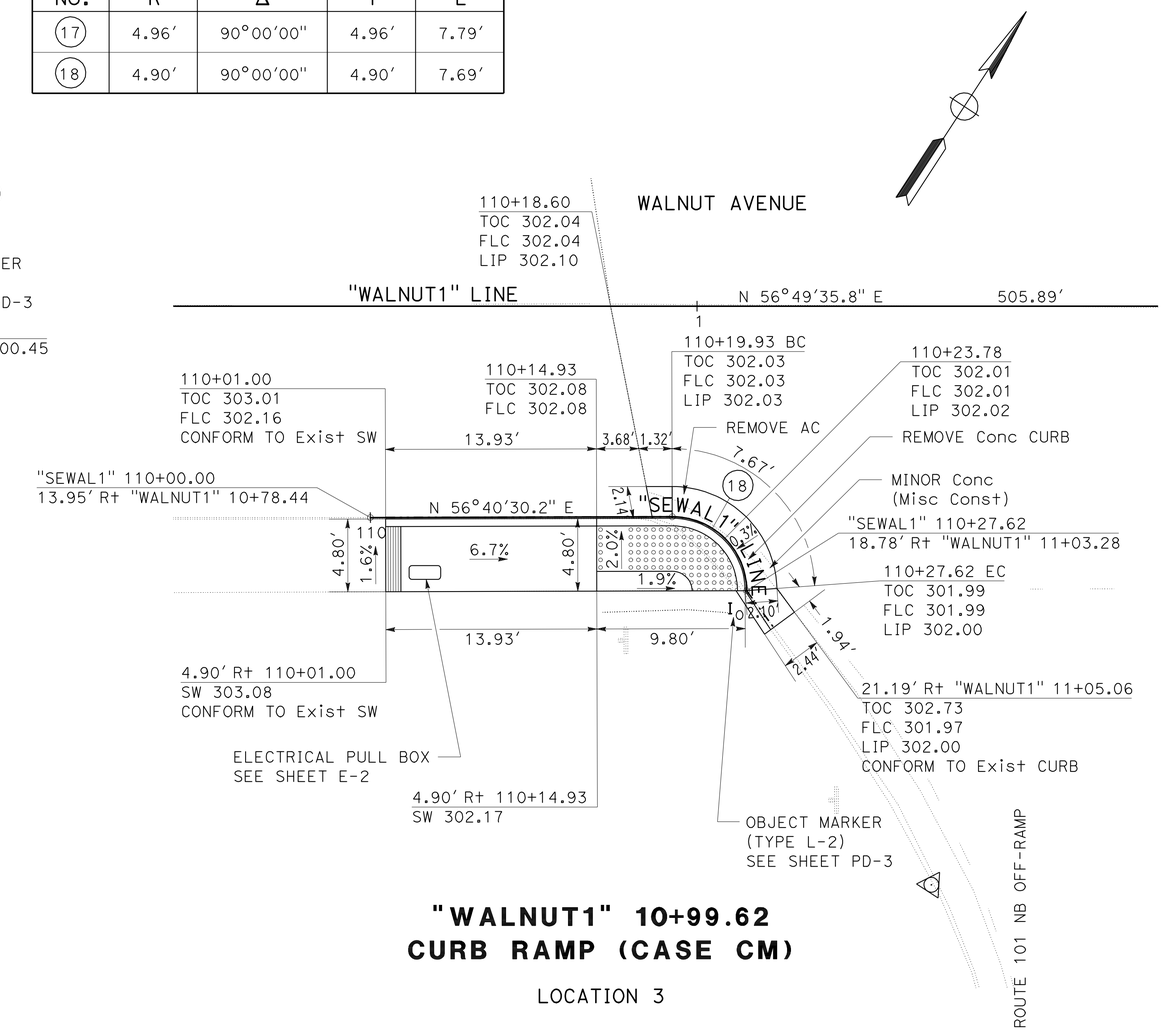

"WALNUT1" 10+99.62
CURB RAMP (CASE CM)

LOCATION 3

CONSTRUCTION DETAILS

SCALE: 1" = 5′

C-9

STATE OF CALIFORNIA - DEPARTMENT OF TRANSPORTATION
Caltrans
DESIGN

FUNCTIONAL SUPERVISOR: RON R. KRAEMER
CALCULATED-DESIGNED BY: KARI BHANA
CHECKED BY: RON R. KRAEMER
REVISED BY
DATE REVISED

LAST REVISION 08-02-10
DATE PLOTTED => 22-SEP-2010
TIME PLOTTED => 07:23

Dist	COUNTY	ROUTE	POST MILES TOTAL PROJECT	SHEET No.	TOTAL SHEETS
05	Mon	101	53.1/53.9	16	70

Kari Bhana 8-2-10
REGISTERED CIVIL ENGINEER DATE

9-20-10
PLANS APPROVAL DATE

REGISTERED PROFESSIONAL ENGINEER
KARI BHANA
No. 65395
Exp. 9-30-11
CIVIL
STATE OF CALIFORNIA

THE STATE OF CALIFORNIA OR ITS OFFICERS OR AGENTS SHALL NOT BE RESPONSIBLE FOR THE ACCURACY OR COMPLETENESS OF SCANNED COPIES OF THIS PLAN SHEET.

NOTE:

FOR ACCURATE RIGHT OF WAY AND ACCESS DATA, CONTACT RIGHT OF WAY ENGINEERING AT THE DISTRICT OFFICE.

CURVE DATA				
No.	R	Δ	T	L
19	39.89′	62°29′24"	24.20′	43.51′

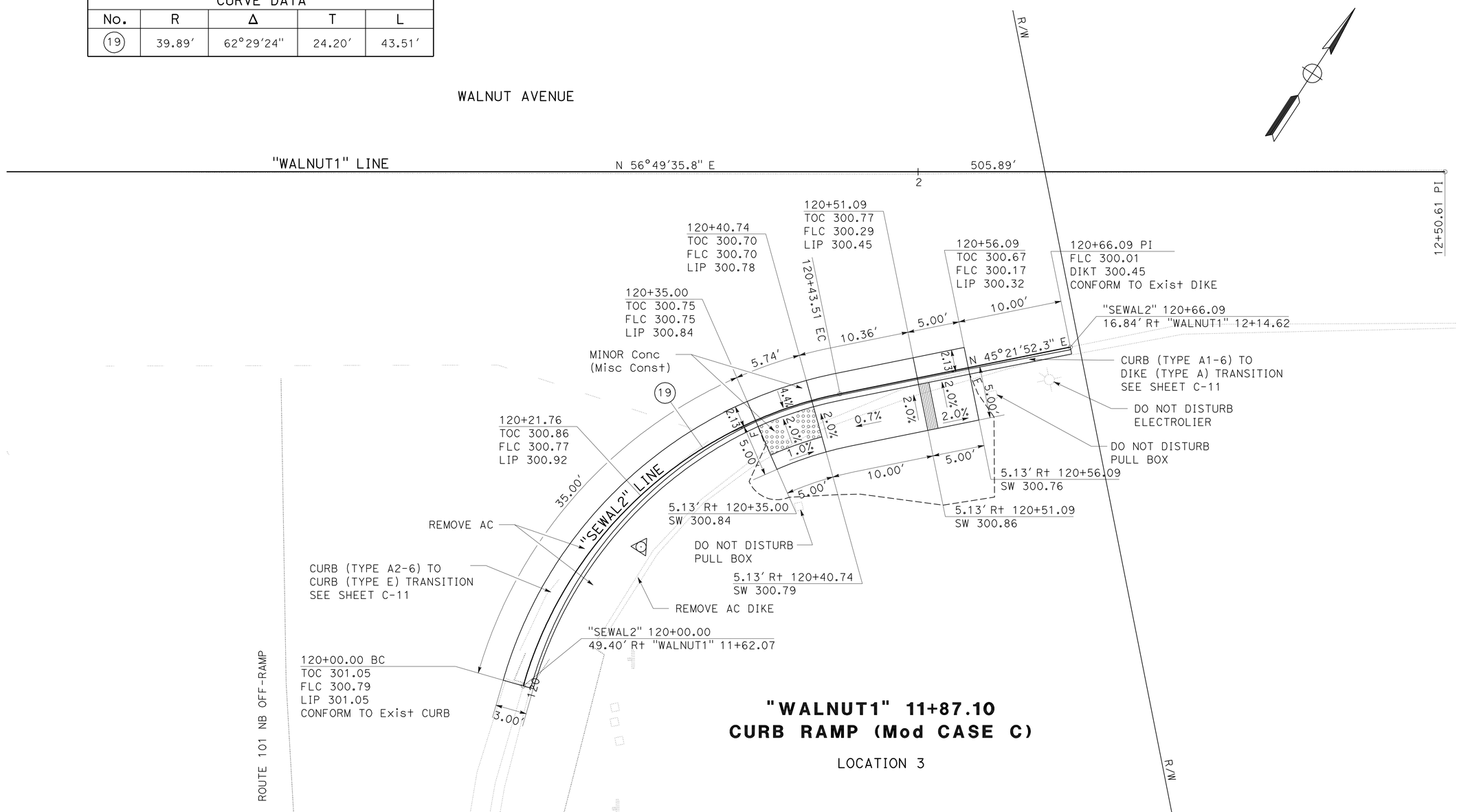

CONSTRUCTION DETAILS

SCALE: 1" = 5′

C-10

STATE OF CALIFORNIA - DEPARTMENT OF TRANSPORTATION
Caltrans
DESIGN

FUNCTIONAL SUPERVISOR: RON R. KRAEMER
CALCULATED-DESIGNED BY: KARI BHANA
CHECKED BY: RON R. KRAEMER
REVISED BY
DATE REVISED

LAST REVISION 08-02-10
DATE PLOTTED => 22-SEP-2010
TIME PLOTTED => 10:46

Dist	COUNTY	ROUTE	POST MILES TOTAL PROJECT	SHEET No.	TOTAL SHEETS
05	Mon	101	53.1/53.9	17	70

Kari Bhana 8-2-10
REGISTERED CIVIL ENGINEER DATE

9-20-10
PLANS APPROVAL DATE

REGISTERED PROFESSIONAL ENGINEER
KARI BHANA
No. 65395
Exp. 9-30-11
CIVIL
STATE OF CALIFORNIA

THE STATE OF CALIFORNIA OR ITS OFFICERS OR AGENTS SHALL NOT BE RESPONSIBLE FOR THE ACCURACY OR COMPLETENESS OF SCANNED COPIES OF THIS PLAN SHEET.

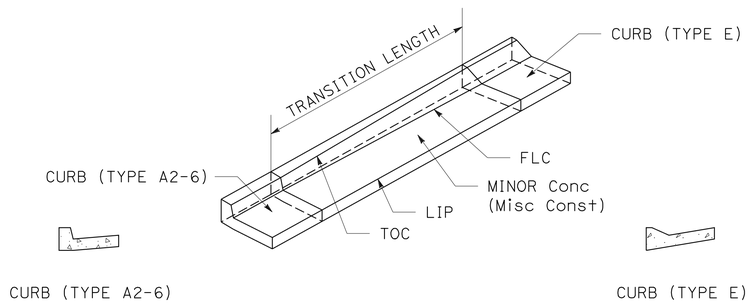

CURB (TYPE A2-6) TO CURB (TYPE E)

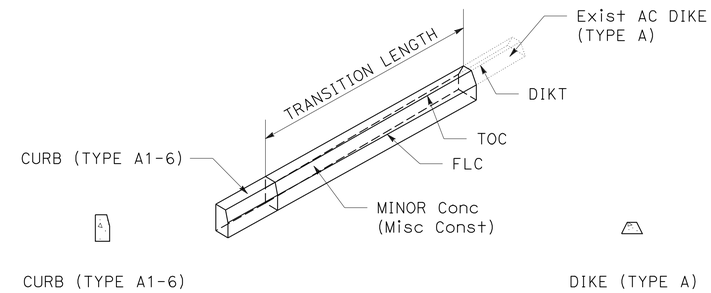

CURB (TYPE A1-6) TO DIKE (TYPE A)

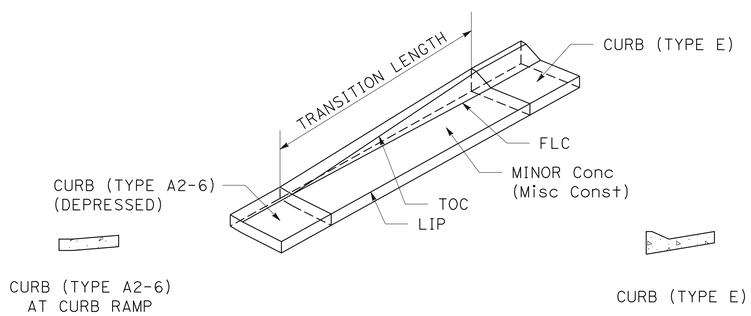

CURB (TYPE A2-6) TO CURB (TYPE E)

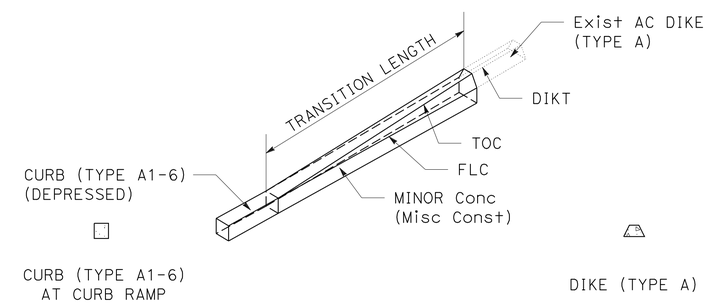

CURB (TYPE A1-6) TO DIKE (TYPE A)

Conc CURB TRANSITION DETAILS

Conc CURB TO AC DIKE TRANSITION DETAILS

CONSTRUCTION DETAILS

NO SCALE

C-11

STATE OF CALIFORNIA - DEPARTMENT OF TRANSPORTATION
Caltrans
DESIGN

FUNCTIONAL SUPERVISOR: RON R. KRAEMER
CALCULATED-DESIGNED BY: KARI BHANA
CHECKED BY: RON R. KRAEMER
REVISED BY
DATE REVISED

LAST REVISION 08-02-10
DATE PLOTTED => 22-SEP-2010
TIME PLOTTED => 07:23

Dist	COUNTY	ROUTE	POST MILES TOTAL PROJECT	SHEET No.	TOTAL SHEETS
05	Mon	101	53.1/53.9	18	70

Kari Bhana 8-2-10
REGISTERED CIVIL ENGINEER DATE

9-20-10
PLANS APPROVAL DATE

REGISTERED PROFESSIONAL ENGINEER
KARI BHANA
No. 65395
Exp. 9-30-11
CIVIL
STATE OF CALIFORNIA

THE STATE OF CALIFORNIA OR ITS OFFICERS OR AGENTS SHALL NOT BE RESPONSIBLE FOR THE ACCURACY OR COMPLETENESS OF SCANNED COPIES OF THIS PLAN SHEET.

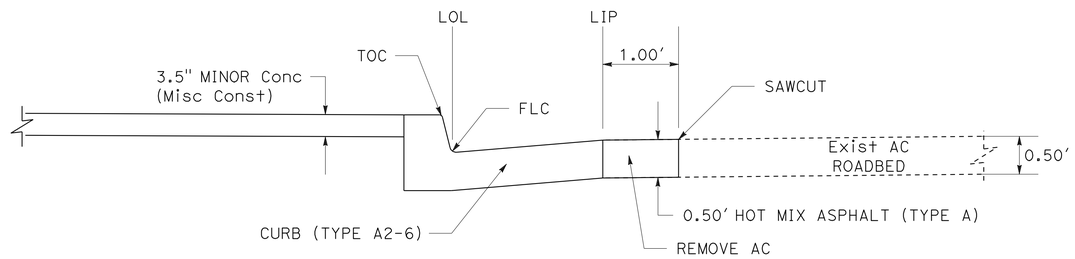

TYPICAL CURB EXCAVATION DETAILS

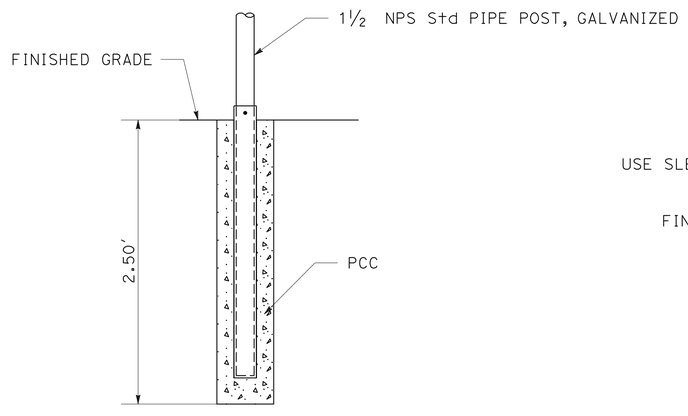

SLEEVE POST DETAIL

PIPE POST TO BE SET 6" BACK FROM FACE OF CURB. THIS NOTE SUPERCEDES NOTE 1 OF STANDARD PLAN ES-7P.

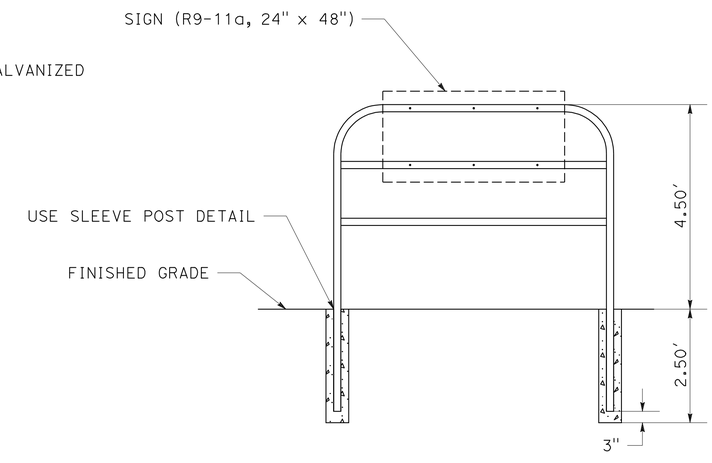

TYPE I PEDESTRIAN BARRICADE

MODIFIED PEDESTRIAN BARRICADE DETAILS

FOR DETAILS NOT SHOWN, SEE STANDARD PLAN ES-7P

CONSTRUCTION DETAILS

NO SCALE

C-12

STATE OF CALIFORNIA - DEPARTMENT OF TRANSPORTATION
Caltrans
DESIGN

FUNCTIONAL SUPERVISOR: RON R. KRAEMER
CALCULATED-DESIGNED BY: KARI BHANA
CHECKED BY: RON R. KRAEMER
REVISED BY
DATE REVISED

LAST REVISION 08-02-10 | DATE PLOTTED => 22-SEP-2010 | TIME PLOTTED => 07:23

Dist	COUNTY	ROUTE	POST MILES TOTAL PROJECT	SHEET No.	TOTAL SHEETS
05	Mon	101	53.1/53.9	19	70

Kari Bhana 8-2-10
REGISTERED CIVIL ENGINEER DATE

9-20-10
PLANS APPROVAL DATE

REGISTERED PROFESSIONAL ENGINEER
KARI BHANA
No. 65395
Exp. 9-30-11
CIVIL
STATE OF CALIFORNIA

THE STATE OF CALIFORNIA OR ITS OFFICERS OR AGENTS SHALL NOT BE RESPONSIBLE FOR THE ACCURACY OR COMPLETENESS OF SCANNED COPIES OF THIS PLAN SHEET.

DRAINAGE QUANTITIES

PLAN SHEET No.	DRAINAGE SYSTEM No. ⬡	DRAINAGE UNIT No. ◯	REMOVE CULVERT LF	14" x 23" OVAL SHAPED REINFORCED CONCRETE PIPE (CLASS III) LF	HEIGHT OF COVER (N) LF	DESCRIPTION	STATION	PLAN SHEET No.	DRAINAGE SYSTEM No. ⬡	DRAINAGE UNIT No. ◯
L-2	1	a		56.3		14" x 23" OVAL RCP	24.11' Lt "OAK1" 7+48.34	L-2	1	a
L-2	1	b	56.3		0 TO 1.5	REMOVE CULVERT, 18" RCP		L-2	1	b
			56.3	56.3		TOTAL				

(N) - NOT A SEPARATE PAY ITEM, FOR INFORMATION ONLY.

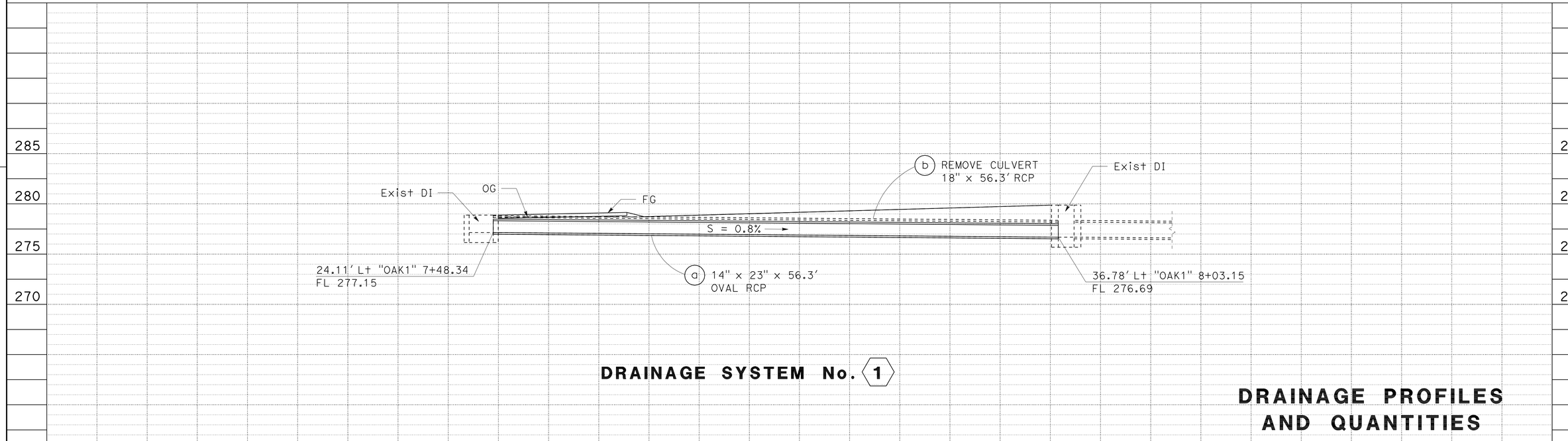

DRAINAGE SYSTEM No. 1

DRAINAGE PROFILES AND QUANTITIES

SCALE: Horiz 1" = 5'
Vert 1" = 5'

DP-1

STATE OF CALIFORNIA - DEPARTMENT OF TRANSPORTATION
Caltrans
DESIGN

FUNCTIONAL SUPERVISOR: RON R. KRAEMER
CALCULATED-DESIGNED BY: KARI BHANA
CHECKED BY: RON R. KRAEMER
REVISED BY
DATE REVISED

LAST REVISION DATE PLOTTED => 22-SEP-2010
TIME PLOTTED => 07:23
08-02-10

Dist	COUNTY	ROUTE	POST MILES TOTAL PROJECT	SHEET No.	TOTAL SHEETS
05	Mon	101	53.1/53.9	20	70

Kari Bhana 8-2-10
REGISTERED CIVIL ENGINEER DATE

9-20-10
PLANS APPROVAL DATE

REGISTERED PROFESSIONAL ENGINEER KARI BHANA No. 65395 Exp. 9-30-11 CIVIL STATE OF CALIFORNIA

THE STATE OF CALIFORNIA OR ITS OFFICERS OR AGENTS SHALL NOT BE RESPONSIBLE FOR THE ACCURACY OR COMPLETENESS OF SCANNED COPIES OF THIS PLAN SHEET.

NOTES:

1. FOR ACCURATE RIGHT OF WAY DATA, CONTACT RIGHT OF WAY ENGINEERING AT THE DISTRICT OFFICE.
2. UTILITY ELEVATIONS SHOWN REFER TO THE TOP OF PIPE OR CONDUIT.
3. UTILITY OWNERSHIP ON THIS PROJECT IS AS SHOWN:

   ELECTRICAL - PACIFIC GAS & ELECTRIC (PG&E)
   WATER - CITY OF GREENFIELD
   WATER - CLARK COLONY WATER COMPANY
   TELEPHONE - AMERICAN TELEPHONE & TELEGRAPH (AT&T)
   CABLE TELEVISION - CHARTER COMMUNICATIONS
   GAS - PACIFIC GAS & ELECTRIC (PG&E)

4. NO UTILITIES AT WALNUT AVENUE (LOCATION 3).

POTHOLING INFORMATION

No.	UTILITY	STATION	UTILITY ELEVATION	UTILITY DEPTH
PH1	PG&E SINGLE PHASE PRIMARY CONDUCTOR	24.36′ Rt "ELM1" 7+42.28	275.56	4.15′
PH2	PG&E THREE PHASE PRIMARY CONDUCTOR 21 KV	37.24′ Rt "ELM1" 7+43.80	276.56	3.30′
PH3	PG&E THREE PHASE PRIMARY CONDUCTOR 21 KV	36.67′ Rt "ELM1" 7+93.71	274.26	5.25′
PH4	PG&E THREE PHASE PRIMARY CONDUCTOR 21 KV	28.03′ Rt "ELM1" 8+03.64	275.82	3.50′
PH5	PG&E 2" HP GAS >60 PSI	14.02′ Rt "ELM1" 8+09.07	275.67	3.85′
PH6	PG&E THREE PHASE PRIMARY CONDUCTOR 21 KV	24.36′ Rt "ELM1" 8+28.86	276.50	2.80′
PH7	CITY OF GREENFIELD 12" WATER ACP	5.91′ Rt "ELM1" 8+51.42	276.21	3.00′
PH8	PG&E 2" HP GAS >60 PSI	14.13′ Rt "ELM1" 8+57.54	275.14	3.80′
PH9	PG&E 2" HP GAS >60 PSI	14.36′ Rt "ELM1" 11+19.87	274.76	3.45′
PH10	CITY OF GREENFIELD 8" WATER ACP	7.65′ Rt "ELM1" 11+20.34	276.18	2.25′
PH11	PG&E 2" HP GAS >60 PSI	14.44′ Rt "ELM1" 11+49.42	274.79	3.20′

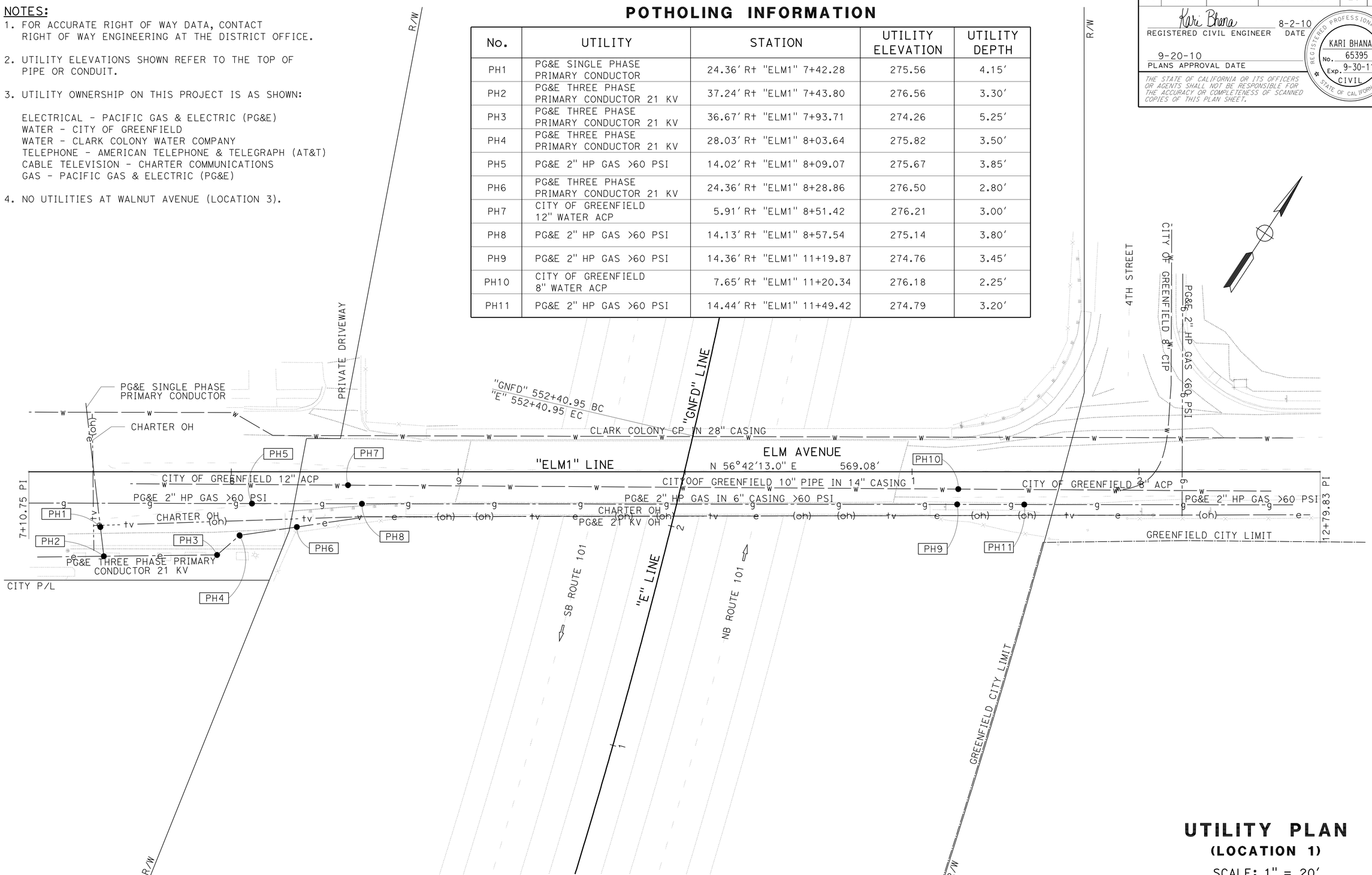

THIS PLAN ACCURATE FOR UTILITY INFORMATION ONLY.

UTILITY PLAN
(LOCATION 1)
SCALE: 1" = 20′

U-1

STATE OF CALIFORNIA - DEPARTMENT OF TRANSPORTATION
DESIGN
FUNCTIONAL SUPERVISOR: RON R. KRAEMER
CALCULATED-DESIGNED BY: KARI BHANA
CHECKED BY: RON R. KRAEMER
REVISED BY
DATE REVISED

LAST REVISION 08-02-10
DATE PLOTTED => 22-SEP-2010
TIME PLOTTED => 07:24

Dist	COUNTY	ROUTE	POST MILES TOTAL PROJECT	SHEET No.	TOTAL SHEETS
05	Mon	101	53.1/53.9	21	70

Kari Bhana 8-2-10
REGISTERED CIVIL ENGINEER DATE

9-20-10
PLANS APPROVAL DATE

REGISTERED PROFESSIONAL ENGINEER
KARI BHANA
No. 65395
Exp. 9-30-11
CIVIL
STATE OF CALIFORNIA

THE STATE OF CALIFORNIA OR ITS OFFICERS OR AGENTS SHALL NOT BE RESPONSIBLE FOR THE ACCURACY OR COMPLETENESS OF SCANNED COPIES OF THIS PLAN SHEET.

NOTE:
FOR ACCURATE RIGHT OF WAY DATA, CONTACT RIGHT OF WAY ENGINEERING AT THE DISTRICT OFFICE.

POTHOLING INFORMATION

No.	UTILITY	STATION	UTILITY ELEVATION	UTILITY DEPTH
PH12	PG&E 8" HP GAS <60 PSI	16.04′ R+ "OAK1" 7+80.94	273.83	5.20′
PH13	AT&T 4x3" CONDUIT	9.11′ L+ "OAK1" 8+74.98	276.21	3.90′
PH14	PG&E 8" HP GAS <60 PSI	10.54′ R+ "OAK1" 8+83.74	276.53	3.40′
PH15	AT&T 4x3" CONDUIT	8.44′ L+ "OAK1" 11+06.43	276.17	3.40′
PH16	PG&E 8" HP GAS <60 PSI	16.17′ R+ "OAK1" 11+78.34	274.20	5.00′
PH17	PG&E 2" HP GAS >60 PSI	61.19′ R+ "OAK1" 12+61.21	271.78	6.40′
PH18	PG&E ELECTRICAL	57.41′ R+ "OAK1" 12+63.83	276.43	1.50′
PH19	PG&E 2" HP GAS >60 PSI	19.25′ R+ "OAK1" 12+91.85	271.13	6.40′
PH20	PG&E ELECTRICAL	19.25′ R+ "OAK1" 12+92.66	275.99	1.50′

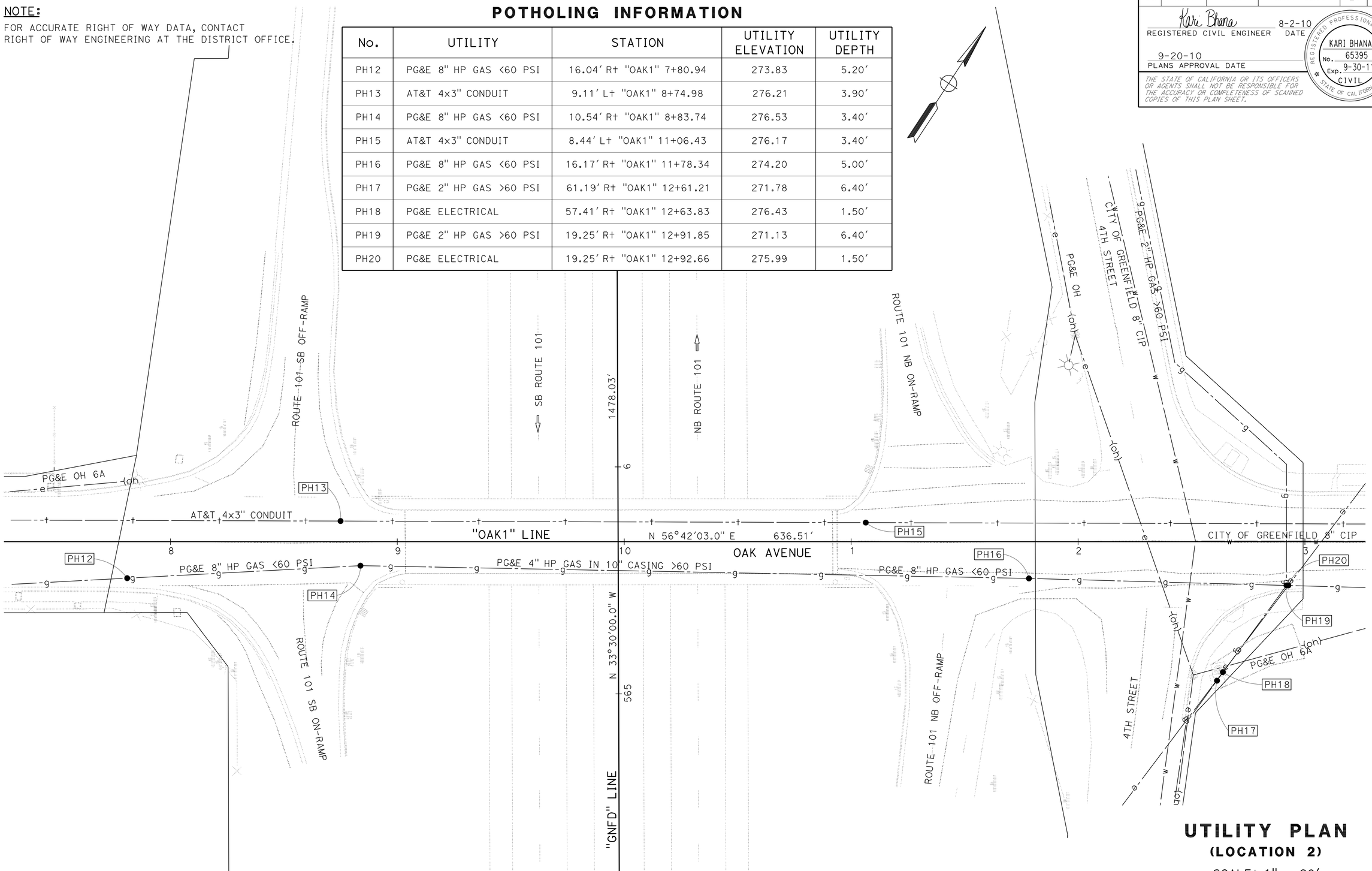

THIS PLAN ACCURATE FOR UTILITY INFORMATION ONLY.

UTILITY PLAN
(LOCATION 2)
SCALE: 1" = 20′

U-2

STATE OF CALIFORNIA - DEPARTMENT OF TRANSPORTATION
Caltrans
DESIGN
FUNCTIONAL SUPERVISOR: RON R. KRAEMER
CALCULATED-DESIGNED BY: KARI BHANA
CHECKED BY: RON R. KRAEMER
REVISED BY
DATE REVISED

LAST REVISION 08-02-10
DATE PLOTTED => 22-SEP-2010
TIME PLOTTED => 07:24

Dist	COUNTY	ROUTE	POST MILES TOTAL PROJECT	SHEET No.	TOTAL SHEETS
05	Mon	101	53.1/53.9	22	70

Kari Bhana 8-2-10
REGISTERED CIVIL ENGINEER DATE

9-20-10
PLANS APPROVAL DATE

REGISTERED PROFESSIONAL ENGINEER
KARI BHANA
No. 65395
Exp. 9-30-11
CIVIL
STATE OF CALIFORNIA

THE STATE OF CALIFORNIA OR ITS OFFICERS OR AGENTS SHALL NOT BE RESPONSIBLE FOR THE ACCURACY OR COMPLETENESS OF SCANNED COPIES OF THIS PLAN SHEET.

NOTES:

1. LOCATION OF CONSTRUCTION AREA SIGNS ARE APPROXIMATE. EXACT LOCATIONS WILL BE DETERMINED BY THE ENGINEER.
2. FOR ADDITIONAL CONSTRUCTION AREA SIGNS, SEE SHEET SCQ-1.

STATIONARY MOUNTED CONSTRUCTION AREA SIGNS

SIGN No. (X)	SIGN CODE (FEDERAL)	PANEL SIZE	SIGN MESSAGE	NUMBER OF POSTS AND SIZE	No. OF SIGNS
A	W20-1	48" x 48"	ROAD WORK AHEAD	1 - 6" x 6"	10
B	G20-2	36" x 18"	END ROAD WORK	1 - 4" x 4"	13
C	W20-1	36" x 36"	ROAD WORK AHEAD	1 - 4" x 4"	3

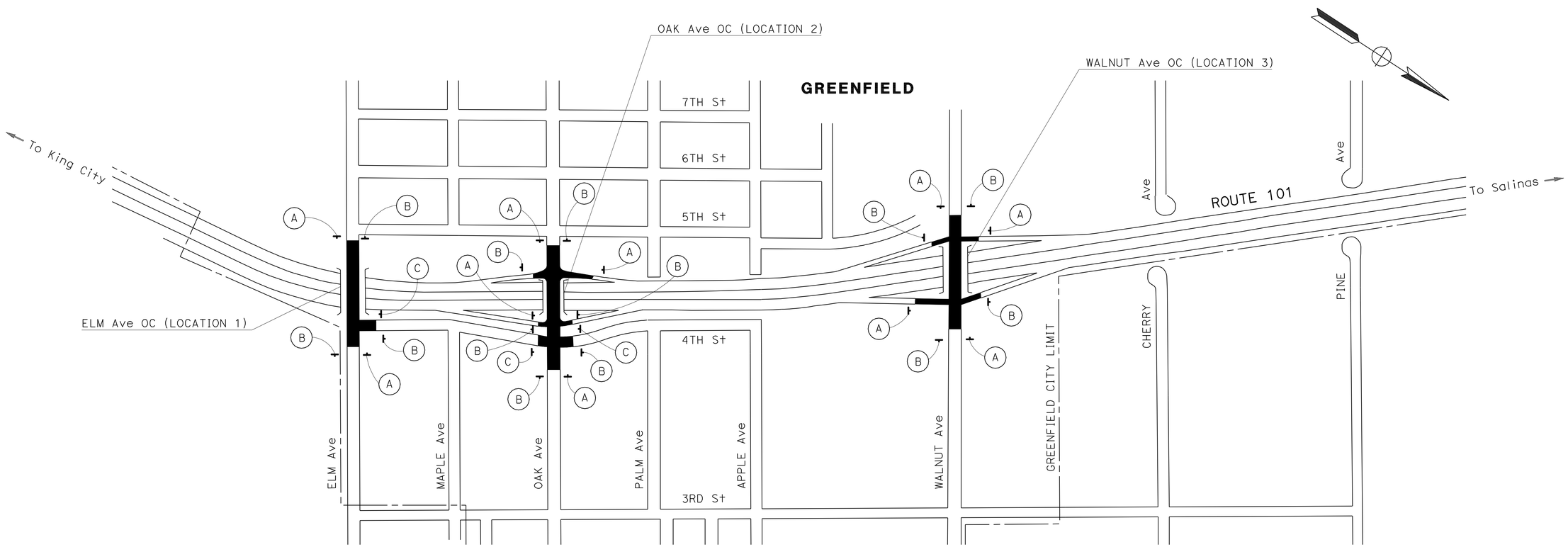

THIS PLAN ACCURATE FOR CONSTRUCTION AREA SIGN WORK ONLY.

CONSTRUCTION AREA SIGNS

NO SCALE

CS-1

STATE OF CALIFORNIA - DEPARTMENT OF TRANSPORTATION
Caltrans
DESIGN

FUNCTIONAL SUPERVISOR: RON R. KRAEMER
CALCULATED-DESIGNED BY: KARI BHANA
CHECKED BY: RON R. KRAEMER
REVISED BY
DATE REVISED

LAST REVISION 08-02-10 | DATE PLOTTED => 22-SEP-2010 | TIME PLOTTED => 07:24

Dist	COUNTY	ROUTE	POST MILES TOTAL PROJECT	SHEET No.	TOTAL SHEETS
05	Mon	101	53.1/53.9	23	70

Kari Bhana 8-2-10
REGISTERED CIVIL ENGINEER DATE

9-20-10
PLANS APPROVAL DATE

REGISTERED PROFESSIONAL ENGINEER KARI BHANA No. 65395 Exp. 9-30-11 CIVIL STATE OF CALIFORNIA

THE STATE OF CALIFORNIA OR ITS OFFICERS OR AGENTS SHALL NOT BE RESPONSIBLE FOR THE ACCURACY OR COMPLETENESS OF SCANNED COPIES OF THIS PLAN SHEET.

LEGEND:

- STAGE 1 CONSTRUCTION
- STAGE 2 CONSTRUCTION
- CHANNELIZER (SURFACE MOUNTED)
- (X) CONSTRUCTION AREA SIGN No.
- CONSTRUCTION AREA SIGN
- TYPE III BARRICADE
- DIRECTION OF TRAFFIC

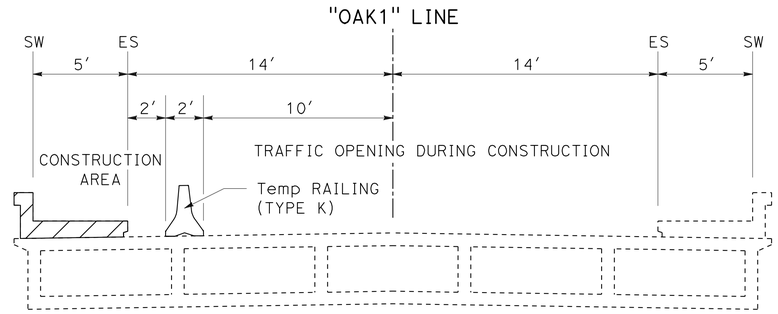

OAK AVENUE OVERCROSSING

"OAK1" 8+95 TO "OAK1" 10+95
NO SCALE

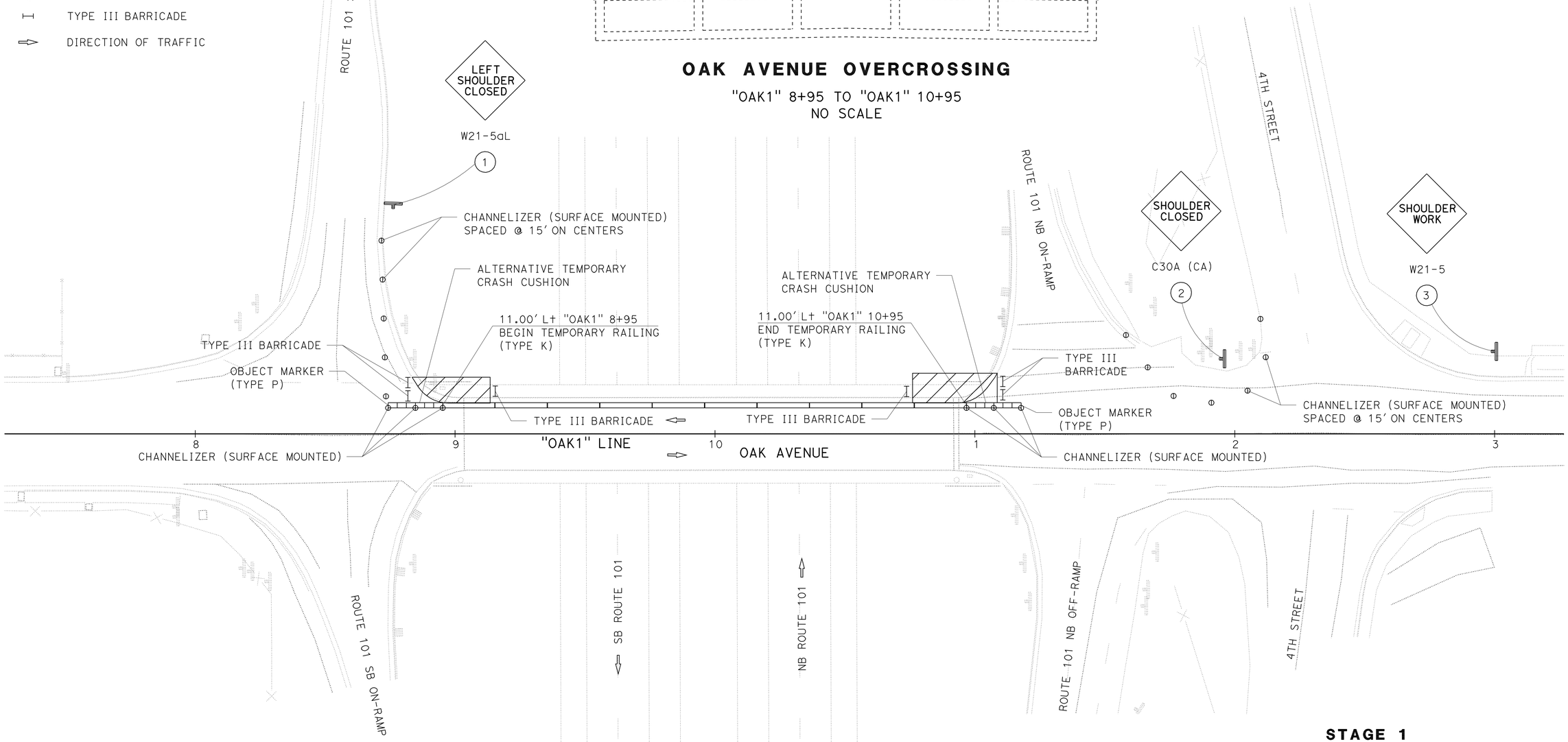

THIS PLAN ACCURATE FOR STAGE CONSTRUCTION AND TRAFFIC HANDLING WORK ONLY.

STAGE 1
STAGE CONSTRUCTION AND TRAFFIC HANDLING PLAN

SCALE: 1" = 20'

SC-1

STATE OF CALIFORNIA - DEPARTMENT OF TRANSPORTATION
Caltrans® DESIGN

FUNCTIONAL SUPERVISOR: RON R. KRAEMER
CALCULATED-DESIGNED BY: KARI BHANA
CHECKED BY: DAVID BLACK
REVISED BY
DATE REVISED

LAST REVISION 08-02-10
DATE PLOTTED => 22-SEP-2010
TIME PLOTTED => 07:24

Dist	COUNTY	ROUTE	POST MILES TOTAL PROJECT	SHEET No.	TOTAL SHEETS
05	Mon	101	53.1/53.9	24	70

Kari Bhana 8-2-10
REGISTERED CIVIL ENGINEER DATE

9-20-10
PLANS APPROVAL DATE

REGISTERED PROFESSIONAL ENGINEER
KARI BHANA
No. 65395
Exp. 9-30-11
CIVIL
STATE OF CALIFORNIA

THE STATE OF CALIFORNIA OR ITS OFFICERS OR AGENTS SHALL NOT BE RESPONSIBLE FOR THE ACCURACY OR COMPLETENESS OF SCANNED COPIES OF THIS PLAN SHEET.

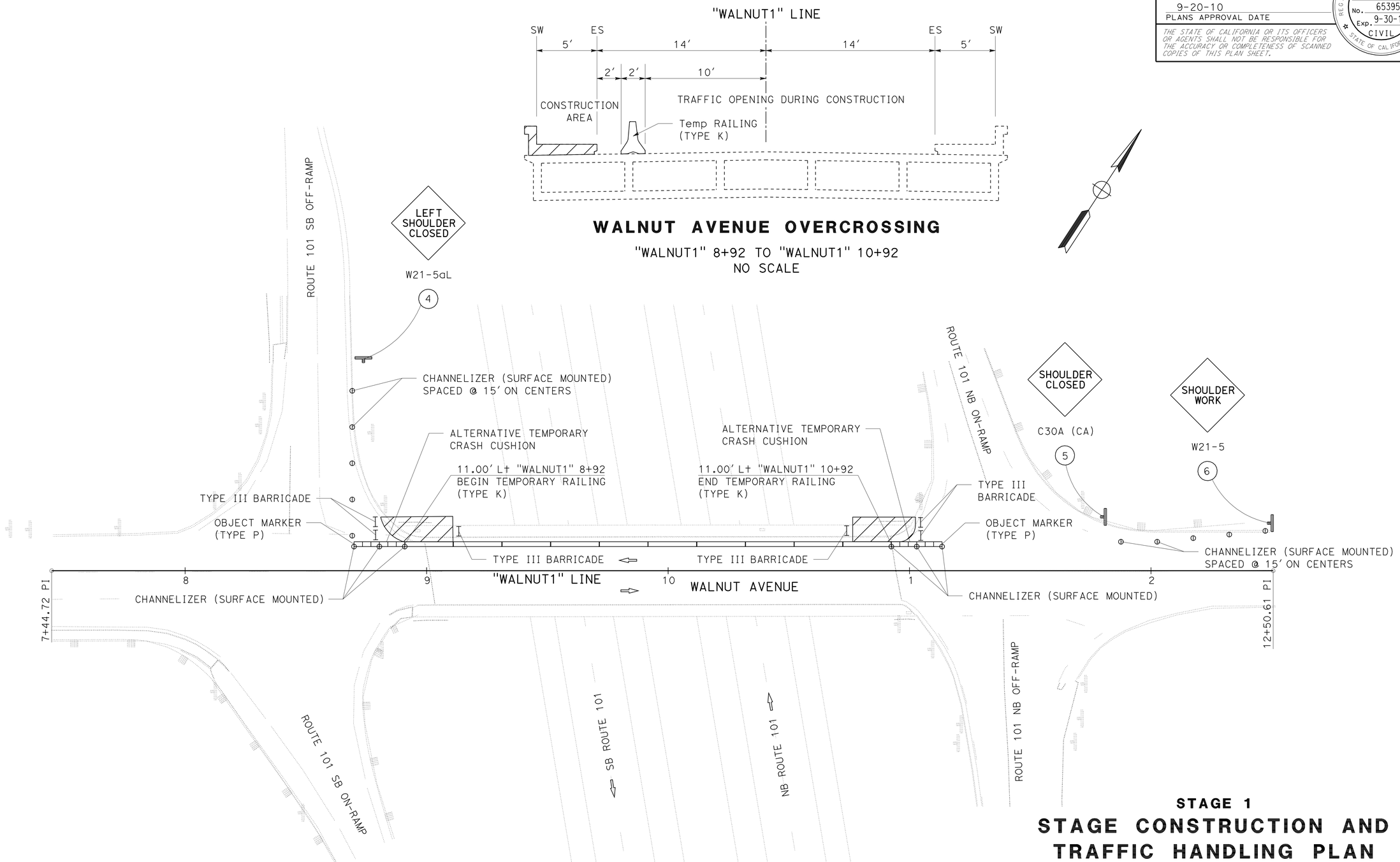

WALNUT AVENUE OVERCROSSING

"WALNUT1" 8+92 TO "WALNUT1" 10+92
NO SCALE

STAGE 1
STAGE CONSTRUCTION AND TRAFFIC HANDLING PLAN

SCALE: 1" = 20′

THIS PLAN ACCURATE FOR STAGE CONSTRUCTION AND TRAFFIC HANDLING WORK ONLY.

SC-2

REVISED BY	DATE REVISED

CALCULATED-DESIGNED BY: KARI BHANA
CHECKED BY: DAVID BLACK

FUNCTIONAL SUPERVISOR: RON R. KRAEMER

STATE OF CALIFORNIA - DEPARTMENT OF TRANSPORTATION
Caltrans
DESIGN

LAST REVISION 08-02-10 | DATE PLOTTED => 22-SEP-2010 | TIME PLOTTED => 07:24

Dist	COUNTY	ROUTE	POST MILES TOTAL PROJECT	SHEET No.	TOTAL SHEETS
05	Mon	101	53.1/53.9	25	70

Kari Bhana 8-2-10
REGISTERED CIVIL ENGINEER DATE

9-20-10
PLANS APPROVAL DATE

REGISTERED PROFESSIONAL ENGINEER
KARI BHANA
No. 65395
Exp. 9-30-11
CIVIL
STATE OF CALIFORNIA

THE STATE OF CALIFORNIA OR ITS OFFICERS OR AGENTS SHALL NOT BE RESPONSIBLE FOR THE ACCURACY OR COMPLETENESS OF SCANNED COPIES OF THIS PLAN SHEET.

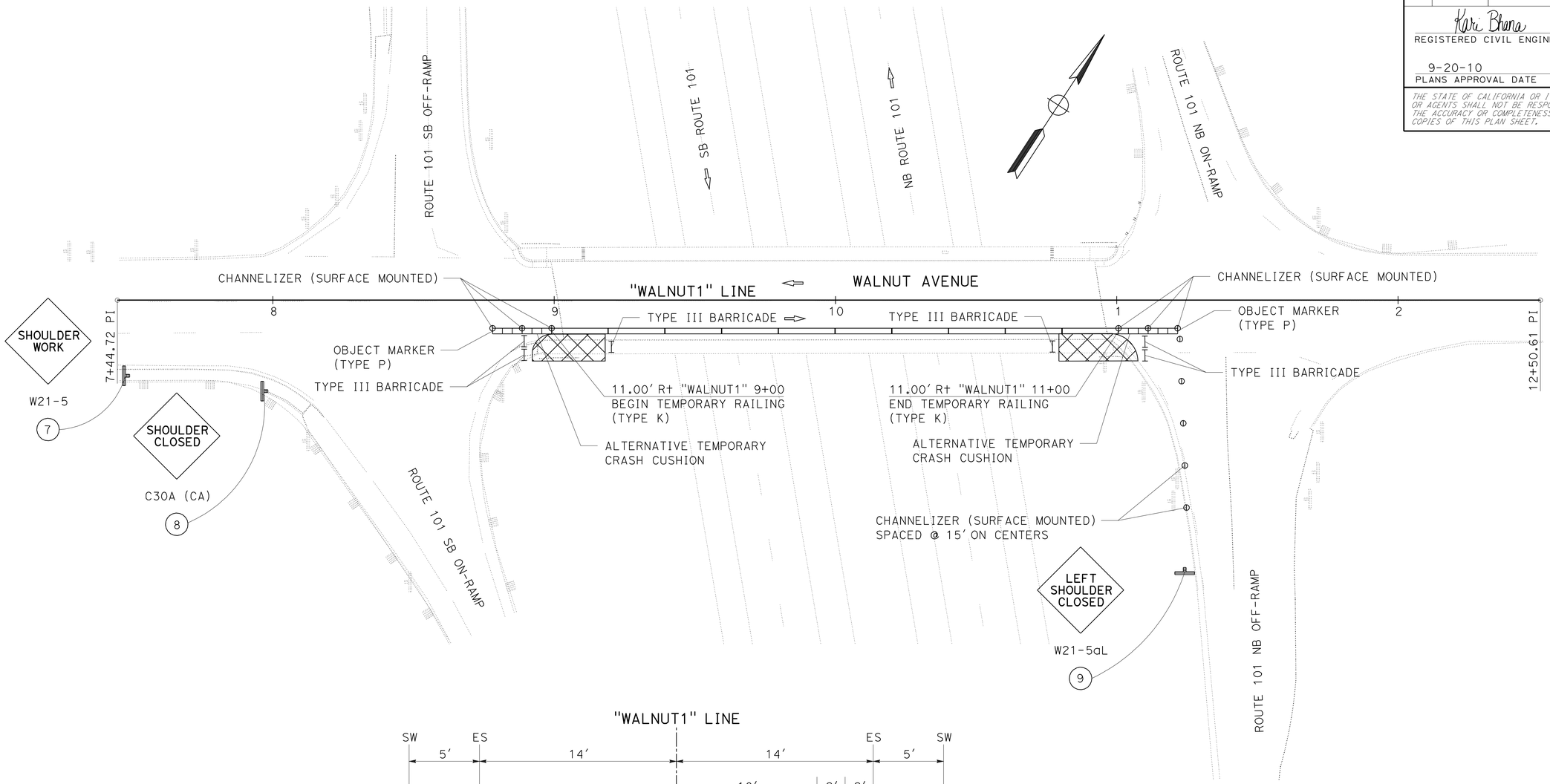

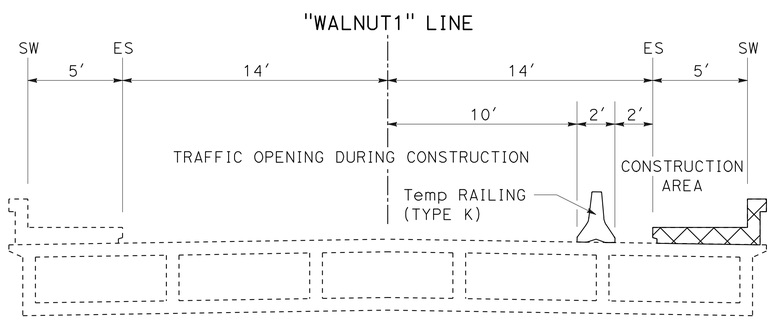

WALNUT AVENUE OVERCROSSING

"WALNUT1" 9+00 TO "WALNUT1" 11+00
NO SCALE

THIS PLAN ACCURATE FOR STAGE CONSTRUCTION AND TRAFFIC HANDLING WORK ONLY.

STAGE 2

STAGE CONSTRUCTION AND TRAFFIC HANDLING PLAN

SCALE: 1" = 20'

SC-3

STATE OF CALIFORNIA - DEPARTMENT OF TRANSPORTATION
Caltrans
DESIGN

FUNCTIONAL SUPERVISOR: RON R. KRAEMER
CALCULATED-DESIGNED BY: KARI BHANA
CHECKED BY: DAVID BLACK
REVISED BY
DATE REVISED

LAST REVISION 08-02-10
DATE PLOTTED => 22-SEP-2010
TIME PLOTTED => 08:47

Dist	COUNTY	ROUTE	POST MILES TOTAL PROJECT	SHEET No.	TOTAL SHEETS
05	Mon	101	53.1/53.9	26	70

Kari Bhana 8-2-10
REGISTERED CIVIL ENGINEER DATE

9-20-10
PLANS APPROVAL DATE

REGISTERED PROFESSIONAL ENGINEER
KARI BHANA
No. 65395
Exp. 9-30-11
CIVIL
STATE OF CALIFORNIA

THE STATE OF CALIFORNIA OR ITS OFFICERS OR AGENTS SHALL NOT BE RESPONSIBLE FOR THE ACCURACY OR COMPLETENESS OF SCANNED COPIES OF THIS PLAN SHEET.

TEMPORARY RAILING (TYPE K)

PLAN SHEET No.	STAGE	STATION	TEMPORARY RAILING (TYPE K)
			LF
SC-1	1	11.00' L+ "OAK1" 8+95 TO 11.00' L+ "OAK1" 10+95	200
SC-2	1	11.00' L+ "WALNUT1" 8+92 TO 11.00' L+ "WALNUT1" 10+92	200
SC-3	2	11.00' R+ "WALNUT1" 9+00 TO 11.00' R+ "WALNUT1" 11+00	200
		TOTAL	600

TYPE III BARRICADE

PLAN SHEET No.	STAGE	STATION	TYPE III BARRICADE
			EA
SC-1	1	11.00' L+ "OAK1" 8+95 TO 11.00' L+ "OAK1" 10+95	6
SC-2	1	11.00' L+ "WALNUT1" 8+92 TO 11.00' L+ "WALNUT1" 10+92	6
SC-3	2	11.00' R+ "WALNUT1" 9+00 TO 11.00' R+ "WALNUT1" 11+00	6
		TOTAL	18

STATIONARY MOUNTED CONSTRUCTION AREA SIGNS

PLAN SHEET No.	STAGE	SIGN No. (X)	SIGN CODE	PANEL SIZE	NUMBER OF POSTS AND SIZE	SIGN MESSAGE
SC-1	1	1	W21-5aL	48" x 48"	1 - 4" x 6"	LEFT SHOULDER CLOSED
SC-1	1	2	C30A (CA)	30" x 30"	1 - 4" x 4"	SHOULDER CLOSED
SC-1	1	3	W21-5	30" x 30"	1 - 4" x 4"	SHOULDER WORK
SC-2	1	4	W21-5aL	48" x 48"	1 - 4" x 6"	LEFT SHOULDER CLOSED
SC-2	1	5	C30A (CA)	30" x 30"	1 - 4" x 4"	SHOULDER CLOSED
SC-2	1	6	W21-5	30" x 30"	1 - 4" x 4"	SHOULDER WORK
SC-3	2	7	W21-5	30" x 30"	1 - 4" x 4"	SHOULDER WORK
SC-3	2	8	C30A (CA)	30" x 30"	1 - 4" x 4"	SHOULDER CLOSED
SC-3	2	9	W21-5aL	48" x 48"	1 - 4" x 6"	LEFT SHOULDER CLOSED

EXACT LOCATION AND POSITION OF CONSTRUCTION AREA SIGNS TO BE DETERMINED BY THE ENGINEER.

FOR ADDITIONAL CONSTRUCTION AREA SIGNS, SEE SHEET CS-1.

TRAFFIC HANDLING AND TEMPORARY PAVEMENT DELINEATION QUANTITIES

PLAN SHEET No.	STAGE	STATION	ALTERNATIVE TEMPORARY CRASH CUSHION	OBJECT MARKER (TYPE P) (N)	CHANNELIZER (SURFACE MOUNTED)
			EA	EA	EA
SC-1	1	11.00' L+ "OAK1" 8+95	1	1	
SC-1	1	11.00' L+ "OAK1" 10+95	1	1	
SC-1	1	"OAK1" 8+95 TO "OAK1" 10+95			11
SC-1	1	"OAK1" 11+58 TO "OAK1" 12+10			7
SC-2	1	11.00' L+ "WALNUT1" 8+92	1	1	
SC-2	1	11.00' L+ "WALNUT1" 10+92	1	1	
SC-2	1	"WALNUT1" 8+92 TO "WALNUT1" 10+92			11
SC-2	1	"WALNUT1" 11+88 TO "WALNUT1" 12+47			5
SC-3	2	11.00' R+ "WALNUT1" 9+00	1	1	
SC-3	2	11.00' R+ "WALNUT1" 11+00	1	1	
SC-3	2	"WALNUT1" 9+00 TO "WALNUT1" 11+00			11
		TOTAL	6		45

(N) - NOT A SEPARATE PAY ITEM, FOR INFORMATION ONLY.

STAGE CONSTRUCTION AND TRAFFIC HANDLING QUANTITIES

SCQ-1

REVISED BY | DATE REVISED
KARI BHANA | DAVID BLACK
CALCULATED-DESIGNED BY | CHECKED BY
FUNCTIONAL SUPERVISOR: RON R. KRAEMER
STATE OF CALIFORNIA - DEPARTMENT OF TRANSPORTATION
Caltrans
DESIGN

LAST REVISION 08-02-10 | DATE PLOTTED => 22-SEP-2010 | TIME PLOTTED => 08:47

Dist	COUNTY	ROUTE	POST MILES TOTAL PROJECT	SHEET No.	TOTAL SHEETS
05	Mon	101	53.1/53.9	27	70

Kari Bhana 8-2-10
REGISTERED CIVIL ENGINEER DATE

9-20-10
PLANS APPROVAL DATE

REGISTERED PROFESSIONAL ENGINEER
KARI BHANA
No. 65395
Exp. 9-30-11
CIVIL
STATE OF CALIFORNIA

THE STATE OF CALIFORNIA OR ITS OFFICERS OR AGENTS SHALL NOT BE RESPONSIBLE FOR THE ACCURACY OR COMPLETENESS OF SCANNED COPIES OF THIS PLAN SHEET.

LEGEND:

- Exist OBJECT MARKER
- OBJECT MARKER (TYPE L-2)
- UTILITY POLE OBJECT MARKER (TYPE L)
- SIGNX — ROADSIDE SIGN No.
- ROADSIDE SIGN (ONE POST)
- XX — THERMOPLASTIC PAVEMENT MARKING
- XX — THERMOPLASTIC TRAFFIC STRIPE (SPRAYABLE)
- XX — REMOVE THERMOPLASTIC PAVEMENT MARKING
- XX — REMOVE THERMOPLASTIC TRAFFIC STRIPE
- PEDESTRIAN BARRICADE (TYPE I)

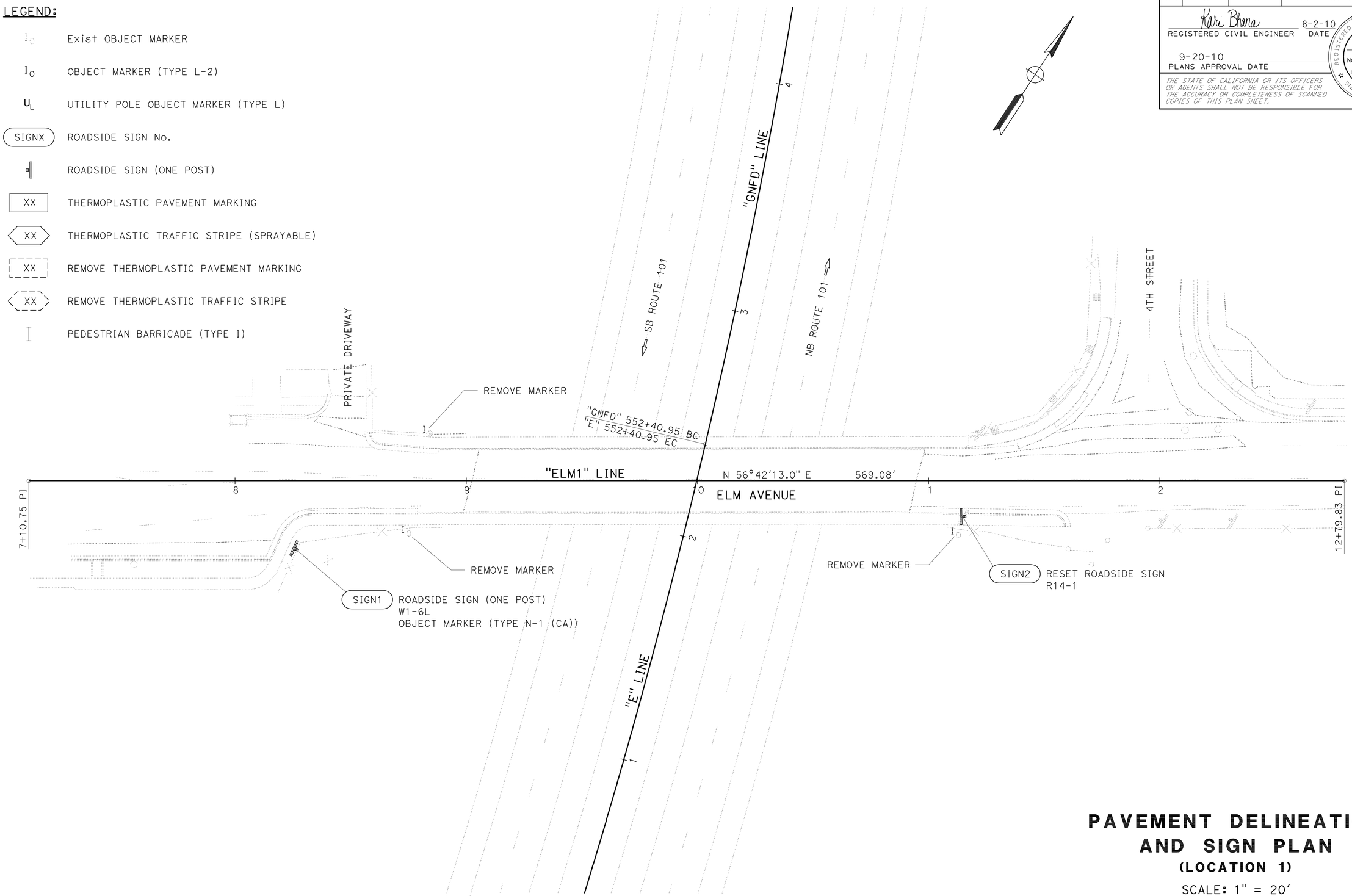

THIS PLAN ACCURATE FOR PAVEMENT DELINEATION AND SIGN WORK ONLY.

PAVEMENT DELINEATION AND SIGN PLAN

(LOCATION 1)

SCALE: 1" = 20'

PD-1

REVISED BY	DATE REVISED
KARI BHANA	RON R. KRAEMER

CALCULATED-DESIGNED BY	CHECKED BY

FUNCTIONAL SUPERVISOR: RON R. KRAEMER

STATE OF CALIFORNIA - DEPARTMENT OF TRANSPORTATION

Caltrans®

DESIGN

LAST REVISION 08-02-10 | DATE PLOTTED => 22-SEP-2010 | TIME PLOTTED => 08:47

Dist	COUNTY	ROUTE	POST MILES TOTAL PROJECT	SHEET No.	TOTAL SHEETS
05	Mon	101	53.1/53.9	28	70

Kari Bhana 8-2-10
REGISTERED CIVIL ENGINEER DATE

9-20-10
PLANS APPROVAL DATE

REGISTERED PROFESSIONAL ENGINEER
KARI BHANA
No. 65395
Exp. 9-30-11
CIVIL
STATE OF CALIFORNIA

THE STATE OF CALIFORNIA OR ITS OFFICERS OR AGENTS SHALL NOT BE RESPONSIBLE FOR THE ACCURACY OR COMPLETENESS OF SCANNED COPIES OF THIS PLAN SHEET.

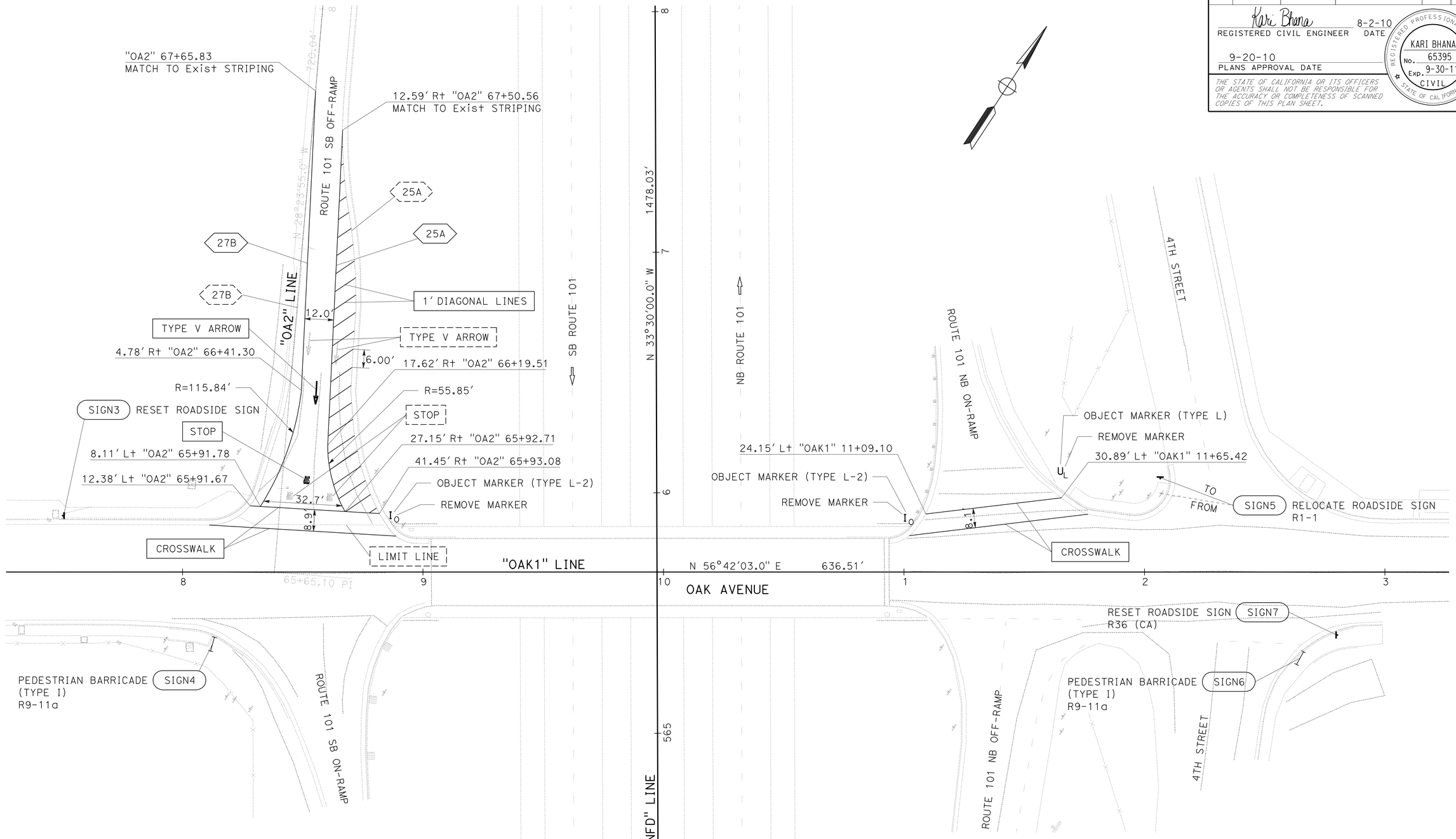

THIS PLAN ACCURATE FOR PAVEMENT DELINEATION AND SIGN WORK ONLY.

PAVEMENT DELINEATION AND SIGN PLAN

(LOCATION 2)

SCALE: 1" = 20'

PD-2

REVISED BY	DATE REVISED
KARI BHANA	
RON R. KRAEMER	

CALCULATED-DESIGNED BY
CHECKED BY

FUNCTIONAL SUPERVISOR
RON R. KRAEMER

STATE OF CALIFORNIA - DEPARTMENT OF TRANSPORTATION
Caltrans
DESIGN

LAST REVISION 08-02-10
DATE PLOTTED => 22-SEP-2010
TIME PLOTTED => 08:47

Dist	COUNTY	ROUTE	POST MILES TOTAL PROJECT	SHEET No.	TOTAL SHEETS
05	Mon	101	53.1/53.9	29	70

Kari Bhana 8-2-10
REGISTERED CIVIL ENGINEER DATE

9-20-10
PLANS APPROVAL DATE

REGISTERED PROFESSIONAL ENGINEER
KARI BHANA
No. 65395
Exp. 9-30-11
CIVIL
STATE OF CALIFORNIA

THE STATE OF CALIFORNIA OR ITS OFFICERS OR AGENTS SHALL NOT BE RESPONSIBLE FOR THE ACCURACY OR COMPLETENESS OF SCANNED COPIES OF THIS PLAN SHEET.

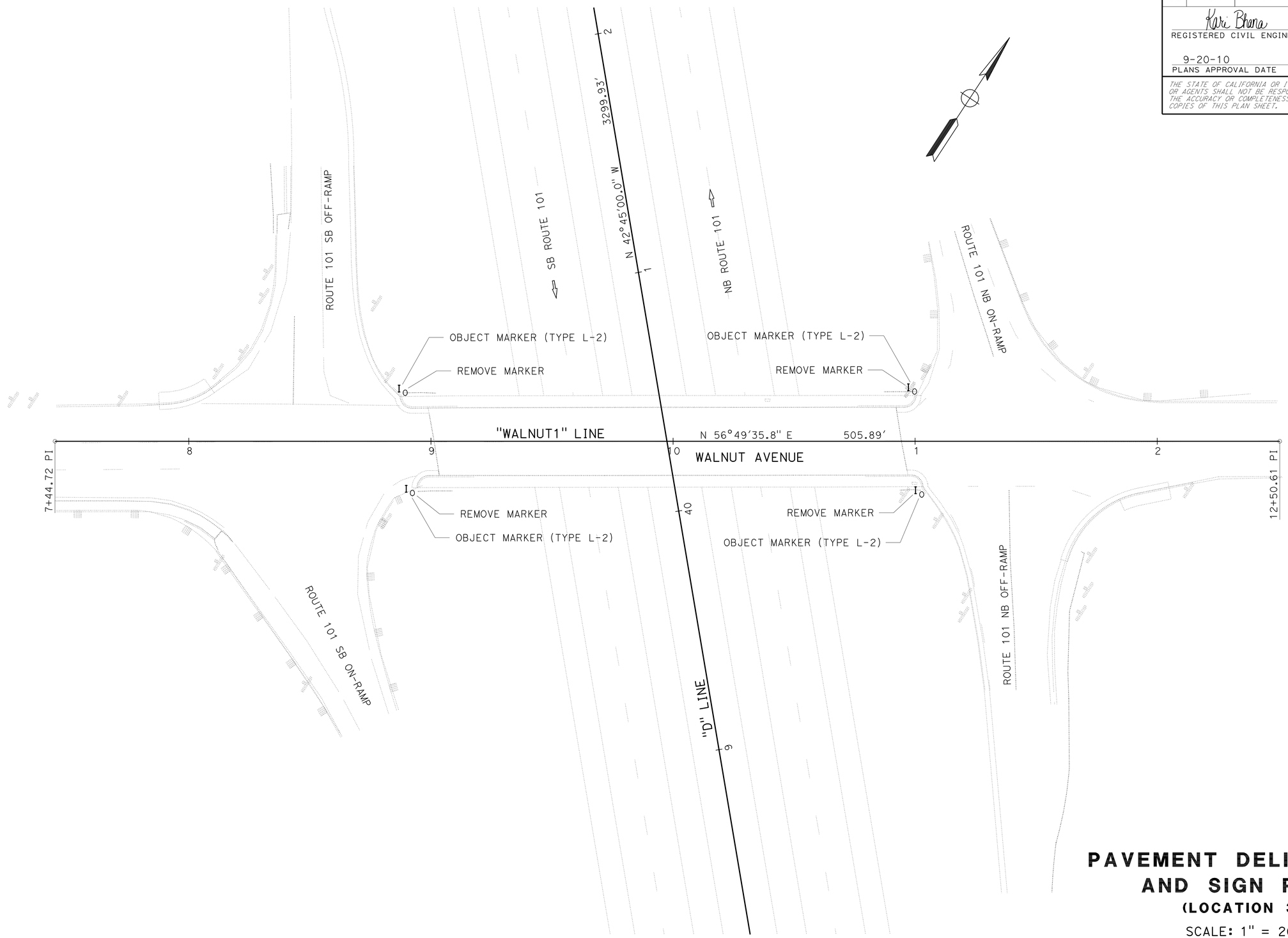

THIS PLAN ACCURATE FOR PAVEMENT DELINEATION AND SIGN WORK ONLY.

PAVEMENT DELINEATION AND SIGN PLAN

(LOCATION 3)

SCALE: 1" = 20'

PD-3

STATE OF CALIFORNIA - DEPARTMENT OF TRANSPORTATION
Caltrans® DESIGN

FUNCTIONAL SUPERVISOR: RON R. KRAEMER

CALCULATED-DESIGNED BY: KARI BHANA
CHECKED BY: RON R. KRAEMER

REVISED BY
DATE REVISED

LAST REVISION 08-02-10
DATE PLOTTED => 22-SEP-2010
TIME PLOTTED => 08:47

Dist	COUNTY	ROUTE	POST MILES TOTAL PROJECT	SHEET No.	TOTAL SHEETS
05	Mon	101	53.1/53.9	30	70

Kari Bhana 8-2-10
REGISTERED CIVIL ENGINEER DATE

9-20-10
PLANS APPROVAL DATE

REGISTERED PROFESSIONAL ENGINEER
KARI BHANA
No. 65395
Exp. 9-30-11
CIVIL
STATE OF CALIFORNIA

THE STATE OF CALIFORNIA OR ITS OFFICERS OR AGENTS SHALL NOT BE RESPONSIBLE FOR THE ACCURACY OR COMPLETENESS OF SCANNED COPIES OF THIS PLAN SHEET.

ROADSIDE SIGN QUANTITIES

PLAN SHEET No.	SIGN No.	SIGN CODE	ROADSIDE SIGN (ONE POST)	RESET ROADSIDE SIGN	RELOCATE ROADSIDE SIGN	PEDESTRIAN BARRICADE	FURNISH SINGLE SHEET ALUMINUM SIGN (0.063"-UNFRAMED)	No. OF PANEL AND SIZE	No. OF POST AND SIZE	SIGN DESCRIPTION
			EA	EA	EA	EA	SQFT			
PD-1	SIGN1	W1-6L	1				4.5	1-36" x 18"	1-4" x 4"	LEFT ARROW
		N-1 (CA)								OBJECT MARKER (TYPE N)
	SIGN2	R14-1		1						"TRUCK ROUTE"
PD-2	SIGN3			1						"NO TRUCKS FROM HERE TO CORNER"
	SIGN4	R9-11a				1	8.0	1-48" x 24"		"SIDEWALK CLOSED ⟵ CROSS HERE"
	SIGN5	R1-1			1					"STOP"
	SIGN6	R9-11a				1	8.0	1-48" x 24"		"SIDEWALK CLOSED ⟶ CROSS HERE"
	SIGN7	R36 (CA)		1						"COMMERCIAL VEHICLES OVER 5 TONS PROHIBITED"
		TOTAL	1	3	1	2	20.5			

EXACT ROADSIDE SIGN LOCATIONS AND POSITIONS TO BE DETERMINED BY THE ENGINEER.

PAVEMENT DELINEATION QUANTITIES

PLAN SHEET No.	STATION	DETAIL No.	PAVEMENT MARKER (RETROREFLECTIVE)	THERMOPLASTIC TRAFFIC STRIPE (SPRAYABLE)		THERMOPLASTIC PAVEMENT MARKING				REMOVE PAVEMENT MARKER (N)	OBJECT MARKER (TYPE L-2)	OBJECT MARKER (TYPE L)	REMOVE THERMOPLASTIC TRAFFIC STRIPE	REMOVE YELLOW THERMOPLASTIC TRAFFIC STRIPE (HAZARDOUS WASTE)	REMOVE THERMOPLASTIC PAVEMENT MARKING	REMOVE MARKER
			TYPE H YELLOW (ONE WAY)	SOLID WHITE	SOLID YELLOW	CROSSWALK	1' DIAGONAL LINES (YELLOW)	TYPE V ARROW	STOP							
				4"	4"											
			EA	LF		SQFT				EA	EA	EA	LF	LF	SQFT	EA
PD-1																3
PD-2	12.38' Lt "OA2" 65+91.67 TO 41.45' Rt "OA2" 65+93.08					132										
	8.11' Lt "OA2" 65+91.78 TO "OA2" 67+65.83	27B		177				33	22		2	1	196		172	3
	27.15' Rt "OA2" 65+92.71 TO 12.59' Rt "OA2" 67+50.56	25A	8		160		209			9				173		
	24.15' Lt "OAK1" 11+09.10 TO 30.89' Lt "OAK1" 11+65.42					132										
PD-3											4					4
		SUBTOTAL	8	177	160	264	209	33	22		6	1	196	173	172	10
		TOTAL	8	337		528					6	1	196	173	172	10

(N) - NOT A SEPARATE PAY ITEM, FOR INFORMATION ONLY.

PAVEMENT DELINEATION AND SIGN QUANTITIES

PDQ-1

STATE OF CALIFORNIA - DEPARTMENT OF TRANSPORTATION
Caltrans®
DESIGN
FUNCTIONAL SUPERVISOR: RON R. KRAEMER
CALCULATED-DESIGNED BY: KARI BHANA
CHECKED BY: RON R. KRAEMER
REVISED BY
DATE REVISED

LAST REVISION 08-02-10
DATE PLOTTED => 22-SEP-2010
TIME PLOTTED => 08:47

Dist	COUNTY	ROUTE	POST MILES TOTAL PROJECT	SHEET No.	TOTAL SHEETS
05	Mon	101	53.1/53.9	31	70

Kari Bhana 8-2-10
REGISTERED CIVIL ENGINEER DATE

9-20-10
PLANS APPROVAL DATE

REGISTERED PROFESSIONAL ENGINEER
KARI BHANA
No. 65395
Exp. 9-30-11
CIVIL
STATE OF CALIFORNIA

THE STATE OF CALIFORNIA OR ITS OFFICERS OR AGENTS SHALL NOT BE RESPONSIBLE FOR THE ACCURACY OR COMPLETENESS OF SCANNED COPIES OF THIS PLAN SHEET.

SIDEWALKS AND CURB RAMPS

PLAN SHEET No.	STATION	REMOVE CONCRETE	REMOVE CONCRETE CURB	REMOVE ASPHALT CONCRETE	REMOVE ASPHALT CONCRETE DIKE	MINOR CONCRETE (MISCELLANEOUS CONSTRUCTION)					GROOVE Exist Conc (N)
						SIDEWALK	CURB RAMP	CURB	RETAINING CURB	CURB TRANSITION	
		CY	LF	SQFT	LF	CY					LF
C-1	"ELM1" 7+29.92 TO "ELM1" 8+78.95	0.2	14.8	368.6	53.9	8.4		4.8			
C-1	"ELM1" 7+40.35		4.0				0.4		0.4		
C-2	"ELM1" 8+61.46	0.1		147.3	35.2		1.4	2.0			
C-2	"ELM1" 11+55.64	0.1		134.9	47.4		2.5	3.3			
C-3	"ELM1" 11+61.21	0.9	19.3	22.6			0.9	1.1	0.5		7.5
C-3	"OAK1" 8+09.51		33.5	64.0			0.9	1.1	0.6	1.0	3.9
C-4	"OAK1" 7+48.74 TO "OAK1" 8+06.00		103.5	663.9		2.8		3.4			
C-4	"OAK1" 8+20.38						1.6	1.6		1.9	
C-5	"OAK1" 8+94.44		19.0	31.5				1.2			
C-5	"OAK1" 10+96.19		15.9	20.0				0.9			
C-6	"OAK1" 11+70.44		3.7	358.3			0.8	1.0		0.6	
C-6	"OAK1" 12+09.64						1.4	2.4			
C-7	"OAK1" 12+75.54	1.9	32.5	52.8			2.1	1.9	0.5		8.0
C-7	"WALNUT1" 8+06.83			88.6	33.0		1.0	1.4		0.2	
C-8	"WALNUT1" 8+91.03		17.4	38.1				1.1			
C-8	"WALNUT1" 8+98.29			75.6				0.7			
C-9	"WALNUT1" 10+96.68			51.5				0.7			
C-9	"WALNUT1" 10+99.62		11.1	28.6				0.7			
C-10	"WALNUT1" 11+87.10			357.9	55.6		1.0	1.2		2.4	
	SUBTOTAL	3.2	274.7	2504.2	225.1	11.2	14.0	30.5	2.0	6.1	
	TOTAL	3.2	274.7	2504.2	225.1	63.8					

(N) - NOT A SEPARATE PAY ITEM, FOR INFORMATION ONLY.

SUMMARY OF QUANTITIES

Q-1

REVISED BY | DATE REVISED
KARI BHANA | RON R. KRAEMER
CALCULATED-DESIGNED BY | CHECKED BY
FUNCTIONAL SUPERVISOR: RON R. KRAEMER
STATE OF CALIFORNIA - DEPARTMENT OF TRANSPORTATION
Caltrans
DESIGN

LAST REVISION 08-02-10 | DATE PLOTTED => 22-SEP-2010 | TIME PLOTTED => 08:47

Dist	COUNTY	ROUTE	POST MILES TOTAL PROJECT	SHEET No.	TOTAL SHEETS
05	Mon	101	53.1/53.9	32	70

Kari Bhana 8-2-10
REGISTERED CIVIL ENGINEER DATE

9-20-10
PLANS APPROVAL DATE

REGISTERED PROFESSIONAL ENGINEER
KARI BHANA
No. 65395
Exp. 9-30-11
CIVIL
STATE OF CALIFORNIA

THE STATE OF CALIFORNIA OR ITS OFFICERS OR AGENTS SHALL NOT BE RESPONSIBLE FOR THE ACCURACY OR COMPLETENESS OF SCANNED COPIES OF THIS PLAN SHEET.

EARTHWORK

PLAN SHEET No.	STATION	ROADWAY EXCAVATION	EMBANKMENT (N)	IMPORTED BORROW
		CY	CY	CY
L-1	"ELM1" 7+29.92 TO "ELM1" 8+78.95	0.2	1.7	
L-1	"ELM1" 8+61.46		0.1	
L-1	"ELM1" 11+55.64	0.1	1.0	
L-2	"OAK1" 7+48.74 TO "OAK1" 8+06.00		7.0	
L-2	"OAK1" 8+20.38			
L-2	"OAK1" 11+70.44	0.1	0.8	
L-2	"OAK1" 12+09.64			
L-3	"WALNUT1" 8+06.83		0.5	
L-3	"WALNUT1" 11+87.10		7.1	
	TOTAL	0.4	18.2	17.8

(N) - NOT A SEPARATE PAY ITEM, FOR INFORMATION ONLY.

EROSION CONTROL

PLAN SHEET No.	STATION	EROSION CONTROL (DRY SEED)	ROLLED EROSION CONTROL PRODUCT (JUTE MESH)	REMARKS
		SQFT	SQFT	
C-1	"ELM1" 7+29.92 TO "ELM1" 8+78.95	290		NOT SHOWN ON PLANS. APPLY TO EMBANKMENT AND EXCAVATION SLOPES AND OTHER AREAS DISTURBED BY CONSTRUCTION ACTIVITIES.
C-2	"ELM1" 8+61.46	25		
C-2	"ELM1" 11+55.64	105		
C-4	"OAK1" 7+48.74 TO "OAK1" 8+06.00	310		
C-4	"OAK1" 8+20.38			
C-6	"OAK1" 11+70.44	96		
C-6	"OAK1" 12+09.64			
C-7	"WALNUT1" 8+06.83	48	48	
C-10	"WALNUT1" 11+87.10	156	156	
	TOTAL	1030	204	

METAL BEAM GUARD RAILING (STEEL POST)

PLAN SHEET No.	STATION	REMOVE METAL BEAM GUARD RAILING	METAL BEAM GUARD RAILING (STEEL POST)	ALTERNATIVE FLARED TERMINAL SYSTEM
		LF	LF	EA
L-1	17.47′ R+ "ELM1" 8+25.77 TO 13.91′ R+ "ELM1" 8+77.12	51.5		
L-1	18.62′ L+ "ELM1" 11+15.50 TO 62.07′ L+ "ELM1" 11+72.16		75.0	
L-1	18.62′ L+ "ELM1" 11+15.50 TO 98.09′ L+ "ELM1" 11+73.22	112.7		
L-1	62.07′ L+ "ELM1" 11+72.16 TO 101.56′ L+ "ELM1" 11+70.71			1
L-2	18.79′ L+ "OAK1" 10+99.86 TO 40.83′ L+ "OAK1" 11+11.62	25.0	25.0	
L-3	35.20′ R+ "WALNUT1" 8+77.65 TO 19.01′ R+ "WALNUT1" 8+97.37	25.0	25.0	
L-3	18.76′ L+ "WALNUT1" 10+97.19 TO 40.33′ L+ "WALNUT1" 11+09.15	25.0	25.0	
	TOTAL	239.2	150.0	1

SLURRY SEAL

PLAN SHEET No.	STATION	SLURRY SEAL
		TON
L-2	"OA2" 65+84.55 TO "OA2" 67+65.83	6.6
	TOTAL	6.6

CHAIN LINK FENCE

PLAN SHEET No.	STATION	RECONSTRUCT CHAIN LINK FENCE
		LF
L-1	21.97′ L+ "ELM1" 8+59.31 TO 20.21′ L+ "ELM1" 8+85.46	26.2
L-1	20.07′ R+ "ELM1" 11+08.07 TO 22.09′ R+ "ELM1" 11+25.17	17.2
	TOTAL	43.4

HOT MIX ASPHALT (TYPE A)

PLAN SHEET No.	STATION	HOT MIX ASPHALT (TYPE A)	TACK COAT
		TON	TON
C-1	"ELM1" 7+29.92 TO "ELM1" 8+78.95	89.3	0.04
C-2	"ELM1" 8+61.46	39.5	
C-2	"ELM1" 11+55.64	63.8	
C-3	"ELM1" 11+61.21	21.6	
C-3	"OAK1" 8+09.51	37.1	
C-4	"OAK1" 7+48.74 TO "OAK1" 8+06.00	123.2	
C-4	"OAK1" 8+20.38		
C-5	"OAK1" 8+94.44	23.2	
C-5	"OAK1" 10+96.19	19.3	
C-6	"OAK1" 11+70.44	78.8	
C-6	"OAK1" 12+09.64		
C-7	"OAK1" 12+75.54	36.1	
C-7	"WALNUT1" 8+06.83	40.5	
C-8	"WALNUT1" 8+91.03	18.8	
C-8	"WALNUT1" 8+98.29	16.7	
C-9	"WALNUT1" 10+96.68	15.6	
C-9	"WALNUT1" 10+99.62	13.9	
C-10	"WALNUT1" 11+87.10	74.8	
	TOTAL	712.2	0.04

SUMMARY OF QUANTITIES

Q-2

STATE OF CALIFORNIA - DEPARTMENT OF TRANSPORTATION
Caltrans® DESIGN

FUNCTIONAL SUPERVISOR: RON R. KRAEMER
CALCULATED-DESIGNED BY: KARI BHANA
CHECKED BY: RON R. KRAEMER
REVISED BY
DATE REVISED

LAST REVISION 08-02-10
DATE PLOTTED => 22-SEP-2010
TIME PLOTTED => 08:47

Dist	COUNTY	ROUTE	POST MILES TOTAL PROJECT	SHEET No.	TOTAL SHEETS
05	Mon	101	53.1/53.9	33	70

Xavier Alfaro 8-2-10
REGISTERED ELECTRICAL ENGINEER DATE

9-20-10
PLANS APPROVAL DATE

REGISTERED PROFESSIONAL ENGINEER XAVIER I. ALFARO No. E17488 Exp. 6-30-11 ELECTRICAL STATE OF CALIFORNIA

THE STATE OF CALIFORNIA OR ITS OFFICERS OR AGENTS SHALL NOT BE RESPONSIBLE FOR THE ACCURACY OR COMPLETENESS OF SCANNED COPIES OF THIS PLAN SHEET.

NOTE (FOR SHEETS E-1 AND E-2):

FOR ACCURATE RIGHT OF WAY DATA, CONTACT RIGHT OF WAY ENGINEERING AT THE DISTRICT OFFICE.

1 TYPE 1 CONDUIT.

ABBREVIATIONS:

PG&E PACIFIC GAS AND ELECTRIC
CTID CALTRANS IDENTIFICATION

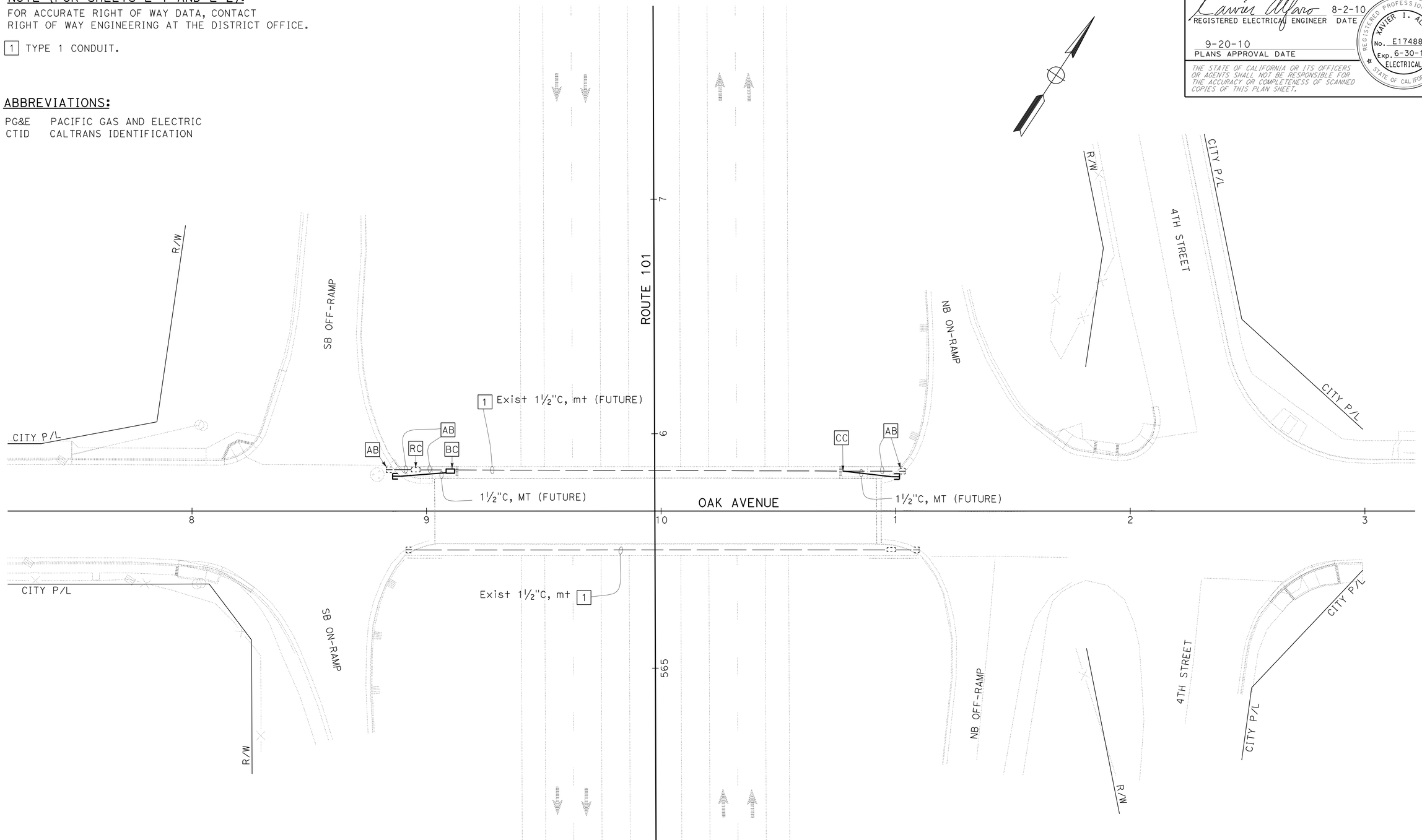

THIS PLAN IS ACCURATE FOR ELECRICAL WORK ONLY.

MODIFY LIGHTING

SCALE: 1" = 20'

E-1

STATE OF CALIFORNIA - DEPARTMENT OF TRANSPORTATION
Caltrans ELECTRICAL DESIGN

FUNCTIONAL SUPERVISOR: ALI BAKHDOUD
CALCULATED-DESIGNED BY: XAVIER ALFARO
CHECKED BY: PAUL MATOS
REVISED BY
DATE REVISED

LAST REVISION 07-21-10
DATE PLOTTED => 22-SEP-2010
TIME PLOTTED => 10:47

Dist	COUNTY	ROUTE	POST MILES TOTAL PROJECT	SHEET No.	TOTAL SHEETS
05	Mon	101	53.1/53.9	34	70

REGISTERED ELECTRICAL ENGINEER 8-2-10 DATE

9-20-10
PLANS APPROVAL DATE

REGISTERED PROFESSIONAL ENGINEER XAVIER I. ALFARO No. E17488 Exp. 6-30-11 ELECTRICAL STATE OF CALIFORNIA

THE STATE OF CALIFORNIA OR ITS OFFICERS OR AGENTS SHALL NOT BE RESPONSIBLE FOR THE ACCURACY OR COMPLETENESS OF SCANNED COPIES OF THIS PLAN SHEET.

NOTE:
FOR ACCURATE RIGHT OF WAY DATA, CONTACT
RIGHT OF WAY ENGINEERING AT THE DISTRICT OFFICE.

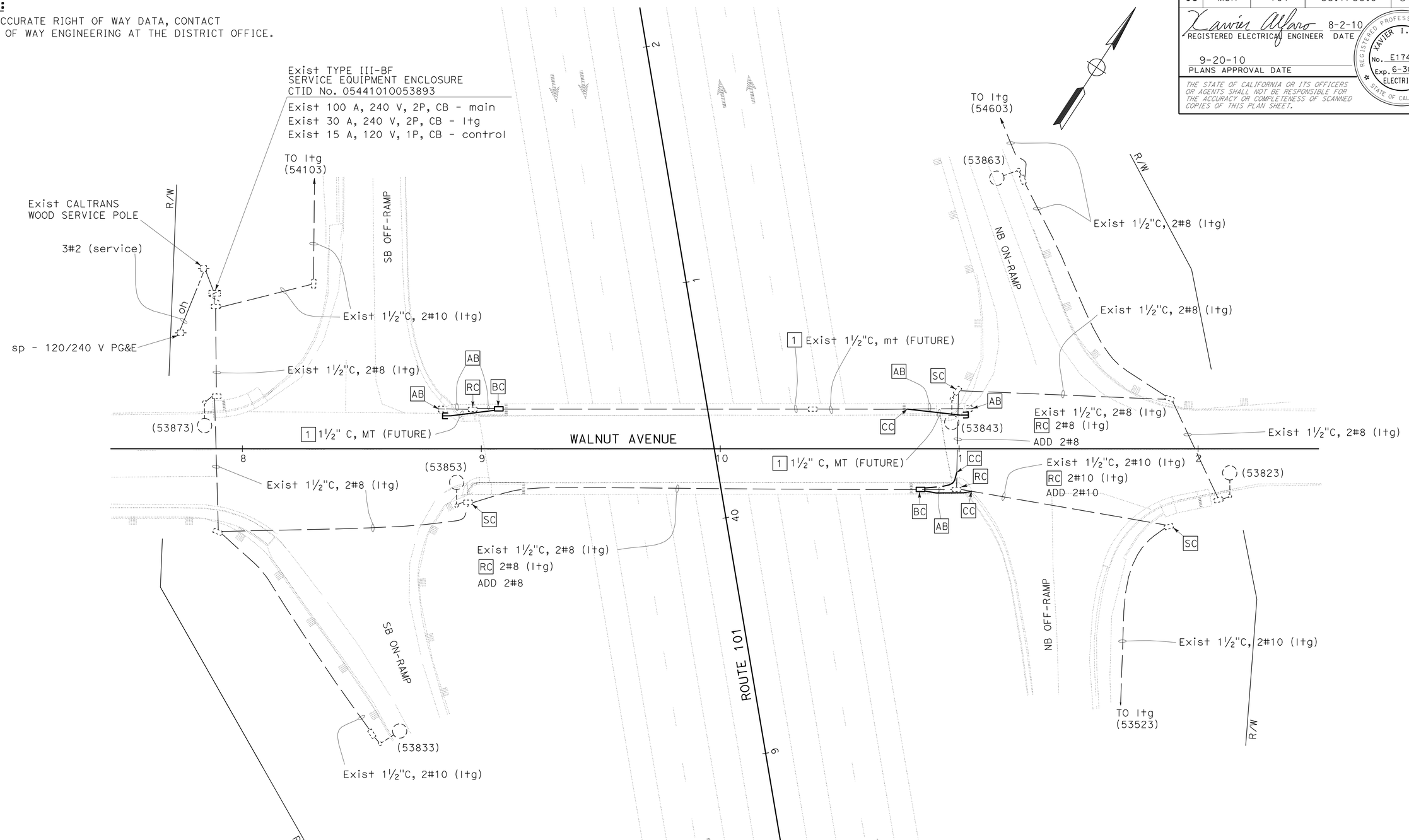

THIS PLAN IS ACCURATE FOR ELECRICAL WORK ONLY.

MODIFY LIGHTING
E-2

SCALE: 1" = 20'

STATE OF CALIFORNIA - DEPARTMENT OF TRANSPORTATION
Caltrans® ELECTRICAL DESIGN

FUNCTIONAL SUPERVISOR: ALI BAKHDOUD
CALCULATED-DESIGNED BY: XAVIER ALFARO
CHECKED BY: PAUL MATOS
REVISED BY
DATE REVISED

LAST REVISION 07-21-10
DATE PLOTTED => 22-SEP-2010
TIME PLOTTED => 10:47

DIST	COUNTY	ROUTE	POST MILES TOTAL PROJECT	SHEET NO.	TOTAL SHEETS
05	Mon	101	53.1/53.9	35	70

REGISTERED CIVIL ENGINEER

November 17, 2006
PLANS APPROVAL DATE

REGISTERED PROFESSIONAL ENGINEER Dallas Forester No. C37765 Exp. 12-31-06 CIVIL STATE OF CALIFORNIA

The State of California or its officers or agents shall not be responsible for the accuracy or completeness of electronic copies of this plan sheet.

To accompany plans dated 9-20-10

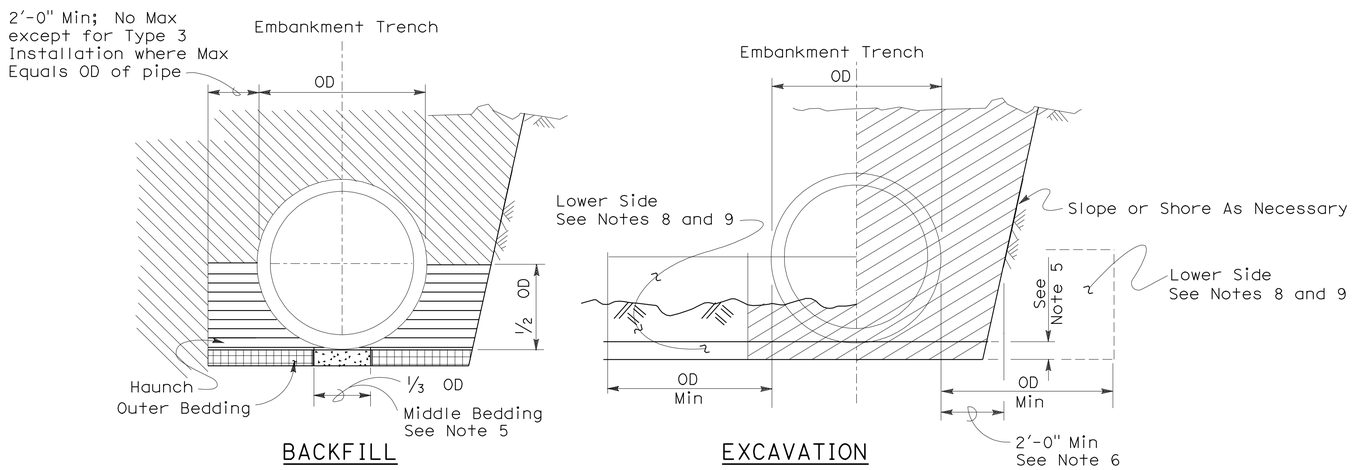

Roadway Embankment

Structure Backfill (Culvert) See Note 6

Structure Backfill (Culvert) See Note 6

Loose Backfill

Excavation Structure (Culvert)

TYPE 1 INSTALLATION:

The haunch and outer bedding shall be compacted to a minimum 90 percent relative compaction. In addition, the minimum sand equivalent in these areas shall be 30 and the maximum percentage passing the 75 μm sieve size shall be 12.

TYPE 2 INSTALLATION:

The haunch and outer bedding shall be compacted to a minimum 90 percent relative compaction. In addition, the minimum sand equivalent in these areas shall be 25.

TYPE 3 INSTALLATION:

The haunch and outer bedding shall be compacted to a minimum 85 percent relative compaction. 90 percent relative compaction will be required where the fill over the pipe is less than 4'-0" or 1/2 OD.

INSTALLATION TYPE 1

MINIMUM CLASS AND D-LOAD	COVER	
	108" Dia AND SMALLER	OVER 108" Dia
Class II 1000D	14.9'	12.9'
Class III 1350D	15.0' - 20.9'	13.0' - 18.9'
Class III Special 1700D	21.0' - 26.9'	19.0' - 24.9'
Class IV 2000D	27.0' - 31.9'	25.0' - 29.9'
Class IV Special 2500D	32.0' - 40.9'	30.0' - 38.9'
Class V 3000D	41.0' - 49.9'	39.0' - 46.9'
Class V Special 3600D	50.0' - 59.0'	47.0' - 58.0'

INSTALLATION TYPE 2

MINIMUM CLASS AND D-LOAD	COVER
Class II 1000D	9.9'
Class III 1350D	10.0'- 14.9'
Class III Special 1700D	15.0' - 19.9'
Class IV 2000D	20.0' - 24.9'
Class IV Special 2500D	25.0' - 31.9'
Class V 3000D	32.0' - 38.9'
Class V Special 3600D	39.0' - 47.0'

INSTALLATION TYPE 3

MINIMUM CLASS AND D-LOAD	COVER	
	48" Dia AND SMALLER	OVER 48" Dia
Class II 1000D	7.9'	5.9'
Class III 1350D	8.0' - 10.9'	6.0' - 8.9'
Class III Special 1700D	11.0' - 14.9'	9.0' - 12.9'
Class IV 2000D	15.0' - 17.9'	13.0' - 15.9'
Class IV Special 2500D	18.0' - 21.9'	16.0' - 19.9'
Class V 3000D	22.0' - 26.9'	20.0' - 24.9'
Class V Special 3600D	30.0' - 33.0'	25.0' - 31.0'

NOTES:

1. Unless otherwise shown on the plans or specified in the special provision, the Contractor shall have the option of selecting the class of RCP and the type of installation to be used, provided the height of cover does not exceed the value shown for the RCP selected.
   Example: 24" RCP culvert with maximum cover of 19'-0" the options are:
   a) Class III or stronger with Installation Type 1.
   b) Class III Special or stronger with Installation Type 2.
   c) Class IV Special or stronger with Installation Type 3.
   Cover is defined as the maximum vertical distance from top of the pipe to finished grade within the length of any given culvert.
2. The class of RCP and Installation Type selected shall be the same throughout the length of any given culvert.
3. The "length of any culvert" is defined as the culvert between:
   a) Successive drainage structure (inlets, junction boxes, headwalls, etc.).
   b) A drainage structure and the inlet or outlet end of the culvert.
   c) The inlet and outlet end of the culvert when there are no intervening drainage structures.
4. Oval and arch shaped RCP shall not be used.
5. 1/25 OD Min, not less than 3".
6. Slurry cement backfill may be substituted for backfill in the outer bedding and haunch areas. If slurry is used the outer and middle beddings shall be omitted. Prior to installation the soil under the middle 1/3 of the outside diameter of the pipe shall be softened by scarifying or other means to a minimum depth of 1/25 OD, but not less than 3". Where slurry cement backfill is used clear distance to trench wall may be reduced as set forth in Section 19-3.062 of the Standard Specifications.
7. Backfill shall be placed full width of excavation except where dimensions are shown for backfill width or thickness. Dimensions shown are minimums.
8. Lower side shall be suitable material as determined by the Engineer. Otherwise it shall be considered unsuitable as set forth in Section 19-2.02 of the Standard Specifications. See Note 9.
9. Where the pipe is placed in a trench, if the trench walls are sloped at 5 vertical to 1 horizontal or steeper for at least 90 percent of the trench height or up to not less than 12" from the grading plane, the firmness of the soil in the lower side need not be considered.
10. Non-reinforced precast concrete pipe sizes 3'-0" or smaller may be placed under installation Types 1, 2 or 3.

STATE OF CALIFORNIA
DEPARTMENT OF TRANSPORTATION

EXCAVATION AND BACKFILL CONCRETE PIPE CULVERTS

NO SCALE

RSP A62DA DATED NOVEMBER 17, 2006 SUPERSEDES STANDARD PLAN A62DA DATED MAY 1, 2006 - PAGE 20 OF THE STANDARD PLANS BOOK DATED MAY 2006.

REVISED STANDARD PLAN RSP A62DA

2006 REVISED STANDARD PLAN RSP A62DA

10-26-06

DIST	COUNTY	ROUTE	POST MILES TOTAL PROJECT	SHEET NO.	TOTAL SHEETS
05	Mon	101	53.1/53.9	36	70

Randell D. Hiatt
REGISTERED CIVIL ENGINEER

June 6, 2008
PLANS APPROVAL DATE

REGISTERED PROFESSIONAL ENGINEER
Randell D. Hiatt
No. C50200
Exp. 6-30-09
CIVIL
STATE OF CALIFORNIA

The State of California or its officers or agents shall not be responsible for the accuracy or completeness of electronic copies of this plan sheet.

To accompany plans dated 9-20-10

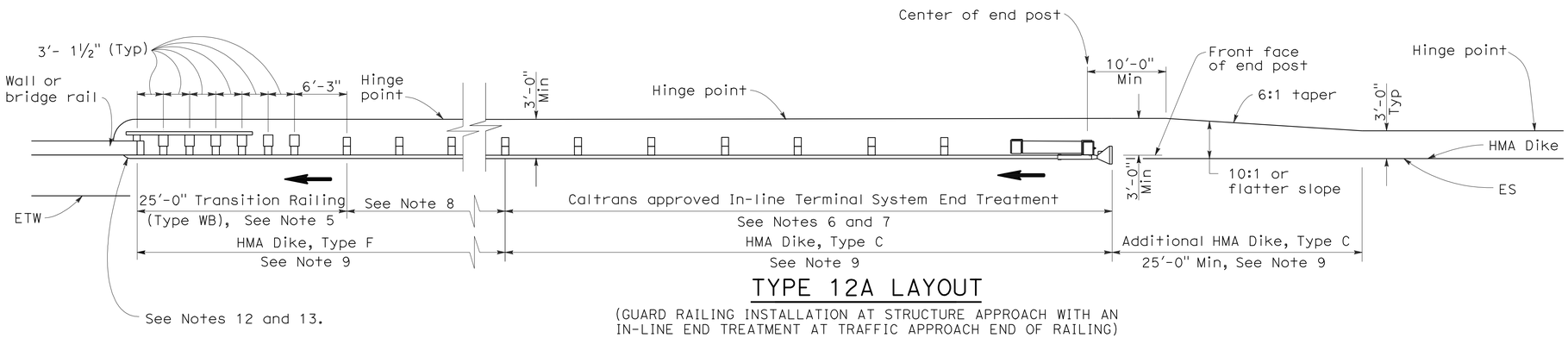

TYPE 12A LAYOUT

(GUARD RAILING INSTALLATION AT STRUCTURE APPROACH WITH AN IN-LINE END TREATMENT AT TRAFFIC APPROACH END OF RAILING)
See Notes 10

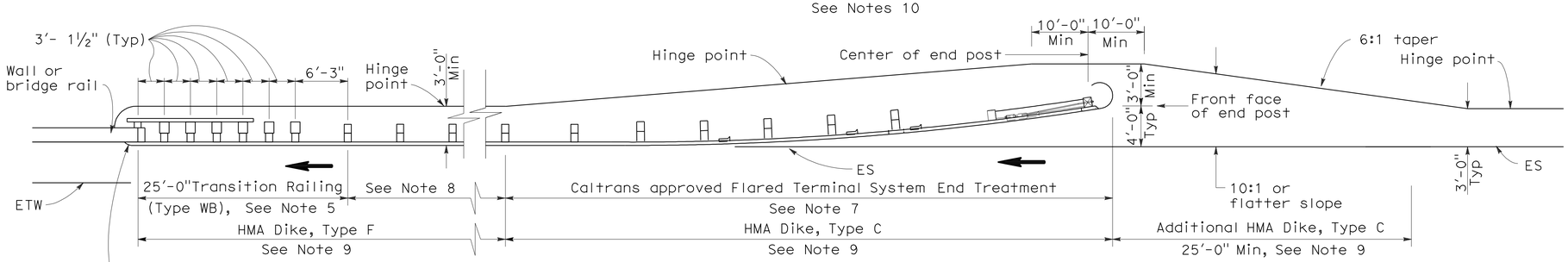

TYPE 12B LAYOUT

(GUARD RAILING INSTALLATION AT STRUCTURE APPROACH WITH A FLARED END TREATMENT AT TRAFFIC APPROACH END OF RAILING)
See Notes 10

NOTES:

1. Line post, blocks and hardware to be used are shown on Standard Plans A77A1, A77A2, A77B1, A77C1 and A77C2.
2. Guard rail post spacing to be 6'-3" center to center, except as otherwise noted.
3. Except as noted, line posts are 6" x 8" x 6'-0" wood with 6" x 8" x 1'-2" wood blocks. W6 x 9 steel posts, 6'-0" in length, with 6" x 8" x 1'-2" notched wood blocks or plastic blocks may be used for 6" x 8" x 6'-0" wood posts with 6" x 8" x 1'-2" wood blocks where applicable and when specified.
4. Direction of adjacent traffic indicated by ➡.
5. For Transition Railing (Type WB) details for Types 12A and 12B Layouts, see Standard Plan A77J4.
6. In-line Terminal System End Treatments are used where site conditions will not accommodate a flared end treatment.
7. The type of terminal system end treatment to be used will be shown on the Project Plans.
8. Dependent on site conditions (embankment height, side slopes, or other fixed objects), it may be advisable to construct additional guard railing (a length equal to multiples of 12'-6" with 6'-3" post spacing) between the transition railing and end treatment.
9. Where placement of dike is required with guard railing installations, see Revised Standard Plan RSP A77C4 for dike positioning details.
10. Type 12A or Type 12B Layouts are typically used:
    a. To the right of approaching traffic, at the end of a structure, on two-lane conventional highway where the roadbed width across the structure is less than 40 feet.
    b. To the left of approaching traffic, at the end of a structure, on two-lane conventional highway where the roadbed width across the structure is less than 40 feet.
    c. To the right of approaching traffic at the end of each structure on multilane freeways or expressways with separate adjacent or parallel bridges.
    d. To the right of approaching traffic at the end of the structure on multilane freeways or expressways with decked median on the bridge.
11. See Revised Standard Plan RSP A77F3 for typical layout used left of approaching traffic at the ends of each structure on multilane freeways or expressways with separate adjacent or parallel bridges.
12. For additional details of typical connections to bridge rail, see Connection Detail AA on Revised Standard Plans RSP A77J1 and RSP A77J2 and Connection Detail FF on Standard Plans A77K1 and A77K2.
13. For additional details of a typical connection to walls or abutments, see Standard Plan A77J3.

STATE OF CALIFORNIA
DEPARTMENT OF TRANSPORTATION

METAL BEAM GUARD RAILING TYPICAL LAYOUTS FOR STRUCTURE APPROACH

NO SCALE

RSP A77F1 DATED JUNE 6, 2008 SUPERSEDES STANDARD PLAN A77F1
DATED MAY 1, 2006 - PAGE 54 OF THE STANDARD PLANS BOOK DATED MAY 2006.

REVISED STANDARD PLAN RSP A77F1

2006 REVISED STANDARD PLAN RSP A77F1

12-10-07

DIST	COUNTY	ROUTE	POST MILES TOTAL PROJECT	SHEET NO.	TOTAL SHEETS
05	Mon	101	53.1/53.9	37	70

Glenn DeCou
REGISTERED CIVIL ENGINEER

June 5, 2009
PLANS APPROVAL DATE

REGISTERED PROFESSIONAL ENGINEER
Glenn DeCou
No. C34547
Exp. 9-30-09
CIVIL
STATE OF CALIFORNIA

The State of California or its officers or agents shall not be responsible for the accuracy or completeness of electronic copies of this plan sheet.

To accompany plans dated 9-20-10

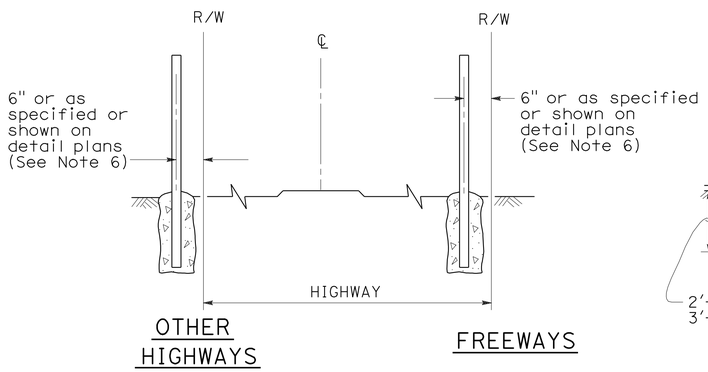

FENCE LOCATION

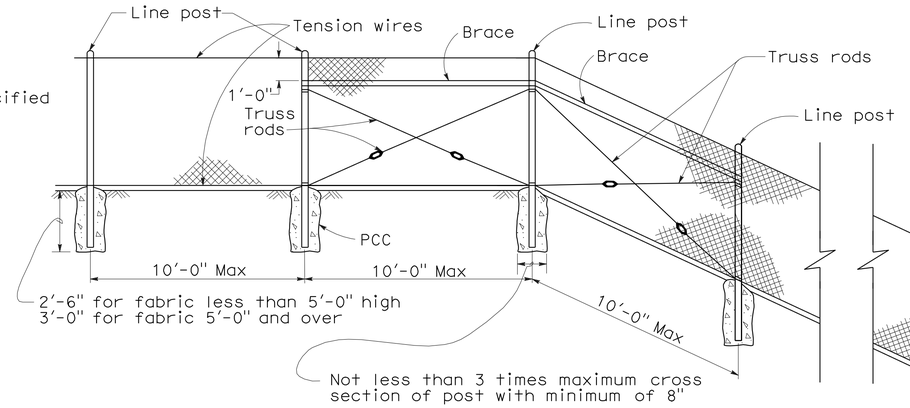

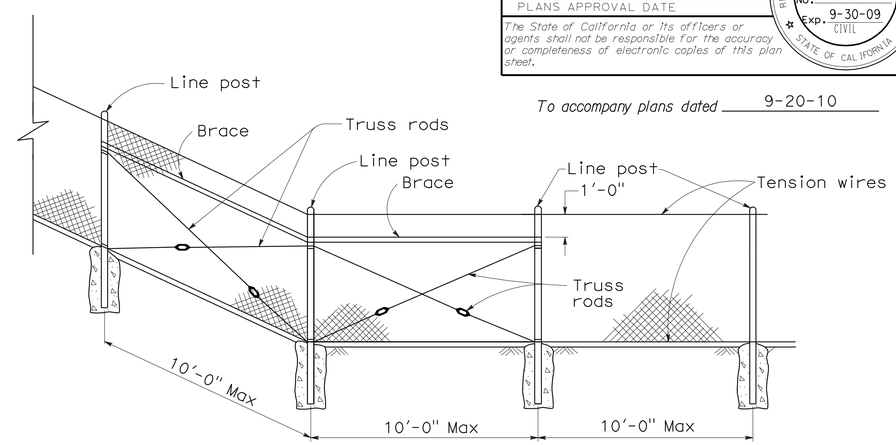

CHAIN LINK FENCE ON SHARP BREAK IN GRADE

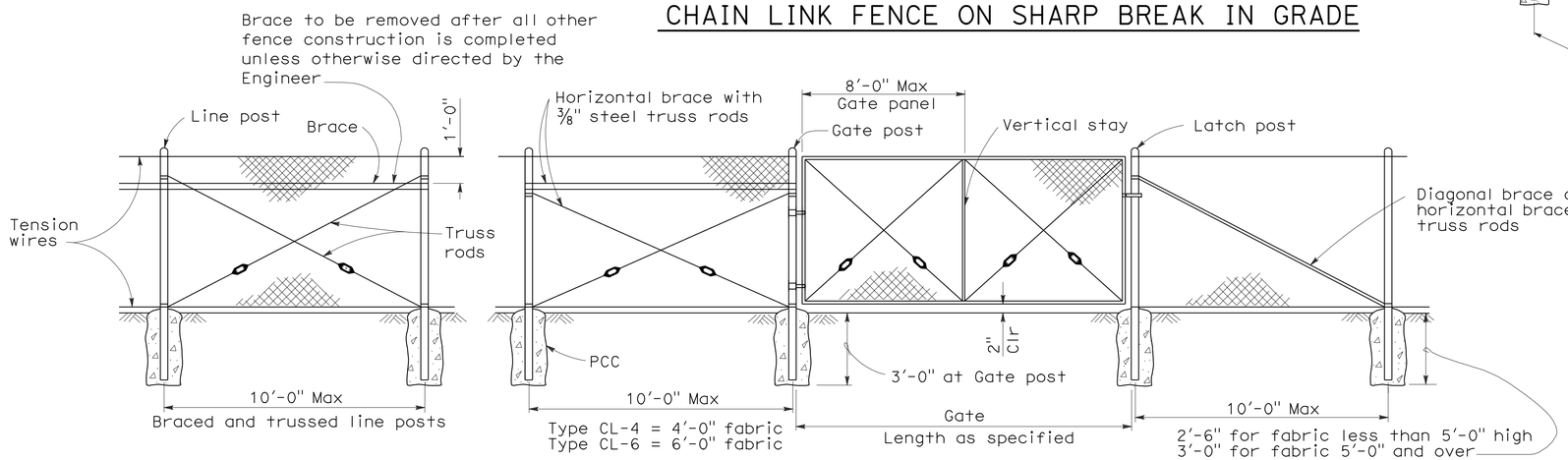

CHAIN LINK GATE INSTALLATION

GATE POST			
FENCE HEIGHT	GATE WIDTHS	NOMINAL ID	WEIGHT PER FOOT
6'-0" and Less	Up thru 6'-0"	2½"	4.95 LB
	Over 6'-0" thru 12'-0"	4"	10.79 LB
	Over 12'-0" thru 18'-0"	5"	14.62 LB
	Over 18'-0" to 24'-0" Max	6"	18.97 LB
Over 6'-0"	Up thru 6'-0"	3"	7.58 LB
	Over 6'-0" thru 12'-0"	5"	14.62 LB
	Over 12'-0" thru 18'-0"	6"	18.97 LB
	Over 18'-0" to 24'-0" Max	8"	28.55 LB

Above post dimensions and weights are minimums. Larger sizes may be used on approval of the Engineer.

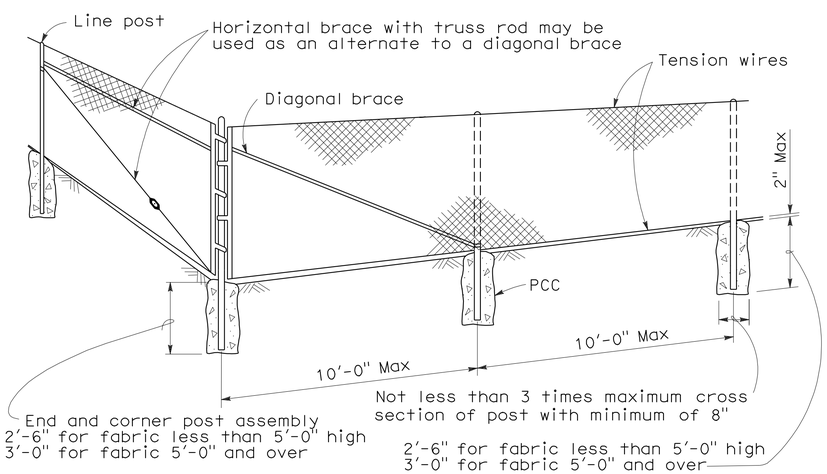

CORNER POST

NOTES:

1. The below table shows examples of post and brace sections which may comply with the Specifications.
2. Sections shown in the tables must also comply with the strength requirements and other provisions of the Specifications.
3. Other sections which comply with the strength requirements and other provisions of the Specifications may be used on approval of the Engineer.
4. Options exercised shall be uniform on any one project.
5. Dimensions shown are nominal.
6. Offset to be 2'-0" at monument locations, measured at right angles to R/W lines. Taper to achieve offset to be at least 20'-0" long.

TYPICAL MEMBER DIMENSIONS (See Notes)											
FENCE HEIGHT	LINE POSTS			END, LATCH & CORNER POSTS				BRACES			
	ROUND ID	H	ROLL FORMED	ROUND ID	ROLL FORMED			ROUND ID	H	ROLL FORMED	
6' & less	1½"	1⅞" × 1⅝"	1⅞" × 1⅝"	2"	3½" × 3½"	2" × 1¾"		1¼"	1½" × 1 5/16"	1⅝" × 1¼"	1¾" × 1¼"
Over 6'	2"	2¼" × 2"	2" × 1¾"	2½"	3½" × 3½"	2½" × 2½"		1¼"	1½" × 1 5/16"	1⅝" × 1¼"	1¾" × 1¼"

STATE OF CALIFORNIA
DEPARTMENT OF TRANSPORTATION

CHAIN LINK FENCE

NO SCALE

RSP A85 DATED JUNE 5, 2009 SUPERSEDES STANDARD PLAN A85
DATED MAY 1, 2006 - PAGE 111 OF THE STANDARD PLANS BOOK DATED MAY 2006.

REVISED STANDARD PLAN RSP A85

2006 REVISED STANDARD PLAN RSP A85

5-7-09

DIST	COUNTY	ROUTE	POST MILES TOTAL PROJECT	SHEET NO.	TOTAL SHEETS
05	Mon	101	53.1/53.9	38	70

REGISTERED CIVIL ENGINEER

June 5, 2009
PLANS APPROVAL DATE

REGISTERED PROFESSIONAL ENGINEER Glenn DeCou No. C34547 Exp. 9-30-09 CIVIL STATE OF CALIFORNIA

The State of California or its officers or agents shall not be responsible for the accuracy or completeness of electronic copies of this plan sheet.

To accompany plans dated 9-20-10

NOTES:

1. H is 2'-6" for fabric less than 5'-0" high.
   H is 3'-0" for fabric 5'-0" and over.
2. T is not less than 3 times maximum cross section of post with minimum of 8".
3. Arms with barbed wire to be used where shown on plans.
4. See Revised Standard Plan RSP A85 for Chain Link Fencing dimensions.
5. Reinforcing must comply with ASTM A 706.
6. See Detail A on New Standard Plan NSP A86B for connection at headwall.

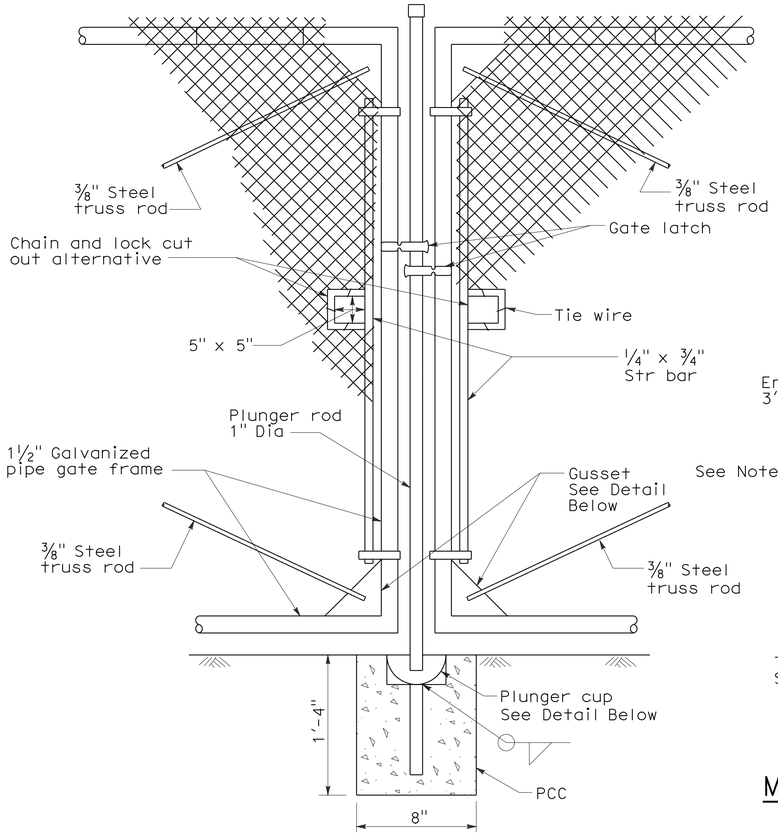

TYPICAL DOUBLE GATE REMOVABLE CENTER POST

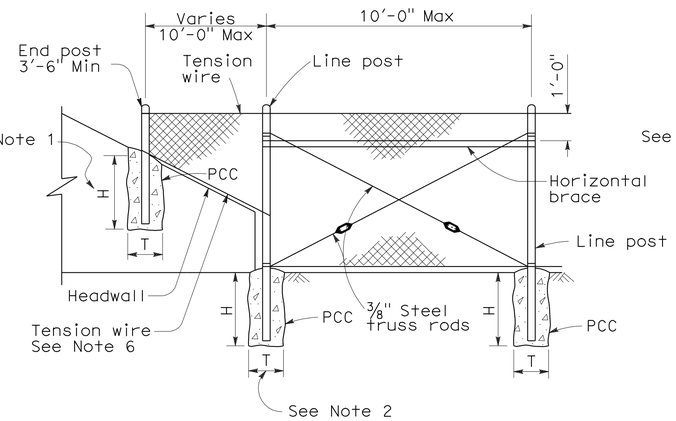

METHOD OF TYING FENCE TO HEADWALL

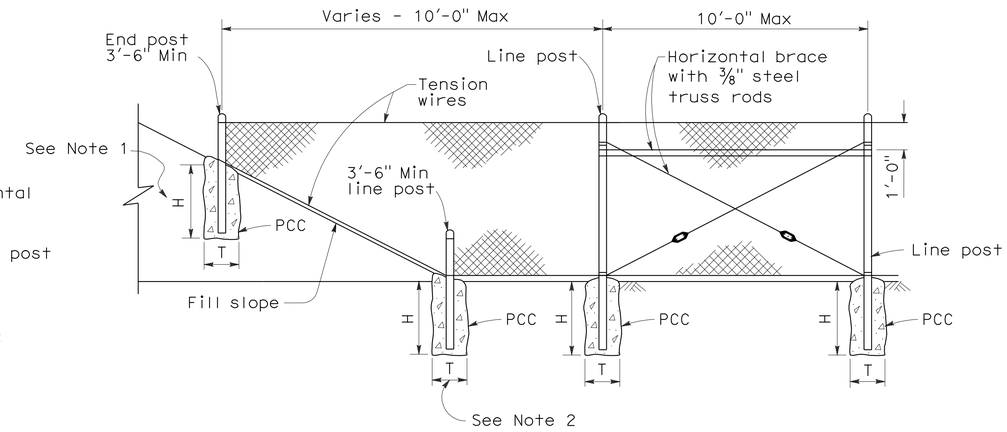

METHOD OF ERECTING FENCE FOR FILL SLOPE

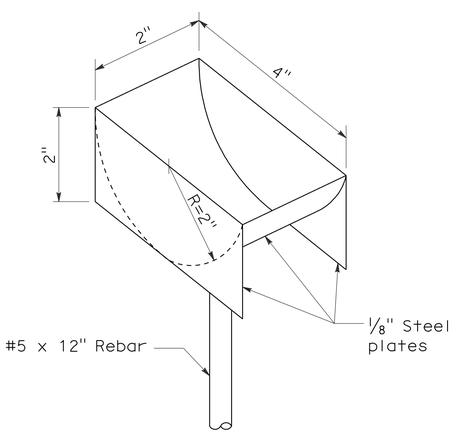

PLUNGER CUP DETAIL

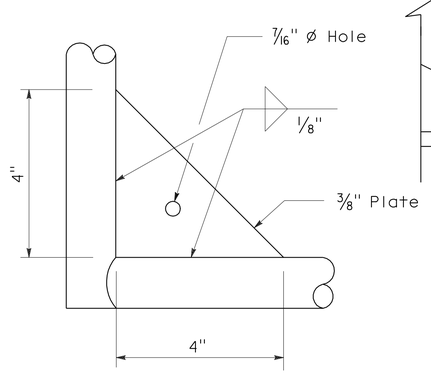

GUSSET DETAIL

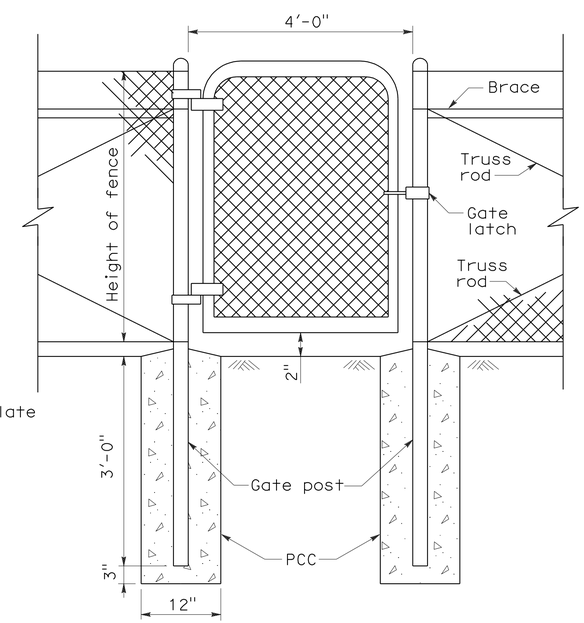

WALK GATE

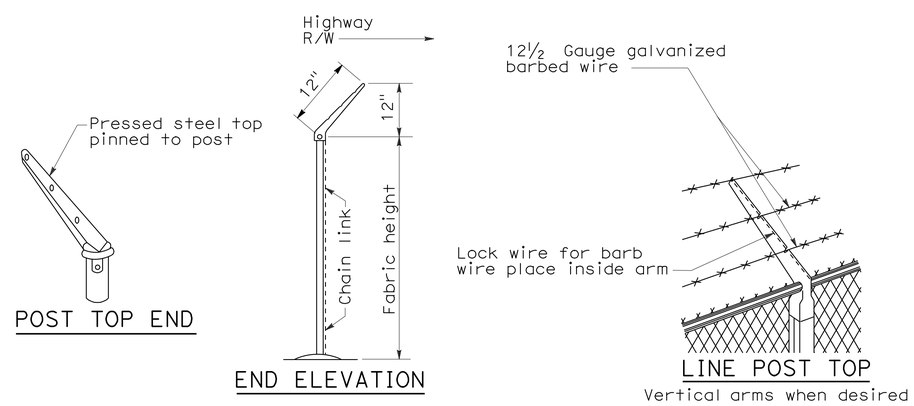

POST TOP END

END ELEVATION

LINE POST TOP
Vertical arms when desired

BARBED WIRE POST TOP
See Note 3

STATE OF CALIFORNIA
DEPARTMENT OF TRANSPORTATION

CHAIN LINK FENCE DETAILS

NO SCALE

NSP A85A DATED JUNE 5, 2009 SUPPLEMENTS THE STANDARD PLANS BOOK DATED MAY 2006.

NEW STANDARD PLAN NSP A85A

2006 NEW STANDARD PLAN NSP A85A

5-7-09

DIST	COUNTY	ROUTE	POST MILES TOTAL PROJECT	SHEET NO.	TOTAL SHEETS
05	Mon	101	53.1/53.9	39	70

REGISTERED CIVIL ENGINEER

June 5, 2009
PLANS APPROVAL DATE

REGISTERED PROFESSIONAL ENGINEER Glenn DeCou No. C34547 Exp. 9-30-09 CIVIL STATE OF CALIFORNIA

The State of California or its officers or agents shall not be responsible for the accuracy or completeness of electronic copies of this plan sheet.

To accompany plans dated 9-20-10

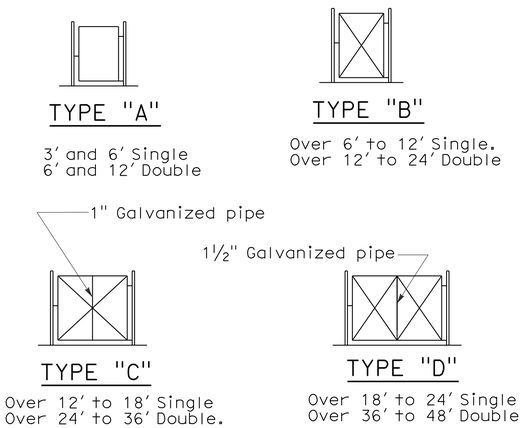

TYPICAL FRAMEWORK SHOWING NUMBER OF BAYS IN GATE

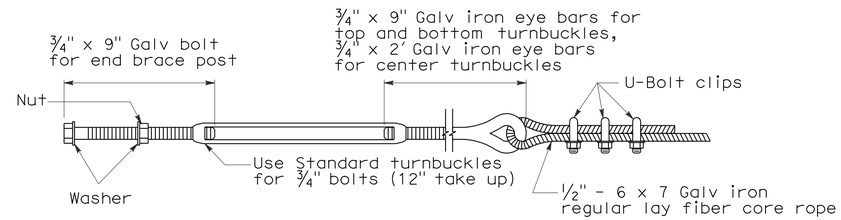

TURNBUCKLE A

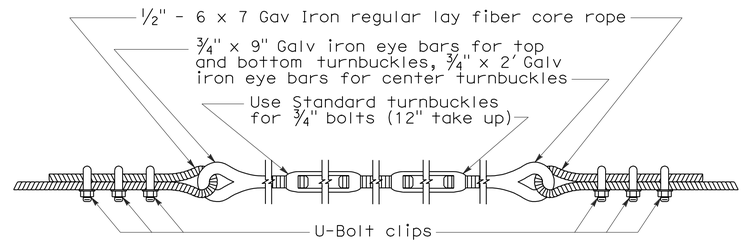

TURNBUCKLE B

NOTES:

1. All material for abutment connection to be galvanized.
2. The chain link fabric shall be replaced by barbed wire strands at 12" maximum centers between the double posts.
3. When the width of the culvert makes it necessary to anchor a post to the top of the culvert, a cast iron shoe or other device approved by the Engineer shall be used.
4. Fencing over stream and around headwall may also use Barbed Wire or Wire Mesh fencing with either wood post or steel post installation.
5. See Revised Standard Plan RSP A85 for Chain Link fence dimensions. See Standard Plan A86 for Barbed Wire and Wire Mesh fence dimensions and for wood post and steel post installation.

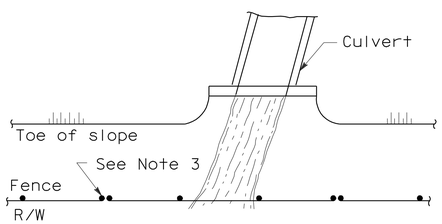

PLAN

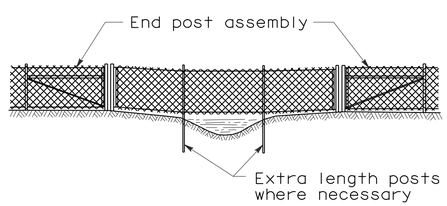

ELEVATION

INSTALLATION OVER STREAM

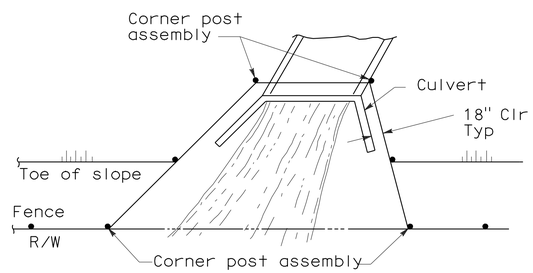

PLAN

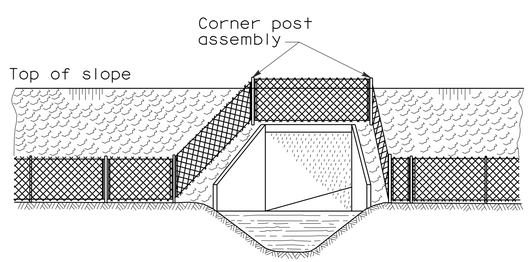

ELEVATION

INSTALLATION AROUND HEADWALL

See Note 4

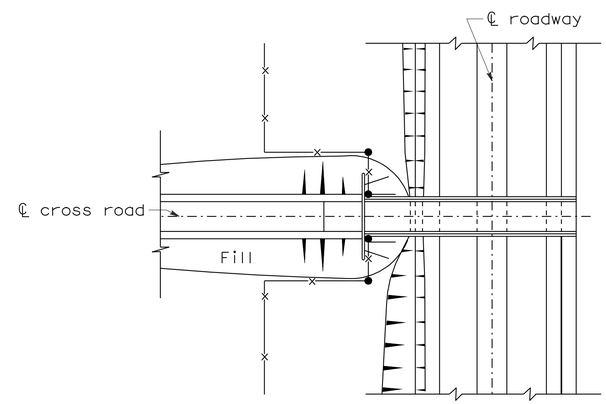

PLAN OF ROADWAY - UNDERPASS

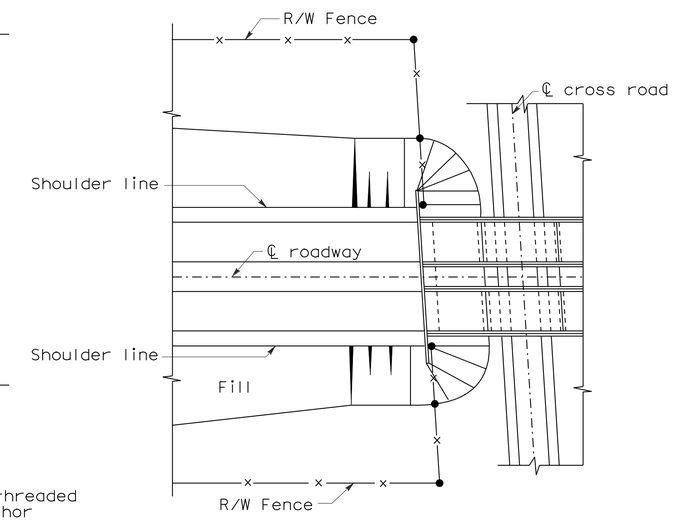

PLAN OF ROADWAY - OVERPASS

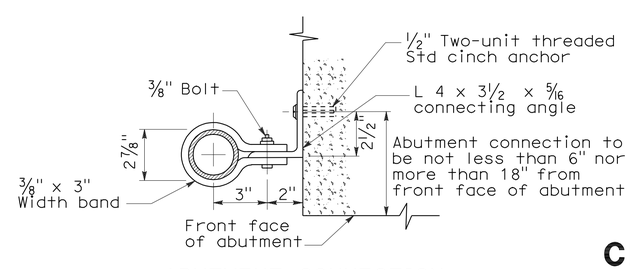

ABUTMENT CONNECTION

TYPICAL INSTALLATION AT BRIDGES

STATE OF CALIFORNIA
DEPARTMENT OF TRANSPORTATION

CHAIN LINK FENCE DETAILS

NO SCALE

NSP A85B DATED JUNE 5, 2009 SUPPLEMENTS THE STANDARD PLANS BOOK DATED MAY 2006.

NEW STANDARD PLAN NSP A85B

2006 NEW STANDARD PLAN NSP A85B

5-12-09

DIST	COUNTY	ROUTE	POST MILES TOTAL PROJECT	SHEET NO.	TOTAL SHEETS
05	Mon	101	53.1/53.9	40	70

REGISTERED CIVIL ENGINEER

November 17, 2006
PLANS APPROVAL DATE

REGISTERED PROFESSIONAL ENGINEER Michael Janzen No. 44788 Exp. 03-31-08 CIVIL STATE OF CALIFORNIA

The State of California or its officers or agents shall not be responsible for the accuracy or completeness of electronic copies of this plan sheet.

To accompany plans dated 9-20-10

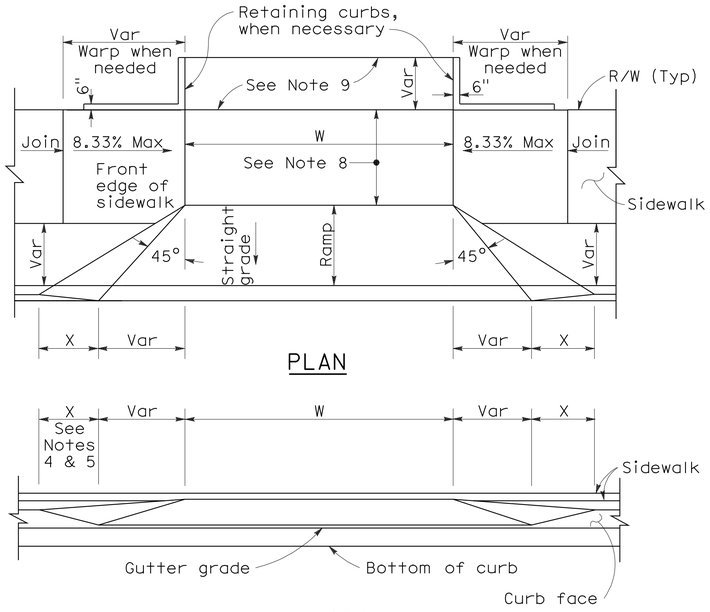

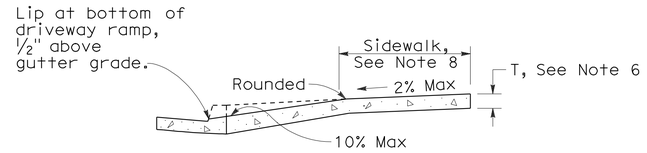

CASE A

Typical driveway, sidewalk not depressed

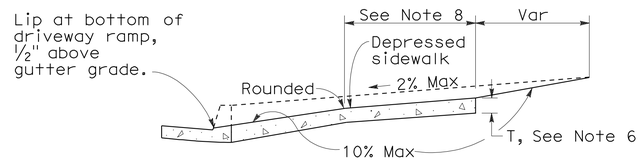

CASE B

Driveway with depressed sidewalk

SECTIONS

CURB QUANTITIES

TYPE	CUBIC YARDS PER LINEAR FOOT
A1-6	0.02585
A1-8	0.03084
A2-6	0.05903
A2-8	0.06379
A3-6	0.01036
A3-8	0.01435
B1-4	0.02185
B1-6	0.02930
B2-4	0.05515
B2-6	0.06171
B3-4	0.00641
B3-6	0.01074
B4	0.05709
D-4	0.04083
D-6	0.06804
E	0.06661

TABLE A

CURB TYPE	DIMENSIONS "H1"	"H2"	"W1"	"W2"
A1-6	1'-2"	6"	7½"	1½"
A1-8	1'-4"	8"	8"	2"
A2-6	1'-0"	6"	2'-7½"	1½"
A2-8	1'-2"	8"	2'-8"	2"
A3-6	6"	5"	7¼"	1¼"
A3-8	8"	7"	7¾"	1¾"
B1-4	1'-0"	4"	7½"	2½"
B1-6	1'-2"	6"	9"	4"
B2-4	10"	4"	2'-7½"	2½"
B2-6	1'-0"	6"	2'-9"	4"
B3-4	4"	3"	7"	2"
B3-6	6"	5"	8½"	3½"
D-4	10"	4"	1'-6"	1'-1"
D-6	1'-0"	6"	2'-2"	1'-8"

DRIVEWAYS

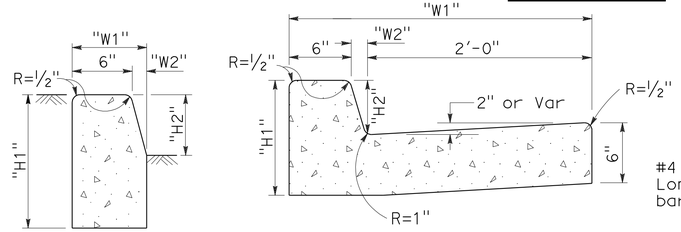

TYPE A1 CURBS

See Table A

TYPE A2 CURBS

See Table A

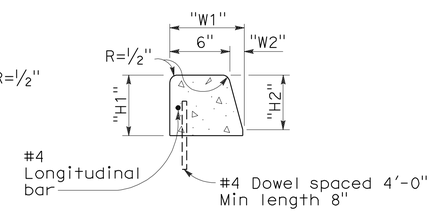

TYPE A3 CURBS

Superimposed on existing pavement
See Table A

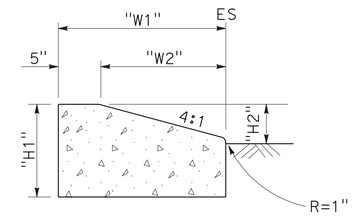

TYPE D CURBS

See Table A

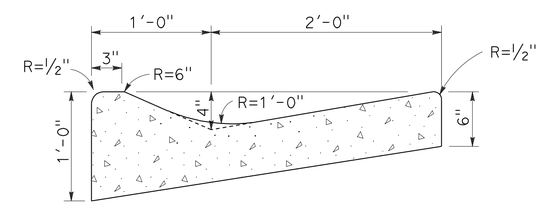

TYPE E CURB

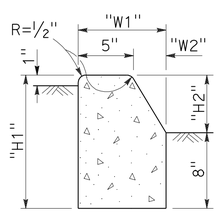

TYPE B1 CURBS

See Table A

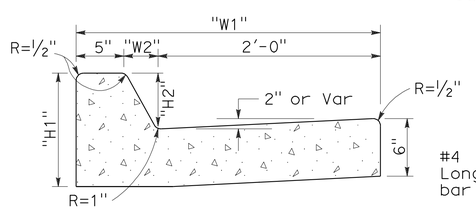

TYPE B2 CURBS

See Table A

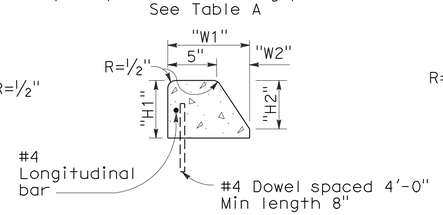

TYPE B3 CURBS

Superimposed on existing pavement
See Table A

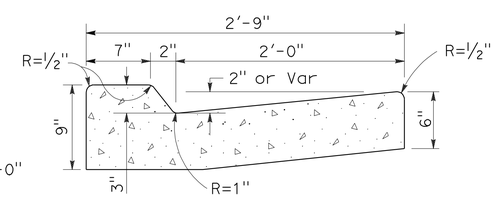

TYPE B4 CURBS

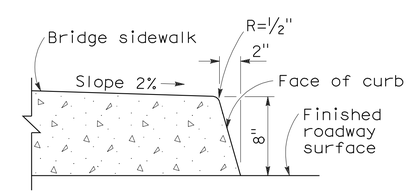

TYPE H CURB

On Bridges

CURBS

NOTES:

1. Case A driveway section typically applies.
2. Use Case B driveway section when ramp slopes would exceed 10% in Case A.
3. Use Case B driveway section when sidewalk cross slope would exceed 2% in Case A.
4. X=3'-0" except for curb heights over 10" where 4:1 slopes shall be used on curb slope.
5. X is a variable when sidewalk is located where wheelchairs may traverse the surface. Slopes shall not exceed 8.33%.
6. Sidewalk and ramp thickness "T" at driveway shall be 4" for residental and 6" for commercial.
7. Difference in slope of the driveway ramp and the slope of a line between the gutter and a point on the roadway 5'-0" from gutter line shall not exceed 15%. Reduce driveway ramp slope, not gutter slope, where required.
8. Minimum width of clear passageway for sidewalk shall be 4'-0".
9. Retaining curbs and acquisition of construction easement may be necessary for narrow sidewalks or curb heights in excess of 6".
10. Across the pedestrian route at curb ramp locations, the gutter pan slope shall not exceed 1" of depth for each 2'-0" of width.

STATE OF CALIFORNIA
DEPARTMENT OF TRANSPORTATION

CURBS AND DRIVEWAYS

NO SCALE

RSP A87A DATED NOVEMBER 17, 2006 SUPERSEDES STANDARD PLAN A87A DATED MAY 1, 2006 - PAGE 113 OF THE STANDARD PLANS BOOK DATED MAY 2006.

REVISED STANDARD PLAN RSP A87A

2006 REVISED STANDARD PLAN RSP A87A

10-25-06

DIST	COUNTY	ROUTE	POST MILES TOTAL PROJECT	SHEET NO.	TOTAL SHEETS
05	Mon	101	53.1/53.9	41	70

REGISTERED CIVIL ENGINEER

September 1, 2006
PLANS APPROVAL DATE

REGISTERED PROFESSIONAL ENGINEER
Hector David Cordova
No. C41957
Exp. 3-31-08
CIVIL
STATE OF CALIFORNIA

The State of California or its officers or agents shall not be responsible for the accuracy or completeness of electronic copies of this plan sheet.

To accompany plans dated 9-20-10

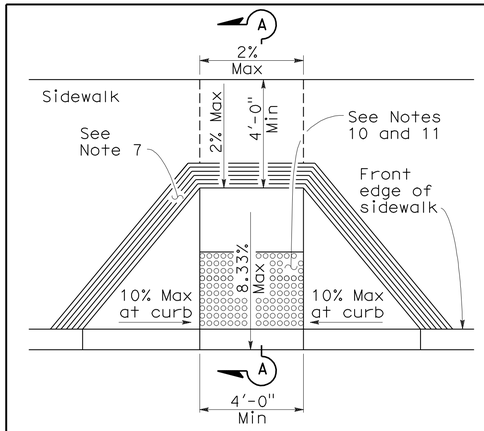

CASE A

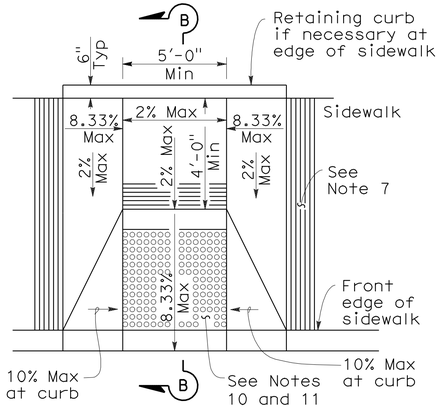

CASE B

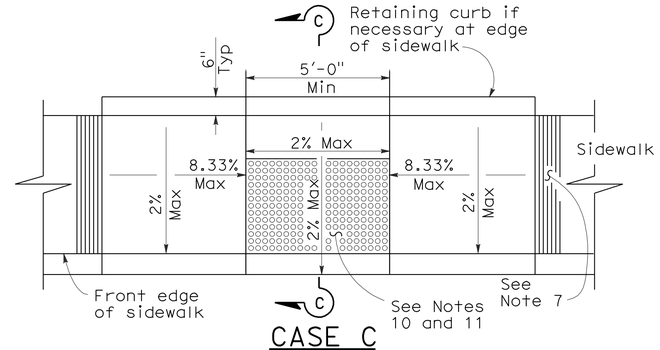

CASE C

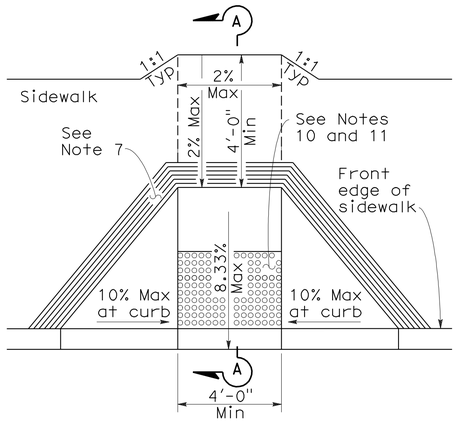

CASE D

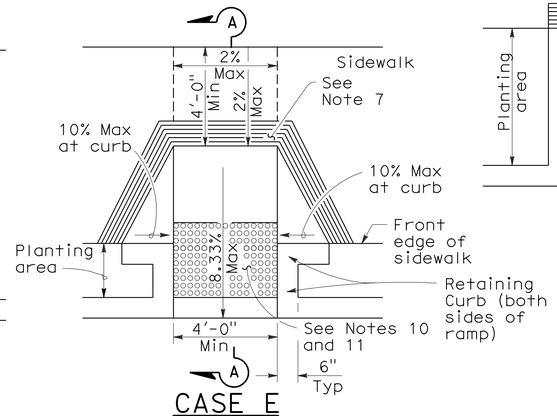

CASE E

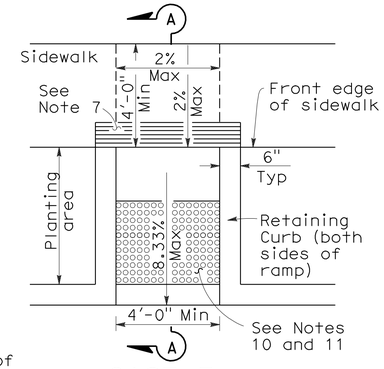

CASE F

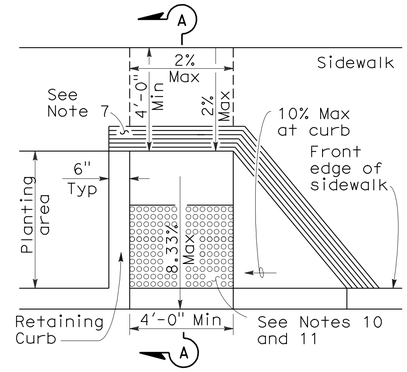

CASE G
See Note 4

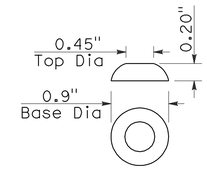

RAISED TRUNCATED DOME

SECTION A-A

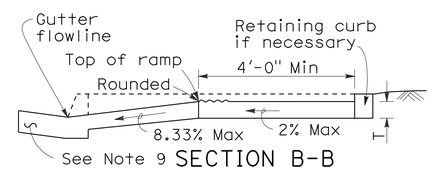

SECTION B-B
Depress entire sidewalk as required

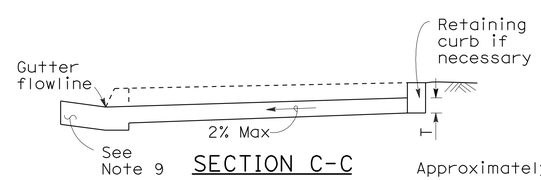

SECTION C-C

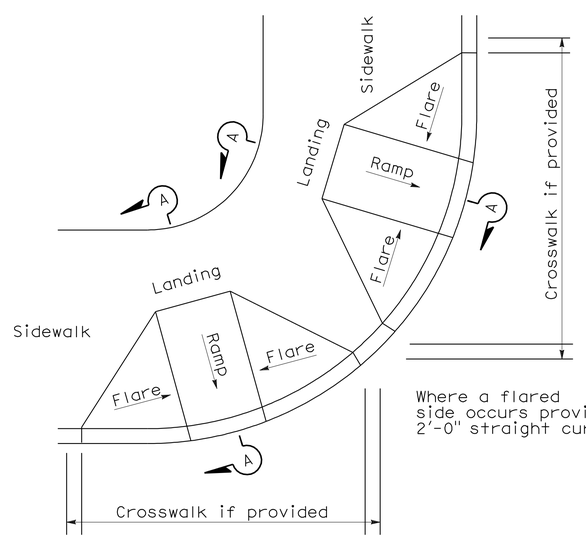

DETAIL A

TYPICAL TWO-RAMP CORNER INSTALLATION
See Note 1

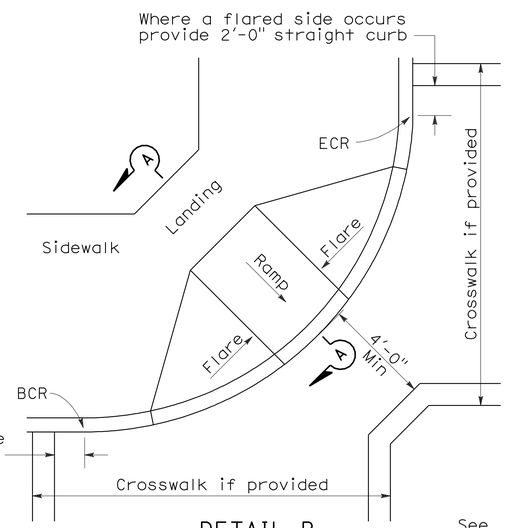

DETAIL B

TYPICAL ONE-RAMP CORNER INSTALLATION
See Notes 1 and 3

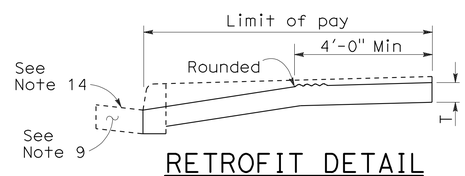

RETROFIT DETAIL
Existing curb and sidewalk

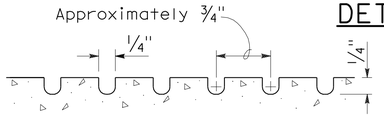

GROOVING DETAIL

NOTES:

1. As site conditions dictate, Case A through Case G curb ramps may be used for corner installations similar to those shown in Detail A and Detail B. The case of curb ramps used in Detail A do not have to be the same. Case A through Case G curb ramps also may be used at mid block locations, as site conditions dictate.
2. If distance from curb to back of sidewalk is too short to accommodate ramp and 4'-0" platform (landing) as shown in Case A, the sidewalk may be depressed longitudinally as in Case B, or C or may be widened as in Case D.
3. When ramp is located in center of curb return, crosswalk configuration must be similar to that shown for Detail B.
4. As site conditions dictate, the retaining curb side and the flared side of the Case G ramp shall be constructed in reversed position.
5. If located on a curve, the sides of the ramp need not be parallel, but the minimum width of the ramp shall be 4'-0".
6. Side slope of ramp flares vary uniformly from a maximum of 10% at curb to conform with longitudinal sidewalk slope adjacent to top of the ramp, except in Case C and Case F.
7. The curb ramp shall be outlined, as shown, with a 1'-0" wide border with 1/4" grooves approximately 3/4" on center. See grooving detail.
8. Transitions from ramps and landing to walks, gutters or streets shall be flush and free of abrupt changes.
9. Maximum slopes of adjoining gutters, the road surface immediately adjacent to the curb ramp or accessible route shall not exceed 5 percent within 4'-0" of the top and bottom of the curb ramp.
10. Curb ramps shall have a detectable warning surface that extends the full width and 3'-0" depth of the ramp. Detectable Warning Surfaces shall conform to the details on this plan and the requirements in the Special Provisions.
11. The edge of the detectable warning surface nearest the street shall be between 6" and 8" from the gutter flowline.
12. Sidewalk and ramp thickness, "T", shall be 3½" minimum.
13. Utility pull boxes, manholes, vaults and all other utility facilities within the boundaries of the curb ramp will be relocated or adjusted to grade by the owner prior to, or in conjunction with, curb ramp construction.
14. For retrofit conditions, removal and replacement of curb apron will be at the Contractor's option, unless otherwise shown on project plans.

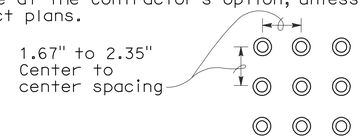

RAISED TRUNCATED DOME PATTERN (IN-LINE)

DETECTABLE WARNING SURFACE
See Note 10

STATE OF CALIFORNIA
DEPARTMENT OF TRANSPORTATION

CURB RAMP DETAILS

NO SCALE

RSP A88A DATED SEPTEMBER 1, 2006 SUPERSEDES STANDARD PLAN A88A DATED MAY 1, 2006 - PAGE 115 OF THE STANDARD PLANS BOOK DATED MAY 2006.

REVISED STANDARD PLAN RSP A88A

2006 REVISED STANDARD PLAN RSP A88A

8-3-06

DIST	COUNTY	ROUTE	POST MILES TOTAL PROJECT	SHEET NO.	TOTAL SHEETS
05	Mon	101	53.1/53.9	42	70

LICENSED LANDSCAPE ARCHITECT

June 5, 2009
PLANS APPROVAL DATE

The State of California or its officers or agents shall not be responsible for the accuracy or completeness of electronic copies of this plan sheet.

LICENSED LANDSCAPE ARCHITECT — Gregory A. Balzer 2878 — Registered Expires 2-28-11 — Renewal Date 5-14-09 — Date — STATE OF CALIFORNIA

To accompany plans dated 9-20-10

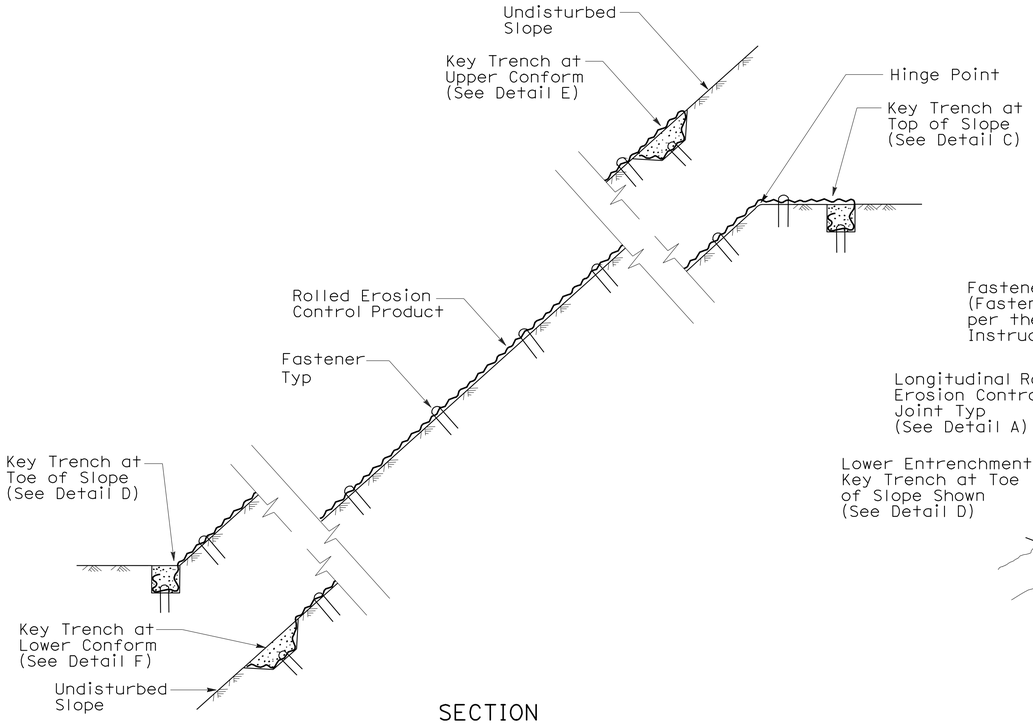

SECTION

ROLLED EROSION CONTROL PRODUCT ON SLOPE WITH VARIOUS KEY ENTRENCHMENTS

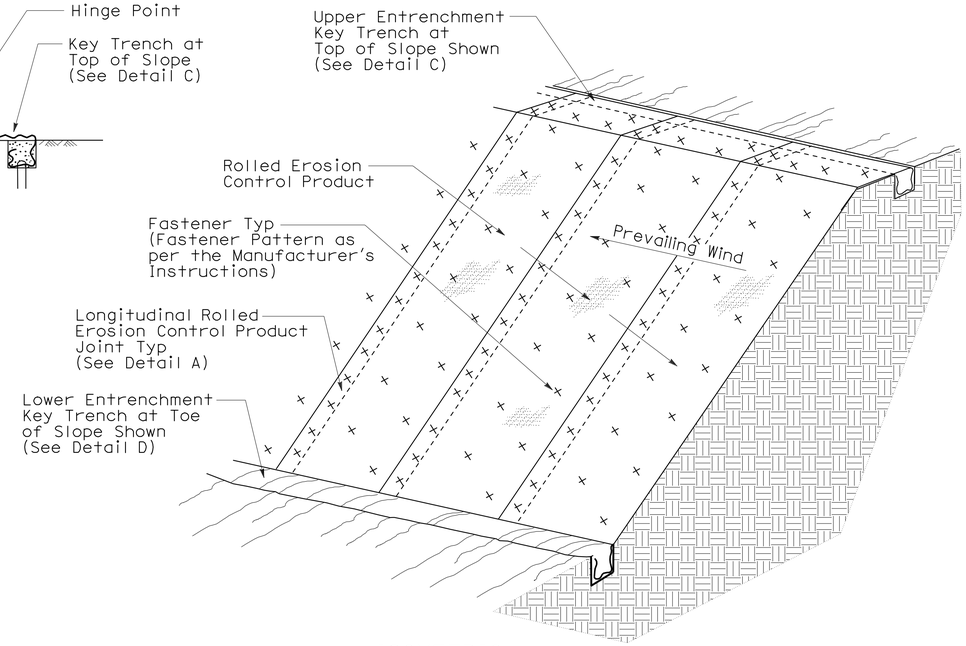

ISOMETRIC

ROLLED EROSION CONTROL PRODUCT ON SLOPE

NOTE:

1. Fiber Roll/Compost Sock shown for reference purposes only.
2. If transverse rolled erosion control product joints are required on slopes, see Detail B.

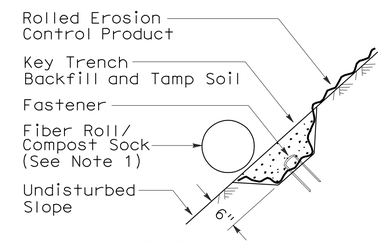

SECTION

DETAIL F
KEY TRENCH AT LOWER CONFORM

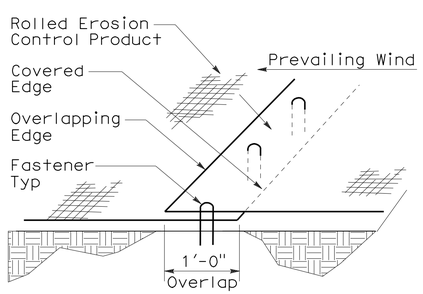

PERSPECTIVE

DETAIL A
LONGITUDINAL ROLLED EROSION CONTROL PRODUCT JOINT

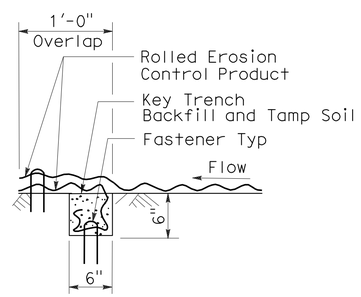

SECTION

DETAIL B
TRANSVERSE ROLLED EROSION CONTROL PRODUCT JOINT

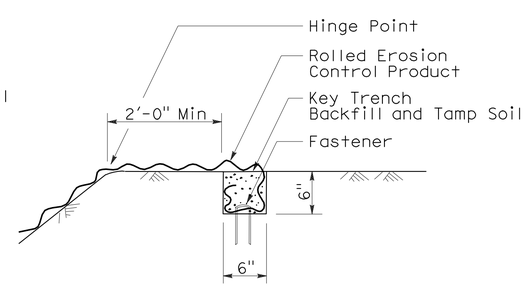

SECTION

DETAIL C
KEY TRENCH AT TOP OF SLOPE

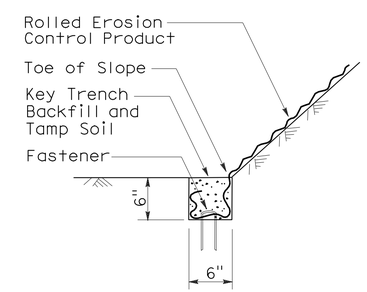

SECTION

DETAIL D
KEY TRENCH AT TOE OF SLOPE

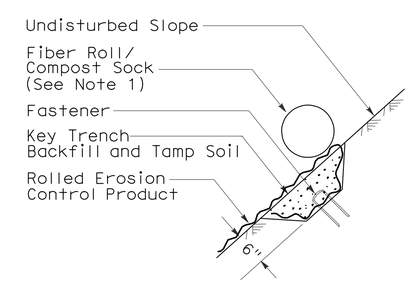

SECTION

DETAIL E
KEY TRENCH AT UPPER CONFORM

STATE OF CALIFORNIA
DEPARTMENT OF TRANSPORTATION

ROLLED EROSION CONTROL PRODUCT

NO SCALE

NSP H53 DATED JUNE 5, 2009 SUPPLEMENTS
THE STANDARD PLANS BOOK DATED MAY 2006.

NEW STANDARD PLAN NSP H53

2006 NEW STANDARD PLAN NSP H53

3-4-09

DIST	COUNTY	ROUTE	POST MILES TOTAL PROJECT	SHEET NO.	TOTAL SHEETS
05	Mon	101	53.1/53.9	43	70

Randell D. Hiatt
REGISTERED CIVIL ENGINEER

June 6, 2008
PLANS APPROVAL DATE

REGISTERED PROFESSIONAL ENGINEER
Randell D. Hiatt
No. C50200
Exp. 6-30-09
CIVIL
STATE OF CALIFORNIA

The State of California or its officers or agents shall not be responsible for the accuracy or completeness of electronic copies of this plan sheet.

To accompany plans dated 9-20-10

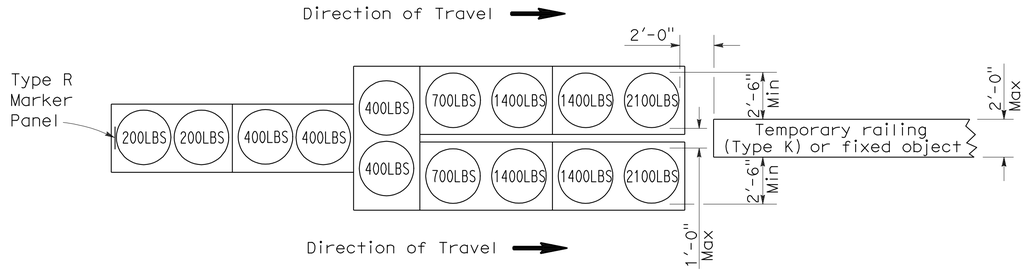

ARRAY 'TU14'

Approach speed 45 mph or more

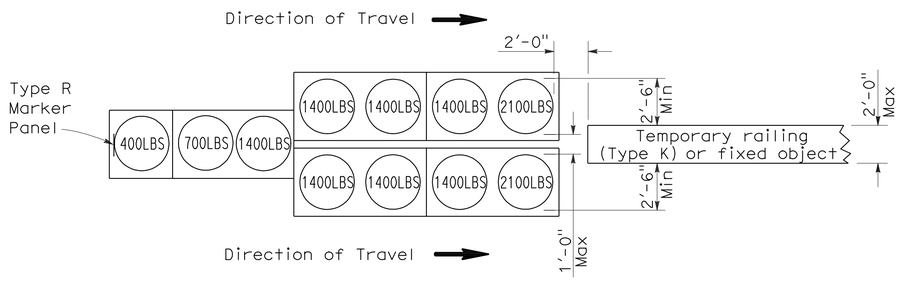

ARRAY 'TU11'

Approach speed less than 45 mph

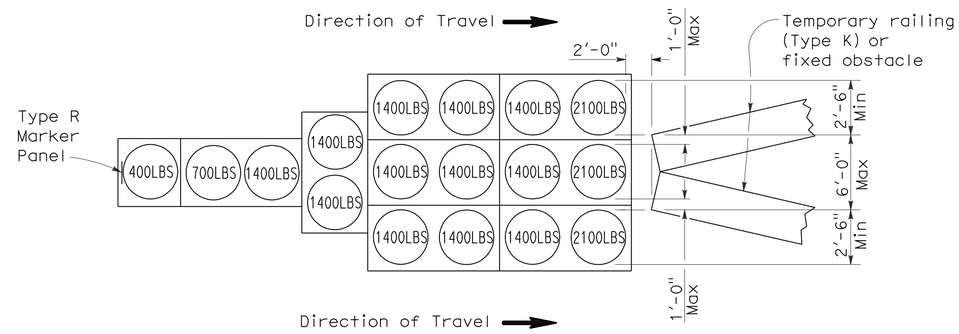

ARRAY 'TU17'

Approach speed less than 45 mph

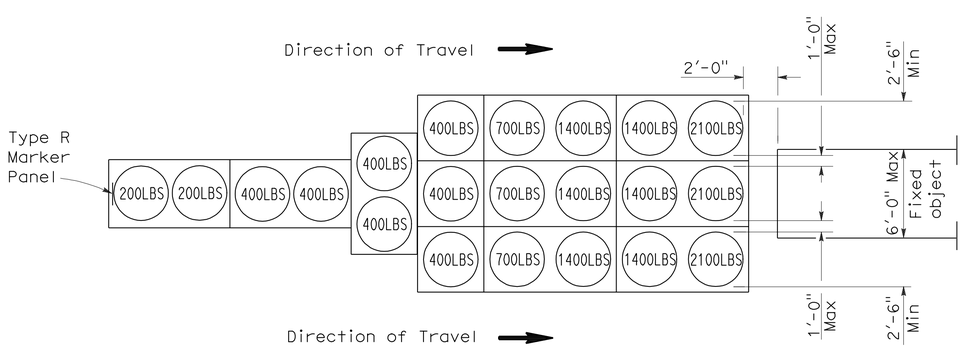

ARRAY 'TU21'

Approach speed 45 mph or more

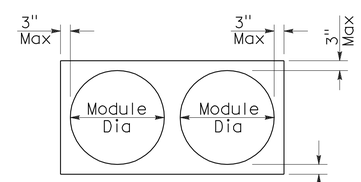

PLAN

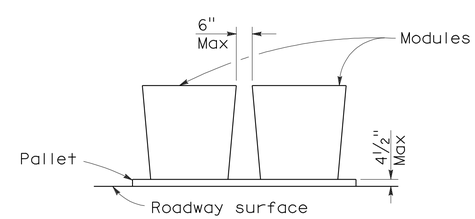

ELEVATION

CRASH CUSHION PALLET DETAIL

See Note 7

NOTES:

1. (XXX) Indicates sand filled module location and weight of sand in pounds for each module. Module spacing is based on the greater diameter of the module.
2. All sand weights are nominal.
3. Temporary crash cushion arrays shall not encroach on the traveled way.
4. Place the top of Type R marker panel 1" below the module lid.
5. Refer to Standard Plan A73B for marker details.
6. Approach speeds indicated conform to NCHRP 350 Report criteria.
7. Use of pallets is optional.

STATE OF CALIFORNIA
DEPARTMENT OF TRANSPORTATION

TEMPORARY CRASH CUSHION, SAND FILLED (UNIDIRECTIONAL)

NO SCALE

RSP T1A DATED JUNE 6, 2008 SUPERSEDES STANDARD PLAN T1A
DATED MAY 1, 2006 - PAGE 211 OF THE STANDARD PLANS BOOK DATED MAY 2006.

REVISED STANDARD PLAN RSP T1A

2006 REVISED STANDARD PLAN RSP T1A

DIST	COUNTY	ROUTE	POST MILES TOTAL PROJECT	SHEET NO.	TOTAL SHEETS
05	Mon	101	53.1/53.9	44	70

Randell D. Hiatt
REGISTERED CIVIL ENGINEER

June 6, 2008
PLANS APPROVAL DATE

REGISTERED PROFESSIONAL ENGINEER
Randell D. Hiatt
No. C50200
Exp. 6-30-09
CIVIL
STATE OF CALIFORNIA

The State of California or its officers or agents shall not be responsible for the accuracy or completeness of electronic copies of this plan sheet.

To accompany plans dated 9-20-10

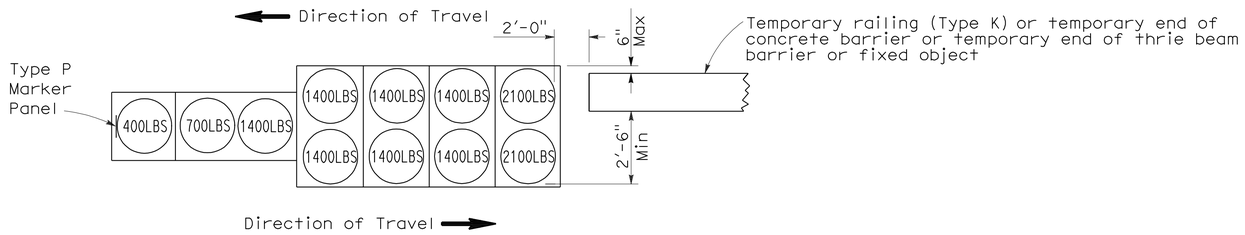

ARRAY 'TB11'

Approach speed less than 45 mph

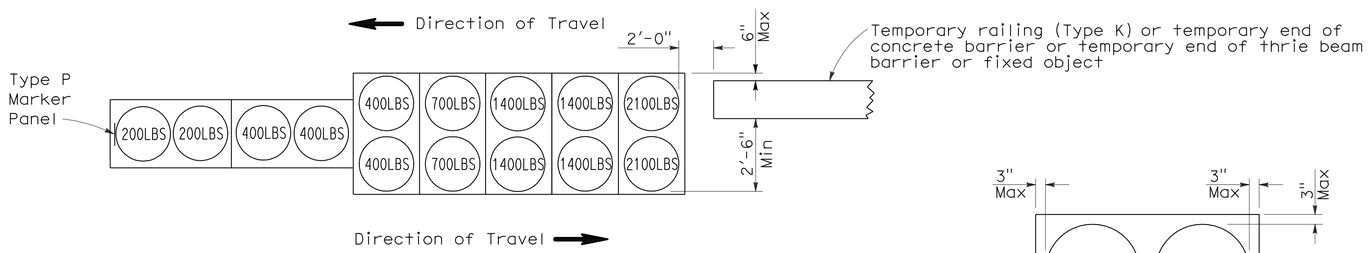

ARRAY 'TB14'

Approach speed 45 mph or more

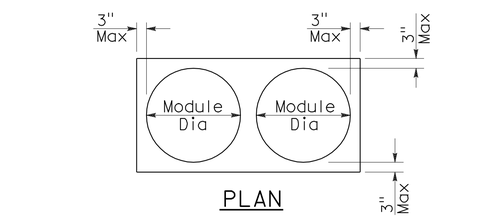

PLAN

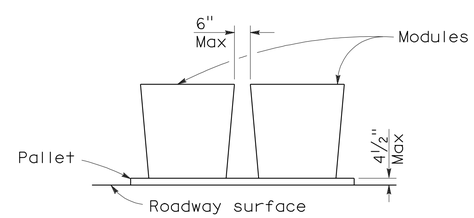

ELEVATION

CRASH CUSHION PALLET DETAIL

See Note 7

NOTES:

1. (XXX) Indicates sand filled module location and weight of sand in pounds for each module. Module spacing is based on the greater diameter of the module.
2. All sand weights are nominal.
3. Temporary crash cushion arrays shall not encroach on the traveled way.
4. Place the Type P marker panel so that the bottom of the panel rests upon the pallet.
5. Refer to Standard Plan A73B for marker details.
6. Approach speeds indicated conform to NCHRP 350 Report criteria.
7. Use of pallets is optional.

STATE OF CALIFORNIA
DEPARTMENT OF TRANSPORTATION

TEMPORARY CRASH CUSHION, SAND FILLED (BIDIRECTIONAL)

NO SCALE

RSP T1B DATED JUNE 6, 2008 SUPERSEDES STANDARD PLAN T1B
DATED MAY 1, 2006 - PAGE 212 OF THE STANDARD PLANS BOOK DATED MAY 2006.

REVISED STANDARD PLAN RSP T1B

2006 REVISED STANDARD PLAN RSP T1B

5-15-08

DIST	COUNTY	ROUTE	POST MILES TOTAL PROJECT	SHEET NO.	TOTAL SHEETS
05	Mon	101	53.1/53.9	45	70

Randell D. Hiatt
REGISTERED CIVIL ENGINEER

June 6, 2008
PLANS APPROVAL DATE

REGISTERED PROFESSIONAL ENGINEER
Randell D. Hiatt
No. C50200
Exp. 6-30-09
CIVIL
STATE OF CALIFORNIA

The State of California or its officers or agents shall not be responsible for the accuracy or completeness of electronic copies of this plan sheet.

To accompany plans dated 9-20-10

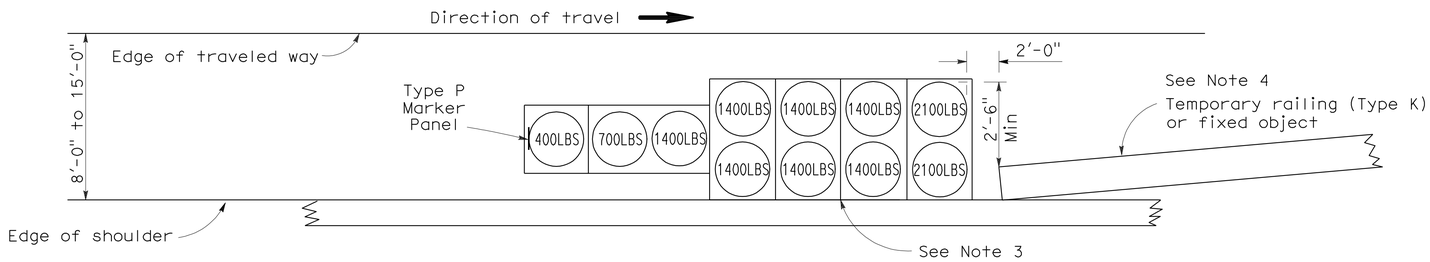

ARRAY 'TS11'

Approach speed less than 45 mph
See Note 9

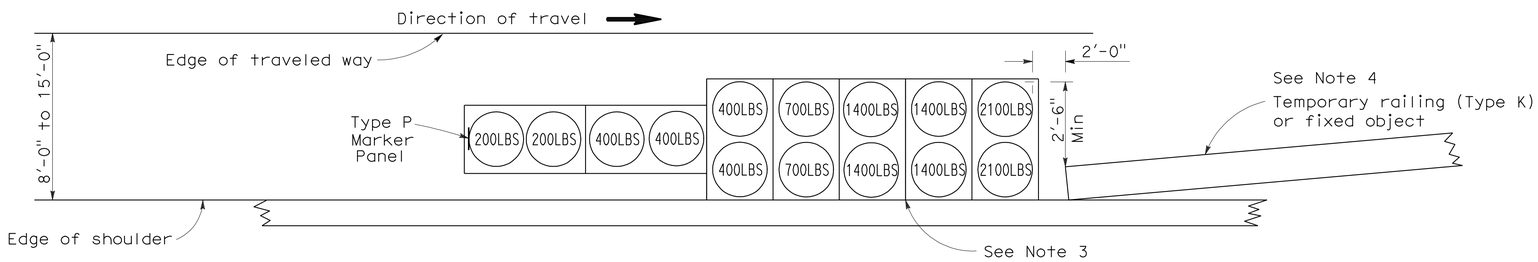

ARRAY 'TS14'

Approach speed 45 mph or more
See Note 9

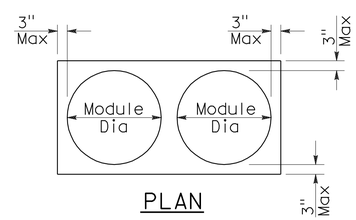

PLAN

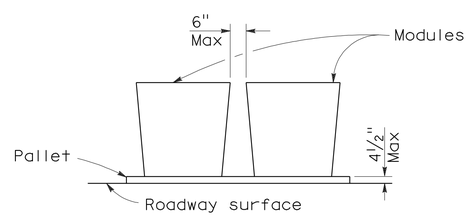

ELEVATION

CRASH CUSHION PALLET DETAIL

See Note 11

NOTES:

1. (XXX) Indicates sand filled module location and weight of sand in pounds for each module. Module spacing is based on the greater diameter of the module.
2. All sand weights are nominal.
3. The temporary crash cushion arrays shown on this plan shall be used only in locations where there will be traffic on one side of the temporary crash cushion array.
4. If the fixed object or approach end of the temporary railing is less than 15'-0" from the edge of traveled way, a temporary crash cushion is required in a construction or work zone.
5. Temporary crash cushion arrays shall not encroach on the traveled way.
6. Arrays for median shoulders shall conform to details shown on this plan for outside shoulders.
7. Place the Type P marker panel so that the bottom of the panel rests upon the pallet and faces traffic.
8. Refer to Standard Plan A73B for marker details.
9. For shoulder widths less than 8'-0", appropriate approved crash cushion protection, other than sand filled modules, shall be provided at fixed objects and at approach ends of temporary railing. The specific type of crash cushion shall be as shown on the project plans or as specified in the Special Provisions, or if not shown on the project plans or specified in the Special Provisions, shall be as approved by the Engineer.
10. Approach speeds indicated conform to NCHRP 350 Report criteria.
11. Use of pallets is optional.

STATE OF CALIFORNIA
DEPARTMENT OF TRANSPORTATION

TEMPORARY CRASH CUSHION, SAND FILLED (SHOULDER INSTALLATIONS)

NO SCALE

RSP T2 DATED JUNE 6, 2008 SUPERSEDES STANDARD PLAN T2
DATED MAY 1, 2006 - PAGE 213 OF THE STANDARD PLANS BOOK DATED MAY 2006.

REVISED STANDARD PLAN RSP T2

2006 REVISED STANDARD PLAN RSP T2

5-15-08

DIST	COUNTY	ROUTE	POST MILES TOTAL PROJECT	SHEET NO.	TOTAL SHEETS
05	Mon	101	53.1/53.9	46	70

REGISTERED CIVIL ENGINEER

October 5, 2007
PLANS APPROVAL DATE

REGISTERED PROFESSIONAL ENGINEER Efthymios Delis No. C51434 Exp. 6-30-08 CIVIL STATE OF CALIFORNIA

The State of California or its officers or agents shall not be responsible for the accuracy or completeness of electronic copies of this plan sheet.

To accompany plans dated 9-20-10

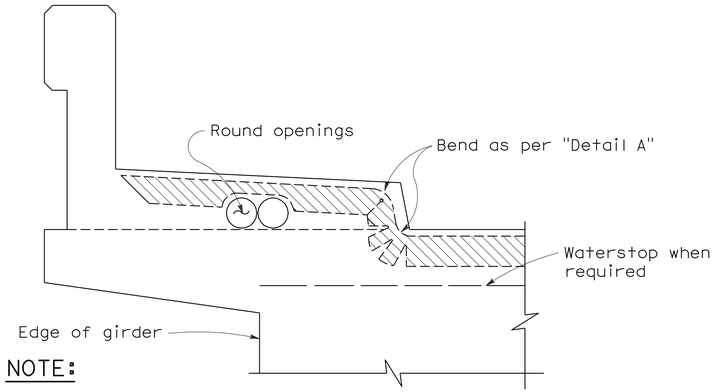

NOTE:

Type "B" seal shown. Type "A" seals to comform to the general path of seal shown, cuts for bending not required. Bend Type "A" seals 3" up into curb or barrier rail on only the low end of the seal.

CONCRETE BARRIER AND SIDEWALK

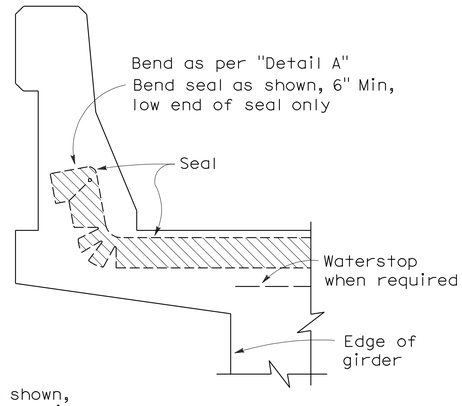

CONCRETE BARRIER

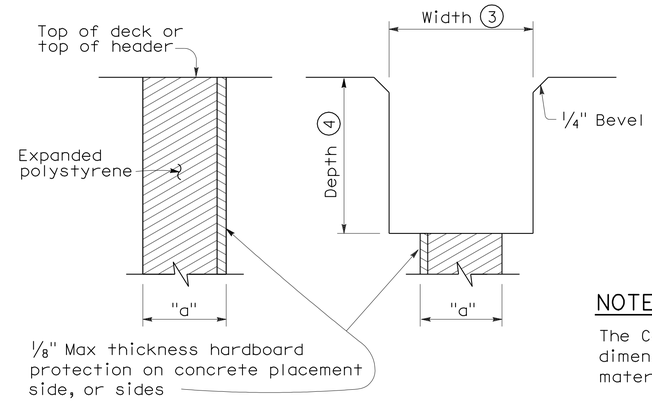

FORMING DETAIL SAWCUT DETAIL

NOTE:

The Contractor shall verify all controlling field dimensions before ordering or fabricatiing any material.

JOINT SEALS DETAILS

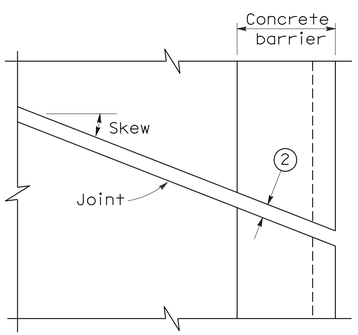

PLAN OF JOINT (SKEW ≤ 20°)

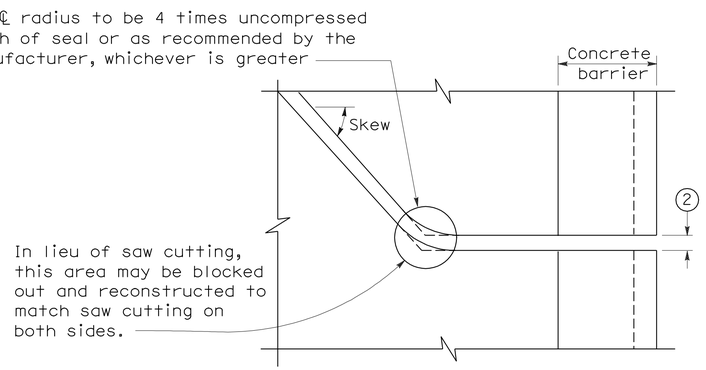

PLAN OF JOINT (SKEW > 20°)

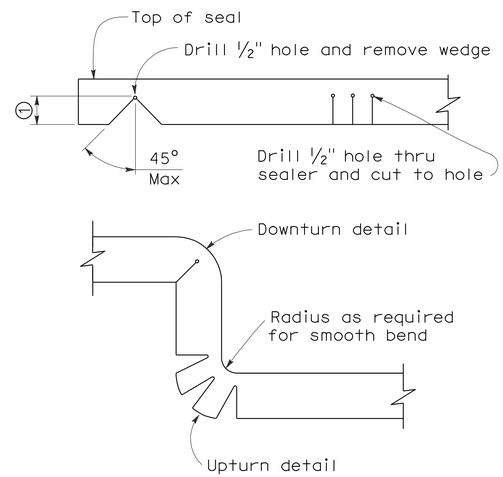

DETAIL A

NOTES:

1. Make smooth cuts from the bottom of seal to 1½" clear of top leaving at least one complete cell between the top of the cut and top of the seal. When necessary cut back of seal to clear conduit and round openings.
2. Opening in barrier to match width of sawn deck joint.
3. Sawcut groove widths shall be as ordered by the Engineer.
4. Depth of sawcut: Type A - Depth to be 2" minimum.
   Type B - Depth to be equal to or greater than the depth of seal measured along the contact surface, when compressed to minimum width position (W_2) plus dimensions shown.
5. MR (movement rating) as shown on other plan sheets.
6. Other depths must be approved by the Engineer.

DIMENSIONS "a" OF JOINT REQUIRED

Movement Rating (MR) (5)	Bridge Type	"a" Dimension Deck Concrete Placed		
		Winter	Fall-Spring	Summer
2"	All except CIP/PS	1½"	1¼"	¾"
	CIP/PS	1¼"	1"	½"
1½"	All except CIP/PS	1¼"	1"	½"
	CIP/PS	1"	¾"	½"
1"	All except CIP/PS	1"	¾"	½"
	CIP/PS	¾"	½"	½"
½"	All except CIP/PS	¾"	¾"	½"
	CIP/PS	½"	½"	½"

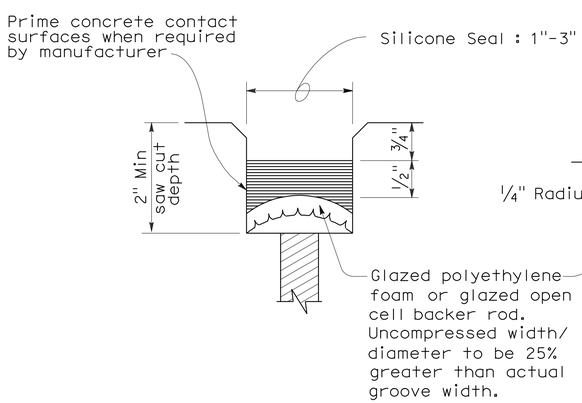

TYPE A SEAL

Movement rating : Silicone = 1" Max

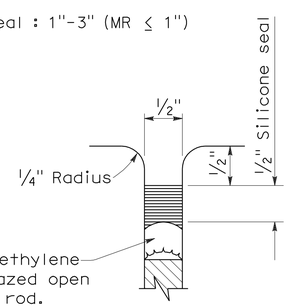

TYPE AL SEAL

Longitudinal joints only

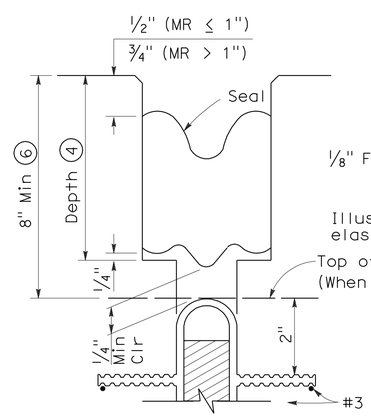

TYPE B JOINT SEAL
IN MINIMUM WIDTH POSITION (W_2)

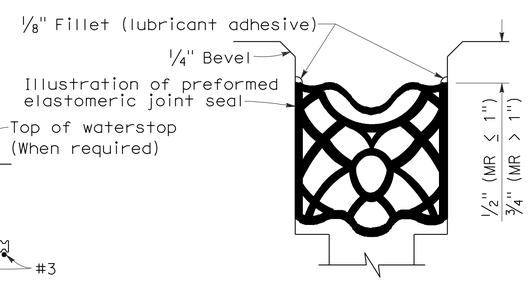

TYPE B SEAL

Movement Rating ≤ 2"

STATE OF CALIFORNIA
DEPARTMENT OF TRANSPORTATION

JOINT SEALS (MAXIMUM MOVEMENT RATING = 2")

NO SCALE

RSP B6-21 DATED OCTOBER 5, 2007 SUPERSEDES STANDARD PLAN B6-21 DATED MAY 1, 2006 - PAGE 258 OF THE STANDARD PLANS BOOK DATED MAY 2006.

REVISED STANDARD PLAN RSP B6-21

2006 REVISED STANDARD PLAN RSP B6-21

5-8-07

DIST	COUNTY	ROUTE	POST MILES TOTAL PROJECT	SHEET NO.	TOTAL SHEETS
05	Mon	101	53.1/53.9	47	70

REGISTERED ELECTRICAL ENGINEER

October 5, 2007
PLANS APPROVAL DATE

REGISTERED PROFESSIONAL ENGINEER Jeffery G. McRae No. E14512 Exp. 6-30-08 ELECTRICAL STATE OF CALIFORNIA

The State of California or its officers or agents shall not be responsible for the accuracy or completeness of electronic copies of this plan sheet.

To accompany plans dated 9-20-10

ELECTROLIERS

STANDARD TYPES
15, 15D
15 STRUCTURE
21, 21D STRUCTURE
30
31
32
35
36-20A

High mast light pole

Double Arm lighting standard

Existing electrolier

Electrolier foundation (Future installation)

NOTES:

1. Luminaires shall be 310 W HPS when installed on Type 21, 21D, 30, 31, 32, 35 and 36-20A Standards, unless otherwise specified. Luminaires shall be 200 W HPS when installed on other type standards or poles, unless otherwise specified.
2. Luminaires shall be the cutoff type, ANSI Type Ⅲ medium cutoff lighting distribution, unless otherwise specified.
3. Variations noted adjacent to symbol on project plans.

Electrolier (see project notes or project plans)

Luminaire on wood pole

STANDARD NOTES:

- AB — Abandon. If applied to conduit, remove conductors.
- BC — Install pull box in existing conduit run.
- BP — Pedestrian barricade, type as indicated on plan.
- CB — Install conduit into existing pull box.
- CC — Connect new and existing conduit. Remove existing conductors and install conductors as indicated.
- CF — Conduit to remain for future use. Remove conductors. Install pull wire or rope.
- DH — Detector handhole.
- FA — Foundation to be abandoned.
- IS — Install sign on signal mast arm.
- NS — No slip base on standard.
- PEC — Photoelectric control.
- PEU — Photoelectric unit.
- RC — Equipment or material to be removed and become the property of the Contractor.
- RE — Remove electrolier, fuses and ballast. Tape ends of conductors.
- RL — Relocate equipment.
- RR — Remove and reuse equipment.
- RS — Remove and salvage equipment.
- SC — Splice new to existing conductors.
- SD — Service disconnect.
- SF — Standard to remain for future use. Remove luminaire, pole conductors, fuses and ballast.
- TSP — Telephone service point.

ABBREVIATIONS AND EQUIPMENT DESIGNATIONS

PROPOSED	EXISTING	
BBS	bbs	Battery backup system
BC	bc	Bolt circle
C	C	Conduit
CCTV	cctv	Closed circuit television
CKT	ckt	Circuit
CMS	cms	Changeable message sign
DLC	dlc	Loop detector lead-in cable
EMS	ems	Extinguishable message sign
EVC	evc	Emergency vehicle cable
EVD	evd	Emergency vehicle detector
FB	fb	Flashing beacon
FBCA	fbca	Flashing beacon control assembly
FBS	fbs	Flashing beacon with slip base
FO	fo	Fiber optic
G	G	Ground (Equipment Grounding Conductor)
GFCI	GFCI	Ground fault circuit interrupt
HAR	har	Highway advisory radio
HEX	hex	Hexagonal
HPS	hps	High pressure sodium
IISNS	iisns	Internally illuminated street name sign
ISL	isl	Induction sign lighting
LED	led	Light emitting diode
LMA	lma	Luminaire mast arm
LPS	lps	Low pressure sodium
LTG	ltg	Lighting
LUM	lum	Luminaire
MAT	mat	Mast arm mounting vehicle signal faces, top attachment
MAS	mas	Mast arm mounting vehicle signal faces, side attachment
MAS-4A	mas-4A	Mast arm mounting vehicle signal faces, side attachment - 4 signal section
MAS-4B	mas-4B	
MAS-4C	mas-4C	
MAS-5A	mas-5A	Mast arm mounting vehicle signal faces, side attachment - 5 signal section
MAS-5B	mas-5B	
MC	mc	Mercury contactor
M/M	m/m	Multiple to multiple transformer
MT	mt	Conduit with pull wire or rope only
MTG	mtg	Mounting
	mv	Mercury vapor lighting fixture
N	N	Neutral (Grounded Conductor)
NC	NC	Normally closed
NO	NO	Normally open
PB	pb	Pull box
PEC	pec	Photoelectric control (Type Ⅰ, Ⅱ, Ⅲ, Ⅳ or Ⅴ as shown)
PED	ped	Pedestrian
PEU	peu	Photoelectric unit
PPB	ppb	Pedestrian push button
RL		Relocated equipment
RM	rm	Ramp metering
SB	sb	Slip base
SIC	sic	Signal interconnect cable
SIG	sig	Signal
SMA	sma	Signal mast arm
SNS	sns	Street name sign
SP	sp	Service point
TDC	tdc	Telephone demarcation cabinet
TMS	tms	Traffic monitoring station
TOS	tos	Traffic Operations System
VEH	veh	Vehicle
XFMR	xfmr	Transformer
COMM	comm	Communication
RWIS	rwis	Roadway weather information system

SOFFIT AND WALL MOUNTED LUMINAIRES

Pendant, 70 W HPS unless otherwise specified.

Flush, 70 W HPS unless otherwise specified.

Wall surface, 70 W HPS unless otherwise specified.

Existing soffit or wall luminaire to remain unmodified.

Existing soffit or wall luminaire to be modified as specified.

NOTE:

Arrow indicates "street side" of luminaire.

STATE OF CALIFORNIA
DEPARTMENT OF TRANSPORTATION

ELECTRICAL SYSTEMS (SYMBOLS AND ABBREVIATIONS)

NO SCALE

RSP ES-1A DATED OCTOBER 5, 2007 SUPERSEDES STANDARD PLAN ES-1A DATED MAY 1, 2006 - PAGE 400 OF THE STANDARD PLANS BOOK DATED MAY 2006.

REVISED STANDARD PLAN RSP ES-1A

2006 REVISED STANDARD PLAN RSP ES-1A

DIST	COUNTY	ROUTE	POST MILES TOTAL PROJECT	SHEET NO.	TOTAL SHEETS
05	Mon	101	53.1/53.9	48	70

REGISTERED ELECTRICAL ENGINEER

October 5, 2007
PLANS APPROVAL DATE

REGISTERED PROFESSIONAL ENGINEER Jeffery G. McRae No. E14512 Exp. 6-30-08 ELECTRICAL STATE OF CALIFORNIA

The State of California or its officers or agents shall not be responsible for the accuracy or completeness of electronic copies of this plan sheet.

To accompany plans dated 9-20-10

CONDUIT

PROPOSED	EXISTING	
		Lighting Conduit, unless otherwise indicated or noted
		Traffic signal conduit
C	c	Communication conduit
T	t	Telephone conduit
F	f	Fire alarm conduit
FO	fo	Fiber optic conduit
		Conduit termination (RSP ES-9A C)
R	r	Conduit riser in/on structure or service pole

SERVICE EQUIPMENT

PROPOSED	EXISTING	
OH	oh	Overhead lines
U	U	Wood pole "U" indicates utility owned
		Pole guy with anchor
		Utility transformer - ground mounted
III		Service equipment enclosure type
		Service equipment enclosure door indicates front of enclosure
T	t	Telephone demarcation cabinet

POLE-MOUNTED SERVICE DESIGNATION

Type of installation

TYPE H SERVICE - 28'-10" ← Pole height above grade

ILLUMINATED OVERHEAD SIGN

PROPOSED	EXISTING	
		Overhead sign - Single post
		Overhead sign - Two post
		Overhead sign - Mounted on structure
		Overhead sign with electrolier

SIGNAL EQUIPMENT

PROPOSED	EXISTING	
		Pedestrian signal face
		Pedestrian push button post
		Pedestrian barricade
		Vehicle signal face (with backplate, 3-Section: red, yellow and green)
		Vehicle signal face with angle visors
PV	PV	Modifications of basic symbols: "L" indicates all non-arrow sections louvered "LG" indicates louvered green section only "PV" indicates 12" programmed visibility sections "8" indicates all 8" sections (only when specified)
		Type 15TS and Vehicle signal face
		Vehicle signal face with red, yellow and green left arrow sections
		Vehicle signal face with red and yellow sections and up green arrow
		Vehicle signal face (5 Section) with red, yellow and green sections and yellow and green right arrows
		Type 1 Standard and attached vehicle signal faces
		Standard with signal mast arm only and attached vehicle signal faces and internally illuminated street name sign
		Type 33 Standard, Left-turn vehicle signal face and sign
		Standard with luminaire and signal mast arms and attached vehicle signal faces
		Cantilever flashing beacon Type 9 Frame, with a sign unless otherwise specified or indicated
		Type 15-FBS Standard with two vehicle signal face sections with lens, backplate and visor with a sign
R	Y	Flashing beacon. One vehicle signal face section with lens, backplate and visor. "R" indicates red indication, "Y" indicates yellow indication
		Controller assembly. Door indicates front of cabinet

SIGNAL EQUIPMENT Cont

PROPOSED	EXISTING	
		Guard post
		Type 1 Standard with "Meter On" sign
		Emergency Vehicle detector

NOTES:

1. All signal sections shall be 12" unless shown otherwise.
2. Signal heads shall be provided with backplates unless shown otherwise.
3. Signal indication shall be LED.

STATE OF CALIFORNIA
DEPARTMENT OF TRANSPORTATION

ELECTRICAL SYSTEMS (SYMBOLS AND ABBREVIATIONS)

NO SCALE

RSP ES-1B DATED OCTOBER 5, 2007 SUPERCEDES STANDARD PLAN ES-1B DATED MAY 1, 2006 - PAGE 401 OF THE STANDARD PLANS BOOK DATED MAY 2006.

REVISED STANDARD PLAN RSP ES-1B

2006 REVISED STANDARD PLAN RSP ES-1B

DIST	COUNTY	ROUTE	POST MILES TOTAL PROJECT	SHEET NO.	TOTAL SHEETS
05	Mon	101	53.1/53.9	49	70

REGISTERED ELECTRICAL ENGINEER

October 5, 2007
PLANS APPROVAL DATE

REGISTERED PROFESSIONAL ENGINEER
Jeffery G. McRae
No. E14512
Exp. 6-30-08
ELECTRICAL
STATE OF CALIFORNIA

The State of California or its officers or agents shall not be responsible for the accuracy or completeness of electronic copies of this plan sheet.

To accompany plans dated 9-20-10

EQUIPMENT IDENTIFICATION

ILLUMINATED SIGN IDENTIFICATION NUMBER:

Sign No. 12345 — Sign number - Place on post or structure

10 ISL SCI 1.0

- 1.0 — Transformer rating (kVA)
- SCI — Lighting control type
- ISL — Number and type of fixtures

Do NOT place on standard or structure

ELECTROLIER OR EQUIPMENT IDENTIFICATION NUMBER:

12345 - 15'-0"

- 15'-0" — Mast arm length, if shown. Do not place on standard or structure.
- 12345 — Equipment number - Place on standard or structure. Existing equipment numbers are shown in parenthesis

CONDUIT AND CONDUCTOR IDENTIFICATION:

1½"C, 2#10, 15#14, 2 DLC

- 2#10, 15#14, 2 DLC — Number and size of conductors and cables
- 1½"C — Size of conduit in inches

Ø1, Ø2, Ø2P, etc.	Traffic phase identification for signal faces, detectors and phase diagrams
1 2 3	Project note numbers
A B C	Equipment description, installation or item numbers
1 2 3	Conduit run numbers

SIGNAL AND LIGHTING STANDARD (TYPICAL DESIGNATION):

19A - 3 - 100

- 100 — Wind velocity = 100 mph
- 3 — Case 3 arm loading
- 19A — Standard type
- Standard Plan sheet number
- Detail number or letter

MISCELLANEOUS EQUIPMENT

PROPOSED	EXISTING	
CMS	cms	Changeable message sign
		Closed circuit television camera
		Highway advisory radio pole and antenna
EMS	ems	Extinguishable message sign
M V	m v	Detection device M = Microwave sensor V = Video image sensor

WIRING DIAGRAM LEGEND

P	Pole
CB	Circuit breaker
A	Ampere
V	Volt
M	Metered
UM	Unmetered
NB	Neutral bus
GB	Ground bus
G	Equipment grounding conductor
N	Grounded conductor (Neutral)

- External conductor
- Conductor or bus
- Tie point
- Contactor coil
- Contactor, Contact NO
- Terminal blocks
- Contactor, Contact NC
- Enclosure bond
- Grounding electrode
- Circuit breaker
- Receptacle

PULL BOXES

PROPOSED EXISTING

Pull box-No. 5 unless otherwise indicated or noted.

3 — 9A(21)

Pull box-Additional designations or descriptions

3 = No. 3½ pull box
5 = No. 5 pull box
6 = No. 6 pull box
7 = No. 7 (Ceiling pull box)
8 = No. 8 (Pendant soffit pull box)
9 = No. 9 pull box
9A = No. 9A pull box

(C) = Communications pull box
(E) = Pull box with extension
(S) = Sprinkler control pull box
(21) = Anchor bolts and conduit for future installation of Type 21 Standard
(T) = Traffic pull box

VEHICLE DETECTORS

5 J 9 U

- U = Upper
- L = Lower
- Slot number in input file
- Input file (I or J)
- Phase — Vehicle detector designation

PROPOSED	EXISTING	
		Type A detector loop. Outline of sawcut shown.
		Type B detector loop. Outline of sawcut shown.
		Type C detector loop. Outline of sawcut shown.
		Type D detector loop. Outline of sawcut shown.
		Type E detector loop. Outline of sawcut shown.
		Type Q detector loop. Outline of sawcut shown.
		Magnetic detector
DH	dh	Detector handhole
		Microwave or video detection zone

STATE OF CALIFORNIA
DEPARTMENT OF TRANSPORTATION

ELECTRICAL SYSTEMS (SYMBOLS AND ABBREVIATIONS)

NO SCALE

RSP ES-1C DATED OCTOBER 5, 2007 SUPERCEDES STANDARD PLAN ES-1C DATED MAY 1, 2006 - PAGE 402 OF THE STANDARD PLANS BOOK DATED MAY 2006.

REVISED STANDARD PLAN RSP ES-1C

2006 REVISED STANDARD PLAN RSP ES-1C

DIST	COUNTY	ROUTE	POST MILES TOTAL PROJECT	SHEET No	TOTAL SHEETS
05	Mon	101	53.1/53.9	50	70

REGISTERED CIVIL ENGINEER 6-17-10 DATE

9-20-10
PLANS APPROVAL DATE

REGISTERED PROFESSIONAL ENGINEER RYAN STILTZ No. C65738 Exp. 9/30/11 CIVIL STATE OF CALIFORNIA

The State of California or its officers or agents shall not be responsible for the accuracy or completeness of electronic copies of this plan sheet.

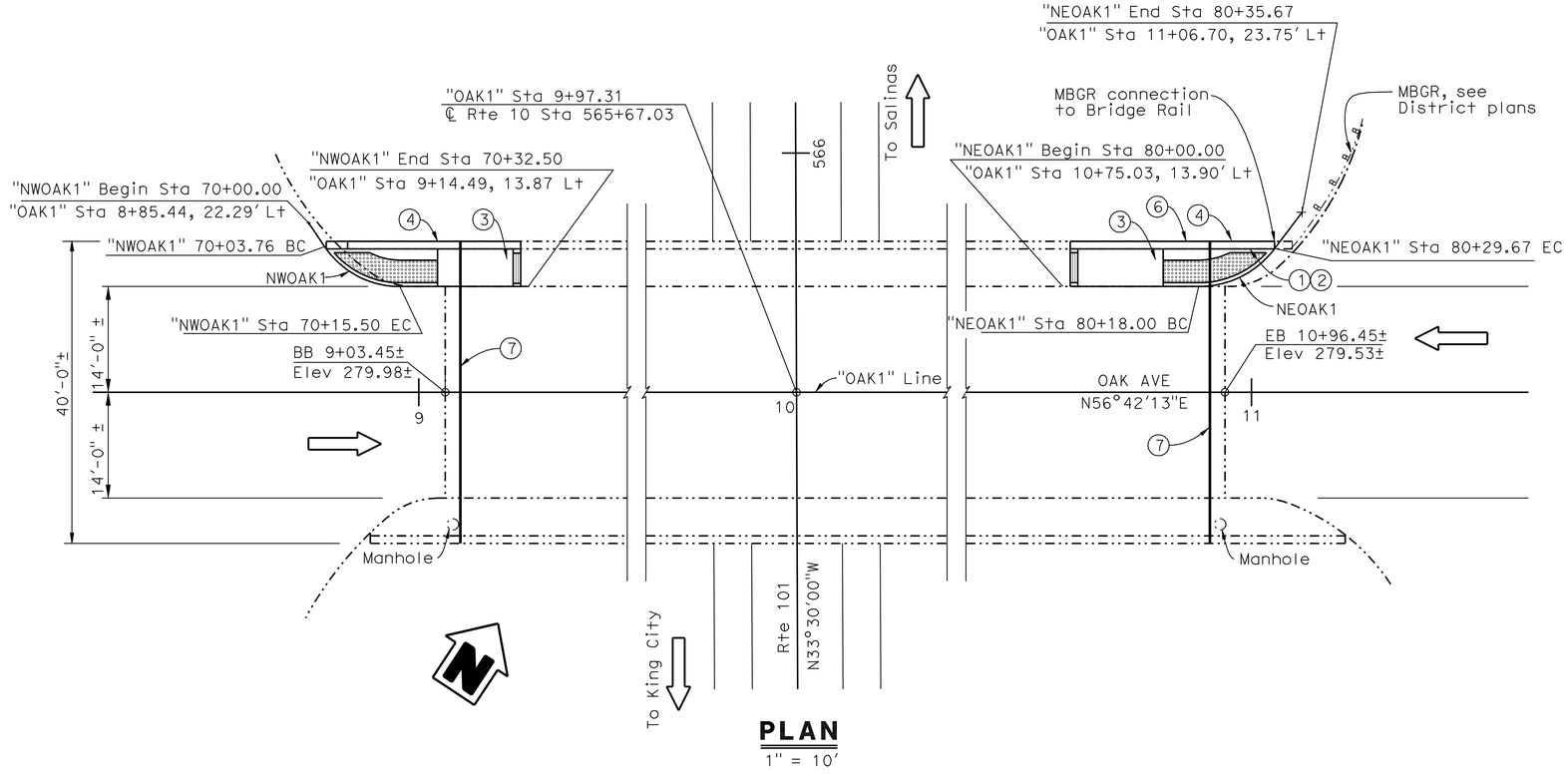

PLAN

1" = 10'

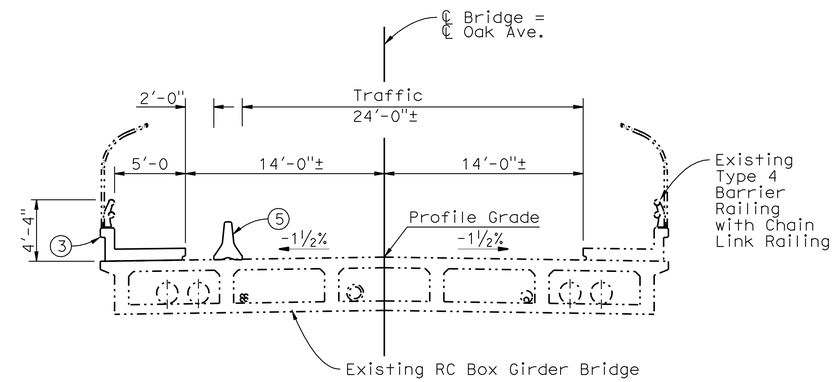

TYPICAL SECTION

3/16" = 1'-0"

STANDARD PLANS DATED MAY 2006

A10A	ABBREVIATIONS (A-L)
A10B	ABBREVIATIONS (M-Z)
A10C	SYMBOLS (SHEET 1 OF 2)
A10D	SYMBOLS (SHEET 2 OF 2)
A77K1	METAL BEAM GUARD RAILING CONNECTIONS TO BRIDGE RAILINGS WITH SIDEWALKS DETAILS No.1
RSP A88A	CURB RAMP DETAILS
A88B	CURB RAMP AND ISLAND PASSAGEWAY DETAILS
RSP B6-21	JOINT SEALS (MAXIMUM MOVEMENT RATING = 2")

STANDARD PLAN SHEET NO.

DETAIL NO.

NOTE:
THE CONTRACTOR SHALL VERIFY ALL CONTROLLING FIELD DIMENSIONS BEFORE ORDERING OR FABRICATING ANY MATERIAL.

NOTES:

1. Paint "OAK AVENUE OC"
2. Paint "BRIDGE NO. 44-0134"
3. Remove and reconstruct portion of existing Sidewalk and Type 4 barrier. Reuse existing pipe railing, posts, and chain link railing, except as otherwise indicated.
4. Remove and reconstruct portion of existing wingwall.
5. Temporary Railing Type K, see "Road Plans"
6. Replace portion of existing chain link railing type 4
7. Replace joint seal. For joint seal table and joint seal notes, see "MISCELLANEOUS DETAILS" sheet.

LEGEND:

—— Indicates New Construction
—·—· Indicates Existing Structure
—— Replace Joint Seal

QUANTITIES

Prepare Concrete Bridge Deck Surface	52	SQFT
Bridge Removal (Portion), Location A	LUMP	SUM
Structure Excavation (Bridge)	3	CY
Structural Concrete, Bridge	1	CY
Drill and Bond Dowel	40	LF
Clean Expansion Joint	76	LF
Furnish Polyester Concrete Overlay	7	CF
Place Polyester Concrete Overlay	52	SQFT
Joint Seal (MR 1")	76	LF
Bar Reinforcing Steel (Bridge)	260	LB
Chain Link Railing (Type 4)	30	LF
Concrete Barrier (Type 4)	52	LF

INDEX TO PLANS

Sheet No.	Title
1.	GENERAL PLAN
2.	NW OAK CURB RAMP LAYOUT
3.	NE OAK CURB RAMP LAYOUT
4.	MISCELLANEOUS DETAILS
5.	REINFORCEMENT PLAN
6.	REINFORCEMENT SECTION NO. 1
7.	REINFORCEMENT SECTION NO. 2
8.	TYPE 4 BARRIER
9.	CHAIN LINK RAILING TYPE 4 SHEET 1 OF 2
10.	CHAIN LINK RAILING TYPE 4 SHEET 2 OF 2

Daniel T Adams
DESIGN ENGINEER

	BY	CHECKED
DESIGN	F. Chen	R. Anderson
DETAILS	Y. Tang	R. Anderson
QUANTITIES	R. Anderson	F. Chen

LOAD & RESISTANCE FACTOR DESIGN — LIVE LOADING: HL93 W/"LOW-BOY"; PERMIT DESIGN VEHICLE

	BY	CHECKED
LAYOUT	F. Chen	R. Anderson
SPECIFICATIONS	K. Ellingson	PLANS AND SPECS COMPARED K. Ellingson

ORIGINAL SCALE IN INCHES FOR REDUCED PLANS 0 1 2 3

STATE OF CALIFORNIA
DEPARTMENT OF TRANSPORTATION

DIVISION OF ENGINEERING SERVICES
STRUCTURE DESIGN
DESIGN BRANCH 10

CU 05
EA 0Q5601

BRIDGE NO. 44-0134
POST MILE 53.36

OAK AVENUE OC (MODIFY)
GENERAL PLAN

DISREGARD PRINTS BEARING EARLIER REVISION DATES

REVISION DATES: 08-31-09 09-30-09 12-28-09 3-04-10 5-11-10

SHEET 1 OF 10

STRUCTURES DESIGN GENERAL PLAN SHEET (ENGLISH) (REV.07-24-06)

FILE => 59-440134-a-gp.dgn

USERNAME => trpierce DATE PLOTTED => 22-SEP-2010 TIME PLOTTED => 08:44

DIST	COUNTY	ROUTE	POST MILES TOTAL PROJECT	SHEET No	TOTAL SHEETS
05	Mon	101	53.1/53.9	51	70

REGISTERED CIVIL ENGINEER 6-17-10 DATE

9-20-10
PLANS APPROVAL DATE

REGISTERED PROFESSIONAL ENGINEER RYAN STILTZ No. C65738 Exp. 9/30/11 CIVIL STATE OF CALIFORNIA

The State of California or its officers or agents shall not be responsible for the accuracy or completeness of electronic copies of this plan sheet.

NOTES:

1. For "SECTION A-A , B-B, and C-C", see "MISCELLANEOUS DETAILS" sheet
2. For Ramp area slope information, see "ROAD PLAN"

"NWOAK1" CURVE DATA

R = 12.00′
Δ = 56°2′16"
T = 6.39′
L = 11.74"

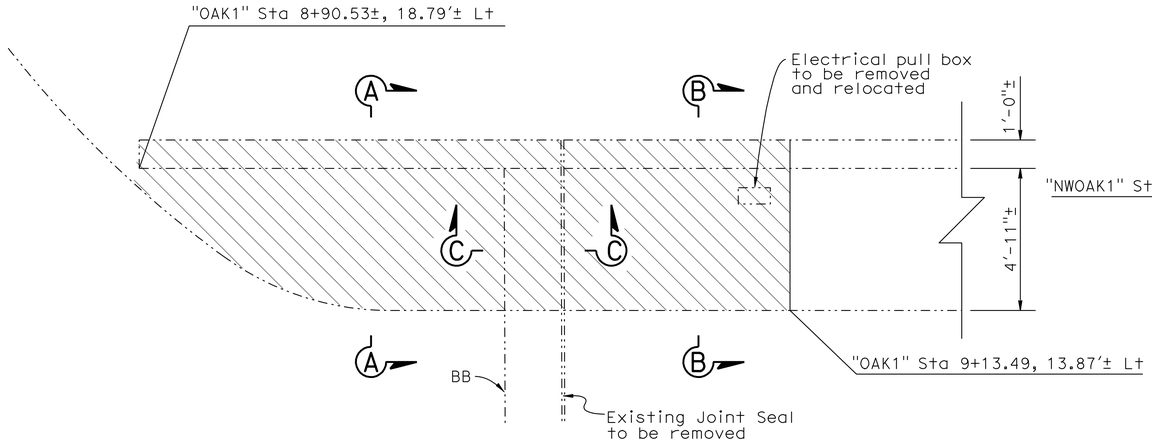

PLAN
3/8" = 1′-0"

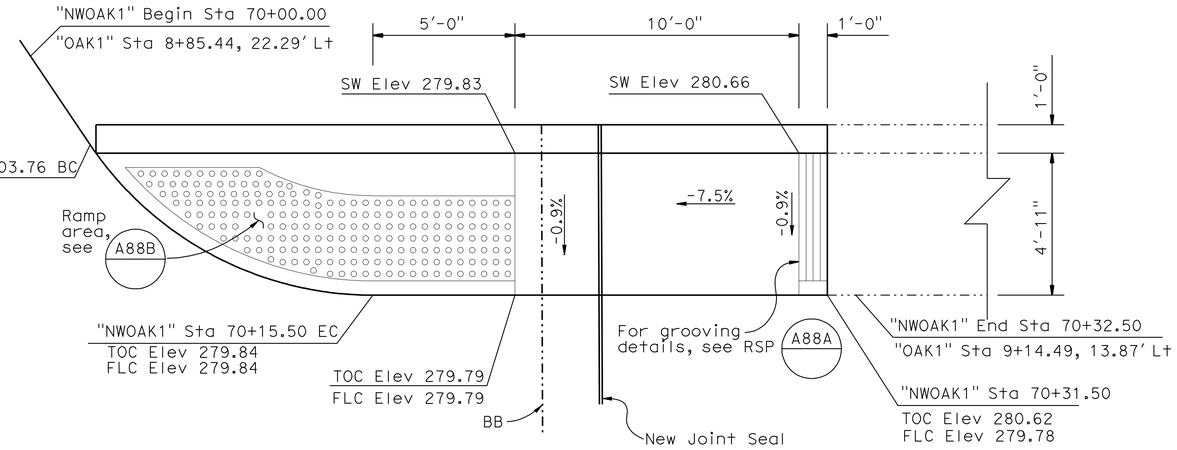

PLAN
3/8" = 1′-0"

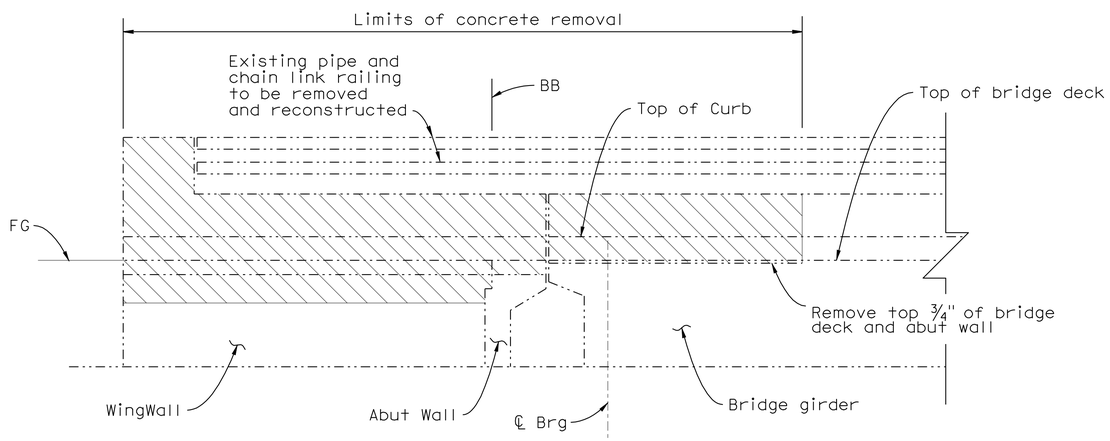

ELEVATION
3/8" = 1′-0"

(CONCRETE REMOVAL)

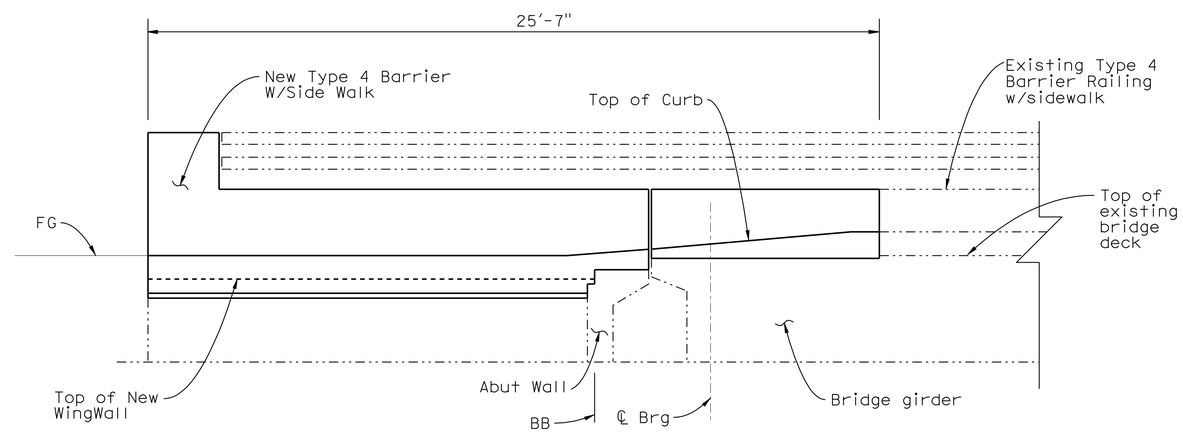

ELEVATION
3/8" = 1′-0"

(NEW CONSTRUCTION)

LEGEND

Indicates New Construction
Indicates Existing Structure
Indicates Bridge Removal (Portion)

NOTE:
THE CONTRACTOR SHALL VERIFY ALL CONTROLLING FIELD DIMNSIONS BEFORE ORDERING OR FABRICATING ANY MATERIAL.

	BY	CHECKED
DESIGN	F. Chen	R. Anderson
DETAILS	Y. Tang	R. Anderson
QUANTITIES	R. Anderson	F. Chen

STATE OF CALIFORNIA
DEPARTMENT OF TRANSPORTATION

DIVISION OF ENGINEERING SERVICES
STRUCTURE DESIGN
DESIGN BRANCH 10

BRIDGE NO. 44-0134
POST MILE 53.36

OAK AVENUE OC (MODIFY)
NW OAK CURB RAMP LAYOUT

STRUCTURES DESIGN DETAIL SHEET (ENGLISH) (REV. 10/25/05)

ORIGINAL SCALE IN INCHES FOR REDUCED PLANS 0 1 2 3

CU 05
EA 0Q5601

DISREGARD PRINTS BEARING EARLIER REVISION DATES

REVISION DATES: 12-10-09 2-05-10 5-10-10

SHEET 2 OF 10

FILE => 59-440134-v-curb-1o1.dgn

USERNAME => trmnguye DATE PLOTTED => 22-SEP-2010 TIME PLOTTED => 08:20

DIST	COUNTY	ROUTE	POST MILES TOTAL PROJECT	SHEET No	TOTAL SHEETS
05	Mon	101	53.1/53.9	52	70

REGISTERED CIVIL ENGINEER 6-17-10 DATE

9-20-10
PLANS APPROVAL DATE

REGISTERED PROFESSIONAL ENGINEER RYAN STILTZ No. C65738 Exp. 9/30/11 CIVIL STATE OF CALIFORNIA

The State of California or its officers or agents shall not be responsible for the accuracy or completeness of electronic copies of this plan sheet.

NOTES:

1. For "SECTION A-A , B-B, and C-C", see "MISCELLANEOUS DETAILS" sheet
2. For loading area slope information, see "ROAD PLAN"

"NEOAK1" CURVE DATA

R = 12.58′
Δ = 53°9′17"
T = 6.29′
L = 11.67"

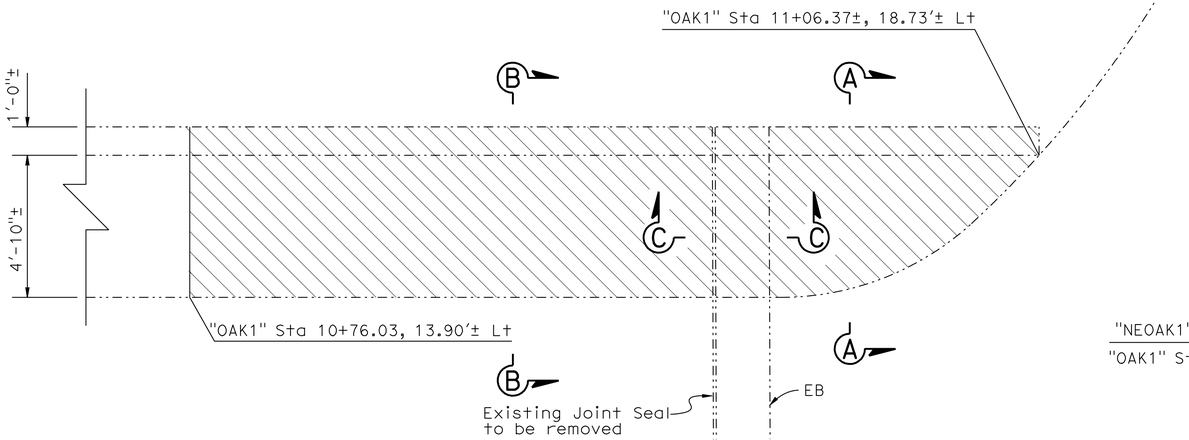

PLAN

3/8" = 1′-0"

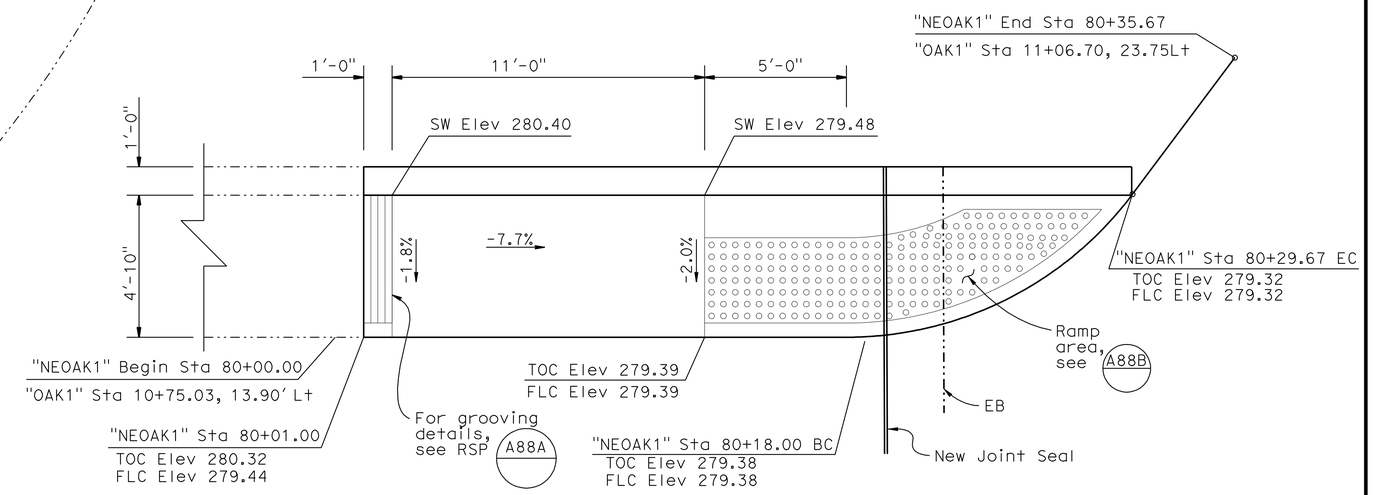

PLAN

3/8" = 1′-0"

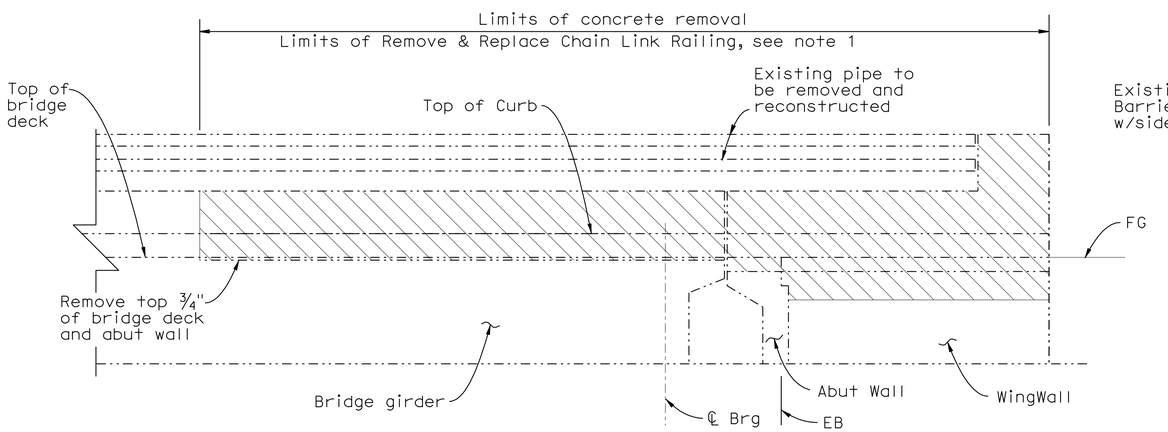

ELEVATION

3/8" = 1′-0"

(CONCRETE REMOVAL)

Note 1: For chain link railing replacement details, see "Chain Link Railing Type 4 sheet 1 of 2" & "Chain Link Railing Type 4 sheet 2 of 2" Limits are approximate as shown, actual limits as directed by engineer

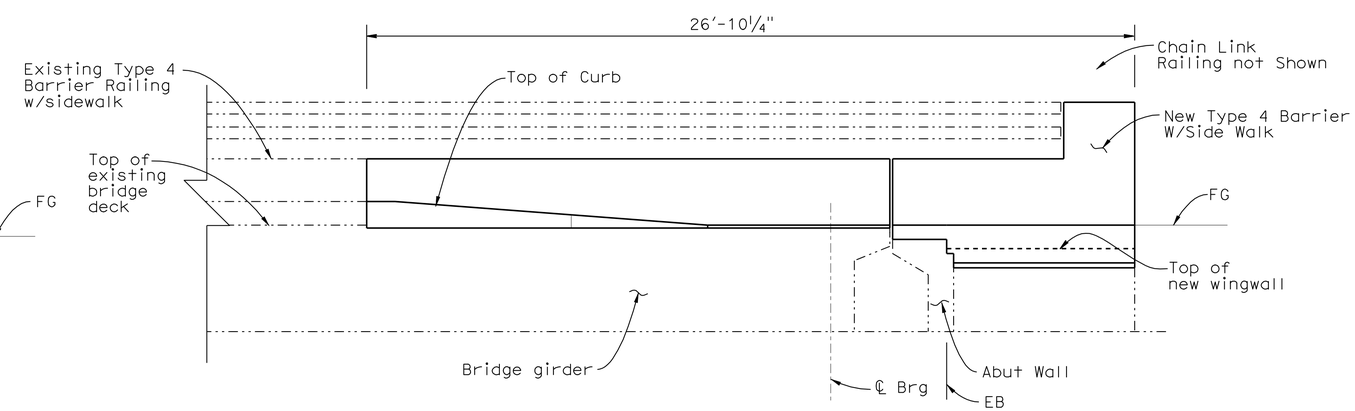

ELEVATION

3/8" = 1′-0"

(NEW CONSTRUCTION)

LEGEND

Indicates New Construction
Indicates Existing Structure
Indicates Bridge Removal (Portion)

NOTE:
THE CONTRACTOR SHALL VERIFY ALL CONTROLLING FIELD DIMENSIONS BEFORE ORDERING OR FABRICATING ANY MATERIAL.

	BY	CHECKED
DESIGN	F. Chen	R. Anderson
DETAILS	Y. Tang	R. Anderson
QUANTITIES	R. Anderson	F. Chen

STATE OF CALIFORNIA
DEPARTMENT OF TRANSPORTATION

DIVISION OF ENGINEERING SERVICES
STRUCTURE DESIGN
DESIGN BRANCH 10

BRIDGE NO. 44-0134
POST MILE 53.36

OAK AVENUE OC (MODIFY)
NE OAK CURB RAMP LAYOUT

STRUCTURES DESIGN DETAIL SHEET (ENGLISH) (REV. 10/25/05)

ORIGINAL SCALE IN INCHES FOR REDUCED PLANS 0 1 2 3

CU 05
EA 0Q5601

DISREGARD PRINTS BEARING EARLIER REVISION DATES

REVISION DATES: 12-10-09 5-11-10

SHEET 3 OF 10

FILE => 59-440134-v-curb-1o2.dgn

USERNAME => ttmnguye DATE PLOTTED => 22-SEP-2010 TIME PLOTTED => 08:17

DIST	COUNTY	ROUTE	POST MILES TOTAL PROJECT	SHEET No	TOTAL SHEETS
05	Mon	101	53.1/53.9	53	70

REGISTERED CIVIL ENGINEER 6-17-10 DATE

9-20-10
PLANS APPROVAL DATE

REGISTERED PROFESSIONAL ENGINEER RYAN STILTZ No. C65738 Exp. 9/30/11 CIVIL STATE OF CALIFORNIA

The State of California or its officers or agents shall not be responsible for the accuracy or completeness of electronic copies of this plan sheet.

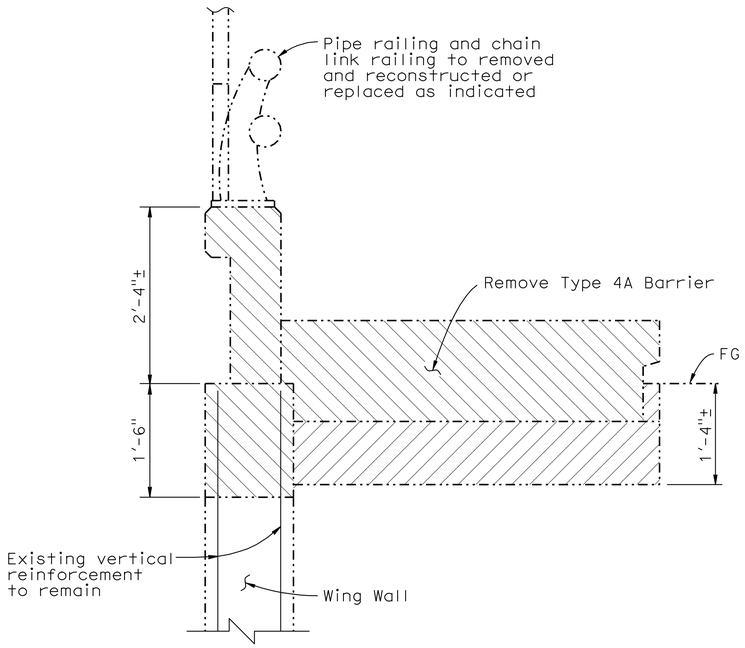

SECTION A-A

1" = 1'-0"

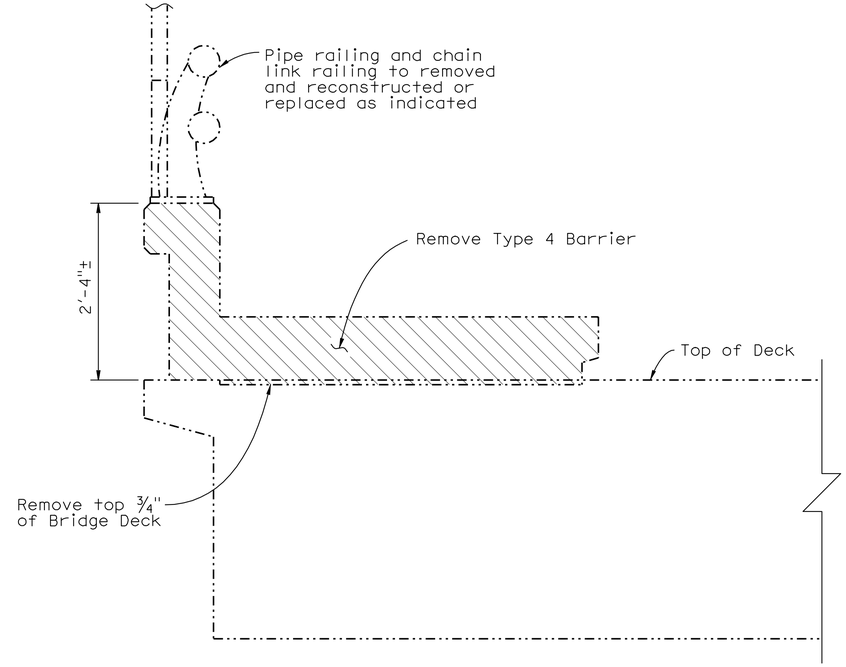

SECTION B-B

1" = 1'-0"

LEGEND

Indicates Existing Structure

Indicates Bridge Removal (Portion)

Indicates Structure Excavation

NOTE:
For location of "SECTION A-A", "B-B" and "C-C", see "NW OAK CURB RAMP LAYOUT" and "NE OAK CURB RAMP LAYOUT" sheets

JOINT SEAL TABLE

	JOINT SEAL TYPE	MIN "MR"	MIN "W1"	APPROX LENGTH	EXISTING WATERSTOP	APPROX DEPTH TO CLEAN EXP JOINT
Abut 1	B	1"	*	38'-0"	Yes	5"
Abut 5	B	1"	*	38'-0"	Yes	5"

* To be provided by the engineer, See Note 2

The following notes apply to JOINT SEAL TYPE B:

1. Seal must satisfy both minimum Movement Rating (MR) and minimum W1 requirements.
2. Minimum W1 is the calculated maximum width of the joint based on field measurements. After the joints have been cleaned, minumum W1 is to be recalculated by the Engineer.
3. W1 shall be the smaller of the values determined as follows:
   A. 0.85 times the manufactures's designed minimum uncompressed width of the seal.
   B. The width of the seal on the third successive test cycle of the pressure deflection test, when compressed to an average pressure of 3 psi
4. Bend Type B joint seal 6" up into curb or rail on the low side of the deck where deck joint matches curb or rail joint.
5. For details not shown see RSP B6-21

NOTE:
THE CONTRACTOR SHALL VERIFY ALL CONTROLLING FIELD DIMENSIONS BEFORE ORDERING OR FABRICATING ANY MATERIAL.

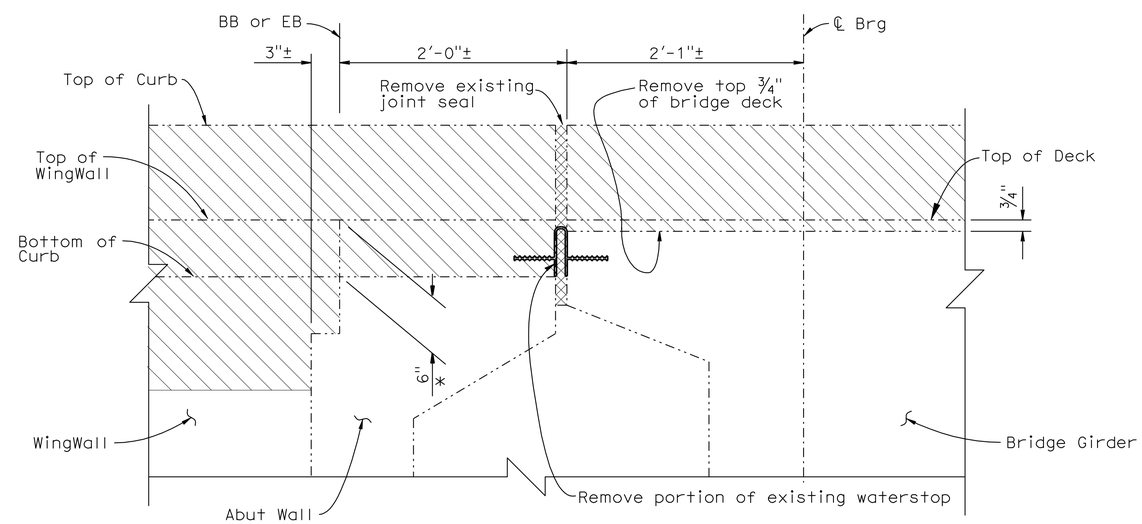

* Existing Abut Wall Reinf to Remain

SECTION C-C

1½" = 1'-0"

DESIGN	BY F. Chen	CHECKED R. Anderson	
DETAILS	BY Y. Tang	CHECKED R. Anderson	
QUANTITIES	BY R. Anderson	CHECKED F. Chen	

STATE OF CALIFORNIA
DEPARTMENT OF TRANSPORTATION

DIVISION OF ENGINEERING SERVICES
STRUCTURE DESIGN
DESIGN BRANCH 10

BRIDGE NO. 44-0134
POST MILE 53.36

OAK AVENUE OC (MODIFY)
MISCELLANEOUS DETAILS

STRUCTURES DESIGN DETAIL SHEET (ENGLISH) (REV. 10/25/05)

ORIGINAL SCALE IN INCHES FOR REDUCED PLANS 0 1 2 3

CU 05
EA 0Q5601

DISREGARD PRINTS BEARING EARLIER REVISION DATES

REVISION DATES: 12/29/09 5-11-10

SHEET 4 OF 10

FILE => 59-440134-v-miscd.dgn

USERNAME => trmnguye DATE PLOTTED => 22-SEP-2010 TIME PLOTTED => 08:17

DIST	COUNTY	ROUTE	POST MILES TOTAL PROJECT	SHEET No	TOTAL SHEETS
05	Mon	101	53.1/53.9	54	70

REGISTERED CIVIL ENGINEER 6-17-10 DATE

9-20-10
PLANS APPROVAL DATE

REGISTERED PROFESSIONAL ENGINEER RYAN STILTZ No. C65738 Exp. 9/30/11 CIVIL STATE OF CALIFORNIA

The State of California or its officers or agents shall not be responsible for the accuracy or completeness of electronic copies of this plan sheet.

NOTES:

1. For section D-D, E-E, and F-F, see "REINFORCEMENT SECTION NO. 1" sheet.
2. For section G-G, H-H, and J-J, see "REINFORCEMENT SECTION NO. 2" sheet.
3. New barrier rail reinforcement not shown, see "TYPE 4 BARRIER" sheet.

LEGEND

Indicates New Construction

Indicates Existing Structure

Indicates New Polyester Concrete

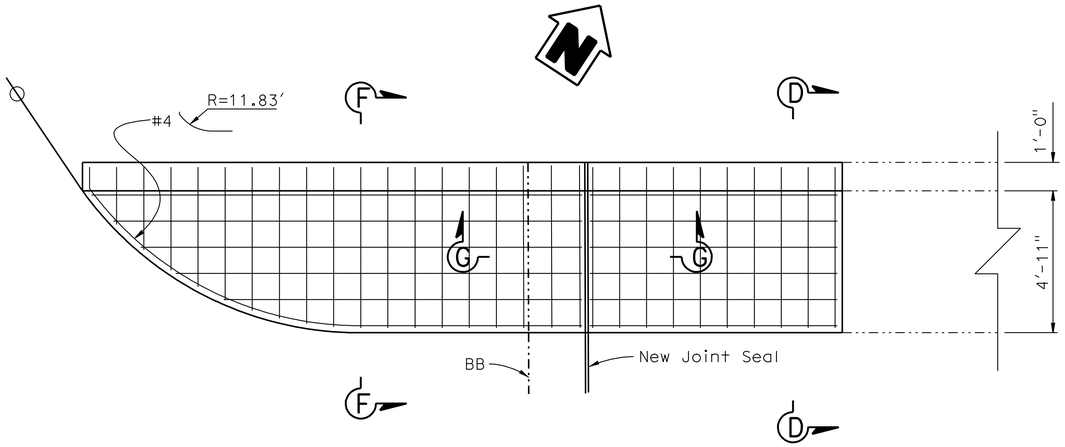

PLAN

3/8" = 1'-0"

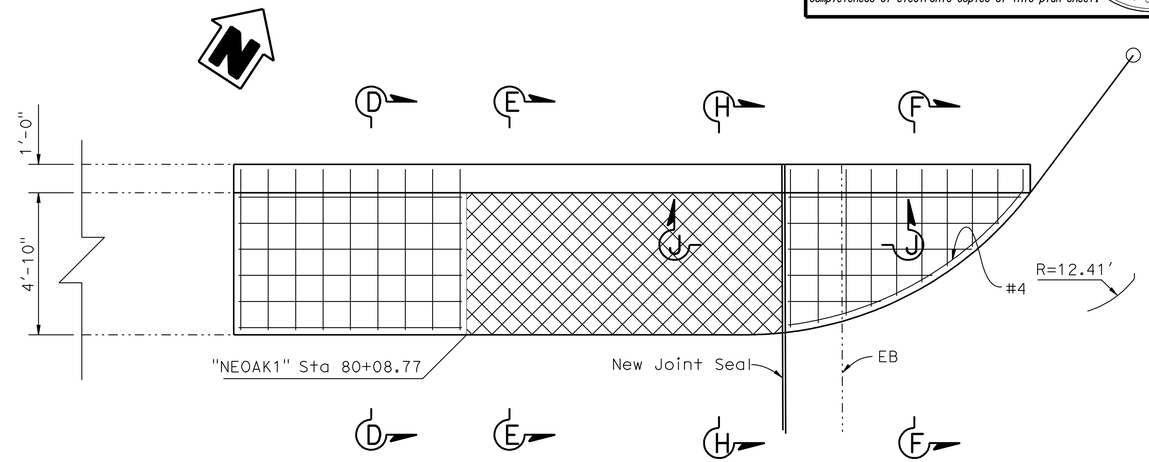

PLAN

3/8" = 1'-0"

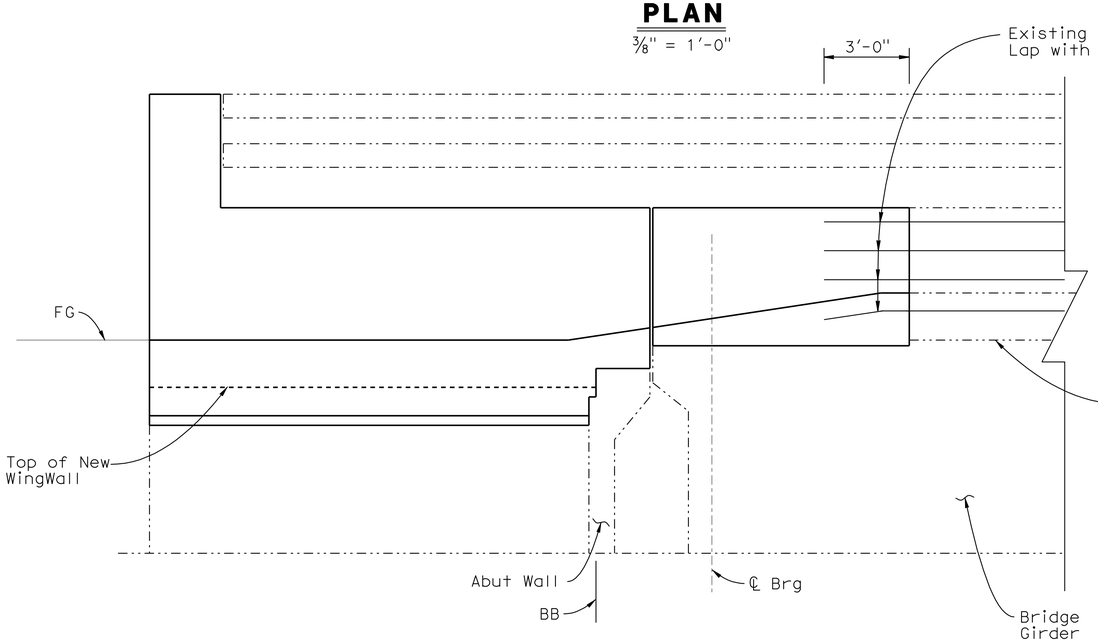

ELEVATION

Horiz. 3/4" = 1'-0"
Vert. 3/8" = 1'-0"

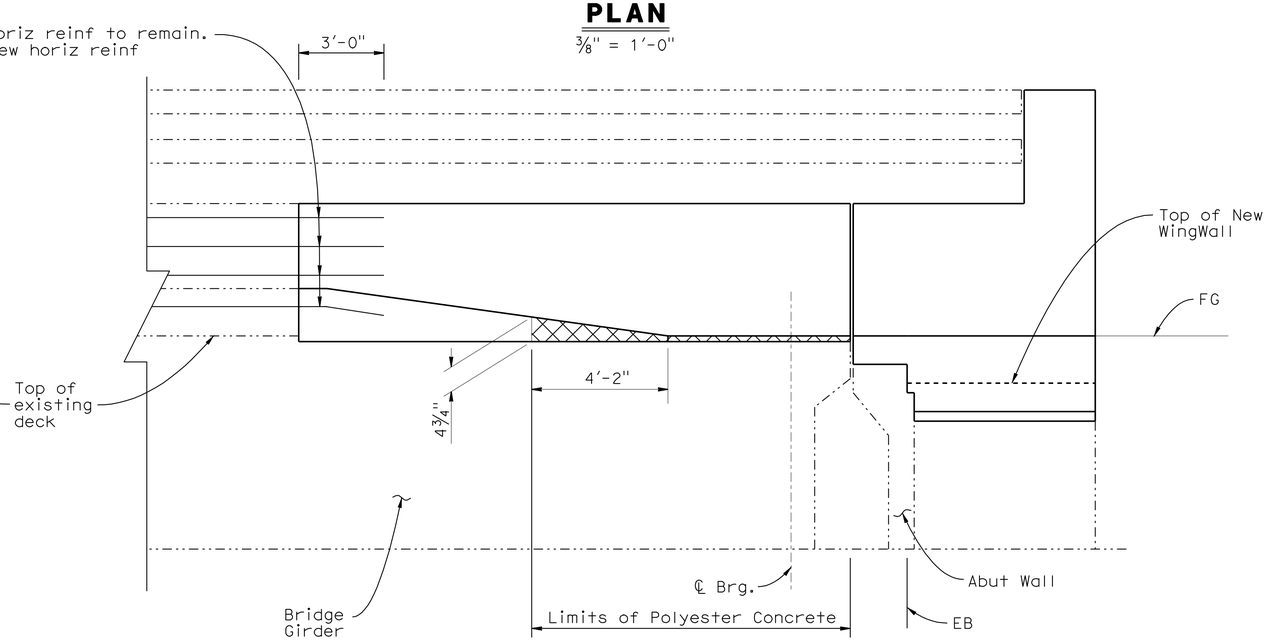

ELEVATION

Horiz. 3/4" = 1'-0"
Vert. 3/8" = 1'-0"

NOTE:
THE CONTRACTOR SHALL VERIFY ALL CONTROLLING FIELD DIMENSIONS BEFORE ORDERING OR FABRICATING ANY MATERIAL.

	BY	CHECKED
DESIGN	F. Chen	R. Anderson
DETAILS	Y. Tang	R. Anderson
QUANTITIES	R. Anderson	F. Chen

STATE OF CALIFORNIA
DEPARTMENT OF TRANSPORTATION

DIVISION OF ENGINEERING SERVICES
STRUCTURE DESIGN
DESIGN BRANCH 10

BRIDGE NO. 44-0134
POST MILE 53.36

OAK AVENUE OC (MODIFY)
REINFORCEMENT PLAN

STRUCTURES DESIGN DETAIL SHEET (ENGLISH) (REV. 10/25/05)

ORIGINAL SCALE IN INCHES FOR REDUCED PLANS 0 1 2 3

CU 05
EA 0Q5601

DISREGARD PRINTS BEARING EARLIER REVISION DATES

REVISION DATES: 12-23-09 1-14-10 2-03-10

SHEET 5 OF 10

FILE => 59-440134-v-rfp.dgn

USERNAME => trmnguye DATE PLOTTED => 22-SEP-2010 TIME PLOTTED => 08:18

DIST	COUNTY	ROUTE	POST MILES TOTAL PROJECT	SHEET No	TOTAL SHEETS
05	Mon	101	53.1/53.9	55	70

REGISTERED CIVIL ENGINEER 6-17-10 DATE

9-20-10
PLANS APPROVAL DATE

REGISTERED PROFESSIONAL ENGINEER RYAN STILTZ No. C65738 Exp. 9/30/11 CIVIL STATE OF CALIFORNIA

The State of California or its officers or agents shall not be responsible for the accuracy or completeness of electronic copies of this plan sheet.

LEGEND

Indicates New Construction

Indicates Existing Structure

Indicates New Polyester Concrete

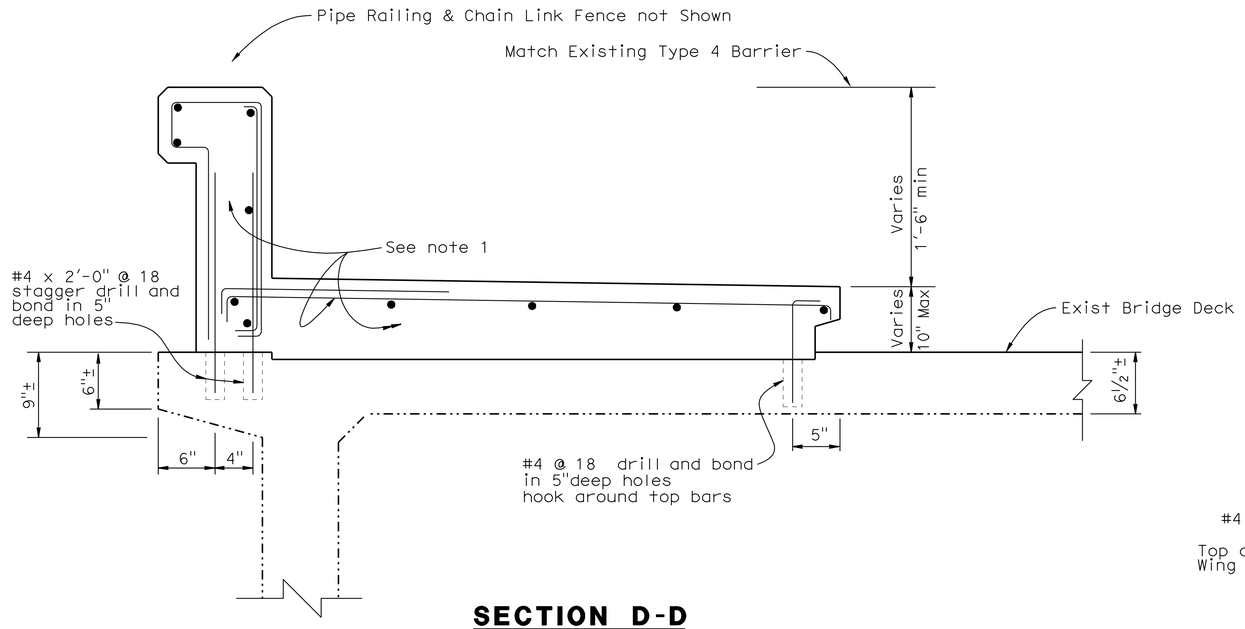

SECTION D-D

1½" = 1'-0"

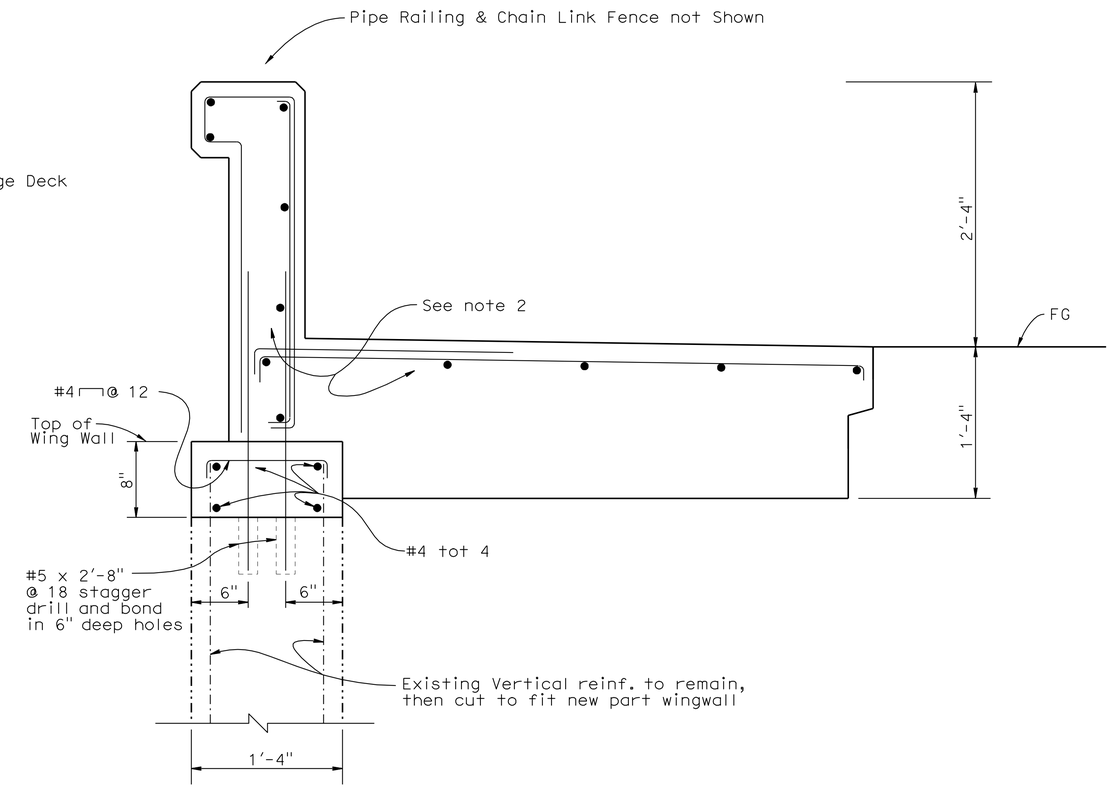

SECTION F-F

1½" = 1'-0"

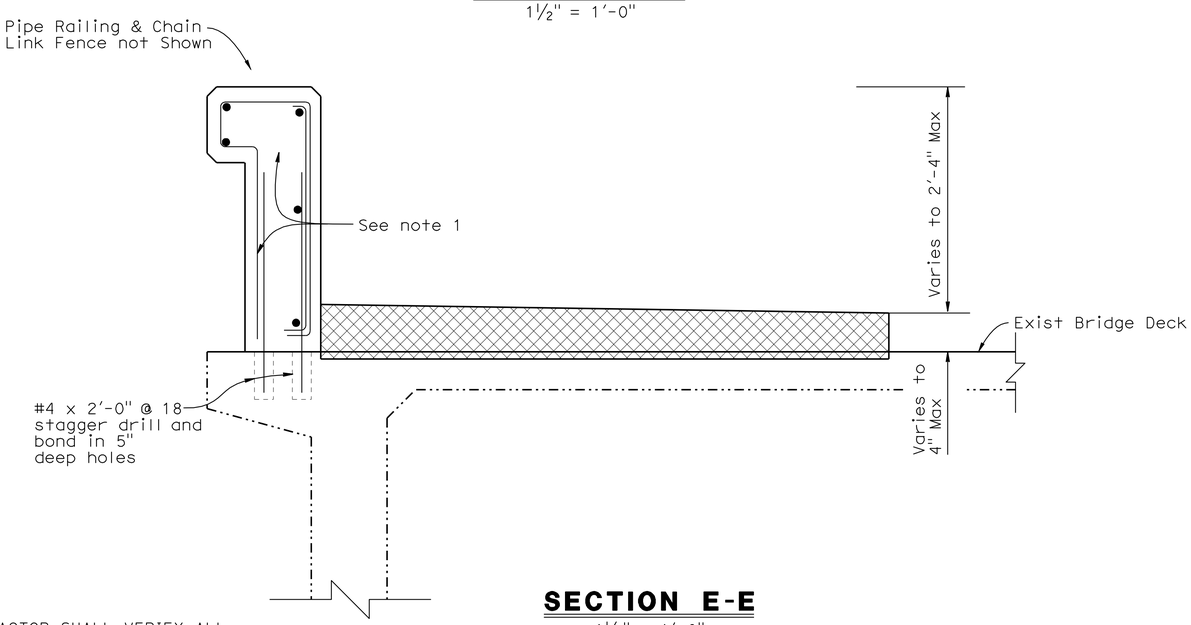

SECTION E-E

1½" = 1'-0"

NOTE:

1. For type 4 barrier dimensions and reinforcement, see "TYPE 4 BARRIER" sheet.
2. For type 4A barrier dimensions and reinforcement, see "TYPE 4 BARRIER" sheet.
3. For location of "SECTION D-D, E-E, and F-F ", see "REINFORCEMENT PLAN" sheet.

NOTE:
THE CONTRACTOR SHALL VERIFY ALL CONTROLLING FIELD DIMENSIONS BEFORE ORDERING OR FABRICATING ANY MATERIAL.

	BY	CHECKED
DESIGN	F. Chen	R. Anderson
DETAILS	Y. Tang	R. Anderson
QUANTITIES	R. Anderson	F. Chen

STATE OF CALIFORNIA
DEPARTMENT OF TRANSPORTATION

DIVISION OF ENGINEERING SERVICES
STRUCTURE DESIGN
DESIGN BRANCH 10

BRIDGE NO. 44-0134
POST MILE 53.36

OAK AVENUE OC (MODIFY)
REINFORCEMENT SECTION NO.1

STRUCTURES DESIGN DETAIL SHEET (ENGLISH) (REV. 10/25/05)

ORIGINAL SCALE IN INCHES FOR REDUCED PLANS 0 1 2 3

CU 05
EA 0Q5601

DISREGARD PRINTS BEARING EARLIER REVISION DATES

REVISION DATES: 12-21-09 1-14-10 3-09-10

SHEET 6 OF 10

FILE => 59-440134-v-rfs01.dgn

USERNAME => trmnguye DATE PLOTTED => 22-SEP-2010 TIME PLOTTED => 08:18

DIST	COUNTY	ROUTE	POST MILES TOTAL PROJECT	SHEET No	TOTAL SHEETS
05	Mon	101	53.1/53.9	56	70

REGISTERED CIVIL ENGINEER 6-17-10 DATE

9-20-10
PLANS APPROVAL DATE

REGISTERED PROFESSIONAL ENGINEER RYAN STILTZ No. C65738 Exp. 9/30/11 CIVIL STATE OF CALIFORNIA

The State of California or its officers or agents shall not be responsible for the accuracy or completeness of electronic copies of this plan sheet.

LEGEND

Indicates New Construction

Indicates existing structure

Indicates New Polyester Concrete

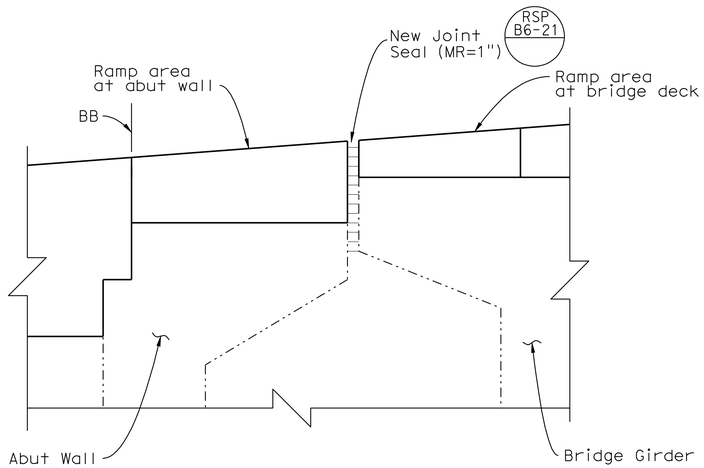

SECTION G-G

1½" = 1'-0"

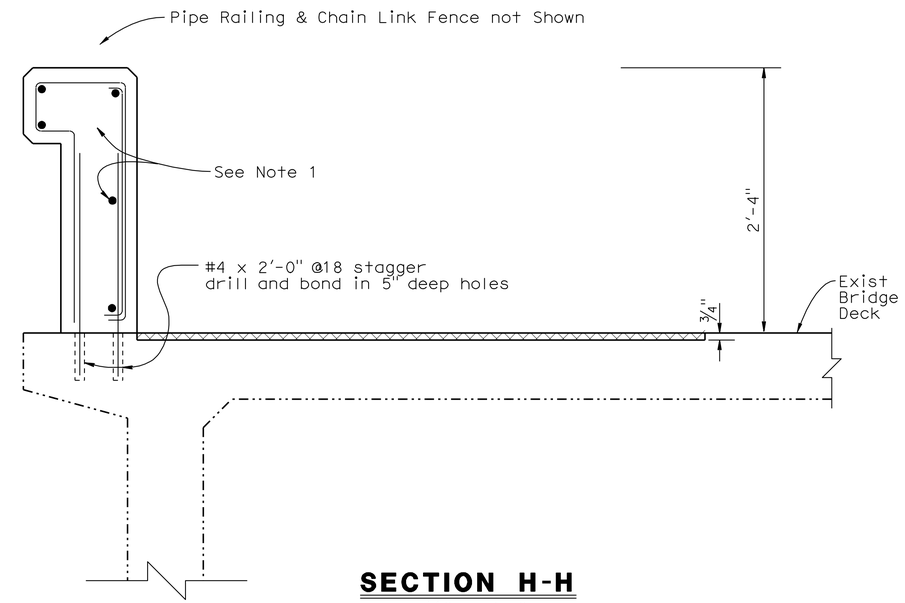

SECTION H-H

1½" = 1'-0"

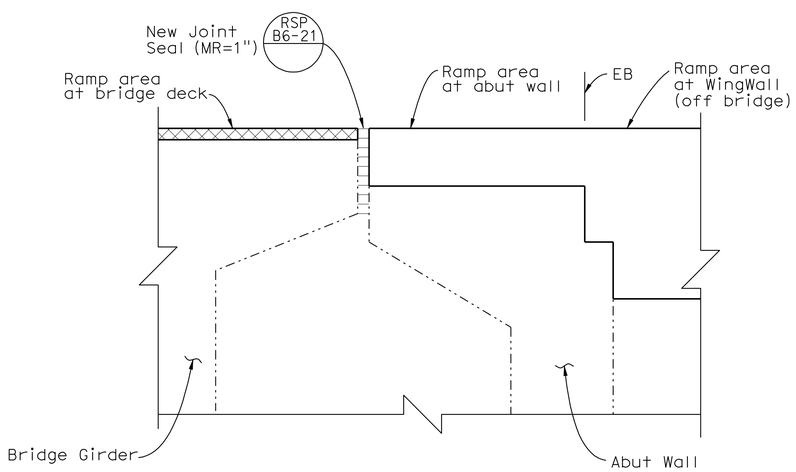

SECTION J-J

1½" = 1'-0"

NOTE:

1. For type 4 barrier dimensions and reinforcement, see "TYPE 4 BARRIER" sheet.
2. For location of "SECTION G-G, J-J, and H-H ", see "REINFORCEMENT PLAN" sheet.

NOTE:
THE CONTRACTOR SHALL VERIFY ALL CONTROLLING FIELD DIMENSIONS BEFORE ORDERING OR FABRICATING ANY MATERIAL.

	BY	CHECKED
DESIGN	F. Chen	R. Anderson
DETAILS	Y. Tang	R. Anderson
QUANTITIES	R. Anderson	F. Chen

STATE OF CALIFORNIA
DEPARTMENT OF TRANSPORTATION

DIVISION OF ENGINEERING SERVICES
STRUCTURE DESIGN
DESIGN BRANCH 10

BRIDGE NO. 44-0134
POST MILE 53.36

OAK AVENUE OC (MODIFY)
REINFORCEMENT SECTION NO.2

STRUCTURES DESIGN DETAIL SHEET (ENGLISH) (REV. 10/25/05)

ORIGINAL SCALE IN INCHES FOR REDUCED PLANS 0 1 2 3

CU 05
EA 0Q5601

DISREGARD PRINTS BEARING EARLIER REVISION DATES 12-30-09 1-14-10

REVISION DATES

SHEET 7 OF 10

FILE => 59-440134-v-rfs02.dgn

USERNAME => trphtis DATE PLOTTED => 22-SEP-2010 TIME PLOTTED => 08:49

DIST	COUNTY	ROUTE	POST MILES TOTAL PROJECT	SHEET No	TOTAL SHEETS
05	Mon	101	53.1/53.9	57	70

REGISTERED CIVIL ENGINEER 6-17-10 DATE

9-20-10
PLANS APPROVAL DATE

REGISTERED PROFESSIONAL ENGINEER RYAN STILTZ No. C65738 Exp. 9/30/11 CIVIL STATE OF CALIFORNIA

The State of California or its officers or agents shall not be responsible for the accuracy or completeness of electronic copies of this plan sheet.

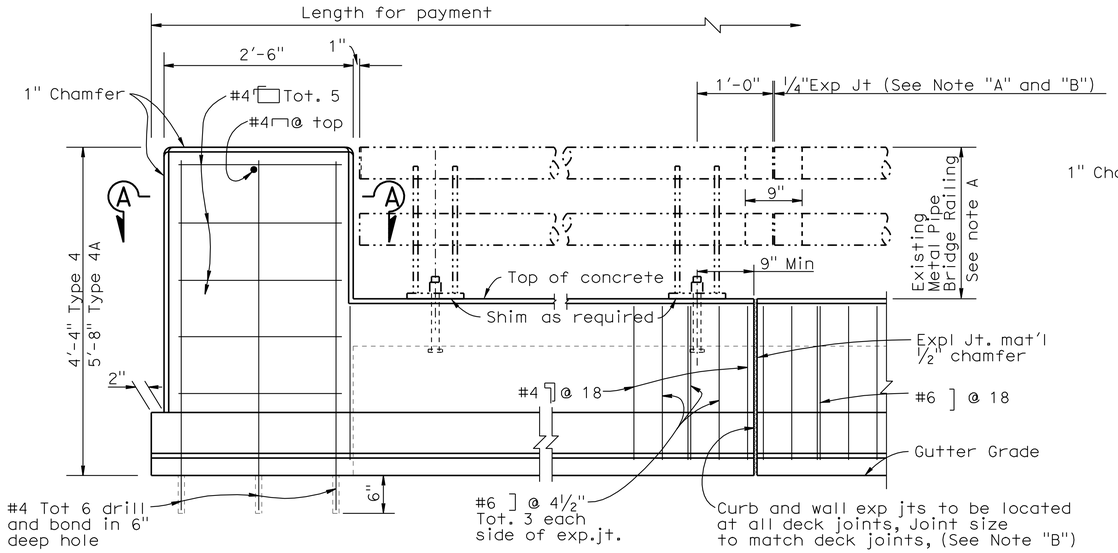

RAILING & END POST ELEVATION

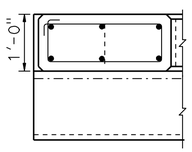

SECTION A-A

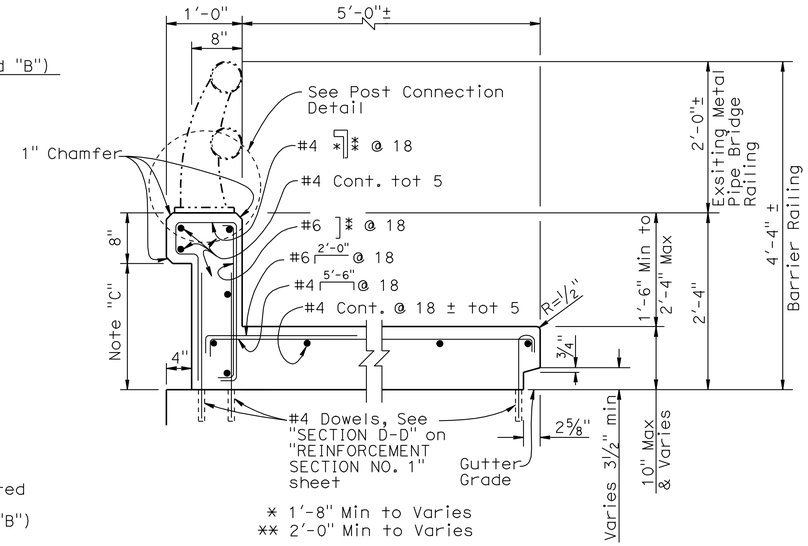

TYPE 4

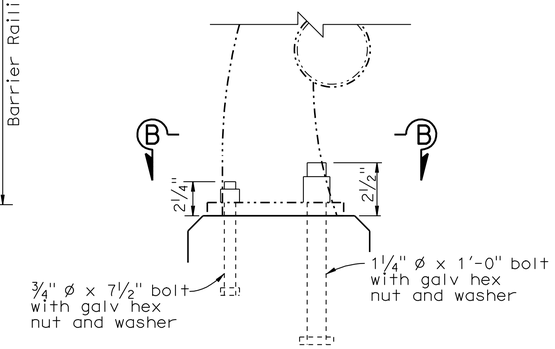

POST CONNECTION DETAILS

NOTES:

(A) Reuse existing metal pipe bridge railing except bolts & shim plates as noted. Location of railing posts, joints, bolts, etc are to match their existing location.
(B) At expansion joint in deck, rail joint shall be increased to same size
(C) Dimension will vary with superelevation transition
(D) Chain link fence not shown

LEGEND

Indicates Existing Metal Pipe Bridge Railing

Indicates New Construction

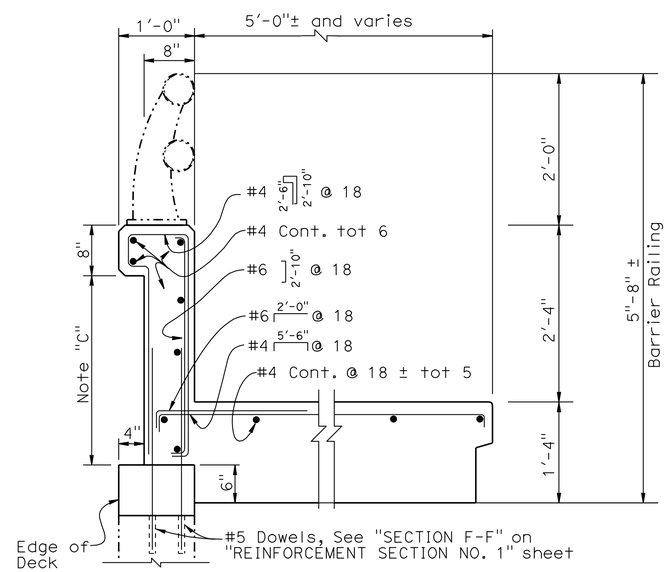

TYPE 4A

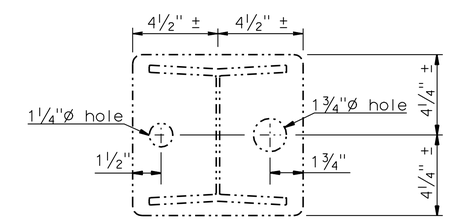

SECTION B-B

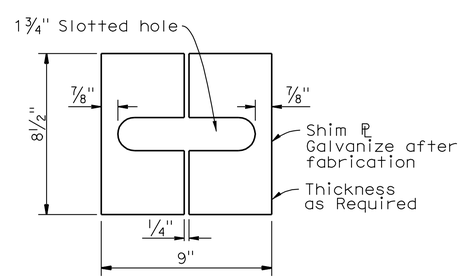

SHIM DETAIL

NOTE:
THE CONTRACTOR SHALL VERIFY ALL CONTROLLING FIELD DIMENSIONS BEFORE ORDERING OR FABRICATING ANY MATERIAL.

NO SCALES

	BY	CHECKED
DESIGN	F. Chen	R. Anderson
DETAILS	Y. Tang	R. Anderson
QUANTITIES	R. Anderson	F. Chen

STATE OF CALIFORNIA DEPARTMENT OF TRANSPORTATION

DIVISION OF ENGINEERING SERVICES STRUCTURE DESIGN DESIGN BRANCH 10

BRIDGE NO. 44-0134
POST MILE 53.36

OAK AVENUE OC (MODIFY)
TYPE 4 BARRIER

STRUCTURES DESIGN DETAIL SHEET (ENGLISH) (REV. 10/25/05)

ORIGINAL SCALE IN INCHES FOR REDUCED PLANS 0 1 2 3

CU 05
EA 0Q5601

DISREGARD PRINTS BEARING EARLIER REVISION DATES

REVISION DATES: 2-08-10 3-04-10 3-08-10 4-06-10

SHEET 8 OF 10

FILE => 59-440134-v-tbrdt.dgn

USERNAME => trphils DATE PLOTTED => 22-SEP-2010 TIME PLOTTED => 08:49

DIST	COUNTY	ROUTE	POST MILES TOTAL PROJECT	SHEET No	TOTAL SHEETS
05	Mon	101	53.1/53.9	58	70

REGISTERED CIVIL ENGINEER 6-17-10 DATE

9-20-10
PLANS APPROVAL DATE

REGISTERED PROFESSIONAL ENGINEER RYAN STILTZ No. C65738 Exp. 9/30/11 CIVIL STATE OF CALIFORNIA

The State of California or its officers or agents shall not be responsible for the accuracy or completeness of electronic copies of this plan sheet.

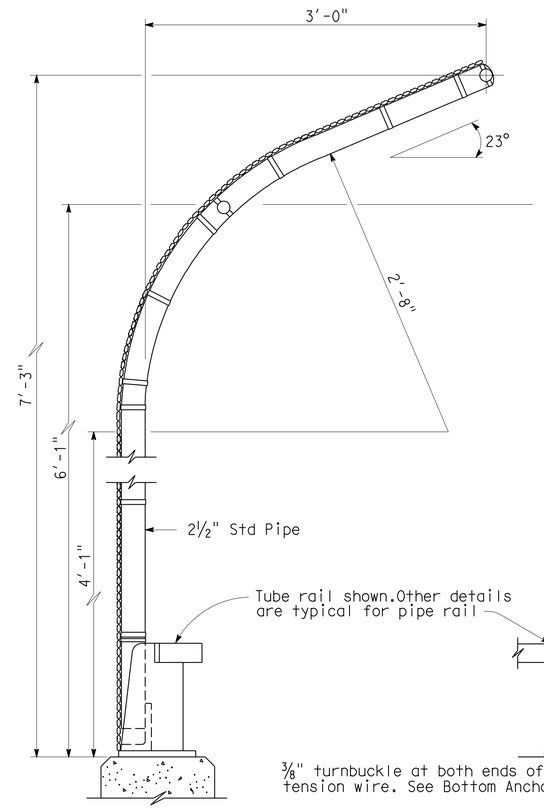

TYPICAL POST DETAIL

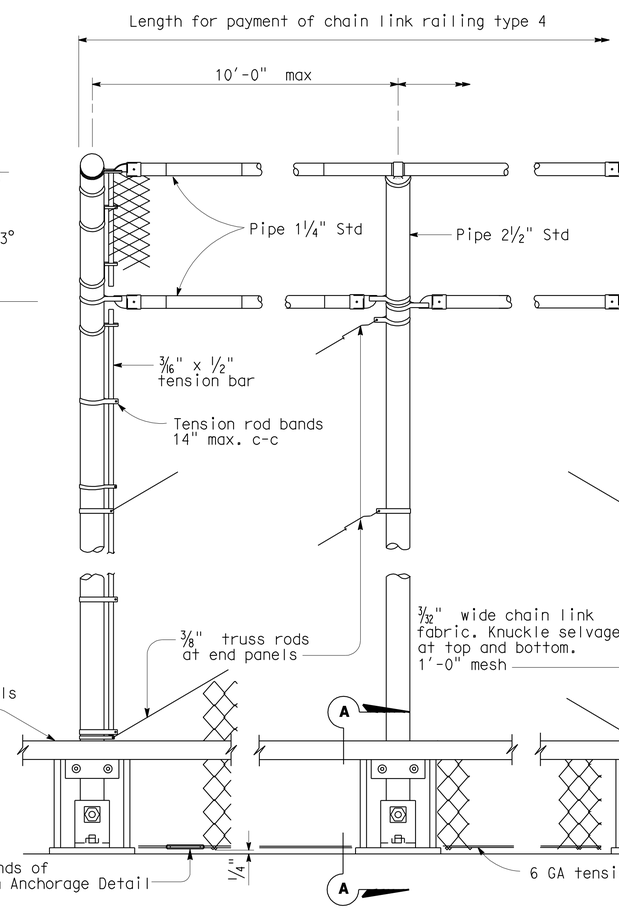

END POST

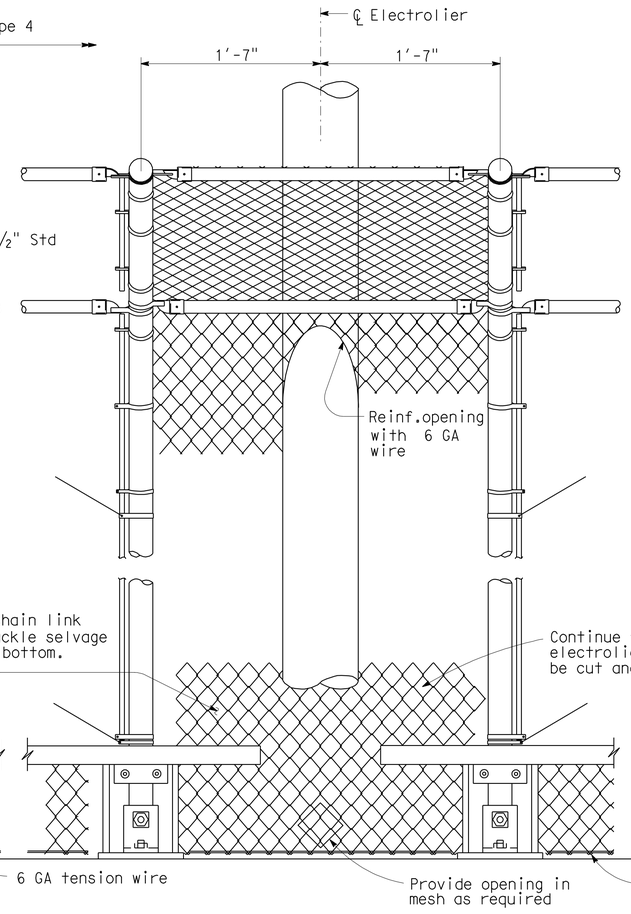

AT ELECTROLIER

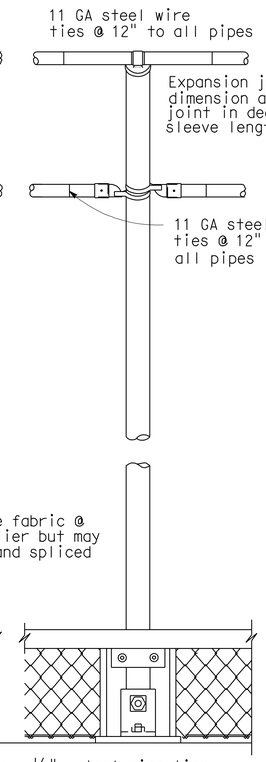

INTERMEDIATE PANEL

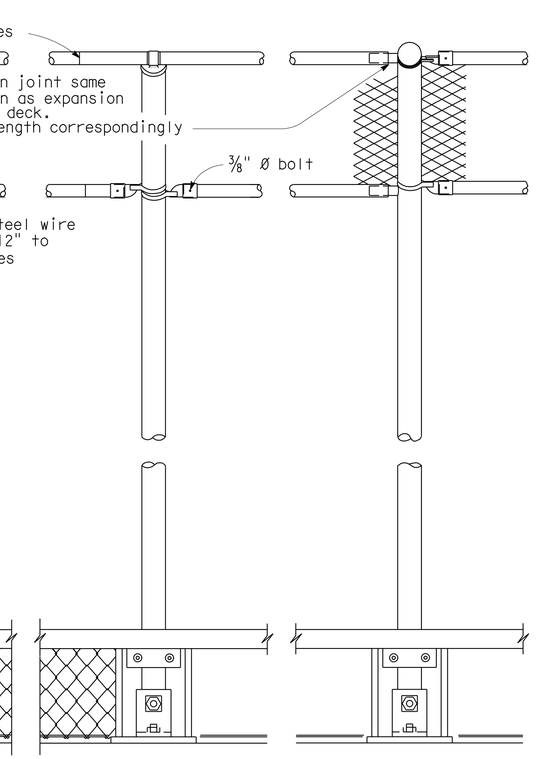

EXPANSION JOINT

ELEVATION

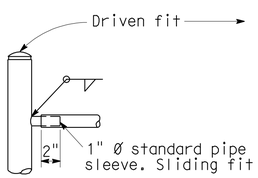

TYPICAL DETAILS

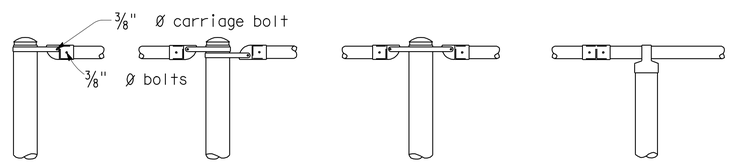

ALTERNATIVE DETAILS

TOP OF POST DETAILS

NOTES:

1. Railing assembly except chain link fabric to be galvanized after fabrication.
2. Contractor to provide suitable shim to place posts vertical.
3. Horizontal pipes shall be bent if radius is 150'-0" or less and may be on 10'-0" chords if radius is over 150'-0".
4. Peen all ⅜" Ø bolts.
5. When rail is on slope, place fabric parallel to slope.
6. The contractor shall verify all dependent dimensions in the field before ordering or fabricating any material.
7. Replace existing bolt with 1" 0 x 4" bolts.
8. At intermediate posts only, contractor has option of either ⅛" x 2" strap or ¼" anchor plate with eyebolt.

NO SCALE

STANDARD DRAWING

FILE NO. xs16-320-1e

APPROVED BY T SATTER (RESPONSIBLE TECHNICAL SPECIALIST) — APPROVAL DATE 4-15-08

RELEASED BY ROBERTO LACALLE (RESPONSIBLE OFFICE CHIEF) — RELEASE DATE 4-15-08

STATE OF CALIFORNIA DEPARTMENT OF TRANSPORTATION

DIVISION OF ENGINEERING SERVICES

BRIDGE NO. 44-0134

POST MILE 53.36

OAK AVENUE OC (MODIFY)

CHAIN LINK RAILING TYPE 4 - SHEET 1 OF 2

DS OSD 2147A (ENGLISH STANDARD DRAWING "XS" BORDER REV. 01/11/08)

ORIGINAL SCALE IN INCHES FOR REDUCED PLANS 0 1 2 3

CU 05
EA 0Q5601

DISREGARD PRINTS BEARING EARLIER REVISION DATES

REVISION DATES (PRELIMINARY STAGE ONLY) 5-11-10

SHEET 9 OF 10

FILE => 59-440134-v-xschainr01.dgn

USERNAME => trphils DATE PLOTTED => 22-SEP-2010 TIME PLOTTED => 08:42

DIST	COUNTY	ROUTE	POST MILES TOTAL PROJECT	SHEET No	TOTAL SHEETS
05	Mon	101	53.1/53.9	59	70

REGISTERED CIVIL ENGINEER 6-17-10 DATE

9-20-10
PLANS APPROVAL DATE

REGISTERED PROFESSIONAL ENGINEER RYAN STILTZ No. C65738 Exp. 9/30/11 CIVIL STATE OF CALIFORNIA

The State of California or its officers or agents shall not be responsible for the accuracy or completeness of electronic copies of this plan sheet.

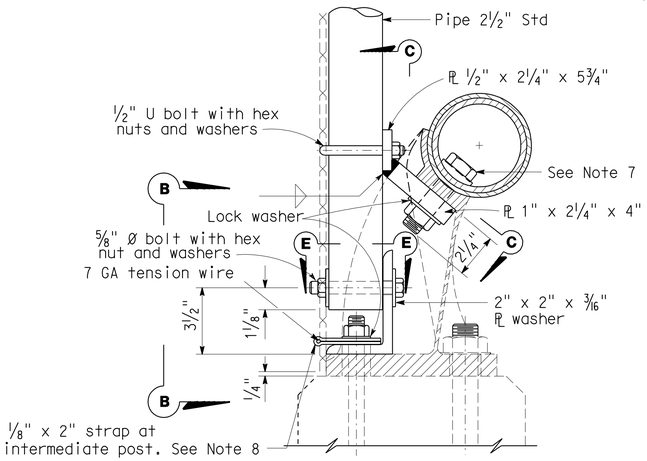

SECTION A-A (SINGLE PIPE RAIL)

Note: Details similar to Single Pipe Rail except as noted

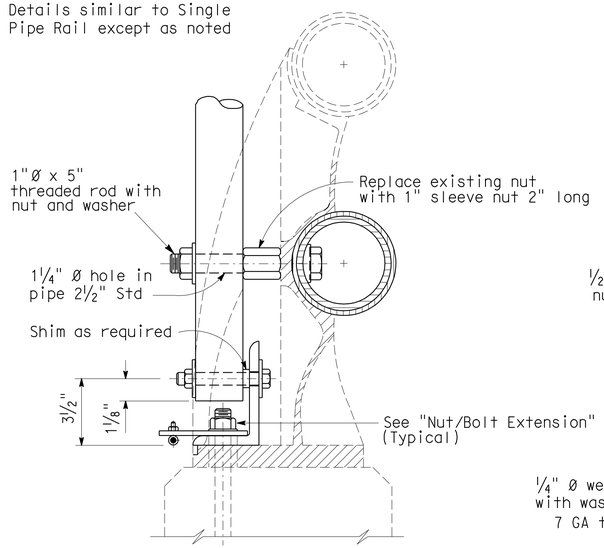

SECTION A-A (DOUBLE PIPE RAIL)

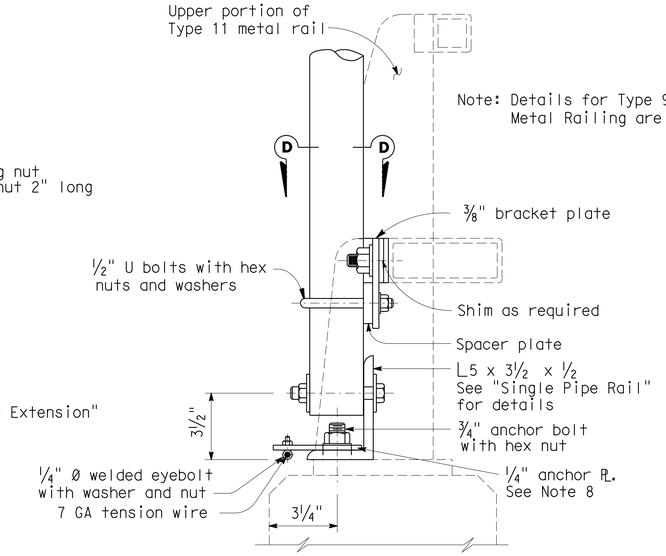

Note: Details for Type 9 and Type 11 Metal Railing are simular

SECTION A-A (TUBE RAIL)

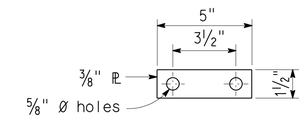

SPACER PLATE

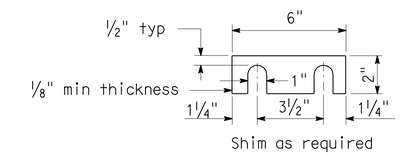

RAILING SHIM DETAIL

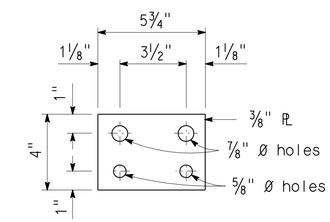

BRACKET PLATE

ATTACHMENT DETAILS

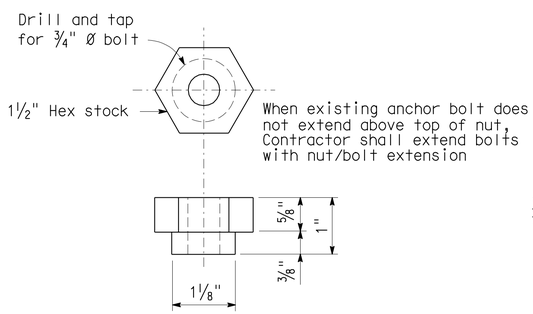

NUT/BOLT EXTENSION

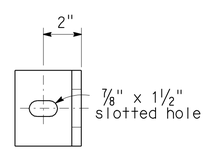

SECTION E-E

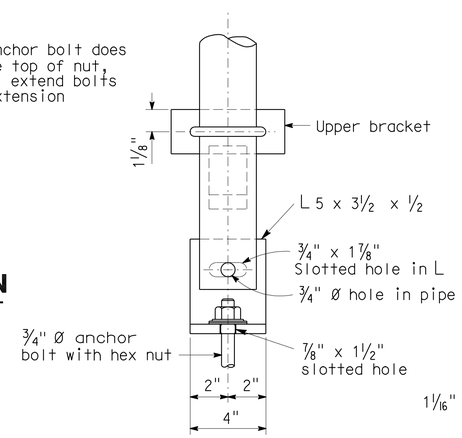

VIEW B-B

(Rail post not shown)

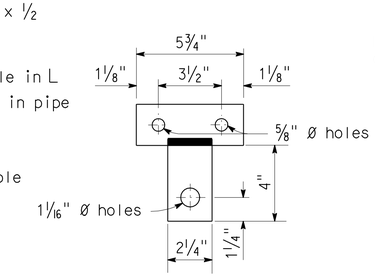

VIEW C-C

(Developed view of upper bracket)

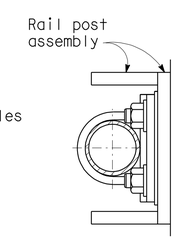

VIEW D-D

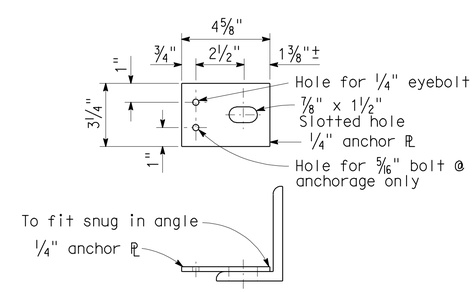

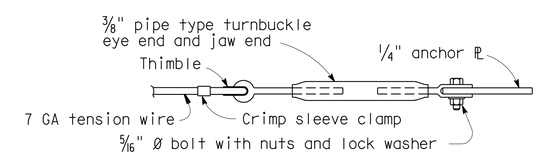

BOTTOM ANCHORAGE DETAIL

NO SCALE

STANDARD DRAWING

FILE NO. xs16-320-2e

APPROVED BY *T SATTER* RESPONSIBLE TECHNICAL SPECIALIST
APPROVAL DATE 4-15-08

RELEASED BY *ROBERTO LACALLE* RESPONSIBLE OFFICE CHIEF
RELEASE DATE 4-15-08

STATE OF CALIFORNIA DEPARTMENT OF TRANSPORTATION

DIVISION OF ENGINEERING SERVICES

BRIDGE NO. 44-0134
POST MILE 53.36

OAK AVENUE OC (MODIFY)
CHAIN LINK RAILING TYPE 4 - SHEET 2 OF 2

DS OSD 2147A (ENGLISH STANDARD DRAWING "XS" BORDER REV. 01/11/08)

ORIGINAL SCALE IN INCHES FOR REDUCED PLANS 0 1 2 3

CU 05
EA 0Q5601

DISREGARD PRINTS BEARING EARLIER REVISION DATES 5-11-10

REVISION DATES (PRELIMINARY STAGE ONLY)

SHEET 10 OF 10

FILE => 59-440134-v-xschainr02.dgn

USERNAME => trphilis DATE PLOTTED => 22-SEP-2010 TIME PLOTTED => 08:42

DIST	COUNTY	ROUTE	POST MILES TOTAL PROJECT	SHEET No	TOTAL SHEETS
05	Mon	101	53.1/53.9	60	70

REGISTERED CIVIL ENGINEER 6-17-10 DATE

9-20-10
PLANS APPROVAL DATE

REGISTERED PROFESSIONAL ENGINEER
RYAN STILTZ
No. C65738
Exp. 9/30/11
CIVIL
STATE OF CALIFORNIA

The State of California or its officers or agents shall not be responsible for the accuracy or completeness of electronic copies of this plan sheet.

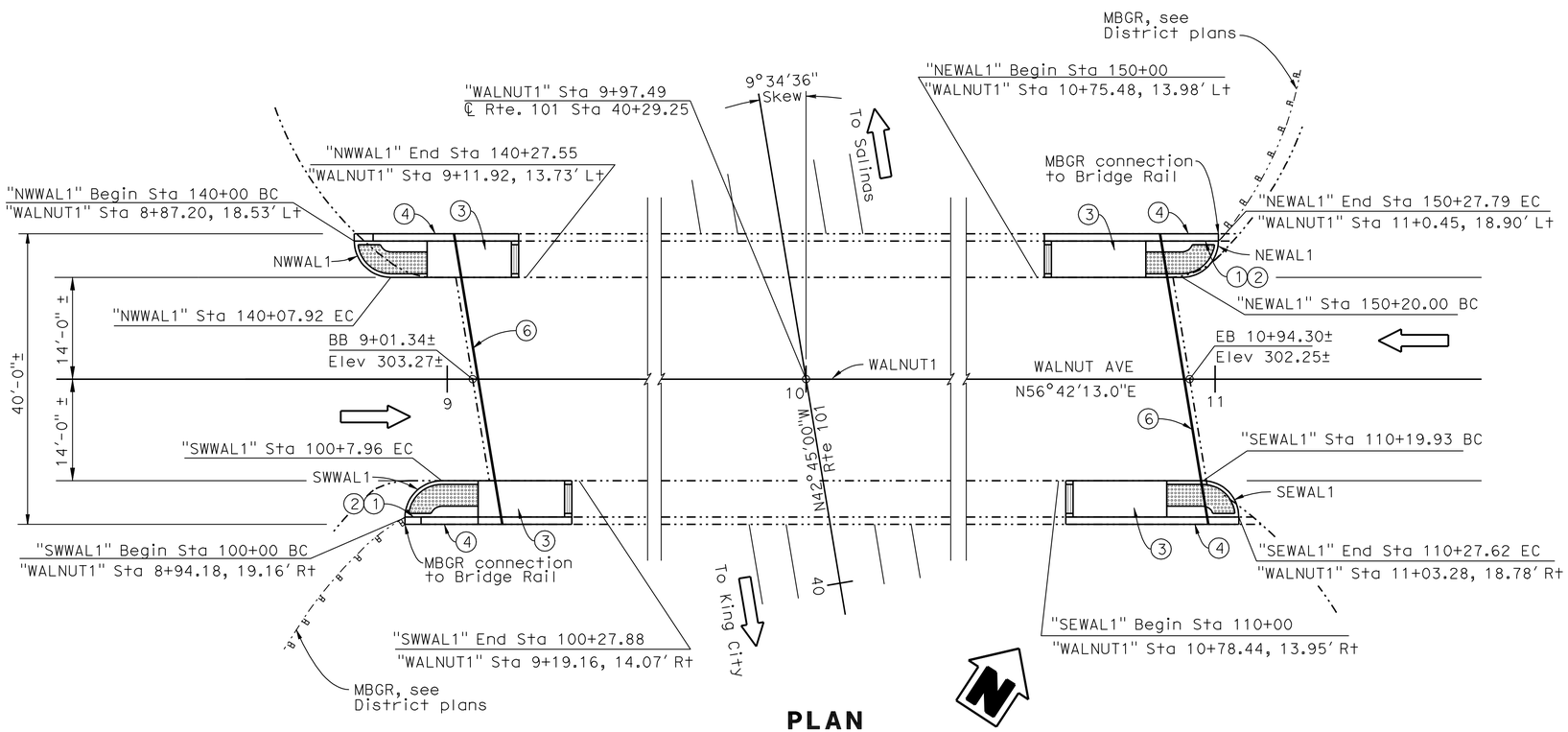

PLAN
1" = 10'

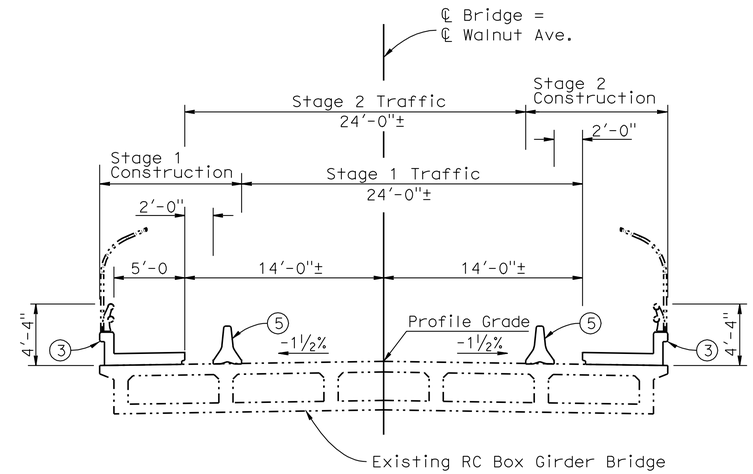

TYPICAL SECTION
3/16" = 1'-0"

STANDARD PLANS DATED MAY 2006

	A10A	ABBREVIATIONS (A-L)
	A10B	ABBREVIATIONS (M-Z)
	A10C	SYMBOLS (SHEET 1 OF 2)
	A10D	SYMBOLS (SHEET 2 OF 2)
RSP	A77K1	METAL BEAM GUARD RAILING CONNECTIONS TO BRIDGE RAILINGS WITH SIDEWALKS DETAILS No.1
RSP	A88A	CURB RAMP DETAILS
	A88B	CURB RAMP AND ISLAND PASSAGEWAY DETAILS
RSP	B6-21	JOINT SEALS (MAXIMUM MOVEMENT RATING = 2")

STANDARD PLAN SHEET NO.

DETAIL NO.

NOTE:
THE CONTRACTOR SHALL VERIFY ALL CONTROLLING FIELD DIMENSIONS BEFORE ORDERING OR FABRICATING ANY MATERIAL.

NOTES:

1. Paint "WALNUT AVENUE OC"
2. Paint "BRIDGE NO. 44-0135"
3. Remove and reconstruct portion of existing Sidewalk and Type 4 barrier. Reuse existing pipe railing, posts, and chain link railing.
4. Remove and reconstruct portion of existing wingwall.
5. Temporary Railing Type k, see "Road Plans"
6. Replace joint seal. For joint seal table and joint seal notes, see "MISCELLANEOUS DETAILS" sheet.

LEGEND:

—— Indicates New Construction
–··– Indicates Existing Structure
━━ Replace Joint Seal

QUANTITIES

Prepare Concrete Bridge Deck Surface	94	SQFT
Bridge Removal (Portion), Location B	LUMP	SUM
Structure Excavation (Bridge)	5	CY
Structural Concrete, Bridge	1	CY
Drill And Bond Dowel	78	LF
Clean Expansion Joint	77	LF
Furnish Polyester Concrete Overlay	17	CF
Place Polyester Concrete Overlay	94	SQFT
Joint Seal (MR 1")	77	LF
Bar Reinforcing Steel (Bridge)	460	LB
Concrete Barrier (Type 4)	95	LF

INDEX TO PLANS

Sheet No.	Title
1.	GENERAL PLAN
2.	NW WALNUT CURB RAMP LAYOUT
3.	NE WALNUT CURB RAMP LAYOUT
4.	SW WALNUT CURB RAMP LAYOUT
5.	SE WALNUT CURB RAMP LAYOUT
6.	MISCELLANEOUS DETAILS
7.	REINFORCEMENT PLAN NO.1
8.	REINFORCEMENT PLAN NO.2
9.	REINFORCEMENT SECTION NO. 1
10.	REINFORCEMENT SECTION NO. 2
11.	TYPE 4 BARRIER

Daniel T Adams
DESIGN ENGINEER

	BY	CHECKED
DESIGN	F. Chen	R. Anderson
DETAILS	Y. Tang	R. Anderson
QUANTITIES	R. Anderson	F. Chen

LOAD & RESISTANCE FACTOR DESIGN — LIVE LOADING: HL93 W/"LOW-BOY"; PERMIT DESIGN VEHICLE

	BY	CHECKED
LAYOUT	F. Chen	R. Anderson
SPECIFICATIONS	K. Ellingson	PLANS AND SPECS COMPARED K. Ellingson

STATE OF CALIFORNIA
DEPARTMENT OF TRANSPORTATION

DIVISION OF ENGINEERING SERVICES
STRUCTURE DESIGN
DESIGN BRANCH 10

BRIDGE NO. 44-0135
POST MILE 53.86

WALNUT AVENUE OC (MODIFY)
GENERAL PLAN

ORIGINAL SCALE IN INCHES FOR REDUCED PLANS 0 1 2 3

CU 05
EA 0Q5601

DISREGARD PRINTS BEARING EARLIER REVISION DATES

REVISION DATES: 09-29-09 1-11-10 2-04-10 3-04-10 5-06-10

SHEET 1 OF 11

STRUCTURES DESIGN GENERAL PLAN SHEET (ENGLISH) (REV.07-24-06)

FILE => 59-440135-a-gp.dgn

USERNAME => trphilis DATE PLOTTED => 22-SEP-2010 TIME PLOTTED => 08:42

DIST	COUNTY	ROUTE	POST MILES TOTAL PROJECT	SHEET No	TOTAL SHEETS
05	Mon	101	53.1/53.9	61	70

REGISTERED CIVIL ENGINEER 6-17-10 DATE

9-20-10
PLANS APPROVAL DATE

REGISTERED PROFESSIONAL ENGINEER RYAN STILTZ No. C65738 Exp. 9/30/11 CIVIL STATE OF CALIFORNIA

The State of California or its officers or agents shall not be responsible for the accuracy or completeness of electronic copies of this plan sheet.

NOTE:

1. For "SECTION A-A , B-B, and C-C", see "MISCELLANEOUS DETAILS" sheet
2. For ramp area slope information, see "ROAD PLANS"

"NWWAL1" CURVE DATA

R = 5.04′
Δ = 90°0′00"
T = 5.04′
L = 7.92′

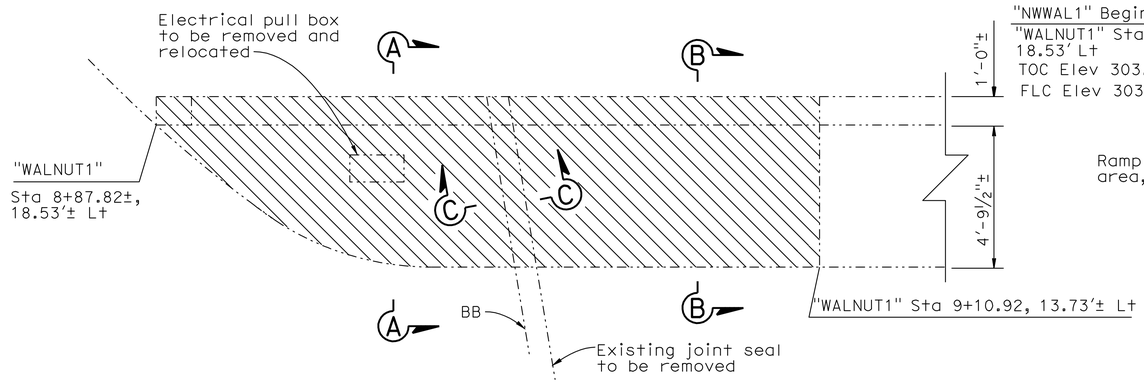

PLAN
⅜" = 1′-0"

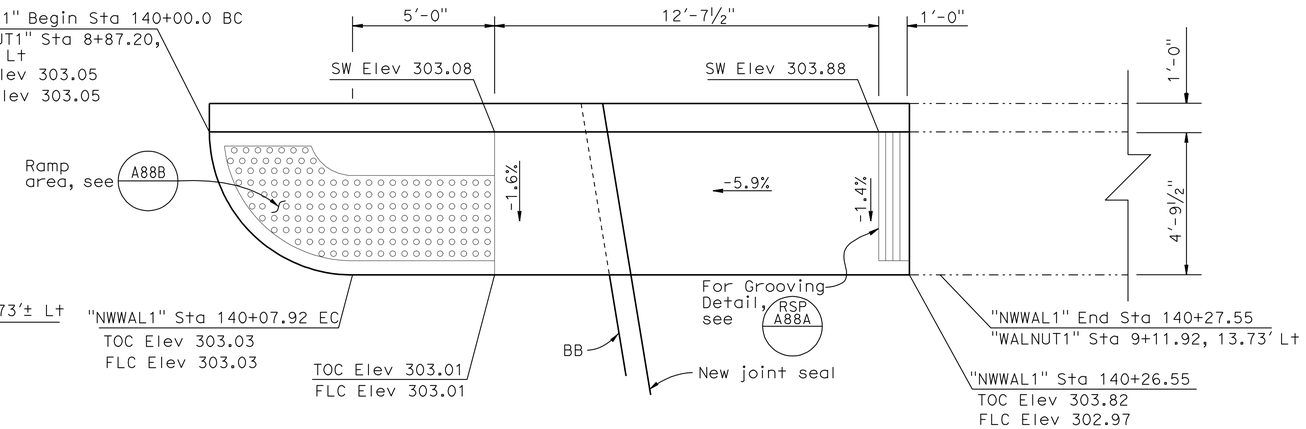

PLAN
⅜" = 1′-0"

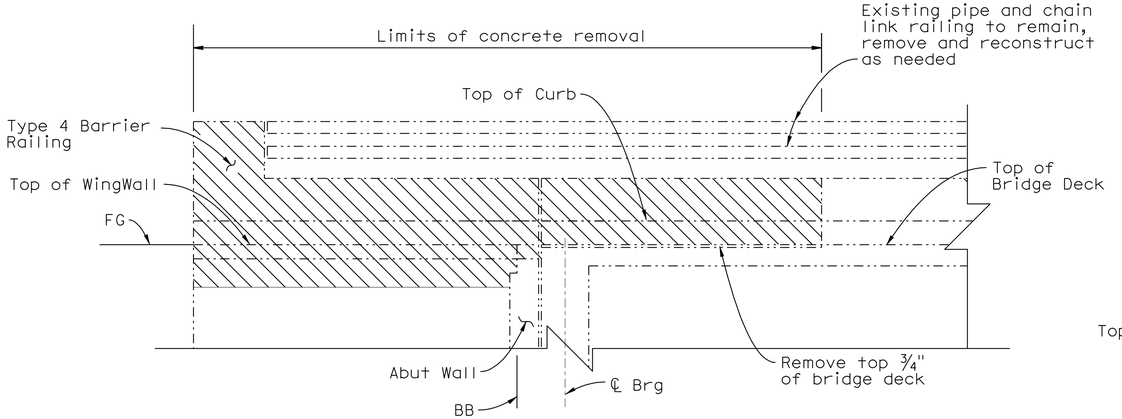

ELEVATION
⅜" = 1′-0"

(CONCRETE REMOVAL)

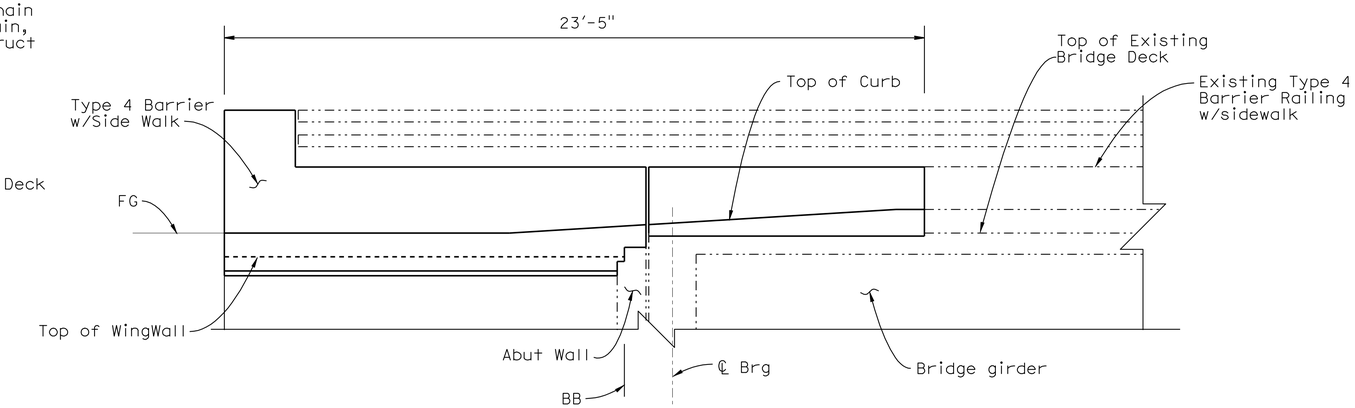

ELEVATION
⅜" = 1′-0"

(NEW CONSTRUCTION)

LEGEND

Indicates New Construction
Indicates Existing Structure
Indicates Bridge Removal (Portion)

NOTE:
THE CONTRACTOR SHALL VERIFY ALL CONTROLLING FIELD DIMNSIONS BEFORE ORDERING OR FABRICATING ANY MATERIAL.

	BY	CHECKED
DESIGN	F. Chen	R. Anderson
DETAILS	Y. Tang	R. Anderson
QUANTITIES	R. Anderson	F. Chen

STATE OF CALIFORNIA
DEPARTMENT OF TRANSPORTATION

DIVISION OF ENGINEERING SERVICES
STRUCTURE DESIGN
DESIGN BRANCH 10

BRIDGE NO. 44-0135
POST MILE 53.86

WALNUT AVENUE OC (MODIFY)
NW WALNUT CURB RAMP LAYOUT

STRUCTURES DESIGN DETAIL SHEET (ENGLISH) (REV. 10/25/05)

ORIGINAL SCALE IN INCHES FOR REDUCED PLANS 0 1 2 3

CU 05
EA 0Q5601

DISREGARD PRINTS BEARING EARLIER REVISION DATES

REVISION DATES: 12-04-09, 1-04-10, 4-09-10, 5-11-10

SHEET 2 OF 11

FILE => 59-440135-v-curb-lo1.dgn

USERNAME => trphtls DATE PLOTTED => 22-SEP-2010 TIME PLOTTED => 08:43

DIST	COUNTY	ROUTE	POST MILES TOTAL PROJECT	SHEET No	TOTAL SHEETS
05	Mon	101	53.1/53.9	62	70

REGISTERED CIVIL ENGINEER 6-17-10 DATE

9-20-10
PLANS APPROVAL DATE

REGISTERED PROFESSIONAL ENGINEER RYAN STILTZ No. C65738 Exp. 9/30/11 CIVIL STATE OF CALIFORNIA

The State of California or its officers or agents shall not be responsible for the accuracy or completeness of electronic copies of this plan sheet.

NOTE:

1. For "SECTION A-A , B-B, and C-C", see "MISCELLANEOUS DETAILS" sheet
2. For ramp area slope information, see "ROAD PLANS"

"NEWAL1"CURVE DATA

R = 4.96′
Δ = 90°0′00"
T = 4.96
L = 7.79′

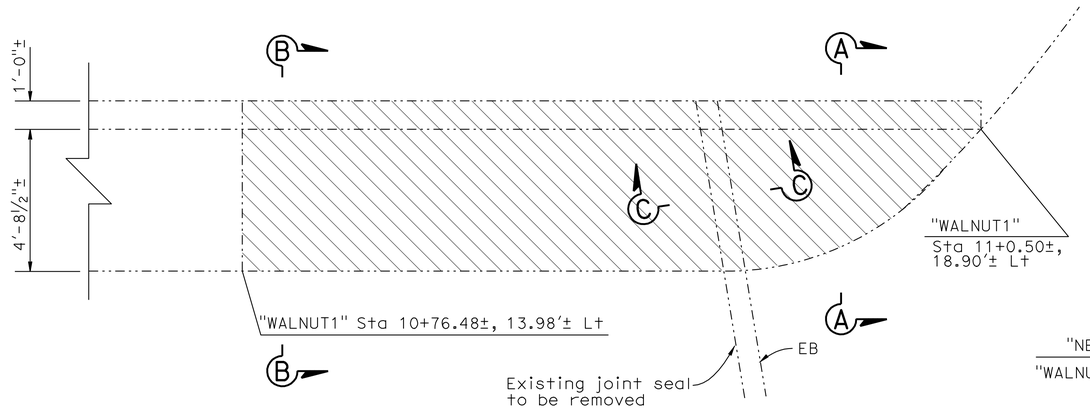

PLAN
⅜" = 1′-0"

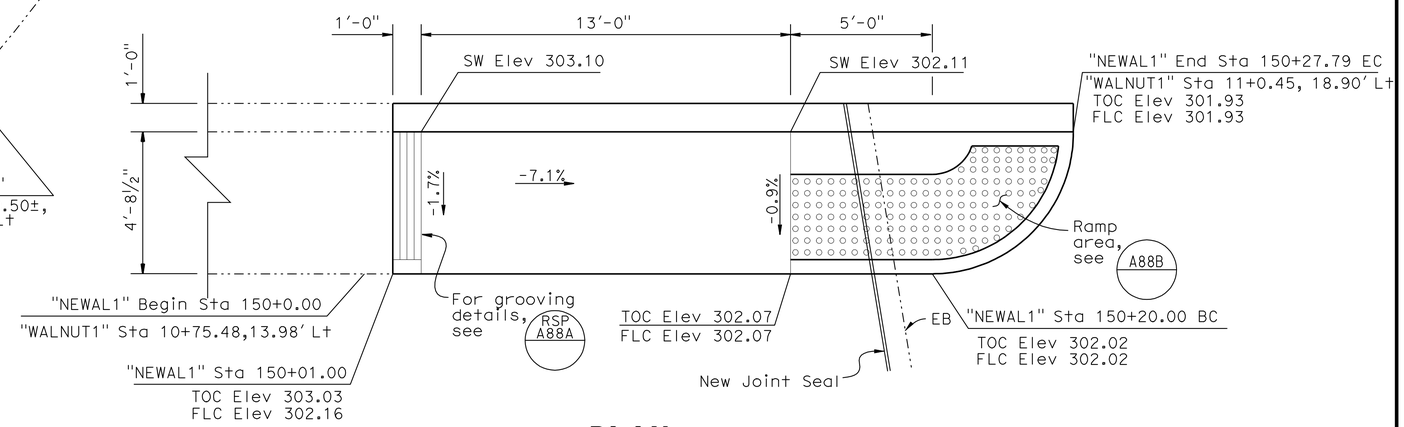

PLAN
⅜" = 1′-0"

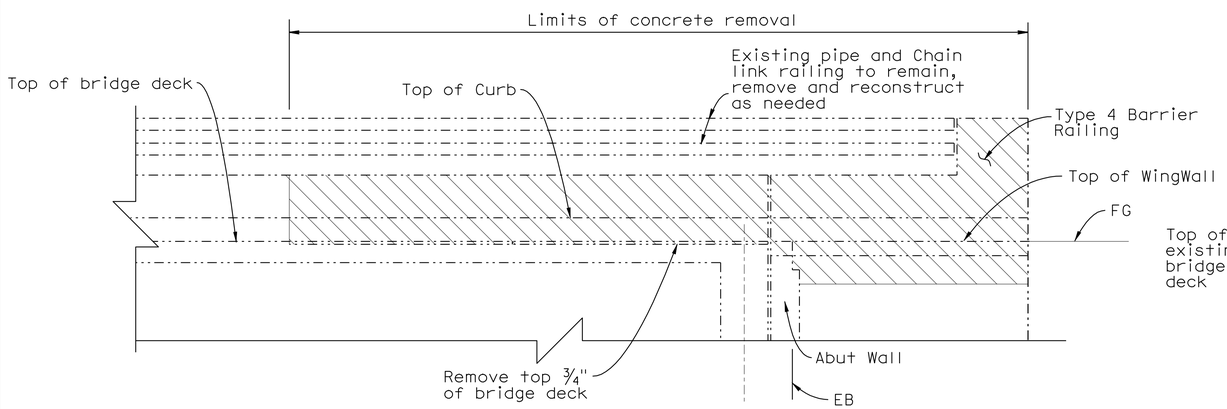

ELEVATION
⅜" = 1′-0"

(CONCRETE REMOVAL)

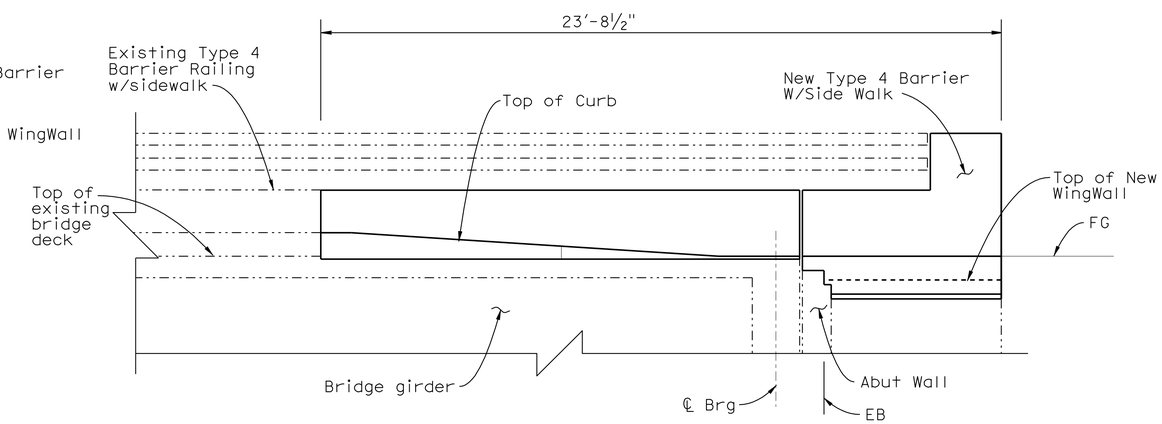

ELEVATION
⅜" = 1′-0"

(NEW CONSTRUCTION)

LEGEND

Indicates New Construction
Indicates Existing Structure
Indicates Bridge Removal (Portion)

NOTE:
THE CONTRACTOR SHALL VERIFY ALL CONTROLLING FIELD DIMNSIONS BEFORE ORDERING OR FABRICATING ANY MATERIAL.

	BY	CHECKED
DESIGN	F. Chen	R. Anderson
DETAILS	Y. Tang	R. Anderson
QUANTITIES	R. Anderson	F. Chen

STATE OF CALIFORNIA
DEPARTMENT OF TRANSPORTATION

DIVISION OF ENGINEERING SERVICES
STRUCTURE DESIGN
DESIGN BRANCH 10

BRIDGE NO. 44-0135
POST MILE 53.86

WALNUT AVENUE OC (MODIFY)
NE WALNUT CURB RAMP LAYOUT

STRUCTURES DESIGN DETAIL SHEET (ENGLISH) (REV. 10/25/05)

ORIGINAL SCALE IN INCHES FOR REDUCED PLANS 0 1 2 3

CU 05
EA 0Q5601

DISREGARD PRINTS BEARING EARLIER REVISION DATES

REVISION DATES: 3-05-10 2-04-10 4-09-10 5-11-10

SHEET 3 OF 11

FILE => 59-440135-v-curb-1o2.dgn

USERNAME => trphtls DATE PLOTTED => 22-SEP-2010 TIME PLOTTED => 08:49

DIST	COUNTY	ROUTE	POST MILES TOTAL PROJECT	SHEET No	TOTAL SHEETS
05	Mon	101	53.1/53.9	63	70

REGISTERED CIVIL ENGINEER 6-17-10 DATE

9-20-10
PLANS APPROVAL DATE

REGISTERED PROFESSIONAL ENGINEER RYAN STILTZ No. C65738 Exp. 9/30/11 CIVIL STATE OF CALIFORNIA

The State of California or its officers or agents shall not be responsible for the accuracy or completeness of electronic copies of this plan sheet.

NOTE:

1. For "SECTION A-A , B-B, and C-C", see "MISCELLANEOUS DETAILS" sheet
2. For ramp area slope information, see "ROAD PLANS"

"SWWAL1" CURVE DATA

R = 5.07′
Δ = 90°0′00"
T = 5.07′
L = 7.96′

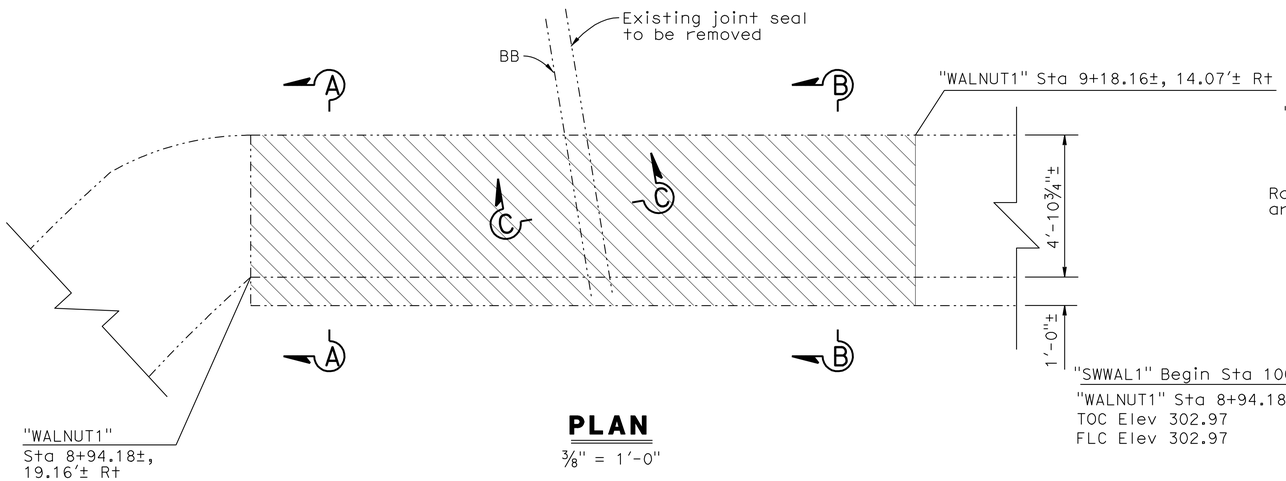

PLAN
⅜" = 1′-0"

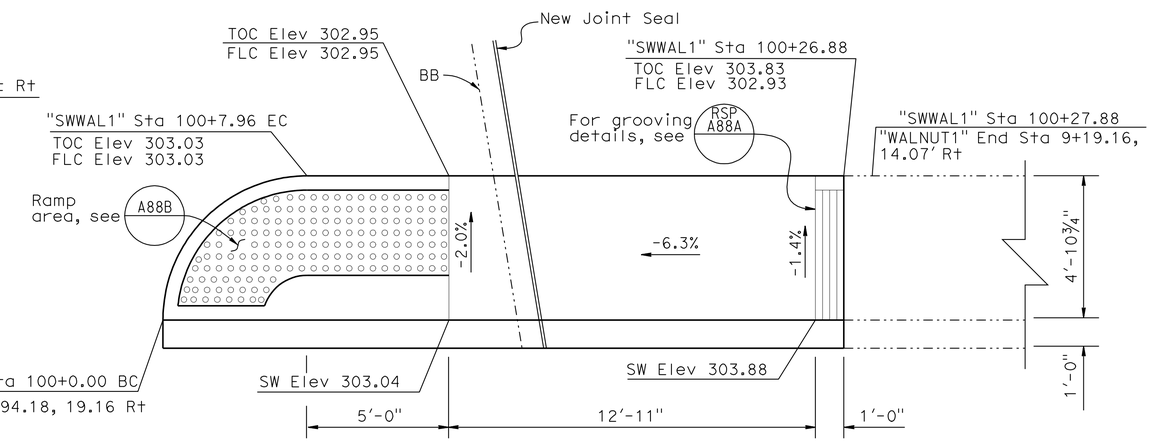

PLAN
⅜" = 1′-0"

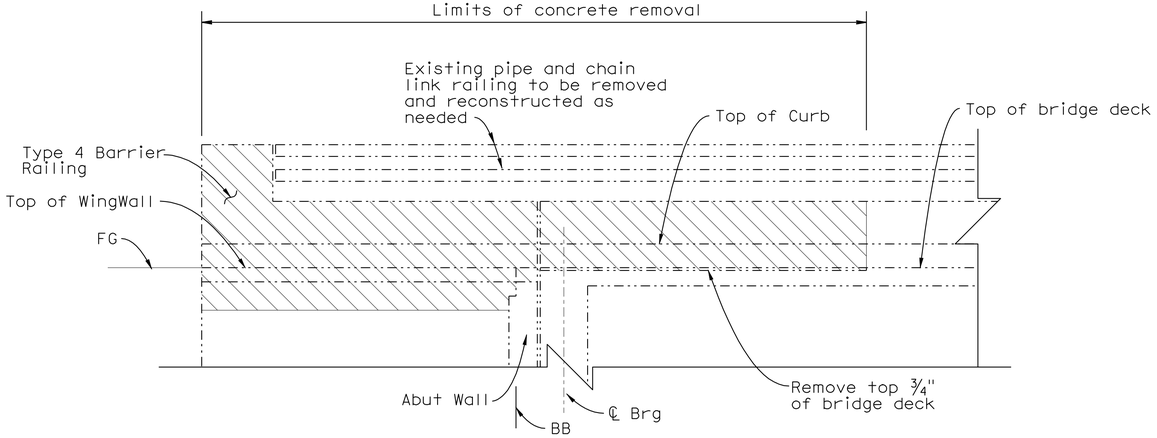

MIRROR ELEVATION
⅜" = 1′-0"

(CONCRETE REMOVAL)

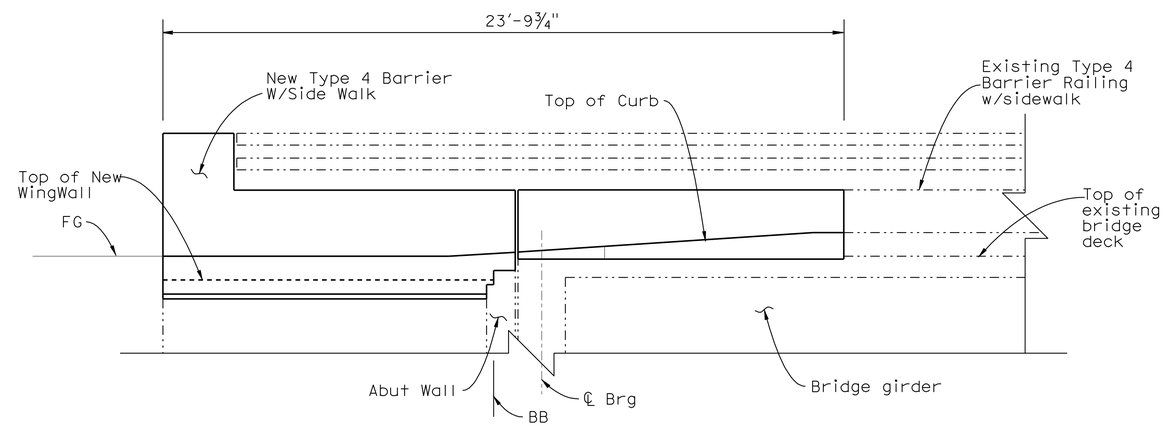

MIRROR ELEVATION
⅜" = 1′-0"

(NEW CONSTRUCTION)

LEGEND

Indicates New Construction
Indicates Existing Structure
Indicates Bridge Removal (Portion)

NOTE:
THE CONTRACTOR SHALL VERIFY ALL CONTROLLING FIELD DIMNSIONS BEFORE ORDERING OR FABRICATING ANY MATERIAL.

	BY	CHECKED
DESIGN	F. Chen	R. Anderson
DETAILS	Y. Tang	R. Anderson
QUANTITIES	R. Anderson	F. Chen

STATE OF CALIFORNIA
DEPARTMENT OF TRANSPORTATION

DIVISION OF ENGINEERING SERVICES
STRUCTURE DESIGN
DESIGN BRANCH 10

BRIDGE NO. 44-0135
POST MILE 53.86

WALNUT AVENUE OC (MODIFY)
SW WALNUT CURB RAMP LAYOUT

STRUCTURES DESIGN DETAIL SHEET (ENGLISH) (REV. 10/25/05)

ORIGINAL SCALE IN INCHES FOR REDUCED PLANS 0 1 2 3

CU 05
EA 005601

DISREGARD PRINTS BEARING EARLIER REVISION DATES

REVISION DATES: 1-06-10 2-04-10 5-11-10

SHEET 4 OF 11

FILE => 59-440135-v-curb-1o3.dgn

USERNAME => s135318 DATE PLOTTED => 22-SEP-2010 TIME PLOTTED => 08:51

DIST	COUNTY	ROUTE	POST MILES TOTAL PROJECT	SHEET No	TOTAL SHEETS
05	Mon	101	53.1/53.9	64	70

REGISTERED CIVIL ENGINEER 6-17-10 DATE

9-20-10
PLANS APPROVAL DATE

REGISTERED PROFESSIONAL ENGINEER RYAN STILTZ No. C65738 Exp. 9/30/11 CIVIL STATE OF CALIFORNIA

The State of California or its officers or agents shall not be responsible for the accuracy or completeness of electronic copies of this plan sheet.

NOTE:

1. For "SECTION A-A , B-B, and C-C", see "MISCELLANEOUS DETAILS" sheet
2. For ramp area slope information, see "ROAD PLANS"

"SEWAL1"CURVE DATA

R = 4.90′
Δ = 90°0′0"
T = 4.90′
L = 7.69′

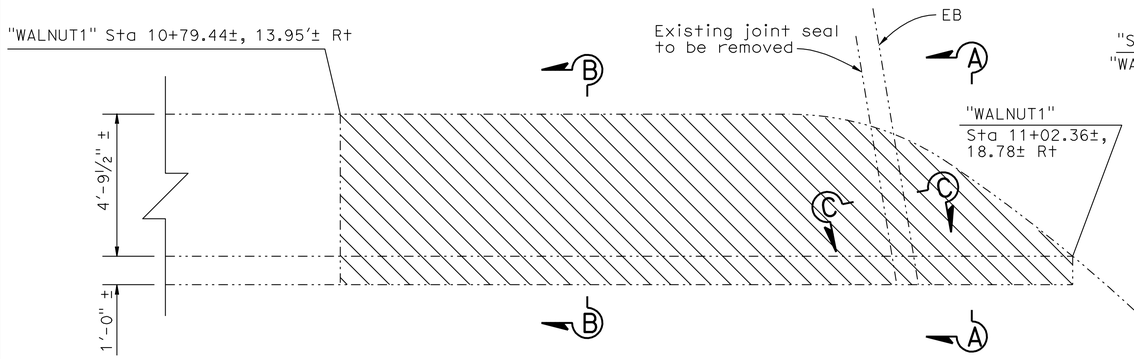

PLAN
3/8" = 1′-0"

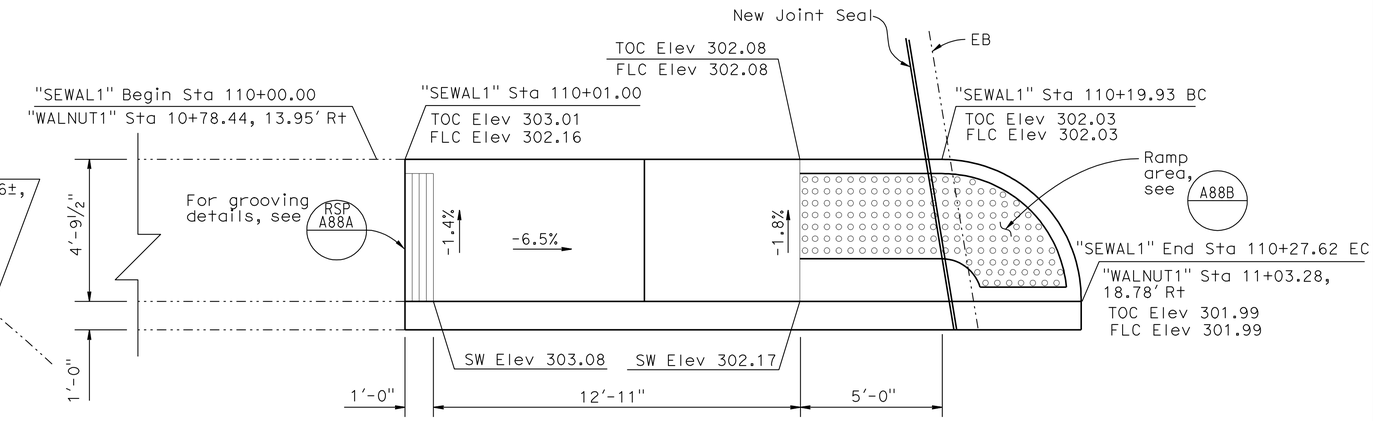

PLAN
3/8" = 1′-0"

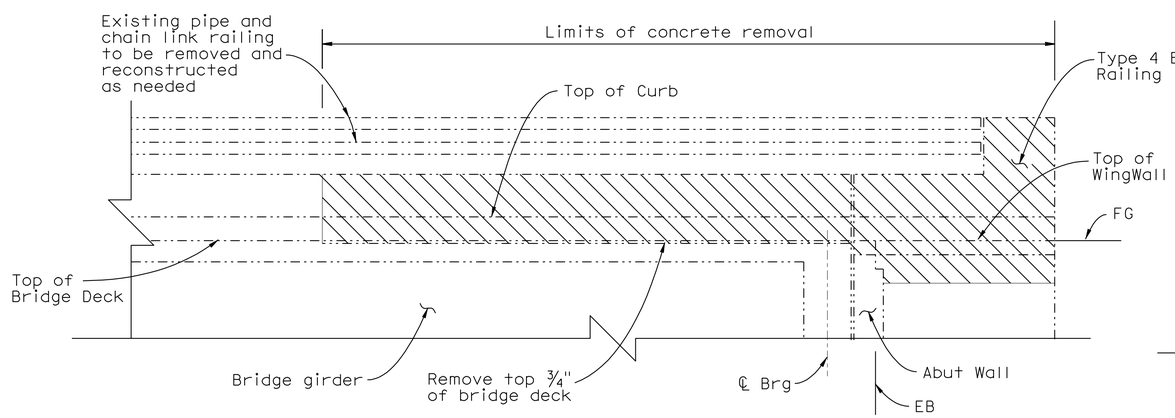

MIRROR ELEVATION
3/8" = 1′-0"

(CONCRETE REMOVAL)

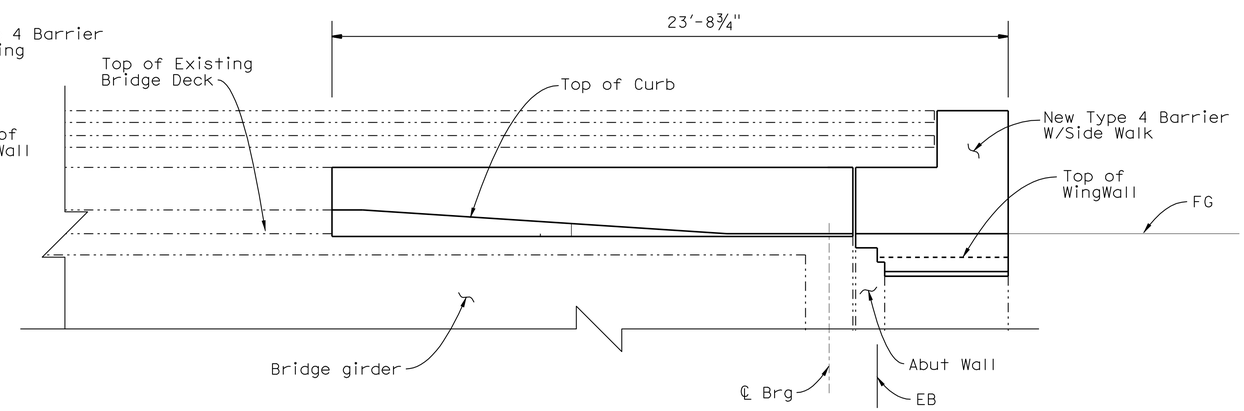

MIRROR ELEVATION
3/8" = 1′-0"

(NEW CONSTRUCTION)

LEGEND

Indicates New Construction
Indicates Existing Structure
Indicates Bridge Removal (Portion)

NOTE:
THE CONTRACTOR SHALL VERIFY ALL CONTROLLING FIELD DIMNSIONS BEFORE ORDERING OR FABRICATING ANY MATERIAL.

	BY	CHECKED
DESIGN	F. Chen	R. Anderson
DETAILS	Y. Tang	R. Anderson
QUANTITIES	R. Anderson	F. Chen

STATE OF CALIFORNIA
DEPARTMENT OF TRANSPORTATION

DIVISION OF ENGINEERING SERVICES
STRUCTURE DESIGN
DESIGN BRANCH 10

BRIDGE NO. 44-0135
POST MILE 53.86

WALNUT AVENUE OC (MODIFY)
SE WALNUT CURB RAMP LAYOUT

STRUCTURES DESIGN DETAIL SHEET (ENGLISH) (REV. 10/25/05)

ORIGINAL SCALE IN INCHES FOR REDUCED PLANS 0 1 2 3

CU 05
EA 0Q5601

DISREGARD PRINTS BEARING EARLIER REVISION DATES

REVISION DATES: 1-8-10 2-04-10 4-07-10

SHEET 5 OF 11

FILE => 59-440135-v-curb-lo4.dgn

USERNAME => trmikesl DATE PLOTTED => 22-SEP-2010 TIME PLOTTED => 11:14

DIST	COUNTY	ROUTE	POST MILES TOTAL PROJECT	SHEET No	TOTAL SHEETS
05	Mon	101	53.1/53.9	65	70

REGISTERED CIVIL ENGINEER 6-17-10 DATE

9-20-10
PLANS APPROVAL DATE

REGISTERED PROFESSIONAL ENGINEER RYAN STILTZ No. C65738 Exp. 9/30/11 CIVIL STATE OF CALIFORNIA

The State of California or its officers or agents shall not be responsible for the accuracy or completeness of electronic copies of this plan sheet.

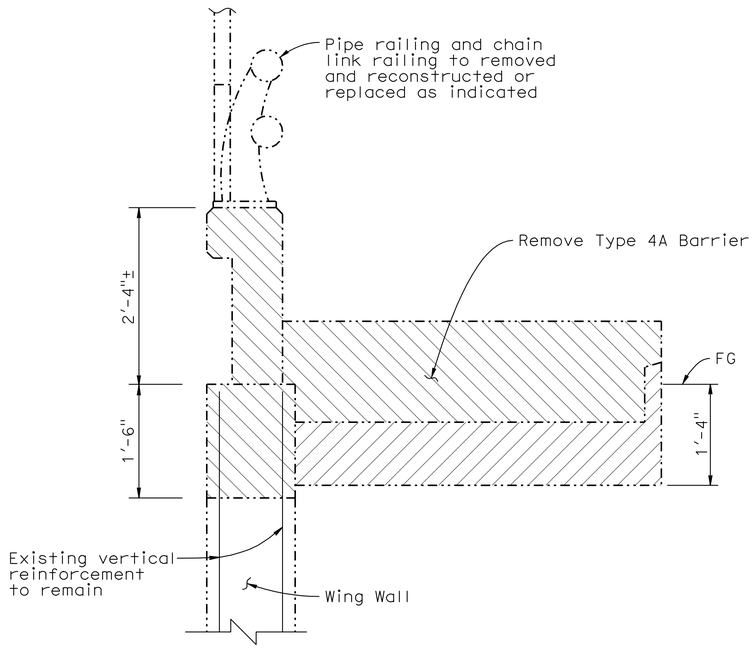

SECTION A-A
1" = 1'-0"

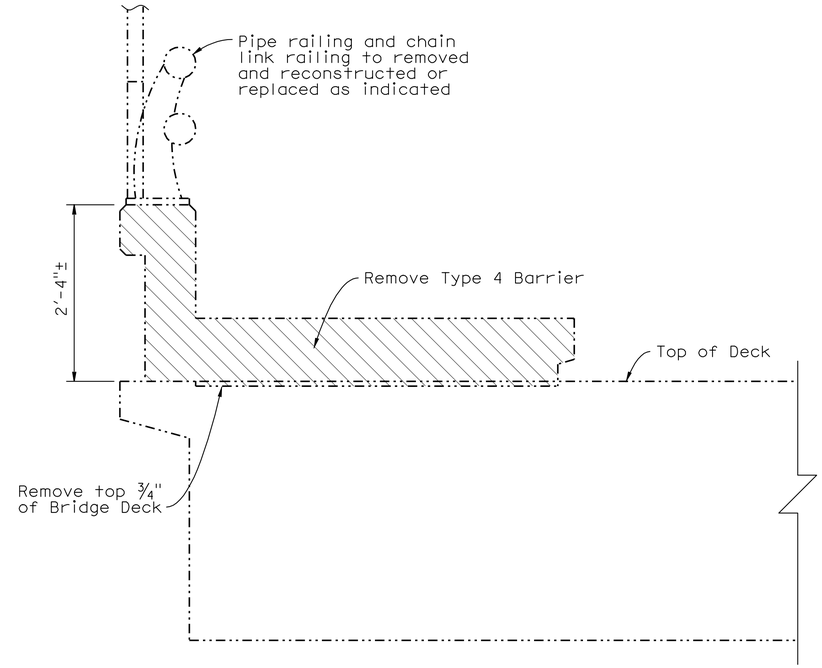

SECTION B-B
1" = 1'-0"

LEGEND

Indicates Existing Structure

Indicates Bridge Removal (Portion)

Indicates Structure Excavation

NOTE:

For location of "SECTION A-A, B-B, and C-C", see "NW WALNUT CURB RAMP LAYOUT", "NE WALNUT CURB RAMP LAYOUT", "SW WALNUT CURB RAMP LAYOUT", and "SE WALNUT CURB RAMP LAYOUT" sheet.

JOINT SEAL TABLE

	JOINT SEAL TYPE	MIN "MR"	MIN "W1"	APPROX LENGTH	EXISTING WATERSTOP	APPROX DEPTH TO CLEAN EXP JOINT
Abut 1	B	1"	*	38'-6"	NO	N/A
Abut 5	B	1"	*	38'-6"	NO	N/A

* To be provided by the engineer, See Note 2

The following notes apply to JOINT SEAL TYPE B:

1. Seal must satisfy both minimum Movement Rating (MR) and minimum W1 requirements.
2. Minimum W1 is the calculated maximum width of the joint based on field measurements. After the joints have been cleaned, minumum W1 is to be recalculated by the Engineer.
3. W1 shall be the smaller of the values determined as follows:
   A. 0.85 times the manufactures's designed minimum uncompressed width of the seal.
   B. The width of the seal on the third successive test cycle of the pressure deflection test, when compressed to an average pressure of 3 psi
4. Bend Type B joint seal 6" up into curb or rail on the low side of the deck where deck joint matches curb or rail joint.
5. For details not shown see RSP B6-21

NOTE:
THE CONTRACTOR SHALL VERIFY ALL CONTROLLING FIELD DIMENSIONS BEFORE ORDERING OR FABRICATING ANY MATERIAL.

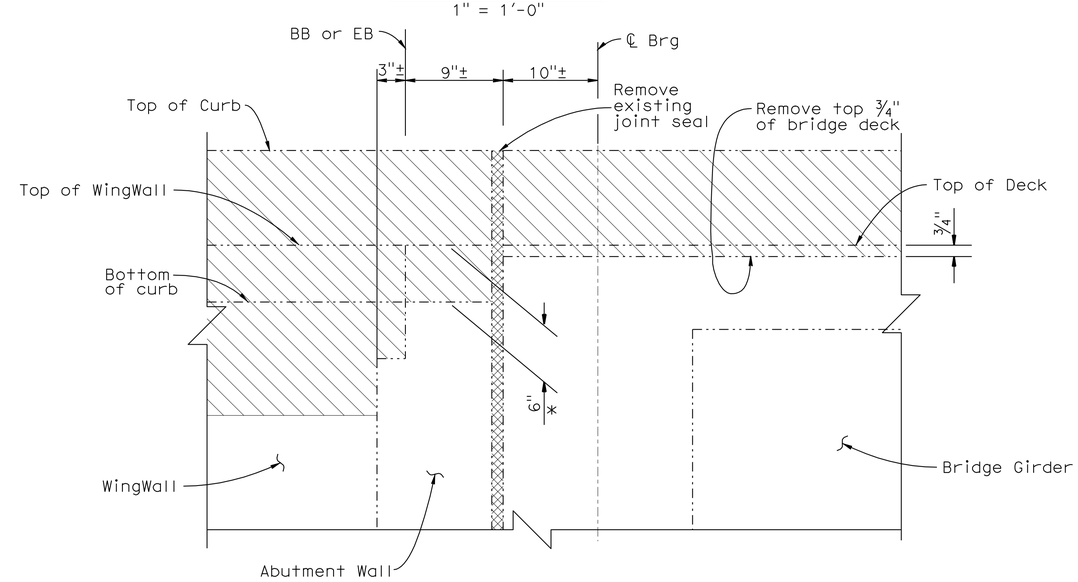

* Existing Abut Wall Reinf to Remain

SECTION C-C
1½" = 1'-0"

DESIGN	BY F. Chen	CHECKED R. Anderson	
DETAILS	BY Y. Tang	CHECKED R. Anderson	
QUANTITIES	BY R. Anderson	CHECKED F. Chen	

STATE OF CALIFORNIA
DEPARTMENT OF TRANSPORTATION

DIVISION OF ENGINEERING SERVICES
STRUCTURE DESIGN
DESIGN BRANCH 10

BRIDGE NO. 44-0135
POST MILE 53.86

WALNUT AVENUE OC (MODIFY)
MISCELLANEOUS DETAILS

STRUCTURES DESIGN DETAIL SHEET (ENGLISH) (REV. 10/25/05)

ORIGINAL SCALE IN INCHES FOR REDUCED PLANS 0 1 2 3

CU 05
EA 0Q5601

DISREGARD PRINTS BEARING EARLIER REVISION DATES

REVISION DATES: 12-3-09 7-14-11 5-13-10

SHEET 6 OF 11

FILE => 59-440135-v-miscd.dgn

USERNAME => s135318 DATE PLOTTED => 22-SEP-2010 TIME PLOTTED => 08:51

DIST	COUNTY	ROUTE	POST MILES TOTAL PROJECT	SHEET No	TOTAL SHEETS
05	Mon	101	53.1/53.9	66	70

REGISTERED CIVIL ENGINEER 6-17-10 DATE

9-20-10
PLANS APPROVAL DATE

REGISTERED PROFESSIONAL ENGINEER RYAN STILTZ No. C65738 Exp. 9/30/11 CIVIL STATE OF CALIFORNIA

The State of California or its officers or agents shall not be responsible for the accuracy or completeness of electronic copies of this plan sheet.

NOTE:

1. For section D-D, E-E, and F-F, see "REINFORCEMENT SECTION NO. 1" sheet.
2. For section G-G, H-H, and J-J, see "REINFORCEMENT SECTION NO. 2" sheet.
3. New barrier rail reinforcement not shown, see "TYPE 4 BARRIER" sheet.

LEGEND

Indicates New Construction

Indicates Existing Structure

Indicates New Polyester Concrete

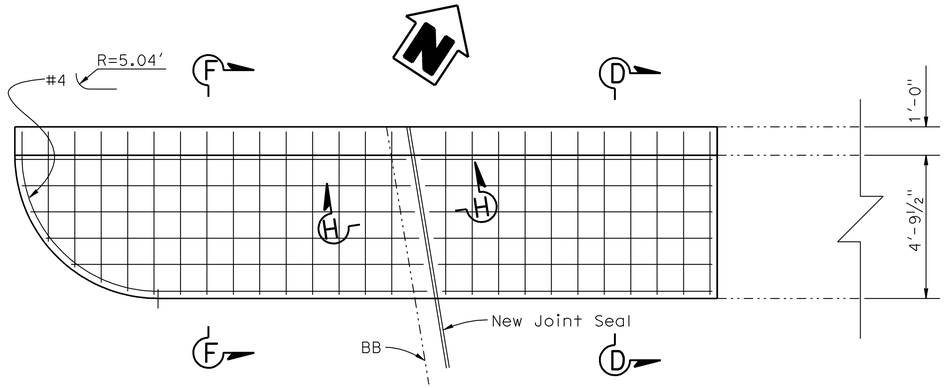

PLAN

3/8" = 1'-0"

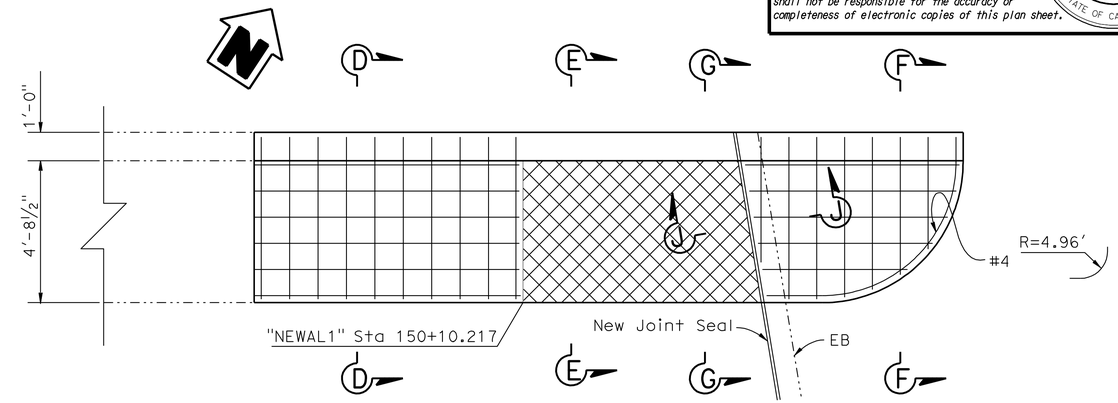

PLAN

3/8" = 1'-0"

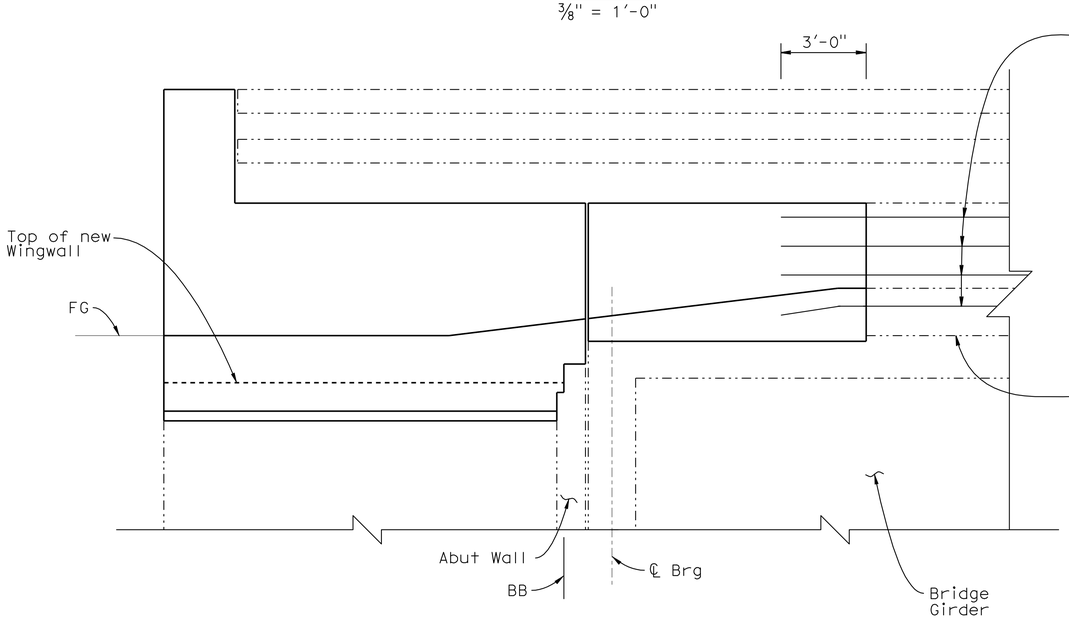

ELEVATION

Horiz. 3/4" = 1'-0"
Vert. 3/8" = 1'-0"

(NW WALNUT)

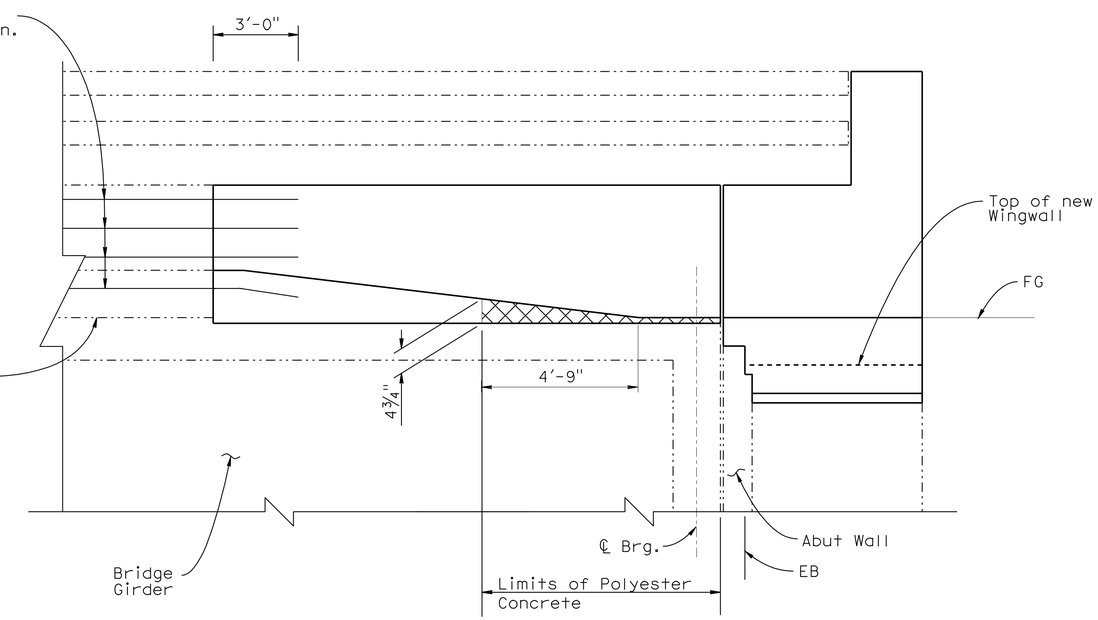

ELEVATION

Horiz. 3/4" = 1'-0"
Vert. 3/8" = 1'-0"

(NE WALNUT)

NOTE:
THE CONTRACTOR SHALL VERIFY ALL CONTROLLING FIELD DIMENSIONS BEFORE ORDERING OR FABRICATING ANY MATERIAL.

	BY	CHECKED
DESIGN	F. Chen	R. Anderson
DETAILS	Y. Tang	R. Anderson
QUANTITIES	R. Anderson	F. Chen

STATE OF CALIFORNIA
DEPARTMENT OF TRANSPORTATION

DIVISION OF ENGINEERING SERVICES
STRUCTURE DESIGN
DESIGN BRANCH 10

BRIDGE NO. 44-0135
POST MILE 53.86

WALNUT AVENUE OC (MODIFY)
REINFORCEMENT PLAN NO.1

STRUCTURES DESIGN DETAIL SHEET (ENGLISH) (REV. 10/25/05)

ORIGINAL SCALE IN INCHES FOR REDUCED PLANS 0 1 2 3

CU 05
EA 005601

DISREGARD PRINTS BEARING EARLIER REVISION DATES

REVISION DATES: 1-18-10 5-12-10

SHEET 7 OF 11

FILE => 59-440135-v-rfp01.dgn

USERNAME => s135318 DATE PLOTTED => 22-SEP-2010 TIME PLOTTED => 08:51

DIST	COUNTY	ROUTE	POST MILES TOTAL PROJECT	SHEET No	TOTAL SHEETS
05	Mon	101	53.1/53.9	67	70

REGISTERED CIVIL ENGINEER 6-17-10 DATE

9-20-10
PLANS APPROVAL DATE

REGISTERED PROFESSIONAL ENGINEER RYAN STILTZ No. C65738 Exp. 9/30/11 CIVIL STATE OF CALIFORNIA

The State of California or its officers or agents shall not be responsible for the accuracy or completeness of electronic copies of this plan sheet.

NOTE:

1. For section D-D, E-E, and F-F, see "REINFORCEMENT SECTION NO. 1" sheet.
2. For section G-G, K-K, and J-J, see "REINFORCEMENT SECTION NO. 2" sheet.
3. New barrier rail reinforcement not shown, see "TYPE 4 BARRIER" sheet.

LEGEND

Indicates New Construction

Indicates Existing Structure

Indicates New Polyester Concrete

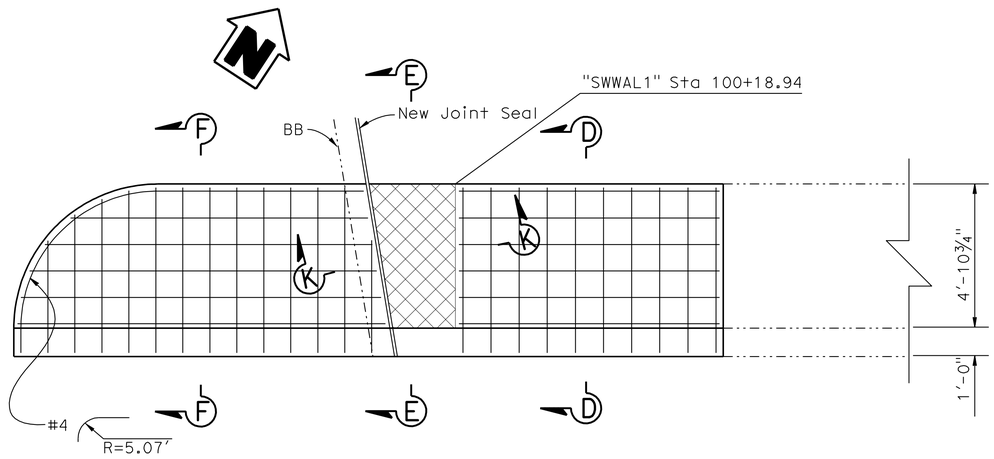

PLAN
⅜" = 1'-0"

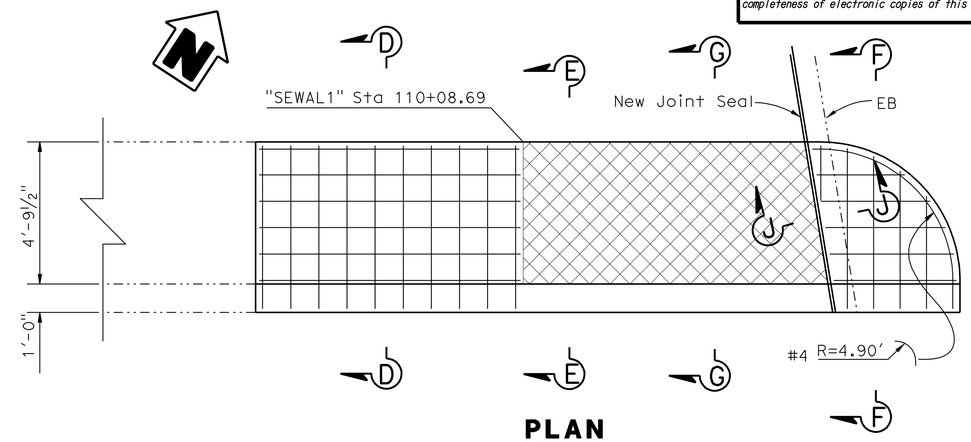

PLAN
⅜" = 1'-0"

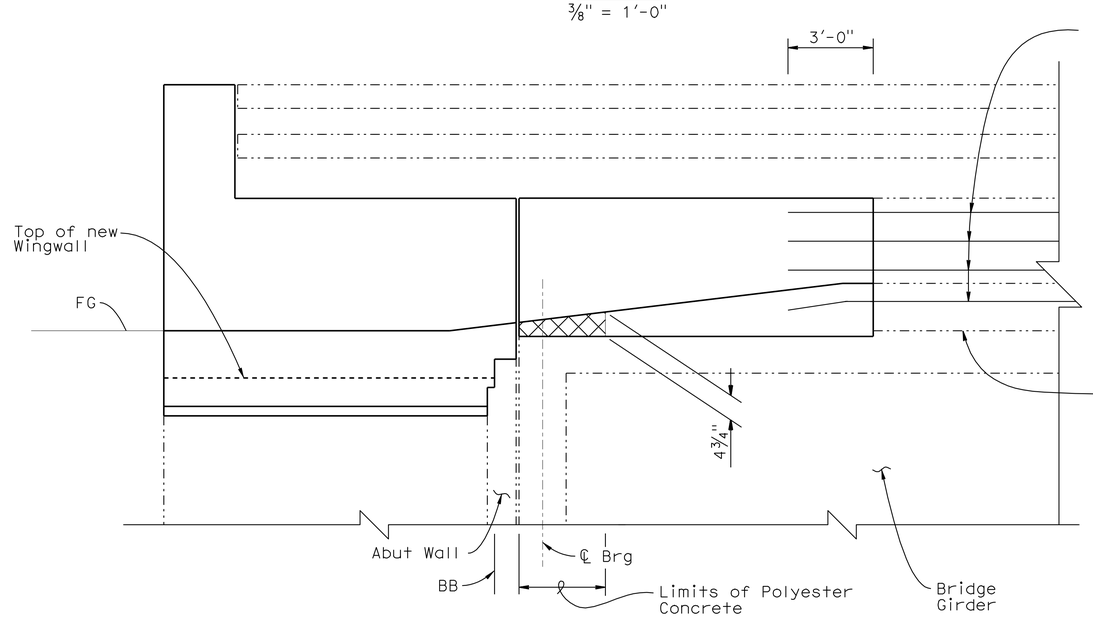

MIRROR ELEVATION
Horiz. ¾" = 1'-0"
Vert. ⅜" = 1'-0"
(SW WALNUT)

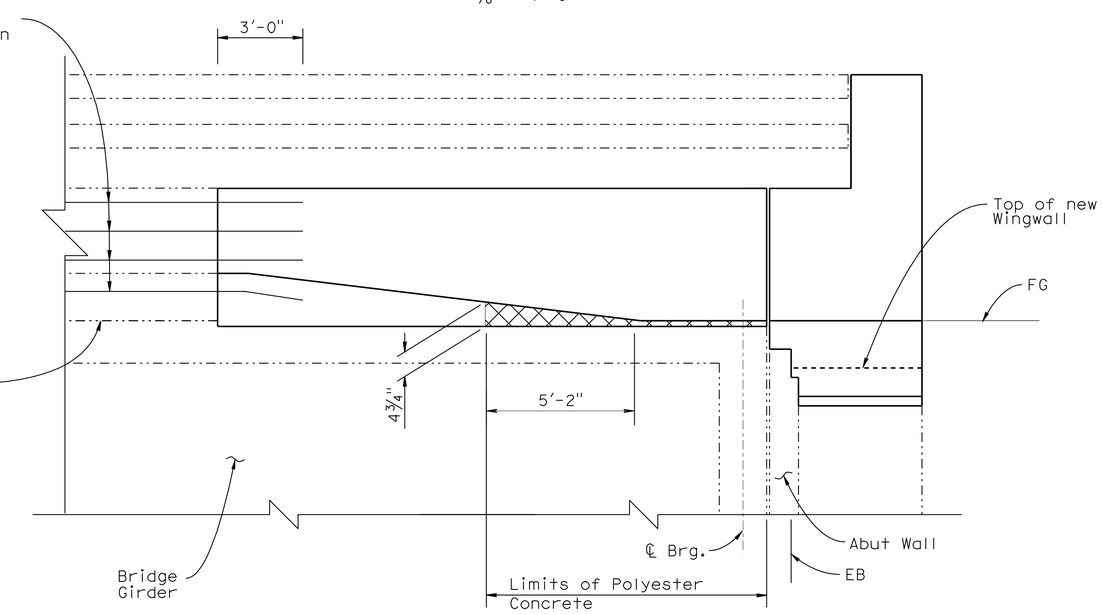

MIRROR ELEVATION
Horiz. ¾" = 1'-0"
Vert. ⅜" = 1'-0"
(SE WALNUT)

NOTE:
THE CONTRACTOR SHALL VERIFY ALL CONTROLLING FIELD DIMENSIONS BEFORE ORDERING OR FABRICATING ANY MATERIAL.

	BY	CHECKED
DESIGN	F. Chen	R. Anderson
DETAILS	Y. Tang	R. Anderson
QUANTITIES	R. Anderson	F. Chen

STATE OF CALIFORNIA
DEPARTMENT OF TRANSPORTATION

DIVISION OF ENGINEERING SERVICES
STRUCTURE DESIGN
DESIGN BRANCH 10

BRIDGE NO. 44-0135
POST MILE 53.86

WALNUT AVENUE OC (MODIFY)
REINFORCEMENT PLAN NO.2

STRUCTURES DESIGN DETAIL SHEET (ENGLISH) (REV. 10/25/05)

ORIGINAL SCALE IN INCHES FOR REDUCED PLANS 0 1 2 3

CU 05
EA 0Q5601

DISREGARD PRINTS BEARING EARLIER REVISION DATES

REVISION DATES: 1-18-10 5-12-10

SHEET 8 OF 11

FILE => 59-440135-v-rfp02.dgn

USERNAME => s135318 DATE PLOTTED => 22-SEP-2010 TIME PLOTTED => 08:52

DIST	COUNTY	ROUTE	POST MILES TOTAL PROJECT	SHEET No	TOTAL SHEETS
05	Mon	101	53.1/53.9	68	70

REGISTERED CIVIL ENGINEER 6-17-10 DATE

9-20-10
PLANS APPROVAL DATE

REGISTERED PROFESSIONAL ENGINEER RYAN STILTZ No. C65738 Exp. 9/30/11 CIVIL STATE OF CALIFORNIA

The State of California or its officers or agents shall not be responsible for the accuracy or completeness of electronic copies of this plan sheet.

LEGEND

Indicates New Construction

Indicates Existing Structure

Indicates New Polyester Concrete

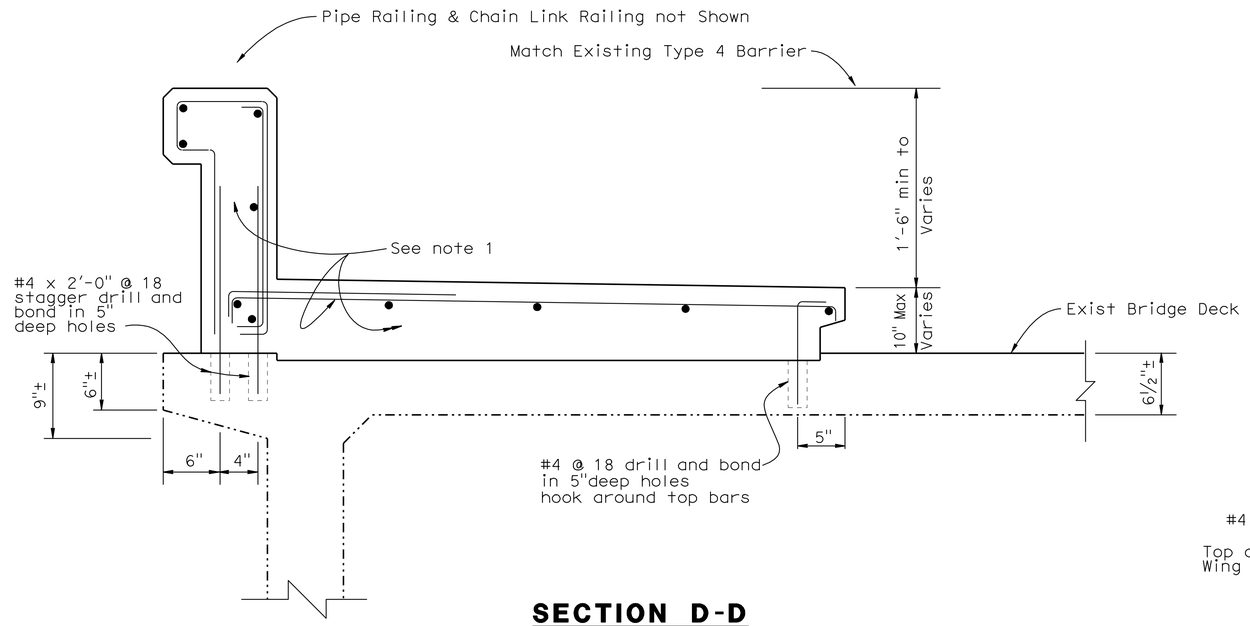

SECTION D-D

1½" = 1'-0"

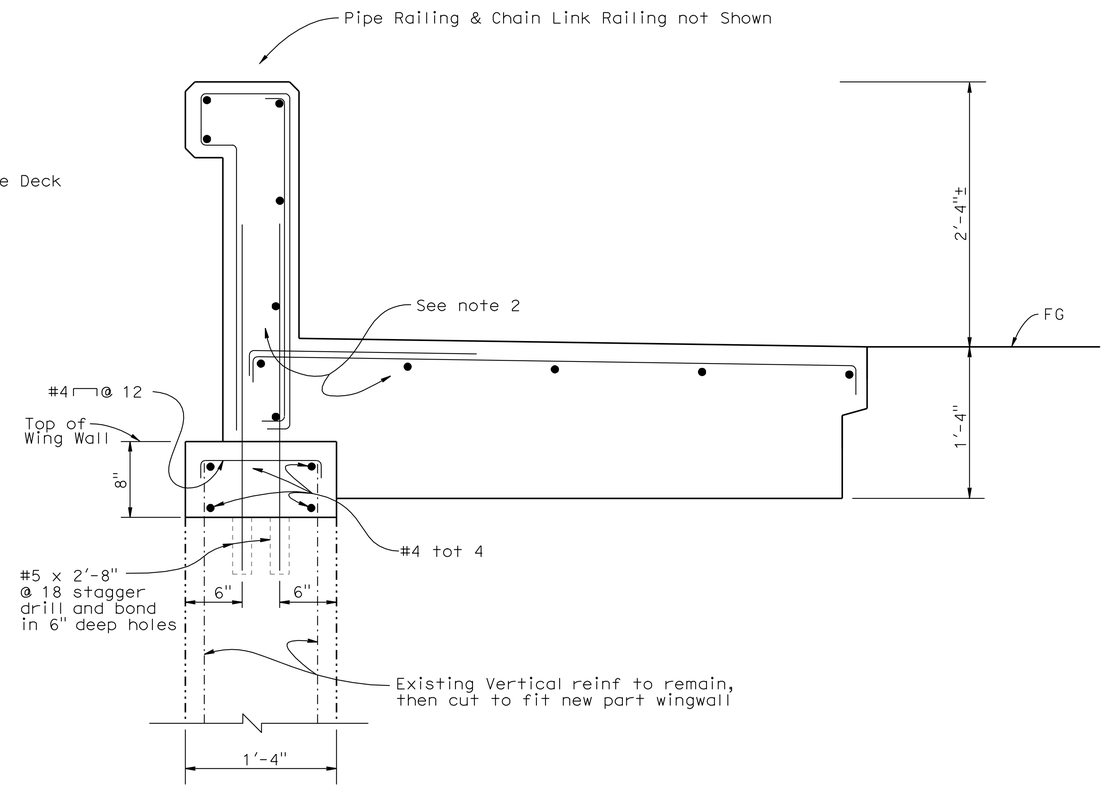

SECTION F-F

1½" = 1'-0"

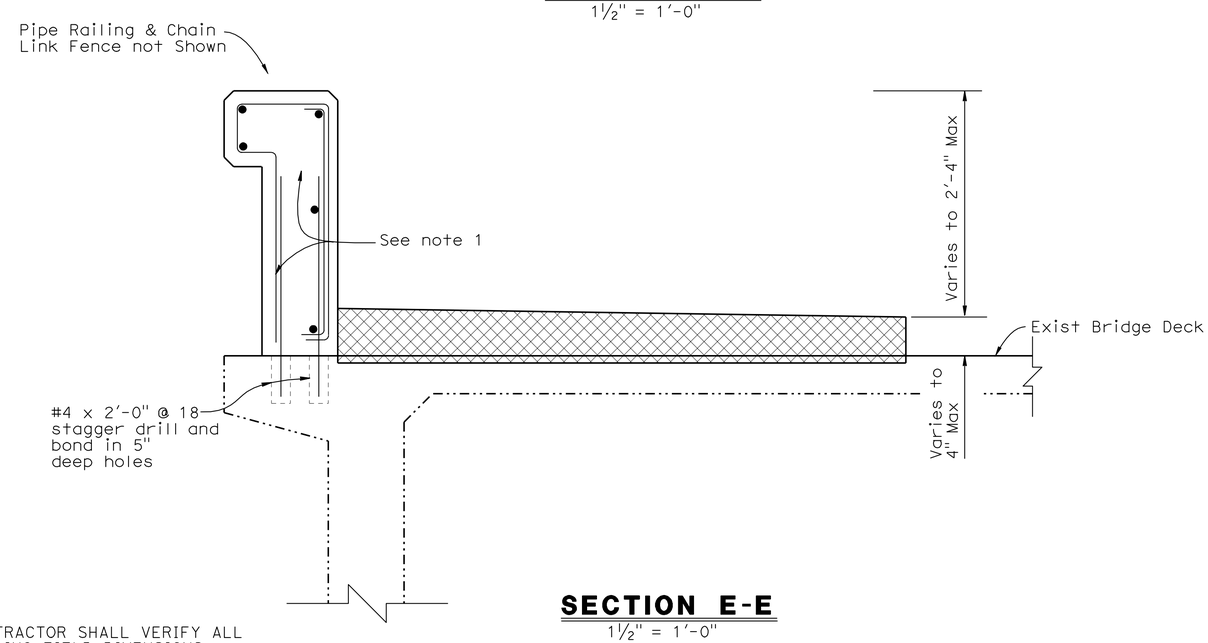

SECTION E-E

1½" = 1'-0"

NOTES:

1. For Type 4 barrier dimensions and reinforcement, see "TYPE 4 BARRIER" sheet.
2. For Type 4A barrier dimensions and reinforcement, see "TYPE 4 BARRIER" sheet.
3. For location of "SECTION D-D, E-E, and F-F", see "REINFORCEMENT PLAN NO. 1" and "REINFORCEMENT PLAN NO. 2"sheet.

NOTE:
THE CONTRACTOR SHALL VERIFY ALL CONTROLLING FIELD DIMENSIONS BEFORE ORDERING OR FABRICATING ANY MATERIAL.

	BY	CHECKED
DESIGN	F. Chen	R. Anderson
DETAILS	Y. Tang	R. Anderson
QUANTITIES	R. Anderson	F. Chen

STATE OF CALIFORNIA
DEPARTMENT OF TRANSPORTATION

DIVISION OF ENGINEERING SERVICES
STRUCTURE DESIGN
DESIGN BRANCH 10

BRIDGE NO. 44-0135
POST MILE 53.86

WALNUT AVENUE OC (MODIFY)
REINFORCEMENT SECTION NO.1

STRUCTURES DESIGN DETAIL SHEET (ENGLISH) (REV. 10/25/05)

ORIGINAL SCALE IN INCHES FOR REDUCED PLANS 0 1 2 3

CU 05
EA 0Q5601

DISREGARD PRINTS BEARING EARLIER REVISION DATES

REVISION DATES: 1-18-10 3-09-10 5-12-10

SHEET 9 OF 11

FILE => 59-440135-v-rfs01.dgn

USERNAME => trmnguye DATE PLOTTED => 22-SEP-2010 TIME PLOTTED => 08:48

DIST	COUNTY	ROUTE	POST MILES TOTAL PROJECT	SHEET No	TOTAL SHEETS
05	Mon	101	53.1/53.9	69	70

REGISTERED CIVIL ENGINEER 6-17-10 DATE

9-20-10
PLANS APPROVAL DATE

REGISTERED PROFESSIONAL ENGINEER RYAN STILTZ No. C65738 Exp. 9/30/11 CIVIL STATE OF CALIFORNIA

The State of California or its officers or agents shall not be responsible for the accuracy or completeness of electronic copies of this plan sheet.

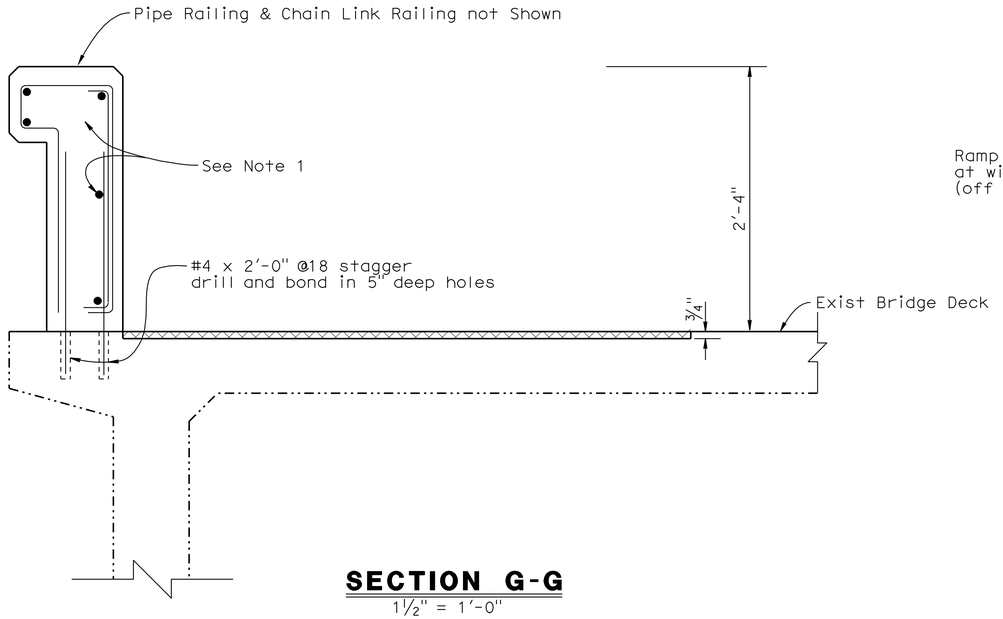

SECTION G-G
1½" = 1'-0"

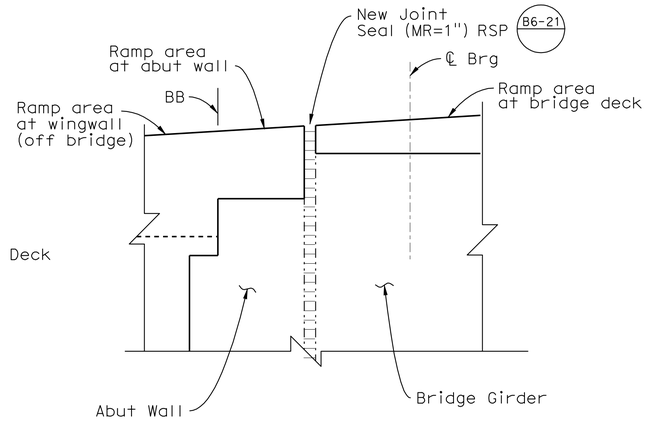

SECTION H-H
1½" = 1'-0"

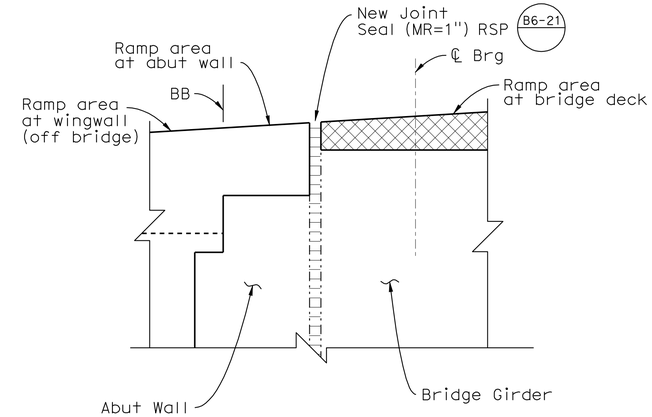

SECTION K-K
1½" = 1'-0"

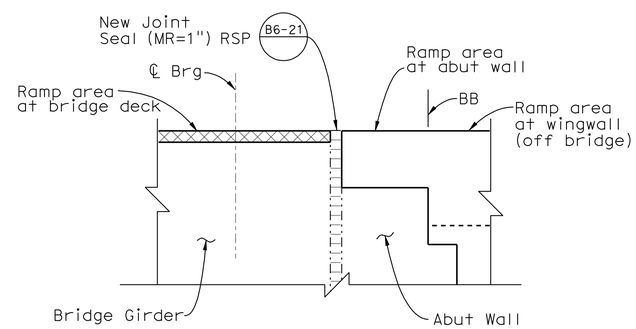

SECTION J-J
1½" = 1'-0"

NOTES:

1. For Type 4 barrier dimensions and reinforcement, see "TYPE 4 BARRIER" sheet.
2. For location of SECTION G-G, H-H, J-J, and K-K, see "REINFORCEMENT PLAN NO. 1" and "REINFORCEMENT PLAN NO. 2" sheets.

LEGEND

———	Indicates New Construction
-·-·-·-	Indicates Existing Structure
▨	Indicates New Polyester Concrete

NOTE:
THE CONTRACTOR SHALL VERIFY ALL CONTROLLING FIELD DIMENSIONS BEFORE ORDERING OR FABRICATING ANY MATERIAL.

	BY	CHECKED
DESIGN	F. Chen	R. Anderson
DETAILS	Y. Tang	R. Anderson
QUANTITIES	R. Anderson	F. Chen

STATE OF CALIFORNIA
DEPARTMENT OF TRANSPORTATION

DIVISION OF ENGINEERING SERVICES
STRUCTURE DESIGN
DESIGN BRANCH 10

BRIDGE NO. 44-0135
POST MILE 53.86

WALNUT AVENUE OC (MODIFY)
REINFORCEMENT SECTION NO. 2

STRUCTURES DESIGN DETAIL SHEET (ENGLISH) (REV. 10/25/05)

ORIGINAL SCALE IN INCHES FOR REDUCED PLANS 0 1 2 3

CU 05
EA 0Q5601

DISREGARD PRINTS BEARING EARLIER REVISION DATES 1-13-10

REVISION DATES

SHEET 10 OF 11

FILE => 59-440135-v-rfs02.dgn

USERNAME => trmnguye DATE PLOTTED => 22-SEP-2010 TIME PLOTTED => 08:56

DIST	COUNTY	ROUTE	POST MILES TOTAL PROJECT	SHEET No	TOTAL SHEETS
05	Mon	101	53.1/53.9	70	70

REGISTERED CIVIL ENGINEER 6-17-10 DATE

9-20-10
PLANS APPROVAL DATE

REGISTERED PROFESSIONAL ENGINEER RYAN STILTZ No. C65738 Exp. 9/30/11 CIVIL STATE OF CALIFORNIA

The State of California or its officers or agents shall not be responsible for the accuracy or completeness of electronic copies of this plan sheet.

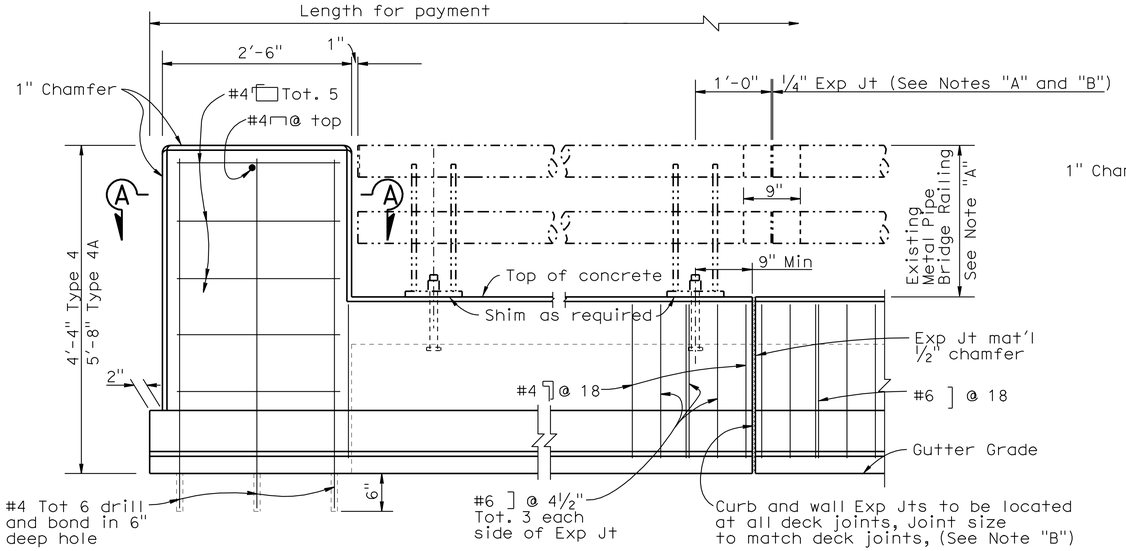

RAILING & END POST ELEVATION

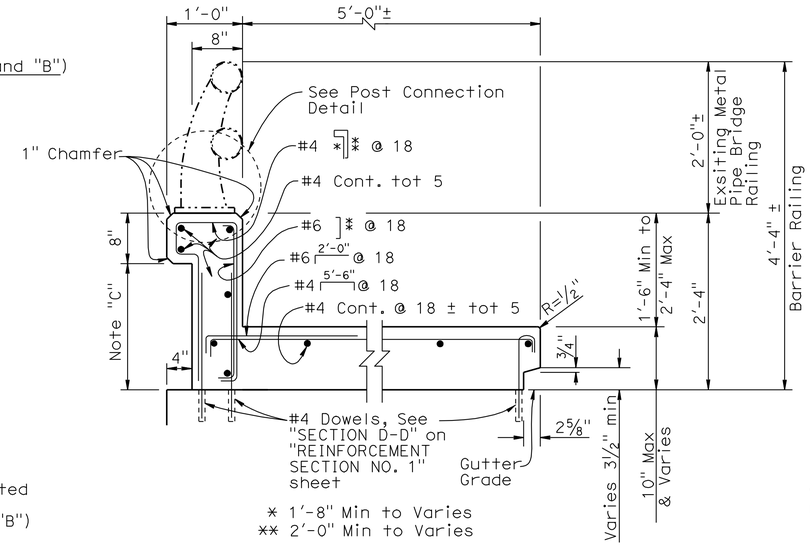

TYPE 4

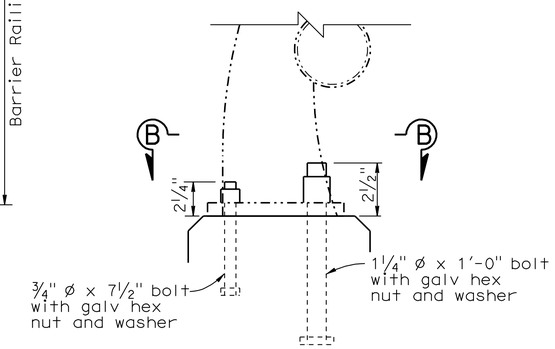

POST CONNECTION DETAILS

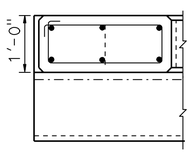

SECTION A-A

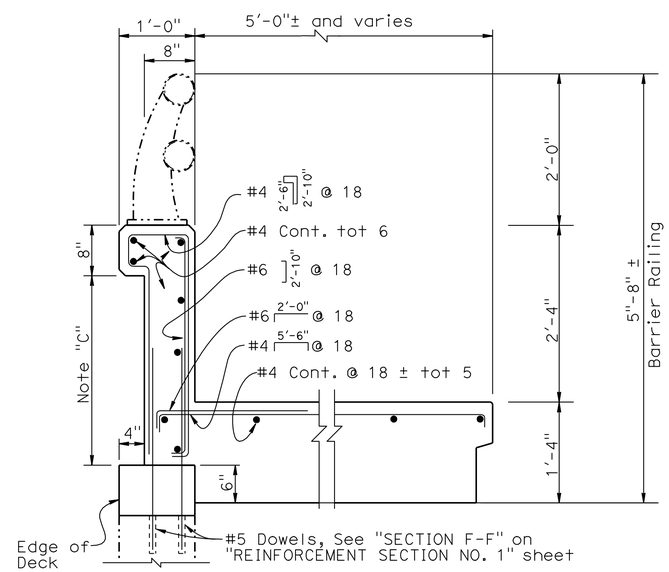

TYPE 4A

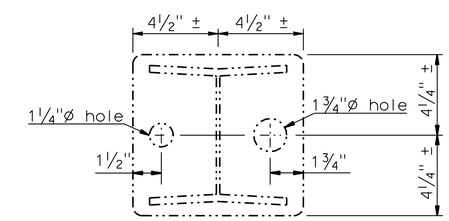

SECTION B-B

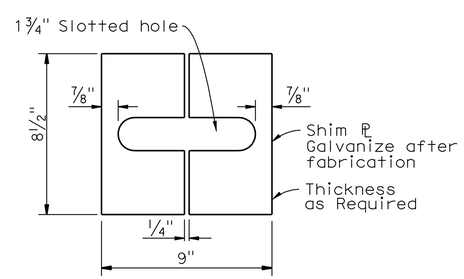

SHIM DETAIL

NOTES:

(A) Reuse existing metal pipe bridge railing except bolts & shim plates as noted. Location of railing posts, joints, bolts, etc are to match their existing location.
(B) At expansion joint in deck, rail joint shall be increased to same size
(C) Dimension will vary with superelevation transition
(D) Chain link fence not shown

LEGEND

Indicates Existing Metal Pipe Bridge Railing

Indicates New Construction

NOTE:
THE CONTRACTOR SHALL VERIFY ALL CONTROLLING FIELD DIMENSIONS BEFORE ORDERING OR FABRICATING ANY MATERIAL.

NO SCALES

	BY	CHECKED
DESIGN	F. Chen	R. Anderson
DETAILS	Y. Tang	R. Anderson
QUANTITIES	R. Anderson	F. Chen

STATE OF CALIFORNIA
DEPARTMENT OF TRANSPORTATION

DIVISION OF ENGINEERING SERVICES
STRUCTURE DESIGN
DESIGN BRANCH 10

BRIDGE NO. 44-0135
POST MILE 53.86

WALNUT AVENUE OC (MODIFY)
TYPE 4 BARRIER

STRUCTURES DESIGN DETAIL SHEET (ENGLISH) (REV. 10/25/05)

ORIGINAL SCALE IN INCHES FOR REDUCED PLANS 0 1 2 3

CU 05
EA 0Q5601

DISREGARD PRINTS BEARING EARLIER REVISION DATES 2-08-10 3-04-10 4-12-10

REVISION DATES

SHEET 11 OF 11

FILE => 59-440135-v-tbrdt.dgn

USERNAME => trmnguye DATE PLOTTED => 22-SEP-2010 TIME PLOTTED => 08:49