INFORMATION HANDOUT

For Contract No. 06-0H6424
At 06-Ker-99-49.6

Identified by
Project ID 0614000266

AGREEMENTS

1. US Department of the Interior Fish and Wildlife Service NLAA Letter LOC-2012-I-0162-1
2. US Department of the Interior Fish and Wildlife Service Revision Letter Rev Night Work

RAILROAD RELATIONS

3. Railroad Relations and Insurance Requirements

MATERIALS INFORMATION

4. Final Foundation Report
5. Water Source Information
6. Alternative Flared Terminal System
7. Asbestos and Lead-Containing Paint Survey Report
8. List of existing traffic management system elements

REPLACED PER ADDENDUM NO. 2 DATED AUGUST 26, 2016

AGREEMENTS

1. US Department of the Interior Fish and Wildlife Service NLAA Letter LOC-2012-I-0162-1

United States Department of the Interior

FISH AND WILDLIFE SERVICE
Sacramento Fish and Wildlife Office
2800 Cottage Way, Room W-2605
Sacramento, California 95825-1846

In Reply Refer To:
08ESMF00-2012-I-0162-1

JUN 05 2012

Ms. Carrie Swanberg
Interim Branch Chief, Southern Central Region Biology
California Department of Transportation, District 6
855 M Street, Suite 200
Fresno, California 93721

Subject: Informal Consultation on the Two Pedestrian Overcrossings Replacement Project in Kern County, California (California Department of Transportation EA 06-0H640; KER-99-PM 49.6, KER-178-PM R4.35)

Dear Ms. Swanberg:

This is the U.S. Fish and Wildlife Service's (Service) response to the California Department of Transportation's (Caltrans) request for concurrence on the proposed Two Pedestrian Overcrossings Replacement Project (project) in Kern County, California. Under the provisions of the July 1, 2007, Pilot Program Memorandum of Understanding between the Federal Highway Administration (FHWA) and Caltrans, FHWA assigned, and Caltrans assumed, FHWA's responsibilities under the National Environmental Policy Act as well as its responsibilities for environmental review, consultation, and coordination under other Federal environmental laws. Your letter, dated January 9, 2012, was received in this office on January 20, 2012. At issue are the effects of this proposed project on the federally-endangered San Joaquin kit fox (*Vulpes macrotis mutica*). Caltrans has determined that the proposed project may affect, but is not likely to affect adversely the San Joaquin kit fox, and requests concurrence from the Service with this determination. This response was prepared in accordance with section 7(a)(2) of the Endangered Species Act of 1973, as amended (16 U.S.C. 1531 *et seq.*) (Act).

The findings and recommendations of this letter are based on: (1) Caltrans' January 9, 2012, letter requesting concurrence; (2) the accompanying January 2012, *Kern County Pedestrian Overcrossings Natural Environment Study-Minimal Impacts (NES-MI)*; (3) design drawings delineating the project footprints of each of the two alternatives for the two overcrossing locations; (4) proposed right-of-way (ROW) maps showing permanent and temporary easements for each of the two alternatives for the two overcrossing locations; (5) electronic-mail (e-mail) correspondence between the Service and Caltrans; and (6) other information available to the Service.

Project Description

Caltrans proposes to replace two pedestrian overcrossing structures at two different locations in Kern County in order to comply with current design standards for disabled access, as required by the Americans with Disabilities Act. The first structure, pedestrian overcrossing #1 (POC #1), is located in the small farming community of McFarland and crosses over State Route (SR) 99 at postmile (PM) 49.6 just north of Kern Avenue; it also crosses over the Southern Pacific Railroad (SPR). The second structure, POC #2, is located in the northeastern part of the City of Bakersfield and crosses over SR 178 at PM R4.35, just south of the Sunny Lane/Height Street intersection.

Each location has two design alternatives. For POC #1, Alternative 1 proposes to replace the existing structure with a new eight-foot (ft.) wide reinforced concrete box situated 200 ft. south of the existing structure. The new structure will utilize turnaround ramps to create a flatter slope for wheelchair access, all contained within a smaller footprint. Alternative 2 will replace the existing structure with a new eight-ft. wide reinforced concrete box girder structure located 200 ft. north of the existing structure. In this instance, the new structure will utilize longer ramps to flatten the slope for wheelchair access. For POC #2, Alternative 1 will replace the existing structure with a new eight-ft. wide reinforced concrete box girder located 100 ft. east of the existing overcrossing; it will utilize turnaround ramps to provide a flatter slope for wheelchair access, contained within a smaller footprint. Alternative 2 proposes to replace the existing structure with a new eight-ft. wide reinforced concrete box located some distance west of the existing overcrossing; it will utilize longer ramps to flatten the slopes into and out of the structure to make it wheelchair accessible.

Caltrans has identified Alternative 1 as the preferred alternative design for each POC location; however, Caltrans has requested that both alternatives at each location continue to be combined for purposes of this consultation in order to account for the greatest extent of construction impacts and to provide Caltrans the flexibility of adjusting and realigning the footprint of the proposed POC structures as Caltrans continues to refine the structural designs.

At each POC location, five non-consecutive nights of work will be necessary in order to avoid major traffic delays on the freeways; work at each site includes two nights to demolish the existing structure, two nights to install falsework, and one night to disassemble and remove falsework following construction completion.

Temporary construction easements at the POC #1 site (Alternative 1: 0.31 ac of railroad ROW and 0.14 acre (ac) of County ROW; Alternative 2: 0.44 ac of railroad ROW and 0.14 ac of County ROW) will be obtained in order to cover certain construction-related activities, e.g. staging. Staging areas and access routes for POC #1 are reasonably likely to be located in an area of temporary easement in between the County Road and the existing Caltrans ROW for southbound SR 99, and also in other portions of temporary easements adjacent to parts of the proposed structure situated east of northbound SR 99. Permanent construction easements (Alternative 1: 0.45 ac of railroad ROW and 0.14 ac of County ROW; Alternative 2: 0.49 ac of railroad ROW and 0.08 ac of County ROW) will be acquired as new Caltrans ROW. Temporary

construction easements at the POC #2 site (Alternative 1: 0.08 ac of City of Bakersfield (City) ROW; Alternative 2: 0.05 ac of County ROW, 0.14 ac of City ROW, and 0.14 ac of Assessor's Parcel Number (APN) 12612503, Golden State Palms Inc.) also will be obtained to cover various construction-related activities. Staging areas and access routes for POC #2 are reasonably likely to be located in areas of temporary easements located between Height Street and the existing Caltrans ROW boundary for westbound SR 178, and in a segment of temporary easement between Rollo Ravine and the existing Caltrans ROW boundary for eastbound SR 178. Permanent construction easements (Alternative 1 only: 0.004 ac of County ROW and 0.09 ac of City ROW) will be acquired as new Caltrans ROW.

Since the project involves elevated structures with only minor ground work for the foundation, access ramps, and the landings/sidewalks, little use of fill material is anticipated; what minor fill there is may be required at the entrances to the access ramps where they are not supported by columns. The tentative construction schedule is from February 2014 to August 2014.

Action Area

The action area is defined in 50 CFR § 402.02, as "all areas to be affected directly or indirectly by the Federal action and not merely the immediate area involved in the action." For the proposed project, the action area consists of the construction footprints combining both Alternatives 1 and 2 at each of the two overcrossing sites. This includes the existing and proposed POC #1 structures; a segment of the SR 99 hardscape and associated median space, along with a segment of the County Road hardscape located between the Caltrans and SPR ROWs; portions of ruderal/disturbed land within the existing Caltrans ROW; and portions of ruderal/disturbed land and urban areas identified within both the SPR ROW and County ROW that will be acquired through permanent and temporary easements since these areas will be affected directly by demolition and replacement activities and likely used for equipment access routes and as staging areas. The action area also includes the existing and proposed POC #2 structures; a segment of the SR 178 hardscape and associated median space; portions of ruderal/disturbed habitat within the existing Caltrans ROW in which overcrossing-related activities will occur; and portions of ruderal/disturbed habitat within the County ROW, City ROW, and APN 12612503 Golden State Palms Inc. that will be acquired through permanent and temporary easements since these areas also will be affected directly by construction activities and used for access routes and as staging areas. The action area further includes portions of ruderal/disturbed habitat within a buffer area extending around the project footprints that may be affected indirectly as a result of project construction work.

Proposed Avoidance and Minimization Measures

According to the NES-MI, Caltrans proposes to implement the following specific measures to minimize and avoid impacts to the San Joaquin kit fox.

1. Pre-construction surveys within the project limits will be conducted no more than 30 calendar days prior to the start of construction in accordance with the Service's most recent available guidelines; currently, this is the revised 2011 *U.S. Fish and Wildlife Service Standardized Recommendations for Protection of the Endangered San Joaquin*

Kit Fox Prior to or During Ground Disturbance (Standardized Recommendations). Surveys will involve walking the project footprints, as well as any adjacent areas buffering the footprints that are accessible to the public and in which San Joaquin kit fox presence may be found (e.g. dens and related sign).

2. An employee education program will be conducted by a Service-approved biologist(s) for all construction personnel prior to ground-breaking; the program will consist of a description of the species and its habitat needs, the status of the species and its protection under the Act, the conservation measures taken to reduce and avoid impacts to the species, and the penalties for not complying with biological minimization requirements. Training will be repeated for all new personnel before they access the project site.

3. Project-related vehicles will observe a 20 mile-per-hour speed limit in all project areas. Vehicle travel will be limited to established roadways.

4. Since the San Joaquin kit fox is most active at night, the majority of work will be restricted to taking place during the day, with the exception of five nights at each POC location for demolition and falsework activities that would otherwise cause major disruptions to traffic and pose safety issues if carried out during daytime hours.

    a. A Service-approved biologist(s) will be present on-site during all night work to monitor for San Joaquin kit fox presence. If an individual is discovered in the project area, all work activities will cease and the Service will be notified within 12 hours. Work will not resume until Caltrans receives approval from the Service.

5. All food-related trash items such as wrappers, cans, bottles, and food scraps will be disposed of in closed containers and removed daily from the entire project site in order to reduce the potential for attracting scavengers and predator species.

6. No firearms will be allowed on-site; nor will any pets be permitted on-site in order to prevent harassment, injury, or transmission of disease to the San Joaquin kit fox and in order to avoid the destruction of dens.

7. The contractor will take measures to prevent the inadvertent entrapment of the San Joaquin kit fox or other species during construction in all excavated, steep-walled holes or trenches more than two feet deep; excavations will be covered with plywood at the close of each work day or provided with escape ramps constructed of fill or wooden planks. Prior to any holes or trenches being filled, they will be inspected thoroughly for trapped individuals. Since the San Joaquin kit fox also is attracted to artificial den-like structures and may enter them becoming trapped or injured, all construction pipes, culverts, or similar structures with a diameter of four inches or greater stored on-site also will be inspected by the contractor prior to the structures being buried, capped, or moved. If a San Joaquin kit fox is discovered, that section of pipe will not be moved (other than to transfer it to a safe location if necessary) until the Service and the California Department of Fish and Game (CDFG) have been consulted and the individual is allowed to leave without harassment.

8. If a San Joaquin kit fox den is discovered during construction, all work activity within a 150 ft. radius of the den will be halted and the Resident Engineer will be contacted immediately. The Service and the CDFG will be contacted for guidance as soon as possible.

9. A representative will be appointed by Caltrans who will be the contact source for any employee or contractor who inadvertently kills or injures a San Joaquin kit fox or who finds a dead, injured, or entrapped individual. If an individual is found, all construction activity within a 150 ft. radius of the San Joaquin kit fox will cease and the representative will be contacted immediately. Both the Service and the CDFG will be contacted within three working days of such incidents.

Determination

Caltrans has determined that the proposed project is unlikely to affect adversely the San Joaquin kit fox. Project activities at both POC #1 and #2 locations will occur within the existing Caltrans ROW, within the City, County, and SPR ROW properties, and within the APN; therefore, Caltrans plans to acquire portions of these ruderal/disturbed, and urban areas through permanent easements (as new Caltrans ROW) and through temporary easements to cover the effects of construction.

According to the California Natural Diversity Database (CNDDB, 2012)[1], there are five records of the San Joaquin kit fox within the McFarland United States Geological Survey (USGS) 7.5-minute quadrangle, which covers the project area for POC #1, and 22 records within the Oil Center USGS 7.5-minute quadrangle, which covers the project area for POC #2. The closest observation to POC #1 is located within 3.5 miles of the site and dates from 1975, while the record closest to POC #2 is located approximately 0.9 mile from the site and dates from 2007. Caltrans biologists conducted a habitat assessment of the action area on October 14, 2011. According to Caltrans, the study area at POC #1 is disturbed, and comprised of urban and ruderal areas with weedy non-native vegetation such as tumbleweeds (*Salsola* sp.) and wild fescue (*Vulpia* sp.), while the habitat surrounding POC #2 is urban and consists of highway landscaping, such as iceplant (*Carpobrotus* sp.) and oleanders (*Nerium oleander*). Neither location provides the type of high quality habitat in which the San Joaquin kit fox typically dens or forages. No signs of known dens or scat were detected during the field review.

However, because the San Joaquin kit fox is known to inhabit and utilize lands in proximity to the action area (e.g. according to CNDDB records and other known occurrences/dens identified in the 2010 *Draft Thomas Roads Improvement Program San Joaquin Kit Fox Effects Analysis, Mitigation Strategy, and Implementation Plan*, prepared for a separate collection of Caltrans projects in the Bakersfield area), it is possible that the San Joaquin kit fox may also occur in the action area, most reasonably as a transient forager dispersing through the project sites to other more suitable locations. Given the absence of known dens and the poor quality habitat, it is

1 California Natural Diversity Database (CNDDB). 2012. Natural Heritage Division, California Department of Fish and Game. RareFind 4. Accessed March 6, 2012. Sacramento, California.

unlikely that the species would reside permanently at these sites. However, California ground squirrel (*Spermophilus beecheyi*) burrows were observed at POC #1, so it is possible these could be modified as potential dens for future use by the San Joaquin kit fox. Also, the City of Bakersfield supports a well-documented urban population of the species and so it is reasonably likely that the San Joaquin kit fox also may occur at POC #2 during construction.

Portions of the ruderal/disturbed areas acquired as new Caltrans ROW through permanent easements to cover construction activities at both overcrossing sites will be impacted by demolition of the existing structures and pile driving and excavation associated with construction of the replacement overcrossings; areas of temporary easements will be affected temporarily as a result of their utilization for staging and access purposes, and for storage and movement of materials and debris. However, given the relatively small-scale scope of work and the existing habitat conditions, along with the implementation of the proposed conservation measures, any effects to the San Joaquin kit fox will be insignificant or discountable.

After reviewing Caltrans' request letter and NES-MI, drawings of the design alternatives, ROW maps, and other information sources, and discussing project aspects with Caltrans, the Service concurs with the determination that the proposed project may affect, but is not likely to affect adversely the San Joaquin kit fox.

Closing Statement

This concludes the Service's review of the proposed Two Pedestrian Overcrossings Replacement Project and its consideration of the project's effects to the species. No further coordination with the Service under the Act is necessary at this time. Please note, however, that take of listed species is not exempted from the prohibitions described under section 9 of the Act. We concur that the project as proposed is not likely to result in take, but if conditions change so that the project may adversely affect listed species, initiation of formal consultation, as provided in 50 CFR § 402.14, is required.

Please contact Jen Schofield, Fish and Wildlife Biologist, or Thomas Leeman, San Joaquin Valley Division Chief, at (916) 414-6600 if you have any questions regarding this letter.

Sincerely,

Daniel Russell

Daniel Russell
Deputy Assistant Field Supervisor

cc:
Ms. Annee Ferranti, CDFG, Fresno, California

AGREEMENTS

2. US Department of the Interior Fish and Wildlife Service Revision Letter Rev Night Work

United States Department of the Interior

FISH AND WILDLIFE SERVICE
Sacramento Fish and Wildlife Office
2800 Cottage Way, Suite W-2605
Sacramento, California 95825-1846

In Reply Refer to:
08ESMF00-
2012-I-0162

SEP 14 2015

Mr. Javier Almaguer
Chief, Central Region Biology Branch - Environmental Stewardship
California Department of Transportation, District 6
855 M Street Suite 200
Fresno, California 93721

Subject: Revisions to the Letter of Concurrence for the Two Pedestrian Overcrossings Replacement Project, Kern County, California (California Department of Transportation KER-99-PM 49.6, KER-178-PM R4.35; EA 06-0H642 and EA 06-0H641, respectively)

Dear Mr. Almaguer:

On June 5, 2012, the U.S. Fish and Wildlife Service (Service) concurred with the California Department of Transportation's (Caltrans) determination that its action to construct the Two Pedestrian Overcrossings Replacement Project (project) in Kern County, California may affect, but is not likely to adversely affect the federally-listed as endangered San Joaquin kit fox (*Vulpes macrotis mutica*)(Service file number 08ESMF00-2012-I-0162-1; concurrence letter). On May 11, 2015, Caltrans provided an electronic letter to the Service, dated the same day, requesting to amend the concurrence letter in order to modify the project schedule to include 12 additional nights of work at the Sunny Lane Pedestrian Overcrossing (POC) site. The Service responded via email, concluding that the addition of the extra work nights would not change the Service's concurrence with Caltrans' original determination. On August 7, 2015, the Service received a letter from Caltrans, dated August 4, 2015, requesting to amend the concurrence letter in order to modify the project schedule to include 12 additional nights of work at the second of the two locations, the Kern Avenue POC site.

Since the original consultation in 2012, the project has been split into two: the Kern Avenue POC project and the Sunny Lane POC project. This letter addresses the proposed modifications to nighttime construction at both the Kern Avenue and Sunny Lane POC locations (POC #1 and POC #2, respectively). Caltrans proposes to increase the number of work nights at each site from five to 17. At the Kern Avenue location, the additional nights will be used as needed over the course of construction between October 3, 2016 and September 29, 2017; and at the Sunny Lane location, these extra work nights are expected to occur within the next 6-8 months. Caltrans has determined that these changes to the construction night work schedule are not likely to alter its original determination that the project may affect, but is not likely to adversely affect the San Joaquin kit fox.

On page 2 of the concurrence letter, the fourth paragraph under the **Project Description** is being modified as follows. Segments of removed text are shown by a strike-through line and new text is shown by an underline:

> At each POC location, ~~five~~ 17 non-consecutive nights of work will be necessary in order to avoid major traffic delays on the freeways and to maintain personnel safety; work at each site includes two nights to demolish the existing structure, two nights to install falsework, and one night to disassemble and remove falsework following construction completion. An extra 12

nights at each location will be necessary in order to carry out additional activities related to setting, removing, and grading falsework, as well as pouring the bridge deck, installing lighting and chain-link fencing, and removing temporary k-rail structures.

On page 4 of the concurrence letter, Measure #4 under the Proposed Avoidance and Minimization Measures is being modified as follows. Segments of removed text are shown by a strike-through line and new text is shown by an underline:

4. Since the San Joaquin kit fox is most active at night, the majority of work will be restricted to taking place during the day, with the exception of ~~five~~ 17 nights at each POC location for demolition and falsework activities, as well as for additional bridge construction activities that would otherwise cause major disruptions to traffic and pose safety issues if carried out during daytime hours.

The following section supplements the information presented in the **Determination** on pages 5-6 of the concurrence letter and pertains to the evaluation of effects on the San Joaquin kit fox from an increase in the number of work nights:

> Although no recent surveys have been conducted at the Kern Avenue POC site, Caltrans performed updated surveys for the San Joaquin kit fox in April 2015 during the demolition of the overcrossing at the Sunny Lane POC site. No individuals, potential dens, or associated sign were observed there. The increase in work nights from five to 17 at each overcrossing location is unlikely to result in an increase in adverse effects to the San Joaquin kit fox given that the additional nights represent only a minor increase relative to the overall project schedule. Furthermore, there was no identification of the species or associated sign at the Sunny Lane POC site. Caltrans therefore has concluded that its proposal to modify the amount of night work does not change its original determination, namely, that the project may affect, but is not likely to adversely affect the San Joaquin kit fox. The Service concurs with Caltrans' conclusion.

Closing Statement

Caltrans' proposed changes to the project schedule do not alter the conclusion of our June 5, 2012 concurrence letter: the proposed project may affect, but is not likely to adversely affect the San Joaquin kit fox. No further coordination with the Service under section 7(a)(2) of the Endangered Species Act of 1973, as amended (16 U.S.C. § 1531 *et seq.*) is necessary at this time. This concludes the revision letter for the Two Pedestrian Overcrossings Replacement Project.

If you have any questions regarding this letter, please contact Jen Schofield, Wildlife Biologist (Jen_Schofield@fws.gov) at the letterhead address or by e-mail.

Sincerely,

Thomas Leeman
Chief, San Joaquin Valley Division

cc:
Craig Bailey, California Department of Fish and Wildlife, Fresno, CA

RAILROAD RELATIONS

3. Railroad Relations and Insurance Requirements

State of California

Business, Transportation and Housing Agency

Memorandum

Flex your power!
Be energy efficient!

To: District Office Engineer

Attention: Julie Gonzalez

Date: April 14, 2016

File: 06-KER-99
P.M. 49.6
EA 06-0H6420
0614000266

From: Maria L. Toles
Senior Right of Way Agent
Right of Way Division

Subject: Railroad Clearance

The above-reference project is now ready to list as far as the Union Pacific Railroad (UPRR) Company is concerned. The California Public Utilities Commission has given permission to modify the structure through the General Order 88-B application process dated October 21, 2014. This clearance is subject to the funds allocation by the California Transportation Commission.

The Railroad Relations, required to protect railroad facilities for UPRR, are attached for insertion in the project's information handout. There is work by the Union Pacific Railroad Company, and the project does require Railroad Protective Liability Insurance.

The District Railroad Agent shall update the District status upon receipt of this clearance memo.

Attachment

cc: Nicholas Chan – Design Manager
Paul Pineda – Project Manager
Denny Fong – Railroad Agreements Coordinator

EXHIBIT D

Information Handout Document to Project Construction Contract:

RAILROAD RELATIONS AND INSURANCE REQUIREMENTS

1.01 GENERAL

The term "Railroad" shall mean the Union Pacific Railroad Company.

It is expected that the Railroad will cooperate with the Contractor to the end that the work may be handled in an efficient manner. However, except for the additional compensation provided for hereinafter for delays in completion of specific unit of work to be performed by the Railroad, and except as provided in Public Contracts Code Section 7102, the Contractor shall have no claim for damages, extension of time, or extra compensation in the event his work is held up by railroad train operations or other work performed by the Railroad.

The Contractor must understand the Contractor's right to enter the Railroad's property is subject to the absolute right of the Railroad to cause the Contractor's work on the Railroad's property to cease if, in the opinion of the Railroad, the Contractor's activities create a hazard to the Railroad's property, employees, tenants, and operations or employees, and operations.

The Contractor acknowledges its receipt from the State of a copy of the Caltrans Right of Entry Agreement that has been executed by the Railroad and the State. The Contractor agrees to execute and deliver to the Railroad the Contractor's Endorsement that is attached hereto as Appendix 1 and to provide to the State and/or the Railroad all insurance policies, binders, certificates or endorsements that are set forth in Exhibits B and C of the Caltrans Right of Entry Agreement.

1.02 RAILROAD REQUIREMENTS

The Contractor shall provide to Mr. Daniel Moreno, Railroad's Manager, Industry and Public Projects, 2015 South Willow Ave., Bloomington CA 92316, and the Engineer, in writing, the advance notice requirements set forth in Section 1 of Exhibit B of Caltrans Right of Entry Agreement before performing any work on, or adjacent to the property or tracks of the Railroad.

The Contractor shall cooperate with the Railroad where work is over or under the tracks, or within the limits of the Railroad property to expedite the work and avoid interference with the operation of railroad equipment.

The Contractor shall comply with the rules and regulations of the Railroad or the instructions of its representatives in relation to protecting the tracks and property of the Railroad and the traffic moving on such tracks, as well as the wires, signals and other property of the Railroad, its tenant or licensees, at and in the vicinity of the work during the period of construction. The responsibility of the Contractor for safe conduct and adequate policing and supervision of its

work at the job site shall not be lessened or otherwise affected by the presence at the work site of Railroad representatives, or by the Contractor's compliance with any requests or recommendations made by Railroad representatives.

The Contractor shall perform work so as not to endanger or interfere with the safe operation of the tracks and property of the Railroad and traffic moving on such tracks, as well as wires, signals and other property of the Railroad, its tenant or licensees, at or in the vicinity of the work.

The Contractor shall take protective measures to keep the Railroad facilities, including track ballast, free of sand or debris resulting from his operations. Damage to the Railroad facilities resulting from the Contractor's operations will be repaired or replaced by the Railroad and the cost of such repairs or replacement shall be deducted from the Contractor's progress and final pay estimates.

The Contractor shall contact the Railroad's "Call Before You Dig" at least forty-eight (48) hours prior to commencing work, at 1-800-336-9193 during normal business hours (7:00 a.m. to 9:00 p.m. Central Time, Monday through Friday, except holidays – also a 24-hour, 7-day number for emergency calls) to determine location of fiber optics. If a telecommunications system is buried anywhere on or near the Railroad property, the Contractor will coordinate with the Railroad and the Telecommunication Company(ies) to arrange for relocation or other protection of the system prior to beginning any work on or near Railroad property.

The Contractor shall not pile or store any materials nor park any equipment closer than 25'-0" to the centerline of the nearest track, unless directed by the Railroad's representative.

The Contractor shall also abide by the following temporary clearances during the course of construction:

- 12'-0" horizontally from centerline of track
- 21'-6" vertically above top of rail

The temporary vertical construction clearance above provided will not be permitted until authorized by the Public Utilities Commission. It is anticipated that authorization will be received not later than fifteen (15) days after the approval of the contract. In the event authorization is not received by the said time specified, the Licensee will compensate the Contractor for such delay to the extent provided in Section 8-1.07, " Delays," of the 2010 Standard Specifications and not otherwise.

Walkways with railing shall be constructed by the Contractor over open excavation areas when in close proximity of tracks, and railings shall not be closer than 12'-0" horizontally from centerline of the nearest track.

Infringement on the above temporary construction clearances by the Contractor's operations shall be submitted to the Railroad by the Engineer, and shall not be undertaken until approved by the Railroad, and until the Engineer has obtained any necessary authorization from any governmental body or bodies having jurisdiction there over. No extension of time or extra

compensation will be allowed in the event the Contractor's work is delayed pending Railroad approval and governmental authorization.

When the temporary vertical clearance is less than 22'-6" above top of rail, the Railroad shall have the option of installing tell-tales or other protective devices the Railroad deems necessary for protection of the Railroad trainmen or rail traffic.

Four (4) sets of plans, in 11" x 17" format, and two (2) sets of calculations showing details of construction affecting the Railroad's tracks and property not included in the contract plans, including but not limited to shoring and false work, shall be submitted to the Engineer for review prior to submittal to the Railroad for final approval. At Railroad's option, these plans and calculations may be submitted electronically via email or by appropriate data disk via US Postal Service. False work shall comply with the Railroad guidelines. Demolition of existing structures shall comply with the Railroad guidelines. Shoring shall be designed in accordance with the Railroad's shoring requirement of Drawing No. 106613 and guidelines for shoring and false work, latest edition, issued by the Railroad's Office of Chief Engineer. Shoring and false work plans and calculations shall be prepared and signed by a professional engineer registered in California. This work shall not be undertaken until such time as the Railroad has given such approval; review by the Railroad may take up to six (6) weeks after receipt of necessary information.

The Contractor shall notify the Engineer in writing, at least twenty-five (25) calendar days but not more than forty (40) days in advance of the starting date of installing temporary work with less than permanent clearance at each structure site. The Contractor shall not be permitted to proceed with work across railroad tracks until this requirement has been met. No extension of time or extra compensation will be allowed if the Contractor's work is delayed due to failure to comply with the requirements in this paragraph.

Blasting will be permitted only when approved by the Railroad.

The Contractor shall, upon completion of the work covered by this Contract to be performed by the Contractor upon the premises or over or beneath the tracks of the Railroad, promptly remove from the premises of the Railroad, the Contractor's tools, implements and other materials, whether brought upon said premises and cause said premises to be left in a clean and presentable condition.

Under track pipeline installations shall be constructed in accordance with the Railroad's current standards which may be obtained from the Railroad. The general guidelines are as follows:

(a) Edges of jacking or boring pit excavations shall be a minimum of 25 feet from the centerline of the nearest track.

(b) If the pipe to be installed under the track is 4 inches in diameter or less, the top of the pipe shall be at least 42 inches below base of rail.

(c) If the pipe diameter is greater than 4 inches in diameter, it shall be encased and the top of the steel pipe casing shall be at least 66 inches below base of rail.

(d) Installation of pipe or conduit under the Railroad's tracks shall be done by dry bore and jack method.

(e) Hydraulic jacking or boring will not be permitted.

Safety of personnel, property, rail operations and the public is of paramount importance. As reinforcement and in furtherance of overall safety measures to be observed by the Contractor (and not by way of limitation), the following special safety rules shall be followed:

(a) The Contractor shall keep the job site free from safety and health hazards and ensure that its employees are competent and adequately trained in all safety and health aspects of the job. The Contractor shall have proper first aid supplies available on the job site so that prompt first aid services can be provided to any person that may be injured on the job site. The Contractor shall promptly notify the Railroad of any U.S. Occupational Safety and Health Administration reportable injuries occurring to any person that may arise during the work performed on the job site. The Contractor shall have a non-delegable duty to control its employees while they are on the job site or any other property of the Railroad to be certain they do not use, be under the influence of, or have in their possession any alcoholic beverage, drug, narcotic or other substance that may inhibit the safe performance of work by the employee.

(b) The employees of the Contractor shall be suitably dressed to perform their duties safely and in a manner that will not interfere with their vision, hearing or free use of their hands or feet. Only waist length shirts with sleeves and trousers that cover the entire leg are to be worn. If flare-legged trousers are worn, the trouser bottoms must be tied to prevent catching. The employees should wear sturdy and protective work boots and at least the following protective equipment:

(1) Protective head gear that meets American National Standard-Z89.1-latest revision. It is suggested that all hardhats be affixed with the Contractor's or the subcontractor's company logo or name.

(2) Eye protection that meets American National Standard for occupational and educational eye and face protection, Z87.1-latest revision. Additional eye protection must be provided to meet specific job situations such as welding, grinding, burning, etc.; and

(3) Hearing protection which affords enough attenuation to give protection from noise levels that will be occurring on the job site.

(c) All heavy equipment provided or leased by the Contractor shall be equipped with audible back-up warning devices. If in the opinion of the Railroad Representative any of the

Contractor's or the subcontractor's equipment is unsafe for use on the Railroad's right-of-way, the Contractor, at the request of the Railroad representative, shall remove such equipment from the Railroad's right-of-way.

1.03 PROTECTION OF RAILROAD FACILITIES

Upon the advance notification provided to the Railroad as set forth in Section 1 of Exhibit B of the Contractor's Right of Entry Agreement, Railroad representatives, conductors, flagmen or watchmen will be provided by Railroad to protect its facilities, property and movements of its trains or engines. Notice shall be made to the Railroad's Manager of Track maintenance at (909) 685-2469. At the time of notification, the Contractor shall provide the Railroad with a schedule of dates that flagging services will be needed, as well as times, if outside normal working hours. Subsequent deviation from the schedule shall require ten (10) working days' advance notice from the first affected date. The Railroad will furnish such personnel or other protective devices:

(a) When equipment is standing or being operated within 25 feet, measured horizontally, from centerline of any track on which trains may operate, or when any erection or construction activities are in progress within such limits, regardless of elevation above or below track.

(b) For any excavation below elevation of track subgrade if, in the opinion of the Railroad's representative, track or other Railroad facilities may be subject to settlement or movement.

(c) During any clearing, grubbing, grading or blasting in proximity to the Railroad which, in the opinion of the Railroad's representative, may endanger the Railroad facilities or operations.

(d) During any of the Contractor's operations when, in the opinion of the Railroad's representatives, the Railroad facilities, including, but not limited to, tracks, buildings, signals, wire lines or pipe lines, may be endangered.

The cost of any flagging and inspection provided by the Railroad during the period of constructing that portion of the project located on or near the Railroad property, as deemed necessary for the protection of the Railroad's facilities and trains, will be borne by the State. The Railroad has indicated that its estimated flagging rate will be around one thousand three hundred dollars and zero cents per day ($1,300.00/day) and that the Railroad has estimated a total of 120 days of flagging. The State shall pay the Railroad for all actual flagging costs incurred by the Railroad under this Project.

1.04 WORK BY RAILROAD

The following work by the Railroad will be performed by Railroad forces and is not a part of the work under this Contract.

(a) The Railroad will perform preliminary engineering and inspection (if any) and flagging as specified in Section 1.03 "Protection of Railroad Facilities," of these special provisions.

(b) Temporary crossings at grade over tracks of Railroad for the purpose of hauling earth, rock, paving or other materials will not be permitted. If the Contractor, for the purpose of constructing highway-railway grade separation structures, including construction ramps thereto, desires to move equipment or materials across Railroad's tracks, the Contractor shall first obtain permission from Railroad concurrence via the State Engineer. Should Railroad approve the temporary crossing, State shall execute a Service Contract with Railroad for Railroad to construct the temporary crossing. Under the Service Contract, State shall bear the cost of the crossing surface, warning devices and other components that might be required. Notwithstanding State's Service Contract with Railroad, the Contractor is required to execute Railroad's form of Contractor's Haul Road Crossing Agreement. Railroad, at State's expense, shall provide flagmen to control movements of vehicles across the temporary crossing. State and its Contractor shall prevent the use of such temporary crossing by unauthorized persons and vehicles.

1.05 DELAYS DUE TO WORK BY RAILROAD

If delays due to work by the Railroad occur, and the Contractor sustains loss which, in the opinion of the Engineer, could not have been avoided by the judicious handling of forces, equipment and plant, the amount of said loss shall be determined as provided in Section 8-1.07, " Delays," of the 2010 Standard Specifications.

If a delay due to work by the Railroad occurs, an extension of time determined pursuant to the provisions in Section 8-1.10, "Liquidated Damages," of the 2010 Standard Specifications will be granted.

1.06 LEGAL RELATIONS

The provisions of Section 1, "Relations with Railroad Company," and the provisions of Section 2, "Railroad Protective Insurance," of these special provisions shall inure directly to the benefit of the Railroad.

2.0 INSURANCE AND ENDORSEMENTS

In addition to any other form of insurance or bonds required under the terms of the contract and specifications, the Contractor will be required to carry insurance of the kinds and in the amounts hereinafter specified.

Such insurance shall be approved by the Railroad before any work is performed on the Railroad's property and shall be carried until all work required to be performed on or adjacent to the Railroad's property under the terms of the contract is satisfactorily completed as determined by the Engineer, and thereafter until all tools, equipment and materials have been removed from the Railroad's property and such property is left in a clean and presentable condition.

Full compensation for all premiums which the Contractor is required to pay on all the insurance described hereinafter shall be considered as included in the prices paid for the various items of work to be performed under the contract, and no additional allowance will be made thereof or for additional premiums which may be required by extensions of the policies of insurance.

The following insurance coverage will be required:

A. **Commercial General Liability Insurance**. Commercial general liability (CGL) with a limit of not less than $5,000,000 each occurrence and an aggregate limit of not less than $10,000,000. CGL insurance must be written on ISO occurrence form CG 00 01 12 04 (or a substitute form providing equivalent coverage).

The policy must also contain the following endorsement, which must be stated on the certificate of insurance:

- Contractual Liability Railroads ISO form CG 24 17 10 01 (or a substitute form providing equivalent coverage) showing "Union Pacific Railroad Company Property" as the Designated Job Site.

B. **Business Automobile Coverage Insurance**. Business auto coverage written on ISO form CA 00 01 (or a substitute form providing equivalent liability coverage) with a combined single limit of not less $5,000,000 for each accident.

The policy must contain the following endorsements, which must be stated on the certificate of insurance:

- Coverage For Certain Operations In Connection With Railroads ISO form CA 20 70 10 01 (or a substitute form providing equivalent coverage) showing "Union Pacific Property" as the Designated Job Site.
- Motor Carrier Act Endorsement - Hazardous materials clean up (MCS-90) if required by law.

C. **Workers' Compensation and Employers' Liability Insurance**. Coverage must include but not be limited to:

- Contractor's statutory liability under the workers' compensation laws of the State of California.
- Employers' Liability (Part B) with limits of at least $500,000 each accident, $500,000 disease policy limit $500,000 each employee.

If Contractor is self-insured, evidence of state approval and excess workers compensation coverage must be provided. Coverage must include liability arising out of the U. S. Longshoremen's and Harbor Workers' Act, the Jones Act, and the Outer Continental Shelf Land Act, if applicable.

01 (or a substitute form providing equivalent coverage) for the job site; and (3) require each of its subcontractors to endorse their Business Automobile Policy with "Coverage for Certain Operations In Connection With Railroads" ISO Form CA 20 70 10 01 (or a substitute form providing equivalent coverage) for the job site.

I. Punitive damages exclusion, if any, must be deleted (and the deletion indicated on the certificate of insurance), unless the law governing this Agreement prohibits all punitive damages that might arise under this Agreement.

J. Contractor waives all rights of recovery, and its insurers also waive all rights of subrogation of damages against Railroad and its agents, officers, directors and employees. This waiver must be stated on the certificate of insurance.

K. Prior to commencing the work, Contractor shall furnish Railroad with a certificate(s) of insurance, executed by a duly authorized representative of each insurer, showing compliance with the insurance requirements in this Agreement.

L. All insurance policies must be written by a reputable insurance company acceptable to Railroad or with a current Best's Insurance Guide Rating of A- and Class VII or better, and authorized to do business in the State of California.

M. The fact that insurance is obtained by Contractor or by Railroad on behalf of Contractor will not be deemed to release or diminish the liability of Contractor, including, without limitation, liability under the indemnity provisions of this Agreement. Damages recoverable by Railroad from Contractor or any third party will not be limited by the amount of the required insurance coverage.

APPENDIX 1

CONTRACTOR'S ENDORSEMENT

A. As a condition to entering upon the Railroad's right-of-way to perform Work pursuant to this agreement, State's contractor, _____
(Name of Contractor)
whose address is _____,
(Contractor's Mailing Address)

(hereinafter "Contractor"), agrees to comply with and be bound by all the terms and provisions of the attached Caltrans Right of Entry Agreement that was signed by Union Pacific Railroad Company ("Railroad") and the State of California, Department of Transportation ("State") relating to the Work to be performed and the insurance requirements set forth in **Exhibit B and C** of the Right of Entry Agreement. The Contractor further acknowledges and agrees that the reference to Cal. Gov. Code §14662.5 in Sections 5.b) and 8.b) of **Exhibit B** to the Right of Entry Agreement does not apply to the Contractor and in no way limits the indemnities set forth in those provisions, to which the Contractor agrees to be bound.

B. Before the Contractor commences any Work, the Contractor will provide the Railroad with (i) a binder of insurance for the Railroad Protective Liability Insurance described in Section 2 of the Contract Special Provisions, hereto attached, and the original policy, or a certified duplicate original policy when available, and (ii) a certificate issued by its insurance carrier providing the other insurance coverage and endorsements required pursuant to Section 2 of the Contract Special Provisions.

C. All insurance correspondence, binders or originals shall be directed to:

Union Pacific Railroad Company
Attn: Real Estate Department
1400 Douglas Street, MS 1690
Omaha, Nebraska 68179-1690
Attn.: Senior Manager - Contracts
Folder No. 2599-74

D. Please note that fiber optic cable may be buried on the Railroad's property. **Prior to commencing any work, the Contractor agrees to contact the Railroad's Telecommunications Operation Center as provided in Section 5 of Exhibit B of the Right of Entry Agreement to determine if any fiber optic cable is located on the Railroad's property on or near the location where the work is to be performed.** If there is, the Contractor must comply with the terms and conditions of Section 5 of Exhibit B before commencing any work on the Railroad's property.

E. **The Contractor agrees to also provide to the Manager of Track Maintenance in Fresno, California,** the advance notice required in Section 1 of Exhibit B of the Right of Entry Agreement prior to working on the Railroad's property in order for the Railroad to coordinate the Contractor's work with the Railroad's operations and to make arrangements for flagging protection (if applicable).

This endorsement shall be completed and sent to the person named in Paragraph C above.

_____
(Name of Contractor)

By_____

Title:_____

State Agreement No. 06R143
UPRR Folder No. 2599-74

06-KER-99 PM 49.60 (EA 0H6424)
Kern Ave Pedestrian Overcrossing
Railroad Mile Post 287.10
Fresno Subdivision
CPUC No. 001B-287.04-AD
US DOT No. 440997D

CONSTRUCTION AND MAINTENANCE AGREEMENT
KERN AVENUE PEDESTRIAN OVERCROSSING

This Agreement ("Agreement"), entered into effective this 8th day of April, 2016 ("Effective Date"), is between the **STATE OF CALIFORNIA**, acting by and through its **DEPARTMENT OF TRANSPORTATION**, referred to herein as "State," and the **UNION PACIFIC RAILRAOD COMPANY**, a corporation of the State of Delaware, referred to herein as "Railroad." State and Railroad may be individually referred to herein as "Party" and collectively referred to as "Parties."

RECITALS:

A. State proposes to replace the existing Kern Avenue Pedestrian Overcrossing, Bridge No. 50-224, PM 49.66, crossing over State Route 99 and Railroad's tracks and property at Railroad Mile Post 287.04, US DOT Crossing #756959V and CPUC Crossing #001B-287.04, on Railroad's Fresno Subdivision in the City of McFarland, Kern County, California with a new and longer structure that will be in compliance with the American with Disability Act (ADA). After completion of the new replacement bridge ("Structure"), the current Kern Avenue Pedestrian Overcrossing will be abandoned, demolished, and removed. The new crossing shall be identified as CPUC No. 001B-287.04-AD and US DOT No. 440997D at Mile Post 287.10, since it will be located approximately 300 feet south of the existing pedestrian overpass. Railroad and Structure location prints are shown on **Exhibit A**.

B. Prints showing the Structure's general type and size are shown on attached **Exhibit B**.

C. In order to facilitate the Project, State desires (i) a non-exclusive easement on, along and across Parcel 86834-1, described in the legal description set forth in the attachment **Exhibit A-1** ("Easement Parcel") and (ii) the temporary use of Railroad's property for construction activities on, along and across Parcels 86834-2 and 86834-3, described in the legal description set forth in the attached **Exhibit A-2** and as further depicted in the attached **Exhibit A-2** ("Temporary Use Parcels").

D. The Easement Parcel and Temporary Use Parcels are hereinafter sometimes collectively referred to as the "Project Parcels."

E. List of exhibits. The following attached exhibits are hereby made a part of this Agreement:

Exhibit A	Railroad and Structure Location Prints
Exhibit A-1	Legal Description – Easement Parcel and Form of Easement
Exhibit A-2	Legal Descriptions – Temporary Use Parcels
Exhibit A-3	Prints Showing the Project Parcels
Exhibit B	General Structure Plan
Exhibit C	Railroad's Summary Estimate Sheet
Exhibit D	Railroad Relations and Insurance Requirements
Exhibit E	Railroad's Minimum Requirements
Exhibit F	UPRR Demolition Guidelines
Exhibit G	Caltrans Right of Entry Agreement

F. Parties now desire to set forth their understanding and agreement relating to the replacement of existing structure including relocation, construction, use, maintenance and repair of constructed Structure.

AGREEMENT

Section 1. CONSIDERATION TO BE PAID BY THE STATE TO THE RAILROAD

A. For and in consideration of Thirty One Thousand Dollars ($31,000.00) to be paid by State to Railroad upon the execution of this Agreement, Railroad and State shall execute an Easement Deed in the form marked **Exhibit A-1**, whereby Railroad grants to State the non-exclusive easement rights necessary for the Project on, along and over the Easement Parcel

B. For and in consideration of Thirty One Thousand Dollars ($31,000.00) to be paid by State to Railroad upon execution of this Agreement, Railroad shall grant to State the right to use the Temporary Use Parcels for temporary construction purposes in the area described in **Exhibit A-2**. The State's use of the Temporary Use Parcels shall be subject to the terms and conditions of this Agreement and the obligation of the State and its Contractor (as defined in Section 12 of this Agreement) to comply with such provisions. The temporary rights granted shall commence as of the Effective Date of the Caltrans Right of Entry Agreement referenced in Section 14 and continue for a period of forty six (46) months thereafter, or until the State has completed its Project, whichever occurs earlier.

Section 2. WORK TO BE PERFORMED BY RAILROADS

Railroad, as a Project cost and at no cost to Railroad, shall perform design and engineering review work, inspection, and flagging protection as deemed necessary by Railroad. Railroad's estimated costs for performing such work are set forth in Railroad's Summary Estimate Sheet, marked **Exhibit C**, attached hereto and hereby made a part hereof ("Railroad Cost Estimate Summary").

Section 3 BILLING SENT BY RAILROAD TO STATE; STATE'S PAYMENT OF RAILROAD BILLS

A. Railroad shall send progressive billing to State and final billing to State within one hundred eighty (180) days after receiving written notice from State that all Project work affecting Railroad's property has been completed.

B. State agrees to pay Railroad for all actual costs and expenses incurred by Railroad in connection with the Project including, but not limited to, all actual costs of preliminary engineering review, construction, inspection, procurement of materials, equipment rental, manpower and deliveries to the job site, flagging and all direct and indirect overhead labor/construction costs. State recognizes that it can elect under 23 CFR 140.907 to reimburse Railroad for all direct and indirect overhead labor/construction costs (using Railroad's standard additive rates) and agrees to do so.

C. State agrees to pay Railroad for billings received from Railroad within forty-five (45) days of State's receipt of billing from Railroad, pursuant to the California Prompt Payment Act, Government Code Sections 927 et seq.

Section 4. RAILROAD NOT TO BEAR ANY PROJECT COSTS

The State confirms that Railroad shall not be required to bear any Project cost nor be required to contribute any funds for Project, in accordance with 23 CFR 646.210 (b)(2), and/or any other applicable provision of law.

Section 5. WORK PERFORMED BY STATE

State, as a Project expense and at no cost to Railroad, shall perform all Project work including, without limitation, drainage, demolition and removal of existing Kern Avenue pedestrian overcrossing, the construction of Structure, and other applicable work, all of which shall be performed in compliance with the Plans and Minimum Requirements described and defined in Sections 6 and 11, respectively, and in a good and workmanlike manner and prosecuted diligently to conclusion.

Section 6. PLANS

A. State, at State's expense, shall prepare, or cause to be prepared by others, the detailed plans and specifications for Project and submit such plans and specifications to Railroad's Assistant Vice President Engineering - Design, or his authorized representative, for review and approval. The plans and specifications shall include all appurtenances, associated drainage, shoring, sheeting and excavations for bents and/or abutments next to or adjacent to Railroad's tracks and also demolition plans involving the existing structure.

B. The final project plans once approved by Railroad without conditions are hereinafter referred to as the "Plans". The Plans are hereby made a part of this Agreement by reference.

C. No changes in the Plans shall be made unless Railroad has consented to such changes in writing.

D. Railroad's review and approval of the Plans will in no way relieve the State from its responsibilities, obligations and/or liabilities under this Agreement, and will be given with the understanding that Railroad make no representations or warranty as to the validity, accuracy, legal compliance or completeness of the Plans and that any reliance by State on the Plans is at the risk of State.

Section 7. MAINTENANCE AND REPAIR OF STRUCTURE AND OF HIGHWAY LOCATED ON THE STRUCTURE

State, and/or its successors and assigns, at their expense, shall maintain, repair and renew, or cause to be maintained, repaired and renewed, the entire Structure and all other improvements constructed on Railroad's property as part of the Project, including, without limitation, all graffiti removal or over-painting involving the Structure, in a safe, clean, sturdy and sound condition. If any maintenance, repairs or reconstruction of the Structure require a Contractor (as defined in Section 11), to enter upon and use any portion of Railroad property, and/or if such work could jeopardize the safety of Railroad personnel and equipment beneath the Structure, such as, but not limited to, falling concrete or other debris, the State, and or its successors and assigns, shall require each Contractor to execute the Railroad's then current form of Contractor's Right of Entry Agreement and to provide to the Railroad the insurance policies, binders, certificates and endorsements that are required in the Contractor's Right of Entry Agreement and to provide to the Railroad the insurance policies, binders, certificates and endorsements that are required in the Contractor's Right of Entry Agreement prior to commencing any such work. The State, and/or its successors and assigns, shall also pay the Railroad for its use of any Railroad property for which it does not at such time already hold easement or other access rights, and for all flagging costs.

Section 8. NON-RAILROAD IMPROVEMENTS

A. Submittal of plans and specifications for protecting, encasing, reinforcing, relocating, replacing, removing, and abandoning in place all non-railroad facilities ("NR Facilities") affected by Project including, without limitation, utilities, fiber optics, pipelines, wire lines, communication lines and fences is required under Section 6. The NR Facilities plans and specifications shall comply with Railroad's standard specifications and requirements, including, without limitation, American Railway Engineering and Maintenance-of-Way Association ("AREMA") standards and guidelines. Railroad has no obligation to supply additional land for NR Facilities and does not waive its right to assert preemption defenses, challenge the right-to-take, or pursue compensation in any condemnation action, regardless of whether the submitted NR Facilities plans and specifications comply with Railroad's standard specifications and requirements. Railroad

has no obligation to permit NR Facilities to be abandoned in place or relocated on Railroad's property. Nothing in the Easement Deed or in the grant of use of the Temporary Use Parcels, modifies, limits, or waives Railroad's preemption rights under federal law.

B. Upon Railroad's approval of submitted NR Facilities plans and specifications, Railroad will attempt to incorporate them into new agreements or supplements of existing agreements with NR Facilities owners or operators. Railroad may use its standard terms and conditions, including, without limitation, its standard license fee and administrative charges when requiring supplements or new agreements for NR Facilities. NR Facilities work shall not commence before a supplement or new agreement has been fully executed by Railroad and the NR Facilities owner or operator or before Railroad and State mutually agree in writing to (i) deem the approved NR Facilities plans and specifications to be Plans pursuant to Section 6B, (ii) deem the NR Facilities part of Structure, and (iii) supplement this Agreement with terms and conditions covering the NR Facilities.

Section 9. NO CLAIMS BY STATE

Notwithstanding any other provisions of this Agreement, State shall not make any claim against Railroad for any damages related to any and all work delays which arise in whole or in part from accommodating or performing railroad train operations, including, without limitation, train schedule changes, and/or increased railroad train operations by Railroad.

Section 10. BOOKS AND RECORDS

The books, papers, records and accounts of Railroad, so far as they relate to the items of expense for the materials to be provided by Railroad under Project, or are associated with the work to be performed by Railroad under Project, shall be open to inspection and audit at Railroad's offices in Omaha, Nebraska, during normal business hours by the agents and authorized representatives of State, and the Federal Highway Administration for a period of three (3) years following the date of Railroad's final billing, as defined by Section 3A, sent to State.

Section 11. RAILROAD'S SPECIAL PROVISIONS AND RAILROAD'S MINIMUM REQUIREMENTS

In the event any of the work upon property of Railroad, as herein contemplated, will be advertised for bids by State, the awarded contract shall include:

(i) State's "Railroad Relations and Insurance Requirements" **Exhibit D**,
(ii) Railroads' "Minimum Requirements" marked **Exhibit E**, and
(iii) "UPRR's Demolition Guidelines," marked **Exhibit F**.

Railroad shall have the rights to amend their individual Insurance Requirements and Minimum Requirements from time to time to conform to its standard provisions.

Section 12. DEFINITION OF CONTRACTOR

For purposes of this Agreement, all references in this Agreement to "Contractor" shall mean the contractor or contractors hired by State, and/or its successors and assigns, to perform any Project work on any portion of Railroad's property and shall also include the Contractor's subcontractors and the Contractor's and subcontractor's respective employees, officers and agents, and others acting under its or their authority and shall ensure their full compliance with all terms and conditions of this Agreement. Nothing in this section is intended to create rights in third parties or third party beneficiaries.

Section 13. FEDERAL AID POLICY GUIDE

The current rules, regulations and provisions of the Federal Aid Policy Guide, as contained in 23 CFR 140, subpart I and 23 CFR 646, subparts A and B are incorporated into this Agreement by reference.

Section 14. RESTRICTIONS ON COMMENCEMENT OF PROJECT WORK

A. Neither State nor any Contractor shall commence any Project work on any Railroad property until:

(i) State has obtained all necessary governmental permits, zoning clearances and approvals including, without limitation, those from the California Public Utilities Commission.

(ii) State has received written approval of the Plans from the Railroad which approval shall not be unreasonably withheld.

(iii) Railroad and State have executed the Right of Entry Agreements marked Exhibit G, the terms of which are hereby made a part hereof.

(iv) Each Contractor hired by State has executed the Contractor's Endorsement that is part of the Right of Entry Agreement.

(v) Railroad has received the insurance policies, binders, certificates and/or endorsements set forth in the Right of Entry Agreement.

B. The insurance coverage set forth in the Right of Entry Agreement shall remain in full force and effect by each Contractor during the performance of said work upon and adjacent to Railroad's property and thereafter until the Contractor removes all tools, equipment and materials from Railroad's property and cleans up the premises to a presentable condition satisfactory to Railroad.

C. State and each Contractor shall give the advance notices described in the Right of Entry Agreement to Railroad's authorized representatives, respectively, before commencing any Project work on Railroad's property, and shall observe Railroad's rules and regulations with

respect thereto. All work on Railroad's property shall be done at such times and in such manner so as not to interfere with or endanger the operations of the Railroad.

Section 15. EFFECTIVE DATE; TERM; TERMINATION

A. This Agreement is effective as of the Effective Date shown on the front page of this Agreement and is fully signed and executed by Railroad and State authorized signatories.

B. Railroad, if so elects, may terminate this Agreement effective upon delivery of a written notice to State in the event State does not commence construction on the portion of the Project located on Railroad's property within twelve (12) months from the Effective Date.

C. If the Agreement is terminated as provided above, or for any other reason, State shall pay to Railroad all actual costs and expenses incurred by Railroad in connection with Project up to the date of termination, including, without limitation, all actual costs incurred by Railroad in connection with reviewing any preliminary or final plans and specifications.

Section 16. FUTURE PROJECTS

In future projects after initial completion of construction of the Structure, State may, at State's sole expense, alter or reconstruct the Structure if necessary or desirable ("**Future Projects**"), provided, however, that State shall have no right (i) to expand the dimensions of the Structure or (ii) to erect falsework or other structures, temporary or permanent, or make any other use of the surface of Railroad's right-of-way other than for inspection or maintenance of the Structure as originally constructed, without obtaining Railroad's prior written consent and the execution of a supplement to this Agreement, or the completion of a separate construction and maintenance agreement, providing, without limitation, for the submission and approval of plans and specifications for such Future Project as contemplated by Section 6 of this Agreement and for a then-current standard contractor's right of entry form as contemplated by Sections 14 of this Agreement. Future Projects may require additional compensation to Railroad.

Section 17. ASSIGNMENT, SUCCESSORS AND ASSIGNS

A. State shall not assign or transfer this Agreement, unless compelled by law, without the prior written consent of Railroad.

B. Subject to the provisions of Section 17.A, above, this Agreement shall inure to the benefit of and be binding upon the successors and assigns of Railroad and State.

Section 18. PRE-CONSTRUCTION MEETING

After award of contract for the Structure construction, State hereby agrees to provide, through its Resident Engineer, a three-week advance notice to Railroad to attend any Structure pre-construction meeting.

Section 19. BUY AMERICA

Railroad acknowledges that this Agreement is for a federal-aid project and Railroad shall comply with the Buy America provisions set forth in 23 U.S.C. Section 313 and 23 CFR 635.410, in the procurement and use of steel and iron produced in the United States, subject to the conditions therein set forth.

Section 20. TIME IS OF THE ESSENCE

Time is of the essence in this Agreement and the Parties agree to execute all documents and proceed with due diligence to complete all covenants and conditions.

IN WITNESS WHEREOF, the Parties hereto have caused this Agreement to be executed in triplicate (3) as of the Effective Date by their officers thereunto duly authorized.

STATE OF CALIFORNIA
DEPARTMENT OF TRANSPORTION

By: _____
BENJAMIN D. MARTIN, Ed.D., Chief
Office of Railroads & Utility Relocations
Division of Right of Way and Land Surveys

APPROVED AS TO FORM AND PROCEDURE

By: _____
Attorney
Department of Transportation

APPROVAL RECOMMENDED AS TO CONSTRUCTION & MAINTENANCE

By: _____
DENNY FONG, P.E.
Railroad Agreements Engineer

UNION PACIFIC RAILROAD COMPANY

By: _____
DANIEL A. LEIS
General Director-Real Estate

Approved as to form:
_____ Attorney

EXHIBIT A

Exhibits A are Railroad and Structure Location Prints

EXHIBIT "A"

RAILROAD LOCATION PRINT
ACCOMPANYING A
CONSTRUCTION & MAINTENANCE AGREEMENT/CONTRACTOR'S RIGHT OF ENTRY AGREEMENT

UNION PACIFIC RAILROAD COMPANY

FRESNO SUBDIVISION
RAILROAD MILE POST 287.10
MCFARLAND, KERN COUNTY, CA

To accompany an Agreement for the
CALIFORNIA DEPT. OF TRANSPORTATION and its Contractors

UPRR Folder No. 2599-74 Date: February 24, 2016

WARNING

IN ALL OCCASIONS, U.P. COMMUNICATIONS DEPARTMENT MUST BE CONTACTED IN ADVANCE OF ANY WORK TO DETERMINE EXISTENCE AND LOCATION OF FIBER OPTIC CABLE.

PHONE: 1-(800) 336-9193

State Agreement No. 06R143
UPRR Folder No. 2599-74

INDEX OF PLANS

SHEET No.	DESCRIPTION
1	TITLE AND LOCATION MAP
2-3	LAYOUTS
4-7	CONSTRUCTION DETAILS
8-10	DRAINAGE PLAN, PROFILE AND QUANTITIES
11	CONSTRUCTION AREA SIGNS
12-16	TRAFFIC HANDLING PLAN AND QUANTITIES
17-19	DETOUR PLANS
20	SIGN DETAILS AND QUANTITIES
21	SUMMARY OF QUANTITIES
22-42	MAINTAIN EXISTING PLANTED AREAS
43-44	IRRIGATION REMOVAL PLAN
45-47	IRRIGATION PLAN, DETAILS AND PLANT LIST
48-49	PLANTING PLAN
50-52	LANDSCAPE DETAILS AND QUANTITIES
53-55	LIGHTING AND ELECTRICAL QUANTITIES
56-XX	REVISED STANDARD PLAN

THE STANDARD PLANS LIST APPLICABLE TO THIS CONTRACT IS INCLUDED IN THE NOTICE TO BIDDERS AND SPECIAL PROVISIONS BOOK.

STATE OF CALIFORNIA
DEPARTMENT OF TRANSPORTATION

PROJECT PLANS FOR CONSTRUCTION ON
STATE HIGHWAY
IN KERN COUNTY IN MCFARLAND ON ROUTE 99
AT KERN AVENUE PEDESTRIAN OVERCROSSING
AND IN BAKERSFIELD ON ROUTE 178
AT SUNNY LANE PEDESTRIAN OVERCROSSING

TO BE SUPPLEMENTED BY STANDARD PLANS DATED 2010

DIST	COUNTY	ROUTE	POST MILES TOTAL PROJECT	SHEET No.	TOTAL SHEETS
06	Ker	99, 178	48.6, R4.4	1	99

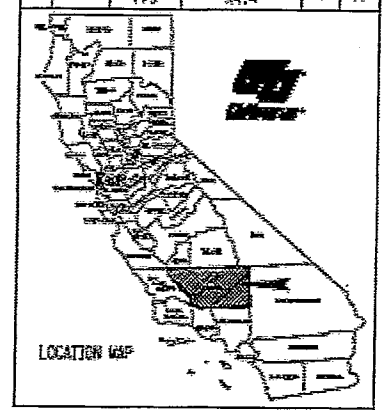

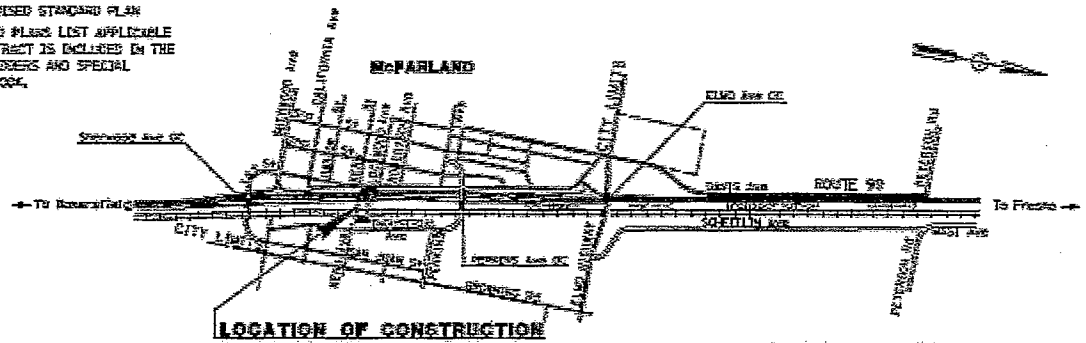

LOCATION OF CONSTRUCTION
KERN AVENUE PEDESTRIAN OVERCROSSING
Br No. 50-0224 PM 48.6

LOCATION OF CONSTRUCTION
SUNNY LANE PEDESTRIAN OVERCROSSING
Br No. 50-0334 PM R4.4

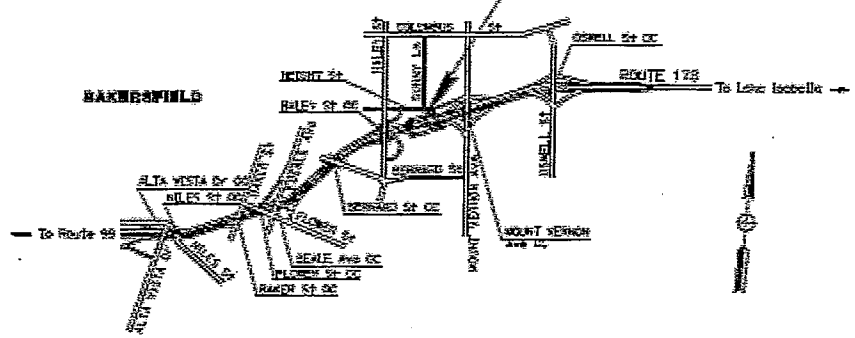

NO SCALE

THE CONTRACTOR SHALL POSSESS THE CLASS (OR CLASSES) OF LICENSE AS SPECIFIED IN THE "NOTICE TO BIDDERS."

CONTRACT No.	06-0H6404
PROJECT ID	0600000133

Exhibit A

EXHIBIT A-1

Exhibits A-1 Legal Description – Easement Parcel 86834-1
and Form of Easement

State Agreement No. 06R143
UPRR Folder No. 2599-74

RECORDING REQUESTED BY AND WHEN
RECORDED MAIL TO:

California Department of Transportation
855 M Street, Suite 200
Fresno, CA 93721

State Business –No Recording Fee
(Gov. Code 27383)
DEPT. OF TRANSPORTATION

BY:_____

Right of Way Agent

Space above this line for Recorder's Use

EASEMENT DEED

District	County	Route	Postmile	Number
06	KER	99	287.10	86834-1

UNION PACIFIC RAILROAD COMPANY, a Delaware corporation (hereinafter, "GRANTOR"), for good and valuable consideration, the receipt and sufficiency of which are hereby acknowledged, hereby grants to the STATE OF CALIFORNIA, Department of Transportation, a public agency, its successors and assigns (hereinafter, "STATE") (subject to the reservations, covenants, terms and conditions hereof), a non-exclusive aerial easement (hereinafter "Easement") for the purpose of constructing, reconstructing, upgrading, replacing, removing, inspecting, maintaining, repairing and operating an overhead bridge and highway only for use as a public road crossing for the Kern Avenue Pedestrian Overcrossing, Bridge No. 50-0224, PM 49.60 along with all necessary supporting columns, footings and appurtenances thereon (hereinafter collectively, "Structure") near the City of McFarland in Kern County, California, over and across GRANTOR's railroad tracks and that certain real property described in **Exhibit** A, attached hereto and hereby made a part hereof (hereinafter the "Property"), at GRANTOR's milepost 287.10 (DOT 440997D) on GRANTOR's Fresno Subdivision.

This conveyance is made for the purpose of widening an existing pedestrian overpass and GRANTOR hereby releases and relinquishes to the STATE any and all rights of access directly to and from the Structure from and to GRANTOR's property.

GRANTOR acknowledges that the Structure and its use as a public road crossing in accordance with this Easement Deed and the C & M Agreement (as defined below) are compatible with railroad operations, within the meaning of California Code of Civil Procedure section 1240.510, so long as they do not impede railroad operations, create an undue safety risk, or interfere with GRANTOR's common carrier obligations as regulated by the Surface Transportation Board or by any successor agency.

GRANTOR further grants to STATE the non-exclusive right of ingress to and egress from the Property over and across GRANTOR's other property, subject to advance notification and coordination with GRANTOR to ensure safety and the compatibility of GRANTOR's other property for such ingress and egress (which coordination by GRANTOR shall not be unreasonably withheld), and provided further that such right of ingress and egress shall be in accordance with the terms and provisions of the parties' separate Construction and Maintenance Agreement dated _____ , 2016, and as thereafter amended by mutual agreement, and known in GRANTOR's records as part of Real Estate Folder Number 2599-74, Audit # S110135 (the "C & M Agreement").

RESERVING unto GRANTOR, its successors and assigns all rights in and to the Property and all uses of the Property that are not inconsistent with STATE's use and enjoyment of the Easement, including, but not limited to the following:

(1) All rights in and to airspace at an elevation higher than a plane parallel with and thirty (30) feet above the roadway surface of the Structure as originally constructed.

(2) The right to construct, reconstruct, upgrade, place, replace, remove, inspect, maintain, repair, alter, renew, improve and operate pipelines, utility lines, track, railroad facilities and communication lines above, below and on the surface of the Property. Railroad reserves and shall have the exclusive right to grant such rights to third parties. Communication lines shall include, without limitation, transmission by conduit, fiber optics, cable, wire or other means of electricity, voice data, video, digitized information, or other materials or information.

(3) All rights as may be required to investigate and remediate environmental contamination and hazards affecting the Property.

(4) All oil, oil rights, minerals, mineral rights, natural gas, natural gas rights, and other hydrocarbons by whatsoever name known that may be within the Property together with the perpetual right of drilling, mining, exploring and operating therefor and removing the same from the Property, including the right to whipstock or directionally drill and mine from lands other than the Property hereinbefore described, oil or gas wells, tunnels and shafts into, through or across the subsurface of the Property, and to bottom such whipstocked or directionally drilled wells, tunnels and shafts under and beneath or beyond the exterior limits thereof, and to redrill, retunnel, equip, maintain, repair, deepen and operate any such wells, or mines, without, however, the right to drill, mine, explore and operate through the surface, or the upper one hundred (100) feet of the subsurface of the Property or otherwise in such manner as to endanger the safety of any Structure that may be constructed on the Property.

This Easement is SUBJECT and SUBORDINATE to the following:

(1) The terms and conditions of the C & M Agreement.

(2) All prior and outstanding licenses, leases, easements, restrictions, conditions,

covenants, liens and claims of title which may affect the Property, whether recorded or both unrecorded and known by Grantor, including, but not limited to, all easements for petroleum and/or hydrocarbon pipelines. The word "grant" as used in this Easement shall not be construed as a covenant against the existence of any Prior Rights affecting the Property.

(3) The continuing right and obligation of GRANTOR, its successors and assigns, to use the Property in the performance of its duties as a common carrier, including, but not limited to, the right to construct, reconstruct, maintain and operate existing or any additional railroad tracks, facilities and appurtenances thereto in, upon, over, along and across the Property in such manner as may be consistent with STATE's use and enjoyment of the easement herein granted; ***provided, further that in the event the Property is transferred to a non-transportation entity, such transferee's use of the Property shall be subject to the following limitations and conditions:***

(a) No use may be made of the Property which would impair the full use and safety of the Structure, or would otherwise interfere with the free flow of traffic thereon or would unreasonably impair the maintenance thereof.

(b) No use may be made of the Property for the manufacture or storage of flammable, volatile, explosive or corrosive substances, and such substances shall not be brought onto said land except in such quantities as are normally required for the maintenance operations of occupants of said land and except as may be transported by rail or pipelines. Installation of any pipelines by a non-railroad or other non-transportation entity, or pipelines not otherwise subject to Federal and/or State regulations and safety standards, carrying volatile substances shall have the written approval of the STATE as to the safety and compatibility with the Easement and such discretion shall not be exercised in a capricious or arbitrary manner. The use of any such substances shall be in conformance with all applicable code requirements.

(c) No hazardous or unreasonably objectionable smoke, fumes, vapors, dust or odors shall be permitted, which would adversely affect the use or maintenance of said Structure or the traveling public thereon.

(d) No building of combustible construction shall hereafter be constructed on the Property. The STATE shall be given the opportunity to review and approve plans for any construction within the Property sixty (60) days prior to said construction. No buildings, no permanent structures, and no advertising displays, may be constructed within eight (8) feet of the undersides nor within fifteen (15) feet (measured horizontally) of the sides of the Structure without the express written approval of the STATE. The STATE shall have the discretion to determine whether such proposed construction will be inimical to or incompatible with the full enjoyment of the public rights in the Easement or against the public interest, but such discretion shall not be exercised in a capricious

or arbitrary manner.

If the Easement, or any portion thereof, shall cease to be needed for public crossing purposes, then the STATE shall vacate such portion (s) of the Easement in accordance with any and all applicable State and Federal laws. In addition, STATE, at STATE's sole expense, shall demolish and remove the Structure in accordance with the then current standards of GRANTOR, including, but not limited to engineering, land use and railroad operating standards, and with the terms and provisions of the C & M Agreement.

Consideration for this grant includes compensation for damages to the value of the remainder of GRANTOR's property, if any, caused by the existence of the Easement herein granted and/or by the construction or maintenance of the Structure. GRANTOR hereby waives any additional claim for such damages to the value of the remainder, if any. This waiver shall not apply to compensation for any physical damages to GRANTOR's remaining property, if any, caused by STATE.

In WITNESS WHEREO F, GRANTOR has caused its corporate name to be hereunder subscribed and its corporate seal to be affixed hereto, this_____day of _____, 2016.

Attest:

UNION PACIFIC RAILROAD COMPANY,
a Delaware corporation

_____
Beverly J. Kubat
Assistant Secretary

By: _____
DANIEL A. LEIS
General Director-Real Estate

State Agreement No. 06R143
UPRR Folder No. 2599-74

ACKNOWLEDGMENT

STATE OF NEBRASKA
) SS
COUNTY OF DOUGLAS)

On this day of , 2016, before me, David C. LaPlante, a Notary Public in and for said County of Douglas and State of Nebraska, personally appeared Daniel A. Leis and Beverly J. Kubat, who are the General Director-Real Estate and the Assistant Secretary, respectively, of Union Pacific Railroad Company, a Delaware corporation, and who are personally known to me (or proved to me on the basis of satisfactory evidence) to be the persons whose names are subscribed to in the within instrument, and acknowledged to me that they executed the same in their authorized capacities, and that by their signatures on the instrument the persons, or the entity upon behalf of which the persons acted, executed the instrument.

WITNESS my hand and official seal.

_____
Notary Public

(Notary Seal)

THIS IS TO CERTIFY, That the State of California, acting by and through the Department of Transportation (pursuant to Government Code Section 27281), hereby accepts for public purposes the real property described in the within deed and consents to the recordation thereof.

IN WITNESS WHEREOF, I have hereunto set my hand this __day of_____, 2016.

_____
Director of Transportation

By: _____
Attorney in Fact

State Agreement No. 06R143
UPRR Folder No. 2599-74

Exhibit A

Property Description for permanent easement

State Agreement No. 06R143
UPRR Folder No. 2599-74

Parcel 86834-1

That portion of the Southeast Quarter of Section 12, Township 26 South, Range 25 East, Mount Diablo Meridian, according to the Official Government Plat thereof, more particularly described as follows:

COMMENCING at the intersection of the centerline of Kern Avenue and the centerline of Industrial Street between Kern Avenue and Perkins Avenue as shown on Record of Survey 15- 2, in Book 11, at Page 55, Kern County Records;

THENCE (1) along said centerline of said Kern Avenue North 89°36'34" West, 173.04 feet to the easterly right of way of the Southern Pacific Railroad, said easterly right of way being parallel with and easterly 383.00 feet from the centerline of State Route 99, as shown on that certain State Highway Monumentation Map filed in Filed Maps 7-1, Book 1 at Page 148, Kern County Records;

THENCE (2) along said easterly right of way North 10°04'49" West, 12.17 feet to the POINT OF BEGINNING;

THENCE (3) continuing along said easterly right of way North 10°04'49" West, 262.32 feet;

THENCE (4) leaving said easterly right of way South 79°55'11" West, to a line that is parallel with and westerly 50 feet from said easterly right of way;

THENCE (5) along said parallel line South 10°04'49" East, 232.32 feet;

THENCE (6) South 79°55'11" West, 210.00 feet to the westerly right of way line of said Southern Pacific Railroad, said westerly right of way line being parallel with and easterly 123.00 feet from said centerline of said State Route 99;

THENCE (7) along said westerly right of way line South 10°04'49" East, 30.00 feet;

THENCE (8) leaving said westerly right of way line North 79°55'11" East, 260.00 feet to the POINT OF BEGINNING.

EXCEPTING THEREFROM that parcel of land conveyed in a deed to the Southern Pacific Company recorded on November 10, 1958 in Book 3051, Page 452, Kern County Records.

Containing 13015 square feet, more or less.

The bearings and distances used in this description are on the California Coordinate System of 1983, Zone 5. Divide distances by 1.00004632 to convert to ground distances.

This real property description has been prepared by me, or under my direction, in conformance with the Professional Land Surveyors Act.

Signature Lyn T. Bockmiller
Professional Land Surveyor

PROFESSIONAL LAND SURVEYOR
LYNN T. BOCKMILLER
Exp 12/31/16
No. 7666

State Agreement No. 06R143
UPRR Folder No. 2599-74

Date July 14, 2015

Page 2 of Easement Deed 86834-1

Ex A-2 Temporary Use Parcels-parcel 86834-2 & 868343-3

Parcel 86834-2

That portion of the Southeast Quarter of Section 12, Township 26 South, Range 25 East, Mount Diablo Meridian, according to the Official Government Plat thereof, more particularly described as follows:

COMMENCING at the intersection of the centerline of Kern Avenue and the centerline of Industrial Street between Kern Avenue and Perkins Avenue as shown on Record of Survey 15-2, in Book 11, at Page 55, Kern County Records;

THENCE (1) along said centerline of said Kern Avenue North 89°36'34" West, 173.04 feet to the easterly right of way of the Southern Pacific Railroad, said easterly right of way being parallel with and easterly 383.00 feet from the centerline of State Route 99, as shown on that certain State Highway Monumentation Map filed in Filed Maps 7-1, Book 1 at Page 148, Kern County Records;

THENCE (2) along said easterly right of way North 10°04'49" West, 12.17 feet to the POINT OF BEGINNING;

THENCE (3) leaving said easterly right of way South 79°55'11" West, 260.00 feet to the westerly right of way line of said Southern Pacific Railroad, said westerly right of way line being parallel with and easterly 123.00 feet from said centerline of said State Route 99;

THENCE (3) along said westerly right of way line South 10°04'49" East, 50.00 feet;

THENCE (4) leaving said westerly right of way line North 79°55'08" East, 230.00 feet to the easterly right of way of said Southern Pacific Railroad said easterly right of way being parallel with and easterly 353.00 feet from said centerline of said State Route 99

THENCE along said easterly right of way the following described courses:

(5) North 10°04'49" West, 11.96 feet; (6) North 89°29'51" East, 30.42 feet, (7) North 10°04'49" West, 43.11 feet to the POINT OF BEGINNING.

Containing 12718 square feet, more or less.

Parcel 86834-3

That portion of the Southeast Quarter of Section 12, Township 26 South, Range 25 East, Mount Diablo Meridian, according to the Official Government Plat thereof, more particularly described as follows:

COMMENCING at the intersection of the centerline of Kern Avenue and the centerline of Industrial Street between Kern Avenue and Perkins Avenue as shown on Record of Survey 15-2, in Book 11, at Page 55, Kern County Records;

Parcel 86834-3 (continued)

THENCE (1) along said centerline of said Kern Avenue North 89°36'34" West, 173.04 feet to the easterly right of way of the Southern Pacific Railroad, said easterly right of way being parallel with and easterly 383.00 feet from the centerline of State Route 99, as shown on that certain State Highway Monumentation Map filed in Filed Maps 7-1, Book 1 at Page 148, Kern County Records;

THENCE (2) along said easterly right of way North 10°04'49" West, 274.49 feet to the POINT OF BEGINNING;

THENCE (3) continuing along said easterly right of way North 10°04'49" West, 79.98 feet;

THENCE (4) leaving said easterly right of way South 79°55'11" West, 70.00 feet;

THENCE (5) South 10°04'49" East, 111.43 feet;

THENCE (6) South 84°10'45" West, 190.53 feet to the westerly right of way line of said Southern Pacific Railroad, said westerly right of way line being parallel with and easterly 123.00 feet from said centerline of said State Route 99;

THENCE (7) along said westerly right of way line South 10°04'49" East, 20.06 feet;

THENCE (8) leaving said westerly right of way line North 84°10'45" East, 190.53 feet;

THENCE (9) South 10°04'49" East, 30.08 feet;

THENCE (10) South 84°10'45" West, 190.53 feet to said westerly right of way line;

THENCE (11) along said westerly right of way line South 10°04'49" East, 20.06 feet;

THENCE (12) leaving said westerly right of way line North 84°10'45" East, 190.53 feet;

THENCE (13) South 10°04'49" East, 110.67 feet;

THENCE (14) South 79°55'11" West, 190.00 feet to said westerly right of way line;

THENCE (15) along said westerly right of way line South 10°04'49" East, 20.00 feet;

THENCE (16) leaving said westerly right of way line North 79°55'11" East, 210.00 feet;

THENCE (17) North 10°04'49" West, 232.32 feet;

THENCE (18) North 79°55'11" East, 50.00 feet to the POINT OF BEGINNING.

Containing 21666 square feet, more or less.

Parcel 86834-3 (continued)

Rights to the above described temporary easements shall cease and terminate on January 06, 2016. Said rights may also be terminated prior to the above date by STATE upon notice to GRANTOR.

The bearings and distances used in this description are on the California Coordinate System of 1983, Zone 5. Divide distances by 1.00004632 to convert to ground distances.

This real property description has been prepared by me, or under my direction, in conformance with the Professional Land Surveyors Act.

Signature Lynn T. Blockmiller
Professional Land Surveyor

Date January 22, 2013

PROFESSIONAL LAND SURVEYOR
LYNN T. BLOCKMILLER
Exp. 12/31/14
No. 7653
STATE OF CALIFORNIA

EXHIBIT A-3

Exhibits A-3 is Prints Showing the Project Parcels

State Agreement No. 06R143
UPRR Folder No. 2599-74

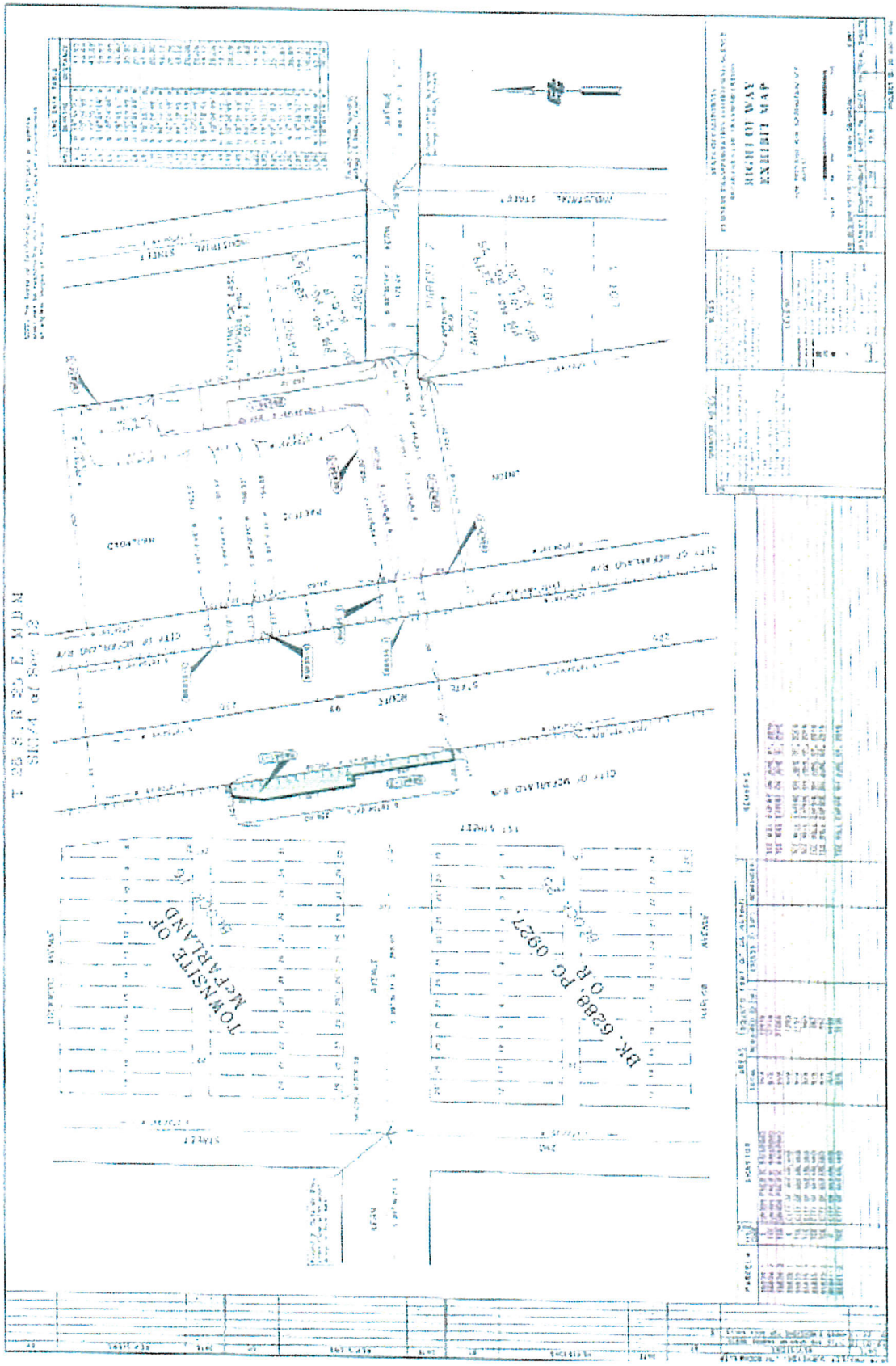

Exhibit A - 3

EXHIBIT B

Exhibit B is General Structure Plan

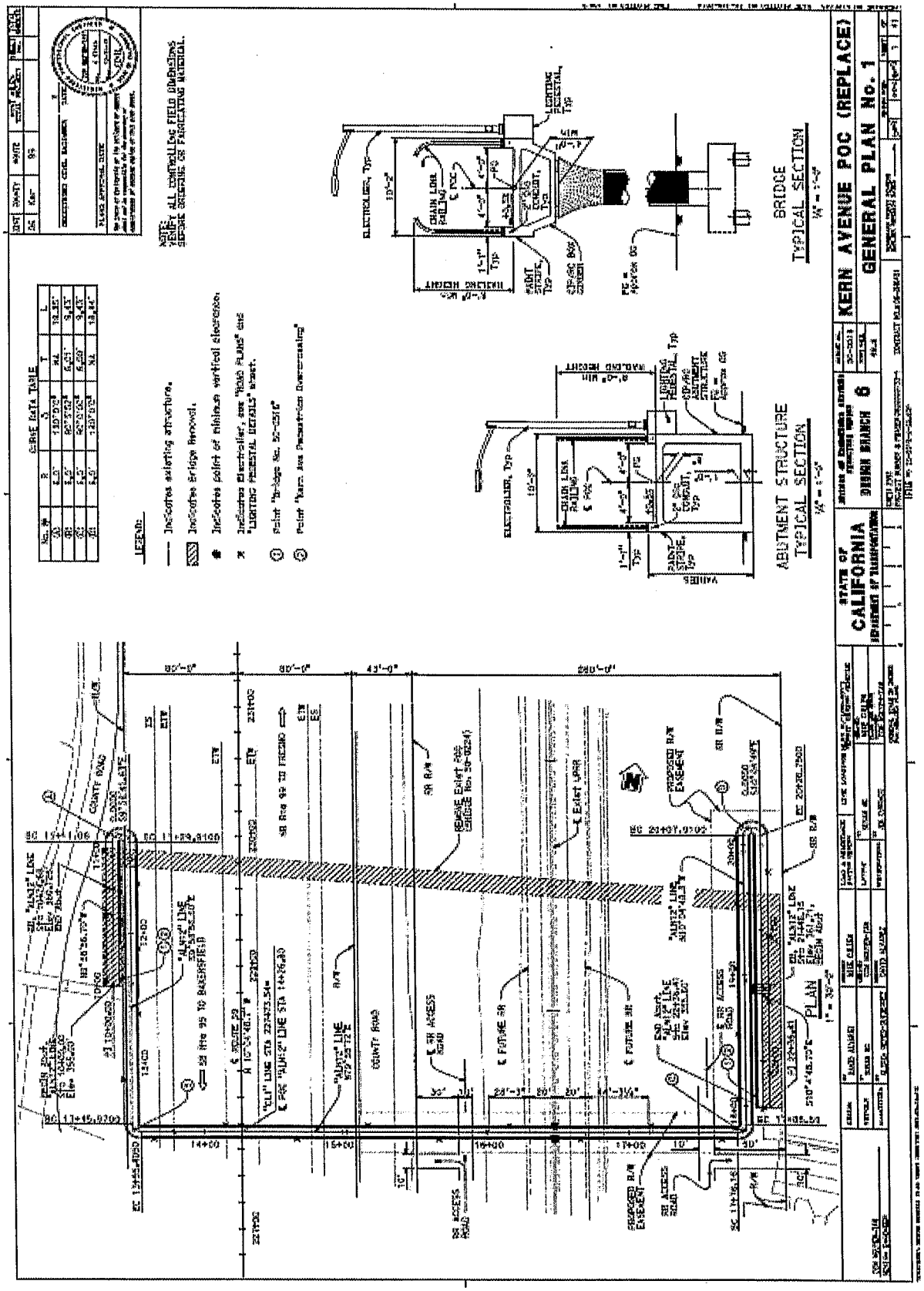
STATE OF CALIFORNIA
KERN AVENUE POC (REPLACE)
GENERAL PLAN No. 1
BRIDGE TYPICAL SECTION
ABUTMENT STRUCTURE TYPICAL SECTION
PLAN

Exhibit B

Exhibit B

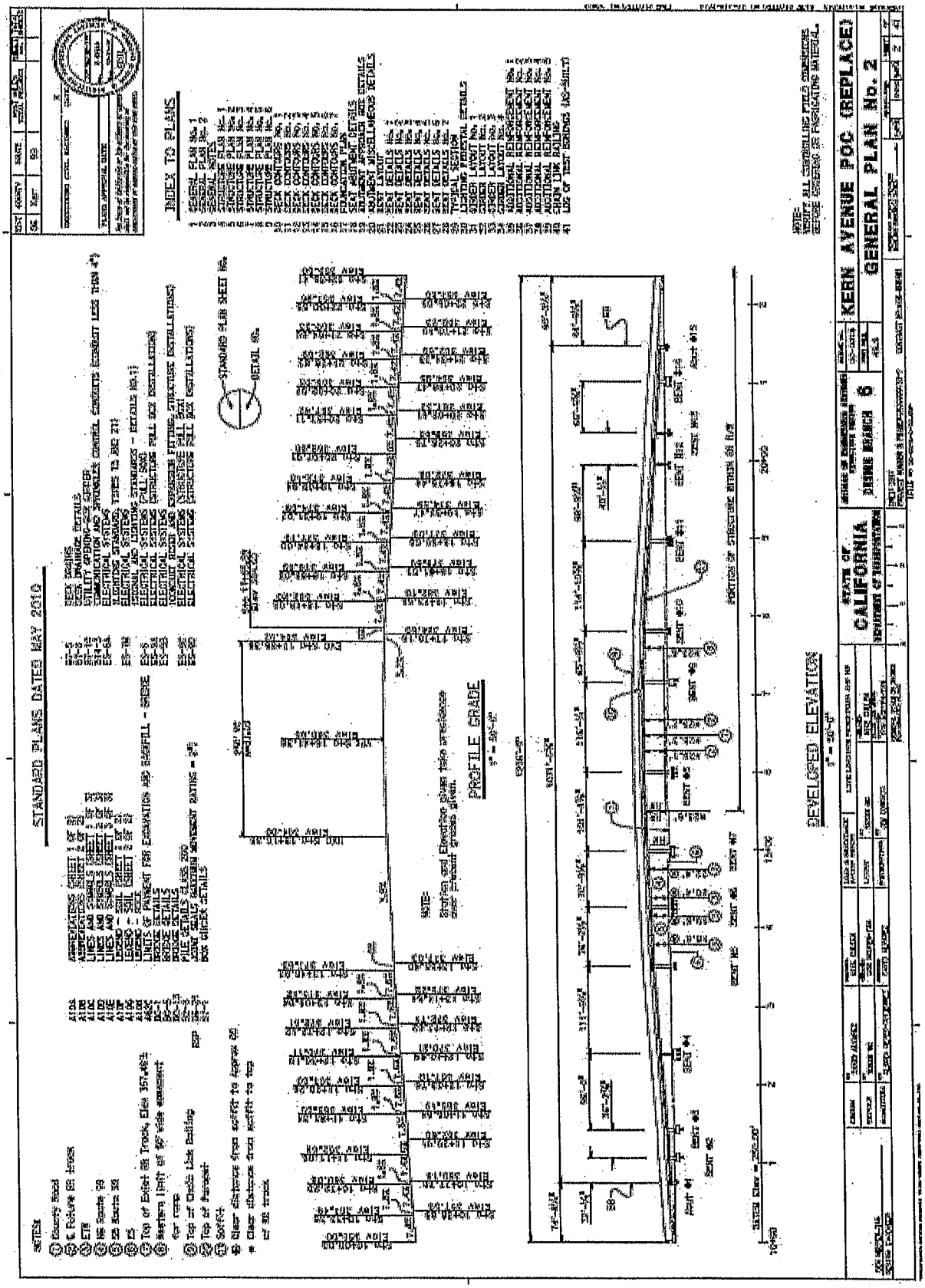
STANDARD PLANS DATED MAY 2010
INDEX TO PLANS
PROFILE GRADE
DEVELOPED ELEVATION
STATE OF CALIFORNIA
DEPARTMENT OF TRANSPORTATION
KERN AVENUE POC (REPLACE)
GENERAL PLAN No. 2

Exhibit B

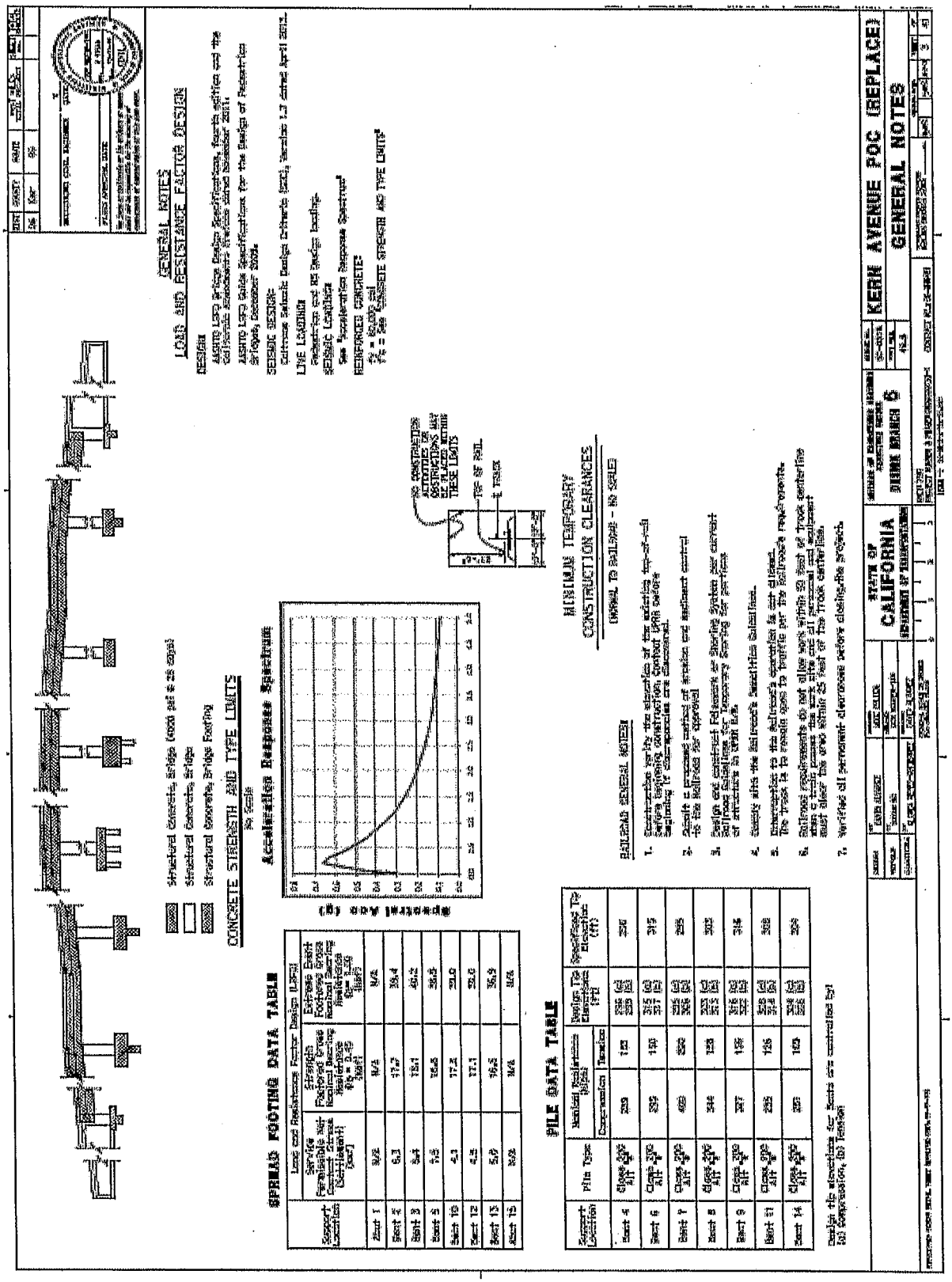
GENERAL NOTES
LOAD AND RESISTANCE FACTOR DESIGN
CONCRETE STRENGTH AND TYPE LIMITS
Acceleration Response Spectrum
SPREAD FOOTING DATA TABLE
PILE DATA TABLE
MINIMUM TEMPORARY CONSTRUCTION CLEARANCES
RAILROAD GENERAL NOTES
STATE OF CALIFORNIA
KERN AVENUE POC (REPLACE)
GENERAL NOTES

State Agreement No. 06R143
UPRR Folder No. 2599-74

EXHIBIT C

UNION PACIFIC RAILROAD
SUMMARY ESTIMATE SHEET

Location: Kern Avenue Pedestrian Overcrossing, Kern County
CPUC No. 001B-287.04-AD, US DOT No. 440997D, Mile Post 287.10

Project: Replace, Relocate, and Remove Existing Pedestrian Overcrossing Currently Located at Railroad Milepost 287.04, USDOT 756959V, on Railroad's Fresno Subdivision in McFarland City, Kern County, California

Estimate:

Flagging ($1,300.00/day) X 120	days	$156,000.00
Engineering Review & Inspection		$ 25,000.00
15% Contingency		$ 27,150.00
Total		**$208,150.00**

* Note: This is an estimate only. Railroads shall bill on an actual cost basis.

EXHIBIT D

Information Handout Document to Project Construction Contract:

RAILROAD RELATIONS AND INSURANCE REQUIREMENTS

1.01 GENERAL

The term "Railroad" shall mean the Union Pacific Railroad Company.

It is expected that the Railroad will cooperate with the Contractor to the end that the work may be handled in an efficient manner. However, except for the additional compensation provided for hereinafter for delays in completion of specific unit of work to be performed by the Railroad, and except as provided in Public Contracts Code Section 7102, the Contractor shall have no claim for damages, extension of time, or extra compensation in the event his work is held up by railroad train operations or other work performed by the Railroad.

The Contractor must understand the Contractor's right to enter the Railroad's property is subject to the absolute right of the Railroad to cause the Contractor's work on the Railroad's property to cease if, in the opinion of the Railroad, the Contractor's activities create a hazard to the Railroad's property, employees, tenants, and operations or employees, and operations.

The Contractor acknowledges its receipt from the State of a copy of the Caltrans Right of Entry Agreement that has been executed by the Railroad and the State. The Contractor agrees to execute and deliver to the Railroad the Contractor's Endorsement that is attached hereto as Appendix 1 and to provide to the State and/or the Railroad all insurance policies, binders, certificates or endorsements that are set forth in Exhibits B and C of the Caltrans Right of Entry Agreement.

1.02 RAILROAD REQUIREMENTS

The Contractor shall provide to Mr. Daniel Moreno, Railroad's Manager, Industry and Public Projects, 2015 South Willow Ave., Bloomington CA 92316, and the Engineer, in writing, the advance notice requirements set forth in Section 1 of Exhibit B of Caltrans Right of Entry Agreement before performing any work on, or adjacent to the property or tracks of the Railroad.

The Contractor shall cooperate with the Railroad where work is over or under the tracks, or within the limits of the Railroad property to expedite the work and avoid interference with the operation of railroad equipment.

The Contractor shall comply with the rules and regulations of the Railroad or the instructions of its representatives in relation to protecting the tracks and property of the Railroad and the traffic moving on such tracks, as well as the wires, signals and other property of the Railroad, its tenant or licensees, at and in the vicinity of the work during the period of construction. The responsibility of the Contractor for safe conduct and adequate policing and supervision of its

work at the job site shall not be lessened or otherwise affected by the presence at the work site of Railroad representatives, or by the Contractor's compliance with any requests or recommendations made by Railroad representatives.

The Contractor shall perform work so as not to endanger or interfere with the safe operation of the tracks and property of the Railroad and traffic moving on such tracks, as well as wires, signals and other property of the Railroad, its tenant or licensees, at or in the vicinity of the work.

The Contractor shall take protective measures to keep the Railroad facilities, including track ballast, free of sand or debris resulting from his operations. Damage to the Railroad facilities resulting from the Contractor's operations will be repaired or replaced by the Railroad and the cost of such repairs or replacement shall be deducted from the Contractor's progress and final pay estimates.

The Contractor shall contact the Railroad's "Call Before You Dig" at least forty-eight (48) hours prior to commencing work, at 1-800-336-9193 during normal business hours (7:00 a.m. to 9:00 p.m. Central Time, Monday through Friday, except holidays – also a 24-hour, 7-day number for emergency calls) to determine location of fiber optics. If a telecommunications system is buried anywhere on or near the Railroad property, the Contractor will coordinate with the Railroad and the Telecommunication Company(ies) to arrange for relocation or other protection of the system prior to beginning any work on or near Railroad property.

The Contractor shall not pile or store any materials nor park any equipment closer than 25'-0" to the centerline of the nearest track, unless directed by the Railroad's representative.

The Contractor shall also abide by the following temporary clearances during the course of construction:

- 12'-0" horizontally from centerline of track
- 21'-6" vertically above top of rail

The temporary vertical construction clearance above provided will not be permitted until authorized by the Public Utilities Commission. It is anticipated that authorization will be received not later than fifteen (15) days after the approval of the contract. In the event authorization is not received by the said time specified, the Licensee will compensate the Contractor for such delay to the extent provided in Section 8-1.07, " Delays," of the 2010 Standard Specifications and not otherwise.

Walkways with railing shall be constructed by the Contractor over open excavation areas when in close proximity of tracks, and railings shall not be closer than 12'-0" horizontally from centerline of the nearest track.

Infringement on the above temporary construction clearances by the Contractor's operations shall be submitted to the Railroad by the Engineer, and shall not be undertaken until approved by the Railroad, and until the Engineer has obtained any necessary authorization from any governmental body or bodies having jurisdiction there over. No extension of time or extra

compensation will be allowed in the event the Contractor's work is delayed pending Railroad approval and governmental authorization.

When the temporary vertical clearance is less than 22'-6" above top of rail, the Railroad shall have the option of installing tell-tales or other protective devices the Railroad deems necessary for protection of the Railroad trainmen or rail traffic.

Four (4) sets of plans, in 11" x 17" format, and two (2) sets of calculations showing details of construction affecting the Railroad's tracks and property not included in the contract plans, including but not limited to shoring and false work, shall be submitted to the Engineer for review prior to submittal to the Railroad for final approval. At Railroad's option, these plans and calculations may be submitted electronically via email or by appropriate data disk via US Postal Service. False work shall comply with the Railroad guidelines. Demolition of existing structures shall comply with the Railroad guidelines. Shoring shall be designed in accordance with the Railroad's shoring requirement of Drawing No. 106613 and guidelines for shoring and false work, latest edition, issued by the Railroad's Office of Chief Engineer. Shoring and false work plans and calculations shall be prepared and signed by a professional engineer registered in California. This work shall not be undertaken until such time as the Railroad has given such approval; review by the Railroad may take up to six (6) weeks after receipt of necessary information.

The Contractor shall notify the Engineer in writing, at least twenty-five (25) calendar days but not more than forty (40) days in advance of the starting date of installing temporary work with less than permanent clearance at each structure site. The Contractor shall not be permitted to proceed with work across railroad tracks until this requirement has been met. No extension of time or extra compensation will be allowed if the Contractor's work is delayed due to failure to comply with the requirements in this paragraph.

Blasting will be permitted only when approved by the Railroad.

The Contractor shall, upon completion of the work covered by this Contract to be performed by the Contractor upon the premises or over or beneath the tracks of the Railroad, promptly remove from the premises of the Railroad, the Contractor's tools, implements and other materials, whether brought upon said premises and cause said premises to be left in a clean and presentable condition.

Under track pipeline installations shall be constructed in accordance with the Railroad's current standards which may be obtained from the Railroad. The general guidelines are as follows:

(a) Edges of jacking or boring pit excavations shall be a minimum of 25 feet from the centerline of the nearest track.

(b) If the pipe to be installed under the track is 4 inches in diameter or less, the top of the pipe shall be at least 42 inches below base of rail.

(c) If the pipe diameter is greater than 4 inches in diameter, it shall be encased and the top of the steel pipe casing shall be at least 66 inches below base of rail.

(d) Installation of pipe or conduit under the Railroad's tracks shall be done by dry bore and jack method.

(e) Hydraulic jacking or boring will not be permitted.

Safety of personnel, property, rail operations and the public is of paramount importance. As reinforcement and in furtherance of overall safety measures to be observed by the Contractor (and not by way of limitation), the following special safety rules shall be followed:

(a) The Contractor shall keep the job site free from safety and health hazards and ensure that its employees are competent and adequately trained in all safety and health aspects of the job. The Contractor shall have proper first aid supplies available on the job site so that prompt first aid services can be provided to any person that may be injured on the job site. The Contractor shall promptly notify the Railroad of any U.S. Occupational Safety and Health Administration reportable injuries occurring to any person that may arise during the work performed on the job site. The Contractor shall have a non-delegable duty to control its employees while they are on the job site or any other property of the Railroad to be certain they do not use, be under the influence of, or have in their possession any alcoholic beverage, drug, narcotic or other substance that may inhibit the safe performance of work by the employee.

(b) The employees of the Contractor shall be suitably dressed to perform their duties safely and in a manner that will not interfere with their vision, hearing or free use of their hands or feet. Only waist length shirts with sleeves and trousers that cover the entire leg are to be worn. If flare-legged trousers are worn, the trouser bottoms must be tied to prevent catching. The employees should wear sturdy and protective work boots and at least the following protective equipment:

(1) Protective head gear that meets American National Standard-Z89.1-latest revision. It is suggested that all hardhats be affixed with the Contractor's or the subcontractor's company logo or name.

(2) Eye protection that meets American National Standard for occupational and educational eye and face protection, Z87.1-latest revision. Additional eye protection must be provided to meet specific job situations such as welding, grinding, burning, etc.; and

(3) Hearing protection which affords enough attenuation to give protection from noise levels that will be occurring on the job site.

(c) All heavy equipment provided or leased by the Contractor shall be equipped with audible back-up warning devices. If in the opinion of the Railroad Representative any of the

Contractor's or the subcontractor's equipment is unsafe for use on the Railroad's right-of-way, the Contractor, at the request of the Railroad representative, shall remove such equipment from the Railroad's right-of-way.

1.03 PROTECTION OF RAILROAD FACILITIES

Upon the advance notification provided to the Railroad as set forth in Section 1 of Exhibit B of the Contractor's Right of Entry Agreement, Railroad representatives, conductors, flagmen or watchmen will be provided by Railroad to protect its facilities, property and movements of its trains or engines. Notice shall be made to the Railroad's Manager of Track maintenance at (909) 685-2469. At the time of notification, the Contractor shall provide the Railroad with a schedule of dates that flagging services will be needed, as well as times, if outside normal working hours. Subsequent deviation from the schedule shall require ten (10) working days' advance notice from the first affected date. The Railroad will furnish such personnel or other protective devices:

(a) When equipment is standing or being operated within 25 feet, measured horizontally, from centerline of any track on which trains may operate, or when any erection or construction activities are in progress within such limits, regardless of elevation above or below track.

(b) For any excavation below elevation of track subgrade if, in the opinion of the Railroad's representative, track or other Railroad facilities may be subject to settlement or movement.

(c) During any clearing, grubbing, grading or blasting in proximity to the Railroad which, in the opinion of the Railroad's representative, may endanger the Railroad facilities or operations.

(d) During any of the Contractor's operations when, in the opinion of the Railroad's representatives, the Railroad facilities, including, but not limited to, tracks, buildings, signals, wire lines or pipe lines, may be endangered.

The cost of any flagging and inspection provided by the Railroad during the period of constructing that portion of the project located on or near the Railroad property, as deemed necessary for the protection of the Railroad's facilities and trains, will be borne by the State. The Railroad has indicated that its estimated flagging rate will be around one thousand three hundred dollars and zero cents per day ($1,300.00/day) and that the Railroad has estimated a total of 120 days of flagging. The State shall pay the Railroad for all actual flagging costs incurred by the Railroad under this Project.

1.04 WORK BY RAILROAD

The following work by the Railroad will be performed by Railroad forces and is not a part of the work under this Contract.

(a) The Railroad will perform preliminary engineering and inspection (if any) and flagging as specified in Section 1.03 "Protection of Railroad Facilities," of these special provisions.

(b) Temporary crossings at grade over tracks of Railroad for the purpose of hauling earth, rock, paving or other materials will not be permitted. If the Contractor, for the purpose of constructing highway-railway grade separation structures, including construction ramps thereto, desires to move equipment or materials across Railroad's tracks, the Contractor shall first obtain permission from Railroad concurrence via the State Engineer. Should Railroad approve the temporary crossing, State shall execute a Service Contract with Railroad for Railroad to construct the temporary crossing. Under the Service Contract, State shall bear the cost of the crossing surface, warning devices and other components that might be required. Notwithstanding State's Service Contract with Railroad, the Contractor is required to execute Railroad's form of Contractor's Haul Road Crossing Agreement. Railroad, at State's expense, shall provide flagmen to control movements of vehicles across the temporary crossing. State and its Contractor shall prevent the use of such temporary crossing by unauthorized persons and vehicles.

1.05 DELAYS DUE TO WORK BY RAILROAD

If delays due to work by the Railroad occur, and the Contractor sustains loss which, in the opinion of the Engineer, could not have been avoided by the judicious handling of forces, equipment and plant, the amount of said loss shall be determined as provided in Section 8-1.07, " Delays," of the 2010 Standard Specifications.

If a delay due to work by the Railroad occurs, an extension of time determined pursuant to the provisions in Section 8-1.10, "Liquidated Damages," of the 2010 Standard Specifications will be granted.

1.06 LEGAL RELATIONS

The provisions of Section 1, "Relations with Railroad Company," and the provisions of Section 2, "Railroad Protective Insurance," of these special provisions shall inure directly to the benefit of the Railroad.

2.0 INSURANCE AND ENDORSEMENTS

In addition to any other form of insurance or bonds required under the terms of the contract and specifications, the Contractor will be required to carry insurance of the kinds and in the amounts hereinafter specified.

Such insurance shall be approved by the Railroad before any work is performed on the Railroad's property and shall be carried until all work required to be performed on or adjacent to the Railroad's property under the terms of the contract is satisfactorily completed as determined by the Engineer, and thereafter until all tools, equipment and materials have been removed from the Railroad's property and such property is left in a clean and presentable condition.

Full compensation for all premiums which the Contractor is required to pay on all the insurance described hereinafter shall be considered as included in the prices paid for the various items of work to be performed under the contract, and no additional allowance will be made thereof or for additional premiums which may be required by extensions of the policies of insurance.

The following insurance coverage will be required:

A. **Commercial General Liability Insurance**. Commercial general liability (CGL) with a limit of not less than $5,000,000 each occurrence and an aggregate limit of not less than $10,000,000. CGL insurance must be written on ISO occurrence form CG 00 01 12 04 (or a substitute form providing equivalent coverage).

The policy must also contain the following endorsement, which must be stated on the certificate of insurance:

- Contractual Liability Railroads ISO form CG 24 17 10 01 (or a substitute form providing equivalent coverage) showing "Union Pacific Railroad Company Property" as the Designated Job Site.

B. **Business Automobile Coverage Insurance**. Business auto coverage written on ISO form CA 00 01 (or a substitute form providing equivalent liability coverage) with a combined single limit of not less $5,000,000 for each accident.

The policy must contain the following endorsements, which must be stated on the certificate of insurance:

- Coverage For Certain Operations In Connection With Railroads ISO form CA 20 70 10 01 (or a substitute form providing equivalent coverage) showing "Union Pacific Property" as the Designated Job Site.
- Motor Carrier Act Endorsement - Hazardous materials clean up (MCS-90) if required by law.

C. **Workers' Compensation and Employers' Liability Insurance**. Coverage must include but not be limited to:

- Contractor's statutory liability under the workers' compensation laws of the State of California.
- Employers' Liability (Part B) with limits of at least $500,000 each accident, $500,000 disease policy limit $500,000 each employee.

If Contractor is self-insured, evidence of state approval and excess workers compensation coverage must be provided. Coverage must include liability arising out of the U. S. Longshoremen's and Harbor Workers' Act, the Jones Act, and the Outer Continental Shelf Land Act, if applicable.

The policy must contain the following endorsement, which must be stated on the certificate of insurance:

- Alternate Employer endorsement ISO form WC 00 03 01 A (or a substitute form providing equivalent coverage) showing Railroad in the schedule as the alternate employer (or a substitute form providing equivalent coverage).

D. **Railroad Protective Liability Insurance**. Contractor must maintain Railroad Protective Liability insurance written on ISO occurrence form CG 00 35 12 04 (or a substitute form providing equivalent coverage) on behalf of Railroad as named insured, with a limit of not less than $2,000,000 per occurrence and an aggregate of $6,000,000. A binder stating the policy is in place must be submitted to Railroad before the work may be commenced and until the original policy is forwarded to Railroad.

E. **Umbrella or Excess Insurance**. If Contractor utilizes umbrella or excess policies, these policies must "follow form" and afford no less coverage than the primary policy.

F. **Pollution Liability Insurance**. Pollution liability coverage must be written on ISO form Pollution Liability Coverage Form Designated Sites CG 00 39 12 04 (or a substitute form providing equivalent liability coverage), with limits of at least $5,000,000 per occurrence and an aggregate limit of $10,000,000.

If the scope of work as defined in this Agreement includes the disposal of any hazardous or non-hazardous materials from the job site, Contractor must furnish to Railroad evidence of pollution legal liability insurance maintained by the disposal site operator for losses arising from the insured facility accepting the materials, with coverage in minimum amounts of $1,000,000 per loss, and an annual aggregate of $2,000,000.

Other Requirements

G. All policy(ies) required above (except worker's compensation and employers liability) must include Railroad as "Additional Insured" using ISO Additional Insured Endorsements CG 20 26, and CA 20 48 (or substitute forms providing equivalent coverage). The coverage provided to Railroad as additional insured shall, to the extent provided under ISO Additional Insured Endorsement CG 20 26, and CA 20 48 provide coverage for Railroad's negligence whether sole or partial, active or passive, and shall not be limited by Contractor's liability under the indemnity provisions of this Agreement.

H. Before Contractor commences any work, the Contractor shall, except to the extent prohibited by law; (1) require each of its subcontractors to include the Contractor as "Additional Insured" in the subcontractor's Commercial Liability policy and Business Automobile policies with respect to all liabilities arising out of the subcontractor's performance of work on behalf of the Contractor by endorsing these policies with ISO Additional Insured Endorsements CG 20 26, and CA 20 48 (or substitute forms providing equivalent coverage; (2) require each of its subcontractors to endorse their Commercial General Liability Policy with "Contractual Liability Railroads" ISO Form CG 24 17 10

01 (or a substitute form providing equivalent coverage) for the job site; and (3) require each of its subcontractors to endorse their Business Automobile Policy with "Coverage for Certain Operations In Connection With Railroads" ISO Form CA 20 70 10 01 (or a substitute form providing equivalent coverage) for the job site.

I. Punitive damages exclusion, if any, must be deleted (and the deletion indicated on the certificate of insurance), unless the law governing this Agreement prohibits all punitive damages that might arise under this Agreement.

J. Contractor waives all rights of recovery, and its insurers also waive all rights of subrogation of damages against Railroad and its agents, officers, directors and employees. This waiver must be stated on the certificate of insurance.

K. Prior to commencing the work, Contractor shall furnish Railroad with a certificate(s) of insurance, executed by a duly authorized representative of each insurer, showing compliance with the insurance requirements in this Agreement.

L. All insurance policies must be written by a reputable insurance company acceptable to Railroad or with a current Best's Insurance Guide Rating of A- and Class VII or better, and authorized to do business in the State of California.

M. The fact that insurance is obtained by Contractor or by Railroad on behalf of Contractor will not be deemed to release or diminish the liability of Contractor, including, without limitation, liability under the indemnity provisions of this Agreement. Damages recoverable by Railroad from Contractor or any third party will not be limited by the amount of the required insurance coverage.

APPENDIX 1

CONTRACTOR'S ENDORSEMENT

A. As a condition to entering upon the Railroad's right-of-way to perform Work pursuant to this agreement, State's contractor, _____
(Name of Contractor)
whose address is _____,
(Contractor's Mailing Address)

(hereinafter "Contractor"), agrees to comply with and be bound by all the terms and provisions of the attached Caltrans Right of Entry Agreement that was signed by Union Pacific Railroad Company ("Railroad") and the State of California, Department of Transportation ("State") relating to the Work to be performed and the insurance requirements set forth in **Exhibit B and C** of the Right of Entry Agreement. The Contractor further acknowledges and agrees that the reference to Cal. Gov. Code §14662.5 in Sections 5.b) and 8.b) of **Exhibit B** to the Right of Entry Agreement does not apply to the Contractor and in no way limits the indemnities set forth in those provisions, to which the Contractor agrees to be bound.

B. Before the Contractor commences any Work, the Contractor will provide the Railroad with (i) a binder of insurance for the Railroad Protective Liability Insurance described in Section 2 of the Contract Special Provisions, hereto attached, and the original policy, or a certified duplicate original policy when available, and (ii) a certificate issued by its insurance carrier providing the other insurance coverage and endorsements required pursuant to Section 2 of the Contract Special Provisions.

C. All insurance correspondence, binders or originals shall be directed to:

Union Pacific Railroad Company
Attn: Real Estate Department
1400 Douglas Street, MS 1690
Omaha, Nebraska 68179-1690
Attn.: Senior Manager - Contracts
Folder No. 2599-74

D. Please note that fiber optic cable may be buried on the Railroad's property. **Prior to commencing any work, the Contractor agrees to contact the Railroad's Telecommunications Operation Center as provided in Section 5 of Exhibit B of the Right of Entry Agreement to determine if any fiber optic cable is located on the Railroad's property on or near the location where the work is to be performed.** If there is, the Contractor must comply with the terms and conditions of Section 5 of Exhibit B before commencing any work on the Railroad's property.

E. **The Contractor agrees to also provide to the Manager of Track Maintenance in Fresno, California,** the advance notice required in Section 1 of Exhibit B of the Right of Entry Agreement prior to working on the Railroad's property in order for the Railroad to coordinate the Contractor's work with the Railroad's operations and to make arrangements for flagging protection (if applicable).

This endorsement shall be completed and sent to the person named in Paragraph C above.

_____
(Name of Contractor)

By_____

Title:_____

EXHIBIT E

Exhibit E is Railroad's Minimum Requirements

Information Handout Document to Project Construction Contract:

EXHIBIT E

Information Handout Document to Project Construction Contract:

UNION PACIFIC RAILROAD MINIMUM REQUIREMENTS

Part 1-GENERAL

1.01 DESCRIPTION

This project includes construction work within the Right-of-Way and/or properties of the Union Pacific Railroad Company "UPRR" and adjacent to tracks, wire lines and other facilities. This section describes the special requirements for coordination with UPRR when work by the Contractor will be performed upon, over or under the UPRR Right-of-Way or may impact current or future UPRR's operations. The Contractor will coordinate, while performing the work outlined in this Contract, and shall afford the same cooperation with UPRR as it does with the Agency. All submittals and work shall be completed in accordance with:

- UPRR Guidelines,
- Joint BNSF Railway – Union Pacific Railroad Guidelines for Railroad Grade Separation Projects: (http://www.uprr.com/aboutup/operations/specs/attachments/grade_separation.pdf), and
- AREMA recommendations as modified by these minimum special requirements or as directed in writing by the UPRR Designated Representative.

For purposes of this project, the UPRR Designated Representative shall be the person or persons designated by the UPRR Manager of Industry and Public Projects to handle specific tasks related to the project.

1.02 DEFINITION OF AGENCY AND CONTRACTOR

As used in these UPRR requirements, the term "Agency" shall mean the State of California, acting by and through its Department of Transportation.

As used in these UPRR requirements, the term "Contractor" shall mean the contractor or contractor's hired by the Agency to perform any project work on any portion of UPRR's property and shall also include the contractor's subcontractors and the contractor's and subcontractor's respective officer, agents and employees, and others acting under its or their authority.

1.03 UPRR CONTACTS

The primary UPRR point of contact for this project is:

Daniel Moreno
Manager Industry and Public Projects
Union Pacific Railroad Company
2015 S. Willow Ave.
Bloomington, California 92316
Phone: (909) 685-2288
dzmoreno@up.com

For UPRR flagging Services and track work, contact:

Manager of Track Maintenance
Union Pacific Railroad Company
3135 N Weber Ave
Fresno, CA 93705
Phone: (559) 443-2328
Fax: (402) 271-5840

1.04 REQUEST FOR INFORMATION / CLARIFICATION

All Requests for Information ("RFI") involving work within any UPRR Right-Of-Way shall be in accordance with the procedures listed elsewhere in these bid documents. All RFI's shall be submitted to the Engineer of Record. The Engineer of Record will submit the RFI to the UPRR Designated Representative for review and approval for corresponding to work within the UPRR Right-Of-Way. The Contractor shall allow four (4) weeks for the review and approval process by UPRR.

1.05 PLANS / SPECIFICATIONS

The plans and specifications for this project, affecting the UPRR, are subject to the written approval by the UPRR and changes in the plans may be required after award of the Contract. Such changes are subject to the approval of the Agency and the UPRR.

2.01 UTILITIES AND FIBER OPTIC

All installations shall be constructed in accordance with current AREMA recommendations and UPRR specifications and requirements. UPRR general guidelines and the required application forms for utility installations can be found on the UPRR website at **www.uprr.com**.

3.01 GENERAL

A. Contractor shall perform all work in compliance with all applicable UPRR and FRA rules and regulations. Contractor shall arrange and conduct all work in such manner and at such times as shall not endanger or interfere with the safe operation of the tracks and property of UPRR and the traffic moving on such tracks, or the wires, signals and other property of UPRR, its tenant or licensees, at or in the vicinity of the work. UPRR shall be reimbursed by Contractor or Agency for train delay costs and lost revenue claims due to any delays or interruption of train operations resulting from Contractor's construction work or other activities.

B. Construction activities will be permitted within 12 feet of the centerline of operational tracks only if absolutely necessary and UPRR's Designated Representative grants approval. Construction activities within 12 feet of the operational track(s) must allow the tracks to stay operational.

C. Track protection is required for all work equipment (including rubber tired equipment) operating within 25 feet from nearest rail.

D. The Contractor is also advised that new railroad facilities within the project may be built by UPRR and that certain Contractor's activities cannot proceed until that work is completed. The Contractor shall be aware of the limits of responsibilities and allow sufficient time in the schedule for that work to be accomplished and shall coordinate its efforts with the UPRR.

3.02 RAILROAD OPERATIONS

A. The Contractor shall be advised that trains and/or equipment are expected on any track, at any time, in either direction. Contractor shall become familiar with the train schedules in this location and structure its bid assuming intermittent track windows in this period, as defined in Paragraph B below.

B. All railroad tracks within and adjacent to the Contract Site are active, and rail traffic over these facilities shall be maintained throughout the Project. Activities may include both through moves and switching moves to local customers. Railroad traffic and operations will occur continuously throughout the day and night on these tracks and shall be maintained at all times as defined herein. The Contractor shall coordinate and schedule the work so that construction activities do not interfere with railroad operations.

C. Work windows for this Contract shall be coordinated with the Agency's and the UPRR's Designated Representatives. Types of work windows include Conditional Work Windows and Absolute Work Windows, as defined below:

1. Conditional Work Window: A Conditional Work Window is a period of time that railroad operations have priority over construction activities. When construction

activities may occur on and adjacent to the railroad tracks within 25 feet of the nearest track, a UPRR flag person will be required. At the direction of the UPRR flag person, upon approach of a train, and when trains are present on the tracks, the tracks must be cleared (i.e., no construction equipment, materials or personnel within 25 feet, or as directed by the UPRR Designated Representative, from the tracks). Conditional Work Windows are available for the Project.

2. Absolute Work Window: An Absolute Work Window is a period of time that construction activities are given priority over railroad operations. During this time frame the designated railroad track(s) will be inactive for train movements and may be fouled by the Contractor. At the end of an Absolute Work Window the railroad tracks and/or signals must be completely operational for train operations and all UPRR, Public Utilities Commission (PUC) and Federal Railroad Administration (FRA) requirements, codes and regulations for operational tracks must be complied with. In the situation where the operating tracks and/or signals have been affected, the UPRR will perform inspections of the work prior to placing that track back into service. UPRR flag persons will be required for construction activities requiring an Absolute Work Window. **Absolute Work Windows will not generally be granted. Any request will require a detailed explanation for UPRR review.**

3.03 RIGHT OF ENTRY, ADVANCE NOTICE AND WORK STOPPAGES

A. Prior to beginning any work on or over the property of, or affecting the facilities of, the UPRR, the Contractor shall execute the Contractor's Endorsement that is a part of the Right of Entry Agreements to be signed by UPRR and Agency. There is a fee for processing of the agreement. This cost shall be borne by the Contractor. Contractor shall submit a copy of the executed agreement and the insurance policies, binders, certificates and endorsements set forth therein to the Agency prior to commencing work on UPRR property. The right of entry agreement shall specify working time frames, flagging and inspection requirements, and any other items specified by the UPRR.

B. The Contractor shall give the advance notice to the UPRR as required in the Right of Entry Agreement before commencing work in connection with construction upon or over UPRR's Right-of-Way and shall observe UPRR's rules and regulations with respect thereto.

C. All work upon UPRR's Right-of-Way shall be done at such times and in such manner so as not to interfere with or endanger the operations of UPRR. Whenever work may affect the operations or safety of trains, the method of doing such work shall first be submitted to UPRR's Designated Representative for approval, but such approval shall not relieve the Contractor from liability. Any work to be performed by the Contractor, which requires flagging and/or inspection service, shall be deferred until

the flagging protection required by UPRR is available at the job site. See Section 3.18 for railroad flagging requirements.

D. The Contractor shall make requests in writing for both Absolute and Conditional Work Windows, at least two weeks in advance of any work. The written request must include:

1. Exactly what the work entails.
2. The days and hours that work will be performed.
3. The exact location of work, and proximity to the tracks.
4. The type of window requested and the amount of time requested.
5. The designated contact person.

The Contractor shall provide a written confirmation notice to the UPRR at least 48 hours before commencing work in connection with approved work windows when work will be performed within **25 feet of any track center line.** All work shall be performed in accordance with previously approved work plans.

E. Should a condition arising from, or in connection with the work, require that immediate and unusual provisions be made to protect the operations and the property of UPRR, the Contractor shall make such provisions. If in the judgment of UPRR's Designated Representatives such provisions are insufficient, the UPRR's Designated Representatives may require or provide such provisions as deemed necessary. In any event, such provisions shall be at the Contractor's expense and without cost to the UPRR and its tenant. UPRR shall have the right to order Contractor to temporarily cease operations in the event of an emergency or, if in the opinion of the UPRR's Designated Representatives, the Contractor's operations could endanger their rail operations. In the event such an order is given, Contractor shall immediately notify the Agency of the order.

3.04 INSURANCE

Contractor shall not begin work upon or over UPRR's Right-of-Way until UPRR has been furnished the insurance policies, binders, certificates and endorsements required by the Right-of-Entry Agreement and UPRR's Designated Representative has advised the Agency that such insurance is in accordance with the Agreement. The required insurance shall be kept in full force and effect during the performance of work and thereafter until Contractor removes all tools, equipment, and material from UPRR's property and cleans the premises in a manner reasonably satisfactory to UPRR.

3.05 RAILROAD SAFETY ORIENTATION

All personnel employed by the Contractor and all subcontractors must complete the UPRR course "Orientation for Contractor's Safety", and be registered prior to working on UPRR property. This orientation is available at **www.contractororientation.com**. This course is required to be completed annually.

3.06 COOPERATION

UPRR will cooperate with Contractor so that work may be conducted in an efficient manner, and will cooperate with Contractor in enabling use of UPRR's right-of-way in performing the work.

3.07 MINIMUM CONSTRUCTION CLEARANCES FOR FALSEWORK AND OTHER TEMPORARY STRUCTURES

The Contractor shall abide by the following minimum temporary clearances during the course of construction:

A. 12' – 0" horizontal from centerline of track
B. 21' –6" vertically above top of rail.

For construction clearance less than listed above, local Operating Unit review and approval is required.

3.08 APPROVAL OF REDUCED CLEARANCES

A. The minimum track clearances to be maintained by the Contractor during construction are specified in Section 3.07 herein.

B. Any proposed infringement on the specified minimum clearances due to the Contractor's operations shall be submitted to UPRR's Designated Representative through the Agency at least 30 days in advance of the work and shall not be undertaken until approved in writing by the UPRR's Designated Representative.

C. No work shall commence until the Contractor receives in writing assurance from UPRR's Designated Representative that arrangements have been made for flagging service, as may be necessary and receives permission from UPRR's Designated Representative to proceed with the work.

3.09 CONSTRUCTION AND AS-BUILT SUBMITTALS

A. Submittals are required for construction materials and procedures as outlined below. The submittals shall include all review comments from the Agency and the Engineer of Record. All design submittals shall be stamped and signed by a Professional Engineer registered in the State of California.

B. The tables below provide UPRR's minimum submittal requirements for the construction items noted. Submittal requirements are in addition to those specified elsewhere in these bid documents. The minimum review times indicated below represent UPRR's requirements only. The Contractor shall allow additional time for the Agency's review time as stated elsewhere in these bid documents.

C. Submittals shall be made by the Agency to the UPRR Manager of Industry and Public Projects unless otherwise directed by the Railroad. Items in Table 1 shall be submitted for both railroad overpass and underpass projects, as applicable. Items in Table 2 shall be submitted for railroad underpass projects only.

TABLE 1

	DESCRIPTION	SETS REQD.	UPRR's Minimum Review Time
1	Shoring design and details	4	4 weeks
2	Falsework design and details	4	4 weeks
3	Drainage design provisions	4	4 weeks
4	Erection diagrams and sequence	4	4 weeks
5	Demolition diagram and sequence	4	4 weeks

Prior to or during construction of railroad underpass structures, the UPRR requires the review of drawings, reports, test data and material data sheets to determine compliance with the specifications. Product information for items noted in Table 2 is submitted to UPRR's Designated Representative through the Agency for their own review and approval of the material. The signed submittal and the Agency's review comments will be reviewed by UPRR or their consultant. If a consultant performs the reviews, the consultant may reply directly to the Agency or its Designated Representative after consultation with UPRR. Review of the submittals will not be conducted until after review by the Agency or its Designated Representative. Review of the submittal items will require a minimum of four (4) weeks after receipt from the Agency.

TABLE 2

ITEM	DESCRIPTION	SETS REQD.	NOTES
1	Shop drawings	4	Steel and Concrete members
2	**Bearings**	4	For entire structures
3	Concrete Mix Designs	4	For entire structures
4	Rebar & Strand certifications	4	For superstructure only
5	28 day concrete strength	4	For superstructure only
6	Waterproofing material certifications and installation procedure	4	Waterproofing & protective boards
7	Structural steel certifications	4	All fracture critical members & other members requiring improved notch toughness
8	Fabrication and Test reports	4	All fracture critical members & other members requiring improved notch toughness

9	Welding Procedures and Welder Certification	4	AWS requirements
10	Foundation Construction Reports	4	Pile driving, drilled shaft construction, bearing pressure test reports for spread footings
11	Compaction testing reports for backfill at abutments	4	Must meet 95% maximum dry density, Modified Proctor ASTM D1557

D. As-Built Records shall be submitted to the UPRR within 60 days of completion of the structures. These records shall consist of the following items:

Overpass Projects

1. Electronic files of all structure design drawings with as-constructed modifications shown, in Microstation J or Acrobat .PDF format.
2. Hard copies of all structure design drawings with as-constructed modifications shown.

Underpass Projects

1. Electronic files of all structure design drawings with as-constructed modifications shown, in Microstation J or Acrobat .PDF format.
2. Hard copies of all structure design drawings with as-constructed modifications shown.
3. Final approved copies of shop drawings for concrete and steel members.
4. Foundation Construction Reports
5. Compaction testing reports for backfill at abutments

3.10 APPROVAL OF DETAILS

The details of the construction affecting the UPRR tracks and property not already included in the Contract Plans shall be submitted to UPRR's Designated Representative through the Agency for UPRR's review and written approval before such work is undertaken. Review and approval of these submittals will require a minimum of four (4) weeks in addition to the Agency's review time as stated elsewhere in these bid documents.

New submittals and resubmittals are treated the same and will require a minimum of 4 weeks for UPRR to review. Once the Contractor is notified to resubmit, the Contractor must make all necessary changes within 20 days of this notice and must provide the revised submittal to the Agency for preapproval prior to the start of UPRR's review.

3.11 MAINTENANCE OF RAILROAD FACILITIES

A. The Contractor shall be required to maintain all ditches and drainage structures free of silt or other obstructions which may result from Contractor's operations; to promptly

repair eroded areas within UPRR's right of way and to repair any other damage to the property of UPRR.

B. All such maintenance and repair of damages due to the Contractor's operations shall be done at the Contractor's expense.

C. The Contractor must submit a proposed method of erosion control and have the method reviewed by the UPRR prior to beginning any grading on the Project Site. Erosion control methods must comply with all applicable local, state and federal regulations.

3.12 SITE INSPECTIONS BY UPRR's DESIGNATED REPRESENTATIVE

A. In addition to the office reviews of construction submittals, site inspections may be performed by UPRR's Designated Representative at significant points during construction, including but not limited to the following:

1. Preconstruction meetings.

2. Pile driving, drilling of caissons or drilled shafts.

3. Reinforcement and concrete placement for railroad bridge substructure and/or superstructure.

4. Erection of precast concrete or steel bridge superstructure.

5. Placement of waterproofing (prior to placing ballast on bridge deck).

6. Completion of the bridge structure.

B. Site inspection is not limited to the milestone events listed above. Site visits to check progress of the work may be performed at any time throughout the construction as deemed necessary by UPRR.

C. A detailed construction schedule, including the proposed temporary horizontal and vertical clearances and construction sequence for all work to be performed, shall be provided to the Agency for submittal to UPRR's Designated Representative for review prior to commencement of work. This schedule shall also include the anticipated dates when the above listed events will occur. This schedule shall be updated for the above listed events as necessary, but at least monthly so that site visits may be scheduled.

3.13 UPRR REPRESENTATIVES

A. UPRR representatives, conductors, flag person or watch person will be provided by UPRR at expense of the Agency or Contractor (as stated elsewhere in these bid

documents) to protect UPRR facilities, property and movements of its trains or engines. In general, UPRR will furnish such personnel or other protective services as follows:

1. When any part of any equipment is standing or being operated within 25 feet, measured horizontally, from centerline of any track on which trains may operate, or when any object is off the ground and any dimension thereof could extend inside the 25 foot limit, or when any erection or construction activities are in progress within such limits, regardless of elevation above or below track.

2. For any excavation below elevation of track subgrade if, in the opinion of UPRR's Designated Representative, track or other UPRR facilities may be subject to settlement or movement.

3. During any clearing, grubbing, excavation or grading in proximity to UPRR facilities, which, in the opinion of UPRR's Designated Representative, may endanger UPRR facilities or operations.

4. During any contractor's operations when, in the opinion of UPRR's Designated Representative, UPRR facilities, including, but not limited to, tracks, buildings, signals, wire lines, or pipe lines, may be endangered.

5. The Contractor shall arrange with the UPRR Designated Representative to provide the adequate number of flag persons to accomplish the work.

3.14 WALKWAYS REQUIRED

Along the outer side of each exterior track of multiple operated track, and on each side of single operated track, an unobstructed continuous space suitable for trainman's use in walking along trains, extending to a line not less than twelve feet (12') from centerline of track, shall be maintained. Any temporary impediments to walkways and track drainage encroachments or obstructions allowed during work hours while UPRR's flagman service is provided shall be removed before the close of each work day. Walkways with railings shall be constructed by Contractor over open excavation areas when in close proximity of track, and railings shall not be closer than 12' – 0" horizontally from center line of track.

3.15 COMMUNICATIONS AND SIGNAL LINES

If required, UPRR will rearrange its communications and signal lines, its grade crossing warning devices, train signals and tracks, and facilities that are in use and maintained by UPRR's forces in connection with its operation at expense of the Agency. This work by UPRR will be done by its own forces and it is not a part of the Work under this Contract.

3.16 TRAFFIC CONTROL

Contractor's operations that control traffic across or around UPRR facilities shall be coordinated with and approved by the UPRR's Designated Representative.

3.17 CONSTRUCTION EXCAVATIONS

A. The Contractor shall be required to take special precaution and care in connection with excavating and shoring. Excavations for construction of footings, piers, columns, walls or other facilities that require shoring shall comply with requirements of OSHA and AREMA "Guidelines for Temporary Shoring".

B. The Contractor shall contact UPRR's "Call Before Your Dig" at least 48 hours prior to commencing work at 1-800-336-9193 during normal business hours (6:30 a.m. to 8:00 p.m. central time, Monday through Friday, except holidays - also a 24 hour, 7 day a week number for emergency calls) to determine location of fiber optics. If a telecommunications system is buried anywhere on or near UPRR property, the Contractor will co-ordinate with UPRR and the Telecommunication Company(ies) to arrange for relocation or other protection of the system prior to beginning any work on or near UPRR property.

3.18 RAILROAD FLAGGING

Performance of any work by the Contractor in which person(s) or equipment will be within twenty-five (25) feet of any track, or will be near enough to any track that any equipment extension (such as, but not limited to, a crane boom) will reach within twenty-five (25) feet of any track, may require railroad flagging services or other protective measures. Contractor shall give the advance notice to the UPRR as required in the "Contractor's Right of Entry Agreement" before commencing any such work, so that the UPRR may determine the need for flagging or other protective measures to ensure the safety of the railroad's operations. Contractor shall comply with all other requirements regarding flagging services covered by the "Contractor's Right of Entry Agreement". Any costs associated with failure to abide by these requirements will be borne by the Contractor.

3.19 CLEANING OF RIGHT-OF-WAY

Contractor shall, upon completion of the work to be performed by Contractor upon the premises, over or beneath the tracks of UPRR, promptly remove from the Right-of-Way of Railroad all of Contractor's tools, implements, and other materials whether brought upon the Right-of-Way by Contractor or any subcontractors, employee or agent of Contractor or of any subcontractor, and leave the Right-of-Way in a clean and presentable condition to satisfaction of UPRR.

State Agreement No. 06R143
UPRR Folder No. 2599-74

EXHIBIT F

Information Handout Document to Project Construction Contract:

Railroad's Demolition Guidelines for Overpass Structure

Information Handout Document to Project Construction Contract Documents:

GUIDELINES FOR PREPARATION OF A BRIDGE DEMOLITION AND REMOVAL PLAN FOR STRUCTURES OVER RAILROAD

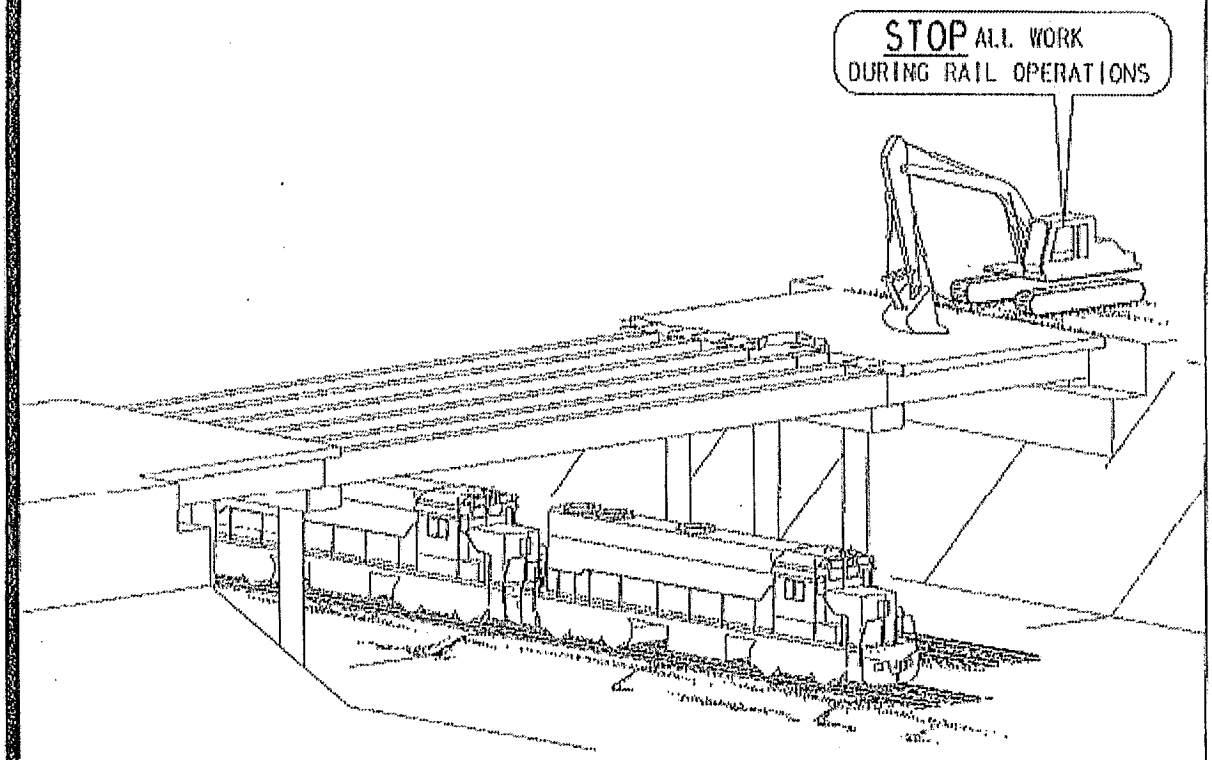

UNION PACIFIC RAILROAD

OFFICE OF CHIEF ENGINEER DESIGN
1416 DODGE ST.
OMAHA, NE 68179

INDEX

	ITEM	PAGE
I.	General	1
II.	Bridge Removal Plan	1
III.	Procedure	3
IV.	Track Protection	4
V.	Cranes	5
VI.	Cutting Torches	6
VII.	Utilities	6
VIII.	Hazardous Material	6
	Appendix	7

I. GENERAL

A. The Contractor's work shall in no way impede the train operations of the Union Pacific Railroad.

B. The Contractor shall develop a work plan assuming that minimal track windows will be available.

C. The Contractor shall be responsible for planning and executing all procedures necessary to remove the overhead bridge in a safe and controlled manner.

D. The Railroad's tracks and property shall be protected at all times.

E. The contractor shall ensure the area immediately adjacent to operational tracks shall remain free from stumble or like hazards to the ground Railroad personnel to prevent injuries. Open excavations shall be in accordance with current CE Drawing 106613 and shall be protected by appropriate fencing.

F. The words "demolition" and "removal" will be used interchangeably.

G. All removed materials shall be disposed of outside the Railroad right-of-way at no expense to the Railroad.

H. No work is allowed within 50 feet of the nearest rail when trains pass the work site.

I. Staged demolition of the portions of structure immediately adjacent to operational tracks will not jeopardize the integrity of the structure over said tracks until actual removal of the portion of the structure over the tracks is being done.

J. A flagman is required when any work is performed within 25 feet of the nearest rail.

K. No blasting will be permitted on Railroad's right-of-way.

II. BRIDGE REMOVAL PLAN

A. The Contractor shall submit a complete Bridge Removal Plan to the Railroad. The Bridge Removal Plan shall include details, procedures and the sequence of staged removal of the bridge, including all steps necessary to remove the bridge in a safe and controlled manner.

B. The Contractor shall submit to the Railroad; three (3) complete sets of the Bridge Removal Plan for review and comments. The Plan shall be sealed by a Civil or Structural Engineer registered in the state where the proposed demolition will take place. A minimum of three (3) weeks shall be allowed for the Railroad's review after the complete submittal is received. No removal operations will be permitted over the Railroad right of way until the submitted material has been reviewed and comments provided.

C. Review and comment of the Removal Plan by the Railroad will not relieve the Contractor of the ultimate responsibility and liability for the demolition of the structure.

D. The Removal Plan shall include the following:

1) Plan, elevation and location of the bridge, and the locations of any access roads needed for movement of the equipment. The as-built drawings may be used for the submittal provided the removal steps are clearly marked and legible.

2) Indicate the position of all railroad tracks below the bridge and identify each track as mainline, siding, spur, etc.

3) Bridge removal sequence and procedures for entire bridge including the staging for the removal of the superstructure and substructure.

4) List type and number of equipment required and their locations during demolition operations.

5) Locations and types of temporary supports, shoring or bracing required. These members shall be designed to meet Union Pacific Railroad current standard drawing 106613 "General Shoring Requirements", "Guidelines for Design and Construction of Falsework for Structures Over Union Pacific Railroad", "Guidelines for Design and Construction of Shoring Adjacent to Active Railroad Tracks", and the appropriate local and national building and design code requirements.

6) The proposed vertical and horizontal clearance from all tracks to the temporary and permanent supports. The minimum vertical and horizontal clearances shall be as per attached frame protection details.

7) If any temporary supports interfere with the natural drainage along the Railroad right-of-way, a temporary drainage plan shall be submitted for review and comment prior to constructing temporary supports. The proposed drainage plan shall route all drainage away from the railroad tracks.

8) Details, limits, and locations of protective covers or other measures proposed to be used to protect the tracks. This includes any shields or other measures that will protect the tracks from falling debris during removal of the overhead bridge and from any debris rolling down the side slopes or otherwise coming into the area around the tracks which could affect train operations. Design loads, including impact loads, shall be noted. In addition equipment should be on site capable of removing debris and track shield from operational tracks.

9) All procedures necessary to remove the bridge in a safe and controlled manner. The estimated time for complete removal over the tracks shall be noted.

10) All overhead and underground utilities in the area affected by removal of the bridge shall be located on the drawings, including any fiber optic, railroad signal, and communication lines.

11) The location and details of track crossings required for moving of the equipment across the railroad tracks.

12) Limits of demolition of substructures.

13) Details of on-site fire suppression.

III. PROCEDURE

A. During removal operations the remaining structure shall be stable during all stages of the removal operations.

B. Prior to proceeding with bridge removal the sealing Civil or Structural Engineer, or his authorized representative working for the Contractor, shall inspect the temporary support shoring, including temporary bracing and protective coverings, for conformity with the working drawings. The Engineer shall certify in writing to the Railroad that the work is in conformance with the drawings and that the materials and workmanship are satisfactory. A copy of this certification shall be available at the site of work at all times.

C. Coordinate the removal schedule with the Railroad. All the removal work within the track area shall be performed during the time windows when the trains are not passing the work site.

D. All substructures shall be removed to at least 3 feet below the final finished grade or at least 2 feet below base of rail whichever is lower, unless otherwise specified by the Railroad.

E. All debris and refuse resulting from the work shall be removed from the right of way by the contractor and the premises left in a neat and presentable condition.

F. The work progress shall be reviewed and logged by the Contractor's Engineer. Should an unplanned event occur, the Contractor shall inform the Railroad and submit procedure to correct or remedy the occurrence.

G. Preferably all demolition and beam removal shall be from above. In the case that the beams require removal from below, the beams may temporarily straddle the tracks. The following steps shall be taken:

1) The work shall be scheduled with the Railroad's Service Unit Superintendent subject to the Railroad's operational requirements for continuos train operations. The beams removed in sufficient time for train passage.

2) The tracks shall be protected and no equipment placed on the tracks.

3) The beams shall be blocked and not come in contact with the tracks. Blocking shall not be placed on the tracks.

4) The beams and all equipment will be moved a minimum of 15 feet from the nearest rail of the tracks when a train is passing.

IV. TRACK PROTECTION

A. The track protective cover shall be constructed before beginning bridge removal work and may be supported by falsework or members of the existing structure. See the attached Track Shield Detail and Frame Protection Detail for additional requirements. Types of protective covers that may be acceptable methods for protecting the tracks are:

1) A decking supported by the bridge or a suspended cover from the bridge above the track clearance envelope.

2) A track shield cover over the tracks per the attached detail.

3) A framed cover outside the track clearance envelope.

4) A catcher box or loader bucket under decking and parapets overhanging the exterior girders.

B. Construction equipment shall not be placed on the tracks unless tracks are protected.

C. Temporary haul road crossings shall be either Section Timbers or Precast Concrete Panels. The type of crossing shall be determined by the Manager of Industry and Public Projects. Solid timbers or ballast with timber headers shall be used between multiple tracks. If temporary crossing is accessible to public crossing shall be protected with barricades or locked gates when contractor is not actively working at the site or weekends.

D. Track protection is required for all equipment including rubber tired equipment operating within 25 ft. or over the tracks.

V. CRANES

A. When cranes are operated near the tracks the following is required:

1) Only cranes with the capacity to handle the loads may be used. Front end loaders and backhoes cannot be used to lift over the tracks.

2) The Contractor shall verify that the foundations under the crane can support the loads.

3) The size and material type of crane mats shall be submitted to the Railroad for review and comment. No mat substitution will be allowed. The mats shall be rigid and of sufficient capacity to distribute the crane loads and prevent tipping of the crane.

4) Installation of temporary track crossings for equipment shall be scheduled with the Manager of Industry and Public Projects .

5) Additional track protection is required when crossing with a crane. The protection methods shall be submitted to the Railroad for review and comment.

6) Equipment shall not place outriggers on the tracks or ballast.

7) Cranes shall not be placed within the track clearance envelope without flagman protection.

VI. CUTTING TORCHES

A. When a cutting torch is used near the tracks or any timber, the following steps shall be taken:

1) Fire suppression equipment is required on-site.

2) Do not use a torch over, between, or adjacent to the tracks unless a steel plate protective cover is used. Care shall be taken to make certain the use of a steel plate does not come in contact with the rails. See "Track Shield Details" for other requirements. Details of the shield shall be submitted to the Railroad for approval.

3) Wet the ties and other timber below the cutting area.

4) Monitor the work site for at least three hours after cutting for a smoldering fire.

B. Extensive overhead cutting will not be performed over the track area without the proper fire suppression equipment on-site and proper protection.

VII. UTILITIES

A. The demolition operations shall be planned such that the utility lines are operating safely at all times. The utility lines shall be protected if affected by demolition operations. All the work associated with utility lines should be coordinated by the contractor with the respective utility companies.

VIII. HAZARDOUS MATERIAL

A. If any hazardous materials are found, provide material protection as specified in local hazardous material codes and immediately contact the Railroad.

APPENDIX

- GENERAL SHORING REQUIREMENTS
- LIVE LOAD PRESSURE DUE TO COOPER E80
- TRACK SHIELD DETAIL
- FRAME PROTECTION DETAILS, sheet 1 of 2
- FRAME PROTECTION DETAILS, sheet 2 of 2

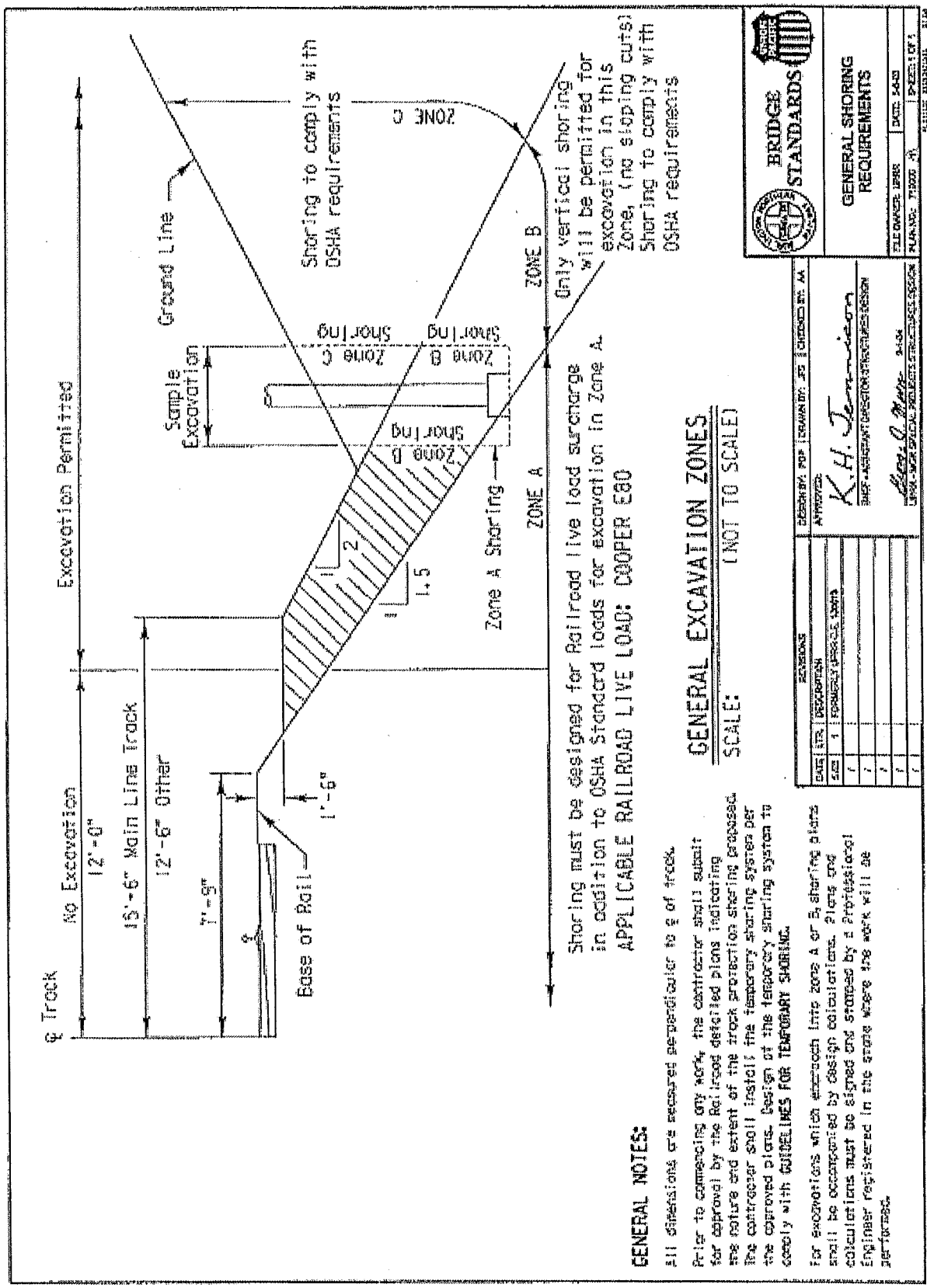
℄ Track
No Excavation
12'-0"
15'-6" Main Line Track
12'-6" Other
7'-9"
1'-6"
Base of Rail
Excavation Permitted
Ground Line
Sample Excavation
Zone C Shoring
Zone B Shoring
Zone B Shoring
Zone A Shoring
ZONE A
ZONE B
ZONE C
Shoring to comply with OSHA requirements
Only vertical shoring will be permitted for excavation in this Zone, (no sloping cuts) Shoring to comply with OSHA requirements
Shoring must be designed for Railroad live load surcharge in addition to OSHA Standard loads for excavation in Zone A.
APPLICABLE RAILROAD LIVE LOAD: COOPER E80
GENERAL EXCAVATION ZONES
SCALE: (NOT TO SCALE)
GENERAL NOTES:
All dimensions are measured perpendicular to ℄ of track.
Prior to commencing any work, the contractor shall submit for approval by the Railroad detailed plans indicating the nature and extent of the track protection shoring proposed. The contractor shall install the temporary shoring system per the approved plans. Design of the temporary shoring system to comply with GUIDELINES FOR TEMPORARY SHORING.
For excavations which encroach into zone A or B, shoring plans shall be accompanied by design calculations. Plans and calculations must be signed and stamped by a Professional Engineer registered in the state where the work will be performed.
BRIDGE STANDARDS
GENERAL SHORING REQUIREMENTS
K.H. Jennicon

Figure 1

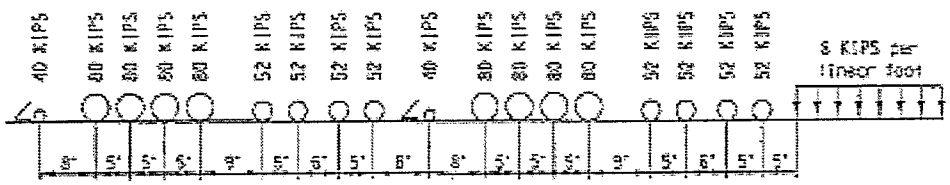

COOPER E80 LOAD

SCALE: (NOT TO SCALE)

Vertical pressure q shall be based on a distribution width La.
La is the length of tie plus H_1.
H_1 is the height from the bottom of tie to the top of shoring.
H_2 is the depth of point being evaluated with the Boussinesq equation.
S is a distance perpendicular from centerline of track to the face of shoring.
D is from top of shoring to one foot below dredge line.
Zp is the minimum embedment depth.
Length of tie is 9 feet
q is the intensity of strip load due to E80 Railroad live load and shall be calculated as follows:

For $H_1 = 0$ Ld = length of tie; therefore, $q = \frac{80{,}000 \text{ lb}}{(5 \text{ feet})(9 \text{ feet})} = 1{,}778$ psf

For $H_1 > 0$ Ld = length of tie + H_1; therefore, $q = \frac{80{,}000 \text{ lb}}{(5 \text{ feet})(La)}$

CASE 1: Lateral live load pressure Ps, due to E80 loading for track parallel to shoring system is calculated using the Boussinesq Strip Load Equation.

$$Ps = \frac{2q}{\pi}(\beta + \sin\beta \sin^2\alpha - \sin\beta \cos^2\alpha)$$

The above equation can be simplified into the following equivalent form:

$$Ps = \frac{2q}{\pi}[\beta - \sin\beta \cos(2\alpha)]$$

α and β are angles measured in radians, $\alpha = \theta + \frac{\beta}{2}$

CASE 2: Live load pressure due to E80 loading for track at a right angle to the shoring system can be calculated using the following equation.

$$Ps = K_a q$$

where $K_a = \tan^2(45 - \frac{\phi}{2})$

ϕ is the angle of internal friction in degrees

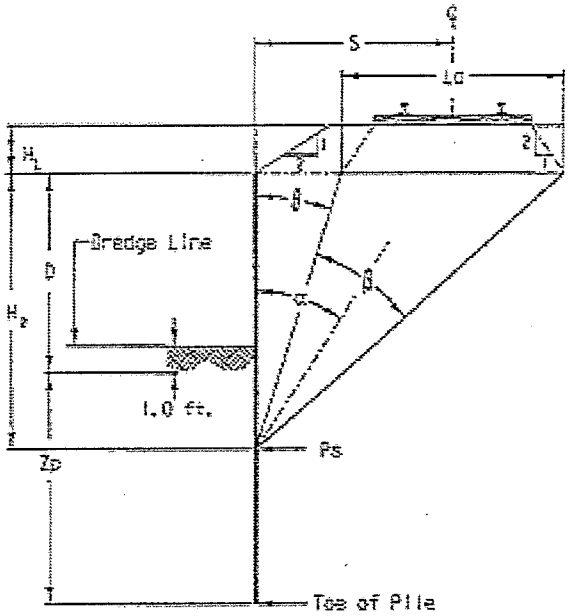

PLAN

SCALE: (NOT TO SCALE)

REVISIONS		
DATE	LTR.	DESCRIPTION
/		
/		
/		
/		
/		
/		

DESIGN BY: PDP | DRAWN BY: JRS | CHECKED BY: AA

APPROVED:

K.H. Jennison

ENGR - ASSISTANT DIRECTOR STRUCTURES DESIGN

UPRR - MGR SPECIAL PROJECTS STRUCTURES DESIGN

BRIDGE SHORING STANDARDS

LIVE LOAD PRESSURE DUE TO COOPER E80

FILE OWNER: UPRR | DATE:

PLAN NO.: T10001 | SHEET 1 OF 1

Figure 2

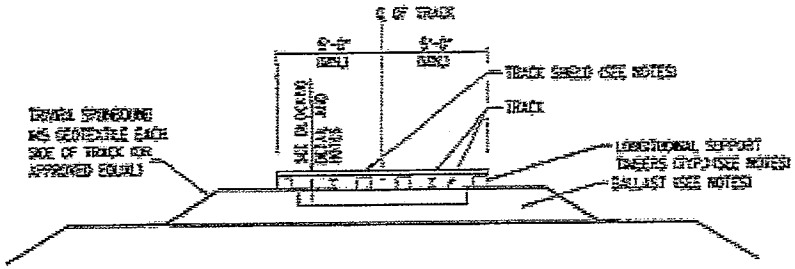

TRACK SHIELD DETAIL
FOR DEBRIS FALLING FROM BRIDGE DECK REMOVAL
WHEN TRACK TIME WINDOW IS AVAILABLE

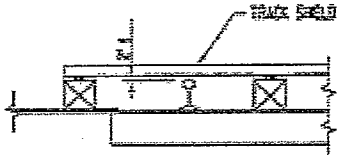

BLOCKING DETAIL

NOTES:

1. A FLAGMAN IS REQUIRED AT ALL TIMES DURING THE USE OF A TRACK SHIELD.
2. THE TRACK SHIELD SHALL BE DESIGNED BY THE CONTRACTOR AND SHALL BE OF SUFFICIENT STRENGTH TO SUPPORT THE ANTICIPATED LOADS, INCLUDING IMPACT. THE SHIELD SHALL PREVENT ANY MATERIALS, EQUIPMENT OR DEBRIS FROM FALLING ONTO THE RAILROAD TRACK. ADDITIONAL LAYERS OF MATERIALS SHALL BE FURNISHED AS NECESSARY TO PREVENT FINE MATERIALS OR DEBRIS FROM SIFTING DOWN UPON THE TRACK.
3. THE SHIELD SHOULD PREFERABLY BE PREFABRICATED AND FURNISHED WITH LIFTING HOOKS TO SIMPLIFY REMOVAL.
4. THE SHIELD SHALL BE OF SUFFICIENT STRENGTH TO SPAN BETWEEN IT'S SUPPORTS WITHOUT BEARING UPON THE RAILS AND TO WITHSTAND DROPPING RUBBLE.
5. BEFORE REMOVAL, THE SHIELD SHALL BE CLEANED OF ALL DEBRIS AND FINE MATERIAL.
6. THE TRACK SHIELD SHALL EXTEND AT LEAST 20 FEET BEYOND THE LIMITS OF DEMOLITION TRANSVERSE TO THE EDGE OF THE BRIDGE.
7. LONGITUDINAL SUPPORT TIMBERS FOR THE SHIELD SHALL NOT EXTEND ABOVE THE TOP OF RAIL WHEN THE SHIELD IS REMOVED. BLOCKING FROM THE TOP OF RAIL TO THE BOTTOM OF THE SHIELD MAY BE ATTACHED TO THE SHIELD. REMAINING TIMBERS SHALL BE ANCHORED.
8. FOR TRAIN PASSAGE, THE RUBBLE SHALL BE REMOVED TO A MINIMUM OF 8'-0" FROM THE NEAREST RAIL AND TO AN ELEVATION NO HIGHER THAN THE TOP OF RAIL.
9. AT THE END OF THE DAY, THE RUBBLE SHALL BE REMOVED COMPLETELY TO A MINIMUM OF 10'-0" FROM THE NEAREST RAIL AND DOWN TO ORIGINAL GRADE.
10. CARE SHALL BE TAKEN TO NOT PLACE METAL ACROSS THE TRACK RAILS. RAILROAD COMMUNICATIONS ARE SENT THROUGH THE RAILS AND WILL BE DISRUPTED BY A SHORT BETWEEN RAILS.
11. DETAILS SHOWN APPLY FOR TIMBER TIES. SPECIAL DETAILS ARE REQUIRED FOR CONCRETE TIES.

UNION PACIFIC RAILROAD

TRACK SHIELD DETAIL

OFFICE OF CHIEF ENGINEER DESIGN

DATE: 3-31-98 SHEET 1 OF 1

State Agreement No. 06R143
UPRR Folder No. 2599-74

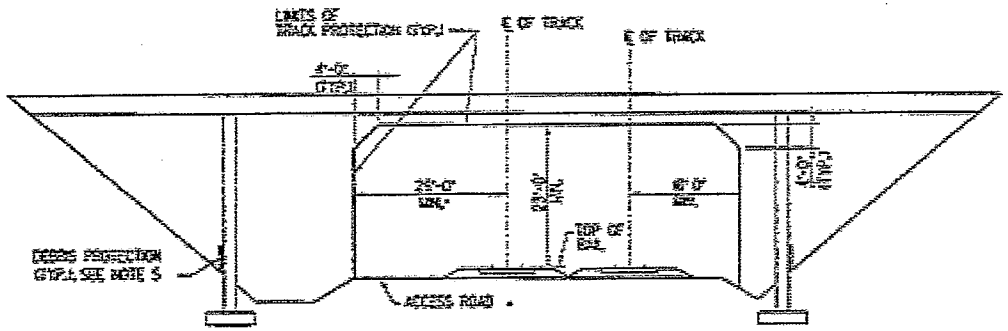

BRIDGE ELEVATION
STANDARD LIMITS OF PROTECTION FOR FRAME PROTECTION

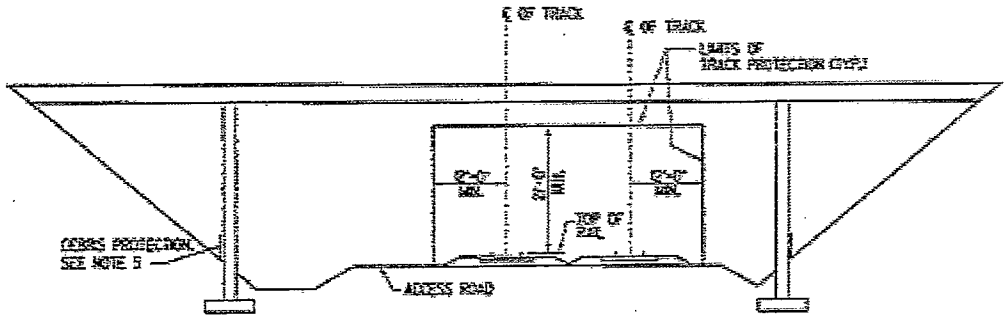

BRIDGE ELEVATION
MINIMUM LIMITS OF PROTECTION FOR FRAME PROTECTION
(SPECIAL PERMISSION REQUIRED, SEE NOTE 8

NOTES:

1. THE STANDARD LIMITS OF PROTECTION NOTED ARE THE MIN. CLEARANCES ALLOWED WITHOUT SPECIAL PERMISSION FROM THE RAILROAD. THE REDUCED CLEARANCES NOTED MAY BE ALLOWED BY THE RAILROAD. SPECIAL PERMISSION FOR THE REDUCED CLEARANCES IS REQUIRED FROM THE RAILROAD SERVICE UNIT SUPERINTENDENT.

2. THE PROTECTION FRAME SHALL, AS A MINIMUM MATCH THE DEMOLITION LIMITS SHOWN AND EXTEND PAST THE BRIDGE WIDTH AS SHOWN ON THE ATTACHED DEMOLITION PLAN SHEET.

3. FOR ADDITIONAL CLEARANCE AND PROTECTION INFORMATION, SEE UNION PACIFIC RAILROAD STANDARD DRAWING NO. [illegible]

4. THE PROTECTION FRAME SHALL PREVENT DEMOLITION DEBRIS, DUST AND FINE MATERIAL FROM FALLING OVER THE RAILROAD TRACKS, ACCESS ROAD OR TRAINS. THE FRAME SHALL BE DESIGNED BY THE CONTRACTOR TO SUPPORT THE ANTICIPATED DEMOLITION LOADS, AND IN ACCORDANCE WITH UNION PACIFIC GUIDELINES FOR DESIGN OF FALSEWORK FOR STRUCTURES OVER THE RAILROAD.

5. DEBRIS PROTECTION IS REQUIRED NEAR THE BASE OF THE SIDE SLOPES AND ADJACENT TO ROADS USED BY DEMOLITION EQUIPMENT TO PREVENT DEBRIS FROM ROLLING ONTO THE TRACK, ACCESS ROAD OR DITCH. USE BARRIERS AS REQUIRED TO STOP LARGE PIECES OF ROLLING DEBRIS.

6. ANY ACTIVITY WITHIN 25 FEET OF THE NEAREST RAIL OF A TRACK REQUIRES A FLAGMAN.

* IF NO ACCESS ROAD, USE MIN. DIMENSION FROM OTHER SIDE OF DETAIL.

UNION PACIFIC RAILROAD

FRAME PROTECTION DETAILS

OFFICE OF CHIEF ENGINEER DESIGN

DATE: 3-31-98

SHEET 1 OF 2

State Agreement No. 06R143
UPRR Folder No. 2599-74

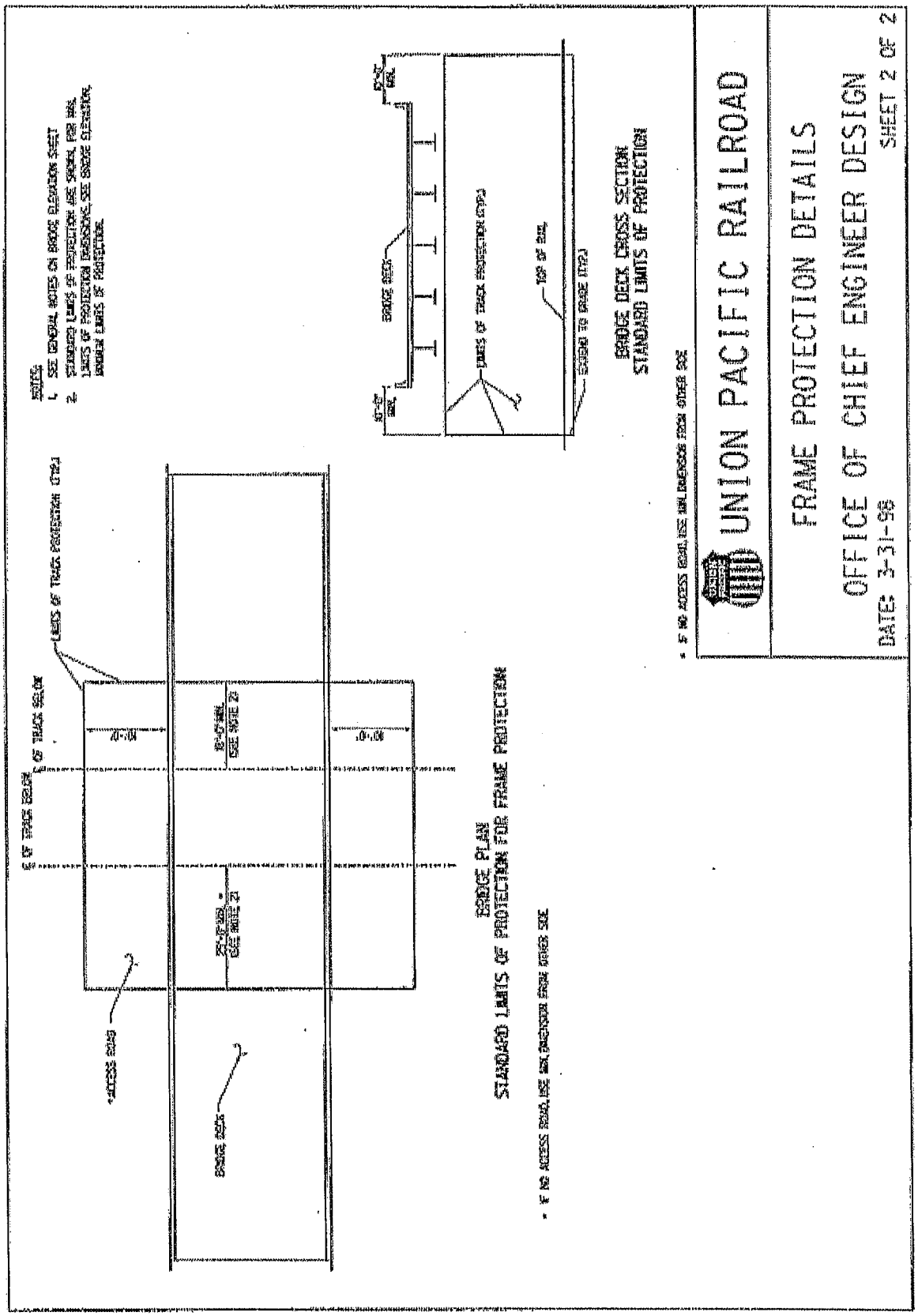
NOTES
1. SEE GENERAL NOTES ON BRIDGE ELEVATION SHEET
2. STANDARD LIMITS OF PROTECTION ARE SHOWN FOR ALL LIMITS OF PROTECTION DIAGRAMS. SEE BRIDGE ELEVATION, BRIDGE LIMITS OF PROTECTION
BRIDGE DECK CROSS SECTION
STANDARD LIMITS OF PROTECTION
BRIDGE PLAN
STANDARD LIMITS OF PROTECTION FOR FRAME PROTECTION
* IF NO ACCESS ROAD, USE MIN. DIMENSION FROM OTHER SIDE
UNION PACIFIC RAILROAD
FRAME PROTECTION DETAILS
OFFICE OF CHIEF ENGINEER DESIGN
DATE: 3-31-98
SHEET 2 OF 2

EXHIBIT G

CALTRANS RIGHT OF ENTRY AGREEMENT

CALTRANS
RIGHT OF ENTRY AGREEMENT

THIS AGREEMENT is made and entered into as of _____, 20__, by and between **UNION PACIFIC RAILROAD COMPANY**, a Delaware corporation (hereinafter "Railroad) and **STATE OF CALIFORNIA, DEPARTMENT OF TRANSPORTATION** (hereinafter "Licensee").

IT IS MUTUALLY AGREED BY AND BETWEEN THE PARTIES HERETO AS FOLLOWS:

ARTICLE 1 - DEFINITION OF LICENSEE

For purposes of this Agreement, all references in this Agreement to Licensee shall include Licensee's contractors, subcontractors, officers, agents and employees, and others acting under its or their authority.

ARTICLE 2 - RIGHT GRANTED; PURPOSE

Railroad hereby grants to Licensee the right, during the term hereinafter stated and upon and subject to each and all of the terms, provisions and conditions herein contained, to enter upon and have ingress to and egress from the portion of Railroad's property located at or near Milepost 287.04 to 287.10, on Railroad's Fresno Subdivision located at or near McFarland, Kern County, California (DOTs 440997D and 756959V), for the purpose of performing work relating to the construction, reconstruction, use, maintenance and repair of a pedestrian grade separation overpass DOT 440997D for Kern Avenue (the "Work"), is in the general location shown on the print, marked **Exhibit A**, attached hereto and hereby made a part hereof. The right herein granted to Licensee is limited to those portions of Railroad's property specifically described herein, or designated by the Railroad representative named in Article 4.

ARTICLE 3 - TERMS AND CONDITIONS CONTAINED IN EXHIBITS B, C, D AND E

The terms and conditions contained in **Exhibit B, Exhibit C, Exhibit D** and **Exhibit E**, attached hereto, are hereby made a part of this Agreement.

ARTICLE 4 - ALL EXPENSES TO BE BORNE BY LICENSEE; RAILROAD REPRESENTATIVE

A. Licensee shall bear any and all costs and expenses associated with any work performed by Licensee, or any costs or expenses incurred by Railroad relating to this Agreement.

B. Licensee shall coordinate all of its work with the following Railroad representative or his or her duly authorized representative (the "Railroad Representative"):

Daniel Moreno
Manager, Industry and Public Projects
Union Pacific Railroad Company
2015 S. Willow Ave.
Bloomington, California 92316
Phone: (909) 685-2288
Fax: (402) 997-4322
Email: dzmoreno@up.com

C. Licensee, at its own expense, shall adequately monitor that its contractors are performing all Work to be performed under construction contracts for the Structure work. Licensee shall require that such Work is performed in a safe manner as set forth in Section 7 of Exhibit B. The responsibility of Licensee's for requiring safe conduct and adequate monitoring and supervision of Contractor's performance of contract work on the Structure shall not be lessened or otherwise affected by Railroad's approval of the plans and specifications involving the Work, or by Railroad's collaboration in performance of any of the Work, or by the presence at the work site of a Railroad Representative, or by compliance by Licensee with any requests or recommendations made by the Railroad Representative.

ARTICLE 5 - TERM; TERMINATION

A. The grant of right herein made to Licensee shall commence on the date of this Agreement, and continue until completion of construction, unless sooner terminated as herein provided, or at such time as Licensee has completed its Work on Railroad's property, whichever is earlier. Licensee agrees to notify the Railroad Representative in writing when it has completed its Work on Railroad's property.

B. Railroad may terminate this Agreement if it reasonably determines in good faith that Licensee has failed to comply with any of the material terms and conditions of this Agreement and has not cured such failure within ten (10) days after receiving notice (oral or written) from Railroad describing such failure in reasonable detail.

ARTICLE 6 - INSURANCE - CONTRACTOR ENDORSEMENT

A. Licensee is self-insured. Licensee shall provide Railroad defense and indemnification at least equal to the defense, indemnification and insurance provisions (including the endorsements) contained in **Exhibit C**. Nothing herein shall be deemed to insure Railroad against its sole negligence or willful misconduct.

B. In the event any of the Work to be done upon the property of Railroad is to be done by a contractor or subcontractor of Licensee, said contractor or subcontractor may have the benefit of the license herein granted, while performing work for Licensee, provided such contractor or subcontractor agrees to be subject to and bound by the terms and conditions of this Agreement by: (1) executing an endorsement to this Agreement in the form set forth in Contractor's Endorsement marked **Exhibit E**, attached hereto, (2) providing to Railroad the

insurance policies, certificates, binders, and/or endorsements described in **Exhibit C**, and (3) providing to Railroad the insurance endorsements required under Section 12 of **Exhibit B** of this Agreement.

C. All insurance correspondence, certificates, endorsements, binders or originals shall be sent to:

Union Pacific Railroad Company
Real Estate Dept., MS 1690
1400 Douglas Street
Omaha, NE 68179-1690
Attn: Senior Manager-Contracts
Folder No. 2599-74

ARTICLE 7 - CHOICE OF FORUM

Unless otherwise preempted by applicable federal laws, rules or regulations, this Agreement shall be governed, construed and enforced in accordance with the laws of the State of California. Litigation arising out of or connected with this Agreement may be instituted and maintained in the courts of the State of California only, and the parties consent to jurisdiction over their person and over the subject matter of any such litigation, in those courts, and consent to service of process issued by such courts.

ARTICLE 8 - REMOVAL OF CONTRACTOR/SUBCONTRACTOR EMPLOYEE

At the request of Railroad, Licensee shall remove from Railroad property any contractor, subcontractor, officer, agent and/or employee of Licensee who fails to conform to the instructions of the Railroad Representative in connection with the Work on Railroad's property, and any right of Licensee shall be suspended until such removal has occurred. Licensee shall indemnify Railroad against any claims arising from the removal of any such contractor, subcontractor, officer, agent and/or employee from Railroad property.

ARTICLE 9 - ADMINISTRATIVE FEE

Upon the execution and delivery of this Agreement, Licensee shall pay to Railroad Five Hundred Dollars ($500.00) as reimbursement for clerical, administrative and handling expenses in connection with the processing of this Agreement.

ARTICLE 10 - SPECIAL PROVISIONS

A. No additional vehicular crossings (including temporary haul roads) or pedestrian crossings over Railroad's trackage shall be installed or used by Licensee without the prior written permission of Railroad.

B. Explosives or other highly flammable substances shall not be stored on Railroad property without the prior written approval of the Railroad Representative.

IN WITNESS WHEREOF, the parties hereto have executed this Agreement in duplicate as of the date first herein written.

UNION PACIFIC RAILROAD COMPANY
(Federal Tax ID #94-6001323)

By: _____
David C. LaPlante
Senior Manager-Real Estate

STATE OF CALIFORNIA,
DEPARTMENT OF TRANSPORTATION

By: _____

Print Name: _____

Title: _____

EXHIBIT A

TO CALTRANS RIGHT OF ENTRY AGREEMENT

Exhibit A will be a print showing the general location of the right of entry area.
(UPRR to provide Railroad Location Print)

EXHIBIT "A"

RAILROAD LOCATION PRINT

ACCOMPANYING A

CONSTRUCTION & MAINTENANCE AGREEMENT/CONTRACTOR'S RIGHT OF ENTRY AGREEMENT

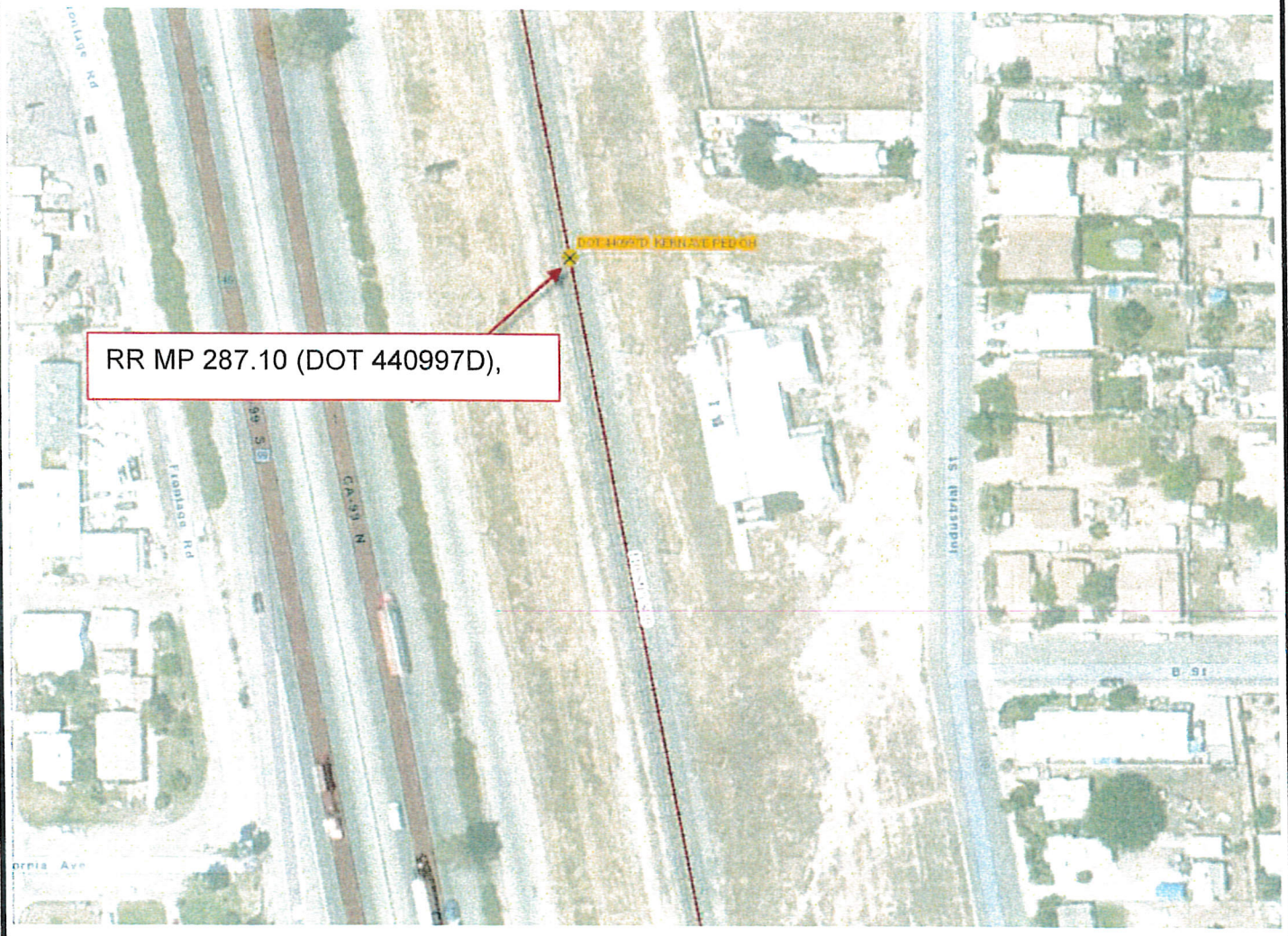

UNION PACIFIC RAILROAD COMPANY

FRESNO SUBDIVISION
RAILROAD MILE POST 287.10
MCFARLAND, KERN COUNTY, CA

To accompany an Agreement for the
CALIFORNIA DEPT. OF TRANSPORTATION and its Contractors

UPRR Folder No. 2599-74Date: March 3, 2016

WARNING

IN ALL OCCASIONS, U.P. COMMUNICATIONS DEPARTMENT MUST BE CONTACTED IN ADVANCE OF ANY WORK TO DETERMINE EXISTENCE AND LOCATION OF FIBER OPTIC CABLE.

PHONE: 1-(800) 336-9193

EXHIBIT B

TO CALTRANS RIGHT OF ENTRY AGREEMENT

Section 1. NOTICE OF COMMENCEMENT OF WORK - FLAGGING.

a. Licensee agrees to notify the Railroad Representative at least thirty (30) working days in advance of Licensee commencing its Work and at least thirty (30) working days in advance of proposed performance of any Work by Licensee in which any person or equipment will be within twenty-five (25) feet of any track, or will be near enough to any track that any equipment extension (such as, but not limited to, a crane boom) will reach to within twenty-five (25) feet of any track. No Work of any kind shall be performed, and no person, equipment, machinery, tool(s), material(s), vehicle(s), or thing(s) shall be located, operated, placed, or stored within twenty-five (25) feet of any of Railroad's track(s) at any time, for any reason, unless and until a Railroad flagman is provided to watch for trains. Upon receipt of such 30-day notice, the Railroad Representative will determine and inform Licensee whether a flagman need be present and whether Licensee need implement any special protective or safety measures. If flagging or other special protective or safety measures are performed by Railroad, such services will be provided at Licensee's expense with the understanding that if Railroad provides any flagging or other services, Licensee shall not be relieved of any of its responsibilities or liabilities set forth herein. Licensee shall promptly pay to Railroad all charges connected with such services within 30 days after presentation of a bill therefor.

b. The rate of pay per hour for each flagman will be the prevailing hourly rate in effect for an eight hour day for the class of persons used during regularly assigned hours and overtime in accordance with Labor Agreements and Schedules in effect at the time the Work is performed. In addition to the cost of such labor, a composite charge for vacation, holiday, health & welfare, supplemental sickness, Railroad Retirement & UC, supplemental pension, Employee's Liability & Property Damage and Administration will be included, computed on actual payroll. The composite charge will be the prevailing composite charge in effect at the time the work is performed. One and one-half times the current hourly rate is paid for overtime, Saturdays and Sundays and two and one-half times current hourly rate for holidays. Wage rates are subject to change, at any time, by law or by agreement between Railroad and its employees, and may be retroactive as a result of negotiations or a ruling of an authorized governmental agency. Additional charges on labor are also subject to change. If the wage rate or additional charges are changed, Licensee shall pay on the basis of the new rates and charges.

c. Reimbursement to Railroad will be required covering the full eight hour day during which any flagman is furnished, unless the flagman can be assigned to other Railroad work during a portion of such day, in which event reimbursement will not be required for the portion of the day during which the flagman is engaged in other Railroad work. Reimbursement will also be required for any day not actually worked by the flagman following the flagman's assignment to work on the project for which Railroad is required to pay the flagman and which could not reasonably be avoided by Railroad by assignment of such flagman to other work, even though the Licensee may not be working during such time. When it becomes necessary for

Railroad to bulletin and assign an employee to a flagging position in compliance with union collective bargaining agreements, Licensee must provide Railroad a minimum of five (5) working days-notice prior to the cessation of the need for a flagman. If five (5) working-days-notice of cessation is not given, Licensee will still be required to pay flagging charges for the five (5) working days-notice period required by union agreement to be given to the employee, even though flagging is not required for that period. An additional thirty (30) days-notice must then be given to Railroad if flagging services are needed again after such five (5) working days-cessation notice has been given to Railroad.

Section 2. LIMITATION AND SUBORDINATION OF RIGHTS GRANTED

a. The foregoing grant of right is subject and subordinate to the prior and continuing right and obligation of Railroad to use and maintain its entire property including the right and power of Railroad to construct, maintain, repair, renew, use, operate, change, modify or relocate railroad tracks, roadways, signal, communication, fiber optics, or other wire lines, pipelines and other facilities upon, along or across any or all parts of its property, all or any of which may be reasonably done at any time or times by Railroad without liability to Licensee or to any other party for compensation or damages.

b. The foregoing grant is also subject to all outstanding superior rights (including those in favor of licensees and lessees of Railroad's property, and others) and the right of Railroad to renew and extend the same, and is made without covenant of title or for quiet enjoyment.

Section 3. NO INTERFERENCE WITH OPERATION OF RAILROAD AND ITS TENANTS

a. Licensee shall conduct its operations so as not to interfere with the continuous and uninterrupted use and operation of the railroad tracks and property of Railroad, including, without limitation, the operations of Railroad's lessees, licensees or others, unless specifically authorized in advance by the Railroad Representative. Nothing shall be done or permitted to be done by Licensee at any time that would in any manner impair the safety of such operations. When not in use, Licensee's machinery and materials shall be kept at least fifty (50) feet from the centerline of Railroad's nearest track, and there shall be no vehicular crossings of Railroad's tracks except at existing open public crossings.

b. Operations of Railroad and work performed by Railroad personnel and delays in the work to be performed by Licensee caused by such railroad operations and work are expected by Licensee, and Licensee agrees that Railroad shall have no liability to Licensee, or any other person or entity for any such delays. Licensee shall coordinate its activities with those of Railroad and third parties so as to avoid interference with railroad operations. The safe operation of Railroad train movements and other activities by Railroad takes precedence over any work to be performed by Licensee.

Section 4. LIENS.

Licensee shall pay in full all persons who perform labor or provide materials for the work to be performed by Licensee. Licensee shall not create, permit or suffer any mechanic's or materialmen's liens of any kind or nature to be created or enforced against any property of Railroad for any such work performed. Licensee shall indemnify and hold harmless Railroad from and against any and all liens, claims, demands, costs or expenses of whatsoever nature in any way connected with or growing out of such work done, labor performed, or materials furnished.

Section 5. PROTECTION OF FIBER OPTIC CABLE SYSTEMS.

a. Fiber optic cable systems may be buried on Railroad's property. Protection of the fiber optic cable systems is of extreme importance since any break could disrupt service to users resulting in business interruption and loss of revenue and profits. Licensee shall telephone Railroad during normal business hours (7:00 a.m. to 9:00 p.m. Central Time, Monday through Friday, except holidays) at 1-800-336-9193 (also a 24-hour, 7-day number for emergency calls) to determine if fiber optic cable is buried anywhere on Railroad's property to be used by Licensee. If it is, Licensee shall telephone the telecommunications company(ies) involved, arrange for a cable locator, make arrangements for relocation or other protection of the fiber optic cable, and shall commence no work on the right of way until all such protection or relocation has been accomplished.

b. In addition to other indemnity provisions in this Agreement, Licensee shall, pursuant to Cal. Gov. Code §14662.5, indemnify and hold Railroad harmless from and against all costs, liability and expense whatsoever (including, without limitation, attorneys' fees, court costs and expenses) arising out of any act or omission of Licensee, its contractor, agents and/or employees, that proximately causes or contributes to (1) any damage to or destruction of any telecommunications system on Railroad's property, and/or (2) any injury to or death of any person employed by or on behalf of any telecommunications company, and/or its contractors, agents and/or employees, on Railroad's property. Licensee shall not have or seek recourse against Railroad for any claim or cause of action for alleged loss of profits or revenue or loss of service or other consequential damage to a telecommunication company using Railroad's property or a customer or user of services of the fiber optic cable on Railroad's property.

Section 6. PERMITS - COMPLIANCE WITH LAWS.

In the prosecution of the work covered by this Agreement, Licensee shall secure any and all necessary permits and shall comply with all applicable federal, state and local laws, regulations and enactments affecting the work, including, without limitation, all applicable Federal Railroad Administration regulations.

Section 7. SAFETY.

a. Safety of personnel, property, rail operations and the public is of paramount importance in the prosecution of the work performed by Licensee. Licensee shall be responsible

for initiating, maintaining and supervising all safety, operations and programs in connection with the work. Licensee shall at a minimum comply with Railroad's safety standards listed in **Exhibit E**, hereto attached, to ensure uniformity with the safety standards followed by Railroad's own forces. As a part of Licensee's safety responsibilities, Licensee shall notify Railroad if Licensee determines that any of Railroad's safety standards are contrary to good safety practices. Licensee shall furnish copies of **Exhibit E** to each of its employees before they enter the job site.

b. Without limitation of the provisions of paragraph A above, Licensee shall keep the job site free from safety and health hazards and ensure that its employees are competent and adequately trained in all safety and health aspects of the job.

c. Licensee shall have proper first aid supplies available on the job site so that prompt first aid services may be provided to any person injured on the job site. Licensee shall promptly notify Railroad of any U.S. Occupational Safety and Health Administration reportable injuries. Licensee shall have a nondelegable duty to control its employees while they are on the job site or any other property of Railroad, and to be certain they do not use, be under the influence of, or have in their possession any alcoholic beverage, drug or other substance that may inhibit the safe performance of any work.

d. If and when requested by Railroad, Licensee shall deliver to Railroad a copy of Railroad's safety plan for conducting the work (the "Safety Plan"). Railroad shall have the right, but not the obligation, to require Licensee to correct any deficiencies in the Safety Plan. The terms of this Agreement shall control if there are any inconsistencies between this Agreement and the Safety Plan.

Section 8. <u>INDEMNITY</u>.

a. In accordance with Cal. Gov. Code §14662.5 and to the extent applicable, Licensee hereby agrees to indemnify and hold harmless Railroad, its affiliates, and its and their officers, agents and employees ("Indemnified Parties") from and against any and all loss, damage, injury, liability, claim, demand, cost or expense (including, without limitation, attorney's, consultant's and expert's fees, and court costs), fine or penalty (collectively, ""Loss") incurred by any person (including, without limitation, any Indemnified Party, Licensee, or any employee of Licensee or of any Indemnified Party) arising out of or in any manner connected with (i) any Work performed by Licensee under this Agreement, or (ii) any act or omission of Licensee, its officers, agents or employees in connection with this Agreement, or (iii) any breach of this Agreement by Licensee.

b. To the extent permitted by Cal. Gov. Code §14662.5, the right to indemnity under this Section 8 shall accrue upon occurrence of the event giving rise to the Loss, and shall apply regardless of any negligence or strict liability of any Indemnified Party, except where the Loss is caused by the sole active negligence or willful misconduct of an Indemnified Party as established by the final judgment of a court of competent jurisdiction. The sole active negligence or willful misconduct of any Indemnified Party shall not bar the recovery of any other Indemnified Party.

c. Licensee expressly and specifically assumes potential liability under this Section 8 for claims or actions brought by Licensee's own employees. To the extent permitted by applicable law, Licensee waives any immunity it may have under worker's compensation or industrial insurance acts to indemnify Railroad under this Section 8. Licensee acknowledges that this waiver was mutually negotiated by the parties hereto.

d. No court or jury findings in any employee's suit pursuant to any worker's compensation act or the Federal Employer's Liability Act against a party to this Agreement may be relied upon or used by Licensee in any attempt to assert liability against Railroad.

e. The provisions of this Section 8 shall survive the completion of any Work performed by Licensee or the termination or expiration of this Agreement. In no event shall this Section 8 or any other provision of this Agreement be deemed to limit any liability Licensee may have to any Indemnified Party by statute or under common law.

Section 9. RESTORATION OF PROPERTY.

In the event Railroad authorizes Licensee to take down any fence of Railroad or in any manner move or disturb any of the other property of Railroad in connection with the Work to be performed by Licensee, then in that event Licensee shall, as soon as possible and at Licensee's sole expense, restore such fence and other property to the same condition as the same were in before such fence was taken down or such other property was moved or disturbed. Licensee shall remove all of Licensee's tools, equipment and materials from Railroad's property promptly upon completion of the Work, restoring Railroad's property to the same state and condition as when Licensee entered thereon.

Section 10. WAIVER OF DEFAULT.

Waiver by Railroad of any breach or default of any condition, covenant or agreement herein contained to be kept, observed and performed by Licensee shall in no way impair the right of Railroad to avail itself of any remedy for any subsequent breach or default.

Section 11. MODIFICATION - ENTIRE AGREEMENT.

No modification of this Agreement shall be effective unless made in writing and signed by Licensee and Railroad. This Agreement and the exhibits attached hereto and made a part hereof constitute the entire understanding between Licensee and Railroad and cancel and supersede any prior negotiations, understandings or agreements, whether written or oral, with respect to the work to be performed by Licensee.

Section 12. ASSIGNMENT - SUBCONTRACTING.

Contractor shall not assign or subcontract this Agreement, or any interest therein, without the written consent of the Railroad. Contractor shall be responsible for the acts and omissions of all subcontractors. Before Contractor commences any work, the Contractor shall, except to the extent prohibited by law; (1) require each of its subcontractors to include the Contractor as

"Additional Insured" in the subcontractor's Commercial General Liability policy and Business Automobile policies with respect to all liabilities arising out of the subcontractor's performance of work on behalf of the Contractor by endorsing these policies with ISO Additional Insured Endorsements CG 20 26, and CA 20 48 (or substitute forms providing equivalent coverage; (2) require each of its subcontractors to endorse their Commercial General Liability Policy with "Contractual Liability Railroads" ISO Form CG 24 17 10 01 (or a substitute form providing equivalent coverage) for the job site; and (3) require each of its subcontractors to endorse their Business Automobile Policy with "Coverage For Certain Operations In Connection With Railroads" ISO Form CA 20 70 10 01 (or a substitute form providing equivalent coverage) for the job site.

EXHIBIT C

TO CALTRANS RIGHT OF ENTRY AGREEMENT

INSURANCE PROVISIONS

Contractor shall, at its sole cost and expense, procure and maintain during the course of the Project and until all Project work on Railroad's property has been completed and Contractor has removed all equipment and materials from Railroad's property and has cleaned and restored Railroad's property to Railroad's satisfaction, the following insurance coverage:

A. **Commercial General Liability** insurance. Commercial general liability (CGL) with a limit of not less than $5,000,000 each occurrence and an aggregate limit of not less than $10,000,000. CGL insurance must be written on ISO occurrence form CG 00 01 12 04 (or a substitute form providing equivalent coverage).

The policy must also contain the following endorsement, which must be stated on the certificate of insurance:

- Contractual Liability Railroads ISO form CG 24 17 10 01 (or a substitute form providing equivalent coverage) showing "Union Pacific Railroad Company Property" as the Designated Job Site.
- Designated Construction Project(s) General Aggregate Limit ISO Form CG 25 03 03 97 (or a substitute form providing equivalent coverage) showing the project on the form schedule.

B. **Business Automobile Coverage** insurance. Business auto coverage written on ISO form CA 00 01 (or a substitute form providing equivalent liability coverage) with a combined single limit of not less $5,000,000 for each accident.

The policy must contain the following endorsements, which must be stated on the certificate of insurance:

- Coverage For Certain Operations In Connection With Railroads ISO form CA 20 70 10 01 (or a substitute form providing equivalent coverage) showing "Union Pacific Property" as the Designated Job Site.
- Motor Carrier Act Endorsement - Hazardous materials clean up (MCS-90) if required by law.

C. **Workers' Compensation and Employers' Liability** insurance. Coverage must include but not be limited to:

- Contractor's statutory liability under the workers' compensation laws of the State of California.
- Employers' Liability (Part B) with limits of at least $500,000 each accident, $500,000 disease policy limit $500,000 each employee.

If Contractor is self-insured, evidence of state approval and excess workers compensation coverage must be provided. Coverage must include liability arising out of the U. S. Longshoremen's and Harbor Workers' Act, the Jones Act, and the Outer Continental Shelf Land Act, if applicable.

The policy must contain the following endorsement, which must be stated on the certificate of insurance:

- Alternate Employer endorsement ISO form WC 00 03 01 A (or a substitute form providing equivalent coverage) showing Railroad in the schedule as the alternate employer (or a substitute form providing equivalent coverage).

D. **Railroad Protective Liability** insurance. Contractor must maintain Railroad Protective Liability insurance written on ISO occurrence form CG 00 35 12 04 (or a substitute form providing equivalent coverage) on behalf of Railroad as named insured, with a limit of not less than $2,000,000 per occurrence and an aggregate of $6,000,000. A binder stating the policy is in place must be submitted to Railroad before the work may be commenced and until the original policy is forwarded to Railroad.

E. **Umbrella or Excess** insurance. If Contractor utilizes umbrella or excess policies, these policies must "follow form" and afford no less coverage than the primary policy.

F. **Pollution Liability** insurance. Pollution liability coverage must be written on ISO form Pollution Liability Coverage Form Designated Sites CG 00 39 12 04 (or a substitute form providing equivalent liability coverage), with limits of at least $5,000,000 per occurrence and an aggregate limit of $10,000,000.

If the scope of work as defined in this Agreement includes the disposal of any hazardous or non-hazardous materials from the job site, Contractor must furnish to Railroad evidence of pollution legal liability insurance maintained by the disposal site operator for losses arising from the insured facility accepting the materials, with coverage in minimum amounts of $1,000,000 per loss, and an annual aggregate of $2,000,000.

Other Requirements

G. All policy(ies) required above (except worker's compensation and employers liability) must include Railroad as "Additional Insured" using ISO Additional Insured Endorsements CG 20 26, and CA 20 48 (or substitute forms providing equivalent coverage). The coverage provided to Railroad as additional insured shall, to the extent provided under ISO Additional Insured Endorsement CG 20 26, and CA 20 48 provide coverage for Railroad's negligence whether sole or partial, active or passive, and shall not be limited by Contractor's liability under the indemnity provisions of this Agreement.

H. Punitive damages exclusion, if any, must be deleted (and the deletion indicated on the certificate of insurance), unless the law governing this Agreement prohibits all punitive damages that might arise under this Agreement.

I. Contractor waives all rights of recovery, and its insurers also waive all rights of subrogation of damages against Railroad and its agents, officers, directors and employees. This waiver must be stated on the certificate of insurance.

J. Prior to commencing the work, Contractor shall furnish Railroad with a certificate(s) of insurance, executed by a duly authorized representative of each insurer, showing compliance with the insurance requirements in this Agreement.

K. All insurance policies must be written by a reputable insurance company acceptable to Railroad or with a current Best's Insurance Guide Rating of A- and Class VII or better, and authorized to do business in the State of California.

L. The fact that insurance is obtained by Contractor or by Railroad on behalf of Contractor will not be deemed to release or diminish the liability of Contractor, including, without limitation, liability under the indemnity provisions of this Agreement. Damages recoverable by Railroad from Contractor or any third party will not be limited by the amount of the required insurance coverage.

EXHIBIT D

TO CALTRAN'S RIGHT OF ENTRY AGREEMENT

MINIMUM SAFETY REQUIREMENTS

The term "employees" as used herein refer to all employees of Licensee as well as all employees of any subcontractor or agent of Licensee.

I. Clothing

A. All employees of Licensee will be suitably dressed to perform their duties safely and in a manner that will not interfere with their vision, hearing, or free use of their hands or feet.

Specifically, Licensee's employees must wear:

(i) Waist-length shirts with sleeves.
(ii) Trousers that cover the entire leg. If flare-legged trousers are worn, the trouser bottoms must be tied to prevent catching.
(iii) Footwear that covers their ankles and has a defined heel. Employees working on bridges are required to wear safety-toed footwear that conforms to the American National Standards Institute (ANSI) and FRA footwear requirements.

B. Employees shall not wear boots (other than work boots), sandals, canvas-type shoes, or other shoes that have thin soles or heels that are higher than normal.

C. Employees must not wear loose or ragged clothing, neckties, finger rings, or other loose jewelry while operating or working on machinery.

II. Personal Protective Equipment

Licensee shall require its employees to wear personal protective equipment as specified by Railroad rules, regulations, or recommended or requested by the Railroad Representative.

(i) Hard hat that meets the American National Standard (ANSI) Z89.1 – latest revision. Hard hats should be affixed with Licensee's company logo or name.
(ii) Eye protection that meets American National Standard (ANSI) for occupational and educational eye and face protection, Z87.1 – latest revision. Additional eye protection must be provided to meet specific job situations such as welding, grinding, etc.
(iii) Hearing protection, which affords enough attenuation to give protection from noise levels that will be occurring on the job site. Hearing protection, in the form of plugs or muffs, must be worn when employees are within:
- 100 feet of a locomotive or roadway/work equipment
- 15 feet of power operated tools
- 150 feet of jet blowers or pile drivers

- 150 feet of retarders in use (when within 10 feet, employees must wear dual ear protection – plugs and muffs)

(iv) Other types of personal protective equipment, such as respirators, fall protection equipment, and face shields, must be worn as recommended or requested by the Railroad Representative.

III. On Track Safety

Licensee is responsible for compliance with the Federal Railroad Administration's Roadway Worker Protection regulations – 49 CFR 214, Subpart C and Railroad's On-Track Safety Rules. Under 49 CFR 214, Subpart C, railroad contractors are responsible for the training of their employees on such regulations. In addition to the instructions contained in Roadway Worker Protection regulations, all employees must:

(i) Maintain a distance of twenty-five (25) feet to any track unless the Railroad Representative is present to authorize movements.

(ii) Wear an orange, reflectorized workwear approved by the Railroad Representative.

(iii) Participate in a job briefing that will specify the type of On-Track Safety for the type of work being performed. Licensee must take special note of limits of track authority, which tracks may or may not be fouled, and clearing the track. Licensee will also receive special instructions relating to the work zone around machines and minimum distances between machines while working or traveling.

IV. Equipment

A. It is the responsibility of Licensee to ensure that all equipment is in a safe condition to operate. If, in the opinion of the Railroad Representative, any of Licensee's equipment is unsafe for use, Licensee shall remove such equipment from the Railroad's property. In addition, Licensee must ensure that the operators of all equipment are properly trained and competent in the safe operation of the equipment. In addition, operators must be:

- Familiar and comply with Railroad's rules on lockout/tagout of equipment.
- Trained in and comply with the applicable operating rules if operating any hy-rail equipment on-track.
- Trained in and comply with the applicable air brake rules if operating any equipment that moves rail cars or any other railbound equipment.

B. All self-propelled equipment must be equipped with a first-aid kit, fire extinguisher, and audible back-up warning device.

C. Unless otherwise authorized by the Railroad Representative, all equipment must be parked a minimum of twenty-five (25) feet from any track. Before leaving any equipment unattended, the operator must stop the engine and properly secure the equipment against movement.

D. Cranes must be equipped with three orange cones that will be used to mark the working area of the crane and the minimum clearances to overhead powerlines.

V. General Safety Requirements

A. Licensee shall ensure that all waste is properly disposed of in accordance with applicable federal and state regulations.

B. Licensee shall ensure that all employees participate in and comply with a job briefing conducted by the Railroad Representative, if applicable. During this briefing, the Railroad Representative will specify safe work procedures, (including On-Track Safety) and the potential hazards of the job. If any employee has any questions or concerns about the work, the employee must voice them during the job briefing. Additional job briefings will be conducted during the work as conditions, work procedures, or personnel change.

C. All track work performed by Licensee meets the minimum safety requirements established by the Federal Railroad Administration's Track Safety Standards 49 CFR 213.

D. All employees comply with the following safety procedures when working around any railroad track:

(i) Always be on the alert for moving equipment. Employees must always expect movement on any track, at any time, in either direction.
(ii) Do not step or walk on the top of the rail, frog, switches, guard rails, or other track components.
(iii) In passing around the ends of standing cars, engines, roadway machines or work equipment, leave at least 20 feet between yourself and the end of the equipment. Do not go between pieces of equipment of the opening is less than one car length (50 feet).
(iv) Avoid walking or standing on a track unless so authorized by the employee in charge.
(v) Before stepping over or crossing tracks, look in both directions first.
(vi) Do not sit on, lie under, or cross between cars except as required in the performance of your duties and only when track and equipment have been protected against movement.

E. All employees must comply with all federal and state regulations concerning workplace safety.

EXHIBIT E

TO CALTRANS RIGHT OF ENTRY AGREEMENT

CONTRACTOR'S ENDORSEMENT

A. As a condition to entering upon the Railroad's right-of-way to perform Work pursuant to this agreement, State's contractor, _____

_____
(Name of Contractor)

whose address is _____
(Contractor's Mailing Address)

(hereinafter "Contractor"), agrees to comply with and be bound by all the terms and provisions of the attached Caltrans Right of Entry Agreement that was signed by Union Pacific Railroad Company ("Railroad") and the State of California, Department of Transportation ("State") relating to the Work to be performed and the insurance requirements set forth in **Exhibits B** and **C** of the Right of Entry Agreement. The Contractor further acknowledges and agrees that the reference to Cal. Gov. Code §14662.5 in Sections 5.b), 8.a) and 8.b) of **Exhibit B** to the Right of Entry Agreement does not apply to the Contractor and in no way limits the indemnities set forth in those provisions, to which the Contractor agrees to be bound.

B. Before the Contractor commences any Work, the Contractor will provide the Railroad with (i) a binder of insurance for the Railroad Protective Liability Insurance described in Section 2 of the Contract Special Provisions, hereto attached, and the original policy, or a certified duplicate original policy when available, and (ii) a certificate issued by its insurance carrier providing the other insurance coverage and endorsements required pursuant to Section 2 of the Contract Special Provisions.

C. All insurance correspondence, binders or originals shall be directed to:

Union Pacific Railroad Company
Attn: Senior Manager Contracts
1400 Douglas Street MS 1690
Omaha, NE 68179-1690
Folder No. 2599-74

D. **Please note that fiber optic cable may be buried on the Railroad's property. Prior to commencing any work, the Contractor agrees to contact the Railroad's**

Telecommunications Operation Center as provided in Section 5 of Exhibit B of the Right of Entry Agreement to determine if any fiber optic cable is located on the Railroad's property on or near the location where the work is to be performed. If there is, the Contractor must comply with the terms and conditions of Section 5 of Exhibit B before commencing any work on the Railroad's property.

E. **The Contractor agrees to also provide to the Railroad's Manager of Track Maintenance in Fresno California,** the advance notice required in Section 1 of **Exhibit B** of the Right of Entry Agreement prior to working on the Railroad's property in order for the Railroad to coordinate the Contractor's work with the Railroad's operations and to make arrangements for flagging protection (if applicable).

This endorsement shall be completed and sent to the person named in Paragraph C above.

_____
(Name of Contractor)

By_____

Title:_____

Date:_____

MATERIALS INFORMATION

4. Final Foundation Report

M e m o r a n d u m

Serious Drought.
Help Save Water!

To: GARY S. BLAKESLEY
Chief, Design Branch 6
Office of Bridge Design North & Central
Structure Design MS 9-4/8I
Division of Engineering Services

Date: September 1, 2015

File: 06-KER-99-49.0/50.0
EA: 06-0H642
ID 0600000266
Kern Ave. POC
(replace)
Br. No. 50-0518

From: **DEPARTMENT OF TRANSPORTATION**
DIVISION OF ENGINEERING SERVICES
GEOTECHNICAL SERVICES – MS 5

Subject: Final Foundation Report (Supersedes report dated March 18, 2014)

Introduction

Per your request, we are providing foundation recommendations for the bridge project referenced above. It is proposed to replace the existing structure (50-0224). This report is for use by the project design engineer, construction personnel, bidders and contractors.

Pertinent Plans and Data

The following resources were used in the assessment of the site conditions for these recommendations:

1. The general plan and provided loads for the proposed new bridge.
2. The as-built Log of Test Borings (LOTB) conducted for the original bridge in 1958.
3. Construction records.
4. CA Dept. of Water Resources (DWR) water well data.
5. U.S.D.A. Natural Resources Conservation Service Web Soil Survey (WSS).

Site Geology and Subsurface Conditions

The subsurface geology at the project site consists of alluvial fan and flood plain deposits. These deposits are composed of fine- to coarse-grained sands which vary in consistency from medium dense to dense. The LOTB also shows minor amounts of silt and clay binder.

Laboratory Testing

No laboratory testing was performed for this report.

Subsurface Exploration

No recent exploratory borings were conducted for the bridge replacement. The 1958 borings for the original bridge structure were used for this report.

Groundwater

Well records (DWR Well Nos. 26S25E12B001M & 26S26E18E002M) indicate that regional groundwater is between 191 and 239 feet below the ground surface in the area between 1985 and 2005. Localized perched/shallow water conditions may be encountered due to seasonal fluctuations, regulated flows and diversions. Groundwater is not a factor for foundation design and is not expected to be a factor during construction.

Seismic Recommendations

Using soil information from the as-built borings for the existing Kern Ave POC, a V_{S30} (the weighted average shear wave velocity for the top 100 feet of foundation material) of 920 ft/s was calculated for the proposed bridge site.

The deterministic spectrum from the Caltrans ARS Online Tool (version 2.3.06) is based on the nearest active fault which controls ground motion. This fault is the San Andreas (Cholame) rev fault (ID No. 220) with MMax of 7.9. The fault is located southwest of the proposed bridge site and the closest distance from the bridge site to the fault rupture plane is approximately 45 miles. Caltrans ARS Online Tool refers to this fault as strike slip.

According to the "Methodology for Developing Design Response Spectrum for Use in Seismic Design Recommendations, November 2012", the governing design Acceleration Response Spectrum (ARS) curves are obtained by any or a combination of the following three methods for Kern Ave POC:

1. Statewide minimum deterministic spectrum with MMax of 6.5, vertical strike-slip event with a rupture distance of 7.5 miles.
2. Deterministic Seismic Hazard spectrum from the Caltrans ARS Online Tool (version

2.3.06).

3. The USGS Interactive Deaggregation procedure with a 5% Probability of Exceedance in 50 years (975 years return period).

For the proposed Kern Ave POC, the recommended ARS curve was obtained using method 3 as stated above. The peak ground acceleration is estimated to be 0.3g. The recommended ARS curve is presented on **Plate No. 1**.

Soil liquefaction occurs when loose, water-saturated soils lose shear strength in response to the sudden shaking from an earthquake and begin behaving like a liquid, reducing their ability to support embankments and structures. As groundwater is greater than 100 feet below the ground surface, the potential for liquefaction is considered non-existent.

The potential for surface rupture due to fault movement is considered minimal as there are no known faults projecting towards or passing directly through the bridge site.

Corrosivity

Corrosion testing of the subsurface soils was not performed as there was no exploratory excavations (borings or trenches) conducted. A search on the WSS online tool indicates that the project site soils are classified as Type #192, McFarland Loam and have chemical properties that characterize these materials as moderately corrosive to untreated steel foundation elements and low corrosive to concrete.

Scour

The site crosses railroad tracks. The foundation will not be subjected to stream instability.

As-Built Foundation Information

The existing bridge is continuous welded steel through plate girder structure founded on driven piles. The construction records (50-0224) indicate the bridge foundations consist of 12-inch diameter, closed-end steel pipes driven to 45 tons design load with hard driving conditions.

Foundation Recommendations

<u>Bent Piles (LRFD)</u>

Based on the review of the structure plans, existing bridge records, soil conditions and structural design requirements, the optimum foundation types are Class 200, Alternative “W” piles at bents 4, 6, 7, 8, 9, 11 and 14. Table 1 lists the foundation recommendation parameters. Table 2 is the pile data table to be included in the project contract documents.

Bent Spread Footings (LRFD)

The optimum foundation support for bents 2, 3, 5, 10, 12, and 13 is spread footings. Table 3 lists the recommended soil bearing and stress limits at these locations. Table 4 is the spread footing data table to be included in the project contract documents.

Abutment Spread Footings (WSD)

Based on a review of the as-built LOTB for the structure, the subsurface soil is adequate to support spread footings at the abutment locations. Table 3 lists the recommended soil bearing and stress limits at these locations.

Tables

Table 1.
Foundation Recommendations for Bents with Piles

Supp Loc	Pile Type	Cut-off Elev (ft)	Service-I Limit State Load Per Support (kips)	Total Permissible Support Settlement (inches)	Required Factored Nominal Resistance (kips)				Design Tip Elevations (ft)	Spec Tip Elev (ft)	Nominal Driving Resistance Required (kips)
					Strength Limit		Extreme Event				
					Comp φ=0.7	Tension φ=0.7	Comp φ=1.0	Tension φ=1.0			
Bent 4	Class 200 Alt "W"	348.25	513	1	160	9	289	183	303 (a-I) 338 (b-I) 295 (a-II) 299 (b-II)	295	289
Bent 6	Class 200 Alt "W"	349.72	480	1	184	1	296	150	301 (a-I) 348 (b-I) 296 (a-II) 307 (b-II)	296	296
Bent 7	Class 200 Alt "W"	349.40	443	1	271	23	400	200	286 (a-I) 332 (b-I) 285 (a-II) 298 (b-II)	285	400
Bent 8	Class 200 Alt "W"	349.25	618	1	215	21	344	158	296 (a-I) 333 (b-I) 289 (a-II) 304 (b-II)	293	344
Bent 9	Class 200 Alt "W"	347.00	567	1	197	20	327	156	295 (a-I) 333 (b-I) 289 (a-II) 304 (b-II)	289	327
Bent 11	Class 200 Alt "W"	349.40	552	1	163	29	235	126	302 (a-I) 329 (b-I) 302 (a-II) 310 (b-II)	302	235
Bent 14	Class 200 Alt "W"	349.30	388	1	97	0	281	169	316 (a-I) 296 (a-II) 301 (b-II)	296	281

Design tip elevations are controlled by: (a-I) Compression (Strength Limit), (b-I) Tension (Strength Limit), (a-II) Compression (Extreme Event), (b-II) Tension (Extreme Event).

Table 2.
Pile Data for Contract Plans

Support Location	Pile Type	Nominal Resistance (kips)		Design Tip Elevations (ft)	Specified Tip Elevation (ft)	Nominal Driving Resistance (kips)
		Compression	Tension			
Bent 4	Class 200 Alt "W"	289	183	295 (a) 299 (b)	295	289
Bent 6	Class 200 Alt "W"	296	150	296 (a) 307 (b)	296	296
Bent 7	Class 200 Alt "W"	400	200	285 (a) 298 (b)	285	400
Bent 8	Class 200 Alt "W"	344	158	293 (a) 304 (b)	293	344
Bent 9	Class 200 Alt "W"	327	156	289 (a) 304 (b)	289	327
Bent 11	Class 200 Alt "W"	235	126	302 (a) 310 (b)	302	235
Bent 14	Class 200 Alt "W"	281	169	296 (a) 301 (b)	296	281

Design tip elevations for Bents are controlled by: (a) Compression, (b) Tension

Table 3
Foundation Design Recommendations for Spread Footings

Support	Footing Size		Bottom of Footing Elevation (ft)	Minimum Footing Embedment Depth (ft)	Total Permissible Support Settlement (in)	WSD (LRFD Service-I Limit State Load Combination)		LRFD		
								Service	Strength $\varphi_b = 0.45$	Extreme Event $\varphi_b = 1.00$
	B	L				Permissible Gross Contact Stress (ksf)	Allowable Gross Bearing Capacity (ksf)	Net Permissible Contact Stress (ksf)	Factored Gross Nominal Bearing Resistance q_R (ksf)	Factored Gross Nominal Bearing Resistance q_R (ksf)
Abut 1	7	11.16	349.50	4	1	7.9	9.0	N/A	N/A	N/A
Bent 2	10	18	346.35	6	1	N/A	N/A	6.3	17.7	39.4
Bent 3	10	14	346.35	6	1	N/A	N/A	6.4	18.1	40.2
Bent 5	8	8	348.60	5.5	1	N/A	N/A	7.5	16.6	36.9
Bent 10	**10**	**10**	349.70	5.5	1	N/A	N/A	4.1	17.6	39.0
Bent 12	**9**	**9**	348.95	5.5	1	N/A	N/A	4.5	17.1	38.0
Bent 13	8	8	348.95	5.5	1	N/A	N/A	5.0	16.6	36.9
Abut 15	7	11.16	351.35	3	1	4.8	7.5	N/A	N/A	N/A

Note: Footing sizes in bold increased to meet required bearing capacity and permissible settlement.

Table 4[1]
Spread Footing Data Table

Support Location	Working Stress Design (WSD)		Load Resistance Factor Design (LRFD)		
	Permissible Gross Contact Stress (Settlement) (ksf)	Allowable Gross Bearing Capacity (ksf)	**Service[2]** Permissible Net Contact Stress (Settlement) (ksf)	**Strength/Construction[3]** Factored Gross Nominal Bearing Resistance $\varphi_b = 0.45$ (ksf)	**Extreme Event[3]** Factored Gross Nominal Bearing Resistance $\varphi_b = 1.00$ (ksf)
Abut 1	7.9	9.0	N/A	N/A	N/A
Bent 2	N/A	N/A	6.3	17.7	39.4
Bent 3	N/A	N/A	6.4	18.1	40.2
Bent 5	N/A	N/A	7.5	16.6	36.9
Bent 10	N/A	N/A	4.1	17.6	39.0
Bent 12	N/A	N/A	4.5	17.1	38.0
Bent 13	N/A	N/A	5.0	16.6	36.9
Abut 15	4.8	7.5	N/A	N/A	N/A

Notes:
1. Stresses and resistances were calculated for controlling load combinations.
2. Controlling load combination for Service Limit State is the one resulting in the highest ratio of $q_{n,u}/q_{pn}$ for foundations on soil, or $q_{n,max}/q_{pn}$ for foundations on rock.
3. Controlling load combination for Strength, Construction, and Extreme Event is the one resulting in the highest ratio of $q_{g,u}/q_R$ for foundations on soil, or $q_{g,max}/q_R$ for foundations on rock.

Construction Considerations

1. Spread footings shall be placed neat against competent materials. All loose materials shall be removed prior to placement of concrete. All footing excavations are to be inspected and approved by this Office or a representative of the Office of Structure Construction, when excavations are completed to the bottom of footing and prior to placement of rebar.

2. The use of center relief drilling will be allowed above the bottom of the pile during driving if hard driving conditions are encountered. The use of center relief drilling shall be stopped 8 feet above the specified pile tip. The contractor shall include center relief drilling in their bidding documents.

If any conceptual changes are proposed during final project design, the Office of Geotechnical Design-North should review those changes to determine if the recommendations contained herein are still applicable.

Project Information

This section discloses to bidders and contractors a list of pertinent information available for their inspection prior to bid opening. The following is information originating from Geotechnical Services.

Data and information attached with the project plans are:
One Log of Test Borings As-Built sheet for original bridge.

Data and information included in the Information Handout provided to the bidders and contractors are:
None.

Data and information available for inspection at the District Office:
None.

Data and information available for inspection at the Transportation Laboratory are:
Final Foundation Report. Kern Ave. POC, Bridge #50-0518, September 1, 2015

If you have any questions or comments, or need additional information please contact Christopher Koepke at (916) 227-1040, Ben Barnes at 227-1039.

Report by:

Christopher Koepke
Engineering Geologist
Office of Geotechnical Design – North
Branch E

Benjamin M. Barnes
Transportation Engineer
Office of Geotechnical Design – North
Branch E

Attachment: ARS curve

cc: R.E. Pending, Structures OE, D06 DME, GS File System :: (all via e-copy)

Kern Ave POC

Bridge No. 50-0518 **Latitude** 35.6785 **Longitude** -119.2270 **Control** Probabilistic

Period (s)	Sa (g)
0.01	0.30
0.05	0.45
0.10	0.53
0.15	0.60
0.20	0.66
0.25	0.65
0.30	0.64
0.40	0.58
0.50	0.53
0.60	0.49
0.70	0.45
0.85	0.40
1.00	0.36
1.20	0.31
1.50	0.26
2.00	0.20
3.00	0.13
4.00	0.10
5.00	0.08

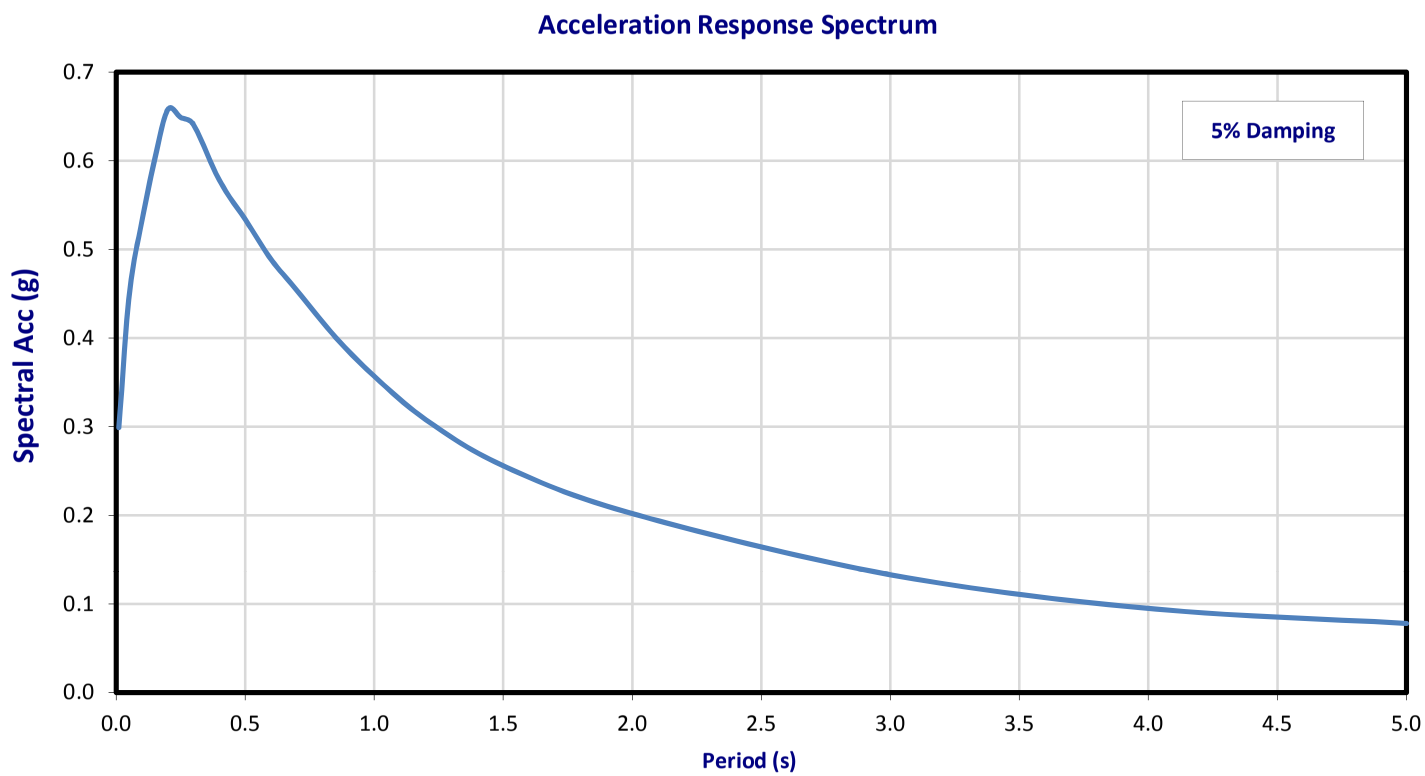

Deterministic Procedure Data

Fault	San Andreas (Cholame) rev				
Fault ID	220		R_{rup}	45	miles
Mmax	7.9		R_{jb}	45	miles
Style	SS		R_x	45	miles
Dip (deg)	90		V_{S30}	920	ft/s
Dip Dir	V		$Z_{1.0}$	N/A	miles
Z_{TOR}	0	miles	$Z_{2.5}$	N/A	miles
Z_{BOT}	7.5	miles			

Note: The ARS curve above is based on the USGS 5% Probability of Exceedance in 50 years (975 years return period).

Caltrans	Division of Engineering Services Geotechnical Services Office of Geotechnical Design - North	EFIS 0600000266 06-0H642	ARS Curve 06-KER-99 PM 49.0/50.0	Plate No. 1

MATERIALS INFORMATION

5. Water Source Information

THE CITY OF
McFarland
TRADITION • UNITY • EXCELLENCE

401 W. Kern Ave
McFarland, California 93250
(661) 792-3091 Office
(661) 792-3093 Fax

To: Cheng, Cheong-Yew

From: Mario Gonzales, Public Works Director

Date: 09/18/2015

Re: Availability of water for project

The City of McFarland operates the community water system in the City of McFarland and can supply water for the Kern Avenue POC project. The contractor can fill-up the water tank trucks at the various fire hydrants in the vicinity of the project. Contractor who wishes to utilize the City water must obtain a permit from the City and pay a rate of $1.00 per 100 cube feet.

MATERIALS INFORMATION

6. Alternative Flared Terminal System

Assembly Instructions for

SKT-SP-MGS *Tangent Terminal*

and

FLEAT-SP-MGS *Flared Terminal*

SP – Standard Post System Terminals For
31" MGS (Midwest Guardrail System)

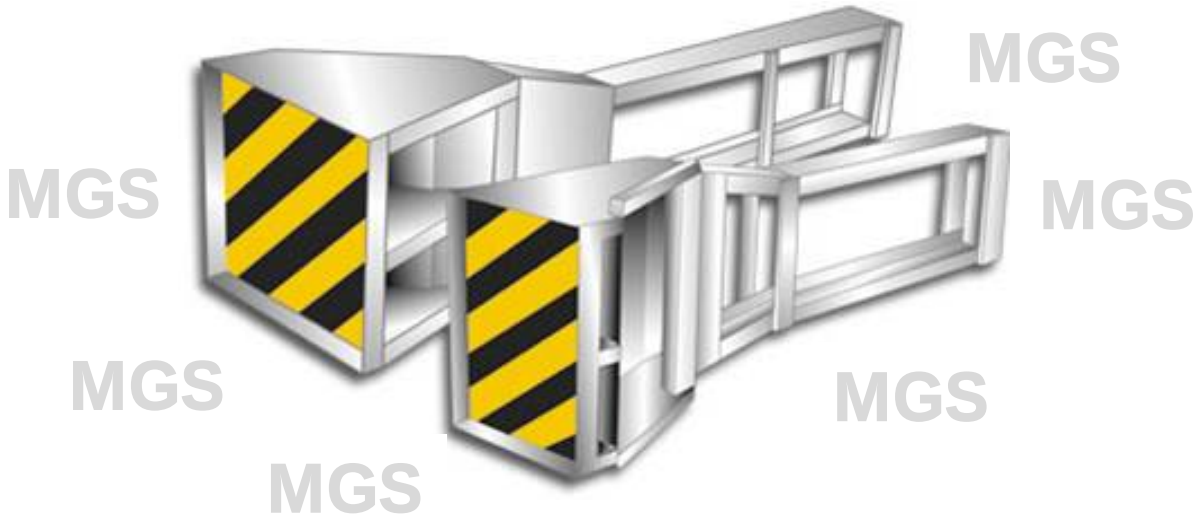

ROAD SYSTEMS, INC.

P. O. Box 2163
Big Spring, Texas 79721
Phone: (432) 263-2435 FAX: (432) 267-4039

Technical Support & Marketing Phone: (330) 346-0721
Technical Support & Marketing Fax: (330) 346-0722

All RSI Installation Manuals can be downloaded from RSI web site
www.roadsystems.com

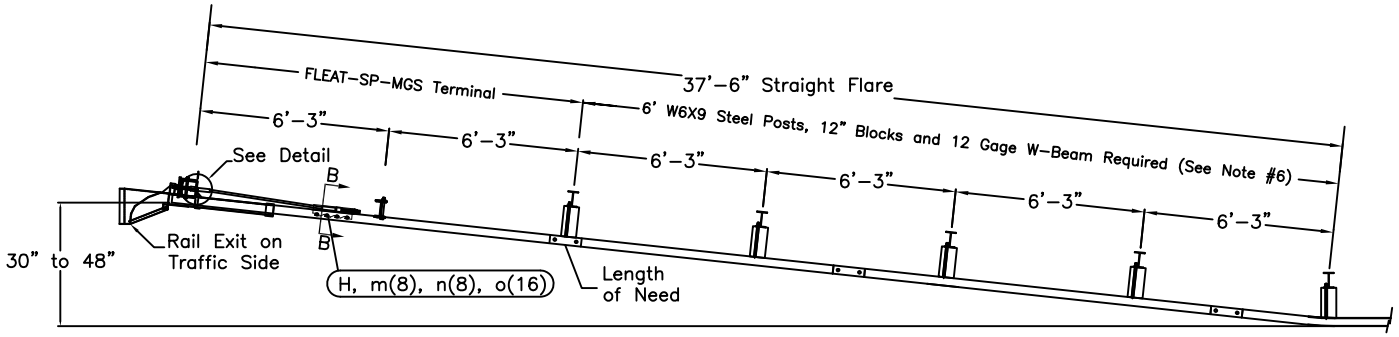

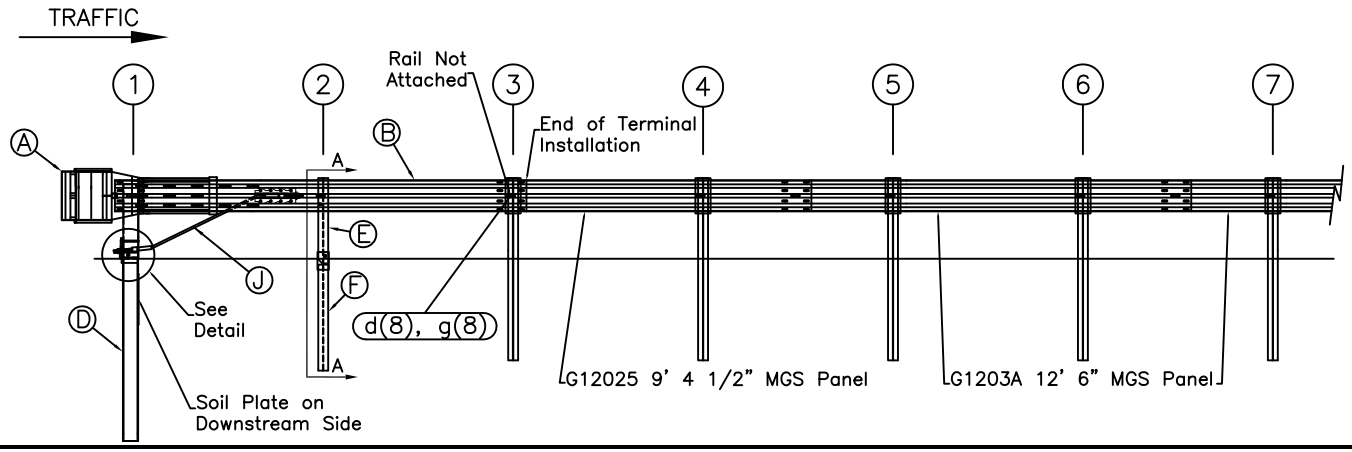

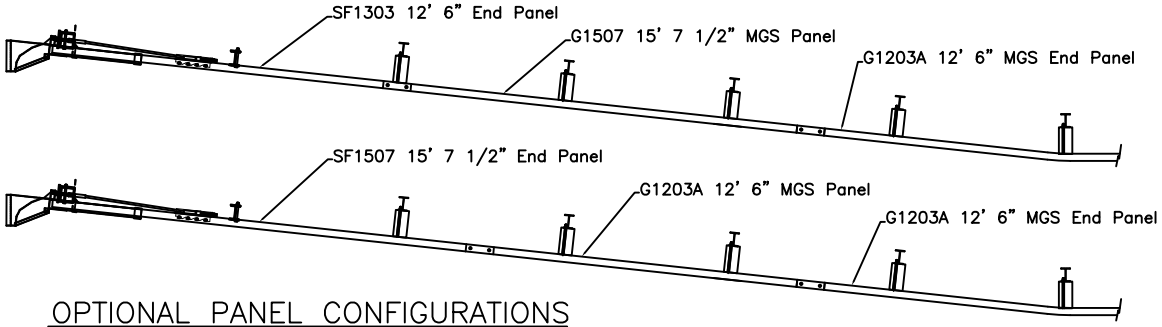

OPTIONAL PANEL CONFIGURATIONS

ITEM	QTY	BILL OF MATERIALS (TERMINAL)	ITEM NO.
A	1	IMPACT HEAD	F3000
B	1	W-BEAM GUARDRAIL END SECTION, 12 Ga.	SF1303
C	1	FIRST POST TOP (6X6X1/8" Tube)	TPHP1A
D	1	FIRST POST BOTTOM (6' W6X15)	TPHP1B
E	1	SECOND POST ASSEMBLY TOP	UHP2A
F	1	SECOND POST ASSEMBLY BOTTOM	HP3B
G	1	BEARING PLATE	E750
H	1	CABLE ANCHOR BOX	S760
J	1	BCT CABLE ANCHOR ASSEMBLY	E770
K	1	BEARING PLATE RETAINER TIE	CT-100S
		HARDWARE (ALL DIMENSIONS IN INCHES)	
a	2	5/16 x 1 HEX BOLT GRD 5	B5160104A
b	4	5/16 WASHER	W0516
c	2	5/16 HEX NUT	N0516
d	9	5/8 Dia. x 1 1/4 SPLICE BOLT	B580122
e	1	5/8 Dia. x 9 HEX BOLT GRD 5	B580904A
f	3	5/8 WASHER	W050
g	10	5/8 Dia. H.G.R NUT	N050
h	1	3/4 Dia. x 8 1/2 HEX BOLT GRD A449	B340854A
j	1	3/4 Dia. HEX NUT	N030
k	2	1 ANCHOR CABLE HEX NUT	N100
l	2	1 ANCHOR CABLE WASHER	W100
m	8	CABLE ANCHOR BOX SHOULDER BOLT	SB58A
n	8	1/2 A325 STRUCTURAL NUT	N055A
o	16	1 1/16 OD x 9/16 ID A325 STR. WASHER	W050A

GENERAL NOTES:

1. All bolts, nuts, cable assemblies, cable anchors and bearing plates shall be galvanized.
2. The lower sections of the Posts 1&2 shall not protrude more than 4 in above the ground (measured along a 5' cord). Site grading may be necessary to meet this requirement.
3. The lower sections of the hinged posts should not be driven with the upper post attached. If the post is placed in a drilled hole, the backfill material must be satisfactorily compacted to prevent settlement.
4. When competent rock is encountered, a 12" Ø post hole, 20 in. deep cored into the rock surface may be used if approved by the engineer for post 1. Granular material will be placed in the bottom of the hole, approximately 2.5" deep to provide drainage. The first post can be field cut to length, placed in the hole and backfilled with suitable backfill. The soil plate may be trimmed if required.
5. The breakaway cable assembly must be taut. A locking device (vice grips or channel lock pliers) should be used to prevent the cable from twisting when tightening nuts.
6. Additional components required downstream of terminal (see plan for required w-beam rail sections):

QTY	Desc.	Item#
8	5/8" x 1 1/4" Splice Bolt	B580122
13	5/8" Dia. H.G.R. Nut	N030
5	6x9 Steel Post	P621
5	MGS Block	P618
5	5/8" x 14" H.G.R. Bolt	B581402

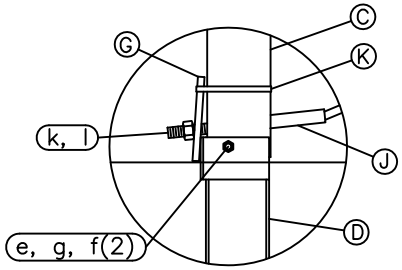

Post #1 Connection Detail

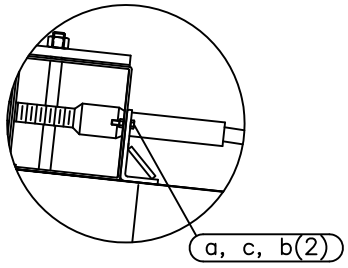

Impact Head Connection Detail

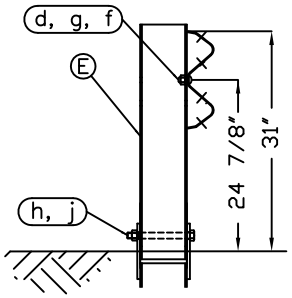

SECTION A–A
Post #2

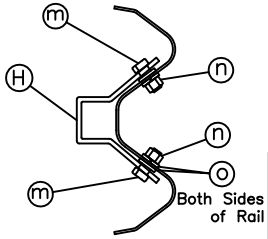

SECTION B–B
Anchor Bracket

RSI
Road Systems, Inc.
Big Spring, TX
Sales: 432-263-2435
Technical: 330-346-0721

FLEAT-SP-MGS Terminal
Midwest Guardrail System
31" Top of Rail

Sheet: 1
Date: 01/15/12
By: JRR
Drawing Name: FLT-SP-S-MGS
Scale: None
Rev: 0

Appendix A - System Configuration, 37' 6" MGS

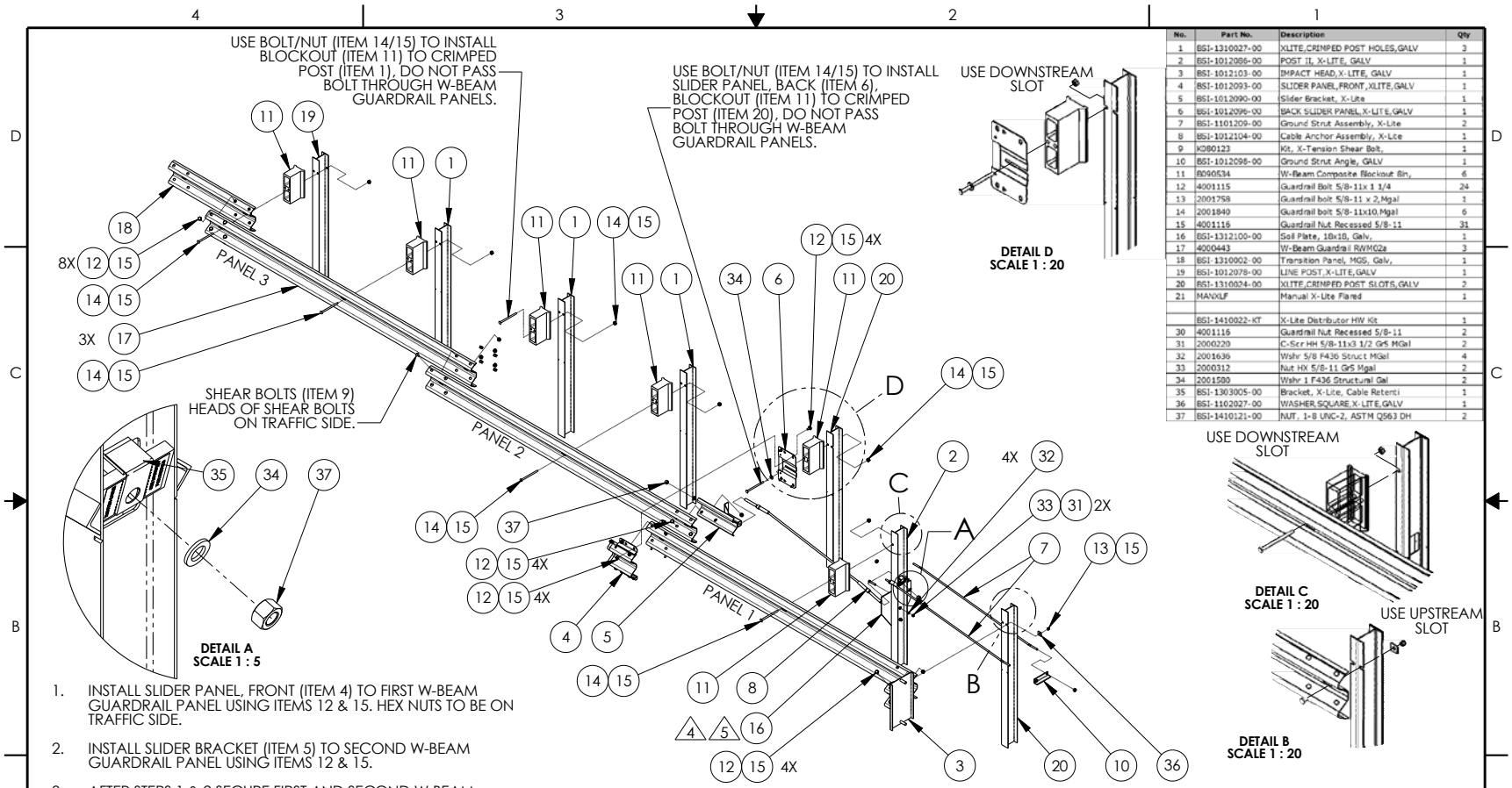

No.	Part No.	Description	Qty
1	BSI-1310027-00	XLITE,CRIMPED POST HOLES,GALV	3
2	BSI-1012086-00	POST II, X-LITE, GALV	1
3	BSI-1012103-00	IMPACT HEAD,X-LITE, GALV	1
4	BSI-1012093-00	SLIDER PANEL,FRONT,XLITE,GALV	1
5	BSI-1012090-00	Slider Bracket, X-Lite	1
6	BSI-1012096-00	BACK SLIDER PANEL,X-LITE,GALV	1
7	BSI-1101209-00	Ground Strut Assembly, X-Lite	2
8	BSI-1012104-00	Cable Anchor Assembly, X-Lite	1
9	K080123	Kit, X-Tension Shear Bolt,	1
10	BSI-1012098-00	Ground Strut Angle, GALV	1
11	B090534	W-Beam Composite Blockout Bln,	6
12	4001115	Guardrail Bolt 5/8-11x 1 1/4	24
13	2001758	Guardrail bolt 5/8-11 x 2,Mgal	1
14	2001840	Guardrail bolt 5/8-11x10,Mgal	6
15	4001116	Guardrail Nut Recessed 5/8-11	31
16	BSI-1312100-00	Soil Plate, 10x10, Galv,	1
17	4000443	W-Beam Guardrail RWM02a	3
18	BSI-1310002-00	Transition Panel, MGS, Galv,	1
19	BSI-1012078-00	LINE POST,X-LITE,GALV	1
20	BSI-1310024-00	XLITE,CRIMPED POST SLOTS,GALV	2
21	MANXLF	Manual X-Lite Flared	1
	BSI-1410022-KT	X-Lite Distributor HW Kit	1
30	4001116	Guardrail Nut Recessed 5/8-11	2
31	2000220	C-Scr HH 5/8-11x3 1/2 Gr5 MGal	2
32	2001636	Wshr 5/8 F436 Struct MGal	4
33	2000312	Nut HX 5/8-11 Gr5 Mgal	2
34	2001500	Wshr 1 F436 Structural Gal	2
35	BSI-1303005-00	Bracket, X-Lite, Cable Retenti	1
36	BSI-1102027-00	WASHER,SQUARE,X-LITE,GALV	1
37	BSI-1410121-00	NUT, 1-8 UNC-2, ASTM Q563 DH	2

1. INSTALL SLIDER PANEL, FRONT (ITEM 4) TO FIRST W-BEAM GUARDRAIL PANEL USING ITEMS 12 & 15. HEX NUTS TO BE ON TRAFFIC SIDE.
2. INSTALL SLIDER BRACKET (ITEM 5) TO SECOND W-BEAM GUARDRAIL PANEL USING ITEMS 12 & 15.
3. AFTER STEPS 1 & 2 SECURE FIRST AND SECOND W-BEAM GUARDRAIL PANEL USING ITEMS 6, 12 & 15. HEX NUTS TO BE ON TRAFFIC SIDE.
4. IF ROCK OR STIFF SOIL IS ENCOUNTERED, THE POST AND SOIL PLATE MAY BE INSTALLED BY AUGERING AND BACKFILLING THE HOLE. EXTRA CARE MUST BE TAKEN TO PREVENT SETTLEMENT OR LATERAL DISPLACEMENT OF THE POST. BACKFILL MATERIAL SHALL BE COMPACTED TO OPTIMUM COMPACTION.
5. IF ROCK IS ENCOUNTERED, THE SOIL PLATE MAY BE MODIFIED IF APPROVED BY THE PROJECT ENGINEER.

© 2010 BARRIER SYSTEMS INC. THE INFORMATION CONTAINED IN THIS DRAWING IS THE SOLE PROPERTY OF BARRIER SYSTEMS INC. ANY REPRODUCTION IN PART OR WHOLE WITHOUT THE WRITTEN PERMISSION OF BARRIER SYSTEMS INC. IS PROHIBITED.

APPROVALS

DRAWN BY:	JMT
DRAWN DATE:	10/09/13
APPR'D BY:	GAD
APPR'D DATE:	10/09/13

UNLESS OTHERWISE SPECIFIED DIMENSIONS ARE IN INCHES. TOLERANCES ARE:
FRACTIONS ±1/16 DECIMAL .XX = ±.03 .XXX = ±.010 ANGLES ±1/2°
INTERPRET DIMENSIONS AND TOLERANCES PER ASME Y14.5-1994

THIRD ANGLE PROJECTION

DO NOT SCALE DRAWING

REV	ECN#	DATE
F	2540	12/12/14
E	2533	12/01/12
D	2444	09/26/14
C	2253	03/25/14
B	2220	01/23/14
A	2165	11/13/13
0	2151	10/09/13

LINDSAY™ TRANSPORTATION SOLUTIONS

BARRIER SYSTEMS
180 River Road
Rio Vista, CA 94571
Tel: 888-800-3691
www.barriersystemsinc.com

TITLE
X-LITE SYSTEM ASSEMBLY FLARED TRANSITION TO MGS

SIZE B | DWG NO. XLFSUS-MGS | REV. F
SCALE 1:40 | SHEET 1 OF 2

Doc. B100108

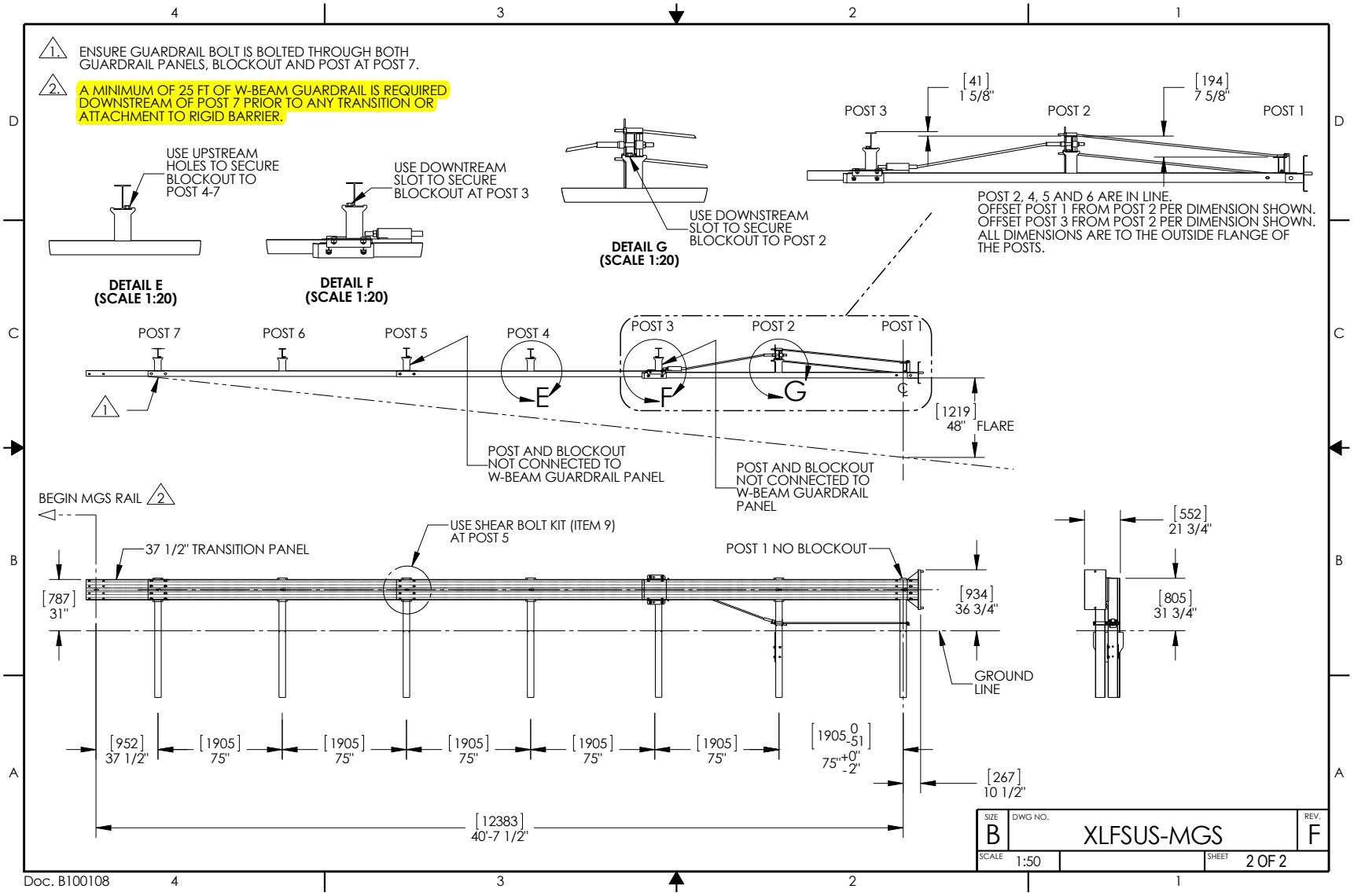
1. ENSURE GUARDRAIL BOLT IS BOLTED THROUGH BOTH GUARDRAIL PANELS, BLOCKOUT AND POST AT POST 7.
2. A MINIMUM OF 25 FT OF W-BEAM GUARDRAIL IS REQUIRED DOWNSTREAM OF POST 7 PRIOR TO ANY TRANSITION OR ATTACHMENT TO RIGID BARRIER.
USE UPSTREAM HOLES TO SECURE BLOCKOUT TO POST 4-7
DETAIL E (SCALE 1:20)
USE DOWNTREAM SLOT TO SECURE BLOCKOUT AT POST 3
DETAIL F (SCALE 1:20)
USE DOWNSTREAM SLOT TO SECURE BLOCKOUT TO POST 2
DETAIL G (SCALE 1:20)
[41] 1 5/8"
[194] 7 5/8"
POST 3
POST 2
POST 1
POST 2, 4, 5 AND 6 ARE IN LINE.
OFFSET POST 1 FROM POST 2 PER DIMENSION SHOWN.
OFFSET POST 3 FROM POST 2 PER DIMENSION SHOWN.
ALL DIMENSIONS ARE TO THE OUTSIDE FLANGE OF THE POSTS.
POST 7
POST 6
POST 5
POST 4
POST 3
POST 2
POST 1
E
F
G
[1219] 48" FLARE
POST AND BLOCKOUT NOT CONNECTED TO W-BEAM GUARDRAIL PANEL
POST AND BLOCKOUT NOT CONNECTED TO W-BEAM GUARDRAIL PANEL
BEGIN MGS RAIL
37 1/2" TRANSITION PANEL
USE SHEAR BOLT KIT (ITEM 9) AT POST 5
POST 1 NO BLOCKOUT
[787] 31"
[934] 36 3/4"
GROUND LINE
[552] 21 3/4"
[805] 31 3/4"
[952] 37 1/2"
[1905] 75"
[1905] 75"
[1905] 75"
[1905] 75"
[1905] 75"
[1905 0 -51] 75" +0" -2"
[267] 10 1/2"
[12383] 40'-7 1/2"
SIZE B
DWG NO. XLFSUS-MGS
REV. F
SCALE 1:50
SHEET 2 OF 2
Doc. B100108

ITEM NO.	PART NUMBER	DESCRIPTION	QTY	UOM
1	BSI-1301252-KT	X-Tension Terminal Comp, 31 in	1	EACH
2	K070202	X-Tension Hardware Kit, GT,	1	EACH
3	K070206	X-Tension System Hardware Kit,	1	EACH
4	K070210	X-Tension GT Guardrail	1	EACH
5	B061100	BSI, I-Beam Post, Middle, X350	1	EACH
6	MANXT1	X-TENSION Installation Manual	1	EACH

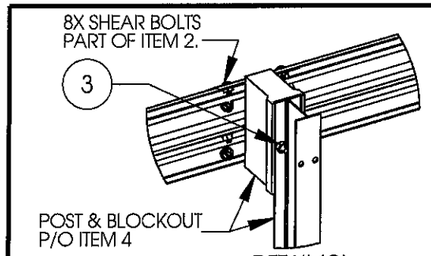

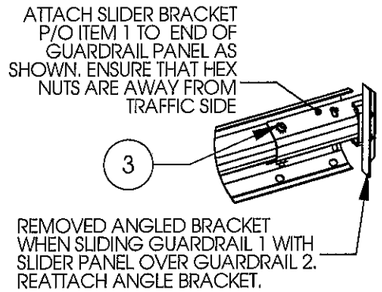

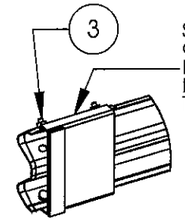

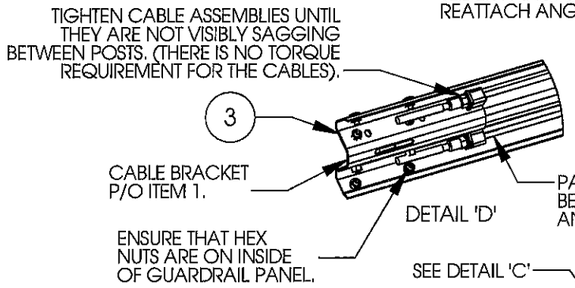

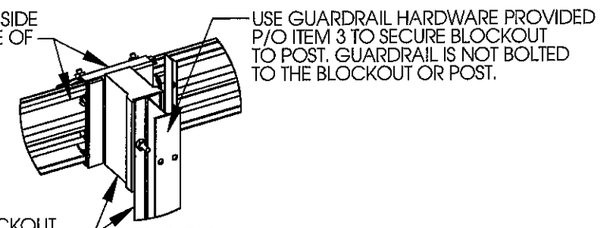

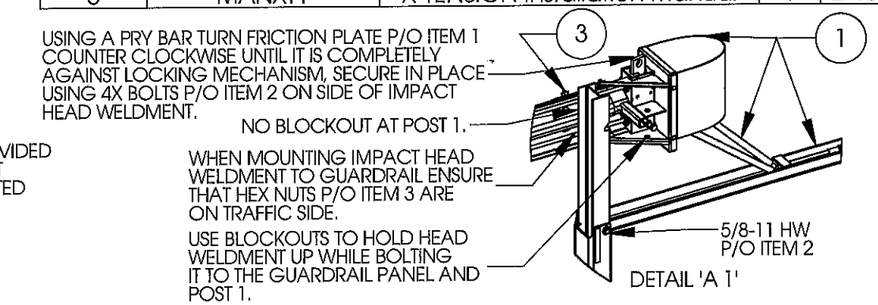

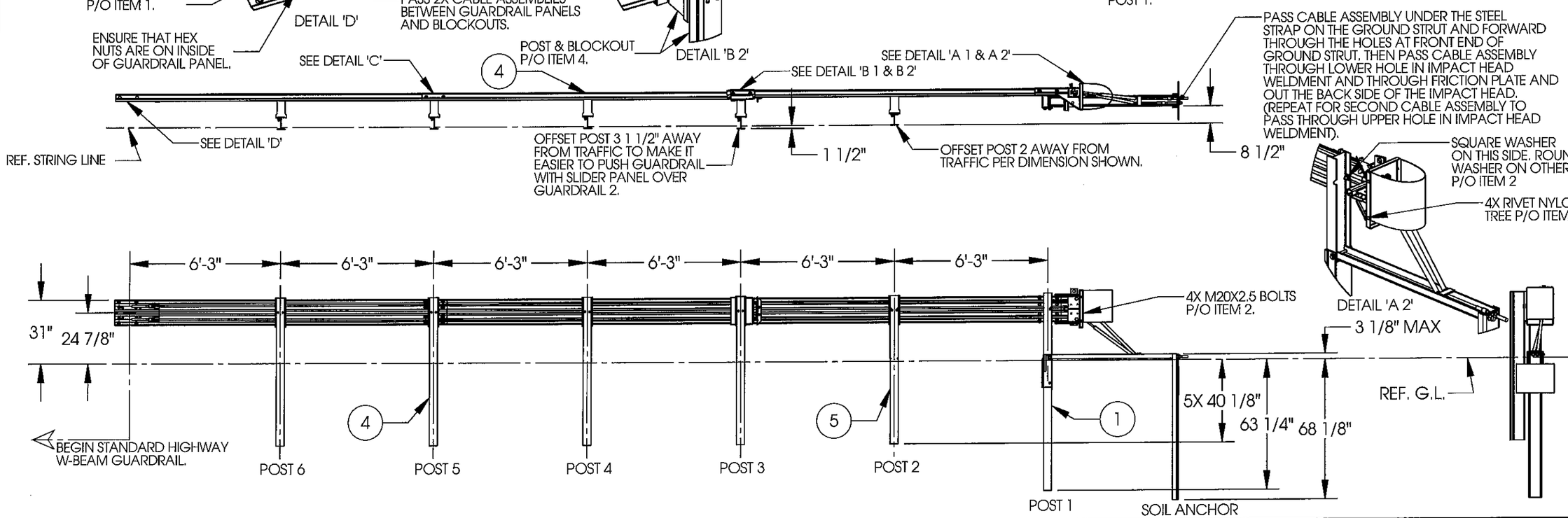

NOTES: UNLESS OTHERWISE SPECIFIED.

1. SYSTEM TO BE INSTALLED PER MANUFACTURER SPECIFICATIONS.
2. ONLY TIGHTEN THE CABLE ASSEMBLIES USING THE NUTS AT THE CABLE BRACKET (SEE DETAIL 'D'). DO NOT TIGHTEN THE CABLES AT THE FRONT OF THE GROUND ANCHOR.
3. WHEN DRIVING STEEL POST, ENSURE THAT A DRIVING CAP WITH TIMBER OR PLASTIC INSERT IS USED TO PREVENT DAMAGE TO THE GALVANIZING TO THE TOP OF THE POST.

© 2012 BARRIER SYSTEMS INC. THE INFORMATION CONTAINED IN THIS DRAWING IS THE SOLE PROPERTY OF BARRIER SYSTEMS INC. ANY REPRODUCTION IN PART OR WHOLE WITHOUT THE WRITTEN PERMISSION OF BARRIER SYSTEMS INC. IS PROHIBITED.

UNLESS OTHERWISE SPECIFIED DIMENSIONS ARE IN INCHES. TOLERANCES ARE:
FRACTIONS ±1/16 DECIMAL .XX = ±.03 .XXX = ±.010 ANGLES ±1/2°
INTERPRET DIMENSIONS AND TOLERANCES PER ASME Y14.5-1994

THIRD ANGLE PROJECTION

DO NOT SCALE DRAWING

APPROVALS	
DRAWN BY:	NMV
DRAWN DATE:	2/08/13
APPR'D BY:	JMT
APPR'D DATE:	2/08/13

REV	ECN#	DATE
B	2067	05/02/13
A	2022	2/08/13

LINDSAY™ TRANSPORTATION SOLUTIONS

BARRIER SYSTEMS INC.
3333 Vaca Valley Parkway Ste 800
Vacaville, CA 95688
Tel: 888-800-3691
www.barriersystemsinc.com

TITLE
X-TENSION GUARDRAIL TERMINAL SYSTEM STEEL POST WITH COMPOSITE BLOCKOUT 31" RAIL HEIGHT

SIZE	DWG NO.	REV.
B	XTGTSS5	B

SCALE 1:50 SHEET 1 OF 1

Doc. B100108

Last Saved by: jeff.thompson; Friday, May 03, 2013 1:23:29 PM

MATERIALS INFORMATION

7. Asbestos and Lead-Containing Paint Survey Report

LEAD IN SOIL SITE INVESTIGATION REPORT

KER-178 and KER-99 Pedestrian Overcrossings Kern County, California

PREPARED FOR:

CALIFORNIA DEPARTMENT OF TRANSPORTATION – DISTRICT 6
HAZARDOUS WASTE BRANCH
855 M STREET, SUITE 200
FRESNO, CALIFORNIA 93721

PREPARED BY:

GEOCON CONSULTANTS, INC.
3160 GOLD VALLEY DRIVE, SUITE 800
RANCHO CORDOVA, CALIFORNIA 95742

GEOCON PROJECT NO. S9525-06-27
TASK ORDER NO. 27, EA 06-0H6400

JUNE 2011

GEOCON
CONSULTANTS, INC.
GEOTECHNICAL ■ ENVIRONMENTAL ■ MATERIALS

Project No. S9525-06-27
June 30, 2011

Ms. Susan Greenwood
California Department of Transportation – District 6
Hazardous Waste Branch
855 M Street, Suite 200
Fresno, California 93721

Subject: LEAD IN SOIL SITE INVESTIGATION REPORT
KER-178 AND KER-99 PEDESTRIAN OVERCROSSINGS
KERN COUNTY, CALIFORNIA
CONTRACT NO. 06A1580, TASK ORDER NO. 27, EA NO. 06-0H6400

Dear Ms. Greenwood:

In accordance with California Department of Transportation (Caltrans) Contract No. 06A1580, Task Order Number 27, and Expense Authorization 06-0H6400, Geocon Consultants, Inc. has performed environmental engineering services for the subject project. The Site consists of Caltrans right-of-way at the State Routes 178 and 99 pedestrian overcrossings in Kern County, California. The accompanying report summarizes the services performed, including the advancement of 16 hand-auger borings for shallow soil sampling and lead testing.

The contents of this report reflect the views of the author, who is responsible for the facts and accuracy of the data presented herein. The contents do not necessarily reflect the official views or policies of the State of California or the Federal Highway Administration. This report does not constitute a standard, specification, or regulation.

Please contact us if there are any questions concerning the contents of this report or if we may be of further service.

Sincerely,

GEOCON CONSULTANTS, INC.

Gemma G. Reblando
Project Geologist

John E. Juhrend, PE, CEG
Project Manager

REGISTERED PROFESSIONAL ENGINEER
JOHN JUHREND
No. 46681
Exp. 06/30/13
CIVIL
STATE OF CALIFORNIA

(2 + 2 CD) Addressee

TABLE OF CONTENTS

LEAD IN SOIL SITE INVESTIGATION REPORT Page

1.0 INTRODUCTION 1
1.1 Project Description and Proposed Improvements 1
1.2 General Objectives 1

2.0 BACKGROUND 1
2.1 Hazardous Waste Determination Criteria 1

3.0 SCOPE OF SERVICES 2
3.1 Pre-field Activities 2
3.2 Field Activities 3

4.0 INVESTIGATIVE METHODS 3
4.1 Boring Location Rationale 3
4.2 Soil Sampling Procedures 3
4.3 Laboratory Analyses 4

5.0 FIELD OBSERVATIONS AND INVESTIGATIVE RESULTS 4
5.1 Site Conditions 4
5.2 Soil Analytical Results 4
5.2.1 KER-178 POC 5
5.2.2 KER-99 POC 5
5.3 Laboratory Quality Assurance/Quality Control 5
5.4 Statistical Evaluation for Lead Detected in Soil Samples 5
5.4.1 Calculating the UCLs for the Arithmetic Mean 6
5.4.2 Correlation of Total and Soluble Lead 6

6.0 CONCLUSIONS AND RECOMMENDATIONS 8
6.1 KER-178 POC (WB) – Borings B1 through B3 8
6.2 KER-178 POC (EB and Median) – Borings B4 through B8 8
6.3 KER-99 POC – Borings B9 through B16 9
6.4 Worker Protection 9

7.0 REPORT LIMITATIONS 10

FIGURES

1-1 and 1-2. Vicinity Maps
2-1 and 2-2. Site Plans

TABLES

1. Summary of Soil Boring Coordinates and Lead Analytical Results

APPENDICES

A. Laboratory Reports and Chain-of-custody Documentation
B. Lead Statistics and Regression Analysis Results

LEAD IN SOIL SITE INVESTIGATION REPORT

1.0 INTRODUCTION

This Site Investigation Report for the Kern 178 (KER-178) and 99 (KER-99) Pedestrian Overcrossings (POC) Project was prepared by Geocon Consultants, Inc. under California Department of Transportation (Caltrans) Contract No. 06A1580, Task Order (TO) Number 27, and Expense Authorization (EA) 06-0H6400.

1.1 Project Description and Proposed Improvements

The project consists of the areas beneath the KER-178 POC at Sunny Lane (Bridge No. 50-0334) and KER-99 POC at Kern Avenue (Bridge No. 50-0224) in Kern County, California. Caltrans proposes to demolish the two POC bridges. The approximate project locations are depicted on the Vicinity Maps, Figures 1-1 and 1-2. The approximate sample locations are depicted on the Site Plans, Figures 2-1 and 2-2.

1.2 General Objectives

The purpose of the scope of services outlined in TO No. 27 was to evaluate whether lead-impacted soil due to paint flakes/chips from the bridge paint exist in the surface and near surface soils within the project boundaries. The investigative results will be used by Caltrans to inform the construction contractor(s) if lead-impacted soil is present within the project boundaries for construction worker health and safety, and waste management/disposal purposes.

2.0 BACKGROUND

2.1 Hazardous Waste Determination Criteria

Regulatory criteria to classify a waste as "California hazardous" for handling and disposal purposes are contained in the *CCR*, Title 22, Division 4.5, Chapter 11, Article 3, § 66261.24. Criteria to classify a waste as "Resource, Conservation, and Recovery Act (RCRA) hazardous" are contained in Chapter 40 of the Code of Federal Regulations (40 CFR), Section 261.

For waste containing metals, the waste is classified as California hazardous when: 1) the total metal content exceeds the respective Total Threshold Limit Concentration (TTLC); or 2) the soluble metal content exceeds the respective Soluble Threshold Limit Concentration (STLC) based on the standard Waste Extraction Test (WET). A waste may have the potential of exceeding the STLC when the waste's total metal content is greater than or equal to ten times the respective STLC value, since the WET uses a 1:10 dilution ratio. Hence, when a total metal is detected at a concentration greater than or equal to ten times the respective STLC, and assuming that 100 percent of the total metals are soluble, soluble metal analysis is required. A material is classified as RCRA hazardous, or Federal hazardous,

when the soluble metal content exceeds the Federal regulatory level based on the Toxicity Characteristic Leaching Procedure (TCLP). The TTLC value for lead is 1,000 milligrams per kilogram (mg/kg). The STLC and TCLP values for lead are both 5.0 milligrams per liter (mg/l).

The above regulatory criteria are based on chemical concentrations. Wastes may also be classified as hazardous based on other criteria such as ignitability and corrosivity; however, for the purposes of this investigation, toxicity (i.e., lead concentrations) is the primary factor considered for waste classification since waste generated during the construction activities would not likely warrant testing for ignitability or corrosivity. Waste that is classified as either California hazardous or RCRA hazardous requires management as a hazardous waste.

The Department of Toxic Substances Control (DTSC) regulates and interprets hazardous waste laws in California. DTSC generally considers excavated or transported materials that exhibit "hazardous waste" characteristics to be a "waste" requiring proper management, treatment and disposal. Soil that contains lead above hazardous waste thresholds and is left in-place would not be necessarily classified by DTSC as a "waste." The DTSC has provided site-specific determinations that "movement of wastes within an area of contamination does not constitute "land disposal" and, thus, does not trigger hazardous waste disposal requirements." Therefore, lead-impacted soil that is scarified in-place, moisture-conditioned, and recompacted during roadway improvement activities might not be considered a "waste." DTSC should be consulted to confirm waste classification. It is noted that in addition to DTSC regulations, health and safety requirements and other local agency requirements may also apply to the handling and disposal of lead-impacted soil.

3.0 SCOPE OF SERVICES

We performed the following scope of services as requested by Caltrans in TO No. 27:

3.1 Pre-field Activities

- Conducted a TO meeting on May 26, 2011, to discuss the TO scope of services. Caltrans representative Susan Greenwood and Geocon representative David Watts attended the meeting. The purpose of the TO meeting was to observe the project boundaries and conditions.
- Prepared a *Workplan* dated June 2, 2011, which described the requested scope of services and quality assurance/quality control (QA/QC) sampling and laboratory procedures.
- Prepared a *Health and Safety Plan* dated May 26, 2011, to provide guidelines on the use of personal protective equipment and the health and safety procedures implemented during the field activities.
- Retained the services of Advanced Technology Laboratories (ATL) to perform the chemical analysis of soil samples.

3.2 Field Activities

On June 6, 2011, 32 soil samples were collected from 16 hand-auger borings located in the vicinity of the areas underneath the KER-178 POC at Sunny Lane and KER-99 POC at Kern Avenue. Eight hand-auger borings were advanced at the KER-178 POC, and eight hand-auger borings were advanced at the KER-99 POC. The soil borings were excavated to an approximate maximum sampling depth of 2.0 feet. Soil samples were collected at general depths of 0.0 to 0.5 foot and 1.5 to 2.0 feet.

4.0 INVESTIGATIVE METHODS

4.1 Boring Location Rationale

The soil boring locations were designated by Caltrans in the vicinity of proposed improvements. Borings B1 through B8 were advanced at the KER-178 POC at Sunny Lane (Figure 2-1). Borings B9 through B16 were advanced at the KER-99 POC at Kern Avenue (Figure 2-2).

The coordinates of the boring locations were determined using a differential global positioning system (GPS). The GPS was utilized during the field activities to locate the horizontal position of each location with an error of no more than 3.3 feet. The latitude and longitude of the boring locations are summarized in Table 1.

4.2 Soil Sampling Procedures

A total of 32 soil samples were collected from 16 hand-auger borings excavated at the project locations. Soil samples were collected using a hand-auger and transferred directly into Ziploc® re-sealable plastic bags. The soil samples were field homogenized within the sample bags and subsequently labeled, placed in an ice chest, and delivered to ATL for analytical testing under chain-of-custody (COC) documentation.

QA/QC procedures were performed during the field exploration activities. These procedures included decontamination of sampling equipment before each boring was advanced and providing COC documentation for each sample submitted to the laboratory. The soil sampling equipment was cleansed between each boring by washing the equipment with an Alconox™ solution followed by a double rinse with deionized water. The field sampling activities were performed under the supervision of Geocon's field manager.

The borings were backfilled with the excess soil cuttings generated at each boring. The decontamination water was discharged to the ground surface away from surface water bodies or storm drain inlets.

4.3 Laboratory Analyses

The soil samples collected within the project boundaries were submitted to ATL for the following analyses under standard turnaround time. The laboratory was instructed to homogenize the soil samples prior to analysis in accordance with Contract 06A1580 requirements.

- Thirty-two soil samples were analyzed for total lead following United States Environmental Protection Agency (EPA) Test Method 6010B.
- Six soil samples with total lead concentrations greater than or equal to 50 mg/kg (ten times the STLC value for lead of 5.0 mg/l) were further analyzed for WET soluble lead by EPA Test Method 7420.
- Three soil samples were further analyzed for TCLP soluble lead by EPA Test Methods 1311 and 7420.

QA/QC procedures were performed for each method of analysis with specificity for each analyte listed in the test method's QA/QC. The laboratory QA/QC procedures included the following:

- One method blank for every ten samples, batch of samples or type of matrix, whichever was more frequent.
- One sample analyzed in duplicate for every ten samples, batch of samples or type of matrix, whichever was more frequent.
- One spiked sample for every ten samples, batch of samples or type of matrix, whichever was more frequent, with the spike made at ten times the detection limit or at the analyte level.

Prior to submitting the soil samples to the laboratory, the COC documentation was reviewed for accuracy and completeness. Reproductions of the laboratory reports and COC documentation are presented in Appendix A.

5.0 FIELD OBSERVATIONS AND INVESTIGATIVE RESULTS

5.1 Site Conditions

Soil encountered during the excavation of borings was generally comprised of brown, silty sand at the KER-178 and KER-99 POCs to the maximum sampling depth of approximately 2.0 feet. Groundwater was not encountered in the soil borings.

5.2 Soil Analytical Results

A summary of the soil analytical results are presented in Table 1. The laboratory reports and COC documentation are presented in Appendix A. The analytical results for each project location are presented in the following sections.

5.2.1 KER-178 POC

Total lead was detected in 12 of the 16 soil samples analyzed at concentrations ranging from 5.4 to 210 mg/kg. Six of the 16 soil samples had reported total lead concentrations greater than 50 mg/kg (ten times the STLC value for lead of 5.0 mg/l).

WET soluble lead was reported for each of the six soil samples analyzed at concentrations ranging from 3.2 to 16 mg/l. Four of the six soil samples had WET soluble lead concentrations greater than the STLC value for lead of 5.0 mg/l.

TCLP soluble lead was reported for one of the three soil samples analyzed at a concentration of 0.33 mg/l, less than the federal RCRA hazardous threshold value for lead of 5.0 mg/l.

5.2.2 KER-99 POC

Total lead was detected in eight of the 16 soil samples analyzed at concentrations ranging from 14 to 49 mg/kg. None of the 16 soil samples had reported total lead concentrations greater than 50 mg/kg (ten times the STLC value for lead of 5.0 mg/l).

5.3 Laboratory Quality Assurance/Quality Control

We reviewed the laboratory QA/QC provided with the laboratory reports. Matrix spike and/or matrix spike duplicates were outside criteria for sample 117289-015AMSD for Method 7420. However, the analytical batch was validated by the laboratory control sample. Based on the laboratory QA/QC data, no additional qualification of the data presented herein is necessary, and the data are of sufficient quality for the purposes of this report.

5.4 Statistical Evaluation for Lead Detected in Soil Samples

Total lead data were separated into three data populations for statistical evaluations as described below.

- KER-178 POC (WB) consists of soil samples collected from borings B1 through B3.
- KER-178 POC (EB and Median) consists of soil samples collected from borings B4 through B8.
- KER-99 POC consists of soil samples collected from borings B9 through B16.

Statistical analysis was not performed for the samples collected from KER-178 POC (WB) and KER-99 POC since the total lead concentrations are less than 50 mg/kg or the WET soluble lead concentrations are less than the STLC value for lead of 5.0 mg/l.

Statistical methods were applied to the total lead data to evaluate the upper confidence limits (UCLs) of the arithmetic means of the total lead concentrations for each sampling depth. The statistical methods used are discussed in a book entitled *Statistical Methods for Environmental Pollution Monitoring*, by

Richard Gilbert; in an EPA *Technology Support Center Issue* document entitled, *The Lognormal Distribution in Environmental Applications,* by Ashok Singh et. al., dated December 1997; and in a book entitled *An Introduction to the Bootstrap,* by Bradley Efron and Robert J. Tibshirani.

5.4.1 Calculating the UCLs for the Arithmetic Mean

The upper one-sided 90% and 95% UCLs of the arithmetic mean are defined as the values that, when calculated repeatedly for randomly drawn subsets of site data, equal or exceed the true mean 90% and 95% of the time, respectively. Statistical confidence limits are the classical tool for addressing uncertainties of a distribution mean. The UCLs of the arithmetic mean concentration are used as the mean concentrations because it is not possible to know the true mean due to the essentially infinite number of soil samples that could be collected from a site. The UCLs therefore account for uncertainties due to limited sampling data. As data become less limited at a site, uncertainties decrease, and the UCLs move closer to the true mean.

Non-parametric bootstrap techniques used to calculate the UCLs are discussed in the previously referenced EPA document and in *An Introduction to the Bootstrap.* For those samples in which total lead was not detected at concentrations exceeding the laboratory reporting limit, a value equal to one-half of the reporting limit was used in the UCL calculation. The bootstrap results are presented in Appendix B. The calculated UCLs and statistical results for KER-178 POC (EB and Median) are summarized in the table below:

KER-178 POC (EB and Median)
Borings B4 through B8

SAMPLE INTERVAL (feet)	90% TOTAL LEAD UCL (mg/kg)	95% TOTAL LEAD UCL (mg/kg)	TOTAL LEAD MEAN (mg/kg)	MINIMUM VALUE (mg/kg)	MAXIMUM VALUE (mg/kg)
0.0 to 0.5	182.5	194.3	135.5	2.5	210
1.5 to 2.0	38.7	42.5	23.8	2.5	73

5.4.2 Correlation of Total and Soluble Lead

Total and corresponding WET soluble lead concentrations are bivariate data with a linear structure. This linear structure should allow for the prediction of WET soluble lead concentrations based on the UCLs calculated above in Section 5.4.1.

To estimate the degree of interrelation between total and corresponding WET soluble lead values (x and y, respectively), the *correlation coefficient [r]* is used. The correlation coefficient is a ratio that ranges from +1 to –1. A *correlation coefficient* of +1 indicates a perfect direct relationship between two variables; a *correlation coefficient* of –1 indicates that one variable changes inversely with relation

to the other. Between the two extremes is a spectrum of less-than-perfect relationships, including zero, which indicates the lack of any sort of linear relationship at all.

The *correlation coefficient* was calculated for the (x, y) data points (i.e., soil samples analyzed for both total lead [x] and WET soluble lead [y]) and equaled 0.8154. A *correlation coefficient* greater than or equal to 0.8 is an acceptable indicator that a correlation exists.

For the *correlation coefficient* that indicates a linear relationship between total and WET soluble lead concentrations, it is possible to compute the line of dependence or a best-fit line between the two variables. A least squares method was used to find the equation of a best-fit line (regression line) by forcing the y-intercept equal to zero since that is a known point. The equation of the regression line was determined to be $y = 0.0610(x)$, where x represents total lead concentrations and y represents predicted WET soluble lead concentrations. This equation was used to estimate the expected WET soluble lead concentrations for the UCLs calculated in Section 5.4.1. Regression analysis results and a scatter plot depicting the (x, y) data points along with the regression line are presented in Appendix B. The 90% and 95% UCL-predicted WET soluble lead concentrations for the KER-178 POC (EB and Median) are presented in Section 6.0.

6.0 CONCLUSIONS AND RECOMMENDATIONS

Waste classifications based on the 90% UCL of the lead content for the relevant excavation depths have historically been considered sufficient to satisfy a good faith effort by the EPA as discussed in SW-846. Risk assessment characterization is typically based on the 95% UCL of the lead content in the waste for the relevant depths; this is in accordance with the Risk Assessment Guidance for Superfund (RAGS) Volume 1 Documentation for Exposure Assessment. Per Caltrans, the 90% UCLs are to be used to evaluate onsite reuse and the 95% UCLs are to be used to evaluate offsite disposal. In addition, the re-use of excavated soil was not evaluated based on the DTSC Variance since the DTSC Variance is not applicable to soil impacted with lead-containing paint.

Based on the TCLP soluble lead results of less than 5.0 mg/l, soil generated at the project locations will not require disposal as a RCRA hazardous waste. If soil within the project limits is scarified in-place, moisture-conditioned, and recompacted during roadway improvement activities, it may not be considered a "waste."

6.1 KER-178 POC (WB) – Borings B1 through B3

Total lead concentrations ranged from less than the laboratory RL of 5.0 mg/kg to 54 mg/kg, with an average total lead concentration of 18.8 mg/kg. Soil excavated to a depth of 2.0 feet or shallower within this area as represented by borings B1 through B3 will not require special soil handling, and disposal procedures based on lead content and can be reused or disposed of as non-hazardous soil since the total lead concentrations are less than 50 mg/kg or the WET soluble lead concentrations are less than the STLC value for lead of 5.0 mg/l.

6.2 KER-178 POC (EB and Median) – Borings B4 through B8

Total lead concentrations ranged from less than the laboratory RL of 5.0 mg/kg to 210 mg/kg, with an average total lead concentration of 79.6 mg/kg. The table below summarizes the excavation scenarios, the predicted WET soluble lead concentrations and the waste classification for excavated soil within this area as represented by borings B4 through B8 based on the calculated total lead UCLs and the relationship between total and WET soluble lead.

Excavation Depth	90% UCL Total Lead (mg/kg)	90% UCL Predicted WET Lead (mg/l)	95% UCL Total Lead (mg/kg)	95% UCL Predicted WET Lead (mg/l)	Waste Classification
0 to 0.5 foot	182.5	11.1	194.3	11.9	Hazardous
Underlying soil (0.5 to 2.0 feet)	134.6	8.2	143.7	8.8	Hazardous
0 to 1.0 foot	182.5	11.1	194.3	11.9	Hazardous
Underlying soil (1.0 to 2.0 feet)	110.6	6.7	118.4	7.2	Hazardous
0 to 1.5 feet	182.5	11.1	194.3	11.9	Hazardous
Underlying soil (1.5 to 2.0 feet)	38.7	2.4	42.5	2.6	Non-hazardous
0 to 2.0 feet	146.6	8.9	156.4	9.5	Hazardous

90% UCL applicable for waste classification and onsite reuse; 95% UCL applicable for risk assessment and offsite disposal
Predicted WET lead concentrations were calculated using the equation of the regression line: $y = 0.0610x$

Based on the above table, soil excavated to a depth of 2.0 feet or shallower would be classified as a California hazardous waste since the 90% and 95% UCL-predicted WET soluble lead concentrations are greater than the STLC value for lead of 5.0 mg/l. Consequently, soil excavated to a depth of 2.0 feet or shallower could not be reused onsite and should be either (1) managed and disposed of as a California hazardous waste or (2) stockpiled and resampled to confirm waste classification in accordance with specific disposal facility acceptance criteria, if applicable.

6.3 KER-99 POC – Borings B9 through B16

Total lead concentrations ranged from less than the laboratory RL of 5.0 mg/kg to 49 mg/kg, with an average total lead concentration of 15.0 mg/kg. Soil excavated to a depth of 2.0 feet or shallower within this area will not require special soil handling and disposal procedures based on lead content and can be reused or disposed of as non-hazardous soil since the total lead concentrations are less than 50 mg/kg for each sample interval.

6.4 Worker Protection

Per Caltrans' requirements, the contractor(s) should prepare a project-specific Lead Compliance Plan (CCR Title 8, Section 1532.1, the "Lead in Construction" standard) to minimize worker exposure to lead-impacted soil. The plan should include protocols for environmental and personnel monitoring, requirements for personal protective equipment, and other health and safety protocols and procedures for the handling of lead-impacted soil.

7.0 REPORT LIMITATIONS

This report has been prepared exclusively for Caltrans. The information contained herein is only valid as of the date of the report and will require an update to reflect additional information obtained.

This report is not a comprehensive site characterization and should not be construed as such. The findings as presented in this report are predicated on the results of the limited sampling and laboratory testing performed. In addition, the information obtained is not intended to address potential impacts related to sources other than those specified herein. Therefore, the report should be deemed conclusive with respect to only the information obtained. We make no warranty, express or implied, with respect to the content of this report or any subsequent reports, correspondence or consultation. We strived to perform the services summarized herein in accordance with the local standard of care in the geographic region at the time the services were rendered.

0 1
Scale in Miles

GEOCON
CONSULTANTS, INC.
3160 GOLD VALLEY DR – SUITE 800 – RANCHO CORDOVA, CA 95742
PHONE 916.852.9118 – FAX 916.852.9132

KER-178 and KER-99 Pedestrian OC

Kern County, California

GEOCON Proj. No. S9525-06-27

VICINITY MAP
KER-178 POC

Task Order No. 27, EA 06-0H6400 | June 2011 | Figure 1-1

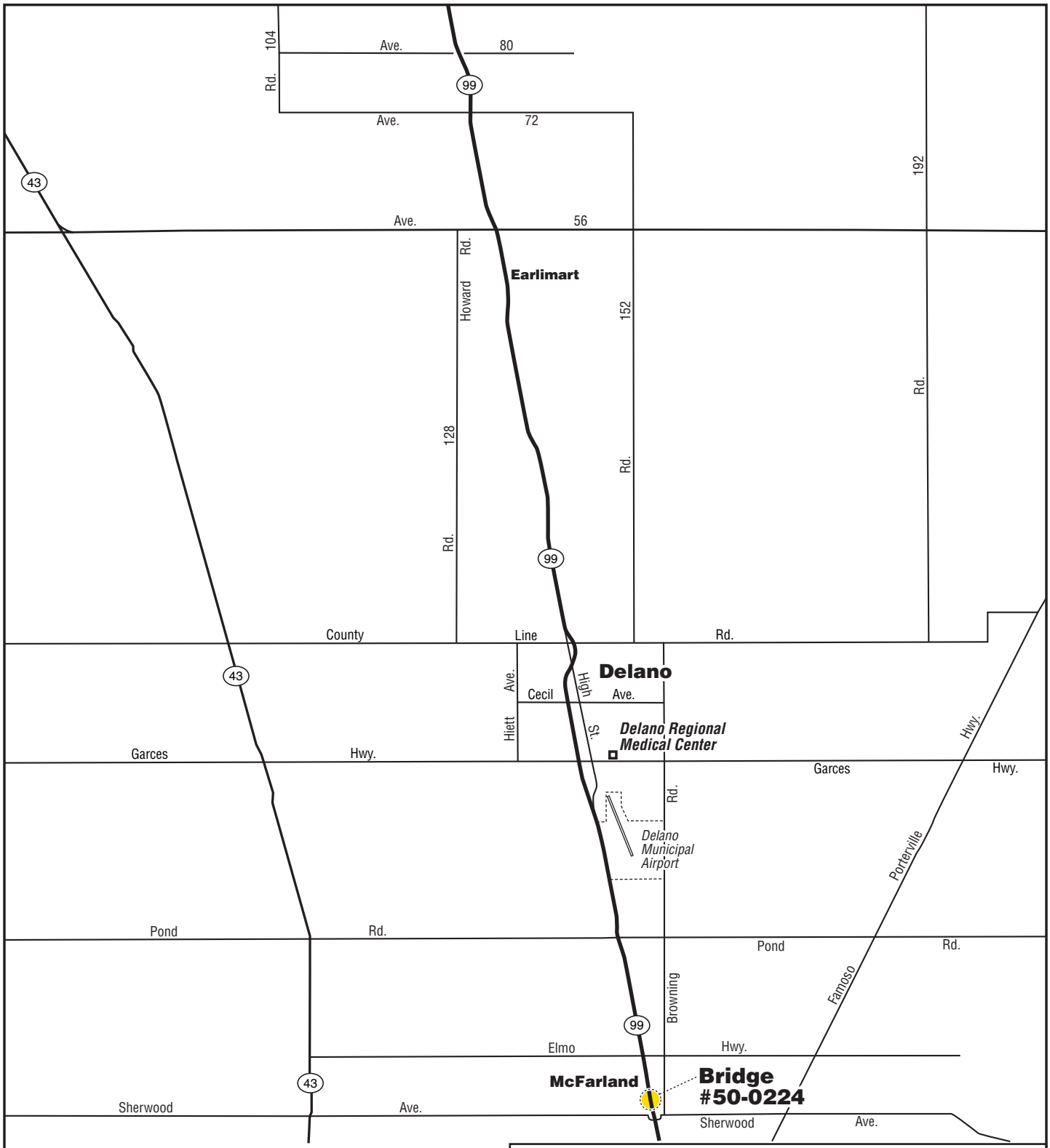

0 1 2 3
Scale in Miles

GEOCON
CONSULTANTS, INC.
3160 GOLD VALLEY DR – SUITE 800 – RANCHO CORDOVA, CA 95742
PHONE 916.852.9118 – FAX 916.852.9132

KER-178 and KER-99 Pedestrian OC

Kern County, California	**VICINITY MAP** **KER-99 POC**	
GEOCON Proj. No. S9525-06-27		
Task Order No. 27, EA 06-0H6400	June 2011	Figure 1-2

GEOCON
CONSULTANTS, INC.
3160 GOLD VALLEY DR – SUITE 800 – RANCHO CORDOVA, CA 95742
PHONE 916.852.9118 – FAX 916.852.9132

KER-178 and KER-99 Pedestrian OC

Kern County, California	**SITE PLAN KER-178 POC**	
GEOCON Proj. No. S9525-06-27		
Task Order No. 27, EA 06-0H6400	June 2011	Figure 2-1

GEOCON
CONSULTANTS, INC.
3160 GOLD VALLEY DR – SUITE 800 – RANCHO CORDOVA, CA 95742
PHONE 916.852.9118 – FAX 916.852.9132

KER-178 and KER-99 Pedestrian OC

Kern County, California

GEOCON Proj. No. S9525-06-27

Task Order No. 27, EA 06-0H6400

SITE PLAN
KER-99 POC

June 2011

Figure 2-2

TABLE 1
SUMMARY OF SOIL BORING COORDINATES AND LEAD ANALYTICAL RESULTS
EA NO. 06-0H6400
KER-178 AND KER-99 PEDESTRIAN OVERCROSSINGS
KERN COUNTY, CALIFORNIA

BORING ID	SAMPLE DATE	LATITUDE	LONGITUDE	TOTAL LEAD (mg/kg)	WET LEAD (mg/l)
KER-178 POC AT SUNNY LANE					
B1-0	6/6/2011	35.393615356	-118.971883918	54	3.2
B1-1.5	6/6/2011			12	---
B2-0	6/6/2011	35.393561705	-118.972085475	27	---
B2-1.5	6/6/2011			<5.0	---
B3-0	6/6/2011	35.393484869	-118.972256595	15	---
B3-1.5	6/6/2011			<5.0	---
B4-0	6/6/2011	35.393105319	-118.971785657	210	**16** (<0.25)
B4-1.5	6/6/2011			5.4	---
B5-0	6/6/2011	35.393057225	-118.971899158	210	**8.0** (<0.25)
B5-1.5	6/6/2011			<5.0	---
B6-0	6/6/2011	35.393057104	-118.972070077	<5.0	---
B6-1.5	6/6/2011			73	4.5
B7-0	6/6/2011	35.393277236	-118.972039033	75	**6.7**
B7-1.5	6/6/2011			22	---
B8-0	6/6/2011	35.393268921	-118.972214397	180	**12** (0.33)
B8-1.5	6/6/2011			16	---
KER-99 POC AT KERN AVENUE					
B9-0	6/6/2011	35.678251528	-119.226278650	30	---
B9-1.5	6/6/2011			<5.0	---
B10-0	6/6/2011	35.678492523	-119.226289124	28	---
B10-1.5	6/6/2011			<5.0	---
B11-0	6/6/2011	35.678599239	-119.226421378	14	---
B11-1.5	6/6/2011			<5.0	---
B12-0	6/6/2011	35.678537769	-119.226672135	32	---
B12-1.5	6/6/2011			<5.0	---
B13-0	6/6/2011	35.678516269	-119.227033867	37	---
B13-1.5	6/6/2011			<5.0	---
B14-0	6/6/2011	35.678097380	-119.227743358	15	---
B14-1.5	6/6/2011			<5.0	---
B15-0	6/6/2011	35.678324208	-119.227839857	49	---
B15-1.5	6/6/2011			<5.0	---
B16-0	6/6/2011	35.678484891	-119.227848663	15	---
B16-1.5	6/6/2011			<5.0	---

TABLE 1
SUMMARY OF SOIL BORING COORDINATES AND LEAD ANALYTICAL RESULTS
EA NO. 06-0H6400
KER-178 AND KER-99 PEDESTRIAN OVERCROSSINGS
KERN COUNTY, CALIFORNIA

BORING ID	SAMPLE DATE	LATITUDE	LONGITUDE	TOTAL LEAD (mg/kg)	WET LEAD (mg/l)

Notes: B1-0

Top of sample depth interval in feet below ground surface

Boring identification

WET = Waste Extraction Test by EPA Test Method 7420

mg/kg = Milligrams per kilogram

mg/l = Milligrams per liter

POC = Pedestrian overcrossing

< = Less than the laboratory reporting limit

--- = Not analyzed

(0.33) = Toxicity Characteristic Leaching Procedure soluble lead concentration

WET soluble lead concentrations in **bold** type are greater than the lead Soluble Threshold Limit Concentration of 5.0 mg/l

APPENDIX A

June 16, 2011

ELAP No.: 1838
NELAP No.: 02107CA
CSDLAC No.: 10196
ORELAP No.: CA300003

Workorder No.: 118289

Chris Giuntoli
Geocon Consultants, Inc.
6671 Brisa Street
Livermore, CA 94550

TEL: (925) 371-5900
FAX: (925) 371-5915

RE: KERN/TULARE BRIDGES, S9525-06-27

Attention: Chris Giuntoli

Enclosed are the results for sample(s) received on June 08, 2011 by Advanced Technology Laboratories . The sample(s) are tested for the parameters as indicated in the enclosed chain of custody in accordance with the applicable laboratory certifications.

Thank you for the opportunity to service the needs of your company.

Please feel free to call me at (562)989-4045 if I can be of further assistance to your company.

Sincerely,

for Eddie F. Rodriguez
Laboratory Director

The cover letter is an integral part of this analytical report. This Laboratory Report cannot be reproduced in part or in its entirety without written permission from the client and Advanced Technology Laboratories.

Advanced Technology Laboratories
3275 Walnut Avenue Signal Hill, CA 90755 Tel: 562 989-4045 Fax: 562 989-4040

Advanced Technology Laboratories

Date: 6/16/2011

ANALYTICAL RESULTS

LEAD BY ICP
EPA 6010B

CLIENT:	Geocon Consultants, Inc.	**Lab Order:**	118289
Project:	KERN/TULARE BRIDGES, S9525-06-27	**Date Received**	6/8/2011 10:04:00 AM
Project No:		**Matrix:**	Soil
Analyte:	Lead	**Analyst:**	IL

Laboratory ID	Client Sample ID	Results	Units	QC Batch	PQL	DF	Date Collected	Date Analyzed
118289-001A	B1-0	54	mg/Kg	73569	5.0	1	6/6/2011	6/14/2011
118289-002A	B1-1.5	12	mg/Kg	73569	5.0	1	6/6/2011	6/14/2011
118289-003A	B2-0	27	mg/Kg	73569	5.0	1	6/6/2011	6/14/2011
118289-004A	B2-1.5	ND	mg/Kg	73569	5.0	1	6/6/2011	6/14/2011
118289-005A	B3-0	15	mg/Kg	73569	5.0	1	6/6/2011	6/14/2011
118289-006A	B3-1.5	ND	mg/Kg	73569	5.0	1	6/6/2011	6/14/2011
118289-007A	B4-0	210	mg/Kg	73569	5.0	1	6/6/2011	6/14/2011
118289-008A	B4-1.5	5.4	mg/Kg	73569	5.0	1	6/6/2011	6/14/2011
118289-009A	B5-0	210	mg/Kg	73569	5.0	1	6/6/2011	6/14/2011
118289-010A	B5-1.5	ND	mg/Kg	73569	5.0	1	6/6/2011	6/14/2011
118289-011A	B6-0	ND	mg/Kg	73569	5.0	1	6/6/2011	6/14/2011
118289-012A	B6-1.5	73	mg/Kg	73569	5.0	1	6/6/2011	6/14/2011
118289-013A	B7-0	75	mg/Kg	73569	5.0	1	6/6/2011	6/14/2011
118289-014A	B7-1.5	22	mg/Kg	73569	5.0	1	6/6/2011	6/14/2011
118289-015A	B8-0	180	mg/Kg	73569	5.0	1	6/6/2011	6/14/2011
118289-016A	B8-1.5	16	mg/Kg	73569	5.0	1	6/6/2011	6/14/2011
118289-017A	B9-0	30	mg/Kg	73569	5.0	1	6/6/2011	6/14/2011
118289-018A	B9-1.5	ND	mg/Kg	73569	5.0	1	6/6/2011	6/14/2011

Qualifiers:

B	Analyte detected in the associated Method Blank	E	Value above quantitation range
H	Holding times for preparation or analysis exceeded	ND	Not Detected at the Reporting Limit
S	Spike/Surrogate outside of limits due to matrix interference		Results are wet unless otherwise specified
DO	Surrogate Diluted Out		

Advanced Technology Laboratories
3275 Walnut Avenue, Signal Hill, CA 90755 Tel: 562. 989.4045 Fax: 562.989.4040

Advanced Technology Laboratories

Date: 6/16/2011

ANALYTICAL RESULTS

LEAD BY ICP
EPA 6010B

CLIENT:	Geocon Consultants, Inc.	**Lab Order:**	118289
Project:	KERN/TULARE BRIDGES, S9525-06-27	**Date Received**	6/8/2011 10:04:00 AM
Project No:		**Matrix:**	Soil
Analyte:	Lead	**Analyst:**	IL

Laboratory ID	Client Sample ID	Results	Units	QC Batch	PQL	DF	Date Collected	Date Analyzed
118289-019A	B10-0	28	mg/Kg	73569	5.0	1	6/6/2011	6/14/2011
118289-020A	B10-1.5	ND	mg/Kg	73569	5.0	1	6/6/2011	6/14/2011
118289-021A	B11-0	14	mg/Kg	73570	5.0	1	6/6/2011	6/14/2011
118289-022A	B11-1.5	ND	mg/Kg	73570	5.0	1	6/6/2011	6/14/2011
118289-023A	B12-0	32	mg/Kg	73570	5.0	1	6/6/2011	6/14/2011
118289-024A	B12-1.5	ND	mg/Kg	73570	5.0	1	6/6/2011	6/14/2011
118289-025A	B13-0	37	mg/Kg	73570	5.0	1	6/6/2011	6/14/2011
118289-026A	B13-1.5	ND	mg/Kg	73570	5.0	1	6/6/2011	6/14/2011
118289-027A	B14-0	15	mg/Kg	73570	5.0	1	6/6/2011	6/14/2011
118289-028A	B14-1.5	ND	mg/Kg	73570	5.0	1	6/6/2011	6/14/2011
118289-029A	B15-0	49	mg/Kg	73570	5.0	1	6/6/2011	6/14/2011
118289-030A	B15-1.5	ND	mg/Kg	73570	5.0	1	6/6/2011	6/14/2011
118289-031A	B16-0	15	mg/Kg	73570	5.0	1	6/6/2011	6/14/2011
118289-032A	B16-1.5	ND	mg/Kg	73570	5.0	1	6/6/2011	6/14/2011

Qualifiers:

B	Analyte detected in the associated Method Blank	E	Value above quantitation range
H	Holding times for preparation or analysis exceeded	ND	Not Detected at the Reporting Limit
S	Spike/Surrogate outside of limits due to matrix interference		Results are wet unless otherwise specified
DO	Surrogate Diluted Out		

Advanced Technology Laboratories

3275 Walnut Avenue, Signal Hill, CA 90755 Tel: 562. 989.4045 Fax: 562.989.4040

CLIENT: Geocon Consultants, Inc.
Work Order: 118289
Project: KERN/TULARE BRIDGES, S9525-06-27

ANALYTICAL QC SUMMARY REPORT

TestCode: 6010_SPB

Sample ID: **MB-73569A** SampType: **MBLK** TestCode: **6010_SPB** Units: **mg/Kg** Prep Date: **6/14/2011** RunNo: **133969**
Client ID: **PBS** Batch ID: **73569** TestNo: **EPA 6010B** **EPA 3050M** Analysis Date: **6/14/2011** SeqNo: **2187986**

Analyte	Result	PQL	SPK value	SPK Ref Val	%REC	LowLimit	HighLimit	RPD Ref Val	%RPD	RPDLimit	Qual
Lead	0.318	5.0									

Sample ID: **LCS-73569** SampType: **LCS** TestCode: **6010_SPB** Units: **mg/Kg** Prep Date: **6/14/2011** RunNo: **133969**
Client ID: **LCSS** Batch ID: **73569** TestNo: **EPA 6010B** **EPA 3050M** Analysis Date: **6/14/2011** SeqNo: **2187987**

Analyte	Result	PQL	SPK value	SPK Ref Val	%REC	LowLimit	HighLimit	RPD Ref Val	%RPD	RPDLimit	Qual
Lead	244.255	5.0	250.0	0.3181	97.6	80	120				

Sample ID: **118289-010A-DUP** SampType: **DUP** TestCode: **6010_SPB** Units: **mg/Kg** Prep Date: **6/14/2011** RunNo: **133969**
Client ID: **B5-1.5** Batch ID: **73569** TestNo: **EPA 6010B** **EPA 3050M** Analysis Date: **6/14/2011** SeqNo: **2187998**

Analyte	Result	PQL	SPK value	SPK Ref Val	%REC	LowLimit	HighLimit	RPD Ref Val	%RPD	RPDLimit	Qual
Lead	1.718	5.0						1.775	0	20	

Sample ID: **118289-010A-MS** SampType: **MS** TestCode: **6010_SPB** Units: **mg/Kg** Prep Date: **6/14/2011** RunNo: **133969**
Client ID: **B5-1.5** Batch ID: **73569** TestNo: **EPA 6010B** **EPA 3050M** Analysis Date: **6/14/2011** SeqNo: **2187999**

Analyte	Result	PQL	SPK value	SPK Ref Val	%REC	LowLimit	HighLimit	RPD Ref Val	%RPD	RPDLimit	Qual
Lead	224.104	5.0	250.0	1.775	88.9	34	126				

Sample ID: **MB-73569B** SampType: **MBLK** TestCode: **6010_SPB** Units: **mg/Kg** Prep Date: **6/14/2011** RunNo: **133969**
Client ID: **PBS** Batch ID: **73569** TestNo: **EPA 6010B** **EPA 3050M** Analysis Date: **6/14/2011** SeqNo: **2188000**

Analyte	Result	PQL	SPK value	SPK Ref Val	%REC	LowLimit	HighLimit	RPD Ref Val	%RPD	RPDLimit	Qual
Lead	0.288	5.0									

Qualifiers:

B	Analyte detected in the associated Method Blank	E	Value above quantitation range	H	Holding times for preparation or analysis exceeded
ND	Not Detected at the Reporting Limit	R	RPD outside accepted recovery limits	S	Spike/Surrogate outside of limits due to matrix interference
DO	Surrogate Diluted Out		Calculations are based on raw values		

CLIENT: Geocon Consultants, Inc.
Work Order: 118289
Project: KERN/TULARE BRIDGES, S9525-06-27

ANALYTICAL QC SUMMARY REPORT

TestCode: 6010_SPB

Sample ID: **118289-020A-DUP** SampType: **DUP** TestCode: **6010_SPB** Units: **mg/Kg** Prep Date: **6/14/2011** RunNo: **133969**
Client ID: **B10-1.5** Batch ID: **73569** TestNo: **EPA 6010B** **EPA 3050M** Analysis Date: **6/14/2011** SeqNo: **2188011**

Analyte	Result	PQL	SPK value	SPK Ref Val	%REC	LowLimit	HighLimit	RPD Ref Val	%RPD	RPDLimit	Qual
Lead	3.166	5.0						2.832	0	20	

Sample ID: **118289-020A-MS** SampType: **MS** TestCode: **6010_SPB** Units: **mg/Kg** Prep Date: **6/14/2011** RunNo: **133969**
Client ID: **B10-1.5** Batch ID: **73569** TestNo: **EPA 6010B** **EPA 3050M** Analysis Date: **6/14/2011** SeqNo: **2188012**

Analyte	Result	PQL	SPK value	SPK Ref Val	%REC	LowLimit	HighLimit	RPD Ref Val	%RPD	RPDLimit	Qual
Lead	202.360	5.0	250.0	2.832	79.8	34	126				

Sample ID: **118289-020A-MSD** SampType: **MSD** TestCode: **6010_SPB** Units: **mg/Kg** Prep Date: **6/14/2011** RunNo: **133969**
Client ID: **B10-1.5** Batch ID: **73569** TestNo: **EPA 6010B** **EPA 3050M** Analysis Date: **6/14/2011** SeqNo: **2188013**

Analyte	Result	PQL	SPK value	SPK Ref Val	%REC	LowLimit	HighLimit	RPD Ref Val	%RPD	RPDLimit	Qual
Lead	215.184	5.0	250.0	2.832	84.9	34	126	202.4	6.14	20	

Qualifiers:

B	Analyte detected in the associated Method Blank	E	Value above quantitation range	H	Holding times for preparation or analysis exceeded
ND	Not Detected at the Reporting Limit	R	RPD outside accepted recovery limits	S	Spike/Surrogate outside of limits due to matrix interference
DO	Surrogate Diluted Out		Calculations are based on raw values		

Advanced Technology Laboratories
3275 Walnut Avenue, Signal Hill, CA 90755 Tel: 562. 989.4045 Fax: 562.989.4040

CLIENT: Geocon Consultants, Inc.
Work Order: 118289
Project: KERN/TULARE BRIDGES, S9525-06-27

ANALYTICAL QC SUMMARY REPORT

TestCode: 6010_SPB

Sample ID: **MB-73570A** SampType: **MBLK** TestCode: **6010_SPB** Units: **mg/Kg** Prep Date: **6/14/2011** RunNo: **133970**
Client ID: **PBS** Batch ID: **73570** TestNo: **EPA 6010B** **EPA 3050M** Analysis Date: **6/14/2011** SeqNo: **2188040**

Analyte	Result	PQL	SPK value	SPK Ref Val	%REC	LowLimit	HighLimit	RPD Ref Val	%RPD	RPDLimit	Qual
Lead	0.296	5.0									

Sample ID: **LCS-73570** SampType: **LCS** TestCode: **6010_SPB** Units: **mg/Kg** Prep Date: **6/14/2011** RunNo: **133970**
Client ID: **LCSS** Batch ID: **73570** TestNo: **EPA 6010B** **EPA 3050M** Analysis Date: **6/14/2011** SeqNo: **2188041**

Analyte	Result	PQL	SPK value	SPK Ref Val	%REC	LowLimit	HighLimit	RPD Ref Val	%RPD	RPDLimit	Qual
Lead	235.286	5.0	250.0	0.2963	94.0	80	120				

Sample ID: **118289-030A-DUP** SampType: **DUP** TestCode: **6010_SPB** Units: **mg/Kg** Prep Date: **6/14/2011** RunNo: **133970**
Client ID: **B15-1.5** Batch ID: **73570** TestNo: **EPA 6010B** **EPA 3050M** Analysis Date: **6/14/2011** SeqNo: **2188052**

Analyte	Result	PQL	SPK value	SPK Ref Val	%REC	LowLimit	HighLimit	RPD Ref Val	%RPD	RPDLimit	Qual
Lead	4.592	5.0						4.000	0	20	

Sample ID: **118289-030A-MS** SampType: **MS** TestCode: **6010_SPB** Units: **mg/Kg** Prep Date: **6/14/2011** RunNo: **133970**
Client ID: **B15-1.5** Batch ID: **73570** TestNo: **EPA 6010B** **EPA 3050M** Analysis Date: **6/14/2011** SeqNo: **2188053**

Analyte	Result	PQL	SPK value	SPK Ref Val	%REC	LowLimit	HighLimit	RPD Ref Val	%RPD	RPDLimit	Qual
Lead	200.508	5.0	250.0	4.000	78.6	34	126				

Sample ID: **MB-73570B** SampType: **MBLK** TestCode: **6010_SPB** Units: **mg/Kg** Prep Date: **6/14/2011** RunNo: **133970**
Client ID: **PBS** Batch ID: **73570** TestNo: **EPA 6010B** **EPA 3050M** Analysis Date: **6/14/2011** SeqNo: **2188054**

Analyte	Result	PQL	SPK value	SPK Ref Val	%REC	LowLimit	HighLimit	RPD Ref Val	%RPD	RPDLimit	Qual
Lead	0.269	5.0									

Qualifiers:

B	Analyte detected in the associated Method Blank	E	Value above quantitation range	H	Holding times for preparation or analysis exceeded
ND	Not Detected at the Reporting Limit	R	RPD outside accepted recovery limits	S	Spike/Surrogate outside of limits due to matrix interference
DO	Surrogate Diluted Out		Calculations are based on raw values		

Advanced Technology Laboratories
3275 Walnut Avenue, Signal Hill, CA 90755 Tel: 562. 989.4045 Fax: 562.989.4040

CLIENT: Geocon Consultants, Inc.
Work Order: 118289
Project: KERN/TULARE BRIDGES, S9525-06-27

ANALYTICAL QC SUMMARY REPORT

TestCode: 6010_SPB

Sample ID: **118333-009A-DUP** SampType: **DUP** TestCode: **6010_SPB** Units: **mg/Kg** Prep Date: **6/14/2011** RunNo: **133970**
Client ID: **ZZZZZZ** Batch ID: **73570** TestNo: **EPA 6010B** **EPA 3050M** Analysis Date: **6/14/2011** SeqNo: **2188065**

Analyte	Result	PQL	SPK value	SPK Ref Val	%REC	LowLimit	HighLimit	RPD Ref Val	%RPD	RPDLimit	Qual
Lead	83.963	5.0						81.58	2.88	20	

Sample ID: **118333-009A-MS** SampType: **MS** TestCode: **6010_SPB** Units: **mg/Kg** Prep Date: **6/14/2011** RunNo: **133970**
Client ID: **ZZZZZZ** Batch ID: **73570** TestNo: **EPA 6010B** **EPA 3050M** Analysis Date: **6/14/2011** SeqNo: **2188066**

Analyte	Result	PQL	SPK value	SPK Ref Val	%REC	LowLimit	HighLimit	RPD Ref Val	%RPD	RPDLimit	Qual
Lead	264.490	5.0	250.0	81.58	73.2	34	126				

Sample ID: **118333-009A-MSD** SampType: **MSD** TestCode: **6010_SPB** Units: **mg/Kg** Prep Date: **6/14/2011** RunNo: **133970**
Client ID: **ZZZZZZ** Batch ID: **73570** TestNo: **EPA 6010B** **EPA 3050M** Analysis Date: **6/14/2011** SeqNo: **2188067**

Analyte	Result	PQL	SPK value	SPK Ref Val	%REC	LowLimit	HighLimit	RPD Ref Val	%RPD	RPDLimit	Qual
Lead	289.150	5.0	250.0	81.58	83.0	34	126	264.5	8.91	20	

Qualifiers:

B	Analyte detected in the associated Method Blank	E	Value above quantitation range	H	Holding times for preparation or analysis exceeded
ND	Not Detected at the Reporting Limit	R	RPD outside accepted recovery limits	S	Spike/Surrogate outside of limits due to matrix interference
DO	Surrogate Diluted Out		Calculations are based on raw values		

Advanced Technology Laboratories
3275 Walnut Avenue, Signal Hill, CA 90755 Tel: 562. 989.4045 Fax: 562.989.4040

CHAIN OF CUSTODY RECORD

ADVANCED TECHNOLOGY LABORATORIES
3275 Walnut Ave., Signal Hill, CA 90755
Tel: (562) 989-4045 • Fax: (562) 989-4040

P.O.#: _____ Quote #: _____

Logged By: _____ Date: 6/10/11

NOTE: Please include your Quote No. to ensure proper pricing of your project.

FOR LABORATORY USE ONLY:

Method of Transport: ☐ Client ☐ ATL ☐ FedEx ☐ OnTrac ☒ GSO ☐ Other: _____

Sample Condition Upon Receipt (20°C)

1. CHILLED	Y ☐ N ☑	4. CUSTODY SEAL	Y ☐ N ☑
2. HEADSPACE (VOA)	Y ☐ N ☐ (NA)	5. # OF SPLS MATCH COC	Y ☑ N ☐
3. CONTAINER INTACT	Y ☑ N ☐	6. PRESERVED	Y ☐ N ☑

Client: **Geocon Consultants, Inc.**
Attn: CHRIS GIUNTOLI
Address: 6671 Brisa Street
City: Livemore State: CA Zip Code: 94550
TEL: (925) 371-5900
FAX: (925) 371-5915

Project Name: KERN/TULARE BRIDGES Project #: S9525-06-27 Sampler: (Printed Name) CHRIS GIUNTOLI (Signature)

Relinquished by: (Signature and Printed Name)	Date: 6/7/11	Time: 1630	Received by: (Signature and Printed Name)	Date: 6/8/11	Time: 10:04
Relinquished by: (Signature and Printed Name)	Date:	Time:	Received by: (Signature and Printed Name)	Date:	Time:
Relinquished by: (Signature and Printed Name)	Date:	Time:	Received by: (Signature and Printed Name)	Date:	Time:

I hereby authorize ATL to perform the work indicated below:
Project Mgr /Submitter: CGIUNTOLI (Print Name) 6/6/11 (Date)
Signature

Send Report To: Attn: SAME Co: _____ Addr: _____ City: State: Zip:

Bill To: Attn: SAME Co: _____ Addr: _____ City: State: Zip:

Special Instructions/Comments:

Sample/Records - Archival & Disposal
Unless otherwise requested by client, all samples will be disposed 45 days after receipt and records will be disposed 1 year after submittal of final report.

Storage Fees (applies when storage is requested):
- Sample : $2.00 / sample / mo (after 45 days)
- Records : $1.00 / ATL workorder / mo (after 1 year)

Circle or Add Analysis(es) Requested

Q A / Q C: RTNE ☐ CT ☒ Legal ☐ SWRCB ☐ Logcode _____ OTHER _____

ITEM	LAB USE ONLY: Batch #: / Lab No.	Sample Description: Sample I.D. / Location	Date	Time	8081A (Pesticides)	8082 (PCB)	8260B (Volatiles)	8270C (BNA)	6010B (Total Metal)	8015B (GRO) / 8021 (BTEX)	8015B (DRO)	TITLE 22 / CAM 17 (6010 / 7000) TOTAL LEAD	SEDIMENT	SOLID	SOIL	DRINKING WATER	GROUND WATER	WASTEWATER	STORMWATER	AQUEOUS	TAT	Container(s) #	Container(s) Type	PRESERVATION	REMARKS
	1182489-001	B1-0	6/6/11									X			X						E	1	P B		
	2	B1-1.5																							
	3	B2-0																							
	4	B2-1.5																							
	5	B3-0																							
	6	B3-1.5																							
	7	B4-0																							
	8	B4-1.5																							
	9	B5-0																							
	10	B5-1.5																							

• TAT starts 8 a.m. following day if samples received after 5 p.m.

TAT: ☐A= Overnight ≤ 24 hrs ☐B= Emergency Next workday ☐C= Critical 2 Workdays ☐D= Urgent 3 Workdays ☐E= Routine 7 Workdays

Container Types: T=Tube V=VOA L=Liter P=Pint J=Jar B=Tedlar G=Glass P=Plastic M=Metal

Preservatives: H=Hcl N=HNO_3 S=H_2SO_4 C=4°C Z=$Zn(AC)_2$ O=NaOH T=$Na_2S_2O_3$

DISTRIBUTION: **White** with report, **Yellow** to folder, **Pink** to submitter.

CHAIN OF CUSTODY RECORD

ADVANCED TECHNOLOGY LABORATORIES
3275 Walnut Ave., Signal Hill, CA 90755
Tel: (562) 989-4045 • Fax: (562) 989-4040

P.O.#: _____ Quote #: _____

Logged By: _____ Date: _____

NOTE: Please include your Quote No. to ensure proper pricing of your project.

FOR LABORATORY USE ONLY:

Method of Transport: ☐ Client ☐ ATL ☐ FedEx ☐ OnTrac ☒ GSO ☐ Other: _____

Sample Condition Upon Receipt:
1. CHILLED Y☐ N☐
2. HEADSPACE (VOA) Y☐ N☐
3. CONTAINER INTACT Y☐ N☐
4. CUSTODY SEAL Y☐ N☐
5. # OF SPLS MATCH COC Y☐ N☐
6. PRESERVED Y☐ N☐

Client: **Geocon Consultants, Inc.**
Attn: CHRIS GIUNTOLI
Address: 6671 Brisa Street
City: Livermore State: CA Zip Code: 94550
TEL: (925) 371-5900
FAX: (925) 371-5915

Project Name: KERN/TULARE BRIDGES Project #: S9525-06-27 Sampler: (Printed Name) CHRIS GIUNTOLI (Signature)

Relinquished by: (Signature and Printed Name) Date: 6/7/11 Time: 1630 Received by: (Signature and Printed Name) Date: 6/8/11 Time: 10:04
Relinquished by: (Signature and Printed Name) Date: Time: Received by: (Signature and Printed Name) Date: Time:
Relinquished by: (Signature and Printed Name) Date: Time: Received by: (Signature and Printed Name) Date: Time:

I hereby authorize ATL to perform the work indicated below:
Project Mgr /Submitter: CGIUNTOLI 6/6/11
Print Name Date
Signature

Send Report To: Attn: SAME Co: Addr: City: State: Zip:

Bill To: Attn: SAME Co: Addr: City: State: Zip:

Special Instructions/Comments:

Sample/Records - Archival & Disposal
Unless otherwise requested by client, all samples will be disposed 45 days after receipt and records will be disposed 1 year after submittal of final report.

Storage Fees (applies when storage is requested):
- Sample : $2.00 / sample / mo (after 45 days)
- Records : $1.00 / ATL workorder / mo (after 1 year)

Circle or Add Analysis(es) Requested

ITEM	LAB USE ONLY: Batch #: / Lab No.	Sample Description: Sample I.D. / Location	Date	Time	8081A (Pesticides)	8082 (PCB)	8260B (Volatiles)	8270C (BNA)	6010B (Total Metal)	8015B (GRO) / 8021 (BTEX)	8015B (DRO)	TITLE 22 / CAM 17 (6010 / 7000) TOTAL LEAD	SPECIFY APPROPRIATE MATRIX: SEDIMENT	SOLID	SOIL	DRINKING WATER	GROUND WATER	WASTEWATER	STORMWATER	AQUEOUS	TAT	Container(s) #	Container(s) Type	PRESERVATION	REMARKS
	118255-11	B6-0	6/6/11									X			X						E	1	P B		
	12	B6-1.5																							
	13	B7-0																							
	14	B7-1.5																							
	15	B8-0																							
	16	B8-1.5																							
	17	B9-0																							
	18	B9-1.5																							
	19	B10-0																							
	20	B10-1.5																							

Q A / Q C
RTNE ☐
CT ☒
Legal ☐
SWRCB ☐
Logcode _____
OTHER _____

• TAT starts 8 a.m. following day if samples received after 5 p.m.

TAT: ☐A= Overnight ≤ 24 hrs ☐B= Emergency Next workday ☐C= Critical 2 Workdays ☐D= Urgent 3 Workdays ☐E= Routine 7 Workdays

Container Types: T=Tube V=VOA L=Liter P=Pint J=Jar B=Tedlar G=Glass P=Plastic M=Metal

Preservatives: H=Hcl N=HNO_3 S=H_2SO_4 C=4°C Z=$Zn(AC)_2$ O=NaOH T=$Na_2S_2O_3$

DISTRIBUTION: **White** with report, **Yellow** to folder, **Pink** to submitter.

CHAIN OF CUSTODY RECORD

ADVANCED TECHNOLOGY LABORATORIES
3275 Walnut Ave., Signal Hill, CA 90755
Tel: (562) 989-4045 • Fax: (562) 989-4040

P.O.#: _____ Quote #: _____

Logged By: _____ Date: _____

NOTE: Please include your Quote No. to ensure proper pricing of your project.

FOR LABORATORY USE ONLY:

Method of Transport: ☐ Client ☐ ATL ☐ FedEx ☐ OnTrac ☒ GSO ☐ Other: _____

Sample Condition Upon Receipt:
1. CHILLED Y☐ N☐ 4. CUSTODY SEAL Y☐ N☐
2. HEADSPACE (VOA) Y☐ N☐ 5. # OF SPLS MATCH COC Y☐ N☐
3. CONTAINER INTACT Y☐ N☐ 6. PRESERVED Y☐ N☐

Client: **Geocon Consultants, Inc.** Address: 6671 Brisa Street TEL: (925) 371-5900
Attn: CHRIS GIUNTOLI City: Livermore State: CA Zip Code: 94550 FAX: (925) 371-5915

Project Name: KERN / TULARE BRIDGES Project #: 59525-06-27 Sampler: (Printed Name) CGIUNTOLI (Signature)

Relinquished by: (Signature and Printed Name) Date: 6/7/11 Time: 1630 Received by: (Signature and Printed Name) Date: 6/8/11 Time: 10:04
Relinquished by: (Signature and Printed Name) Date: Time: Received by: (Signature and Printed Name) Date: Time:
Relinquished by: (Signature and Printed Name) Date: Time: Received by: (Signature and Printed Name) Date: Time:

I hereby authorize ATL to perform the work indicated below:
Project Mgr /Submitter: CGIUNTOLI (Print Name) 6/6/11 (Date)
Signature

Send Report To: Attn: SAME Co: Addr: City: State: Zip:

Bill To: Attn: Same Co: Addr: City: State: Zip:

Special Instructions/Comments:

Sample/Records - Archival & Disposal
Unless otherwise requested by client, all samples will be disposed 45 days after receipt and records will be disposed 1 year after submittal of final report.
Storage Fees (applies when storage is requested):
- Sample : $2.00 / sample / mo (after 45 days)
- Records : $1.00 / ATL workorder / mo (after 1 year)

Circle or Add Analysis(es) Requested: 8081A (Pesticides), 8082 (PCB), 8260B (Volatiles), 8270C (BNA), 6010B (Total Metal), 8015B (GRO) / 8021 (BTEX), 8015B (DRO), TITLE 22 / CAM 17 (6010 / 7000) TOTAL LEAD

SPECIFY APPROPRIATE MATRIX: SEDIMENT, SOLID, SOIL, DRINKING WATER, GROUND WATER, WASTEWATER, STORMWATER, AQUEOUS

Q A / Q C: RTNE ☐ CT ☒ Legal ☐ SWRCB ☐ Logcode ____ OTHER ____

ITEM	LAB USE ONLY: Batch #: / Lab No.	Sample Description: Sample I.D. / Location	Date	Time	TITLE 22 / CAM 17 (6010 / 7000) TOTAL LEAD	SOIL	TAT	Container(s) #	Container(s) Type	PRESERVATION	REMARKS
	1198289-21	B11-0	6/6/11		X	X	E	1	P B		
	22	B11-1.5									
	23	B12-0									
	24	B12-1.5									
	25	B13-0									
	26	B13-1.5									
	27	B14-0									
	28	B14-1.5									
	29	B15-0									
	30	B15-1.5									

• TAT starts 8 a.m. following day if samples received after 5 p.m.

TAT: ☐A= Overnight ≤ 24 hrs ☐B= Emergency Next workday ☐C= Critical 2 Workdays ☐D= Urgent 3 Workdays ☐E= Routine 7 Workdays

Container Types: T=Tube V=VOA L=Liter P=Pint J=Jar B=Tedlar G=Glass P=Plastic M=Metal

Preservatives: H=Hcl N=HNO_3 S=H_2SO_4 C=4°C Z=$Zn(AC)_2$ O=NaOH T=$Na_2S_2O_3$

DISTRIBUTION: **White** with report, **Yellow** to folder, **Pink** to submitter.

CHAIN OF CUSTODY RECORD

ADVANCED TECHNOLOGY LABORATORIES
3275 Walnut Ave., Signal Hill, CA 90755
Tel: (562) 989-4045 • Fax: (562) 989-4040

P.O.#: _____ Quote #: _____
Logged By: _____ Date: _____
NOTE: Please include your Quote No. to ensure proper pricing of your project.

FOR LABORATORY USE ONLY:

Method of Transport: ☐ Client ☐ ATL ☐ FedEx ☐ OnTrac ☑ GSO ☐ Other: _____

Sample Condition Upon Receipt:
1. CHILLED Y☐ N☐ 4. CUSTODY SEAL Y☐ N☐
2. HEADSPACE (VOA) Y☐ N☐ 5. # OF SPLS MATCH COC Y☐ N☐
3. CONTAINER INTACT Y☐ N☐ 6. PRESERVED Y☐ N☐

Client: Geocon Consultants, Inc.
Attn: CHRIS GIUNTOLI
Address: 6671 Brisa Street
City: Livermore State: CA Zip Code: 94550
TEL: (925) 371-5900
FAX: (925) 371-5915

Project Name: KERN/TULARE BRIDGES Project #: S9525-06-27 Sampler: (Printed Name) CGIUNTOLI (Signature) [signature]

Relinquished by: (Signature and Printed Name) [signature] Date: 6/7/11 Time: 1630 Received by: (Signature and Printed Name) [signature] Date: 6/8/11 Time: 10:04
Relinquished by: (Signature and Printed Name) Date: Time: Received by: (Signature and Printed Name) Date: Time:
Relinquished by: (Signature and Printed Name) Date: Time: Received by: (Signature and Printed Name) Date: Time:

I hereby authorize ATL to perform the work indicated below:
Project Mgr /Submitter: CGIUNTOLI (Print Name) 6/6/11 (Date) [signature] (Signature)

Send Report To: Attn: SAME Co: Addr: City: State: Zip:

Bill To: Attn: SAME Co: Addr: City: State: Zip:

Special Instructions/Comments:

Sample/Records - Archival & Disposal
Unless otherwise requested by client, all samples will be disposed 45 days after receipt and records will be disposed 1 year after submittal of final report.
Storage Fees (applies when storage is requested):
- Sample : $2.00 / sample / mo (after 45 days)
- Records : $1.00 / ATL workorder / mo (after 1 year)

Circle or Add Analysis(es) Requested

ITEM	LAB USE ONLY: Batch #: / Lab No.	Sample Description: Sample I.D. / Location	Date	Time	8081A (Pesticides)	8082 (PCB)	8260B (Volatiles)	8270C (BNA)	6010B (Total Metal)	8015B (GRO) / 8021 (BTEX)	8015B (DRO)	TITLE 22 / CAM 17 (6010 / 7000) TOTAL LEAD				SEDIMENT	SOLID	SOIL	DRINKING WATER	GROUND WATER	WASTEWATER	STORMWATER	AQUEOUS	TAT	Container(s) #	Container(s) Type	PRESERVATION	REMARKS
	118259-31	B16-0	6/6/11									X						X						E	1	P B		
	32	B16-1.5	↓									↓						↓						↓	↓	↓		

SPECIFY APPROPRIATE MATRIX

Q A / Q C
RTNE ☐ CT ☑ Legal ☐
SWRCB ☐ Logcode _____
OTHER _____

• TAT starts 8 a.m. following day if samples received after 5 p.m.

TAT: ☐A= Overnight ≤ 24 hrs ☐B= Emergency Next workday ☐C= Critical 2 Workdays ☐D= Urgent 3 Workdays ☐E= Routine 7 Workdays

Container Types: T=Tube V=VOA L=Liter P=Pint J=Jar B=Tedlar G=Glass P=Plastic M=Metal

Preservatives: H=Hcl N=HNO_3 S=H_2SO_4 C=4°C Z=$Zn(AC)_2$ O=NaOH T=$Na_2S_2O_3$

DISTRIBUTION: **White** with report, **Yellow** to folder, **Pink** to submitter.

June 21, 2011

Chris Giuntoli
Geocon Consultants, Inc.
6671 Brisa Street
Livermore, CA 94550

TEL: (925) 371-5900
FAX: (925) 371-5915

ELAP No.: 1838
NELAP No.: 02107CA
CSDLAC No.: 10196
ORELAP No.: CA300003

Workorder No.: 118289

RE: KERN/TULARE BRIDGES, S9525-06-27

Attention: Chris Giuntoli

Enclosed are the results for sample(s) received on June 08, 2011 by Advanced Technology Laboratories . The sample(s) are tested for the parameters as indicated in the enclosed chain of custody in accordance with the applicable laboratory certifications.

This is an addendum report. Please incorporate with documentation previously submitted.

Thank you for the opportunity to service the needs of your company.

Please feel free to call me at (562)989-4045 if I can be of further assistance to your company.

Sincerely,

Eddie F. Rodriguez
Laboratory Director

The cover letter is an integral part of this analytical report. This Laboratory Report cannot be reproduced in part or in its entirety without written permission from the client and Advanced Technology Laboratories.

Advanced Technology Laboratories
3275 Walnut Avenue Signal Hill, CA 90755 Tel: 562 989-4045 Fax: 562 989-4040

CLIENT: Geocon Consultants, Inc.
Project: KERN/TULARE BRIDGES, S9525-06-27
Lab Order: 118289

CASE NARRATIVE

Analytical Comments for Method 7420

Dilution was necessary for samples 118289-007A and 118289-015A, due to sample matrix.

Matrix Spike (MS) and /or Matrix Spike Duplicate (MSD) are/is outside recovery criteria for sample 117289-015AMSD; however, the analytical batch was validated by the Laboratory Control Sample (LCS).

Advanced Technology Laboratories
3275 Walnut Avenue, Signal Hill, CA 90755 Tel: 562. 989.4045 Fax: 562.989.4040

Advanced Technology Laboratories

Date: 6/21/2011

ANALYTICAL RESULTS

LEAD BY ATOMIC ABSORPTION (STLC)
WET/ EPA 7420

CLIENT:	Geocon Consultants, Inc.	**Lab Order:**	118289
Project:	KERN/TULARE BRIDGES, S9525-06-27	**Date Received**	6/8/2011 10:04:00 AM
Project No:		**Matrix:**	Soil
Analyte:	Lead	**Analyst:**	VV

Laboratory ID	Client Sample ID	Results	Units	QC Batch	PQL	DF	Date Collected	Date Analyzed
118289-001A	B1-0	3.2	mg/L	73710	0.25	1	6/6/2011	6/21/2011
118289-007A	B4-0	16	mg/L	73710	0.50	2	6/6/2011	6/21/2011
118289-009A	B5-0	8.0	mg/L	73710	0.25	1	6/6/2011	6/21/2011
118289-012A	B6-1.5	4.5	mg/L	73710	0.25	1	6/6/2011	6/21/2011
118289-013A	B7-0	6.7	mg/L	73710	0.25	1	6/6/2011	6/21/2011
118289-015A	B8-0	12	mg/L	73710	0.50	2	6/6/2011	6/21/2011

Qualifiers:

B	Analyte detected in the associated Method Blank	E	Value above quantitation range
H	Holding times for preparation or analysis exceeded	ND	Not Detected at the Reporting Limit
S	Spike/Surrogate outside of limits due to matrix interference		Results are wet unless otherwise specified
DO	Surrogate Diluted Out		

Advanced Technology Laboratories
3275 Walnut Avenue, Signal Hill, CA 90755 Tel: 562. 989.4045 Fax: 562.989.4040

Advanced Technology Laboratories

Date: 6/21/2011

ANALYTICAL RESULTS

LEAD BY ATOMIC ABSORPTION (TCLP)
EPA 1311/ 7420

CLIENT:	Geocon Consultants, Inc.	**Lab Order:**	118289
Project:	KERN/TULARE BRIDGES, S9525-06-27	**Date Received**	6/8/2011 10:04:00 AM
Project No:		**Matrix:**	Soil
Analyte:	Lead	**Analyst:**	VV

Laboratory ID	Client Sample ID	Results	Units	QC Batch	PQL	DF	Date Collected	Date Analyzed
118289-007A	B4-0	ND	mg/L	73764	0.25	1	6/6/2011	6/21/2011
118289-009A	B5-0	ND	mg/L	73764	0.25	1	6/6/2011	6/21/2011
118289-015A	B8-0	0.33	mg/L	73764	0.25	1	6/6/2011	6/21/2011

Qualifiers:

B	Analyte detected in the associated Method Blank	E	Value above quantitation range
H	Holding times for preparation or analysis exceeded	ND	Not Detected at the Reporting Limit
S	Spike/Surrogate outside of limits due to matrix interference		Results are wet unless otherwise specified
DO	Surrogate Diluted Out		

Advanced Technology Laboratories

3275 Walnut Avenue, Signal Hill, CA 90755 Tel: 562. 989.4045 Fax: 562.989.4040

CLIENT: Geocon Consultants, Inc.
Work Order: 118289
Project: KERN/TULARE BRIDGES, S9525-06-27

ANALYTICAL QC SUMMARY REPORT

TestCode: 7420_ST

Sample ID: **MB-73710A** SampType: **MBLK** TestCode: **7420_ST** Units: **mg/L** Prep Date: **6/18/2011** RunNo: **134246**
Client ID: **PBS** Batch ID: **73710** TestNo: **WET/ EPA 74 WET** Analysis Date: **6/21/2011** SeqNo: **2193994**

Analyte	Result	PQL	SPK value	SPK Ref Val	%REC	LowLimit	HighLimit	RPD Ref Val	%RPD	RPDLimit	Qual
Lead	ND	0.25									

Sample ID: **LCS-73710** SampType: **LCS** TestCode: **7420_ST** Units: **mg/L** Prep Date: **6/18/2011** RunNo: **134246**
Client ID: **LCSS** Batch ID: **73710** TestNo: **WET/ EPA 74 WET** Analysis Date: **6/21/2011** SeqNo: **2193995**

Analyte	Result	PQL	SPK value	SPK Ref Val	%REC	LowLimit	HighLimit	RPD Ref Val	%RPD	RPDLimit	Qual
Lead	5.111	0.25	5.000	0	102	80	120				

Sample ID: **118289-015A-DUP** SampType: **DUP** TestCode: **7420_ST** Units: **mg/L** Prep Date: **6/18/2011** RunNo: **134246**
Client ID: **B8-0** Batch ID: **73710** TestNo: **WET/ EPA 74 WET** Analysis Date: **6/21/2011** SeqNo: **2194002**

Analyte	Result	PQL	SPK value	SPK Ref Val	%REC	LowLimit	HighLimit	RPD Ref Val	%RPD	RPDLimit	Qual
Lead	12.699	0.50						12.12	4.69	20	

Sample ID: **118289-015A-MS** SampType: **MS** TestCode: **7420_ST** Units: **mg/L** Prep Date: **6/18/2011** RunNo: **134246**
Client ID: **B8-0** Batch ID: **73710** TestNo: **WET/ EPA 74 WET** Analysis Date: **6/21/2011** SeqNo: **2194003**

Analyte	Result	PQL	SPK value	SPK Ref Val	%REC	LowLimit	HighLimit	RPD Ref Val	%RPD	RPDLimit	Qual
Lead	17.906	1.0	5.000	12.12	116	80	120				

Sample ID: **118289-015A-MSD** SampType: **MSD** TestCode: **7420_ST** Units: **mg/L** Prep Date: **6/18/2011** RunNo: **134246**
Client ID: **B8-0** Batch ID: **73710** TestNo: **WET/ EPA 74 WET** Analysis Date: **6/21/2011** SeqNo: **2194004**

Analyte	Result	PQL	SPK value	SPK Ref Val	%REC	LowLimit	HighLimit	RPD Ref Val	%RPD	RPDLimit	Qual
Lead	18.125	1.0	5.000	12.12	120	80	120	17.91	1.22	20	S

Qualifiers:

B	Analyte detected in the associated Method Blank	E	Value above quantitation range	H	Holding times for preparation or analysis exceeded
ND	Not Detected at the Reporting Limit	R	RPD outside accepted recovery limits	S	Spike/Surrogate outside of limits due to matrix interference
DO	Surrogate Diluted Out		Calculations are based on raw values		

CLIENT: Geocon Consultants, Inc.
Work Order: 118289
Project: KERN/TULARE BRIDGES, S9525-06-27

ANALYTICAL QC SUMMARY REPORT

TestCode: 7420_TC

Sample ID: **MB-73764A** SampType: **MBLK** TestCode: **7420_TC** Units: **mg/L** Prep Date: **6/21/2011** RunNo: **134244**
Client ID: **PBS** Batch ID: **73764** TestNo: **EPA 1311/ 74 EPA3010A** Analysis Date: **6/21/2011** SeqNo: **2193917**

Analyte	Result	PQL	SPK value	SPK Ref Val	%REC	LowLimit	HighLimit	RPD Ref Val	%RPD	RPDLimit	Qual
Lead	ND	0.25									

Sample ID: **MB-73744A TCLP** SampType: **MBLK** TestCode: **7420_TC** Units: **mg/L** Prep Date: **6/21/2011** RunNo: **134244**
Client ID: **PBS** Batch ID: **73764** TestNo: **EPA 1311/ 74 EPA3010A** Analysis Date: **6/21/2011** SeqNo: **2193918**

Analyte	Result	PQL	SPK value	SPK Ref Val	%REC	LowLimit	HighLimit	RPD Ref Val	%RPD	RPDLimit	Qual
Lead	ND	0.25									

Sample ID: **LCS-73764** SampType: **LCS** TestCode: **7420_TC** Units: **mg/L** Prep Date: **6/21/2011** RunNo: **134244**
Client ID: **LCSS** Batch ID: **73764** TestNo: **EPA 1311/ 74 EPA3010A** Analysis Date: **6/21/2011** SeqNo: **2193919**

Analyte	Result	PQL	SPK value	SPK Ref Val	%REC	LowLimit	HighLimit	RPD Ref Val	%RPD	RPDLimit	Qual
Lead	0.897	0.25	1.000	0	89.7	80	120				

Sample ID: **118309-094A-DUP** SampType: **DUP** TestCode: **7420_TC** Units: **mg/L** Prep Date: **6/21/2011** RunNo: **134244**
Client ID: **ZZZZZZ** Batch ID: **73764** TestNo: **EPA 1311/ 74 EPA3010A** Analysis Date: **6/21/2011** SeqNo: **2193930**

Analyte	Result	PQL	SPK value	SPK Ref Val	%REC	LowLimit	HighLimit	RPD Ref Val	%RPD	RPDLimit	Qual
Lead	ND	0.25						0	0	20	

Sample ID: **118309-094A-MS** SampType: **MS** TestCode: **7420_TC** Units: **mg/L** Prep Date: **6/21/2011** RunNo: **134244**
Client ID: **ZZZZZZ** Batch ID: **73764** TestNo: **EPA 1311/ 74 EPA3010A** Analysis Date: **6/21/2011** SeqNo: **2193931**

Analyte	Result	PQL	SPK value	SPK Ref Val	%REC	LowLimit	HighLimit	RPD Ref Val	%RPD	RPDLimit	Qual
Lead	2.462	0.25	2.500	0	98.5	70	130				

Qualifiers:

B	Analyte detected in the associated Method Blank	E	Value above quantitation range	H	Holding times for preparation or analysis exceeded
ND	Not Detected at the Reporting Limit	R	RPD outside accepted recovery limits	S	Spike/Surrogate outside of limits due to matrix interference
DO	Surrogate Diluted Out		Calculations are based on raw values		

Advanced Technology Laboratories
3275 Walnut Avenue, Signal Hill, CA 90755 Tel: 562. 989.4045 Fax: 562.989.4040

CLIENT: Geocon Consultants, Inc.
Work Order: 118289
Project: KERN/TULARE BRIDGES, S9525-06-27

ANALYTICAL QC SUMMARY REPORT

TestCode: 7420_TC

Sample ID: **118309-094A-MSD** SampType: **MSD** TestCode: **7420_TC** Units: **mg/L** Prep Date: **6/21/2011** RunNo: **134244**
Client ID: **ZZZZZZ** Batch ID: **73764** TestNo: **EPA 1311/ 74 EPA3010A** Analysis Date: **6/21/2011** SeqNo: **2193932**

Analyte	Result	PQL	SPK value	SPK Ref Val	%REC	LowLimit	HighLimit	RPD Ref Val	%RPD	RPDLimit	Qual
Lead	2.488	0.25	2.500	0	99.5	70	130	2.462	1.04	20	

Qualifiers:

B	Analyte detected in the associated Method Blank	E	Value above quantitation range	H	Holding times for preparation or analysis exceeded
ND	Not Detected at the Reporting Limit	R	RPD outside accepted recovery limits	S	Spike/Surrogate outside of limits due to matrix interference
DO	Surrogate Diluted Out		Calculations are based on raw values		

Advanced Technology Laboratories
3275 Walnut Avenue, Signal Hill, CA 90755 Tel: 562. 989.4045 Fax: 562.989.4040

Diane Galvan

From: Rebecca Silva [silva@geoconinc.com]
Sent: Friday, June 17, 2011 9:38 AM
To: Diane Galvan
Cc: 'Gemma Reblando'; 'Chris Giuntoli'
Subject: FW: Results/EDD - TULARE & KERN BRIDGES (118289)
Attachments: 118289.pdf; 118289.xls

Hi Diane - Please analyze the following 6 samples for WET lead on 48-hr TAT.

118289-001A
118289-007A
118289-009A
118289-012A
118289-013A
118289-015A

And the following 3 samples for TCLP lead on 48-hr TAT.

118289-007A
118289-009A
118289-015A

Thanks!
Rebecca

APPENDIX B

SUMMARY OF STATISTICAL ANALYSIS
EA NO. 06-0H6400
KERN 178 AND 99 PEDESTRIAN OVERCROSSING
KERN COUNTY, CALIFORNIA

KER-178 POC (EB and Median)

Total Lead UCLs (mg/kg)

Sample Interval (feet)	90% UCL	95% UCL
0.0 to 0.5	182.5	194.3
1.5 to 2.0	38.7	42.5

Excavation Scenarios

	90% UCL		95% UCL	
Excavation Depth	Total Lead (mg/kg)	Soluble (WET) Lead * (mg/l)	Total Lead (mg/kg)	Soluble (WET) Lead * (mg/l)
0.0 to 0.5 foot	182.5	11.1	194.3	11.9
Underlying Soil (0.5 to 2.0 feet)	134.6	8.2	143.7	8.8
0.0 to 1.0 foot	182.5	11.1	194.3	11.9
Underlying Soil (1.0 to 2.0 feet)	110.6	6.7	118.4	7.2
0.0 to 1.5 feet	182.5	11.1	194.3	11.9
Underlying Soil (1.5 to 2.0 feet)	38.7	2.4	42.5	2.6
0.0 to 2.0 feet	146.6	8.9	156.4	9.5

Notes:
UCL = Upper Confidence Level
90% UCL applicable for waste classification and onsite reuse
95% UCL applicable for risk assessment and offsite disposal
mg/kg = milligrams per kilogram
mg/l = milligrams per liter
* = Soluble (WET) lead concentrations were predicted using slope of the regression line,
where y = predicted soluble (WET) lead and x = total lead

Regression Line Slope: $y = 0.0610\ x$

DESCRIPTION OF DATA SET

Project Name:	KERN 178 AND 99 PEDESTRIAN OVERCROSSING
Project No.:	S9525-06-27
Sample Depth:	0.0 ft
	KER-178 POC (EB and Median)

DATA SET STATISTICS

Number of Valid Observations	5
Number of Distinct Observations	4
Minimum	2.5
Maximum	210
Mean	135.5
Median	180
Standard Deviation	92.78
Variance	8608
Standard Error of Mean	41.49
Coefficient of Variation	0.685
Skewness	-0.866
Mean of log data	4.224
Standard Deviation of log data	1.898
90% Non-parametric UCLs	
Standard Bootstrap UCL	182.5
95% Non-parametric UCLs	
Standard Bootstrap UCL	194.3

DESCRIPTION OF DATA SET

Project Name:	KERN 178 AND 99 PEDESTRIAN OVERCROSSING
Project No.:	S9525-06-27
Sample Depth:	1.5 ft
	KER-178 POC (EB and Median)

DATA SET STATISTICS

Number of Valid Observations	5
Number of Distinct Observations	5
Minimum	2.5
Maximum	73
Mean	23.78
Median	16
Standard Deviation	28.62
Variance	819.2
Standard Error of Mean	12.8
Coefficient of Variation	1.204
Skewness	1.829
Mean of log data	2.551
Standard Deviation of log data	1.303
90% Non-parametric UCLs	
Standard Bootstrap UCL	38.7
95% Non-parametric UCLs	
Standard Bootstrap UCL	42.5

KER-178 AND KER-99 PEDESTRIAN OVERCROSSING
S9525-06-27

KER-178 POC (EB and Median)

Sample ID	Total Lead	WET Lead
B1-0	54	3.2
B6-1.5	73	4.5
B7-0	75	6.7
B5-0	210	8.0
B8-0	180	12
B4-0	210	16

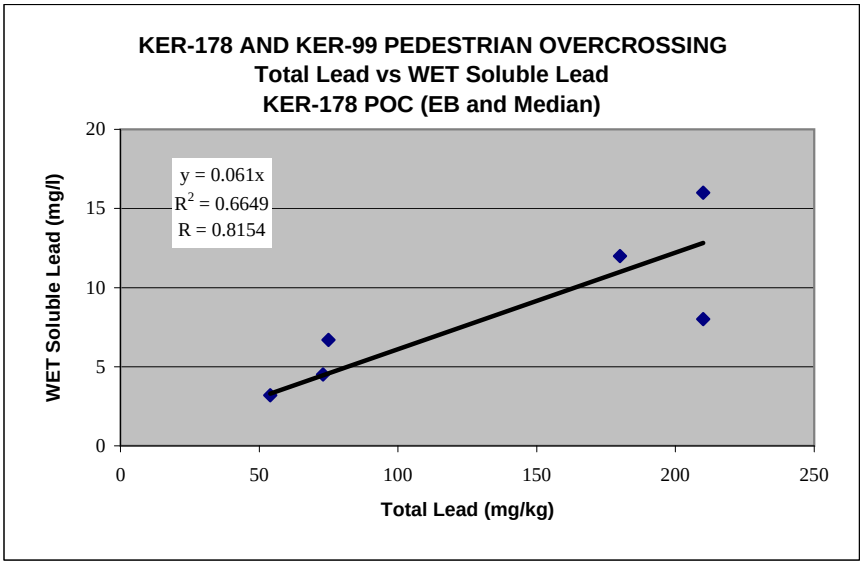

MATERIALS INFORMATION

8. List of existing traffic management system elements

LIST OF EXISTING TRAFFIC MANAGEMENT SYSTEM ELEMENTS

Element	County	Route	PostMile	Location	Direction	Status
TCS	KER	99	49.166	NB OFF TO SHERWOOD		EXISTING
TCS	KER	99	49.308	SB ON FR SHERWOOD		EXISTING
VDS	KER	99	49.42	S OF SHERWOOD AVE OC(ET 110)	SB	EXISTING
TCS	KER	99	49.471	SB OFF TO SHERWOOD		EXISTING
VDS	KER	99	49.66	N OF KERN AVE OC (EA 06-0T330)	NB	EXISTING
TCS	KER	99	49.815	NB OFF TO PERKINS AVE		EXISTING
TCS	KER	99	49.949	SOUTH OF MC FARLAND, ELMO HIGHWAY	NB/SB	EXISTING
VDS	KER	99	49.95	S OF PERKINS AVE OC(ET 012)	SB	EXISTING
TCS	KER	99	50.123	NB ON FR PERKINS AVE		EXISTING
TCS	KER	99	50.288	SB ON FR ELMO HWY		EXISTING
VDS	KER	99	50.39	JSO ELMO OC(ET113)	SB	EXISTING
TCS	KER	99	50.4	SB OFF TO ELMO HIGHWAY		EXISTING