INFORMATION HANDOUT

For Contract No. 06-432604
At 06-Fre-33-10.9/11.1

Identified by
Project ID 0600020388

PERMITS

United States Fish and Wildlife Service - Biological Opinion, dated March 5, 2013

United States Army Corps of Engineers permit, dated February 19, 2014

WATER QUALITY

Central Valley Regional Water Quality Control Board 401 Certification, dated April 15, 2014

AGREEMENT

California Department of Fish and Wildlife - Streambed Alteration Agreement, dated May 12, 2014

MATERIALS INFORMATION

Revised Foundation Report for Jacalitos Creek Bridge (Replace), Bridge Number 42-0441 dated January 10, 2014

Final Hydraulic Report for Jacalitos Creek Bridge (Replace), Bridge Number 42-0441 dated September 17, 2013

Manufacturer's drawings for Alternative Flared Terminal System

Water Source Information

United States Department of the Interior

FISH AND WILDLIFE SERVICE
Sacramento Fish and Wildlife Office
2800 Cottage Way, Room W-2605
Sacramento, California 95825-1846

In Reply Refer To:
81420-2011-F-0384-1

March 5, 2013

Mr. Javier Almaguer
Chief, Central Region Biology South Branch
California Department of Transportation, District 6
855 M Street, Suite 200
Fresno, California 93721

Subject: Formal Consultation for the Jacalitos Creek Bridge Replacement Project, Fresno County, California (California Department of Transportation EA 06-43260; 06-FRE-33-PM 10.9/11.1), as appended to the Upland Species Programmatic Biological Opinion

Dear Mr. Almaguer:

This is the U.S. Fish and Wildlife Service's (Service) response to the California Department of Transportation's (Caltrans) request for initiation of formal consultation on the proposed Jacalitos Creek Bridge Replacement Project (project) in Fresno County, California. Under the provisions of the July 1, 2007, Pilot Program Memorandum of Understanding between the Federal Highway Administration (FHWA) and Caltrans, FHWA assigned, and Caltrans assumed, FHWA's responsibilities under the National Environmental Policy Act (NEPA) as well as its responsibilities for environmental review, consultation, and coordination under other Federal environmental laws.

Your letter, dated July 23, 2012, was received in this office on July 26, 2012. Caltrans determined, and the Service agreed, that the project be considered for inclusion with the Service's December 21, 2004, *Programmatic Biological Opinion on the Effects of Minor Transportation Projects on the San Joaquin Kit Fox, Giant Kangaroo Rat, Tipton Kangaroo Rat, Blunt-nosed Leopard Lizard, California Jewelflower, San Joaquin Woolly-threads, Bakersfield Cactus, and Recommendations for the San Joaquin Antelope Squirrel* (Programmatic) (Service file number 1-1-01-F-0003), as amended on September 22, 2009 (Service file number 81420-2009-F-0974-1). At issue are potential effects to the federally-listed as endangered San Joaquin kit fox (*Vulpes macrotis mutica*) and giant kangaroo rat (*Dipodomys ingens*). This document represents the Service's biological opinion on the effects of the proposed project on these listed species. This document has been prepared in accordance with section 7(a)(2) of the Endangered Species Act of 1973, as amended (16 U.S.C. § 1531 *et seq.*) (Act).

The findings and recommendations of this biological opinion are based on: (1) the consultation history; and (2) other information available to the Service.

Caltrans has determined that the project may affect, and is likely to adversely affect the San Joaquin kit fox and giant kangaroo rat. The Service has reviewed the proposed project and concurs with Caltrans' determination.

Caltrans also has determined, and the Service concurs, that the proposed project may affect, but is not likely to adversely affect the blunt-nosed leopard lizard. According to the California Natural Diversity Database (CNDDB; 2013)[1], the blunt-nosed leopard lizard has been observed all around the project area to the northeast, northwest, southeast, and southwest. There are eight records of the blunt-nosed leopard lizard within the Coalinga quadrangle; two of these records are located closest to the project area at a distance of approximately 1.8 and 2.3 mi northeast. A separate record is situated within the Guijarral Hills quadrangle to the east and is located approximately 2.1 mi northeast of the project area. Despite these occurrences existing in close proximity to the project area, no blunt-nosed leopard lizards were discovered during protocol-level surveys conducted in 2011 both within the immediate project footprint and within an additional 100 ft. extending out from the project footprint. Surveys were conducted in accordance with the California Department of Fish and Wildlife's (CDFW) May 2004 *Approved Survey Methodology for the Blunt-nosed Leopard Lizard* (Survey Methodology).

Caltrans also has determined, and the Service concurs, that the proposed project will have no effect on the California jewelflower and San Joaquin woolly-threads based on the results of botanical surveys and the distance of known occurrences from the project area. Although there is potentially suitable habitat present within the project footprint for these two species in the form of valley grassland, it is unlikely to be currently occupied given the results of surveys for special status plants, which resulted in no detections of the species. Four focused botanical surveys were conducted for the project when the species were confirmed to be in bloom, with the first survey performed on March 9, 2011, then on March 16, 29, and April 6, 2011. Surveys were conducted during the appropriate blooming periods and followed standard methods in accordance with the California Department of Fish and Wildlife's (CDFW) revised 2009 *Protocols for Surveying and Evaluating Impacts to Special Status Native Plant Populations and Natural Communities*.

According to the CNDDB (2013)[1], there is one historic occurrence of the California jewelflower located within the Coalinga United States Geological Survey (USGS) 7.5 minute quadrangle, in which the project area is located. The observation was made approximately 4.5 miles (mi) northwest of the project area in the general vicinity of the City of Coalinga. There is another historic occurrence of the California jewelflower located approximately 3 mi upstream from the project area at the mouth of Jacalitos Canyon; this is located within the Kreyenhagen Hills USGS 7.5 minute quadrangle, which is situated south of the Coalinga quadrangle. The record notes that the habitat at this location was modified and as of 1998, the population identified there was possibly extirpated; therefore additional surveys were needed to determine its status. Caltrans attempted to use this location as a reference site for the species during the 2011 surveys but was

[1] California Department of Fish and Wildlife, Natural Diversity Data Base. 2013. Element occurrence reports. Biogeographic Data Branch. RareFind 4. Government Version - April 5, 2011. Accessed January 2-3, 2013.

not granted access. Instead, Caltrans obtained verbal confirmation from the U.S. Bureau of Land Management (BLM) that the species was in bloom on one of the BLM's sites.

There is also one historic occurrence of the San Joaquin woolly-threads located within the Coalinga quadrangle; it is located approximately 4.5 mi northwest of the project area. The record notes that as of 1989, little native vegetation remained in the area and the site was highly disturbed. Another record of the San Joaquin woolly-threads (dated 2006 and located approximately 2.5 mi northeast of the project area) was observed near Los Gatos Creek; this occurrence is located within the Guijarral Hills USGS 7.5 minute quadrangle, situated to the east of the Coalinga quadrangle. Reference sites for the San Joaquin woolly-threads were visited during surveys.

Because habitat in the project area is still considered to be suitable and provides the potential for the blunt-nosed leopard lizard to move into the area, as well as for both plant species to establish in the future, Caltrans has incorporated two additional minimization measures, one specifically addressing the plants and one addressing the blunt-nosed leopard lizard. The measures are further described under the *General* heading of the Conservation Measures section.

If substantial changes are made to the proposed project or if new information is presented to the Service, these determinations may be re-evaluated and reinitiation of consultation recommended. The remainder of this biological opinion will address the effects of the proposed project upon the San Joaquin kit fox and giant kangaroo rat.

Consultation History

March 8&10, 2011. Caltrans corresponded with the Service via e-mail regarding presence/absence of the giant kangaroo rat, potential trapping efforts, as well as habitat suitability in the project area. Caltrans also provided aerial site maps to the Service.

June 27, 2011. Caltrans and the Service met for a site visit to review the project area and to discuss the potential for giant kangaroo rat presence, the issues concerning proposed giant kangaroo rat compensation measures, and whether trapping would be necessary if Caltrans chose to instead infer species presence.

July 12-13, 2011. Caltrans e-mailed the Service to say that Caltrans was unable at that time to obtain more detailed information from its design team regarding habitat removal. It also asked the Service for its recommendations regarding the giant kangaroo rat and project trapping efforts. The Service replied on July 13 to suggest that if Caltrans inferred giant kangaroo rat presence (based in part on the species' historic range and observations of unidentified kangaroo rat sign on-site during prior surveys), trapping may not be necessary.

July 19, 2011. Caltrans e-mailed the Service to discuss giant kangaroo rat compensation options, particularly given the absence of available conservation banks in the San Joaquin Valley. Caltrans inquired whether it could utilize the Kreyenhagen Hills Conservation Bank (KHCB) for both the San Joaquin kit fox and giant kangaroo rat since it reasoned that this bank was located within the historical range of the giant kangaroo rat, contained similar habitat to that at the

project site, included the Jacalitos Creek, and was located in close proximity to the project site. The Service replied that it needed to further discuss the matter.

September 1&7, 2011. The Service e-mailed Caltrans with updates regarding its discussion of proposed giant kangaroo rat compensation measures. The Service concluded that using the KHCB to compensate for both the San Joaquin kit fox and giant kangaroo rat was not viable. Also introduced were possible options regarding third party land acquisitions. On September 7, Caltrans responded to the Service to inquire whether the Palo Prieto Conservation Bank was a possible option.

September 26, 2011. Caltrans and the Service discussed the project at a meeting. Points of discussion included habitat suitability for the giant kangaroo rat at the KHCB; information to be included in the future biological assessment (BA); habitat suitability at the Palo Prieto Conservation Bank (it was determined to be too far away from the project site); and viability of establishing a 'likely to adversely affect' determination for the giant kangaroo rat with no accompanying credit-based compensation.

October 6, 2011. The Service e-mailed Caltrans to recommend that Caltrans not propose credit-based compensation for the giant kangaroo rat; however, the Service clarified that it would continue to exempt section 9 take prohibitions for the species. The Service requested that in the future BA, Caltrans highlight the effects of the project on the giant kangaroo rat, the proposed avoidance and minimization measures for the species, and an explanation as to why Caltrans was not successful in securing suitable third parties to accept both easements and endowments for purchased lands.

July 26, 2012. The Service received a letter from Caltrans requesting initiation of formal consultation for the project. The request included a BA titled *Jacalitos Creek Bridge Replacement,* dated July 23, 2012, and prepared by Caltrans.

September 6, 2012. The Service e-mailed Caltrans with a request for further information regarding the BA.

September 12, 2012. Caltrans responded to the Service's September 6 questions.

September 17-18, 2012. Caltrans e-mailed the Service to inquire whether the Service had further questions and whether the initiation package was considered complete. The Service replied on September 18 to confirm that it was deemed complete on September 12.

January 3, 2013. The Service e-mailed Caltrans with additional clarification requests regarding the BA.

January 17, 2013. Caltrans responded to the Service's January 3 queries.

February 22, 2013. Caltrans requested via e-mail that the project be appended to the Programmatic.

February 25, 2013. Via telephone, the Service and Caltrans discussed changing the blunt-nosed leopard lizard determination to more appropriately reflect that the project may affect, but is not likely to adversely affect the species. Caltrans later e-mailed the Service to confirm this alteration and that it would conduct protocol surveys for the blunt-nosed leopard lizard in the season prior to construction.

BIOLOGICAL OPINION

Proposed Project

Caltrans proposes to replace the Jacalitos Creek Bridge (bridge number 42-0072) in order to correct seismic damage and foundation settlement attributed to historic heavy flooding in the project area. The project area is located approximately 4 mi east of the City of Coalinga on State Route (SR) 33 (post mile [PM] 10.9/11.1) and approximately 6.5 mi west of Interstate 5 (I-5). The segment of SR 33 within the project area is a two-lane undivided highway that runs through a rural area from the City of Coalinga (located west of Jacalitos Creek) east towards I-5. The existing Jacalitos Creek Bridge was built in 1955 as a 6-span concrete slab bridge. The replacement structure will be a single-span box girder bridge.

The project also will include reconstruction of the roadway at the bridge approaches, addition of rock slope protection (RSP) on the southeast side of the bridge and on the abutments, repair of the existing erosion control double fence with rocks on the south side of the bridge, and construction of storage ditches on all four corners of the bridge.

Staging will occur in the southeast corner of the project area. Construction is anticipated to begin in March 2015 and to take 250 working days to complete, with work potentially spread over two seasons. No night work is proposed.

Conservation Measures

Caltrans will implement the Programmatic's *Conservation Measures*, *Reasonable and Prudent Measures*, and *Terms and Conditions,* as well as the avoidance and minimization measures discussed in the BA; all these measures will serve to avoid or minimize effects to the listed species that are known and/or have the potential to occur within the project area:

- General

    1. Caltrans will include Special Provisions that include the avoidance and minimization measures of this biological opinion when soliciting contractor bid packages.

    2. A Service-approved biologist(s) will conduct a worker environmental awareness program for all construction crews prior to ground-disturbing activities, with the purpose of informing all personnel of the potential for listed species to occur on-site and the effects on the species from construction activities. It will provide workers with information on their responsibilities with regard to listed species, including: locations of environmentally sensitive areas, exclusion zones, timing constraints, and the reporting of any discovered species to the Service-approved biologist(s). The training will be

repeated to all new crew members and annually to all crew members working in the species' habitat. Crew members will sign an attendance sheet and confirm that they understand the protection measures and construction restrictions. Training materials and records of attendees will be submitted to the Service in advance for approval.

3. Protocol-level surveys for the blunt-nosed leopard lizard will be conducted by a Service-approved biologist(s) no longer than one year prior to construction and in accordance with the CDFW's Survey Methodology in order to identify any changes in species presence at the project site.

    a. If the blunt-nosed leopard lizard is observed within the project footprint, Caltrans will notify the Service to discuss the need to reinitiate this consultation.

4. Prior to groundbreaking, a Service-approved biologist(s) will conduct updated protocol-level botanical surveys within the project area for the following two species: the California jewelflower and the San Joaquin woolly-threads. Surveys will be conducted in the appropriate blooming seasons and in accordance with the most current protocols accepted by the Service. The intention will be to discover any future changes in, or new additions to, the floristic composition of federally-listed plant species at the project site.

    a. If either plant species is observed within the project footprint, Caltrans will notify the Service to discuss the need to reinitiate this consultation.

5. To minimize opportunistic predatory effects to the San Joaquin kit fox and giant kangaroo rat, Caltrans will condition contracts with contractors to require that trash be removed at least once daily from project areas and disposed of off-site so as not to attract predator species like coyotes (*Canis latrans*) to the project area.

6. Upon completion of project construction, all habitat areas impacted temporarily by project activities, such as storage and staging areas, will be restored to original grade and contour, and also will be re-vegetated to promote restoration of the area. Appropriate methods and plant species used to re-vegetate will be determined on a site-specific basis in consultation with the Service and/or other re-vegetation experts.

❖ San Joaquin Kit Fox

1. Caltrans and the City will adhere to the standard construction and operational requirements described in the Service's most recent available guidelines for the San Joaquin kit fox; currently this is the revised January 2011 *U.S. Fish and Wildlife Service Standardized Recommendations for Protection of the Endangered San Joaquin Kit Fox Prior to or During Ground Disturbance* (Standardized Recommendations), including the measures below.

2. No less than 14 days but no more than 30 days prior to the start of ground disturbance and/or construction activities, the Service-approved biologist(s) will conduct preconstruction surveys for the San Joaquin kit fox both in the project footprint and within 200 ft. of the project footprint, inclusive of any utilities relocations.

3. Disturbance to all San Joaquin kit fox dens will be avoided to the maximum extent possible. If known or potential dens are identified within the project footprint during the preconstruction surveys, Caltrans will request to monitor and excavate those dens that are expected to be affected directly by the project and cannot be avoided. Active dens will not be excavated during the natal season (approximately January 1 - June 14). The Service-approved biologist(s) will monitor potential dens for three consecutive nights using tracking medium or a remote sensor camera, will submit monitoring results in a letter report to the Service, and also will oversee the hand excavation of any dens that have been determined vacant following approval by the Service. The Service-approved biologist(s) also will submit results of den excavation and exclusion activities in a letter report to the agencies. The following measures will be applied to dens that are not excavated:

    a. Dens that are identified during preconstruction surveys of the project footprint and a 200 ft. area outside of the project footprint will be monitored and protected by an exclusion zone around dens, as measured outward from the entrance or cluster of entrances of each den.

        i. Potential and atypical dens within 50 ft. of the project footprint will be protected with a 50 ft. zone delineated by flagged stakes;

        ii. Known dens within 100 ft. of the project footprint will be protected with a 100 ft. zone. To ensure protection, the exclusion zone will be demarcated by fencing/flagging that does not prevent access to the den by the San Joaquin kit fox. Acceptable designs will have openings for San Joaquin kit fox ingress/egress but will keep humans and equipment out, e.g. wooden posts connected with caution tape; orange construction cones; orange construction fencing with a mesh size less than 2 inches in diameter (to prevent the San Joaquin kit fox from becoming entangled in the fencing) with gaps every 50 ft. Fencing/flagging will be maintained until all construction-related disturbances have been terminated. At that time, all fencing/flagging will be removed to avoid attracting subsequent attention to the dens.

    b. If natal/pupping dens are discovered either within the project footprint or within 200 ft. of the project footprint, Caltrans will immediately notify the Service.

4. The Service-approved biologist(s) will be on-site during initial ground-disturbing activities that could affect the San Joaquin kit fox, and then will be available on-call during all subsequent construction periods when not present on-site.

Caltrans proposes to compensate for the permanent loss of 4.91 ac, as well as the temporary disturbance to 1.43 ac of suitable habitat for the San Joaquin kit fox by purchasing 16.3 ac worth of credits (using a 3:1 compensation ratio for permanent effects and 1.1:1 compensation ratio for temporary effects) at a Service-approved conservation bank. Caltrans has proposed using the Kreyenhagen Hills Conservation Bank in Fresno County.

❖ Giant Kangaroo Rat

1. Preconstruction trapping surveys will be conducted no more than 30 calendar days prior to the start of construction. If occupied suitable habitat is observed during surveys, Caltrans will consult further with the Service concerning implementation of avoidance measures to the maximum extent possible.

2. To prevent inadvertent entrapment of the giant kangaroo rat during construction, all open trenches and holes will be covered at the close of each day. Prior to any trenches or holes being filled, they will be thoroughly inspected for trapped individuals. Pipes also will be inspected prior to their being buried, capped, or moved. If a giant kangaroo rat is discovered, that section of pipe will not be moved until the Service has been consulted and the species is allowed to leave without harassment.

Action Area

The action area is defined in 50 CFR § 402.02, as "all areas to be affected directly or indirectly by the Federal action and not merely the immediate area involved in the action." The action area for this project is composed of the project impact area, which includes areas directly impacted by construction. This comprises the 0.2 mi segment of SR 33 at which bridge replacement and road reconstruction activities will occur; and portions of agricultural land, valley saltbush scrub, tamarisk scrub, and a segment of the Jacalitos Creek bed within which work activities will occur and the proposed staging area and access routes will be located. The action area also includes portions of land that extend approximately 200 ft. from the project impact area which will experience further-reaching effects of bridge replacement and associated roadway improvement activities such as visual and noise disturbance.

Appending to the Programmatic Biological Opinion

Caltrans has requested and the Service has agreed that it is appropriate to append the Jacalitos Creek Bridge Replacement Project to the Programmatic. This letter is an agreement by the Service to append the project to the Programmatic and represents the Service's biological opinion on the effects of the proposed action.

The proposed project will permanently and temporarily remove 6.34 ac of habitat. Caltrans proposes to provide compensatory measures for the anticipated habitat loss, which will minimize the effect of the take on the San Joaquin kit fox. Compensation will occur on a Service-approved site that meets the requirements documented in the Service's most recently available (revised July 28, 2011), *Selected Review Criteria for Conservation Banks and Section 7 Off-Site Compensation* (Review Criteria). Caltrans has proposed to use an available Service-approved conservation bank as the compensation site. If a site other than that identified is proposed, the Service will require additional information on the site, the protections afforded the site (see Review Criteria), and who will be responsible for the monitoring and maintenance under the Review Criteria.

Analytical Framework for the Jeopardy/No Jeopardy Determination

In accordance with policy and regulation, the following analysis relies on four components to support the jeopardy/no jeopardy determinations for the San Joaquin kit fox and giant kangaroo rat: (1) the *Status of the Species*, which evaluates the species' range-wide conditions, the factors responsible for those conditions, and their survival and recovery needs; (2) the *Environmental Baseline*, which evaluates the condition of the species in the action area, the factors responsible for those conditions, and the role of the action area in the species' survival and recovery; (3) the *Effects of the Action*, which determines the direct and indirect effects of the proposed Federal action and the effects of any interrelated or interdependent activities on the species; and (4) *Cumulative Effects*, which evaluates the effects of future, non-Federal activities in the action area on the species.

In accordance with policy and regulation, the jeopardy/no jeopardy determinations are made by evaluating the effects of the proposed Federal action in the context of the species' current statuses, taking into account any cumulative effects, to determine if implementation of the proposed action is likely to cause an appreciable reduction in the likelihood of both the survival and recovery of the San Joaquin kit fox and giant kangaroo rat in the wild.

The following analysis places an emphasis on consideration of the range-wide survival and recovery needs of the species and the role of the action area in meeting those needs as the context for evaluating the significance of the effects of the proposed Federal action, combined with cumulative effects, for purposes of making the jeopardy/no jeopardy determinations. In short, a non-jeopardy determination is warranted if the proposed action is consistent with maintaining the role of habitat for the species' populations in the action area for the survival and recovery of the three species.

Supplement to the Programmatic's Environmental Baseline

The action area consists of portions of cultivated agricultural fields (e.g. barley), valley saltbush scrub, tamarisk scrub, and a segment of the Jacalitos Creek. The creek is an ephemeral stream and receives water only during rain events and so does not provide a constant source of water; consequently, it flows for short periods and provides only limited aquatic resources.

The action area is located within known and/or suitable habitat for each species. According to the CNDDB (2013)[1], there are two records documenting the San Joaquin kit fox within the Coalinga USGS 7.5 minute quadrangle, in which the action area is located, both located northwest of the project impact area. The closest records, located approximately 1.6 and 3.0 mi northeast of the project impact area in the Guijarral Hills USGS 7.5 minute quadrangle to the east. According to the CNDDB (2013)[1], there are no documented records of the giant kangaroo rat within either the Coalinga quadrangle or in the vicinity of the action area. Although Caltrans considers it unlikely for the giant kangaroo rat to occur on-site, it acknowledges that the action area is situated within the historical range of the species and that there remains potentially suitable habitat for the species.

Effects of the Proposed Action

Habitat Loss and Disturbance

Construction work, such as the excavation, filling, and paving activities associated with the replacement of the Jacalitos Creek Bridge and associated roadway improvements on SR 33 at the bridge approaches and on the bridge embankments will result in the permanent loss of 4.91 ac of valley saltbush scrub and tamarisk scrub. Habitat that is anticipated to require longer than two seasons to recover from construction effects and to reach the maturity that existed prior to construction, was identified as permanently affected habitat. There also will be temporary disturbance to 1.43 ac of agricultural and creek-bed habitat due to activities such as grading, staging, and access. Temporary disturbance to habitat is defined in this instance as those areas in which effects do not degrade the habitat beyond its ability to recover within one year after completion of project construction. Because the project is anticipated to last for longer than one season, the disturbance to habitat areas may be ongoing and therefore the habitat will likely take longer to recover. Therefore, it is reasonable to expect this disturbance to result in harm and harassment to the San Joaquin kit fox and giant kangaroo rat.

While no potential or known San Joaquin kit fox dens were identified specifically at the time of surveys within the project impact area, there were several areas located within 200 ft. of the project impact area that were considered potentially suitable for denning activity. Since an appropriate prey base for the San Joaquin kit fox was identified in the action area, the action area also was considered to be potential foraging habitat (e.g. ground squirrels [*Spermophilus beecheyi*] and unidentified kangaroo rat species). Surveys were not conducted specifically for the giant kangaroo rat; however, during surveys performed for sensitive plants and the blunt-nosed leopard lizard, small mammal sign (e.g. dust baths and trail drag marks likely created by unidentified kangaroo rats) was observed in the action area. The numerous small mammal burrows that were observed in the action area potentially could be used by the giant kangaroo rat. It is reasonably likely that some of these burrows will be lost during the course of construction. Any potential or known dens and/or burrows that are identified in the project impact area during preconstruction surveys and which undergo excavation (following appropriate monitoring action), will be destroyed and consequently will remove shelter and cover for the species. This is reasonably likely to adversely affect local San Joaquin kit fox and giant kangaroo rat survival by reducing the number and distribution of shelter and escape refuges from predators.

Entombment and Strikes

Although no dens were identified specifically during the 2011 surveys within the project impact area, this does not preclude the San Joaquin kit fox from moving into the project site and establishing dens at some point in time after the surveys. Because some suitable areas of denning habitat exist in the wider action area, it is reasonably likely that potential dens could exist in the action area; there are no recently updated survey results to confirm otherwise. Similarly, although no burrows were identified specifically as those inhabited by the giant kangaroo rat, appropriate small mammal burrows suitable for the species do exist in the action area. With the implementation of proposed conservation measures such as preconstruction surveys, den/burrow monitoring, exclusion zones, and hole/trench covering, the crushing or

entombing of these two species during groundbreaking activities and major construction is not reasonably likely to occur.

The proposed conservation measures also are designed to minimize the risk of construction vehicle/equipment strikes. Therefore, it is not reasonably likely that the species will be hit by construction equipment or vehicles while occupying or moving through the action area.

Road Mortality

Injury and mortality are likely to occur to the San Joaquin kit fox when individuals attempt to cross roads. The highway, SR 33, acts as an existing hazard for the widely-ranging, dispersing San Joaquin kit fox and it will continue to be a hazard for the species.

Conclusion

Conservation measures set forth for implementation before, during, and following project work will serve to minimize project effects and the extent of take associated with the San Joaquin kit fox and giant kangaroo rat. The effects and amount of take also will be minimal in regards to the wider populations of these two species present in the vicinity of the action area, and within the wider region of Fresno County. After reviewing the current status of the San Joaquin kit fox and giant kangaroo rat, the environmental baseline, and the cumulative effects as analyzed in the Programmatic, in addition to the project-specific effects of the Jacalitos Creek Bridge Replacement Project, it is the Service's biological opinion that the proposed project is not likely to jeopardize the continued existence of the San Joaquin kit fox and giant kangaroo rat.

INCIDENTAL TAKE STATEMENT

Section 9 of the Act and Federal regulation pursuant to section 4(d) of the Act prohibit the take of endangered and threatened species, respectively, without special exemption. Take is defined as to harass, harm, pursue, hunt, shoot, wound, kill, trap, capture or collect, or to attempt to engage in any such conduct. Harass is defined by the Service as intentional or negligent actions that create the likelihood of injury to listed species to such an extent as to significantly disrupt normal behavior patterns which include, but are not limited to, breeding, feeding, or sheltering. Harm is further defined by the Service to include significant habitat modification or degradation that results in death or injury to listed species by significantly impairing essential behavioral patterns, including breeding, feeding, or sheltering. Incidental take is defined as take that is incidental to, and not the purpose of, the carrying out of an otherwise lawful activity. Under the terms of section 7(b)(4) and section 7(o)(2), taking that is incidental to and not intended as part of the agency action is not considered to be prohibited taking under the Act provided that such taking is in compliance with the terms and conditions of this Incidental Take Statement.

The measures described below are nondiscretionary, and must be undertaken by Caltrans, as appropriate, for the exemption in section 7(o)(2) to apply. Caltrans has a continuing duty to regulate the activity covered by this Incidental Take Statement. If Caltrans (1) fails to assume and implement the terms and conditions, or (2) fails to require any of its contractors to adhere to the terms and conditions of the Incidental Take Statement through enforceable terms that are added to the permit or grant document, the protective coverage of section 7(o)(2) may lapse. In

order to monitor the impact of incidental take, Caltrans must report the progress of the action and its impact on the species to the Service as specified in the Incidental Take Statement [50 CFR §402.14(i)(3)].

Amount or Extent of Take

San Joaquin Kit Fox

It is infeasible to quantify the exact number of San Joaquin kit foxes that will be taken as a result of the proposed action because the numbers of individuals in the action area are unknown and estimates of population density in the action area are unavailable. Thus, the Service cannot quantify the exact number of individual animals that is anticipated to be taken as a result of the proposed action. In instances in which the number of individuals that may be taken cannot be determined, the Service may quantify take in numbers of acres of permanently lost or degraded habitat; since take is expected to result from these impacts to habitat, the quantification of acreage becomes a direct surrogate for the species that will be taken. The Service therefore anticipates take incidental to the project as the 6.34 ac of suitable habitat that will be permanently lost and temporarily disturbed. Dens also may be destroyed as a result of project construction. Upon implementation of the *Reasonable and Prudent Measures* and *Terms and Conditions* in the Programmatic, and the *Conservation Measures* considered herein, incidental take within this acreage in the forms of harm and harassment due to bridge replacement and associated roadway improvement activities leading to habitat loss and disturbance, as well as den excavation and destruction, will become exempt from the prohibitions described under section 9 of the Act.

Giant Kangaroo Rat

It is infeasible to quantify the exact number of giant kangaroo rats that will be taken as a result of the proposed action because the numbers of individuals in the action area are unknown and estimates of population density in the action area are unavailable. Thus, the Service cannot quantify the exact number of individual animals that is anticipated to be taken as a result of the proposed action. In instances in which the number of individuals that may be taken cannot be determined, the Service may quantify take in numbers of acres of permanently lost or degraded habitat; since take is expected to result from these impacts to habitat, the quantification of acreage becomes a direct surrogate for the species that will be taken. The Service therefore anticipates take incidental to the project as the 6.34 ac of suitable habitat that will be permanently lost and temporarily disturbed. Burrows also may be destroyed as a result of project construction. Upon implementation of the *Reasonable and Prudent Measures* and *Terms and Conditions* in the Programmatic, and the *Conservation Measures* considered herein, incidental take within this acreage in the forms of harm and harassment due to bridge replacement and associated roadway improvement activities leading to habitat loss and disturbance, as well as burrow excavation and destruction, will become exempt from the prohibitions described under section 9 of the Act.

Effect of the Take

The Service has determined that the level of anticipated take is not likely to jeopardize the continued existence of the San Joaquin kit fox and giant kangaroo rat.

Salvage and Disposition of Individuals

In the case of an injured and/or dead San Joaquin kit fox or giant kangaroo rat, the Service shall be notified of events within one day and the animal shall be handled only by a Service-approved biologist. Injured animals shall be cared for by a licensed veterinarian or other Service-approved person. In the case of a dead species, the animal shall be preserved, as appropriate, and shall be bagged and labeled (i.e. species type; who found or reported the incident; when the report was made; when and where the incident occurred; and if possible, cause of death). Carcasses shall be held in a secure location, such as a freezer or cooler, until instructions are received from the Service regarding the disposition of the specimen or until the Service, or another appropriate agency or Service-approved person, takes custody of the specimen. Caltrans must report to the Service within one calendar day any information about take or suspected take of federally-listed species not exempted in this opinion. Notification must include the date, time, and location of the incident or of the finding of a dead or injured animal. The Service contacts are Daniel Russell, Deputy Assistant Field Supervisor, Endangered Species Program, Sacramento, at (916) 414-6600 and the Service's Law Enforcement Division at (916) 569-8444.

Any contractor or employee who, during routine operations and maintenance activities inadvertently kills or injures a listed wildlife species must immediately report the incident to his representative at his contracting/employment firm and to Caltrans. This representative must contact the Service within one calendar day.

REINITIATION—CLOSING STATEMENT

This concludes the Service's review of the proposed Jacalitos Creek Bridge Replacement Project, as outlined in your letter. As provided in 50 CFR § 402.16, reinitiation of formal consultation is required where discretionary Federal agency involvement or control over the action has been maintained (or is authorized by law) and if: (1) the amount or extent of incidental take is exceeded; (2) new information reveals effects of the agency action that may affect listed species or critical habitat in a manner or an extent not considered in this biological opinion; (3) the agency action is subsequently modified in a manner that causes an effect to the listed species or critical habitat that was not considered in this biological opinion; or (4) a new species is listed or critical habitat designated that may be affected by the action.

Please contact Jen Schofield, Fish and Wildlife Biologist, or Thomas Leeman, Chief, San Joaquin Valley Division, at the letterhead address or at (916) 414-6600 if you have any questions regarding this letter.

Sincerely,

Kenneth Sanchez
Assistant Field Supervisor

cc:
Annee Ferranti, California Department of Fish and Wildlife, Fresno, California

DEPARTMENT OF THE ARMY
U.S. ARMY ENGINEER DISTRICT, SACRAMENTO
CORPS OF ENGINEERS
1325 J STREET
SACRAMENTO CA 95814-2922

REPLY TO
ATTENTION OF

February 19, 2014

Regulatory Division (SPK-2014-00123)

State of California
Department of Transportation, District 6
Attn: Ms. Suzanne K. Holdridge
2015 East Shields Avenue, Suite 100
Fresno, California 93726

Dear Ms. Holdridge:

We are responding to your agents February 4, 2014, request for a Department of the Army Nationwide Permit verification for the proposed Jacalitos Creek Bridge Replacement Project (EA 06-43260 PM 10.9 - 11.1). This approximately 0.50-acre project involves activities, including discharges of dredged or fill material, in waters of the United States to replace the existing bridge with a wider, single-span box girder bridge and add new Rock Slope Protection (RSP) to protect the structure. The project is located in Section 31, Township 20 South, Range 16 East, Mount Diablo Meridian, Latitude 36.136965°, Longitude -120.277262°, near Coalinga, Fresno County, California.

Based on the information your agent provided, the proposed activity, resulting in approximately 0.06 acre of permanent impact and 0.76 acre of temporary impact to waters of the U.S (Jacalitos Creek), is authorized by Nationwide Permit Number 3 – Maintenance (NWP). However, until Section 401 Water Quality Certification for the activity has been issued or waived, our authorization is denied without prejudice. Once you have provided us evidence of water quality certification, the activity is authorized and the work may proceed subject to the conditions of certification and the NWP. Your work must comply with the general terms and conditions listed on the enclosed NWP 3 information sheets, the Final Sacramento District Regional Conditions for California, excluding Lake Tahoe, and the following special conditions:

Special Conditions

1. This permit is contingent upon the permittee applying for and being issued a Section 401 Water Quality Certification. Evidence of a water quality certification must be submitted to this office, prior to commencing work in Waters of the U.S. All terms and conditions of the Section 401 Water Quality Certification are expressly incorporated as conditions of this permit.

2. Prior to commencing construction, you shall notify this office of any design changes or deviations from the work as authorized that would result in the initiation or re-initiation of consultation under the Federal Endangered Species Act and/or the National Historic Preservation Act, so that we may consult as appropriate or designate you to consult on our behalf.

3. Prior to commencing construction, you shall notify this office of any design changes or deviations from the work as authorized, which result in additional impacts to waters of the U.S., including wetlands. These changes must be coordinated with this office prior to impacts.

4. This Corps permit does not authorize you to take an endangered species, in particular San Joaquin kit fox (*Vulpes macrotis mutica*), giant kangaroo rat (*Dipodomys ingens*), blunt-nosed leopard lizard (*Gambelia sila*) or their designated critical habitat. In order to legally take a listed species, you must have separate authorization under the Endangered Species Act (e.g., an Endangered Species Act Section 10 permit, or a Biological Opinion under Endangered Species Act Section 7, with "incidental take" provisions with which you must comply). The enclosed Fish and Wildlife Service Biological Opinion (Number 81420-2011-F-0384-1, dated March 5, 2013) contains mandatory terms and conditions to implement the reasonable and prudent measures that are associated with "incidental take" that is also specified in the Biological Opinion. Your authorization under this Corps permit is conditional upon your compliance with all of the mandatory terms and conditions associated with "incidental take" of the attached Biological Opinion, which terms and conditions are incorporated by reference in this permit. Failure to comply with the terms and conditions associated with incidental take of the Biological Opinion, where a take of the listed species occurs, would constitute an unauthorized take, and it would also constitute non-compliance with your Corps permit. The U. S. Fish and Wildlife Service is the appropriate authority to determine compliance with the terms and conditions of its Biological Opinion, and with the Endangered Species Act. You must comply with all conditions of this Biological Opinion, including those ascribed to Caltrans.

5. To mitigate for adverse impacts to Jacalitos Creek and associated habitat, you shall plant and maintain regionally appropriate native riparian trees at a 3:1 replacement ratio, and at a spacing of a maximum of 2-foot centers, extending from the low water line to the top of the bank along the affected reach of the waterway. The rip-rapped areas shall be planted with a mosaic of appropriate native riparian trees and shrubs, using the enclosed vegetated rip-rap techniques, or other appropriate methods. You shall complete all plantings by the end of the growing season, following construction completion.

6. To ensure long-term survival of the riparian vegetation plantings, you shall develop a final comprehensive on-site mitigation and monitoring plan, which must be approved by this office prior to initiation of construction activities within waters of the U.S. You shall ensure the plan includes design drawings, vegetation plans, including target species to be planted and supplemental planting plans to account for mortality, and final success criteria, which shall be presented in the format of the Sacramento District's Habitat Mitigation and Monitoring Proposal Guidelines, dated December 30, 2004.

7. To assure success of the riparian vegetation plantings, you shall monitor the compensatory mitigation for ten years or until the success criteria described in the approved mitigation plan are met, whichever is greater. This period shall commence immediately upon completion of the mitigation plantings. Additionally, you shall demonstrate continued success of the mitigation plantings, without human intervention, for three consecutive years after the success criteria have been met. The mitigation plan will not be deemed successful until this criterion has been met.

8. You shall submit monitoring reports for the mitigation plantings to this office annually for years one through four and bi-annually for years six, eight, and ten, of the ten-year monitoring period and for each additional year if remediation is required, by October 1 of each year. In addition, you shall submit an additional monitoring report to us at the end of the three-year period demonstrating continued success of the mitigation program without human intervention. The only exception to this last requirement shall be if the three-year period occurs wholly within the ten-year monitoring period, in which case, the ten-year report may be used to meet this requirement. The annual reports shall follow the format described in the enclosed *Contents of Monitoring Reports*.

9. Your responsibility to complete the required compensatory mitigation, as set forth in Special Condition 6 will not be considered fulfilled until you have demonstrated mitigation success and have received written verification from this office.

10. The mitigating measures (including Pre- and Post-Construction Best Management Practices (BMPs)) detailed in the document entitled *Jacalitos Creek Bridge Replacement Project, Initial Study with Mitigated Negative Declaration, Appendix C*, dated March 2013, are incorporated by reference as a condition of this NWP verification.

11. No work shall occur within standing or flowing waters. Temporary dewatering structures (e.g. coffer dams) shall be deployed when the channel is naturally dry. Dewatering plans must be approved, in writing, by this office prior to commencement of construction activities. Plans, maps and/or drawings may be submitted electronically to regulatory-info@usace.army.mil.

12. Excavated materials from the permit area shall not be stockpiled or disposed of outside the permit area. Disposal and stockpile areas must be reviewed and approved by this office prior to commencement of construction activities. Plans, maps, and/or drawings may be submitted electronically to regulatory-info@usace.army.mil.

13. If any of the above conditions are violated or unauthorized activities occur, you shall stop work immediately and notify this office. You shall provide us with a detailed description of the unauthorized activity(s), photo documentation, and any measures taken to remedy the violation.

You must sign the enclosed Compliance Certification and return it to this office within 30 days after completion of the authorized work.

This verification is valid until March 18, 2017, when the existing NWPs are scheduled to be modified, reissued, or revoked. Furthermore, if you commence or are under contract to commence this activity before the date that the relevant NWP is modified, reissued, or revoked, you will have twelve (12) months from the date of the modification, reissuance, or revocation of the NWP to complete the activity under the present terms and conditions. Failure to comply with the General and Regional Conditions of this NWP, or the project-specific Special Conditions of this authorization, may result in the suspension or revocation of your authorization.

We would appreciate your feedback. At your earliest convenience, please tell us how we are doing by completing the customer survey on our website under *Customer Service Survey*.

Please refer to identification number SPK-2014-00123 in any correspondence concerning this project. If you have any questions, please contact Ms. Leah Fisher at our California North Branch Office, Regulatory Division, U.S. Army Corps of Engineers, 1325 J Street, Room 1350, Sacramento, California 95814-2922, by email at *Leah.M.Fisher@usace.army.mil*, or telephone at 916-557-6639. For more information regarding our program, please visit our website at *www.spk.usace.army.mil/Missions/Regulatory.aspx*.

Sincerely,

Nancy Arcady Haley
Chief, California North Branch
Regulatory Division

Enclosures

cc: (w/o encls)
Mr. Ronald Cummings, California Department of Transportation, District 6, 855 M Street, Suite 200, Fresno California 93721-2716
Mr. Thomas Leeman, United States Fish and Wildlife Service, Endangered Species Division, 2800 Cottage Way, Suite W2605, Sacramento, California 95825-3901
Ms. Elizabeth Lee, California Regional Water Quality Control Board, Central Valley Region, Fresno Branch Office, 1985 E Street, Suite 200, Fresno, California 93706
Mr. Jason Brush, Wetland Regulatory Office, U.S. Environmental Protection Agency, Region IX, Wetlands Regulatory Office (WTR-8), 75 Hawthorne Street, San Francisco, California, 94105-3901
Ms. Tina Bartlett, California Department of Fish and Game, Region 2, 1701 Nimbus Drive, Rancho Cordova, California 95670-4599

15 April 2014

Javier Almaguer, South Biology Branch Chief
California Department of Transportation, District 6
855 M St., Ste. 200
Fresno 93721-2716

CLEAN WATER ACT §401 TECHNICALLY CONDITIONED WATER QUALITY CERTIFICATION FOR DISCHARGE OF DREDGED AND/OR FILL MATERIALS FOR JACALITOS CREEK BRIDGE REPLACEMENT PROJECT, WDID 5C10CR00033, FRESNO COUNTY

WATER QUALITY CERTIFICATION STANDARD CONDITIONS:

1. This Certification is subject to modification or revocation upon administrative or judicial review, including review and amendment pursuant to § 13330 of the California Water Code and § 3867 of Title 23 of the California Code of Regulations (23 CCR).

2. This Certification is not intended and shall not be construed to apply to any discharge from any activity involving a hydroelectric facility requiring a Federal Energy Regulatory Commission (FERC) license or an amendment to a FERC license unless the pertinent certification application was filed pursuant to 23 CCR § 3855(b) and the application specifically identified that a FERC license or amendment to a FERC license for a hydroelectric facility was being sought.

3. The validity of any non-denial certification action shall be conditioned upon total payment of the full fee required under 23 CCR § 3860.

4. Certification is valid for the duration of the Jacalitos Creek Bridge Replacement Project (Project) described in the attached "Project Information Sheet." This Certification is no longer valid if the Project (as summarized in the "Project Information Sheet" and described in the water quality certification application) is modified, or coverage under the project permit issued by the U.S. Army Corps of Engineers pursuant to § 404 of the Clean Water Act has expired. California Department of Transportation (Discharger) shall notify the Central Valley Regional Water Quality Control Board (Central Valley Water Board) in writing **within seven days** of Project completion.

5. All reports, notices, or other documents required by this Certification or requested by the Central Valley Water Board shall be signed by a person described below or by a duly authorized representative of that person.

   a. For a corporation: by a responsible corporate officer such as (1) a president, secretary, treasurer, or vice president of the corporation in charge of a principal business function; (2) any other person who performs similar policy or decision-making functions for the corporation; or (3) the manager of one or more manufacturing, production, or operating facilities if *authority* to sign documents has been assigned or delegated to the manager in accordance with corporate procedures.

   b. For a partnership or sole proprietorship: by a general partner or the proprietor.

c. For a municipality, State, federal, or other public agency: by either a principal executive officer or ranking elected official.

6. Any person signing a document under Standard Condition No. 5 shall make the following certification, whether written or implied:

   "I certify under penalty of law that this document and all attachments were prepared under my direction or supervision in accordance with a system designed to assure that qualified personnel properly gathered and evaluated the information submitted. Based on my inquiry of the person or persons who manage the system, or those persons directly responsible for gathering the information, the information submitted is, to the best of my knowledge and belief, true, accurate, and complete. I am aware there are significant penalties for submitting false information, including the possibility of fine and imprisonment for knowing violations."

ADDITIONAL TECHNICALLY CONDITIONED CERTIFICATION CONDITIONS:

In addition to the six standard conditions, the Discharger shall satisfy the following:

1. The Discharger shall notify the Central Valley Water Board in writing **seven days** prior to beginning any in-water activities.

2. Except for activities permitted by the U.S. Army Corps of Engineers under § 404 of the Clean Water Act, soil, silt, or other organic materials shall not be placed where such materials could pass into surface water or surface water drainage courses.

3. All areas disturbed by Project activities shall be protected from washout or erosion.

4. The Discharger shall maintain a copy of this Certification and supporting documentation (Project Information Sheet) at the Project site during construction for review by site personnel and agencies. All personnel (employees, contractors, and subcontractors) performing work on the proposed Project shall be adequately informed and trained regarding the conditions of this Certification.

5. An effective combination of erosion and sediment control Best Management Practices (BMPs) shall be implemented and adequately working during all phases of construction.

6. All temporarily affected areas shall be restored to pre-construction contours and conditions upon completion of construction activities.

7. The Discharger shall perform surface water sampling: 1) when performing any in-water work; 2) in the event that Project activities result in any materials reaching surface waters or; 3) when any activities result in the creation of a visible plume in surface waters. Pollutants shall be analyzed using the analytical methods described in 40 Code of Federal Regulations Part 136; where no methods are specified for a given pollutant, the method shall be approved by Central Valley Water Board staff. The following monitoring shall be conducted immediately upstream out of the influence of the Project and approximately 300 feet downstream of the active work area. Sampling results shall be submitted to this office by the first day of the second month following sampling. The sampling frequency and monitoring locations may be modified for certain projects with written permission from the Central Valley Water Board Executive Officer.

Parameter	Unit	Type of Sample	Frequency of Sample
Turbidity	NTU	Grab	Every 4 hours during in-water work
Settleable Material	ml/L	Grab	Same as above
pH	Standard units	Grab	Daily during concrete activity
Visible construction related pollutants	Observation	Visible Inspections	Continuous throughout the construction period

8. Activities shall not cause in surface waters:

   (a) where natural turbidity is between 0 and 5 Nephelometric Turbidity Units (NTUs), increases exceeding 1 NTU;

   (b) where natural turbidity is between 5 and 50 NTUs, increases exceeding 20 percent;

   (c) where natural turbidity is between 50 and 100 NTUs, increases exceeding 10 NTUs;

   (d) where natural turbidity is greater than 100 NTUs, increases exceeding 10 percent.

   In determining compliance with the above limits, appropriate averaging periods may be applied provided that beneficial uses will be fully protected. Averaging periods may only be used with prior permission of the Central Valley Water Board Executive Officer.

9. Activities shall not cause settleable material to exceed 0.1 ml/L in surface waters as measured in surface waters downstream from the Project.

10. Activities shall not cause the pH to be depressed below 6.5 nor raised above 8.3.

11. The discharge of petroleum products or other excavated materials to surface water is prohibited. Activities shall not cause visible oil, grease, or foam in the work area or downstream. The Discharger shall notify the Central Valley Water Board immediately of any spill of petroleum products or other organic or earthen materials.

12. The Discharger shall notify the Central Valley Water Board immediately if any of the above conditions are violated, along with a description of measures it is taking to remedy the violation.

13. The Discharger shall comply with all California Department of Fish and Game Code § 1600 requirements for the Project.

14. The Discharger must obtain coverage under the NPDES General Permit for Storm Water Discharges Associated with Construction Activities issued by the State Water Resources Control Board for any project disturbing an area of one acre or greater.

15. In the event of any violation or threatened violation of the conditions of this Certification, the violation or threatened violation shall be subject to any remedies, penalties, process, or sanctions as provided for under State law and § 401 (d) of the federal Clean Water Act. The applicability of any State law authorizing remedies, penalties, process, or sanctions for the violation or threatened violation constitutes a limitation necessary to ensure compliance with this Certification.

16. If the Discharger or a duly authorized representative of the Discharger fails or refuses to furnish technical or monitoring reports, as required under this Certification, or falsifies any information provided in the monitoring reports, the Discharger will be subject to civil liability, for each day of violation, or criminal liability.

17. In response to a suspected violation of any condition of this Certification, the Central Valley Water Board may require the Discharger to furnish, under penalty of perjury, any technical or monitoring reports the Central Valley Water Board deems appropriate, provided that the burden, including cost of the reports, shall be in reasonable relationship to the need for the reports and the benefits to be obtained from them.

18. The Discharger shall allow staff of the Central Valley Water Board, or an authorized representative(s), upon the presentation of credentials and other documents, as may be required by law, to enter the Project premises for inspection, including taking photographs and securing copies of project-related records, for the purpose of assuring compliance with this Certification and determining the ecological success of the Project.

CENTRAL VALLEY WATER BOARD CONTACT PERSON:

Debra Mahnke, Water Resource Control Engineer
1685 E Street
Fresno, CA 93706
(559) 445-6281
dmahnke@waterboards.ca.gov

WATER QUALITY CERTIFICATION:

I hereby issue an order certifying that the proposed discharge from the California Department of Transportation Jacalitos Creek Bridge Replacement Project, WDID 5C10CR00033, will comply with the applicable provisions of § 301 ("Effluent Limitations"), § 302 ("Water Quality Related Effluent Limitations"), § 303 ("Water Quality Standards and Implementation Plans"), § 306 ("National Standards of Performance"), and § 307 ("Toxic and Pretreatment Effluent Standards") of the Clean Water Act. This discharge is also regulated under State Water Resources Control Board Water Quality Order No. 2003-0017 DWQ "Statewide General Waste Discharge Requirements For Dredged Or Fill Discharges That Have Received State Water Quality Certification."

Except insofar as may be modified by any preceding conditions, all certification actions are contingent on (a) the discharge being limited to and all proposed mitigation being completed in strict compliance with the Discharger's project description, the attached "Project Information Sheet," and the Discharger's water quality certification application; and (b) compliance with all applicable requirements of the Central Valley Water Board's *Water Quality Control Plan for the Tulare Lake Basin*, Second Edition, revised January 2004.

Any person aggrieved by this action may petition the State Water Resources Control Board to review the action in accordance with California Water Code § 13320 and California Code of Regulations, title 23, § 2050 and following. The State Water Resources Control Board must receive the petition by 5:00 p.m., 30 days after the date of this action, except that if the thirtieth day following the date of this action falls on a Saturday, Sunday, or state holiday, the petition must be received by the State Water

Resources Control Board by 5:00 p.m. on the next business day. Copies of the law and regulations applicable to filing petitions may be found on the Internet at: http://www.waterboards.ca.gov/public_notices/petitions/water_quality or will be provided upon request.

Clay L. Rodgers

for Pamela C. Creedon
Executive Officer

Enclosure: Water Quality Order No. 2003-0017 DWQ
Attachment: Project Information Sheet

cc: Jason Brush, Supervisor, Wetlands Regulatory Office, U.S. Environmental Protection Agency, Region 9, San Francisco (email)
Kate Dadey, Sacramento South Branch Chief, Regulatory Unit, Department of the Army, Corps of Engineers, Sacramento
Bill Orme, Water Quality Certification Unit Chief, Division of Water Quality, State Water Resources Control Board, Sacramento (email)
Jeffrey Single, Regional Manager, San Joaquin Valley-Southern Sierra Region, California Department of Fish and Wildlife, Fresno

PROJECT INFORMATION SHEET

Application Date: 3 February 2014

Applicant: California Department of Transportation

Applicant Representative: Javier Almaguer, South Biology Branch Chief

Project Name: Jacalitos Creek Bridge Replacement Project

Application Number: WDID 5C10CR00033

Type of Project: Bridge replacement

Project Location: Section 31, Township 20 South, Range 16 East, and Section 6, Township 21 South, Range 16 East, MDB&M.
Latitude: 36.136974° and Longitude: -120.277337°

Project Duration: The Project is anticipated to take 240 days and is tentatively scheduled to begin in April 2015.

County: Fresno

Receiving Water: Jacalitos Creek, Tulare Lake Hydrologic Basin, South Valley Floor Hydrologic Unit #558.50, Kettleman HA

Water Body Type: Un-vegetated streambed

Designated Beneficial Uses: The *Water Quality Control Plan for the Tulare Lake Basin*, Second Edition, revised January 2004 designates beneficial uses for surface and ground waters within the region. Beneficial uses that could be impacted by the Project include: Agricultural Supply; Industrial Service and Process Supply; Groundwater Recharge; Water Contact Recreation; Non-Contact Water Recreation; Warm Freshwater Habitat; Wildlife Habitat; and Rare, Threatened or Endangered Species Habitat.

Project Description: The Project will remove and replace the earthquake-damaged Jacalitos Creek Bridge on State Route 33. The existing bridge will be demolished and reconstructed one lane at a time to allow for continued, one-way traffic flow during construction.

Preliminary Water Quality Concerns: Increased erosion and sedimentation in the channel.

Proposed Mitigation to Address Concerns: The Discharger intends to conduct construction when no water is present in the stream channel. The Discharger must submit a stream diversion plan to the Central Valley Water Board if construction occurs when water is present in the channel.

Fill/Excavation Area: The Project will result in the permanent fill of 0.1 acres and temporary fill of 0.76 acres of un-vegetated streambed. Approximately 486 cubic yards of rock slope protection will be placed in the creek channel.

Dredge Volume: None

U.S. Army Corps of Engineers Permit Number: Nationwide Permit 14

Department of Fish and Wildlife Streambed Alteration Agreement: The Discharger applied for a Streambed Alteration Agreement on 30 January 2014.

Status of CEQA Compliance: The Department of Transportation approved a Mitigated Negative Declaration and filed a Notice of Determination on 10 May 2013 (State Clearinghouse Number SCH 2012031067).

As a Responsible Agency under California Environmental Quality Act (CEQA), the Central Valley Water Board reviewed the Mitigated Negative Declaration and found that the Project impacts to water quality were adequately addressed. Mitigation for impacts to water quality is discussed in the "Proposed Mitigation to Address Concerns" section above and the "Compensatory Mitigation" section below.

Compensatory Mitigation: The Discharger will pay $15,000 to an in-lieu fee program to mitigate for permanent impact to 0.1 acre of un-vegetated streambed. The Discharger will restore the temporarily impacted 0.76 acres of streambed to original condition at the conclusion of the Project.

Application Fee Provided: Total fees of $5,643 have been submitted as required by 23 CCR §3833(b)(3)(A) and by 23 CCR §2200(e).

STATE WATER RESOURCES CONTROL BOARD

WATER QUALITY ORDER NO. 2003 - 0017 - DWQ

STATEWIDE GENERAL WASTE DISCHARGE REQUIREMENTS FOR DREDGED OR FILL DISCHARGES THAT HAVE RECEIVED STATE WATER QUALITY CERTIFICATION (GENERAL WDRs)

The State Water Resources Control Board (SWRCB) finds that:

1. Discharges eligible for coverage under these General WDRs are discharges of dredged or fill material that have received State Water Quality Certification (Certification) pursuant to federal Clean Water Act (CWA) section 401.

2. Discharges of dredged or fill material are commonly associated with port development, stream channelization, utility crossing land development, transportation water resource, and flood control projects. Other activities, such as land clearing, may also involve discharges of dredged or fill materials (e.g., soil) into waters of the United States.

3. CWA section 404 establishes a permit program under which the U.S. Army Corps of Engineers (ACOE) regulates the discharge of dredged or fill material into waters of the United States.

4. CWA section 401 requires every applicant for a federal permit or license for an activity that may result in a discharge of pollutants to a water of the United States (including permits under section 404) to obtain Certification that the proposed activity will comply with State water quality standards. In California, Certifications are issued by the Regional Water Quality Control Boards (RWQCB) or for multi-Region discharges, the SWRCB, in accordance with the requirements of California Code of Regulations (CCR) section 3830 et seq. The SWRCB's water quality regulations do not authorize the SWRCB or RWQCBs to waive certification, and therefore, these General WDRs do not apply to any discharge authorized by federal license or permit that was issued based on a determination by the issuing agency that certification has been waived. Certifications are issued by the RWQCB or SWRCB before the ACOE may issue CWA section 404 permits. Any conditions set forth in a Certification become conditions of the federal permit or license if and when it is ultimately issued.

5. Article 4, of Chapter 4 of Division 7 of the California Water Code (CWC), commencing with section 13260(a), requires that any person discharging or proposing to discharge waste, other than to a community sewer system, that could affect the quality of the waters of the State,[1] file a report of waste discharge (ROWD). Pursuant to Article 4, the RWQCBs are required to prescribe waste discharge requirements (WDRs) for any proposed or existing discharge unless WDRs are waived pursuant to CWC section 13269. These General WDRs fulfill the requirements of Article 4 for proposed dredge or fill discharges to waters of the United States that are regulated under the State's CWA section 401 authority.

---

[1] "Waters of the State" as defined in CWC Section 13050(e)

6. These General WDRs require compliance with all conditions of Certification orders to ensure that water quality standards are met.

7. The U.S. Supreme Court decision of *Solid Waste Agency of Northern Cook County v. U.S. Army Corps of Engineers*, 531 U.S. 159 (2001) (the *SWANCC* decision) called into question the extent to which certain "isolated" waters are subject to federal jurisdiction. The SWRCB believes that a Certification is a valid and enforceable order of the SWRCB or RWQCBs irrespective of whether the water body in question is subsequently determined not to be federally jurisdictional. Nonetheless, it is the intent of the SWRCB that all Certification conditions be incorporated into these General WDRs and enforceable hereunder even if the federal permit is subsequently deemed invalid because the water is not deemed subject to federal jurisdiction.

8. The beneficial uses for the waters of the State include, but are not limited to, domestic and municipal supply, agricultural and industrial supply, power generation, recreation, aesthetic enjoyment, navigation, and preservation and enhancement of fish, wildlife, and other aquatic resources.

9. Projects covered by these General WDRs shall be assessed a fee pursuant to Title 23, CCR section 3833.

10. These General WDRs are exempt from the California Environmental Quality Act (CEQA) because (a) they are not a "project" within the meaning of CEQA, since a "project" results in a direct or indirect physical change in the environment (Title 14, CCR section 15378); and (b) the term "project" does not mean each separate governmental approval (Title 14, CCR section 15378(c)). These WDRs do not authorize any specific project. They recognize that dredge and fill discharges that need a federal license or permit must be regulated under CWA section 401 Certification, pursuant to CWA section 401 and Title 23, CCR section 3855, et seq. Certification and issuance of waste discharge requirements are overlapping regulatory processes, which are both administered by the SWRCB and RWQCBs. Each project subject to Certification requires independent compliance with CEQA and is regulated through the Certification process in the context of its specific characteristics. Any effects on the environment will therefore be as a result of the certification process, not from these General WDRs. (Title 14, CCR section 15061(b)(3)).

11. Potential dischargers and other known interested parties have been notified of the intent to adopt these General WDRs by public hearing notice.

12. All comments pertaining to the proposed discharges have been heard and considered at the November 4, 2003 SWRCB Workshop Session.

13. The RWQCBs retain discretion to impose individual or General WDRs or waivers of WDRs in lieu of these General WDRs whenever they deem it appropriate. Furthermore, these General WDRs are not intended to supersede any existing WDRs or waivers of WDRs issued by a RWQCB.

IT IS HEREBY ORDERED that WDRs are issued to all persons proposing to discharge dredged or fill material to waters of the United States where such discharge is also subject to the water quality certification requirements of CWA section 401 of the federal Clean Water Act (Title 33 United States Code section 1341), and such certification has been issued by the applicable RWQCB or the SWRCB, unless the applicable RWQCB notifies the applicant that its discharge will be regulated through WDRs or waivers of WDRs issued by the RWQCB. In order to meet the provisions contained in Division 7 of CWC and regulations adopted thereunder, dischargers shall comply with the following:

1. Dischargers shall implement all the terms and conditions of the applicable CWA section 401 Certification issued for the discharge. This provision shall apply irrespective of whether the federal license or permit for which the Certification was obtained is subsequently deemed invalid because the water body subject to the discharge has been deemed outside of federal jurisdiction.

2. Dischargers are prohibited from discharging dredged of fill material to waters of the United States without first obtaining Certification from the applicable RWQCB or SWRCB.

CERTIFICATION

The undersigned, Clerk to the Board, does hereby certify that the foregoing is a full, true, and correct copy of an order duly and regularly adopted at a meeting of the State Water Resources Control Board held on November 19, 2003.

AYE: Arthur G. Baggett, Jr.
Peter S. Silva
Richard Katz
Gary M. Carlton
Nancy H. Sutley

NO: None.

ABSENT: None.

ABSTAIN: None.

Debbie Irvin
Clerk to the Board

CALIFORNIA DEPARTMENT OF FISH AND WILDLIFE
REGION 4 - CENTRAL REGION
1234 EAST SHAW AVENUE
FRESNO, CALIFORNIA 93710

STREAMBED ALTERATION AGREEMENT
NOTIFICATION NO. 1600-2014-0016-R4
JACALITOS CREEK - FRESNO COUNTY

CALIFORNIA DEPARTMENT OF TRANSPORTATION
CALTRANS DISTRICT 6
JAVIER ALMAGUER
855 M STREET, SUITE 200
FRESNO, CALIFORNIA 93721

FRE-33 JACALITOS BRIDGE REPLACEMENT EA 06-43260 (PROJECT)

This Streambed Alteration Agreement (Agreement) is entered into between the California Department of Fish and Wildlife (CDFW) and the California Department of Transportation (referred to as Permittee), represented by Javier Almaguer.

RECITALS

WHEREAS, pursuant to Fish and Game Code (FGC) Section 1602, Permittee notified CDFW on February 3, 2014, that Permittee intends to complete the Project described herein.

WHEREAS, pursuant to FGC Section 1603, CDFW has determined that the Project could substantially adversely affect existing fish or wildlife resources and has included Protective Measures in this Agreement necessary to protect those resources.

WHEREAS, Permittee has reviewed this Agreement and accepts its terms and conditions, including the Protective Measures to protect fish and wildlife resources.

NOW THEREFORE, Permittee agrees to complete the Project in accordance with this Agreement.

PROJECT LOCATION

The Project is located on the Jacalitos Creek along State Route (SR) 33 between Post Mile (PM) 10.9-11.1, Fresno County, State of California; Township 20 and 21 South, Range 16 East, Section 31 and 6 United States Geological Survey (USGS) map Coalinga, MDB&M; Latitude 36.136974, Longitude -120.277337 (Exhibit A - Figure 1).

PROJECT DESCRIPTION

The purpose of the proposed project is to correct seismic damage and foundation settlement by replacing the existing Jacalitos Creek Bridge (#42-0072) with a wider, single-span box girder bridge structure with 12-foot-wide lanes and 8-foot-wide shoulders to meet current roadway structure standards. The new bridge will be approximately 136.5 feet long and 42.8 feet wide. The roadway approaches to the bridge will also be widened from 4 feet to 8 feet and new metal-beam guardrails will be installed. Demolition and construction will occur in two stages, half of the bridge at a time. One-way, signal controlled traffic flow will be maintained during construction. Construction staging will be within Caltrans Temporary Construction Easement.

Project activity authorized by this Agreement is limited to:

- Shoulder widening from 4 feet to 8 feet on approaches to the bridge will require cut and fill on the sides of the road. The cut area will total 31,576 square feet and include 3,500 cubic yards of native material. There will be a total of 23,326 square feet and 3,878 cubic yards of fill material consisting of excavated material and rocks.

- During Stage 1, the southern half of the bridge will be removed, including two out of five columns from each of the five piers, and reconstruction of the first half of the free span bridge will be completed. During Stage 2, the northern half of the bridge will be removed, including the final three columns from each of the five piers, and reconstruction of the second half of the free span bridge will be completed. Approximately 25 cubic yards of existing concrete from the existing piers and columns within the waterway will be removed and will not be replaced.

- To catch and contain fine particles that fall into the creek during demolition, an impermeable removable membrane/barrier will be placed under the bridge. All bridge debris will be removed from the site and disposed of properly.

- The new bridge will be constructed of cast-in-place pre-stressed concrete box girders. The south side will consist of two boxes: the inside box will be 7½ feet wide and the outer box will be 5 feet wide at the base and 7½ feet wide at the top. The north side will consist of two boxes, the inside box will be 8 feet 11¾ inches wide and the outer box will be 7 feet wide at the base and 9½ feet wide at the top. Each outer edge will have a 2-feet 5¼-inch wide lip that is 8 inches thick to support the outside concrete barrier. A closure pour of 2 feet 11¾ inches will be required to join the south side of the bridge to the newly completed north side of the bridge. This may be done by one of two alternatives. Alternative 1: Falsework will be released as soon as permitted by the specifications, and closure pour shall not be placed sooner than 60 days after the Falsework has been released. Alternative 2: Falsework will not be released less than 28 days after the last concrete has been placed, and closure pour will not be placed sooner than 14 days after the falsework has been released.

- Work on the abutments will also require the removal of 4,900 square feet of existing Rock Slope Protection (RSP) with a total volume of 452 cubic yards of the embankment. Two sections of 30-foot-long existing sheet pile cut-off wall ranging from 14 feet to 18 feet in height and located 12½ feet north of the existing left edge of the bridge deck will be removed to access the abutments. An 85-foot section of the sheet pile wall at the center will remain in place.

- Each of the two new abutments will require 16 Cast-in-Steel-Shell (CISS) 24-inch diameter piles that will extend 87 feet below the footing, which will be 44 feet 10 inches long, 12 feet wide and 3 feet thick made of reinforced concrete. The 16 CISS piles will be arranged in two rows of eight, spaced 8 feet apart from center point to center point. The abutment stem wall, which will be 3 feet thick and 42 feet 10 inches long, will rest on the footing between the two rows of CISS piles. The abutment stem wall and 6 foot deep back wall on top of the stem will be constructed by excavating a rectangular shape 44 feet 10 inches long by 12 feet long until the excavation reaches the bottom of footing elevation. Using the top of the new bridge deck as reference, the excavation will be 20½ feet deep. Once excavation is complete and after the CISS piles have been driven in, the new concrete footing will be poured with concrete forms. Then the stem wall and back wall will be built and soil will backfill the excavation hole until it meets new finished grade.

- The wing walls will be 31½ feet feet long. They will taper from 2 feet thick at the connection to the abutment to 1½ feet thick at the end. The height will taper from 17½ feet at the connection to the abutment down to 3 feet at the end. Construction will require 76½ cubic yards (total for the 4 wing walls) of concrete to be poured in place utilizing temporary form work.

- In order to construct the free span bridge, falsework will be temporarily installed. The falsework vertical support will be constructed using 1½-foot diameter pipe piles arranged in false-work bents, because there is potential for rain events to produce water flow in the creek while falsework is up. There will be 5 falsework bents total, spaced at 35 feet apart in the longitudinal direction of the bridge. For both Stage 1 and Stage 2 Construction, each bent will be 24 feet wide. The bent will be supported by 5 piles; the piles will be spaced at 6 feet on center. Each 50-foot long pile will be embedded approximately 40 feet into the ground and will stick out from the bottom of the creek approximately 10 feet to allow grade adjusting to comply with soffit profile of the new bridge. Piles will be removed from the creek during falsework removal. Each Stage of falsework will be 140 feet long by 24 feet wide supported on 5 falsework bents described above. Each Stage of falsework that will rest on top of the falsework bents will be a transverse 2 feet wide and 1 foot tall steel I-beam resting on top of the pipe piles. For longitudinal span support, 36 feet long steel I-beams measuring 1 foot wide by 1 foot tall will be placed at 4 feet on centers, for a total of 6 beams that will provide the support for plywood to be placed on top. The rest of the concrete forms will be built on top of this plywood.

- All bank protection will be done by "Method B" Placement. This is a three-step process that consists of 1) lay down of the RSP fabric (class 8); 2) placement of a 1.8-foot thick layer of No. 1 RSP onto the RSP fabric; and 3) overlay of the No. 1 RSP with a 3.3 foot thick layer of ¼ ton RSP. The thickness of each layer must be at least 1.5 times the diameter of the median-sized rock. The RSP slope will be 2:1 or flatter. The toe of the slope will be keyed 10.4 feet deep into the streambed. Cut and backfill of the bank may be required to smoothly join the top of the RSP slope to the embankment above.

- The existing retard fence, also referred to as fence (type "wire mesh" or "WM"), on the west side of the channel south of the bridge will be left in place. On the east side, 320 feet of the existing wire mesh fence will be removed from the retard fence in order to install the "B" Line alignment of RSP (see below). The southernmost portion of the retard fence, approximately 140 feet long, will be left in place and filled with approximately 110 cubic yards of ½ ton RSP within the existing WM fence.

- The RSP around the west abutment will be 184 feet long, 7 feet high and 5.1 feet thick. This will require 739 square yards of RSP fabric, 223 cubic yards of RSP No. 1, and 409 cubic yards of ¼-ton RSP. The RSP around the east abutment will be 409 feet long, from 3 feet to 10.2 feet high and 5.3 feet thick. It will also extend south for a distance of 230 feet and curl back away from the channel in an erosion control structure referred to as the "B" Line. This will require a total of 1220 square yards of RSP fabric, 436 cubic yards of RSP No. 1, and 936 cubic yards of ¼ ton RSP. The total area of RSP is 9148 square feet.

- Work will be done in absence of surface flow during naturally dry conditions and during daylight hours.

- A total of 6 tamarisk trees and 1 California buckeye with trunks sized less than 24 inches diameter at breast height (DBH) and 3 cottonwood trees (1 with a DBH less than 24 inches and 2 with a DBH greater than 24 inches) will be removed as a result of Project implementation.

- Equipment to be used will include: an asphalt paver/roller, backhoe, Bidwell and roller screeds, bobcat, bulldozer/loader, chainsaw, compressor, concrete pump, Concrete truck mixers, crane, dump truck, excavator, flatbed truck, fork lift, front-end loader, Genie man lift, grader, haul truck, motor grader, paint/striping truck, pavement roller, pile driver/drill rig, pump truck, Redi-mix truck, roller/compactor, saw cutting/stripping equipment, scraper, shoulder paver, truck with seed sprayer, and water truck.

- All design plans included in the Notification are incorporated into the Project description.

PROJECT IMPACTS

The Project will result in approximately 1.79 acres of impacts from cut and fill. Between the cut and fill impacts and the project boundary limits there will be approximately 3.42 acres of permanent impacts to habitats within CDFW jurisdiction. Other potential impacts related to disturbance during Project implementation include but are not limited to those resulting from noise, vibration, trampling/crushing, erosion, and surface water contact with new concrete or other construction-related materials.

This Agreement is intended to avoid, minimize, and mitigate adverse impacts to the fish and wildlife resources that occupy the Project area, and the immediate adjacent riparian habitat. Absent implementation of the Protective Measures required by this Agreement, the species presented in Tables A and B in addition to other species of birds, mammals, fish, reptiles, amphibians, invertebrates, and plants that compose the local riparian ecosystem could potentially be impacted by the Project.

TABLE A
(Animals)

Name	Scientific Name	Listing		
		Federal	State	Other
Blunt-nosed leopard lizard	*Gambelia sila*	**E**	**E**	**SFP**
San Joaquin whipsnake	*Masticophis flagellum ruddocki*	---	SOC	---
Swainson's hawk	*Buteo swainsoni*	---	**T**	---
Burrowing owl	*Athene cunicularia*	---	SOC	---
Long-eared owl	*Asio otus*	---	SOC	---
Loggerhead shrike	*Lanius ludovicianus*	---	SOC	---
Le Conte's thrasher	*Toxostoma lecontei*	---	SOC	---
San Joaquin kit fox	*Vulpes macrotis mutica*	**E**	**T**	---
Giant kangaroo rat	*Dipodomys ingens*	**E**	**E**	---
San Joaquin Antelope squirrel	*Ammospermophilus nelsoni*	---	**T**	---
Short-nosed kangaroo rat	*Dipodomys nitratoides brevinasus*	---	SOC	---
Tulare grasshopper mouse	*Onychomys torridus tularensis*	---	SOC	---
American badger	*Taxidea taxus*	---	SOC	---

TABLE B
(Plants)

Name	Scientific Name	Listing		
		Federal	State	CNPS
California jewel-flower	*Caulanthus californicus*	**E**	**E**	1B.1
San Joaquin woollythreads	*Monolopia congdonii*	**E**	SOC	1B.2
Lemon's jewel flower	*Caulanthus lemmonii*	---	SOC	1B.1
Hoover's eriastrum	*Eriastrum hooveri*	---	SOC	4.2
Showy golden madia	*Madia radiata*	---	SOC	1B.1

T = Threatened, E = Endangered, R = Rare, PT = Potentially Threatened, D = De-Listed, SOC = Species of Concern
CNPS = California Native Plant Society, SFP = State Fully Protected Species.

MEASURES TO PROTECT FISH AND WILDLIFE RESOURCES

1. Administrative Measures

Permittee shall meet each administrative Protective Measure described below.

1.1 Documentation at Project Site. Permittee shall make this Agreement, any extensions and amendments to this Agreement, and all related Notification materials and California Environmental Quality Act (CEQA) documents, readily available at the Project site at all times and shall be presented to CDFW personnel or personnel from another State, Federal, or local agency upon request.

1.2 Providing Agreement to Persons at Project Site. Permittee shall provide copies of this Agreement and any extensions and amendments to this Agreement to all persons who will be working on the Project at the Project site on behalf of Permittee, including but not limited to contractors, subcontractors, inspectors, and monitors.

1.3 Notification of Conflicting Provisions. Permittee shall notify CDFW if Permittee determines or learns that a Protective Measure in this Agreement might conflict with a provision imposed on the Project by another local, State, or Federal agency. In that event, CDFW shall contact Permittee to resolve any conflict.

1.4 Project Site Entry. Permittee agrees that CDFW personnel may enter the Project site at any time to verify compliance with this Agreement.

1.5 Legal Obligations. This Agreement does not exempt Permittee from complying with all other applicable local, State, and Federal law, or other legal obligations.

1.6 Unauthorized Take. This Agreement does not authorize the "take" (defined in Fish and Game Code §86 as to hunt, pursue, catch, capture, or kill; or attempt to hunt, pursue, catch, capture, or kill) of State- or Federally-listed threatened or endangered species. Any such "take" shall require separate permitting as may be required.

1.7 Water Diversion. To the extent that the Protective Measures of this Agreement provide for the diversion of water, they are agreed to with the understanding that Permittee possesses the legal right to so divert such water.

1.8 Property Not Owned by Permittee. To the extent that the Protective Measures of this Agreement provide for activities that require Permittee to enter on another owner's property, they are agreed to with the understanding that Permittee possesses the legal right to so enter.

1.9 Construction/Work Schedule. Permittee shall submit a **construction/work schedule** to CDFW (Laura.Peterson-Diaz@wildlife.ca.gov with reference to Agreement 1600-2014-0016-R4) prior to beginning any activities covered by this

Agreement. Permittee shall also notify CDFW upon the completion of the activities covered by this Agreement.

1.10 Training. Prior to starting any Project activity, all employees, contractors, and visitors who will be present during Project activities shall receive training from a qualified individual on the contents of this Agreement, the resources at stake, and the legal consequences of non-compliance. A **training sign-in sheet** for the employees and contractors, including the date of the training and who gave the training shall be provided to CDFW (Laura.Peterson-Diaz@wildlife.ca.gov with reference to Agreement 1600-2014-0016-R4) prior to beginning any activities covered by this Agreement.

2. Avoidance and Minimization Measures

To avoid or minimize adverse impacts to fish and wildlife resources identified above, Permittee shall implement each Protective Measure listed below.

2.1 Construction/Work Hours. All non-emergency work activities shall be confined to daylight hours. For purposes of this Agreement, "daylight hours" are defined as that daytime period between sunrise and sunset.

2.2 Flagging/Fencing. Prior to any activity within the channel, Permittee shall identify the limits of the required access routes and encroachment into the stream. These "work area" limits shall be identified with brightly-colored flagging/fencing. Work completed under this Agreement shall be limited to this defined area only. Flagging/fencing shall be maintained in good repair for the duration of the Project. All CDFW jurisdictional areas beyond the identified work area limits shall be considered Environmentally Sensitive Areas (ESA) and shall not be disturbed.

2.3 Listed Species.

(a) This Agreement does not allow for the "take," or "incidental take," of any State- or Federally-listed threatened or endangered species. Liability for any "take," or "incidental take," of such listed species remains the separate responsibility of Permittee for the duration of the Project.

(b) Permittee affirms that no "take" of listed species will occur as a result of this Project and will take prudent measures to ensure that all "take" is avoided. Permittee acknowledges fully understand that they do not have State "incidental take" authority. If any State- or Federally-listed threatened or endangered species occur within the proposed work area or could be impacted by the work proposed, and thus "taken" as a result of Project activities, Permittee is responsible for obtaining and complying with required State and Federally threatened and endangered species permits or other written authorization before proceeding with this Project.

(c) Permittee shall immediately notify CDFW of the discovery of any rare, threatened, or endangered species prior to and during Project implementation.

(d) **Pre-activity surveys** for potential rare, listed, or other sensitive species shall be conducted by a qualified biologist within 30 days prior to commencement of Project activities unless otherwise specified in species-specific measures below. Surveys shall be conducted within the work area and all access routes to avoid and minimize "incidental take," confirm previous observations, identify any areas occupied by listed or sensitive species, and clearly mark all resources to be avoided by Project activities. If any State- or Federally-listed threatened or endangered animal species are found or could be impacted by the work proposed, Permittee shall notify CDFW of the discovery prior to commencement of construction. A new Agreement and/or a 2081(b) State Incidental Take Permit may be necessary and a new CEQA analysis may need to be conducted, before work can begin.

(e) Burrow Surveys: In advance of Project activities, all rodent burrows shall be flagged and mapped by a qualified wildlife biologist on the Project site and within a minimum 50-foot buffer of all Project-related activity. Maps showing flagged burrows and areas of proposed Project activity shall be submitted to CDFW for review at least one (1) week prior to Project initiation.

(f) Blunt-Nosed Leopard Lizard: "Take" (incidental or otherwise) of the State fully protected blunt-nosed leopard lizard cannot be authorized by CDFW. Project activities shall proceed according to the following options: 1) Within all areas of suitable habitat on the Project site and within a 50-foot buffer of the Project site, a 50-foot no-disturbance buffer shall be maintained around each rodent burrow for the duration of Project activities. A qualified wildlife biologist shall be present during all ground disturbing activities during the active season of the species (from April through September) and shall halt activity if a blunt-nosed leopard lizard is detected in or adjacent to the Project area, until the individual leaves of its own volition. Or, 2) **Protocol-level surveys** (including spring and fall surveys) to detect presence shall be conducted by a qualified wildlife biologist, and results shall be submitted to CDFW for review well in advance of Project activity at each Project location. If any individuals are detected, full avoidance shall occur according to option 1, above.

(g) Swainson's Hawk: No Project-related activities shall be completed from March 1 through August 31 unless a qualified biologist conducts **Swainson's hawk nesting surveys** following the survey methodology developed by the Swainson's Hawk Technical Advisory Committee (http://www.dfg.ca.gov/wildlife/nongame/docs/swain_proto.pdf) prior to commencing Project-related activities. Additional pre-Project surveys for active nests within a ½ mile radius of the Project site shall be conducted by a qualified biologist no more than 10 days prior to the start of Project activities

and during the appropriate time of day to maximize detectability. A minimum no disturbance buffer of ½ mile shall be delineated around active nests until the breeding season has ended or until a qualified biologist has determined and CDFW has confirmed in writing that the birds have fledged and are no longer reliant upon the nest or parental care for survival. Alternately, Permittee may apply for and acquire an Incidental Take Permit for Swainson's hawk prior to initiating Project activities.

(h) Burrowing Owl: A qualified wildlife biologist shall **survey for burrowing owl** within a 500-foot radius of the Project site, within 30 days prior to Project commencement. Surveys shall be conducted at appropriate times to maximize detection. If any active burrowing owl burrows are observed, these burrows shall be designated an ESA, protected, and monitored by a qualified biologist during Project-related activities. A minimum 500-foot avoidance buffer shall be established and maintained around each owl burrow during the nesting season (February 1 through August 31). If active burrowing owl burrows are observed outside of the nesting season, a minimum 150-foot no disturbance buffer shall be established around each burrow. Implementation of passive relocation with one-way doors is not authorized by CDFW in this Agreement.

(i) San Joaquin Kit Fox: Pre-activity transect **surveys for kit fox** shall be conducted and submitted to CDFW, and Permittee shall follow all requirements in the United States Fish and Wildlife Service (USFWS) "USFWS Standardized Recommendations for the Protection of the Endangered San Joaquin Kit Fox Prior to or During Ground Disturbance" (http://www.fws.gov/sacramento/es/Survey-Protocols-Guidelines/Documents/kitfox_standard_rec_2011.pdf). A qualified biological monitor shall be available on-site during all Project-related activities that could impact the species. If kit fox are found on or adjacent to the Project site, all activity shall cease until a qualified biologist confirms that the individual(s) has left of its own volition.

If San Joaquin kit fox dens are found, they shall be avoided by appropriate distances (potential or atypical den = 50 feet; known den = 100 feet; occupied or unoccupied pupping den = minimum 250 feet). During reconnaissance-level surveys the den will be treated as a known den unless sign associated with natal/pupping activity is observed. If any occupied San Joaquin kit fox pupping dens are subsequently discovered, Permittee shall contact CDFW and USFWS for further guidance. Absolutely no disturbance to known San Joaquin kit fox dens shall occur and no work shall occur within the above buffers without contacting CDFW and USFWS and obtaining written authorization from each to do so. Permittee is advised that an Incidental Take Permit for San Joaquin kit fox may first be required for such activities.

(j) Giant Kangaroo Rat: Within all areas of suitable habitat on the Project site and within a 50-foot buffer of the Project site, a 50-foot no-disturbance buffer shall be maintained around each rodent burrow for the duration or Project activities. If avoidance of all burrows is not possible, then **protocol-level trapping surveys** shall be conducted by a qualified wildlife biologist who holds a Scientific Collecting Permit for the species. Trapping survey results shall be submitted to CDFW for review in advance of initiating Project activities. If CDFW is unable to determine that avoidance of the species is possible, Permittee shall acquire an Incidental Take Permit for giant kangaroo rat prior to commencing the Project.

(k) San Joaquin Antelope Squirrel: During all Project activity, a 50-foot no-disturbance buffer shall be maintained around each burrow entrance within all areas of suitable habitat on the Project site and within a 50-foot buffer of the Project site. If avoidance of all burrows is not possible, **transect surveys** of the entire Project site including areas of temporary disturbance (parking, equipment storage, staging areas, etc.) shall be completed by a qualified biologist multiple times using walking transect surveys, and survey results shall be submitted to CDFW for review. Surveys shall be completed between April 1 and September 30, when temperatures are between 20-30° C (68-86° F). If individuals are detected at any time prior to or during Project activities, all activity shall cease and Permittee shall contact CDFW. If CDFW is unable to determine that avoidance is possible, Permittee shall acquire an Incidental Take Permit for San Joaquin antelope squirrel prior to commencing or resuming Project activity, whichever applies.

(l) American Badger: Any American badger detected within the Project area during Project-related activities shall be allowed to move out of the work area of its own volition. If American badger is denning on or immediately adjacent to the Project site, Permittee shall consult with CDFW to determine whether the animal(s) may be evicted from the den. Eviction of badgers will not be approved by CDFW unless it is confirmed that no dependent young are present.

(m) Sensitive Plant Species: Sensitive plants (including but not limited to California jewel flower and San Joaquin woollythreads) have the potential of existing on the Project site; therefore, if suitable habitat is present, Permittee shall conduct surveys for these plants and natural communities on the Project site well in advance of any planned ground-disturbing activities. **Repeated floristic surveys** shall be conducted by a qualified botanist multiple times during the appropriate floristic period(s) in order to adequately assess the potential Project-related impacts to listed plant species). Survey results shall be submitted to CDFW for review in advance of Project commencement. If sensitive plant species are identified, Permittee shall identify them with flagging and avoid with a 25-foot no-disturbance buffer during Project activities. If this avoidance is not feasible, Permittee shall consult with CDFW

to determine whether alternative avoidance measures are possible. CDFW may provide alternate guidance in writing.

2.4 General Wildlife.

(a) If any fish or wildlife is encountered during the course of Project implementation, said fish and wildlife shall be allowed to leave the Project area unharmed.

(b) Pursuant to FGC Sections 3503 and 3503.5, it is unlawful to "take," possess, or destroy the nest or eggs of any bird or bird-of-prey. To protect nesting birds, no Project activity shall be completed from March 1 through August 31 unless the following surveys are completed by a qualified biologist within 30 days prior to Project initiation.

Due to their special status designation and differing nesting period, separate avian survey and avoidance requirements are listed above for Swainson's Hawk and burrowing owls (see Avoidance and Minimization Measure 2.3 (g) and (h) respectively).

Raptor Species: Survey for nesting raptors within a 500-foot radius of the Project area. If any active nests are observed, these nests shall be designated an ESA and protected by a minimum 500-foot avoidance buffer until the breeding season has ended or until a qualified biologist has determined that the young have fledged and are no longer reliant upon the nest or parental care for survival.

Other Avian Species: Survey for nesting activity within a 250-foot radius of the defined work area. If any nesting activity is found, Permittee shall designate nests and nest substrate (trees, shrubs, ground, or burrows) as an ESA protected with a minimum 250-foot buffer until the young have fledged and are no longer reliant upon the nest or parental care for survival.

CDFW may consider variances from these buffers when there is a compelling biological or ecological reason to do so, such as when the Project area would be concealed from a nest site by topography.

2.5 Vegetation.

(a) Trimming and removal of vegetation shall be limited to the minimal amount necessary to complete the Project.

(b) Permittee shall document the number and species of all woody-stemmed plants in excess of four (4) inches DBH that are cut, trimmed, or otherwise removed or damaged during Project activities. Trees and shrubs with a DBH of four (4) inches or greater that are damaged or removed shall be replaced by replanting appropriate native species at a 3:1 ratio (replaced to lost),

except that heritage trees 24-inches or greater shall require replanting of like species at a 10:1 ratio in or immediately adjacent to the Project site, according to Compensatory Measure 3.1(a) Revegetation/Restoration.

(c) Vegetation or material removed from the Project site shall be disposed of at an appropriate and legal off-site location where the material cannot enter the stream channel. No such material shall be stockpiled in the streambed, banks, or channel, except that native vegetation removed from the channel may be chipped and the chips used as mulch for disturbed soil sites in or near the Project area.

(d) To minimize the spread of invasive plant species to uninfested areas within and outside of the Project site, Permittee shall implement control and eradication activities prior to the initiation of ground-disturbing activities. Permittee shall utilize control and eradication methods that are specific to the target species, avoid the spread and proliferation of other invasive plant species, and minimize damage to and/or removal of native plant species. All nonnative and invasive plants controlled or eradicated at the project site shall be removed and disposed of in a manner that prevents the introduction and establishment of those species to new areas.

(e) Vehicles, heavy equipment and other machinery shall be inspected for the presence of undesirable plant species and cleaned prior to on-site use to reduce the risk of introducing exotic, invasive plant species into the Project site.

2.6 Vehicles.

(a) Vehicles shall not be operated in areas where surface water is present. Vehicles shall only operate in the channel during naturally dry.

(b) Vehicle access to the channel's banks and bed shall be limited to predetermined ingress and egress corridors on existing roads. All other areas adjacent to the work site shall be considered an ESA and shall remain off-limits to Project-related equipment. Vehicle corridors and the ESA shall be identified by Permittee's resident engineer in consultation with the CDFW representative.

(c) Vehicles shall not be driven where wetland vegetation, riparian vegetation, or aquatic organisms may be destroyed, except as otherwise provided for in this Agreement and as necessary to complete the authorized work.

(d) Any equipment or vehicles driven and/or operated within or adjacent to the stream shall be checked and maintained daily to prevent leaks of materials that, if introduced to water, could be deleterious to aquatic and terrestrial life.

(e) Staging and storage areas for equipment, materials, fuels, lubricants, and solvents shall be located outside of the stream banks. Stationary equipment

such as motors, pumps, generators, compressors and welders, located within or adjacent to the channel, shall be positioned over drip-pans. Vehicles shall be moved away from the stream prior to refueling and lubrication.

2.7 Structures. Permittee confirms that all structures are designed (i.e., size and alignment) and will be constructed and maintained such that they will accommodate high flows and not cause long- term changes in water flows that adversely modify the existing upstream or downstream channel bed/bank contours, increase sediment deposition, or cause significant new erosion.

2.8 Fill/Spoil.

(a) Spoil storage shall not be located within the stream, where spoil will be washed into the stream, or where it will cover aquatic or riparian vegetation. Rock, gravel, and/or other materials shall not be imported into or moved within the stream bed or banks, except as otherwise addressed in this Agreement.

(b) Fill shall be limited to the minimal amount necessary to accomplish the agreed activities. Excess fill material shall be moved off-site at Project completion.

2.9 Erosion.

(a) No work within the banks of the channel will be conducted during or immediately following large rainfall events (¼-inch in any 24-hour period).

(b) All disturbed soils within the Project site shall be stabilized to reduce erosion potential, both during and following Project activities. Temporary erosion control devices, such as straw bales, silt fencing, and sand bags, may be used, as appropriate, to prevent siltation of the channel. To minimize the risk of ensnaring and strangling wildlife, coir rolls, erosion control mats or blankets, straw or fiber wattles, or similar erosion control products shall be composed entirely of natural-fiber, biodegradable materials. Permittee shall not use "photodegradable" or other plastic erosion control materials.

(c) Permittee's ability to minimize siltation shall be the subject of preconstruction planning and feature implementation. Precautions to minimize siltation may require that the work site be isolated so that silt or other deleterious materials are not allowed to pass to downstream reaches. The placement of any structure or materials in the channel for this purpose, not included in the original Project description, shall be coordinated with CDFW. If it is determined that silt levels resulting from Project-related activities constitute a threat to aquatic life, activities associated with the siltation shall be halted until effective CDFW-approved control devices are installed, or abatement procedures are initiated.

2.10 Pollution.

(a) During Project implementation, Permittee shall not dump any litter or debris within the stream. All such debris and waste shall be picked up daily and properly disposed of at an appropriate site.

(b) Raw cement, concrete or washings thereof, asphalt, paint or other coating material, oil or other petroleum products, or any other substances that could be hazardous to fish or wildlife resulting from Project-related activities, shall be prevented from contaminating the soil and/or entering the "Waters of the State".

(c) Permittee shall install the necessary containment structures to control the placement of any wet concrete/cement and to prevent it from entering into the channel outside of those structures. No concrete/cement shall be poured or applied below the top of bank if the 10-day weather forecast indicates any chance of rain. At all times when Permittee is pouring or working with wet concrete/cement there shall be a designated monitor to inspect the containment structures and ensure that no concrete or other debris enters into the channel outside of those structures. Poured concrete/cement shall remain isolated from surface waters and soils that could become saturated, and allowed to cure for a minimum of 30 days. CDFW may approve a variance to this measure if Permittee proposes a plan to collect surface water (including rain) that comes in contact with concrete/cement and dispose of the water in a lawful manner at an off-site location. No variance shall be implemented unless CDFW has provided approval in writing and in advance.

(d) Permittee and all contractors shall be subject to the water pollution regulations found in FGC Sections 5650 and 12015.

(e) In the event that a spill occurs, all Project activities shall immediately cease until cleanup of the spilled materials is completed. CDFW shall be notified immediately by Permittee of any spills and shall be consulted regarding cleanup procedures.

(f) All Project-generated debris, building materials, and rubbish shall be removed from the stream bed and banks, and from areas where such materials could be washed into the stream bed and banks.

3. Compensatory Measures

To compensate for adverse impacts to fish and wildlife resources identified above that cannot be avoided or minimized, Permittee shall implement each measure listed below.

3.1 Revegetation/Restoration.

(a) If any trees four (4) inches in DBH or greater are removed as part of the Project, Permittee shall develop a **Revegetation Plan** for the site and submit it to CDFW for approval at least 30 days prior to Project commencement. The Revegetation Plan shall specifically address plantings of native trees, shrubs, herbs and grasses removed, as indicated in Avoidance and Minimization Measure 2.5(b) above, and include monitoring and maintenance to ensure a minimum of 70 percent survival for the plantings after five (5) years, including up to three (3) years with supplemental water and at least two (2) years without such assistance. The Plan shall also identify remedial action to be taken if the survival success criteria are not met, and methods for annual monitoring and reporting to CDFW.

(b) If the Project causes any exposed slopes or exposed areas on the stream banks, these areas shall be seeded (with weed-free straw or mulch) with a blend of a minimum of three (3) locally native grass species. One (1) or two (2) sterile non-native perennial grass species may be added to the seed mix provided that amount does not exceed 25 percent of the total seed mix by count. Locally native wildflower and/or shrub seeds may also be included in the seed mix. The seeding shall be completed as soon as possible, but no later than November 15 of the year Project activity ends in any location. A **seed mixture** shall be submitted to CDFW for approval prior to application. At the discretion of CDFW, all exposed areas where seeding is considered unsuccessful after 90 days shall receive appropriate soil preparation and a second application of seeding, straw, or mulch as soon as is practical on a date mutually agreed upon.

(c) Where suitable vegetation cannot be reasonably expected to become established, non-erodible materials shall be used for such stabilization. Any installation of non-erodible materials not described in the original Project description shall be coordinated with CDFW. Coordination may include the negotiation of additional Protective Measures for this activity.

4. Reporting Measures

Permittee shall meet each reporting requirement described below.

4.1 Obligations of Permittee.

(a) Permittee shall have primary responsibility for monitoring compliance with all Protective Measures included in this Agreement. Protective Measures shall be implemented within the time periods indicated in this Agreement and the reporting program described below.

(b) Permittee (or Permittee's designee) shall ensure the implementation of the Protective Measures of this Agreement, and shall monitor the effectiveness of the Protective Measures.

4.2 Reports. Permittee shall submit the following Reports to CDFW:

- Construction/work schedule, submitted to CDFW prior to commencing Project activities (Administrative Measure 1.9).
- Training sign-in sheet, submitted to CDFW prior to commencing Project activities (Administrative Measure 1.10).
- Results of the pre-activity surveys for special status species, submitted to CDFW at least one (1) week prior to Project initiation (Avoidance and Minimization Measure 2.3(d)).
- Results of burrow surveys and map showing all rodent burrow locations, submitted to CDFW at least one (1) week prior to Project initiation (Avoidance and Minimization Measure 2.3(e)).
- Results of protocol surveys for blunt-nosed leopard lizard, if avoidance of burrows is not feasible, submitted to CDFW at least one (1) week prior to Project initiation (Avoidance and Minimization Measure 2.3(f)).
- Results of surveys for Swainson's hawk nests if Project activities occur during the Swainson's hawk nesting season, submitted to CDFW at least one (1) week prior to Project initiation (Avoidance and Minimization Measure 2.3(g)).
- Results of surveys for burrowing owls, submitted to CDFW at least one (1) week prior to Project initiation (Avoidance and Minimization Measure 2.3(h)).
- Results of surveys for San Joaquin kit fox, submitted to CDFW at least one (1) week prior to Project initiation (Avoidance and Minimization Measure 2.3(i)).
- Results of the protocol trapping surveys for giant kangaroo rat, if avoidance of burrows is not feasible, submitted to CDFW at least one (1) week prior to Project initiation (Avoidance and Minimization Measure 2.3(j)).
- Results of the transect surveys for San Joaquin antelope squirrel, if avoidance of burrows is not feasible, submitted to CDFW at least one (1) week prior to Project initiation (Avoidance and Minimization Measure 2.3(k)).
- Results of surveys for sensitive plants, submitted to CDFW at least one (1) week prior to the start of Project activities (Avoidance and Minimization Measure 2.3(m)).

- Results of surveys for nesting birds if any Project activities are scheduled during the avian nesting season, submitted to CDFW at least one (1) week prior to Project initiation (Avoidance and Minimization Measure 2.4(b)).

- A seed mixture to be used to control erosion, submitted to CDFW prior to application (Compensatory Measure 3.1(b)).

- A Final Project Report to be submitted within 30 days after the Project is completed. The final report shall summarize the Project and address the implementation of each Protective Measure included in this Agreement. "Before and after" photo documentation of the Project site shall be included in the report.

CONTACT INFORMATION

Any communication that Permittee or CDFW submits to the other shall be in writing and any communication or documentation shall be delivered to the address below by U.S. mail, fax, or email, or to such other address as Permittee or CDFW specifies by written notice to the other.

To Permittee:

California Department of Transportation (Caltrans)
Ronald Cummings
855 M Street, Suite 200
Fresno, California 93721
(559) 445-6260
Fax: (559) 445-6260
ronald.cummings@dot.ca.gov

To CDFW:

California Department of Fish and Wildlife
Region 4 - Central Region
1234 East Shaw Avenue
Fresno, California 93710
Attn: Lake and Streambed Alteration Program – Laura Peterson-Diaz
Notification No. 1600-2014-0016-R4
Phone: (559) 243-4017, extension 225
Fax: (559) 243-4020
Laura.Peterson-Diaz@wildlife.ca.gov

LIABILITY

Permittee shall be solely liable for any violations of this Agreement, whether committed by Permittee or any person acting on behalf of Permittee, including its officers,

employees, representatives, agents or contractors and subcontractors, to complete the Project or any activity related to it that this Agreement authorizes.

This Agreement does not constitute CDFW's endorsement of, or require Permittee to proceed with the Project. The decision to proceed with the Project is Permittee's alone.

SUSPENSION AND REVOCATION

CDFW may suspend or revoke in its entirety this Agreement if it determines that Permittee or any person acting on behalf of Permittee, including its officers, employees, representatives, agents, or contractors and subcontractors, is not in compliance with this Agreement.

Before CDFW suspends or revokes this Agreement, it shall provide Permittee written notice by certified or registered mail that it intends to suspend or revoke. The notice shall state the reason(s) for the proposed suspension or revocation, provide Permittee an opportunity to correct any deficiency before CDFW suspends or revokes this Agreement, and include instructions to Permittee, if necessary, including but not limited to a directive to immediately cease the specific activity or activities that caused CDFW to issue the notice.

ENFORCEMENT

Nothing in this Agreement precludes CDFW from pursuing an enforcement action against Permittee instead of, or in addition to, suspending or revoking this Agreement.

Nothing in this Agreement limits or otherwise affects CDFW's enforcement authority or that of its enforcement personnel.

OTHER LEGAL OBLIGATIONS

This Agreement does not relieve Permittee or any person acting on behalf of Permittee, including its officers, employees, representatives, agents, or contractors and subcontractors, from obtaining any other permits or authorizations that might be required under other Federal, State, or local laws or regulations before beginning the Project or an activity related to it.

This Agreement does not relieve Permittee or any person acting on behalf of Permittee, including its officers, employees, representatives, agents, or contractors and subcontractors, from complying with other applicable statutes in the FGC including, but not limited to, FGC sections 2050 et seq. (threatened and endangered species), 3503 (bird nests and eggs), 3503.5 (birds of prey), 5650 (water pollution), 5652 (refuse disposal into water), 5901 (fish passage), 5937 (sufficient water for fish), and 5948 (obstruction of stream).

Nothing in this Agreement authorizes Permittee or any person acting on behalf of Permittee, including its officers, employees, representatives, agents, or contractors and subcontractors, to trespass.

AMENDMENT

CDFW may amend this Agreement at any time during its term if CDFW determines the amendment is necessary to protect an existing fish or wildlife resource.
Permittee may amend this Agreement at any time during its term, provided the amendment is mutually agreed to in writing by CDFW and Permittee. To request an amendment, Permittee shall submit to CDFW a completed CDFW "Request to Amend Lake or Streambed Alteration" form and include with the completed form payment of the corresponding amendment fee identified in CDFW's fee schedule at the time of the request (see Cal. Code Regs., Title 14, § 699.5).

TRANSFER AND ASSIGNMENT

This Agreement may not be transferred or assigned to another entity, and any purported transfer or assignment of this Agreement to another entity shall not be valid or effective, unless the transfer or assignment is requested by Permittee in writing, as specified below, and thereafter CDFW approves the transfer or assignment in writing.

The transfer or assignment of this Agreement to another entity shall constitute a minor amendment, and therefore to request a transfer or assignment, Permittee shall submit to CDFW a completed CDFW "Request to Amend Lake or Streambed Alteration" form and include with the completed form payment of the minor amendment fee identified in CDFW's fee schedule at the time of the request (see Cal. Code Reg., Title 14, § 699.5).

EXTENSIONS

In accordance with FGC section 1605(b), Permittee may request one (1) extension of this Agreement, provided the request is made prior to the expiration of this Agreement's term. To request an extension, Permittee shall submit to CDFW a completed CDFW "Request to Extend Lake or Streambed Alteration" form and include with the completed form payment of the extension fee identified in CDFW's fee schedule at the time of the request (see Cal. Code Reg., Title 14, § 699.5). CDFW shall process the extension request in accordance with FGC 1605(b) through (e).

If Permittee fails to submit a request to extend this Agreement prior to its expiration, Permittee must submit a new notification and notification fee before beginning or continuing the Project this Agreement covers (FGC § 1605, subd. (f)).

EFFECTIVE DATE

This Agreement becomes effective on the date of CDFW's signature, which shall be: 1) after Permittee's signature; 2) after CDFW complies with all applicable requirements

under the California Environmental Quality Act (CEQA); and 3) after payment of the applicable FGC section 711.4 filing fee listed at http://www.wildlife.ca.gov/habcon/ceqa/ceqa_changes.html.

TERM

This Agreement shall remain in effect for five (5) years beginning on the date signed by CDFW, unless it is terminated or extended before then. All Protective Measures in this Agreement shall remain in force throughout its term. Permittee shall remain responsible for implementing any Protective Measures specified herein to protect fish and wildlife resources after this Agreement expires or is terminated, as FGC section 1605(a) (2) requires.

CALIFORNIA ENVIRONMENTAL QUALITY ACT (CEQA) COMPLIANCE

In approving this Agreement, CDFW is independently required to assess the applicability of CEQA. The features of this Agreement shall be considered as part of the overall Project description.

Permittee's concurrence signature on this Agreement serves as confirmation to CDFW that the activities conducted under the terms of this Agreement are consistent with the Project as described in the CEQA Mitigated Negative Declaration prepared by California Department of Transportation as the Lead Agency for the Jacalitos Creek Bridge Replacement Project (SCH No. 2012031067), approved on March 27, 2013. A copy of the Mitigated Negative Declaration was provided to CDFW by Permittee.

CDFW, as a CEQA Responsible Agency, shall submit a Notice of Determination to the State Clearinghouse upon signing this Agreement.

EXHIBITS

The document listed below is included as an exhibit to this Agreement and is incorporated herein by reference.

A. Figure 1. Project Location USGS Quad Map.

AUTHORITY

If the person signing this Agreement (signatory) is doing so as a representative of Permittee, the signatory hereby acknowledges that he or she is doing so on Permittee's behalf and represents and warrants that he or she has the authority to legally bind Permittee to the terms herein.

AUTHORIZATION

This Agreement authorizes only the Project described herein. If Permittee begins or completes a Project different from the Project this Agreement authorizes, Permittee may be subject to civil or criminal prosecution for failing to notify CDFW in accordance with FGC section 1602.

CONCURRENCE

The undersigned accepts and agrees to comply with all the terms of this Agreement.

FOR CALIFORNIA DEPARTMENT OF TRANSPORTATION

Javier Almaguer — 5/8/2014
Date

Branch Chief – Caltrans Central Region Biology South

FOR CALIFORNIA DEPARTMENT OF FISH AND WILDLIFE

Jeffrey R. Single, Ph.D. — 5/12/14
Date

Regional Manager – Central Region

Prepared by: Laura Peterson-Diaz
Environmental Scientist

Figure 1

Exhibit A

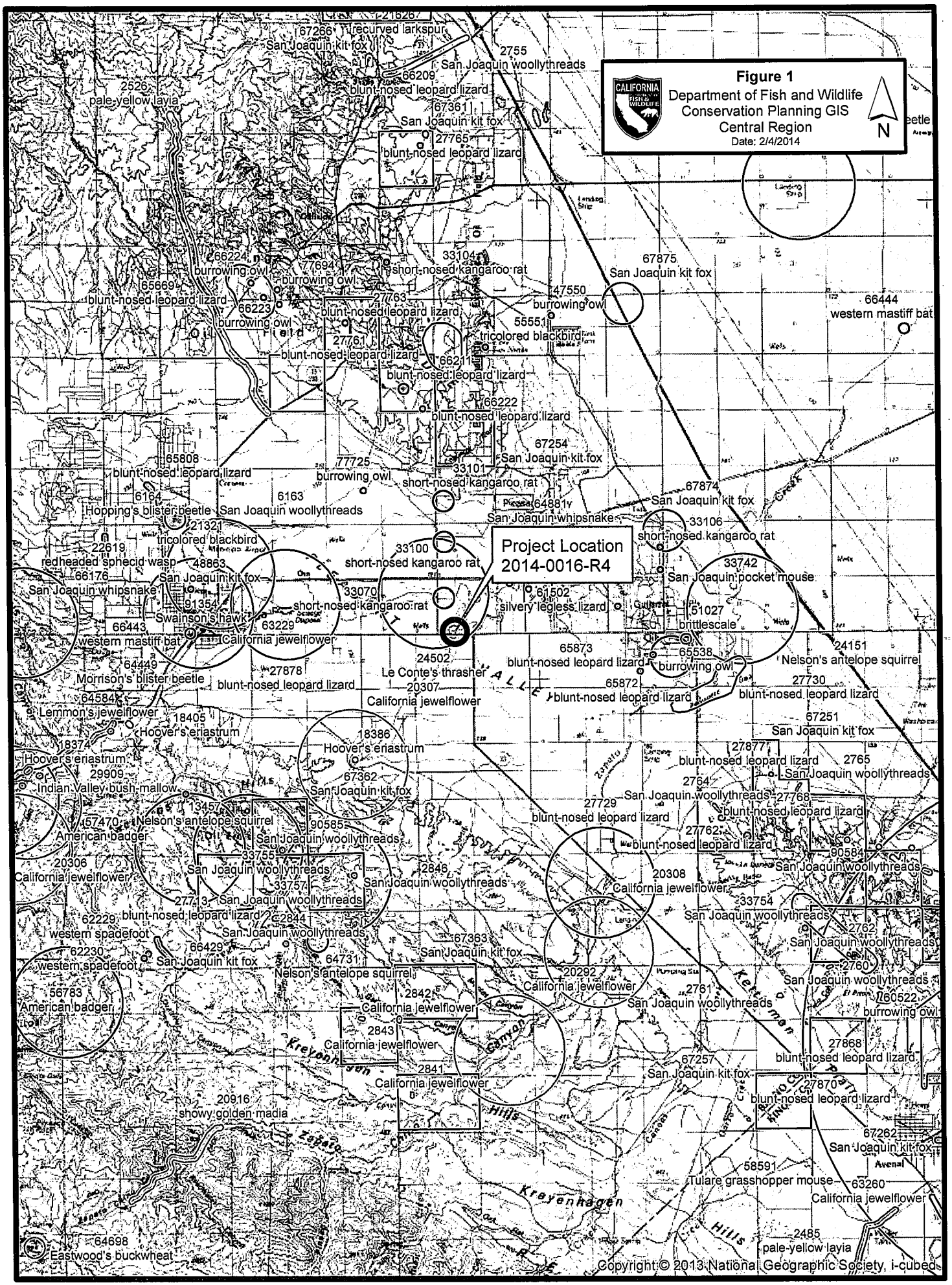
Figure 1
Department of Fish and Wildlife
Conservation Planning GIS
Central Region
Date: 2/4/2014
N
Project Location
2014-0016-R4
recurved larkspur
San Joaquin kit fox
San Joaquin woollythreads
blunt-nosed leopard lizard
pale-yellow layia
burrowing owl
short-nosed kangaroo rat
tricolored blackbird
western mastiff bat
Hopping's blister beetle
San Joaquin whipsnake
redheaded sphecid wasp
Swainson's hawk
California jewelflower
Le Conte's thrasher
silvery legless lizard
brittlescale
San Joaquin pocket mouse
Nelson's antelope squirrel
Morrison's blister beetle
Lemmon's jewelflower
Hoover's eriastrum
Indian Valley bush-mallow
American badger
western spadefoot
Eastwood's buckwheat
showy golden madia
Tulare grasshopper mouse
Copyright © 2013 National Geographic Society, i-cubed
0 1 2 3 Miles

M e m o r a n d u m

Flex your power!
Be energy efficient!

To: MICHAEL BEAUCHAMP
Chief, Office of Bridge Design South 2

Attention: Eduardo Ortega Jr.

Date: January 10, 2014

File: 06-FRE-33 PM 11.0
EA 06-432601
ID 0600020388
Jacalitos Creek
Bridge (Replace)
Br. No. 42-0441

From: **DEPARTMENT OF TRANSPORTATION**
DIVISION OF ENGINEERING SERVICES
GEOTECHNICAL SERVICES – MS 5

Subject: Revised Foundation Report

Introduction

The Office of Geotechnical Design North has prepared this revised Foundation Report (FR) to provide foundation recommendations for replacement of the Jacalitos Creek Bridge, Br. No. 42-0441. The structure is located on State Route 33 (Jayne Ave) in the city of Coalinga in Fresno County. This revised Foundation Report supersedes the Foundation Report dated December 4, 2013.

Scope of Work

The scope of our work for this FR includes review of the General Plan, Foundation Plan, foundation design loads provided by Structure Design (SD), evaluation of subsurface conditions based on the available geotechnical and geologic data, a field exploration program, and engineering and seismic analyses.

Pertinent Reports and Investigation

In preparation of this report, the following documents were reviewed:

- Preliminary Geologic Recommendations and Resources Estimate for Advance Planning Studies, Jacalitos Creek Bridge (Replace), June 19, 2000.
- Preliminary Foundation Report, Jacalitos Creek Br. (Replace), August 15, 2011.
- Preliminary Seismic Recommendations for Jacalitos Creek Bridge, May 31, 2000.

- Final Hydraulic Report, Jacalitos Creek Bridge, Structure Hydraulics and Hydrology, September 17, 2013.
- Foundation Recommendations for Jacalitos Creek Bridge, April 17, 1969.
- As-Built Log of Test Borings, Jacalitos Creek Bridge Repairs, Bridge No. 42-0072, Contract No. 06-098144, August 4, 1969.
- As-Built General Plan, Jacalitos Creek Bridge Channel Modification, Bridge No. 42-0072, Contract No. 62-14T13C19, undated.
- Foundation Plan for Jacalitos Creek Bridge (Replace), undated.
- Geologic Map of California, Santa Cruz, Scale 1: 250,000, CDC, 1958.
- Geotechnical Services Design Manual, Version 1.1, August 2009.
- Ground Water Well Data, CA Department of Water Resources.

Project Description

The project proposes to replace the existing bridge structure with a single span CIP pre-stressed (PS) box girder structure supported by 2 ft diameter CISS piles. The proposed bridge has a length of 134.5 ft and a width of 43 ft.

Foundation design data and foundation design loads provided by Structure Design (SD) are presented in **Tables 1** through **3**.

Table 1. Foundation Design Data Sheet

Support No.	Design Method	Pile Type	Finished Grade Elev. (ft)	Cut-off Elev. (ft)	Pile Cap Size (ft)		Permissible Settlement Under Service Load (in)		Number of Piles Per Support
					B	L	ΔV	ΔH	
Abut 1	WSD	2’ ϕ CISS	571.41	566.66	12.00	44.83	1	0.25	16
Abut 2	WSD	2’ ϕ CISS	571.00	566.25	12.00	44.83	1	0.25	16

Table 2. Service-I Limit State (LRFD Foundation Design Loads)

Support No.	Total Vertical Load per Support (kips)		Service-I Limit State (kips)			
			Compression		Tension	
	Total Load	Permanent Load	Per Support	Max Per Pile	Per Support	Max Per Pile
Abut 1	2922	2490	2922	211	0	0
Abut 2	2922	2490	2922	211	0	0

Table 3. Strength and Extreme Event Limit State (LRFD Foundation Design Loads)

Support No.	Strength Limit State (kips)				Extreme Event Limit State (kips)			
	Compression		Tension		Compression		Tension	
	Per Support	Max Per Pile	Per Support	Max Per Pile	Per Support	Max Per Pile	Per Support	Max Per Pile
Abut 1	N/A	N/A	N/A	N/A	3608	346	408	51
Abut 2	N/A	N/A	N/A	N/A	3608	346	408	51

Field Investigation

The Office of Geotechnical Design North conducted a subsurface investigation in October and November 2011.

The subsurface investigation consisted of two rotary wash borings (A-11-001 and R-11-002) and two Cone Penetrometer Tests (CPT-11-001 and CPT-11-002). The borings were advanced using a self-casing wireline drilling method. The maximum depth reached by the borings and CPT was approximately 151.5 feet and 51.6 feet, respectively. Sampling was achieved in the borings utilizing a Standard Penetration Test (SPT) sampler. A summary of the borings and CPT is included in **Table 4**.

Table 4. Subsurface Exploration Summary for Jacalitos Creek Bridge

Boring / CPT No.	Completion Date	Drill Rig Type	Hammer Type	Hammer Efficiency (%)	Approx. Ground Surface Elevation (ft)	Boring Depth (ft)
A-11-001	8/17/2011	CS 1000	Auto	95	570	101.0
R-11-002	8/24/2011	CS 1000	Auto	95	575	151.5
CPT-11-001	9/7/2011	CPT	NA	NA	590	51.6
CPT-11-002	9/7/2011	CPT	NA	NA	590	50.5

Full-sized Logs-of-Test-Borings (LOTB) will be prepared by Geotechnical Services, Office of Geotechnical Support, Branch D, Contracts, Graphics & Records to be incorporated in the project plans.

Laboratory Testing

Laboratory testing was performed on selected samples from the borings. A summary of the laboratory testing results is presented in **Table 5**.

Table 5. Laboratory Testing Summary

Boring No.	Sample No.	Elevation (ft)	Percent Passing No. 4	Percent Passing No. 200	Liquid Limit	Plasticity Index	Moisture Content (%)
A-11-001	2	565	59	9		NP	1.9
A-11-001	4	560	100	24		NP	7.0
A-11-001	6	555	100	9		NP	5.5
A-11-001	8	550	100	99	47	22	28.3
A-11-001	14	535	100	46	23	5	15.5
R-11-002	2	570	97	8		NP	14.3
R-11-002	6	560	98	17		NP	12.5
R-11-002	12	545	100	91	40	19	33.8
R-11-002	20	525	62	13		NP	12.4
R-11-002	30	500	100	55		NP	23.0

Site Geology and Subsurface Conditions

The California Department of Conservation, Division of Mines and Geology, Geologic Map of California, Santa Cruz, 1958 was used to determine the geologic formations of the project area. The project locations are mapped as being in an area of Pleistocene Non-marine Recent Alluvial Fan Deposit (Qf).

Based on the borings performed, the subsurface soils consisted predominantly of interbedded layers of medium dense to very dense sand, sand with gravel, and silty sand, and medium stiff to very stiff silty to sandy clay. Soil density/consistency generally increased with depth. Detailed soil descriptions from the borings can be found on the LOTB.

Topography and Drainage

The proposed site is located in the Great Valley geomorphic province of California on the western side of the Sierra Nevada Mountain Range and on the eastern side of the Coastal Mountain Range. The flat terrain is typical for the valley region. However, this site is near the edge between the Central Valley and the Coastal Mountain Range. The ground surface elevation ranges from approximately 570 to 580 feet.

Ground Water

Ground water was not encountered in the borings performed for this project, which were drilled to a maximum depth of approximately 150 feet in August 2011. Department of Water Resources (DWR) monitoring well data indicates that for the project area, the average ground water depth is 180 feet (average elevation 390 feet). A boring performed in March 1969 for the original Jacalitos Creek Bridge show ground water at a depth of 5 feet below the ground surface (elevation 566.7 feet). As this boring was drilled within the rainy season, the shallow depth may be attributed to the seasonal high water level. Groundwater conditions will vary according to variations in rainfall, well pumping, and construction activities.

For liquefaction and pile analysis, a groundwater elevation of 570 feet (bottom of channel elevation) was used.

Scour

Potential scour conditions at the bridge site, provided in the Final Hydraulic Report dated September 17, 2013 by Structure Hydraulics & Hydrology, are summarized in **Table 6** below.

Table 6. Scour Summary

Support No.	Degradation Scour (ft)	Base Flood Scour (ft)		Total Scour (ft)
		Contraction	Local	
Abut 1	4.0	6.4	N/A	10.4
Abut 2	4.0	6.4	N/A	10.4

Corrosion

Chemical tests were performed to determine the corrosion potential of the soil. The results from the corrosion testing are included in **Table 7**.

Table 7. Soil Corrosion Test Summary

Sample Type	Sample Location	Sample Depth (ft)	Minimum Resistivity (ohm-cm)	pH
Bulk sample	Creek channel, beneath existing bridge	0-5	15178	8.83

The Department currently defines a corrosive area as an area where the soil and/or water contains more than 500 PPM of chlorides, or more than 2000 PPM of sulfates, or has a minimum resistivity of less than 1000 ohm-centimeters, or has a pH of 5.5 or less. With the exception of MSE Walls, chloride and sulfate tests (CTM 422 and CTM 417) are not required (NA) if the minimum resistivity is greater than 1,000 ohm-cm.

The test results are consistent for soils present in the project area and within the non-corrosive limits established by the Department. Consequently, the soil should be considered non-corrosive with respect to pH and resistivity.

Seismic Recommendations

Based on the SPT blow counts from the borings, a V_{S30} (the weighted shear wave velocity for the top 100 feet of foundation material) of 213 m/s (700 ft/s) is considered to be applicable to the foundation material for the proposed bridge.

The deterministic spectrum from the Caltrans ARS Online Tool (version 2.3.06) is based on the nearest active fault which controls ground motion. This fault is the Great Valley 13 (Coalinga) fault (ID No. 205) with MMax of 7.0. The fault is located west of the bridge site and the closest distance from the bridge site to the fault rupture plane is approximately 7 miles. The fault is a reverse fault with a dip angle of 15 degrees to the west.

Based on the "Methodology for Developing Design Response Spectrum for Use in Seismic Design Recommendations, November 2012", the governing design Acceleration Response Spectrum (ARS) curves are obtained by any or a combination of the following three methods for the proposed bridge:

1. Statewide minimum deterministic spectrum with MMax of 6.5, vertical strike-slip event with a rupture distance of 7.5 miles.
2. Deterministic Seismic Hazard spectrum from the Caltrans ARS Online Tool (version 2.3.06).
3. The USGS Interactive Deaggregation procedure with a 5% Probability of Exceedance in 50 years (975 years return period).

For the proposed Jacalitos Creek Bridge, the recommended ARS curve was determined using method 3. The peak ground acceleration is estimated to be 0.55g. The recommended ARS curve is presented on **Plate No. 1**.

<u>Liquefaction</u>

Liquefaction, which is commonly observed during earthquakes, is a phenomenon where saturated granular soils lose their strength during an earthquake and become fluid-like and mobile. As a result, the ground may undergo large permanent displacements that can damage structures.

A liquefaction analysis was performed and indicates for boring A-11-001, the soil from elevation 570 to 558 ft, elevation 556 to 553 ft, and elevation 540 to 530 ft has the potential to liquefy during a seismic event and for boring R-11-002 the soil from elevation

575 to 555 ft, elevation 546 to 544 ft, and elevation 540 to 535 ft has the potential to liquefy during a seismic event. The calculated liquefaction will result in a seismic induced settlement on the order of 4 to 7 inches.

Lateral Spreading

Lateral spreading is the horizontal lateral displacement of the ground surface down slopes or towards creek or stream channels as a result of liquefaction in underlying deposits during an earthquake. A lateral spreading analysis was performed and indicates that lateral spreading is possible at the bridge site if the liquefaction as described above occurs. The potential of lateral spreading was analyzed with a displacement controlled kinematic approach using commercial software LPile (Ensoft, Inc.) and SlopeW (Geo-Slope International, Ltd.). Based on the analysis, a lateral spreading force of 95 kips is estimated at the top of the proposed 24-inch diameter CISS piles.

As-Built Foundation Data

The original structure of the Jacalitos Creek Bridge was built in 1955 and founded on concrete piles at the abutments and bents. A design load of 32 tons was recommended for all supports, and the estimated pile length was 50 ft. Bridge Inspection Reports indicate that this structure has been subject to severe scour issues resulting in settlement of the foundation soon after the bridge was built. In 1970, the bridge was repaired by jacking up the bridge deck and adding steel H piles (250x85) to provide additional support (70 ton design load, specified tip elevation 527 ft, 27.35 ft length added to design tip to obtain bearing).

Foundation Recommendations

Recommendations for 2 ft diameter CISS piles are presented in **Tables 8** and **9**.

Table 8. Foundation Recommendations for Abutments

Support	Pile Type	Cut-off Elev. (ft)	Service Limit State Per Support (kips)		LRFD Service-I Limit State Total Load (kips) Per Pile (Compression)	Nominal Resistance (kips)	Design Tip Elev (ft)	Spec Tip Elev (ft)	Nominal Driving Resistance Required (kips)
			Total	Permanent					
Abut 1	2' ϕ CISS (0.625" wall thickness)	566.66	2922	2490	211	430	497 (a) 480 (b) 510 (c) 491 (d)	480	650
Abut 2	2' ϕ CISS (0.625" wall thickness)	566.25	2922	2490	211	430	497 (a) 480 (b) 510 (c) 491 (d)	480	650

Notes:
1. Recommendations are based on working stress design (WSD) and loads provided by SD.
2. A FS of 2.0 is used to calculate the available geotechnical resistance in Service Limit State.
3. Design tip elevations are controlled by (a) compression, (b) compression with liquefaction, (c) tension, (d) lateral load.
4. Design tip elevation controlled by settlement is not applicable.
5. Design tip elevation for lateral load is provided by SD.
6. Specified tip elevation shall not be raised above lateral load design tip elevation.
7. The nominal driving resistance required is equal to the nominal resistance needed to support the factored loads plus the driving resistance from the unsuitable penetrated soil layers (liquefiable layers and layers above liquefiable layers) which do not contribute to the design resistance.

Table 9. Pile Data Table

Support Location	Pile Type	Nominal Resistance (kips)		Design Tip Elevation (ft)	Specified Tip Elevation (ft)	Nominal Driving Resistance Required (kips)
		Compression	Tension			
Abut 1	2' ϕ CISS (0.625" wall thickness)	430	50	497 (a) 480 (b) 510 (c) 491 (d)	480	650
Abut 2	2' ϕ CISS (0.625" wall thickness)	430	50	497 (a) 480 (b) 510 (c) 491 (d)	480	650

Note:
1. Design tip elevations are controlled by (a) compression, (b) compression with liquefaction, (c) tension, (d) lateral load.
2. The nominal driving resistance required is equal to the nominal resistance needed to support the factored loads plus the driving resistance from the unsuitable penetrated soil layers (liquefiable layers and layers above liquefiable layers) which do not contribute to the design resistance.

Pile Drivability

According to the Log of Test Borings, there are very dense sand and gravel zones between elevations 502 ft and 527 ft. The piles must be driven through these zones, as the specified pile tip elevation cannot be raised above the lateral load design tip elevation. There is potential for hard driving conditions through these zones. If hard driving conditions are encountered, the following options are available:

1. A driving shoe may be added to the piles as needed. The driving shoe and any welds must not be any larger than the outside diameter of the pile.
2. Central relief drilling may be used as needed. The central relief drilling must always leave a 15 ft soil plug in the pile.

Construction Considerations

1. While ground water was not encountered during the field investigation, the ground water level fluctuates seasonally and is anticipated to vary depending on the season and water flow in the creek.

2. An indicator pile program is recommended the CISS piles. Thirty two piles are proposed for the bridge replacement (sixteen at each abutment). One production pile shall be selected as indicator pile and PDA monitored before full production pile construction starts.

The field acceptance criteria shall be established as follows:

a. PDA monitor the initial driving of the indicator pile with blow counts (blows/ft). The initial driving shall be stopped 1 ft above specified tip elevation.
b. Restrike the pile to specified tip after the pile clean up (with minimum required soil plug), determine blow counts every 1/10 ft with PDA.
c. Set up the production pile acceptance criteria based on correlations between initial driving blow counts and second PDA/analysis (restrike) data. This will minimize the possible internal skin impact on the nominal driving resistance required.

3. Prior to installation of the CISS piles, the Contractor shall provide a pile driving system submittal. All proposed driving systems (i.e. each hammer that may be brought onto the site) must be included in the submittal. The submittal shall include a drivability analysis indicating that the proposed driving system will install the piles to the specified tip elevations at acceptable rates of penetration. The submittal shall be provided to Caltrans Foundation Testing Branch for review and approval. No CISS piles may be installed until the submittal is approved.

Project Information

"Project Information," discloses to bidders and contractors a list of pertinent information available for their inspection prior to bid opening. The following is information originating from Geotechnical Services.

Data and information attached with the project plans are:
A. Log-of-Test-Borings (LOTB), Jacalitos Creek Bridge (Replace).

Data and Information included in the Information Handout provided to the bidders and Contractors are:
A. Revised Foundation Report for EA 06-432601, dated 1/10/2014.

Data and Information available for inspection at the District Office:

A. None.

Data and Information available for inspection at the Transportation Laboratory are:

A. None.

Disclaimer and Contact Information

The foundation recommendations included in this report are based on specific project information regarding structure type, location, and design loads provided by SD. If any changes are made during final project design, OGDN should review the changes to determine if these foundation recommendations are still applicable. Any questions regarding this report should be directed to the attention of Ben Barnes at 916-227-1039.

BENJAMIN M. BARNES, P.E.
Transportation Engineer, Civil
Office of Geotechnical Design North
Geotechnical Services

Attachment: **Plate No. 1**, ARS Curve

c: Suzie Holdridge (D6 Project Manager)
Qiang Huang (GS, OGDN-E)
Structure Construction R.E. Pending File
Rebecca Harnagel (DES Office Engineer, Office of PS&E)
Ted Mooradian (D6 DME)

Jacalitos Creek Bridge

Bridge No. 42-0441 **Latitude** 36.1370

Project ID 0600020388 **Longitude** -120.2773 **Control** Probabilistic

Period (s)	Sa(g)
0.01	0.55
0.05	0.80
0.10	0.93
0.15	1.06
0.20	1.16
0.25	1.17
0.30	1.17
0.40	1.10
0.50	1.05
0.60	1.01
0.70	0.98
0.85	0.93
1.00	0.88
1.20	0.76
1.50	0.63
2.00	0.50
3.00	0.32
4.00	0.23
5.00	0.18

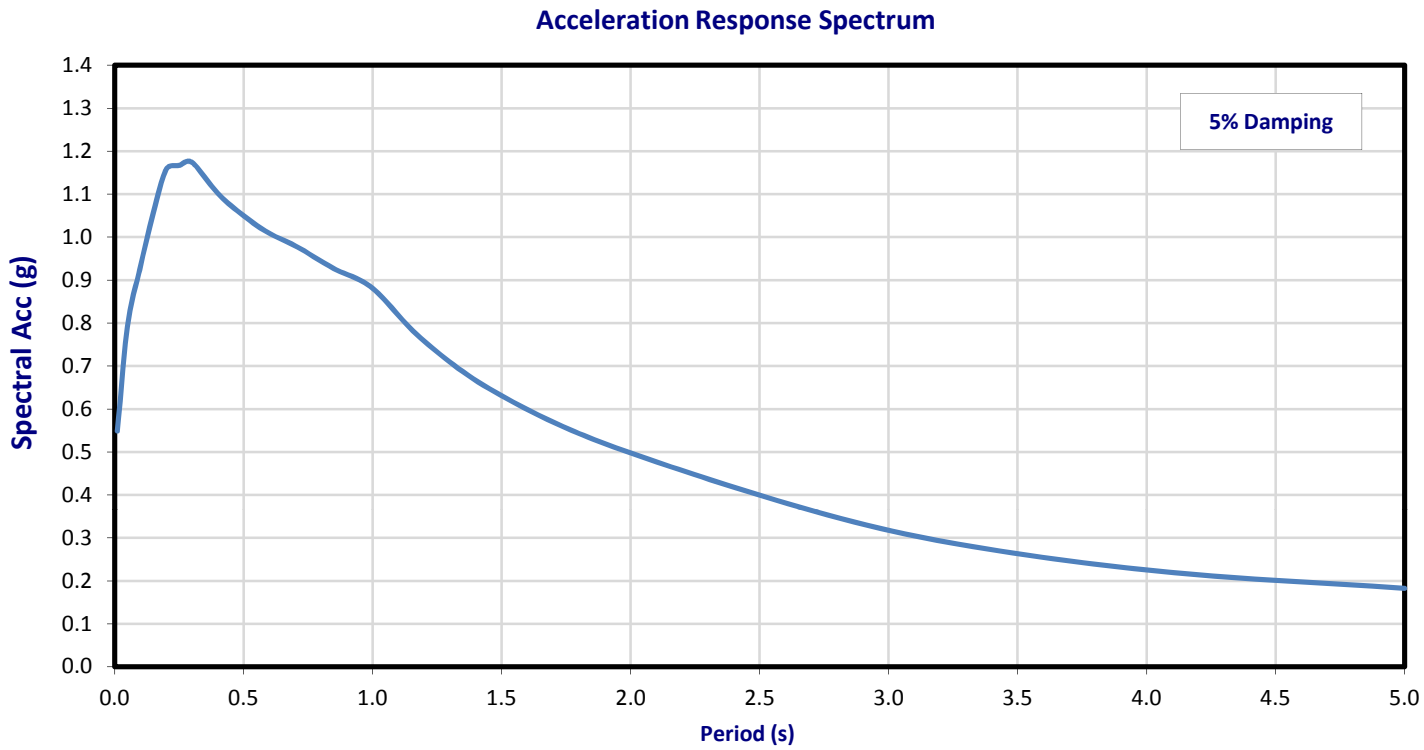

Deterministic Procedure Data

Fault	Great Valley 13 (Coalinga)	R_{rup}	11.8	km
Fault ID	205	R_{jb}	0.0	km
Mmax	7	R_x	11.5	km
Style	Rev	V_{S30}	213	m/s
Dip (deg)	15	$Z_{1.0}$	N/A	m
Dip Dir	W	$Z_{2.5}$	N/A	km
Z_{TOR}	9.1			

Note: The ARS curve above is controlled by the USGS 5% Probability of Exceedance in 50 years (975 years return period).

Caltrans	Division of Engineering Services Geotechnical Services Office of Geotechnical Design - North	ID 0600020388	ARS Curve	Plate No. 1
		EA 06-432601	Jacalitos Creek Bridge, Br. No. 42-0441, 06-FRE-33 PM 11.0	

State of California – Department of Transportation
Division of Engineering Services
Structure Design Services

FINAL HYDRAULIC REPORT

Jacalitos Creek

Bridge No. 42 0441
06 - FRE – 33 PM 11.0
EA 06-432601
Project ID 06 0002 0388

Prepared by:

Anthony Nedwick, PE
Structure Hydraulics and Hydrology
September 17, 2013

REGISTERED PROFESSIONAL ENGINEER
ANTHONY NEDWICK
No. C60368
Exp. 06/30/14
CIVIL
STATE OF CALIFORNIA

General:

It is proposed to replace the existing Jacalitos Creek, Bridge No. 42-0072. The new Bridge Number will be 42-0441. The bridge is located on State Route 33 in Fresno County, east of the City of Coalinga. The existing bridge was originally constructed in 1955.

Figure 1: Aerial View of existing Jacalitos Creek Bridge, Br. No. 42 0072.

The purpose of the proposed project is to replace the existing Jacalitos Creek Bridge with a new structure that will meet the current standards for lane and shoulder width, as well as correct the seismic deficiencies of the current bridge. The existing bridge was evaluated by both the Structures Maintenance-Hydraulics and Structures Maintenance-Ratings groups and determined to be not scour critical, with an NBIS 113 Code of 5 (December 2012).

It should be noted that the alignment stationing and related numerical designation for the bridge elements such as abutments, Beginning of Bridge (BB) and End of Bridge

(EB), have all been reversed for the proposed structure, in comparison to the convention used for the existing structure. Therefore, Abutment 1 of the proposed structure is the west abutment which is the location of the existing Abutment 7 for the 1955 structure. Similarly, the proposed Abutment 2 is the east abutment, the location of the existing Abutment 1.

The current structure consists of a 134'-6" long, 6-span concrete slab bridge on multi-column bents. The columns are a combination of concrete and steel H-piles. The natural channel both upstream and downstream is a wide, meandering channel. The roadway embankment and relatively small bridge opening causes a considerable restriction to the natural flow during high discharge events. This restriction causes the velocities to increase from about 3 fps in the reach 55 feet upstream of the structure to 7 fps at the upstream side of the bridge, and further to almost 17 fps within 50 feet of the downstream side of the bridge, where the maximum velocities occur. Velocities then drop back to the 8 to 9 fps range within about 90 feet of the structure, and drop further, to the 3 to 4 fps range, approximately 400 feet downstream of the structure. This increased velocity along with the extreme angle of attack occurring at the bridge site are causing significant scour and erosion issues at the piers and embankments.

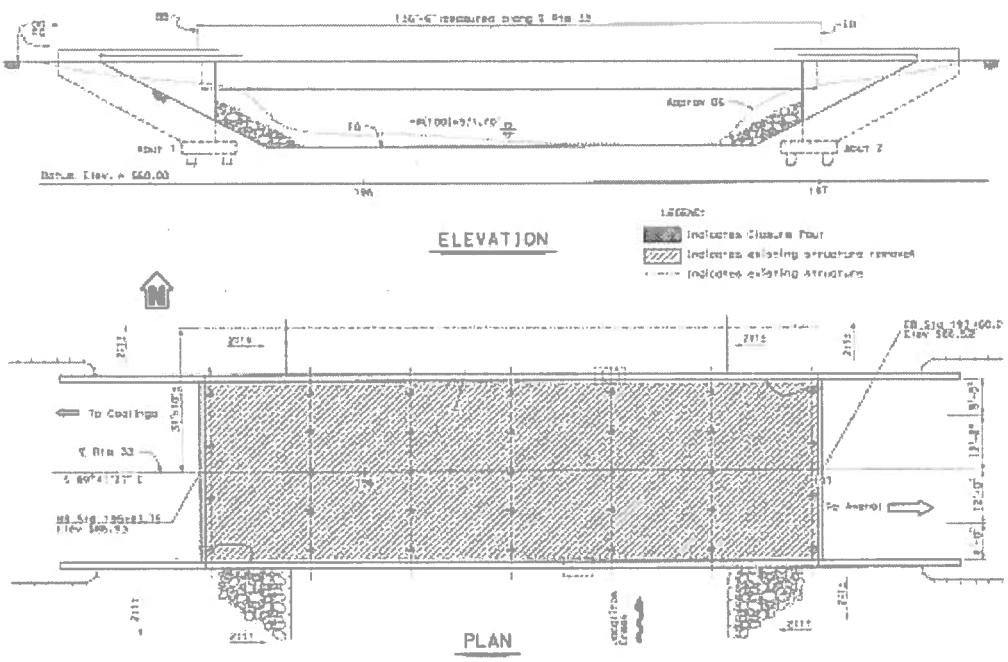

Figure 2: Plan and Elevation Views of the proposed replacement bridge. Not to Scale.

The proposed structure would be 136'-6", single-span, cast-in-place, pre-stressed (CIP/PS) concrete box girder structures founded on 2' diameter CISS piles. The proposed structure has a width of approximately 43 feet, and a structural depth of 6'-

0". The proposed structure will replace the existing structure in its current location, with no increase in the bridge opening width.

This report is based on the plans and information provided by Eduardo Ortega Jr. of Structure Design, including the General Plan, dated September 9, 2013. All elevations are based on survey information as noted by the Foundation Plan provided by Preliminary Investigations-North. **All elevations indicated in this report are based on the Vertical Datum NAVD 1988.**

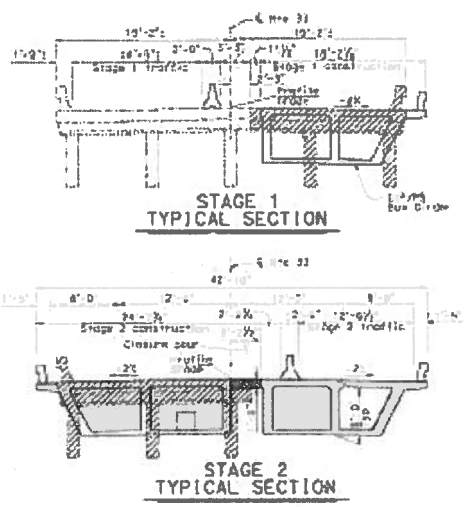

Figure 3: Typical Section. Not to Scale.

Hydraulic Issues at the Existing Structure:

The current structure has experienced hydraulic issues in the past. High flows in 1958 caused a 4 foot drop in channel elevation beneath the structure. Further flooding in 1962 caused some minor settlement of the structure and prompted the design and installation of a sheetpile checkdam immediately downstream of the bridge. Further flooding in 1969 washed away RSP at Abutment 1, exposed the pile shells at the bents and caused the sheetpile checkdam to partially fail by bowing out. Subsequent surveys revealed a 3" settlement of the deck. The deck was jacked up and four additional steel H-piles per bent were installed at Bents 2 through 6. In addition to the additional piles, a concrete pile cap was constructed around the columns of Bents 2 through 6. There was no indication whether the pile caps were covered after installation. A review of historical Bridge Inspection Reports indicates that the pile caps are currently exposed but not undermined. Based on information from previous reports and site visits, there is little evidence that the sheetpile checkdam still exists, except for some file photos from 1992 showing the outer ends visible above the channel invert. These historical inspection reports also indicate the placement of concrete rip rap in the channel under the structure.

The 4 feet of degradation noted after the 1958 storms was likely due to a combination of streambed degradation and contraction scour caused by the constriction of the relatively small bridge opening compared to the width of the natural channel. The contraction scour estimation is supported by calculations based on the HEC-RAS model, which indicate the current bridge opening of under 134'-6" feet will cause approximately 6.4 feet of contraction scour.

It was estimated that the invert has experienced between 2 and 3 feet of long-term degradation since 1962, based on survey data. At this rate, it is likely the new structure could experience up to 4 feet of long term degradation over its lifespan. There is no indication of channel head-cutting. The remnants of the sheetpile checkdam can be abandoned in place, unless it conflicts with the construction of the new structure.

A review of the structure and the current channel configuration was performed by the Caltrans Structures Maintenance and Investigations (SM&I) Hydraulics Branch with input from the SM&I Ratings Branch. The existing structure was determined to be not Scour Critical, with an NBIS 113 Code of 5 (December 2012).

There has also been a history of embankment erosion upstream of the existing Abutment 1. Much of this erosion appears to be caused by the redirection of the channel flow to the east. Upstream of Route 33, the natural channel flows in the north-easterly direction until it is redirected nearly due east by the Route 33 roadway embankment fill to the west of the existing bridge. The flow then travels in an easterly direction, nearly parallel to the roadway, where it then must turn nearly 90-degrees to the north to pass through the bridge opening. Much of the hydraulic energy is directed at the east embankment just to the south of Abutment 1, where past erosion problems have necessitated the addition of several different erosion mitigation designs including, rock slope protection (RSP), retards and wire revetment fences. Revetment has also been required immediately upstream from the existing Abutment 7, along the roadway embankment.

Basin:

At the bridge site, the watershed for Jacalitos Creek encompasses more than 64 square miles. Jacalitos Creek originates in the Diablo Range and flows northeasterly through the Kreyenhagen and Jacalitos Hills into Pleasant Valley to the east of the City of Coalinga, where it flows through the project site and eventually into Los Gatos Creek just over a mile downstream from the site. Elevations in the watershed range from approximately 570 feet at the bridge site to almost 4,000 feet in the higher elevations of the Diablo Range. Precipitation in the watershed is light but tends to increase with altitude and varies from an average annual precipitation of about 5 inches at the bridge site to about 20 inches in the higher elevations of the coastal range with most areas receiving less than 12 inches per year.

Jacalitos Creek is a tributary to Los Gatos Creek, which in turn becomes Arroyo Pasajero. Several miles downstream from the Jacalitos Bridge site, Interstate 5 crosses Arroyo Pasajero. On March 10, 1995, a catastrophic failure attributed to scour caused both Northbound and Southbound structures carrying Interstate 5 over Arroyo Pasajero to collapse, causing seven fatalities.

Jacalitos Creek is not under the jurisdiction of the Central Valley Flood Protection Board or the Fresno County Flood Control Board. In a phone conversation with Dan McKay with the City of Coalinga, it was determined that there is no flood control agency with jurisdiction over the Jacalitos Creek channel. The City of Coalinga is constructing a new wastewater treatment facility on the property located near the South eastern quadrant of the bridge.

The channel stability of Jacalitos Creek was assessed within the FHWA publication "Assessing Stream Channel Stability at Bridges in Physiographic Regions," (Publication No. FHWA-HRT-05-072, July 2006). Channel stability was estimated to be "fair."

Discharge:

WMS (Watershed Modeling System by Aquaveo), version 8.4, was utilized to determine the watershed area in excess of 64 square miles. There is a stream gage attached to the existing bridge, with notes in the file indicating the gage belongs to the Department of Water Resources (DWR). However no current information was found after checking DWR and USGS stream gage data sources. The FEMA Flood Insurance Study for Fresno County did not contain any specific information for Jacalitos Creek, but did contain discharge rates and watershed area for nearby Warthan Creek. The Warthan Creek watershed is northwest of, and immediately adjacent to, the Jacalitos Creek watershed, and encompasses about 116 square miles. The discharge rates for Jacalitos Creek were correlated with the FEMA discharges from Warthan Creek, using a basin transfer method, as outlined in USGS publication #77-21; Magnitude and Frequency of Floods in California. The 50-year and 100-year discharges for Jacalitos Creek were estimated to be 3,700 cfs and 5,200 cfs, respectively.

Hydraulic Analysis:

The channel hydraulics were modeled using the Army Corps of Engineers HEC-RAS modeling program, version 4.1.0, utilizing survey data provided by Preliminary Investigations-North. HEC-RAS was used to determine the water surface elevations and velocities throughout the project reach. Manning's roughness coefficients were estimated using USGS guides as well as data gathered during site investigations and Log of Test Boring information. Manning's coefficients were estimated at 0.038 for the main channel in this reach. The channel has a very flat average slope of approximately 0.6 % in the reach at the project site.

Two scenarios were evaluated; the existing structure and the proposed single span replacement structure. The abutment slopes and soil bench widths where assumed for the proposed structure, with a 2:1. The survey data was altered to represent the modified channel at the proposed structure. Actual survey data and as-built plans were used to model the existing structure.

Based on the hydraulic model for the existing structure, the top width of the 100-year flow gradually decreases from about 920 feet in width at a location approximately 900 feet upstream of the structure, to about 90 feet wide at the structure itself, and then increases to about 680 feet in width, approximately 600 feet downstream of the structure. Several hundred feet upstream from the structure, channel velocities are in the range of 1.5 fps to 3.1 fps. At the contracted area near the bridge, the velocities increase from 7 fps to almost 17 fps, and then decrease back to less than 8 fps several hundred feet downstream of the structure as the channel widens back to near the natural width. This illustrates the channel constriction at the bridge site. This constriction is likely the cause of most of the localized channel degradation at the bridge since its construction in 1955.

Velocities in the vicinity of the structure vary based on the revised geometry of the channel cross-section for the existing structure as well as the proposed alternative. The geometry was based on both the existing channel as well as assumptions regarding the removal and replacement of the structures. Table 1 lists the 100-year water surface elevation ($WSEL_{100}$) at the upstream side of the structure, as well as the average channel velocities immediately upstream (V_{US}), and downstream (V_{DS}) of the proposed structure.

	$WSEL_{100}$	V_{US}	V_{DS}	$scour_{contraction}$
Existing	577.0 ft	7.1 fps	15.2 fps	6.4 ft
Proposed	571.7 ft	8.8 fps	8.0 fps	6.4 ft

There has also been a history of embankment erosion upstream of the proposed Abutment 2 (eastern abutment) and the roadway embankment upstream and to the west of the proposed Abutment 1. Much of this erosion is thought to be caused by the redirection of the channel flow to the east. Upstream of the structure, the natural channel flows in the north-easterly direction until it is redirected nearly due east by the roadway embankment fill for Route 33. The flow then travels in an easterly direction, nearly parallel to the roadway, where it then must turn nearly 90-degrees to the north to pass through the bridge opening. Much of the hydraulic energy is directed at the east embankment just to the south of Abutment 1, where past erosion problems have necessitated the addition of several different erosion control designs including, rock slope protection (RSP), retards and wire revetment fences. These countermeasures have been placed along both banks upstream of the structure.

Streambed:

Based on the 1969 Log of Borings, the channel bed materials at the bridge site consist of mostly sand and fine gravels with some lenses of clayey silt and silty clay. This material is considered to be scourable.

Scour Analysis:

Due to the constriction of the channel at the bridge site, contraction scour is expected to occur. Contraction scour for the existing structure was calculated to reach a depth of approximately 6.4 feet at the structure. This correlates well with the degradation noted after the 1958 storms. Based on the hydraulic models, the proposed single span structure will have minimal effect on the contraction scour estimate of 6.4 feet. There is no abutment scour anticipated at the proposed structure, however erosion and sloughing of soil at the abutments due to long term degradation, contraction scour and lateral migration may cause abutment foundation exposure. The channel velocities should be taken into account when designing RSP or other scour countermeasures at the embankments in the vicinity of the structure such as guide banks, retards or revetment.

Scour was estimated utilizing the methods set forth in the FHWA HEC-18, "Evaluating Scour at Bridges." All scour elevations are based on the 100-year discharge and assume no mitigation measures will be in place. Based on the HEC-RAS model, the current channel invert at the structure is approximately 564.8 ft (NAVD88 datum). The existing channel was also modeled using the TUFLOW, 2D modeling software from Aquaveo, to run a two-dimensional (2D) depth-averaged model for simulating and examining flow patterns under the Jacalitos Creek Bridge and in the channel bend upstream of the bridge.

Channel migration is a consideration at this site but Local Pier Scour and potential debris are not applicable due to the single-span box girder design.

The post-project channel has been assumed to closely match the pre-project channel with regards to vegetation, configuration and embankment lining. Therefore, Manning's roughness coefficients remained the same for all scenarios modeled. It is anticipated that the channel configuration will be gradually transitioned from the existing state to the proposed configuration.

Summary & Recommendations:

Below is a summary of key design parameters based on the hydrology and hydraulic analysis performed for these structures.
Bank protection and channel guides should be incorporated into the upstream embankments on both the west and east approaches, to stem the bank erosion currently caused by the lateral migration of the channel. Bank protection shall be designed by the District.

Due to bed and embankment materials, along with FHWA requirements, the abutments should be designed for scour depths below the channel invert, including the effects of migration, contraction scour and long-term degradation. These elevations are noted in the accompanying tables shown below.

All elevations given are referenced to the data provided by Structures Design and Preliminary Investigations-North, using the NAVD 88 vertical datum.

Hydrologic Summary for Jacalitos Creek, 42-0441		
Drainage Area: 64 mi^2		
Frequency	**Design Flood**	**Base Flood**
	50-year	100-year
Discharge	3,700 cfs	5,200 cfs
Water Surface Elevation at Bridge	571.0 ft	571.7 ft
Flood plain data are based upon information available when the plans were prepared and are shown to meet federal requirements. The accuracy of said information is not warranted by the State and interested or affected parties should make their own investigation.		
Minimum Required Soffit Elevation	573.0 ft	

LongTerm Scour Depths, Jacalitos Creek, Br. No. 42-0441		
Supports	Degradation Scour Depth	Contraction Scour Depth
All Supports	4.0 ft	6.4 ft

Scour Data (Elevation and Depth), Jacalitos Creek, Br. No. 42-0441			
		Short Term (Local) Scour Elevation	
Supports	Long Term Scour Elev	Depth	Elevation
All Supports	554.4 ft	N/A	N/A

All elevations given are referenced to the data provided by Structures Design and Preliminary Investigations-North, using the NAVD 88 vertical datum.

This report has been prepared under my direction as the professional engineer in responsible charge of the work, in accordance with the provisions of the Professional Engineers Act of the State of California.

ALTERNATIVE FLARED TERMINAL SYSTEM

1. TYPE FLEAT-MGS TERMINAL SYSTEM
2. TYPE SRT-31 TERMINAL SYSTEM
3. TYPE 31" X-TENSION

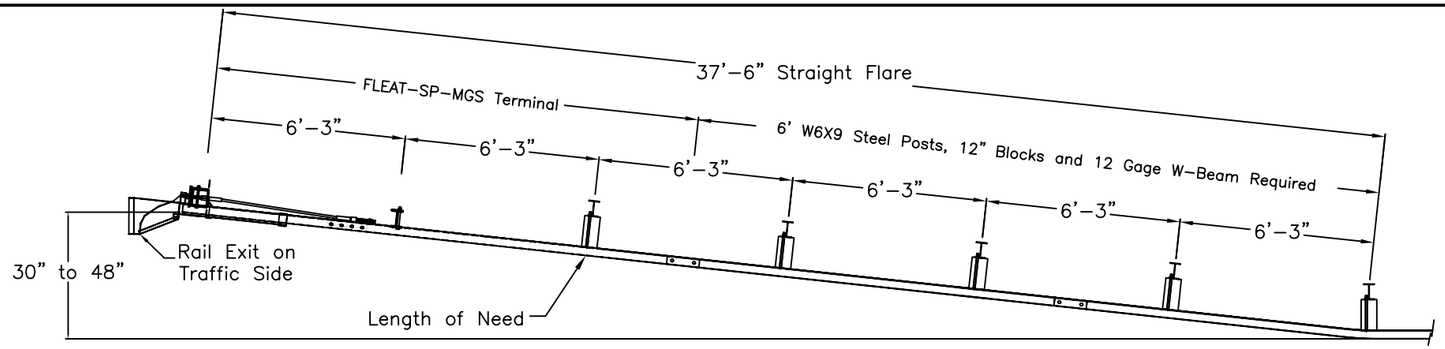

PLAN

TRAFFIC

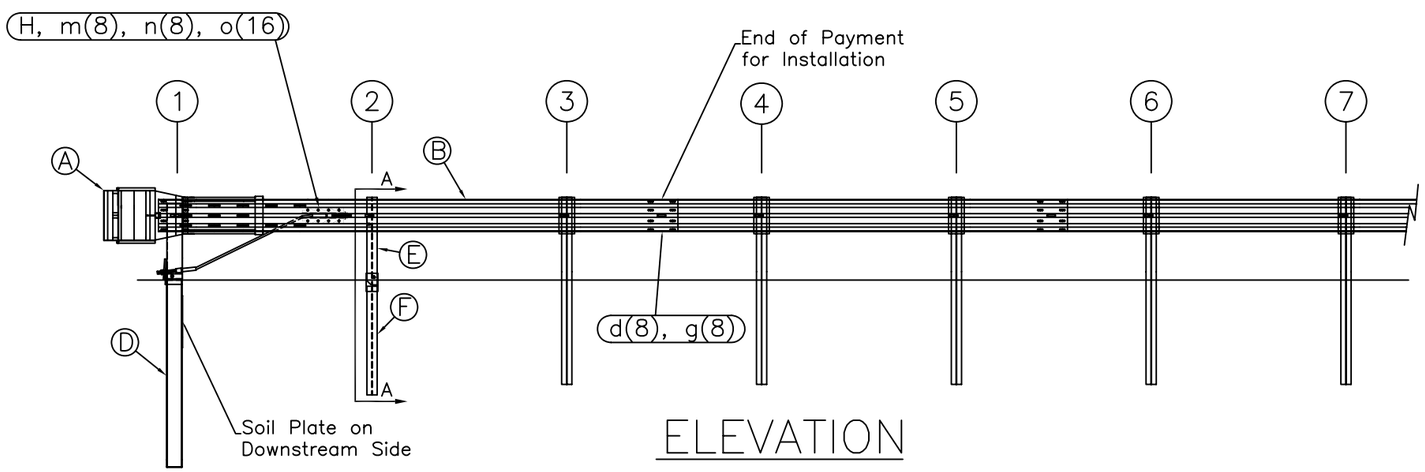

ELEVATION

ITEM	QTY	BILL OF MATERIALS	ITEM NO.
A	1	IMPACT HEAD	F3000
B	1	W-BEAM GUARDRAIL END SECTION, 12 Ga.	MGS-SF1303
C	1	FIRST POST TOP (6X6X$\frac{1}{8}$" Tube)	TPHP1A
D	1	FIRST POST BOTTOM (6' W6X15)	TPHP1B
E	1	SECOND POST ASSEMBLY TOP	UHP2A
F	1	SECOND POST ASSEMBLY BOTTOM	HP3B
G	1	BEARING PLATE	E750
H	1	CABLE ANCHOR BOX	S760
J	1	BCT CABLE ANCHOR ASSEMBLY	E770
		HARDWARE (ALL DIMENSIONS IN INCHES)	
a	2	5/16 x 1 HEX BOLT GRD 5	B5160104A
b	4	5/16 WASHER	W0516
c	2	5/16 HEX NUT	N0516
d	9	5/8 Dia. x 1 1/4 SPLICE BOLT (POST #2)	B580122
e	1	5/8 Dia. x 9 HEX BOLT GRD 5	B580904A
f	3	5/8 WASHER	W050
g	10	5/8 Dia. H.G.R NUT	N050
h	1	3/4 Dia. x 8 1/2 HEX BOLT GRD A449	B340854A
j	1	3/4 Dia. HEX NUT	N030
k	2	1 ANCHOR CABLE HEX NUT	N100
l	2	1 ANCHOR CABLE WASHER	W100
m	8	CABLE ANCHOR BOX SHOULDER BOLT	SB58A
n	8	1/2 A325 STRUCTURAL NUT	N055A
o	16	1 1/16 OD x 9/16 ID A325 STR. WASHER	W050A

GENERAL NOTES:
1. All bolts, nuts, cable assemblies, cable anchors and bearing plates shall be galvanized.
2. The lower sections of the Posts 1&2 shall not protrude more than 4 in above the ground (measured along a 5' cord). Site grading may be necessary to meet this requirement.
3. The lower sections of the hinged posts should not be driven with the upper post attached. If the post is placed in a drilled hole, the backfill material must be satisfactorily compacted to prevent settlement.
4. When competent rock is encountered, a 12" Ø post hole, 20 in. deep cored into the rock surface may be used if approved by the engineer for post 1. Granular material will be placed in the bottom of the hole, approximately 2.5" deep to provide drainage. The first post can be field cut to length, placed in the hole and backfilled with suitable backfill. The soil plate may be trimmed if required.
5. The breakaway cable assembly must be taut. A locking device (vice grips or channel lock pliers) should be used to prevent the cable from twisting when tightening nuts.

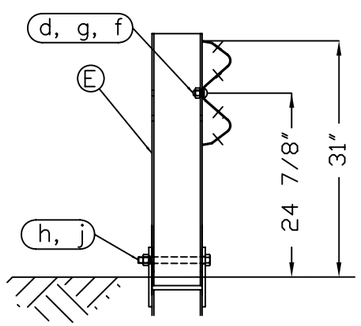

SECTION A-A
Post #2

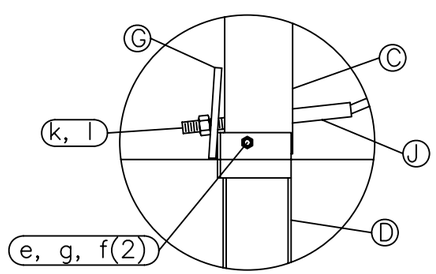

Post #1 Connection Detail

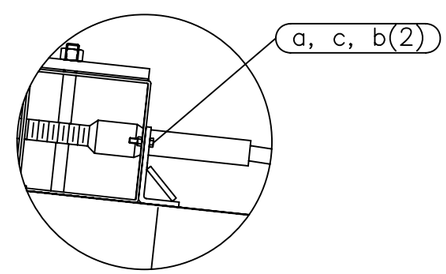

Impact Head Connection Detail

Road Systems, Inc.
Big Spring, TX
Phone: 432-263-2435
or Phone: 330-346-0721

FLEAT-SP-MGS Terminal
Midwest Guardrail System
31" Top of Rail

Sheet: 1
Date: 02/24/10
By: JRR
Drawing Name: FLT-SP-S-MGS
Scale: None
Rev: 0

OFFSET NOTES:
1) POST OFFSET DIMENSIONS ARE GIVEN TO THE CENTER OF THE TRAFFIC FACE OF POSTS, EXCEPT AT POSTS #7 & #8, WHERE DIMENSION IS TO CENTER OF THE TRAFFIC FACE OF THE BLOCKOUTS.
2) GUARDRAIL BETWEEN POST 1-7 IS ON A STRAIGHT LINE FLARE.

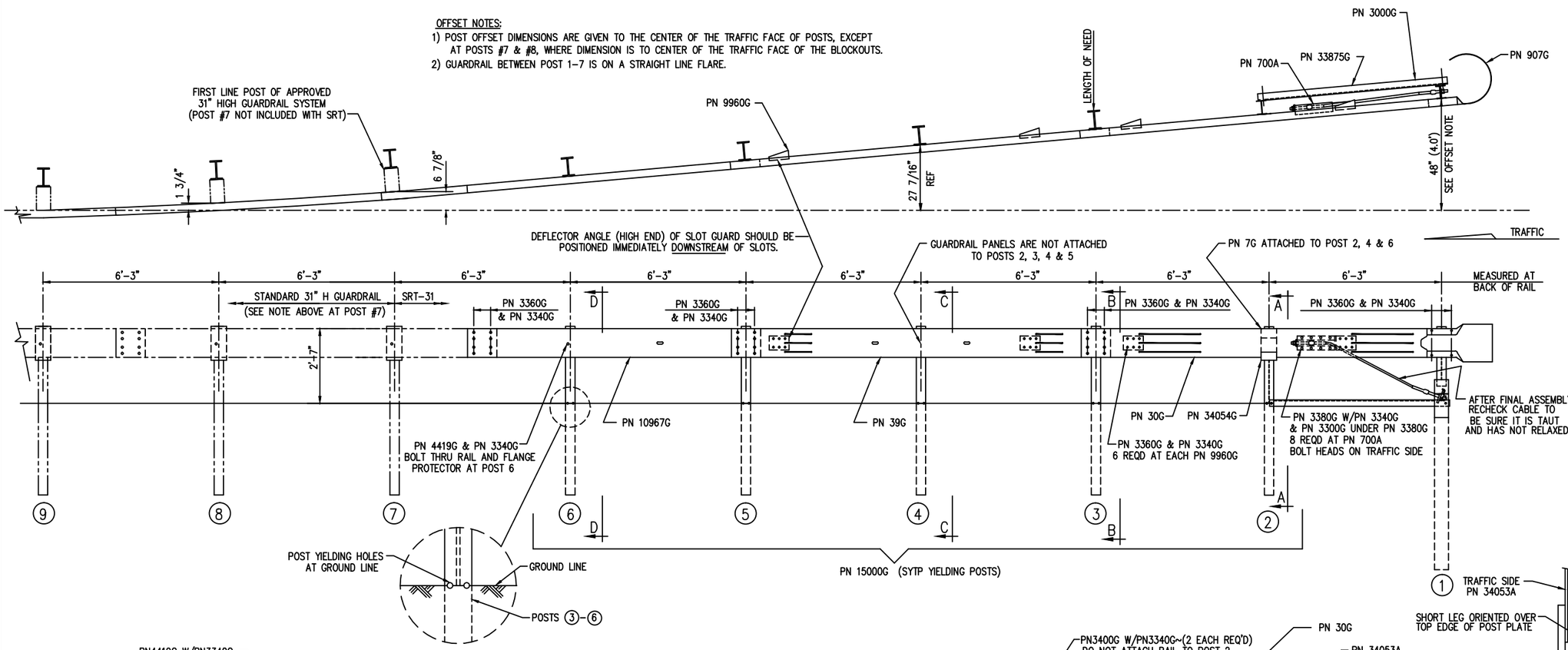

BILL OF MATERIAL

	PN	QTY	DESCRIPTION
	7G	3	12/6"/FLG PROTECTOR (AT POST 2, 4 & 6)
	30G	1	12/12'6/S SRT-1 (GUARDRAIL)
	39G	1	12/12'6/S SRT-2 (GUARDRAIL)
	700A	1	CABLE ANCHOR BRACKET
	907G	1	12/BUFFER/ROLLED (TERMINAL)
	3000G	1	3/4 x 6'-6" CABLE
HARDWARE	3240G	2	5/16" WASHER (AT POST 1)
HARDWARE	3245G	2	5/16" HEX NUT (AT POST 1)
HARDWARE	3300G	12	5/8" WASHER
HARDWARE	3340G	67	5/8" HEX HGR NUT
HARDWARE	3360G	52	5/8"ø x 1 1/4" HGR SPLICE BOLT
HARDWARE	3380G	8	5/8"ø x 1 1/2" HEX HD BOLT
HARDWARE	3400G	4	5/8"ø x 2" HGR POST BOLT (AT POSTS 1, 2 & 4)
HARDWARE	3391G	2	5/8"ø x 1 3/4" HEX BOLT (A325) (AT STRUT)
HARDWARE	3900G	2	1" WASHER (AT CABLE)
HARDWARE	3910G	2	1" HEX NUT (AT CABLE)
HARDWARE	4211G	2	5/16"ø x 1 3/4" HEX BOLT (AT POST 1)
HARDWARE	4419G	1	5/8"ø x 1 3/4" COUNTERSUNK HD BOLT (AT POST 6)
	9960G	4	SLOT GUARD BRACKET
	10967G	1	12/9'4.5/3'1.5/S SRT-3 (GUARDRAIL)
	15000G	5	6'-0" SYT POST (W6 X 8.5)
	33909G	1	CABLE ANCHOR BRACKET (AT POST 1)
	33875G	1	ANGLE STRUT 3 x 3 x 1/4
	34052A	1	CR POST 1 BOT (W6 x 15)
	34053A	1	CR POST 1 TOP (W6 x 8.5)
	34054G	1	POST SHELF ANGLE (AT POST 2)

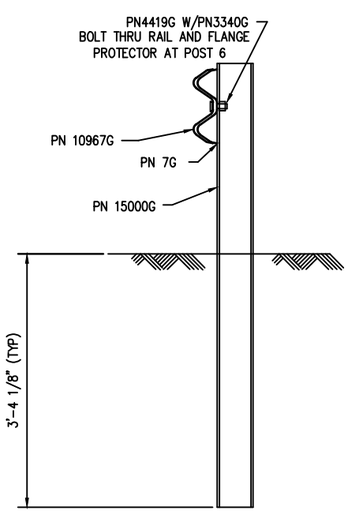

SECTION "D-D"
(@ POST #6)

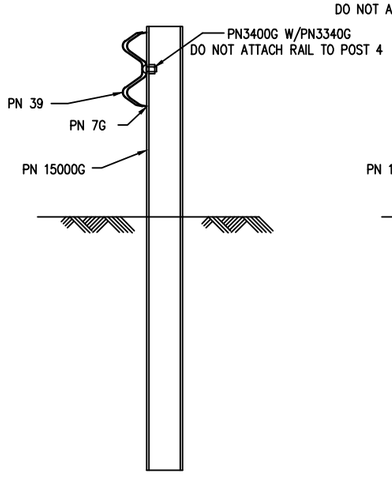

SECTION "C-C"
(@ POST #4)

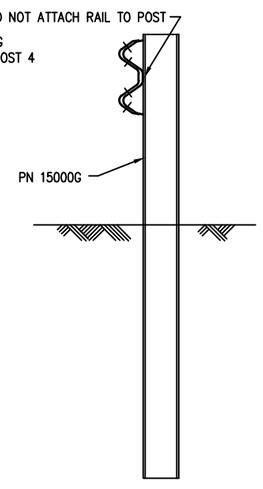

SECTION "B-B"
(@ POST #3 & #5)

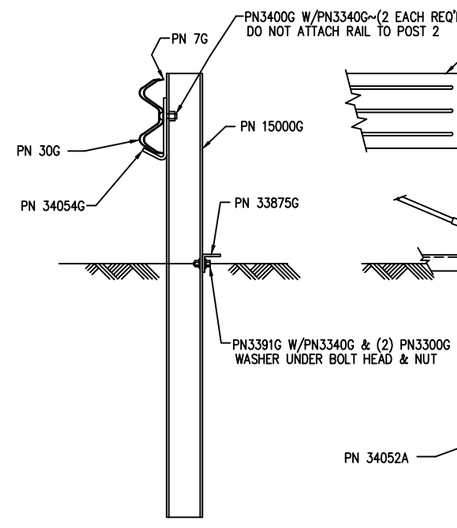

SECTION "A-A"
(@ POST #2)

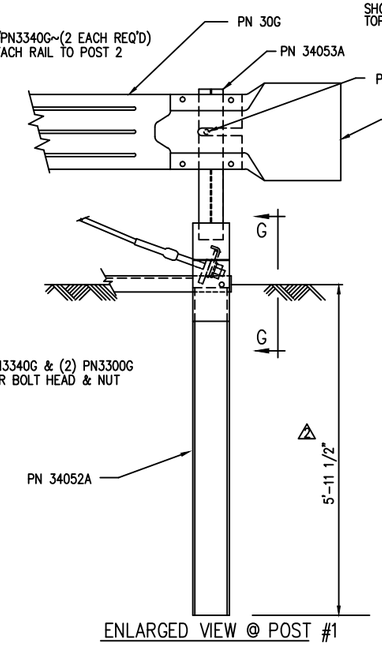

ENLARGED VIEW @ POST #1

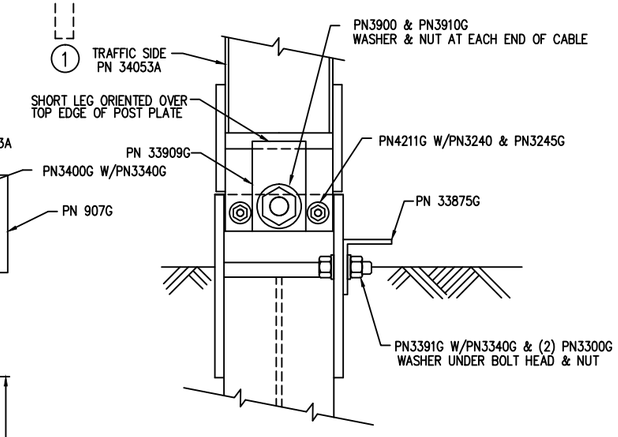

VIEW "G-G"
(@ POST #1)

REV.	CHK'D	BY	DATE	REMARKS
4	BT	LH	10/6/10	OFFSET POSTS #7 & #8
3	BT	LH	2/26/09	REVISED HARDWARE
2	SG	LH	7/28/08	REVISED POST #1 LENGTH IN GROUND
1	SG	LH	1/16/08	REVISED HARDWARE QUANTITY IN BILL OF MATERIAL

SRT-31

SLOTTED RAIL TERMINAL SRT-31 (31" H)
ERECTION DETAILS
(3 PANELS, CR AND SYT POSTS)

DRAWN	BT
CHECKED	SG
SCALE	NTS
DATE	10/30/07
ENG. FILE #	SS436-01E
SHT.No.	E1 OF 1
DRAWING NO.	SS 436
REV.	4

The drawings and the information shown thereon are copyrighted by Trinity Highway Products (2010) and the sole property of Trinity Highway Products. Neither the drawings nor such information is to be used for any purpose other than that for which it was specifically furnished from Trinity Highway Products, LLC., nor is any reproduction authorized without written permission.

TRINITY HIGHWAY PRODUCTS, LLC.
2525 STEMMONS FREEWAY
DALLAS, TX 75207

ITEM NO.	PART NUMBER	DESCRIPTION	QTY	UOM
1	BSI-1301252-KT	X-Tension Terminal Comp, 31 in	1	EACH
2	K070202	X-Tension Hardware Kit, GT,	1	EACH
3	K070206	X-Tension System Hardware Kit,	1	EACH
4	K070210	X-Tension GT Guardrail	1	EACH
5	B061100	BSI, I-Beam Post, Middle, X350	1	EACH
6	MANXT1	X-TENSION Installation Manual	1	EACH

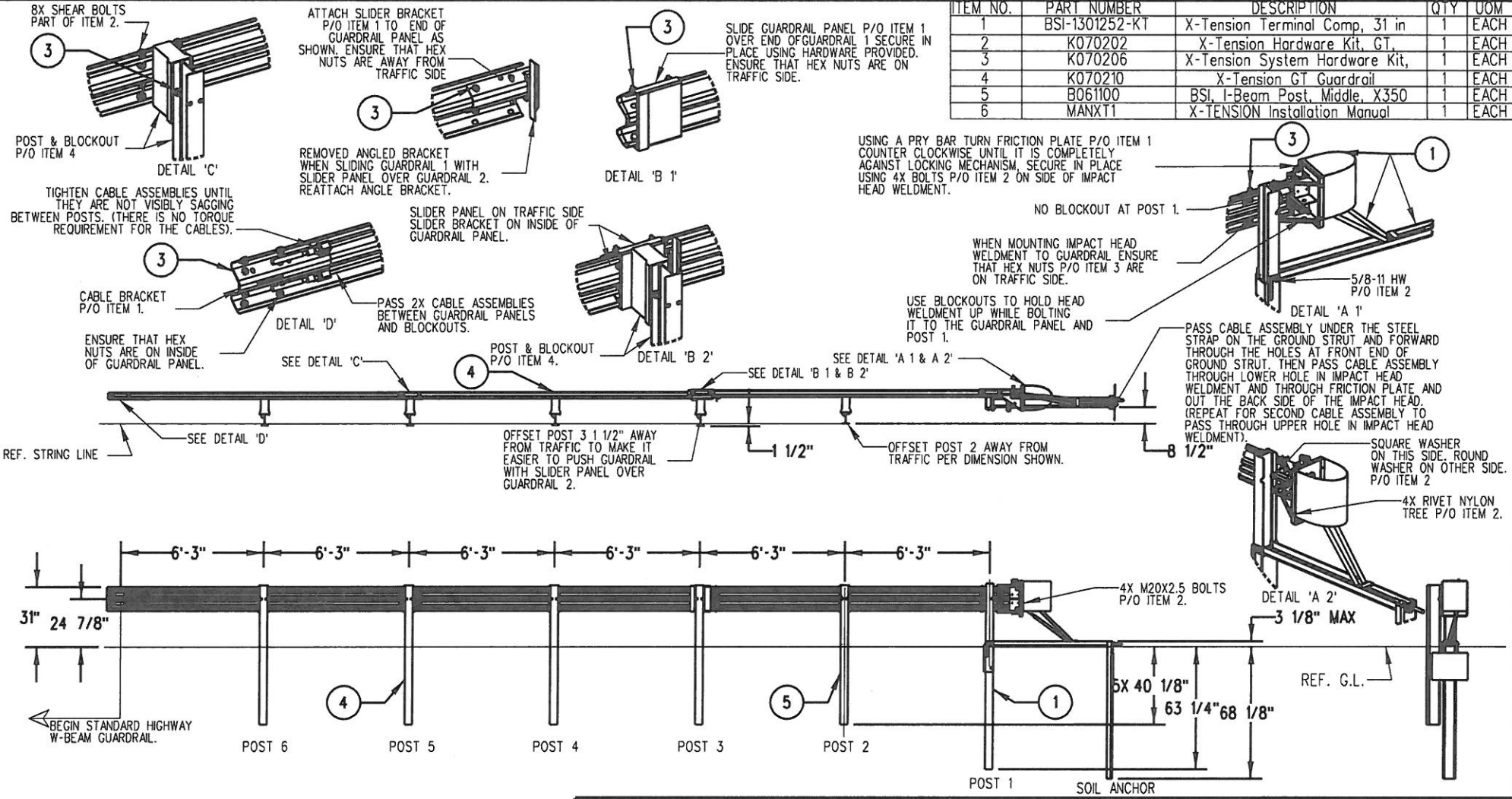

NOTES: UNLESS OTHERWISE SPECIFIED.

1. SYSTEM TO BE INSTALLED PER MANUFACTURER SPECIFICATIONS.
2. ONLY TIGHTEN THE CABLE ASSEMBLIES USING THE NUTS AT THE CABLE BRACKET (SEE DETAIL 'D'). DO NOT TIGHTEN THE CABLES AT THE FRONT OF THE GROUND ANCHOR.
3. WHEN DRIVING STEEL POST, ENSURE THAT A DRIVING CAP WITH TIMBER OR PLASTIC INSERT IS USED TO PREVENT DAMAGE TO THE GALVANIZING TO THE TOP OF THE POST.

© 2012 BARRIER SYSTEMS INC. THE INFORMATION CONTAINED IN THIS DRAWING IS THE SOLE PROPERTY OF BARRIER SYSTEMS INC. ANY REPRODUCTION IN PART OR WHOLE WITHOUT THE WRITTEN PERMISSION OF BARRIER SYSTEMS INC. IS PROHIBITED.

APPROVALS

DRAWN BY:	NMV
DRAWN DATE:	2/08/13
APPR'D BY:	JMT
APPR'D DATE:	2/08/13

UNLESS OTHERWISE SPECIFIED DIMENSIONS ARE IN INCHES. TOLERANCES ARE:
FRACTIONS ±1/16 DECIMAL .XX - ±.03 .XXX - ±.010 ANGLES ±1/2°
INTERPRET DIMENSIONS AND TOLERANCES PER ASME Y14.5-1994
THIRD ANGLE PROJECTION
DO NOT SCALE DRAWING

REV	ECN#	DATE
B	2067	03/02/15
A	2022	2/08/13

LINDSAY TRANSPORTATION SOLUTIONS™

BARRIER SYSTEMS INC.
3333 Vaca Valley Parkway Ste 800
Vacaville, CA 95688
Tel: 888-800-3691
www.barriersystemsinc.com

TITLE
X-TENSION GUARDRAIL TERMINAL SYSTEM STEEL POST WITH COMPOSITE BLOCKOUT 31" RAIL HEIGHT

SIZE	DWG NO.	REV.
B	XTGTSS5	B

SCALE 1:50 SHEET 1 OF 1

From: Ataelgeed, Eltahir@DOT
To: Liu, Stephanie L@DOT
Subject: FW: Recycled Water for Construction on State Route 33-06-43260 Jacalitos Creek Bridge Project
Date: Friday, August 29, 2014 2:53:25 PM

Stephanie,

This is the email from Clovis.

Thanks

Eltahir Ataelgeed, PE.
Caltrans, Project Development 1 - Branch A
2015 E. Shields Ave, Suite 100, Fresno, CA 93726
(559) 243-3527

From: Rob Rush [mailto:RobR@ci.clovis.ca.us]
Sent: Friday, August 29, 2014 1:36 PM
To: Ataelgeed, Eltahir@DOT
Subject: RE: Recycled Water for Construction on State Route 33-06-43260 Jacalitos Creek Bridge Project

Eltahir, we should be able to meet this demand as the daily amount will be relatively low. When the project gets closer we will probably need a map of the general construction area and the load count/amount. Thanks.

From: Ataelgeed, Eltahir@DOT [mailto:eltahir.ataelgeed@dot.ca.gov]
Sent: Friday, August 29, 2014 8:20 AM
To: Rob Rush
Subject: RE: Recycled Water for Construction on State Route 33-06-43260 Jacalitos Creek Bridge Project

Hi Rob,

Any update on the Recycled Water request?

Thanks

Eltahir Ataelgeed, PE.
Caltrans, Project Development 1 - Branch A
2015 E. Shields Ave, Suite 100, Fresno, CA 93726
(559) 243-3527

From: Ataelgeed, Eltahir@DOT
Sent: Tuesday, August 19, 2014 11:55 AM
To: 'Rob Rush'
Subject: RE: Recycled Water for Construction on State Route 33-06-43260 Jacalitos Creek Bridge Project

Thanks Rob for your response ; I will be in touch next week.

Thanks

Eltahir Ataelgeed, PE.
Project Engineer
Caltrans, Project Development 1 - Branch A
2015 E. Shields Ave, Suite 100, Fresno, CA 93726
(559) 243-3527

From: Rob Rush [mailto:RobR@ci.clovis.ca.us]
Sent: Tuesday, August 19, 2014 8:49 AM
To: Ataelgeed, Eltahir@DOT
Subject: RE: Recycled Water for Construction on State Route 33-06-43260 Jacalitos Creek Bridge Project

Hello Eltahir, we will need to look at our estimated demands for next summer. I will have more data sometime next week.

Thanks,

Rob Rush
City of Clovis - Utilities Manager
155 N. Sunnyside Avenue
Clovis, CA 93611
(559) 324-2611 office
(559) 324-2862 fax
(559) 916-4100 cell

From: Ataelgeed, Eltahir@DOT [mailto:eltahir.ataelgeed@dot.ca.gov]
Sent: Monday, August 18, 2014 5:02 PM
To: Rob Rush
Cc: Baker, Abdul H@DOT
Subject: Recycled Water for Construction on State Route 33-06-43260 Jacalitos Creek Bridge Project

Hi Rob,

I am trying to secure a recycled water source for construction of the Jacalitos Creek Bridge. The project proposes to replace the existing bridge over Jacalitos Creek on Route 33 in Fresno County; other related works are embankment and approach road construction. Water needed during construction is about 440,000 gallons. Most of this quantity will be used for earthwork and dust control. Average use of 4,000 gallons is anticipated with peak draw of about 17,000 per day for a short period. Construction will be in the summer of 2015.

Please confirm if the City could provide recycled water for construction of this project. If so, then additional information about the water source and quality will be appreciated.

Thanks

Eltahir Ataelgeed, PE.
Project Engineer
Caltrans, Project Development 1 - Branch A
2015 E. Shields Ave, Suite 100, Fresno, CA 93726
(559) 243-3527