| Dist | COUNTY | ROUTE | POST MILES TOTAL PROJECT | SHEET No. | TOTAL SHEETS |
|---|---|---|---|---|---|
| 06 | Tul | 65 | R15.1/18.0 | 201 | 324 |

REGISTERED ELECTRICAL ENGINEER — DATE: 6-1-16

PLANS APPROVAL DATE: 6-20-16

REGISTERED PROFESSIONAL ENGINEER — DANIEL THANH VO — No. 17408 — Exp. 9/30/16 — ELECTRICAL — STATE OF CALIFORNIA

*THE STATE OF CALIFORNIA OR ITS OFFICERS OR AGENTS SHALL NOT BE RESPONSIBLE FOR THE ACCURACY OR COMPLETENESS OF SCANNED COPIES OF THIS PLAN SHEET.*

## NOTES:

1. FOR ACCURATE RIGHT OF WAY DATA, CONTACT RIGHT OF WAY ENGINEERING AT THE DISTRICT OFFICE.
2. COORDINATE Sig PHASE MODIFICATION WITH THE ENGINEER.
3. SEE SHEET E-15 FOR LEGEND AND SCHEDULES.
4. SEE SES SHEETS FOR TEMPORARY WOOD POLE DETAILS.
5. SEE SHEET E-22 FOR LOCATION OF PROPOSED TRAFFIC Sig EQUIPMENT.

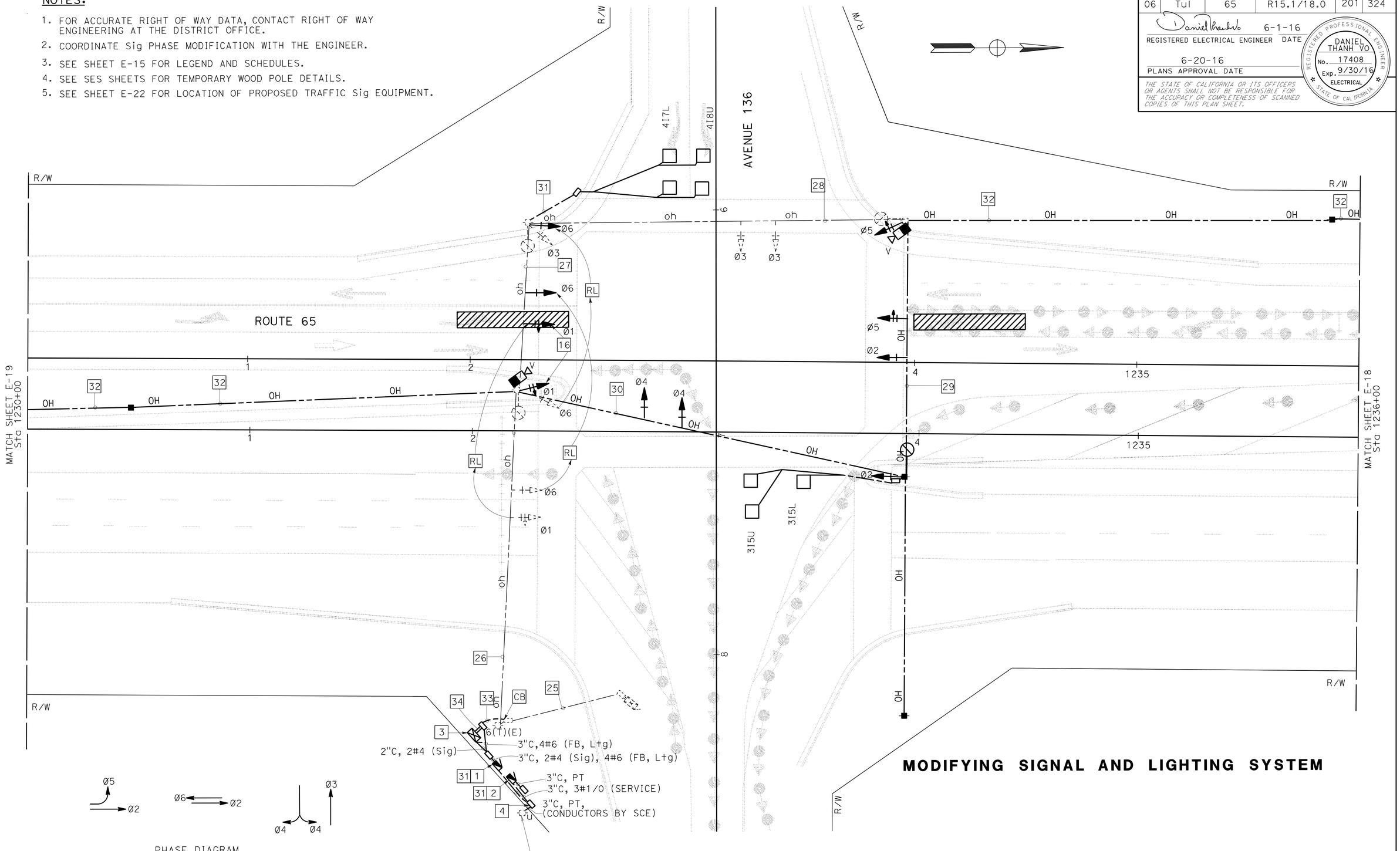


**MODIFYING SIGNAL AND LIGHTING SYSTEM**

**(STAGE 2B)**

# MODIFYING EXISTING ELECTRICAL SYSTEM

**E-17**

*APPROVED FOR ELECTRICAL WORK ONLY*

SCALE: 1"=20'

STATE OF CALIFORNIA - DEPARTMENT OF TRANSPORTATION — Caltrans — ELECTRICAL DESIGN

FUNCTIONAL SUPERVISOR: ALI BAKHDOUD

CALCULATED-DESIGNED BY: DANIEL VO — CHECKED BY: MONA ATTALLAH

REVISED BY — DATE REVISED

LAST REVISION — DATE PLOTTED => 27-JUL-2016 — TIME PLOTTED => 16:10 — 06-20-16

| Dist | COUNTY | ROUTE | POST MILES TOTAL PROJECT | SHEET No. | TOTAL SHEETS |
|---|---|---|---|---|---|
| 06 | Tul | 65 | R15.1/18.0 | 202 | 324 |

REGISTERED ELECTRICAL ENGINEER 6-1-16 DATE

6-20-16
PLANS APPROVAL DATE

REGISTERED PROFESSIONAL ENGINEER DANIEL THANH VO No. 17408 Exp. 9/30/16 ELECTRICAL STATE OF CALIFORNIA

*THE STATE OF CALIFORNIA OR ITS OFFICERS OR AGENTS SHALL NOT BE RESPONSIBLE FOR THE ACCURACY OR COMPLETENESS OF SCANNED COPIES OF THIS PLAN SHEET.*

## NOTES:

1. FOR ACCURATE RIGHT OF WAY DATA, CONTACT RIGHT OF WAY ENGINEERING AT THE DISTRICT OFFICE.
2. COORDINATE Sig PHASE MODIFICATION WITH THE ENGINEER.
3. SEE SHEET E-15 FOR LEGEND AND SCHEDULES.
4. SEE SES SHEETS FOR TEMPORARY WOOD POLE DETAILS.

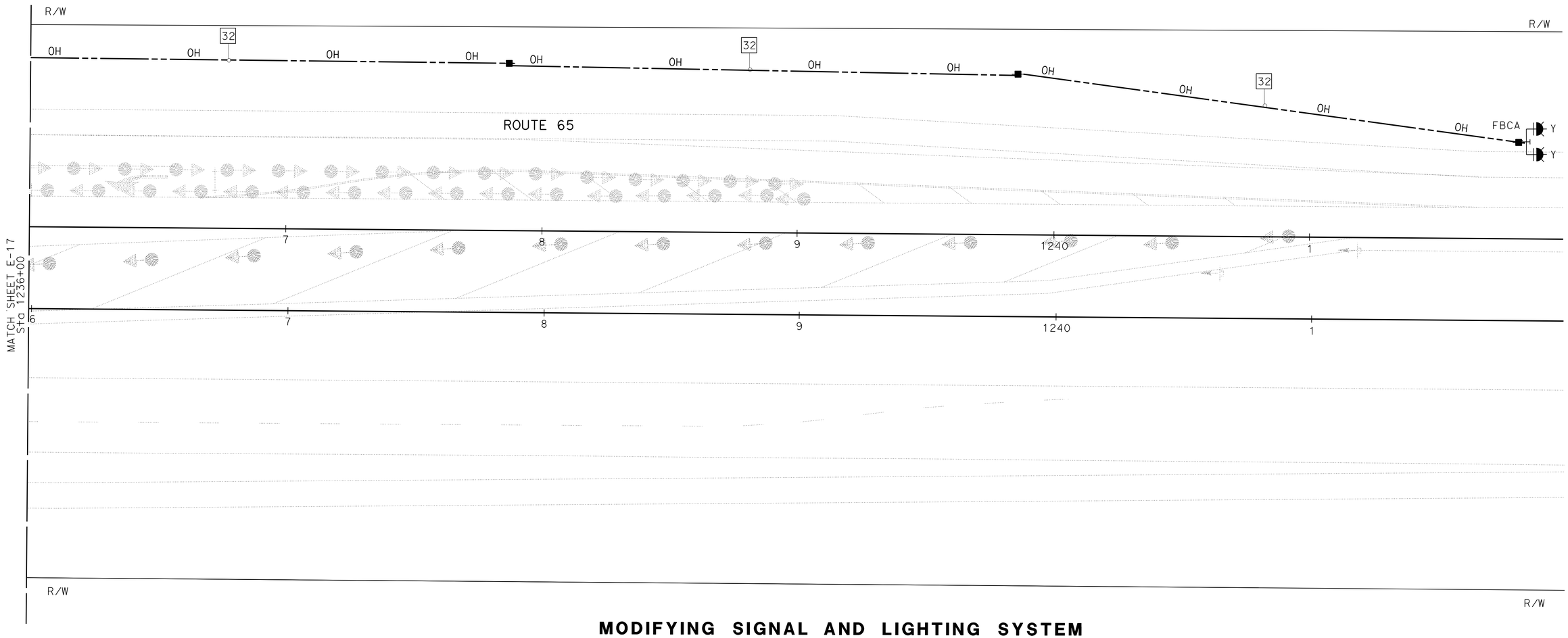


## MODIFYING SIGNAL AND LIGHTING SYSTEM

**(STAGE 2B)**

## MODIFYING EXISTING ELECTRICAL SYSTEM

**E-18**

*APPROVED FOR ELECTRICAL WORK ONLY*

SCALE: 1"=20'

STATE OF CALIFORNIA - DEPARTMENT OF TRANSPORTATION
Caltrans ELECTRICAL DESIGN

FUNCTIONAL SUPERVISOR: ALI BAKHDOUD
CALCULATED-DESIGNED BY: DANIEL VO
CHECKED BY: MONA ATTALLAH
REVISED BY
DATE REVISED

LAST REVISION 06-20-16 DATE PLOTTED => 27-JUL-2016 TIME PLOTTED => 16:10

| Dist | COUNTY | ROUTE | POST MILES TOTAL PROJECT | SHEET No. | TOTAL SHEETS |
|---|---|---|---|---|---|
| 06 | Tul | 65 | R15.1/18.0 | 203 | 324 |

REGISTERED ELECTRICAL ENGINEER 6-1-16 DATE

6-20-16
PLANS APPROVAL DATE

REGISTERED PROFESSIONAL ENGINEER DANIEL THANH VO No. 17408 Exp. 9/30/16 ELECTRICAL STATE OF CALIFORNIA

*THE STATE OF CALIFORNIA OR ITS OFFICERS OR AGENTS SHALL NOT BE RESPONSIBLE FOR THE ACCURACY OR COMPLETENESS OF SCANNED COPIES OF THIS PLAN SHEET.*

NOTES:

1. FOR ACCURATE RIGHT OF WAY DATA, CONTACT RIGHT OF WAY ENGINEERING AT THE DISTRICT OFFICE.
2. COORDINATE Sig PHASE MODIFICATION WITH THE ENGINEER.
3. SEE SHEET E-15 FOR LEGEND AND SCHEDULES.
4. SEE SES SHEETS FOR TEMPORARY WOOD POLE DETAILS.

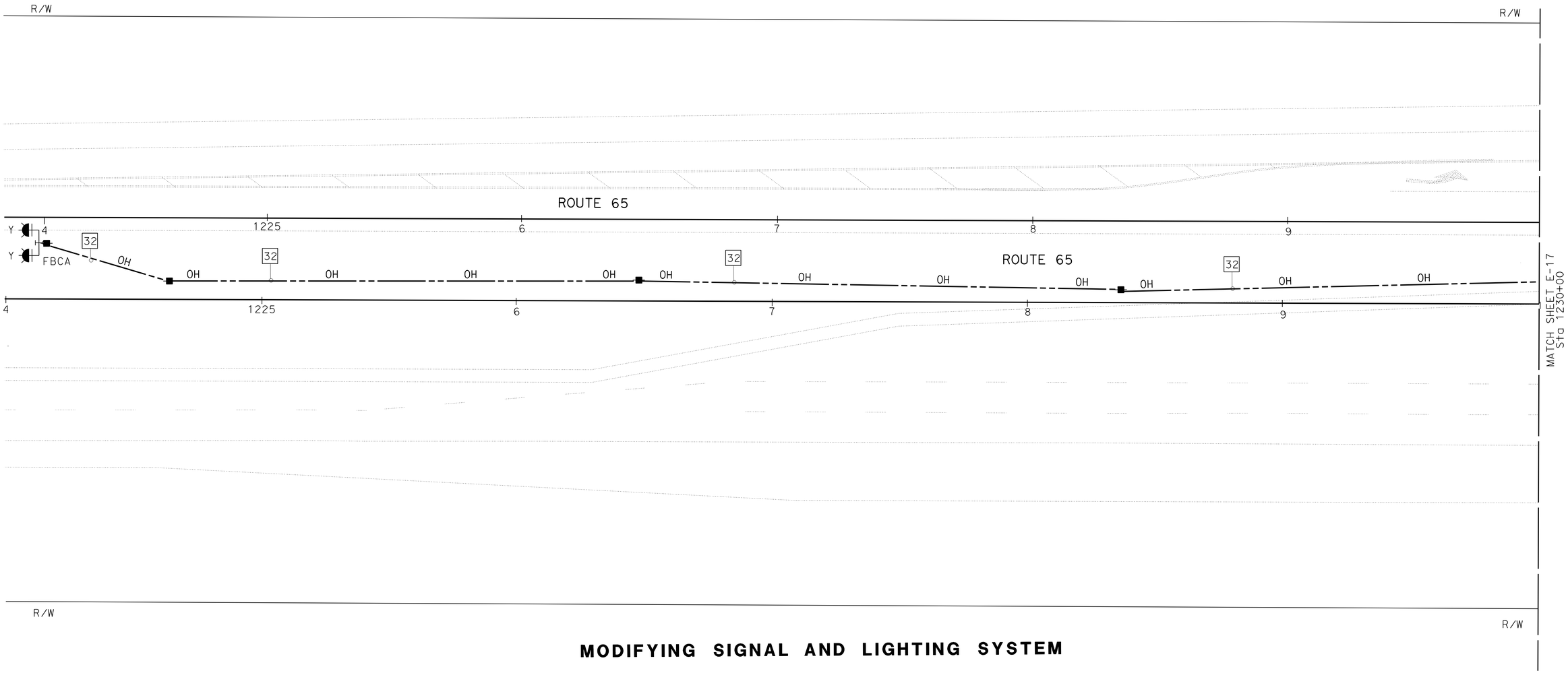


## MODIFYING SIGNAL AND LIGHTING SYSTEM

**(STAGE 2B)**

## MODIFYING EXISTING ELECTRICAL SYSTEM

**E-19**

SCALE: 1"=20'

*APPROVED FOR ELECTRICAL WORK ONLY*

STATE OF CALIFORNIA - DEPARTMENT OF TRANSPORTATION
Caltrans ELECTRICAL DESIGN

FUNCTIONAL SUPERVISOR: ALI BAKHDOUD
CALCULATED-DESIGNED BY: DANIEL VO
CHECKED BY: MONA ATTALLAH
REVISED BY / DATE REVISED

LAST REVISION 06-20-16 | DATE PLOTTED => 27-JUL-2016 | TIME PLOTTED => 16:10

| Dist | COUNTY | ROUTE | POST MILES TOTAL PROJECT | SHEET No. | TOTAL SHEETS |
|---|---|---|---|---|---|
| 06 | Tul | 65 | R15.1/18.0 | 204 | 324 |

REGISTERED ELECTRICAL ENGINEER 6-1-16 DATE

6-20-16
PLANS APPROVAL DATE

REGISTERED PROFESSIONAL ENGINEER DANIEL THANH VO No. 17408 Exp. 9/30/16 ELECTRICAL STATE OF CALIFORNIA

*THE STATE OF CALIFORNIA OR ITS OFFICERS OR AGENTS SHALL NOT BE RESPONSIBLE FOR THE ACCURACY OR COMPLETENESS OF SCANNED COPIES OF THIS PLAN SHEET.*

NOTE:

1. FOR ACCURATE RIGHT OF WAY DATA, CONTACT RIGHT OF WAY ENGINEERING AT THE DISTRICT OFFICE.
2. COORDINATE Sig PHASE MODIFICATION WITH THE ENGINEER.
3. SEE SHEET E-15 FOR LEGEND AND SCHEDULES.

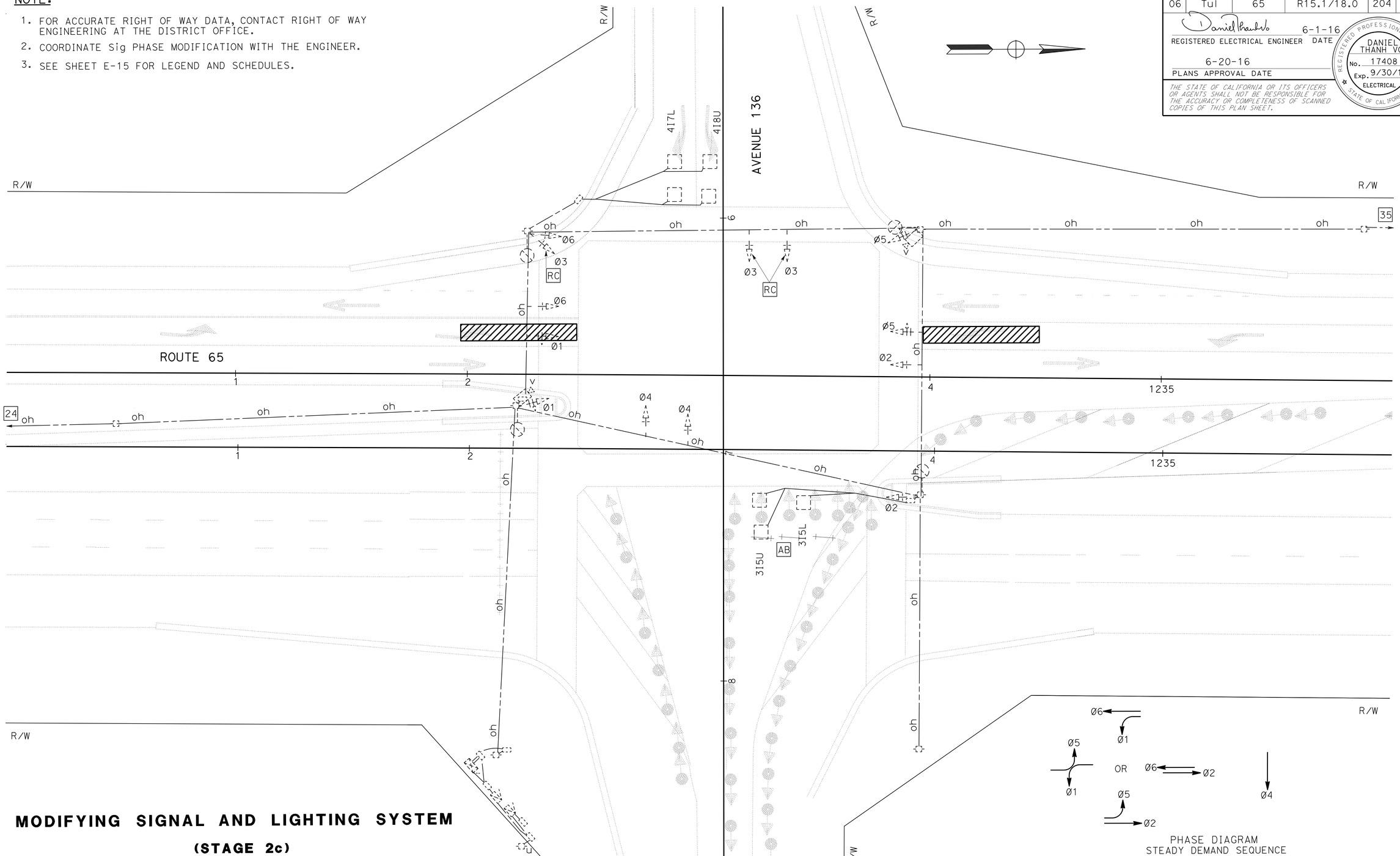


## MODIFYING SIGNAL AND LIGHTING SYSTEM

**(STAGE 2c)**

## MODIFYING EXISTING ELECTRICAL SYSTEM

*APPROVED FOR ELECTRICAL WORK ONLY*

SCALE: 1"=20'

**E-20**

STATE OF CALIFORNIA - DEPARTMENT OF TRANSPORTATION
Caltrans ELECTRICAL DESIGN

FUNCTIONAL SUPERVISOR: ALI BAKHDOUD
CALCULATED-DESIGNED BY: DANIEL VO
CHECKED BY: MONA ATTALLAH
REVISED BY / DATE REVISED

LAST REVISION 06-20-16 | DATE PLOTTED => 27-JUL-2016 | TIME PLOTTED => 16:10

| Dist | COUNTY | ROUTE | POST MILES TOTAL PROJECT | SHEET No. | TOTAL SHEETS |
|---|---|---|---|---|---|
| 06 | Tul | 65 | R15.1/18.0 | 205 | 324 |

REGISTERED ELECTRICAL ENGINEER 6-1-16 DATE

6-20-16
PLANS APPROVAL DATE

REGISTERED PROFESSIONAL ENGINEER DANIEL THANH VO No. 17408 Exp. 9/30/16 ELECTRICAL STATE OF CALIFORNIA

*THE STATE OF CALIFORNIA OR ITS OFFICERS OR AGENTS SHALL NOT BE RESPONSIBLE FOR THE ACCURACY OR COMPLETENESS OF SCANNED COPIES OF THIS PLAN SHEET.*

**NOTE:**

FOR ACCURATE RIGHT OF WAY DATA, CONTACT RIGHT OF WAY ENGINEERING AT THE DISTRICT OFFICE.

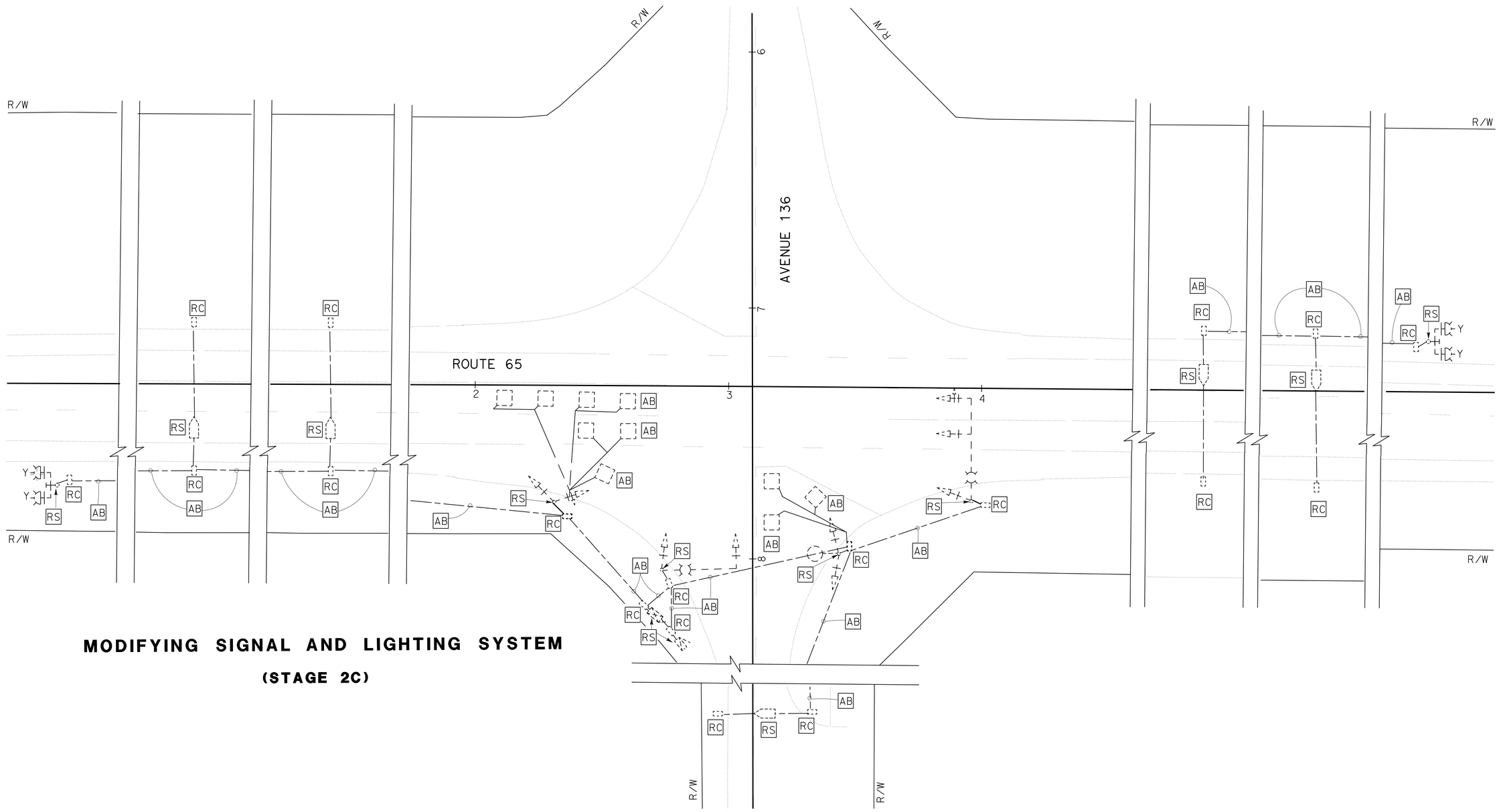


## MODIFYING SIGNAL AND LIGHTING SYSTEM

**(STAGE 2C)**

## MODIFYING EXISTING ELECTRICAL SYSTEM

SCALE: 1"=20'

**E-21**

*APPROVED FOR ELECTRICAL WORK ONLY*

REVISED BY | DATE REVISED

DANIEL VO | MONA ATTALLAH

CALCULATED-DESIGNED BY | CHECKED BY

FUNCTIONAL SUPERVISOR: ALI BAKHDOUD

STATE OF CALIFORNIA - DEPARTMENT OF TRANSPORTATION

Caltrans ELECTRICAL DESIGN

LAST REVISION 06-01-16 | DATE PLOTTED => 27-JUL-2016 | TIME PLOTTED => 16:10

| Dist | COUNTY | ROUTE | POST MILES TOTAL PROJECT | SHEET No. | TOTAL SHEETS |
|---|---|---|---|---|---|
| 06 | Tul | 65 | R15.1/18.0 | 206 | 324 |

REGISTERED ELECTRICAL ENGINEER 6-1-16 DATE

6-20-16
PLANS APPROVAL DATE

REGISTERED PROFESSIONAL ENGINEER DANIEL THANH VO No. 17408 Exp 9/30/16 ELECTRICAL STATE OF CALIFORNIA

*THE STATE OF CALIFORNIA OR ITS OFFICERS OR AGENTS SHALL NOT BE RESPONSIBLE FOR THE ACCURACY OR COMPLETENESS OF SCANNED COPIES OF THIS PLAN SHEET.*

## NOTES:

1. SEE SHEET E-15 FOR LEGENDS, AND EQUIPMENT SCHEDULES.
2. FOR ACCURATE RIGHT OF WAY DATA, CONTACT RIGHT OF WAY ENGINEERING AT THE DISTRICT OFFICE.
3. ALL PULL BOXES MUST BE No. 5 (T)(E) UNLESS OTHERWISE NOTED.

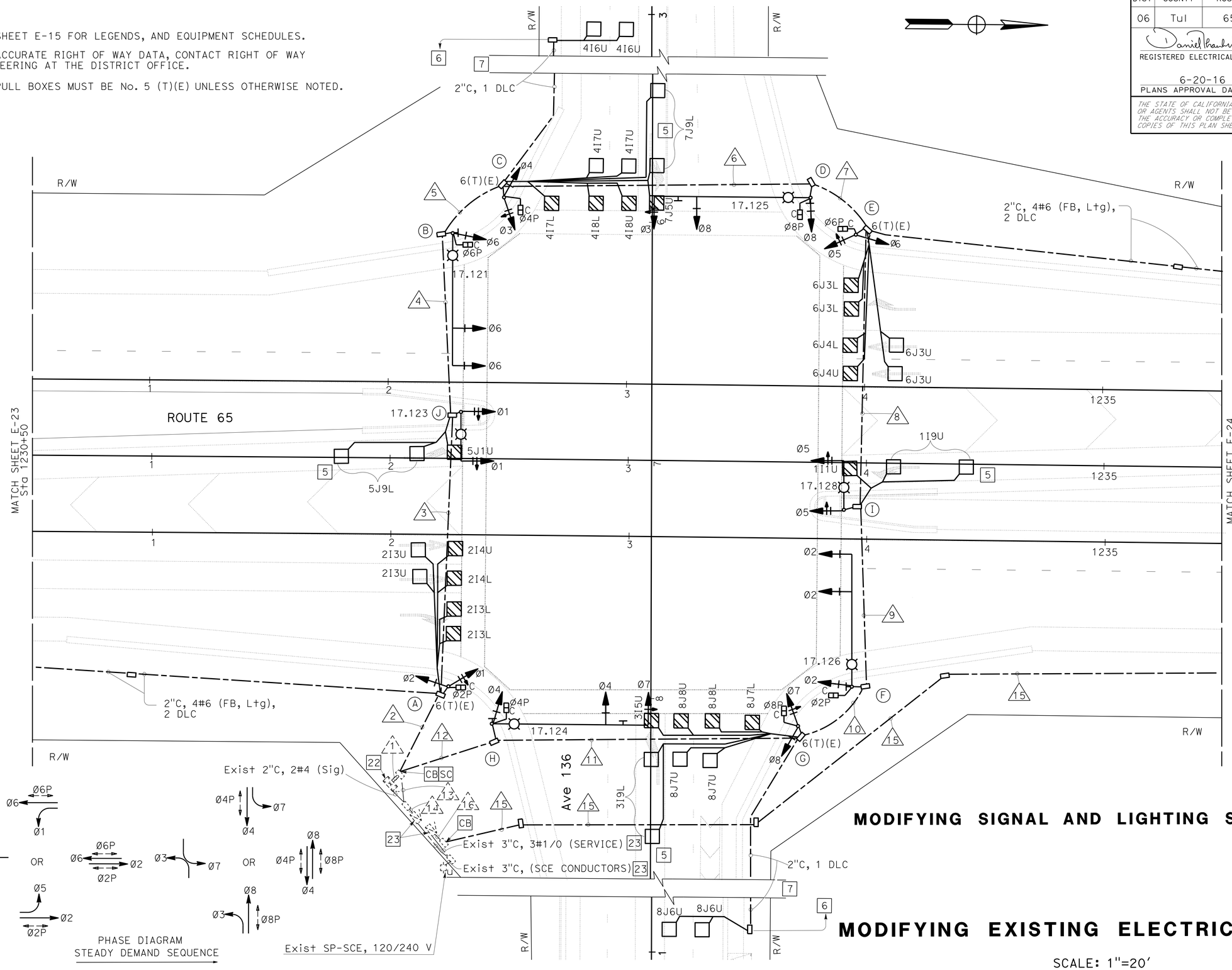


# MODIFYING SIGNAL AND LIGHTING SYSTEM

# MODIFYING EXISTING ELECTRICAL SYSTEM

SCALE: 1"=20'

**E-22**

*APPROVED FOR ELECTRICAL WORK ONLY*

STATE OF CALIFORNIA - DEPARTMENT OF TRANSPORTATION
Caltrans ELECTRICAL DESIGN

FUNCTIONAL SUPERVISOR: ALI BAKHDOUD
CALCULATED-DESIGNED BY: DANIEL VO
CHECKED BY: MONA ATTALLAH
REVISED BY / DATE REVISED

LAST REVISION 06-01-16 | DATE PLOTTED => 27-JUL-2016 | TIME PLOTTED => 16:10

| Dist | COUNTY | ROUTE | POST MILES TOTAL PROJECT | SHEET No. | TOTAL SHEETS |
|---|---|---|---|---|---|
| 06 | Tul | 65 | R15.1/18.0 | 207 | 324 |

REGISTERED ELECTRICAL ENGINEER 6-1-16 DATE

6-20-16
PLANS APPROVAL DATE

REGISTERED PROFESSIONAL ENGINEER DANIEL THANH VO No. 17408 Exp 9/30/16 ELECTRICAL STATE OF CALIFORNIA

*THE STATE OF CALIFORNIA OR ITS OFFICERS OR AGENTS SHALL NOT BE RESPONSIBLE FOR THE ACCURACY OR COMPLETENESS OF SCANNED COPIES OF THIS PLAN SHEET.*

## NOTES:

1. SEE SHEET E-15 FOR LEGEND AND SCHEDULES.
2. FOR ACCURATE RIGHT OF WAY DATA, CONTACT RIGHT OF WAY ENGINEERING AT THE DISTRICT OFFICE.
3. ALL PULL BOXES MUST BE No. 5 (T)(E) UNLESS OTHERWISE NOTED.

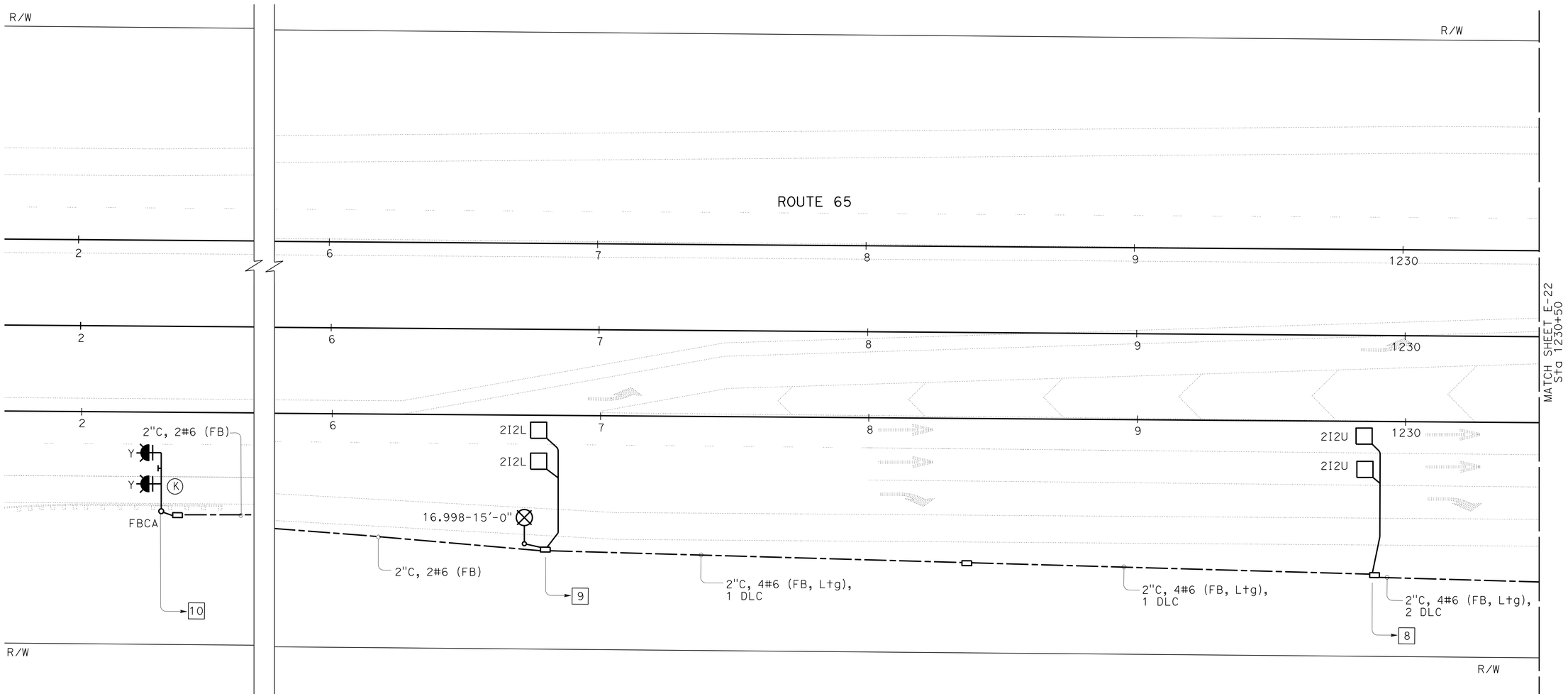


## MODIFYING SIGNAL AND LIGHTING SYSTEM

# MODIFYING EXISTING ELECTRICAL SYSTEM

SCALE: 1"=20'

**E-23**

*APPROVED FOR ELECTRICAL WORK ONLY*

STATE OF CALIFORNIA - DEPARTMENT OF TRANSPORTATION
Caltrans ELECTRICAL DESIGN

FUNCTIONAL SUPERVISOR: ALI BAKHDOUD
CALCULATED-DESIGNED BY: DANIEL VO
CHECKED BY: MONA ATTALLAH
REVISED BY
DATE REVISED

LAST REVISION 06-20-16
DATE PLOTTED => 27-JUL-2016
TIME PLOTTED => 16:10

| Dist | COUNTY | ROUTE | POST MILES TOTAL PROJECT | SHEET No. | TOTAL SHEETS |
|---|---|---|---|---|---|
| 06 | Tul | 65 | R15.1/18.0 | 208 | 324 |

REGISTERED ELECTRICAL ENGINEER 6-1-16 DATE

6-20-16
PLANS APPROVAL DATE

REGISTERED PROFESSIONAL ENGINEER
DANIEL THANH VO
No. 17408
Exp. 9/30/16
ELECTRICAL
STATE OF CALIFORNIA

*THE STATE OF CALIFORNIA OR ITS OFFICERS OR AGENTS SHALL NOT BE RESPONSIBLE FOR THE ACCURACY OR COMPLETENESS OF SCANNED COPIES OF THIS PLAN SHEET.*

NOTES:

1. SEE SHEET E-15 FOR LEGEND AND SCHEDULES.
2. FOR ACCURATE RIGHT OF WAY DATA, CONTACT RIGHT OF WAY ENGINEERING AT THE DISTRICT OFFICE.
3. ALL PULL BOXES MUST BE No. 5 (T)(E) UNLESS OTHERWISE NOTED.

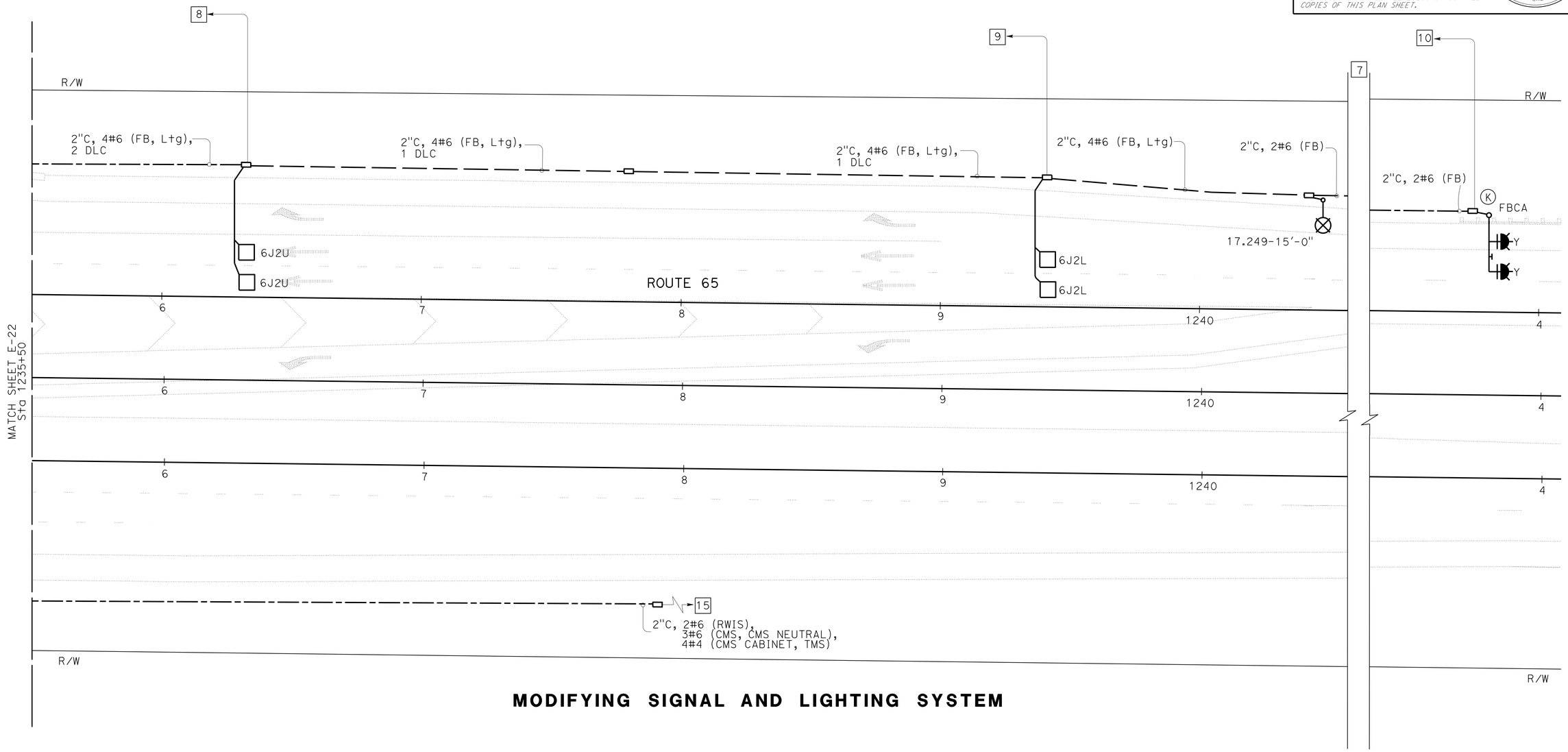


**MODIFYING SIGNAL AND LIGHTING SYSTEM**

# MODIFYING EXISTING ELECTRICAL SYSTEM

SCALE: 1"=20'

**E-24**

*APPROVED FOR ELECTRICAL WORK ONLY*

STATE OF CALIFORNIA - DEPARTMENT OF TRANSPORTATION
Caltrans ELECTRICAL DESIGN

FUNCTIONAL SUPERVISOR: ALI BAKHDOUD
CALCULATED-DESIGNED BY: DANIEL VO
CHECKED BY: MONA ATTALLAH
REVISED BY
DATE REVISED

LAST REVISION 06-20-16
DATE PLOTTED => 27-JUL-2016
TIME PLOTTED => 16:10

| Dist | COUNTY | ROUTE | POST MILES TOTAL PROJECT | SHEET No. | TOTAL SHEETS |
|---|---|---|---|---|---|
| 06 | Tul | 65 | R15.1/18.0 | 209 | 324 |

REGISTERED ELECTRICAL ENGINEER 6-1-16 DATE

6-20-16
PLANS APPROVAL DATE

REGISTERED PROFESSIONAL ENGINEER
DANIEL THANH VO
No. 17408
Exp 9/30/16
ELECTRICAL
STATE OF CALIFORNIA

*THE STATE OF CALIFORNIA OR ITS OFFICERS OR AGENTS SHALL NOT BE RESPONSIBLE FOR THE ACCURACY OR COMPLETENESS OF SCANNED COPIES OF THIS PLAN SHEET.*

## NOTES:

1. FOR ACCURATE RIGHT OF WAY DATA, CONTACT RIGHT OF WAY ENGINEERING AT THE DISTRICT OFFICE.
2. ALL PULL BOXES MUST BE No. 5 (T)(E) UNLESS OTHERWISE NOTED.

## LEGEND:(FOR THIS SHEET ONLY)

1. FURNISH AND INSTALL WIRELESS MODEM. DF MODEL 2070E CONTROLLER ASSEMBLY.
2. CMS EQUIPMENT GROUNDING ELECTRODE IN PULL BOX.
3. DF MODEL 500 LED CHANGEABLE MESSAGE SIGN.
4. SEE SHEET E-26 FOR CONTINUATION.
5. SEE SHEET E-24 FOR CONTINUATION.

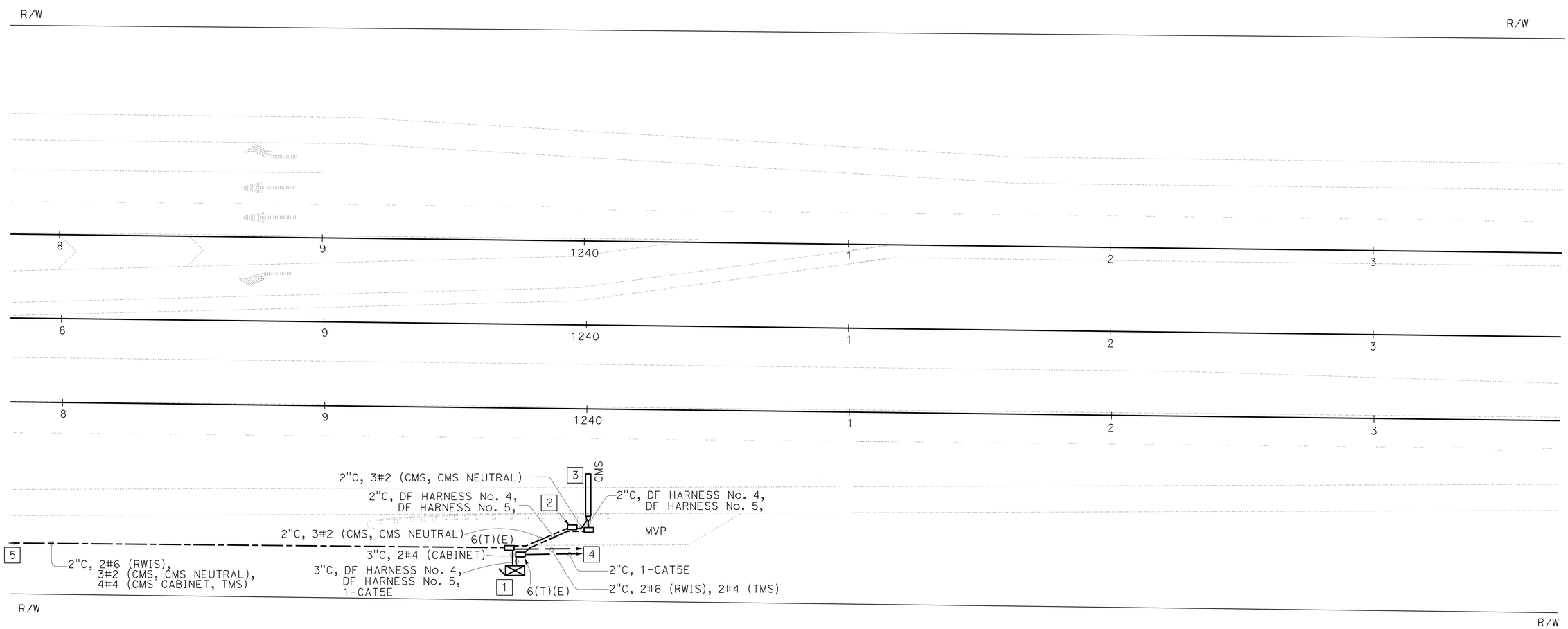


# CHANGEABLE MESSAGE SIGN SYSTEM

SCALE: 1"=20'

**E-25**

*APPROVED FOR ELECTRICAL WORK ONLY*

STATE OF CALIFORNIA - DEPARTMENT OF TRANSPORTATION
Caltrans ELECTRICAL DESIGN

FUNCTIONAL SUPERVISOR: ALI BAKHDOUD
CALCULATED-DESIGNED BY: DANIEL VO
CHECKED BY: MONA ATTALLAH
REVISED BY
DATE REVISED

LAST REVISION 06-20-16
DATE PLOTTED => 27-JUL-2016
TIME PLOTTED => 16:10

| Dist | COUNTY | ROUTE | POST MILES TOTAL PROJECT | SHEET No. | TOTAL SHEETS |
|---|---|---|---|---|---|
| 06 | Tul | 65 | R15.1/18.0 | 210 | 324 |

REGISTERED ELECTRICAL ENGINEER 6-1-16 DATE

6-20-16
PLANS APPROVAL DATE

REGISTERED PROFESSIONAL ENGINEER
DANIEL THANH VO
No. 17408
Exp 9/30/16
ELECTRICAL
STATE OF CALIFORNIA

*THE STATE OF CALIFORNIA OR ITS OFFICERS OR AGENTS SHALL NOT BE RESPONSIBLE FOR THE ACCURACY OR COMPLETENESS OF SCANNED COPIES OF THIS PLAN SHEET.*

## NOTES:

1. FOR ACCURATE RIGHT OF WAY DATA, CONTACT RIGHT OF WAY ENGINEERING AT THE DISTRICT OFFICE.
2. ALL PULL BOXES MUST BE No. 5 (T)(E) UNLESS OTHERWISE NOTED.

## LEGEND:(FOR THIS SHEET ONLY)

1 RWIS ON POLE TYPE VDS 30. SEE SHEET E-29 FOR DETAIL.

2 SEE SHEET E-25 FOR CONTINUATION.

3 SEE SHEET E-27 FOR CONTINUATION.

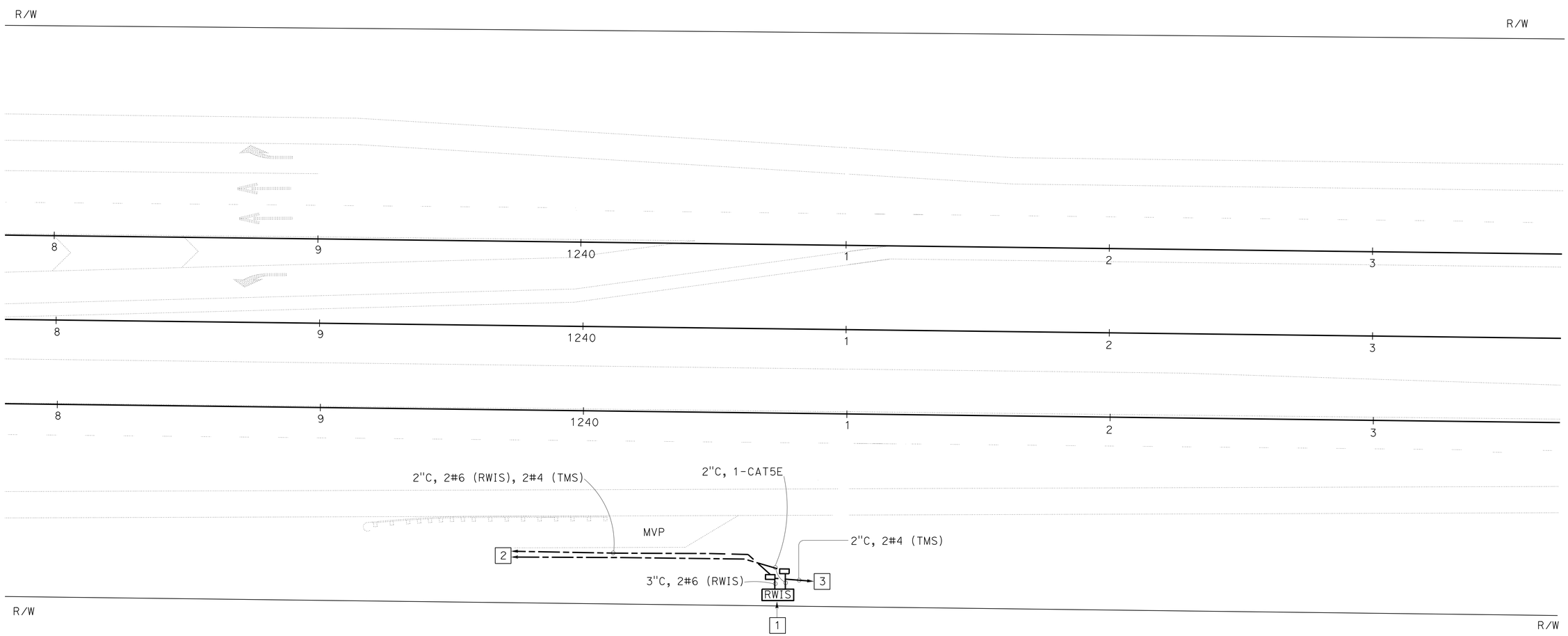


# ROADSIDE WEATHER INFORMATION SYSTEM

SCALE: 1"=20'

**E-26**

*APPROVED FOR ELECTRICAL WORK ONLY*

REVISED BY | DATE REVISED
DANIEL VO | MONA ATTALLAH
CALCULATED-DESIGNED BY | CHECKED BY
FUNCTIONAL SUPERVISOR
ALI BAKHDOUD

STATE OF CALIFORNIA - DEPARTMENT OF TRANSPORTATION
Caltrans ELECTRICAL DESIGN

LAST REVISION 06-20-16 | DATE PLOTTED => 27-JUL-2016 TIME PLOTTED => 16:10

| Dist | COUNTY | ROUTE | POST MILES TOTAL PROJECT | SHEET No. | TOTAL SHEETS |
|---|---|---|---|---|---|
| 06 | Tul | 65 | R15.1/18.0 | 211 | 324 |

REGISTERED ELECTRICAL ENGINEER — DATE: 6-1-16

PLANS APPROVAL DATE: 6-20-16

REGISTERED PROFESSIONAL ENGINEER — DANIEL THANH VO — No. 17408 — Exp 9/30/16 — ELECTRICAL — STATE OF CALIFORNIA

*THE STATE OF CALIFORNIA OR ITS OFFICERS OR AGENTS SHALL NOT BE RESPONSIBLE FOR THE ACCURACY OR COMPLETENESS OF SCANNED COPIES OF THIS PLAN SHEET.*

## NOTES:

1. FOR ACCURATE RIGHT OF WAY DATA, CONTACT RIGHT OF WAY ENGINEERING AT THE DISTRICT OFFICE.
2. ALL PULL BOXES MUST BE No. 5 (T)(E) UNLESS OTHERWISE NOTED.

## LEGEND:(FOR THIS SHEET ONLY)

1. MODEL 334L CONTROLLER CABINET WITH ATC AND WIRELESS MODEM. DF 2070E CONTROLLER UNIT.
2. INDUCTIVE LOOP DETECTORS AND PIEZO AXLE SENSORS MUST BE PLACED AND IDENTIFIED AS SHOWN ON SHEET E-30.
3. SEE SHEET E-26 FOR CONTINUATION.
4. 2-3"C, 8 DLC, 4 STC
5. 2"C, 8 DLC, 4 STC

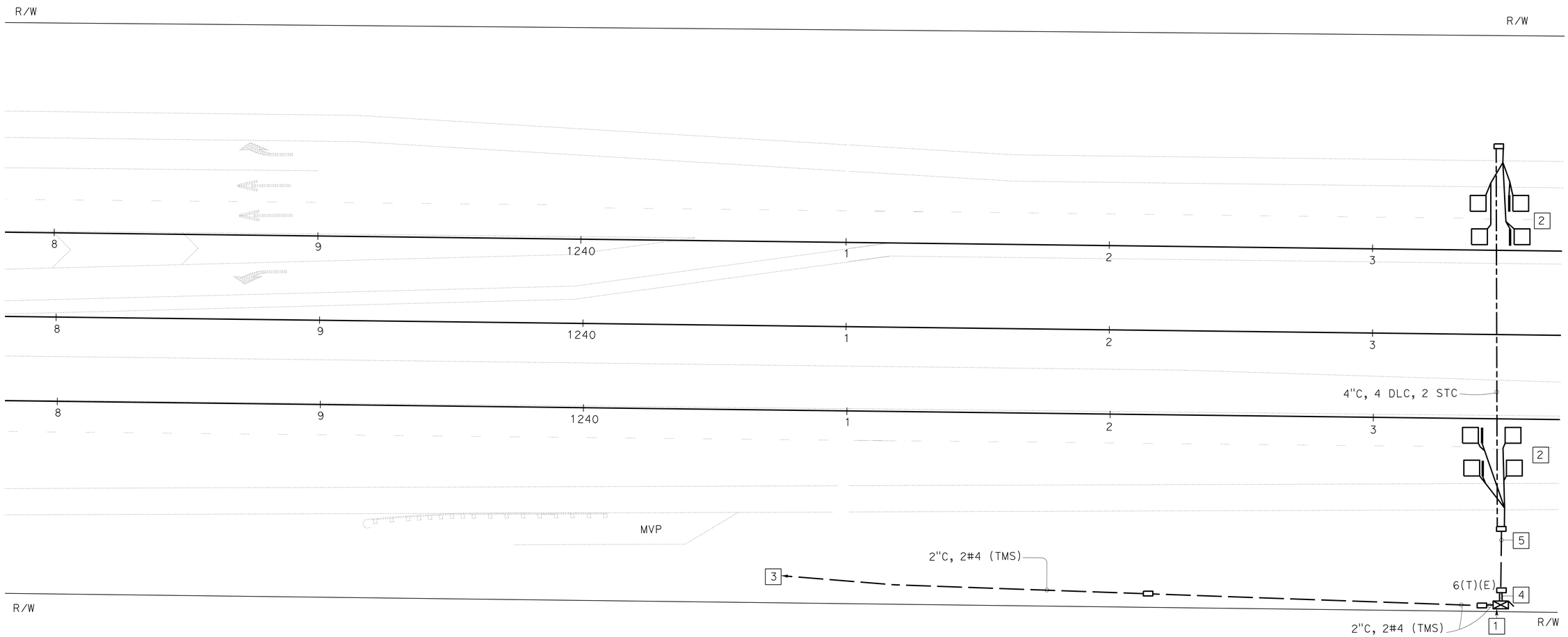


# TRAFFIC MONITORING STATION SYSTEM

SCALE: 1"=20'

**E-27**

*APPROVED FOR ELECTRICAL WORK ONLY*

STATE OF CALIFORNIA - DEPARTMENT OF TRANSPORTATION

Caltrans ELECTRICAL DESIGN

FUNCTIONAL SUPERVISOR: ALI BAKHDOUD

CALCULATED-DESIGNED BY: DANIEL VO

CHECKED BY: MONA ATTALLAH

REVISED BY | DATE REVISED

LAST REVISION | DATE PLOTTED => 27-JUL-2016 | TIME PLOTTED => 16:10 | 06-20-16

| Dist | COUNTY | ROUTE | POST MILES TOTAL PROJECT | SHEET No. | TOTAL SHEETS |
|---|---|---|---|---|---|
| 06 | Tul | 65 | R15.1/18.0 | 212 | 324 |

REGISTERED ELECTRICAL ENGINEER 6-1-16 DATE

6-20-16
PLANS APPROVAL DATE

REGISTERED PROFESSIONAL ENGINEER DANIEL THANH VO No. 17408 Exp 9/30/16 ELECTRICAL STATE OF CALIFORNIA

*THE STATE OF CALIFORNIA OR ITS OFFICERS OR AGENTS SHALL NOT BE RESPONSIBLE FOR THE ACCURACY OR COMPLETENESS OF SCANNED COPIES OF THIS PLAN SHEET.*

NOTE:

FOR ACCURATE RIGHT OF WAY DATA, CONTACT RIGHT OF WAY ENGINEERING AT THE DISTRICT OFFICE.

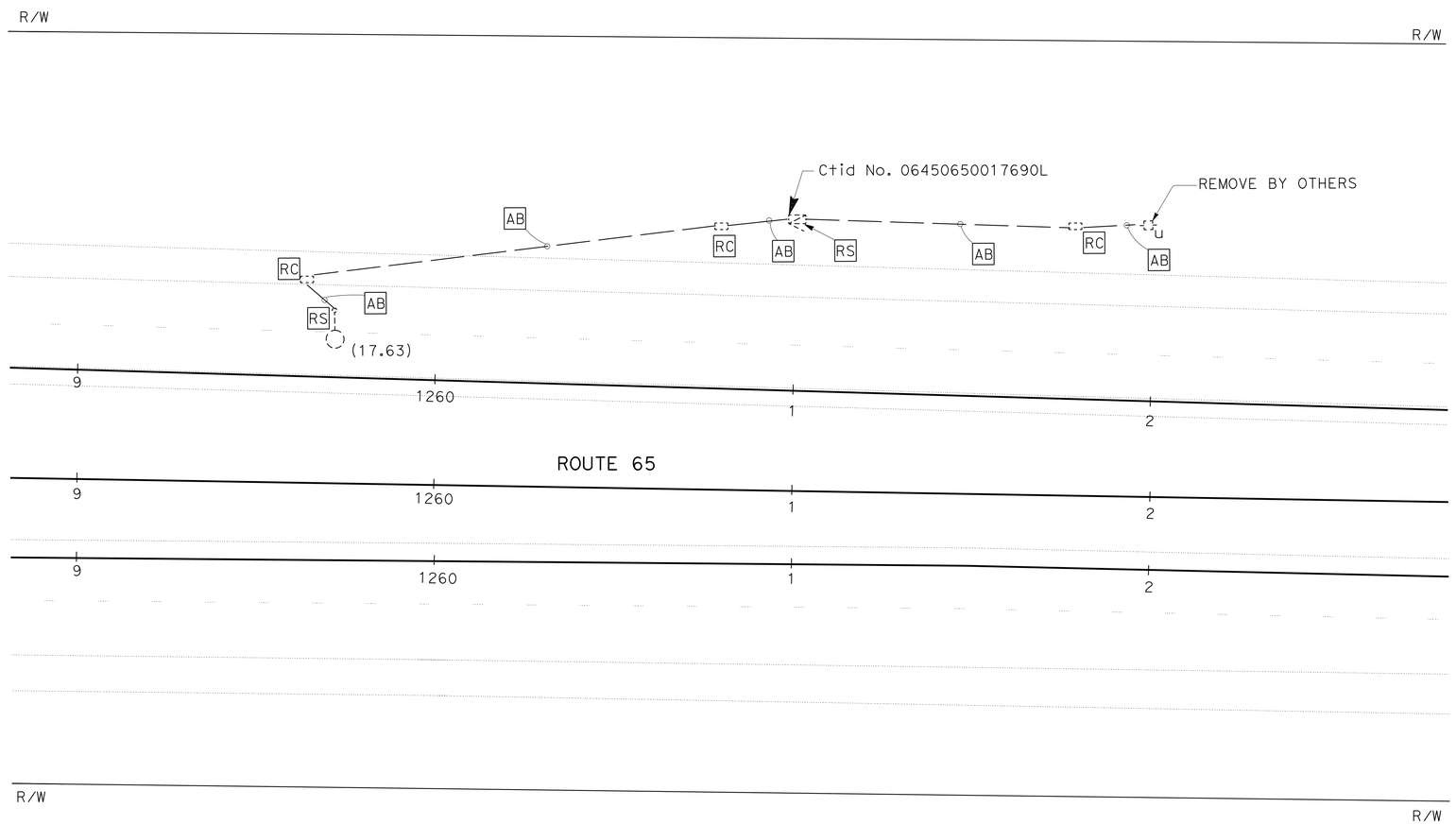


# REMOVING EXISTING ELECTRICAL SYSTEM

SCALE: 1"=20'

E-28

*APPROVED FOR ELECTRICAL WORK ONLY*

REVISED BY | DATE REVISED

DANIEL VO | MONA ATTALLAH

CALCULATED-DESIGNED BY | CHECKED BY

FUNCTIONAL SUPERVISOR: ALI BAKHDOUD

STATE OF CALIFORNIA - DEPARTMENT OF TRANSPORTATION

Caltrans ELECTRICAL DESIGN

LAST REVISION 06-20-16 | DATE PLOTTED => 27-JUL-2016 TIME PLOTTED => 16:10

| Dist | COUNTY | ROUTE | POST MILES TOTAL PROJECT | SHEET No. | TOTAL SHEETS |
|---|---|---|---|---|---|
| 06 | Tul | 65 | R15.1/18.0 | 213 | 324 |

REGISTERED ELECTRICAL ENGINEER 6-1-16 DATE

6-20-16
PLANS APPROVAL DATE

REGISTERED PROFESSIONAL ENGINEER DANIEL THANH VO No. 17408 Exp 9-30-16 ELECTRICAL STATE OF CALIFORNIA

*THE STATE OF CALIFORNIA OR ITS OFFICERS OR AGENTS SHALL NOT BE RESPONSIBLE FOR THE ACCURACY OR COMPLETENESS OF SCANNED COPIES OF THIS PLAN SHEET.*

## LEGEND:

1 NEMA 3R ENCLOSURE WITH HINGED DOOR, PADLOCK HASP AND INTERIOR PANEL, AND RPU, SEE DETAIL B ON THIS SHEET.

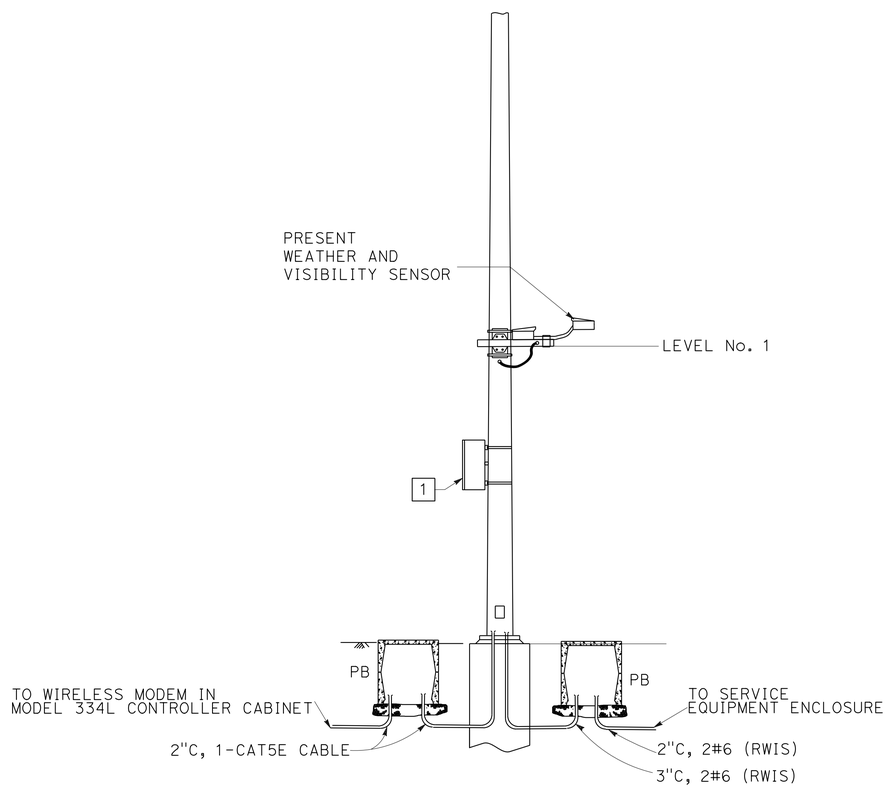


POLE TYPE VDS 30

**DETAIL A**

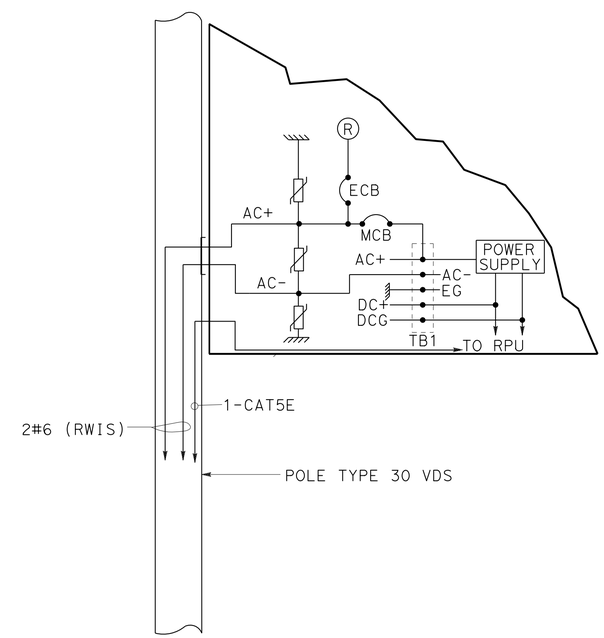


RWIS POWER CONNECTION

**DETAIL B**

# ELECTRICAL DETAILS

**E-29**

NO SCALE

STATE OF CALIFORNIA - DEPARTMENT OF TRANSPORTATION
Caltrans® **ELECTRICAL DESIGN**

FUNCTIONAL SUPERVISOR: ALI BAKHDOUD
CALCULATED-DESIGNED BY: DANIEL VO
CHECKED BY: MONA ATTALLAH
REVISED BY
DATE REVISED

LAST REVISION 06-20-16
DATE PLOTTED => 27-JUL-2016
TIME PLOTTED => 16:10

| Dist | COUNTY | ROUTE | POST MILES TOTAL PROJECT | SHEET No. | TOTAL SHEETS |
|---|---|---|---|---|---|
| 06 | Tul | 65 | R15.1/18.0 | 214 | 324 |

REGISTERED ELECTRICAL ENGINEER 6-1-16 DATE

6-20-16
PLANS APPROVAL DATE

REGISTERED PROFESSIONAL ENGINEER DANIEL THANH VO No. 17408 Exp. 9/30/16 ELECTRICAL STATE OF CALIFORNIA

*THE STATE OF CALIFORNIA OR ITS OFFICERS OR AGENTS SHALL NOT BE RESPONSIBLE FOR THE ACCURACY OR COMPLETENESS OF SCANNED COPIES OF THIS PLAN SHEET.*

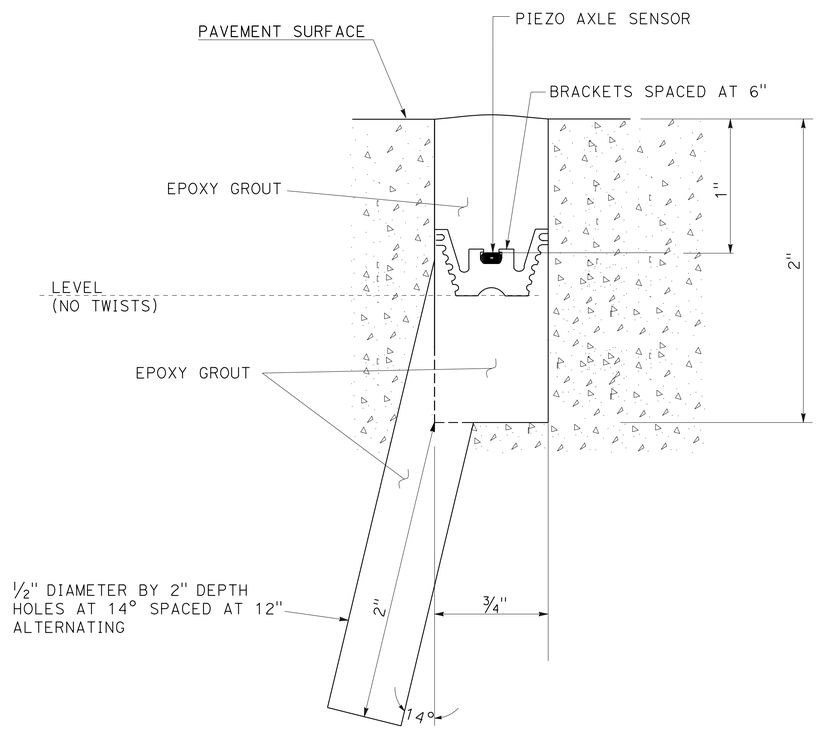


SECTION A-A

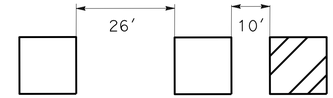


LEFT TURN DETECTOR LOOP SPACING

**DETAIL C**

INDUCTIVE LOOP DETECTOR SENSOR DESIGNATION

N-1-2

- DIRECTION OF TRAFFIC: N - NORTHBOUND , S - SOUTHBOUND; E - EASTBOUND , W - WESTBOUND
- 1 - ENTERING; 2 - LEAVING
- LANE NUMBER: 1 - FIRST LANE FROM LEFT; 2 - SECOND LANE

PIEZO AXLE SENSOR DESIGNATION

N-P-1-1

- DIRECTION OF TRAFFIC: N - NORTHBOUND, S - SOUTHBOUND; E - EASTBOUND, W - WESTBOUND
- PIEZO AXLE SENSOR
- 1 - FOR ALL PIEZO AXLE SENSORS
- LANE NUMBER: 1 - FIRST LANE FROM LEFT; 2 - SECOND LANE

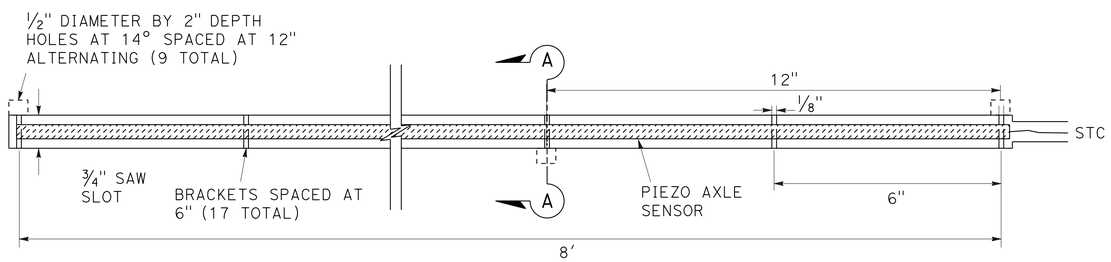


PIEZO AXLE SENSOR INSTALLATION

**TOP VIEW**
**DETAIL A**

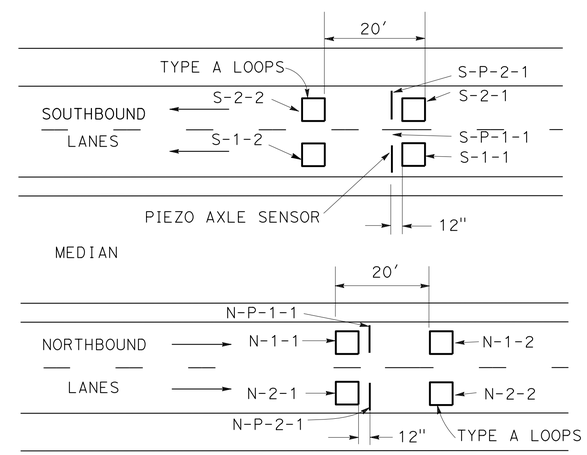


LOOP DETECTOR AND PIEZO AXLE SENSOR PLACEMENT AND DESIGNATION

**DETAIL B**

# ELECTRICAL DETAILS
# E-30

NO SCALE

*APPROVED FOR ELECTRICAL WORK ONLY*

STATE OF CALIFORNIA - DEPARTMENT OF TRANSPORTATION
Caltrans ELECTRICAL DESIGN

FUNCTIONAL SUPERVISOR: ALI BAKHDOUD
CALCULATED-DESIGNED BY: DANIEL VO
CHECKED BY: MONA ATTALLAH
REVISED BY
DATE REVISED

LAST REVISION 06-20-16
DATE PLOTTED => 27-JUL-2016
TIME PLOTTED => 16:11

| Dist | COUNTY | ROUTE | POST MILES TOTAL PROJECT | SHEET No. | TOTAL SHEETS |
|---|---|---|---|---|---|
| 06 | Tul | 65 | R15.1/18.0 | 215 | 324 |

REGISTERED ELECTRICAL ENGINEER — DATE: 6-1-16

PLANS APPROVAL DATE: 6-20-16

REGISTERED PROFESSIONAL ENGINEER — DANIEL THANH VO — No. 17408 — Exp 9-30-16 — ELECTRICAL — STATE OF CALIFORNIA

THE STATE OF CALIFORNIA OR ITS OFFICERS OR AGENTS SHALL NOT BE RESPONSIBLE FOR THE ACCURACY OR COMPLETENESS OF SCANNED COPIES OF THIS PLAN SHEET.

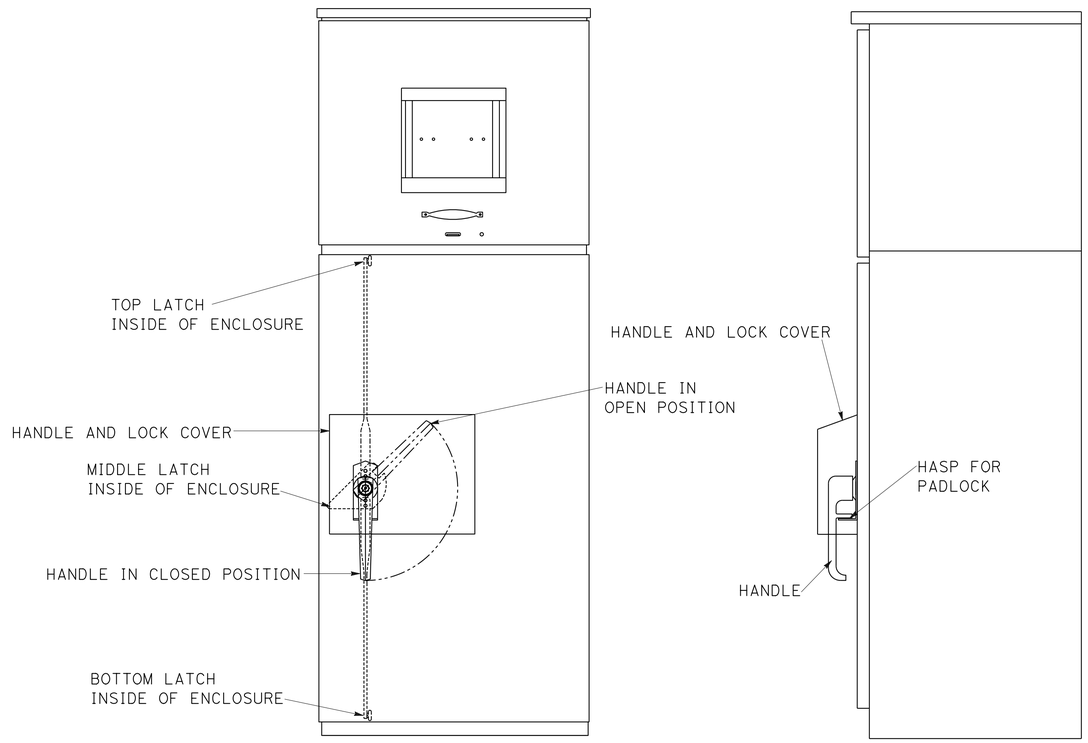


TYPE III SERVICE EQUIPMENT ENCLOSURE 3 POINT LATCH, HANDLE, AND LOCK COVER

**DETAIL A**

# ELECTRICAL DETAILS

**E-31**

NO SCALE

STATE OF CALIFORNIA - DEPARTMENT OF TRANSPORTATION

Caltrans® **ELECTRICAL DESIGN**

FUNCTIONAL SUPERVISOR: ALI BAKHDOUD

CALCULATED-DESIGNED BY: DANIEL VO

CHECKED BY: MONA ATTALLAH

REVISED BY

DATE REVISED

LAST REVISION 06-20-16 | DATE PLOTTED => 27-JUL-2016 | TIME PLOTTED => 16:11

| Dist | COUNTY | ROUTE | POST MILES TOTAL PROJECT | SHEET No. | TOTAL SHEETS |
|---|---|---|---|---|---|
| 06 | Tul | 65 | R15.1/18.0 | 216 | 324 |

REGISTERED ELECTRICAL ENGINEER 6-1-16 DATE

6-20-16
PLANS APPROVAL DATE

REGISTERED PROFESSIONAL ENGINEER DANIEL THANH VO No. 17408 Exp 9-30-16 ELECTRICAL STATE OF CALIFORNIA

*THE STATE OF CALIFORNIA OR ITS OFFICERS OR AGENTS SHALL NOT BE RESPONSIBLE FOR THE ACCURACY OR COMPLETENESS OF SCANNED COPIES OF THIS PLAN SHEET.*

NOTE:

THE QUANTITIES SHOWN ON THIS TABLE ARE NOT SEPARATE PAY ITEMS, FOR INFORMATION ONLY.
FOR COMPLETE ELECTRICAL WORK, SEE ELECTRICAL PLAN SHEETS.

## LIGHTING SYSTEM

| SHEET No. | No. 5(T)(E) PB | UTILITY APPROVD PB | STANDARD TYPE 30 FOUNDATION | STANDARD TYPE 30 | TYPE III-CF SERVICE EQUIPMENT ENCLOSURE | TYPE III-CF SERVICE EQUIPMENT ENCLOSURE FOUNDATION | 2"C (TYPE 1) | 3"C (TYPE 1) | 2"C (TYPE 3) | 3"C (TYPE 3) | 4"C (TYPE 3) | No. 8 CONDUCTOR (G) (COPPER) | No. 6 CONDUCTOR (ALUMINUM) | No. 1/0 CONDUCTOR (ALUMINUM) |
|---|---|---|---|---|---|---|---|---|---|---|---|---|---|---|
| | EA | | | | | | FT | | | | | | | |
| E-1 | 11 | 1 | 6 | 6 | 1 | 1 | 40 | 10 | 1200 | 200 | 500 | 1600 | 4100 | 200 |

## TRAFFIC MONITORING STATION SYSTEM

| SHEET No. | No. 5(T)(E) PB | No. 6(T)(E) PB | TYPE A DETECTOR LOOP | MODEL 334L CONTROLLER CABINET FOUNDATION | MODEL 334L CONTROLLER CABINET | WIRELESS MODEM | PIEZO SENSOR WITH STC | ATC | 3"C (TYPE 1) | 2"C (TYPE 3) | 4"C (TYPE 3) | No. 8 CONDUCTOR (G) (COPPER) | No. 6 CONDUCTOR (ALUMINUM) | No. 4 CONDUCTOR (ALUMINUM) | DLC |
|---|---|---|---|---|---|---|---|---|---|---|---|---|---|---|---|
| | EA | | | | | | | | FT | | | | | | |
| E-3 | 3 | 1 | 8 | 1 | 1 | 1 | 4 | 1 | 20 | 50 | 150 | 80 | 140 | | 800 |
| E-27 | 4 | 1 | 8 | 1 | 1 | 1 | 4 | 1 | 20 | 300 | 150 | 470 | | 600 | 800 |

# ELECTRICAL QUANTITIES

E-32

STATE OF CALIFORNIA - DEPARTMENT OF TRANSPORTATION
Caltrans® ELECTRICAL DESIGN

FUNCTIONAL SUPERVISOR: ALI BAKHDOUD
CALCULATED-DESIGNED BY: DANIEL VO
CHECKED BY: MONA ATTALLAH
REVISED BY
DATE REVISED

LAST REVISION 06-20-16
DATE PLOTTED => 27-JUL-2016
TIME PLOTTED => 16:11

| Dist | COUNTY | ROUTE | POST MILES TOTAL PROJECT | SHEET No. | TOTAL SHEETS |
|---|---|---|---|---|---|
| 06 | Tul | 65 | R15.1/18.0 | 217 | 324 |

REGISTERED ELECTRICAL ENGINEER 6-1-16 DATE

6-20-16
PLANS APPROVAL DATE

REGISTERED PROFESSIONAL ENGINEER DANIEL THANH VO No. 17408 Exp 9-30-16 ELECTRICAL STATE OF CALIFORNIA

*THE STATE OF CALIFORNIA OR ITS OFFICERS OR AGENTS SHALL NOT BE RESPONSIBLE FOR THE ACCURACY OR COMPLETENESS OF SCANNED COPIES OF THIS PLAN SHEET.*

NOTE:

THE QUANTITIES SHOWN ON THIS TABLE ARE NOT SEPARATE PAY ITEMS, FOR INFORMATION ONLY.
FOR COMPLETE ELECTRICAL WORK, SEE ELECTRICAL PLAN SHEETS.

## CHANGEABLE MESSAGE SIGN SYSTEM

| SHEET No. | No. 5(T)(E) PB | No. 6(T)(E) PB | MODEL 334L CONTROLLER CABINET FOUNDATION | MODEL 334L CONTROLLER CABINET | WIRELESS MODEM | 2"C (TYPE 1) | 3"C (TYPE 1) | 2"C (TYPE 3) | No. 8 CONDUCTOR (COPPER) | No. 6 CONDUCTOR (ALUMINUM) | No. 4 CONDUCTOR (ALUMINUM) | No. 2 CONDUCTOR (ALUMINUM) |
|---|---|---|---|---|---|---|---|---|---|---|---|---|
| | EA | | | | | FT | | | | | | |
| E-25 | 2 | 2 | 1 | 1 | 1 | 20 | 20 | 800 | 800 | 1200 | 2400 | 1800 |

## ROADSIDE WEATHER INFORMATION SYSTEM

| SHEET No. | No. 5(T)(E) PB | NEMA 3R ENCLOSURE WITH RWIS EQUIPMENT | WIRELESS MODEM | NEMA 3R ENCLOSURE WITH RWIS EQUIPMENT | POLE TYPE 30 VDS WITH RWIS SENSOR | POLE TYPE 30 VDS FOUNDATION | 2"C (TYPE 1) | 3"C (TYPE 1) | 2"C (TYPE 3) | No. 8 CONDUCTOR (COPPER) | No. 6 CONDUCTOR (ALUMINUM) | No. 4 CONDUCTOR (ALUMINUM) | CAT5E |
|---|---|---|---|---|---|---|---|---|---|---|---|---|---|
| | EA | | | | | | FT | | | | | | |
| E-26 | 2 | 1 | 1 | 1 | 1 | 1 | 10 | 10 | 300 | 450 | 250 | 250 | 150 |

# ELECTRICAL QUANTITIES

E-33

STATE OF CALIFORNIA - DEPARTMENT OF TRANSPORTATION
Caltrans® ELECTRICAL DESIGN

FUNCTIONAL SUPERVISOR: ALI BAKHDOUD
CALCULATED-DESIGNED BY: DANIEL VO
CHECKED BY: MONA ATTALLAH
REVISED BY
DATE REVISED

LAST REVISION 06-20-16
DATE PLOTTED => 27-JUL-2016
TIME PLOTTED => 16:11

| Dist | COUNTY | ROUTE | POST MILES TOTAL PROJECT | SHEET No. | TOTAL SHEETS |
|---|---|---|---|---|---|
| 06 | Tul | 65 | R15.1/18.0 | 218 | 324 |

Daniel Thanh Vo 6-1-16
REGISTERED ELECTRICAL ENGINEER DATE

6-20-16
PLANS APPROVAL DATE

REGISTERED PROFESSIONAL ENGINEER DANIEL THANH VO No. 17408 Exp 9-30-16 ELECTRICAL STATE OF CALIFORNIA

*THE STATE OF CALIFORNIA OR ITS OFFICERS OR AGENTS SHALL NOT BE RESPONSIBLE FOR THE ACCURACY OR COMPLETENESS OF SCANNED COPIES OF THIS PLAN SHEET.*

**NOTE:**
THE QUANTITIES SHOWN ON THIS TABLE ARE NOT SEPARATE PAY ITEMS, FOR INFORMATION ONLY.
FOR COMPLETE ELECTRICAL WORK, SEE ELECTRICAL PLAN SHEETS.

## MODIFY EXISTING ELECTRICAL SYSTEM

| SHEET No. | 2" CONDUIT (TYPE 1) | 3" CONDUIT (TYPE 1) | 4" CONDUIT (TYPE 1) | 1" CONDUIT (TYPE 3) | 2" CONDUIT (TYPE 3) | 3" CONDUIT (TYPE 3) | 4" CONDUIT (TYPE 3) | NO. 14 CONDUCTOR (CU) | NO. 8 CONDUCTOR (G) (CU) | NO. 6 CONDUCTOR (AL) | NO. 4 CONDUCTOR (AL) | NO. 2 CONDUCTOR (AL) | NO. 1/0 CONDUCTOR (AL) | 12 CSC | 3 CSC | DLC | MESSENGER CABLE | VIVDS CABLE | APS CABLE |
|---|---|---|---|---|---|---|---|---|---|---|---|---|---|---|---|---|---|---|---|
| | FT | | | | | | | | | | | | | | | | | | |
| E-5 | | 30 | | | | | | | 550 | 1020 | | | | 1610 | 1020 | 1710 | 600 | | |
| E-7 | 10 | 10 | 20 | 60 | | 60 | | | 250 | 1500 | 50 | | 180 | 575 | 440 | 270 | 600 | | 450 |
| E-8 | | | | | | | | | 600 | 1200 | | | | | | | 600 | | |
| E-9 | | | | | | | | | 650 | 1300 | | | | | | | 650 | | |
| E-12 | 100 | 20 | | | 850 | 20 | 800 | 500 | 1600 | 4100 | | | | 2100 | 1800 | 7200 | | 850 | |
| E-13 | 20 | | | | 800 | | | 120 | 850 | 3300 | | | | | | 280 | | | |
| E-14 | 20 | | | | 860 | | | 120 | 900 | 3400 | | | | | | 400 | | | |
| E-16 | | | | | | 90 | | | 280 | 550 | | | | 550 | | | 500 | | |
| E-17 | | | | 20 | | | | | 260 | 500 | | | | 550 | | 550 | 830 | | |
| E-18 | | 10 | 20 | 30 | 10 | 40 | | | 500 | 1600 | 60 | | 120 | 1250 | | 760 | 600 | | 540 |
| E-19 | | | | | | | | | 600 | 1200 | | | | | | | 600 | | |
| E-22 | 100 | | | | 1300 | | 900 | 400 | 1600 | 4800 | 1500 | 120 | | 2500 | 2200 | 7500 | | 800 | |
| E-23 | 20 | | | | 840 | | | 100 | 850 | 3400 | | | | | | 440 | | | |
| E-24 | 20 | | | | 800 | | | 100 | 860 | 3400 | | | | | | 400 | | | |

## MODIFY EXISTING ELECTRICAL SYSTEM

| SHEET No. | NO. 5 PB | NO. 5(T) PB | No. 5(T)(E) PB | No. 6(T)(E) PB | UTILITIES APPROVED PB | TYPE A DETECTOR LOOP | TYPE D DETECTOR LOOP | TYPE 30 STANDARD FOUNDATION | TYPE 30 STANDARD | TYPE 1-A STANDARD | TYPE 1-A STANDARD FOUNDATION | TYPE 19-2-100 STANDARD | TYPE 19-2-100 STANDARD FOUNDATON | TYPE 29-5-100 STANDARD | TYPE 29-5-100 STANDARD FOUNDATION | TYPE 61-5-100 STANDARD | TYPE 61-5-100 STANDARD FOUNDATION | TYPE 9B FB | TYPE 9B FB FOUNDATION | TYPE III SERVICE EQUIPMENT ENCLOSURE FOUNDATION | TYPE III-BF SERVICE EQUIPMENT ENCLOSURE | TYPE III-CF SERVICE EQUIPMENT ENCLOSURE | TEMPORARY WOOD POLE | MODEL 334L CONTROLLER CABINET FOUNDATION | WIRELESS MODEM | VIVDA | TEMPORARY WOOD POLE WITH SIGNAL EQUIPMENT | TEMPORARY WOOD POLE WITH FB EQUIPMENT | SIGNAL HEAD ON OVERHEAD LINES |
|---|---|---|---|---|---|---|---|---|---|---|---|---|---|---|---|---|---|---|---|---|---|---|---|---|---|---|---|---|
| | EA | | | | | | | | | | | | | | | | | | | | | | | | | | | |
| E-5 | 4 | | | | | 6 | | | | | | | | | | | | | | | | 5 | | | | 3 | | 4 |
| E-7 | 2 | | 1 | 1 | 1 | 6 | | | | | | | | | | | | | | 1 | | 1 | 2 | 1 | 1 | 2 | 1 | | 4 |
| E-8 | | | | | | | | | | | | | | | | | | | | | | | 4 | | | | | 1 | |
| E-9 | | | | | | | | | | | | | | | | | | | | | | | 3 | | | | | 1 | |
| E-12 | | | 16 | | | 14 | 15 | | | | 4 | 4 | 2 | 2 | 4 | 4 | | | | | | | | | | | | | |
| E-13 | | | 6 | | | 2 | | 1 | 1 | | | | | | | | | 1 | 1 | | | | | | | | | | |
| E-14 | | | 6 | | | 4 | | 1 | 1 | | | | | | | | | 1 | 1 | | | | | | | | | | |
| E-16 | 1 | | | | | | | | | | | | | | | | | | | | | | 3 | | | | 4 | | 4 |
| E-17 | 1 | | | | | 9 | | | | | | | | | | | | | | | | | 1 | 1 | 1 | | 2 | | 2 |
| E-18 | 2 | 3 | | 1 | 1 | 7 | | | | | | | | | | | | | | 2 | 1 | 1 | 4 | | | 2 | | 1 | |
| E-19 | | | | | | | | | | | | | | | | | | | | | | | 3 | | | | | 1 | |
| E-22 | | | 15 | 4 | | 20 | 18 | | | | 4 | 4 | 2 | 2 | 2 | 2 | 2 | | | | | | | | | | | | |
| E-23 | | | 7 | | | 4 | | 1 | 1 | 1 | | | | | | | | 1 | 1 | | | | | | | | | | |
| E-24 | | | 8 | | | 4 | | 1 | 1 | 1 | | | | | | | | 1 | 1 | | | | | | | | | | |

# ELECTRICAL QUANTITIES
# E-34

STATE OF CALIFORNIA - DEPARTMENT OF TRANSPORTATION
Caltrans® ELECTRICAL DESIGN

FUNCTIONAL SUPERVISOR: ALI BAKHDOUD
CALCULATED-DESIGNED BY: MONA ATTALLAH
CHECKED BY: DANIEL VO
REVISED BY
DATE REVISED

LAST REVISION 06-20-16 | DATE PLOTTED => 27-JUL-2016 | TIME PLOTTED => 16:11

| Dist | COUNTY | ROUTE | POST MILES TOTAL PROJECT | SHEET No. | TOTAL SHEETS |
|---|---|---|---|---|---|
| 06 | Tul | 65 | R15.1/18.0 | 219 | 324 |

E. Ataelgeed 03-21-16
REGISTERED CIVIL ENGINEER DATE

6-20-16
PLANS APPROVAL DATE

REGISTERED PROFESSIONAL ENGINEER ELTAHIR K. ATAELGEED No. 76374 Exp. 12-31-16 CIVIL STATE OF CALIFORNIA

*THE STATE OF CALIFORNIA OR ITS OFFICERS OR AGENTS SHALL NOT BE RESPONSIBLE FOR THE ACCURACY OR COMPLETENESS OF SCANNED COPIES OF THIS PLAN SHEET.*

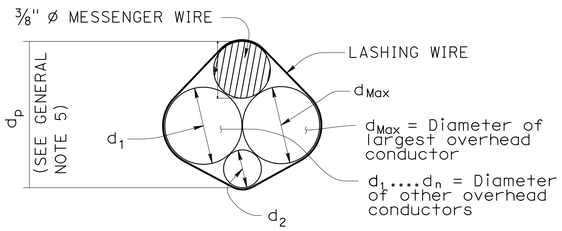


$d_p = 3/8'' + d_{Max} + 0.30 * (d_1 + d_2 + \ldots d_n)$




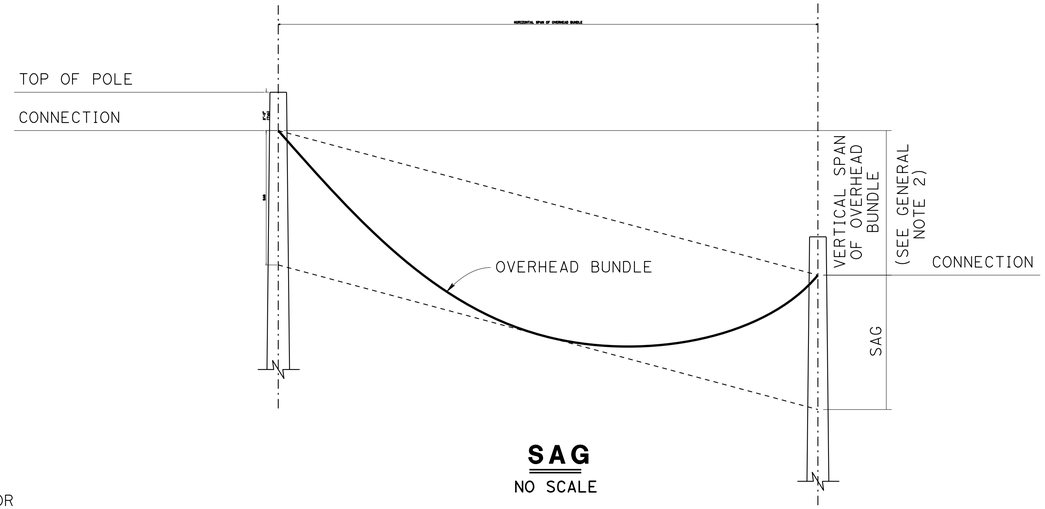


**SAG**
NO SCALE

DESIGN: AASHTO STANDARD SPECIFICATIONS FOR STRUCTURAL SUPPORTS FOR HIGHWAY SIGNS, LUMINAIRES AND TRAFFIC SIGNALS, FIFTH EDITION (LTS-5).

GROUP LOAD COMBINATIONS:

I DEAD LOAD
II DEAD LOAD + WIND LOAD
III DEAD LOAD + 0.5 (WIND LOAD) + ICE LOAD
IV FATIGUE: NOT USED

LOADING:

WIND LOADING: 100 MPH (3-SECOND GUST)
WIND RECURRENCE INTERVAL: 10 YEARS
COMBINED HEIGHT, EXPOSURE, AND ELEVATED TERRAIN FACTOR = 1.05 (EXPOSURE C, STRUCTURE IS NOT LOCATED ON OR OVER THE TOP HALF OF A RIDGE, HILL, OR ESCARPMENT)

ICE LOADING: 3.0 PSF ON SURFACES, 0.60 IN RADIAL THICKNESS OF ICE AT A UNIT WEIGHT OF 60 PCF ON OVERHEAD BUNDLES

BASIC DESIGN VALUES:

TIMBER POLES: FB = 1850 PSI
FV = 110 PSI
FCP = 230 PSI
FC = 950 PSI
E = 1500 X $10^3$ PSI

DESIGN WIRE BREAKING STRENGTHS:

ASTM A475, UTILITIES GRADE, 7 STRAND MODIFIED BY TERMINATION EFFICIENCY FACTOR OF 0.8

FOUNDATION DESIGN NOTES:

1. POLE EMBEDMENT DEPTH DESIGN IS BASED ON BROMS' APPROXIMATE PROCEDURE AS DESCRIBED IN ARTICLE 13.6 OF AASHTO LTS-5.

2. EMBEDMENT DEPTH IS CALCULATED BASED ON FOLLOWING SOIL PARAMETERS,
COHESIVE SOIL:
SHEAR STRENGTH OF SOIL C = 1500 PSF.
Cohesionless Soil:
Ø = 30 DEG, γ = 120 PCF.
SOIL ASSUMED TO BE UNSATURATED.

3. AN OVERLOAD FACTOR OF 2.0 AND AN UNDERCAPACITY FACTOR OF 0.7 WERE USED FOR SAFETY FACTOR OF 2.86.

4. ALLOWABLE VERTICAL BEARING PRESSURE AT THE END BEARING OF POLES IS 3000 PSF AT 6 FEET OR MORE EMBEDMENT.

5. GUY WIRE ANCHOR MINIMUM ALLOWABLE TENSION CAPACITY, "QA" = 8,900 LBS.

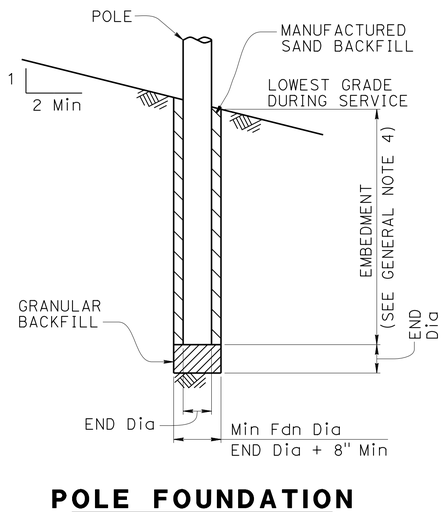


**POLE FOUNDATION**

GENERAL NOTES:

1.

2. THE MAXIMUM VERTICAL SPAN IS 10% OF THE HORIZONTAL SPAN.

3. FOR POLES WITH ADJACENT UNBALANCED HORIZONTAL SPANS, THE SHORTEST HORIZONTAL SPAN MUST BE AT LEAST 50% OF THE LARGEST HORIZONTAL SPAN.

4. ADD 2'-0" FOR SLOPES ABOVE 1V:4H.

5. FOR A POLE SUPPORTING MULTIPLE SPANS, CALCULATE $D_p$ FOR EACH SPAN AND USE THE LARGEST VALUE.

6. DO NOT EXCEED THE ATTACHMENTS SHOWN.

## DIAMETERS AND SELF WEIGHT OF OVERHEAD CONDUCTORS

| CONDUCTOR OR CABLE TYPE | DIAMETER d (in) | WEIGHT w (plf) |
|---|---|---|
| 3 CONDUCTOR SIGNAL CABLE (3CSC) | 0.400 | 0.0980 |
| 5 CONDUCTOR SIGNAL CABLE (5CSC) | 0.500 | 0.1560 |
| 9 CONDUCTOR SIGNAL CABLE (9CSC) | 0.650 | 0.2760 |
| 12 CONDUCTOR SIGNAL CABLE (12CSC) | 0.800 | 0.3970 |
| 28 CONDUCTOR SIGNAL CABLE (28CSC) | 0.900 | 0.6490 |
| 1-#14 | 0.166 | 0.0235 |
| 1-#12 | 0.185 | 0.0330 |
| 1-#10 | 0.210 | 0.0476 |
| 1-#8 | 0.271 | 0.0774 |
| 1-#6 | 0.310 | 0.1130 |
| 1-#4 | 0.359 | 0.1690 |
| 1-#3 | 0.388 | 0.2080 |
| 1-#2 | 0.420 | 0.2560 |
| 1-#1 | 0.498 | 0.3340 |
| 6-CONDUCTOR SIGNAL INTERCONNECT CABLE (SIC) | 0.350 | 0.0860 |
| 12-CONDUCTOR SIGNAL INTERCONNECT CABLE (SIC) | 0.500 | 0.1440 |
| DETECTOR LEAD-IN CABLE (DLC) | 0.310 | 0.0440 |
| 12 to 48-STRAND FIBER OPTIC CABLE (48FOC) | 0.424 | 0.0600 |
| 72-STRAND FIBER OPTIC CABLE (72FOC) | 0.484 | 0.0770 |
| 96-STRAND FIBER OPTIC CABLE (96FOC) | 0.535 | 0.1050 |
| 144-STRAND FIBER OPTIC CABLE (144FOC) | 0.670 | 0.1890 |
| 3/8" Ø MESSENGER WIRE | 0.375 | 0.2730 |

# SPECIAL ELECTRICAL STRUCTURES
## (TEMPORARY WOOD POLES)
## (GENERAL NOTES)

NO SCALE **SES-1**

REVISED BY | DATE REVISED
ELTAHIR ATAELGEED | ABDUL BAKER
CALCULATED-DESIGNED BY | CHECKED BY
FUNCTIONAL SUPERVISOR: ABDUL BAKER
STATE OF CALIFORNIA - DEPARTMENT OF TRANSPORTATION
Caltrans
DESIGN

LAST REVISION 03-18-16 | DATE PLOTTED => 29-JUL-2016 | TIME PLOTTED => 08:57

| Dist | COUNTY | ROUTE | POST MILES TOTAL PROJECT | SHEET No. | TOTAL SHEETS |
|---|---|---|---|---|---|
| 06 | Tul | 65 | R15.1/18.0 | 220 | 324 |

E. Ataelgeed 03-21-16
REGISTERED CIVIL ENGINEER DATE

6-20-16
PLANS APPROVAL DATE

REGISTERED PROFESSIONAL ENGINEER
ELTAHIR K. ATAELGEED
No. 76374
Exp. 12-31-16
CIVIL
STATE OF CALIFORNIA

*THE STATE OF CALIFORNIA OR ITS OFFICERS OR AGENTS SHALL NOT BE RESPONSIBLE FOR THE ACCURACY OR COMPLETENESS OF SCANNED COPIES OF THIS PLAN SHEET.*

## LEGEND

A WOOD POLE WITH ATTACHMENTS

—OH··— OVERHEAD BUNDLE

GUY ANCHOR

1. CCTV CAMERA ASSEMBLY OR VEHICLE DETECTION SYSTEM
2. OVERHEAD BUNDLE CONSISTING OF A 3/8" Ø MESSENGER WIRE, OVERHEAD CONDUCTORS, AND LASHING WIRE
3. LUMINAIRE WITH MAST ARM
4. PEDESTRIAN PUSH BUTTON ASSEMBLY OR ACCESSIBLE PUSH BUTTON ASSEMBLY
5. SIGNAL FACE WITH 3 INDICATIONS OR SINGLE SHEET SIGN PANEL (10 SQFT MAX)
6. RISER WITH WEATHER HEAD AS REQUIRED
7. PULL BOX AS REQUIRED
8. GROUNDING AS REQUIRED
9. SINGLE FLASHING BEACON OR SINGLE SHEET SIGN PANEL (4 SQFT MAX)
10. SINGLE SHEET SIGN PANEL (4' X 4' MAX) OR SIGNAL FACE WITH 3 INDICATIONS
11. FLASHING BEACON CONTROL ASSEMBLY
12. 1/2" Ø GUY WIRE WITH WHITE GUY MARKER AND STRAIN INSULATOR (FOR ANCHORAGE SEE "TEMPORARY WOOD POLES-DETAILS NO. 2" SHEET)

## POLE SELECTION TABLE

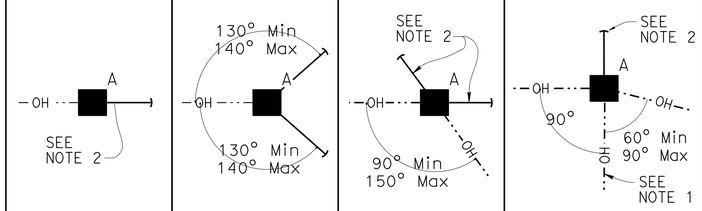


| | | | CASE 1G | | | | CASE 2G | | | | CASE 3G | | | | CASE 4G | | | |
|---|---|---|---|---|---|---|---|---|---|---|---|---|---|---|---|---|---|---|
| | | MAXIMUM $d_p$ | 1" | 1.5" | 2.0" | 2.5" | 1" | 1.5" | 2.0" | 2.5" | 1" | 1.5" | 2.0" | 2.5" | 1" | 1.5" | 2.0" | 2.5" |
| OVERHEAD BUNDLE HORIZONTAL SPAN (Max) | 50' | MINIMUM POLE CLASS | H-1 | H-1 | H-2 | H-2 | 1 | 1 | 1 | 1 | 1 | 1 | 1 | H-1 | H-2 | H-2 | H-3 | H-3 |
| | | POLE EMBEDMENT (E) | 10' | | | | 9' | | | | 9' | | | | 11' | | | |
| | 100' | MINIMUM POLE CLASS | H-2 | H-2 | H-3 | H-4 | 1 | H-1 | H-1 | H-1 | 1 | H-1 | H-2 | H-2 | H-3 | H-3 | H-4 | H-4 |
| | | POLE EMBEDMENT (E) | 11' | | | | 9' | | | | 9' | | | | 12' | | | |
| | 150' | MINIMUM POLE CLASS | H-3 | H-3 | H-4 | H-5 | H-1 | H-1 | H-2 | H-2 | H-2 | H-3 | H-3 | H-3 | H-4 | H-5 | H-5 | H-6 |
| | | POLE EMBEDMENT (E) | 11' | | | | 9' | | | | 9' | | | | 12' | | | |
| | 200' | MINIMUM POLE CLASS | H-4 | H-4 | H-5 | H-6 | H-1 | H-2 | H-3 | H-3 | H-3 | H-3 | H-4 | H-4 | H-5 | H-6 | | |
| | | POLE EMBEDMENT (E) | 11' | | | | 9' | | | | 9' | | | | 12' | | | |

**NOTES:**

1. IN ADDITION TO OTHER RESTRICTIONS ON MAXIMUM HORIZONTAL SPAN, THIS HORIZONTAL SPAN MUST NOT EXCEED 100'.
2. GUY WIRE IN LINE WITH OPPOSING SPAN ± 5°.

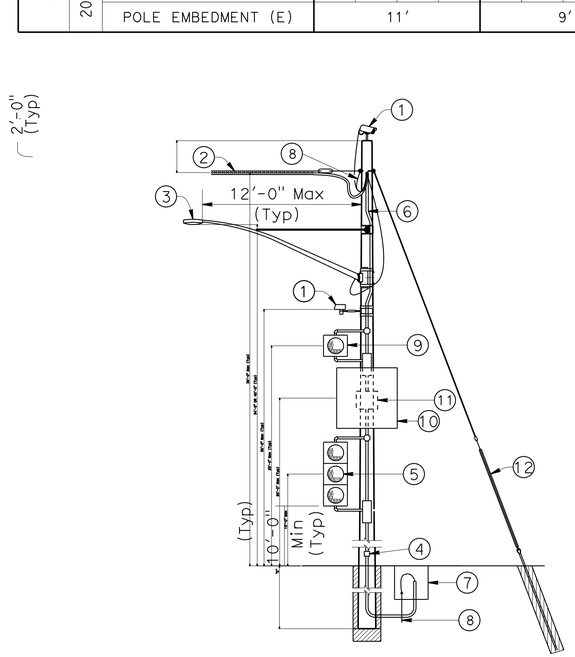


CASE 1G
**POLE AT DEAD END WITH ATTACHMENTS**

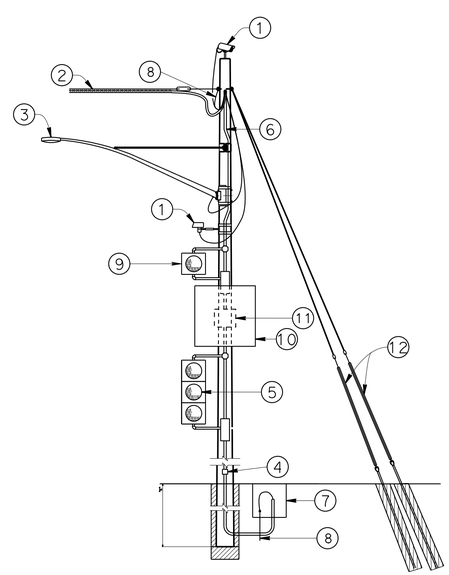

CASE 2G
**POLE AT DEAD END WITH ATTACHMENTS**

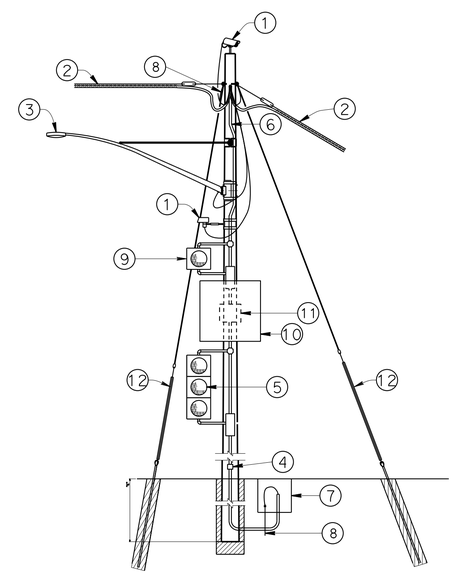

CASE 3G
**POLE AT CORNER WITH ATTACHMENTS**

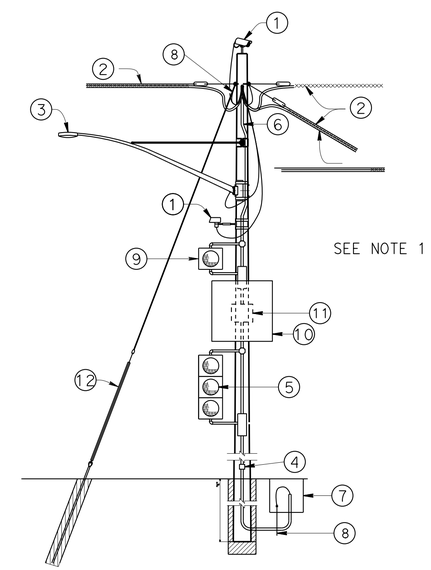


CASE 4G
**POLE AT JUNCTION WITH ATTACHMENTS**

# SPECIAL ELECTRICAL STRUCTURES
## (TEMPORARY WOOD POLES)
## GUYED - NO SIGNALS ON SPANS

NO SCALE

**SES-2**

STATE OF CALIFORNIA - DEPARTMENT OF TRANSPORTATION
Caltrans
DESIGN
FUNCTIONAL SUPERVISOR: ABDUL BAKER
CALCULATED-DESIGNED BY: ELTAHIR ATAELGEED
CHECKED BY: ABDUL BAKER
REVISED BY
DATE REVISED

LAST REVISION 03-18-16 | DATE PLOTTED => 29-JUL-2016 | TIME PLOTTED => 08:57

| Dist | COUNTY | ROUTE | POST MILES TOTAL PROJECT | SHEET No. | TOTAL SHEETS |
|---|---|---|---|---|---|
| 06 | Tul | 65 | R15.1/18.0 | 221 | 324 |

E. Ataelgeed 03-21-16
REGISTERED CIVIL ENGINEER DATE

6-20-16
PLANS APPROVAL DATE

REGISTERED PROFESSIONAL ENGINEER ELTAHIR K. ATAELGEED No. 76374 Exp. 12-31-16 CIVIL STATE OF CALIFORNIA

*THE STATE OF CALIFORNIA OR ITS OFFICERS OR AGENTS SHALL NOT BE RESPONSIBLE FOR THE ACCURACY OR COMPLETENESS OF SCANNED COPIES OF THIS PLAN SHEET.*

## LEGEND

- A — WOOD POLE WITH ATTACHMENTS
- —TS— OVERHEAD BUNDLE WITH SIGNAL FACES (SEE NOTE 2)
- —OH— OVERHEAD BUNDLE
- GUY ANCHOR

## POLE SELECTION TABLE

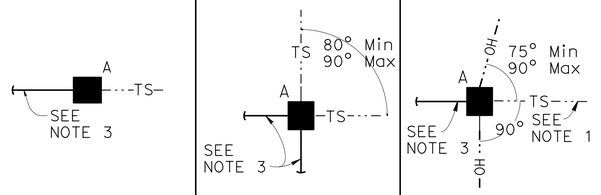


| | | | CASE 1GT | | | CASE 2GT | | | CASE 3GT | | |
|---|---|---|---|---|---|---|---|---|---|---|---|
| | | MAXIMUM dp | 1" | 1.5" | 2.0" | 1" | 1.5" | 2.0" | 1" | 1.5" | 2.0" |
| OVERHEAD BUNDLE HORIZONTAL SPAN Max | 50' | MINIMUM POLE CLASS | H-2 | H-3 | H-3 | H-2 | H-2 | H-2 | H-3 | H-4 | H-4 |
| | | POLE EMBEDMENT (E) | 10' | | | 10' | | | 11' | | |
| | 100' | MINIMUM POLE CLASS | H-3 | H-3 | H-4 | H-2 | H-3 | H-3 | H-4 | H-4 | H-5 |
| | | POLE EMBEDMENT (E) | 11' | | | 10' | | | 11' | | |
| | 150' | MINIMUM POLE CLASS | H-3 | H-4 | H-4 | H-2 | H-3 | H-4 | H-4 | H-5 | H-5 |
| | | POLE EMBEDMENT (E) | 11' | | | 10' | | | 11' | | |

**NOTES:**

1. IN ADDITION TO OTHER RESTRICTIONS ON MAXIMUM HORIZONTAL SPAN, THIS HORIZONTAL SPAN MUST NOT EXCEED 100'.
2. MAXIMUM OF 2 SIGNAL FACES PER SPAN WITHIN THE HATCHED REGIONS INDICATED BY "LOCATION OF SIGNAL FACES".
3.

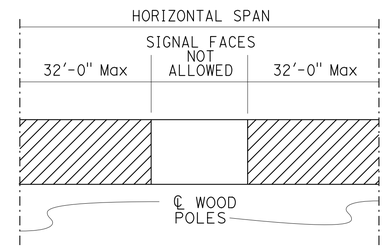


## LOCATION OF SIGNAL FACES

1. CCTV CAMERA ASSEMBLY OR VEHICLE DETECTION SYSTEM
2. OVERHEAD BUNDLE CONSISTING OF 3/8" ø MESSENGER WIRE AND OVERHEAD CONDUCTORS AND LASHING WIRE
3. LUMINAIRE WITH MAST ARM
4. PEDESTRIAN PUSH BUTTON ASSEMBLY OR ACCESSIBLE PUSH BUTTON ASSEMBLY
5. SIGNAL FACE WITH 3 INDICATIONS OR SINGLE SHEET SIGN PANEL (10 SQFT MAX)
6. RISER WITH WEATHER HEAD AS REQUIRED
7. PULL BOX AS REQUIRED
8. GROUNDING AS REQUIRED
9. 3/8" ø TETHER WIRE
10. 1/2" ø GUY WIRE WITH WHITE GUY MARKER AND STRAIN INSULATOR. FOR ANCHORAGE SEE "TEMPORARY WOOD POLES-DETAILS NO. 2" SHEET
11. Pedestrian signal head

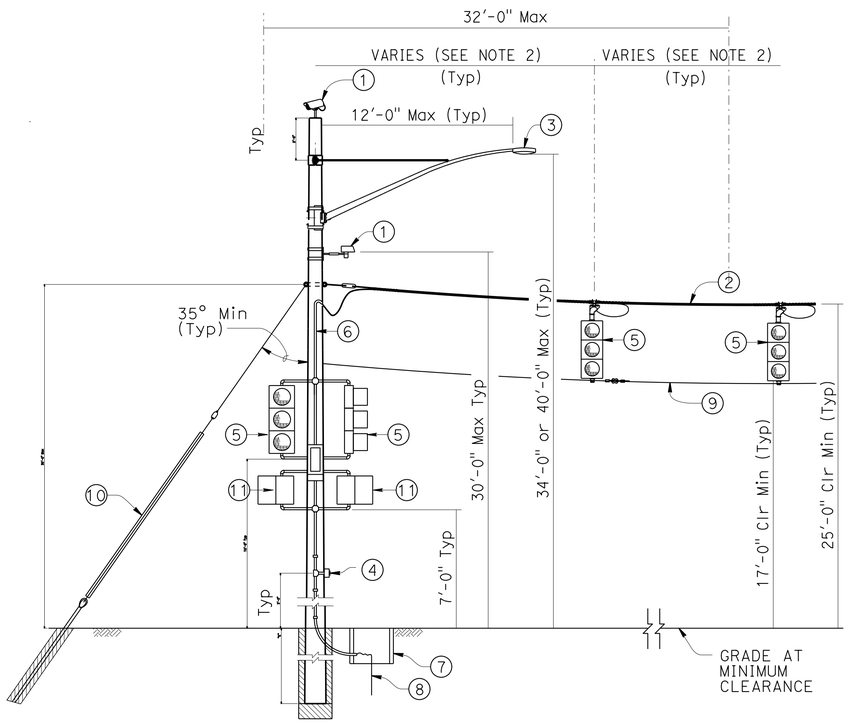


CASE 1GT

**POLE AT DEAD END WITH ATTACHMENTS**

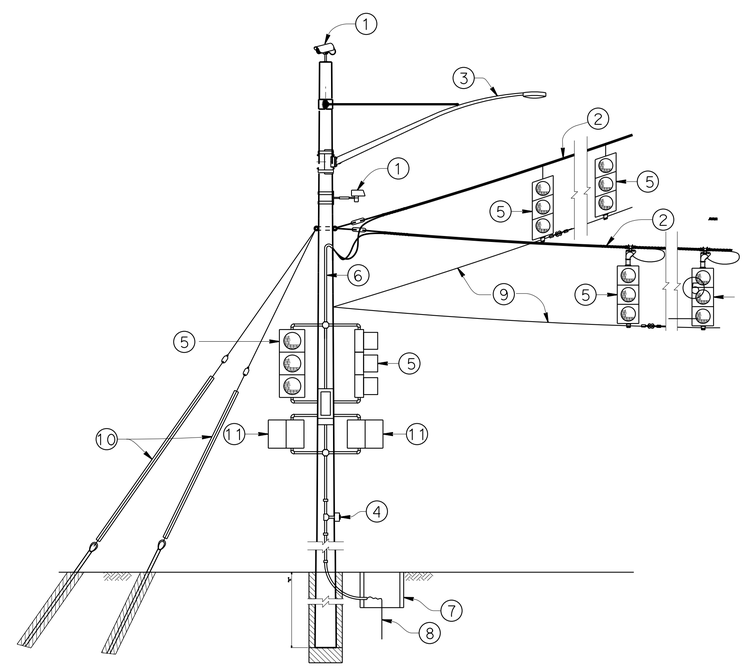

CASE 2GT

**POLE AT CORNER WITH ATTACHMENTS**

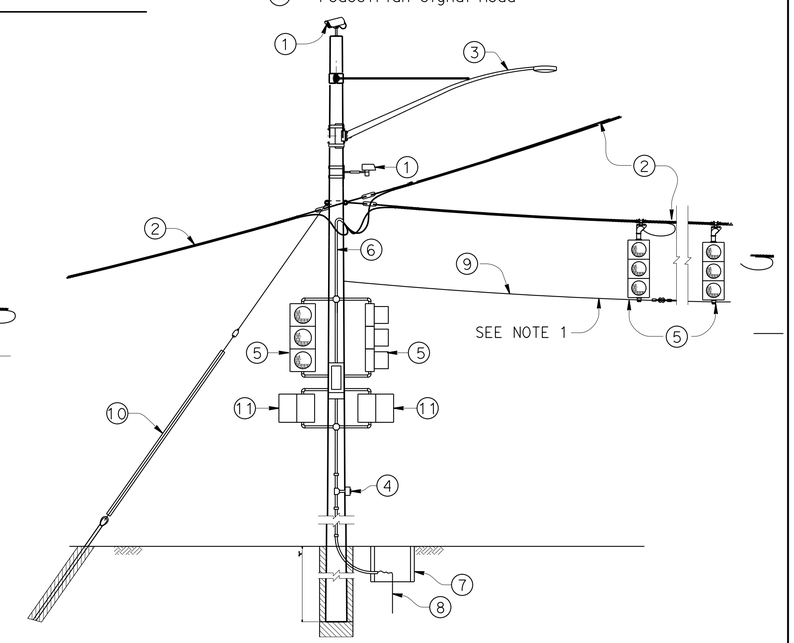


CASE 3GT

**POLE AT JUNCTION WITH ATTACHMENTS**

# SPECIAL ELECTRICAL STRUCTURES
## (TEMPORARY WOOD POLES)
## GUYED-WITH SIGNAL FACES ON SPANS

NO SCALE

**SES-3**

STATE OF CALIFORNIA - DEPARTMENT OF TRANSPORTATION
Caltrans® DESIGN
FUNCTIONAL SUPERVISOR: ABDUL BAKER
CALCULATED-DESIGNED BY: ELTAHIR ATAELGEED
CHECKED BY: ABDUL BAKER
REVISED BY / DATE REVISED

LAST REVISION 03-18-16 | DATE PLOTTED => 29-JUL-2016 | TIME PLOTTED => 08:57

| Dist | COUNTY | ROUTE | POST MILES TOTAL PROJECT | SHEET No. | TOTAL SHEETS |
|---|---|---|---|---|---|
| 06 | Tul | 65 | R15.1/18.0 | 222 | 324 |

E. Ataelgeed 03-21-16
REGISTERED CIVIL ENGINEER DATE

6-20-16
PLANS APPROVAL DATE

REGISTERED PROFESSIONAL ENGINEER ELTAHIR K. ATAELGEED No. 76374 Exp. 12-31-16 CIVIL STATE OF CALIFORNIA

*THE STATE OF CALIFORNIA OR ITS OFFICERS OR AGENTS SHALL NOT BE RESPONSIBLE FOR THE ACCURACY OR COMPLETENESS OF SCANNED COPIES OF THIS PLAN SHEET.*

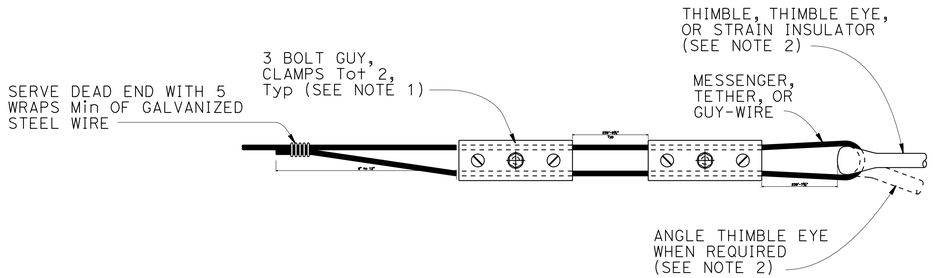


## ALTERNATIVE TERMINATION OF MESSENGER WIRES USING GUY CLAMPS

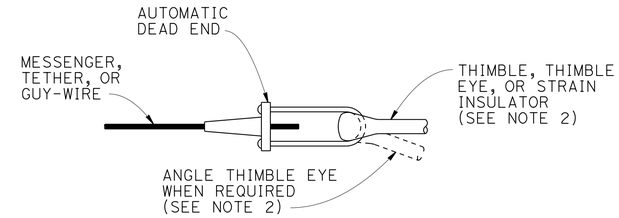


## TERMINATION OF WIRES USING AUTOMATIC DEAD END

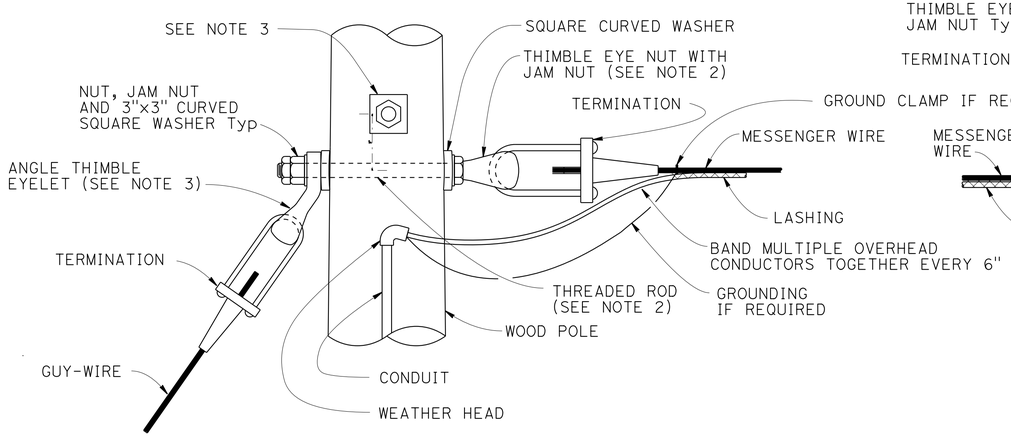


## POLE AT DEAD END WITH GUY-WIRE CONNECTION

SQUARE CURVED WASHER

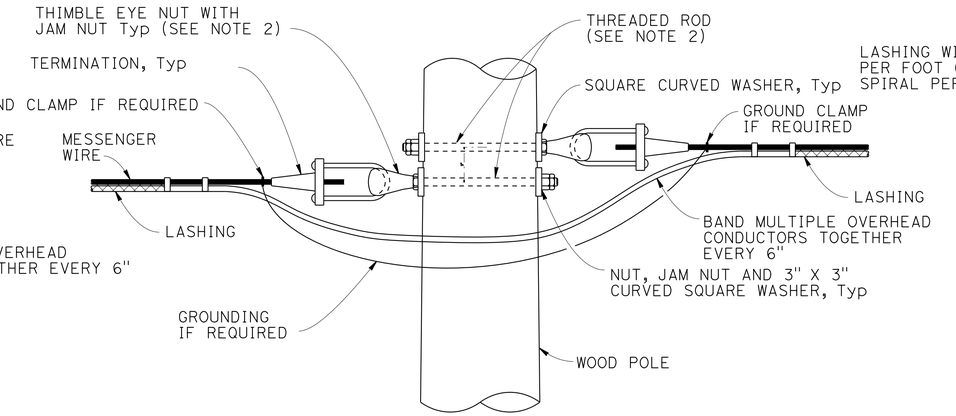


## POLE AT TANGENT OR CORNER CONNECTION

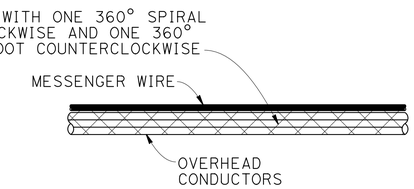


## DOUBLE LASHING DETAIL

USE IF $d_p$ IS GREATER THAN 1½"

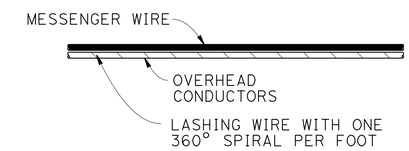


## TYPICAL LASHING DETAIL

USE IF $d_p$ IS 1½" OR LESS

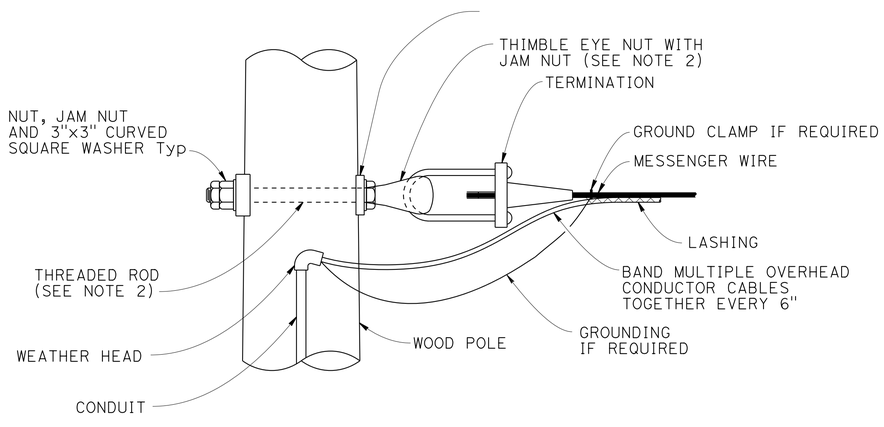


## POLE AT DEAD END CONNECTION

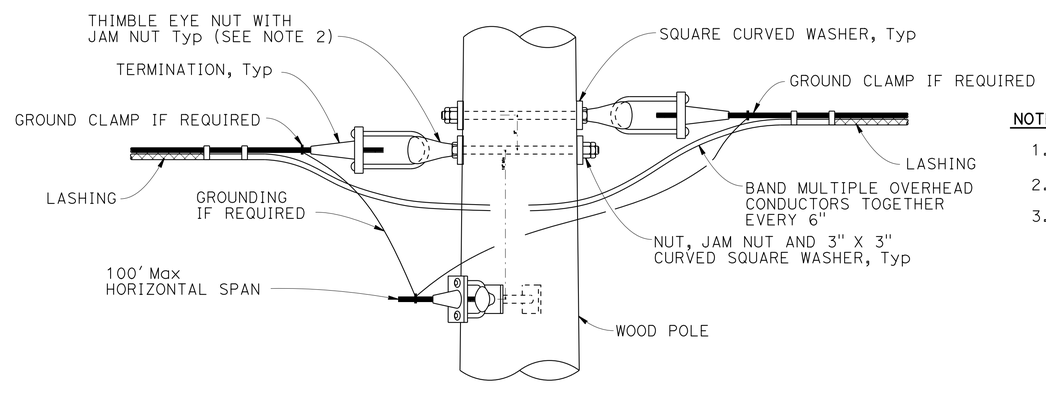


## POLE AT JUNCTION CONNECTION

**NOTES:**

1. FOR GUY WIRES USE 3 CLAMPS.
2. USE ⅝" * EXCEPT ¾" * AT GUYED WIRES
3. INSTALL ADDITIONAL ANGLE THIMBLE EYELET AT POLES WITH TWO GUY WIRES.

# SPECIAL ELECTRICAL STRUCTURES (TEMPORARY WOOD POLES) DETAILS No. 1

NO SCALE

SES-4

STATE OF CALIFORNIA - DEPARTMENT OF TRANSPORTATION
Caltrans®
DESIGN
FUNCTIONAL SUPERVISOR: ABDUL BAKER
CALCULATED-DESIGNED BY: ELTAHIR ATAELGEED
CHECKED BY: ABDUL BAKER
REVISED BY
DATE REVISED

LAST REVISION 03-18-16
DATE PLOTTED => 29-JUL-2016
TIME PLOTTED => 08:57

| Dist | COUNTY | ROUTE | POST MILES TOTAL PROJECT | SHEET No. | TOTAL SHEETS |
|---|---|---|---|---|---|
| 06 | Tul | 65 | R15.1/18.0 | 223 | 324 |

E. Ataelgeed 03-21-16
REGISTERED CIVIL ENGINEER DATE

6-20-16
PLANS APPROVAL DATE

REGISTERED PROFESSIONAL ENGINEER
ELTAHIR K. ATAELGEED
No. 76374
Exp. 12-31-16
CIVIL
STATE OF CALIFORNIA

*THE STATE OF CALIFORNIA OR ITS OFFICERS OR AGENTS SHALL NOT BE RESPONSIBLE FOR THE ACCURACY OR COMPLETENESS OF SCANNED COPIES OF THIS PLAN SHEET.*

**NOTE:**

1. FOR MINIMUM ALLOWABLE TENSION CAPACITY OF ANCHORS SEE "TEMPORARY WOOD POLES - GENERAL NOTES" SHEET.

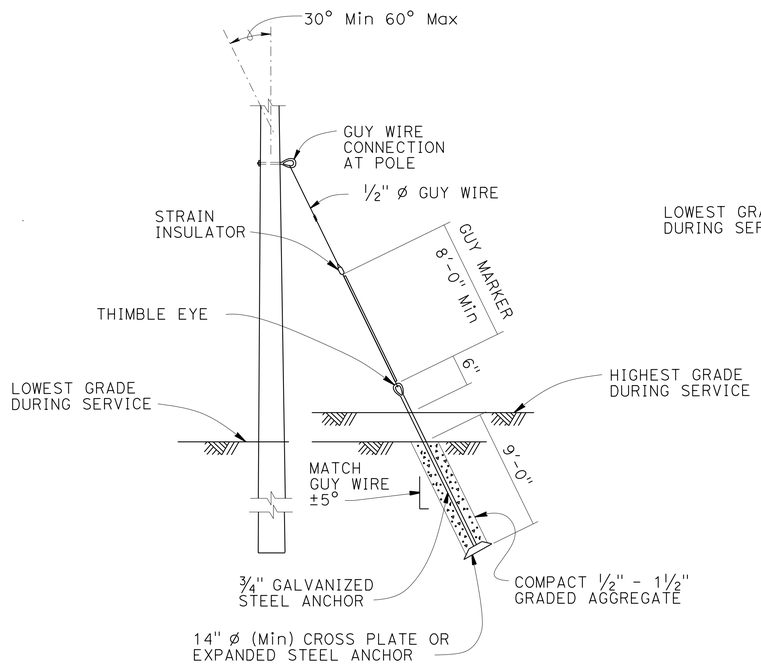


**NOTE:**

HELICAL ANCHOR DETAIL MAY BE USED IN PLACE OF EXPANDED STEEL ANCHORS.

## EXPANDED STEEL ANCHOR DETAIL

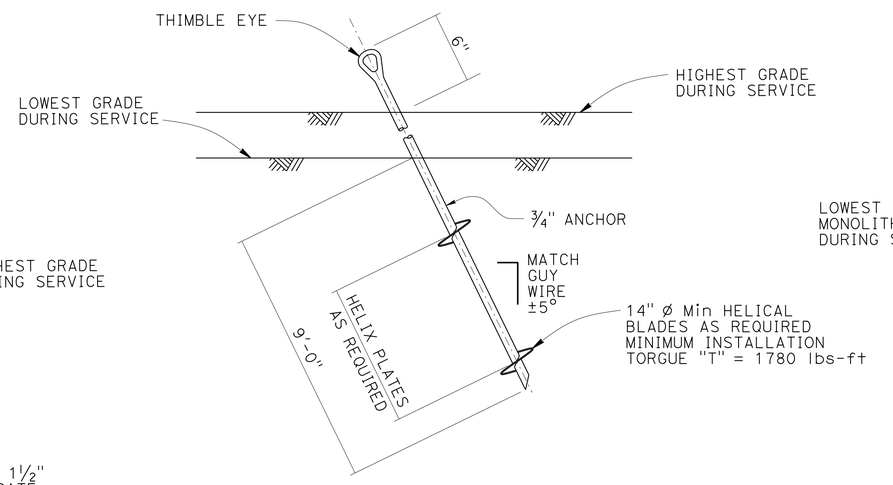


## HELICAL ANCHOR DETAIL

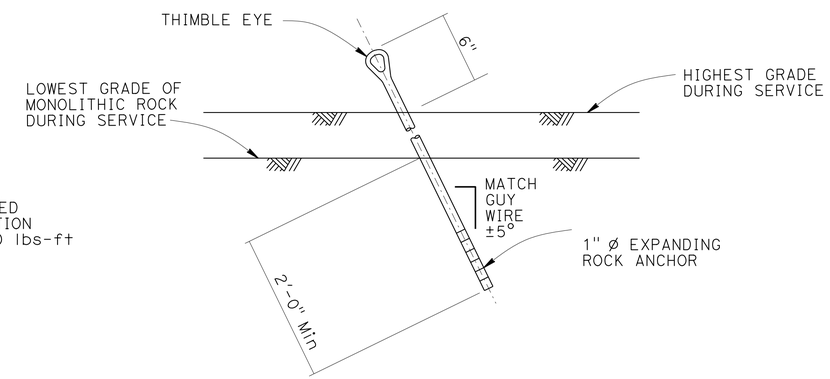


## EXPANDING ROCK ANCHOR DETAIL

# SPECIAL ELECTRICAL STRUCTURES (TEMPORARY WOOD POLES) DETAILS No. 2

NO SCALE

**SES-5**

STATE OF CALIFORNIA - DEPARTMENT OF TRANSPORTATION
Caltrans
DESIGN
FUNCTIONAL SUPERVISOR: ABDUL BAKER
CALCULATED-DESIGNED BY: ELTAHIR ATAELGEED
CHECKED BY: ABDUL BAKER
REVISED BY
DATE REVISED

LAST REVISION 03-18-16
DATE PLOTTED => 29-JUL-2016
TIME PLOTTED => 08:57

| Dist | COUNTY | ROUTE | POST MILES TOTAL PROJECT | SHEET No. | TOTAL SHEETS |
|---|---|---|---|---|---|
| 06 | Tul | 65 | R15.1/18.0 | 224 | 324 |

E. Ataelgeed 03-21-16
REGISTERED CIVIL ENGINEER DATE

6-20-16
PLANS APPROVAL DATE

REGISTERED PROFESSIONAL ENGINEER ELTAHIR K. ATAELGEED No. 76374 Exp. 12-31-16 CIVIL STATE OF CALIFORNIA

*THE STATE OF CALIFORNIA OR ITS OFFICERS OR AGENTS SHALL NOT BE RESPONSIBLE FOR THE ACCURACY OR COMPLETENESS OF SCANNED COPIES OF THIS PLAN SHEET.*

**NOTES:**

1. LUMINAIRE MAST ARMS MUST BE IN COMPLIANCE WITH STANDARD PLAN ES-6D WITH NOTED MODIFICATIONS.
2. VERIFY POLE DIMENSIONS AT TIE-ROD ATTACHMENT HEIGHT. FABRICATE 8" FLAT BAR WITH "L" DIMENSION TO MAINTAIN AN OPEN GAP BETWEEN FLANGES IN FINISHED INSTALLATION.
3. NOT ALL SCREW HEADS AND BOLT HEADS ARE SHOWN FOR CLARITY.
4. MAST ARM NOT SHOWN FOR CLARITY.

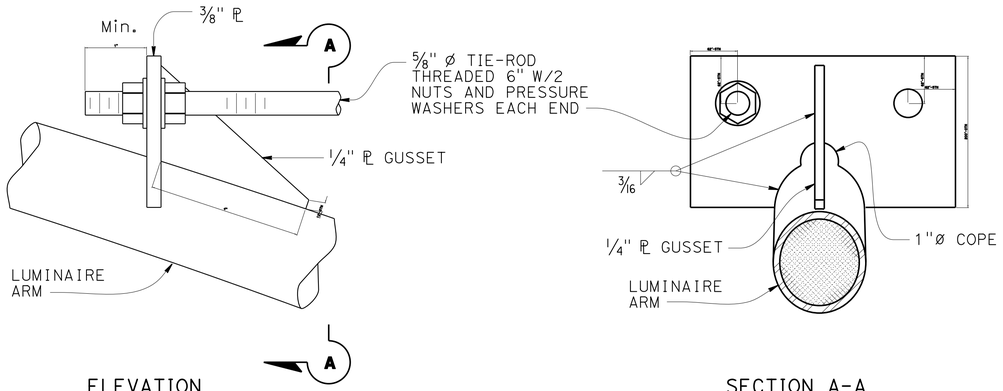


ELEVATION

SECTION A-A

## DETAIL A
## TIE-ROD AT LUMINAIRE ARM

NO SCALE

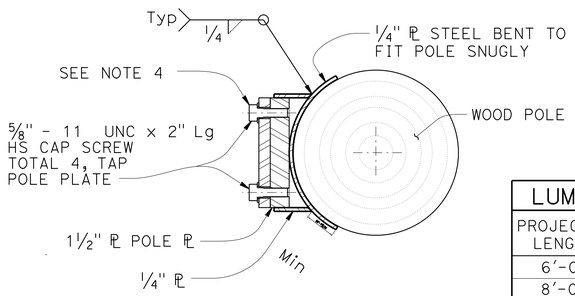


SECTION E-E

| LUMINAIRE MAST ARM DATA | | | |
|---|---|---|---|
| PROJECTED LENGTH | N RISE | Min OD AT POLE | NOMINAL THICKNESS |
| 6'-0" | 2'-0"± | 3 1/4" | 0.1196" |
| 8'-0" | 2'-6"± | 3 1/2" | |
| 10'-0" | 3'-3"± | 3 7/8" | |
| 12'-0" | 4'-3"± | | |

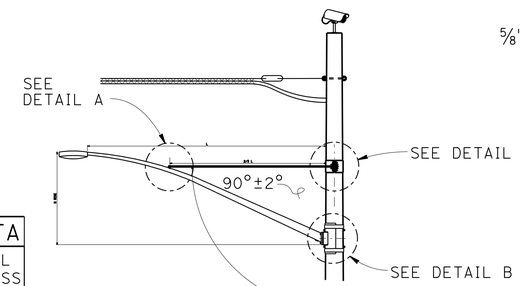


LUMINAIRE MAST ARM

NOTE:
NOT ALL SCREW AND BOLT HEADS SHOWN FOR CLARITY.

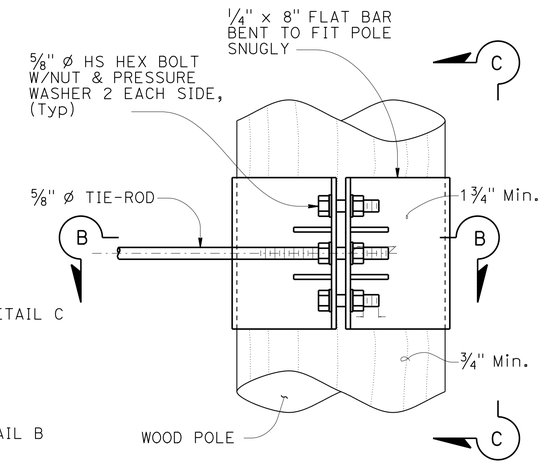


ELEVATION

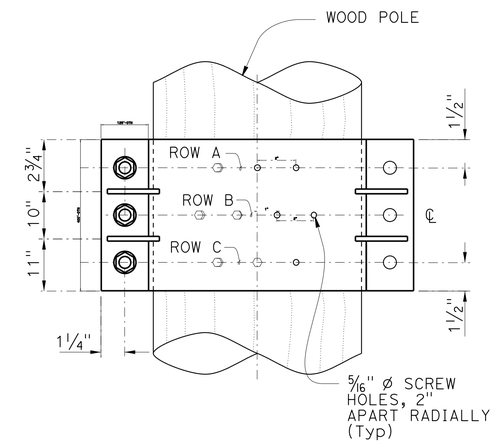


VIEW C-C

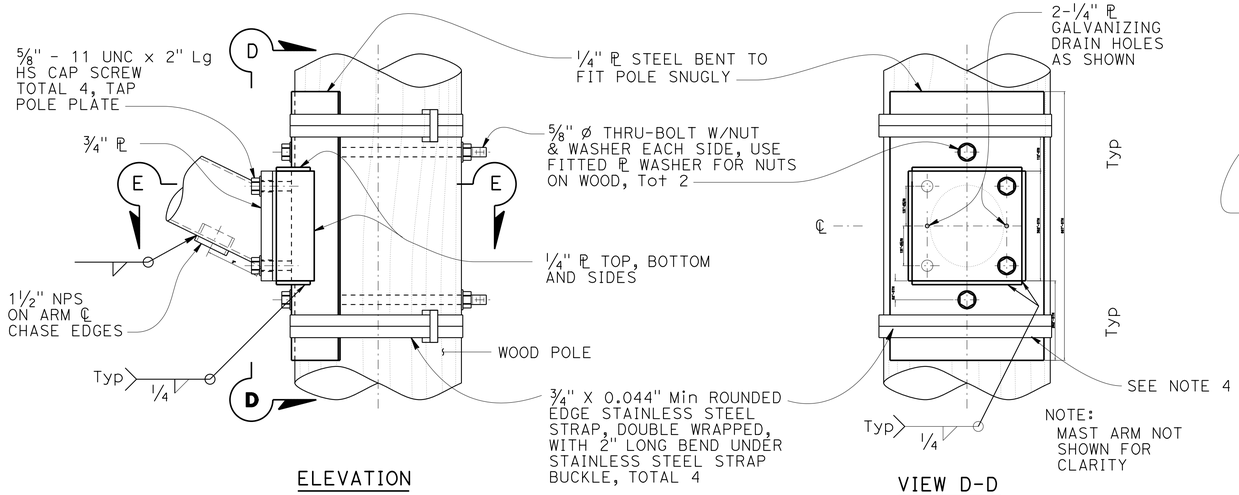


ELEVATION

VIEW D-D

## DETAIL B
## ARM CONNECTION DETAILS

NO SCALE

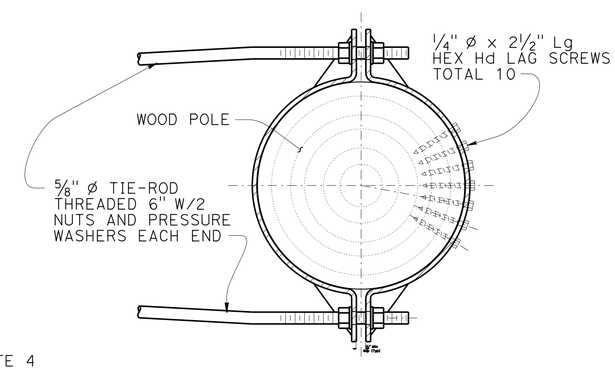


SECTION B-B

## DETAIL C
## TIE-ROD AT POLE

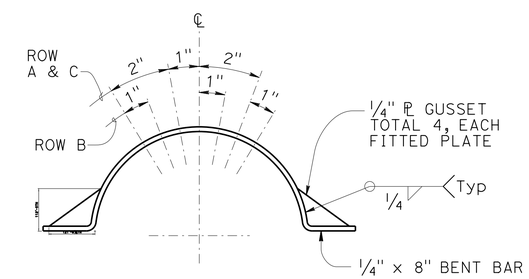


## LAG SCREW AND GUSSET PLATE LAYOUT

# SPECIAL ELECTRICAL STRUCTURES
## TEMPORARY WOOD POLES
## DETAILS No. 3

NO SCALE

**SES-6**

STATE OF CALIFORNIA - DEPARTMENT OF TRANSPORTATION
Caltrans
DESIGN
FUNCTIONAL SUPERVISOR ABDUL BAKER
CALCULATED-DESIGNED BY ELTAHIR ATAELGEED
CHECKED BY ABDUL BAKER
REVISED BY
DATE REVISED

LAST REVISION 03-18-16 | DATE PLOTTED => 29-JUL-2016 | TIME PLOTTED => 08:57

| Dist | COUNTY | ROUTE | POST MILES TOTAL PROJECT | SHEET No. | TOTAL SHEETS |
|---|---|---|---|---|---|
| 06 | Tul | 65 | R15.1/18.0 | 225 | 324 |

E. Ataelgeed 03-21-16
REGISTERED CIVIL ENGINEER DATE

6-20-16
PLANS APPROVAL DATE

REGISTERED PROFESSIONAL ENGINEER
ELTAHIR K. ATAELGEED
No. 76374
Exp. 12-31-16
CIVIL
STATE OF CALIFORNIA

*THE STATE OF CALIFORNIA OR ITS OFFICERS OR AGENTS SHALL NOT BE RESPONSIBLE FOR THE ACCURACY OR COMPLETENESS OF SCANNED COPIES OF THIS PLAN SHEET.*

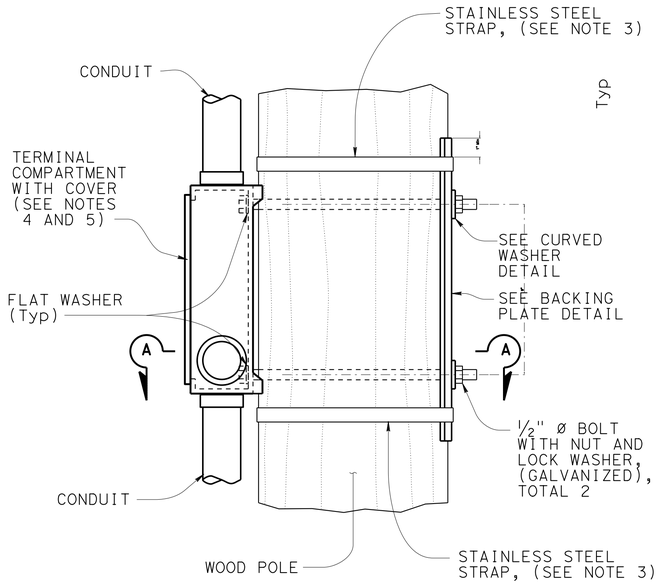


ELEVATION

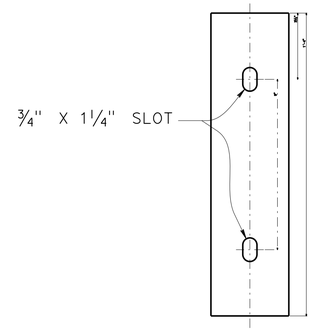


ELEVATION

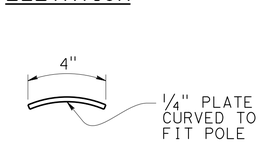


PLAN

**BACKING PLATE DETAIL**

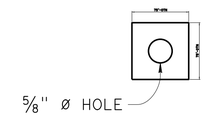


ELEVATION

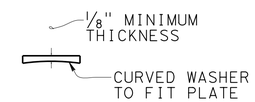


PLAN

**CURVED WASHER DETAIL**

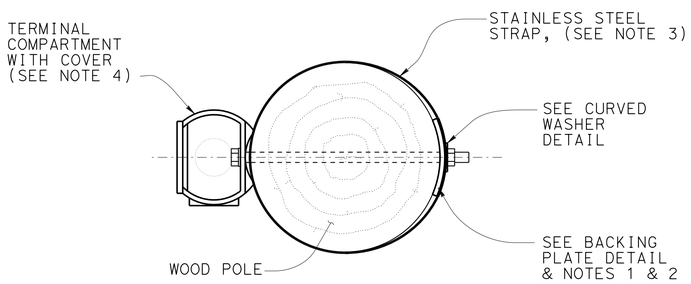


SECTION A-A

**SIDE MOUNTING TERMINAL COMPARTMENT**

NOTES:

1. VERIFY POLE DIMENSIONS AT TERMINAL COMPARTMENT FOR FABRICATION OF BACKING PLATE AND CURVED WASHER.
2. BACKING PLATE TO BE GALVANIZED AFTER FABRICATION.
3. ¾" X 0.044" MINIMUM, ROUNDED EDGE STAINLESS STEEL STRAPS, DOUBLE WRAPPED WITH 2" LONG BEND UNDER STAINLESS STEEL STRAP BUCKLE.
4. FOR MISCELLANEOUS DETAILS FOR SIGNAL MOUNTING NOT SHOWN SEE STANDARD PLAN ES-4D.
5. IF THE TERMINAL COMPARTMENT HAS A CABLE ENTRY GUIDE ON THE REAR FACE, REMOVE THE CABLE ENTRY GUIDE TO A LEVEL THAT WILL NOT INTERFERE WITH THE WOOD POST. CLOSE ANY UNUSED CABLE ENTRY LOCATIONS WITH RAINTIGHT CAP.

# SPECIAL ELECTRICAL STRUCTURES
## (TEMPORARY WOOD POLES)
## DETAILS No. 4

NO SCALE

**SES-7**

REVISED BY | DATE REVISED
ELTAHIR ATAELGEED | ABDUL BAKER
CALCULATED-DESIGNED BY | CHECKED BY
FUNCTIONAL SUPERVISOR: ABDUL BAKER
STATE OF CALIFORNIA - DEPARTMENT OF TRANSPORTATION
Caltrans® DESIGN

LAST REVISION 03-18-16 | DATE PLOTTED => 29-JUL-2016 | TIME PLOTTED => 08:57

| Dist | COUNTY | ROUTE | POST MILES TOTAL PROJECT | SHEET No. | TOTAL SHEETS |
|---|---|---|---|---|---|
| 06 | Tul | 65 | R15.1/18.0 | 226 | 324 |

E. Ataelgeed 3-21-16
REGISTERED CIVIL ENGINEER DATE

6-20-16
PLANS APPROVAL DATE

REGISTERED PROFESSIONAL ENGINEER
ELTAHIR K. ATAELGEED
No. 76374
Exp. 12-31-16
CIVIL
STATE OF CALIFORNIA

*THE STATE OF CALIFORNIA OR ITS OFFICERS OR AGENTS SHALL NOT BE RESPONSIBLE FOR THE ACCURACY OR COMPLETENESS OF SCANNED COPIES OF THIS PLAN SHEET.*

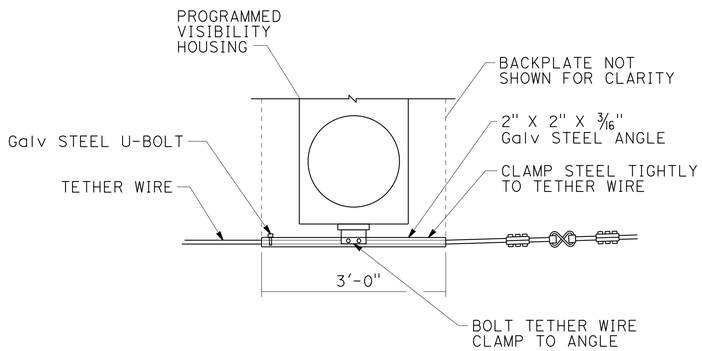


## TETHER WIRE ATTACHMENT FOR PROGRAMMED VISIBILITY SIGNAL FACE

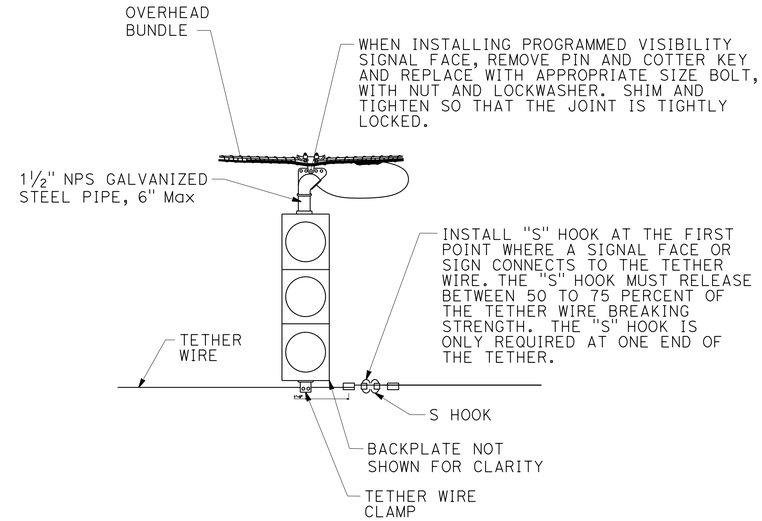


## SIGNAL FACE SUPPORT

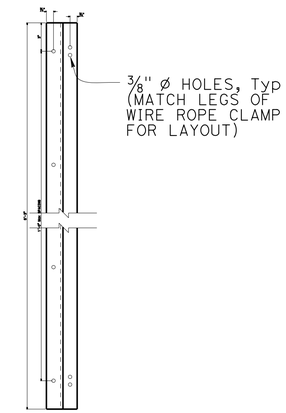


## Z-BAR ELEVATION

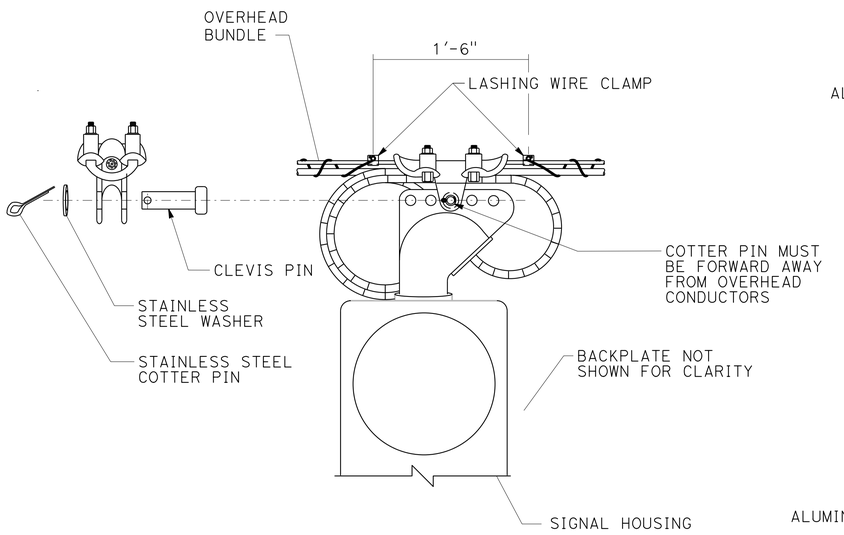


## MESSENGER WIRE CLAMP COTTER PIN DETAIL

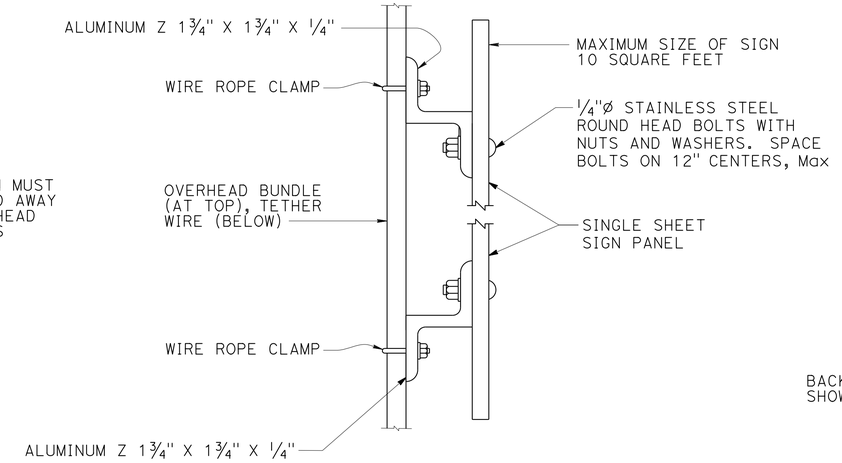


THE OVERLAPPED CONNECTION OF ADJUSTABLE HANGERS MUST USE A MINIMUM OF 2 BOLTS WITH A MINIMUM SPACING BETWEEN BOLTS OF 2"

## SIGN MOUNTING DETAIL

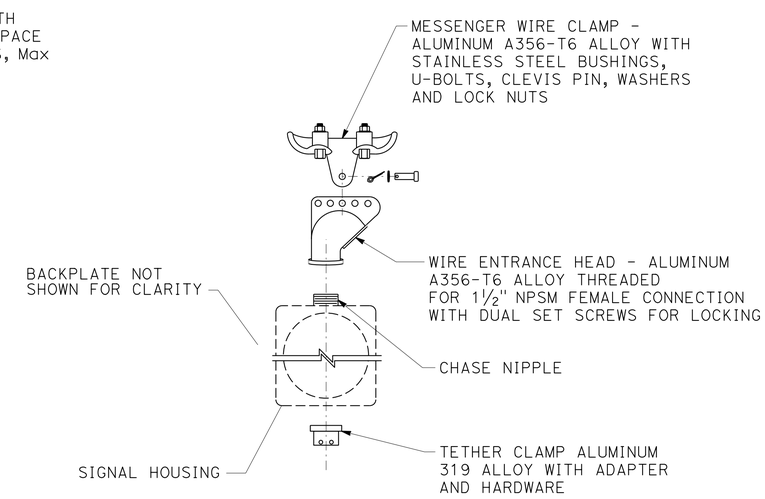


## SIGNAL FACE SUPPORT EXPLODED VIEW

# SPECIAL ELECTRICAL STRUCTURES
## (TEMPORARY WOOD POLES)
## DETAILS No. 5

NO SCALE

**SES-8**

STATE OF CALIFORNIA - DEPARTMENT OF TRANSPORTATION
Caltrans® DESIGN
FUNCTIONAL SUPERVISOR: ABDUL BAKER
CALCULATED-DESIGNED BY: ELTAHIR ATAELGEED
CHECKED BY: ABDUL BAKER
REVISED BY
DATE REVISED

LAST REVISION 03-18-16
DATE PLOTTED => 29-JUL-2016
TIME PLOTTED => 08:57

## M

| | |
|---|---|
| Maint | MAINTENANCE |
| Max | MAXIMUM |
| MB | METAL BEAM |
| MBB | METAL BEAM BARRIER |
| MBGR | METAL BEAM GUARD RAILING |
| Med | MEDIAN |
| MGS | MIDWEST GUARDRAIL SYSTEM |
| MH | MANHOLE |
| Min | MINIMUM |
| Misc | MISCELLANEOUS |
| Misc I & S | MISCELLANEOUS IRON AND STEEL |
| Mkr | MARKER |
| Mod | MODIFIED, |
| | MODIFY |
| Mon | MONUMENT |
| MP | METAL PLATE |
| MPGR | METAL PLATE GUARD RAILING |
| MR | MOVEMENT RATING |
| MSE | MECHANICALLY STABILIZED EMBANKMENT |
| Mt | MOUNTAIN, MOUNT |
| Mtl | MATERIAL |
| MVP | MAINTENANCE VEHICLE PULLOUT |

## N

| | |
|---|---|
| N | NORTH |
| NB | NORTHBOUND |
| No. | NUMBER (MUST HAVE PERIOD) |
| Nos. | NUMBERS (MUST HAVE PERIOD) |
| NPS | NOMINAL PIPE SIZE |
| NS | NEAR SIDE |
| NSP | NEW STANDARD PLAN |
| NTS | NOT TO SCALE |

## O

| | |
|---|---|
| Oblr | OBLITERATE |
| OC | OVERCROSSING |
| OD | OUTSIDE DIAMETER |
| OF | OUTSIDE FACE |
| OG | ORIGINAL GROUND |
| OGAC | OPEN GRADED ASPHALT CONCRETE |
| OGFC | OPEN GRADED FRICTION COURSE |
| OH | OVERHEAD |
| OHWM | ORDINARY HIGH WATER MARK |
| O-O | OUT TO OUT |
| Opp | OPPOSITE |
| OSD | OVERSIDE DRAIN |

## P

| | |
|---|---|
| P | PAGE |
| PAP | PERFORATED ALUMINUM PIPE |
| PB | PULL BOX |
| PC | POINT OF CURVATURE, |
| | PRECAST |
| PCC | POINT OF COMPOUND CURVE, |
| | PORTLAND CEMENT CONCRETE |
| PCMS | PORTABLE CHANGEABLE MESSAGE SIGN |
| PCP | PERFORATED CONCRETE PIPE, |
| | PRESTRESSED CONCRETE PIPE |
| PCVC | POINT OF COMPOUND VERTICAL CURVE |
| PEC | PERMIT TO ENTER AND CONSTRUCT |
| Ped | PEDESTRIAN |
| Ped OC | PEDESTRIAN OVERCROSSING |
| Ped UC | PEDESTRIAN UNDERCROSSING |
| Perm Mtl | PERMEABLE MATERIAL |

## P continued

| | |
|---|---|
| PG | PROFILE GRADE |
| PI | POINT OF INTERSECTION |
| PJP | PARTIAL JOINT PENETRATION |
| Pkwy | PARKWAY |
| ℙ,PL | PLATE |
| P/L | PROPERTY LINE |
| PM | POST MILE, |
| | TIME FROM NOON TO MIDNIGHT |
| PN | PAVING NOTCH |
| POC | POINT OF HORIZONTAL CURVE |
| POT | POINT OF TANGENT |
| POVC | POINT OF VERTICAL CURVE |
| PP | PIPE PILE, |
| | PLASTIC PIPE, |
| | POWER POLE |
| PPL | PREFORMED PERMEABLE LINER |
| PPP | PERFORATED PLASTIC PIPE |
| PRC | POINT OF REVERSE CURVE |
| PRF | PAVEMENT REINFORCING FABRIC |
| PRVC | POINT OF REVERSE VERTICAL CURVE |
| PS&E | PLANS, SPECIFICATIONS AND ESTIMATES |
| PS, P/S | PRESTRESSED |
| PSP | PERFORATED STEEL PIPE |
| PT | POINT OF TANGENCY |
| PVC | POLYVINYL CHLORIDE |
| Pvmt | PAVEMENT |

## Q

| | |
|---|---|
| Qty | QUANTITY |

## R

| | |
|---|---|
| R | RADIUS |
| R & D | REMOVE AND DISPOSE |
| R & S | REMOVE AND SALVAGE |
| R/C | RATE OF CHANGE |
| RCA | REINFORCED CONCRETE ARCH |
| RCB | REINFORCED CONCRETE BOX |
| RCP | REINFORCED CONCRETE PIPE |
| RCPA | REINFORCED CONCRETE PIPE ARCH |
| Rd | ROAD |
| Reinf | REINFORCED, |
| | REINFORCEMENT, |
| | REINFORCING |
| Rel | RELOCATE |
| Repl | REPLACEMENT |
| Ret | RETAINING |
| Rev | REVISED, REVISION |
| Rdwy | ROADWAY |
| RHMA | RUBBERIZED HOT MIX ASPHALT |
| Riv | RIVER |
| RM | ROAD-MIXED |
| RP | RADIUS POINT, |
| | REFERENCE POINT |
| RR | RAILROAD |
| RSP | ROCK SLOPE PROTECTION, |
| | REVISED STANDARD PLAN |
| Rt | RIGHT |
| Rte | ROUTE |
| RW | REDWOOD, |
| | RETAINING WALL |
| R/W | RIGHT OF WAY |
| Rwy | RAILWAY |

## S

| | |
|---|---|
| S | SOUTH, |
| | SUPPLEMENT |
| SAE | STRUCTURE APPROACH EMBANKMENT |
| Salv | SALVAGE |
| SAPP | STRUCTURAL ALUMINUM PLATE PIPE |
| SB | SOUTHBOUND |
| SC | SAND CUSHION |
| SCSP | SLOTTED CORRUGATED STEEL PIPE |
| SD | STORM DRAIN |
| Sec | SECOND, |
| | SECTION |
| Sep | SEPARATION |
| SG | SUBGRADE |
| Shld | SHOULDER |
| Sht | SHEET |
| Sim | SIMILAR |
| ₤ | STATION LINE |
| SM | SELECTED MATERIAL |
| Spec | SPECIAL, |
| | SPECIFICATIONS |
| SPP | SLOTTED PLASTIC PIPE |
| SS | SLOPE STAKE |
| SSBM | STRAP AND SADDLE BRACKET METHOD |
| SSD | STRUCTURAL SECTION DRAIN |
| SSPA | STRUCTURAL STEEL PLATE ARCH |
| SSPP | STRUCTURAL STEEL PLATE PIPE |
| SSPPA | STRUCTURAL STEEL PLATE PIPE ARCH |
| SSRP | STEEL SPIRAL RIB PIPE |
| St | STREET |
| Sta | STATION |
| STBB | SINGLE THRIE BEAM BARRIER |
| Std | STANDARD |
| Str | STRUCTURE |
| Surf | SURFACING |
| SW | SIDEWALK, |
| | SOUND WALL |
| Swr | SEWER |
| Sym | SYMMETRICAL |
| S4S | SURFACE 4 SIDES |

## T

| | |
|---|---|
| T | SEMI-TANGENT |
| Tan | TANGENT |
| TBB | THRIE BEAM BARRIER |
| Tbr | TIMBER |
| TC | TOP OF CURB |
| TCB | TRAFFIC CONTROL BOX |
| TCE | TEMPORARY CONSTRUCTION EASEMENT |
| Tel | TELEPHONE |
| Temp | TEMPORARY |
| TG | TOP OF GRADE |
| Tot | TOTAL |
| TP | TELEPHONE POLE |
| TPB | TREATED PERMEABLE BASE |
| TPM | TREATED PERMEABLE MATERIAL |
| Trans | TRANSITION |

## T continued

| | |
|---|---|
| TS | TRANSVERSE, |
| | TRAFFIC SIGNAL, |
| | TUBULAR STEEL |
| Typ | TYPICAL |

## U

| | |
|---|---|
| UC | UNDERCROSSING |
| UD | UNDERDRAIN |
| UG | UNDERGROUND |
| UON | UNLESS OTHERWISE NOTED |
| UP | UNDERPASS |

## V

| | |
|---|---|
| V | VALVE, |
| | DESIGN SPEED |
| Var | VARIABLE, |
| | VARIES |
| VC | VERTICAL CURVE |
| VCP | VITRIFIED CLAY PIPE |
| Vert | VERTICAL |
| Via | VIADUCT |
| Vol | VOLUME |

## W

| | |
|---|---|
| W | WEST, |
| | WIDTH |
| WB | WESTBOUND |
| WH | WEEP HOLE |
| WM | WIRE MESH |
| WS | WATER SURFACE |
| WSP | WELDED STEEL PIPE |
| Wt | WEIGHT |
| WV | WATER VALVE |
| WW | WINGWALL |
| WWLOL | WINGWALL LAYOUT LINE |

## X

| | |
|---|---|
| X Sec | CROSS SECTION |
| Xing | CROSSING |

## Y

| | |
|---|---|
| Yr | YEAR |
| Yrs | YEARS |

| Dist | COUNTY | ROUTE | POST MILES TOTAL PROJECT | SHEET No. | TOTAL SHEETS |
|---|---|---|---|---|---|
| 06 | Tul | 65 | R15.1/18.0 | 227 | 324 |

Grace M. Tsushima
REGISTERED CIVIL ENGINEER

July 19, 2013
PLANS APPROVAL DATE

REGISTERED PROFESSIONAL ENGINEER
Grace M. Tsushima
No. C49814
Exp. 9-30-14
CIVIL
STATE OF CALIFORNIA

*THE STATE OF CALIFORNIA OR ITS OFFICERS OR AGENTS SHALL NOT BE RESPONSIBLE FOR THE ACCURACY OR COMPLETENESS OF SCANNED COPIES OF THIS PLAN SHEET.*

TO ACCOMPANY PLANS DATED 6-20-16

**UNIT OF MEASUREMENT SYMBOLS:**

Some of the symbols used in the project plan quantity tables and in the Bid Item List are:

TABLE A

| SYMBOL USED | DEFINITIONS |
|---|---|
| ACRE | ACRE |
| CF | CUBIC FOOT |
| CY | CUBIC YARD |
| EA | EACH |
| GAL | GALLON |
| LB | POUND |
| LF | LINEAR FOOT |
| SQFT | SQUARE FOOT |
| SQYD | SQUARE YARD |
| STA | 100 FEET |
| TAB | TABLET |
| TON | 2,000 POUNDS |

Some of the symbols used in the plans other than in the project plan quantity tables are:

TABLE B

| SYMBOL USED | DEFINITIONS |
|---|---|
| ksi | KIPS PER SQUARE INCH |
| ksf | KIPS PER SQUARE FOOT |
| psi | POUNDS PER SQUARE INCH |
| psf | POUNDS PER SQUARE FOOT |
| $lb/ft^3$, pcf | POUNDS PER CUBIC FOOT |
| tsf | TONS PER SQUARE FOOT |
| mph, MPH * | MILES PER HOUR |
| ø | NOMINAL DIAMETER |
| oz | OUNCE |
| lb | POUND |
| kip | 1,000 POUNDS |
| cal | CALORIE |
| ft | FOOT OR FEET |
| gal | GALLON |

* For use on a sign panel only

STATE OF CALIFORNIA
DEPARTMENT OF TRANSPORTATION

# ABBREVIATIONS (SHEET 2 OF 2)

NO SCALE

RSP A10B DATED JULY 19, 2013 SUPERSEDES STANDARD PLAN A10B DATED MAY 20, 2011 - PAGE 2 OF THE STANDARD PLANS BOOK DATED 2010.

**REVISED STANDARD PLAN RSP A10B**

**2010 REVISED STANDARD PLAN RSP A10B**

6-7-13

| Dist | COUNTY | ROUTE | POST MILES TOTAL PROJECT | SHEET No. | TOTAL SHEETS |
|---|---|---|---|---|---|
| 06 | Tul | 65 | R15.1/18.0 | 228 | 324 |

REGISTERED CIVIL ENGINEER

April 20, 2012
PLANS APPROVAL DATE

REGISTERED PROFESSIONAL ENGINEER
Roberta L. McLaughlin
No. C40375
Exp. 3-31-13
CIVIL
STATE OF CALIFORNIA

*THE STATE OF CALIFORNIA OR ITS OFFICERS OR AGENTS SHALL NOT BE RESPONSIBLE FOR THE ACCURACY OR COMPLETENESS OF SCANNED COPIES OF THIS PLAN SHEET.*

TO ACCOMPANY PLANS DATED 6-20-16

**2010 REVISED STANDARD PLAN RSP A24A**

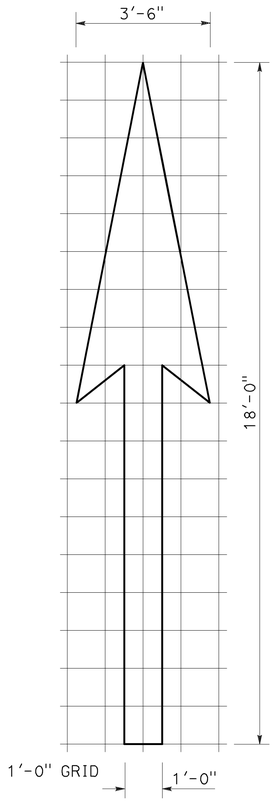


A=25 ft$^2$

TYPE I 18'-0" ARROW

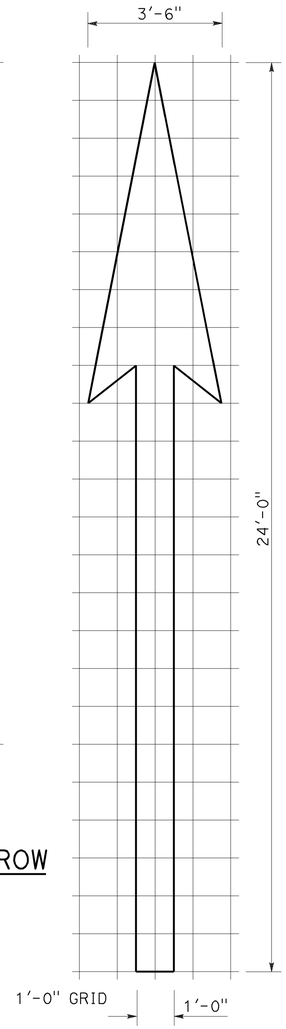


A=31 ft$^2$

TYPE I 24'-0" ARROW

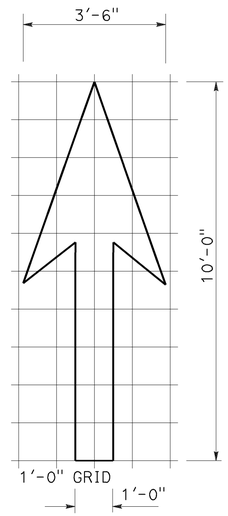


A=14 ft$^2$

TYPE I 10'-0" ARROW

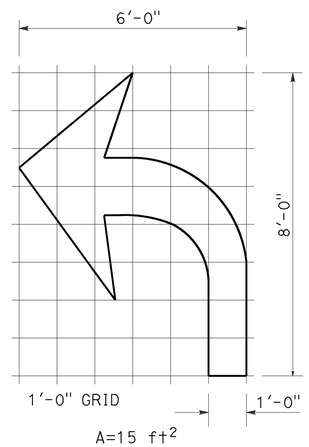


A=15 ft$^2$

TYPE IV (L) ARROW

(For Type IV (R) arrow, use mirror image)

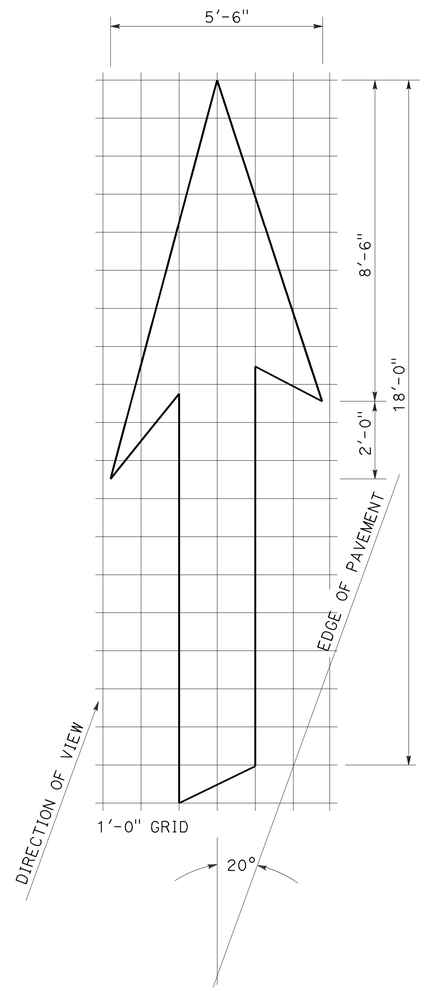


A=42 ft$^2$

TYPE VI ARROW

Right lane drop arrow
(For left lane, use mirror image)

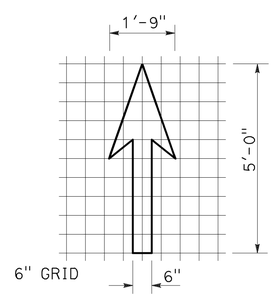


A=3.5 ft$^2$

BIKE LANE ARROW

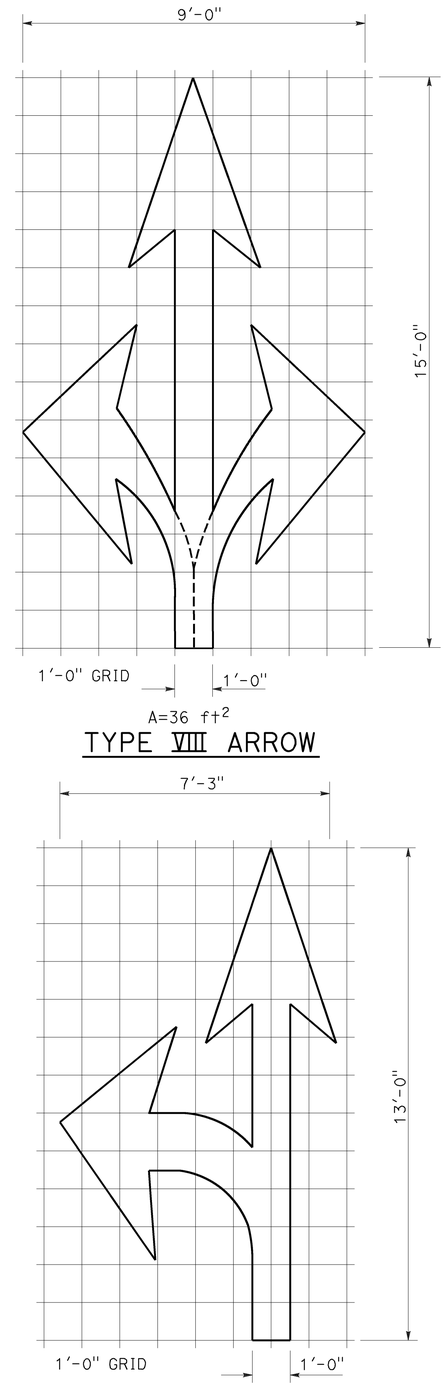


A=36 ft$^2$

TYPE VIII ARROW

A=27 ft$^2$

TYPE VII (L) ARROW

(For Type VII (R) arrow, use mirror image)

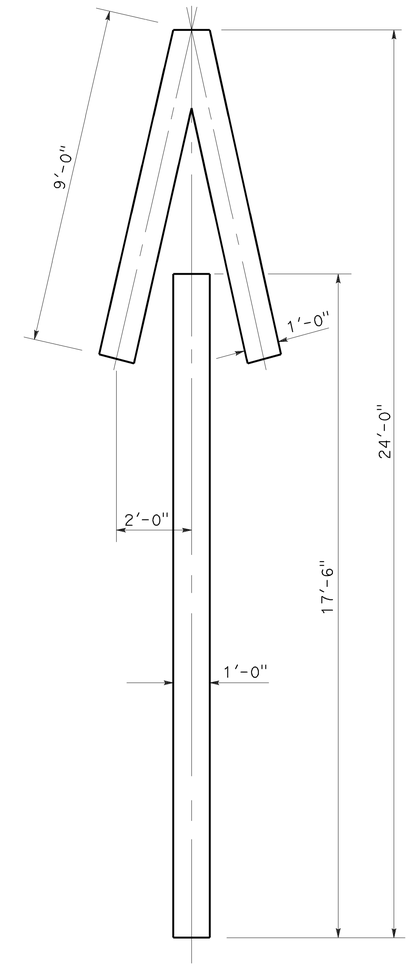


A=33 ft$^2$

TYPE V ARROW

NOTE:
Minor variations in dimensions may be accepted by the Engineer.

STATE OF CALIFORNIA
DEPARTMENT OF TRANSPORTATION

# PAVEMENT MARKINGS ARROWS

NO SCALE

RSP A24A DATED APRIL 20, 2012 SUPERSEDES STANDARD PLAN A24A DATED MAY 20, 2011 - PAGE 13 OF THE STANDARD PLANS BOOK DATED 2010.

**REVISED STANDARD PLAN RSP A24A**

3-14-12

| Dist | COUNTY | ROUTE | POST MILES TOTAL PROJECT | SHEET No. | TOTAL SHEETS |
|---|---|---|---|---|---|
| 06 | Tul | 65 | R15.1/18.0 | 229 | 324 |

REGISTERED CIVIL ENGINEER

July 20, 2012
PLANS APPROVAL DATE

REGISTERED PROFESSIONAL ENGINEER
Roberta L. McLaughlin
No. C40375
Exp. 3-31-13
CIVIL
STATE OF CALIFORNIA

*THE STATE OF CALIFORNIA OR ITS OFFICERS OR AGENTS SHALL NOT BE RESPONSIBLE FOR THE ACCURACY OR COMPLETENESS OF SCANNED COPIES OF THIS PLAN SHEET.*

TO ACCOMPANY PLANS DATED 6-20-16

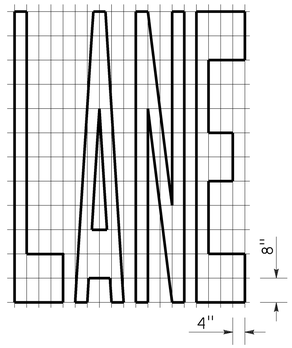


A=24 ft$^2$

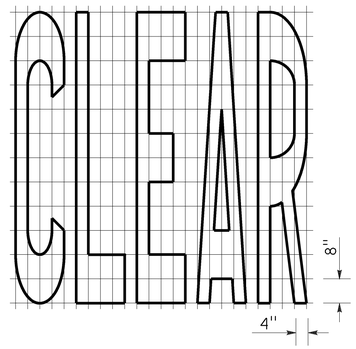


A=27 ft$^2$

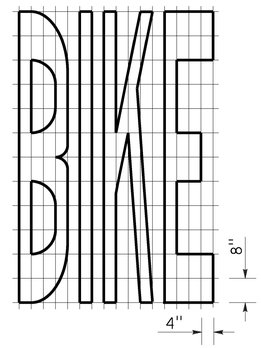


A=21 ft$^2$

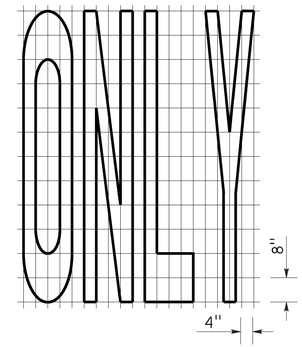


A=22 ft$^2$

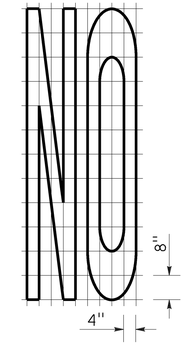


A=14 ft$^2$

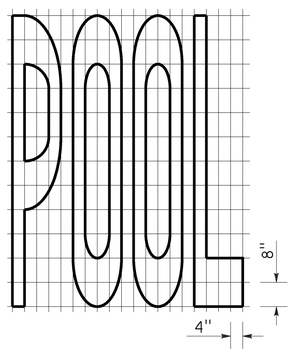


A=23 ft$^2$

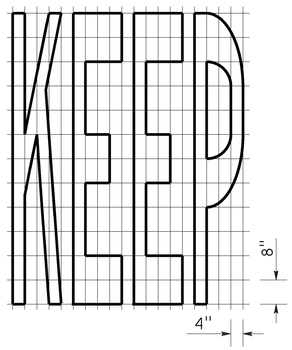


A=24 ft$^2$

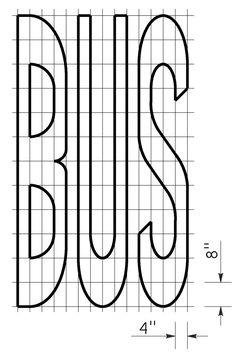


A=20 ft$^2$

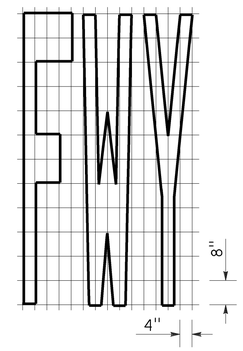


A=16 ft$^2$

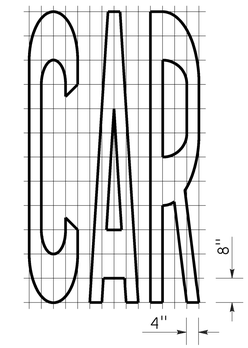


A=17 ft$^2$

| WORD MARKINGS | | | |
|---|---|---|---|
| ITEM | ft$^2$ | ITEM | ft$^2$ |
| LANE | 24 | NO | 14 |
| POOL | 23 | BIKE | 21 |
| CAR | 17 | BUS | 20 |
| CLEAR | 27 | ONLY | 22 |
| KEEP | 24 | FWY | 16 |

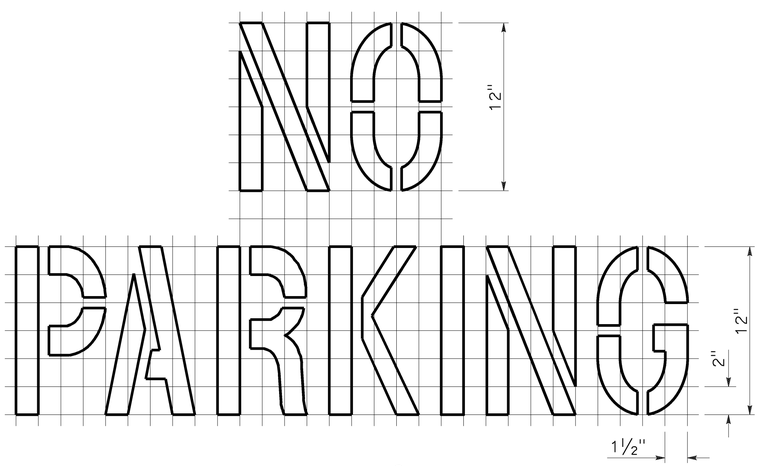


A=2 ft$^2$
See Notes 6 and 7

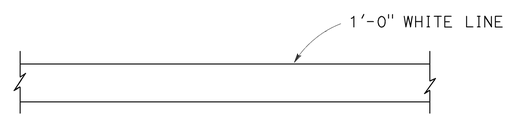


LIMIT LINE (STOP LINE)

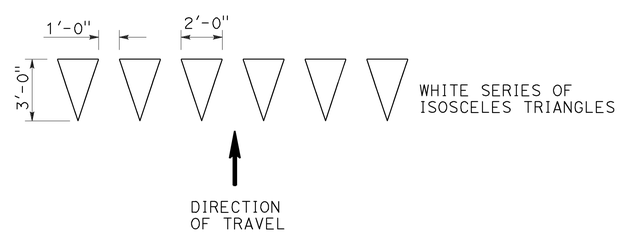


YIELD LINE

NOTES:

1. If a message consists of more than one word, it should read "UP", i.e., the first word should be nearest the driver.
2. The space between words should be at least four times the height of the characters for low speed roads, but not more than ten times the height of the characters. The space may be reduced appropriately where there is limited space because of local conditions.
3. Minor variations in dimensions may be accepted by the Engineer.
4. Portions of a letter, number or symbol may be separated by connecting segments not to exceed 2" in width.
5. The words "NO PARKING" pavement marking is to be used for parking facilities. For typical locations of markings, see Standard Plans A90A and A90B.
6. The words "NO PARKING", shall be painted in white letters no less than 1'-0" high on a contrasting background and located so that it is visible to traffic enforcement officials.

STATE OF CALIFORNIA
DEPARTMENT OF TRANSPORTATION

# PAVEMENT MARKINGS WORDS, LIMIT AND YIELD LINES

NO SCALE

RSP A24E DATED JULY 20, 2012 SUPERSEDES STANDARD PLAN A24E
DATED MAY 20, 2011 - PAGE 17 OF THE STANDARD PLANS BOOK DATED 2010.

**REVISED STANDARD PLAN RSP A24E**

**2010 REVISED STANDARD PLAN RSP A24E**

6-12-12

| Dist | COUNTY | ROUTE | POST MILES TOTAL PROJECT | SHEET No. | TOTAL SHEETS |
|---|---|---|---|---|---|
| 06 | Tul | 65 | R15.1/18.0 | 230 | 324 |

REGISTERED CIVIL ENGINEER

July 20, 2012
PLANS APPROVAL DATE

REGISTERED PROFESSIONAL ENGINEER
Roberta L. McLaughlin
No. C40375
Exp. 3-31-13
CIVIL
STATE OF CALIFORNIA

*THE STATE OF CALIFORNIA OR ITS OFFICERS OR AGENTS SHALL NOT BE RESPONSIBLE FOR THE ACCURACY OR COMPLETENESS OF SCANNED COPIES OF THIS PLAN SHEET.*

TO ACCOMPANY PLANS DATED 6-20-16

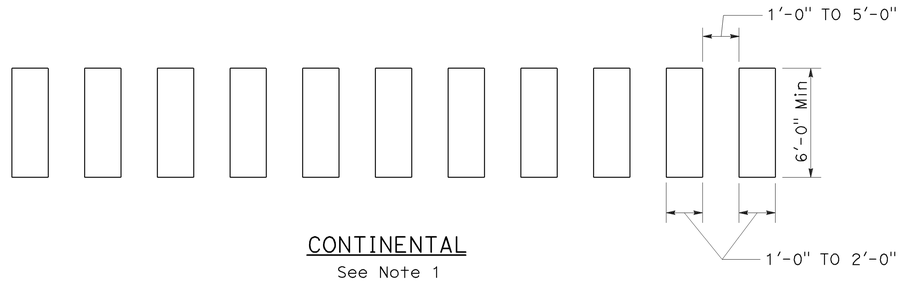


CONTINENTAL
See Note 1

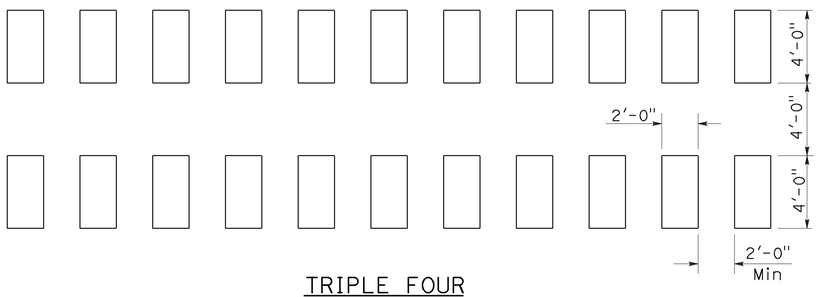


TRIPLE FOUR
See Note 1

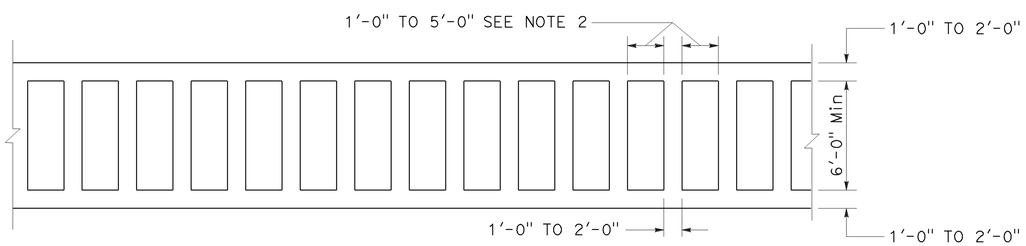


LADDER

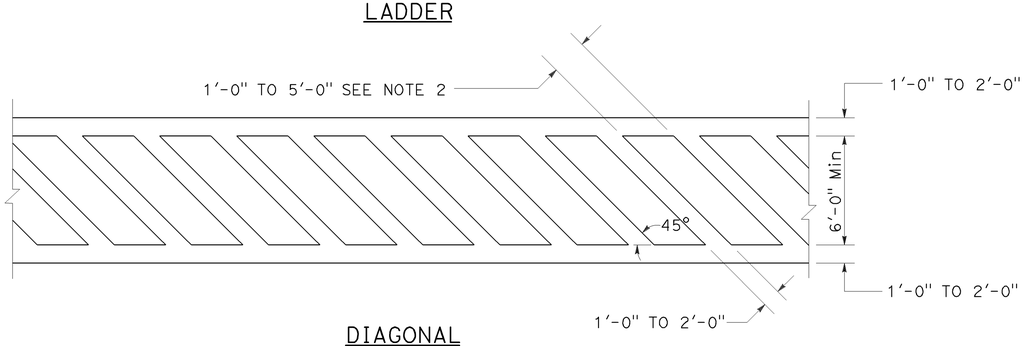


DIAGONAL

HIGHER VISIBILITY CROSSWALKS

NOTES:

1. Spaces between markings should be placed in wheel tracks of each lane.
2. Spacings not to exceed 2.5 times width of longitudinal line.
3. All crosswalk markings must be white except for those near schools must be yellow.

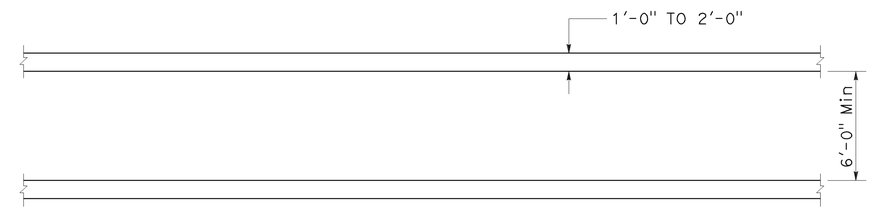


BASIC

STATE OF CALIFORNIA
DEPARTMENT OF TRANSPORTATION

# PAVEMENT MARKINGS CROSSWALKS

NO SCALE

RSP A24F DATED JULY 20, 2012 SUPPLEMENTS THE STANDARD PLANS BOOK DATED 2010.

**REVISED STANDARD PLAN RSP A24F**

**2010 REVISED STANDARD PLAN RSP A24F**

6-28-12

| Dist | COUNTY | ROUTE | POST MILES TOTAL PROJECT | SHEET No. | TOTAL SHEETS |
|---|---|---|---|---|---|
| 06 | Tul | 65 | R15.1/18.0 | 231 | 324 |

REGISTERED CIVIL ENGINEER

July 18, 2014
PLANS APPROVAL DATE

REGISTERED PROFESSIONAL ENGINEER
Carl M. Duan
No. C59976
Exp. 6-30-16
CIVIL
STATE OF CALIFORNIA

*THE STATE OF CALIFORNIA OR ITS OFFICERS OR AGENTS SHALL NOT BE RESPONSIBLE FOR THE ACCURACY OR COMPLETENESS OF SCANNED COPIES OF THIS PLAN SHEET.*

TO ACCOMPANY PLANS DATED 6-20-16

## DESIGN NOTES:

Design: AASHTO LRFD Bridge Design Specifications, 4th edition with California Amendments. ACPA DESIGN DATA 1, October 2007. INDIRECT DESIGN METHOD

Soil: w Fe = 162 pcf Installation Type 1
w Fe = 168 pcf Installation Types 2 & 3
w = Unit weight of soil (pcf)
Fe = Soil-structure interaction factor

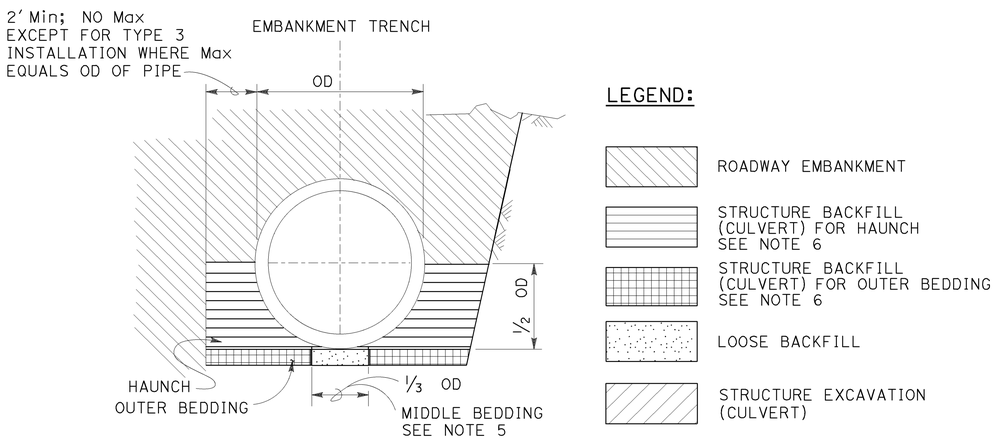


BACKFILL

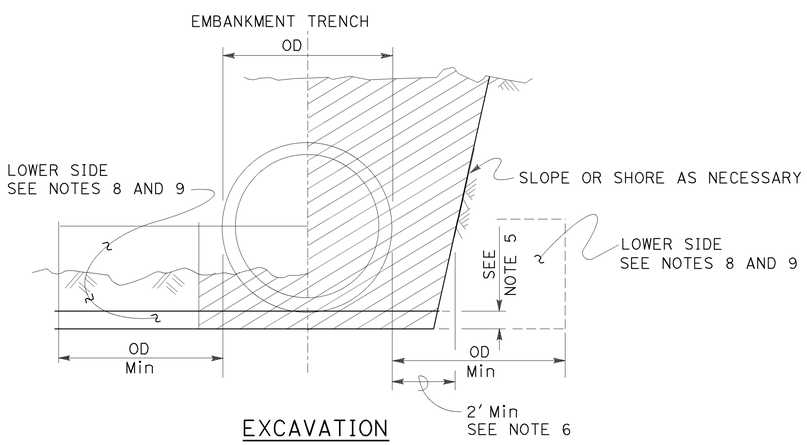


EXCAVATION

## INSTALLATION TYPE 1:

The haunch and outer bedding shall be compacted to a minimum 90 percent relative compaction. In addition, the minimum sand equivalent in these areas shall be 30 and the maximum percentage passing the No. 200 sieve size shall be 12.

## INSTALLATION TYPE 2:

The haunch and outer bedding shall be compacted to a minimum 90 percent relative compaction. In addition, the minimum sand equivalent in these areas shall be 25.

## INSTALLATION TYPE 3:

The haunch and outer bedding shall be compacted to a minimum 85 percent relative compaction. 90 percent relative compaction will be required where the fill over the pipe is less than 4′-0″ or 1/2 OD. In addition, the minimum sand equivalent in these areas shall be 25 and the material shall not contain rocks, broken concrete, or other solid material exceeding 3″ in greatest dimension.

### INSTALLATION TYPE 1

| MINIMUM CLASS AND D-LOAD | COVER | |
|---|---|---|
| | 60″ Dia AND SMALLER | OVER 60″ Dia TO 120″ Dia Max |
| CLASS II 1000D | 14.9′ | 12.9′ |
| CLASS III 1350D | 15.0′ - 21.9′ | 13.0′ - 18.9′ |
| CLASS III SPECIAL 1700D | 22.0′ - 27.9′ | 19.0′ - 24.9′ |
| CLASS IV 2000D | 28.0′ - 32.9′ | 25.0′ - 29.9′ |
| CLASS IV SPECIAL 2500D | 33.0′ - 41.9′ | 30.0′ - 38.9′ |
| CLASS V 3000D | 42.0′ - 49.9′ | 39.0′ - 46.9′ |
| CLASS V SPECIAL 3600D | 50.0′ - 60.0′ | 47.0′ - 58.0′ |

### INSTALLATION TYPE 2

| MINIMUM CLASS AND D-LOAD | COVER | |
|---|---|---|
| | 60″ Dia AND SMALLER | OVER 60″ Dia TO 120″ Dia Max |
| CLASS II 1000D | 11.9′ | 9.9′ |
| CLASS III 1350D | 12.0′ - 15.9′ | 10.0′ - 14.9′ |
| CLASS III SPECIAL 1700D | 16.0′ - 20.9′ | 15.0′ - 19.9′ |
| CLASS IV 2000D | 21.0′ - 24.9′ | 20.0′ - 23.9′ |
| CLASS IV SPECIAL 2500D | 25.0′ - 31.9′ | 24.0′ - 30.9′ |
| CLASS V 3000D | 32.0′ - 37.9′ | 31.0′ - 37.9′ |
| CLASS V SPECIAL 3600D | 38.0′ - 46.0′ | 38.0′ - 46.0′ |

### INSTALLATION TYPE 3

| MINIMUM CLASS AND D-LOAD | COVER | |
|---|---|---|
| | 60″ Dia AND SMALLER | OVER 60″ Dia TO 120″ Dia Max |
| CLASS II 1000D | 8.9′ | 5.9′ |
| CLASS III 1350D | 9.0′ - 11.9′ | 6.0′ - 10.9′ |
| CLASS III SPECIAL 1700D | 12.0′ - 15.9′ | 11.0′ - 13.9′ |
| CLASS IV 2000D | 16.0′ - 18.9′ | 14.0′ - 17.9′ |
| CLASS IV SPECIAL 2500D | 19.0′ - 24.9′ | 18.0′ - 22.9′ |
| CLASS V 3000D | 25.0′ - 29.9′ | 23.0′ - 28.9′ |
| CLASS V SPECIAL 3600D | 30.0′ - 36.0′ | 29.0′ - 35.0′ |

## NOTES:

1. Unless otherwise shown on the plans or specified in the special provision, the Contractor shall have the option of selecting the class of RCP and the type of installation to be used, provided the height of cover does not exceed the value shown for the RCP selected.
   Example: 24″ RCP culvert with maximum cover of 24′-0″ the options are:
   a) Class III Special or stronger with Installation Type 1.
   b) Class IV or stronger with Installation Type 2.
   c) Class IV Special or stronger with Installation Type 3.
   Cover is defined as the maximum vertical distance from top of the pipe to finished grade within the length of any given culvert.
2. The class of RCP and Installation Type selected shall be the same throughout the length of any given culvert.
3. The "length of any culvert" is defined as the culvert between:
   a) Successive drainage structure (inlets, junction boxes, headwalls, etc.).
   b) A drainage structure and the inlet or outlet end of the culvert.
   c) The inlet and outlet end of the culvert when there are no intervening drainage structures.
4. Oval and arch shaped RCP shall not be used.
5. Bedding depth: 1/25 OD Min, not less than 3″.
6. Slurry cement backfill may be substituted for backfill in the outer bedding and haunch areas. If slurry is used, the outer and middle beddings shall be omitted. Prior to installation, the soil under the middle 1/3 of the outside diameter of the pipe shall be softened by scarifying or other means to a minimum depth of 1/25 OD, but not less than 3″. Where slurry cement backfill is used, clear distance to trench wall may be reduced as set forth in the Standard Specifications.
7. Backfill shall be placed full width of excavation except where dimensions are shown for backfill width or thickness. Dimensions shown are minimum.
8. Lower side shall be suitable material as determined by the Engineer. Otherwise it shall be considered unsuitable as set forth in of the Standard Specifications. See Note 9.
9. Where the pipe is placed in a trench, if the trench walls are sloped at 5 vertical to 1 horizontal or steeper for at least 90 percent of the trench height or up to not less than 12″ from the grading plane, the firmness of the soil in the lower side need not be considered.
10. Non-reinforced precast concrete pipe sizes 3′-0″ or smaller may be placed under installation Types 1, 2 or 3.

STATE OF CALIFORNIA
DEPARTMENT OF TRANSPORTATION

# EXCAVATION AND BACKFILL CONCRETE PIPE CULVERTS INDIRECT DESIGN METHOD

NO SCALE

RSP A62DA DATED JULY 18, 2014 SUPERSEDES STANDARD PLAN A62DA DATED MAY 20, 2011 - PAGE 24 OF THE STANDARD PLANS BOOK DATED 2010.

**REVISED STANDARD PLAN RSP A62DA**

**2010 REVISED STANDARD PLAN RSP A62DA**

5-13-14

| Dist | COUNTY | ROUTE | POST MILES TOTAL PROJECT | SHEET No. | TOTAL SHEETS |
|---|---|---|---|---|---|
| 06 | Tul | 65 | R15.1/18.0 | 232 | 324 |

REGISTERED CIVIL ENGINEER

October 30, 2015
PLANS APPROVAL DATE

REGISTERED PROFESSIONAL ENGINEER
Carl M. Duan
No. C59976
Exp. 6-30-16
CIVIL
STATE OF CALIFORNIA

*THE STATE OF CALIFORNIA OR ITS OFFICERS OR AGENTS SHALL NOT BE RESPONSIBLE FOR THE ACCURACY OR COMPLETENESS OF SCANNED COPIES OF THIS PLAN SHEET.*

TO ACCOMPANY PLANS DATED 6-20-16

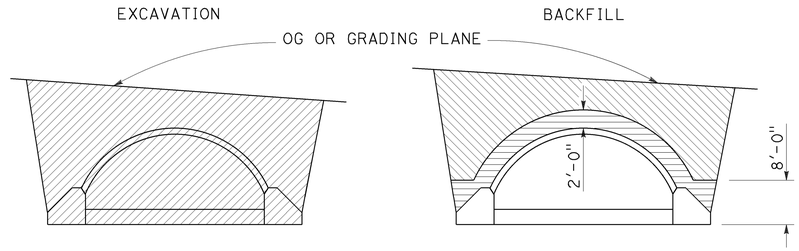


IN TRENCH

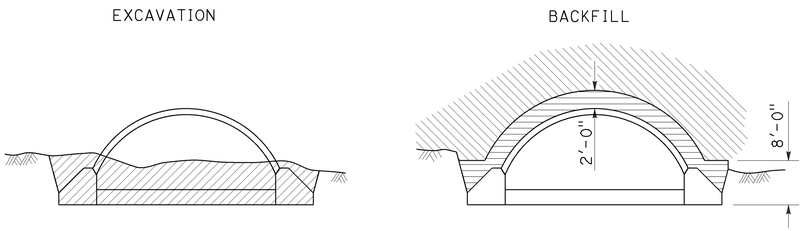


IN EMBANKMENT

## STRUCTURAL STEEL PLATE ARCHES

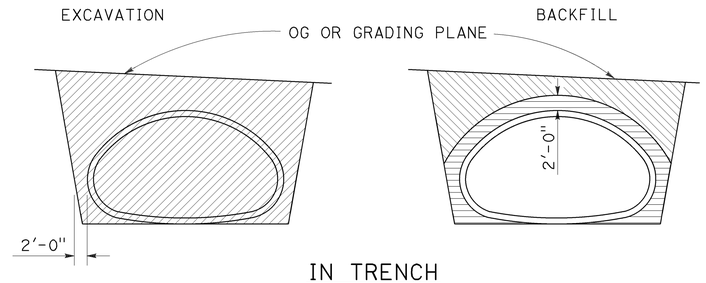


IN TRENCH

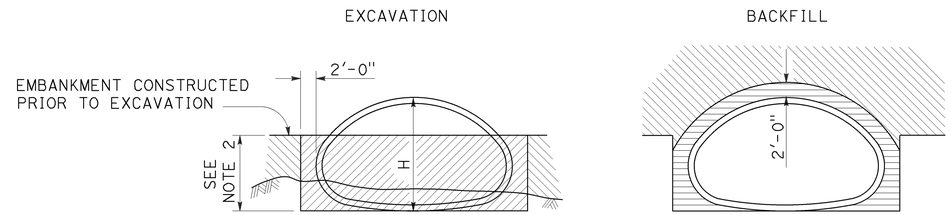


IN EMBANKMENT

## STRUCTURAL STEEL PLATE PIPE ARCHES AND VEHICULAR UNDERCROSSING

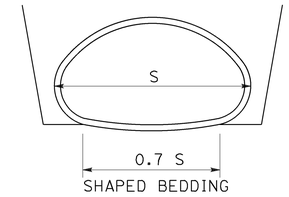


SHAPED BEDDING

S = Larger than 84"

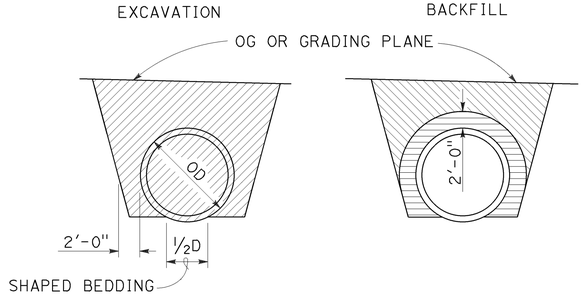


IN TRENCH

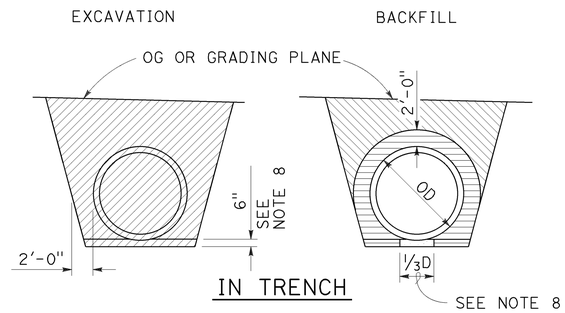


IN TRENCH

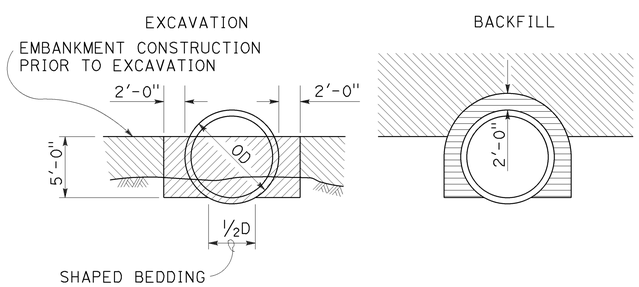


IN EMBANKMENT

## PIPES

Larger than 84"

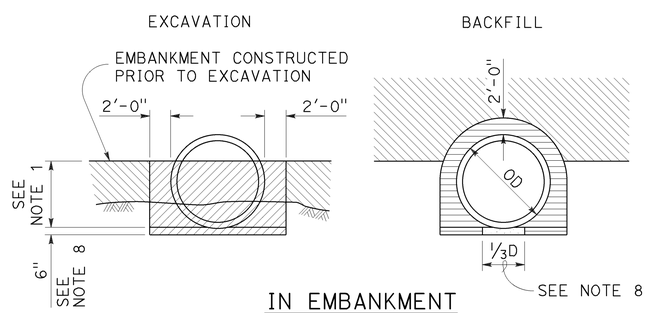


IN EMBANKMENT

## METAL AND PLASTIC PIPES AND CORRUGATED METAL PIPE ARCHES

84" or Smaller

### NOTES:

1. PIPES: 30" minimum for diameters up to and including 42" then ⅔ diameter but no more than 60" required. CORRUGATED METAL PIPE ARCHES: 30" maximum.
2. ⅔ H up to 60" maximum.
3. Slope or shore excavation sides as necessary.
4. Backfill shall be placed full width of excavation except as noted.
5. Diagrams do not apply to overside drains.
6. Dimensions shown are minimum.
7. Construction strutting of structural steel plate pipe, arches and vehicular undercrossing to be used when shown on the project plans. When shown, see Standard Plan D88A for strutting requirements.
8. Excavation below pipe and 80% relative compaction requirements for plastic pipes only.
9. D is the inside diameter (ID) of the pipe.

### LEGEND

- STRUCTURE EXCAVATION (CULVERT)
- ROADWAY EMBANKMENT
- STRUCTURE BACKFILL (CULVERT) 95% RELATIVE COMPACTION
- STRUCTURE BACKFILL (CULVERT) 80% RELATIVE COMPACTION

STATE OF CALIFORNIA
DEPARTMENT OF TRANSPORTATION

# EXCAVATION AND BACKFILL METAL AND PLASTIC CULVERTS

NO SCALE

RSP A62F DATED OCTOBER 30, 2015 SUPERSEDES STANDARD PLAN A62F DATED MAY 20, 2011 - PAGE 26 OF THE STANDARD PLANS BOOK DATED 2010.

**REVISED STANDARD PLAN RSP A62F**

**2010 REVISED STANDARD PLAN RSP A62F**

10-13-15

| Dist | COUNTY | ROUTE | POST MILES TOTAL PROJECT | SHEET No. | TOTAL SHEETS |
|---|---|---|---|---|---|
| 06 | Tul | 65 | R15.1/18.0 | 233 | 324 |

Randell D. Hiatt
REGISTERED CIVIL ENGINEER

July 19, 2013
PLANS APPROVAL DATE

REGISTERED PROFESSIONAL ENGINEER
Randell D. Hiatt
No. C50200
Exp. 6-30-15
CIVIL
STATE OF CALIFORNIA

THE STATE OF CALIFORNIA OR ITS OFFICERS OR AGENTS SHALL NOT BE RESPONSIBLE FOR THE ACCURACY OR COMPLETENESS OF SCANNED COPIES OF THIS PLAN SHEET.

TO ACCOMPANY PLANS DATED 6-20-16

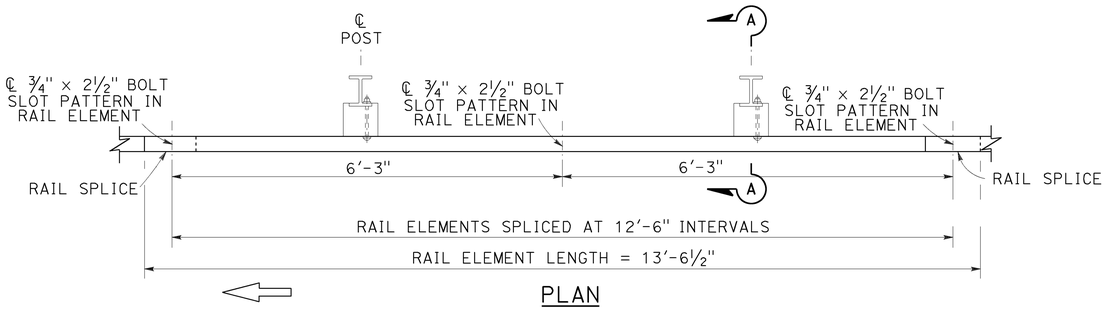


PLAN

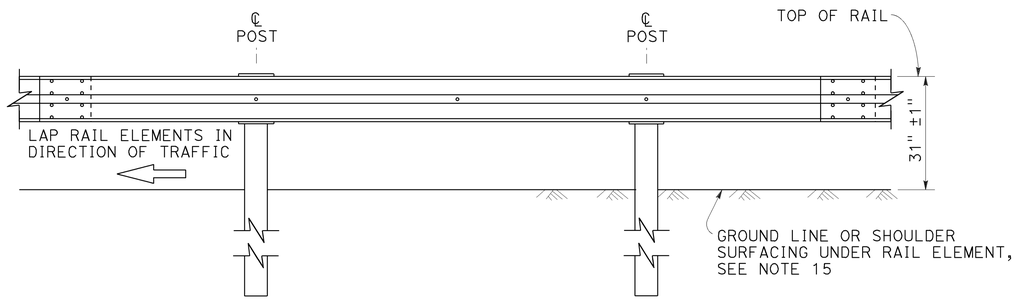


ELEVATION

## MIDWEST GUARDRAIL SYSTEM WITH STEEL POSTS AND NOTCHED WOOD OR NOTCHED RECYCLED PLASTIC BLOCKS

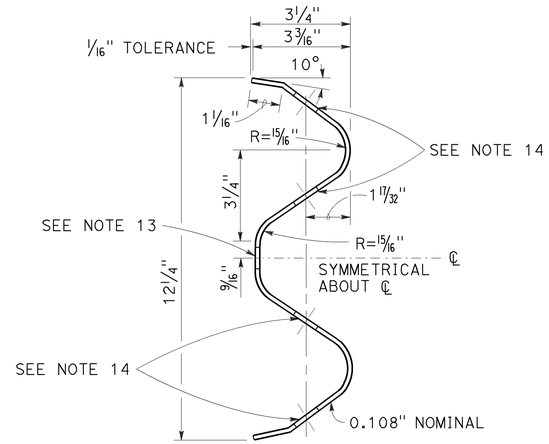


SECTION THRU RAIL ELEMENT

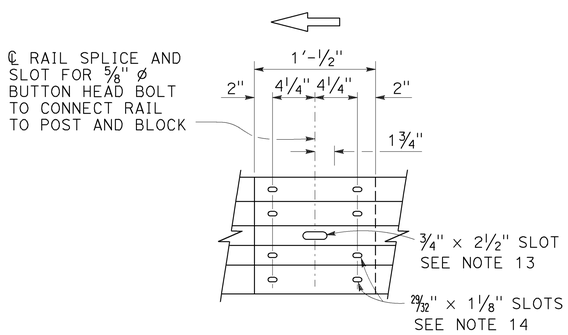


ELEVATION

## RAIL ELEMENT SPLICE DETAIL

a) Connect the over lapped end of the rail elements with ⅝" ø × 1⅜" button head oval shoulder splice bolts inserted into the 29⁄32" × 1⅛" slots and bolted together with ⅝" ø recessed hex nuts. Recess of hex nut points toward rail element. A total of 8 bolts and nuts are to be used at each rail splice connection.

b) The ends of the rail elements are to be overlapped in the direction of traffic (see details).

c) Where end cap is to be attached to the end of a rail element, a total of 4 of the above described splice bolts and nuts are to be used.

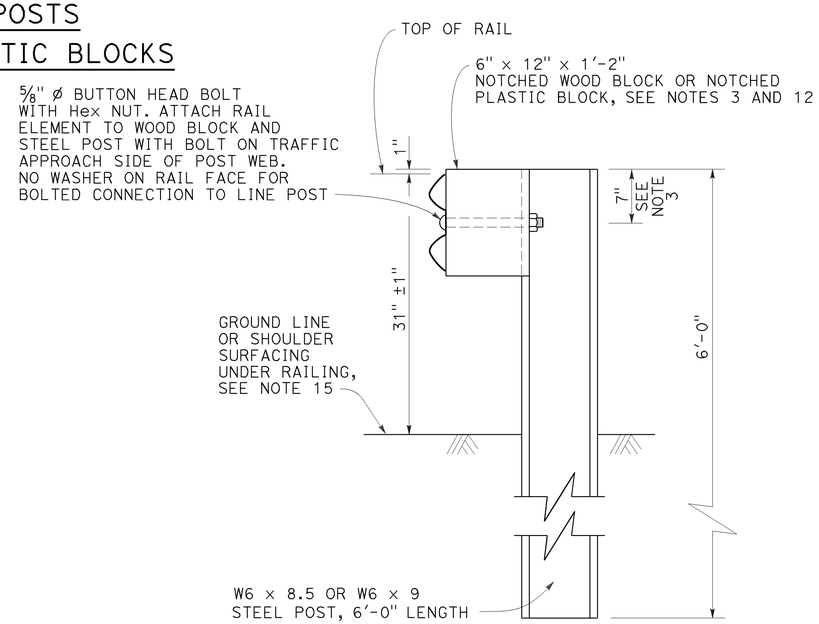


SECTION A-A

## TYPICAL STEEL LINE POST INSTALLATION

See Note 4

NOTES:

1. For details of wood post installations, see Revised Standard Plan RSP A77L1.
2. For details of standard hardware used to construct MGS, see Revised Standard Plan RSP A77M1.
3. For details of steel posts and notched wood blocks used to construct MGS, see Revised Standard Plan RSP A77N2.
4. For additional installation details, see Revised Standard Plan RSP A77N3.
5. MGS post spacing to be 6'-3" center to center, except as otherwise noted.
6. For MGS typical layouts, see the A77P, A77Q and A77R Series of Standard Plans.
7. If railing is connected to terminal system end treatment, use 31" height terminal system end treatment.
8. For MGS end anchor details, see Revised Standard Plans RSP A77S1 and RSP A77T2.
9. For details of MGS transition to bridge railing, see Revised Standard Plan RSP A77U4.
10. For additional details of MGS connection to bridge railings, see Revised Standard Plans RSP A77U1, RSP A77U2 and RSP A77V1.
11. For dike positioning and MGS delineation details, see Revised Standard Plan RSP A77N4.
12. Notched face of block faces steel post.
13. Slotted hole for bolted connection of rail element to block and post. See "Section Thru Rail Element".
14. Slotted holes for splice bolts to overlap ends of rail element. See "Section Thru Rail Element".
15. Install posts in soil.

STATE OF CALIFORNIA
DEPARTMENT OF TRANSPORTATION

# MIDWEST GUARDRAIL SYSTEM STANDARD RAILING SECTION (STEEL POST WITH NOTCHED WOOD OR NOTCHED RECYCLED PLASTIC BLOCK)

NO SCALE

RSP A77L2 DATED JULY 19, 2013 SUPPLEMENTS THE STANDARD PLANS BOOK DATED 2010.

**REVISED STANDARD PLAN RSP A77L2**

**2010 REVISED STANDARD PLAN RSP A77L2**

7-3-13

| Dist | COUNTY | ROUTE | POST MILES TOTAL PROJECT | SHEET No. | TOTAL SHEETS |
|---|---|---|---|---|---|
| 06 | Tul | 65 | R15.1/18.0 | 234 | 324 |

Randell D. Hiatt
REGISTERED CIVIL ENGINEER

July 19, 2013
PLANS APPROVAL DATE

REGISTERED PROFESSIONAL ENGINEER
Randell D. Hiatt
No. C50200
Exp. 6-30-15
CIVIL
STATE OF CALIFORNIA

*THE STATE OF CALIFORNIA OR ITS OFFICERS OR AGENTS SHALL NOT BE RESPONSIBLE FOR THE ACCURACY OR COMPLETENESS OF SCANNED COPIES OF THIS PLAN SHEET.*

TO ACCOMPANY PLANS DATED 6-20-16

**2010 REVISED STANDARD PLAN RSP A77M1**

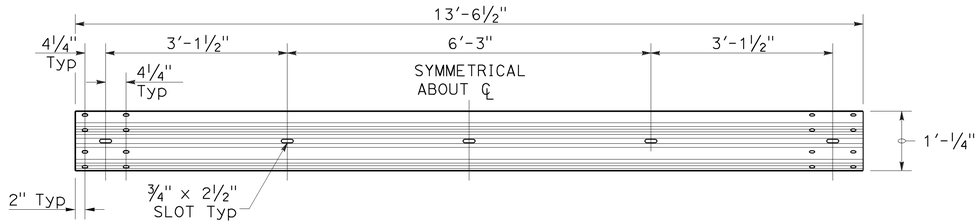


## TYPICAL RAIL ELEMENT

NOTE:

1. Slotted holes for splice bolts to overlap ends of rail element.

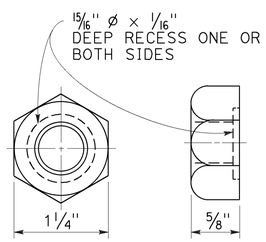


## ⅝" ø RECESS NUT

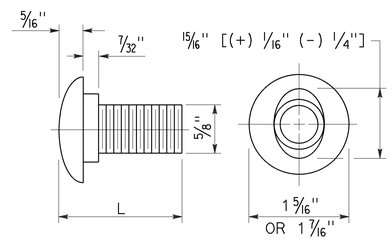


## ⅝" ø BUTTON HEAD BOLT

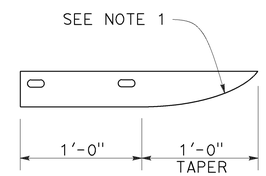


## PLAN

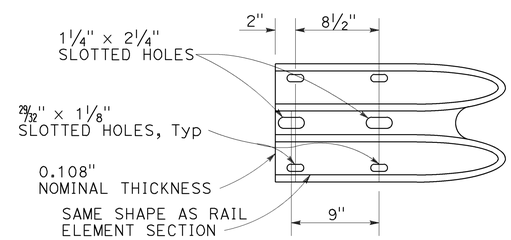


## ELEVATION

## END CAP (TYPE A)

### BUTTON HEAD BOLT

| L | THREAD LENGTH |
|---|---|
| 1⅜" | FULL THREAD LENGTH |
| 2" | FULL THREAD LENGTH |
| 10" | 4" Min THREAD LENGTH |
| 18" | 4" Min THREAD LENGTH |
| 20" | 4" Min THREAD LENGTH |
| 22" | 4" Min THREAD LENGTH |
| 26" | 4" Min THREAD LENGTH |
| 36" | 4" Min THREAD LENGTH |
| ** 2¾" | 2" Min THREAD LENGTH |
| ** 19" | 4" Min THREAD LENGTH |

** For nested rail applications.

STATE OF CALIFORNIA
DEPARTMENT OF TRANSPORTATION

# MIDWEST GUARDRAIL SYSTEM STANDARD HARDWARE

NO SCALE

RSP A77M1 DATED JULY 19, 2013 SUPPLEMENTS THE STANDARD PLANS BOOK DATED 2010.

**REVISED STANDARD PLAN RSP A77M1**

7-3-13

| Dist | COUNTY | ROUTE | POST MILES TOTAL PROJECT | SHEET No. | TOTAL SHEETS |
|---|---|---|---|---|---|
| 06 | Tul | 65 | R15.1/18.0 | 235 | 324 |

Randell D. Hiatt
REGISTERED CIVIL ENGINEER

November 15, 2013
PLANS APPROVAL DATE

REGISTERED PROFESSIONAL ENGINEER
Randell D. Hiatt
No. C50200
Exp. 6-30-15
CIVIL
STATE OF CALIFORNIA

*THE STATE OF CALIFORNIA OR ITS OFFICERS OR AGENTS SHALL NOT BE RESPONSIBLE FOR THE ACCURACY OR COMPLETENESS OF SCANNED COPIES OF THIS PLAN SHEET.*

TO ACCOMPANY PLANS DATED 6-20-16

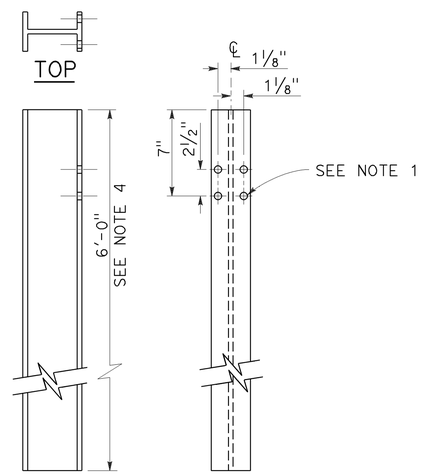


SIDE FRONT

W6 x 9 OR W6 x 8.5
STEEL POST
See Note 4

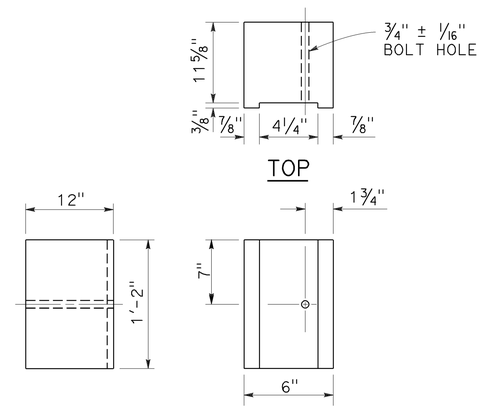


SIDE FRONT

6" x 12"
NOTCHED WOOD BLOCK
See Notes 2 and 3

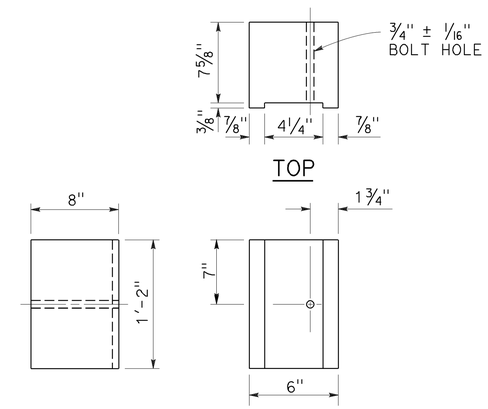


SIDE FRONT

6" x 8"
NOTCHED WOOD BLOCK
Only for use with metal beam guard railing. See Note 5

## NOTES:

1. All holes in steel post shall be 13/16" Dia maximum.
2. Dimensions shown for wood block are nominal.
3. Notched face of block faces steel post.
4. 6'-0" length posts to be used for typical roadway installation. See Revised Standard Plan RSP A77N3.
5. See Revised Standard Plan RSP A77L3 for use of 6" x 8" and 8" x 8" notched wood blocks.
6. This post and 8" x 12" block combination to be used for line post sections of MGS on narrow roadways and where strengthened line post sections of MGS are warranted to shield fixed objects.

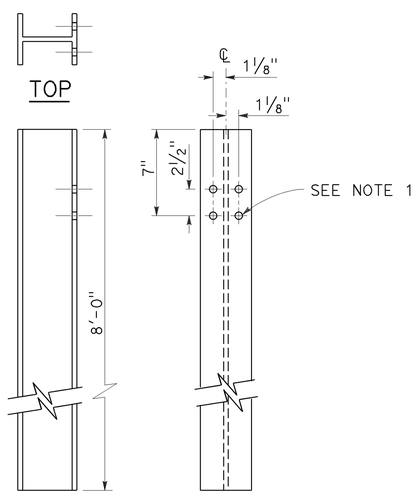


SIDE FRONT

W6 x 15
STEEL POST
See Note 6

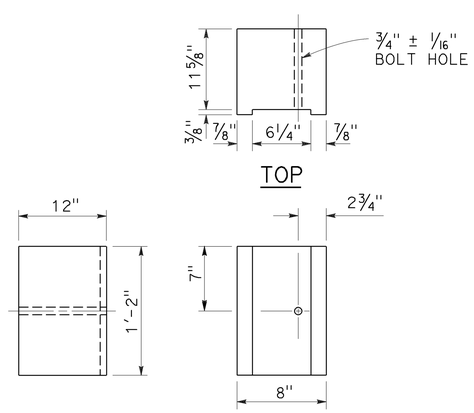


SIDE FRONT

8" x 12"
NOTCHED WOOD BLOCK
See Notes 2 and 3

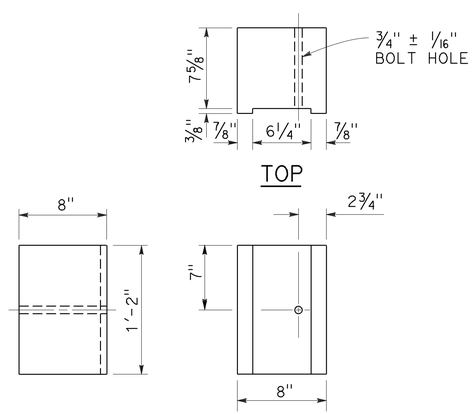


SIDE FRONT

8" x 8"
NOTCHED WOOD BLOCK
Only for use with metal beam guard railing. See Note 5

STATE OF CALIFORNIA
DEPARTMENT OF TRANSPORTATION

# MIDWEST GUARDRAIL SYSTEM STEEL POST AND NOTCHED WOOD BLOCK DETAILS

NO SCALE

RSP A77N2 DATED NOVEMBER 15, 2013 SUPERSEDES RSP A77N2
DATED JULY 19, 2013 THAT SUPPLEMENTS THE STANDARD PLANS BOOK DATED 2010.

**REVISED STANDARD PLAN RSP A77N2**

**2010 REVISED STANDARD PLAN RSP A77N2**

10-29-13

| Dist | COUNTY | ROUTE | POST MILES TOTAL PROJECT | SHEET No. | TOTAL SHEETS |
|---|---|---|---|---|---|
| 06 | Tul | 65 | R15.1/18.0 | 236 | 324 |

Randell D. Hiatt
REGISTERED CIVIL ENGINEER

November 15, 2013
PLANS APPROVAL DATE

REGISTERED PROFESSIONAL ENGINEER
Randell D. Hiatt
No. C50200
Exp. 6-30-15
CIVIL
STATE OF CALIFORNIA

THE STATE OF CALIFORNIA OR ITS OFFICERS OR AGENTS SHALL NOT BE RESPONSIBLE FOR THE ACCURACY OR COMPLETENESS OF SCANNED COPIES OF THIS PLAN SHEET.

TO ACCOMPANY PLANS DATED 6-20-16

2010 REVISED STANDARD PLAN RSP A77N3

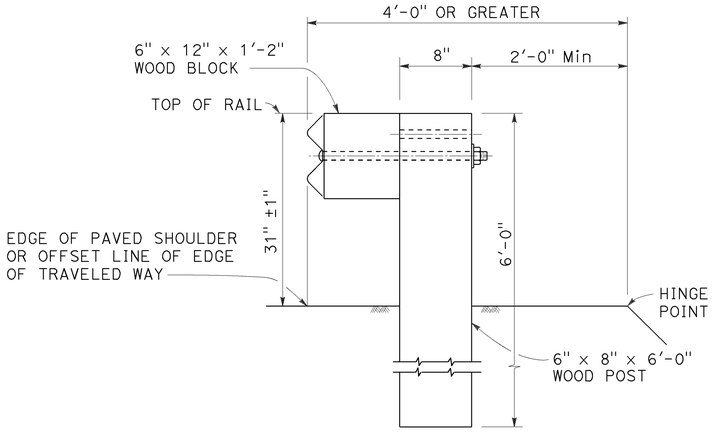


DETAIL A

TYPICAL ROADWAY INSTALLATION

See Note 1

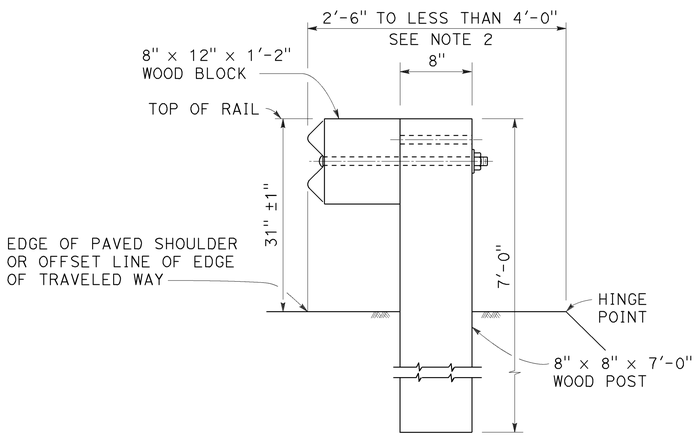


DETAIL B

NARROW ROADWAY INSTALLATION

See Note 1

## POST EMBEDMENT

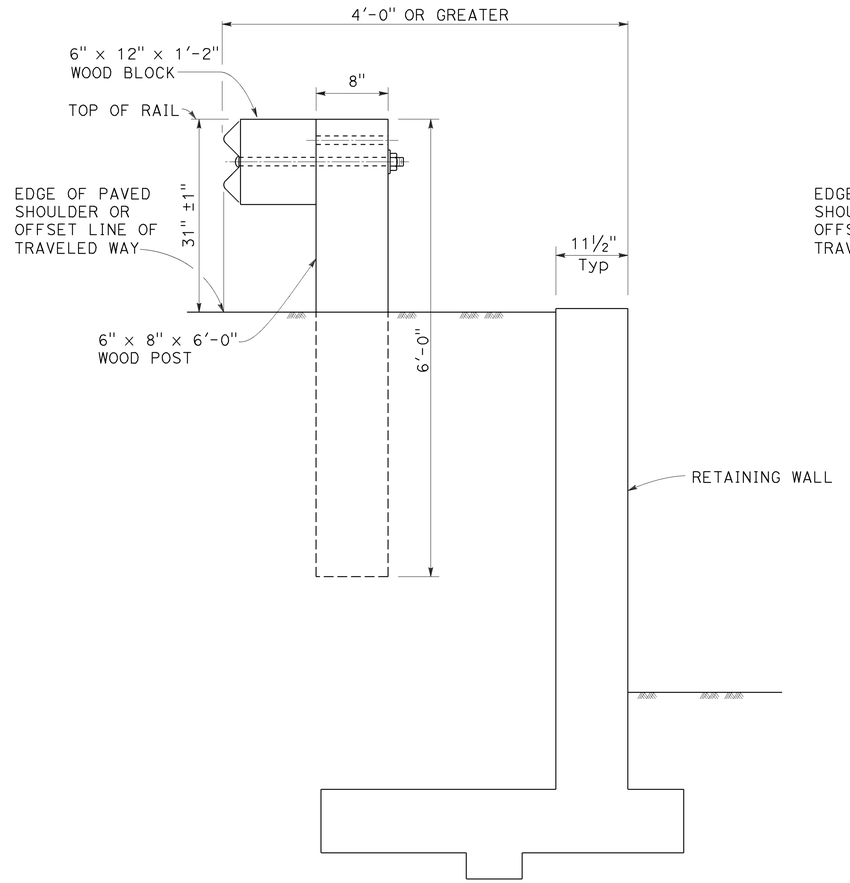


DETAIL C

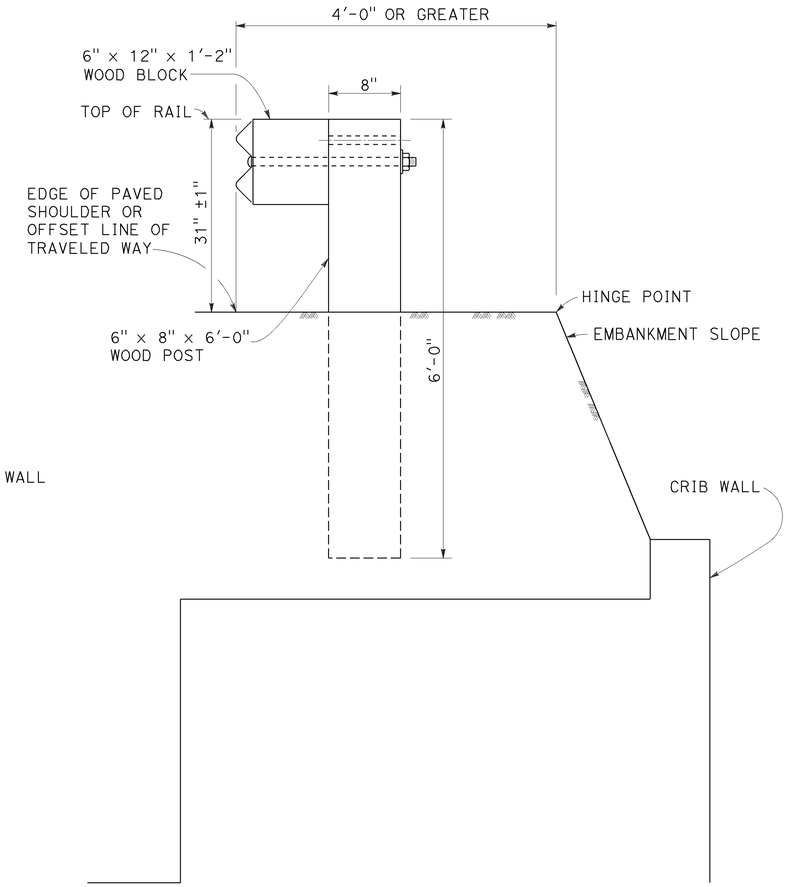


DETAIL D

## INSTALLATION AT EARTH RETAINING WALLS

NOTES:

1. These installation details also applicable to steel line post installations. For Detail A, C, and D, where steel line post installations are constructed, W6 x 8.5 or W6 x 9 steel post, 6'-0" in length, with 6" x 12" x 1'-2" notched wood blocks or notched recycled plastic blocks are to be used in place of the size of wood post and wood block shown. For Detail B, where steel line post installations are constructed, W6 x 15 steel post, 8'-0" in length, with 8" x 12" x 1'-2" notched wood blocks or notched recycled plastic blocks are to be used in place of the size of wood post and wood block shown. For additional installation details, see Revised Standard Plan RSP A77L1 and RSP A77L2.
2. Where the distance between the face of the rail and the hinge point is less than 2'-6", see the Project Plans for special details.
3. For dike positioning with MGS installations, see Revised Standard Plan RSP A77N4.

STATE OF CALIFORNIA
DEPARTMENT OF TRANSPORTATION

# MIDWEST GUARDRAIL SYSTEM TYPICAL LINE POST EMBEDMENT AND HINGE POINT OFFSET DETAILS

NO SCALE

RSP A77N3 DATED NOVEMBER 15, 2013 SUPERSEDES RSP A77N3
DATED JULY 19, 2013 THAT SUPPLEMENTS THE STANDARD PLANS BOOK DATED 2010.

**REVISED STANDARD PLAN RSP A77N3**

10-29-13

| Dist | COUNTY | ROUTE | POST MILES TOTAL PROJECT | SHEET No. | TOTAL SHEETS |
|---|---|---|---|---|---|
| 06 | Tul | 65 | R15.1/18.0 | 237 | 324 |

Randell D. Hiatt
REGISTERED CIVIL ENGINEER

July 19, 2013
PLANS APPROVAL DATE

REGISTERED PROFESSIONAL ENGINEER
Randell D. Hiatt
No. C50200
Exp. 6-30-15
CIVIL
STATE OF CALIFORNIA

THE STATE OF CALIFORNIA OR ITS OFFICERS OR AGENTS SHALL NOT BE RESPONSIBLE FOR THE ACCURACY OR COMPLETENESS OF SCANNED COPIES OF THIS PLAN SHEET.

TO ACCOMPANY PLANS DATED 6-20-16

## NOTES:

1. When necessary to place dike more than 7" in front of face of MGS, only Type C dike may be used. For dike details, see Revised Standard Plan RSP A87B.
2. For standard railing post embedment, see Revised Standard Plan RSP A77N3.
3. MGS delineation to be used where shown on the Project Plans.
4. When dike or curb is placed under MGS, the maximum height of the dike or curb shall be 6". Mountable dike should not be used. For dike and curb details, see Revised Standard Plans RSP A87A and RSP A87B.
5. For details of typical distance between the face of rail and hinge point, see Revised Standard Plan RSP A77N3.
6. For steel line posts, use 1/4 - 20 self-tapping screws in 0.22" diameter holes or 1/4" bolts in 9/32" diameter holes.

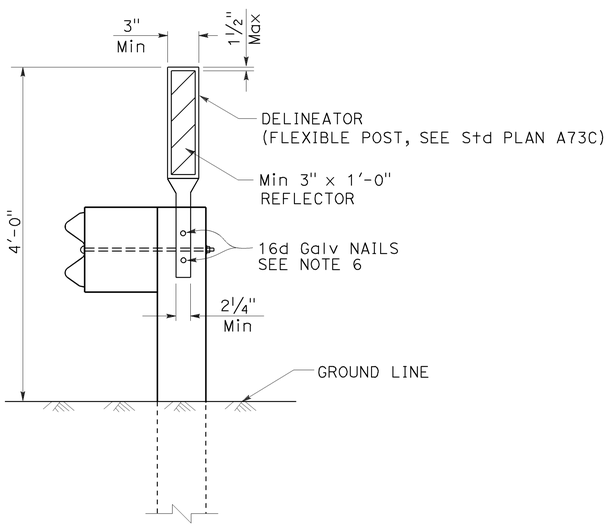


MGS DELINEATION
See Note 3

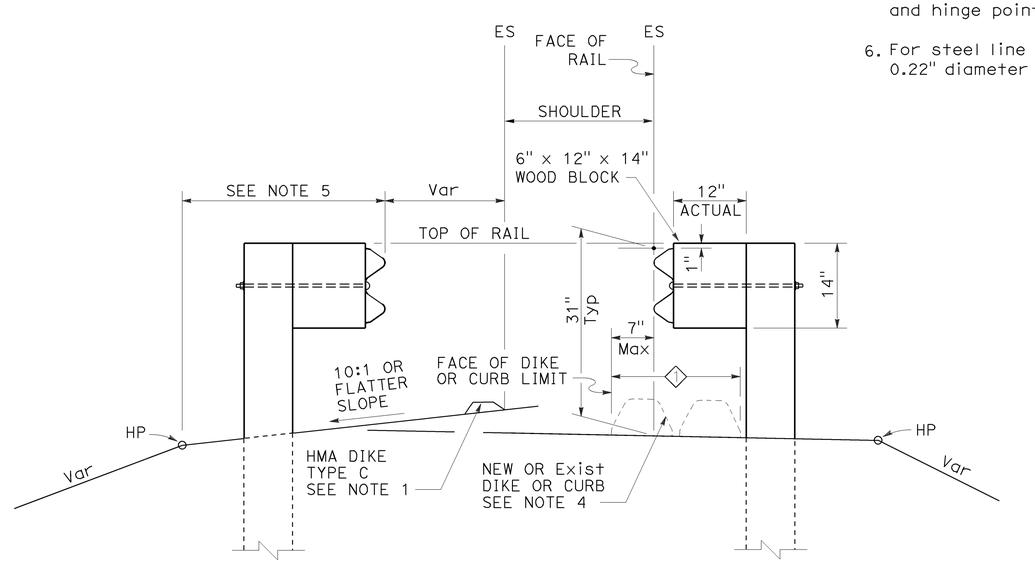


DIKE POSITIONING
See Note 1

1 PERMISSIBLE DIKE OR CURB PLACEMENT AREA

STATE OF CALIFORNIA
DEPARTMENT OF TRANSPORTATION

# MIDWEST GUARDRAIL SYSTEM TYPICAL RAILING DELINEATION AND DIKE POSITIONING DETAILS

NO SCALE

RSP A77N4 DATED JULY 19, 2013 SUPPLEMENTS THE STANDARD PLANS BOOK DATED 2010.

**REVISED STANDARD PLAN RSP A77N4**

**2010 REVISED STANDARD PLAN RSP A77N4**

7-10-13

| Dist | COUNTY | ROUTE | POST MILES TOTAL PROJECT | SHEET No. | TOTAL SHEETS |
|---|---|---|---|---|---|
| 06 | Tul | 65 | R15.1/18.0 | 238 | 324 |

Randell D. Hiatt
REGISTERED CIVIL ENGINEER

July 19, 2013
PLANS APPROVAL DATE

REGISTERED PROFESSIONAL ENGINEER
Randell D. Hiatt
No. C50200
Exp. 6-30-15
CIVIL
STATE OF CALIFORNIA

*THE STATE OF CALIFORNIA OR ITS OFFICERS OR AGENTS SHALL NOT BE RESPONSIBLE FOR THE ACCURACY OR COMPLETENESS OF SCANNED COPIES OF THIS PLAN SHEET.*

TO ACCOMPANY PLANS DATED 6-20-16

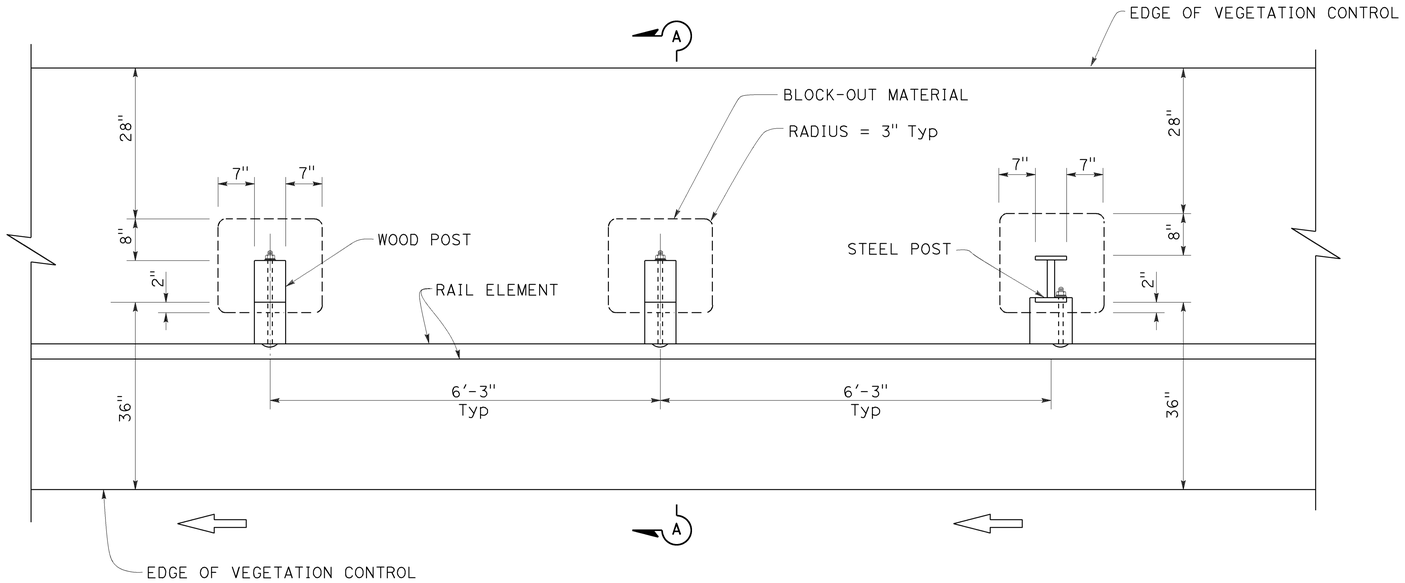


PLAN

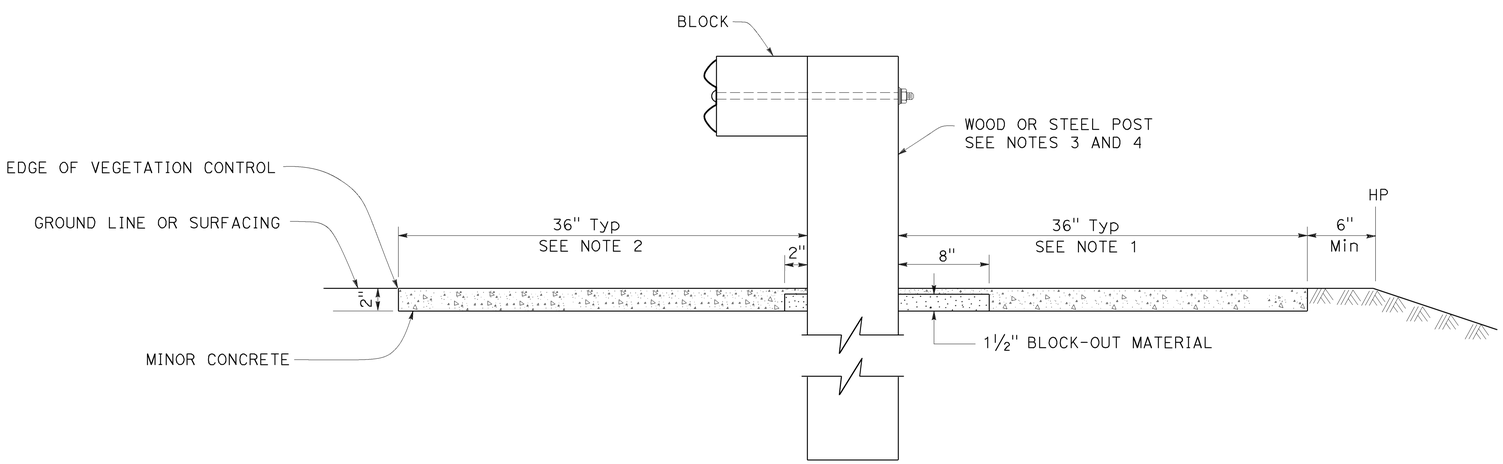


SECTION A-A

NOTES:

1. Where the distance between back of post and hinge point is less than 42", construct vegetation control to 6" from hinge point while maintaining the 8" block-out at back of post. If the 8" block-out at back of post can not be maintained, construct vegetation control flush with the back edge of post.
2. Where dike is constructed under railing, construct vegetation control to back edge of dike. Where paved shoulder is constructed within 36" in front of the post, construct vegetation control to the edge of paved shoulder.
3. For wood post sizes, see Revised Standard Plan RSP A77N1.
4. For steel post sizes, see Revised Standard Plan RSP A77N2.
5. For details not shown, see Revised Standard Plans RSP A77L1 and RSP A77L2.

STATE OF CALIFORNIA
DEPARTMENT OF TRANSPORTATION

# MIDWEST GUARDRAIL SYSTEM TYPICAL VEGETATION CONTROL STANDARD RAILING SECTION

NO SCALE

RSP A77N5 DATED JULY 19, 2013 SUPPLEMENTS THE STANDARD PLANS BOOK DATED 2010.

**REVISED STANDARD PLAN RSP A77N5**

**2010 REVISED STANDARD PLAN RSP A77N5**

7-3-13

| Dist | COUNTY | ROUTE | POST MILES TOTAL PROJECT | SHEET No. | TOTAL SHEETS |
|---|---|---|---|---|---|
| 06 | Tul | 65 | R15.1/18.0 | 239 | 324 |

Randell D. Hiatt
REGISTERED CIVIL ENGINEER

July 19, 2013
PLANS APPROVAL DATE

REGISTERED PROFESSIONAL ENGINEER
Randell D. Hiatt
No. C50200
Exp. 6-30-15
CIVIL
STATE OF CALIFORNIA

*THE STATE OF CALIFORNIA OR ITS OFFICERS OR AGENTS SHALL NOT BE RESPONSIBLE FOR THE ACCURACY OR COMPLETENESS OF SCANNED COPIES OF THIS PLAN SHEET.*

TO ACCOMPANY PLANS DATED 6-20-16

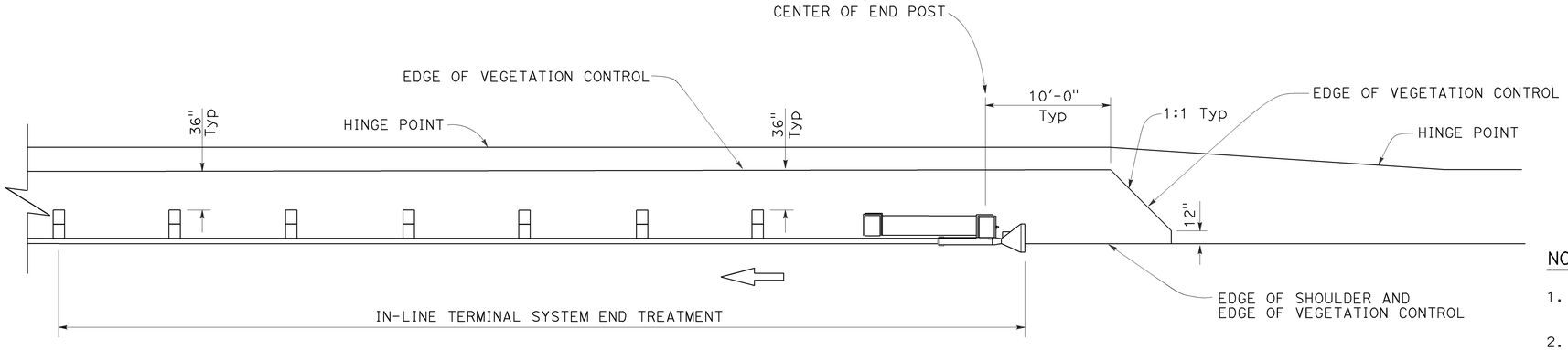


PLAN

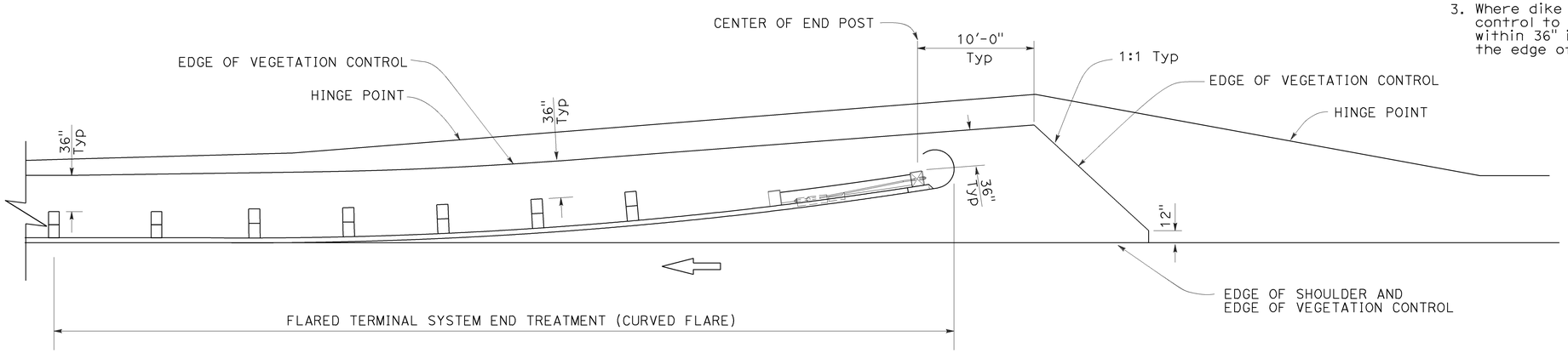


PLAN

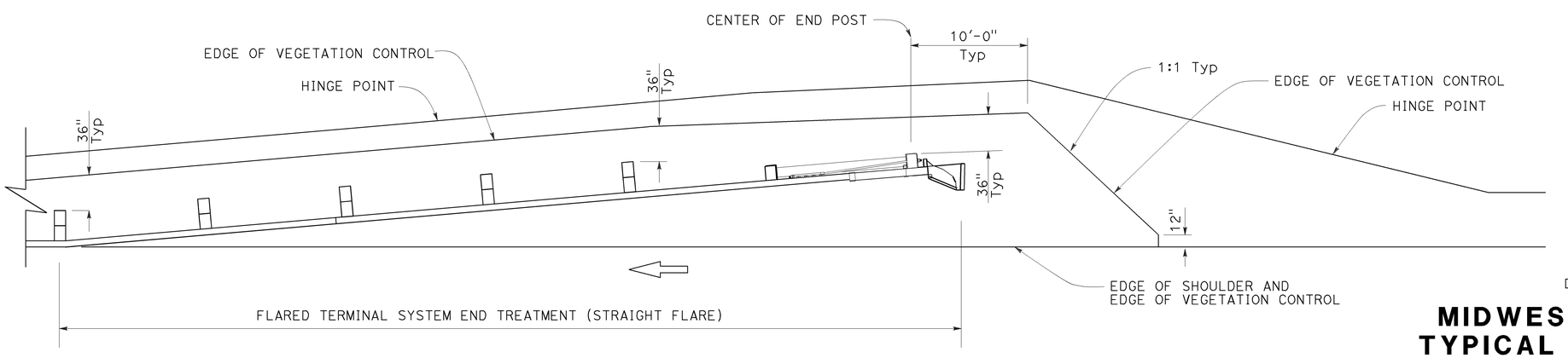


PLAN

## NOTES:

1. See Revised Standard Plan RSP A77N5 for additional vegetation control details.
2. Where the distance between back of post and hinge point is less than 42", construct vegetation control to 6" from hinge point while maintaining the 8" block-out at back of post. If the 8" block-out at back of post can not be maintained, construct vegetation control flush with the back edge of post.
3. Where dike is constructed under railing, construct vegetation control to back edge of dike. Where paved shoulder is constructed within 36" in front of the post, construct vegetation control to the edge of paved shoulder.

STATE OF CALIFORNIA
DEPARTMENT OF TRANSPORTATION

# MIDWEST GUARDRAIL SYSTEM TYPICAL VEGETATION CONTROL FOR TERMINAL SYSTEM END TREATMENTS

NO SCALE

RSP A77N6 DATED JULY 19, 2013 SUPPLEMENTS THE STANDARD PLANS BOOK DATED 2010.

**REVISED STANDARD PLAN RSP A77N6**

**2010 REVISED STANDARD PLAN RSP A77N6**

6-12-13

| Dist | COUNTY | ROUTE | POST MILES TOTAL PROJECT | SHEET No. | TOTAL SHEETS |
|---|---|---|---|---|---|
| 06 | Tul | 65 | R15.1/18.0 | 240 | 324 |

Randell D. Hiatt
REGISTERED CIVIL ENGINEER

July 19, 2013
PLANS APPROVAL DATE

REGISTERED PROFESSIONAL ENGINEER
Randell D. Hiatt
No. C50200
Exp. 6-30-15
CIVIL
STATE OF CALIFORNIA

THE STATE OF CALIFORNIA OR ITS OFFICERS OR AGENTS SHALL NOT BE RESPONSIBLE FOR THE ACCURACY OR COMPLETENESS OF SCANNED COPIES OF THIS PLAN SHEET.

TO ACCOMPANY PLANS DATED 6-20-16

## NOTES:

1. See Revised Standard Plan RSP A77N5 for additional vegetation control details.
2. Where the distance between back of post and hinge point is less than 42", construct vegetation control to 6" from hinge point while maintaining the 8" block-out at back of post. If the 8" block-out at back of post can not be maintained, construct vegetation control flush with the back edge of post.
3. Where dike is constructed under railing, construct vegetation control to back edge of dike. Where paved shoulder is constructed within 36" in front of the post, construct vegetation control to the edge of paved shoulder.

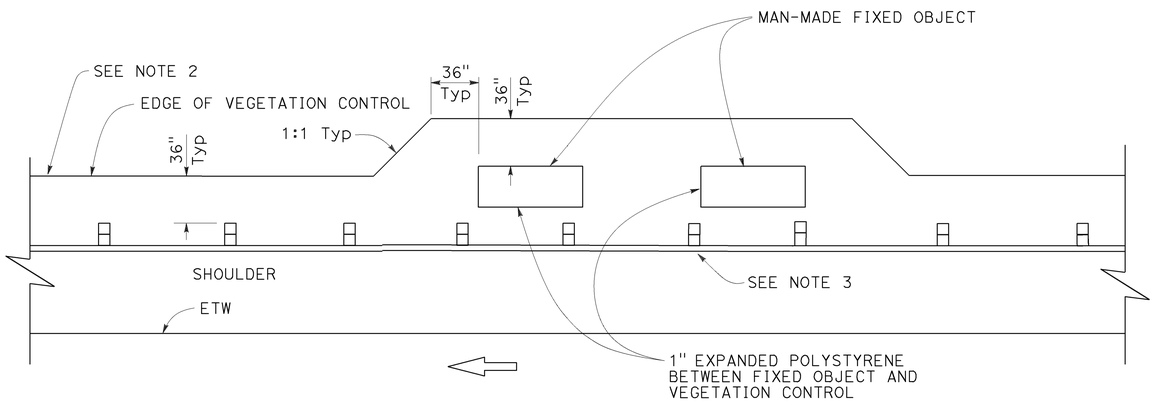


PLAN

Fixed object(s) on shoulder

STATE OF CALIFORNIA
DEPARTMENT OF TRANSPORTATION

# MIDWEST GUARDRAIL SYSTEM TYPICAL VEGETATION CONTROL AT FIXED OBJECT

NO SCALE

RSP A77N8 DATED JULY 19, 2013 SUPPLEMENTS THE STANDARD PLANS BOOK DATED 2010.

**REVISED STANDARD PLAN RSP A77N8**

**2010 REVISED STANDARD PLAN RSP A77N8**

6-12-13

| Dist | COUNTY | ROUTE | POST MILES TOTAL PROJECT | SHEET No. | TOTAL SHEETS |
|---|---|---|---|---|---|
| 06 | Tul | 65 | R15.1/18.0 | 241 | 324 |

Randell D. Hiatt
REGISTERED CIVIL ENGINEER

July 19, 2013
PLANS APPROVAL DATE

REGISTERED PROFESSIONAL ENGINEER
Randell D. Hiatt
No. C50200
Exp. 6-30-15
CIVIL
STATE OF CALIFORNIA

*THE STATE OF CALIFORNIA OR ITS OFFICERS OR AGENTS SHALL NOT BE RESPONSIBLE FOR THE ACCURACY OR COMPLETENESS OF SCANNED COPIES OF THIS PLAN SHEET.*

TO ACCOMPANY PLANS DATED 6-20-16

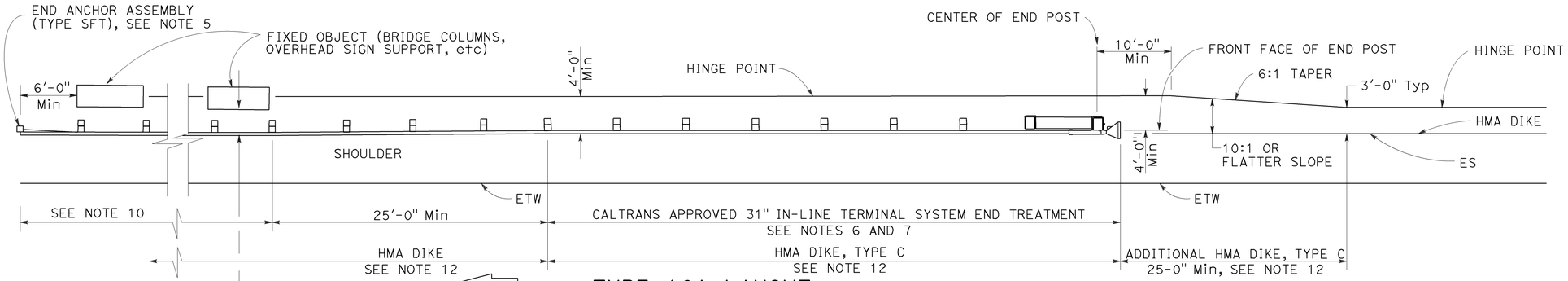


## TYPE 16A LAYOUT

(MGS installation at roadside fixed object or objects with 31" in-line end treatment at traffic approach end of railing)
See Notes 11 and 12

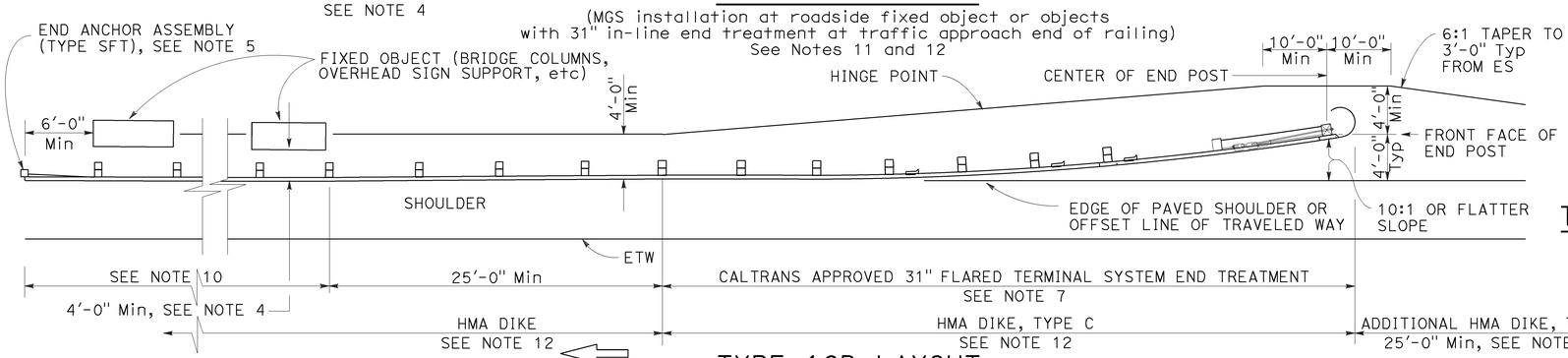


## TYPE 16B LAYOUT

(MGS installation at roadside fixed object or objects with 31' flared end treatment at traffic approach end of railing)
See Notes 11 and 12

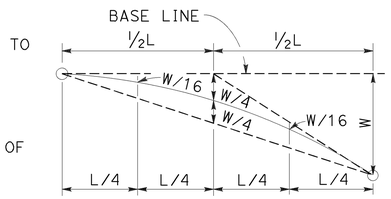


## TYPIC AL PARABOLIC LAYOUT

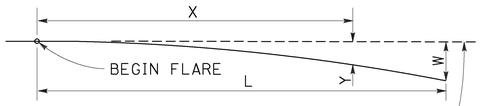


BASE LINE (EDGE OF PAVED SHOULDER OR OFFSET LINE OF EDGE OF TRAVELED WAY)

$$Y = \frac{WX^2}{L^2}$$

Y = OFFSET FROM BASE LINE
W = MAXIMUM OFFSET
X = DISTANCE ALONG BASE LINE
L = LENGTH OF FLARE

## PARABOLIC FLARE OFFSETS

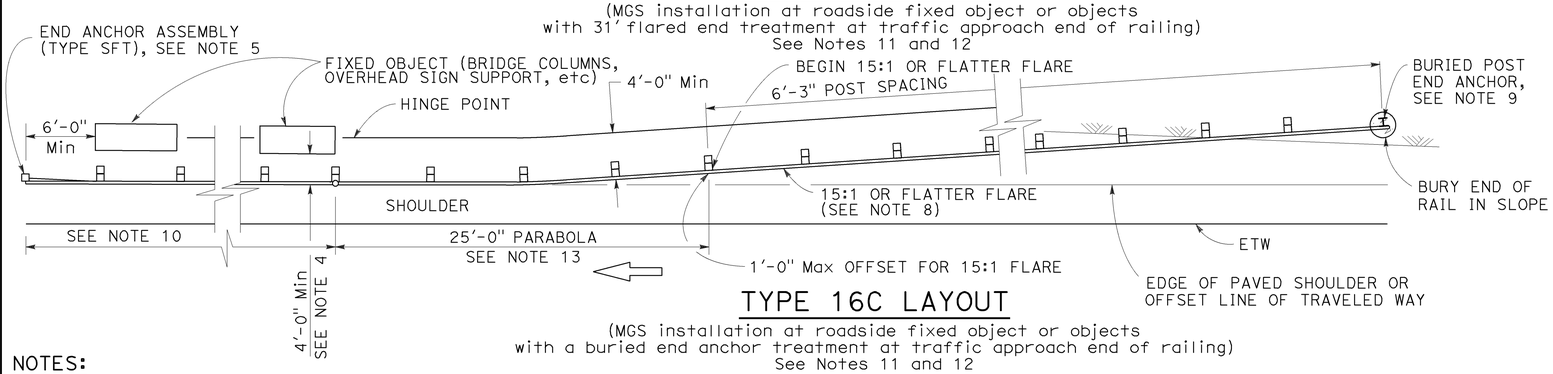


## TYPE 16C LAYOUT

(MGS installation at roadside fixed object or objects with a buried end anchor treatment at traffic approach end of railing)
See Notes 11 and 12

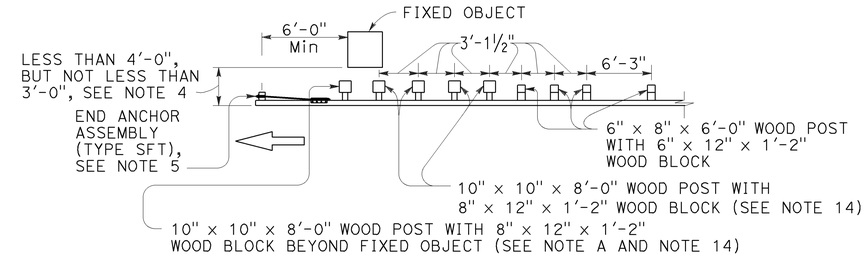


**NOTE A:** For a series of fixed objects (bridge columns, overhead sign supports, etc.) additional 10" x 10" x 8'-0" wood post with 8" x 12" x 1'-2" wood blocks at 3'-1½" center to center spacing are to be used between fixed objects.

## STRENGTHENED MIDWEST GUARDRAIL SYSTEM SECTIONS FOR FIXED OBJECT

Use strengthened MGS sections with Types 16A, 16B or 16C layouts where minimum clearance between the face of the railing and fixed object(s) is less than 4'-0", but not less than 3'-0". See Note 4

## NOTES:

1. Line post, blocks and hardware to be used are shown on Revised Standard Plans RSP A77L1, RSP A77L2, RSP A77M1, RSP A77N1 and RSP A77N2.
2. MGS post spacing to be 6'-3" center to center, except as otherwise noted.
3. Except as noted, line posts are 6" x 8" x 6'-0" wood with 6" x 12" x 1'-2" wood blocks. W6 x 8.5 or W6 x 9 steel posts, 6'-0" in length, with 6" x 12" x 1'-2" notched wood blocks or notched recycled plastic blocks may be used for 6" x 8" x 6'-0" wood line posts with 6" x 12" x 1'-2" wood blocks where applicable and when specified.
4. A 4'-0" minimum clearance is required between the face of the railing and the face of a fixed object located directly behind MGS sections with post spacing of 6'-3". Construct MGS as shown in the detail "Strengthened Midwest Guardrail System Sections for Fixed Object" on this plan, where the clearance between the face of the railing and the face of a fixed object is less than 4'-0", but not less than 3'-0". Where the clearance is less than 3'-0", a concrete wall or barrier should be constructed to shield the fixed object(s).
5. For End Anchor Assembly (Type SFT) details, see Revised Standard Plan RSP A77S1.
6. 31" in-line terminal system end treatments are used where site conditions will not accommodate a 31" flared end treatment.
7. The type of 31" terminal system to be used will be shown on the Project Plans.
8. The 15:1 or flatter flare used with Type 16C Layout is based on the edge of the paved shoulder or offset line of edge of the traveled way. The length of MGS within the 15:1 or flatter flare is based on site conditions and should be a length equal to multiples of 12'-6".
9. For details of the Buried Post End Anchor used with Type 16C Layout, see Revised Standard Plan RSP A77T2.
10. As site conditions dictate, construct additional MGS to shield fixed object(s). Additional MGS length equal to multiples of 12'-6". Post spacing at 6'-3" except as specified in Note 4.
11. Layout Types 16A, 16B or 16C are typically used where MGS is recommended to shield roadside fixed object(s) and a crashworthy 31" end treatment is required for only one direction of traffic.
12. Where placement of dike is required with MGS, see Revised Standard Plan RSP A77N4 for dike positioning details.
13. For typical flare offsets for 25'-0" length parabola with maximum offset of 1'-0", see Revised Standard Plan RSP A77P1.
14. W6 x 15 steel post, 8'-0" in length, with 8" x 12" x 1'-2" notched wood block or notched recycled plastic blocks may be used in place of the 10" x 10" x 8'-0" wood post with 8" x 12" x 1'-2" wood block shown in the detail "Strengthened Midwest Guardrail System Sections for Fixed Object".

STATE OF CALIFORNIA
DEPARTMENT OF TRANSPORTATION

# MIDWEST GUARDRAIL SYSTEM TYPICAL LAYOUTS FOR ROADSIDE FIXED OBJECTS

NO SCALE

RSP A77R3 DATED JULY 19, 2013 SUPPLEMENTS THE STANDARD PLANS BOOK DATED 2010.

**REVISED STANDARD PLAN RSP A77R3**

**2010 REVISED STANDARD PLAN RSP A77R3**

6-20-13

| Dist | COUNTY | ROUTE | POST MILES TOTAL PROJECT | SHEET No. | TOTAL SHEETS |
|---|---|---|---|---|---|
| 06 | Tul | 65 | R15.1/18.0 | 242 | 324 |

Randell D. Hiatt
REGISTERED CIVIL ENGINEER

November 15, 2013
PLANS APPROVAL DATE

REGISTERED PROFESSIONAL ENGINEER
Randell D. Hiatt
No. C50200
Exp. 6-30-15
CIVIL
STATE OF CALIFORNIA

*THE STATE OF CALIFORNIA OR ITS OFFICERS OR AGENTS SHALL NOT BE RESPONSIBLE FOR THE ACCURACY OR COMPLETENESS OF SCANNED COPIES OF THIS PLAN SHEET.*

TO ACCOMPANY PLANS DATED 6-20-16

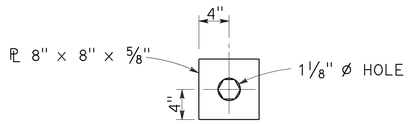


DETAIL "A"
CABLE CONNECTION
END PLATE

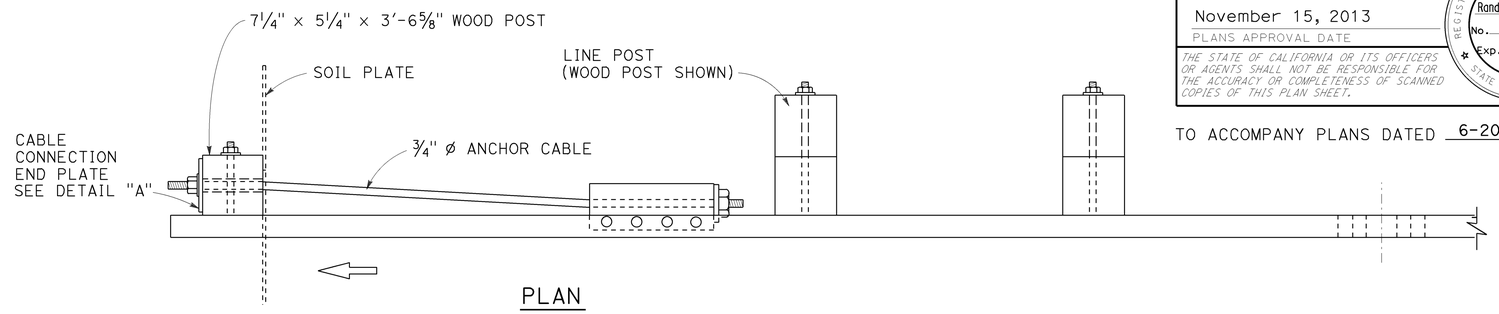


PLAN

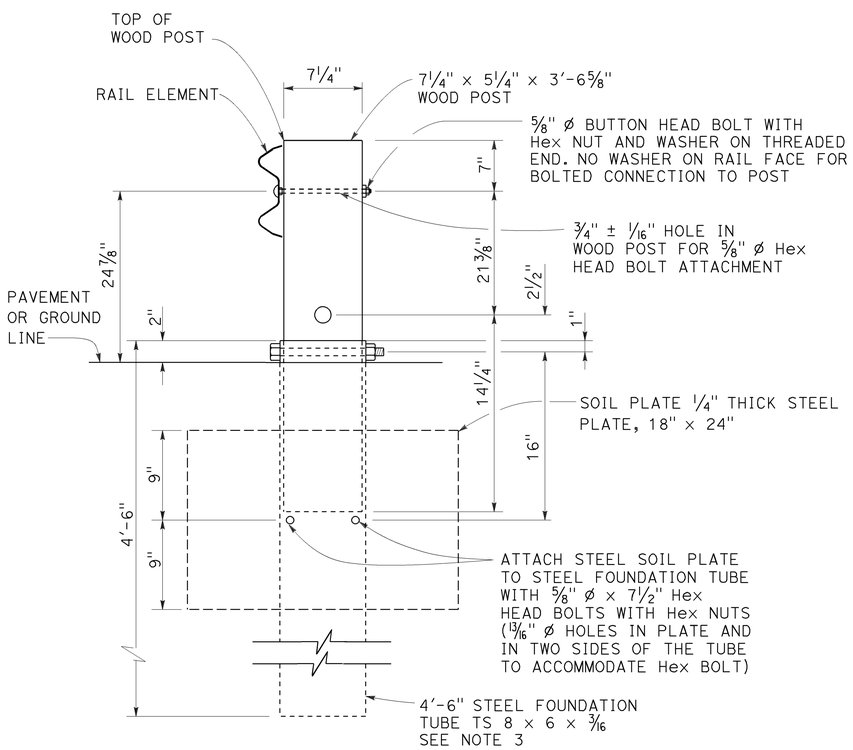


SECTION A-A

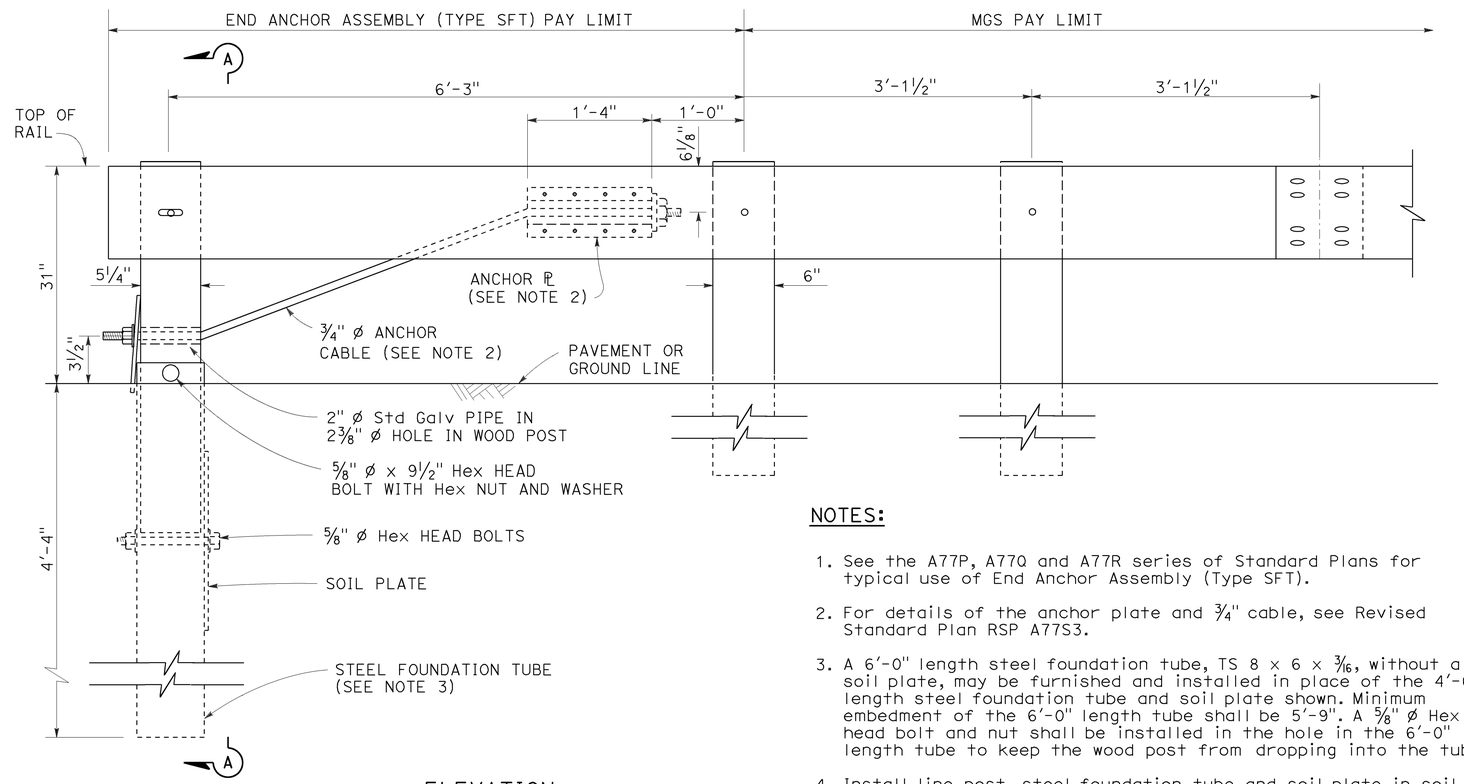


ELEVATION

END ANCHOR
ASSEMBLY (TYPE SFT)
See Note 1

NOTES:

1. See the A77P, A77Q and A77R series of Standard Plans for typical use of End Anchor Assembly (Type SFT).
2. For details of the anchor plate and 3/4" cable, see Revised Standard Plan RSP A77S3.
3. A 6'-0" length steel foundation tube, TS 8 x 6 x 3/16, without a soil plate, may be furnished and installed in place of the 4'-6" length steel foundation tube and soil plate shown. Minimum embedment of the 6'-0" length tube shall be 5'-9". A 5/8" ø Hex head bolt and nut shall be installed in the hole in the 6'-0" length tube to keep the wood post from dropping into the tube.
4. Install line post, steel foundation tube and soil plate in soil.

STATE OF CALIFORNIA
DEPARTMENT OF TRANSPORTATION

# MIDWEST GUARDRAIL SYSTEM END ANCHOR ASSEMBLY (TYPE SFT)

NO SCALE

RSP A77S1 DATED NOVEMBER 15, 2013 SUPERSEDES RSP A77S1
DATED JULY 19, 2013 THAT SUPPLEMENTS THE STANDARD PLANS BOOK DATED 2010.

**REVISED STANDARD PLAN RSP A77S1**

**2010 REVISED STANDARD PLAN RSP A77S1**

10-4-13

| Dist | COUNTY | ROUTE | POST MILES TOTAL PROJECT | SHEET No. | TOTAL SHEETS |
|---|---|---|---|---|---|
| 06 | Tul | 65 | R15.1/18.0 | 243 | 324 |

Randell D. Hiatt
REGISTERED CIVIL ENGINEER

July 19, 2013
PLANS APPROVAL DATE

REGISTERED PROFESSIONAL ENGINEER
Randell D. Hiatt
No. C50200
Exp. 6-30-15
CIVIL
STATE OF CALIFORNIA

*THE STATE OF CALIFORNIA OR ITS OFFICERS OR AGENTS SHALL NOT BE RESPONSIBLE FOR THE ACCURACY OR COMPLETENESS OF SCANNED COPIES OF THIS PLAN SHEET.*

TO ACCOMPANY PLANS DATED 6-20-16

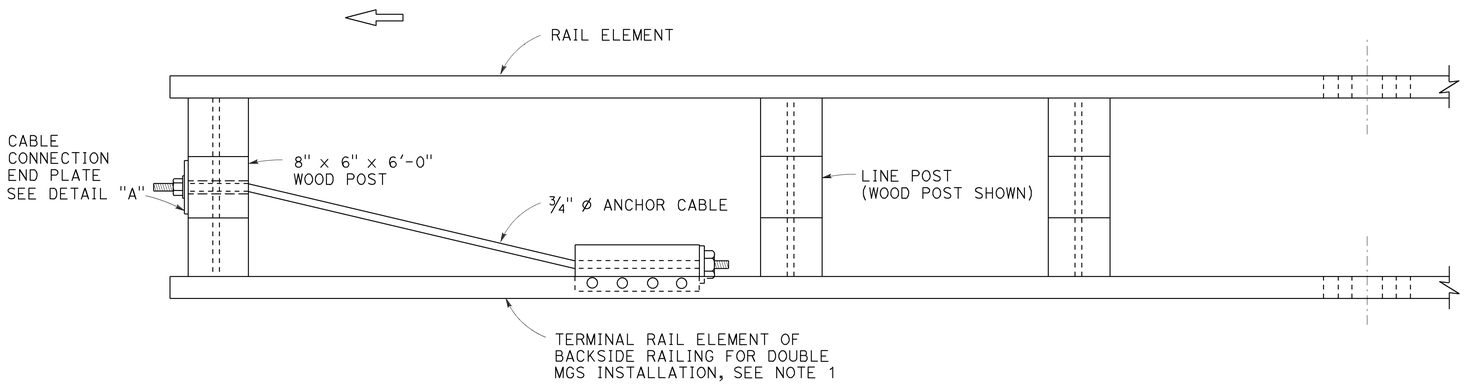


PLAN

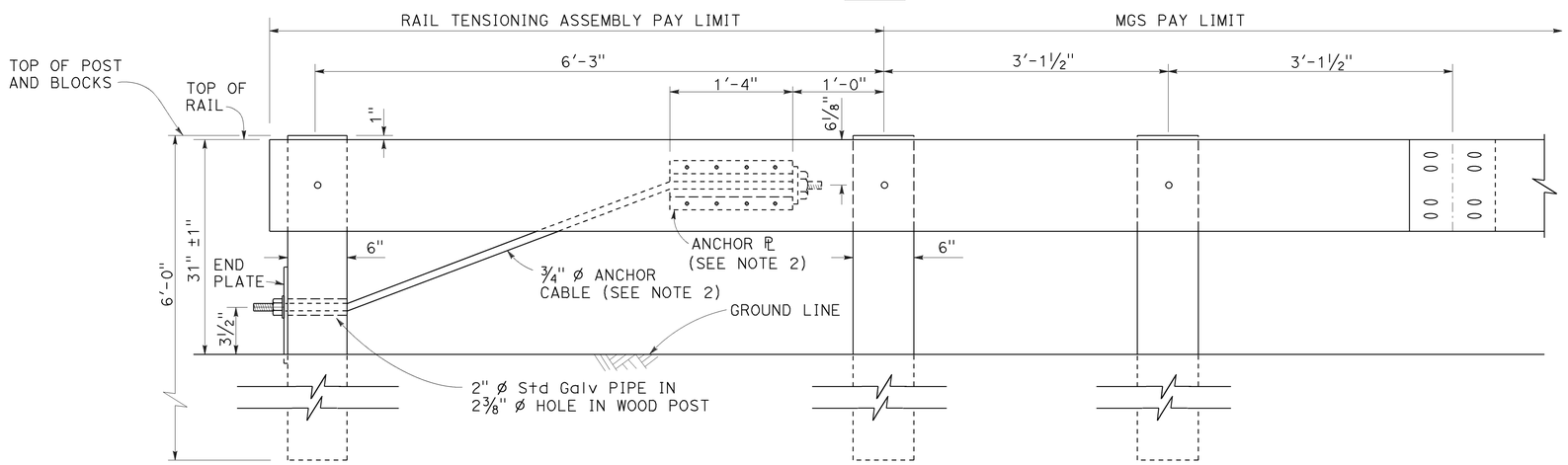


ELEVATION
RAIL TENSIONING ASSEMBLY
See Note 1

## NOTES:

1. See Revised Standard Plans RSP A77O3 and RSP A77R1 for typical use of rail tensioning assembly.
2. For details of the anchor plate and ¾" cable, see Revised Standard Plan RSP A77S3.

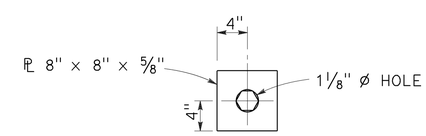


DETAIL "A"
CABLE CONNECTION END PLATE

STATE OF CALIFORNIA
DEPARTMENT OF TRANSPORTATION

# MIDWEST GUARDRAIL SYSTEM RAIL TENSIONING ASSEMBLY

NO SCALE

RSP A77S2 DATED JULY 19, 2013 SUPPLEMENTS THE STANDARD PLANS BOOK DATED 2010.

**REVISED STANDARD PLAN RSP A77S2**

**2010 REVISED STANDARD PLAN RSP A77S2**

7-3-13

| Dist | COUNTY | ROUTE | POST MILES TOTAL PROJECT | SHEET No. | TOTAL SHEETS |
|---|---|---|---|---|---|
| 06 | Tul | 65 | R15.1/18.0 | 244 | 324 |

Raymond Don Tsztoo
REGISTERED CIVIL ENGINEER

October 19, 2012
PLANS APPROVAL DATE

REGISTERED PROFESSIONAL ENGINEER
Raymond Don Tsztoo
No. C37332
Exp. 6-30-14
CIVIL
STATE OF CALIFORNIA

*THE STATE OF CALIFORNIA OR ITS OFFICERS OR AGENTS SHALL NOT BE RESPONSIBLE FOR THE ACCURACY OR COMPLETENESS OF SCANNED COPIES OF THIS PLAN SHEET.*

TO ACCOMPANY PLANS DATED 6-20-16

**2010 REVISED STANDARD PLAN RSP A86D**

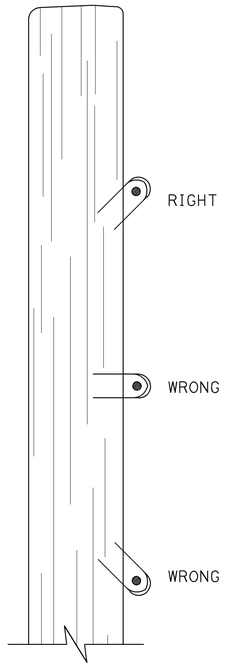


DRIVE STAPLES AT ANGLE

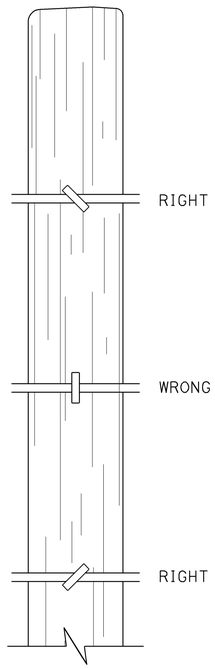


DO NOT DRIVE STAPLES PARALLEL TO SIDE OF POST

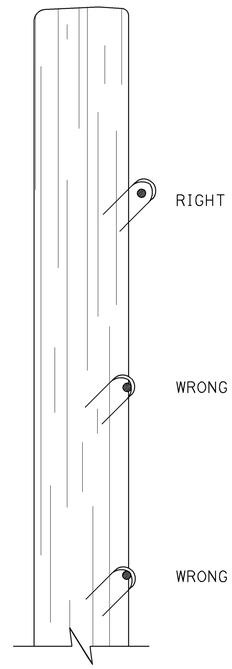


LEAVE WIRE LOOSE IN STAPLE

## LINE POST STAPLING DETAILS

(Apply to rectangular/square and round posts)
Do not staple vertical wire in wire mesh.

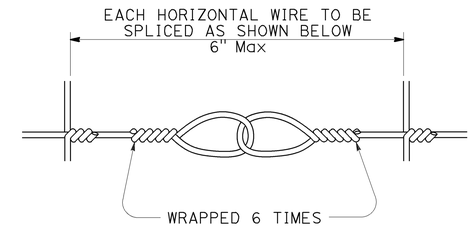


## SPLICE DETAIL FOR BARBED WIRE/WIRE MESH FENCE

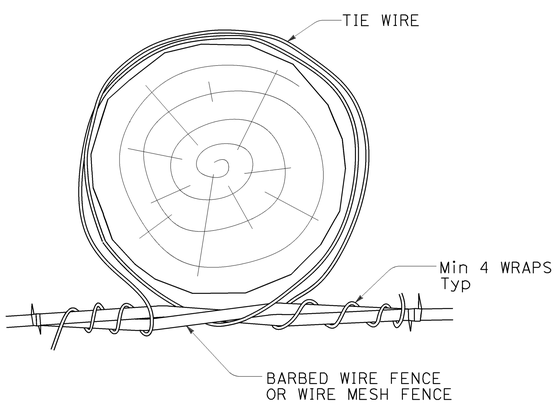


OPTION A

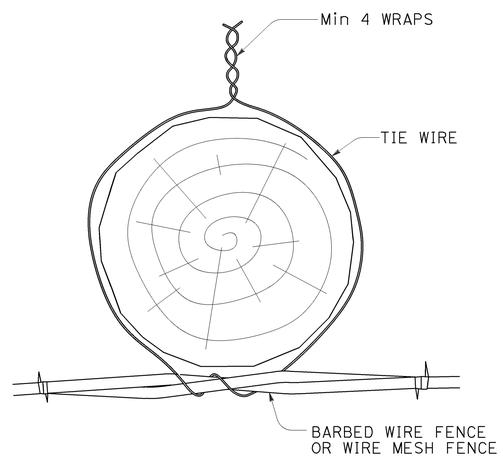


OPTION B

## LINE POST WIRE TIE OPTION DETAILS

(Option details also apply to rectangular/square posts)

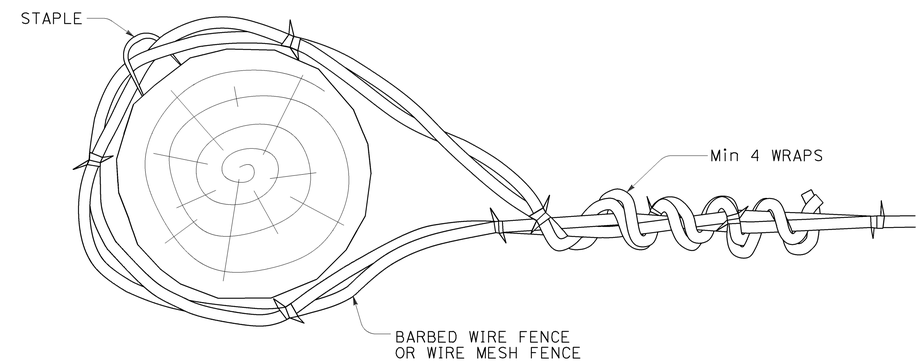


## END, LATCH, PULL, AND CORNER POST DETAIL

(Also applies to rectangular/square posts)

STATE OF CALIFORNIA
DEPARTMENT OF TRANSPORTATION

# BARBED WIRE AND WIRE MESH FENCE - MISCELLANEOUS DETAILS

NO SCALE

RSP A86D DATED OCTOBER 19, 2012 SUPPLEMENTS THE STANDARD PLANS BOOK DATED 2010.

**REVISED STANDARD PLAN RSP A86D**

10-9-12

| Dist | COUNTY | ROUTE | POST MILES TOTAL PROJECT | SHEET No. | TOTAL SHEETS |
|---|---|---|---|---|---|
| 06 | Tul | 65 | R15.1/18.0 | 245 | 324 |

REGISTERED CIVIL ENGINEER

July 19, 2013
PLANS APPROVAL DATE

REGISTERED PROFESSIONAL ENGINEER
Michael Janzen
No. 44788
Exp. 03-31-14
CIVIL
STATE OF CALIFORNIA

*THE STATE OF CALIFORNIA OR ITS OFFICERS OR AGENTS SHALL NOT BE RESPONSIBLE FOR THE ACCURACY OR COMPLETENESS OF SCANNED COPIES OF THIS PLAN SHEET.*

TO ACCOMPANY PLANS DATED 6-20-16

**2010 REVISED STANDARD PLAN RSP A87A**

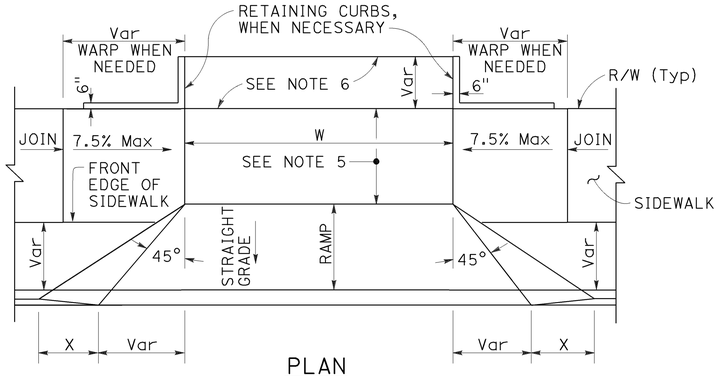


PLAN

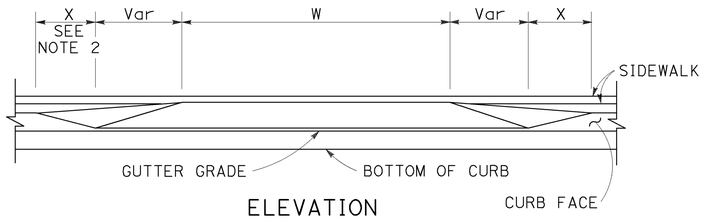


ELEVATION

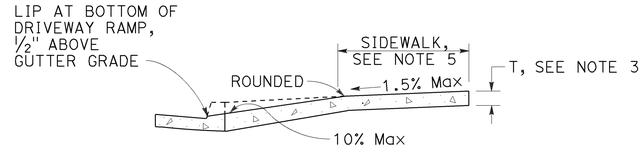


CASE A

Typical driveway, sidewalk not depressed

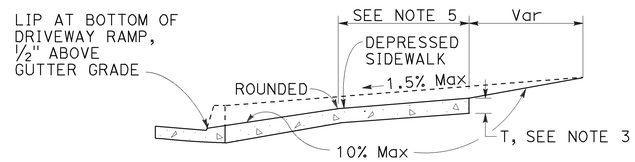


CASE B

Driveway with depressed sidewalk

SECTIONS

## DRIVEWAYS

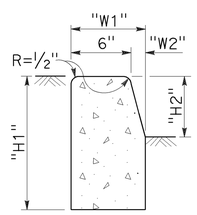


TYPE A1 CURBS

See Table A

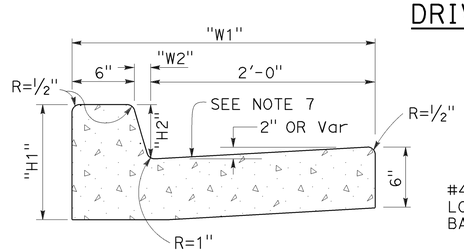


TYPE A2 CURBS

See Table A

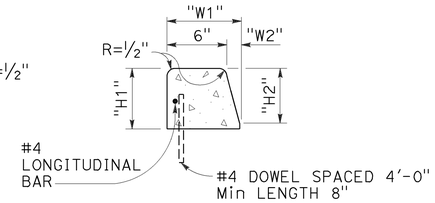


TYPE A3 CURBS

Superimposed on existing pavement
See Table A

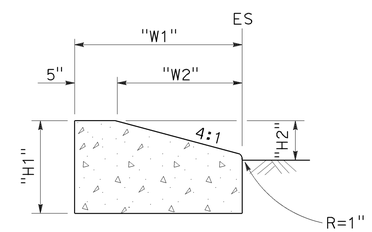


TYPE D CURBS

See Table A

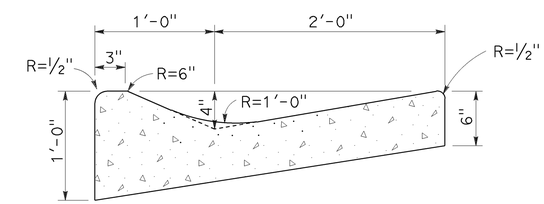


TYPE E CURB

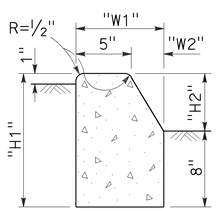


TYPE B1 CURBS

See Table A

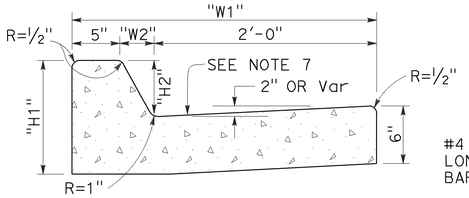


TYPE B2 CURBS

See Table A

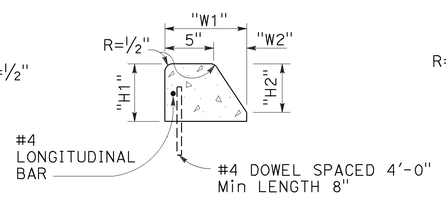


TYPE B3 CURBS

Superimposed on existing pavement
See Table A

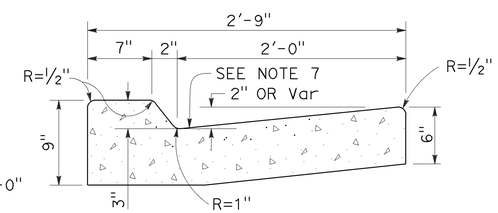


TYPE B4 CURBS

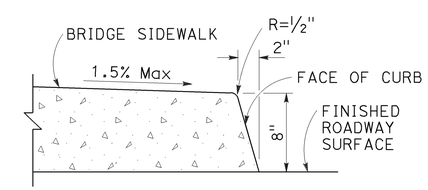


TYPE H CURB

On Bridges

CURBS

## TABLE A

| CURB TYPE | DIMENSIONS | | | |
|---|---|---|---|---|
| | "H1" | "H2" | "W1" | "W2" |
| A1-6 | 1'-2" | 6" | 7½" | 1½" |
| A1-8 | 1'-4" | 8" | 8" | 2" |
| A2-6 | 1'-0" | 6" | 2'-7½" | 1½" |
| A2-8 | 1'-2" | 8" | 2'-8" | 2" |
| A3-6 | 6" | 5" | 7¼" | 1¼" |
| A3-8 | 8" | 7" | 7¾" | 1¾" |
| B1-4 | 1'-0" | 4" | 7½" | 2½" |
| B1-6 | 1'-2" | 6" | 9" | 4" |
| B2-4 | 10" | 4" | 2'-7½" | 2½" |
| B2-6 | 1'-0" | 6" | 2'-9" | 4" |
| B3-4 | 4" | 3" | 7" | 2" |
| B3-6 | 6" | 5" | 8½" | 3½" |
| D-4 | 10" | 4" | 1'-6" | 1'-1" |
| D-6 | 1'-0" | 6" | 2'-2" | 1'-9" |

## CURB QUANTITIES

| TYPE | CUBIC YARDS PER LINEAR FOOT |
|---|---|
| A1-6 | 0.02585 |
| A1-8 | 0.03084 |
| A2-6 | 0.05903 |
| A2-8 | 0.06379 |
| A3-6 | 0.01036 |
| A3-8 | 0.01435 |
| B1-4 | 0.02185 |
| B1-6 | 0.02930 |
| B2-4 | 0.05515 |
| B2-6 | 0.06171 |
| B3-4 | 0.00641 |
| B3-6 | 0.01074 |
| B4 | 0.05709 |
| D-4 | 0.04083 |
| D-6 | 0.06804 |
| E | 0.06661 |

## NOTES:

1. Case A driveway section typically applies.
2. X=3'-0" except for curb heights over 10" where 4:1 slopes shall be used on curb slope.
3. Sidewalk and ramp thickness "T" at driveway shall be 4" for residental and 6" for commercial.
4. Difference in slope of the driveway ramp and the slope of a line between the gutter and a point on the roadway 5'-0" from gutter line shall not exceed 15%. Reduce driveway ramp slope, not gutter slope, where required.
5. Minimum width of clear passageway for sidewalk shall be 4'-2".
6. Retaining curbs and acquisition of construction easement may be necessary for narrow sidewalks or curb heights in excess of 6".
7. Across the pedestrian route at curb ramp locations, the gutter pan slope shall not exceed 1" of depth for each 2'-0" of width.

STATE OF CALIFORNIA
DEPARTMENT OF TRANSPORTATION

# CURBS AND DRIVEWAYS

NO SCALE

RSP A87A DATED JULY 19, 2013 SUPERSEDES STANDARD PLAN A87A
DATED MAY 20, 2011 - PAGE 119 OF THE STANDARD PLANS BOOK DATED 2010.

**REVISED STANDARD PLAN RSP A87A**

7-8-13

| Dist | COUNTY | ROUTE | POST MILES TOTAL PROJECT | SHEET No. | TOTAL SHEETS |
|---|---|---|---|---|---|
| 06 | Tul | 65 | R15.1/18.0 | 246 | 324 |

REGISTERED CIVIL ENGINEER

January 15, 2016
PLANS APPROVAL DATE

REGISTERED PROFESSIONAL ENGINEER
Michael Janzen
No. 44788
Exp. 3-31-16
CIVIL
STATE OF CALIFORNIA

*THE STATE OF CALIFORNIA OR ITS OFFICERS OR AGENTS SHALL NOT BE RESPONSIBLE FOR THE ACCURACY OR COMPLETENESS OF SCANNED COPIES OF THIS PLAN SHEET.*

TO ACCOMPANY PLANS DATED 6-20-16

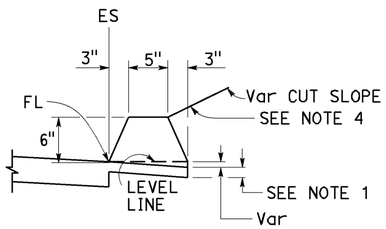


**TYPE A**
See Notes 3 and 5

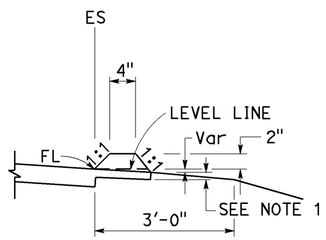


**TYPE C**

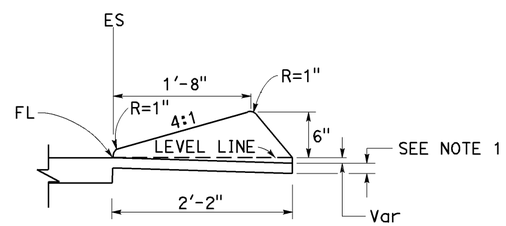


**TYPE D**

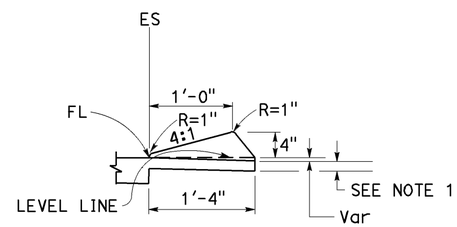


**TYPE E**

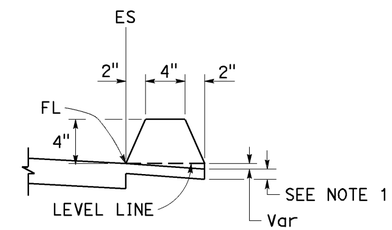


**TYPE F**
See Note 5

## DIKES

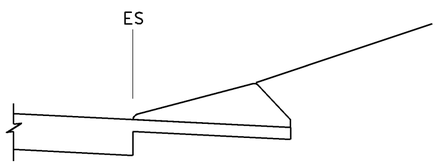


**CASE C-1**
Cut Slope

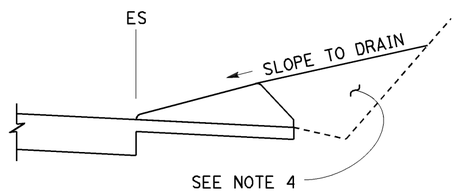


**CASE C-2**
Cut Slope

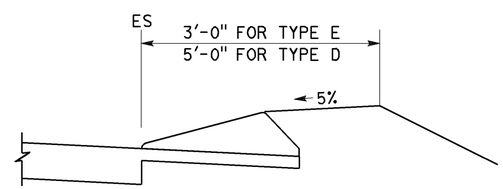


**CASE F**

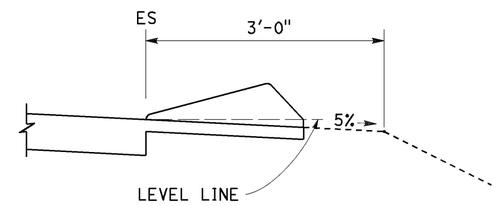


**CASE R**
See Note 2

## TYPE D AND E BACKFILL DETAILS

### NOTES:

1. For HMA shoulders only, extend top layer of HMA placed on the shoulder under dike with no joint at the ES. For projects with OGFC shoulders, do not extend OGFC under dike. See project plans for modified dike detail.
2. Case R applies to retrofit only projects where restrictive conditions do not provide enough width for Case F backfill.
3. Type A dike only to be used where restrictive slope conditions do not provide enough width to use Type D or Type E dike.
4. Fill and compact with excavated material to top of dike.
5. Use Type A or F dike, where dike is required with guardrail installations. See Revised Standard Plan RSP A77N4 for dike positioning details. See Revised Standard Plan RSP A77N3 for hinge point offsets with guardrail.

### DIKE QUANTITIES

| TYPE | CUBIC YARDS PER LINEAR FOOT |
|---|---|
| A | 0.0135 |
| C | 0.0038 |
| D | 0.0293 |
| E | 0.0130 |
| F | 0.0066 |

Quantities based on 5% cross slope.

STATE OF CALIFORNIA
DEPARTMENT OF TRANSPORTATION

# HOT MIX ASPHALT DIKES

NO SCALE

RSP A87B DATED JANUARY 15, 2016 SUPERSEDES RSP A87B DATED JULY 19, 2013 AND STANDARD PLAN A87B DATED MAY 20, 2011 - PAGE 120 OF THE STANDARD PLANS BOOK DATED 2010.

**REVISED STANDARD PLAN RSP A87B**

**2010 REVISED STANDARD PLAN RSP A87B**

11-17-15

| Dist | COUNTY | ROUTE | POST MILES TOTAL PROJECT | SHEET No. | TOTAL SHEETS |
|---|---|---|---|---|---|
| 06 | Tul | 65 | R15.1/18.0 | 247 | 324 |

REGISTERED CIVIL ENGINEER

July 15, 2016
PLANS APPROVAL DATE

REGISTERED PROFESSIONAL ENGINEER Hector David Cordova No. C41957 Exp. 3-31-18 CIVIL STATE OF CALIFORNIA

*THE STATE OF CALIFORNIA OR ITS OFFICERS OR AGENTS SHALL NOT BE RESPONSIBLE FOR THE ACCURACY OR COMPLETENESS OF SCANNED COPIES OF THIS PLAN SHEET.*

TO ACCOMPANY PLANS DATED 6-20-16

**2010 REVISED STANDARD PLAN RSP A88A**

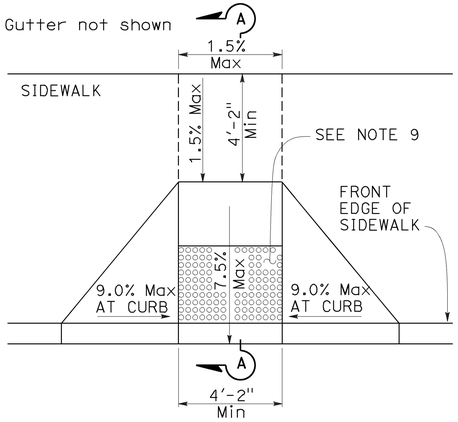


CASE A

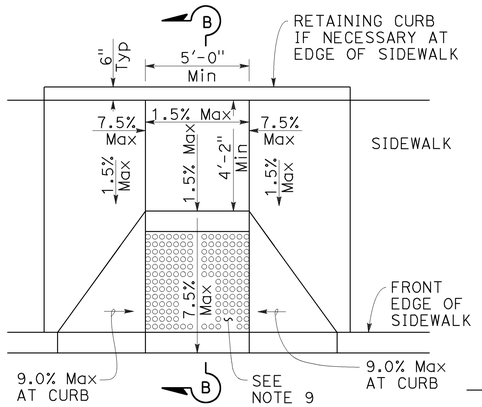


CASE B

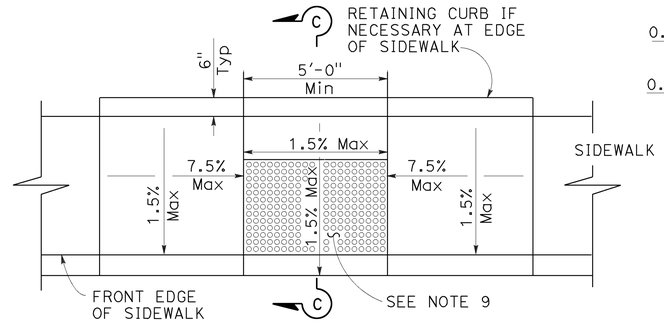


CASE C

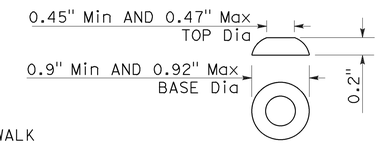


RAISED TRUNCATED DOME

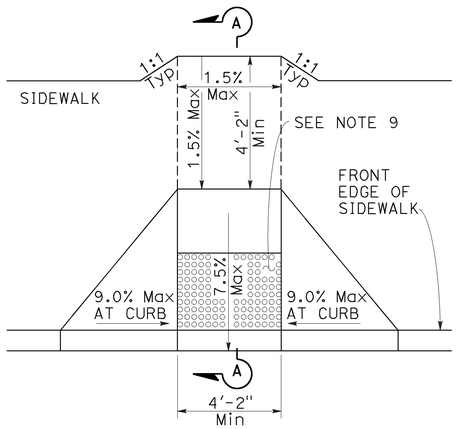


CASE D

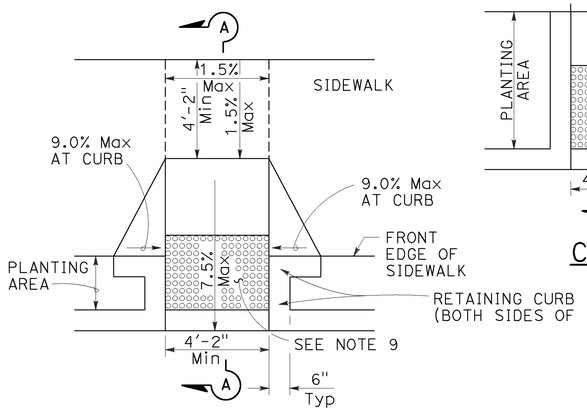


CASE E

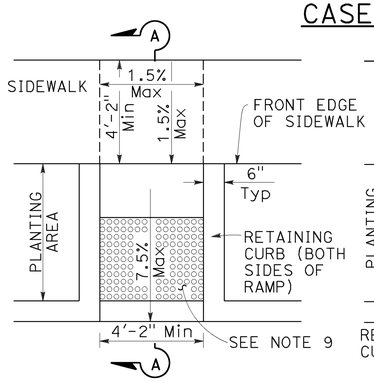


CASE F

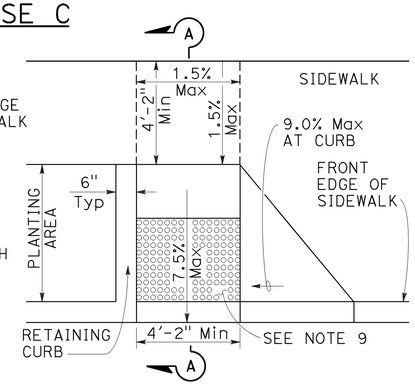


CASE G

See Note 4

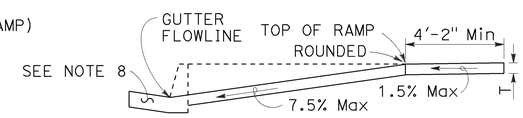


SECTION A-A

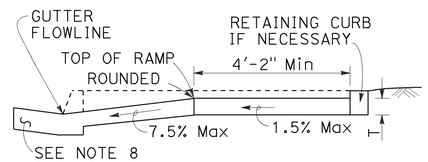


SECTION B-B

Depress entire sidewalk as required

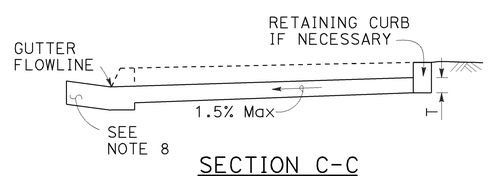


SECTION C-C

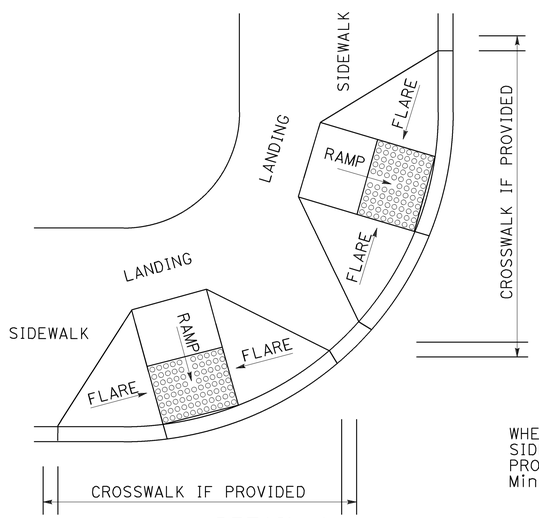


DETAIL A

TYPICAL TWO-RAMP CORNER INSTALLATION

See Note 1

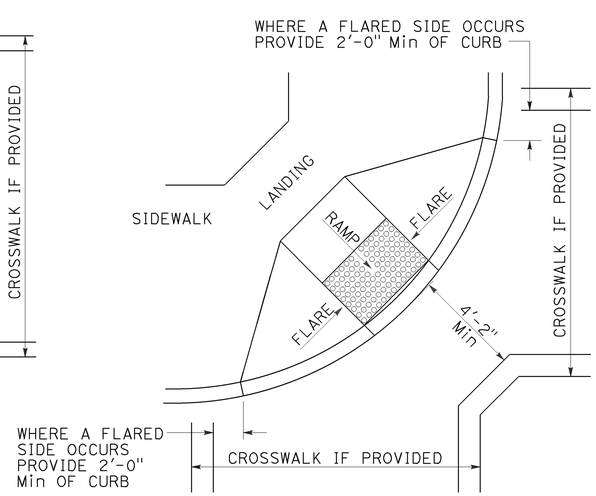


DETAIL B

TYPICAL ONE-RAMP CORNER INSTALLATION

See Notes 1 and 3

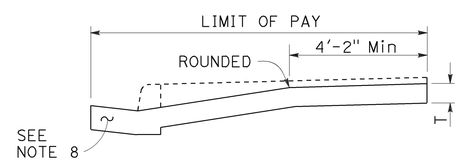


RETROFIT PAY LIMITS

Existing curb and sidewalk

## NOTES:

1. As site conditions dictate, Case A through Case G curb ramps may be used for corner installations similar to those shown in Detail A and Detail B. The case of curb ramps used in Detail A do not have to be the same. Case A through Case G curb ramps also may be used at mid block locations, as site conditions dictate.
2. If distance from curb to back of sidewalk is too short to accommodate ramp and 4'-2" platform (landing) as shown in Case A, the sidewalk may be depressed longitudinally as in Case B, or C or may be widened as in Case D.
3. When ramp is located in center of curb return, crosswalk configuration must be similar to that shown for Detail B.
4. As site conditions dictate, the retaining curb side and the flared side of the Case G ramp shall be constructed in reversed position.
5. If located on a curve, the sides of the ramp need not be parallel, but the minimum width of the ramp shall be 4'-2".
6. Side slope of ramp flares vary uniformly from a maximum of 9.0% at curb to conform with longitudinal sidewalk slope adjacent to top of the ramp, except in Case C and Case F.
7. The adjacent surfaces at transitions at curb ramps to walks, gutters, and streets shall be at the same level.
8. Counter slopes of adjoining gutters and road surfaces immediately adjacent to and within 24 inches of the curb ramp shall not be steeper than 1:20 (5.0%). Gutter pan slope shall not exceed 1" of depth for each 2'-0" of width.
9. Curb ramps shall have a detectable warning surface that extends the full width and 3'-0" depth of the ramp. A 4'-0" wide detectable warning surface may be used on a 4'-2" wide curb ramp. Detectable Warning Surfaces shall conform to the requirements in the Standard Specifications.
10. Sidewalk and ramp thickness, "T", shall be 3½" minimum.
11. Utility pull boxes, manholes, vaults and all other utility facilities within the boundaries of the curb ramp will be relocated or adjusted to grade by the owner prior to, or in conjunction with, curb ramp construction.
12. Detectable warning surface may have to be cut to allow removal of utility covers while maintaining full detectable warning width and depth.

RAISED TRUNCATED DOME PATTERN (IN-LINE)

DETECTABLE WARNING SURFACE

See Note 9

STATE OF CALIFORNIA
DEPARTMENT OF TRANSPORTATION

# CURB RAMP DETAILS

NO SCALE

RSP A88A DATED JULY 15, 2016 SUPERSEDES RSP A88A DATED JULY 3, 2015, RSP A88A DATED MARCH 21, 2014 AND RSP A88A DATED JULY 19, 2013 AND STANDARD PLAN A88A DATED MAY 20, 2011 - PAGE 121 OF THE STANDARD PLANS BOOK DATED 2010.

**REVISED STANDARD PLAN RSP A88A**

3-30-16

| Dist | COUNTY | ROUTE | POST MILES TOTAL PROJECT | SHEET No. | TOTAL SHEETS |
|---|---|---|---|---|---|
| 06 | Tul | 65 | R15.1/18.0 | 248 | 324 |

REGISTERED CIVIL ENGINEER

July 15, 2016
PLANS APPROVAL DATE

REGISTERED PROFESSIONAL ENGINEER
Hector David Cordova
No. C41957
Exp. 3-31-18
CIVIL
STATE OF CALIFORNIA

*THE STATE OF CALIFORNIA OR ITS OFFICERS OR AGENTS SHALL NOT BE RESPONSIBLE FOR THE ACCURACY OR COMPLETENESS OF SCANNED COPIES OF THIS PLAN SHEET.*

TO ACCOMPANY PLANS DATED 6-20-16

Gutter not shown

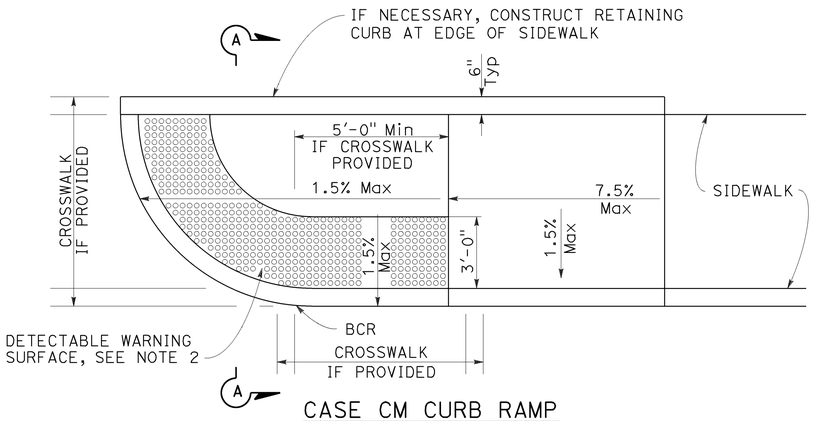


CASE CM CURB RAMP

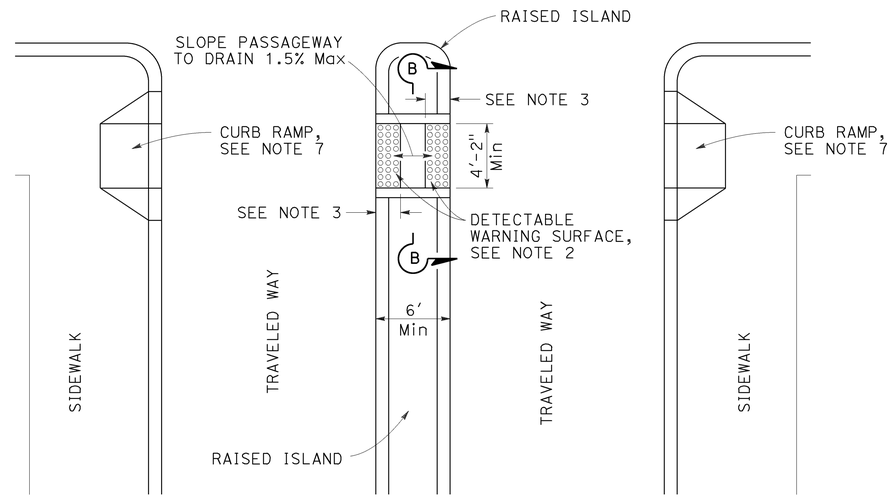


TYPE A PASSAGEWAY

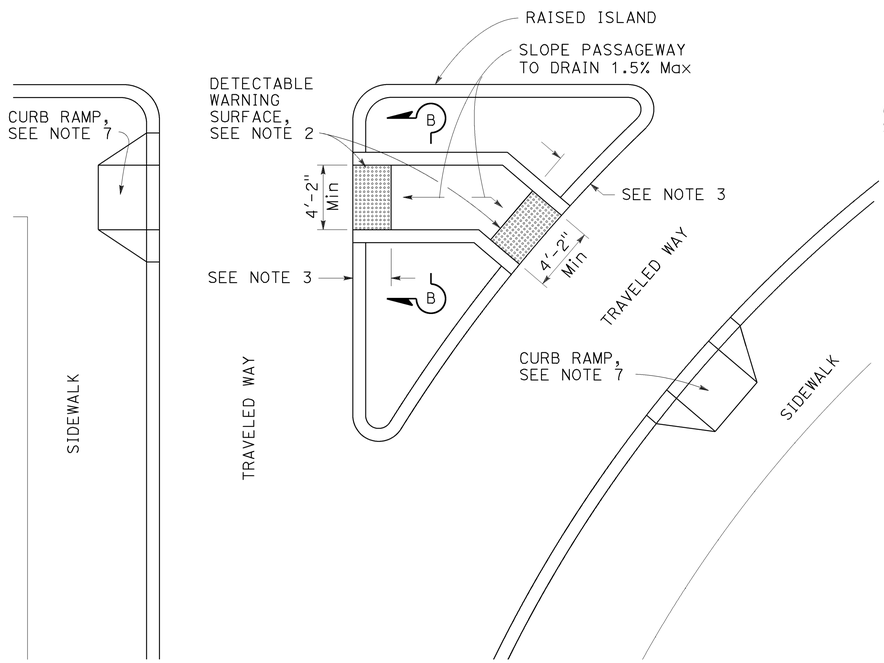


TYPE B PASSAGEWAY

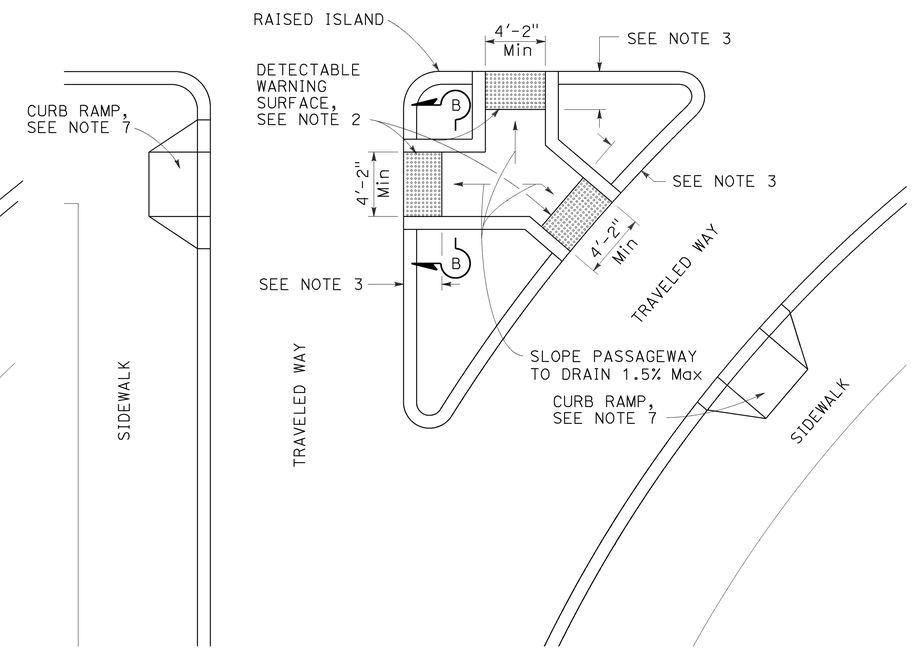


TYPE C PASSAGEWAY

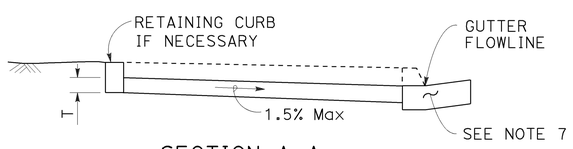


SECTION A-A

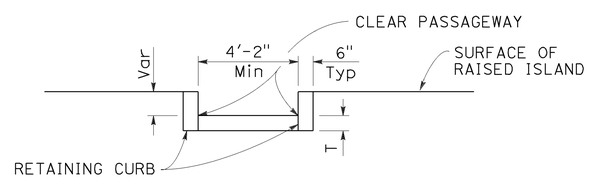


SECTION B-B

## NOTES:

1. Sidewalk, ramp and passageway thickness, "T", shall be 3½" minimum.
2. For details of detectable warning surfaces, see Revised Standard Plan RSP A88A.
3. Where an island passageway length is greater than or equal to 6'-0", but less than 8'-0", each detectable warning surface shall extend the full width and 2'-0" depth of the passageway length. Where an island passageway length is greater than or equal to 8'-0", each detectable warning surface shall extend the full width and 3'-0" depth of the passageway length. A 4'-0" wide detectable warning surface may be used on a 4'-2" wide island passageway.
4. The adjacent surfaces at transitions at curb ramps to walks, gutters, and streets shall be at the same level.
5. Utility pull boxes, manholes, vaults and all other utility facilities within the boundaries of the curb ramp will be relocated or adjusted to grade by the owner prior to, or in conjunction with, curb ramp construction.
6. Detectable warning surface may have to be cut to allow removal of utility covers while maintaining full detectable warning width and depth.
7. For additional curb ramp details, see Revised Standard Plan RSP A88A.

STATE OF CALIFORNIA
DEPARTMENT OF TRANSPORTATION

# CURB RAMP AND ISLAND PASSAGEWAY DETAILS

NO SCALE

RSP A88B DATED JULY 15, 2016 SUPERSEDES RSP A88B DATED JULY 3, 2015, RSP A88B DATED MARCH 21, 2014 AND RSP A88B DATED JULY 19, 2013 AND STANDARD PLAN A88B DATED MAY 20, 2011 - PAGE 122 OF THE STANDARD PLANS BOOK DATED 2010.

**REVISED STANDARD PLAN RSP A88B**

**2010 REVISED STANDARD PLAN RSP A88B**

3-29-16

| Dist | COUNTY | ROUTE | POST MILES TOTAL PROJECT | SHEET No. | TOTAL SHEETS |
|---|---|---|---|---|---|
| 06 | Tul | 65 | R15.1/18.0 | 249 | 324 |

William K. Farnbach
REGISTERED CIVIL ENGINEER

July 19, 2013
PLANS APPROVAL DATE

REGISTERED PROFESSIONAL ENGINEER
William K. Farnbach
No. C49042
Exp. 9-30-14
CIVIL
STATE OF CALIFORNIA

*THE STATE OF CALIFORNIA OR ITS OFFICERS OR AGENTS SHALL NOT BE RESPONSIBLE FOR THE ACCURACY OR COMPLETENESS OF SCANNED COPIES OF THIS PLAN SHEET.*

TO ACCOMPANY PLANS DATED 6-20-16

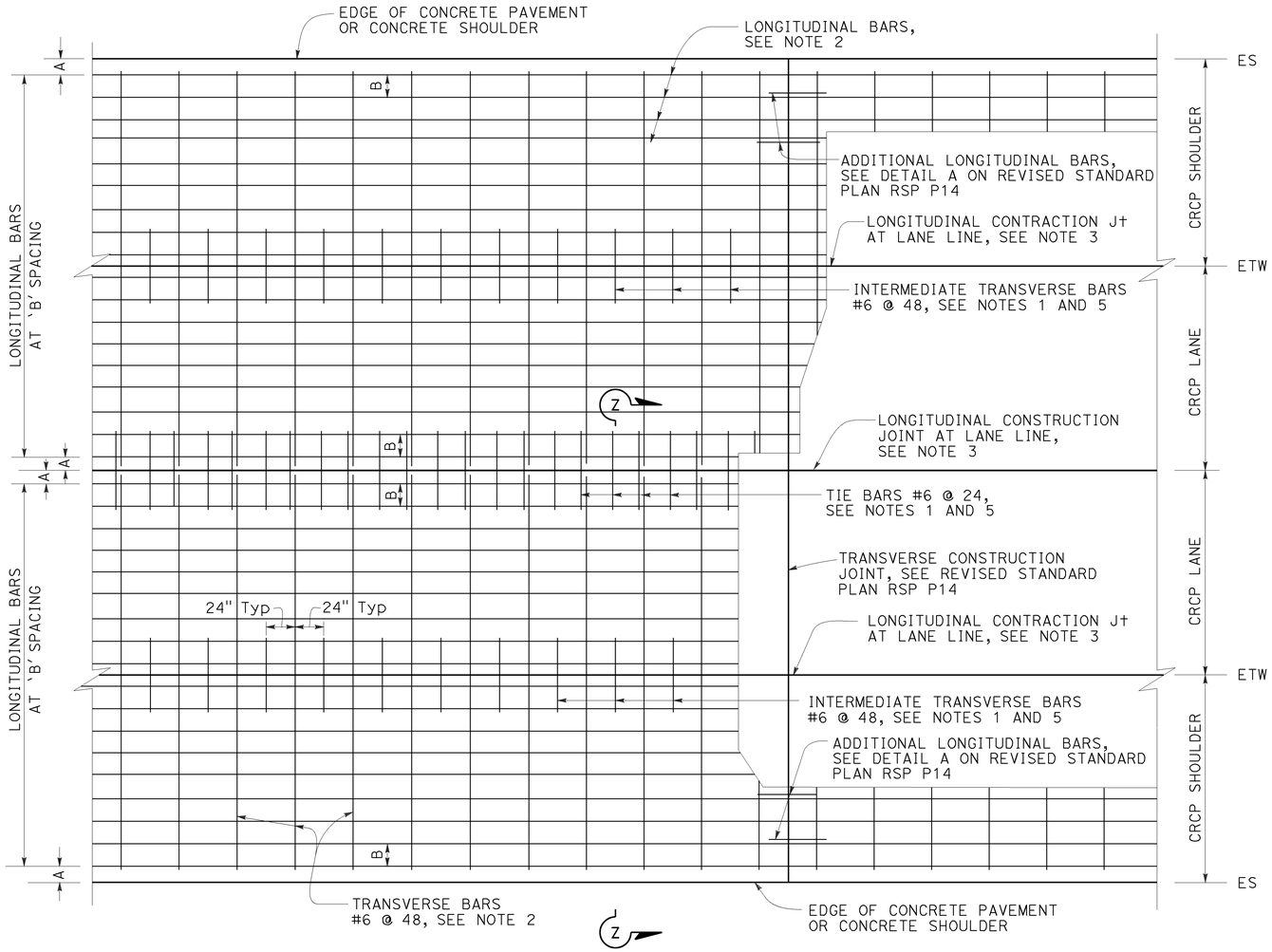


PLAN

See Note 4

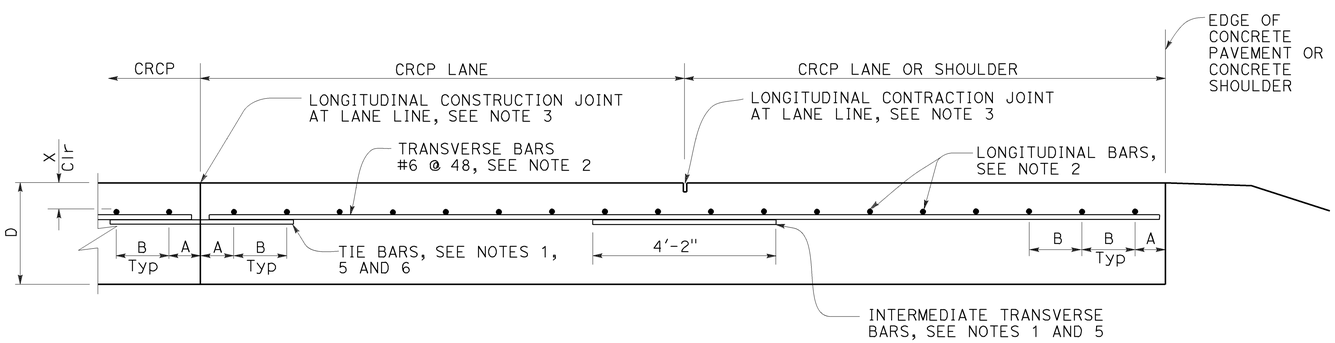


SECTION Z-Z

| TABLE No. 1 LONGITUDINAL BAR REINFORCEMENT | | | | | |
|---|---|---|---|---|---|
| SLAB THICKNESS AND BAR SIZE | | FIRST SPACING AT EDGE OR JOINT | REGULAR BARS | ADDITIONAL BARS AT TRANSVERSE CONSTRUCTION JOINT | Clr |
| D | BAR SIZE | SPACING A | SPACING B | SPACING 2 x B | X |
| .75′ | #6 | 3" TO 4" | 8.0" | 16" | 4" |
| .80′ | #6 | 3" TO 4" | 7.5" | 15" | 4" |
| .85′ | #6 | 3" TO 4" | 7.0" | 14" | 4" |
| .90′ | #6 | 3" TO 4" | 6.5" | 13" | 4" |
| .95′ | #6 | 3" TO 4" | 6.25" | 12.5" | 4" |
| 1.00′ | #6 | 3" TO 4" | 6.0" | 12" | 5" |
| 1.05′ | #6 | 3" TO 4" | 5.75" | 11.5" | 5" |
| 1.10′ | #6 | 3" TO 4" | 5.5" | 11" | 5.5" |

NOTES:

1. Place transverse tie bars and intermediate transvese bars parallel to and in the same plane as transverse bars.
2. The length of lap splices for bar reinforcement must be at least 25".
3. For longitudinal contraction and construction joint details, see Revised Standard Plan RSP P16.
4. For curved lane layout see Revised Standard Plan RSP P16.
5. For tie bar and intermediate transverse bar details see Revised Standard Plan RSP P16.

STATE OF CALIFORNIA
DEPARTMENT OF TRANSPORTATION

# CONTINUOUSLY REINFORCED CONCRETE PAVEMENT

NO SCALE

RSP P4 DATED JULY 19, 2013 SUPERSEDES RSP P4 DATED APRIL 20, 2012 AND STANDARD PLAN P4 DATED MAY 20, 2011 - PAGE 128 OF THE STANDARD PLANS BOOK DATED 2010.

# REVISED STANDARD PLAN RSP P4

2010 REVISED STANDARD PLAN RSP P4

5-31-13

| Dist | COUNTY | ROUTE | POST MILES TOTAL PROJECT | SHEET No. | TOTAL SHEETS |
|---|---|---|---|---|---|
| 06 | Tul | 65 | R15.1/18.0 | 250 | 324 |

William K. Farnbach
REGISTERED CIVIL ENGINEER

July 19, 2013
PLANS APPROVAL DATE

REGISTERED PROFESSIONAL ENGINEER
William K. Farnbach
No. C49042
Exp. 9-30-14
CIVIL
STATE OF CALIFORNIA

*THE STATE OF CALIFORNIA OR ITS OFFICERS OR AGENTS SHALL NOT BE RESPONSIBLE FOR THE ACCURACY OR COMPLETENESS OF SCANNED COPIES OF THIS PLAN SHEET.*

TO ACCOMPANY PLANS DATED 6-20-16

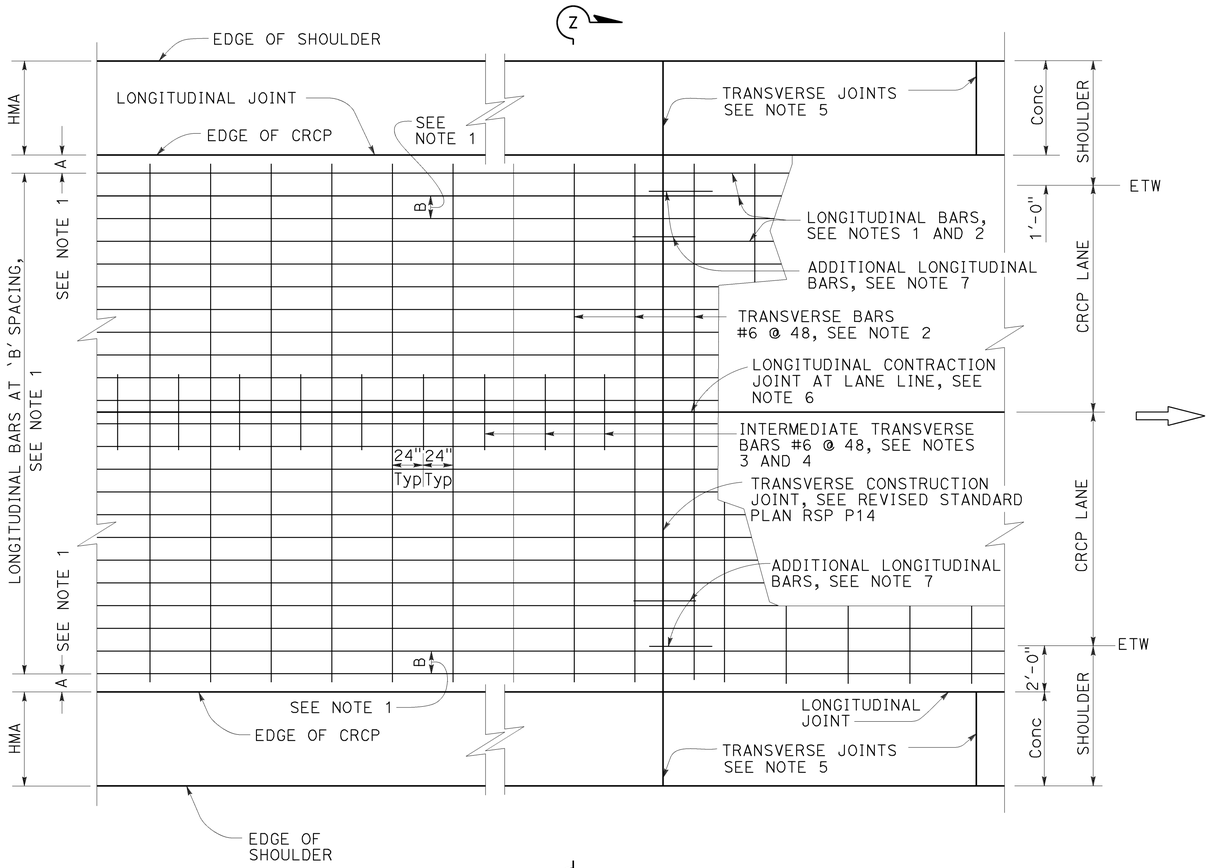


PLAN
See Note 8

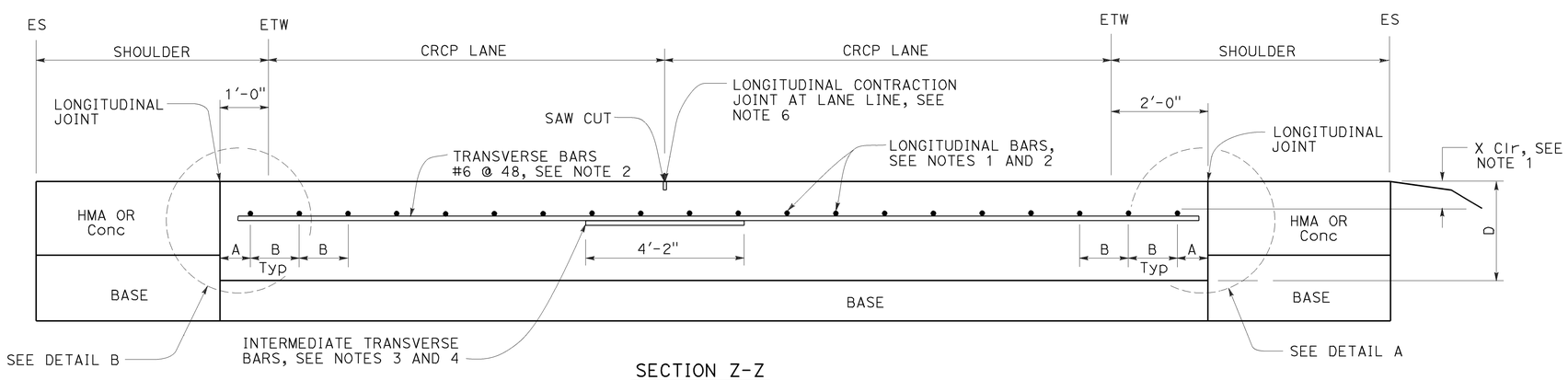


SECTION Z-Z

## NOTES:

1. For longitudinal bar size, spacing and clearances, see Revised Standard Plan RSP P4.
2. The length of lap splices for bar reinforcement must be at least 25".
3. For tie bar and intermediate transverse bar details, see Revised Standard Plan RSP P16.
4. Place Intermediate transverse bars parallel to and in the same plane as transverse bars.
5. Construct transverse joints at right angle to the longitudinal joints in adjacent CRCP. Space joints at no less than 10' intervals and no more than 14' intervals. Match location of JPCP transverse joint with CRCP transverse construction joint, expansion joint or wide flange beam. Omit dowel bars.
6. For longitudinal contraction and construction joint details, see Revised Standard Plan RSP P16.
7. For additional longitudinal bars detail, see Detail A on Revised Standard Plans RSP P14.
8. For longitudinal construction joint plan layout not shown, see Revised Standard Plan RSP P4. For tie bar details at longitudinal construction joint, see Revised Standard Plan RSP P16.
9. For limits of rumble strips, see Project Plans.

## ABBREVIATION:

D = Thickness of CRCP

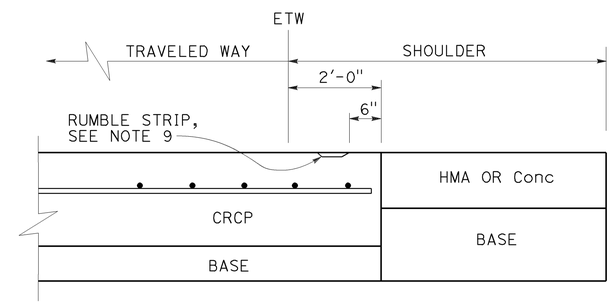


DETAIL A

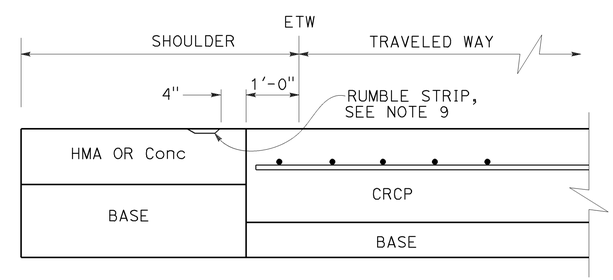


DETAIL B

STATE OF CALIFORNIA
DEPARTMENT OF TRANSPORTATION

# CONTINUOUSLY REINFORCED CONCRETE PAVEMENT (WIDENED LANE)

NO SCALE

RSP P5A DATED JULY 19, 2013 SUPPLEMENTS THE STANDARD PLANS BOOK DATED 2010.

# REVISED STANDARD PLAN RSP P5A

2010 REVISED STANDARD PLAN RSP P5A

5-31-13

| Dist | COUNTY | ROUTE | POST MILES TOTAL PROJECT | SHEET No. | TOTAL SHEETS |
|---|---|---|---|---|---|
| 06 | Tul | 65 | R15.1/18.0 | 251 | 324 |

William K. Farnbach
REGISTERED CIVIL ENGINEER

July 19, 2013
PLANS APPROVAL DATE

REGISTERED PROFESSIONAL ENGINEER
William K. Farnbach
No. C49042
Exp. 9-30-14
CIVIL
STATE OF CALIFORNIA

*THE STATE OF CALIFORNIA OR ITS OFFICERS OR AGENTS SHALL NOT BE RESPONSIBLE FOR THE ACCURACY OR COMPLETENESS OF SCANNED COPIES OF THIS PLAN SHEET.*

TO ACCOMPANY PLANS DATED 6-20-16

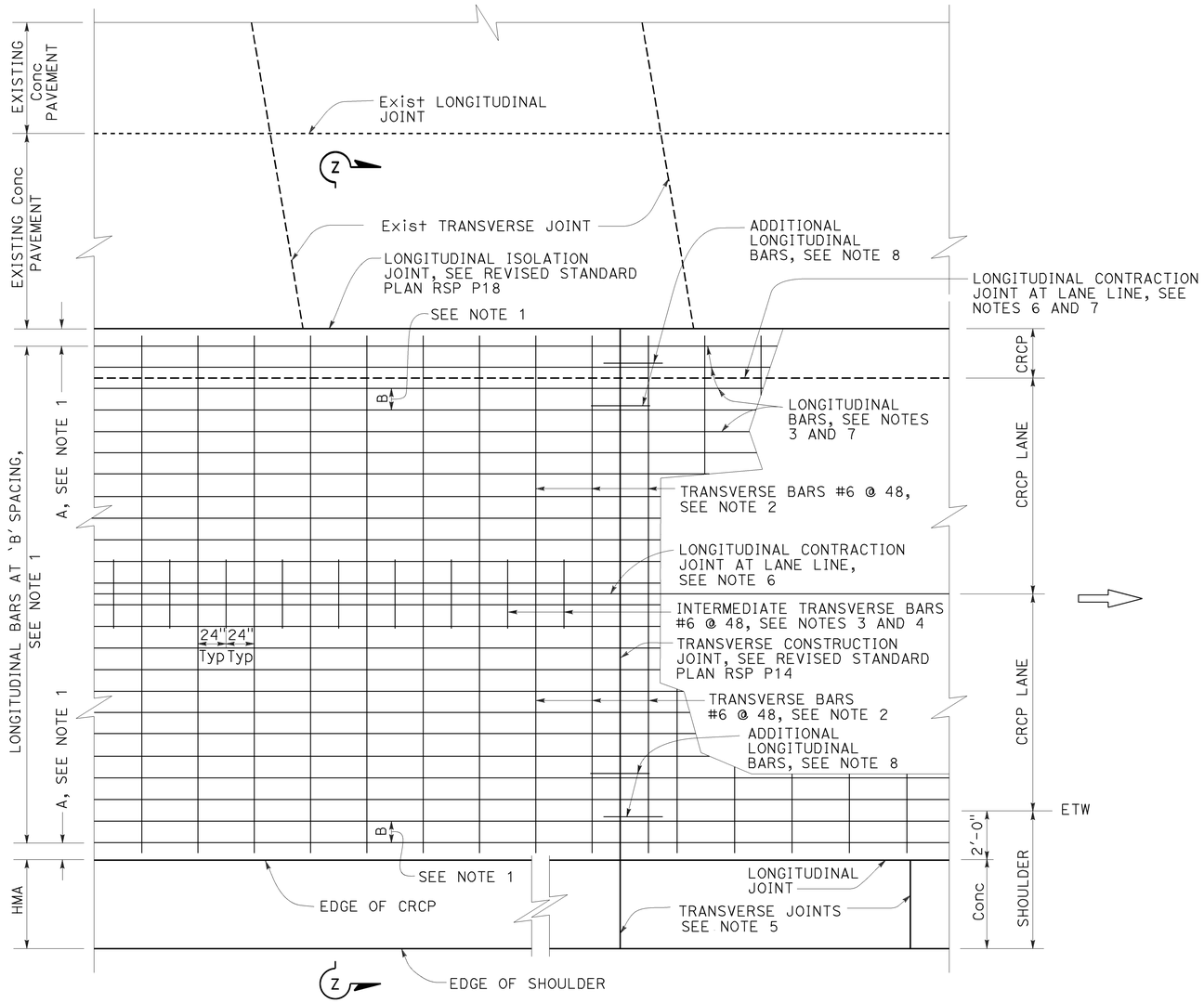


PLAN
See Note 9

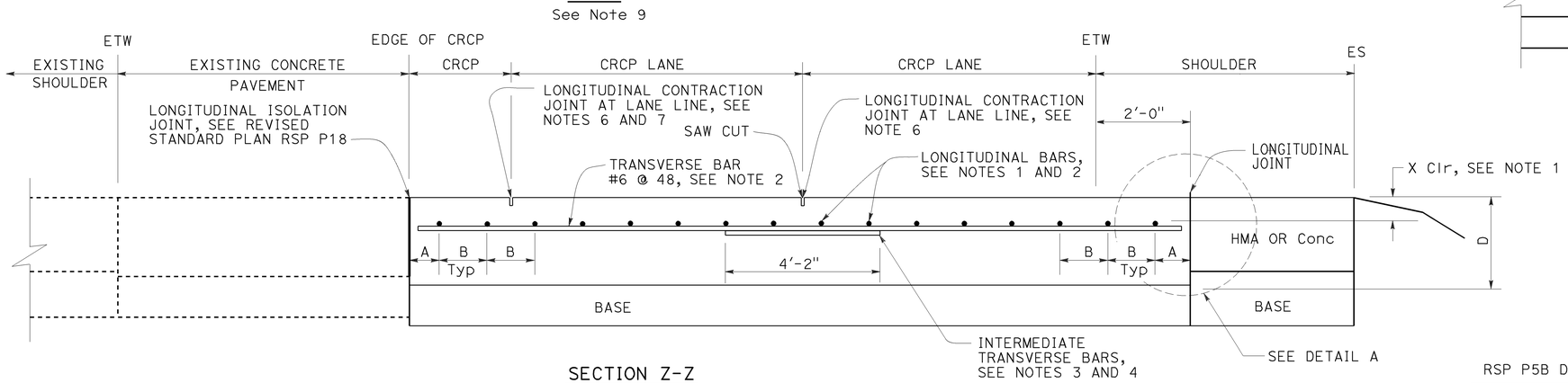


SECTION Z-Z

## NOTES:

1. For longitudinal bar size, spacing and clearances, see Revised Standard Plan RSP P4.
2. The length of lap splices for bar reinforcement must be at least 25".
3. For tie bar and intermediate transverse bar details, see Revised Standard Plan RSP P16.
4. Place Intermediate transverse bars parallel to and in the same plane as transverse bars.
5. Construct transverse joints at right angle to the longitudinal joints in adjacent CRCP. Space joints at no less than 10′ intervals and no more than 14′ intervals. Match location of JPCP transverse joint with CRCP transverse construction joint, expansion joint or wide flange beam. Omit dowel bars.
6. For longitudinal contraction and construction joint details, see Revised Standard Plan RSP P16.
7. Do not construct longitudinal contraction joint when edge of new CRCP is less than 3′-3" from lane line.
8. For additional longitudinal bars detail, see Detail A on Revised Standard Plan RSP P14.
9. For longitudinal construction joint plan layout not shown, see Revised Standard Plan RSP P4. For tie bar details at longitudinal construction joint, see Revised Standard Plan RSP P16.
10. For limits of rumble strips, see Project Plans.

## ABBREVIATION:

D = Thickness of CRCP

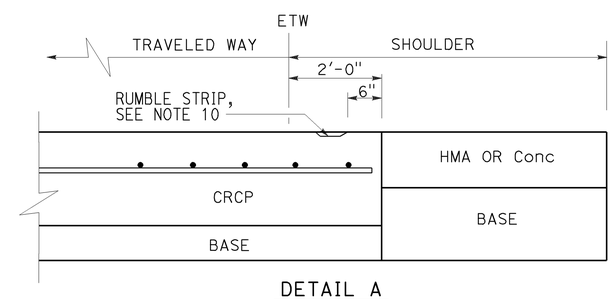


DETAIL A

STATE OF CALIFORNIA
DEPARTMENT OF TRANSPORTATION

# CONTINUOUSLY REINFORCED CONCRETE PAVEMENT (WIDENED LANE) LANE AND SHOULDER ADDITION OR REPLACEMENT

NO SCALE

RSP P5B DATED JULY 19, 2013 SUPPLEMENTS THE STANDARD PLANS BOOK DATED 2010.

# REVISED STANDARD PLAN RSP P5B

2010 REVISED STANDARD PLAN RSP P5B

5-31-13

| Dist | COUNTY | ROUTE | POST MILES TOTAL PROJECT | SHEET No. | TOTAL SHEETS |
|---|---|---|---|---|---|
| 06 | Tul | 65 | R15.1/18.0 | 252 | 324 |

William K. Farnbach
REGISTERED CIVIL ENGINEER

July 19, 2013
PLANS APPROVAL DATE

REGISTERED PROFESSIONAL ENGINEER
William K. Farnbach
No. C49042
Exp. 9-30-14
CIVIL
STATE OF CALIFORNIA

*THE STATE OF CALIFORNIA OR ITS OFFICERS OR AGENTS SHALL NOT BE RESPONSIBLE FOR THE ACCURACY OR COMPLETENESS OF SCANNED COPIES OF THIS PLAN SHEET.*

TO ACCOMPANY PLANS DATED 6-20-16

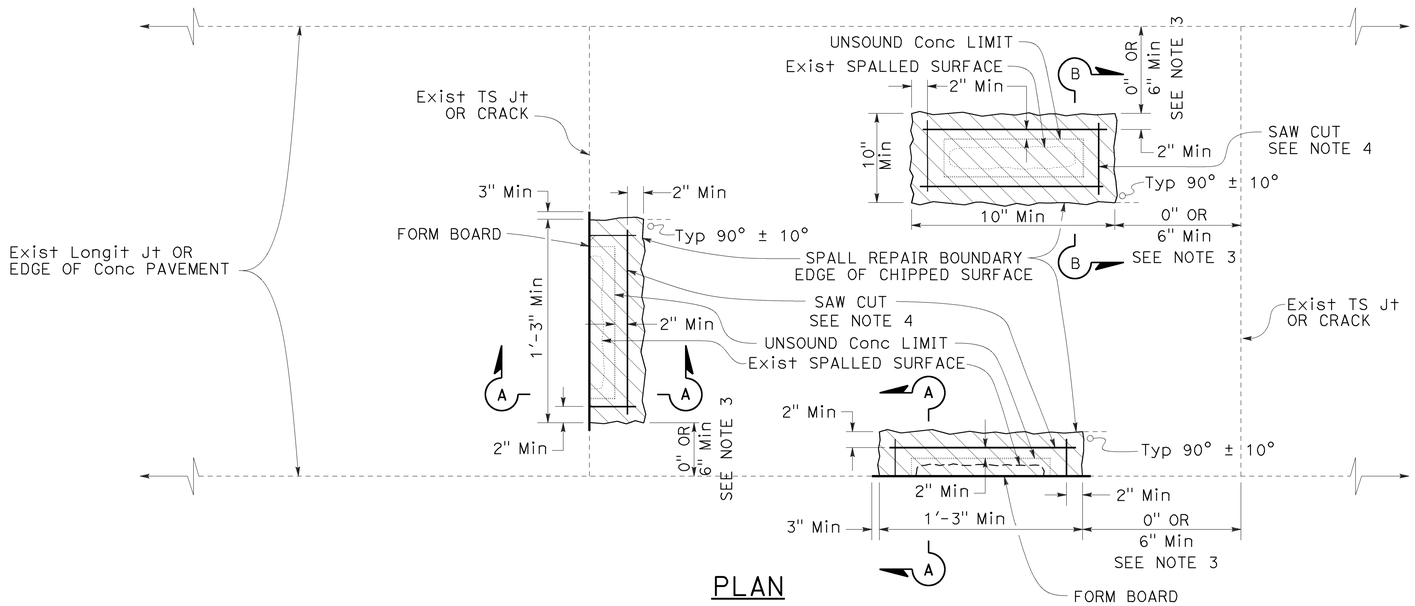


PLAN

## LEGEND

SPALL REPAIR

## NOTES:

1. See Project Plans for spall repair locations.
2. Combine spall repair areas closer than 2' apart.
3. If the spall repair area is less than 6" from a joint, extend the repair to the joint.
4. Cut at least 2" beyond the rectangular limits of unsound concrete determined by the Engineer. Determine the saw cut depth using the following table:

| Conc MATERIAL | SAW CUT DEPTH | |
|---|---|---|
| | Min | Max |
| FAST-SETTING | 2" | 3½" |
| POLYESTER | 1½" | 3½" |

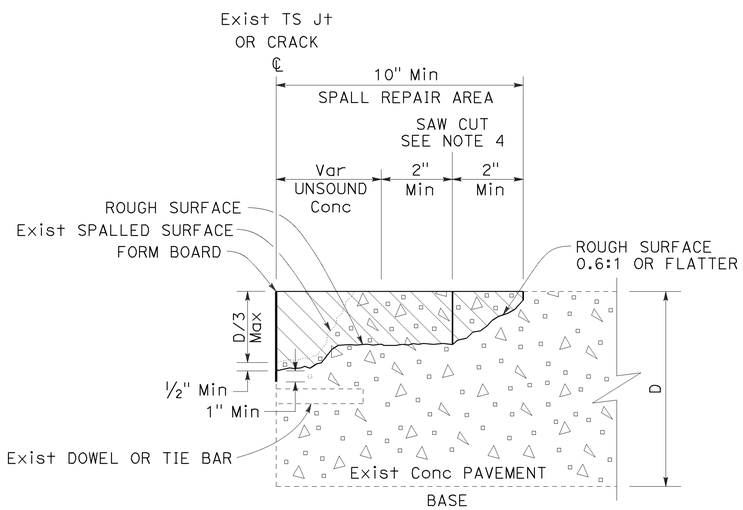


SECTION A-A

JOINT, CRACK, OR EDGE OF CONCRETE PAVEMENT REPAIR

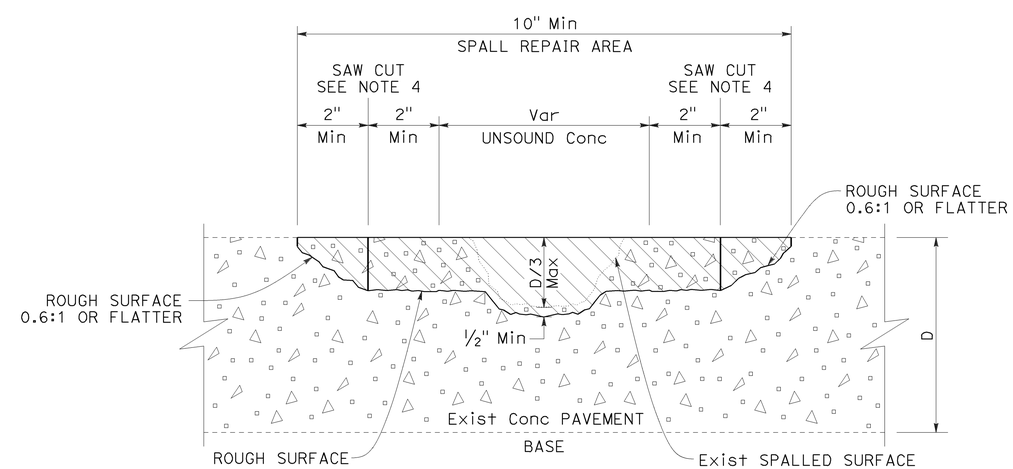


SECTION B-B

MISCELLANEOUS SPALL REPAIR

STATE OF CALIFORNIA
DEPARTMENT OF TRANSPORTATION

**SPALL REPAIR**

NO SCALE

RSP P6 DATED JULY 19, 2013 SUPPLEMENTS THE STANDARD PLANS BOOK DATED 2010.

**REVISED STANDARD PLAN RSP P6**

**2010 REVISED STANDARD PLAN RSP P6**

5-31-13

| Dist | COUNTY | ROUTE | POST MILES TOTAL PROJECT | SHEET No. | TOTAL SHEETS |
|---|---|---|---|---|---|
| 06 | Tul | 65 | R15.1/18.0 | 253 | 324 |

REGISTERED CIVIL ENGINEER

October 30, 2015
PLANS APPROVAL DATE

REGISTERED PROFESSIONAL ENGINEER
Florante E. Bautista
No. C54859
Exp. 6-30-16
CIVIL
STATE OF CALIFORNIA

*THE STATE OF CALIFORNIA OR ITS OFFICERS OR AGENTS SHALL NOT BE RESPONSIBLE FOR THE ACCURACY OR COMPLETENESS OF SCANNED COPIES OF THIS PLAN SHEET.*

TO ACCOMPANY PLANS DATED 6-20-16

**2010 REVISED STANDARD PLAN RSP P13**

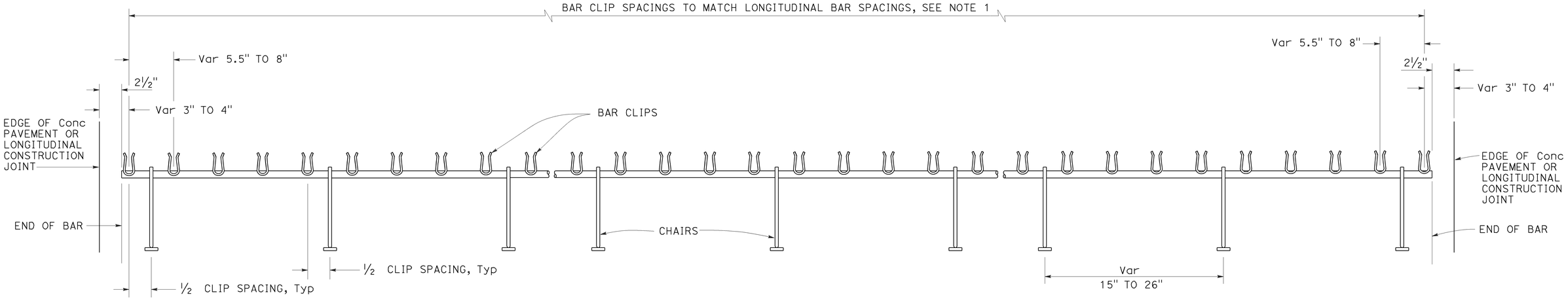


## TRANSVERSE BAR ASSEMBLY

NOTES:

1. See Revised Standard Plan RSP P4 for spacing of longitudinal bars.
2. Tensile strength of chair shall be at least 50,000 psi.
3. Wire sizes shown are minimum required.
4. For concrete cover (X), see Table 1 in Revised Standard Plan RSP P4.

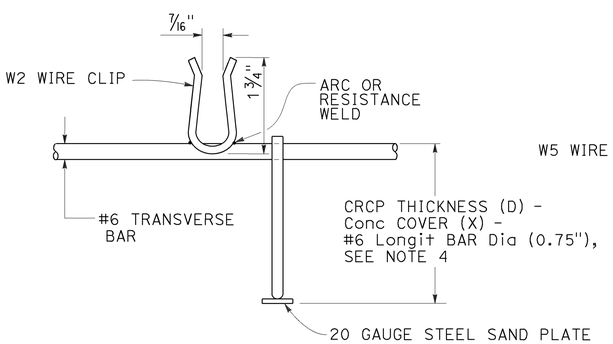


## #6 BAR CLIP DETAIL

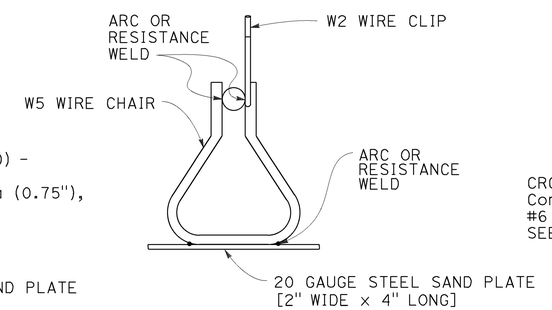


## CHAIR DETAIL

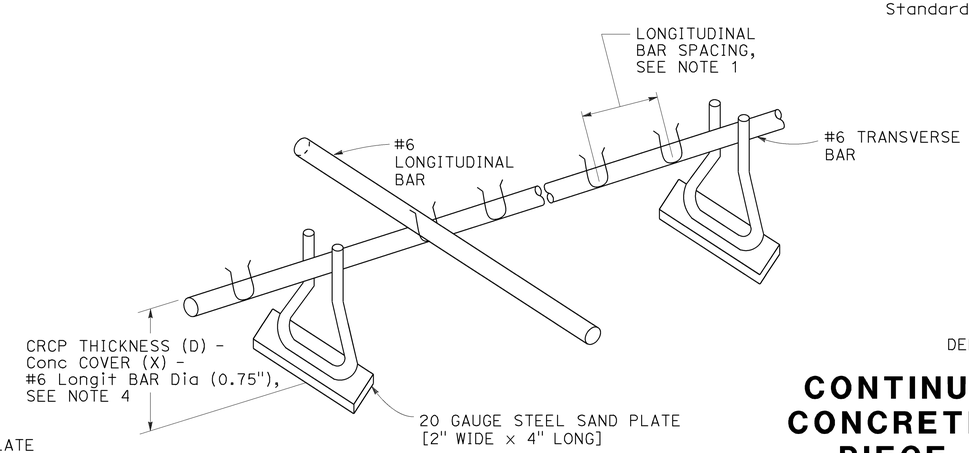


## ISOMETRIC VIEW OF CHAIR ASSEMBLY

STATE OF CALIFORNIA
DEPARTMENT OF TRANSPORTATION

# CONTINUOUSLY REINFORCED CONCRETE PAVEMENT-SINGLE PIECE TRANSVERSE BAR ASSEMBLY

NO SCALE

RSP P13 DATED OCTOBER 30, 2015 SUPERSEDES RSP P13 DATED OCTOBER 19, 2012 AND STANDARD PLAN P13 DATED MAY 20, 2011 - PAGE 133 OF THE STANDARD PLANS BOOK DATED 2010.

**REVISED STANDARD PLAN RSP P13**

10-7-15

| Dist | COUNTY | ROUTE | POST MILES TOTAL PROJECT | SHEET No. | TOTAL SHEETS |
|---|---|---|---|---|---|
| 06 | Tul | 65 | R15.1/18.0 | 254 | 324 |

William K. Farnbach
REGISTERED CIVIL ENGINEER

July 19, 2013
PLANS APPROVAL DATE

REGISTERED PROFESSIONAL ENGINEER
William K. Farnbach
No. C49042
Exp. 9-30-14
CIVIL
STATE OF CALIFORNIA

*THE STATE OF CALIFORNIA OR ITS OFFICERS OR AGENTS SHALL NOT BE RESPONSIBLE FOR THE ACCURACY OR COMPLETENESS OF SCANNED COPIES OF THIS PLAN SHEET.*

TO ACCOMPANY PLANS DATED 6-20-16

## NOTES:

1. For longitudinal bar size, spacing and clearances, see Table 1 on Revised Standard Plan RSP P4.
2. The length of lap splices for bar reinforcement must be at least 25".
3. For tie bars in longitudinal construction joint, see Revised Standard Plan RSP P16.
4. Place additional longitudinal bars parallel to and in the same plane as the longitudinal bars.
5. Place additional longitudinal bars symmetrically about longitudinal construction joint.

## ABBREVIATION

D = Thickness of CRCP

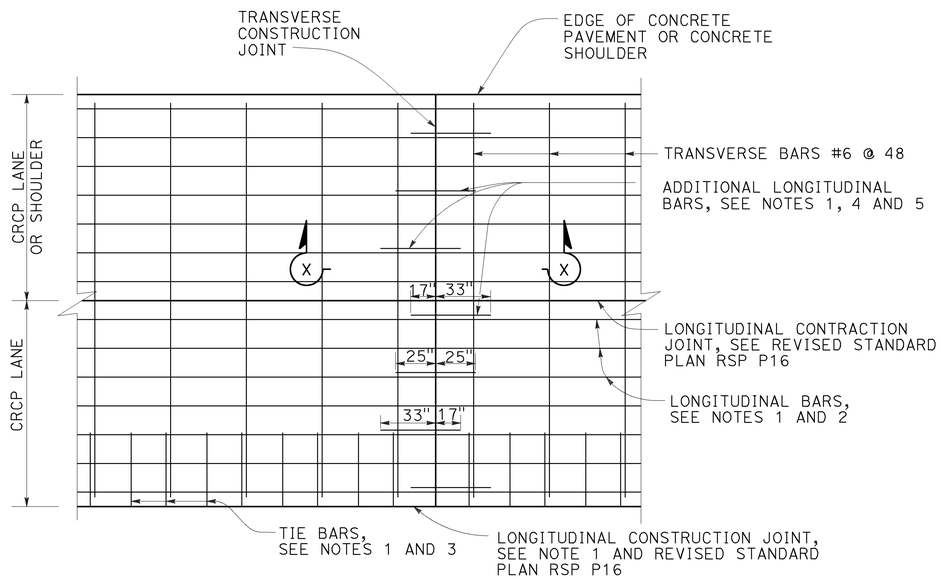


DETAIL A

Additional longitudinal bars at transverse construction joint

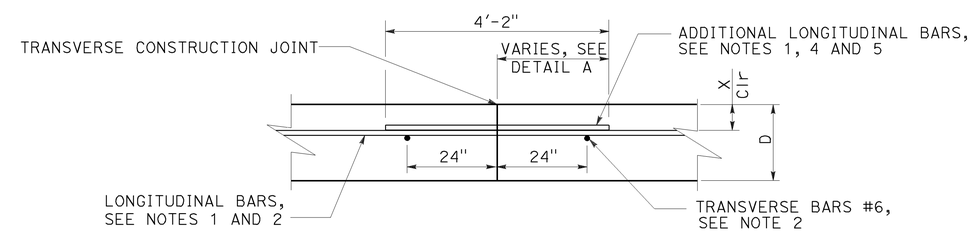


SECTION X-X

TRANSVERSE CONSTRUCTION JOINT

STATE OF CALIFORNIA
DEPARTMENT OF TRANSPORTATION

# CONTINUOUSLY REINFORCED CONCRETE PAVEMENT TRANSVERSE CONSTRUCTION JOINT

NO SCALE

RSP P14 DATED JULY 19, 2013 SUPPLEMENTS THE STANDARD PLANS BOOK DATED 2010.

**REVISED STANDARD PLAN RSP P14**

**2010 REVISED STANDARD PLAN RSP P14**

5-31-13

| Dist | COUNTY | ROUTE | POST MILES TOTAL PROJECT | SHEET No. | TOTAL SHEETS |
|---|---|---|---|---|---|
| 06 | Tul | 65 | R15.1/18.0 | 255 | 324 |

William K. Farnbach
REGISTERED CIVIL ENGINEER

July 19, 2013
PLANS APPROVAL DATE

REGISTERED PROFESSIONAL ENGINEER William K. Farnbach No. C49042 Exp. 9-30-14 CIVIL STATE OF CALIFORNIA

*THE STATE OF CALIFORNIA OR ITS OFFICERS OR AGENTS SHALL NOT BE RESPONSIBLE FOR THE ACCURACY OR COMPLETENESS OF SCANNED COPIES OF THIS PLAN SHEET.*

TO ACCOMPANY PLANS DATED 6-20-16

**2010 REVISED STANDARD PLAN RSP P15**

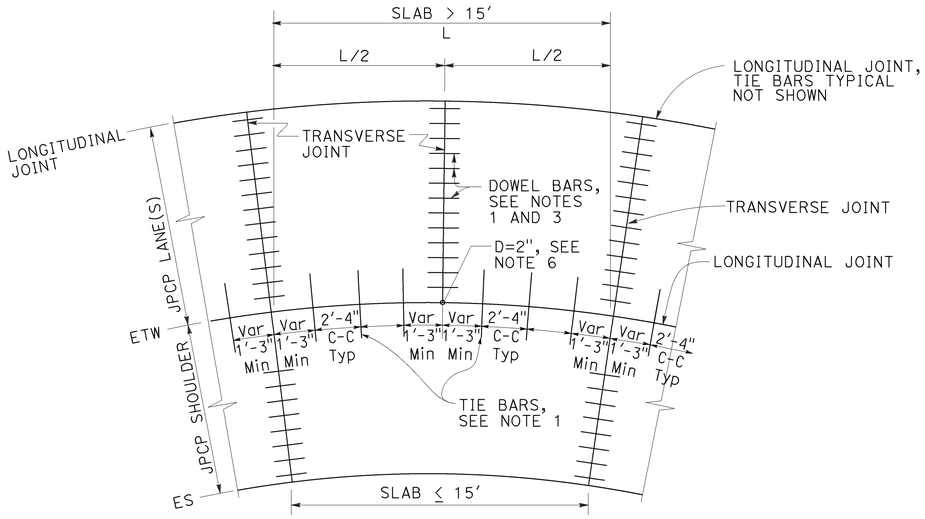


## TIE BAR LAYOUT IN CURVED LANES

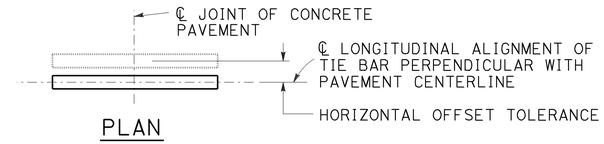


PLAN

## HORIZONTAL OFFSET TOLERANCE

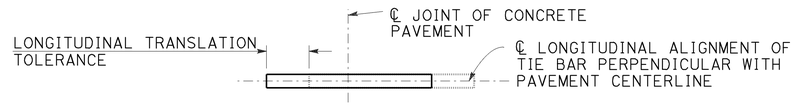


PLAN

## LONGITUDINAL TRANSLATION TOLERANCE

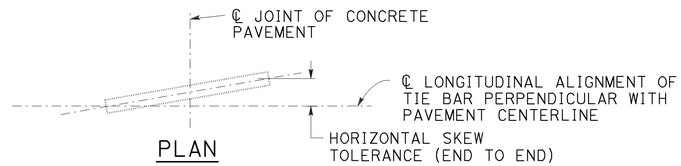


PLAN

## HORIZONTAL SKEW TOLERANCE

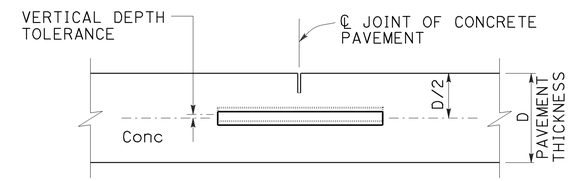


ELEVATION

## VERTICAL DEPTH TOLERANCE

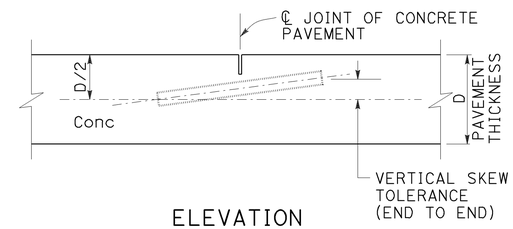


ELEVATION

## VERTICAL SKEW TOLERANCE

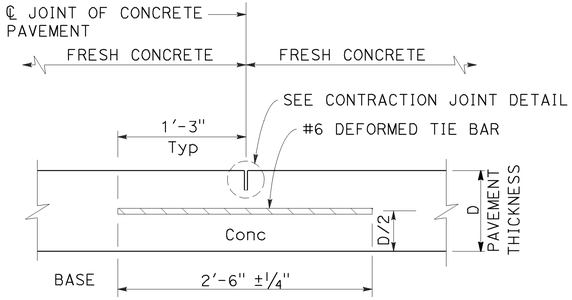


## LONGITUDINAL CONTRACTION JOINT

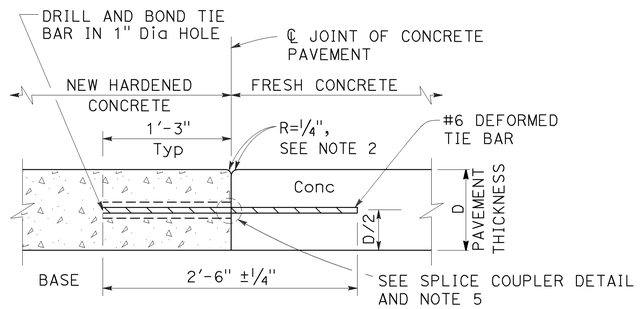


## LONGITUDINAL CONSTRUCTION JOINT

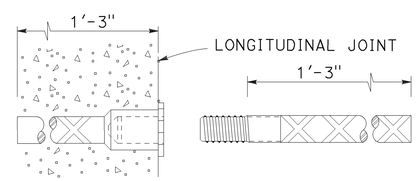


## ALTERNATIVE SPLICE COUPLER

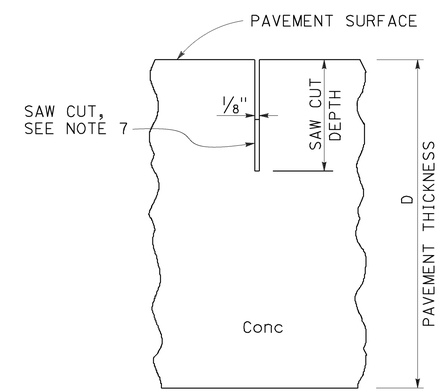


## CONTRACTION JOINT DETAIL

NOTES:

1. See Revised Standard Plan RSP P1 for typical dowel bar and tie bar placement and locations.
2. Where new pavement is placed against existing concrete pavement, rounding the corner is not required.
3. For dowel bar sizes, See Revised Standard Plan RSP P10.
4. Tie bar details apply to inside widenings.
5. Use either drill and bond or splice couplers.
6. Full depth drilled hole. Fill hole with filler material.
7. The bottom of the saw cut must be at least 0.5" clear of any dowel bar, tie bar and bar reinforcement.

STATE OF CALIFORNIA
DEPARTMENT OF TRANSPORTATION

# CONCRETE PAVEMENT-TIE BAR DETAILS

NO SCALE

RSP P15 DATED JULY 19, 2013 SUPPLEMENTS THE STANDARD PLANS BOOK DATED 2010.

**REVISED STANDARD PLAN RSP P15**

5-31-13

| Dist | COUNTY | ROUTE | POST MILES TOTAL PROJECT | SHEET No. | TOTAL SHEETS |
|---|---|---|---|---|---|
| 06 | Tul | 65 | R15.1/18.0 | 256 | 324 |

REGISTERED CIVIL ENGINEER

October 30, 2015
PLANS APPROVAL DATE

REGISTERED PROFESSIONAL ENGINEER
Florante E. Bautista
No. C54859
Exp. 6-30-16
CIVIL
STATE OF CALIFORNIA

*THE STATE OF CALIFORNIA OR ITS OFFICERS OR AGENTS SHALL NOT BE RESPONSIBLE FOR THE ACCURACY OR COMPLETENESS OF SCANNED COPIES OF THIS PLAN SHEET.*

TO ACCOMPANY PLANS DATED 6-20-16

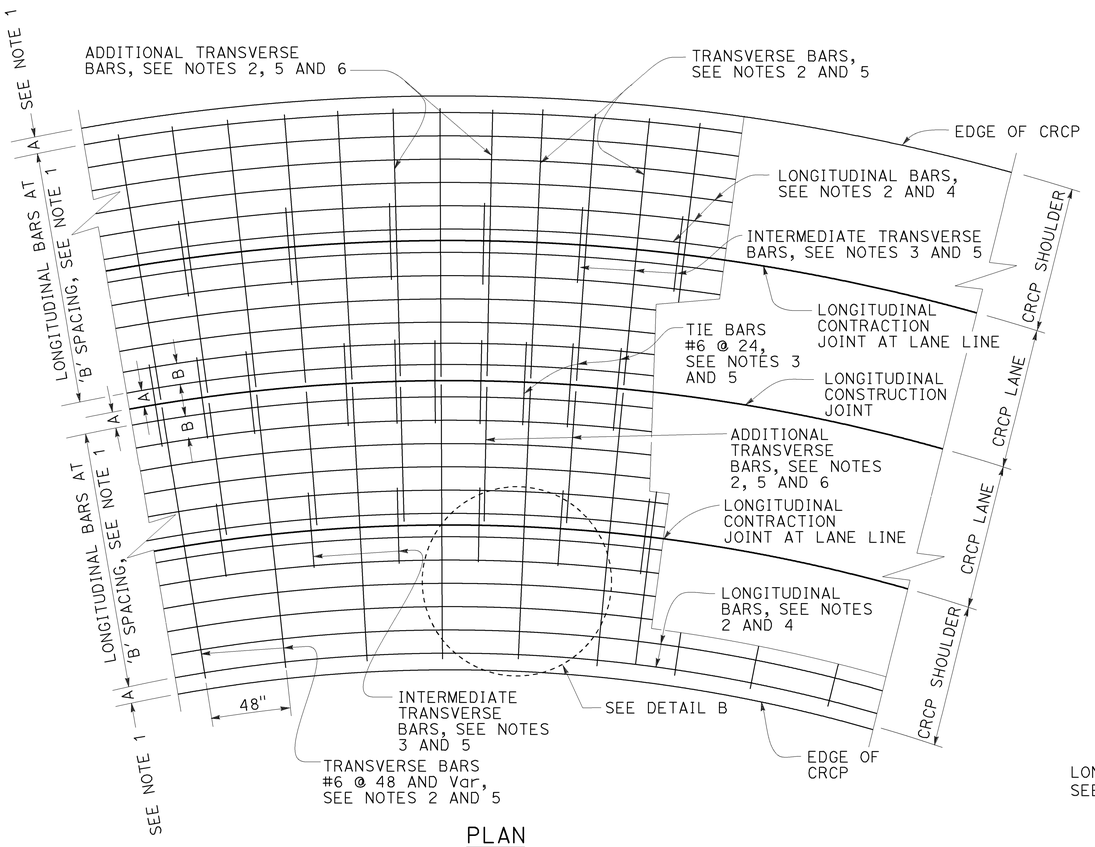


PLAN

CURVED LANES

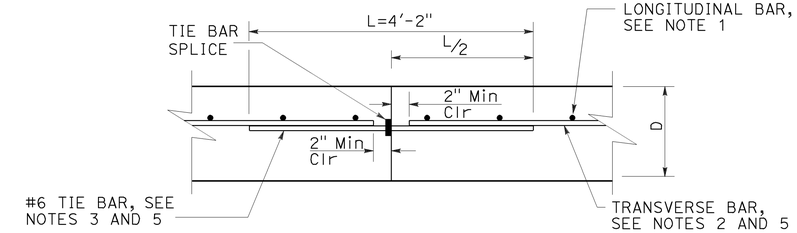


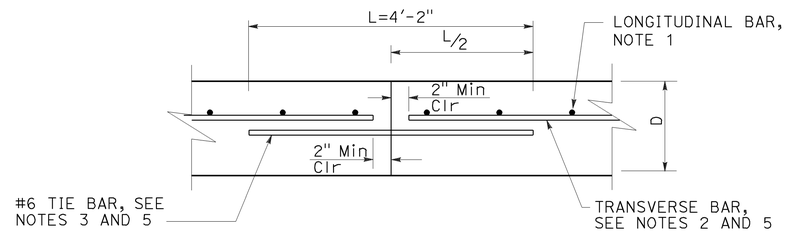


ALTERNATE

LONGITUDINAL CONSTRUCTION JOINT

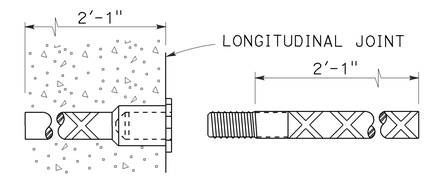


TIE BAR SPLICE COUPLER DETAIL

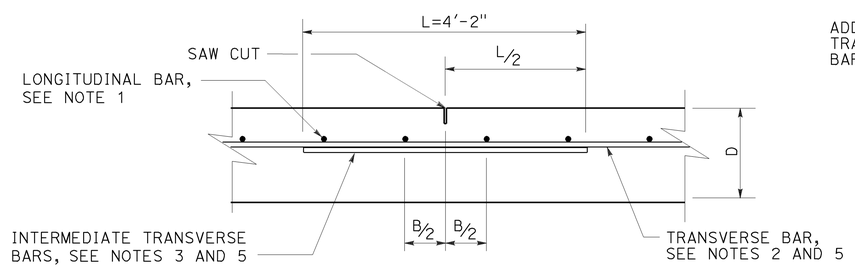


LONGITUDINAL CONTRACTION JOINT

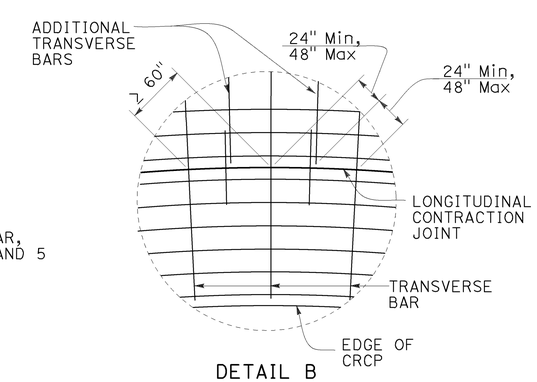


DETAIL B

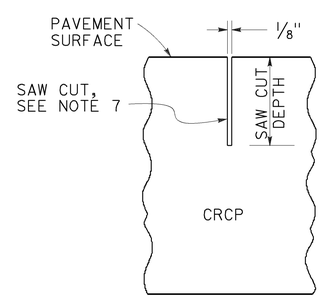


CONTRACTION JOINT SAW CUT DETAIL

## NOTES:

1. For longitudinal bar spacing and clearances, see Table 1 on Revised Standard Plan RSP P4.
2. The length of lap splices for bar reinforcement must be at least 25".
3. Place tie bars and intermediate transverse bars parallel to and in the same plane as the transverse bars.
4. Place longitudinal bars parallel to roadway curvature.
5. Place transverse bars, additional transverse bars, tie bars and intermediate transverse bars perpendicular to the pavement curvature.
6. Place additional transverse bars where required, see Detail B.
7. The bottom of the saw cut must be at least 0.5" clear of any dowel bar, tie bar and bar reinforcement.

## ABBREVIATION:

D = Thickness of CRCP

STATE OF CALIFORNIA
DEPARTMENT OF TRANSPORTATION

# CONTINUOUSLY REINFORCED CONCRETE PAVEMENT TIE BARS AND JOINT DETAILS

NO SCALE

RSP P16 DATED OCTOBER 30, 2015 SUPPLEMENTS RSP P16 DATED JULY 19, 2013 THAT SUPPLEMENTS THE STANDARD PLANS BOOK DATED 2010.

**REVISED STANDARD PLAN RSP P16**

**2010 REVISED STANDARD PLAN RSP P16**

9-28-15

| Dist | COUNTY | ROUTE | POST MILES TOTAL PROJECT | SHEET No. | TOTAL SHEETS |
|---|---|---|---|---|---|
| 06 | Tul | 65 | R15.1/18.0 | 257 | 324 |

REGISTERED CIVIL ENGINEER

July 19, 2013
PLANS APPROVAL DATE

REGISTERED PROFESSIONAL ENGINEER William K. Farnbach No. C49042 Exp. 9-30-14 CIVIL STATE OF CALIFORNIA

*THE STATE OF CALIFORNIA OR ITS OFFICERS OR AGENTS SHALL NOT BE RESPONSIBLE FOR THE ACCURACY OR COMPLETENESS OF SCANNED COPIES OF THIS PLAN SHEET.*

TO ACCOMPANY PLANS DATED 6-20-16

**2010 REVISED STANDARD PLAN RSP P31A**

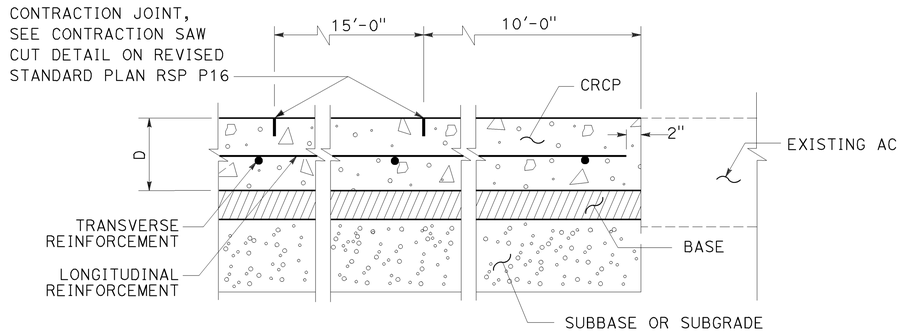


## TERMINAL JOINT TYPE A

(For Existing AC)

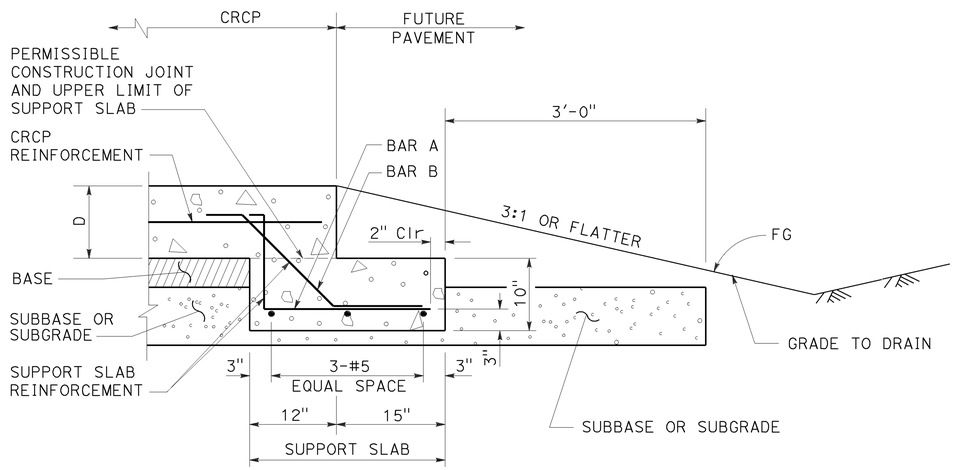


## TERMINAL JOINT TYPE B

(For Future Pavement)

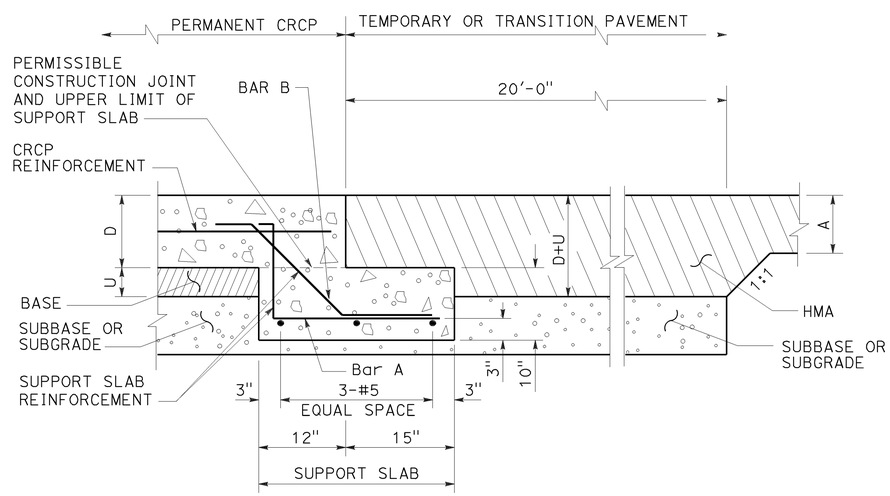


## TERMINAL JOINT TYPE C

(For Temporary HMA Pavement)

## NOTES:

1. For the locations of wide flange beam terminal, pavement anchors and expansion joints, see Projects Plans.
2. See Revised Standard Plans RSP P31B and RSP P32A.

## ABBREVIATIONS

D = Thickness of CRCP

A = Depth of HMA as shown on Project Plans

U = Thickness of Base

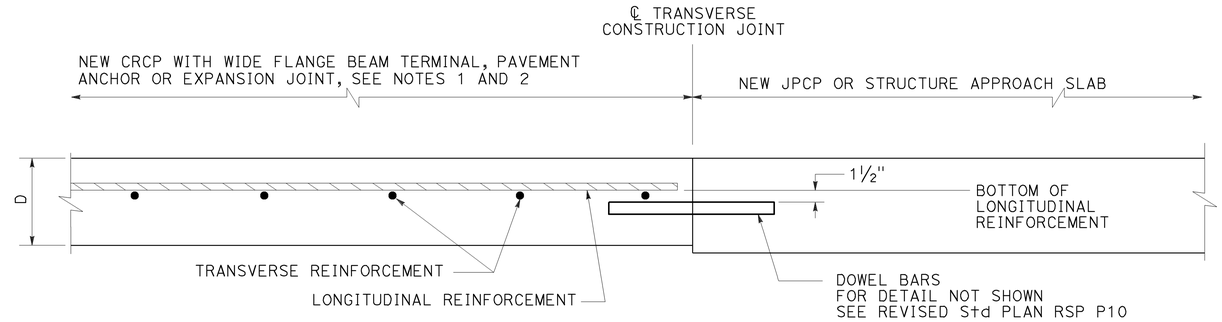


## TERMINAL JOINT TYPE E

(For New JPCP or Structure Appproach Slabs)

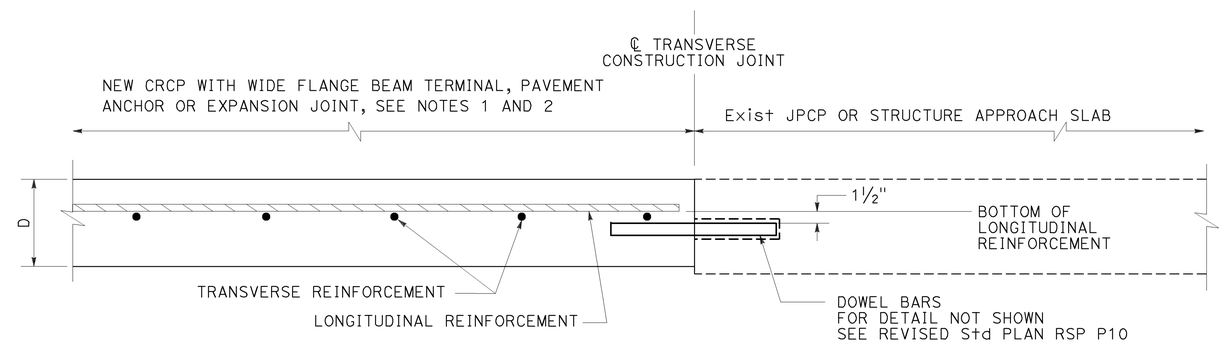


## TERMINAL JOINT TYPE D

(For Existing JPCP or Structure Appproach Slabs)

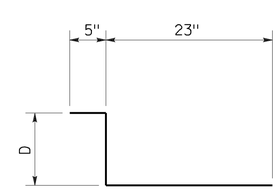


## BAR "A" (#5)

AT 12" C-C

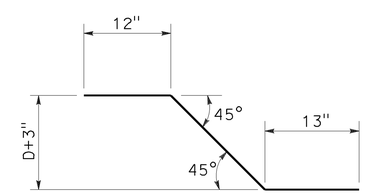


## BAR "B" (#5)

AT 12" C-C

STATE OF CALIFORNIA
DEPARTMENT OF TRANSPORTATION

# CONTINUOUSLY REINFORCED CONCRETE PAVEMENT TERMINAL JOINT DETAILS

NO SCALE

RSP P31A DATED JULY 19, 2013 SUPERSEDES STANDARD PLAN P31A
DATED MAY 20, 2011 - PAGE 138 OF THE STANDARD PLANS BOOK DATED 2010.

**REVISED STANDARD PLAN RSP P31A**

5-31-13

| Dist | COUNTY | ROUTE | POST MILES TOTAL PROJECT | SHEET No. | TOTAL SHEETS |
|---|---|---|---|---|---|
| 06 | Tul | 65 | R15.1/18.0 | 258 | 324 |

Florante E. Bautista
REGISTERED CIVIL ENGINEER

April 20, 2012
PLANS APPROVAL DATE

REGISTERED PROFESSIONAL ENGINEER — Florante E. Bautista — No. C54859 — Exp. 6-30-12 — CIVIL — STATE OF CALIFORNIA

*THE STATE OF CALIFORNIA OR ITS OFFICERS OR AGENTS SHALL NOT BE RESPONSIBLE FOR THE ACCURACY OR COMPLETENESS OF SCANNED COPIES OF THIS PLAN SHEET.*

TO ACCOMPANY PLANS DATED 6-20-16

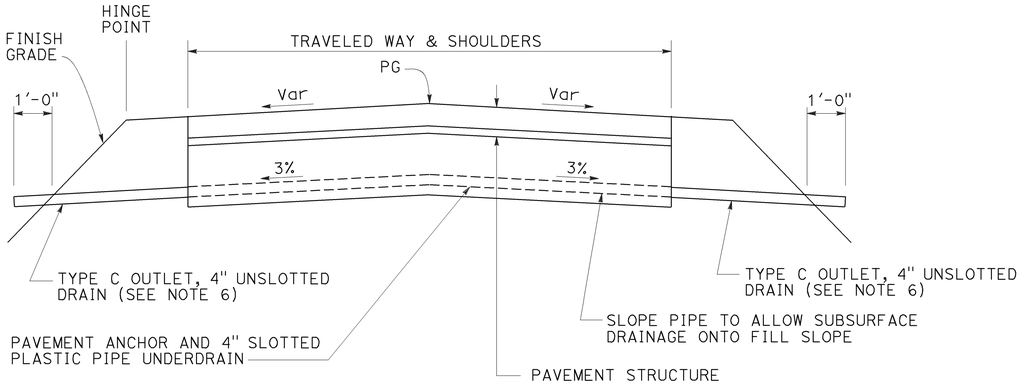


## PAVEMENT ANCHOR PROFILE

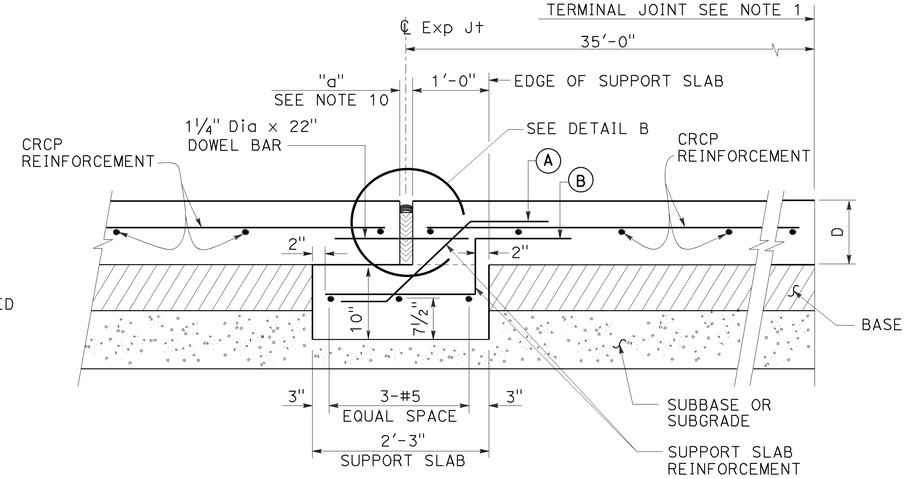


## EXPANSION JOINT TYPE AN

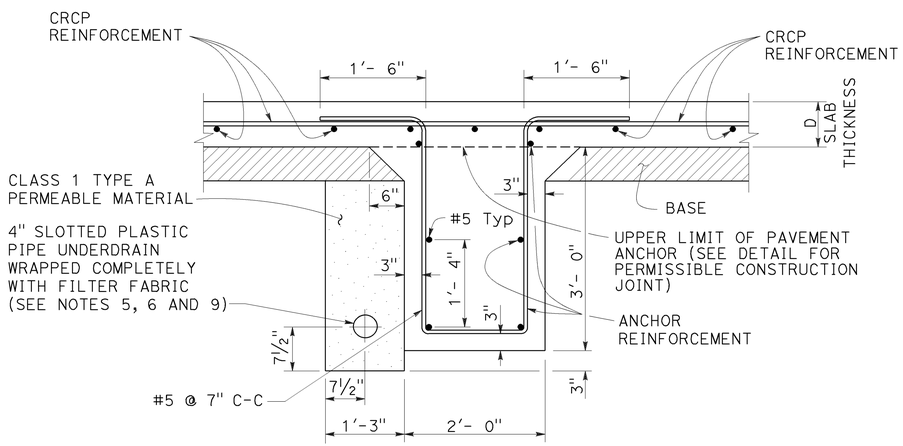


## PAVEMENT ANCHOR

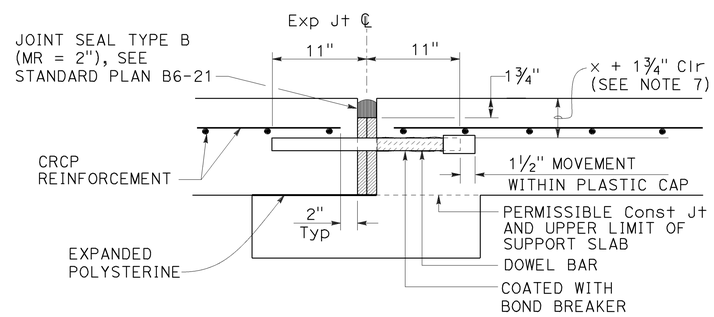


## DETAIL B

(For layout, tolerances, and other details not shown, see Revised Standard Plan RSP P10.)

## NOTES:

1. For the locations of the terminal joints, expansion joints and pavement anchors, see project plans.
2. The CRCP shall continue across the pavement anchor and expansion joints as shown.
3. Details of reinforcement, tie bars, and longitudinal joints (and if necessary, transverse construction joints) are shown on Revised Standard Plan RSP P4.
4. Transverse construction joints are not allowed within 20'-0" of the pavement anchor.
5. When placing pipe through concrete barrier, use 4" unslotted plastic pipe wrapped completely with 9/16" polystyrene.
6. See Standard Plan D99B for details not shown.
7. See Revised Standard Plan RSP P4 for "x".
8. D = thickness of CRCP
9. Place the 4" Slotted Plastic Pipe on the high side of the longitudinal grade.
10. See Standard Plan B6-21 for "a".

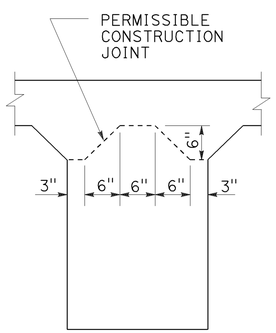


## PAVEMENT ANCHOR DETAIL SHOWING PERMISSIBLE CONSTRUCTION JOINT

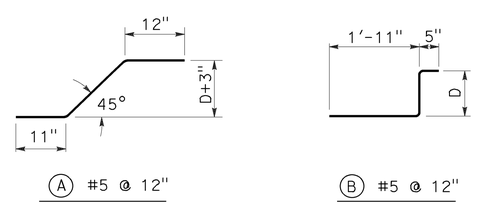


## REINFORCEMENT DETAIL

STATE OF CALIFORNIA
DEPARTMENT OF TRANSPORTATION

# CONTINUOUSLY REINFORCED CONCRETE PAVEMENT- EXPANSION JOINT AND ANCHOR DETAILS

NO SCALE

RSP P31B DATED APRIL 20, 2012 SUPERSEDES STANDARD PLAN P31B DATED MAY 20, 2011 - PAGE 139 OF THE STANDARD PLANS BOOK DATED 2010.

**REVISED STANDARD PLAN RSP P31B**

**2010 REVISED STANDARD PLAN RSP P31B**

2-22-12

| Dist | COUNTY | ROUTE | POST MILES TOTAL PROJECT | SHEET No. | TOTAL SHEETS |
|---|---|---|---|---|---|
| 06 | Tul | 65 | R15.1/18.0 | 259 | 324 |

Srikanth Balasubramanian
REGISTERED CIVIL ENGINEER

October 30, 2015
PLANS APPROVAL DATE

REGISTERED PROFESSIONAL ENGINEER Srikanth N. Balasubramanian No. C56426 Exp. 6-30-17 CIVIL STATE OF CALIFORNIA

*THE STATE OF CALIFORNIA OR ITS OFFICERS OR AGENTS SHALL NOT BE RESPONSIBLE FOR THE ACCURACY OR COMPLETENESS OF SCANNED COPIES OF THIS PLAN SHEET.*

TO ACCOMPANY PLANS DATED 6-20-16

## ABBREVIATIONS:

TE TAPERED EDGE

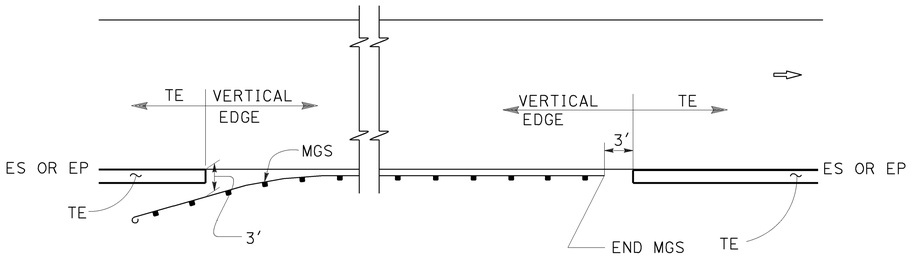


MGS

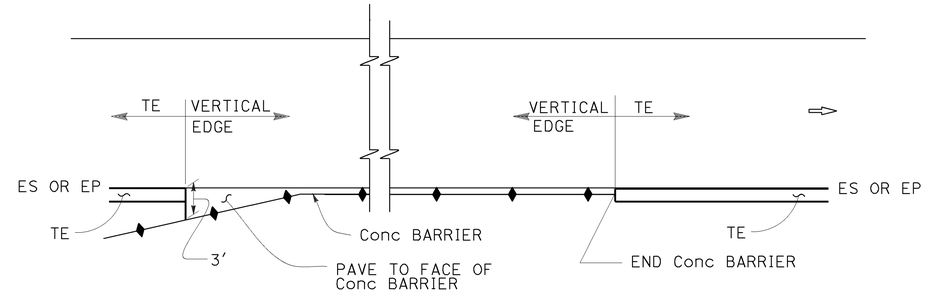


CONCRETE BARRIER

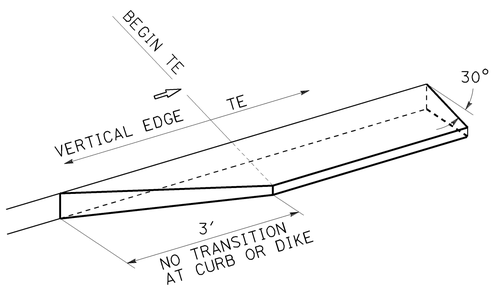


TRANSITION DETAIL FOR CONCRETE ONLY

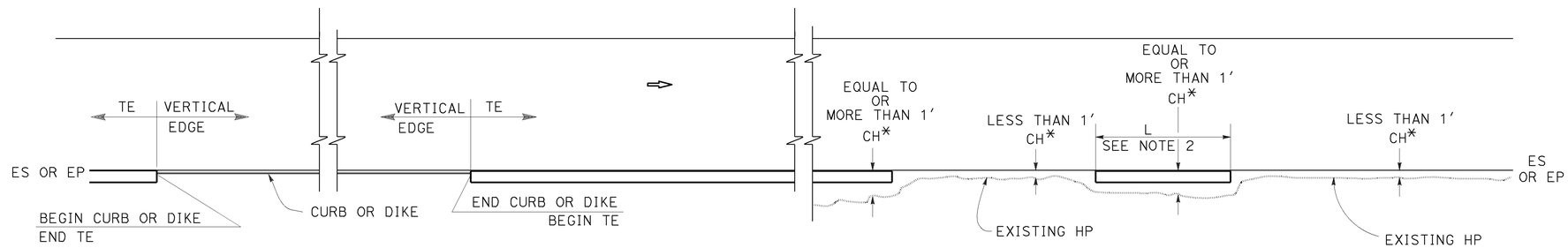


CURB OR DIKE




NARROW SIDE SLOPE

* CH = Distance from ES or EP to existing HP.

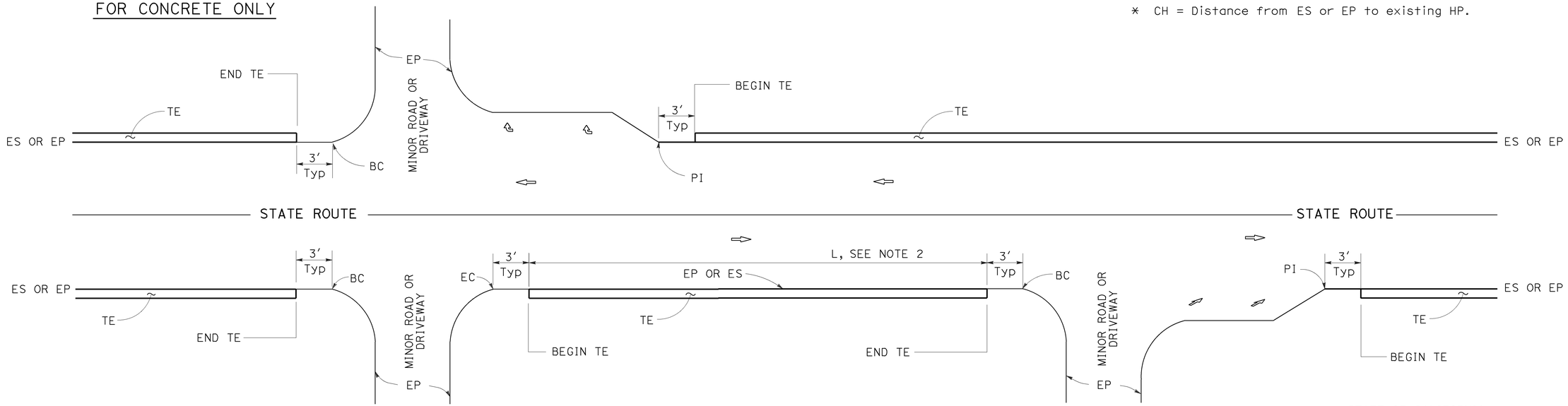


INTERTECTION

DRIVEWAY AND INTERSECTION

MINOR ROADWAY OR DRIVEWAY

STATE OF CALIFORNIA
DEPARTMENT OF TRANSPORTATION

# PAVEMENT EDGE TREATMENTS

NO SCALE

## NOTES:

1. For details not shown, see Revised Standard Plans RSP P75 and RSP P76.
2. Tapered edge is optional when L is less than 30′.

RSP P74 DATED OCTOBER 30, 2015 SUPERSEDES RSP P74 DATED NOVEMBER 15, 2013 AND RSP P74 DATED JANUARY 20, 2012 THAT SUPPLEMENTS THE STANDARD PLANS BOOK DATED 2010.

**REVISED STANDARD PLAN RSP P74**

**2010 REVISED STANDARD PLAN RSP P74**

10-13-15

| Dist | COUNTY | ROUTE | POST MILES TOTAL PROJECT | SHEET No. | TOTAL SHEETS |
|---|---|---|---|---|---|
| 06 | Tul | 65 | R15.1/18.0 | 260 | 324 |

Srikanth Balasubramanian
REGISTERED CIVIL ENGINEER

October 30, 2015
PLANS APPROVAL DATE

REGISTERED PROFESSIONAL ENGINEER
Srikanth N. Balasubramanian
No. C56426
Exp. 6-30-17
CIVIL
STATE OF CALIFORNIA

*THE STATE OF CALIFORNIA OR ITS OFFICERS OR AGENTS SHALL NOT BE RESPONSIBLE FOR THE ACCURACY OR COMPLETENESS OF SCANNED COPIES OF THIS PLAN SHEET.*

TO ACCOMPANY PLANS DATED 6-20-16

## LEGEND:

- HMA PAVEMENT
- HMA OR CONCRETE PAVEMENT
- CONCRETE PAVEMENT

## ABBREVIATIONS:

TE TAPERED EDGE
TT TOTAL THICKNESS OF TE
HW HINGE WIDTH, DISTANCE FROM ES OR EP TO HP

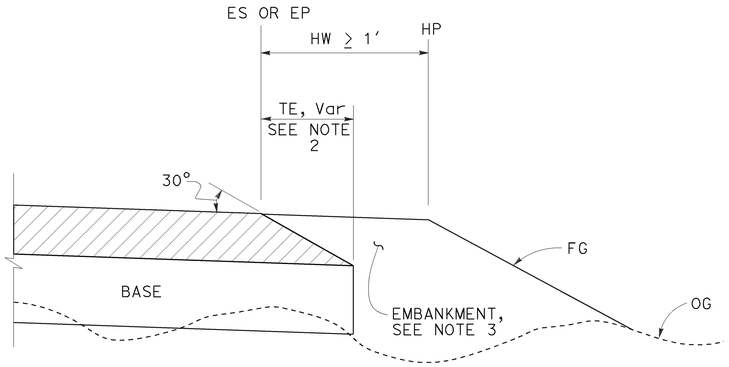


CASE K
Tapered Edge - Fill Section, HW ≥ 1′

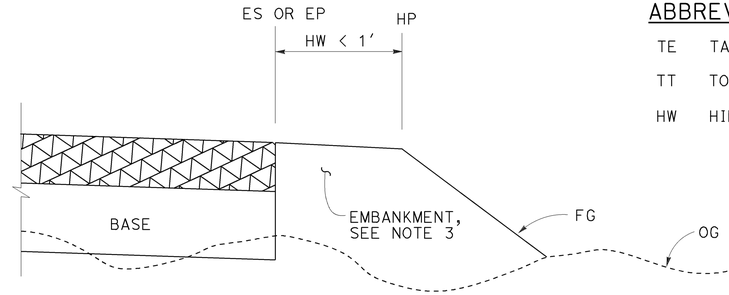


CASE L
Vertical Edge - Fill Section, HW < 1′

FILL SECTION

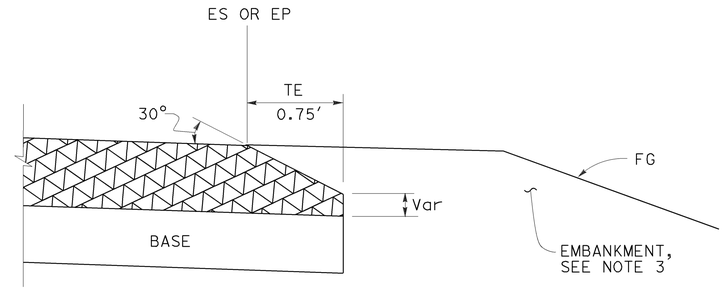


DETAIL "B"
For HMA pavement thickness more than 0.43′ or concrete pavement

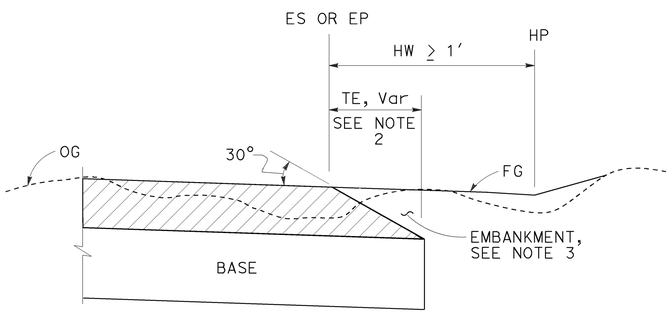


CASE M
Tapered Edge - Cut Section, HW ≥ 1′

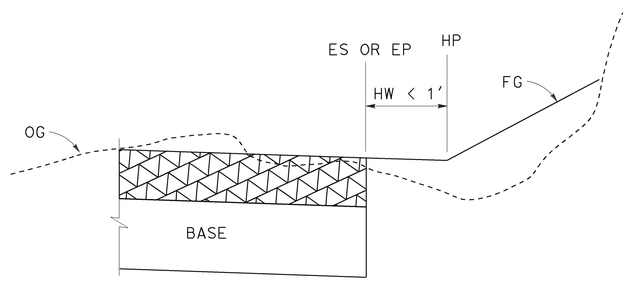


CASE N
Vertical Edge - Cut Section, HW < 1′

CUT SECTION

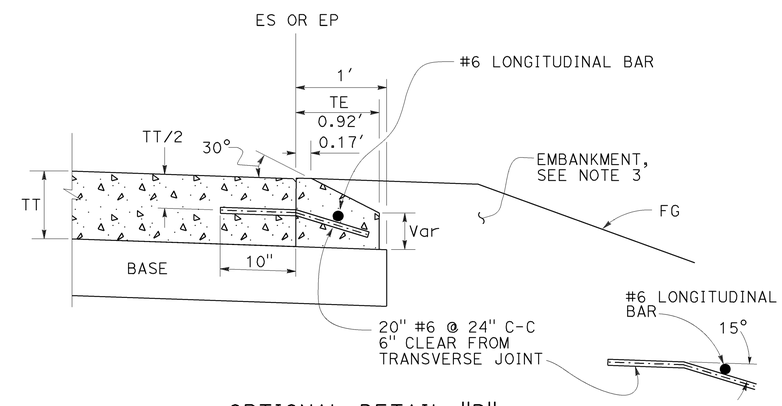


OPTIONAL DETAIL "B"
For concrete pavement
See Note 4

## NOTES:

1. For limits of tapered edge and vertical edge treatments, see Revised Standard Plan RSP P74
2. Details shown for HMA pavement thickness less than 0.43′. See Detail "B" for HMA pavement thickness more than 0.43′ or concrete pavement.
3. For locations and limits of embankment see project plans.
4. Tapered edge transverse joint must match pavement transverse joint. End of #6 longitudinal bar must be 2" ±½" clear from transverse joint.
5. Tapered edge is not needed in the area of MGS, barrier, right turn lane and acceleration lane. See Revised Standard Plan RSP P74.

STATE OF CALIFORNIA
DEPARTMENT OF TRANSPORTATION

# PAVEMENT EDGE TREATMENTS-NEW CONSTRUCTION

NO SCALE

RSP P76 DATED OCTOBER 30, 2015 SUPERSEDES RSP P76 DATED NOVEMBER 15, 2013 AND RSP P76 DATED JANUARY 20, 2012 THAT SUPPLEMENTS THE STANDARD PLANS BOOK DATED 2010.

**REVISED STANDARD PLAN RSP P76**

**2010 REVISED STANDARD PLAN RSP P76**

7-2-15

| Dist | COUNTY | ROUTE | POST MILES TOTAL PROJECT | SHEET No. | TOTAL SHEETS |
|---|---|---|---|---|---|
| 06 | Tul | 65 | R15.1/18.0 | 261 | 324 |

REGISTERED CIVIL ENGINEER

July 15, 2016
PLANS APPROVAL DATE

REGISTERED PROFESSIONAL ENGINEER Carl M. Duan No. C59976 Exp. 6-30-18 CIVIL STATE OF CALIFORNIA

*THE STATE OF CALIFORNIA OR ITS OFFICERS OR AGENTS SHALL NOT BE RESPONSIBLE FOR THE ACCURACY OR COMPLETENESS OF SCANNED COPIES OF THIS PLAN SHEET.*

TO ACCOMPANY PLANS DATED 6-20-16

**NOTE:**

1. For notes and Table 2, See Revised Standard Plan RSP D73C.

| TABLE 1 | | |
|---|---|---|
| | $T_1$ | Vert BARS |
| $L_1$ AND $L_2$ < 2'-10" | 8" | #4 @ 12 |
| $L_1$ OR $L_2$ > 2'-10" | 12" | #5 @ 12 |

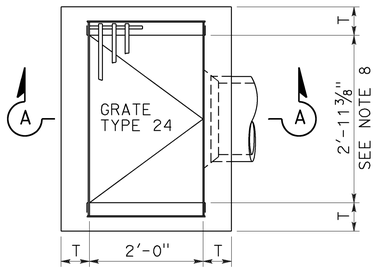


PLAN
TYPE G1

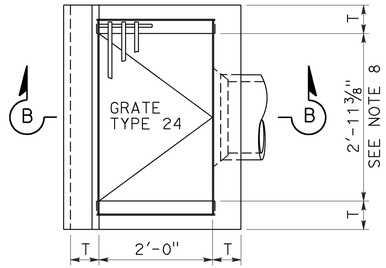


PLAN
TYPE G3

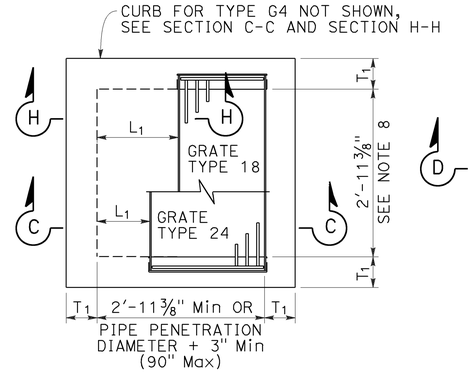


PLAN
STANDARD TYPE G2 OR G4
(INTEGRAL TOP ALTERNATIVE)
FOR "L" AND "T" VALUES, SEE TABLE 1

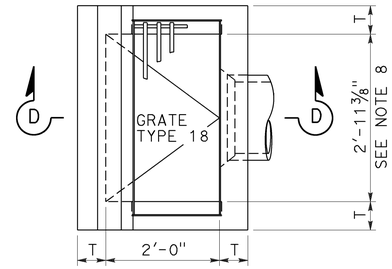


PLAN
TYPE G5

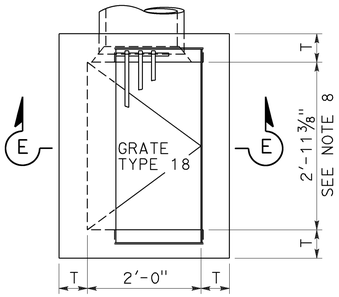


PLAN
TYPE G6

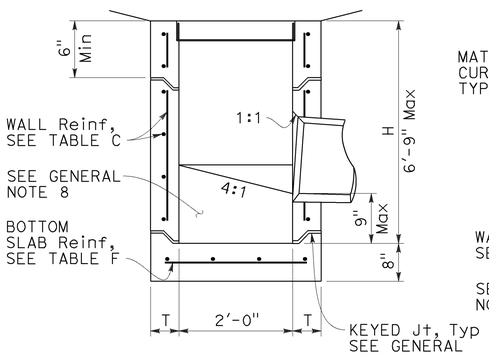


SECTION A-A

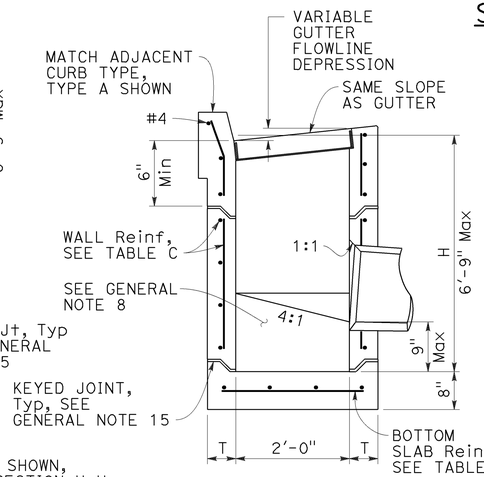


SECTION B-B

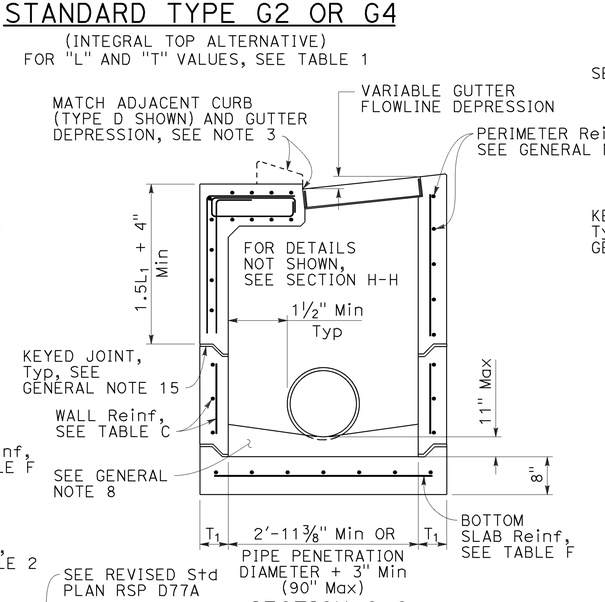


SECTION C-C
FOR "L1", "L2" AND "T1" VALUES, SEE "TABLE 1"

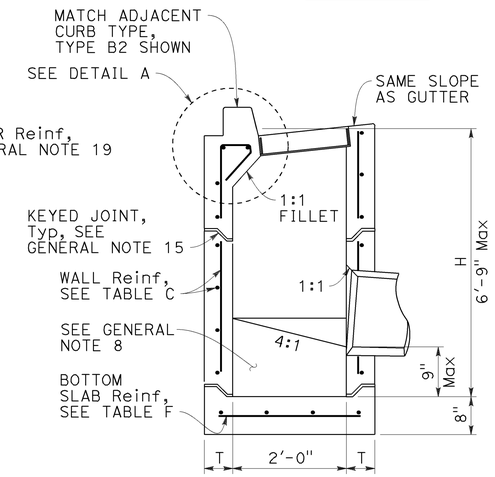


SECTION D-D

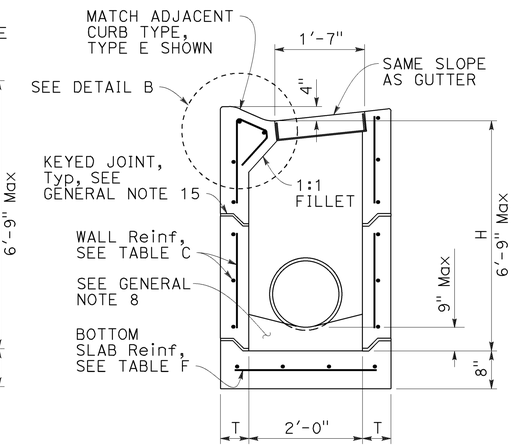


SECTION E-E

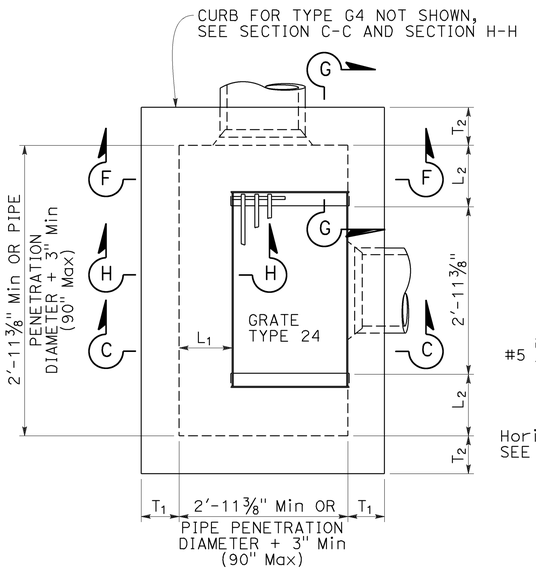


PLAN
EXPANDED
TYPE G2 OR G4
(INTEGRAL TOP ALTERNATIVE)
FOR "L1", "L2" AND "T1" VALUES, SEE "TABLE 1"

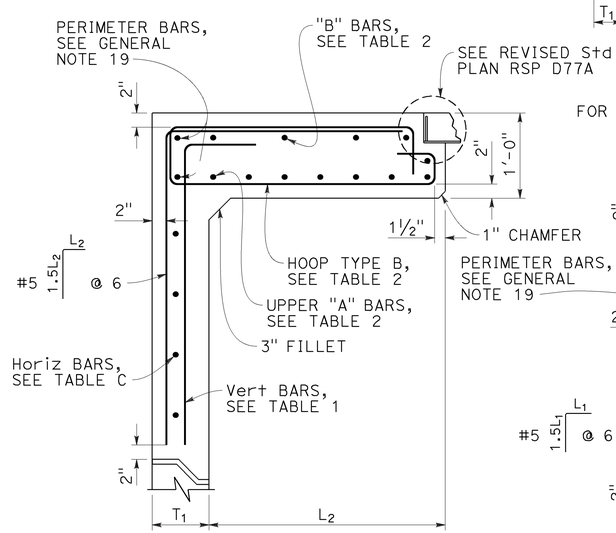


SECTION G-G
FOR "L1", "L2" AND "T1" VALUES, SEE "TABLE 1"

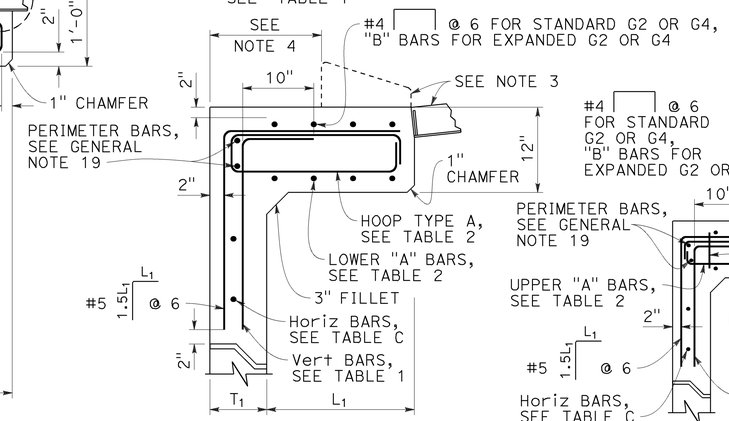


SECTION H-H
FOR "L1", "L2" AND "T1" VALUES, SEE "TABLE 1"

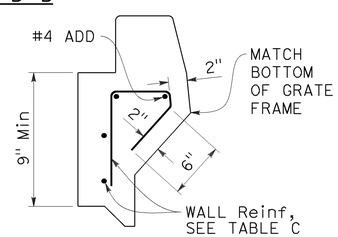


DETAIL A

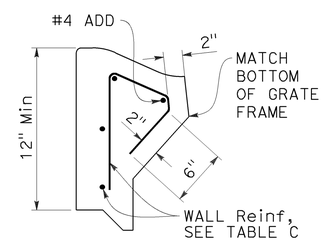


DETAIL B

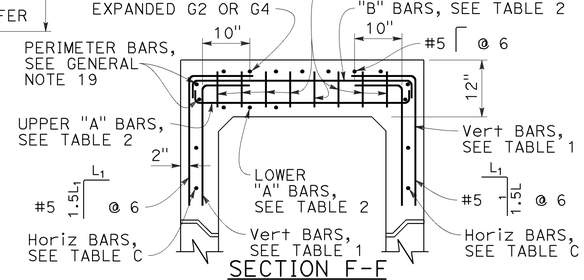


SECTION F-F
FOR "L1", "L2" AND "T1" VALUES, SEE "TABLE 1"

STATE OF CALIFORNIA
DEPARTMENT OF TRANSPORTATION

# PRECAST DRAINAGE INLETS TYPES G1, G2, G3, G4, G5 AND G6

NO SCALE

RSP D73B DATED JULY 15, 2016 SUPPLEMENTS THE STANDARD PLANS BOOK DATED 2010.

**REVISED STANDARD PLAN RSP D73B**

**2010 REVISED STANDARD PLAN RSP D73B**

6-29-16

| Dist | COUNTY | ROUTE | POST MILES TOTAL PROJECT | SHEET No. | TOTAL SHEETS |
|---|---|---|---|---|---|
| 06 | Tul | 65 | R15.1/18.0 | 262 | 324 |

REGISTERED CIVIL ENGINEER

July 15, 2016
PLANS APPROVAL DATE

REGISTERED PROFESSIONAL ENGINEER
Carl M. Duan
No. C59976
Exp. 6-30-18
CIVIL
STATE OF CALIFORNIA

*THE STATE OF CALIFORNIA OR ITS OFFICERS OR AGENTS SHALL NOT BE RESPONSIBLE FOR THE ACCURACY OR COMPLETENESS OF SCANNED COPIES OF THIS PLAN SHEET.*

TO ACCOMPANY PLANS DATED 6-20-16

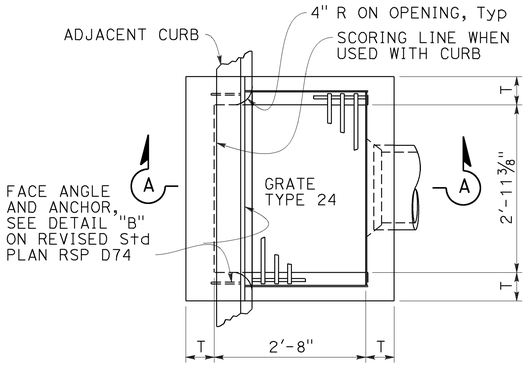


PLAN
TYPE GO

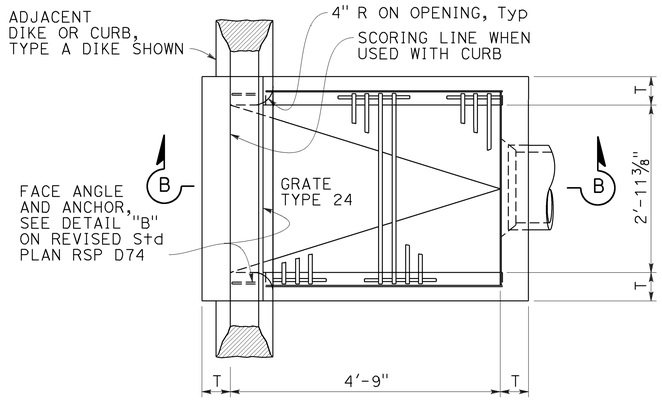


PLAN
TYPE GDO

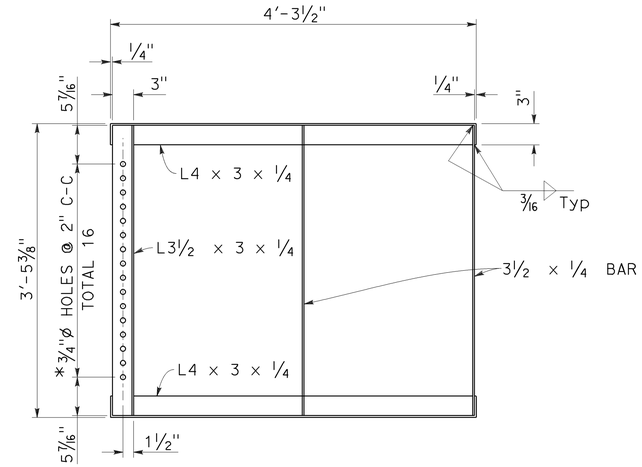


GRATE FRAME FOR TYPE GDO INLET

* HOLES REQUIRED ONLY WITH TRASH RACK

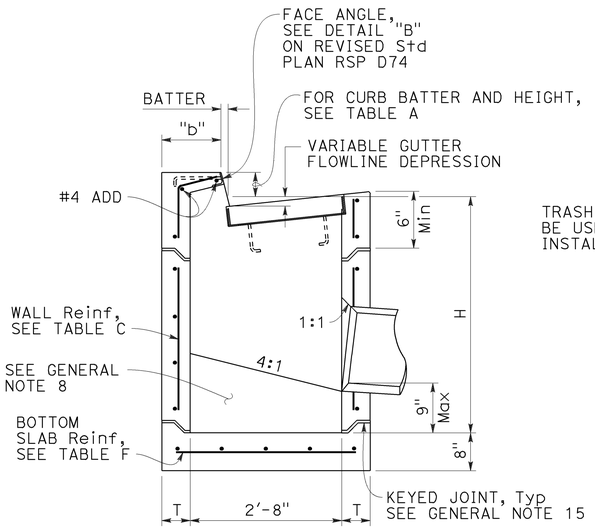


SECTION A-A

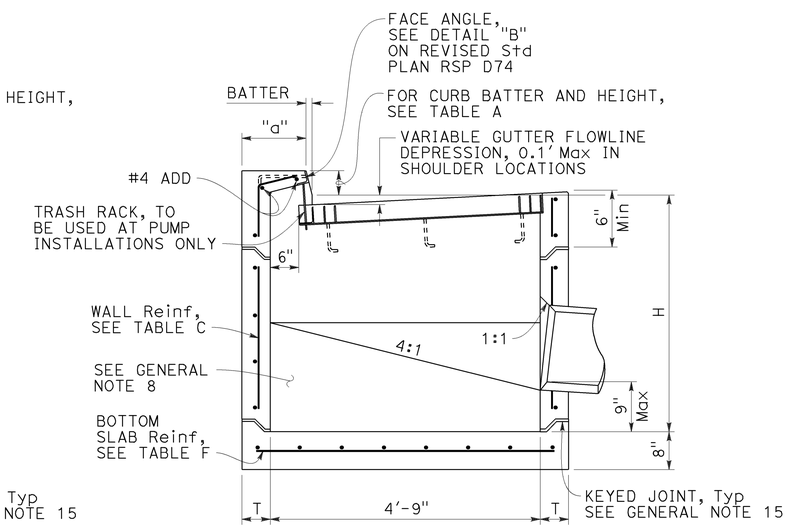


SECTION B-B

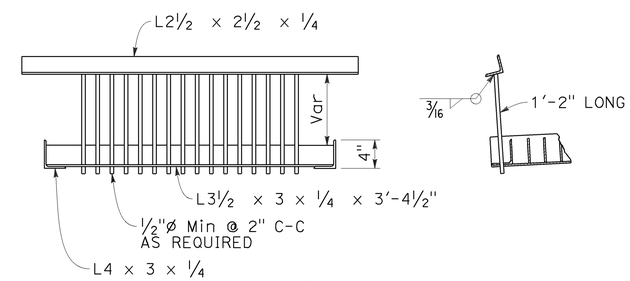


TRASH RACK

FOR USE WITH PUMP INSTALLATION

| TABLE A | | | | |
|---|---|---|---|---|
| CURB TYPE | NORMAL CURB HEIGHT | CURB BATTER | "a" DIMENSION | "b" DIMENSION |
| A1-6 | 6" | 1 1/2" | T+7 1/2" | T+6 1/2" |
| A1-8 | 8" | 2" | T+7" | T+6" |
| B1-6 | 6" | 4" | T+5" | T+4" |
| TYPE A DIKE | 6" | 3" | T+6" | T+5" |

Height of curb opening will vary with the type of curb and the depth of the local depression.

NOTES:

1. See Revised Standard Plan RSP D73F for General Notes and additional details. See Revised Standard Plan RSP D73G for tables, wall thickness "T" and quantities.
2. Where shown on the project plans, place a 3/4"ø plain round protection bar horizontally across the length of the opening and bend back 4" into the inlet wall on each side.
3. Complete joint penetration butt welds may be substituted for the fillet welds on all anchors.
4. Standard square, hexagon, round or equivalent headed anchors may be substituted for the right angle hooks on the anchors shown on this plan.

STATE OF CALIFORNIA
DEPARTMENT OF TRANSPORTATION

# PRECAST DRAINAGE INLETS TYPES GO AND GDO

NO SCALE

RSP D73E DATED JULY 15, 2016 SUPPLEMENTS THE STANDARD PLANS BOOK DATED 2010.

**REVISED STANDARD PLAN RSP D73E**

**2010 REVISED STANDARD PLAN RSP D73E**

6-20-16

| Dist | COUNTY | ROUTE | POST MILES TOTAL PROJECT | SHEET No. | TOTAL SHEETS |
|---|---|---|---|---|---|
| 06 | Tul | 65 | R15.1/18.0 | 263 | 324 |

REGISTERED CIVIL ENGINEER

July 15, 2016
PLANS APPROVAL DATE

REGISTERED PROFESSIONAL ENGINEER Carl M. Duan No. C59976 Exp. 6-30-18 CIVIL STATE OF CALIFORNIA

*THE STATE OF CALIFORNIA OR ITS OFFICERS OR AGENTS SHALL NOT BE RESPONSIBLE FOR THE ACCURACY OR COMPLETENESS OF SCANNED COPIES OF THIS PLAN SHEET.*

TO ACCOMPANY PLANS DATED 6-20-16

## GENERAL NOTES:

1. "H" is measured from top of bottom slab to the normal gutter grade line undepressed at the curb face.
2. For "T" wall thickness and reinforcement, see Table C on Revised Standard Plan RSP D73G.
3. Wall reinforcement must be placed at the center of wall thickness with horizontal bars placed on the exterior face. Bottom slab concrete cover must be 3" clear on the interior side face unless otherwise noted. Top slab concrete cover must be 2" clear on the exterior face unless otherwise noted. Short independent wall sections or height adjustment rings 6" to 24" high must have a minimum of two #4 horizontal bars. Reinforcement spacing is in inches unless otherwise noted.
4. Steps - None required where "H" is less than 2'-6". Where "H" is 2'-6" or more, install steps with lowest rung 1'-0" above the floor and highest rung not more than 6" below bottom of lid. The distance between steps must not exceed 1'-0" and be uniform throughout the length of the wall. Place steps in the wall without an opening. Steps inserts may be substituted for the bar steps. Step inserts must comply with State Industrial Safety Requirements. See Revised Standard Plan RSP D74 for step details.
5. Pipe(s) can be placed in any wall. Adjacent to each side of the opening, place additional reinforcement equivalent to half the interupted main reinforcement. For larger pipes greater than or equal to 42" diameter, also add 4 diagonal bars, 1 bar each side. Bars must be the same size as the larger of the main vertical or horizontal bars. Extend bars one development length past the intersection with the adjacent diagonal bar, or where bars intersect mid thickness of adjacent wall bottom or top of non-continuous wall, bend ends as required into same plane.
6. Set inlet so that grate bars are parallel to direction of principal surface flow.
7. Curb section must match adjacent curb.
8. Except for inlets used as junction boxes, basin floors must have wood trowel finish and a minimum slope of 4:1, unless otherwise noted, from all directions toward outlet pipe by casting grout on top of the bottom slab. Grout must be placed prior to backfill.
9. See Revised Standard Plans RSP D77A and RSP D77B for grate and frame details and weights of miscellaneous iron and steel.
10. See Standard Plans D78A and D78B for gutter depression details.
11. See Revised Standard Plans RSP A87A and RSP A87B for curb and dike details.
12. Details shown apply to metal, concrete and plastic pipe(s).
13. The Contractor may use WWR instead of bar reinforcement. The ratio of bar reinforcement to WWR shall be based on the yield strength ratio.
14. Seal precast inlets connection openings between wall and pipe with non-shrink grout or resilient connectors as specified in the Special Provisions. Precast inlets shall have mortared connections conforming to details for Type GCP Inlet shown on Revised Standard Plan RSP D75B. See Standard Specifications for mortar composition.
15. Where shown, provide precast inlets with separate top sections for final grade adjustment. Provide keyed joints with butyl rubber sealant between the top section and wall, multiple wall sections, and wall and bottom slab. Joint design may vary but must be 1" to 3" in depth. For tongue type joints, tongue down orientation is not allowed. For keyed joints, keyway up, keyway down or tongue up configurations are allowed. Only one key type is allowed for each drainage inlet.
16. Non-shrink grout can be used for upper most joint to facilitate final top grade adjustment.
17. Provide a level and firm sand bedding on which to place precast inlets. Extend sand bedding under all structure backfill.
18. For Integral Base, see Detail "A".
19. Perimeter reinforcement must not be smaller than main bars and #4 and serves as a rigid frame to position and attach the required structural reinforcement and may be tack welded at outer corners when using ASTM A706 weldable bars.
20. Inlet extensions may be cast in place after placement of main box and placement and compaction of backfill. Concrete strength must be 3.6 ksi minimum. All slab and wall thicknesses must be per Revised Standard Plan RSP D72A. All reinforcement shall extend a minimum of 24" from precast main inlet box.

## DESIGN NOTES:

1. Design Specifications: AASHTO LRFD Bridge Design Specifications, 6th edition with 2012 Interims and Errata and CA Amendments.
2. Live Load (AASHTO LRFD 3.6.1.2):
   HL-93, consists of design truck or tandem, and design lane load.
   Dynamic Load Allowance, IM = 33%
   Multiple Presence Factor, m = 1.0
   Design lane load was excluded in Top Slab design.
   A wheel load of 8 kips without impact factor was used for top slabs that are above a curb.
3. Earth Load:
   Vertical pressure = 140 pcf
   Lateral pressure:
   = 100 pcf for walls with flat embankment
   = 140 pcf For walls with slope embankment, 1.5:1 Max
4. Downdrag: $\phi$ = 34° and $\gamma_E$ = 120 pcf.
5. Buoyancy: $\gamma_W$ = 62.4 pcf to finished grade.
6. Reinforced Concrete: f'c = 5.0 ksi, fy = 60.0 ksi.
7. Tables are based on the worst case from the level ground and sloped ground.
8. Soil pressures shown are factored per AASHTO LRFD and include self-weight, live load and downdrag.

| SPAN "A" OR "B" (IN) | L (IN) |
|---|---|
| <38 | 34 |
| 38 TO 50 | 40 |
| 51 TO 64 | 47 |
| 65 TO 76 | 53 |
| 77 TO 90 | 60 |

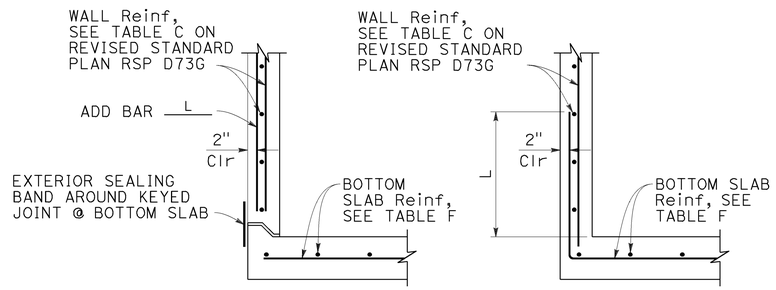


BASE WITH KEYED JOINT  INTEGRAL BASE

## DETAIL "A"

FOR INTEGRAL BASE, CLEARANCE BETWEEN PIPE PENETRATION AND BASE SLAB MAY BE AS SHOWN IN CIP ALTERNATIVE STANDARD PLAN SHEET.

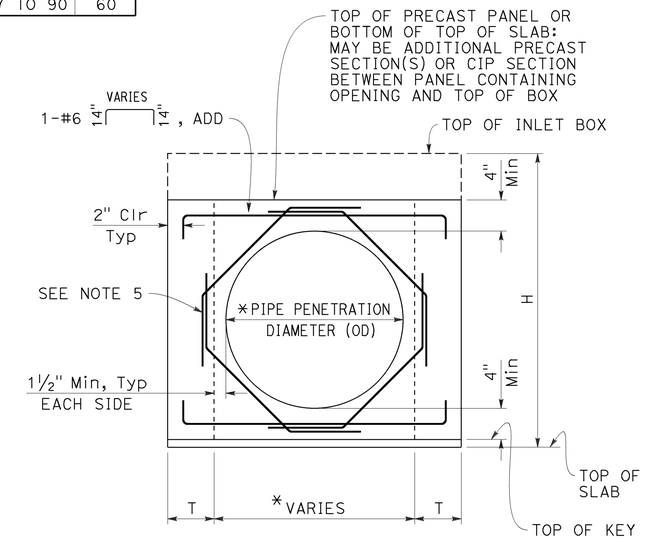


BASE WITH KEYED JOINT

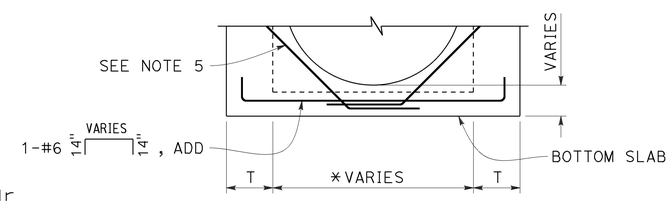


## INTEGRAL BASE

FOR DETAILS NOT SHOWN, SEE "BASE WITH KEYED JOINT"

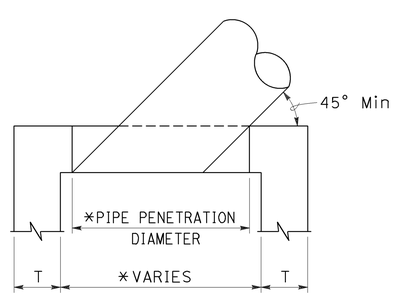


## SKEWED PIPE PLAN

* ADJUST PIPE PENETRATION AND BOX WIDTH FOR SKEWED PIPES.

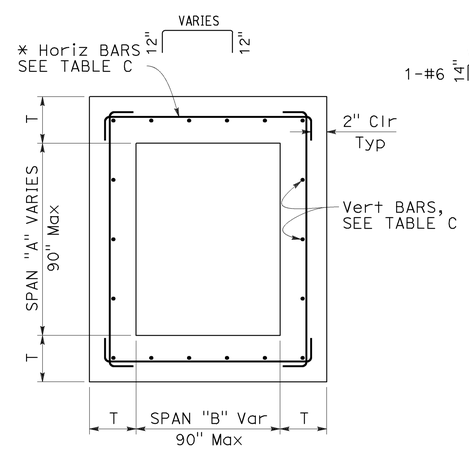


## TYPICAL INLET PLAN

* ALTERNATIVE HORIZONTAL BARS

## TYPICAL WALL W/ PIPE OPENING

* SEE "SKEWED PIPE PLAN"

STATE OF CALIFORNIA
DEPARTMENT OF TRANSPORTATION

# PRECAST DRAINAGE INLET NOTES

NO SCALE

RSP D73F DATED JULY 15, 2016 SUPPLEMENTS THE STANDARD PLANS BOOK DATED 2010.

**REVISED STANDARD PLAN RSP D73F**

**2010 REVISED STANDARD PLAN RSP D73F**

6-20-16

| Dist | COUNTY | ROUTE | POST MILES TOTAL PROJECT | SHEET No. | TOTAL SHEETS |
|---|---|---|---|---|---|
| 06 | Tul | 65 | R15.1/18.0 | 264 | 324 |

REGISTERED CIVIL ENGINEER

July 15, 2016
PLANS APPROVAL DATE

REGISTERED PROFESSIONAL ENGINEER
Carl M. Duan
No. C59976
Exp. 6-30-18
CIVIL
STATE OF CALIFORNIA

*THE STATE OF CALIFORNIA OR ITS OFFICERS OR AGENTS SHALL NOT BE RESPONSIBLE FOR THE ACCURACY OR COMPLETENESS OF SCANNED COPIES OF THIS PLAN SHEET.*

TO ACCOMPANY PLANS DATED 6-20-16

**2010 REVISED STANDARD PLAN RSP D73G**

## TABLE A - CONCRETE QUANTITIES

| TYPE | H=3'-0" TO 8'-0" | | H=8'-1" TO 20'-0" | |
|---|---|---|---|---|
| | H=3'-0" (CY) | ADDITIONAL CONCRETE PER FOOT (CY) | H=8'-1" (CY) | ADDITIONAL CONCRETE PER FOOT (CY) |
| G1 | 0.95 | 0.220 | SEE NOTE 2 | SEE NOTE 2 |
| G2* | 1.25 | 0.255 | 2.55 | 0.255 |
| G3 | 1.06 | 0.220 | SEE NOTE 2 | SEE NOTE 2 |
| G4 (TYPE 18)* | 1.41 | 0.255 | 2.71 | 0.255 |
| G4 (TYPE 24)* | 1.36 | 0.255 | 2.65 | 0.255 |
| G5 | 1.09 | 0.220 | SEE NOTE 2 | SEE NOTE 2 |
| G6 | 1.14 | 0.220 | SEE NOTE 2 | SEE NOTE 2 |
| OS | 1.28 | 0.278 | 2.69 | 0.278 |
| OL7 | 1.92 | 0.278 | 3.33 | 0.278 |
| OL10 | 2.43 | 0.278 | 3.84 | 0.278 |
| OL14 | 3.16 | 0.278 | 4.57 | 0.278 |
| OL21 | 4.58 | 0.278 | 5.99 | 0.278 |
| GOL7 | 2.36 | 0.313 | 4.04 | 0.434 |
| GOL10 | 2.84 | 0.313 | 4.53 | 0.434 |
| GT1 | 2.30 | 0.480 | SEE NOTE 2 | SEE NOTE 2 |
| GT2 | 2.71 | 0.530 | 5.40 | 0.530 |
| GT3 | 2.29 | 0.480 | SEE NOTE 2 | SEE NOTE 2 |
| GT4 | 2.69 | 0.530 | 5.39 | 0.530 |
| GO | 1.25 | 0.245 | 2.37 | 0.245 |
| GDO | 1.64 | 0.322 | 3.37 | 0.446 |

* Quantities are based on the minimum interior dimensions.

## TABLE B - REINFORCEMENT QUANTITIES

| TYPE | H=3'-0" TO 8'-0" | | H=8'-1" TO 20'-0" | |
|---|---|---|---|---|
| | H=3'-0" (LB) | ADDITIONAL REINFORCEMENT PER FOOT (LB) | H=8'-1" (LB) | ADDITIONAL REINFORCEMENT PER FOOT (LB) |
| G1 | 88.5 | 21.90 | SEE NOTE 2 | SEE NOTE 2 |
| G2* | 151.5 | 24.54 | 277.4 | 38.64 |
| G3 | 92.9 | 21.90 | SEE NOTE 2 | SEE NOTE 2 |
| G4 (TYPE 18)* | 134.4 | 24.54 | 260.3 | 38.64 |
| G4 (TYPE 24)* | 125.1 | 24.54 | 251.0 | 38.64 |
| G5 | 92.5 | 21.90 | SEE NOTE 2 | SEE NOTE 2 |
| G6 | 92.5 | 21.90 | SEE NOTE 2 | SEE NOTE 2 |
| OS | 145.8 | 35.57 | 327.8 | 49.60 |
| OL7 | 328.0 | 35.57 | 510.0 | 49.60 |
| OL10 | 467.5 | 35.57 | 649.5 | 49.60 |
| OL14 | 667.5 | 35.57 | 849.5 | 49.60 |
| OL21 | 1056.1 | 35.57 | 1238.1 | 49.60 |
| GOL7 | 474.7 | 45.17 | 706.8 | 74.02 |
| GOL10 | 604.9 | 45.17 | 836.9 | 74.02 |
| GT1 | 349.0 | 80.48 | SEE NOTE 2 | SEE NOTE 2 |
| GT2 | 403.7 | 86.82 | 849.1 | 135.15 |
| GT3 | 347.0 | 80.48 | SEE NOTE 2 | SEE NOTE 2 |
| GT4 | 403.7 | 86.82 | 849.1 | 135.15 |
| GO | 99.8 | 23.75 | 221.7 | 37.46 |
| GDO | 208.8 | 46.22 | 446.2 | 75.61 |

* Quantities are based on the minimum interior dimensions.

## TABLE D

| INLET | CURB USED IN QUANTITIES |
|---|---|
| G1 | - |
| G2 | - |
| G3 | A1-6 |
| G4 (Type 18) | A1-6 |
| G4 (Type 24) | A1-6 |
| G5 | B1-4 |
| G6 | ½E |
| OS | - |
| OL7 | - |
| OL10 | - |
| OL14 | - |
| OL21 | - |
| GOL7 | - |
| GOL10 | - |
| GT1 | D-6 |
| GT2 | E |
| GT3 | A2-8 |
| GT4 | A2-8 |
| GO | - |
| GDO | - |

## TABLE C - WALL REINFORCEMENT

| TYPE | H ≤8'-0" (T=6", UON) | | | 8'-0"< H ≤20'-0" (T=8", UON) | | |
|---|---|---|---|---|---|---|
| | HORIZONTAL | VERTICAL | *ADD | HORIZONTAL | VERTICAL | *ADD |
| OS | #4@6 | #3@8 | #3@8 | #4@4 (T=6") | #3@8 | #3@8 |
| OL | #4@6 | #3@8 | #3@8 | #4@4 (T=6") | #3@8 | #3@8 |
| GOL | #4@5 | #3@8 | #3@8 | #5@5 | #3@6 | #3@6 |
| G1 (H ≤6'-9") | #4@9 | #3@8 | #3@8 | - | - | - |
| G2 & G4 (a** ≤38") | #4@9 | #3@8 | #3@8 | #4@5 (T=6") | #3@8 | #3@8 |
| G2 & G4 (38" < a** ≤50") | #4@6 | #3@8 | #3@8 | #4@4 (T=6") | #3@8 | #3@8 |
| G2 & G4 (50" < a** ≤64") | #4@5 | #3@8 | #3@8 | #5@5 | #3@6 | #3@6 |
| G2 & G4 (64"< a** ≤76") | #5@7 (T=8") | #3@6 | #3@6 | #5@4 | #3@6 | #5@6 |
| G2 & G4 (76" < a** ≤90") | #5@5 (T=8") | #3@6 | #3@6 | #5@3 | #3@6 | #5@6 |
| G3 (H ≤6'-9") | #4@9 | #3@8 | #3@8 | - | - | - |
| G5 (H ≤6'-9") | #4@9 | #3@8 | #3@8 | - | - | - |
| G6 (H ≤6'-9") | #4@9 | #3@8 | #3@8 | - | - | - |
| GT1 (H ≤6'-9") | #5@5 (T=8") | #3@6 | #3@6 | - | - | - |
| GT2 | #5@5 (T=8") | #3@6 | #3@6 | #5@3 | #3@6 | #5@6 |
| GT3 (H ≤6'-9") | #5@5 (T=8") | #3@6 | #3@6 | - | - | - |
| GT4 | #5@5 (T=8") | #3@6 | #3@6 | #5@3 | #3@6 | #5@6 |
| GO | #4@9 | #3@8 | #3@8 | #4@5 (T=6") | #3@8 | #3@8 |
| GDO | #4@5 | #3@8 | #3@8 | #5@5 | #3@6 | #3@6 |

* See Detail A on Revised Standard Plan RSP D73F for additional vertical bars at the base.
** a = Larger interior span

## TABLE E

| SOIL PRESSURE BELOW BASE SLAB (ksf) | | |
|---|---|---|
| TYPE | H ≤8'-0" | 8'-0"< H ≤20'-0" |
| OS | 2.89 | 5.68 |
| OL* | 2.89 | 5.68 |
| GOL* | 2.36 | 4.93 |
| G1 (H ≤6'-9") | 3.51 | - |
| G2 & G4 (a** ≤38") | 2.96 | 5.79 |
| G2 & G4 (38" < a** ≤50") | 2.21 | 4.51 |
| G2 & G4 (50" < a** ≤64") | 3.19 | 4.89 |
| G2 & G4 (64"< a** ≤76") | 2.50 | 4.23 |
| G2 & G4 (76" < a** ≤90") | 2.04 | 3.56 |
| G3 (H ≤6'-9") | 3.51 | - |
| G5 (H ≤6'-9") | 3.51 | - |
| G6 (H ≤6'-9") | 3.51 | - |
| GT1 (H ≤6'-9") | 3.41 | - |
| GT2 | 3.60 | 6.42 |
| GT3 (H ≤6'-9") | 3.41 | - |
| GT4 | 3.60 | 6.42 |
| GO | 3.37 | 6.46 |
| GDO | 2.48 | 7.30 |

* Main Box
** a = Larger interior span

## TABLE F

| BASE SLAB REINFORCEMENT (T=8", UON) | | |
|---|---|---|
| TYPE | H ≤8'-0" | 8'-0"< H ≤20'-0" |
| OS | #4@8 (EW) | #4@5 (EW) |
| OL* | #4@8 (EW) | #4@5 (EW) |
| GOL* | #4@6 (EW) | #4@4 (EW) |
| G1 (H ≤6'-9") | #4@10 (EW) | - |
| G2 & G4 (a** ≤38") | #4@10 (EW) | #4@6 (EW) |
| G2 & G4 (38" < a** ≤50") | #4@8 (EW) | #4@5 (EW) |
| G2 & G4 (50" < a** ≤64") | #4@6 (EW) | #4@4 (EW) |
| G2 & G4 (64"< a** ≤76") | #4@5 (EW) | #4@3 (EW) |
| G2 & G4 (76" < a** ≤90") | #4@4 (EW) | #5@3 (EW) |
| G3 (H ≤6'-9") | #4@10 (EW) | - |
| G5 (H ≤6'-9") | #4@10 (EW) | - |
| G6 (H ≤6'-9") | #4@10 (EW) | - |
| GT1 (H ≤6'-9") | #4@4 (EW) | - |
| GT2 | #4@4 (EW) | #5@3 (EW) |
| GT3 (H ≤6'-9") | #4@4 (EW) | - |
| GT4 | #4@4 (EW) | #5@3 (EW) |
| GO | #4@10 (EW) | #4@6 (EW) |
| GDO | #4@6 (EW) | #4@4 (EW) |

(EW) Each Way
* Main Box
** a = Larger interior span

## NOTES:

1. No deduction or adjustment was made to the quantities of concrete and reinforcement for pipe openings, floor alternatives or curb type.
2. Maximum allowable height is 6'-9".
3. Quantities are approximate and for design purposes only.
4. Design is based on envelope of level and sloped ground.

STATE OF CALIFORNIA
DEPARTMENT OF TRANSPORTATION

# PRECAST DRAINAGE INLET TABLES

NO SCALE

RSP D73G DATED JULY 15, 2016 SUPPLEMENTS THE STANDARD PLANS BOOK DATED 2010.

**REVISED STANDARD PLAN RSP D73G**

6-20-16

| Dist | COUNTY | ROUTE | POST MILES TOTAL PROJECT | SHEET No. | TOTAL SHEETS |
|---|---|---|---|---|---|
| 06 | Tul | 65 | R15.1/18.0 | 265 | 324 |

REGISTERED CIVIL ENGINEER

July 15, 2016
PLANS APPROVAL DATE

REGISTERED PROFESSIONAL ENGINEER
Carl M. Duan
No. C59976
Exp. 6-30-18
CIVIL
STATE OF CALIFORNIA

*THE STATE OF CALIFORNIA OR ITS OFFICERS OR AGENTS SHALL NOT BE RESPONSIBLE FOR THE ACCURACY OR COMPLETENESS OF SCANNED COPIES OF THIS PLAN SHEET.*

TO ACCOMPANY PLANS DATED 6-20-16

| FACE ANGLE DETAIL "A" | |
|---|---|
| LENGTH OF CURB OPENING | No. OF ANCHORS |
| 3'-6" OR LESS | 2 |
| 7'-0" | 3 |
| 10'-0" | 4 |
| 14'-0" | 5 |
| 21'-0" | 7 |

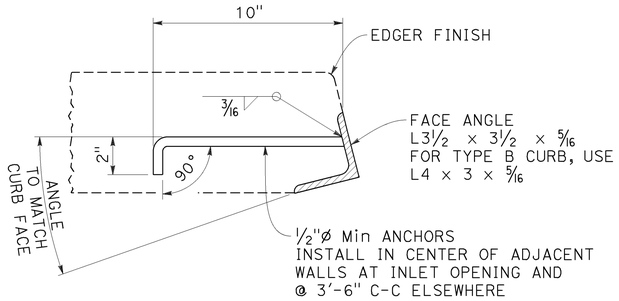


DETAIL "A"

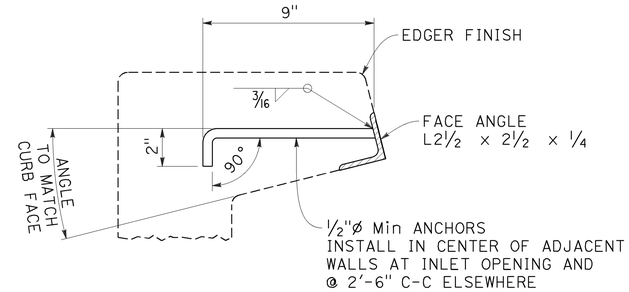


DETAIL "B"

## FACE ANGLE AND ANCHOR

**NOTE:**

1. When shown on the project plans, place a ¾"ø plain round protection bar horizontally across the length of the opening and bend back 4" into the inlet wall on each side.

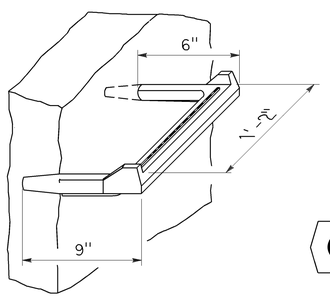


STEP INSERT

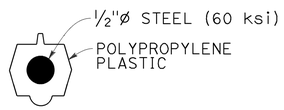


TYPICAL SECTION
(STEP INSERT)

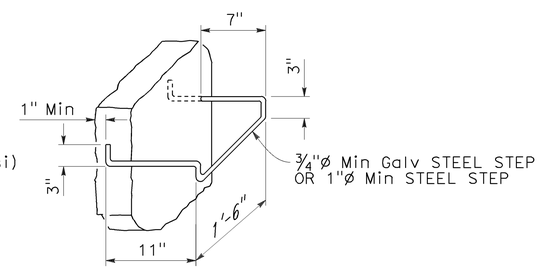


BAR STEP

## STEP DETAILS

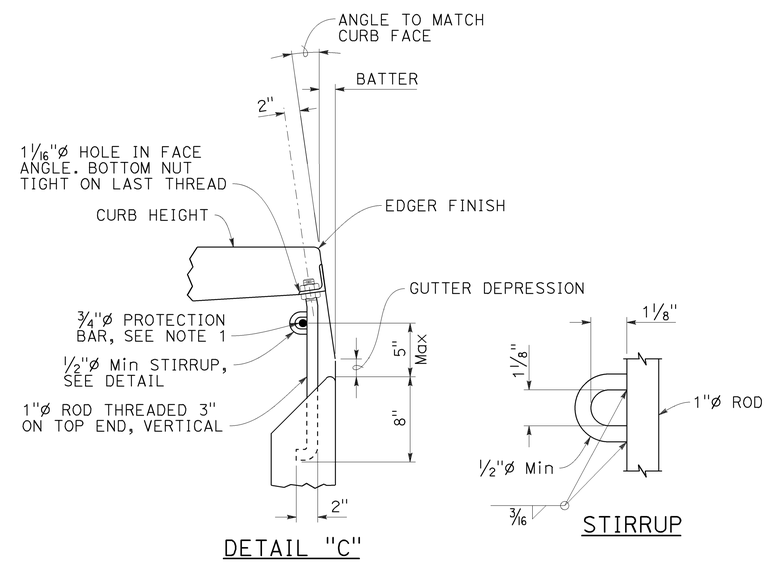


DETAIL "C"

STIRRUP

## CURB SUPPORT

CURB SUPPORTS SHALL BE EVENLY SPACED AND MINIMAL IN NUMBER SUCH THAT MAXIMUM SPAN OF UNSUPPORTED CURB IS 7'-0".

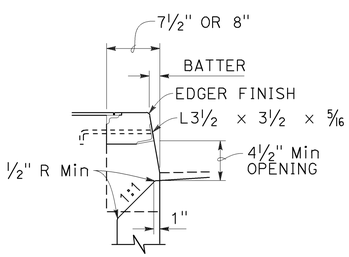


TYPE A CURBS

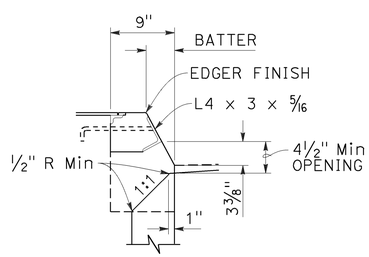


TYPE B CURBS

## CURB OPENING DETAILS

STATE OF CALIFORNIA
DEPARTMENT OF TRANSPORTATION

# DRAINAGE INLET DETAILS

NO SCALE

RSP D74 DATED JULY 15, 2016 SUPPLEMENTS THE STANDARD PLANS BOOK DATED 2010.

**REVISED STANDARD PLAN RSP D74**

**2010 REVISED STANDARD PLAN RSP D74**

6-20-16

| Dist | COUNTY | ROUTE | POST MILES TOTAL PROJECT | SHEET No. | TOTAL SHEETS |
|---|---|---|---|---|---|
| 06 | Tul | 65 | R15.1/18.0 | 266 | 324 |

Raymond Don Tsztoo
REGISTERED CIVIL ENGINEER

April 19, 2013
PLANS APPROVAL DATE

REGISTERED PROFESSIONAL ENGINEER Raymond Don Tsztoo No. C37332 Exp. 6-30-14 CIVIL STATE OF CALIFORNIA

*THE STATE OF CALIFORNIA OR ITS OFFICERS OR AGENTS SHALL NOT BE RESPONSIBLE FOR THE ACCURACY OR COMPLETENESS OF SCANNED COPIES OF THIS PLAN SHEET.*

TO ACCOMPANY PLANS DATED 6-20-16

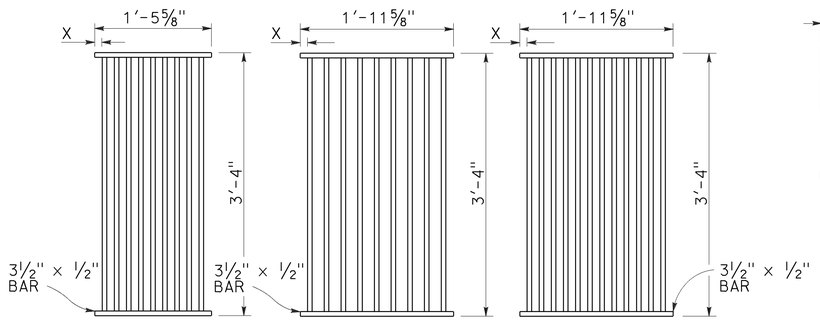


TYPE 18-9
1⅜" Clear spacing. Use within the roadbed on highways where bicycles and pedestrians are excluded.

TYPE 24-9
2" Clear spacing. Use in locations off the roadbed on all types of highways.

TYPE 24-12
1⅜" Clear spacing. Use within the roadbed on highways where bicycles and pedestrians are excluded.

## RECTANGULAR GRATE DETAILS
(See table below)

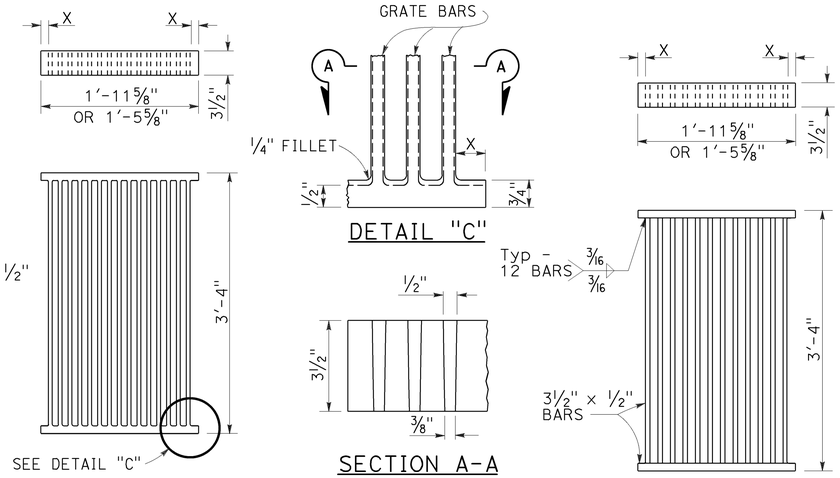


## ALTERNATIVE CAST DUCTILE IRON GRATE OR CAST CARBON STEEL GRATE

## ALTERNATIVE WELDED GRATE

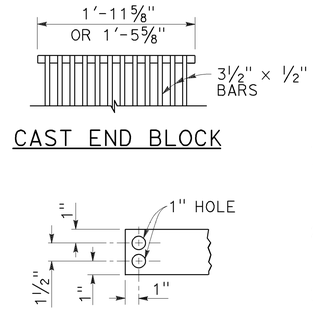


CAST END BLOCK

END OF BAR

## NOTES:

1. Grate type numbers refer to approximate width of grate in inches and number of bars, respectively.
2. Contractor has the option of using cast ductile iron, cast carbon steel, welded, bolted, or cast end block grate.
3. Rounded top of bars optional on all grates.
4. Pipe inlets with a grate shall be placed so that bars parallel direction of principle surface flow.
5. Complete joint penetration butt welds may be substituted for the fillet welds on all anchors.
6. Standard square, hexagon, round or equivalent headed anchors may be substituted for the right angle hooks on the anchors shown on this plan.
7. Grate and frame weights are based on welded grates (weights of face angles, steps, protection bars, etc. are not included).
8. Connect chain to grate and frame only at locations shown on the plans. When chain is required, do not use cast ductile iron grates.

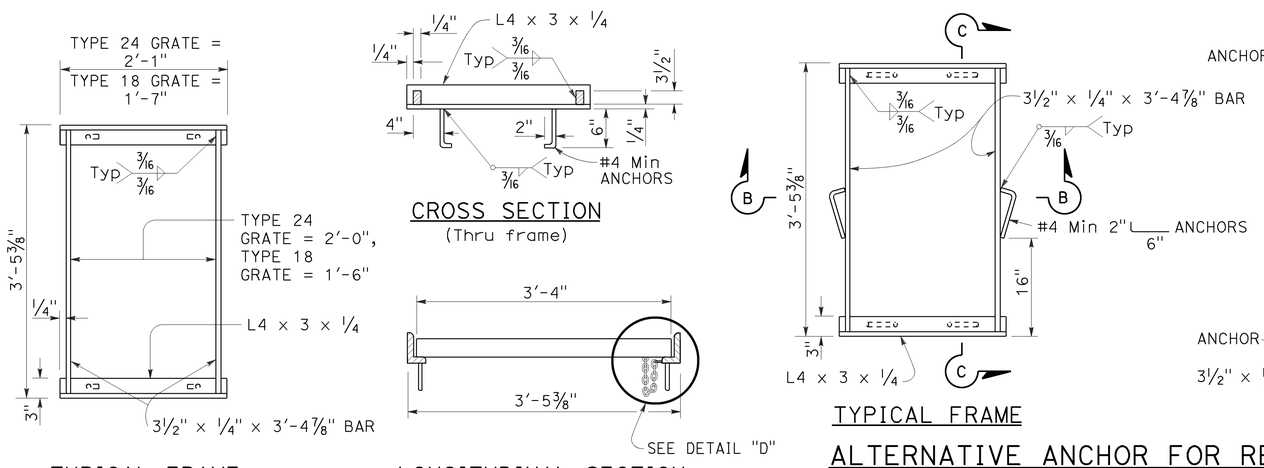


TYPICAL FRAME

CROSS SECTION
(Thru frame)

LONGITUDINAL SECTION
(Thru frame and grate)

## RECTANGULAR FRAME DETAILS
(For all rectangular grates)




TYPICAL FRAME

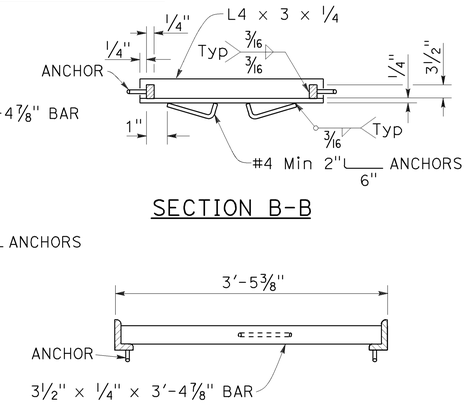


SECTION B-B

SECTION C-C

## ALTERNATIVE ANCHOR FOR RECTANGULAR FRAME
(For details not shown, See Rectangular Frame Details)

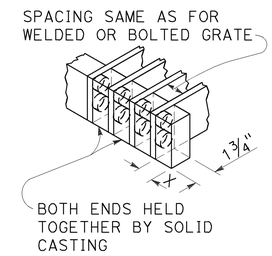


## ALTERNATIVE CAST DUCTILE IRON OR CAST CARBON STEEL END BLOCK GRATE

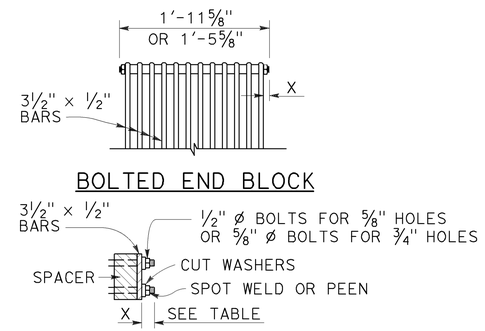


## ALTERNATIVE BOLTED GRATE

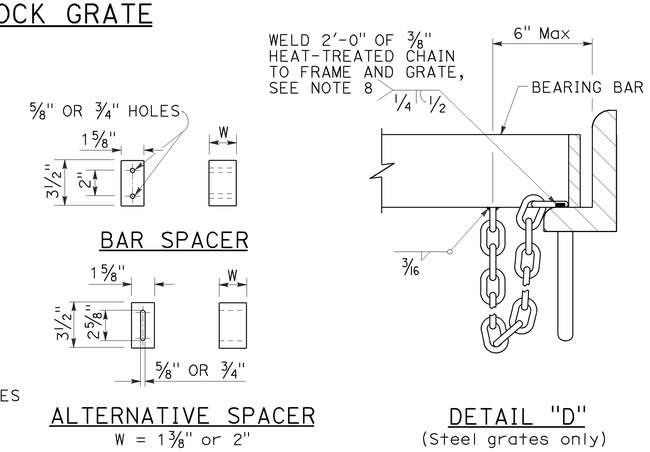


GRATE BAR SPACING TABLE

| TYPE | No. OF BARS | CLEAR BAR SPACING | X |
|---|---|---|---|
| 18-9 | 9 | 1⅜" | 1 1/16" |
| 24-9 | 9 | 2" | 1 9/16" |
| 24-12 | 12 | 1⅜" | 1¼" |

| INLET TYPE | COVER TYPE | WEIGHT LB |
|---|---|---|
| OS | PLATE | 174 |
| OL-7 | PLATE | 170 |
| OL-10 | PLATE | 170 |
| OL-14 | PLATE | 170 |
| OL-21 | PLATE | 170 |
| OCP | PLATE | 112 |
| OCPI | PLATE | 112 |
| OCPI | REDWOOD | 42 |
| OMP | PLATE | 177 |
| OMPI | PLATE | 177 |

| INLET TYPE | GRATE TYPE | No. OF GRATES | WEIGHT LB |
|---|---|---|---|
| GDO | 24-12 | 2 | 634 |
| | | | |
| GOL-7 | 24-12 | 1 | 326 |
| | | | |
| GOL-10 | 24-12 | 1 | 326 |
| | | | |
| GO,G1,G2,G3,G4 (TYPE 24) | 24-9 | 1 | 263 |
| | 24-12 | 1 | 326 |
| | | | |
| G4 (TYPE 18),G5,G6 | 18-9 | 1 | 249 |
| GT1 | 18-9 | 2 | 498 |
| GT2 | 18-9 | 2 | 498 |
| GT3 | 24-12 | 2 | 652 |
| | | | |
| GT4 | 24-12 | 2 | 652 |
| | | | |
| TRASH RACK | | | 22 |
| GRATE CHAIN | | | 3 |

## BASIS FOR Misc IRON & STEEL FINAL PAY WEIGHTS FOR DRAINAGE INLETS
(See Note 7)

STATE OF CALIFORNIA
DEPARTMENT OF TRANSPORTATION

# GRATE DETAILS No. 1

NO SCALE

RSP D77A DATED APRIL 19, 2013 SUPERSEDES RSP D77A DATED JULY 20, 2012 AND STANDARD PLAN D77A DATED MAY 20, 2011 - PAGE 164 OF THE STANDARD PLANS BOOK DATED 2010.

**REVISED STANDARD PLAN RSP D77A**

**2010 REVISED STANDARD PLAN RSP D77A**

4-4-13

| Dist | COUNTY | ROUTE | POST MILES TOTAL PROJECT | SHEET No. | TOTAL SHEETS |
|---|---|---|---|---|---|
| 06 | Tul | 65 | R15.1/18.0 | 267 | 324 |

REGISTERED CIVIL ENGINEER

July 18, 2014
PLANS APPROVAL DATE

REGISTERED PROFESSIONAL ENGINEER Carl M. Duan No. C59976 Exp. 6-30-16 CIVIL STATE OF CALIFORNIA

*THE STATE OF CALIFORNIA OR ITS OFFICERS OR AGENTS SHALL NOT BE RESPONSIBLE FOR THE ACCURACY OR COMPLETENESS OF SCANNED COPIES OF THIS PLAN SHEET.*

TO ACCOMPANY PLANS DATED 6-20-16

**2010 REVISED STANDARD PLAN RSP D82**

## DESIGN NOTES:

Design Specifications:
AASHTO LRFD Bridge Design Specifications, 4th Edition with California Amendments.

Loading:
Live load: (AASHTO LRFD 3.6.1.2)
HL-93 consists of design truck or design tandem and design lane load.

Impact Factor: (Apply to roof slab only)
$IM = 33(1.0-0.125D_E) \geq 0\%$ (AASHTO LRFD 3.6.2.2)
$D_E$ = minimum depth of earth cover

Earth load:
Earth pressure for two conditions:
140 pcf vertical, 42 pcf horizontal
140 pcf vertical, 140 pcf horizontal

Load Factors:
AASHTO LRFD Table 3.4.1.1 & Table 3.4.1.2

Unit stresses:
$f'_c$ = 3600 psi
$f_y$ = 60,000 psi

Distribution "d" bars:
Up to and including 10'-0" cover
Express as a percentage of main positive reinforcement required: $\frac{100}{\sqrt{S}}$, Max 50%,

Over 10'-0" cover,
# 4 @ 12 maximum

Shear:
$V_c = \{2.14\sqrt{f'_c}+4600\frac{A_s}{bd_e}\frac{V_u d_e}{M_u}\}b.d_e \leq 4.0\sqrt{f'_c}b.d_e$ (Pounds)
$V_c$ shall not be less than $3.00\sqrt{f'_c}b.d_e$ for frame members and $2.5\sqrt{f'_c}b.d_e$ for simply supported members.

Exclusion:
Compressive reinforcement and negative moment reduction (for continuity) do not apply.
Axial loading on members has not been considered.

## CONSTRUCTION NOTES:

Construction loads:
Strutting required as shown on Standard Plan D88.
Strutting may be required on culvert extensions when existing parapet is removed.

Expansion joints:
Invert:
No expansion joints shall be permitted.

Roof and Walls:
When cover is less than span length-
Place ½" premolded expansion joint filler at 30'-0" ± centers outside the paved roadway lanes and place Bridge Detail 3-2, Standard Plan B0-3, at 30'-0" centers under paved roadway lanes.
When cover is more than span length-
Place ½" premolded expansion joint filler at 30'-0" ± centers and additional ½" premolded expansion joints at locations of change in foundation character, as directed by the Engineer.

Construction joints:
Temporary joints may be permitted if normal (or radial) to ℄ of RCB. Otherwise, the contractor is to submit a proposal for consideration.

Cutoff walls:
4'-0" cutoff walls are to be provided at inlet and/or outlet unless adjacent channel is lined and unless otherwise shown. These walls are to be extended if scour conditions warrant.

Earthwork:
See Standard Plan A62E.

Backfill:
See Standard Specifications, except that the difference in level of backfill (against outside walls) shall not exceed 2'-0".

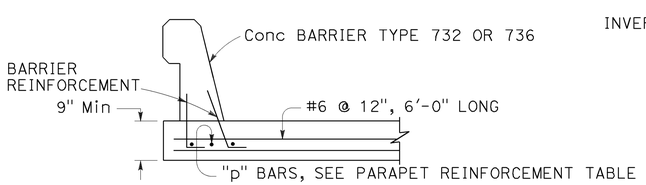


BARRIER SECTION (30'-0" MINIMUM)

## GENERAL NOTES:

Designation:
Standard single or multiple box culverts are shown on plans as span times height with maximum cover over roof thus: 8' x 5' RCB with 10' or double 10' x 5' RCB with 20', followed by alternatives.

Alternatives:
Single cell: Invert will be sloped unless "trapezoidal invert", "flat invert" or "V invert" is included in designation.
Multiple cell: Invert will be vee unless "flat invert" is specified. Ends of culvert will be rounded unless "square ends" are designated. Parapets will be as shown unless designated in plans. Such designations may be different for inlet and outlet ends.

Quantities:
Quantities do not include the following:
- Concrete for parapet, paving notches and cut-off wall.
- Reinforcement for 2% splices, parapets, paving notches, cut-off wall and additional required bars for exposed top slab (D-80, Note 9).

Reinforcement placement:
Main reinforcement is to be placed transversely or, for curved culverts, radially. When radial, reinforcing spacing of the "a", "f" and "g" bars is measured along the centerline. Stagger splices not shown. Hooks may be rotated or tilted, as necessary, for clearance.

Special reinforcement coverage:
Box standard plans are not to be used for culverts in a corrosive environment or where there is a severe abrasive flow condition or in freeze-thaw locations.

Special design:
Required for culverts with conditions, loads, design bearing pressures or sizes greater than those given on this plan or Standard Plans D80 & D81. Also required for multiple cell culverts with unequal spans. For culverts with railroad loading, see the current AREMA design specification.

3 or more cells:
For culverts with more than two cells, use dimensions and reinforcement for the standard "double box culvert" and adjust quantities accordingly.

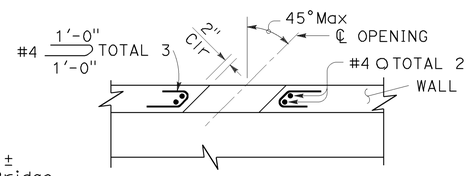


PART PLAN-SECTION

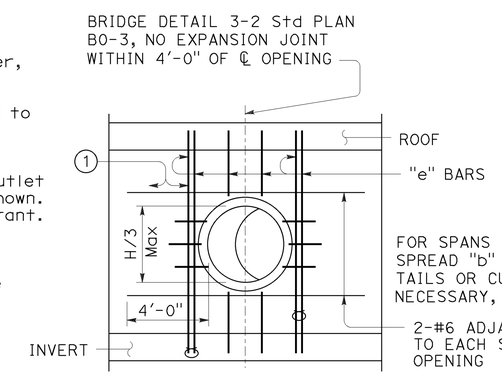


LONGITUDINAL SECTION

UTILITY OPENING-WALL

H=Height of box

(1) Adjacent to each side of the opening, place additional bars equivalent to half the interrupted main reinforcement.

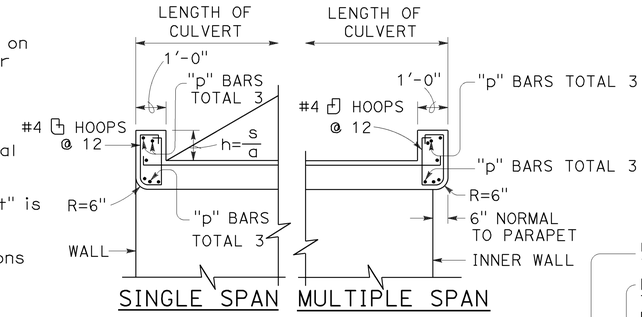


PARAPET DETAIL

s = Clear span (ft)
a = 12 cosine skew angle
h = Height, 1'-0" Min

| PARAPET "p" BARS | | | |
|---|---|---|---|
| SPAN \ SKEW ANGLE | 0° TO 15° | 16° TO 30° | 31° TO 45° |
| 4' | #4 | #4 | #4 |
| 6' | #4 | #4 | #5 |
| 8' | #4 | #5 | #6 |
| 10' | #5 | #6 | #7 |
| 12' | #6 | #7 | #8 |
| 14' | #7 | #8 | #9 |

PARAPET REINFORCEMENT

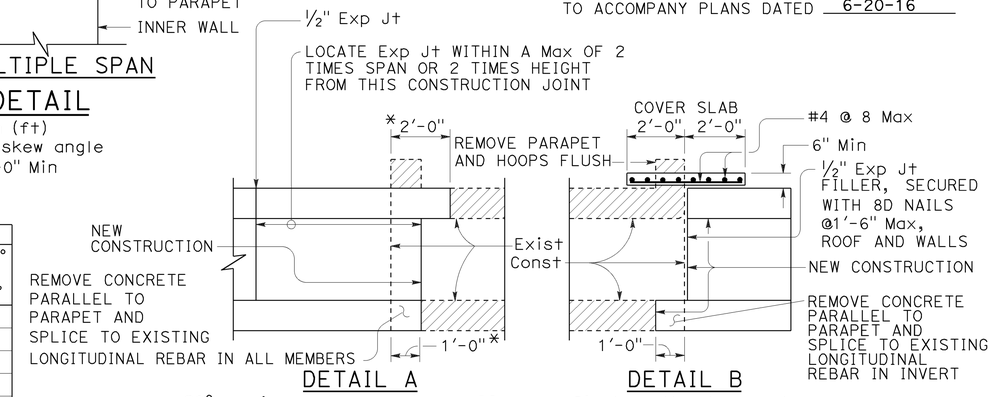


DETAIL A

20° maximum skew as shown. If existing longitudinal and transverse reinforcing bars in top slab are lap spliced with new longitudinal and transverse reinforcing bars, the 20° skew may be exceeded. Lap splicing may require removal of top slab in excess of 2'-0" shown.

DETAIL B

Single cell only, no skew allowed, 1'-0" minimum cover.

* Measured perpendicular to parapet

CULVERT EXTENSION

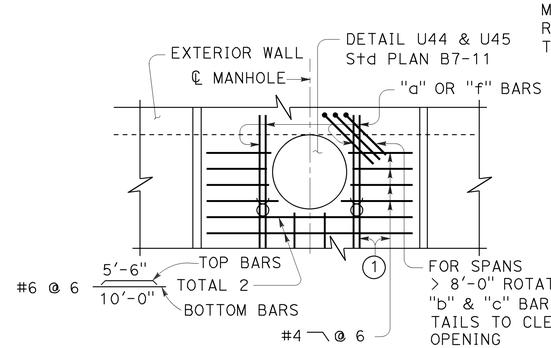


PART PLAN

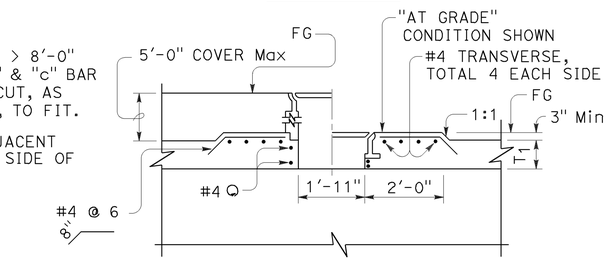


PART LONGITUDINAL SECTION

MANHOLE

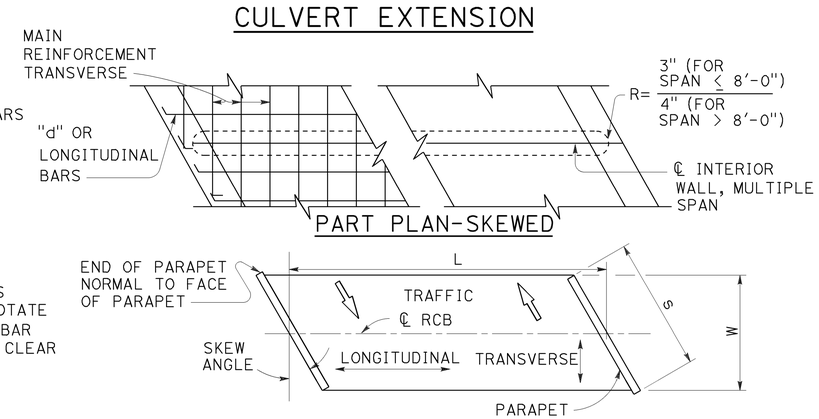


PART PLAN-SKEWED

RCB TERMINOLOGY

STATE OF CALIFORNIA
DEPARTMENT OF TRANSPORTATION

# CAST-IN-PLACE REINFORCED CONCRETE BOX CULVERT MISCELLANEOUS DETAILS

NO SCALE

RSP D82 DATED JULY 18, 2014 SUPERSEDES STANDARD PLAN D82 DATED MAY 20, 2011 - PAGE 174 OF THE STANDARD PLANS BOOK DATED 2010.

**REVISED STANDARD PLAN RSP D82**

4-3-14

| Dist | COUNTY | ROUTE | POST MILES TOTAL PROJECT | SHEET No. | TOTAL SHEETS |
|---|---|---|---|---|---|
| 06 | Tul | 65 | R15.1/18.0 | 268 | 324 |

REGISTERED CIVIL ENGINEER

July 18, 2014
PLANS APPROVAL DATE

REGISTERED PROFESSIONAL ENGINEER
Carl M. Duan
No. C59976
Exp. 6-30-16
CIVIL
STATE OF CALIFORNIA

*THE STATE OF CALIFORNIA OR ITS OFFICERS OR AGENTS SHALL NOT BE RESPONSIBLE FOR THE ACCURACY OR COMPLETENESS OF SCANNED COPIES OF THIS PLAN SHEET.*

TO ACCOMPANY PLANS DATED 6-20-16

**2010 REVISED STANDARD PLAN RSP D83A**

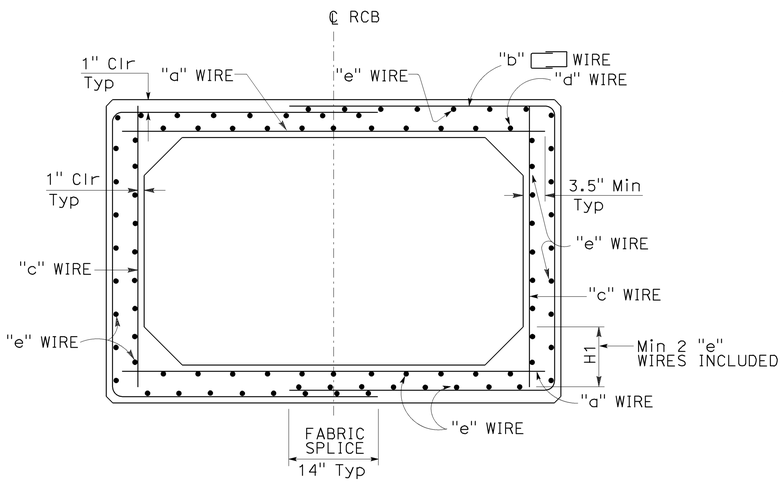


## TYPICAL SECTION - SPANS 4'-0" THRU 12'-0"

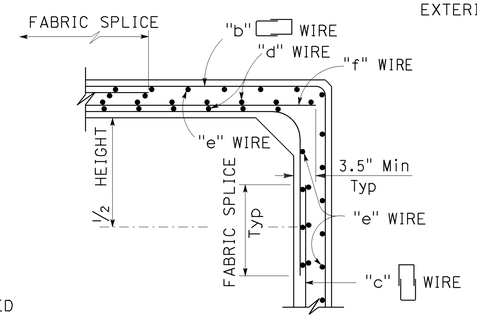


## ALTERNATIVE DETAILING OPTION

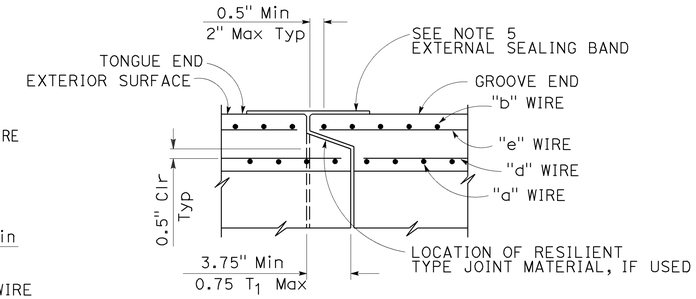


## END JOINT DETAIL

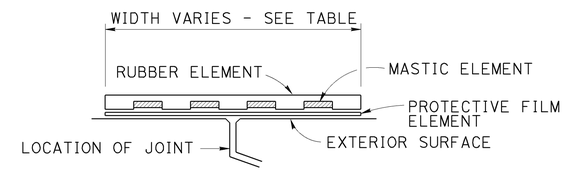


## EXTERNAL SEALING BAND SCHEMATIC

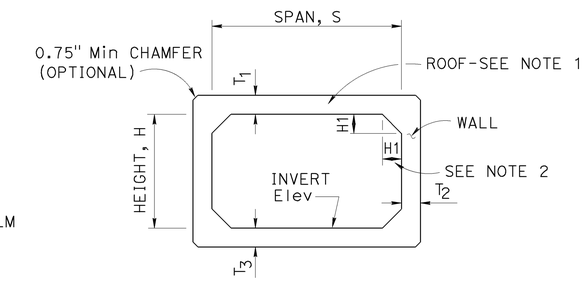


## SCHEMATIC

| TABLE | |
|---|---|
| SPAN | EXTERNAL SEALING BAND WIDTH |
| 4'-6' | 9" |
| 7'-8' | 11" |
| 10'-12' | 13" |

| SPAN, S | | | 4' | | | | | | 5' | | | | | | | | 6' | | | | | | | | 7' | | | | | | | | | |
|---|---|---|---|---|---|---|---|---|---|---|---|---|---|---|---|---|---|---|---|---|---|---|---|---|---|---|---|---|---|---|---|---|---|---|
| HEIGHT, H | | | 2' | | 3' | | 4' | | 2' | | 3' | | 4' | | 5' | | 3' | | 4' | | 5' | | 6' | | 3' | | 4' | | 5' | | 6' | | 7' | |
| MAXIMUM EARTH COVER | | | 10' | 20' | 10' | 20' | 10' | 20' | 10' | 20' | 10' | 20' | 10' | 20' | 10' | 20' | 10' | 20' | 10' | 20' | 10' | 20' | 10' | 20' | 10' | 20' | 10' | 20' | 10' | 20' | 10' | 20' | 10' | 20' |
| CONCRETE (INCH) | ROOF | $T_1$ | 5.5" | 5.5" | 5.5" | 5.5" | 5.5" | 5.5" | 6" | 6" | 6" | 6" | 6" | 6" | 6" | 6" | 7" | 7" | 7" | 7" | 7" | 7" | 7" | 7" | 8" | 8" | 8" | 8" | 8" | 8" | 8" | 8" | 8" | 8" |
| | SIDE WALL | $T_2$ | 5.5" | 5.5" | 5.5" | 5.5" | 5.5" | 5.5" | 6" | 6" | 6" | 6" | 6" | 6" | 6" | 6" | 7" | 7" | 7" | 7" | 7" | 7" | 7" | 7" | 8" | 8" | 8" | 8" | 8" | 8" | 8" | 8" | 8" | 8" |
| | INVERT | $T_3$ | 5.5" | 5.5" | 5.5" | 5.5" | 5.5" | 5.5" | 6" | 6" | 6" | 6" | 6" | 6" | 6" | 6" | 7" | 7" | 7" | 7" | 7" | 7" | 7" | 7" | 8" | 8" | 8" | 8" | 8" | 8" | 8" | 8" | 8" | 8" |
| MINIMUM WELDED WIRE FABRIC ($inch^2/ft$) | | "a" | .33 | .47 | .34 | .49 | .34 | .50 | .40 | .62 | .41 | .62 | .42 | .64 | .43 | .64 | .44 | .67 | .45 | .70 | .46 | .71 | .47 | .72 | .47 | .72 | .48 | .75 | .50 | .78 | .50 | .79 | .51 | .80 |
| | | "b" | .23 | .28 | .23 | .25 | .21 | .23 | .26 | .36 | .24 | .36 | .24 | .33 | .24 | .30 | .28 | .44 | .27 | .40 | .27 | .37 | .27 | .38 | .33 | .52 | .31 | .48 | .30 | .45 | .30 | .43 | .30 | .48 |
| | | "c" | .11 | .11 | .11 | .12 | .18 | .24 | .11 | .11 | .11 | .11 | .13 | .23 | .24 | .34 | .11 | .11 | .11 | .12 | .19 | .27 | .27 | .42 | .11 | .11 | .11 | .11 | .13 | .20 | .26 | .31 | .30 | .50 |
| | | "d" | .16 | .11 | .16 | .11 | .16 | .11 | .17 | .11 | .18 | .11 | .18 | .11 | .18 | .11 | .17 | .11 | .18 | .11 | .18 | .11 | .18 | .11 | .17 | .11 | .17 | .11 | .18 | .11 | .18 | .11 | .18 | .11 |
| | | "e" | .11 | .11 | .11 | .11 | .11 | .11 | .11 | .11 | .11 | .11 | .11 | .11 | .11 | .11 | .11 | .11 | .11 | .11 | .11 | .11 | .11 | .11 | .11 | .11 | .11 | .11 | .11 | .11 | .11 | .11 | .11 | .11 |
| | | "f" | .22 | .36 | .23 | .37 | .22 | .26 | .29 | .51 | .30 | .51 | .29 | .41 | .26 | .30 | .33 | .56 | .34 | .58 | .27 | .44 | .21 | .30 | .36 | .61 | .37 | .64 | .37 | .57 | .25 | .48 | .21 | .30 |
| * QUANTITY | Conc | CY/LF | .31 | | .34 | | .38 | | .37 | | .41 | | .44 | | .48 | | .51 | | .56 | | .60 | | .64 | | .63 | | .68 | | .73 | | .78 | | .83 | |
| | Reinf | LB/LF | 35 | 41 | 39 | 45 | 45 | 51 | 49 | 58 | 49 | 62 | 54 | 69 | 62 | 78 | 60 | 79 | 64 | 83 | 72 | 93 | 80 | 107 | 72 | 98 | 76 | 102 | 81 | 110 | 92 | 120 | 101 | 143 |
| ** SOIL PRESSURE (ksf) | | | 2.3 | 4.4 | 2.4 | 4.5 | 2.4 | 4.5 | 3.1 | 4.4 | 3.1 | 4.5 | 3.1 | 4.5 | 3.2 | 4.5 | 2.7 | 4.5 | 2.8 | 4.5 | 2.8 | 4.6 | 2.8 | 4.6 | 2.5 | 4.5 | 2.5 | 4.6 | 2.5 | 4.6 | 2.5 | 4.6 | 2.6 | 4.6 |

| SPAN, S | | | 8' | | | | | | | | | | 10' | | | | | | | | | | | | 12' | | | | | | | | | | | | | |
|---|---|---|---|---|---|---|---|---|---|---|---|---|---|---|---|---|---|---|---|---|---|---|---|---|---|---|---|---|---|---|---|---|---|---|---|---|---|---|
| HEIGHT, H | | | 4' | | 5' | | 6' | | 7' | | 8' | | 5' | | 6' | | 7' | | 8' | | 9' | | 10' | | 6' | | 7' | | 8' | | 9' | | 10' | | 11' | | 12' | |
| MAXIMUM EARTH COVER | | | 10' | 20' | 10' | 20' | 10' | 20' | 10' | 20' | 10' | 20' | 10' | 20' | 10' | 20' | 10' | 20' | 10' | 20' | 10' | 20' | 10' | 20' | 10' | 20' | 10' | 20' | 10' | 20' | 10' | 20' | 10' | 20' | 10' | 20' | 10' | 20' |
| CONCRETE (INCH) | ROOF | $T_1$ | 8.5" | 8.5" | 8.5" | 8.5" | 8.5" | 8.5" | 8.5" | 8.5" | 8.5" | 8.5" | 10" | 10" | 10" | 10" | 10" | 10" | 10" | 10" | 10" | 10" | 10" | 10" | 12" | 12" | 12" | 12" | 12" | 12" | 12" | 12" | 12" | 12" | 12" | 12" | 12" | 12" |
| | SIDE WALL | $T_2$ | 8.5" | 8.5" | 8.5" | 8.5" | 8.5" | 8.5" | 8.5" | 8.5" | 8.5" | 8.5" | 10" | 10" | 10" | 10" | 10" | 10" | 10" | 10" | 10" | 10" | 10" | 10" | 12" | 12" | 12" | 12" | 12" | 12" | 12" | 12" | 12" | 12" | 12" | 12" | 12" | 12" |
| | INVERT | $T_3$ | 8.5" | 8.5" | 8.5" | 8.5" | 8.5" | 8.5" | 8.5" | 8.5" | 8.5" | 8.5" | 10" | 10" | 10" | 10" | 10" | 10" | 10" | 10" | 10" | 10" | 10" | 10" | 12" | 12" | 12" | 12" | 12" | 12" | 12" | 12" | 12" | 12" | 12" | 12" | 12" | 12" |
| MINIMUM WELDED WIRE FABRIC ($inch^2/ft$) | | "a" | .55 | .87 | .56 | .90 | .57 | .92 | .58 | .93 | .58 | .94 | .66 | 1.07 | .67 | 1.10 | .69 | 1.13 | .70 | 1.14 | .70 | 1.16 | .77 | 1.16 | .73 | 1.21 | 1.21 | 1.24 | .77 | 1.27 | 1.24 | 1.29 | 1.27 | 1.31 | .78 | 1.32 | 1.29 | 1.32 |
| | | "b" | .37 | .59 | .35 | .55 | .33 | .52 | .33 | .52 | .36 | .57 | .45 | .74 | .43 | .70 | .41 | .67 | .40 | .64 | .43 | .67 | .48 | .67 | .51 | .85 | .85 | .81 | .49 | .77 | .81 | .74 | .77 | .77 | .53 | .79 | .74 | .79 |
| | | "c" | .11 | .11 | .11 | .11 | .20 | .31 | .31 | .42 | .38 | .62 | .11 | .11 | .11 | .11 | .22 | .31 | .36 | .42 | .40 | .62 | .54 | .86 | .11 | .11 | .11 | .11 | .23 | .30 | .37 | .42 | .42 | .60 | .54 | .82 | .42 | 1.06 |
| | | "d" | .19 | .11 | .19 | .11 | .20 | .11 | .20 | .11 | .20 | .11 | .20 | .11 | .20 | .11 | .21 | .11 | .21 | .11 | .21 | .11 | .21 | .11 | .20 | .11 | .20 | .11 | .21 | .11 | .22 | .11 | .22 | .11 | .22 | .11 | .22 | .11 |
| | | "e" | .11 | .11 | .11 | .11 | .11 | .11 | .11 | .11 | .11 | .11 | .11 | .11 | .11 | .11 | .11 | .11 | .11 | .11 | .11 | .11 | .11 | .11 | .11 | .11 | .11 | .11 | .11 | .11 | .11 | .11 | .11 | .11 | .11 | .11 | .11 | .11 |
| | | "f" | .44 | .76 | .45 | .79 | .37 | .61 | .27 | .52 | .20 | .31 | .55 | .96 | .56 | .99 | .47 | .81 | .34 | .73 | .31 | .53 | .16 | .30 | .62 | 1.10 | 1.10 | 1.13 | .64 | .97 | 1.13 | .87 | .97 | .71 | .40 | .50 | .87 | .26 |
| * QUANTITY | Conc | CY/LF | .78 | | .83 | | .88 | | .94 | | .99 | | 1.10 | | 1.17 | | 1.23 | | 1.29 | | 1.35 | | 1.41 | | 1.56 | | 1.63 | | 1.70 | | 1.78 | | 1.85 | | 1.93 | | 2.00 | |
| | Reinf | LB/LF | 93 | 129 | 97 | 133 | 105 | 148 | 117 | 161 | 131 | 189 | 133 | 191 | 138 | 196 | 148 | 212 | 191 | 225 | 176 | 253 | 201 | 282 | 174 | 255 | 179 | 261 | 191 | 279 | 207 | 293 | 223 | 323 | 249 | 357 | 281 | 393 |
| ** SOIL PRESSURE (ksf) | | | 2.5 | 4.6 | 2.5 | 4.6 | 2.5 | 4.6 | 2.5 | 4.6 | 2.5 | 4.6 | 3.8 | 4.6 | 3.8 | 4.7 | 3.8 | 4.7 | 4.6 | 4.7 | 3.9 | 4.7 | 3.9 | 4.8 | 3.6 | 4.7 | 3.7 | 4.7 | 3.7 | 4.8 | 3.7 | 4.8 | 3.7 | 4.8 | 3.8 | 4.9 | 3.8 | 4.9 |

* See Note 3 ** See Note 6

## NOTES:

1. The inside and outside surfaces of the RCB roof shall be marked "TOP".
2. H1 minimum shall equal the wall thickness. H1 maximum shall be 8" for spans through 8' and 14" for spans over 8'.
3. Quantities are approximate and for design purposes only.
4. For design and details not shown see Revised Standard Plan RSP D83B.
5. For external sealing band applications see Standard Plan A62G.
6. Soil pressures shown are factored per AASHTO LRFD and include soil weight of fill over box, self weight of box and live load where applicable.

STATE OF CALIFORNIA
DEPARTMENT OF TRANSPORTATION

# PRECAST REINFORCED CONCRETE BOX CULVERT

NO SCALE

RSP D83A DATED JULY 18, 2014 SUPERSEDES STANDARD PLAN D83A DATED MAY 20, 2011 - PAGE 175 OF THE STANDARD PLANS BOOK DATED 2010.

# REVISED STANDARD PLAN RSP D83A

4-3-14

| Dist | COUNTY | ROUTE | POST MILES TOTAL PROJECT | SHEET No. | TOTAL SHEETS |
|---|---|---|---|---|---|
| 06 | Tul | 65 | R15.1/18.0 | 269 | 324 |

REGISTERED CIVIL ENGINEER

July 18, 2014
PLANS APPROVAL DATE

REGISTERED PROFESSIONAL ENGINEER Carl M. Duan No. C59976 Exp. 6-30-16 CIVIL STATE OF CALIFORNIA

*THE STATE OF CALIFORNIA OR ITS OFFICERS OR AGENTS SHALL NOT BE RESPONSIBLE FOR THE ACCURACY OR COMPLETENESS OF SCANNED COPIES OF THIS PLAN SHEET.*

TO ACCOMPANY PLANS DATED 6-20-16

## DESIGN NOTES:

Specifications:

AASHTO LRFD Bridge Design Specifications, 4th Edition with California Amendments.

Earth load:

Earth pressures for two conditions:
140 pcf Vert, 42 pcf Horiz
140 pcf Vert, 140 pcf Horiz

Unit stresses:

f'c = 5.0 ksi
fy = 65.0 ksi for weld wire fabric
n = 7

Shear:

Based on

$V_c = \{2.14\sqrt{f'_c} + 4600 \frac{A_s}{bd_e} \frac{V_u d_e}{M_u}\} b.d_e \leq 4.0\sqrt{f'_c} b.d_e$ (Pounds)

$V_c$ shall not be less than $3.00\sqrt{f'_c} b.d_e$ for frame members and $2.5\sqrt{f'_c} b.d_e$ for simply supported members.

Exclusion:

Axial loading on the members has not been considered.

## GENERAL NOTES:

Designation:

Standard single or multiple precast box culverts are shown on the plans as span times height with maximum cover over roof thus: 8' x 5' RCB with 10'-0" or double 10' x 5' RCB with 20'-0", followed by alternatives.

Alternatives:

Single cell:

Standard dimensions of AASHTO Material Specification 'M259' or 'M273'.

Multiple cell:

Constructed by placing single cells adjacent to each other. Inlet and outlet ends of culvert will be rounded unless square ends are designated. Parapet will be shown unless designated in plans. Such designation may be different for inlet and outlet ends.

Limitations:

Where the overfill is less than 12", Precast RCB culverts are not to be used. Precast RCB culverts are not to be used in siphon or pressurized installations unless appropriate "watertight" jointing is provided.

Special reinforcement coverage:

Precast RCB culvert standard plans are not to be used in a corrosive environment or where there is a severe abrasive flow condition or freeze-thaw locations.

Special design:

Required for culvert with different conditions, loads or design bearing pressures greater than those given on these plans. Required for culverts where end details need higher skew angles, higher parapets or barrier sections.

## CONSTRUCTION NOTES:

Cutoff walls:

4'-0" Cutoff walls are to be provided at inlet and/or outlet unless channel is lined and unless otherwise shown. These walls are to be extended if scour conditions warrant. See Standard Plans D84, D85 and D86A.

Wingwalls:

Wingwalls shall be cast-in-place and shall conform to standard plan details for box culvert wingwalls. See Standard Plans D84, D85 and D86A.

Earthwork:

See Standard Plan A62G.

Construction loads:

Strutting may be required near temporary ends. For construction loads on culverts, See Standard Plan D88.

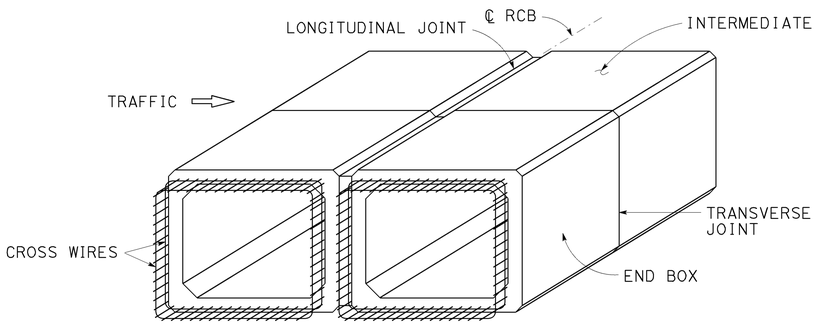


PRECAST RCB TERMINOLOGY

NOTE: Inner and outer reinforcement to be exposed as required to tie to cast-in-place construction. A minimum of two cross wires shall be exposed on all sides.

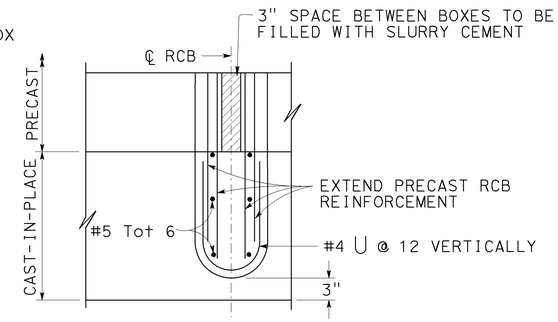


PARTIAL PLAN INTERIOR WALL MULTICELL CULVERT

| PARAPET "P" BARS | | | |
|---|---|---|---|
| SPAN \ SKEW ANGLE | 0° TO 15° | 16° TO 30° | 31° TO 45° |
| 4'-0" | #5 | #5 | #5 |
| 5'-0" | #5 | #5 | #6 |
| 6'-0" | #6 | #6 | #6 |
| 7'-0" | #7 | #7 | #7 |
| 8'-0" | #7 | #7 | #8 |
| 10'-0" | #8 | #8 | #9 |
| 12'-0" | #9 | #9 | #10 |

BARRIER PARAPET REINFORCEMENT

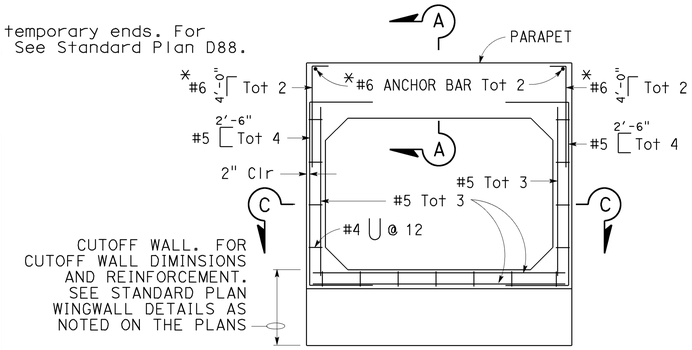


CAST-IN-PLACE END ELEVATION

* Reinforcing required for barrier parapet application only.

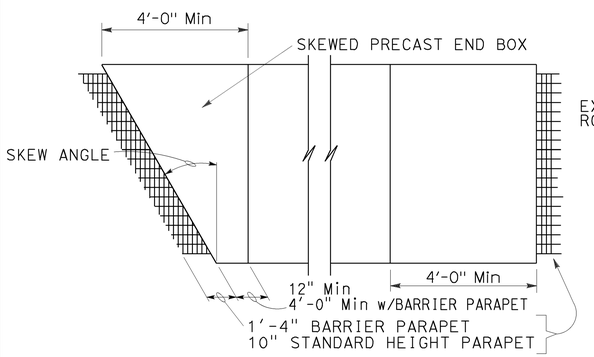


PARTIAL PLAN VIEW

For illustrative purposes only.
For correct skew direction see plans.

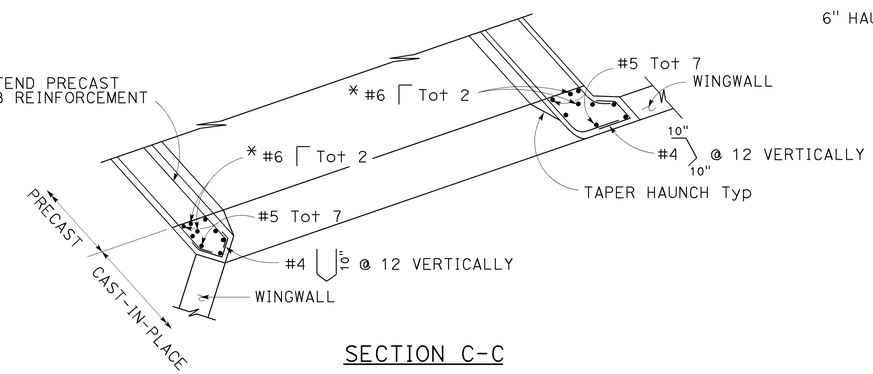


SECTION C-C

* Reinforcing required for barrier parapet application only.

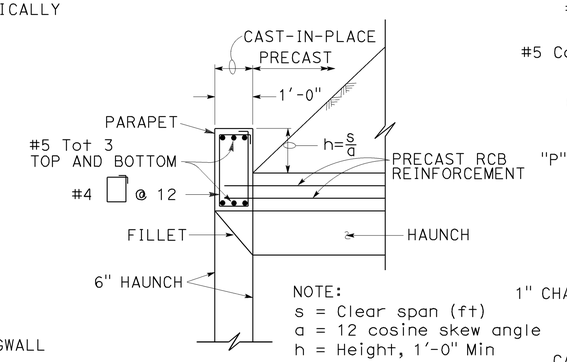


SECTION A-A
(Standard Height Parapet)

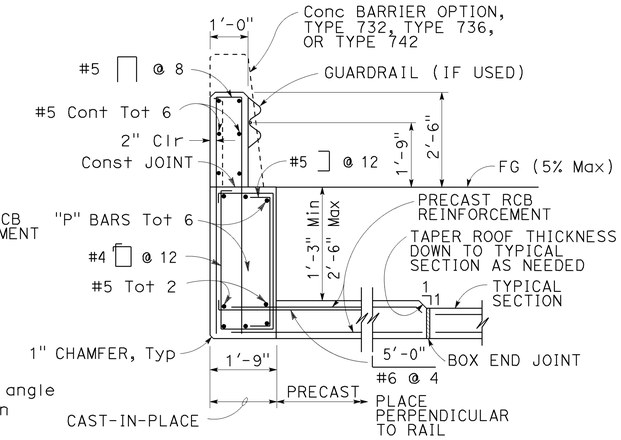


SECTION A-A
(Barrier Parapet)

TYPICAL CULVERT END DETAILS

For wall and invert reinforcement not shown, See "End Elevation" detail.

STATE OF CALIFORNIA
DEPARTMENT OF TRANSPORTATION

# PRECAST REINFORCED CONCRETE BOX CULVERT MISCELLANEOUS DETAILS

NO SCALE

RSP D83B DATED JULY 18, 2014 SUPERSEDES STANDARD PLAN D83B DATED MAY 20, 2011 - PAGE 176 OF THE STANDARD PLANS BOOK DATED 2010.

**REVISED STANDARD PLAN RSP D83B**

**2010 REVISED STANDARD PLAN RSP D83B**

4-3-14

| Dist | COUNTY | ROUTE | POST MILES TOTAL PROJECT | SHEET No. | TOTAL SHEETS |
|---|---|---|---|---|---|
| 06 | Tul | 65 | R15.1/18.0 | 270 | 324 |

REGISTERED CIVIL ENGINEER

July 15, 2016
PLANS APPROVAL DATE

REGISTERED PROFESSIONAL ENGINEER
Carl M. Duan
No. C59976
Exp. 6-30-18
CIVIL
STATE OF CALIFORNIA

*THE STATE OF CALIFORNIA OR ITS OFFICERS OR AGENTS SHALL NOT BE RESPONSIBLE FOR THE ACCURACY OR COMPLETENESS OF SCANNED COPIES OF THIS PLAN SHEET.*

TO ACCOMPANY PLANS DATED 6-20-16

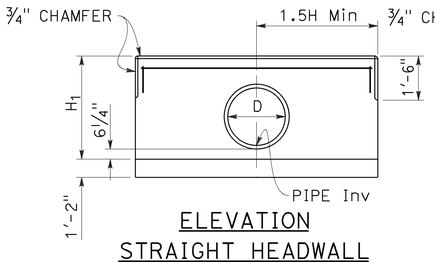


ELEVATION
STRAIGHT HEADWALL
SINGLE CIRCULAR PIPE

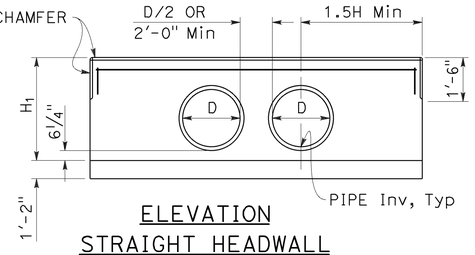


ELEVATION
STRAIGHT HEADWALL
DOUBLE CIRCULAR PIPE

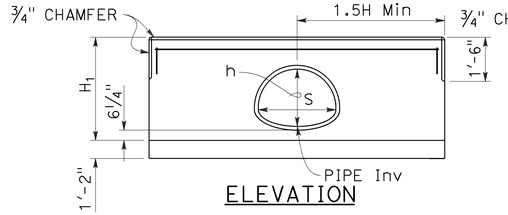


ELEVATION
STRAIGHT HEADWALL
SINGLE CMP

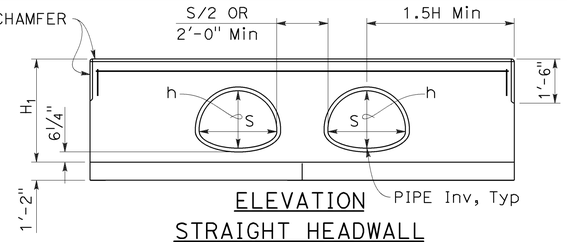


ELEVATION
STRAIGHT HEADWALL
DOUBLE CMP

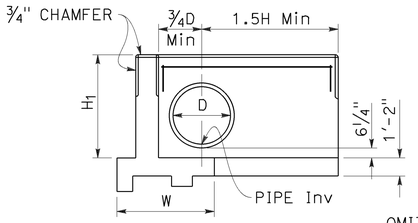


ELEVATION
"L" HEADWALL

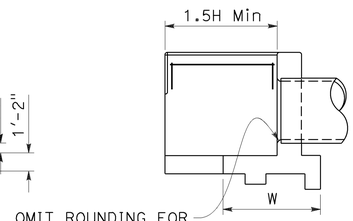


OMIT ROUNDING FOR PIPES < 48" Dia

SECTION
"L" HEADWALL

## CIRCULAR PIPE CULVERT HEADWALLS

See Note 2

| H | CIRCULAR PIPE SIZE D | CMP ARCH SIZE S x h |
|---|---|---|
| 2'-8" | 12" | - |
| 2'-11" | 15" | 21" x 15" |
| 3'-2" | 18" | 24" x 18" |
| 3'-5" | 21" | 28" x 20" |
| 3'-8" | 24" | 35" x 24" |
| 3'-11" | 27" | - |
| 4'-2" | 30" | 42" x 29" |
| 4'-5" | 33" | 49" x 33" |
| 4'-8" | 36" | - |
| 4'-11" | 39" | 57" x 38" |
| 5'-2" | 42" | 64" x 43" |
| 5'-5" | 45" | - |
| 5'-8" | 48" | 71" x 47" |
| 5'-11" | 51" | - |
| 6'-2" | 54" | - |

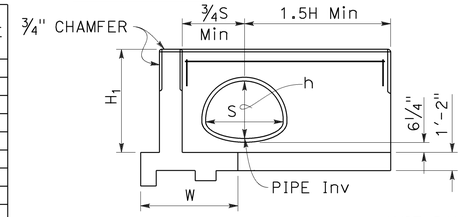


ELEVATION
"L" HEADWALL

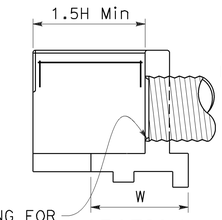


OMIT ROUNDING FOR PIPES < 48" Dia

SECTION
"L" HEADWALL

## CMP ARCH CULVERT HEADWALLS

See Note 2

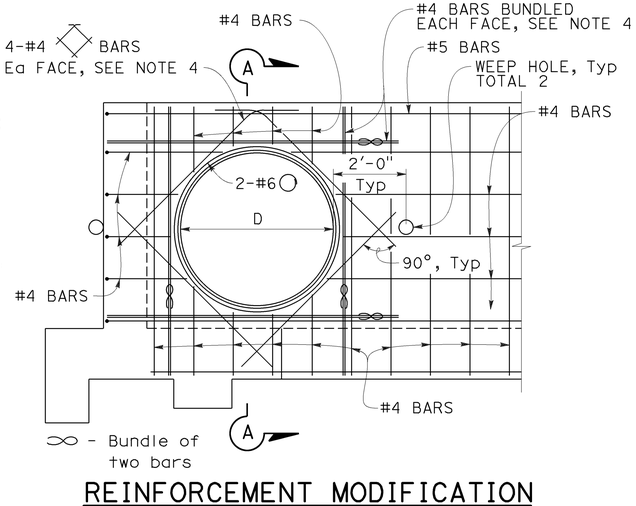


## REINFORCEMENT MODIFICATION

"L" headwall shown. Straight headwall similar.
Circular pipe shown. CMP arch similar.

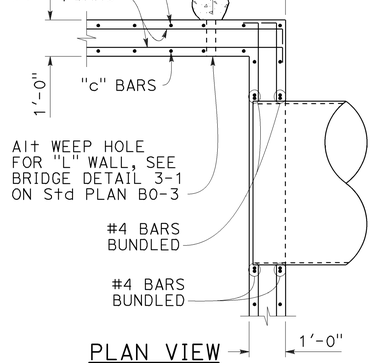


PLAN VIEW
## STEM WALL

"L" headwall shown.
Straight headwall similar.

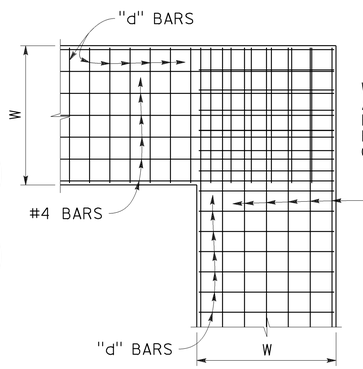


PLAN VIEW
## FOOTING

"L" headwall shown.
Straight headwall similar.

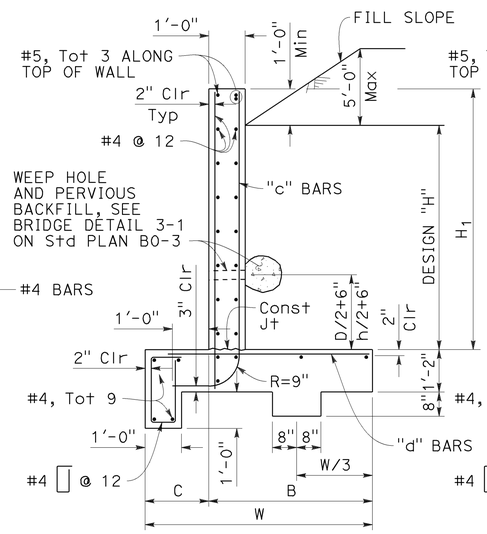


## TYPICAL SECTION

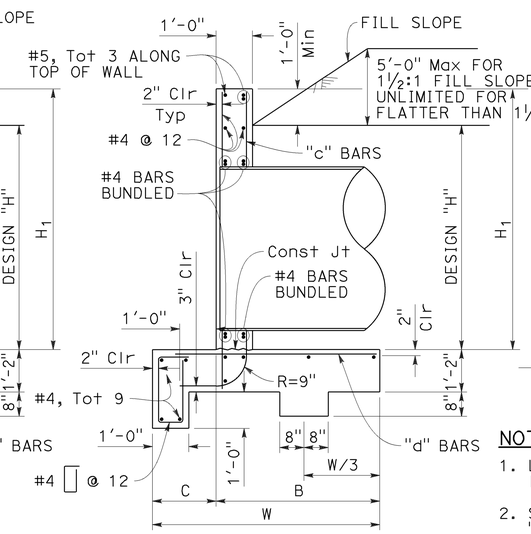


## SECTION A-A

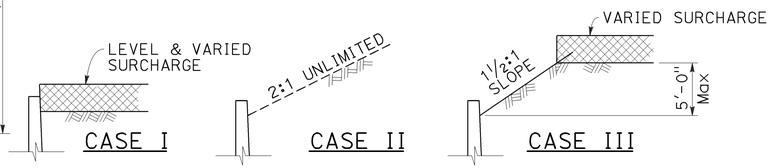


## DETAIL OF DESIGN LOADING CASES

| | | H | 2'-8" | 2'-11" | 3'-2" | 3'-5" | 3'-8" | 3'-11" | 4'-2" | 4'-5" | 4'-8" | 4'-11" | 5'-2" | 5'-5" | 5'-8" | 5'-11" | 6'-2" |
|---|---|---|---|---|---|---|---|---|---|---|---|---|---|---|---|---|---|
| | | W | 4'-7" | 4'-9" | 4'-10" | 5'-0" | 5'-1" | 5'-2" | 5'-3" | 5'-5" | 5'-6" | 5'-7" | 5'-8" | 5'-9" | 5'-11" | 6'-0" | 6'-3" |
| | | C | 1'-2" | 1'-2" | 1'-2" | 1'-3" | 1'-3" | 1'-3" | 1'-3" | 1'-4" | 1'-4" | 1'-4" | 1'-5" | 1'-5" | 1'-6" | 1'-6" | 1'-9" |
| | | B | 3'-5" | 3'-7" | 3'-8" | 3'-9" | 3'-10" | 3'-11" | 4'-0" | 4'-1" | 4'-2" | 4'-3" | 4'-3" | 4'-4" | 4'-5" | 4'-6" | 4'-6" |
| "c" BARS | | | #4 @ 12 | #4 @ 12 | #4 @ 12 | #4 @ 12 | #4 @ 12 | #4 @ 12 | #4 @ 12 | #4 @ 12 | #4 @ 12 | #4 @ 12 | #4 @ 12 | #4 @ 12 | #4 @ 12 | #4 @ 12 | #5 @ 12 |
| "d" BARS | | | #4 @ 12 | #4 @ 8 | #4 @ 8 | #4 @ 8 | #4 @ 8 | #5 @ 12 | #5 @ 12 | #5 @ 12 | #5 @ 12 | #5 @ 8 | #5 @ 8 | #5 @ 8 | #5 @ 8 | #6 @ 8 | #6 @ 8 |
| * Conc CY/LF | | | 0.404 | 0.412 | 0.415 | 0.423 | 0.426 | 0.430 | 0.433 | 0.440 | 0.444 | 0.448 | 0.451 | 0.455 | 0.462 | 0.466 | 0.477 |
| * Reinf LB/LF | | | 23 | 24 | 24 | 25 | 25 | 26 | 27 | 27 | 28 | 28 | 29 | 29 | 30 | 31 | 32 |
| **CASE I | Ser | (q'o, B') | 0.79, 4.66 | 0.83, 4.57 | 0.88, 4.58 | 0.89, 4.73 | 0.93, 4.74 | 0.93, 4.75 | 1.02, 4.75 | 1.02, 4.92 | 1.07, 4.93 | 1.11, 4.94 | 1.12, 4.98 | 1.16, 4.99 | 1.17, 5.16 | 1.21, 5.18 | 1.15, 5.53 |
| | Str | (q'o, B') | 1.48, 1.75 | 1.53, 1.80 | 1.65, 1.76 | 1.64, 1.88 | 1.76, 1.85 | 1.89, 1.83 | 2.02, 1.80 | 1.97, 1.95 | 2.08, 1.94 | 2.20, 1.93 | 2.28, 1.92 | 2.39, 1.92 | 2.31, 2.08 | 2.41, 2.09 | 2.17, 2.41 |
| | Extr | (q'o, B') | 0.65, 4.16 | 0.68, 4.27 | 0.72, 4.29 | 0.74, 4.44 | 0.78, 4.46 | 0.82, 4.47 | 0.86, 4.47 | 0.87, 4.63 | 0.92, 4.63 | 0.96, 4.64 | 0.98, 4.69 | 1.03, 4.69 | 1.04, 4.84 | 1.09, 4.84 | 1.05, 5.18 |
| **CASE II | Ser | (q'o, B') | 0.41, 4.52 | 0.44, 4.67 | 0.48, 4.73 | 0.51, 4.90 | 0.55, 4.95 | 0.59, 5.00 | 0.63, 5.04 | 0.65, 5.21 | 0.70, 5.26 | 0.74, 5.30 | 0.77, 5.37 | 0.81, 5.40 | 0.83, 5.58 | 0.88, 5.61 | 0.86, 5.96 |
| | Str | (q'o, B') | 1.05, 4.49 | 1.10, 4.64 | 1.15, 4.69 | 1.19, 4.86 | 1.24, 4.90 | 1.30, 4.94 | 1.36, 4.98 | 1.39, 5.15 | 1.46, 5.18 | 1.52, 5.22 | 1.56, 5.28 | 1.62, 5.31 | 1.62, 5.48 | 1.72, 5.51 | 1.69, 5.85 |
| | Extr | (q'o, B') | 0.98, 3.90 | 1.03, 4.00 | 1.10, 4.01 | 1.13, 4.15 | 1.19, 4.15 | 1.26, 4.15 | 1.33, 4.14 | 1.37, 4.28 | 1.44, 4.27 | 1.52, 4.26 | 1.57, 4.29 | 1.65, 4.28 | 1.68, 4.41 | 1.77, 4.40 | 1.72, 4.71 |
| **CASE III | Ser | (q'o, B') | 0.61, 4.53 | 0.64, 4.73 | 0.68, 4.76 | 0.70, 4.91 | 0.74, 4.91 | 0.79, 4.94 | 0.83, 4.93 | 0.85, 5.08 | 1.17, 4.03 | 1.23, 4.03 | 1.27, 4.06 | 1.34, 4.02 | 1.36, 4.15 | 1.43, 4.11 | 1.36, 4.45 |
| | Str | (q'o, B') | 0.99, 4.28 | 1.04, 4.67 | 1.10, 4.69 | 1.13, 4.83 | 1.19, 4.82 | 1.25, 4.83 | 1.32, 4.82 | 1.35, 4.95 | 2.02, 2.66 | 2.16, 2.62 | 2.25, 2.59 | 2.44, 2.48 | 2.49, 2.54 | 2.70, 2.44 | 2.50, 2.72 |
| | Extr | (q'o, B') | 0.90, 3.88 | 0.95, 3.93 | 1.01, 3.91 | 1.04, 4.02 | 1.11, 3.97 | 1.18, 3.92 | 1.25, 3.90 | 1.28, 4.00 | 1.35, 3.94 | 1.43, 3.92 | 1.11, 5.14 | 1.55, 3.87 | 1.58, 3.97 | 1.67, 3.91 | 1.60, 4.22 |

* Quantities include 1'-0" extension above the design "H" limit.
** q'o = net bearing stress (ksf), B' = effective footing width (ft)
Ser - service limit
Str - strength limit
Extr - extreme event

## REINFORCED CONCRETE HEADWALL

Quantities do not include added diagonals and do not consider pipe occupancy.

NOTE: Reinforced Concrete: fy = 60,000 psi
f'c = 3,600 psi

Earth Density: 120 pcf
Equivalent Fluid Pressure: 36 pcf

## NOTES:

1. Length of wall from ℄ pipe to end of wall is 1.5H Min, unless a greater length is shown on project plans.
2. Single circular pipe or single CMP shown for "L" headwall. For double pipe in "L" headwall, see "ELEVATION STRAIGHT HEADWALL DOUBLE CIRCULAR PIPE" or "ELEVATION STRAIGHT HEADWALL DOUBLE CMP" detail for additional information.
3. Cable railing to be installed on top of headwall when shown on Project Plans. See Revised Standard Plan RSP B11-47 for cable railing details.
4. Adjacent to each side of the opening, place additional reinforcement equivalent to half the interupted main reinforcement. For pipes 42" diameter and greater, add 4 diagonals, 1 bar each side. Extend bars one development length past the intersection with the adjacent diagonal bar, or where bars intersect mid thickness of adjacent wall, bottom slab or at top of wall, bend ends as required into same plane.
5. Quantities are approximate and for design purposes only. No deduction is made for pipe or arch occupancy.

STATE OF CALIFORNIA
DEPARTMENT OF TRANSPORTATION

# PIPE CULVERT HEADWALLS STRAIGHT AND "L"

NO SCALE

RSP D89 DATED JULY 15, 2016 SUPERSEDES STANDARD PLAN D89
DATED MAY 20, 2011 - PAGE 188 OF THE STANDARD PLANS BOOK DATED 2010.

**REVISED STANDARD PLAN RSP D89**

**2010 REVISED STANDARD PLAN RSP D89**

6-20-16

| Dist | COUNTY | ROUTE | POST MILES TOTAL PROJECT | SHEET No. | TOTAL SHEETS |
|---|---|---|---|---|---|
| 06 | Tul | 65 | R15.1/18.0 | 271 | 324 |

Raymond Don Tsztoo
REGISTERED CIVIL ENGINEER

October 30, 2015
PLANS APPROVAL DATE

REGISTERED PROFESSIONAL ENGINEER
Raymond Don Tsztoo
No. C37332
Exp. 6-30-16
CIVIL
STATE OF CALIFORNIA

THE STATE OF CALIFORNIA OR ITS OFFICERS OR AGENTS SHALL NOT BE RESPONSIBLE FOR THE ACCURACY OR COMPLETENESS OF SCANNED COPIES OF THIS PLAN SHEET.

TO ACCOMPANY PLANS DATED 6-20-16

## ANNULAR AND HELICAL PROFILE

| COUPLING TYPE | PIPE CORRUGATION | PIPE SIZE | W OR A | PIPE WALL THICKNESS | | BAND THICKNESS | | BAR AND STRAP (CSP ONLY) | | | | ANGLE | | | | | | |
|---|---|---|---|---|---|---|---|---|---|---|---|---|---|---|---|---|---|---|
| | | | | | | | | | | | | DIMENSIONS | | BOLTS (No.- Dia) | | RIVETS ANGLE TO BAND | | SPOT WELDS ANGLE TO BAND |
| | | | | CSP | CAP | CSP | CAP | STRAP THICKNESS | BOLTS Dia | BAR Dia | BAR YIELD STRENGTH | CSP | CAP | CSP | CAP | CSP | CAP | CSP |
| TWO PIECE INTEGRAL FLANGE | 1½′ × ¼" | 6" | 7" | 0.064"-0.168" | | 0.052" | | | | | | | | 3-⅜" | | | | |
| | 1½′ × ¼" | 8"-10" | 7" | 0.064"-0.168" | 0.060"-0.164" | 0.064" | 0.060" | | | | | | | 3-⅜" | 3-⅜" | | | |
| ANNULAR | 2⅔" × ½" | THROUGH 24" | 12" | 0.064"-0.168" | 0.060"-0.164" | 0.064" | 0.060" | | | | | 2" × 2" × 3/16" | 2" × 2" × 3/16" | 3-½" | 3-½" | 3-⅜" | 3-⅜" | 3-½" |
| HUGGER | 2⅔" × ½" REROLLED END | THROUGH 24" | 10½" | 0.064"-0.168" | | 0.064" | | 0.079" | ½" | ⅞" | 32 ksi | | | | | | | |

## SPIRAL RIB PROFILE

| COUPLING TYPE | PIPE CORRUGATION | PIPE SIZE | W | PIPE WALL THICKNESS | | BAND THICKNESS | | BAR AND STRAP (SSRP ONLY) | | | | ANGLE | | | | | | |
|---|---|---|---|---|---|---|---|---|---|---|---|---|---|---|---|---|---|---|
| | | | | | | | | | | | | DIMENSIONS | | BOLTS (No.- Dia) | | RIVETS ANGLE TO BAND | | SPOT WELDS ANGLE TO BAND |
| | | | | SSRP | ASRP | SSRP | ASRP | STRAP THICKNESS | BOLTS Dia | BAR Dia | BAR YIELD STRENGTH | SSRP | ASRP | SSRP | ASRP | SSRP | ASRP | SSRP |
| ANNULAR | 2⅔" × ½" * REROLLED END | 24" | 12" | 0.064"-0.168" | 0.060"-0.164" | 0.064" | 0.060" | | | | | 2" × 2" × 3/16" | 2" × 2" × 3/16" | 3-½" | 3-½" | 3-⅜" | 3-⅜" | 3-½" |
| HUGGER | 2⅔" × ½" * REROLLED END | 24" | 10½" | 0.064"-0.168" | | 0.064" | | 0.079" | ½" | ⅞" | 32 ksi | | | | | | | |

* See Note 11.

## NOTES:

1. For helically corrugated coupling bands, the connection angles may be oriented parallel to the pipe axis, provided connecting holes are slotted lengthwise sufficiently to allow adjustment for the helix angle.
2. Tension strap may be connected to band with either spot welds or fillet welds that develop minimum required strength of strap.
3. Use 1¼" gage line dimension on attached angle leg for rivets and spot welds.
4. Band thickness shall not be less than:
   a. 3 standard thicknesses lighter than the thickness of the pipe for Corrugated Steel Pipe.
   b. 2 standard thicknesses lighter than the thickness of the pipe and in no case lighter than 0.060" for Corrugated Aluminum Pipe.
5. Dimensions, thicknesses and strengths shown are minimum.
6. For pipe arches use same width band as for round pipe of equal periphery.
7. Fillet welds of equivalent strength may be substituted for spot welds or rivets.
8. Spot welds shall develop minimum required strength of strap.
9. Pipe with rerolled ends having at least two 2⅔" × ½" annular corrugations at each end with or without an upturned flange may be connected with any of the annular coupling bands shown for pipe of the same diameter and wall thickness and having 2⅔" × ½" corrugations.
10. For downdrain applications, two piece integral flange couplers shall have factory applied sleeve type rubber gaskets with a minimum length of 7" measured along the length of the pipe.
11. All profiles of Spiral Rib Pipe (¾" × ¾" ribs at 7½" pitch and ¾" × 1" ribs at 11½" pitch in both steel and aluminum and ¾" × 1" ribs at 8½" pitch in steel only) shall be manufactured with rerolled ends. Corrugation profile of the rerolled ends shall be 2⅔" × ½" annual corrugations with a minimum of two full corrugations at each end.

STATE OF CALIFORNIA
DEPARTMENT OF TRANSPORTATION

# CORRUGATED METAL PIPE COUPLING DETAILS No. 7 DOWNDRAIN

NO SCALE

RSP D97G DATED OCTOBER 30, 2015 SUPERSEDES STANDARD PLAN D97G DATED MAY 20, 2011 - PAGE 202 OF THE STANDARD PLANS BOOK DATED 2010.

**REVISED STANDARD PLAN RSP D97G**

**2010 REVISED STANDARD PLAN RSP D97G**

8-19-15

| Dist | COUNTY | ROUTE | POST MILES TOTAL PROJECT | SHEET No. | TOTAL SHEETS |
|---|---|---|---|---|---|
| 06 | Tul | 65 | R15.1/18.0 | 272 | 324 |

Gregory A. Balzer
LICENSED LANDSCAPE ARCHITECT

July 19, 2013
PLANS APPROVAL DATE

LICENSED LANDSCAPE ARCHITECT
Gregory A. Balzer 2516
Gregory A. Balzer
06-28-13
Renewal Date
2-28-15
Renewal Date
7-19-13
Date
STATE OF CALIFORNIA

*THE STATE OF CALIFORNIA OR ITS OFFICERS OR AGENTS SHALL NOT BE RESPONSIBLE FOR THE ACCURACY OR COMPLETENESS OF SCANNED COPIES OF THIS PLAN SHEET.*

TO ACCOMPANY PLANS DATED 6-20-16

## A

| | |
|---|---|
| AB | AGGREGATE BASE |
| ABS | ACRYLONITRILE-BUTADIENE-STYRENE |
| AC | ASPHALT CONCRETE |
| ACC | ARMOR-CLAD CONDUCTORS |
| Adj | ADJACENT/ADJUSTABLE |
| AIC | AUXILIARY IRRIGATION CONTROLLER |
| Alt | ALTERNATIVE |
| AMEND | AMENDMENT |
| ARV | AIR RELEASE VALVE |
| AUTO | AUTOMATIC |
| AUX | AUXILIARY |
| AVB | ATMOSPHERIC VACUUM BREAKER |

## B

| | |
|---|---|
| B&B | BALLED AND BURLAPPED |
| B/B | BRASS/BRONZE |
| B/B/PL | BRASS/BRONZE/PLASTIC |
| B/PL | BRASS/PLASTIC |
| BFM | BONDED FIBER MATRIX |
| Bit Ctd | BITUMINOUS COATED |
| BP | BOOSTER PUMP |
| BPA | BACKFLOW PREVENTER ASSEMBLY |
| BPE | BACKFLOW PREVENTER ENCLOSURE |
| BV | BALL VALVE |

## C

| | |
|---|---|
| C | CONDUIT |
| CAP | CORRUGATED ALUMINUM PIPE |
| CARV | COMBINATION AIR RELEASE VALVE |
| CB | COUPLING BAND |
| CCA | CAM COUPLER ASSEMBLY |
| CEC | CONTROLLER ENCLOSURE CABINET |
| CHDPE | CORRUGATED HIGH DENSITY POLYETHYLENE |
| CL | CHAIN LINK |
| CNC | CONTROL AND NEUTRAL CONDUCTORS |
| Conc | CONCRETE |
| CP | COPPER PIPE |
| CS | COMPOST SOCK |
| CSP | CORRUGATED STEEL PIPE |
| CST | CENTER STRIP |
| CV | CHECK VALVE |

## D

| | |
|---|---|
| Dia | DIAMETER |
| DIP | DUCTILE IRON PIPE |
| DIT | DRIP IRRIGATION TUBING |
| DG | DECOMPOSED GRANITE |
| DN | DIAMETER NOMINAL |
| DVA | DRIP VALVE ASSEMBLY |

## E

| | |
|---|---|
| EC | EROSION CONTROL |
| ECTC | EROSION CONTROL TECHNOLOGY COUNCIL |
| Elect | ELECTRIC/ELECTRICAL |
| Elev | ELEVATION |
| ELL | ELBOW |
| ENCL | ENCLOSURE |
| EP | EDGE OF PAVEMENT |
| ES | EDGE OF SHOULDER |
| EST | END STRIP |
| ESTB | ESTABLISHMENT |
| ETW | EDGE OF TRAVELED WAY |

## F

| | |
|---|---|
| F | FULL CIRCLE |
| F/P | FULL/PART CIRCLE |
| FCV | FLOW CONTROL VALVE |
| FERT | FERTILIZER |
| FG | FINISHED GRADE |
| FH | FLEXIBLE HOSE |
| FIPT | FEMALE IRON PIPE THREAD |
| FIS | FERTILIZER INJECTOR SYSTEM |
| FL | FLOW LINE |
| FR | FIBER ROLL |
| FS | FLOW SENSOR |
| FSC | FLOW SENSOR CABLE |
| FV | FLUSH VALVE |

## G

| | |
|---|---|
| Galv | GALVANIZED |
| GARV | GARDEN VALVE |
| GARVA | GARDEN VALVE ASSEMBLY |
| GM | GRAVEL MULCH |
| GPH | GALLONS PER HOUR |
| GPM | GALLONS PER MINUTE |
| GSP | GALVANIZED STEEL PIPE |
| GV | GATE VALVE |

## H

| | |
|---|---|
| H | HALF CIRCLE |
| HDPE | HIGH DENSITY POLYETHYLENE |
| HP | HORSEPOWER/HINGE POINT |
| HPL | HIGH PRESSURE LINE |
| Hwy | HIGHWAY |

## I

| | |
|---|---|
| IC | IRRIGATION CONTROLLER |
| ICC | IRRIGATION CONTROLLER(S) IN CONTROLLER ENCLOSURE CABINET |
| ID | INSIDE DIAMETER |
| IFS | IRRIGATION FILTRATION SYSTEM |
| IPS | IRON PIPE SIZE |
| IPT | IRON PIPE THREAD |
| Irr | IRRIGATION |

## L

| | |
|---|---|
| L | LENGTH |

## M

| | |
|---|---|
| Max | MAXIMUM |
| MBGR | METAL BEAM GUARD RAILING |
| MCV | MANUAL CONTROL VALVE |
| MIC | MASTER IRRIGATION CONTROLLER |
| Min | MINIMUM |
| MIPT | MALE IRON PIPE THREAD |
| Misc | MISCELLANEOUS |
| Mtl | MATERIAL |
| MVP | MAINTENANCE VEHICLE PULLOUT |

## N

| | |
|---|---|
| NCN | NO COMMON NAME |
| NL | NOZZLE LINE |
| No. | NUMBER |
| NPT | NATIONAL PIPE THREAD |

## O

| | |
|---|---|
| O/C | ON CENTER |
| OD | OUTSIDE DIAMETER |
| OL | OVERLAP |

## P

| | |
|---|---|
| P | PART CIRCLE |
| PB | PULL BOX |
| PCC | PORTLAND CEMENT CONCRETE |
| PE | POLYETHYLENE |
| Pkt | PACKET |
| PL | PLASTIC |
| PLS | PURE LIVE SEED |
| PLT | PLANT/PLANTING |
| PLT ESTB | PLANT ESTABLISHMENT |
| PM | POST MILE |
| PR | PRESSURE RATED |
| PRLV | PRESSURE RELIEF VALVE |
| PRV | PRESSURE REGULATING VALVE |
| PVC | POLYVINYL CHLORIDE |
| Pvmt | PAVEMENT |

## Q

| | |
|---|---|
| Q | QUARTER CIRCLE |
| QCV | QUICK COUPLING VALVE |

## R

| | |
|---|---|
| R | RADIUS |
| RCP | REINFORCED CONCRETE PIPE |
| RCV | REMOTE CONTROL VALVE |
| RCVM | REMOTE CONTROL VALVE (MASTER) |
| RCVMF | REMOTE CONTROL VALVE (MASTER) W/FLOW SENSOR |
| RCVP | REMOTE CONTROL VALVE W/PRESSURE REGULATOR |
| RCW | RECYCLED WATER |
| RECP | ROLLED EROSION CONTROL PRODUCT |
| REQ | REQUIRED |
| RICS | REMOTE IRRIGATION CONTROL SYSTEM |
| R/W | RIGHT OF WAY |

## S

| | |
|---|---|
| S | SLIP |
| SCH | SCHEDULE |
| SF | STATE-FURNISHED |
| Shld | SHOULDER |
| Sq | SQUARE |
| SST | SIDE STRIP |
| Sta | STATION |
| Std | STANDARD |
| SW | SIDEWALK/SOUND WALL |

## T

| | |
|---|---|
| T | THIRD CIRCLE/THREAD |
| TLS | TRUCK LOADING STANDPIPE |
| TQ | THREE QUARTER CIRCLE |
| TRM | TURF REINFORCEMENT MAT |
| TT | TWO-THIRDS CIRCLE |
| TWSA | TREE WELL SPRINKLER ASSEMBLY |
| Typ | TYPICAL |

## U

| | |
|---|---|
| UG | UNDERGROUND |

## W

| | |
|---|---|
| W | WIDTH |
| W/ | WITH |
| WM | WATER METER |
| WS | WYE STRAINER |
| WSA | WYE STRAINER ASSEMBLY |
| WSP | WELDED STEEL PIPE |
| WWM | WELDED WIRE MESH |

**NOTE:**
For additional abbreviations, see Standard Plans A10A and A10B.

STATE OF CALIFORNIA
DEPARTMENT OF TRANSPORTATION

# LANDSCAPE AND EROSION CONTROL ABBREVIATIONS

NO SCALE

RSP H1 DATED JULY 19, 2013 SUPERSEDES STANDARD PLAN H1 DATED MAY 20, 2011 - PAGE 218 OF THE STANDARD PLANS BOOK DATED 2010.

**REVISED STANDARD PLAN RSP H1**

**2010 REVISED STANDARD PLAN RSP H1**

| Dist | COUNTY | ROUTE | POST MILES TOTAL PROJECT | SHEET No. | TOTAL SHEETS |
|---|---|---|---|---|---|
| 06 | Tul | 65 | R15.1/18.0 | 273 | 324 |

REGISTERED CIVIL ENGINEER

July 19, 2013
PLANS APPROVAL DATE

REGISTERED PROFESSIONAL ENGINEER Gurinderpal Bhullar No. C48815 Exp. 9-30-14 CIVIL STATE OF CALIFORNIA

*THE STATE OF CALIFORNIA OR ITS OFFICERS OR AGENTS SHALL NOT BE RESPONSIBLE FOR THE ACCURACY OR COMPLETENESS OF SCANNED COPIES OF THIS PLAN SHEET.*

TO ACCOMPANY PLANS DATED 6-20-16

**2010 REVISED STANDARD PLAN RSP T9**

## TABLE 1

### TAPER LENGTH CRITERIA AND CHANNELIZING DEVICE SPACING

| SPEED (S) | MINIMUM TAPER LENGTH * FOR WIDTH OF OFFSET 12 FEET (W) | | | | MAXIMUM CHANNELIZING DEVICE SPACING | | |
|---|---|---|---|---|---|---|---|
| | | | | | X | Y | Z ** |
| | TANGENT 2L | MERGING L | SHIFTING L/2 | SHOULDER L/3 | TAPER | TANGENT | CONFLICT |
| mph | ft | ft | ft | ft | ft | ft | ft |
| 20 | 160 | 80 | 40 | 27 | 20 | 40 | 10 |
| 25 | 250 | 125 | 63 | 42 | 25 | 50 | 12 |
| 30 | 360 | 180 | 90 | 60 | 30 | 60 | 15 |
| 35 | 490 | 245 | 123 | 82 | 35 | 70 | 17 |
| 40 | 640 | 320 | 160 | 107 | 40 | 80 | 20 |
| 45 | 1080 | 540 | 270 | 180 | 45 | 90 | 22 |
| 50 | 1200 | 600 | 300 | 200 | 50 | 100 | 25 |
| 55 | 1320 | 660 | 330 | 220 | 55 | 110 | 27 |
| 60 | 1440 | 720 | 360 | 240 | 60 | 120 | 30 |
| 65 | 1560 | 780 | 390 | 260 | 65 | 130 | 32 |
| 70 | 1680 | 840 | 420 | 280 | 70 | 140 | 35 |

* - For other offsets, use the following merging taper length formula for L:
For speed of 40 mph or less, $L = WS^2/60$
For speed of 45 mph or more, $L = WS$

Where: L = Taper length in feet
W = Width of offset in feet
S = Posted speed limit, off-peak 85th-percentile speed prior to work starting, or the anticipated operating speed in mph

** - Use for taper and tangent sections where there are no pavement markings or where there is a conflict between existing pavement markings and channelizers (CA).

## TABLE 2

### LONGITUDINAL BUFFER SPACE AND FLAGGER STATION SPACING

| SPEED * | Min D ** | DOWNGRADE Min D *** | | |
|---|---|---|---|---|
| | | -3% | -6% | -9% |
| mph | ft | ft | ft | ft |
| 20 | 115 | 116 | 120 | 126 |
| 25 | 155 | 158 | 165 | 173 |
| 30 | 200 | 205 | 215 | 227 |
| 35 | 250 | 257 | 271 | 287 |
| 40 | 305 | 315 | 333 | 354 |
| 45 | 360 | 378 | 400 | 427 |
| 50 | 425 | 446 | 474 | 507 |
| 55 | 495 | 520 | 553 | 593 |
| 60 | 570 | 598 | 638 | 686 |
| 65 | 645 | 682 | 728 | 785 |
| 70 | 730 | 771 | 825 | 891 |

* - Speed is posted speed limit, off-peak 85th-percentile speed prior to work starting, or the anticipated operating speed in mph

** - Longitudinal buffer space or flagger station spacing

*** - Use on sustained downgrade steeper than -3 percent and longer than 1 mile.

## TABLE 3

### ADVANCE WARNING SIGN SPACING

| ROAD TYPE | DISTANCE BETWEEN SIGNS * | | |
|---|---|---|---|
| | A | B | C |
| | ft | ft | ft |
| URBAN - 25 mph OR LESS | 100 | 100 | 100 |
| URBAN - MORE THAN 25 mph TO 40 mph | 250 | 250 | 250 |
| URBAN - MORE THAN 40 mph | 350 | 350 | 350 |
| RURAL | 500 | 500 | 500 |
| EXPRESSWAY / FREEWAY | 1000 | 1500 | 2640 |

* - The distances are approximate, are intended for guidance purposes only, and should be applied with engineering judgment. These distances should be adjusted by the Engineer for field conditions, if necessary, by increasing or decreasing the recommmended distances.

STATE OF CALIFORNIA
DEPARTMENT OF TRANSPORTATION

# TRAFFIC CONTROL SYSTEM TABLES FOR LANE AND RAMP CLOSURES

NO SCALE

RSP T9 DATED JULY 19, 2013 SUPERSEDES RSP T9 DATED APRIL 19, 2013 THAT SUPPLEMENTS THE STANDARD PLANS BOOK DATED 2010.

**REVISED STANDARD PLAN RSP T9**

| Dist | COUNTY | ROUTE | POST MILES TOTAL PROJECT | SHEET No. | TOTAL SHEETS |
|---|---|---|---|---|---|
| 06 | Tul | 65 | R15.1/18.0 | 274 | 324 |

REGISTERED CIVIL ENGINEER

April 19, 2013
PLANS APPROVAL DATE

REGISTERED PROFESSIONAL ENGINEER Gurinderpal Bhullar No. C48815 Exp. 9-30-14 CIVIL STATE OF CALIFORNIA

*THE STATE OF CALIFORNIA OR ITS OFFICERS OR AGENTS SHALL NOT BE RESPONSIBLE FOR THE ACCURACY OR COMPLETENESS OF SCANNED COPIES OF THIS PLAN SHEET.*

TO ACCOMPANY PLANS DATED 6-20-16

## NOTES:

See Revised Standard Plan RSP T9 for tables.

Use cone spacing X for taper segment, Y for tangent segment or Z for conflict situations, as approriate, per Table 1, unless X, Y, or Z cone spacing is shown on this sheet.

Unless otherwise specified in the special provisions, all temporary warning signs shall have black legend on fluorescent orange background.

California codes are designated by (CA). Otherwise, Federal (MUTCD) codes are shown.

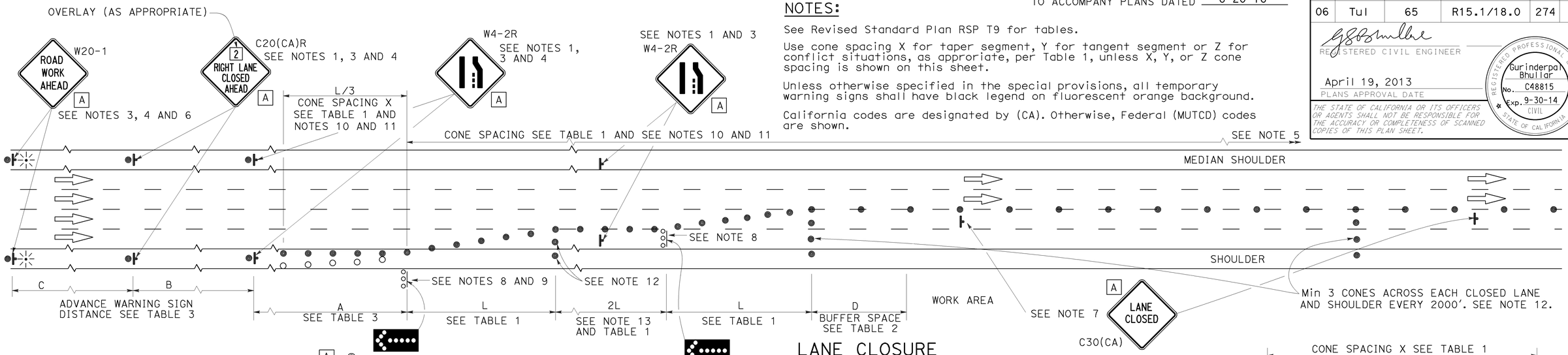


## LANE CLOSURE

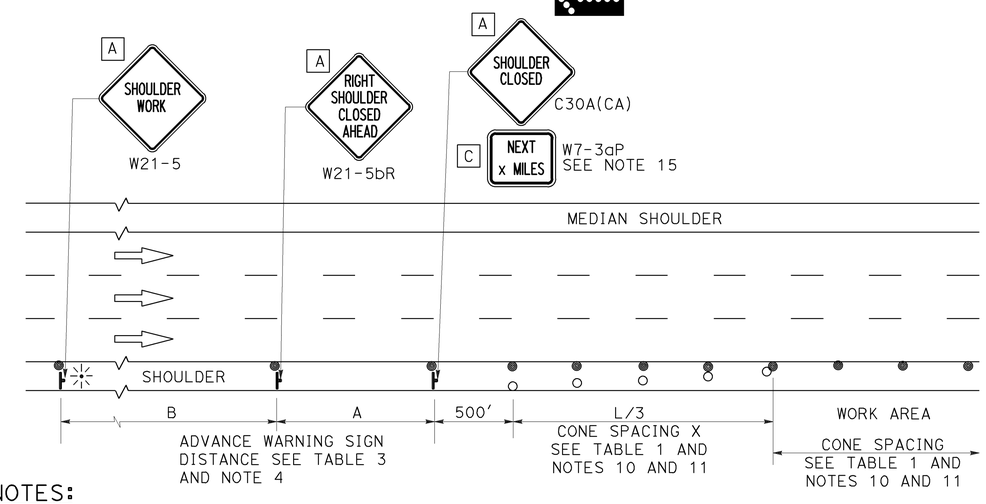


## SHOULDER CLOSURE

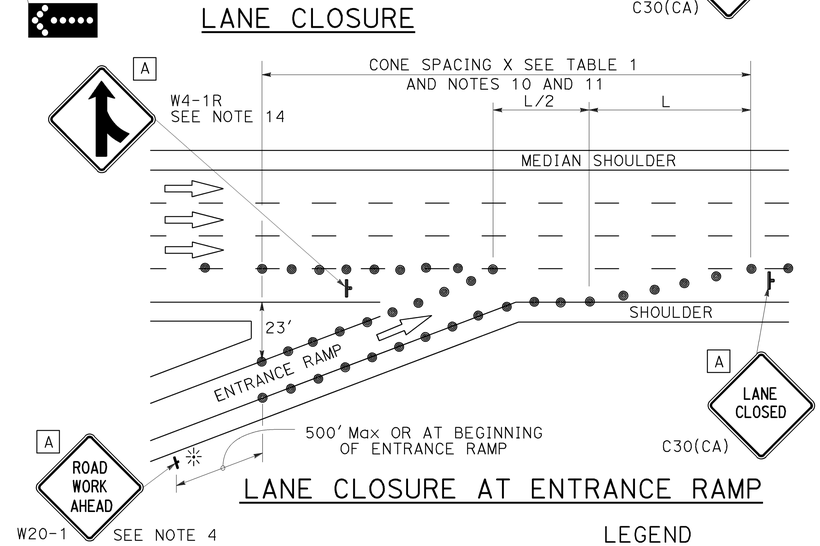


## LANE CLOSURE AT ENTRANCE RAMP

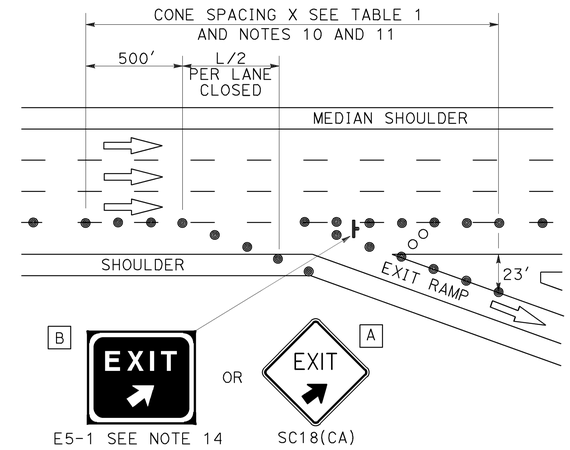


## LANE CLOSURE AT EXIT RAMP

## NOTES:

1. Median lane closures shall conform to the details as shown except that C20(CA)L and W4-2L signs shall be used.
2. At least one person shall be assigned to provide full time maintenance of traffic control devices for lane closures.
3. Duplicate sign installations are not required:
   a) On opposite shoulder if at least one-half of the available lanes remain open to traffic.
   b) In the median if the width of the median shoulder is less than 8' and the outside lanes are to be closed.
4. Each advance warning sign on each side of the roadway shall be equipped with at least two flags for daytime closure. Each flag shall be at least 16" x 16" in size and shall be orange or fluorescent red-orange in color. Flashing beacons shall be placed at the locations indicated for lane closure during hours of darkness.
5. A G20-2 "END ROAD WORK" sign, with minimum size of 48" x 24" as appropriate, shall be placed at the end of the lane closure unless the end of work area is obvious or ends within a larger project's limits.
6. If the W20-1 sign would follow within 2000' of a stationary W20-1 or G20-1 "ROAD WORK NEXT _____ MILES", use a C20(CA) sign for the first advance warning sign.
7. Place a C30(CA) sign every 2000' throughout length of lane closure.
8. One flashing arrow sign for each lane closed. The flashing arrow signs shall be Type I.
9. A minimum 1500' of sight distance shall be provided where possible for vehicles approaching the first flashing arrow sign. Lane closures shall not begin at top of crest vertical curve or on a horizontal curve.
10. All cones used for lane closures during the hours of darkness shall be fitted with retroreflective bands (or sleeves) as specified in the specifications.
11. Portable delineators, placed at one-half the spacing indicated for traffic cones may be used instead of cones for daytime closures only.
12. Unless otherwise specified in the special provisions, a minimum of 3 cones shall be placed transversely across each closed lane and shoulder at each location where a taper across a traffic lane ends and every 2000' as shown on the "Lane Closure" detail. Two Type II barricades may be used instead of the 3 cones. The transverse alignment of the cones or barricades on the closed shoulder may be shifted from the transverse alignment to provide access to the work.
13. Unless otherwise specified in the special provisions, the 2L tangent shown along lane lines shall be used between the L tapers required for each closed traffic lane.
14. Unless otherwise specified in the special provisions, the E5-1 or SC18(CA) and W4-1 signs shall be used as shown.
15. A W7-3aP "NEXT____ MILES" plaque must be used if theshoulder closure extends beyond the distance that can be perceived by road users.

## LEGEND

- TRAFFIC CONE
- TRAFFIC CONE (OPTIONAL TAPER)
- TEMPORARY TRAFFIC CONTROL SIGN
- FLASHING ARROW SIGN (FAS)
- FAS SUPPORT OR TRAILER
- PORTABLE FLASHING BEACON

## SIGN PANEL SIZE (Min)

| | |
|---|---|
| A | 48" x 48" |
| B | 72" x 60" |
| C | 36" x 30" |

STATE OF CALIFORNIA
DEPARTMENT OF TRANSPORTATION

# TRAFFIC CONTROL SYSTEM FOR LANE CLOSURE ON FREEWAYS AND EXPRESSWAYS

NO SCALE

RSP T10 DATED APRIL 19, 2013 SUPERSEDES STANDARD PLAN T10 DATED MAY 20, 2011 - PAGE 237 OF THE STANDARD PLANS BOOK DATED 2010.

**REVISED STANDARD PLAN RSP T10**

**2010 REVISED STANDARD PLAN RSP T10**

12-18-12

TO ACCOMPANY PLANS DATED 6-20-16

| Dist | COUNTY | ROUTE | POST MILES TOTAL PROJECT | SHEET No. | TOTAL SHEETS |
|---|---|---|---|---|---|
| 06 | Tul | 65 | R15.1/18.0 | 275 | 324 |

REGISTERED CIVIL ENGINEER

April 19, 2013
PLANS APPROVAL DATE

REGISTERED PROFESSIONAL ENGINEER Gurinderpal Bhullar No. C48815 Exp. 9-30-14 CIVIL STATE OF CALIFORNIA

*THE STATE OF CALIFORNIA OR ITS OFFICERS OR AGENTS SHALL NOT BE RESPONSIBLE FOR THE ACCURACY OR COMPLETENESS OF SCANNED COPIES OF THIS PLAN SHEET.*

**NOTES:** See Revised Standard Plan RSP T9 for tables.

Use cone spacing X for taper segment, Y for tangent segment or Z for conflict situations, as approriate, per Table 1, unless X, Y, or Z cone spacing is shown on this sheet.

Unless otherwise specified in the special provisions, all temporary warning signs shall have black legend on fluorescent orange background.

California codes are designated by (CA). Otherwise, Federal (MUTCD) codes are shown.

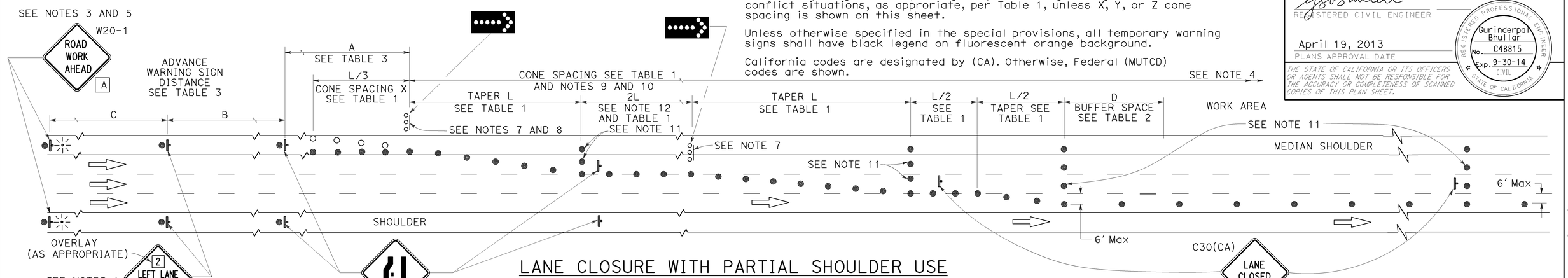


## LANE CLOSURE WITH PARTIAL SHOULDER USE

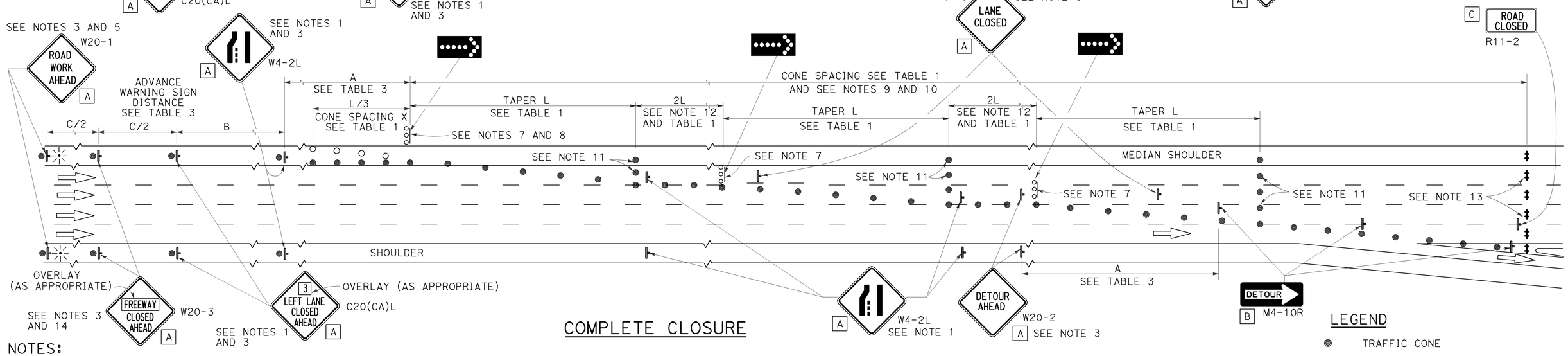


## COMPLETE CLOSURE

## NOTES:

1. Lane closures on the right side using partial median shoulder as a traffic lane shall conform to the details as shown except that C20(CA)R and W4-2R signs shall be used.
2. At least one person shall be assigned to provide full time maintenance of traffic control devices for lane closures.
3. Each advance warning sign on each side of the roadway shall be equipped with at least two flags for daytime closure. Each flag shall be at least 16" X 16" in size and shall be orange or fluorescent red-orange in color. Flashing beacons shall be placed at the locations indicated for lane closure during hours of darkness.
4. A G20-2 "END ROAD WORK" sign, with minimum size of 48" x 24" as appropriate, shall be placed at the end of the lane closure unless the end of work area is obvious or ends within a larger project's limits.
5. If the W20-1 sign would follow within 2000' of a stationary W20-1 or G20-1 "ROAD WORK NEXT ___ MILES", use a C20(CA) sign for the first advance warning sign.
6. Place a C30(CA) sign every 2000' throughout length of lane closure.
7. One flashing arrow sign for each lane closed. The flashing arrow signs shall be Type I.
8. A minimum 1500' of sight distance shall be provided where possible for vehicles approaching the first flashing arrow sign. Lane closures shall not begin at the top of crest vertical curve or on a horizontal curve.
9. All cones used for lane closures during the hours of darkness shall be fitted with retroreflective bands (or sleeves) as specified in the specifications.
10. Portable delineators, placed at one-half the spacing indicated for traffic cones, may be used instead of cones for daytime closures only.
11. Unless otherwise specified in the special provisions, a minimum of 3 cones shall be placed transversely across each closed lane and shoulder at each location where a taper across a traffic lane ends and every 2000' as shown on the "Lane Closure With Partial Shoulder Use" detail. Two Type II barricades may be used instead of the 3 cones. The transverse alignment of the cones or barricades on the closed shoulder may be shifted from the transverse alignment to provide access to the work.
12. Unless otherwise specified in the special provisions, the 2L tangent shown along lane lines shall be used between the L tapers required for each closed traffic lane.
13. A minimum of Two Type II or III barricades shall be placed across each closed lane and shoulder at the location shown and every 2000' within the complete closure area. Within the complete closure area, the transverse alignment of the barricades on the closed shoulder may be shifted from the transverse alignment to provide access to the work.
14. When specified in the special provisions, a W20-2 "DETOUR AHEAD" sign is to be used in place of the W20-3 "FREEWAY CLOSED AHEAD" sign.

## SIGN PANEL SIZE (Min)

| | |
|---|---|
| A | 48" x 48" |
| B | 48" x 18" |
| C | 48" x 30" |

## LEGEND

- TRAFFIC CONE
- TRAFFIC CONE (OPTIONAL TAPER)
- TEMPORARY TRAFFIC CONTROL SIGN
- FLASHING ARROW SIGN (FAS)
- FAS SUPPORT OR TRAILER
- PORTABLE FLASHING BEACON

STATE OF CALIFORNIA
DEPARTMENT OF TRANSPORTATION

# TRAFFIC CONTROL SYSTEM FOR LANE CLOSURES ON FREEWAYS AND EXPRESSWAYS

NO SCALE

RSP T10A DATED APRIL 19, 2013 SUPERSEDES STANDARD PLAN T10A DATED MAY 20, 2011 - PAGE 238 OF THE STANDARD PLANS BOOK DATED 2010.

**REVISED STANDARD PLAN RSP T10A**

**2010 REVISED STANDARD PLAN RSP T10A**

12-18-12

| Dist | COUNTY | ROUTE | POST MILES TOTAL PROJECT | SHEET No. | TOTAL SHEETS |
|---|---|---|---|---|---|
| 06 | Tul | 65 | R15.1/18.0 | 276 | 324 |

REGISTERED CIVIL ENGINEER

April 19, 2013
PLANS APPROVAL DATE

REGISTERED PROFESSIONAL ENGINEER Gurinderpal Bhullar No. C48815 Exp. 9-30-14 CIVIL STATE OF CALIFORNIA

*THE STATE OF CALIFORNIA OR ITS OFFICERS OR AGENTS SHALL NOT BE RESPONSIBLE FOR THE ACCURACY OR COMPLETENESS OF SCANNED COPIES OF THIS PLAN SHEET.*

TO ACCOMPANY PLANS DATED 6-20-16

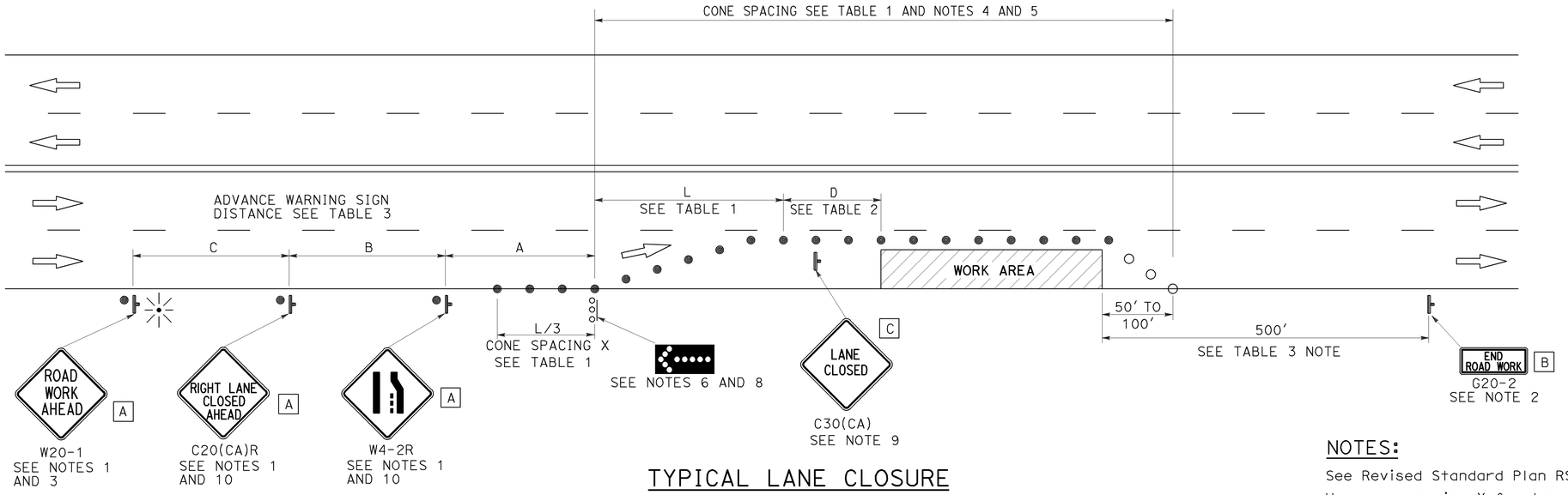


## TYPICAL LANE CLOSURE

## NOTES:

See Revised Standard Plan RSP T9 for tables.

Use cone spacing X for taper segment, Y for tangent segment or Z for conflict situations, as approriate, per Table 1, unless X, Y, or Z cone spacing is shown on this sheet.

Unless otherwise specified in the special provisions, all temporary warning signs shall have black legend on fluorescent orange background.

California codes are designated by (CA). Otherwise, Federal (MUTCD) codes are shown.

## NOTES:

1. Each advance warning sign shall be equipped with at least two flags for daytime closure. Each flag shall be at least 16" x 16" in size and shall be orange or fluorescent red-orange in color. Flashing beacons shall be placed at the locations indicated for lane closure during hours of darkness.
2. A G20-2 "END ROAD WORK" sign, as appropriate, shall be placed at the end of the lane closure unless the end of work area is obvious, or ends within a larger project's limits.
3. If the W20-1 sign would follow within 2000' of a stationary W20-1 or G20-1 "ROAD WORK NEXT _____ MILES", use a C20(CA) sign for the first advance warning sign.
4. All cones used for lane closures during the hours of darkness shall be fitted with retroreflective bands (or sleeves) as specified in the specifications.
5. Portable delineators, placed at one-half the spacing indicated for traffic cones, may be used instead of cones for daytime closures only.
6. Flashing arrow sign shall be either Type I or Type II.
7. For approach speeds over 50 mph, use the "Traffic Control System for Lane Closure On Freeways And Expressways" plan for lane closure details and requirements.
8. A minimum 1500' of sight distance shall be provided where possible for vehicles approaching the first flashing arrow sign. Lane closures shall not begin at the top of crest vertical curve or on a horizontal curve.
9. Place a C30(CA) sign every 2000' throughout length of lane closure.
10. Median lane closures shall conform to the details as shown except that C20(CA)L and W4-2L signs shall be used.
11. At least one person shall be assigned to provide full time maintenance of traffic control devices for lane closure unless, otherwise directed by the Engineer.

## LEGEND

- TRAFFIC CONE
- TRAFFIC CONE (OPTIONAL TAPER)
- TEMPORARY TRAFFIC CONTROL SIGN
- FLASHING ARROW SIGN (FAS)
- FAS SUPPORT OR TRAILER
- PORTABLE FLASHING BEACON

## SIGN PANEL SIZE (Min)

| | |
|---|---|
| A | 48" x 48" |
| B | 36" x 18" |
| C | 30" x 30" |

STATE OF CALIFORNIA
DEPARTMENT OF TRANSPORTATION

# TRAFFIC CONTROL SYSTEM FOR LANE CLOSURE ON MULTILANE CONVENTIONAL HIGHWAYS

NO SCALE

RSP T11 DATED APRIL 19, 2013 SUPERSEDES STANDARD PLAN T11 DATED MAY 20, 2011 - PAGE 239 OF THE STANDARD PLANS BOOK DATED 2010.

**REVISED STANDARD PLAN RSP T11**

**2010 REVISED STANDARD PLAN RSP T11**

4-2-13

| Dist | COUNTY | ROUTE | POST MILES TOTAL PROJECT | SHEET No. | TOTAL SHEETS |
|---|---|---|---|---|---|
| 06 | Tul | 65 | R15.1/18.0 | 277 | 324 |

Devinder Singh
REGISTERED CIVIL ENGINEER

October 30, 2015
PLANS APPROVAL DATE

REGISTERED PROFESSIONAL ENGINEER
Devinder Singh
No. C50470
Exp. 6-30-17
CIVIL
STATE OF CALIFORNIA

THE STATE OF CALIFORNIA OR ITS OFFICERS OR AGENTS SHALL NOT BE RESPONSIBLE FOR THE ACCURACY OR COMPLETENESS OF SCANNED COPIES OF THIS PLAN SHEET.

TO ACCOMPANY PLANS DATED 6-20-16

2010 REVISED STANDARD PLAN RSP T13

## NOTES:

See Revised Standard Plan RSP T9 for tables.

Use cone spacing X for taper segment, Y for tangent segment or Z for conflict situations, as approriate, per Table 1, unless X, Y, or Z cone spacing is shown on this sheet.

Unless otherwise specified in the special provisions, all temporary warning signs shall have black legend on fluorescent orange background.

California codes are designated by (CA). Otherwise, Federal (MUTCD) codes are shown.

## TYPICAL LANE CLOSURE WITH REVERSIBLE CONTROL

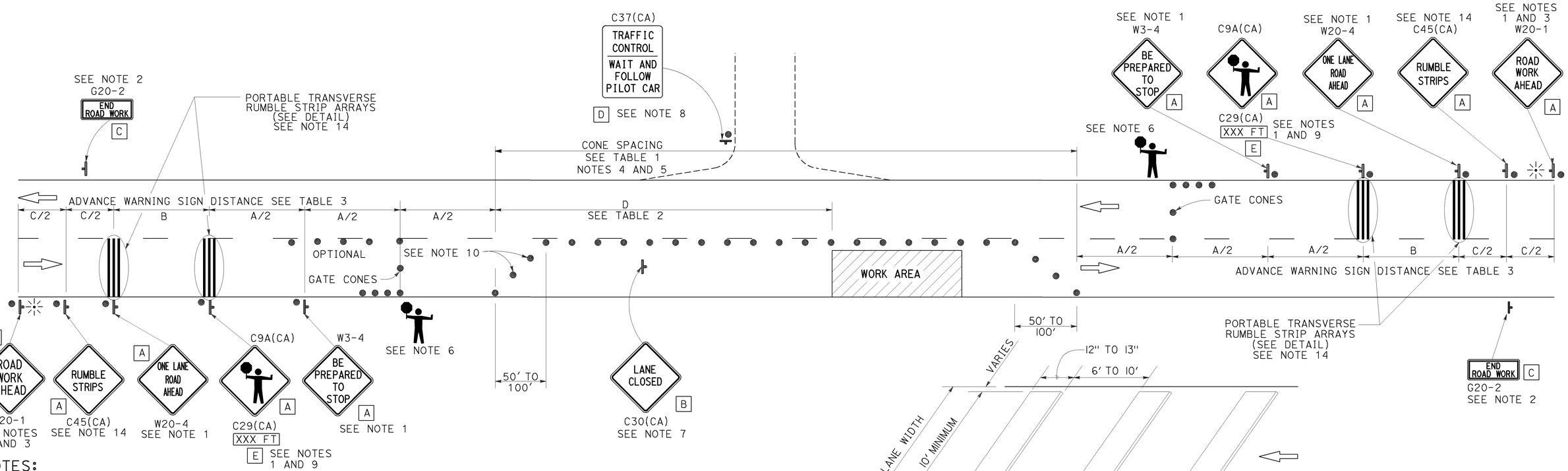


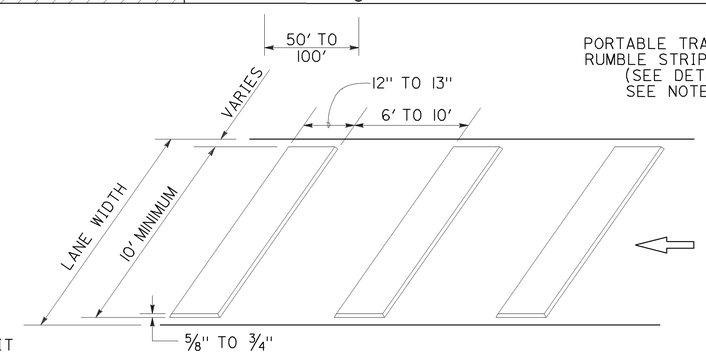


PORTABLE TRANSVERSE RUMBLE STRIP ARRAY DETAIL

## NOTES:

1. Each advance warning sign in each direction of travel shall be equipped with at least two flags for daytime closure. Each flag shall be at least 16" x 16" in size and shall be orange or fluorescent red-orange in color. Flashing beacons shall be placed at the locations indicated for lane closure during hours of darkness.
2. A G20-2 "END ROAD WORK" sign, as appropriate, shall be placed at the end of the lane control unless the end of work area is obvious, or ends within a larger project's limits.
3. If the W20-1 sign would follow within 2000' of a stationary W20-1 or G20-1 "ROAD WORK NEXT _____ MILES", use a W20-4 sign for the first advance warning sign.
4. All cones used for lane closures during the hours of darkness shall be fitted with retroreflective bands (or sleeves) as specified in the specifications.
5. Portable delineators, placed at one-half the spacing indicated for traffic cones, may be used instead of cones for daytime closures only.
6. Additional advance flaggers may be required. Flagger should stand in a conspicuous place, be visible to approaching traffic as well as approaching vehicles after the first vehicle has stopped. During the hours of darkness, the flagging-station and flagger shall be illuminated and clearly visible to approaching traffic. The illumination footprint of the lighting on the ground shall be at least 20' in diameter. Place a minimum of four cones at 50' intervals in advance of flagger station as shown.
7. Place C30(CA) "LANE CLOSED" sign at 500' to 1000' intervals throughout extended work areas. They are optional if the work area is visible from the flagger station.
8. When a pilot car is used, place a C37(CA) "TRAFFIC CONTROL-WAIT AND FOLLOW PILOT CAR" sign with black legend on white background at all intersections, driveways and alleys without a flagger within traffic control area. Signs shall be clean and visible at all times. Where traffic can not be effectively self-regulated, at least one flagger shall be used at each intersection within traffic control area.
9. An optional C29(CA) sign may be placed below the C9A(CA) sign.
10. Either traffic cones or barricades shall be placed on the taper. Barricades shall be Type I, II, or III.
11. The color of the portable transverse rumble strips shall be black or orange. Use 2 arrays, each array shall consist of 3 rumble strips.
12. Portable transverse rumble strips shall not be placed on sharp horizontal or vertical curves nor shall they be placed through pedestrian crossings.
13. If the portable transverse rumble strips become out of alignment (skewed) by more than 6 inches, measured from one end to the other, they shall be readjusted to bring the placement back to the original location.
14. Portable transverse rumble strips are not required if any one of the following conditions is satisfied:
    A. Work duration occupies a location for four hours or less
    B. Posted speed limit is below 45 MPH
    C. Work is of emergency nature
    D. Work zone is in snow or icy weather conditions

## SIGN PANEL SIZE (Min)

| | |
|---|---|
| A | 48" x 48" |
| B | 30" x 30" |
| C | 36" x 18" |
| D | 36" x 42" |
| E | 20" x 7" |

## LEGEND

- TRAFFIC CONE
- TEMPORARY TRAFFIC CONTROL SIGN
- PORTABLE FLASHING BEACON
- FLAGGER

STATE OF CALIFORNIA
DEPARTMENT OF TRANSPORTATION

# TRAFFIC CONTROL SYSTEM FOR LANE CLOSURE ON TWO LANE CONVENTIONAL HIGHWAYS

NO SCALE

RSP T13 DATED OCTOBER 30, 2015 SUPERSEDES RSP T13 DATED OCTOBER 17, 2014, RSP T13 DATED JULY 18, 2014 AND RSP T13 DATED APRIL 19, 2013 AND STANDARD PLAN T13 DATED MAY 20, 2011 - PAGE 241 OF THE STANDARD PLANS BOOK DATED 2010.

**REVISED STANDARD PLAN RSP T13**

10-13-15

| Dist | COUNTY | ROUTE | POST MILES TOTAL PROJECT | SHEET No. | TOTAL SHEETS |
|---|---|---|---|---|---|
| 06 | Tul | 65 | R15.1/18.0 | 278 | 324 |

REGISTERED CIVIL ENGINEER

April 19, 2013
PLANS APPROVAL DATE

REGISTERED PROFESSIONAL ENGINEER Gurinderpal Bhullar No. C48815 Exp. 9-30-14 CIVIL STATE OF CALIFORNIA

THE STATE OF CALIFORNIA OR ITS OFFICERS OR AGENTS SHALL NOT BE RESPONSIBLE FOR THE ACCURACY OR COMPLETENESS OF SCANNED COPIES OF THIS PLAN SHEET.

TO ACCOMPANY PLANS DATED 6-20-16

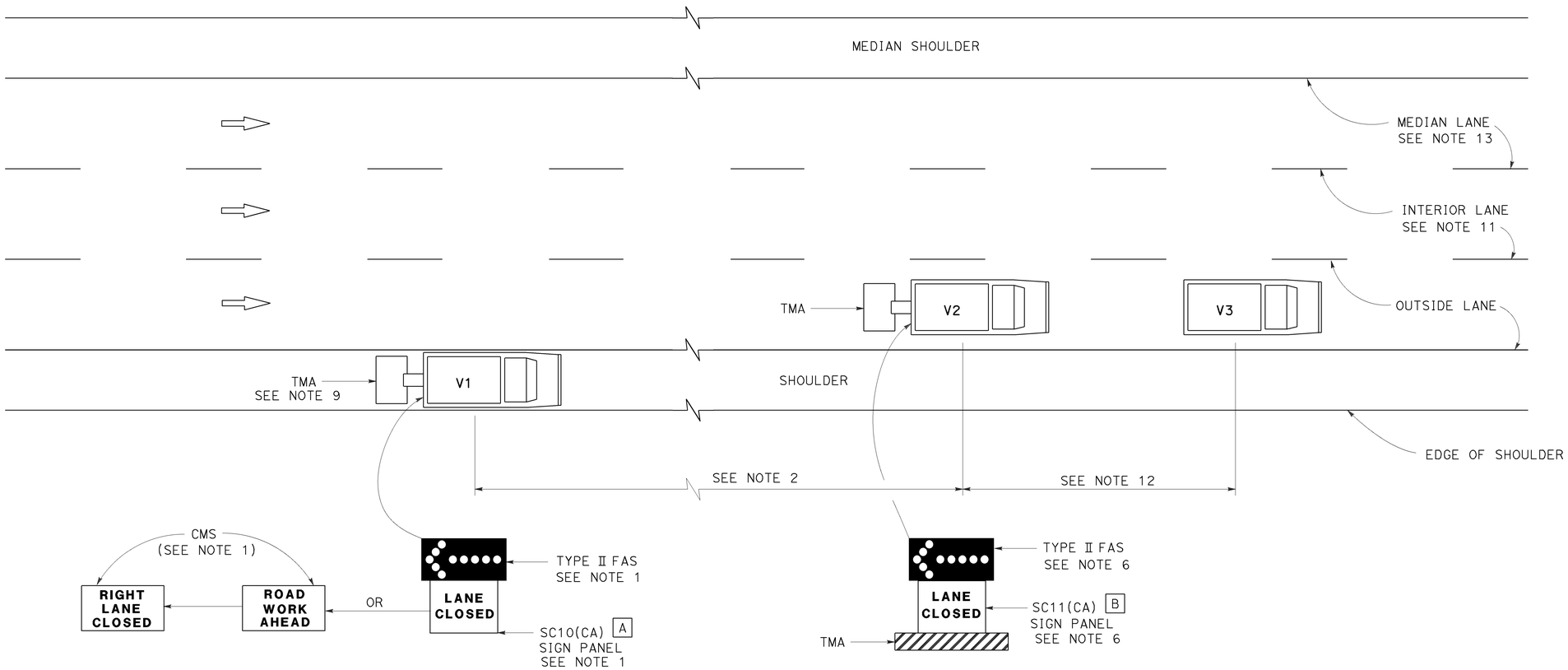


## MOVING LANE CLOSURE ON MEDIAN LANE OR OUTSIDE LANE OF MULTILANE HIGHWAYS

### SIGN PANEL SIZE (Min)

A 66" x 36"

B 54" x 42"

### LEGEND

| | |
|---|---|
| V1 | SIGN VEHICLE |
| V2 | SHADOW VEHICLE |
| V3 | WORK/APPLICATION VEHICLE |
| | FLASHING ARROW SIGN (FAS) |
| CMS | CHANGEABLE MESSAGE SIGN |
| TMA | TRUCK-MOUNTED ATTENUATOR |

### NOTES:

1. Either a changeable message sign or a SC10(CA) sign panel and a Type II flashing arrow sign shall be mounted on the rear of sign vehicle V1. The changeable message sign shall be sequenced to show the "ROAD WORK AHEAD" message first, followed by the "RIGHT LANE CLOSED" message. For median lane closure, the flashing arrow symbol shall be reversed with the arrowhead on the right and the changeable message sign shall show "LEFT LANE CLOSED".
2. If traffic queues develop, sign vehicle V1 should be positioned upstream from the end of queue. Sign vehicle V1 shall be positioned where highly visible when shoulders are not available.
3. A minimum sight distance of 1500′ should be provided in advance of sign vehicle V1.
4. Sign vehicle V1 should remain at the beginning of horizontal or vertical curves until the other vehicles (V2 and V3) are far enough beyond the curve to resume the minimum sight distance of 1500′.
5. Vehicle-mounted sign panels shall have Type III or above retroreflective sheeting, black on white, or black on fluorescent orange, with 6" minimum series D letters per Caltrans sign specifications.
6. Shadow vehicle V2 shall be equipped with a truck-mounted attenuator. The sign panel shown and a Type II flashing arrow sign shall be mounted on the rear of shadow vehicle V2. For median lane closure the flashing arrow sign symbol shall be displayed with the arrowhead on the right.
7. All vehicles used for lane closures shall be equipped with two-way radios, and the vehicle operators shall maintain communication during the work or application operation.
8. All vehicles shall be equipped with flashing or rotating amber lights.
9. If sign vehicle V1 encroaches into the traffic lane due to insufficient shoulder width, sign vehicle V1 shall be equipped with a truck-mounted attenuator. Sign vehicle V1 shall stay as close to the edge of shoulder as practicable.
10. Where workers would be on foot in the work area, a stationary type lane closure (Revised Standard Plan T10, T11, etc., as applicable) shall be used instead of this plan.
11. For moving lane closure on interior lane of multilane highways, use Revised Standard Plan T16.
12. The spacing between work vehicle(s) and the shadow vehicles, and between each shadow vehicle should be minimized to deter road users from driving in between.
13. When the work/application vehicle V3 occupies the median lane, sign vehicle V1 should drive in the median shoulder and indicate left lane closed ahead.

STATE OF CALIFORNIA
DEPARTMENT OF TRANSPORTATION

# TRAFFIC CONTROL SYSTEM FOR MOVING LANE CLOSURE ON MULTILANE HIGHWAYS

NO SCALE

RSP T15 DATED APRIL 19, 2013 SUPERSEDES STANDARD PLAN T15
DATED MAY 20, 2011 - PAGE 243 OF THE STANDARD PLANS BOOK DATED 2010.

**REVISED STANDARD PLAN RSP T15**

**2010 REVISED STANDARD PLAN RSP T15**

12-18-12

| Dist | COUNTY | ROUTE | POST MILES TOTAL PROJECT | SHEET No. | TOTAL SHEETS |
|---|---|---|---|---|---|
| 06 | Tul | 65 | R15.1/18.0 | 279 | 324 |

REGISTERED CIVIL ENGINEER

April 19, 2013
PLANS APPROVAL DATE

REGISTERED PROFESSIONAL ENGINEER
Gurinderpal Bhullar
No. C48815
Exp. 9-30-14
CIVIL
STATE OF CALIFORNIA

*THE STATE OF CALIFORNIA OR ITS OFFICERS OR AGENTS SHALL NOT BE RESPONSIBLE FOR THE ACCURACY OR COMPLETENESS OF SCANNED COPIES OF THIS PLAN SHEET.*

TO ACCOMPANY PLANS DATED 6-20-16

**2010 REVISED STANDARD PLAN RSP T16**

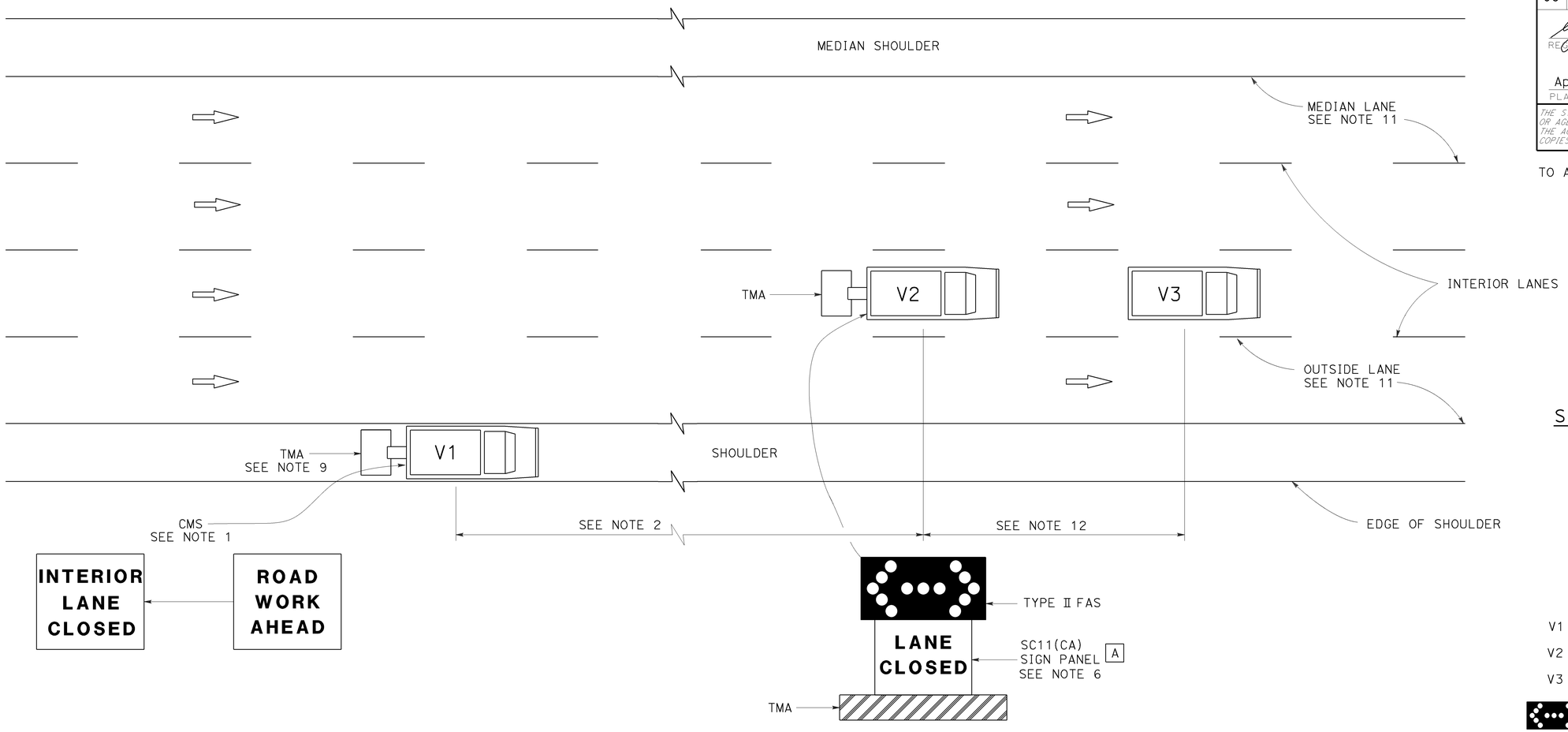


## SIGN PANEL SIZE (Min)

A 54" x 42"

## LEGEND

| | |
|---|---|
| V1 | SIGN VEHICLE |
| V2 | SHADOW VEHICLE |
| V3 | WORK/APPLICATION VEHICLE |
| | FLASHING ARROW SIGN (FAS) IN FLASHING DOUBLE ARROW MODE |
| CMS | CHANGEABLE MESSAGE SIGN |
| TMA | TRUCK-MOUNTED ATTENUATOR |

## MOVING LANE CLOSURE ON INTERIOR LANE OF MULTILANE HIGHWAYS

## NOTES:

1. A changeable message sign shall be mounted on the rear of sign vehicle V1. The changeable message sign shall be sequenced to show the "ROAD WORK AHEAD" message first, followed by the "INTERIOR LANE CLOSED" message. The message "CENTER LANE CLOSED" may be used in place of the "INTERIOR LANE CLOSED" message.
2. If traffic queues develop, sign vehicle V1 should be positioned upstream from the end of queue. Sign vehicle V1 shall be positioned where highly visible when shoulders are not available.
3. A minimum sight distance of 1500′ should be provided in advance of sign vehicle V1.
4. Sign vehicle V1 should remain at the beginning of horizontal or vertical curves until the other vehicles (V2 and V3) are far enough beyond the curve to resume the minimum sight distance of 1500′.
5. Vehicle-mounted sign panels shall have Type III or above retroreflective sheeting, black on white, or black on fluorescent orange, with 6" minimum series D letters per Caltrans sign specifications.
6. Shadow vehicle V2 shall be equipped with a truck-mounted attenuator. The sign panel shown and a Type II flashing arrow sign shall be mounted on the rear of shadow vehicle V2.
7. All vehicles used for lane closures shall be equipped with two-way radios, and the vehicle operators shall maintain communication during the work or application operation.
8. All vehicles shall be equipped with flashing or rotating amber lights.
9. If sign vehicle V1 encroaches into the traffic lane due to insufficient shoulder width, sign vehicle V1 shall be equipped with a truck-mounted attenuator. Sign vehicle V1 shall stay as close to the edge of shoulder as practicable.
10. Where workers would be on foot in the work area, a stationary type lane closure (Revised Standard Plan T10, T11 etc., as applicable) shall be used instead of this plan.
11. For moving lane closure on median lane or outside lane of multilane highways, use Revised Standard Plan T15.
12. The spacing between work vehicle(s) and the shadow vehicles, and between each shadow vehicle should be minimized to deter road users from driving in between.

STATE OF CALIFORNIA
DEPARTMENT OF TRANSPORTATION

# TRAFFIC CONTROL SYSTEM FOR MOVING LANE CLOSURE ON MULTILANE HIGHWAYS

NO SCALE

RSP T16 DATED APRIL 19, 2013 SUPERSEDES STANDARD PLAN T16
DATED MAY 20, 2011 - PAGE 244 OF THE STANDARD PLANS BOOK DATED 2010.

**REVISED STANDARD PLAN RSP T16**

12-18-12

| Dist | COUNTY | ROUTE | POST MILES TOTAL PROJECT | SHEET No. | TOTAL SHEETS |
|---|---|---|---|---|---|
| 06 | Tul | 65 | R15.1/18.0 | 280 | 324 |

REGISTERED CIVIL ENGINEER

April 19, 2013
PLANS APPROVAL DATE

REGISTERED PROFESSIONAL ENGINEER Gurinderpal Bhullar No. C48815 Exp. 9-30-14 CIVIL STATE OF CALIFORNIA

THE STATE OF CALIFORNIA OR ITS OFFICERS OR AGENTS SHALL NOT BE RESPONSIBLE FOR THE ACCURACY OR COMPLETENESS OF SCANNED COPIES OF THIS PLAN SHEET.

TO ACCOMPANY PLANS DATED 6-20-16

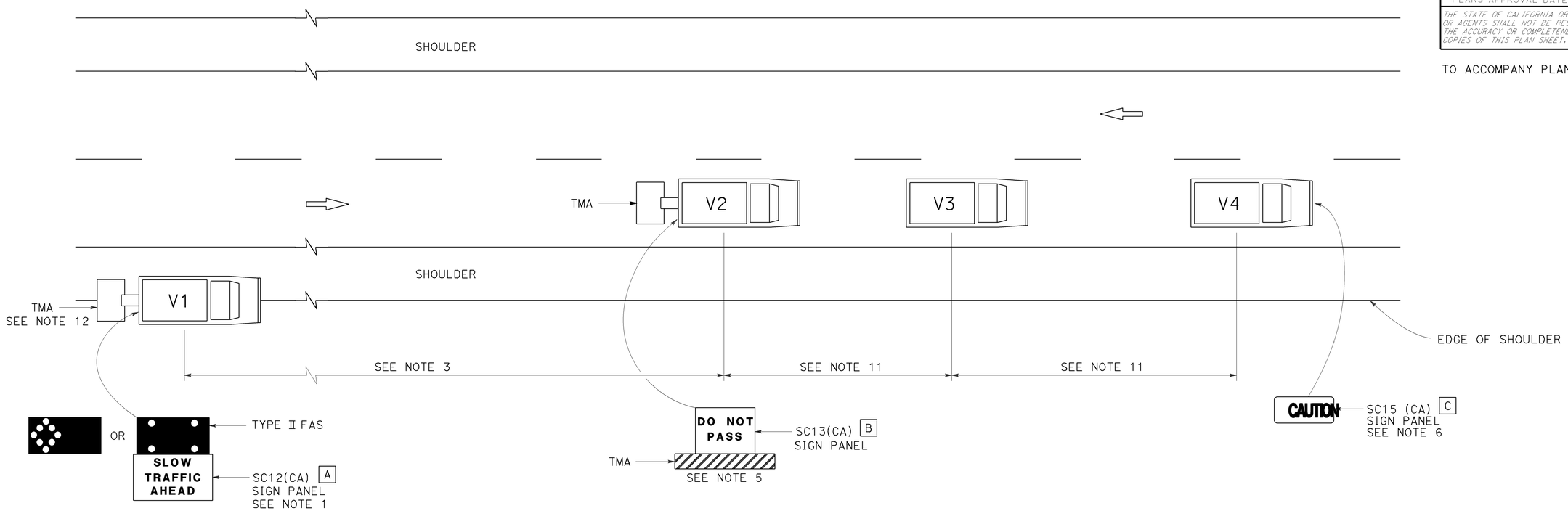


## LEGEND

| | |
|---|---|
| V1 | SIGN VEHICLE |
| V2 | SHADOW VEHICLE |
| V3 | WORK/APPLICATION VEHICLE |
| V4 | SIGN VEHICLE |
| TMA | TRUCK-MOUNTED ATTENUATOR |
| | FLASHING ARROW SIGN (FAS) IN FLASHING CAUTION MODE |
| | FLASHING ARROW SIGN (FAS) IN ALTERNATING DIAMOND CAUTION |

## SIGN PANEL SIZE (Min)

| | |
|---|---|
| A | 72" x 42" |
| B | 54" x 42" |
| C | 54" x 24" |

## NOTES:

1. Either a changeable message sign or a SC12(CA) "SLOW TRAFFIC AHEAD" sign shall be mounted on the rear of sign vehicle V1. The changeable message sign shall be sequenced to show the "CAUTION" message first, follow by the "SLOW TRAFFIC AHEAD" message. A Type II flashing arrow sign may be used with the SC12(CA) sign panel.
2. Sign vehicle V1 should be positioned where highly visible when shoulders are not available.
3. If traffic queues develop, sign vehicle V1 should be positioned upstream from the end of queue.
4. Vehicle-mounted sign panels shall have Type III or above retroreflective sheeting, black on white, or black on fluorescent orange, with 6" minimum series D letters per Caltrans sign specifications.
5. Shadow vehicle shall be equipped with a truck-mounted attenuator. The sign panel shown shall be mounted on the rear of shadow vehicle V2. The message "LANE CLOSED" may be used in place of the "DO NOT PASS" message.
6. The sign panel shown shall be mounted on the front of sign vehicle V4, facing opposing traffic.
7. All vehicles shall be equipped with flashing or rotating amber lights.
8. Sign vehicle V4 will not be required when the work and vehicles V2 and V3 are 2′ or more from the centerline of the highway during the work or application operations.
9. All vehicles used for lane closures shall be equipped with two-way radios and the vehicle operators shall maintain communication during the work or application operation.
10. This plan shall not be used where workers would be on foot in the work area. Use a stationary type lane closure (Revised Standard Plan T13) for this condition.
11. Minimize spacing between vehicles V2 and V3 and vehicles V3 and V4 to deter road users from driving in between them.
12. If sign vehicle V1 encroaches into the traffic lane due to insufficient shoulder width, sign vehicle V1 shall be equipped with a truck-mounted attenuator. Sign vehicle V1 shall stay as close to the edge of shoulder as practicable.

STATE OF CALIFORNIA
DEPARTMENT OF TRANSPORTATION

# TRAFFIC CONTROL SYSTEM FOR MOVING LANE CLOSURE ON TWO LANE HIGHWAYS

NO SCALE

RSP T17 DATED APRIL 19, 2013 SUPERSEDES STANDARD PLAN T17
DATED MAY 20, 2011 - PAGE 245 OF THE STANDARD PLANS BOOK DATED 2010.

**REVISED STANDARD PLAN RSP T17**

**2010 REVISED STANDARD PLAN RSP T17**

12-18-12

| Dist | COUNTY | ROUTE | POST MILES TOTAL PROJECT | SHEET No. | TOTAL SHEETS |
|---|---|---|---|---|---|
| 06 | Tul | 65 | R15.1/18.0 | 281 | 324 |

REGISTERED CIVIL ENGINEER

July 19, 2013
PLANS APPROVAL DATE

REGISTERED PROFESSIONAL ENGINEER
Stanley P. Johnson
No. C57793
Exp. 3-31-14
CIVIL
STATE OF CALIFORNIA

*THE STATE OF CALIFORNIA OR ITS OFFICERS OR AGENTS SHALL NOT BE RESPONSIBLE FOR THE ACCURACY OR COMPLETENESS OF SCANNED COPIES OF THIS PLAN SHEET.*

TO ACCOMPANY PLANS DATED 6-20-16

**2010 REVISED STANDARD PLAN RSP S140**

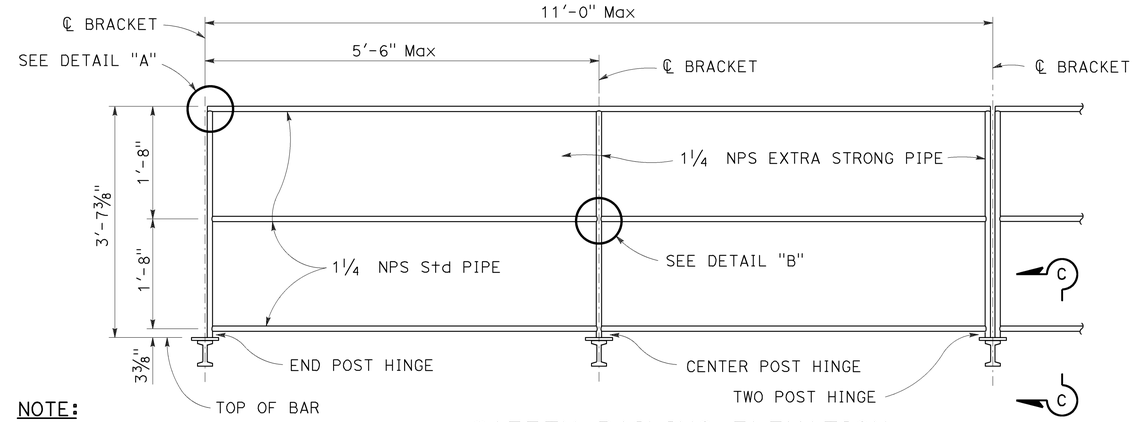


**NOTE:**
Chain assembly behind (see detail this page)

## SAFETY RAILING ELEVATION

**NOTE:**
See Standard Plans S101 and S105 and S109 for walkway bracket spacing.

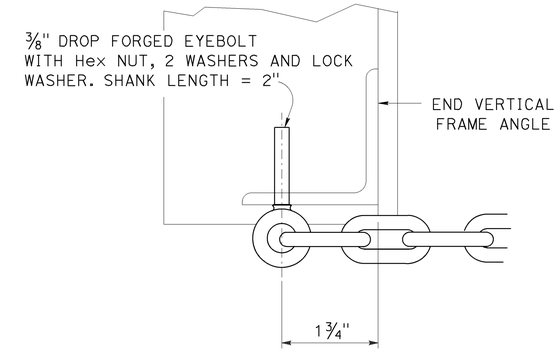


## SECTION D-D

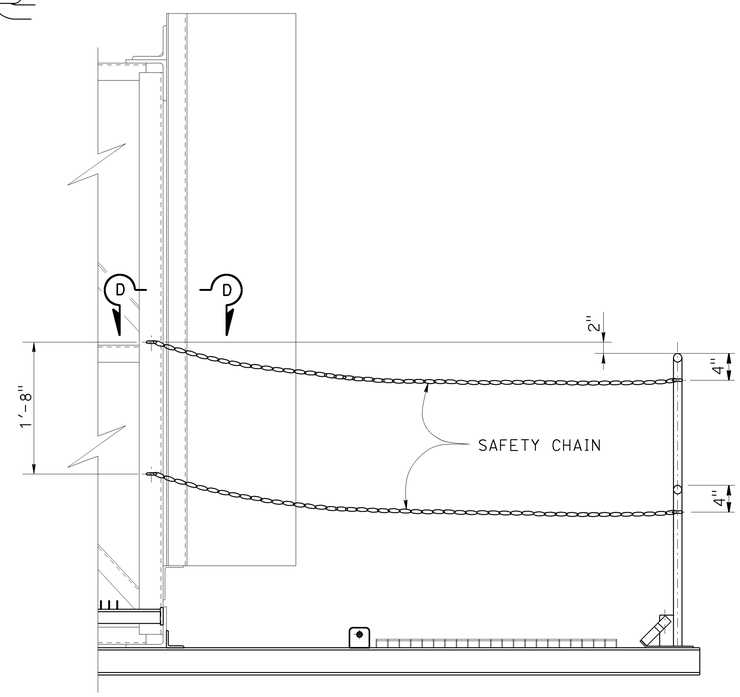


## CHAIN ASSEMBLY

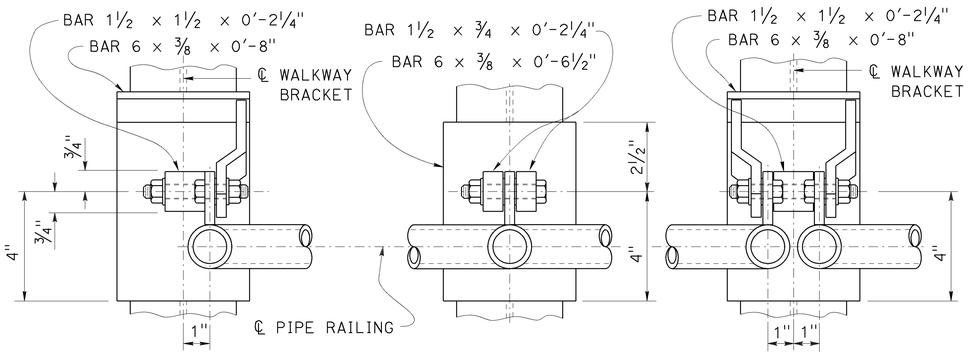


END POST — CENTER POST — TWO POST

## WELDED HINGE - PLAN

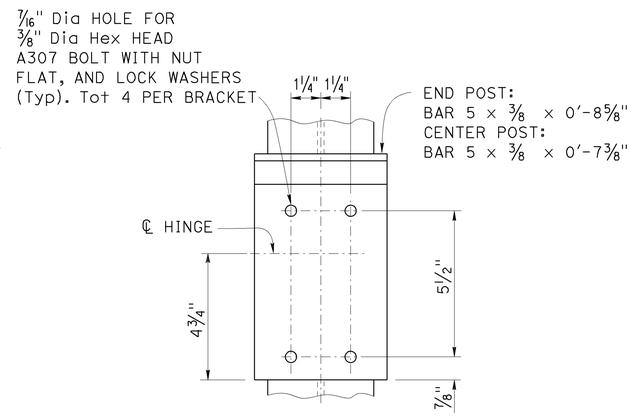


## TYPICAL BOLTED (ALTERNATIVE)

## HINGED CONNECTION

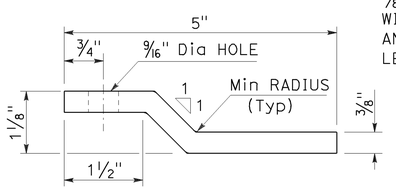


## PLAN - KICKER BAR

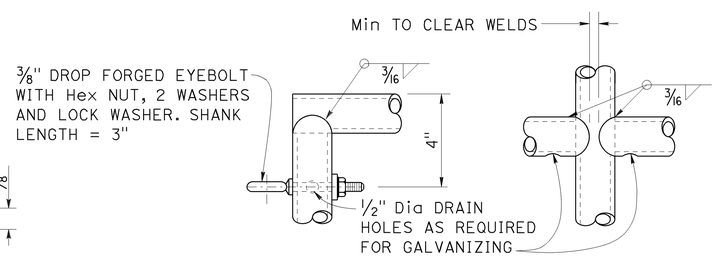


## DETAIL "A" — DETAIL "B"

**NOTE:**
Alternative venting methods may be used if approved by the Engineer.

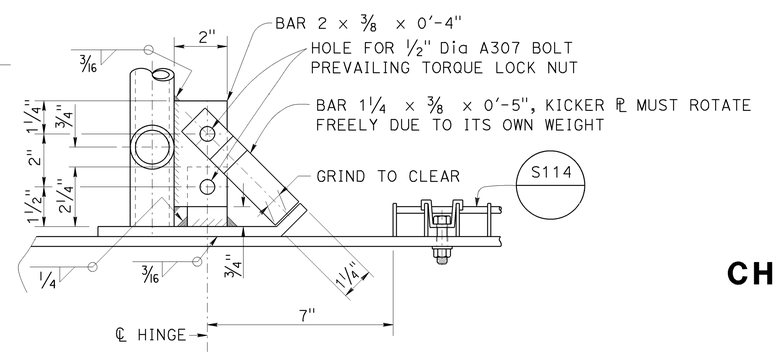


## SECTION C-C
## ELEVATION VIEW

STATE OF CALIFORNIA
DEPARTMENT OF TRANSPORTATION

# OVERHEAD SIGN-TRUSS SINGLE POST TYPE WALKWAY SAFETY RAILING DETAILS CHANGEABLE MESSAGE SIGNS MODEL 500 AND 510

NO SCALE

RSP S140 DATED JULY 19, 2013 SUPERSEDES STANDARD PLAN S140 DATED MAY 20, 2011 - PAGE 422 OF THE STANDARD PLANS BOOK DATED 2010.

**REVISED STANDARD PLAN RSP S140**

7-11-13

| Dist | COUNTY | ROUTE | POST MILES TOTAL PROJECT | SHEET No. | TOTAL SHEETS |
|---|---|---|---|---|---|
| 06 | Tul | 65 | R15.1/18.0 | 282 | 324 |

REGISTERED CIVIL ENGINEER

July 19, 2013
PLANS APPROVAL DATE

REGISTERED PROFESSIONAL ENGINEER
Stanley P. Johnson
No. C57793
Exp. 3-31-14
CIVIL
STATE OF CALIFORNIA

*THE STATE OF CALIFORNIA OR ITS OFFICERS OR AGENTS SHALL NOT BE RESPONSIBLE FOR THE ACCURACY OR COMPLETENESS OF SCANNED COPIES OF THIS PLAN SHEET.*

TO ACCOMPANY PLANS DATED 6-20-16

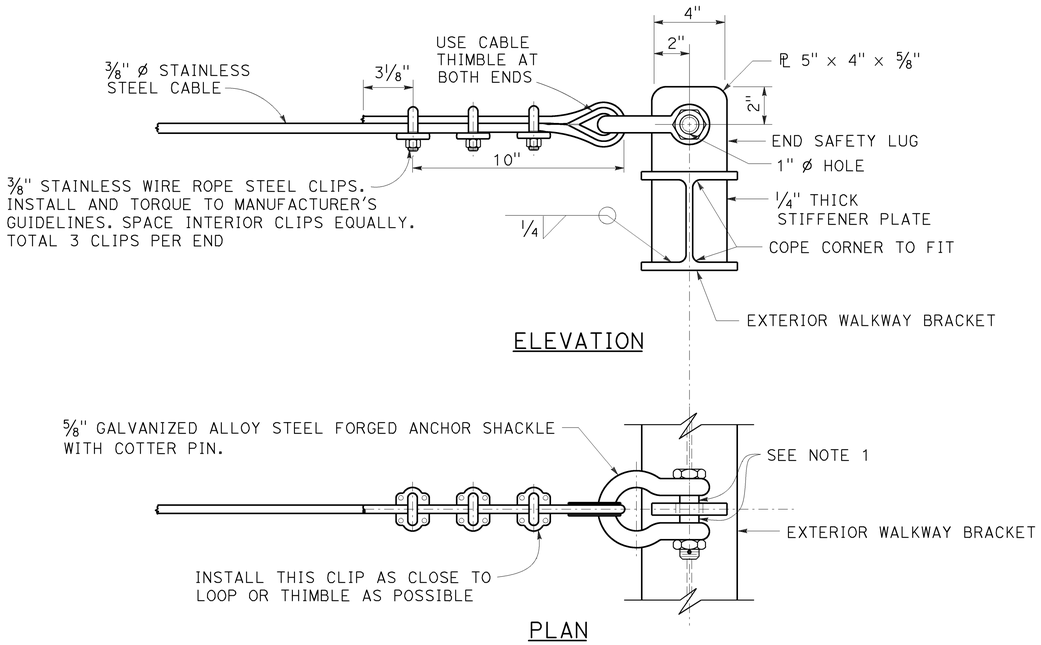


## END SAFETY CABLE DETAIL

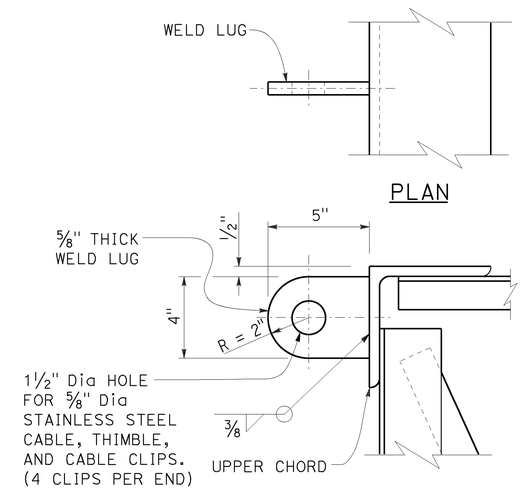


## BACKSIDE WELD LUG DETAIL

**NOTE:** Backside weld lug shall be installed only for projects requiring backside walkways.

**NOTES:**

1. Place an equal amount of washers on each side to align cable with end lug without restricting shakle bolt rotation or contacting cable.
2. For walkway grating details, see Standard Plan S114.

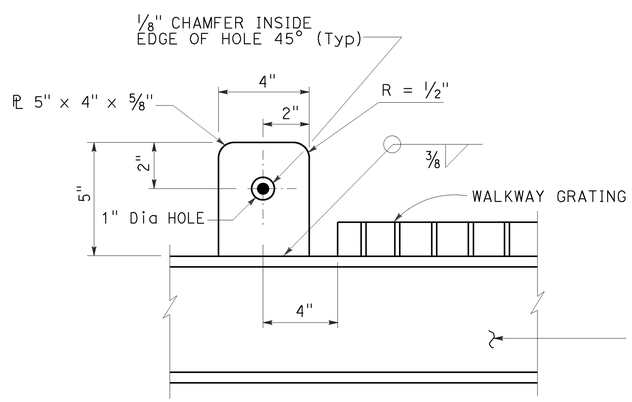


## INTERIOR SAFETY LUG DETAIL

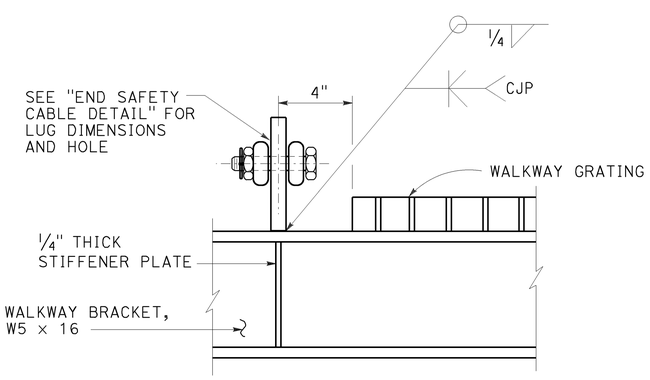


## END SAFETY LUG DETAIL

STATE OF CALIFORNIA
DEPARTMENT OF TRANSPORTATION

# OVERHEAD SIGN-TRUSS SINGLE POST TYPE SAFETY CABLE ANCHORAGE DETAILS CHANGEABLE MESSAGE SIGNS MODEL 500 AND 510

NO SCALE

RSP S141 DATED JULY 19, 2013 SUPERSEDES STANDARD PLAN S141
DATED MAY 20, 2011 - PAGE 423 OF THE STANDARD PLANS BOOK DATED 2010.

**REVISED STANDARD PLAN RSP S141**

**2010 REVISED STANDARD PLAN RSP S141**

7-11-13

| Dist | COUNTY | ROUTE | POST MILES TOTAL PROJECT | SHEET No. | TOTAL SHEETS |
|---|---|---|---|---|---|
| 06 | Tul | 65 | R15.1/18.0 | 283 | 324 |

Theresa Gabriel
REGISTERED ELECTRICAL ENGINEER

October 30, 2015
PLANS APPROVAL DATE

REGISTERED PROFESSIONAL ENGINEER
Theresa Aziz Gabriel
No. E15129
Exp. 6-30-16
ELECTRICAL
STATE OF CALIFORNIA

*THE STATE OF CALIFORNIA OR ITS OFFICERS OR AGENTS SHALL NOT BE RESPONSIBLE FOR THE ACCURACY OR COMPLETENESS OF SCANNED COPIES OF THIS PLAN SHEET.*

TO ACCOMPANY PLANS DATED 6-20-16

## LEGEND:

- AB — ABANDON. IF APPLIED TO CONDUIT, REMOVE CONDUCTORS
- BC — INSTALL PULL BOX IN EXISTING CONDUIT RUN
- BP — PEDESTRIAN BARRICADE, TYPE AS INDICATED ON PLAN
- CB — INSTALL CONDUIT INTO EXISTING PULL BOX
- CC — CONNECT NEW AND EXISTING CONDUIT. REMOVE EXISTING CONDUCTORS AND INSTALL CONDUCTORS AS INDICATED
- CF — CONDUIT TO REMAIN FOR FUTURE USE. REMOVE CONDUCTORS. INSTALL PULL TAPE
- DH — DETECTOR HANDHOLE
- FA — FOUNDATION TO BE ABANDONED
- IS — INSTALL SIGN ON SIGNAL MAST ARM
- NS — NO SLIP BASE ON STANDARD
- PEC — PHOTOELECTRIC CONTROL
- PEU — PHOTOELECTRIC UNIT
- RC — EQUIPMENT OR MATERIAL TO BE REMOVED AND BECOME THE PROPERTY OF THE CONTRACTOR
- RE — REMOVE ELECTROLIER, FUSES AND BALLAST. TAPE ENDS OF CONDUCTORS
- RL — RELOCATE EQUIPMENT
- RR — REMOVE AND REUSE EQUIPMENT
- RS — REMOVE AND SALVAGE EQUIPMENT
- SC — SPLICE NEW TO EXISTING CONDUCTORS
- SD — SERVICE DISCONNECT
- TSP — TELEPHONE SERVICE POINT

## ABBREVIATIONS

| | |
|---|---|
| AC+ | UNDERGROUNDED CONDUCTOR |
| APS | ACCESSIBLE PEDESTRIAN SIGNAL |
| Batt | BATTERY |
| BBS | BATTERY BACKUP SYSTEM |
| BC | BOLT CIRCLE |
| Blk | BLACK |
| BP | BYPASS |
| BPB | BICYCLE PUSH BUTTON |
| C | CONDUIT |
| CB | CIRCUIT BREAKER |
| CCTV | CLOSED CIRCUIT TELEVISION |
| Ckt | CIRCUIT |
| CMS | CHANGEABLE MESSAGE SIGN |
| Ctid | CALTRANS IDENTIFICATION |
| Comm | COMMUNICATION |
| Cntl | CONTROL |
| DF | DEPARTMENT-FURNISHED |
| DLC | LOOP DETECTOR LEAD-IN CABLE |
| EMS | EXTINGUISHABLE MESSAGE SIGN |
| EVUC | EMERGENCY VEHICLE UNIT CABLE |
| EVUD | EMERGENCY VEHICLE UNIT DETECTOR |
| FB | FLASHING BEACON |
| FBCA | FLASHING BEACON CONTROL ASSEMBLY |
| FBS | FLASHING BEACON WITH SLIP BASE |
| FO | FIBER OPTIC |
| G | EQUIPMENT GROUNDING CONDUCTOR |
| GB | GROUND BUS |
| GFCI | GROUND FAULT CIRCUIT INTERRUPTER |
| Grn | GREEN |
| HAR | HIGHWAY ADVISORY RADIO |
| Hex | HEXAGONAL |
| HPS | HIGH PRESSURE SODIUM |
| IISNS | INTERNALLY ILLUMINATED STREET NAME SIGN |
| ISL | INDUCTION SIGN LIGHTING |
| LED | LIGHT EMITTING DIODE |
| LMA | LUMINAIRE MAST ARM |
| LPS | LOW PRESSURE SODIUM |
| Ltg | LIGHTING |
| Lum | LUMINAIRE |
| M | METERED |
| MAT | MAST ARM MOUNTING TOP ATTACHMENT |
| MAS | MAST ARM MOUNTING SIDE ATTACHMENT |
| MBPS | MANUAL BYPASS SWITCH |
| M/M | MULTIPLE TO MULTIPLE TRANSFORMER |
| Mtg | MOUNTING |
| MV | MERCURY VAPOR LIGHTING FIXTURE |
| MVDS | MICROWAVE VEHICLE DETECTION SYSTEM |
| N | NEUTRAL (GROUNDED CONDUCTOR) |
| NB | NEUTRAL BUS |
| NC | NORMALLY CLOSE |
| NO | NORMALLY OPEN |
| P | CIRCUIT BREAKER'S POLE |
| PB | PULL BOX |
| PBA | PUSH BUTTON ASSEMBLY |
| PEC | PHOTOELECTRIC CONTROL |
| Ped | PEDESTRIAN |
| PEU | PHOTOELECTRIC UNIT |
| PT | CONDUIT WITH PULL TAPE |
| PTR | POWER TRANSFER RELAY |
| RE | RELOCATED EQUIPMENT |
| RM | RAMP METERING |
| RWIS | ROADSIDE WEATHER INFORMATION SYSTEM |
| SB | SLIP BASE |
| SIC | SIGNAL INTERCONNECT CABLE |
| Sig | SIGNAL |
| SMA | SIGNAL MAST ARM |
| SNS | STREET NAME SIGN |
| SP | SERVICE POINT |
| TB | TERMINAL BOARD |
| TDC | TELEPHONE DEMARCATION CABINET |
| Temp | TEMPERATURE |
| TMS | TRAFFIC MONITORING STATION |
| TOS | TRAFFIC OPERATIONS SYSTEM |
| UPS | UNINTERRUPTABLE POWER SUPPLY |
| UPSC | UNINTERRUPTABLE POWER SUPPLY CONTROLLER |
| Veh | VEHICLE |
| VIVDS | VIDEO IMAGE VEHICLE DETECTION SYSTEM |
| Wht | WHITE |
| WIM | WEIGH-IN-MOTION |
| Xfmr | TRANSFORMER |

## SOFFIT AND WALL-MOUNTED LUMINAIRES

- PENDANT SOFFIT LUMINAIRE, 70 W HPS UNLESS OTHERWISE SPECIFIED
- FLUSH-MOUNTED SOFFIT LUMINAIRE, 70 W HPS UNLESS OTHERWISE SPECIFIED
- WALL-MOUNTED LUMINAIRE, 70 W HPS UNLESS OTHERWISE SPECIFIED
- EXISTING SOFFIT OR WALL-MOUNTED LUMINAIRE TO REMAIN UNMODIFIED
- EXISTING SOFFIT OR WALL-MOUNTED LUMINAIRE TO BE MODIFIED AS SPECIFIED

**NOTE:**
Arrow indicates "street side" of luminaire.

COMMONLY USED SYMBOLS FOR UNITED STATES CUSTOMARY UNITS OF MEASUREMENT:

| SYMBOL | DEFINITIONS |
|---|---|
| Ω | OHMS |
| min | MINUTE |
| s | SECOND |
| bps | BITS PER SECOND |
| Bps | BYTES PER SECOND |
| A | AMPERE |
| V | VOLT |
| V(dc) | VOLT (DIRECT CURRENT) |
| V(ac) | VOLT (ALTERNATING CURRENT) |
| FC | FOOT - CANDLE |
| W | WATTS |
| VA | VOLT-AMPERE |
| M | MEGA |
| k | KILO |
| m | MILLI |
| μ | MICRO |
| P | PICO |
| Hz | HERTZ |

## MISCELLANEOUS ELECTROLIERS

| NEW | EXISTING | |
|---|---|---|
| | | LUMINAIRE ON WOOD POLE |
| | | NON-STANDARD ELECTROLIER (SEE PROJECT LEGEND) |
| | | CITY ELECTROLIER |
| | | ELECTROLIER FOUNDATION (FUTURE INSTALLATION) |

**NOTES:**

1. LED luminaires shall be 235 W when installed on Type 21, 21D, 30, 31 and 32 Standards, unless otherwise specified. LED luminaires shall be 165 W when installed on other type standards or poles, unless otherwise specified.
2. Luminaires shall be the cutoff type, ANSI Type III medium cutoff lighting distribution, unless otherwise specified.

## STANDARD ELECTROLIER

| NEW | EXISTING | STANDARD TYPE |
|---|---|---|
| | | 15 |
| | | 15D |
| | | 15 STRUCTURE |
| | | 15D STRUCTURE |
| | | 21 |
| | | 21D |
| | | 21 STRUCTURE |
| | | 21D STRUCTURE |
| | | 30 |
| | | 31 |
| | | 32 |

STATE OF CALIFORNIA
DEPARTMENT OF TRANSPORTATION

# ELECTRICAL SYSTEMS (LEGEND AND ABBREVIATIONS)

NO SCALE

RSP ES-1A DATED OCTOBER 30, 2015 SUPERSEDES RSP ES-1A DATED JULY 19, 2013 AND STANDARD PLAN ES-1A DATED MAY 20, 2011 - PAGE 425 OF THE STANDARD PLANS BOOK DATED 2010.

**REVISED STANDARD PLAN RSP ES-1A**

**2010 REVISED STANDARD PLAN RSP ES-1A**

9-29-15

| Dist | COUNTY | ROUTE | POST MILES TOTAL PROJECT | SHEET No. | TOTAL SHEETS |
|---|---|---|---|---|---|
| 06 | Tul | 65 | R15.1/18.0 | 284 | 324 |

Theresa Gabriel
REGISTERED ELECTRICAL ENGINEER

October 30, 2015
PLANS APPROVAL DATE

REGISTERED PROFESSIONAL ENGINEER Theresa Aziz Gabriel No. E15129 Exp. 6-30-16 ELECTRICAL STATE OF CALIFORNIA

*THE STATE OF CALIFORNIA OR ITS OFFICERS OR AGENTS SHALL NOT BE RESPONSIBLE FOR THE ACCURACY OR COMPLETENESS OF SCANNED COPIES OF THIS PLAN SHEET.*

TO ACCOMPANY PLANS DATED 6-20-16

## CONDUIT

| NEW | EXISTING | |
|---|---|---|
| | | LIGHTING CONDUIT, UNLESS OTHERWISE INDICATED OR NOTED |
| | | TRAFFIC SIGNAL CONDUIT |
| C | c | COMMUNICATION CONDUIT |
| T | t | TELEPHONE CONDUIT |
| F | f | FIRE ALARM CONDUIT |
| FO | fo | FIBER OPTIC CONDUIT |
| | | CONDUIT TERMINATION |
| R | r | CONDUIT RISER ATTACHED TO THE STRUCTURE OR SERVICE POLE |

## SERVICE EQUIPMENT

| NEW | EXISTING | |
|---|---|---|
| OH | oh | OVERHEAD LINES |
| U | U | WOOD POLE, "U" INDICATES UTILITY OWNED |
| | | POLE GUY WITH ANCHOR |
| | | UTILITY TRANSFORMER - GROUND MOUNTED |
| III | III | SERVICE EQUIPMENT ENCLOSURE TYPE. DOOR INDICATES FRONT OF ENCLOSURE |
| T | t | TELEPHONE DEMARCATION CABINET |

## POLE-MOUNTED SERVICE DESIGNATION

TYPE H SERVICE, 28'-10" — TYPE OF INSTALLATION AND POLE HEIGHT ABOVE GRADE

## FLASHING BEACON

| NEW | EXISTING | |
|---|---|---|
| R | R | FLASHING BEACON (ONE VEHICLE SIGNAL HEAD WITH BACKPLATE AND VISOR) "R" INDICATES RED INDICATION, "Y" INDICATES YELLOW INDICATION |
| Y Y | Y Y | FLASHING BEACON WITH TYPE 15-FBS STANDARD AND A SIGN. |
| R R | R R | FLASHING BEACON WITH TYPES 9, 9A OR 9B SIGN UNLESS OTHERWISE SPECIFIED OR INDICATED |

## SIGNAL EQUIPMENT

| NEW | EXISTING | |
|---|---|---|
| | | PEDESTRIAN SIGNAL HEAD |
| | | PUSH BUTTON ASSEMBLY POST |
| | | PEDESTRIAN BARRICADE |
| | | VEHICLE SIGNAL HEAD (WITH BACKPLATE AND 3-SECTIONS: RED, YELLOW AND GREEN) |
| | | VEHICLE SIGNAL HEAD WITH ANGLE VISOR |
| PV | PV | MODIFICATIONS OF BASIC SYMBOL: "L" INDICATES ALL NON-ARROW SECTIONS LOUVERED "LG" INDICATES LOUVERED GREEN SECTION ONLY "PV" INDICATES ALL 12" SECTIONS PROGRAMMED VISIBILITY "8" INDICATES ALL 8" SECTIONS (ONLY WHEN SPECIFIED) |
| | | VEHICLE SIGNAL HEAD CONSISTING OF RED, YELLOW AND GREEN LEFT ARROW SECTIONS |
| | | VEHICLE SIGNAL HEAD CONSISTING OF RED AND YELLOW SECTIONS WITH AN UP GREEN ARROW SECTION |
| | | VEHICLE SIGNAL HEAD (5 SECTION) CONSISTING OF RED, YELLOW AND GREEN SECTIONS WITH YELLOW AND GREEN RIGHT ARROW SECTIONS |
| | | TYPE 15TS STANDARD WITH VEHICLE SIGNAL HEAD AND LUMINAIRE |
| | | TYPE 21TS STANDARD WITH VEHICLE SIGNAL HEAD AND LUMINAIRE |
| | | STANDARD WITH LUMINAIRE AND SIGNAL MAST ARMS AND ATTACHED VEHICLE SIGNAL HEADS |
| | | TYPE 1 STANDARD WITH ATTACHED VEHICLE SIGNAL HEADS |
| | | STANDARD WITH A SIGNAL MAST ARM, ATTACHED VEHICLE SIGNAL HEADS AND INTERNALLY ILLUMINATED STREET NAME SIGN |
| | | CONTROLLER ASSEMBLY. DOOR INDICATES FRONT OF CABINET |

## SIGNAL EQUIPMENT Cont

| NEW | EXISTING | |
|---|---|---|
| | | GUARD POST |
| | | TYPE 1 STANDARD WITH RAMP METERING SIGN |
| | | OPTICAL DETECTOR FOR THE EMERGENCY VEHICLE DETECTION |

### NOTES:

1. All signal sections shall be 12" unless shown otherwise.
2. Signal heads shall be provided with backplates unless shown otherwise.

## ILLUMINATED OVERHEAD SIGN

| NEW | EXISTING | |
|---|---|---|
| | | SINGLE POST, SINGLE ILLUMINATED SIGN, BALANCED BUTTERFLY |
| | | SINGLE POST, DOUBLE ILLUMINATED SIGN, BALANCED BUTTERFLY |
| | | SINGLE POST, SINGLE ILLUMINATED SIGN, FULL CANTILEVER |
| | | DOUBLE POST, SINGLE ILLUMINATED SIGN |
| | | SINGLE ILLUMINATED SIGN MOUNTED ON STRUCTURE |
| | | DOUBLE POST, SINGLE ILLUMINATED SIGN WITH ELECTROLIER |

STATE OF CALIFORNIA
DEPARTMENT OF TRANSPORTATION

# ELECTRICAL SYSTEMS (LEGEND AND ABBREVIATIONS)

NO SCALE

RSP ES-1B DATED OCTOBER 30, 2015 SUPERSEDES RSP ES-1B DATED JULY 19, 2013 AND STANDARD PLAN ES-1B DATED MAY 20, 2011 - PAGE 426 OF THE STANDARD PLANS BOOK DATED 2010.

**REVISED STANDARD PLAN RSP ES-1B**

**2010 REVISED STANDARD PLAN RSP ES-1B**

8-19-15

| Dist | COUNTY | ROUTE | POST MILES TOTAL PROJECT | SHEET No. | TOTAL SHEETS |
|---|---|---|---|---|---|
| 06 | Tul | 65 | R15.1/18.0 | 285 | 324 |

Theresa Gabriel
REGISTERED ELECTRICAL ENGINEER

April 15, 2016
PLANS APPROVAL DATE

REGISTERED PROFESSIONAL ENGINEER
Theresa Aziz Gabriel
No. E15129
Exp. 6-30-16
ELECTRICAL
STATE OF CALIFORNIA

THE STATE OF CALIFORNIA OR ITS OFFICERS OR AGENTS SHALL NOT BE RESPONSIBLE FOR THE ACCURACY OR COMPLETENESS OF SCANNED COPIES OF THIS PLAN SHEET.

TO ACCOMPANY PLANS DATED 6-20-16

# 2010 REVISED STANDARD PLAN RSP ES-1C

## EQUIPMENT IDENTIFICATION

### ILLUMINATED SIGN IDENTIFICATION:

SIGN No. 12345
10 ISL SCI 1.0

- SIGN EQUIPMENT IDENTIFICATION CHARACTERS - PLACE ON POST OR STRUCTURE
- TRANSFORMER RATING (kVA)
- LIGHTING CONTROL TYPE
- NUMBER AND TYPE OF FIXTURES

} DO NOT PLACE ON STANDARD OR STRUCTURE

### ELECTROLIER OR EQUIPMENT IDENTIFICATION:

L2745 - 15'-0"

- MAST ARM LENGTH, IF SHOWN. DO NOT PLACE ON STANDARD OR STRUCTURE
- EQUIPMENT IDENTIFICATION CHARACTERS - PLACE ON STANDARD OR STRUCTURE. EXISTING EQUIPMENT IDENTIFICATION CHARACTERS ARE SHOWN IN PARENTHESIS

### CONDUIT AND CONDUCTOR IDENTIFICATION:

1½"C, 2#10, 15#14, 2 DLC, 12P#18 (PAIR)

- NUMBER AND SIZE OF CONDUCTORS AND CABLES
- SIZE OF CONDUIT IN INCHES

| | |
|---|---|
| ø1, ø2, ø2P, etc. | TRAFFIC PHASE IDENTIFICATION FOR SIGNALS, DETECTORS AND PHASE DIAGRAMS |
| 1 2 3 | LEGEND NUMBERS |
| A B C | EQUIPMENT, SIGNAL POLES, INSTALLATION OR ITEMS |
| 1 2 3 | CONDUIT RUN NUMBERS |

### SIGNAL AND LIGHTING STANDARD (TYPICAL DESIGNATION):

19A - 3 - 100

- WIND VELOCITY = 100 mph
- CASE 3 ARM LOADING
- STANDARD TYPE
- STANDARD PLAN SHEET NUMBER
- DETAIL, NUMBER, SECTION, TYPE OR ELEVATION

## MISCELLANEOUS EQUIPMENT

| NEW | EXISTING | |
|---|---|---|
| CMS | cms | CHANGEABLE MESSAGE SIGN |
| | | CLOSED CIRCUIT TELEVISION CAMERA |
| | | HIGHWAY ADVISORY RADIO POLE AND ANTENNA |
| EMS | ems | LED EXTINGUISHABLE MESSAGE SIGN |
| M V | m v | DETECTION DEVICE<br>M = MICROWAVE SENSOR<br>V = VIDEO IMAGE SENSOR |

## WIRING DIAGRAM LEGEND

- EXTERNAL CONDUCTOR
- CONDUCTOR OR BUS
- TIE POINT
- CONTACTOR COIL
- CONTACTOR, NO CONTACT
- TERMINAL BLOCKS
- CONTACTOR, NC CONTACT
- ENCLOSURE BOND
- GROUNDING ELECTRODE
- CIRCUIT BREAKER
- RECEPTACLE

## PULL BOXES

| NEW | EXISTING | |
|---|---|---|
| | | PULL BOX, No. 5 UNLESS OTHERWISE INDICATED OR NOTED |
| 3 | 9A(21) | PULL BOX, ADDITIONAL DESIGNATIONS OR DESCRIPTIONS |

3 No. 3½ PULL BOX
5 No. 5 PULL BOX
6 No. 6 PULL BOX
7 No. 7 PULL BOX (CEILING)
8 No. 8 PULL BOX
9 No. 9 PULL BOX (STRUCTURE)
9A No. 9A PULL BOX (STRUCTURE)

(C) COMMUNICATIONS PULL BOX
(E) PULL BOX WITH EXTENSION
(S) SPRINKLER CONTROL PULL BOX
(21) ANCHOR BOLTS AND CONDUIT FOR FUTURE INSTALLATION OF TYPE 21 STANDARD
(T) TRAFFIC PULL BOX

## VEHICLE DETECTORS

5 J 9 U

- VEHICLE DETECTOR DESIGNATION
- U = UPPER
  L = LOWER
- SLOT NUMBER IN INPUT FILE
- INPUT FILE (I OR J)
- PHASE

| NEW | EXISTING | |
|---|---|---|
| | | TYPE A LOOP DETECTOR. OUTLINE OF SAW CUT SHOWN |
| | | TYPE B LOOP DETECTOR. OUTLINE OF SAW CUT SHOWN |
| | | TYPE C LOOP DETECTOR. OUTLINE OF SAW CUT SHOWN |
| | | TYPE D LOOP DETECTOR. OUTLINE OF SAW CUT SHOWN |
| | | TYPE E LOOP DETECTOR. OUTLINE OF SAW CUT SHOWN |
| | | TYPE Q LOOP DETECTOR. OUTLINE OF SAW CUT SHOWN |
| DH | dh | DETECTOR HANDHOLE |
| | | MICROWAVE OR VIDEO DETECTION ZONE |

STATE OF CALIFORNIA
DEPARTMENT OF TRANSPORTATION

# ELECTRICAL SYSTEMS (LEGEND AND ABBREVIATIONS)

NO SCALE

RSP ES-1C DATED APRIL 15, 2016 SUPERSEDES RSP ES-1C DATED OCTOBER 30, 2015 AND RSP ES-1C DATED JULY 19, 2013 AND STANDARD PLAN ES-1C DATED MAY 20, 2011 - PAGE 427 OF THE STANDARD PLANS BOOK DATED 2010.

**REVISED STANDARD PLAN RSP ES-1C**

1-22-16

| Dist | COUNTY | ROUTE | POST MILES TOTAL PROJECT | SHEET No. | TOTAL SHEETS |
|---|---|---|---|---|---|
| 06 | Tul | 65 | R15.1/18.0 | 286 | 324 |

Theresa Gabriel
REGISTERED ELECTRICAL ENGINEER

October 30, 2015
PLANS APPROVAL DATE

REGISTERED PROFESSIONAL ENGINEER Theresa Aziz Gabriel No. E15129 Exp. 6-30-16 ELECTRICAL STATE OF CALIFORNIA

*THE STATE OF CALIFORNIA OR ITS OFFICERS OR AGENTS SHALL NOT BE RESPONSIBLE FOR THE ACCURACY OR COMPLETENESS OF SCANNED COPIES OF THIS PLAN SHEET.*

TO ACCOMPANY PLANS DATED 6-20-16

**2010 REVISED STANDARD PLAN RSP ES-2A**

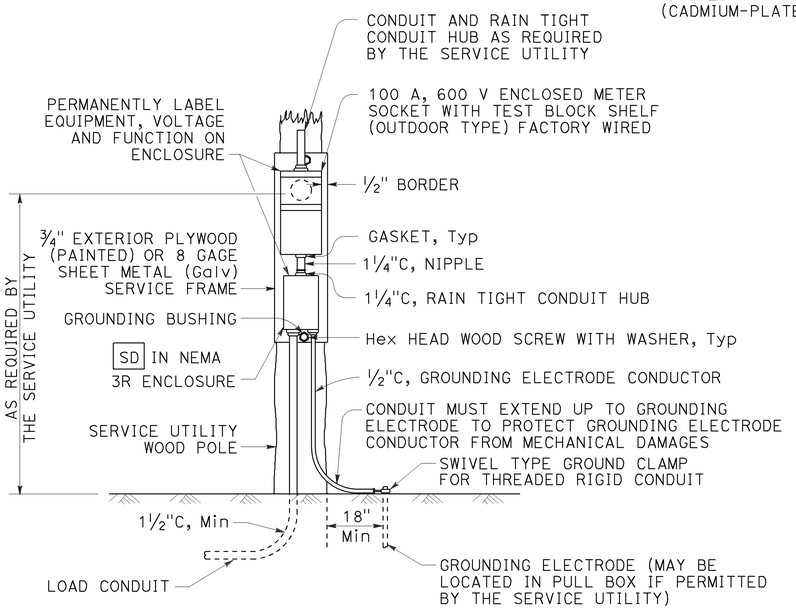


## TYPE SCE-1
DETAIL A

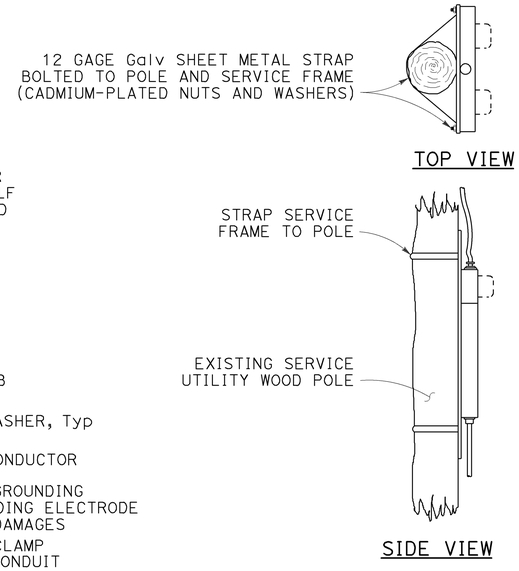


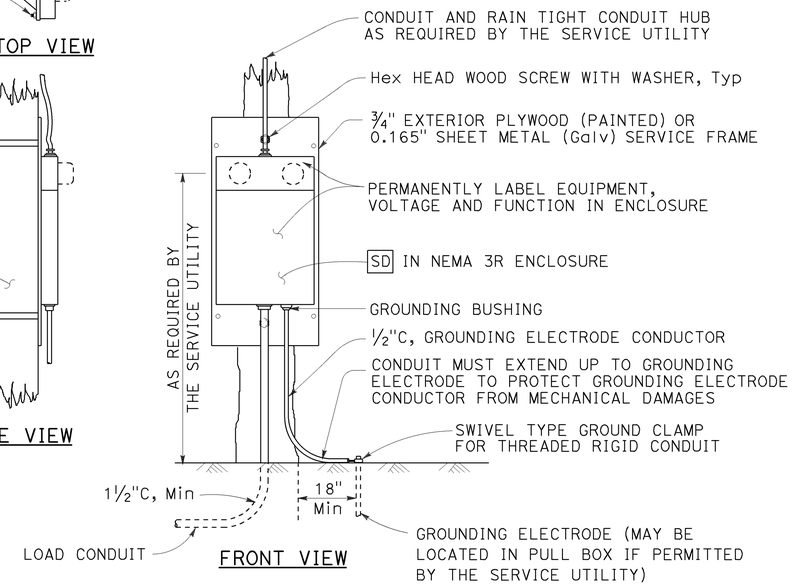


## TYPE SCE-2
DETAIL B

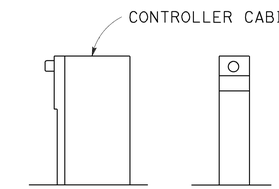


## TYPE OF SERVICE (TYPICAL)
DETAIL C

See Notes 1 and 2

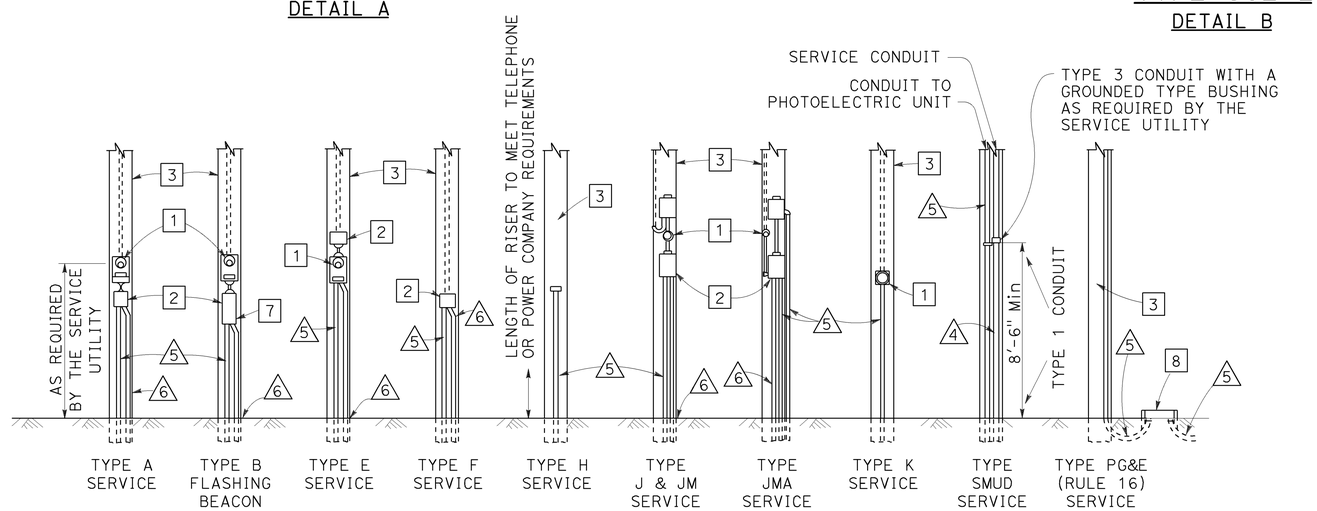


## POLE MOUNTED SERVICE INSTALLATIONS
DETAIL D

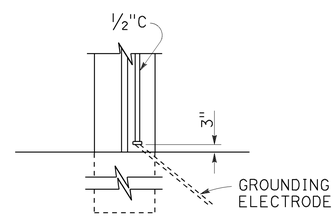


TYPE A
See Note 3

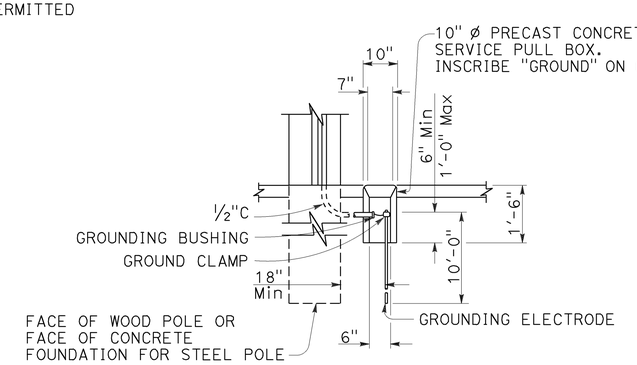


TYPE B
See Note 4

## SERVICE GROUNDING
DETAIL E

**LEGEND:**

1. METER SOCKET.
2. SERVICE ENCLOSURE WITH A MINIMUM 60 A RATED MAIN CIRCUIT BREAKER, UNLESS OTHERWISE SHOWN.
3. A. UTILITY OWNED POLE. THE SERVICE UTILITY WILL FURNISH AND INSTALL REQUIRED SERVICE RISER, PEU WITH CONDUCTORS AND OTHER EQUIPMENT AS NEEDED.
   B. STATE OWNED POLE. THE CONTRACTOR SHALL FURNISH AND INSTALL REQUIRED SERVICE RISER AND EQUIPMENT.
4. 2"C, SERVICE CONDUIT MUST HAVE A GROUNDED TYPE BUSHING INSTALLED AT UPPER END OF THE METALLIC POLE RISER CONDUIT. A GROUNDING CONDUCTOR MUST BE ATTACHED TO THE BUSHING, CARRIED THROUGH THE CONDUIT RUN AND ATTACHED TO THE SERVICE EQUIPMENT ENCLOSURE'S GROUNDING ELECTRODE.
5. CONDUIT, LENGTH AND SIZE AS REQUIRED.
6. ½"C, 1#6. SEE DETAIL E.
7. FLASHING BEACON CONTROL ASSEMBLY.
8. SERVICE PULL BOX, No. 5 UNLESS OTHERWISE NOTED, FURNISHED AND INSTALLED BY THE CONTRACTOR. SERVICE UTILITY SHALL DETERMINE THE EXACT LOCATION.

**NOTES:**

1. Type II service equipment enclosure mounted on the side of a controller cabinet.
2. Type III complete free-standing service equipment enclosure.
3. Ground clamp and required fittings must be accessible. Conduit must extend to protect grounding electrode conductor from mechanical damage.
4. Use where service utility requires 18" clearance between grounding electrode and the pole or service equipment enclosure. Installation shown is for sidewalk or paved areas. In unpaved areas, omit special service pull box and locate ground clamp above ground or locate ground clamp in nearest pull box.

STATE OF CALIFORNIA
DEPARTMENT OF TRANSPORTATION

# ELECTRICAL SYSTEMS (SERVICE EQUIPMENT)

NO SCALE

RSP ES-2A DATED OCTOBER 30, 2015 SUPERSEDES STANDARD PLAN ES-2A DATED MAY 20, 2011 - PAGE 428 OF THE STANDARD PLANS BOOK DATED 2010.

**REVISED STANDARD PLAN RSP ES-2A**

8-20-15

| Dist | COUNTY | ROUTE | POST MILES TOTAL PROJECT | SHEET No. | TOTAL SHEETS |
|---|---|---|---|---|---|
| 06 | Tul | 65 | R15.1/18.0 | 287 | 324 |

Theresa Gabriel
REGISTERED ELECTRICAL ENGINEER

October 30, 2015
PLANS APPROVAL DATE

REGISTERED PROFESSIONAL ENGINEER
Theresa Aziz Gabriel
No. E15129
Exp. 6-30-16
ELECTRICAL
STATE OF CALIFORNIA

*THE STATE OF CALIFORNIA OR ITS OFFICERS OR AGENTS SHALL NOT BE RESPONSIBLE FOR THE ACCURACY OR COMPLETENESS OF SCANNED COPIES OF THIS PLAN SHEET.*

TO ACCOMPANY PLANS DATED 6-20-16

2010 REVISED STANDARD PLAN RSP ES-2C

NOTES:

1. The plan shows the approximate location of devices within the enclosure. Components may be rearranged, however, the "working" clearances within the service equipment enclosure shall be maintained.

2. In unpaved areas a raised portland cement concrete pad 2'-0" x 4" x width of foundation shall be constructed in front of new service equipment enclosure installation. Pad shall be set to elevation of foundation.

3. Plug-in circuit breakers may be mounted in the vertical or horizontal position. Cable-in/cable-out circuit breakers shall be mounted in the vertical position.

4. Type III-AF and Type III-BF service equipment enclosures shall have the meter viewing windows located on the front side of the service equipment enclosures.

5. Type III-AR and Type III-BR service equipment enclosure shall be similarly constructed as Type III-AF and Type III-BF respectively, except the meter viewing windows shall be located on the back side of the service equipment enclosures.

STATE OF CALIFORNIA
DEPARTMENT OF TRANSPORTATION

# ELECTRICAL SYSTEMS (SERVICE EQUIPMENT ENCLOSURE NOTES TYPE III SERIES)

NO SCALE

RSP ES-2C DATED OCTOBER 30, 2015 SUPERSEDES STANDARD PLAN ES-2C DATED MAY 20, 2011 - PAGE 430 OF THE STANDARD PLANS BOOK DATED 2010.

**REVISED STANDARD PLAN RSP ES-2C**

8-19-15

| Dist | COUNTY | ROUTE | POST MILES TOTAL PROJECT | SHEET No. | TOTAL SHEETS |
|---|---|---|---|---|---|
| 06 | Tul | 65 | R15.1/18.0 | 288 | 324 |

Theresa Gabriel
REGISTERED ELECTRICAL ENGINEER

October 30, 2015
PLANS APPROVAL DATE

Theresa Aziz Gabriel No. E15129 Exp. 6-30-16 ELECTRICAL — REGISTERED PROFESSIONAL ENGINEER — STATE OF CALIFORNIA

*THE STATE OF CALIFORNIA OR ITS OFFICERS OR AGENTS SHALL NOT BE RESPONSIBLE FOR THE ACCURACY OR COMPLETENESS OF SCANNED COPIES OF THIS PLAN SHEET.*

TO ACCOMPANY PLANS DATED 6-20-16

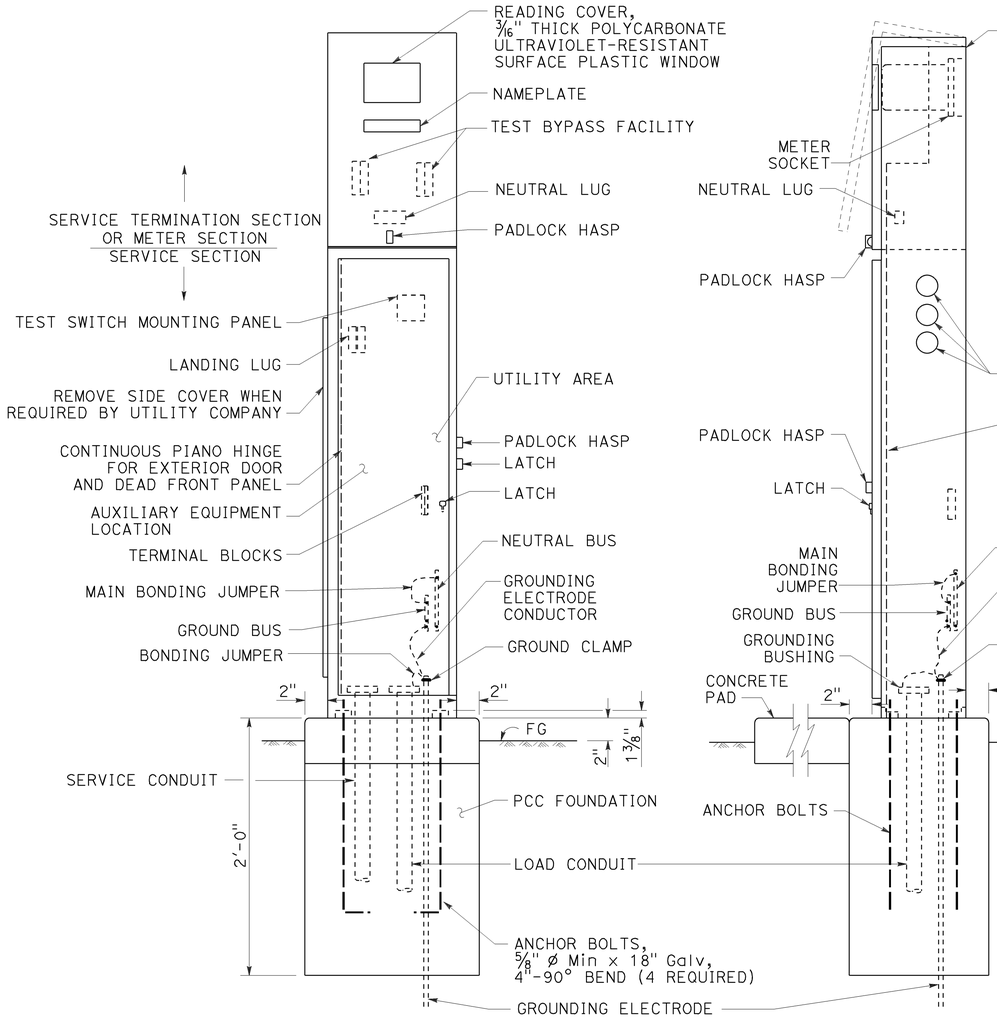


FRONT VIEW

SIDE VIEW

## TYPE III-AF SERVICE EQUIPMENT ENCLOSURE (TYPICAL)

DETAIL A

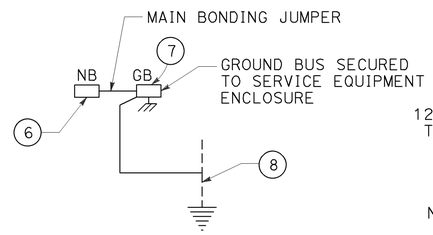


DETAIL D

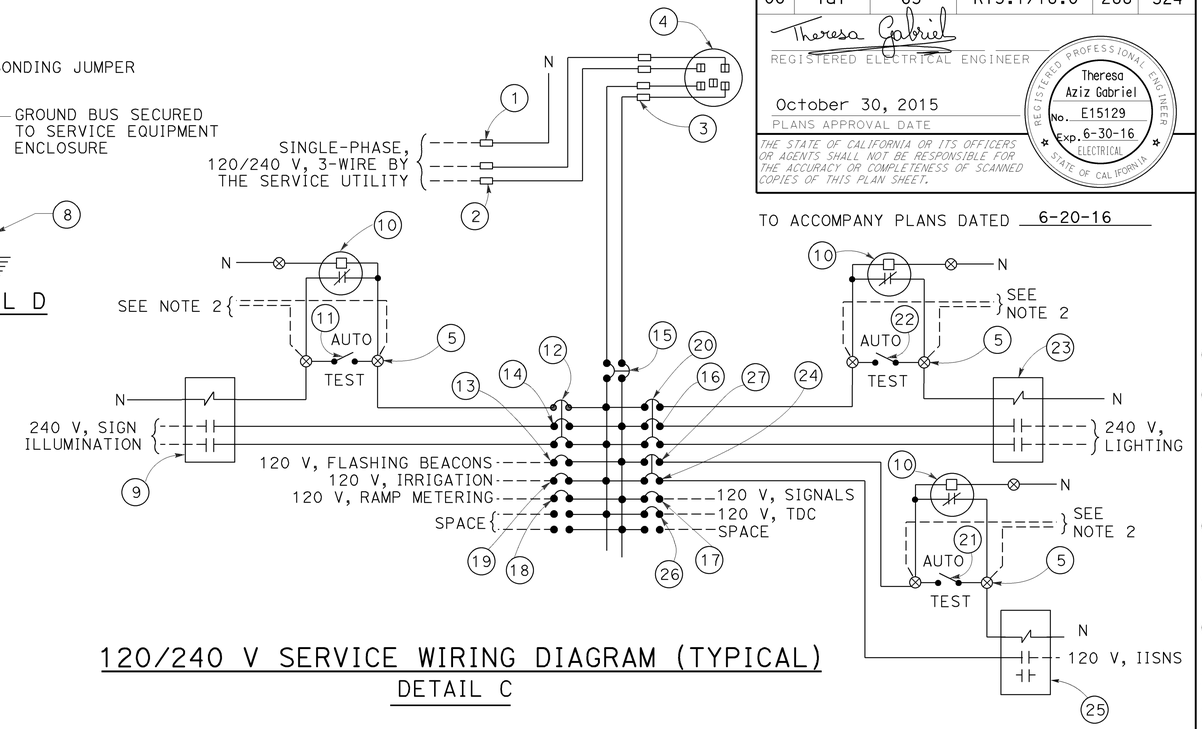


## 120/240 V SERVICE WIRING DIAGRAM (TYPICAL)

DETAIL C

### TYPE III-A SERVICE EQUIPMENT ENCLOSURE LEGEND (120/240 V)

| ITEM | COMPONENT | NAMEPLATE DESCRIPTION | ITEM | COMPONENT | NAMEPLATE DESCRIPTION |
|---|---|---|---|---|---|
| 1 | NEUTRAL LUG | | 14 | 30 A, 240 V, 2P, CB | SIGN ILLUMINATION |
| 2 | LANDING LUG | | 15 | 100 A, 240 V, 2P, CB | MAIN BREAKER |
| 3 | TEST BYPASS FACILITY | | 16 | 30 A, 240 V, 2P, CB | LIGHTING |
| 4 | METER SOCKET AND SUPPORT | | 17 | 50 A, 120 V, 1P, CB | SIGNALS |
| 5 | TERMINAL BLOCKS | | 18 | 30 A, 120 V, 1P, CB | RAMP METERING |
| 6 | NEUTRAL BUS | | 19 | 20 A, 120 V, 1P, CB | IRRIGATION |
| 7 | GROUND BUS | | 20 | 15 A, 120 V, 1P, CB | LIGHTING CONTROL |
| 8 | GROUNDING ELECTRODE | | 21 | 15 A, 1P, TEST SWITCH | IISNS TEST SWITCH |
| 9 | 30 A, 2P, NO CONTACTOR | SIGN ILLUMINATION | 22 | 15 A, 1P, TEST SWITCH | LIGHTING TEST SWITCH |
| 10 | PHOTOELECTRIC UNIT (NOTE 4) | PEU | 23 | 60 A, 2P, NO CONTACTOR | LIGHTING |
| 11 | 15 A, 1P, TEST SWITCH | SIGN ILLUMINATION TEST SWITCH | 24 | 15 A, 120 V, 1P, CB | IISNS |
| 12 | 15 A, 120 V, 1P, CB | SIGN ILLUMINATION CONTROL | 25 | 30 A, 2P, NO CONTACTOR | IISNS |
| 13 | 15 A, 120 V, 1P, CB | FLASHING BEACON | 26 | 20 A, 120 V, 1P, CB | TELEPHONE DEMARCATION CABINET |
| | | | 27 | 15 A, 120 V, 1P, CB | IISNS CONTROL |

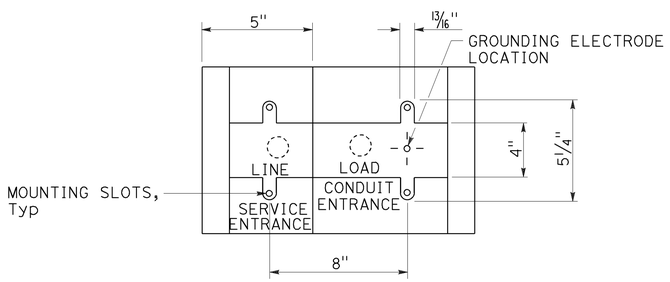


## BASE FOR TYPE III-A SERVICE EQUIPMENT ENCLOSURE

DETAIL B

NOTES:

1. Unless otherwise indicated on the plans, service equipment items shall be provided for each service equipment enclosure as shown.
2. Connect to remote test switch mounted on lighting standards, sign post or structure when required.
3. Items 1 and 6 shall be isolated from the service equipment enclosure.
4. Type V photoelectric control shall be used unless otherwise indicated on the plans.
5. Item 12, 20 and 27 shall be ganged operated CB.

STATE OF CALIFORNIA
DEPARTMENT OF TRANSPORTATION

# ELECTRICAL SYSTEMS (SERVICE EQUIPMENT ENCLOSURE AND TYPICAL WIRING DIAGRAM, TYPE III-A SERIES)

NO SCALE

RSP ES-2D DATED OCTOBER 30, 2015 SUPERSEDES STANDARD PLAN ES-2D DATED MAY 20, 2011 - PAGE 431 OF THE STANDARD PLANS BOOK DATED 2010.

**REVISED STANDARD PLAN RSP ES-2D**

2010 REVISED STANDARD PLAN RSP ES-2D

| Dist | COUNTY | ROUTE | POST MILES TOTAL PROJECT | SHEET No. | TOTAL SHEETS |
|---|---|---|---|---|---|
| 06 | Tul | 65 | R15.1/18.0 | 289 | 324 |

Theresa Gabriel
REGISTERED ELECTRICAL ENGINEER

October 30, 2015
PLANS APPROVAL DATE

REGISTERED PROFESSIONAL ENGINEER Theresa Aziz Gabriel No. E15129 Exp. 6-30-16 ELECTRICAL STATE OF CALIFORNIA

*THE STATE OF CALIFORNIA OR ITS OFFICERS OR AGENTS SHALL NOT BE RESPONSIBLE FOR THE ACCURACY OR COMPLETENESS OF SCANNED COPIES OF THIS PLAN SHEET.*

TO ACCOMPANY PLANS DATED 6-20-16

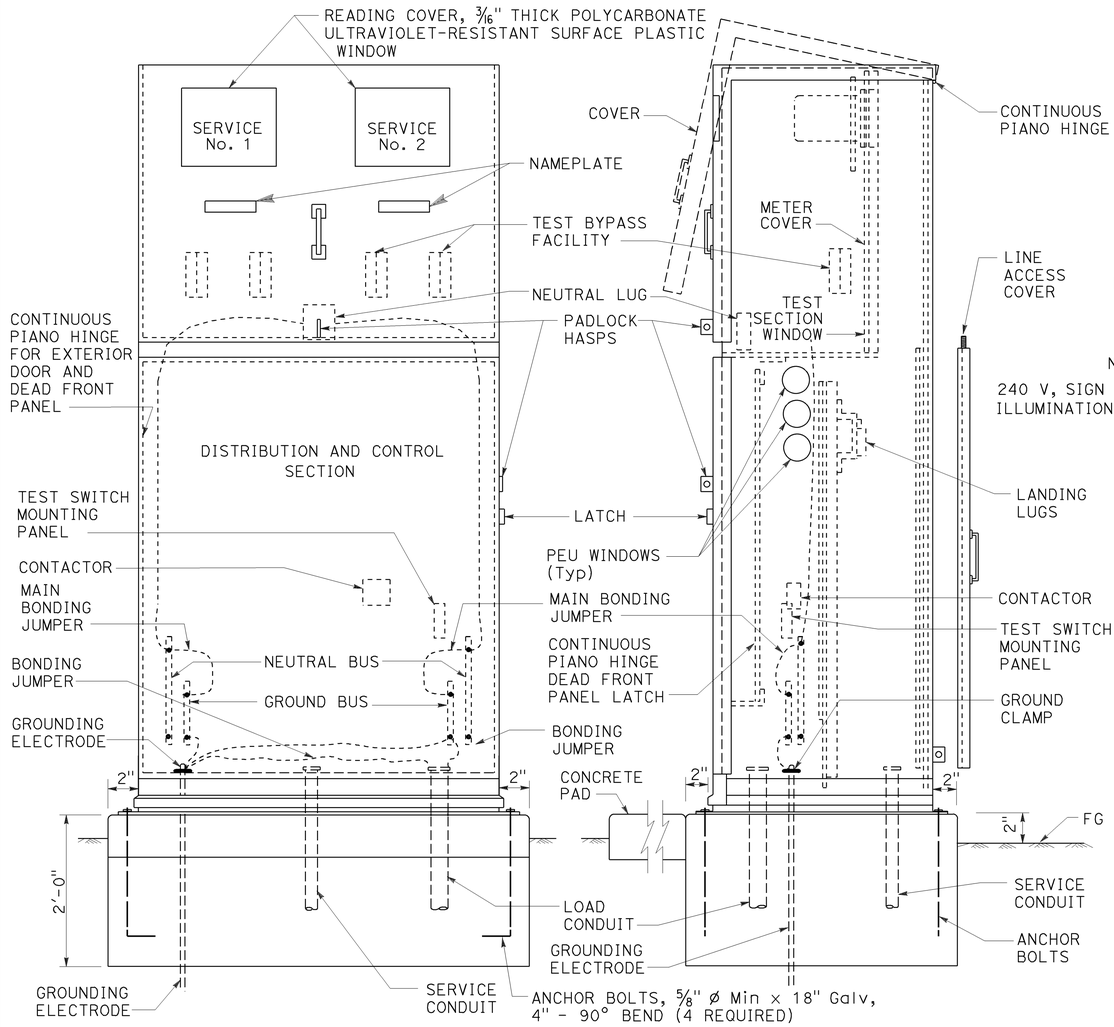


FRONT VIEW SIDE VIEW

## TYPE III-CF SERVICE EQUIPMENT ENCLOSURE (TYPICAL)

DETAIL A

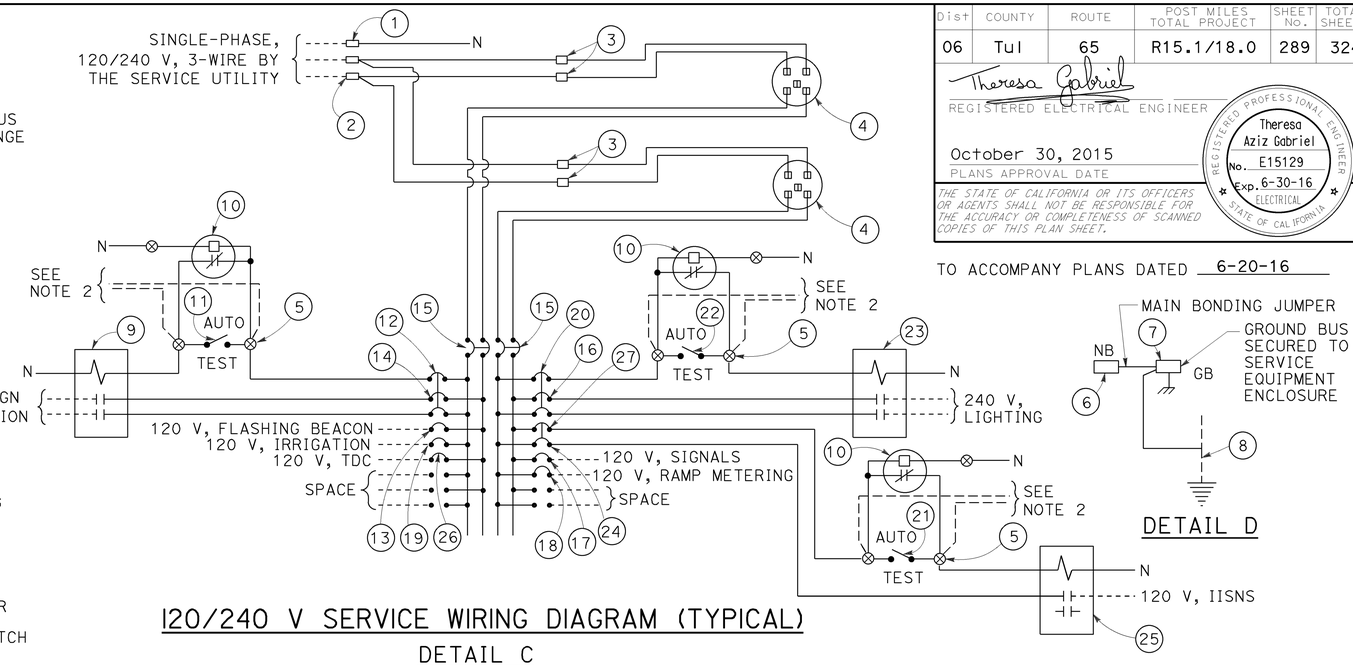


## 120/240 V SERVICE WIRING DIAGRAM (TYPICAL)

DETAIL C

DETAIL D

| TYPE III-C SERVICE EQUIPMENT ENCLOSURE LEGEND (120/240 V) | | | | | |
|---|---|---|---|---|---|
| ITEM | COMPONENT | NAMEPLATE DESCRIPTION | ITEM | COMPONENT | NAMEPLATE DESCRIPTION |
| 1 | NEUTRAL LUG | | 14 | 30 A, 240 V, 2P, CB | SIGN ILLUMINATION |
| 2 | LANDING LUG | | 15 | 100 A, 240 V, 2P, CB | MAIN BREAKER |
| 3 | TEST BYPASS FACILITY | | 16 | 30 A, 240 V, 2P, CB | LIGHTING |
| 4 | METER SOCKET AND SUPPORT | | 17 | 50 A, 120 V, 1P, CB | SIGNALS |
| 5 | TERMINAL BLOCKS | | 18 | 30 A, 120 V, 1P, CB | RAMP METERING |
| 6 | NEUTRAL BUS | | 19 | 20 A, 120 V, 1P, CB | IRRIGATION |
| 7 | GROUND BUS | | 20 | 15 A, 120 V, 1P, CB | LIGHTING CONTROL |
| 8 | GROUNDING ELECTRODE | | 21 | 15 A, 1P, TEST SWITCH | IISNS TEST SWITCH |
| 9 | 30 A, 2P, NO CONTACTOR | SIGN ILLUMINATION | 22 | 15 A, 1P, TEST SWITCH | LIGHTING TEST SWITCH |
| 10 | PHOTOELECTRIC UNIT (NOTE 4) | PEU | 23 | 60 A, 2P, NO CONTACTOR | LIGHTING |
| 11 | 15 A, 1P, TEST SWITCH | SIGN ILLUMINATION TEST SWITCH | 24 | 15 A, 120 V, 1P, CB | IISNS |
| 12 | 15 A, 120 V, 1P, CB | SIGN ILLUMINATION CONTROL | 25 | 30 A, 2P, NO CONTACTOR | IISNS |
| 13 | 15 A, 120 V, 1P, CB | FLASHING BEACON | 26 | 20 A, 120 V, 1P, CB | TELEPHONE DEMARCATION CABINET |
| | | | 27 | 15 A, 120 V, 1P, CB | IISNS CONTROL |

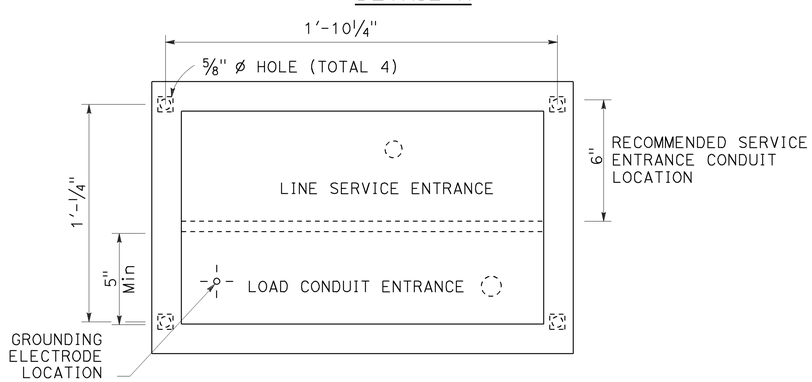


## BASE FOR TYPE III-C SERVICE EQUIPMENT ENCLOSURE

DETAIL B

NOTES:

1. Unless otherwise indicated on the plans, service equipment items shall be provided for each service equipment enclosure as shown.
2. Connect to remote test switch mounted on lighting standards, sign post or structure when required.
3. Items 1 and 6 shall be isolated from the service equipment enclosure.
4. Type V photoelectric control shall be used unless otherwise indicated on the plans.
5. Item 12, 20 and 27 shall be ganged operated CB.

STATE OF CALIFORNIA
DEPARTMENT OF TRANSPORTATION

# ELECTRICAL SYSTEMS (SERVICE EQUIPMENT ENCLOSURE AND TYPICAL WIRING DIAGRAM TYPE III-C SERIES)

NO SCALE

RSP ES-2F DATED OCTOBER 30, 2015 SUPERSEDES STANDARD PLAN ES-2F DATED MAY 20, 2011 - PAGE 433 OF THE STANDARD PLANS BOOK DATED 2010.

**REVISED STANDARD PLAN RSP ES-2F**

**2010 REVISED STANDARD PLAN RSP ES-2F**

8-19-15

| Dist | COUNTY | ROUTE | POST MILES TOTAL PROJECT | SHEET No. | TOTAL SHEETS |
|---|---|---|---|---|---|
| 06 | Tul | 65 | R15.1/18.0 | 290 | 324 |

Theresa Gabriel
REGISTERED ELECTRICAL ENGINEER

April 15, 2016
PLANS APPROVAL DATE

REGISTERED PROFESSIONAL ENGINEER Theresa Aziz Gabriel No. E15129 Exp. 6-30-16 ELECTRICAL STATE OF CALIFORNIA

THE STATE OF CALIFORNIA OR ITS OFFICERS OR AGENTS SHALL NOT BE RESPONSIBLE FOR THE ACCURACY OR COMPLETENESS OF SCANNED COPIES OF THIS PLAN SHEET.

TO ACCOMPANY PLANS DATED 6-20-16

NOTES:

1. Controller units, plug-mounted equipment, shelf-mounted equipment and wall-mounted equipment shall be located to permit safe and easy removal or replacement without removing any other piece of equipment.
2. Cabinet fan may be installed at an alternate location near the top of the cabinet when approved by the Engineer.
3. Where telephone interconnect is required, a minimum of 5" clear vertical space shall be provided inside the cabinet for the equipment.
4. Telephone interconnect conductors shall be enclosed in a ¾"C or larger conduit through the foundation. Type 4 conduit shall be used to separate telephone and power conductors in cabinets.

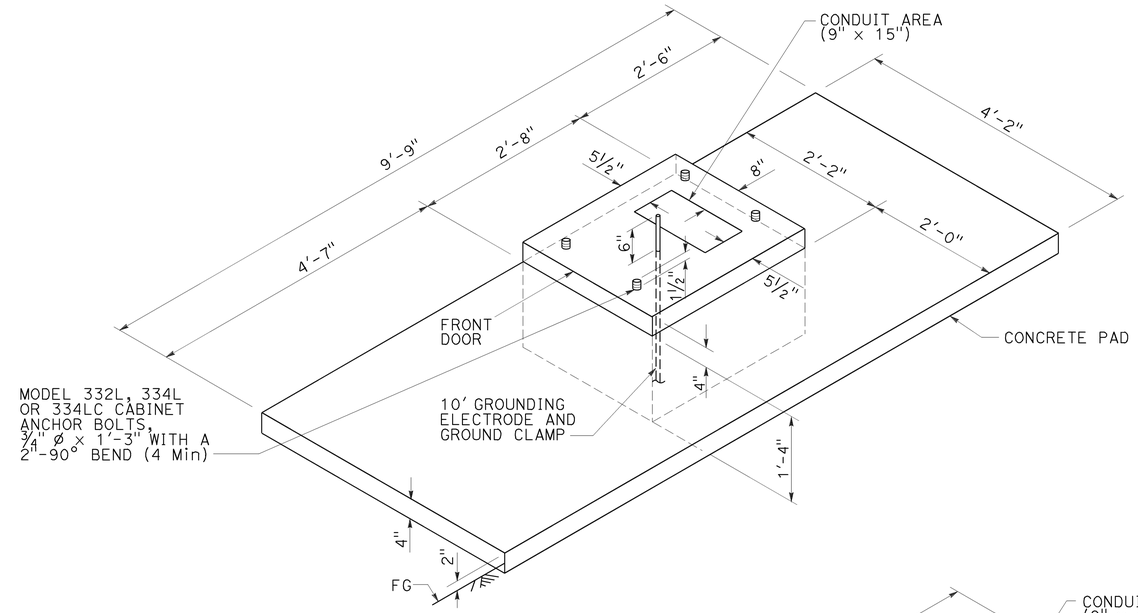


FOUNDATION AND PAD DETAIL

Model 332L, 334L and 334LC

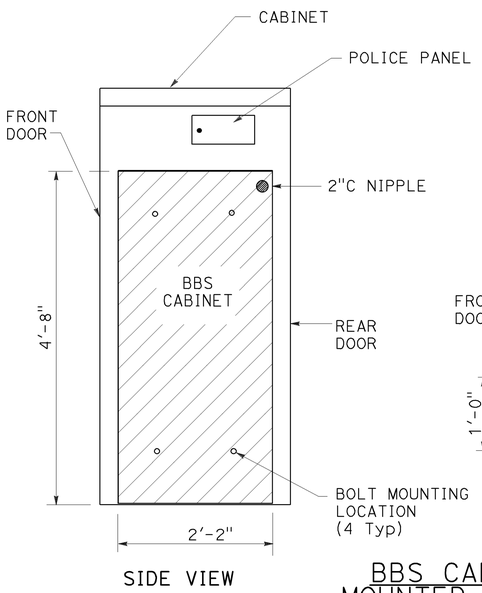


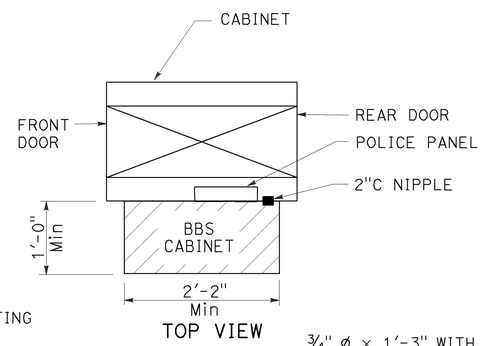


BBS CABINET MOUNTED TO THE MODEL 332L CABINET

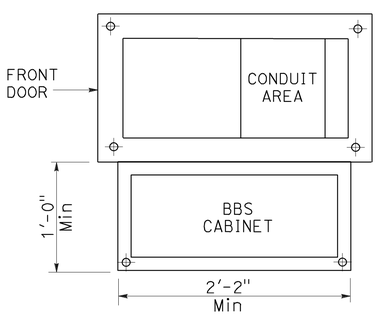


BASE PLAN FOR BBS MOUNTED TO THE MODEL 332L CABINET

(FOR DIMENSIONS AND DETAILS NOT SHOWN, SEE CABINET HOUSING DETAILS OF THE TRANSPORTATION ELECTRICAL EQUIPMENT SPECIFICATION (TEES))

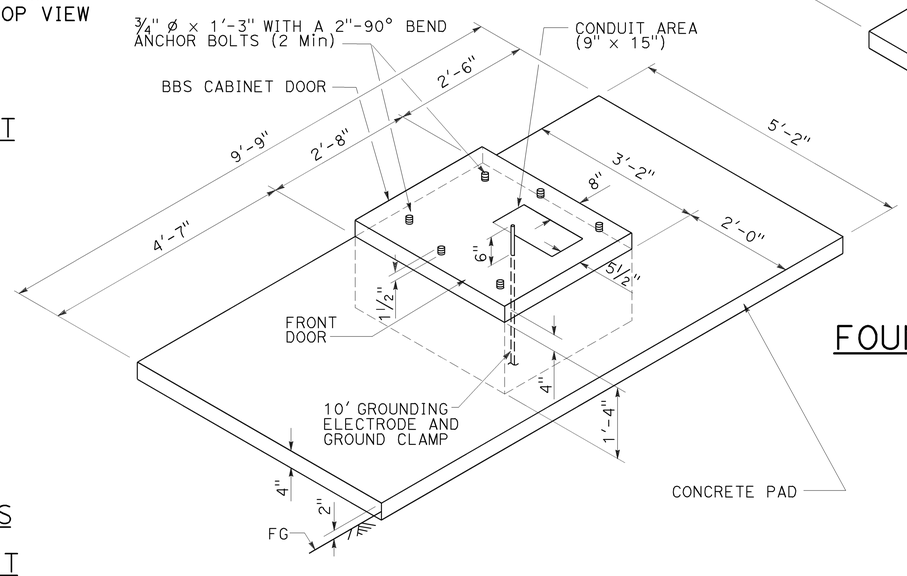


LEFT SIDE INSTALLATION

DETAIL A

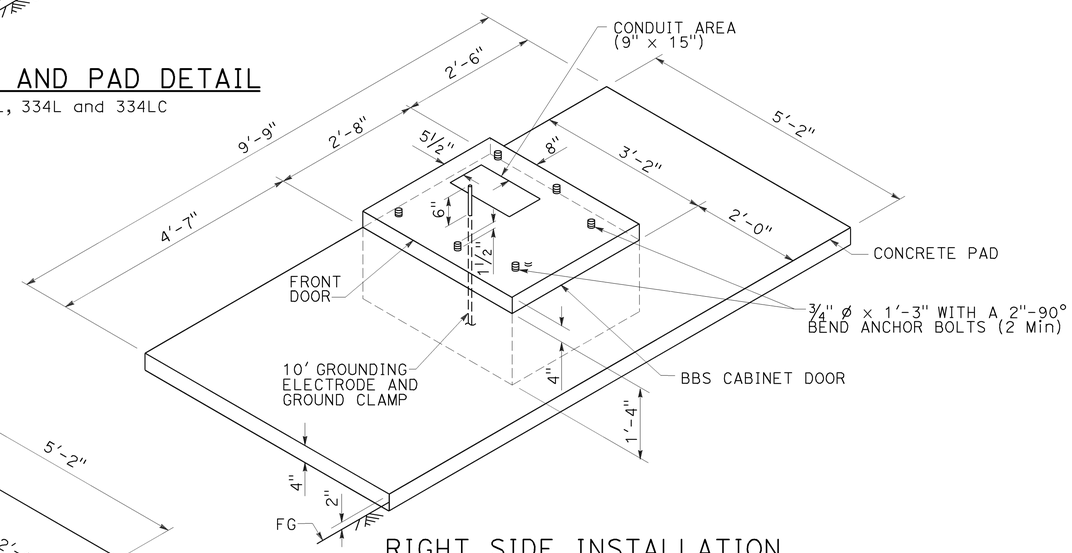


RIGHT SIDE INSTALLATION

DETAIL B

MODIFIED MODEL 332L CABINET FOUNDATION DETAIL FOR BATTERY BACKUP SYSTEM

STATE OF CALIFORNIA
DEPARTMENT OF TRANSPORTATION

**ELECTRICAL SYSTEMS (CONTROLLER CABINET FOUNDATION AND PAD DETAILS)**

NO SCALE

RSP ES-3C DATED APRIL 15, 2016 SUPERSEDES RSP ES-3C DATED OCTOBER 30, 2015 AND STANDARD PLAN ES-3C DATED MAY 20, 2011 - PAGE 437 OF THE STANDARD PLANS BOOK DATED 2010.

**REVISED STANDARD PLAN RSP ES-3C**

**2010 REVISED STANDARD PLAN RSP ES-3C**

1-12-16

| Dist | COUNTY | ROUTE | POST MILES TOTAL PROJECT | SHEET No. | TOTAL SHEETS |
|---|---|---|---|---|---|
| 06 | Tul | 65 | R15.1/18.0 | 291 | 324 |

Theresa Gabriel
REGISTERED ELECTRICAL ENGINEER

April 15, 2016
PLANS APPROVAL DATE

REGISTERED PROFESSIONAL ENGINEER
Theresa Aziz Gabriel
No. E15129
Exp. 6-30-16
ELECTRICAL
STATE OF CALIFORNIA

*THE STATE OF CALIFORNIA OR ITS OFFICERS OR AGENTS SHALL NOT BE RESPONSIBLE FOR THE ACCURACY OR COMPLETENESS OF SCANNED COPIES OF THIS PLAN SHEET.*

TO ACCOMPANY PLANS DATED 6-20-16

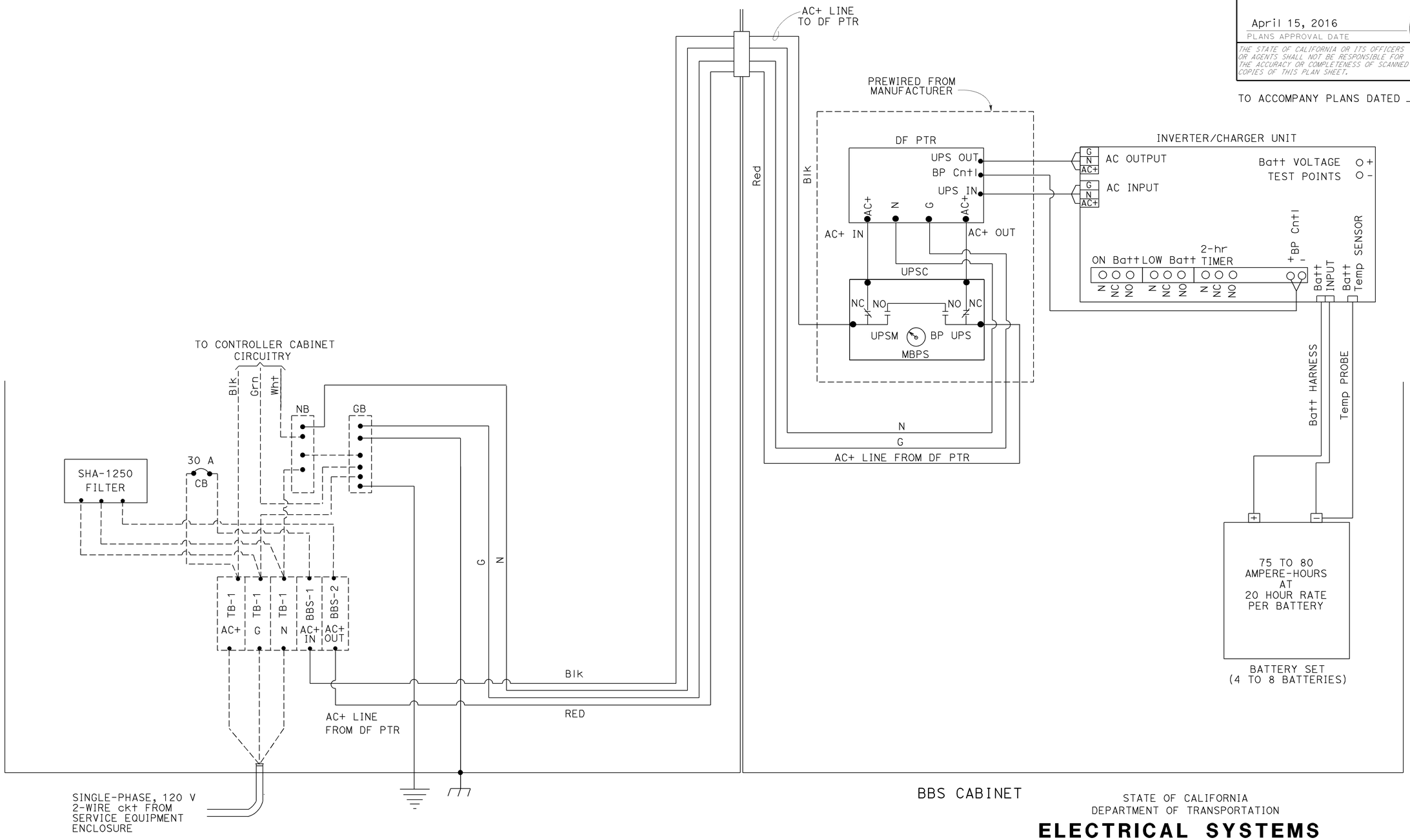


STATE OF CALIFORNIA
DEPARTMENT OF TRANSPORTATION

# ELECTRICAL SYSTEMS (ELECTRONICS ASSEMBLY CONNECTION DIAGRAM, WITH BYPASS CONTROL LINE)

NO SCALE

RSP ES-3I DATED APRIL 15, 2016 SUPERSEDES RSP ES-3I
DATED OCTOBER 30, 2015 THAT SUPPLEMENTS THE STANDARD PLANS BOOK DATED 2010.

**REVISED STANDARD PLAN RSP ES-3I**

**2010 REVISED STANDARD PLAN RSP ES-3I**

1-12-16

| Dist | COUNTY | ROUTE | POST MILES TOTAL PROJECT | SHEET No. | TOTAL SHEETS |
|---|---|---|---|---|---|
| 06 | Tul | 65 | R15.1/18.0 | 292 | 324 |

Theresa Gabriel
REGISTERED ELECTRICAL ENGINEER

April 15, 2016
PLANS APPROVAL DATE

REGISTERED PROFESSIONAL ENGINEER Theresa Aziz Gabriel No. E15129 Exp. 6-30-16 ELECTRICAL STATE OF CALIFORNIA

*THE STATE OF CALIFORNIA OR ITS OFFICERS OR AGENTS SHALL NOT BE RESPONSIBLE FOR THE ACCURACY OR COMPLETENESS OF SCANNED COPIES OF THIS PLAN SHEET.*

TO ACCOMPANY PLANS DATED 6-20-16

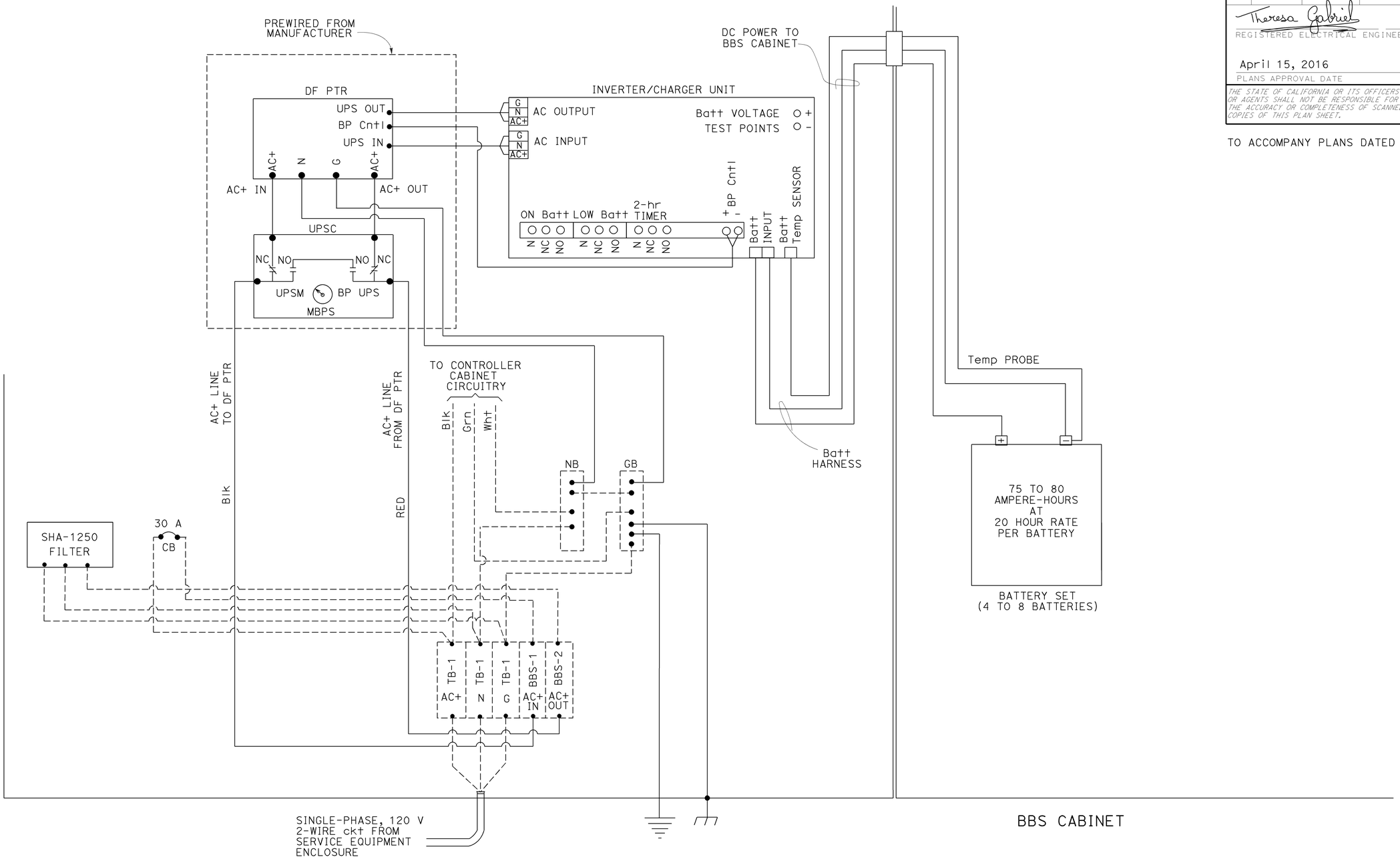


STATE OF CALIFORNIA
DEPARTMENT OF TRANSPORTATION

# ELECTRICAL SYSTEMS (ELECTRONICS ASSEMBLY CONNECTION DIAGRAM, WITH BYPASS CONTROL LINE)

NO SCALE

RSP ES-3J DATED APRIL 15, 2016 SUPERSEDES RSP ES-3J DATED OCTOBER 30, 2015 THAT SUPPLEMENTS THE STANDARD PLANS BOOK DATED 2010.

**REVISED STANDARD PLAN RSP ES-3J**

2010 REVISED STANDARD PLAN RSP ES-3J

| Dist | COUNTY | ROUTE | POST MILES TOTAL PROJECT | SHEET No. | TOTAL SHEETS |
|---|---|---|---|---|---|
| 06 | Tul | 65 | R15.1/18.0 | 293 | 324 |

Theresa Gabriel
REGISTERED ELECTRICAL ENGINEER

July 15, 2016
PLANS APPROVAL DATE

REGISTERED PROFESSIONAL ENGINEER
Theresa Aziz Gabriel
No. E15129
Exp. 6-30-18
ELECTRICAL
STATE OF CALIFORNIA

*THE STATE OF CALIFORNIA OR ITS OFFICERS OR AGENTS SHALL NOT BE RESPONSIBLE FOR THE ACCURACY OR COMPLETENESS OF SCANNED COPIES OF THIS PLAN SHEET.*

TO ACCOMPANY PLANS DATED 6-20-16

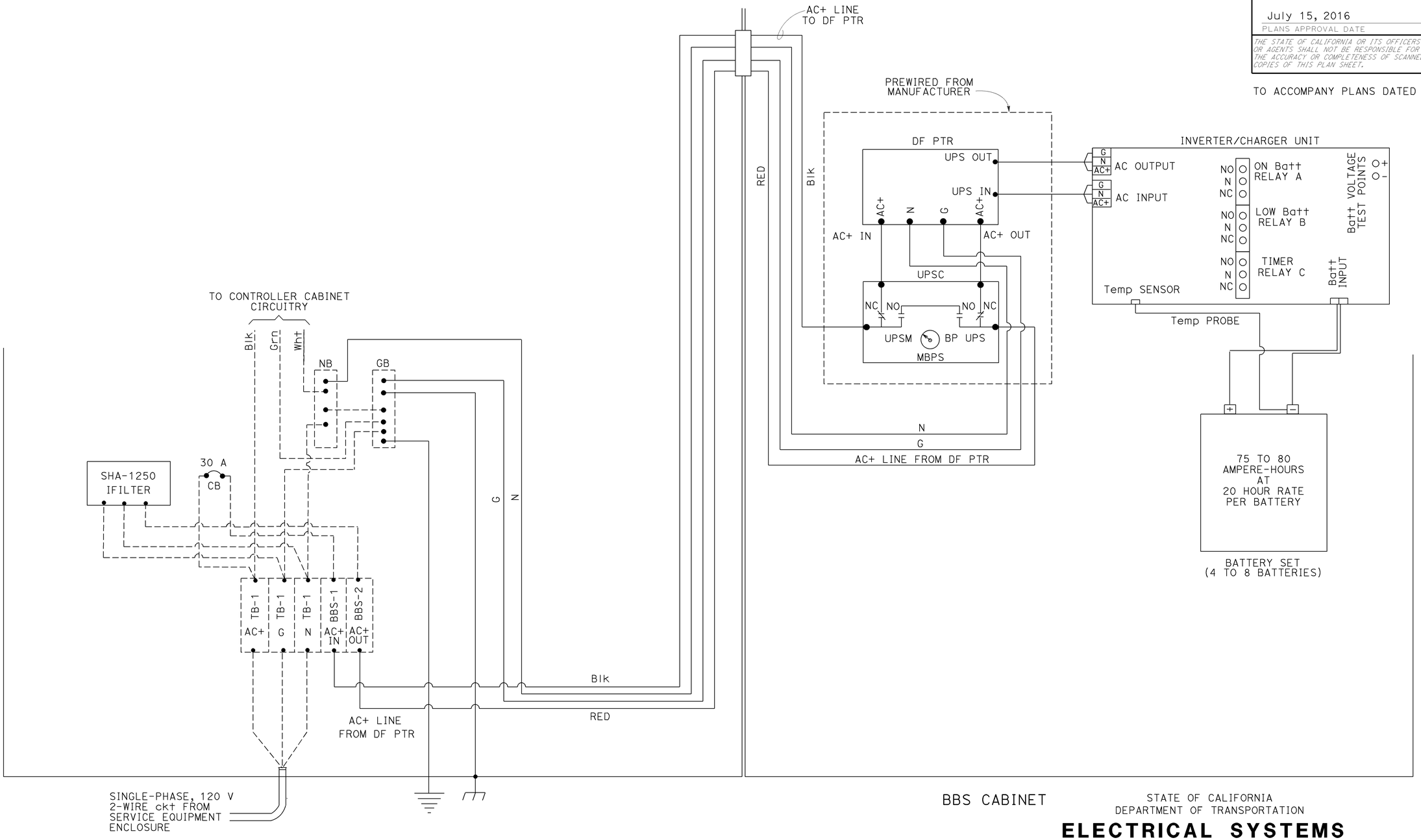


STATE OF CALIFORNIA
DEPARTMENT OF TRANSPORTATION

# ELECTRICAL SYSTEMS (ELECTRONICS ASSEMBLY CONNECTION DIAGRAM, WITHOUT BYPASS CONTROL LINE)

NO SCALE

RSP ES-3K DATED JULY 15, 2016 SUPERSEDES RSP ES-3K DATED APRIL 15, 2016 AND RSP ES-3K DATED OCTOBER 30, 2015 THAT SUPPLEMENTS THE STANDARD PLANS BOOK DATED 2010.

**REVISED STANDARD PLAN RSP ES-3K**

**2010 REVISED STANDARD PLAN RSP ES-3K**

5-24-16

| Dist | COUNTY | ROUTE | POST MILES TOTAL PROJECT | SHEET No. | TOTAL SHEETS |
|---|---|---|---|---|---|
| 06 | Tul | 65 | R15.1/18.0 | 294 | 324 |

Theresa Gabriel
REGISTERED ELECTRICAL ENGINEER

July 15, 2016
PLANS APPROVAL DATE

REGISTERED PROFESSIONAL ENGINEER
Theresa Aziz Gabriel
No. E15129
Exp. 6-30-18
ELECTRICAL
STATE OF CALIFORNIA

*THE STATE OF CALIFORNIA OR ITS OFFICERS OR AGENTS SHALL NOT BE RESPONSIBLE FOR THE ACCURACY OR COMPLETENESS OF SCANNED COPIES OF THIS PLAN SHEET.*

TO ACCOMPANY PLANS DATED 6-20-16

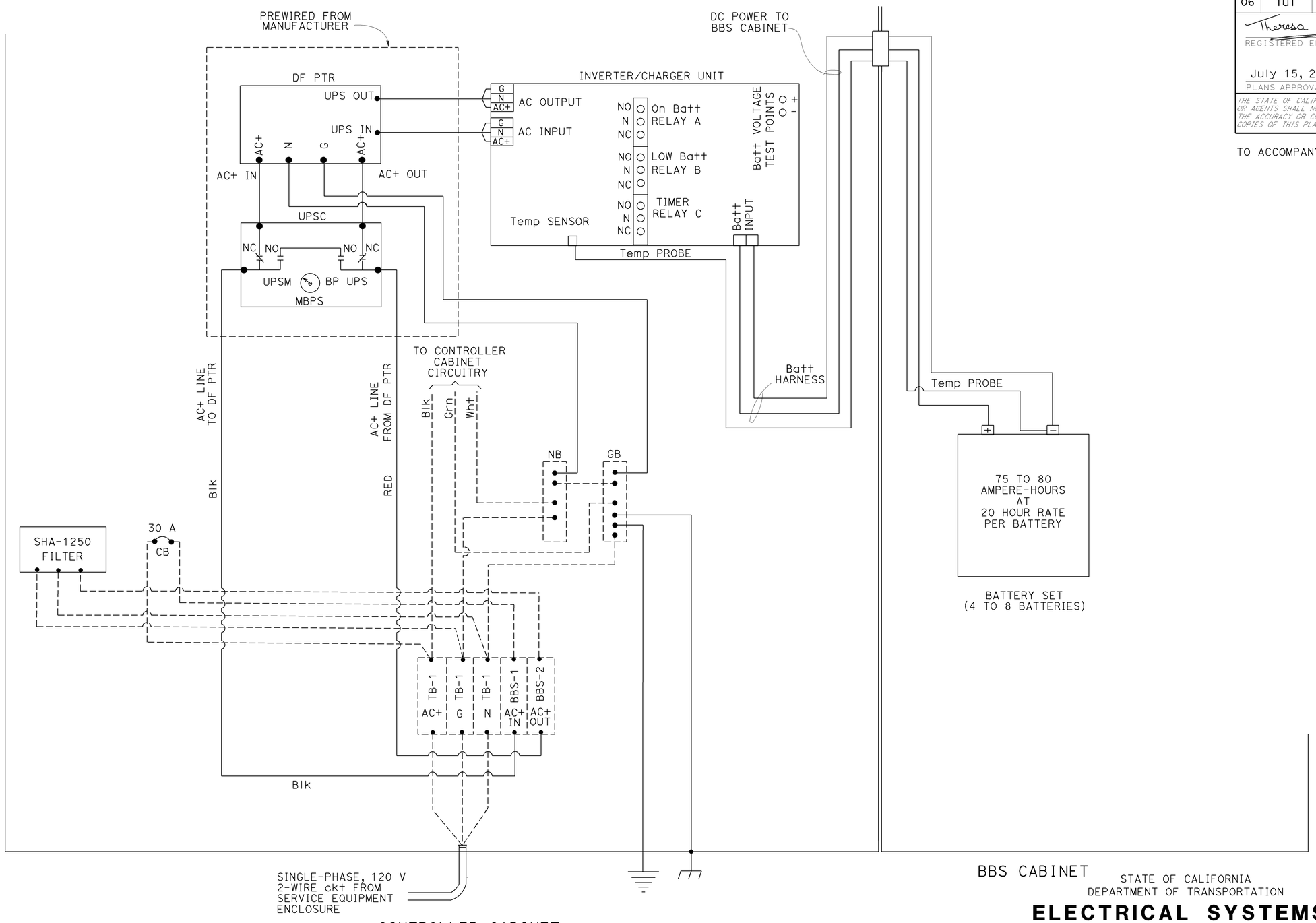


STATE OF CALIFORNIA
DEPARTMENT OF TRANSPORTATION

# ELECTRICAL SYSTEMS (ELECTRONICS ASSEMBLY CONNECTION DIAGRAM, WITHOUT BYPASS CONTROL LINE)

NO SCALE

RSP ES-3L DATED JULY 15, 2016 SUPERSEDES RSP ES-3L DATED APRIL 15, 2016 AND RSP ES-3L DATED OCTOBER 30, 2015 THAT SUPPLEMENTS THE STANDARD PLANS BOOK DATED 2010.

**REVISED STANDARD PLAN RSP ES-3L**

**2010 REVISED STANDARD PLAN RSP ES-3L**

5-24-16

| Dist | COUNTY | ROUTE | POST MILES TOTAL PROJECT | SHEET No. | TOTAL SHEETS |
|---|---|---|---|---|---|
| 06 | Tul | 65 | R15.1/18.0 | 295 | 324 |

Theresa Gabriel
REGISTERED ELECTRICAL ENGINEER

October 30, 2015
PLANS APPROVAL DATE

REGISTERED PROFESSIONAL ENGINEER
Theresa Aziz Gabriel
No. E15129
Exp. 6-30-16
ELECTRICAL
STATE OF CALIFORNIA

*THE STATE OF CALIFORNIA OR ITS OFFICERS OR AGENTS SHALL NOT BE RESPONSIBLE FOR THE ACCURACY OR COMPLETENESS OF SCANNED COPIES OF THIS PLAN SHEET.*

TO ACCOMPANY PLANS DATED 6-20-16

**2010 REVISED STANDARD PLAN RSP ES-4A**

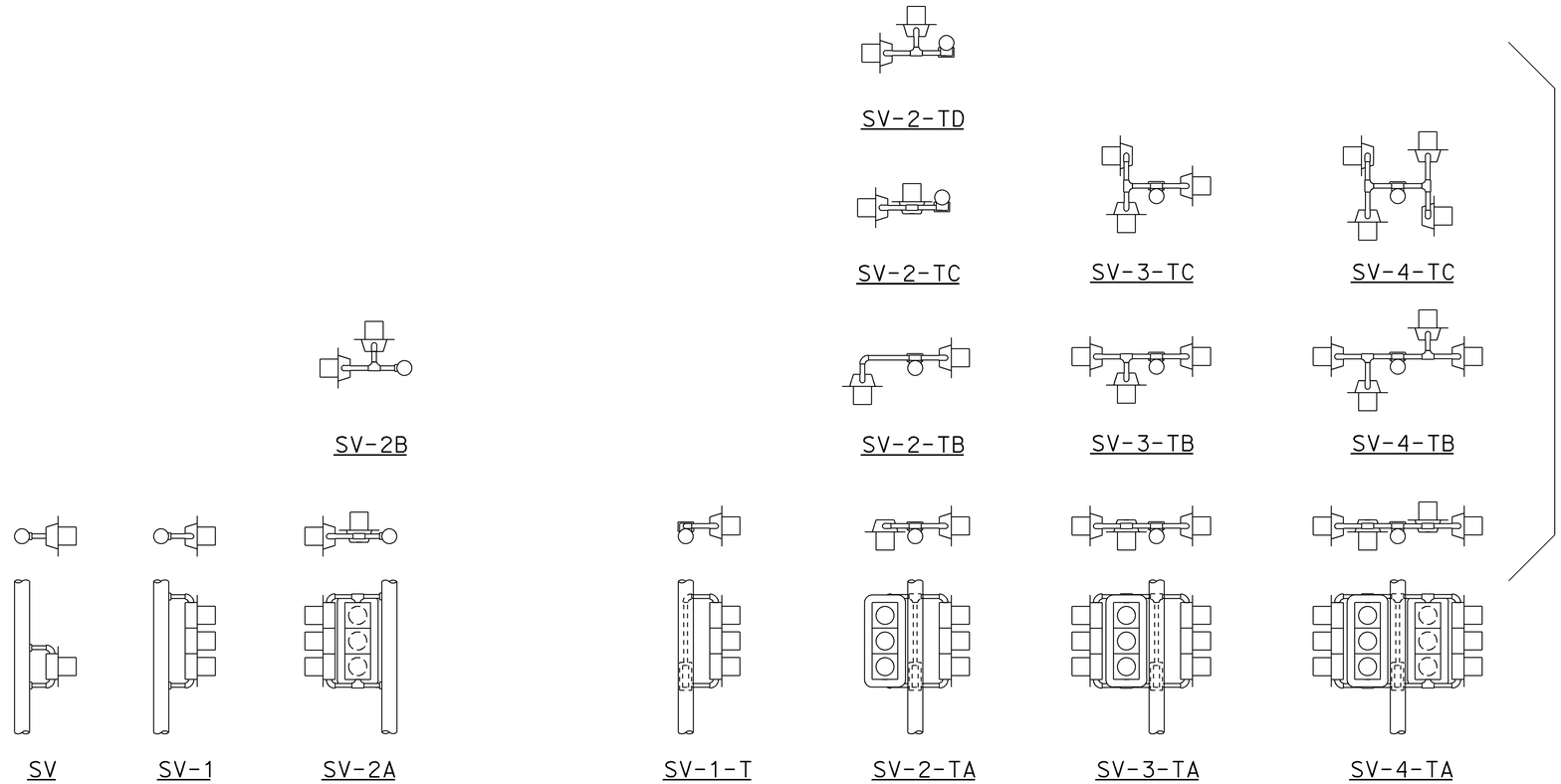


SIDE MOUNTINGS

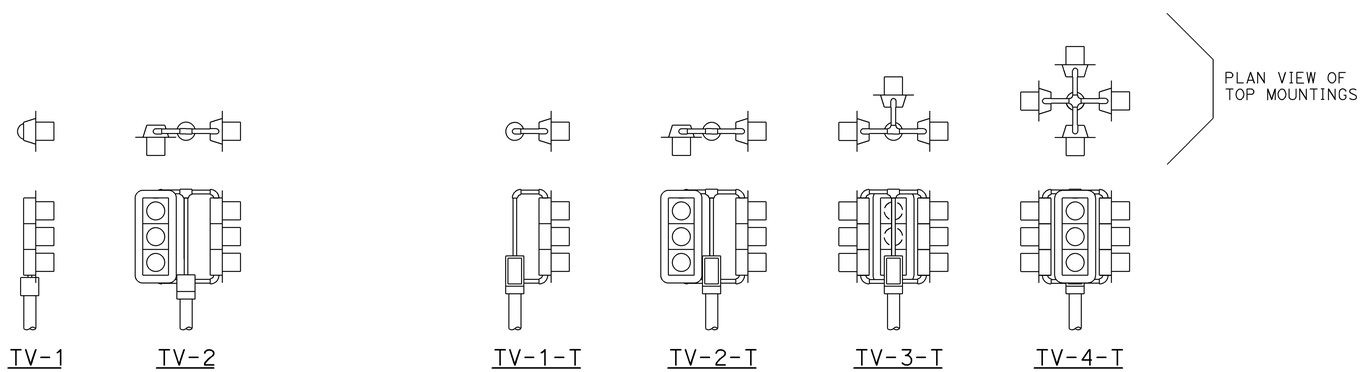


TOP MOUNTINGS

## ABBREVIATIONS:

| | |
|---|---|
| SV | SIDE MOUNTED SIGNAL HEADS |
| T | TERMINAL COMPARTMENT |
| TV | TOP MOUNTED SIGNAL HEADS |
| 1, 2, 3, 4 | NUMBER OF SIGNAL FACES (3 - SECTION, UNLESS OTHERWISE INDICATED) |
| A, B, C, D | CONFIGURATION OF SIGNALS |

## NOTES:

1. Mountings shall be oriented to provide maximum horizontal clearance to adjacent roadway.
2. Bracket arms shall be long enough to permit proper alignment of signals and backplate installation.
3. See Revised Standard Plans RSP ES-4D and RSP ES-4E for attachment fitting details.

STATE OF CALIFORNIA
DEPARTMENT OF TRANSPORTATION

# ELECTRICAL SYSTEMS (SIGNAL HEADS AND MOUNTINGS)

NO SCALE

RSP ES-4A DATED OCTOBER 30, 2015 SUPERSEDES RSP ES-4A DATED JULY 19, 2013 AND STANDARD PLAN ES-4A DATED MAY 20, 2011 - PAGE 443 OF THE STANDARD PLANS BOOK DATED 2010.

**REVISED STANDARD PLAN RSP ES-4A**

| Dist | COUNTY | ROUTE | POST MILES TOTAL PROJECT | SHEET No. | TOTAL SHEETS |
|---|---|---|---|---|---|
| 06 | Tul | 65 | R15.1/18.0 | 296 | 324 |

Theresa Gabriel
REGISTERED ELECTRICAL ENGINEER

October 30, 2015
PLANS APPROVAL DATE

REGISTERED PROFESSIONAL ENGINEER
Theresa Aziz Gabriel
No. E15129
Exp. 6-30-16
ELECTRICAL
STATE OF CALIFORNIA

*THE STATE OF CALIFORNIA OR ITS OFFICERS OR AGENTS SHALL NOT BE RESPONSIBLE FOR THE ACCURACY OR COMPLETENESS OF SCANNED COPIES OF THIS PLAN SHEET.*

TO ACCOMPANY PLANS DATED 6-20-16

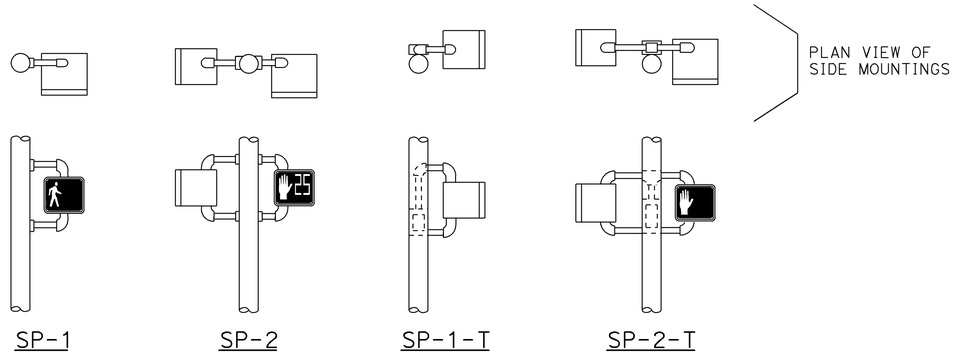


SIDE MOUNTINGS

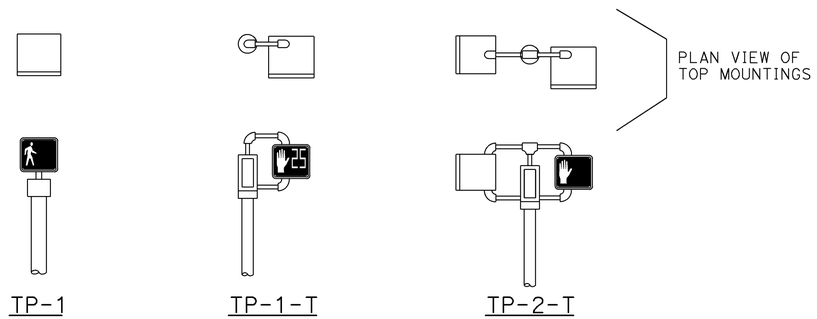


TOP MOUNTINGS

PEDESTRIAN SIGNAL HEAD MOUNTINGS

DETAIL A

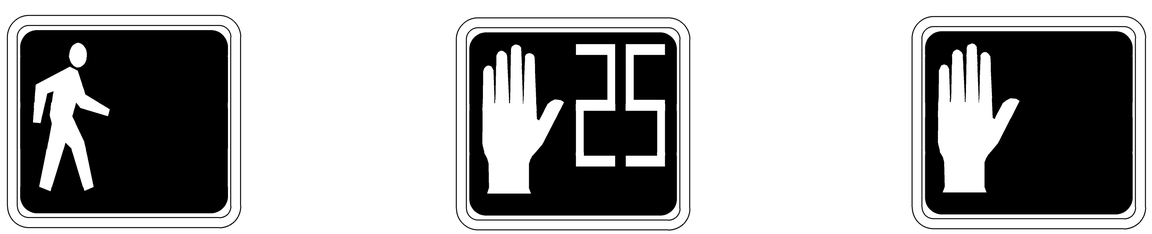

PERSON WALKING INTERVAL FLASHING UPRAISED HAND INTERVAL STEADY UPRAISED HAND INTERVAL

LED COUNTDOWN PEDESTRIAN SIGNAL FACE MODULE

DETAIL B

## NOTES:

1. Mounting shall be oriented to provide maximum horizontal clearance to adjacent roadway.
2. Bracket arms shall be long enough to permit proper alignment of signals.
3. See Revised Standard Plan RSP ES-4D for attachment fittings details.

## ABBREVIATIONS:

| | |
|---|---|
| 1, 2 | NUMBER OF SIGNAL FACES |
| SP | SIDE MOUNTED PEDESTRIAN SIGNAL |
| T | TERMINAL COMPARTMENT |
| TP | TOP MOUNTED PEDESTRIAN SIGNAL |

STATE OF CALIFORNIA
DEPARTMENT OF TRANSPORTATION

# ELECTRICAL SYSTEMS (PEDESTRIAN SIGNAL HEADS)

NO SCALE

RSP ES-4B DATED OCTOBER 30, 2015 SUPERSEDES RSP ES-4B DATED JULY 19, 2013 AND STANDARD PLAN ES-4B DATED MAY 20, 2011 - PAGE 444 OF THE STANDARD PLANS BOOK DATED 2010.

**REVISED STANDARD PLAN RSP ES-4B**

**2010 REVISED STANDARD PLAN RSP ES-4B**

9-1-15

| Dist | COUNTY | ROUTE | POST MILES TOTAL PROJECT | SHEET No. | TOTAL SHEETS |
|---|---|---|---|---|---|
| 06 | Tul | 65 | R15.1/18.0 | 297 | 324 |

Theresa Gabriel
REGISTERED ELECTRICAL ENGINEER

October 30, 2015
PLANS APPROVAL DATE

REGISTERED PROFESSIONAL ENGINEER
Theresa Aziz Gabriel
No. E15129
Exp. 6-30-16
ELECTRICAL
STATE OF CALIFORNIA

THE STATE OF CALIFORNIA OR ITS OFFICERS OR AGENTS SHALL NOT BE RESPONSIBLE FOR THE ACCURACY OR COMPLETENESS OF SCANNED COPIES OF THIS PLAN SHEET.

TO ACCOMPANY PLANS DATED 6-20-16

## VISORS

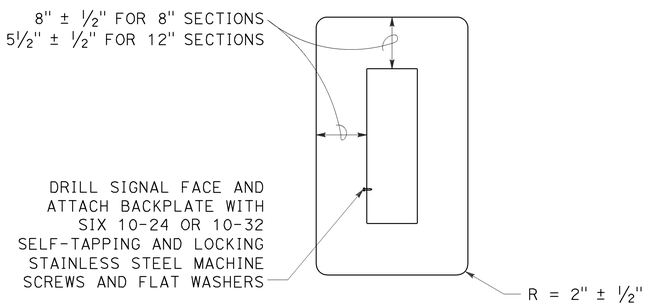


8" AND 12" SECTIONS

## BACKPLATE

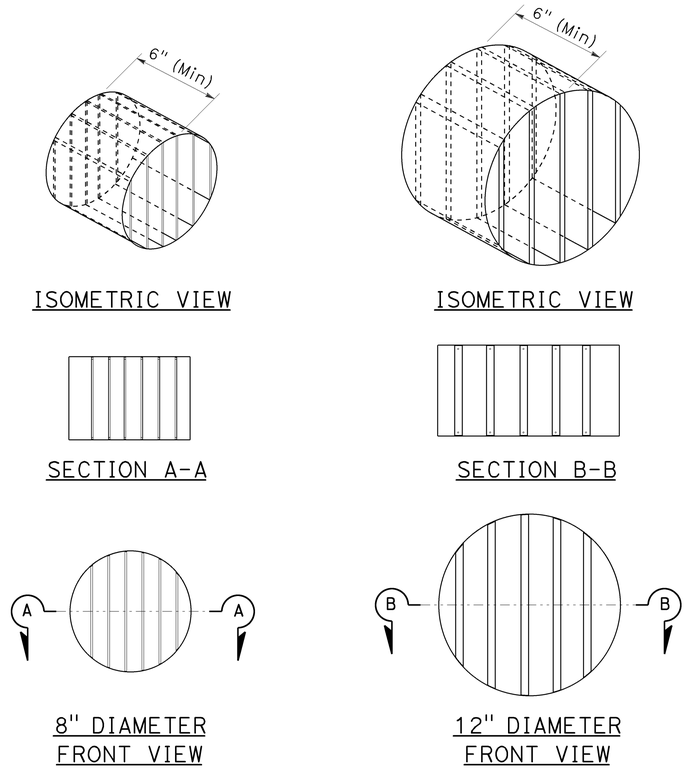


## DIRECTIONAL LOUVER

Directional louvers shall be oriented and secured in place with one plated brass machine screw and nut.

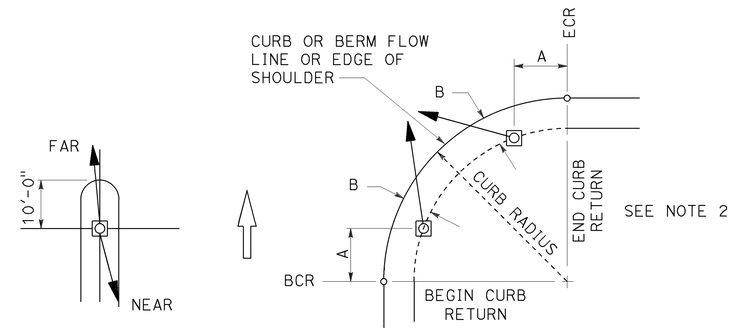


NOTES:

1. Typical signal pole placement unless dimensioned on plans.
2. For A and B dimensions, see Pole Schedule.

## SIGNAL STANDARD PLACEMENT DIMENSIONS AND EQUIPMENT LOCATIONS

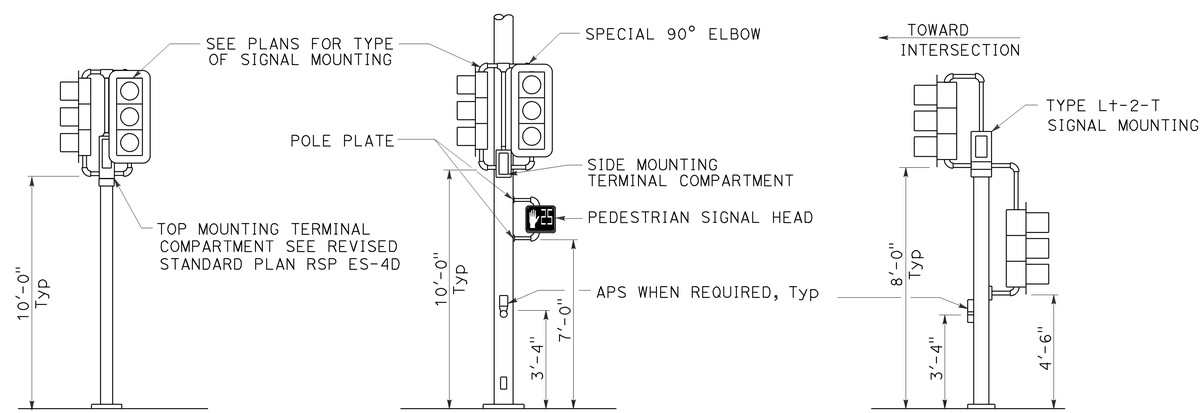


TOP MOUNTED SIGNALS (TV)
Type 1-A, 1-B, 1-C and 1-D standard as indicated on the plans

SIDE MOUNTED SIGNALS (SV AND SP)
Normally used on standards with luminaire or signal mast arm

LEFT TURN LANE SIGNAL
Type 1-A, 1-B, 1-C and 1-D standard as indicated on plans

## TYPICAL SIGNAL HEAD INSTALLATIONS

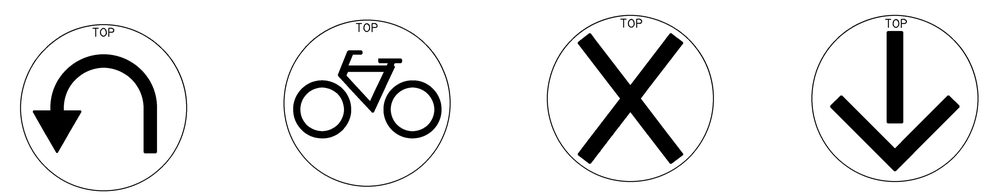


U-TURN
BICYCLE
LANE CONTROL
LANE CONTROL

## SIGNAL FACES

STATE OF CALIFORNIA
DEPARTMENT OF TRANSPORTATION

# ELECTRICAL SYSTEMS (SIGNAL HEADS AND MOUNTINGS)

NO SCALE

RSP ES-4C DATED OCTOBER 30, 2015 SUPERSEDES RSP ES-4C DATED JULY 19, 2013 AND STANDARD PLAN ES-4C DATED MAY 20, 2011 - PAGE 445 OF THE STANDARD PLANS BOOK DATED 2010.

**REVISED STANDARD PLAN RSP ES-4C**

**2010 REVISED STANDARD PLAN RSP ES-4C**

9-28-15

| Dist | COUNTY | ROUTE | POST MILES TOTAL PROJECT | SHEET No. | TOTAL SHEETS |
|---|---|---|---|---|---|
| 06 | Tul | 65 | R15.1/18.0 | 298 | 324 |

Theresa Gabriel
REGISTERED ELECTRICAL ENGINEER

October 30, 2015
PLANS APPROVAL DATE

REGISTERED PROFESSIONAL ENGINEER Theresa Aziz Gabriel No. E15129 Exp. 6-30-16 ELECTRICAL STATE OF CALIFORNIA

*THE STATE OF CALIFORNIA OR ITS OFFICERS OR AGENTS SHALL NOT BE RESPONSIBLE FOR THE ACCURACY OR COMPLETENESS OF SCANNED COPIES OF THIS PLAN SHEET.*

TO ACCOMPANY PLANS DATED 6-20-16

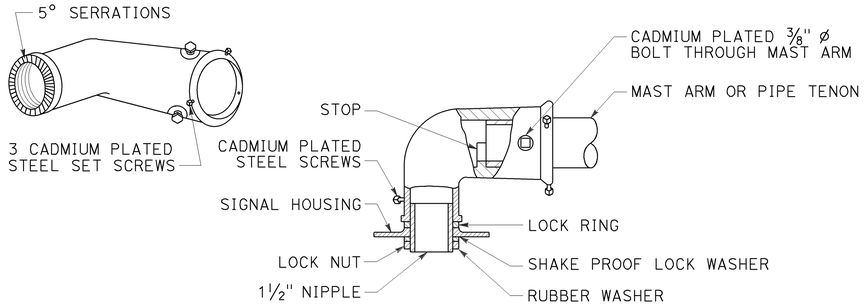


TYPE MAT
MAST ARM MOUNTING
For 2 NPS pipe, see Note 1.

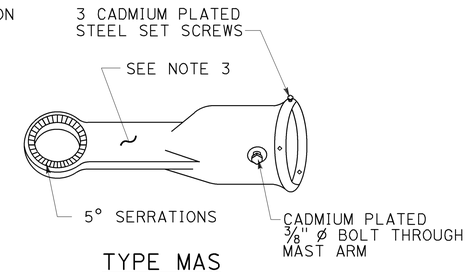


TYPE MAS
MAST ARM MOUNTING
For 2 NPS pipe, see Note 1.

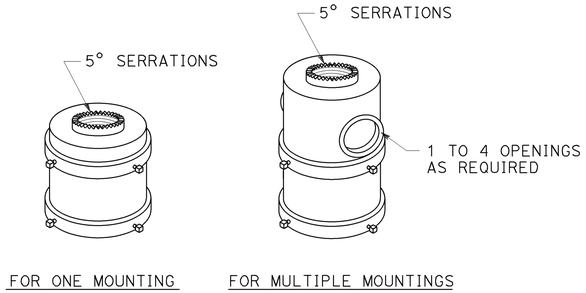


TOP MOUNTINGS
For 4 NPS pipe, see Note 2.

## SIGNAL SLIP FITTERS

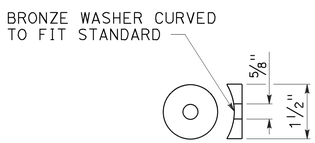


DETAIL C

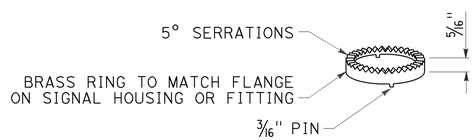


LOCK RING
Use where locking ring is not integral With signal housing or fitting.

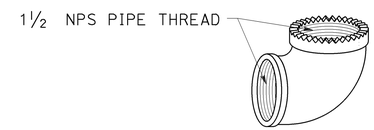


SPECIAL 90° ELBOW
One for each signal head, except those With special slip fitter mounting

## MISCELLANEOUS MOUNTING HARDWARE

## NOTES:

1. After mast arm signal has been plumbed and secured, drill 7/16" hole through mast arm tenon in line with slip fitter hole. Place a cadmium plated 3/8" ø galvanized bolt with washer under bolt head through hole and secure with washer, nut, and locknut. Seal openings between mast arm mountings and mast arm with mastic.
2. (A) Threaded top mounted slip fitter openings shall be 1½ NPS.
   (B) Serrations in fittings shall match those on bottom of signal heads or in lock ring.
   (C) Top opening shall be offset when backplate is used.
3. Wireway shall have a cross section area of 0.95 square inch minimum. Minimum width of ½".

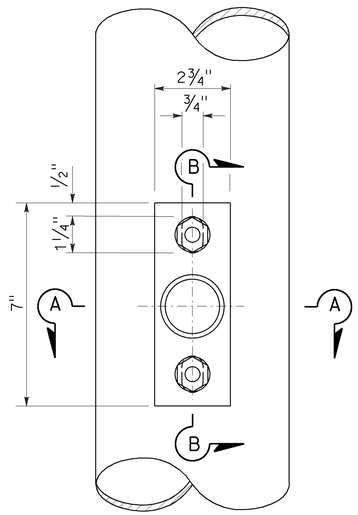


TOP VIEW

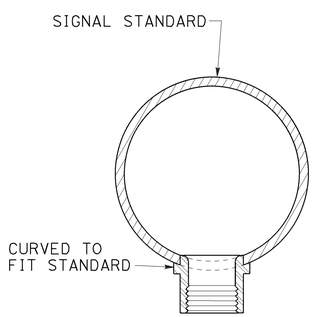


SECTION A-A

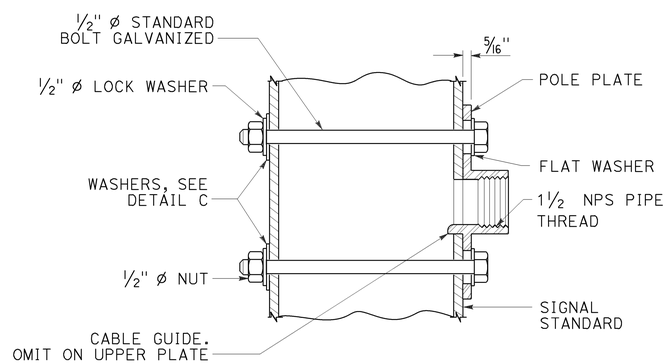


SECTION B-B

POLE PLATE FOR SIDE MOUNTED SIGNAL HEAD
WITHOUT TERMINAL COMPARTMENT

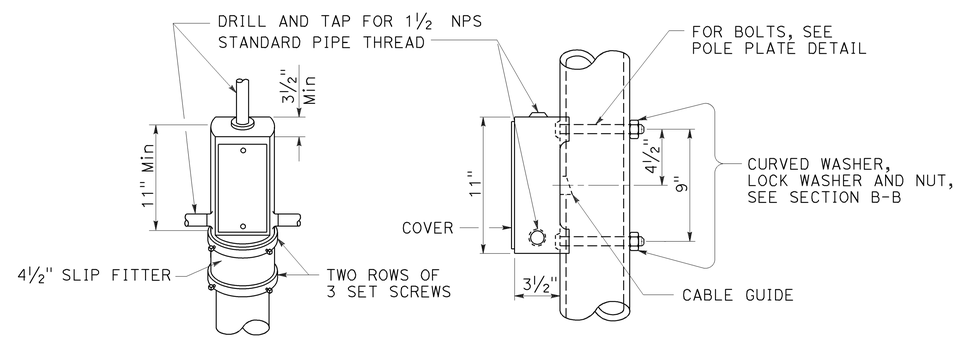


TOP MOUNTING

SIDE MOUNTING

TERMINAL COMPARTMENT

STATE OF CALIFORNIA
DEPARTMENT OF TRANSPORTATION

# ELECTRICAL SYSTEMS (SIGNAL HEAD MOUNTING)

NO SCALE

RSP ES-4D DATED OCTOBER 30, 2015 SUPERSEDES STANDARD PLAN ES-4D DATED MAY 20, 2011 - PAGE 446 OF THE STANDARD PLANS BOOK DATED 2010.

**REVISED STANDARD PLAN RSP ES-4D**

**2010 REVISED STANDARD PLAN RSP ES-4D**

8-20-15

| Dist | COUNTY | ROUTE | POST MILES TOTAL PROJECT | SHEET No. | TOTAL SHEETS |
|---|---|---|---|---|---|
| 06 | Tul | 65 | R15.1/18.0 | 299 | 324 |

Theresa Gabriel
REGISTERED ELECTRICAL ENGINEER

October 30, 2015
PLANS APPROVAL DATE

REGISTERED PROFESSIONAL ENGINEER
Theresa Aziz Gabriel
No. E15129
Exp. 6-30-16
ELECTRICAL
STATE OF CALIFORNIA

*THE STATE OF CALIFORNIA OR ITS OFFICERS OR AGENTS SHALL NOT BE RESPONSIBLE FOR THE ACCURACY OR COMPLETENESS OF SCANNED COPIES OF THIS PLAN SHEET.*

TO ACCOMPANY PLANS DATED 6-20-16

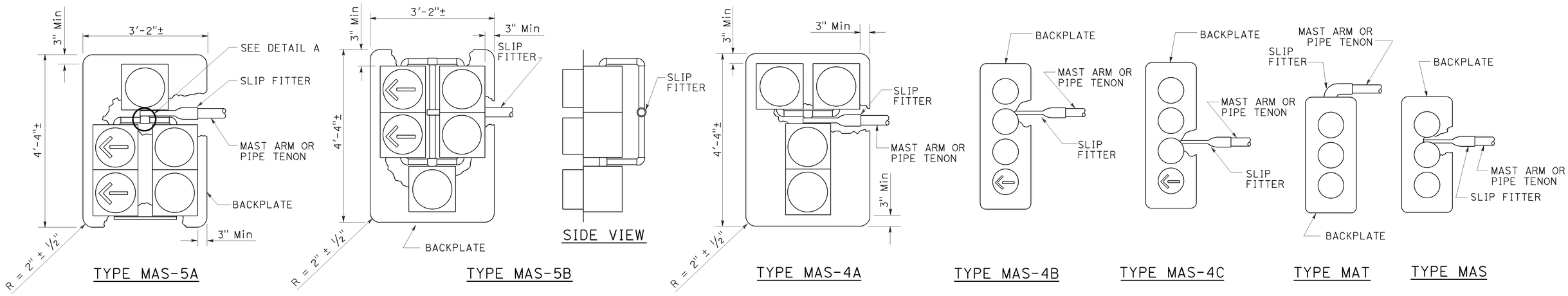


MAST ARM MOUNTINGS

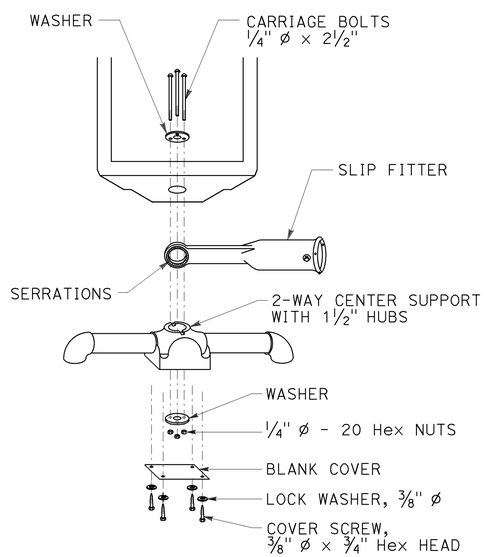


DETAIL A

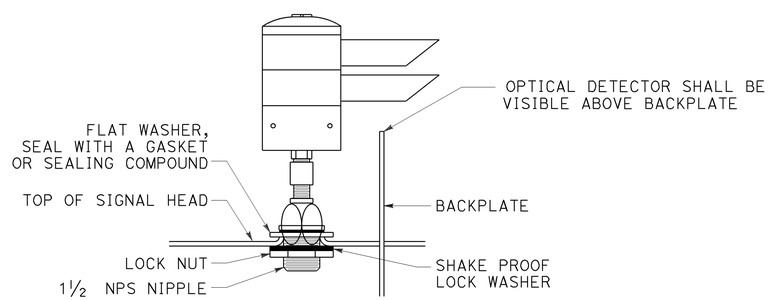


OPTICAL DETECTOR MOUNTING FOR EMERGENCY VEHICLE DETECTION

DETAIL B

STATE OF CALIFORNIA
DEPARTMENT OF TRANSPORTATION

# ELECTRICAL SYSTEMS (SIGNAL HEADS AND OPTICAL DETECTOR MOUNTING)

NO SCALE

RSP ES-4E DATED OCTOBER 30, 2015 SUPERSEDES RSP ES-4E DATED JULY 19, 2013 AND STANDARD PLAN ES-4E DATED MAY 20, 2011 - PAGE 447 OF THE STANDARD PLANS BOOK DATED 2010.

**REVISED STANDARD PLAN RSP ES-4E**

**2010 REVISED STANDARD PLAN RSP ES-4E**

8-19-15

| Dist | COUNTY | ROUTE | POST MILES TOTAL PROJECT | SHEET No. | TOTAL SHEETS |
|---|---|---|---|---|---|
| 06 | Tul | 65 | R15.1/18.0 | 300 | 324 |

Theresa Gabriel
REGISTERED ELECTRICAL ENGINEER

April 15, 2016
PLANS APPROVAL DATE

REGISTERED PROFESSIONAL ENGINEER
Theresa Aziz Gabriel
No. E15129
Exp. 6-30-16
ELECTRICAL
STATE OF CALIFORNIA

THE STATE OF CALIFORNIA OR ITS OFFICERS OR AGENTS SHALL NOT BE RESPONSIBLE FOR THE ACCURACY OR COMPLETENESS OF SCANNED COPIES OF THIS PLAN SHEET.

TO ACCOMPANY PLANS DATED 6-20-16

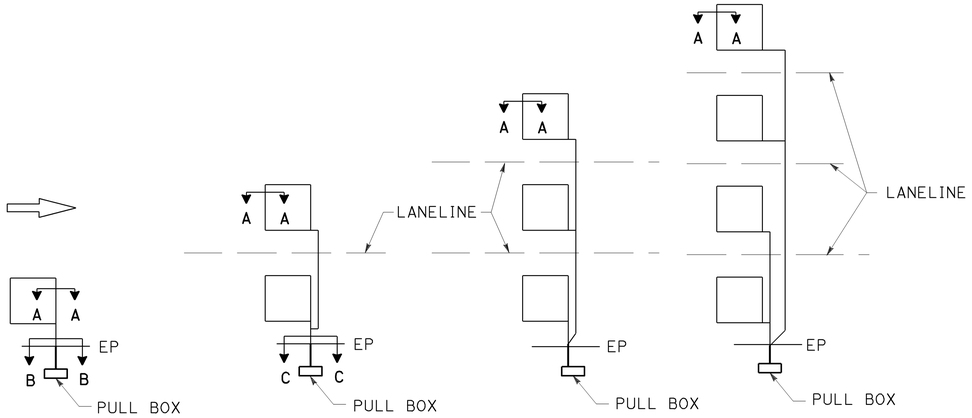


## SAW CUT DETAILS

Type A loop detector configurations illustrated

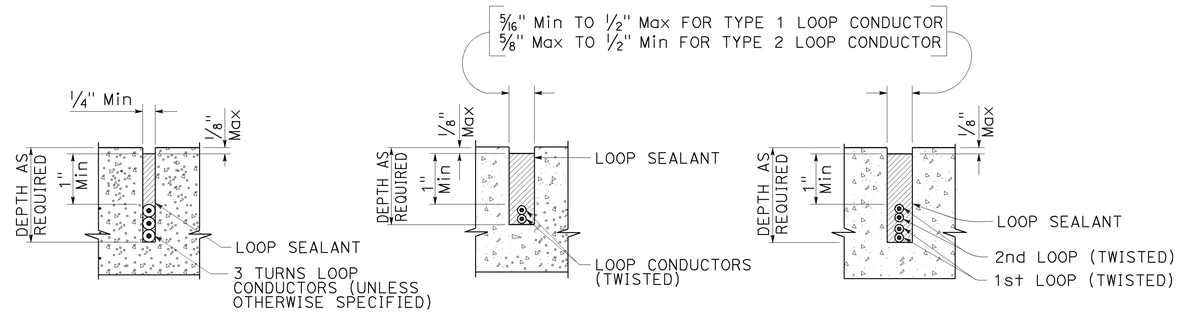


SECTION A-A SECTION B-B SECTION C-C

## SLOT DETAILS - TYPE 1 AND TYPE 2 LOOP CONDUCTOR

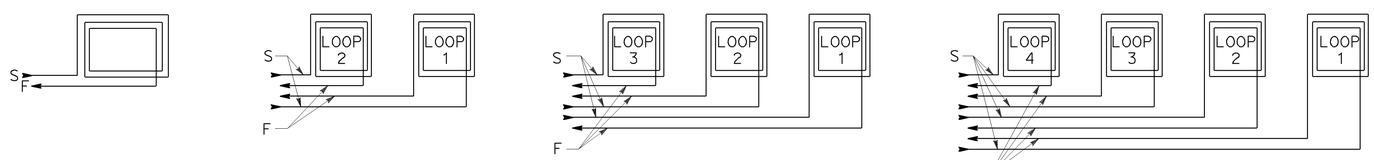


## WINDING DETAILS

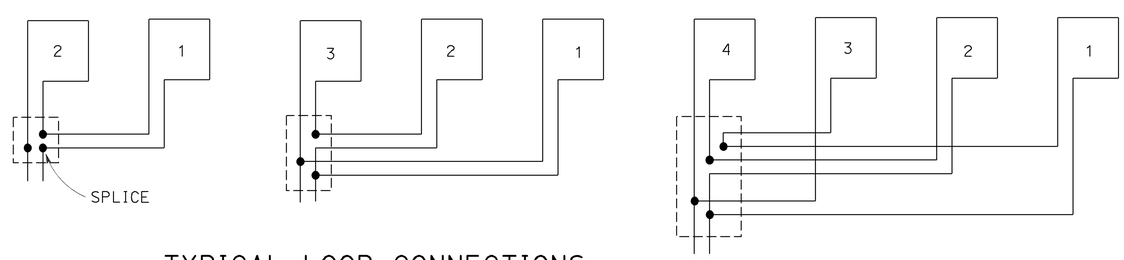


## TYPICAL LOOP CONNECTIONS

Dashed lines represent the pull box

ABBREVIATIONS:

S - START
F - FINISH

STATE OF CALIFORNIA
DEPARTMENT OF TRANSPORTATION

# ELECTRICAL SYSTEMS (LOOP DETECTORS)

NO SCALE

RSP ES-5A DATED APRIL 15, 2016 SUPERSEDES RSP ES-5A DATED OCTOBER 30, 2015 AND STANDARD PLAN ES-5A DATED MAY 20, 2011 - PAGE 448 OF THE STANDARD PLANS BOOK DATED 2010.

**REVISED STANDARD PLAN RSP ES-5A**

**2010 REVISED STANDARD PLAN RSP ES-5A**

1-12-16

| Dist | COUNTY | ROUTE | POST MILES TOTAL PROJECT | SHEET No. | TOTAL SHEETS |
|---|---|---|---|---|---|
| 06 | Tul | 65 | R15.1/18.0 | 301 | 324 |

Theresa Gabriel
REGISTERED ELECTRICAL ENGINEER

April 15, 2016
PLANS APPROVAL DATE

REGISTERED PROFESSIONAL ENGINEER Theresa Aziz Gabriel No. E15129 Exp. 6-30-16 ELECTRICAL STATE OF CALIFORNIA

*THE STATE OF CALIFORNIA OR ITS OFFICERS OR AGENTS SHALL NOT BE RESPONSIBLE FOR THE ACCURACY OR COMPLETENESS OF SCANNED COPIES OF THIS PLAN SHEET.*

TO ACCOMPANY PLANS DATED 6-20-16

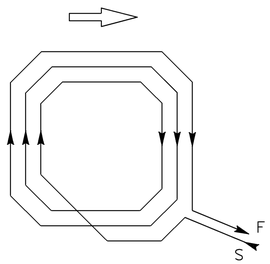


WINDING DETAIL

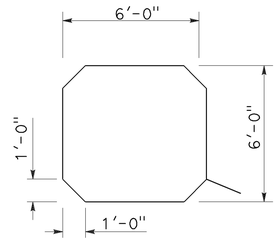


SAW CUT DETAIL

TYPE A LOOP DETECTOR CONFIGURATION

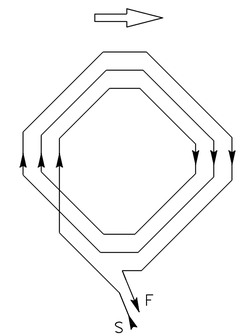


WINDING DETAIL

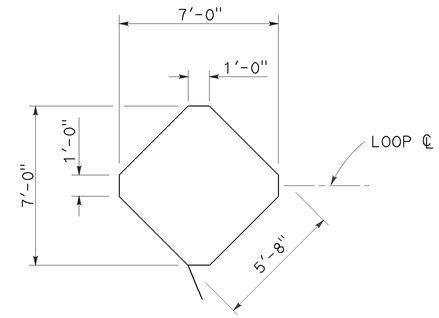


SAW CUT DETAIL

TYPE B LOOP DETECTOR CONFIGURATION

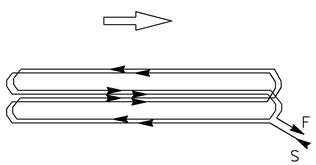


WINDING DETAIL

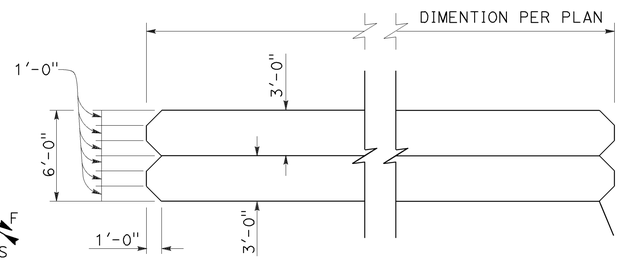


SAW CUT DETAIL

TYPE C LOOP DETECTOR CONFIGURATION

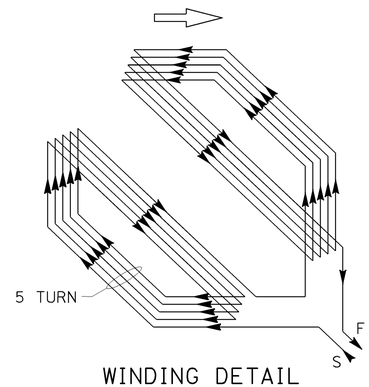


WINDING DETAIL

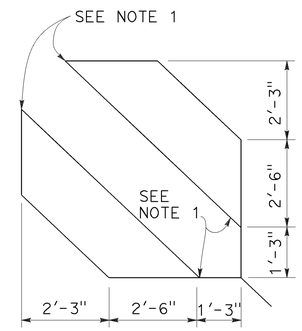


SAW CUT DETAIL

TYPE D LOOP DETECTOR CONFIGURATION

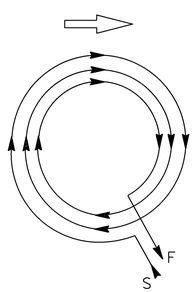


WINDING DETAIL

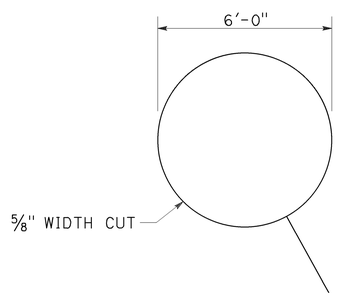


SAW CUT DETAIL

TYPE E LOOP DETECTOR CONFIGURATION

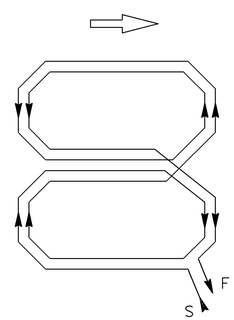


WINDING DETAIL

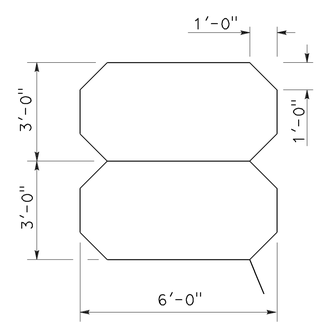


SAW CUT DETAIL

TYPE Q LOOP DETECTOR CONFIGURATION

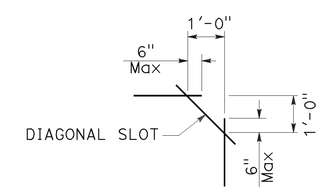


PLAN VIEW OF DIAGONAL SLOT AT CORNERS

NOTES:

1. Round corners of acute angle saw cuts to prevent damage to conductors.
2. Typical distance separating loops from edge to edge is 10' for Type A, B, D and E installation in single lane.
3. Use Type D loops for limit line detection and bicycle lanes.

STATE OF CALIFORNIA
DEPARTMENT OF TRANSPORTATION

# ELECTRICAL SYSTEMS (DETECTORS)

NO SCALE

RSP ES-5B DATED APRIL 15, 2016 SUPERSEDES RSP ES-5B DATED OCTOBER 30, 2015 AND RSP ES-5B DATED JULY 19, 2013 AND STANDARD PLAN ES-5B DATED MAY 20, 2011 - PAGE 449 OF THE STANDARD PLANS BOOK DATED 2010.

**REVISED STANDARD PLAN RSP ES-5B**

**2010 REVISED STANDARD PLAN RSP ES-5B**

| Dist | COUNTY | ROUTE | POST MILES TOTAL PROJECT | SHEET No. | TOTAL SHEETS |
|---|---|---|---|---|---|
| 06 | Tul | 65 | R15.1/18.0 | 302 | 324 |

Theresa Gabriel
REGISTERED ELECTRICAL ENGINEER

October 30, 2015
PLANS APPROVAL DATE

REGISTERED PROFESSIONAL ENGINEER
Theresa Aziz Gabriel
No. E15129
Exp. 6-30-16
ELECTRICAL
STATE OF CALIFORNIA

THE STATE OF CALIFORNIA OR ITS OFFICERS OR AGENTS SHALL NOT BE RESPONSIBLE FOR THE ACCURACY OR COMPLETENESS OF SCANNED COPIES OF THIS PLAN SHEET.

TO ACCOMPANY PLANS DATED 6-20-16

## NOTES:

1. Back casting shape to fit curvature of pole.
2. Provide cover fitting for top of post, when PBA is mounted on push button assembly post.
3. Install push button on crosswalk side of standard.
4. Use R10 series regulatory signs and plaques for pedestrian and bicycle facilities.

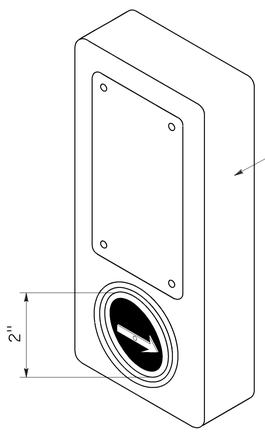


ACCESSIBLE PEDESTRIAN SIGNAL

DETAIL A

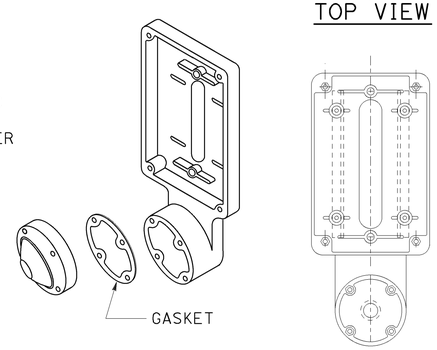


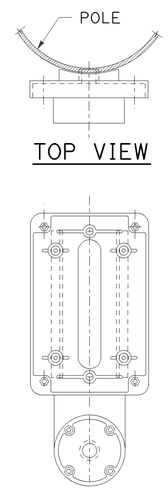


TOP VIEW

FRONT VIEW

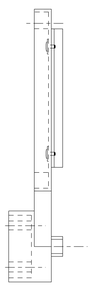

SIDE VIEW

TYPE B PUSH BUTTON ASSEMBLY

DETAIL B

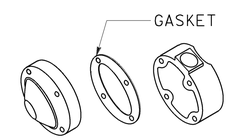


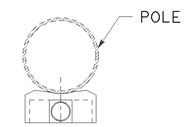


TOP VIEW

FRONT VIEW

SIDE VIEW

TYPE C PUSH BUTTON ASSEMBLY

DETAIL C

STATE OF CALIFORNIA
DEPARTMENT OF TRANSPORTATION

# ELECTRICAL SYSTEMS (ACCESSIBLE PEDESTRIAN SIGNAL AND PUSH BUTTON ASSEMBLIES)

NO SCALE

RSP ES-5C DATED OCTOBER 30, 2015 SUPERSEDES RSP ES-5C DATED JULY 19, 2013 AND STANDARD PLAN ES-5C DATED MAY 20, 2011 - PAGE 450 OF THE STANDARD PLANS BOOK DATED 2010.

**REVISED STANDARD PLAN RSP ES-5C**

**2010 REVISED STANDARD PLAN RSP ES-5C**

8-24-15

| Dist | COUNTY | ROUTE | POST MILES TOTAL PROJECT | SHEET No. | TOTAL SHEETS |
|---|---|---|---|---|---|
| 06 | Tul | 65 | R15.1/18.0 | 303 | 324 |

Theresa Gabriel
REGISTERED ELECTRICAL ENGINEER

October 30, 2015
PLANS APPROVAL DATE

REGISTERED PROFESSIONAL ENGINEER Theresa Aziz Gabriel No. E15129 Exp. 6-30-16 ELECTRICAL STATE OF CALIFORNIA

*THE STATE OF CALIFORNIA OR ITS OFFICERS OR AGENTS SHALL NOT BE RESPONSIBLE FOR THE ACCURACY OR COMPLETENESS OF SCANNED COPIES OF THIS PLAN SHEET.*

TO ACCOMPANY PLANS DATED 6-20-16

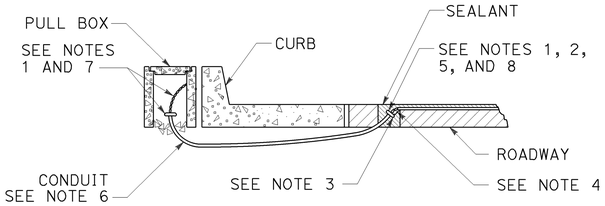


TYPE A
## CURB TERMINATION DETAIL

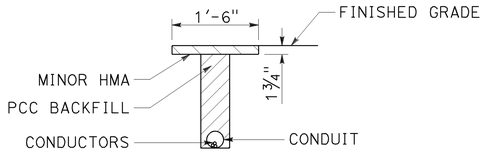


## "T" TRENCH
DETAIL T

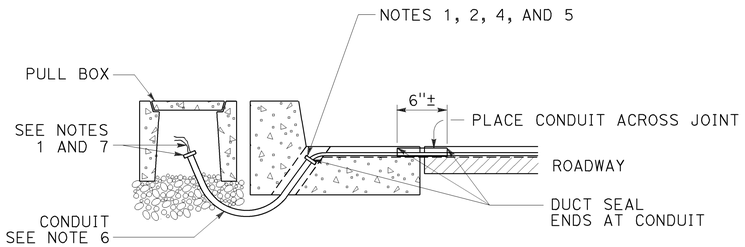


CROSS SECTION

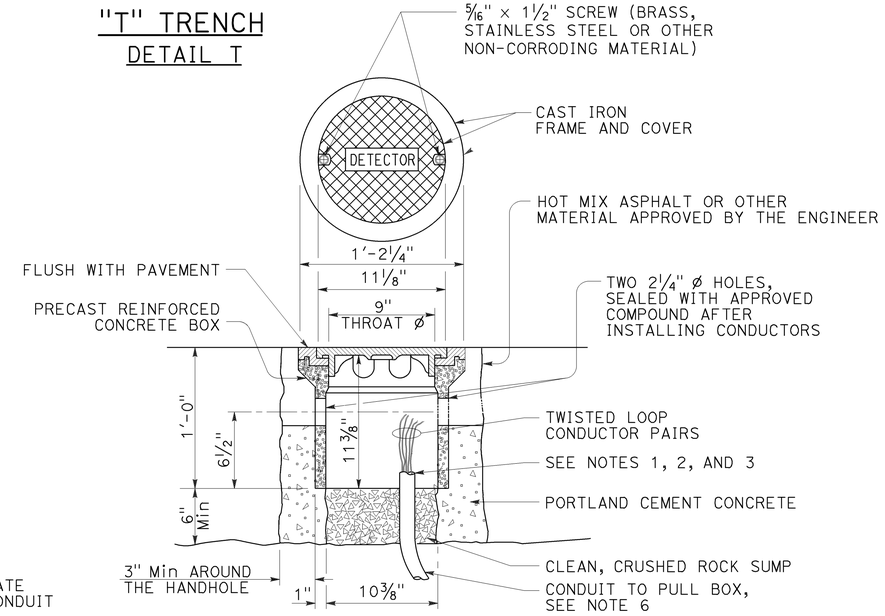


## DETECTOR HANDHOLE DETAIL

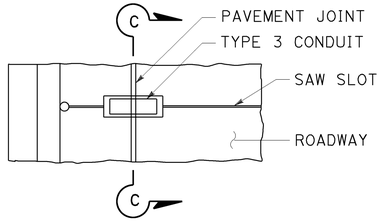


PLAN VIEW

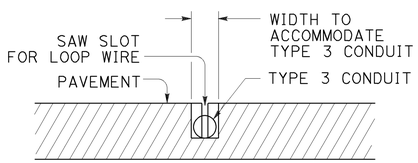


SECTION C-C

TYPE B
## CURB TERMINATION DETAIL

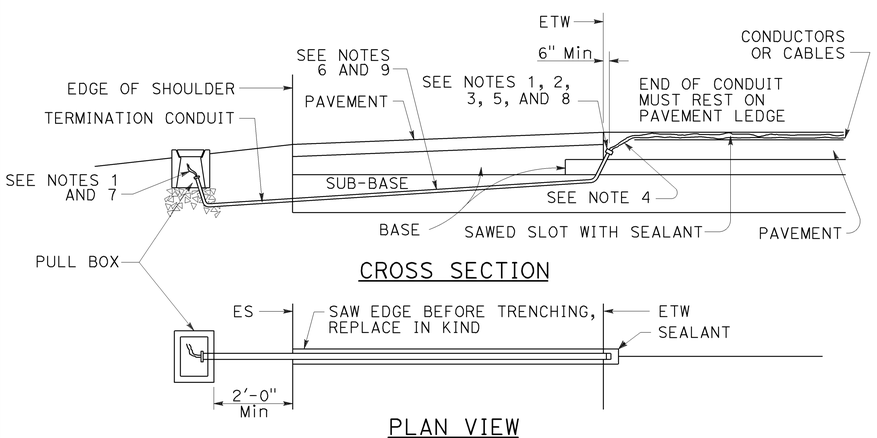


CROSS SECTION

PLAN VIEW

## SHOULDER TERMINATION DETAILS

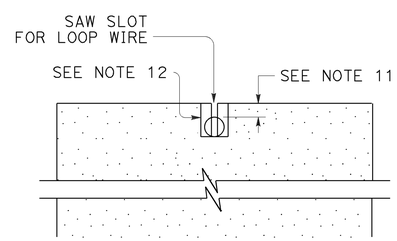


SECTION A-A

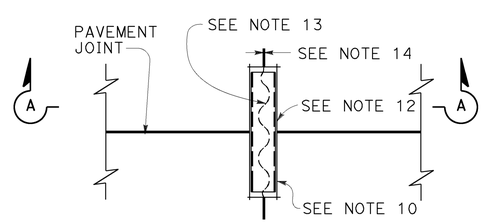


PLAN VIEW

## TYPICAL LOOP LEAD-IN DETAIL AT PAVEMENT JOINT

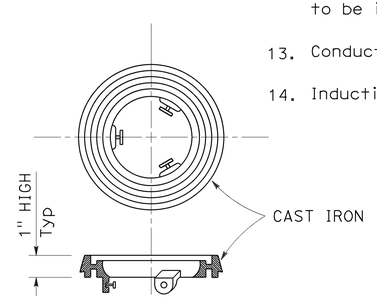


## LOCKING GRADE RING

## NOTES:

1. Bushing shall be used at end of conduit.
2. Tape detector conductors or cables 3" each side of bushings.
3. Install duct seal compound to each end of termination conduit before installing sealant.
4. Round all sharp edges where detector conductors or cables have to pass.
5. End of conduit shall be 3⅛" below roadway surface.
6. 

| Conduit size | Loop conductors |
|---|---|
| 1"C minimum | 1 to 2 pairs |
| 1½"C minimum | 3 to 4 pairs |
| 2"C minimum | 5 or more pairs |

7. Splice detector conductors or cables to detector lead-in-cable.
8. Location of detector handhole when shown on plans.
9. When the shoulder and traveled way are paved with the same material and there is no joint between them, the conduit shall extend only 2'-0" into the shoulder pavement.
10. ¾"C, Type 3 conduit 6" long minimum, plug both ends with duct compound to keep out sealant.
11. ½" Minimum between top of conduit and pavement surface.
12. Sawcut shall not exceed 1" in width and ⅛" longer than conduit to be installed.
13. Conductors with ½" minimum slack inside conduit.
14. Inductive loop detector saw slot.

STATE OF CALIFORNIA
DEPARTMENT OF TRANSPORTATION

# ELECTRICAL SYSTEMS (CURB AND SHOULDER TERMINATION, TRENCH, AND HANDHOLE DETAILS)

NO SCALE

RSP ES-5D DATED OCTOBER 30, 2015 SUPERSEDES RSP ES-5D DATED JULY 19, 2013 AND STANDARD PLAN ES-5D DATED MAY 20, 2011 - PAGE 451 OF THE STANDARD PLANS BOOK DATED 2010.

**REVISED STANDARD PLAN RSP ES-5D**

**2010 REVISED STANDARD PLAN RSP ES-5D**

8-19-15

| Dist | COUNTY | ROUTE | POST MILES TOTAL PROJECT | SHEET No. | TOTAL SHEETS |
|---|---|---|---|---|---|
| 06 | Tul | 65 | R15.1/18.0 | 304 | 324 |

REGISTERED CIVIL ENGINEER

July 15, 2016
PLANS APPROVAL DATE

REGISTERED PROFESSIONAL ENGINEER
Stanley P. Johnson
No. C57793
Exp. 3-31-18
CIVIL
STATE OF CALIFORNIA

*THE STATE OF CALIFORNIA OR ITS OFFICERS OR AGENTS SHALL NOT BE RESPONSIBLE FOR THE ACCURACY OR COMPLETENESS OF SCANNED COPIES OF THIS PLAN SHEET.*

TO ACCOMPANY PLANS DATED 6-20-16

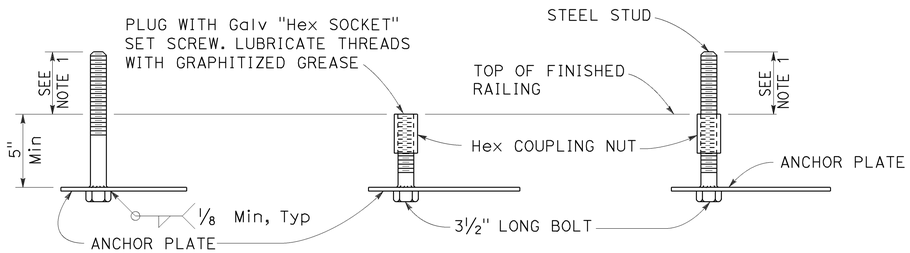


FOR IMMEDIATE INSTALLATION
DETAIL B-1

FOR FUTURE INSTALLATION WITH PLUG
DETAIL B-2

FOR INSTALLATION ON FUTURE ANCHORAGE WITH STUD
DETAIL B-3

## ELECTROLIER ANCHORAGES
DETAIL B

## NOTES:

1. Anchor bolt or stud length shall be such that thread extends 1/2" maximum above nut on level base plate after grouting. See Detail N.
2. Electrolier anchor bolts shall be held in position for pouring by means of anchor plates and suitable templates. Deviation from the true position, vertical and height shall not exceed 1/16".
3. See railing sheets for reinforcement and structural details at electroliers and pull boxes.

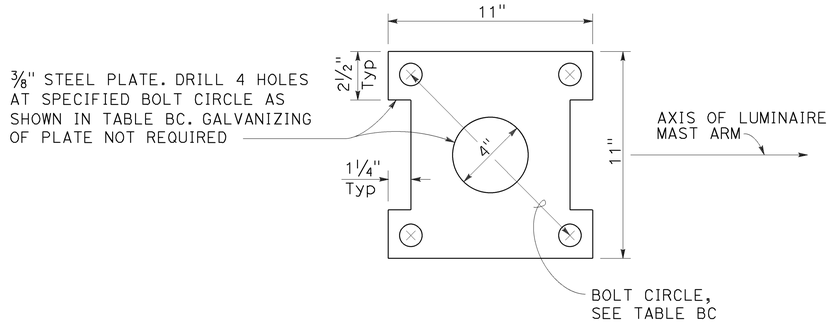


## ANCHOR PLATE
DETAIL A

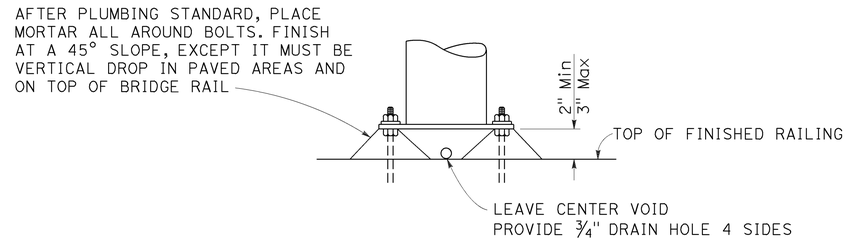


## GROUTING AT ELECTROLIER
DETAIL N

| TABLE BC | | | | |
|---|---|---|---|---|
| TYPE | BC = BOLT CIRCLE | ANCHOR BOLT DIAMETER | COUPLING NUT BASIC LENGTH | SET SCREW LENGTH DETAIL B-2 |
| 15 | 1'-0" | 1" | 3" | 1 1/2" |
| 21 | | 1 1/4" | 3 3/4" | 1 7/8" |

STATE OF CALIFORNIA
DEPARTMENT OF TRANSPORTATION

# ELECTRICAL SYSTEMS (ELECTROLIER ANCHORAGE AND GROUTING FOR TYPE 15 AND TYPE 21 BARRIER RAIL MOUNTED)

NO SCALE

RSP ES-6B DATED JULY 15, 2016 SUPERSEDES STANDARD PLAN ES-6B DATED MAY 20, 2011 - PAGE 453 OF THE STANDARD PLANS BOOK DATED 2010.

**REVISED STANDARD PLAN RSP ES-6B**

**2010 REVISED STANDARD PLAN RSP ES-6B**

6-20-16

| Dist | COUNTY | ROUTE | POST MILES TOTAL PROJECT | SHEET No. | TOTAL SHEETS |
|---|---|---|---|---|---|
| 06 | Tul | 65 | R15.1/18.0 | 305 | 324 |

REGISTERED CIVIL ENGINEER

July 15, 2016

PLANS APPROVAL DATE

REGISTERED PROFESSIONAL ENGINEER Stanley P. Johnson No. C57793 Exp. 3-31-18 CIVIL STATE OF CALIFORNIA

*THE STATE OF CALIFORNIA OR ITS OFFICERS OR AGENTS SHALL NOT BE RESPONSIBLE FOR THE ACCURACY OR COMPLETENESS OF SCANNED COPIES OF THIS PLAN SHEET.*

TO ACCOMPANY PLANS DATED 6-20-16

**2010 REVISED STANDARD PLAN RSP ES-6E**

| LUMINAIRE MAST ARM DATA | | | |
|---|---|---|---|
| PROJECTED LENGTH | THICKNESS | MINIMUM OD AT POLE | MOUNTING HEIGHT |
| * 6'-0" | 0.1196" | 3¼" | 36'-9"± |
| * 8'-0" | | 3½" | 37'-3"± |
| * 10'-0" | | 3⅞" | 38'-0"± |
| * 12'-0" | | | 39'-0"± |
| * 15'-0" | | 4¼" | 39'-6"± |
| ** 20'-0" | 0.1793" | 5" | 37'-0"± |

* TYPE 30
** TYPE 31

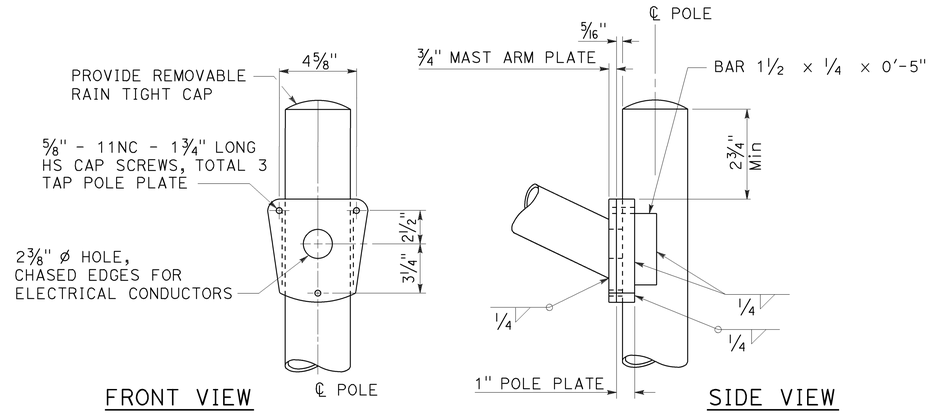


TYPE 30
DETAIL A

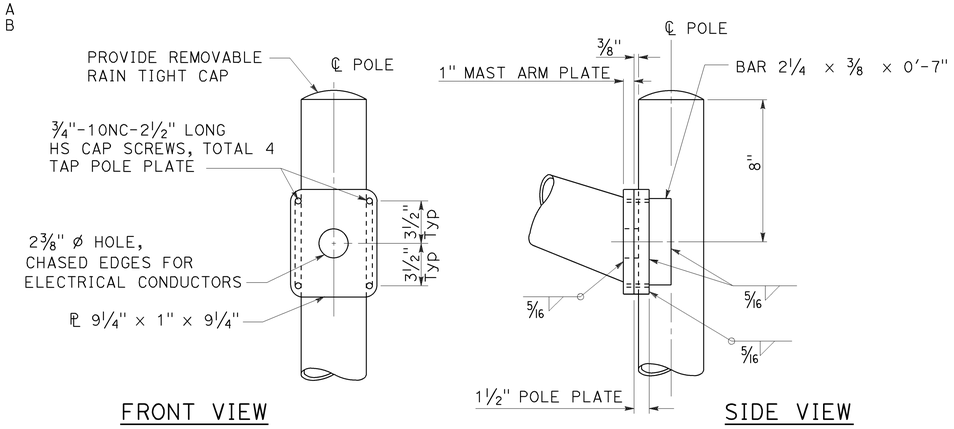


TYPE 31
DETAIL B

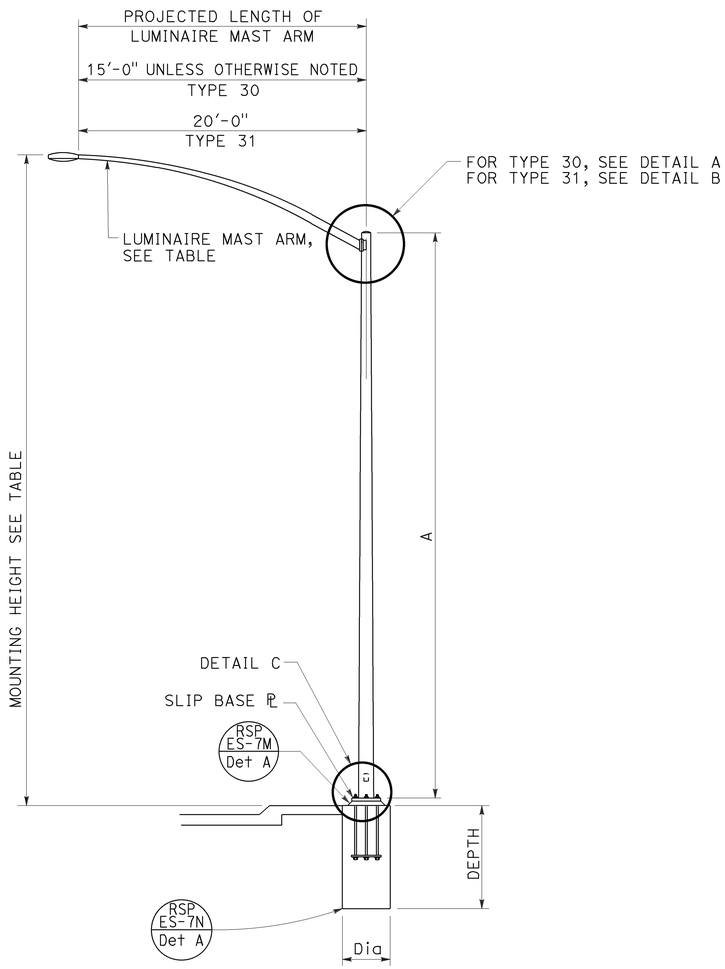


ELEVATION A

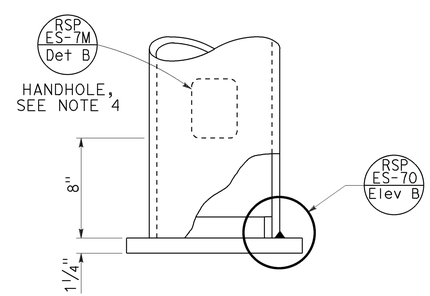


DETAIL C

NOTES:

1. For slip base plate details, see Revised Standard Plan RSP ES-6F.
2. For Type 30 fixed base use Type 15 base plate and foundation shown on Revised Standard Plan RSP ES-6A. Use 1¼" Dia x 3'-6" anchor bolts.
3. For Type 31 fixed base use Type 32 base plate, anchor bolts and foundation on Revised Standard Plan RSP ES-6G.
4. Handhole shall be located on the downstream side of traffic.
5. For additional notes and details, see Revised Standard Plans RSP ES-7M and RSP ES-7N.

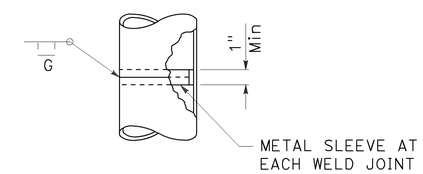


POLE SPLICE

| POLE TYPE | POLE DATA | | | | CIDH PILE FOUNDATION | |
|---|---|---|---|---|---|---|
| | A HEIGHT | Min OD BASE | Min OD TOP | Min THICKNESS | Dia | DEPTH |
| 30 | 35'-0" | 8¾" | 3 11/16" | 0.1196" | 2'-6" | 7'-0" |
| 31 | | 10¾" | 5 11/16" | 0.1793" | 3'-0" | 8'-0" |

STATE OF CALIFORNIA
DEPARTMENT OF TRANSPORTATION

# ELECTRICAL SYSTEMS (LIGHTING STANDARD, TYPES 30 AND 31)

NO SCALE

RSP ES-6E DATED JULY 15, 2016 SUPERSEDES RSP ES-6E DATED OCTOBER 30, 2015 AND STANDARD PLAN ES-6E DATED MAY 20, 2011 - PAGE 456 OF THE STANDARD PLANS BOOK DATED 2010.

**REVISED STANDARD PLAN RSP ES-6E**

| Dist | COUNTY | ROUTE | POST MILES TOTAL PROJECT | SHEET No. | TOTAL SHEETS |
|---|---|---|---|---|---|
| 06 | Tul | 65 | R15.1/18.0 | 306 | 324 |

REGISTERED CIVIL ENGINEER

October 30, 2015
PLANS APPROVAL DATE

REGISTERED PROFESSIONAL ENGINEER
Stanley P. Johnson
No. C57793
Exp. 3-31-16
CIVIL
STATE OF CALIFORNIA

*THE STATE OF CALIFORNIA OR ITS OFFICERS OR AGENTS SHALL NOT BE RESPONSIBLE FOR THE ACCURACY OR COMPLETENESS OF SCANNED COPIES OF THIS PLAN SHEET.*

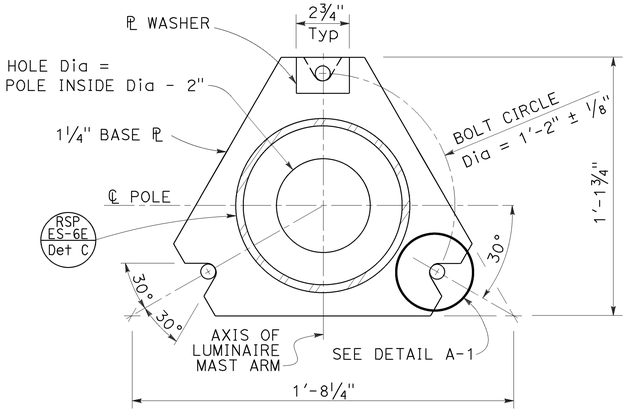


BASE PLATE
DETAIL A

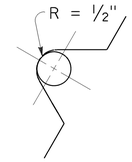


DETAIL A-1

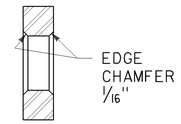


SECTION A-A

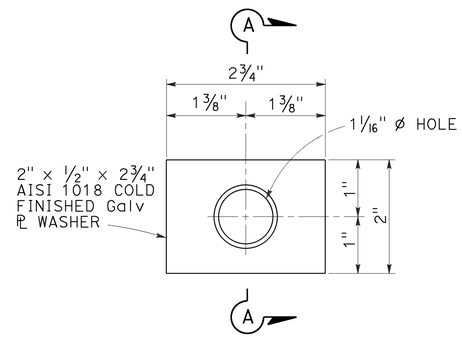


PLATE WASHER
DETAIL D

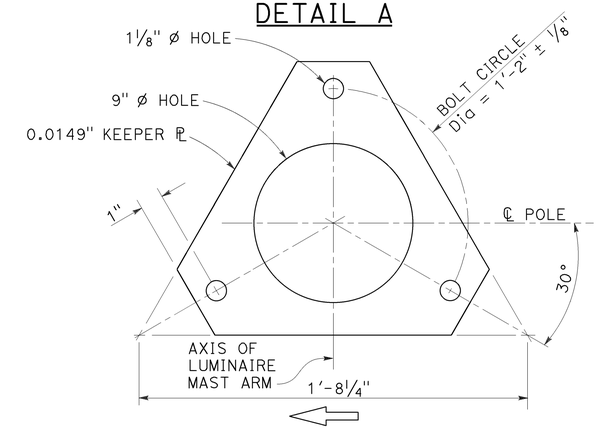


KEEPER PLATE
DETAIL B

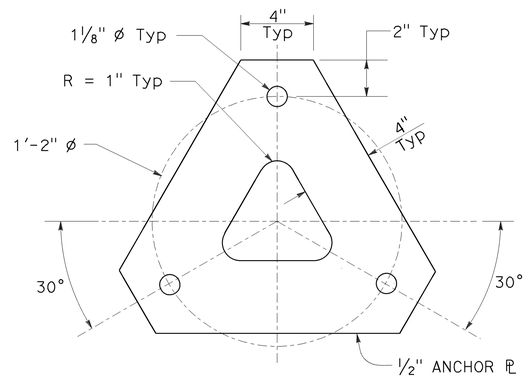


ANCHOR PLATE
DETAIL E

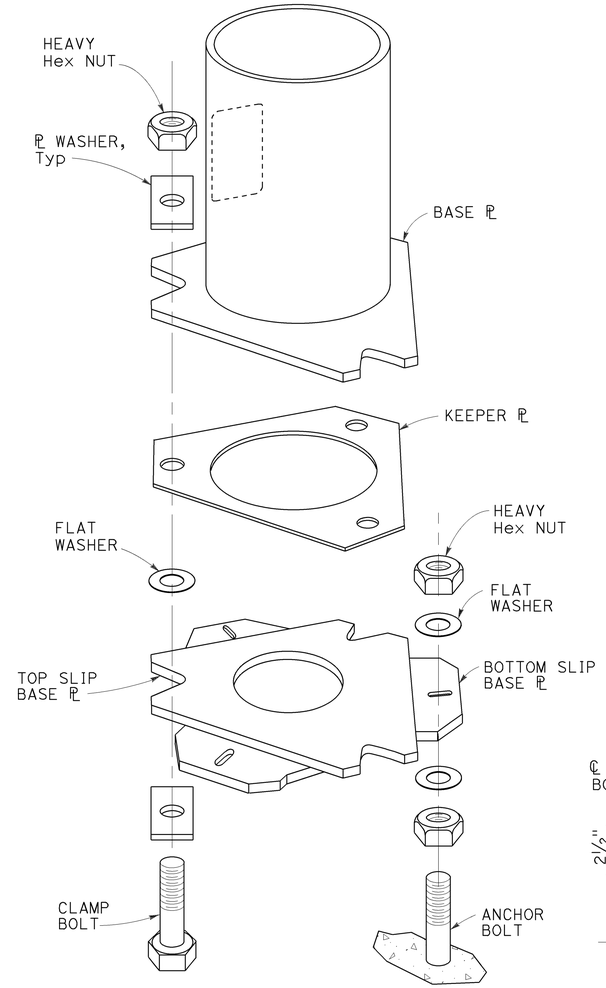


SLIP BASE DETAIL
DETAIL F

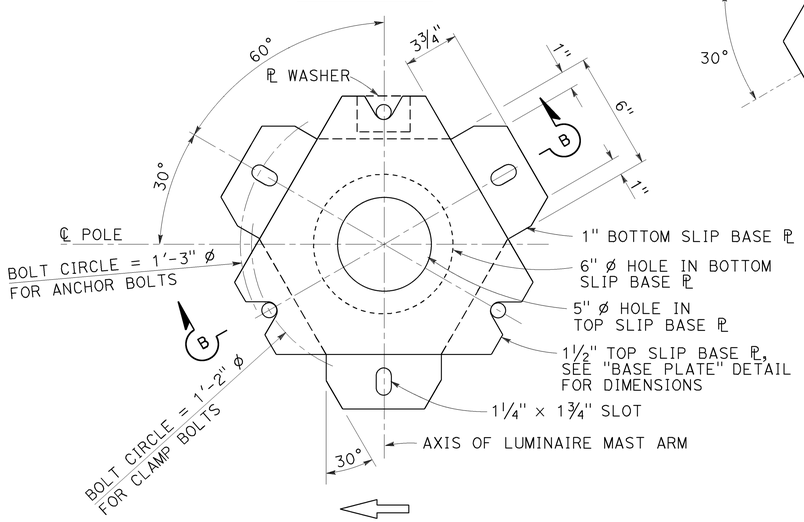


BOTTOM PLATE
DETAIL C

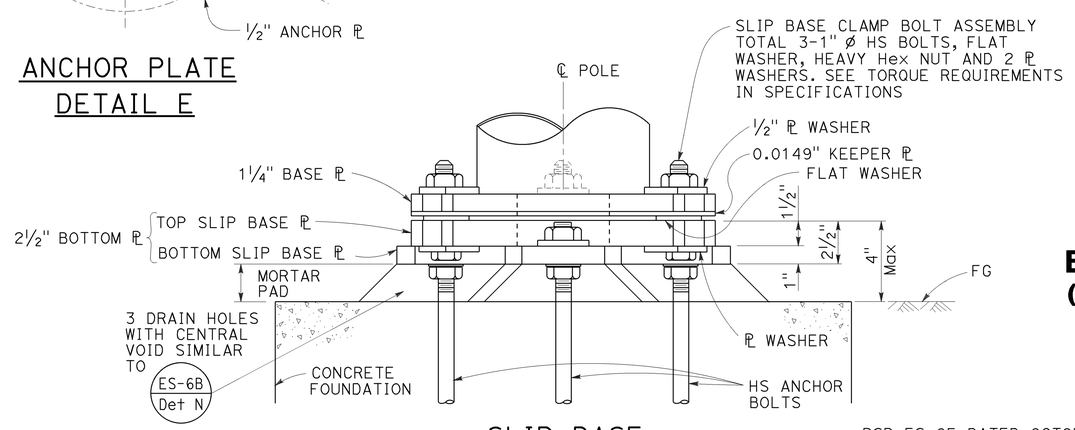


SLIP BASE
ELEVATION A

NOTES: TO ACCOMPANY PLANS DATED 6-20-16

1. 1" ø HS anchor bolts. For clamp bolts, see specifications.
2. Conduit shall not protrude more than 2" above top of foundation.
3. Handhole shall be located on the downstream side of traffic.
4. For Type 30 fixed base and for Type 31 fixed base, see Notes 3 and 4 on Revised Standard Plan RSP ES-6E.

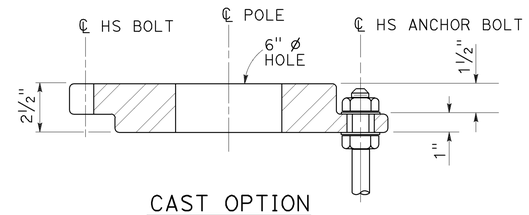


CAST OPTION

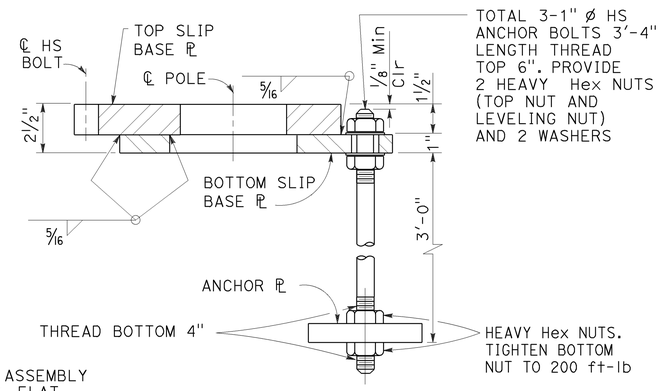


WELDED OPTION

SECTION B-B

STATE OF CALIFORNIA
DEPARTMENT OF TRANSPORTATION

# ELECTRICAL SYSTEMS (LIGHTING STANDARD, SLIP BASE PLATE)

NO SCALE

RSP ES-6F DATED OCTOBER 30, 2015 SUPERSEDES STANDARD PLAN ES-6F DATED MAY 20, 2011 - PAGE 457 OF THE STANDARD PLANS BOOK DATED 2010.

**REVISED STANDARD PLAN RSP ES-6F**

**2010 REVISED STANDARD PLAN RSP ES-6F**

8-20-15

| Dist | COUNTY | ROUTE | POST MILES TOTAL PROJECT | SHEET No. | TOTAL SHEETS |
|---|---|---|---|---|---|
| 06 | Tul | 65 | R15.1/18.0 | 307 | 324 |

REGISTERED CIVIL ENGINEER

July 15, 2016
PLANS APPROVAL DATE

REGISTERED PROFESSIONAL ENGINEER
Stanley P. Johnson
No. C57793
Exp. 3-31-18
CIVIL
STATE OF CALIFORNIA

*THE STATE OF CALIFORNIA OR ITS OFFICERS OR AGENTS SHALL NOT BE RESPONSIBLE FOR THE ACCURACY OR COMPLETENESS OF SCANNED COPIES OF THIS PLAN SHEET.*

TO ACCOMPANY PLANS DATED 6-20-16

**2010 REVISED STANDARD PLAN RSP ES-7B**

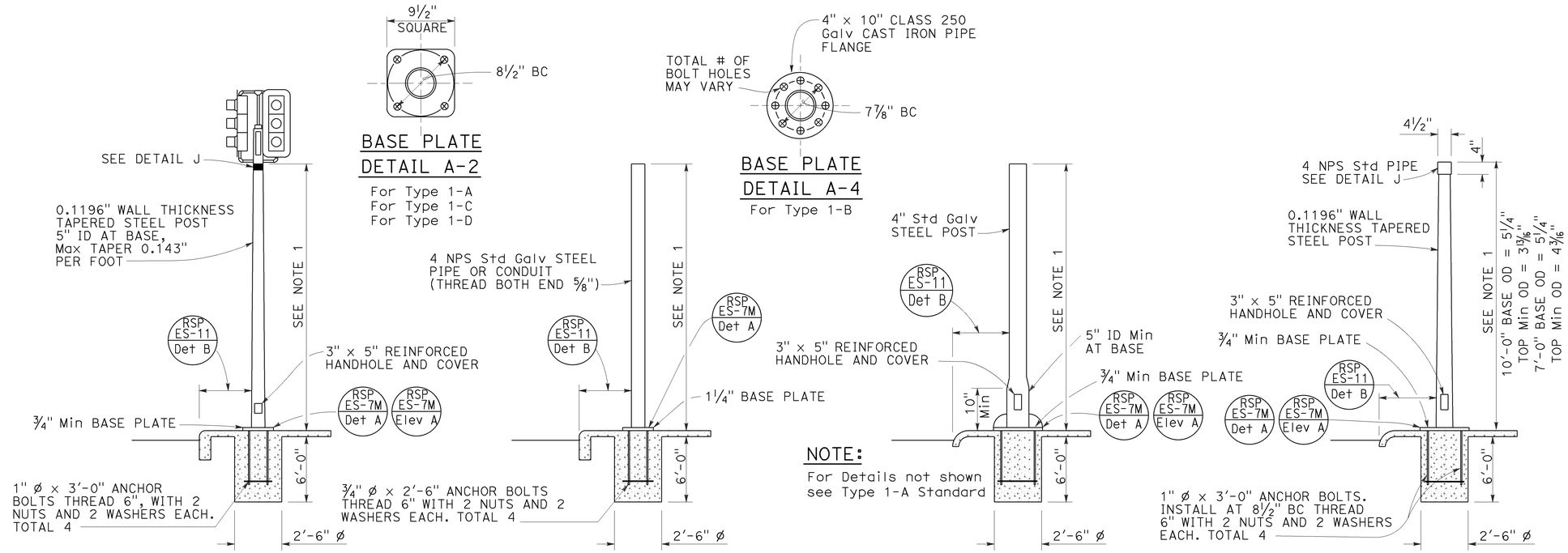


## TYPE 1 SIGNAL STANDARDS
### DETAIL A

## NOTES:

1. Standards shall be 10'-0" ± 2" for vehicle signals and 7'-0" ± 2" for pedestrian signals unless shorter pole is noted on project plans.
2. Top of standards shall be 4½" OD.
3. Conduits shall extend 2" maximum above finished surface of foundation and for Types 1-A, 1-C and 1-D shall be sloped toward handhole.
4. Anchor bolts shall be bonded to conduit or grounding conductor.
5. For additional notes and details, see Revised Standard Plans RSP ES-7M and RSP ES-7N.
6. Pour foundation concrete against undisturbed soil.
7. For standards with handhole, locate in the downstream side of traffic.
8. Coupling nuts to be used only when shown or specified on project plans.

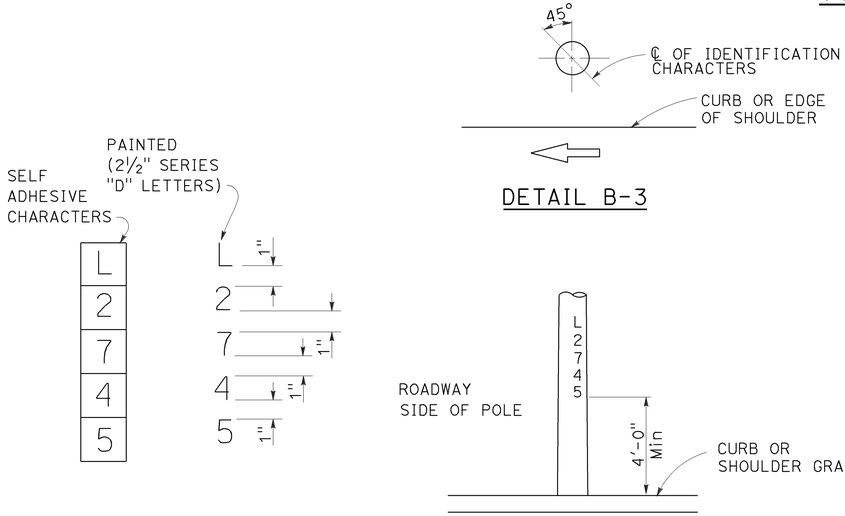


IDENTIFICATION CHARACTER DETAIL
DETAIL B-1

TYPICAL IDENTIFICATION CHARACTER FORMAT
DETAIL B-2

## LOCATION OF EQUIPMENT IDENTIFICATION CHARACTERS ON STANDARDS AND POSTS
### DETAIL B

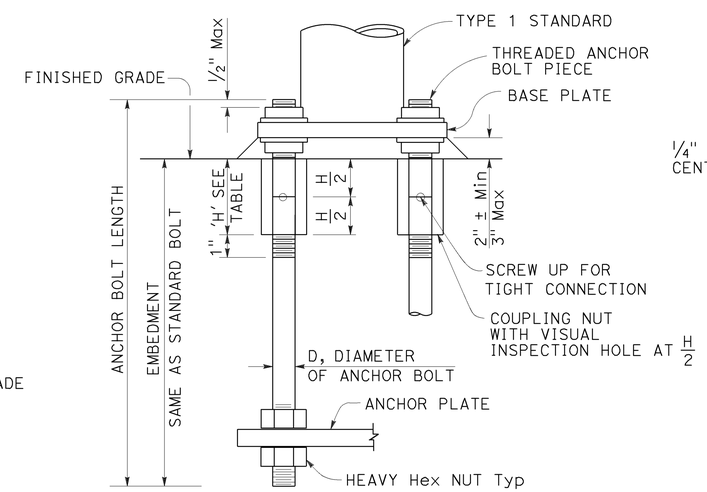


## ANCHOR BOLTS WITH SLEEVE NUTS
### DETAIL C
(See Note 8)

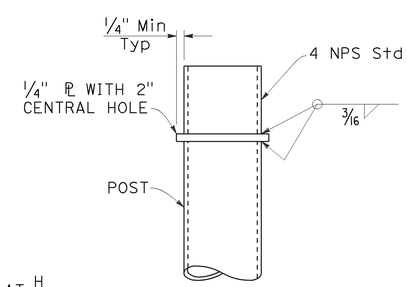


DETAIL J

| COUPLING NUT TABLE | |
|---|---|
| BOLT DIAMETER | NUT TABLE THICKNESS 'H' |
| ¾" | 2¼" |
| 1" | 3' |

STATE OF CALIFORNIA
DEPARTMENT OF TRANSPORTATION

# ELECTRICAL SYSTEMS (SIGNAL AND LIGHTING STANDARD, TYPE 1 AND EQUIPMENT IDENTIFICATION CHARACTERS)

NO SCALE

RSP ES-7B DATED JULY 15, 2016 SUPERSEDES RSP ES-7B DATED OCTOBER 30, 2015 AND STANDARD PLAN ES-7B DATED MAY 20, 2011 - PAGE 463 OF THE STANDARD PLANS BOOK DATED 2010.

**REVISED STANDARD PLAN RSP ES-7B**

6-20-16

| Dist | COUNTY | ROUTE | POST MILES TOTAL PROJECT | SHEET No. | TOTAL SHEETS |
|---|---|---|---|---|---|
| 06 | Tul | 65 | R15.1/18.0 | 308 | 324 |

REGISTERED CIVIL ENGINEER

July 15, 2016
PLANS APPROVAL DATE

REGISTERED PROFESSIONAL ENGINEER Stanley P. Johnson No. C57793 Exp. 3-31-18 CIVIL STATE OF CALIFORNIA

*THE STATE OF CALIFORNIA OR ITS OFFICERS OR AGENTS SHALL NOT BE RESPONSIBLE FOR THE ACCURACY OR COMPLETENESS OF SCANNED COPIES OF THIS PLAN SHEET.*

TO ACCOMPANY PLANS DATED 6-20-16

**NOTE:**

Handhole shall be located on the downstream side of traffic.

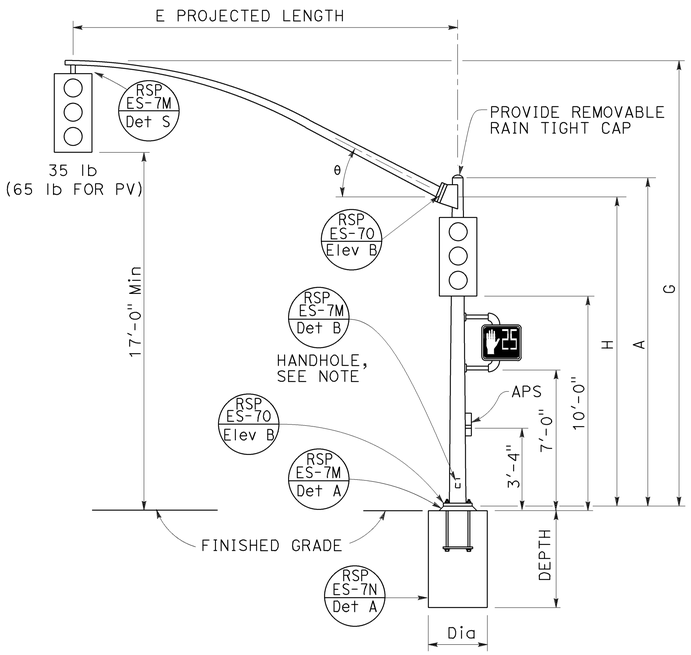


TYPE 16-1-100, 18-1-100

ELEVATION A

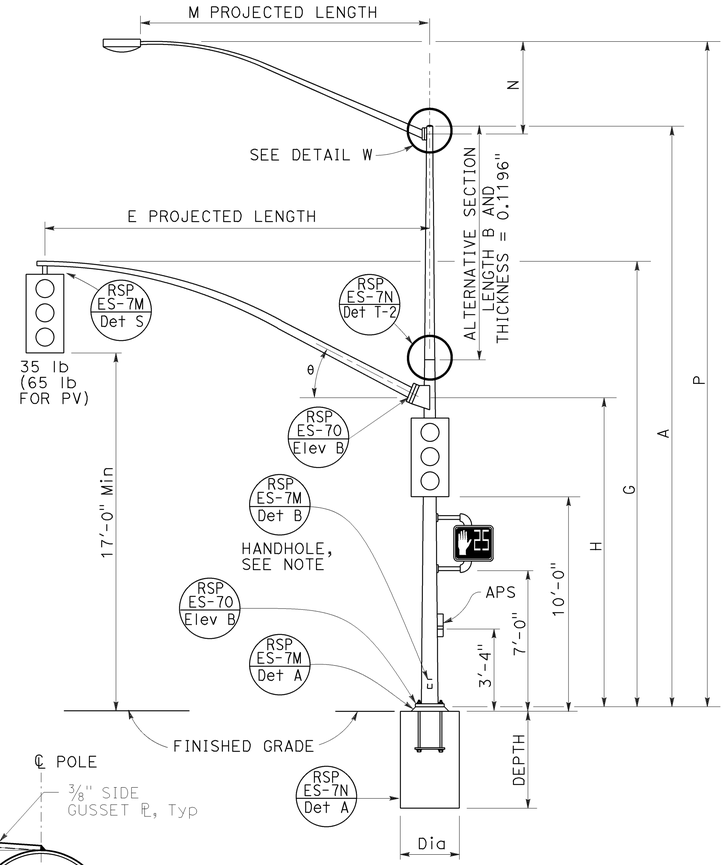


TYPE 19-1-100, 19A-1-100

ELEVATION B

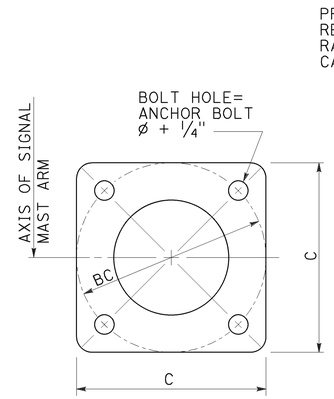


DETAIL D

BASE PLATE

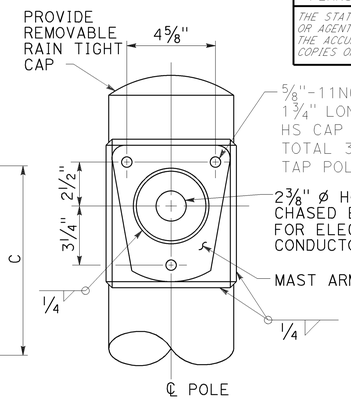


DETAIL W-1

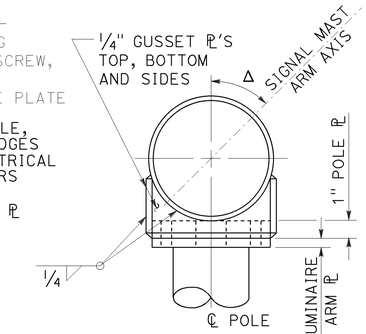


DETAIL W-2

LUMINAIRE MAST ARM CONNECTION

DETAIL W

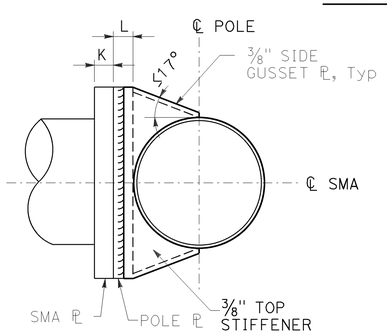


SECTION B-B

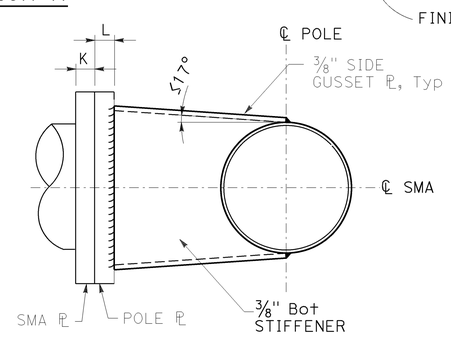


SECTION C-C

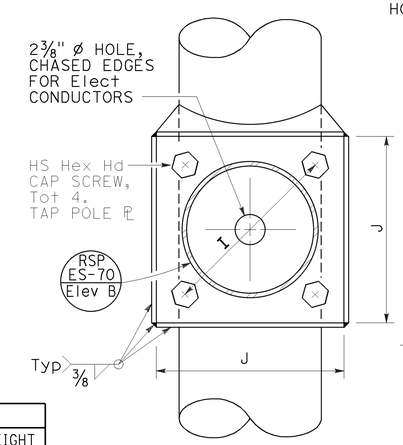


SECTION A-A

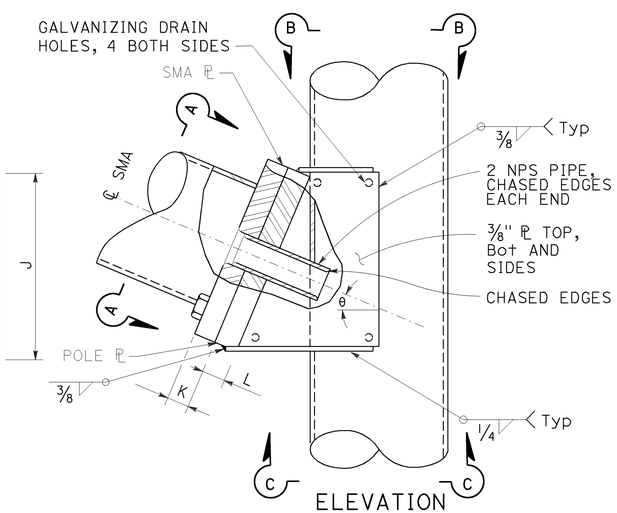


ELEVATION

SIGNAL MAST ARM CONNECTION

DETAIL A

| SIGNAL MAST ARM DATA | | | | | | | | | | |
|---|---|---|---|---|---|---|---|---|---|---|
| E PROJECTED LENGTH | G MOUNTING HEIGHT | H | Min OD AT POLE | THICKNESS | I BOLT CIRCLE | HS CAP SCREWS | J PLATE SIZE | K MAST ARM ℄ THICKNESS | L POLE ℄ THICKNESS | θ |
| 15'-0" | 21'-8"± | 17'-6" | 7 3/8" | 0.1793" | 12" | 1 1/4"-7NC-3" | 1'-0" | 1 1/4" | 1 1/2" | 23° |
| 20'-0" | | | 8" | | | | 1'-1" | | | |
| 25'-0" | 22'-8"± | 16'-0" | 9" | | | | | | | |
| 30'-0" | 23'-0"± | | 10" | | | | | | | |

| LUMINAIRE MAST ARM DATA | | | | | |
|---|---|---|---|---|---|
| M PROJECTED LENGTH | N RISE | Min OD AT POLE | THICKNESS | P MOUNTING HEIGHT 30'-0" POLE | P MOUNTING HEIGHT 35'-0" POLE |
| 6'-0" | 2'-0"± | 3 1/4" | 0.1196" | 31'-6"± | 36'-6"± |
| 8'-0" | 2'-6"± | 3 1/2" | | 32'-0"± | 37'-0"± |
| 10'-0" | 3'-3"± | 3 7/8" | | 32'-9"± | 37'-9"± |
| 12'-0" | 4'-3"± | | | 33'-9"± | 38'-9"± |
| 15'-0" | 4'-9"± | 4 1/4" | | 34'-3"± | 39'-3"± |

| POLE TYPE | LOAD CASE | WIND VELOCITY (mph) | POLE DATA: A HEIGHT | Min OD BASE | Min OD TOP | THICKNESS | ALTERNATIVE SECTION B LENGTH | ALTERNATIVE SECTION BOTTOM | ALTERNATIVE SECTION TOP | BASE PLATE DATA: C | BC = BOLT CIRCLE | THICKNESS | ANCHOR BOLT SIZE | LUMINAIRE MAST ARM | SIGNAL MAST ARM | CIDH PILE FOUNDATION Dia | CIDH PILE FOUNDATION DEPTH |
|---|---|---|---|---|---|---|---|---|---|---|---|---|---|---|---|---|---|
| 16-1-100 | 1 | 100 | 18'-6" | 12" | 9 3/8" | 0.2391" OR 0.25" | None | | | 1'-6" | 1'-4" | 2" | 1 3/4"ø × 42" | NONE | 15'-0", [20'-0"] | 3'-0" | 9'-0" |
| 18-1-100 | | | 17'-0" | | | | None | | | | | | | NONE | | | |
| 19-1-100 | | | 30'-0" | 14" | 9 3/4" | | 10'-0" | 11 1/8" | 9 3/4" | 1'-10" | 1'-8" | 2 1/2" | 2"ø × 42" | 6'-15' [12'-0"] | 25'-0", [30'-0"] | 3'-6" | 10'-0" |
| 19A-1-100 | | | 35'-0" | | 9" | | 15'-0" | | 9" | | | | | 6'-15' [15'-0"] | | | |

[ ] INDICATES MAST ARM LENGTH TO BE USED UNLESS OTHERWISE NOTED ON PLANS.

STATE OF CALIFORNIA
DEPARTMENT OF TRANSPORTATION

# ELECTRICAL SYSTEMS (SIGNAL AND LIGHTING STANDARD, CASE 1 SIGNAL MAST ARM LOADING, WIND VELOCITY = 100 MPH AND SIGNAL MAST ARM LENGTHS 15' TO 30')

NO SCALE

RSP ES-7C DATED JULY 15, 2016 SUPERSEDES RSP ES-7C DATED OCTOBER 30, 2015 AND RSP ES-7C DATED JULY 19, 2013 AND STANDARD PLAN ES-7C DATED MAY 20, 2011 - PAGE 464 OF THE STANDARD PLANS BOOK DATED 2010.

**REVISED STANDARD PLAN RSP ES-7C**

**2010 REVISED STANDARD PLAN RSP ES-7C**

6-20-16

| Dist | COUNTY | ROUTE | POST MILES TOTAL PROJECT | SHEET No. | TOTAL SHEETS |
|---|---|---|---|---|---|
| 06 | Tul | 65 | R15.1/18.0 | 309 | 324 |

REGISTERED CIVIL ENGINEER

July 15, 2016

PLANS APPROVAL DATE

REGISTERED PROFESSIONAL ENGINEER — Stanley P. Johnson — No. C57793 — Exp. 3-31-18 — CIVIL — STATE OF CALIFORNIA

*THE STATE OF CALIFORNIA OR ITS OFFICERS OR AGENTS SHALL NOT BE RESPONSIBLE FOR THE ACCURACY OR COMPLETENESS OF SCANNED COPIES OF THIS PLAN SHEET.*

**NOTE:** TO ACCOMPANY PLANS DATED 6-20-16

Handhole shall be located on the downstream side of traffic.

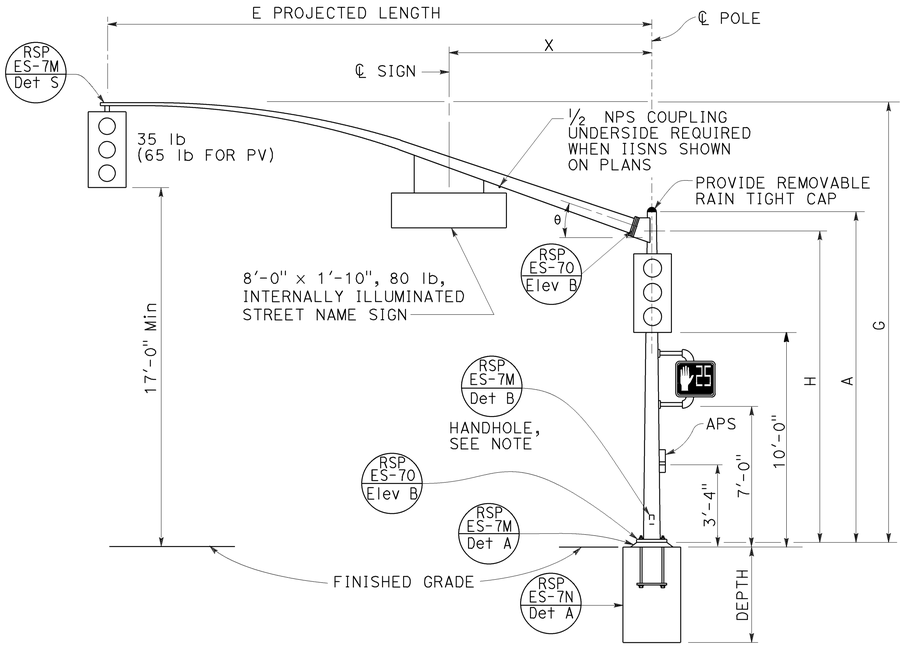


TYPE 16-2-100, 18-2-100

ELEVATION A

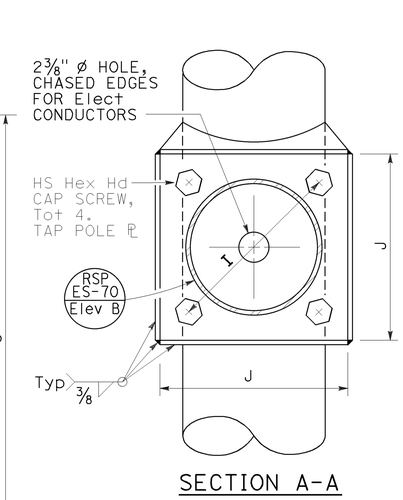


SECTION A-A

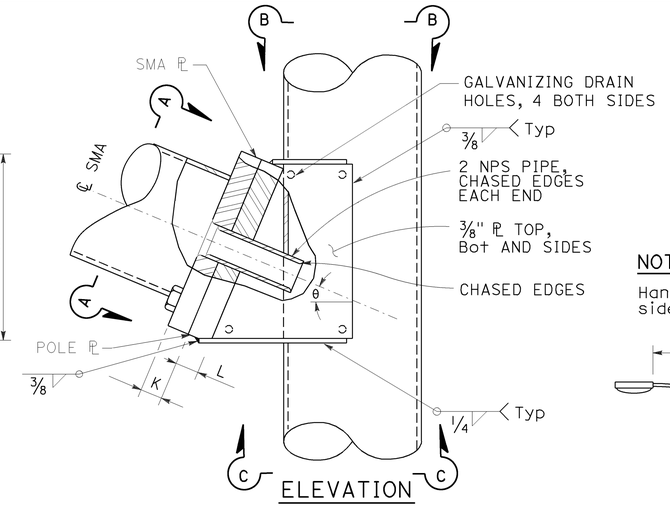


ELEVATION

SIGNAL MAST ARM CONNECTION

DETAIL A

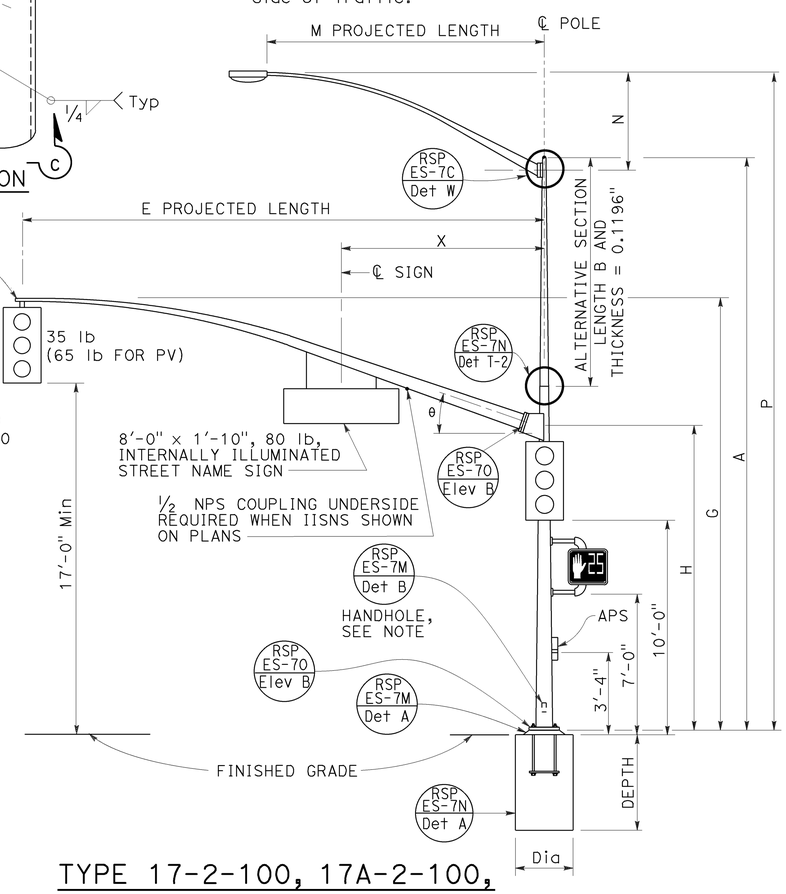


TYPE 17-2-100, 17A-2-100, 19-2-100, 19A-2-100

ELEVATION B

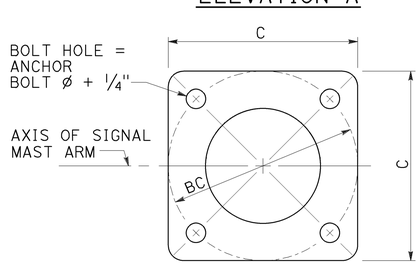


BASE PLATE

DETAIL B

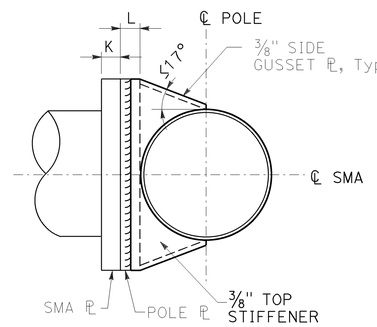


SECTION B-B

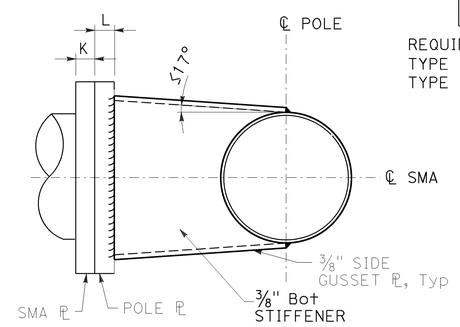


SECTION C-C

| SIGNAL MAST ARM DATA | | | | | | | | | | | |
|---|---|---|---|---|---|---|---|---|---|---|---|
| E PROJECTED LENGTH | G MOUNTING HEIGHT | H | Min OD AT POLE | THICKNESS | I BOLT CIRCLE | HS CAP SCREWS | J PLATE SIZE | K MAST ARM ℙ THICKNESS | L POLE ℙ THICKNESS | θ | X Max |
| 15'-0" | 21'-8"± | 17'-6" | 7⅜" | 0.1793" | 12" | 1¼"-7NC-3" | 1'-1" | 1¼" | 1½" | 23° | 10'-6" |
| 20'-0" | 21'-8"± | | 8" | | | | | | | | |
| 25'-0" | 22'-8"± | 16'-0" | 9" | | | | 1'-3" | | | | |
| 30'-0" | 23'-0"± | | 10" | 0.2391" | | | | | | | |

| LUMINAIRE MAST ARM DATA | | | | | |
|---|---|---|---|---|---|
| M PROJECTED LENGTH | N RISE | Min OD AT POLE | THICKNESS | P MOUNTING HEIGHT | |
| | | | | 30'-0" POLE | 35'-0" POLE |
| 6'-0" | 2'-0"± | 3¼" | 0.1196" | 31'-6"± | 36'-6"± |
| 8'-0" | 2'-6"± | 3½" | | 32'-0"± | 37'-0"± |
| 10'-0" | 3'-3"± | 3⅞" | | 32'-9"± | 37'-9"± |
| 12'-0" | 4'-3"± | | | 33'-9"± | 38'-9"± |
| 15'-0" | 4'-9"± | 4¼" | | 34'-3"± | 39'-3"± |

| POLE TYPE | LOAD CASE | WIND VELOCITY (mph) | POLE DATA | | | | | | | BASE PLATE DATA | | | | LUMINAIRE MAST ARM | SIGNAL MAST ARM | CIDH PILE FOUNDATION | |
|---|---|---|---|---|---|---|---|---|---|---|---|---|---|---|---|---|---|
| | | | A HEIGHT | Min OD | | THICKNESS | ALTERNATIVE SECTION | | | C | BC = BOLT CIRCLE | THICKNESS | ANCHOR BOLT SIZE | | | Dia | DEPTH |
| | | | | BASE | TOP | | B LENGTH | BOTTOM | TOP | | | | | | | | |
| 16-2-100 | 2 | 100 | 18'-6" | 14" | 11⅜" | 0.2391" OR 0.25" | | | | 1'-10" | 1'-8" | 2½" | 2"ø x 42" | NONE | 15'-0", 20'-0" | 3'-6" | 10'-0" |
| 17-2-100 | | | 30'-0" | | 9¾" | | 10'-0" | 11⅛" | 9¾" | | | | | 6'-15' 12'-0" | | | |
| 17A-2-100 | | | 35'-0" | | 9" | | 15'-0" | | 9" | | | | | 6'-15' 15'-0" | | | |
| 18-2-100 | | | 17'-0" | | 11⅝" | | | | | | | | | None | 25'-0", 30'-0" | | |
| 19-2-100 | | | 30'-0" | | 9¾" | | 10'-0" | 11⅛" | 9¾" | | | | | 6'-15' 12'-0" | | | |
| 19A-2-100 | | | 35'-0" | 16" | 11" | | 15'-0" | 13⅛" | 11" | 1'-11" | 1'-9" | 3" | 2¼"ø x 42" | 6'-15' 15'-0" | | | 12'-0" |

[ ] INDICATES MAST ARM LENGTH TO BE USED UNLESS OTHERWISE NOTED ON PLANS.

STATE OF CALIFORNIA
DEPARTMENT OF TRANSPORTATION

# ELECTRICAL SYSTEMS (SIGNAL AND LIGHTING STANDARD, CASE 2 SIGNAL MAST ARM LOADING, WIND VELOCITY=100 MPH AND SIGNAL MAST ARM LENGTHS 15' TO 30')

NO SCALE

RSP ES-7D DATED JULY 15, 2016 SUPERSEDES RSP ES-7D DATED OCTOBER 30, 2015 AND RSP ES-7D DATED JULY 19, 2013 AND STANDARD PLAN ES-7D DATED MAY 20, 2011 - PAGE 465 OF THE STANDARD PLANS BOOK DATED 2010.

**REVISED STANDARD PLAN RSP ES-7D**

**2010 REVISED STANDARD PLAN RSP ES-7D**

6-20-16

| Dist | COUNTY | ROUTE | POST MILES TOTAL PROJECT | SHEET No. | TOTAL SHEETS |
|---|---|---|---|---|---|
| 06 | Tul | 65 | R15.1/18.0 | 310 | 324 |

REGISTERED CIVIL ENGINEER

July 15, 2016
PLANS APPROVAL DATE

REGISTERED PROFESSIONAL ENGINEER Stanley P. Johnson No. C57793 Exp. 3-31-18 CIVIL STATE OF CALIFORNIA

*THE STATE OF CALIFORNIA OR ITS OFFICERS OR AGENTS SHALL NOT BE RESPONSIBLE FOR THE ACCURACY OR COMPLETENESS OF SCANNED COPIES OF THIS PLAN SHEET.*

TO ACCOMPANY PLANS DATED 6-20-16

**NOTE:**
Handhole shall be located on the downstream side of traffic.

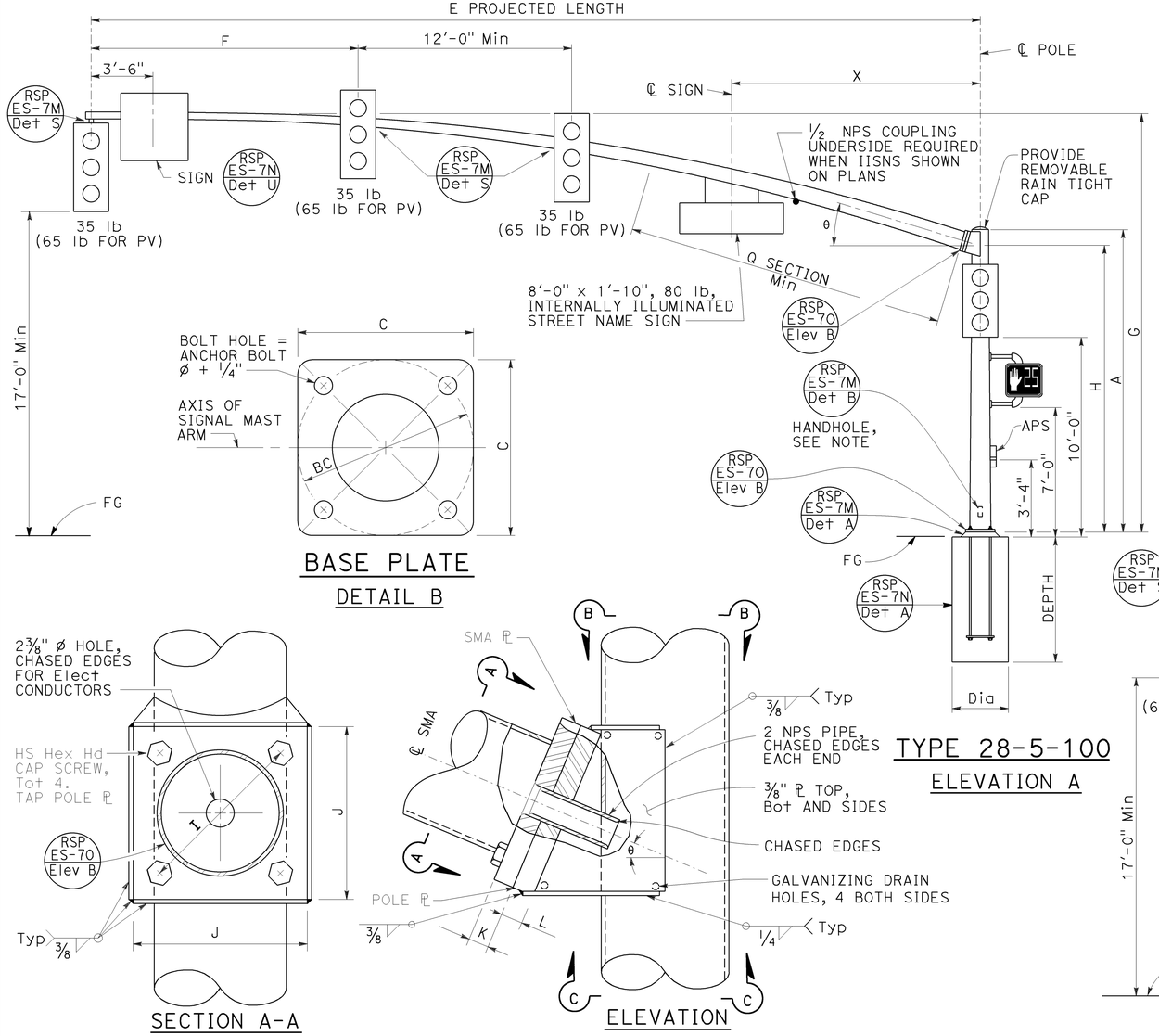


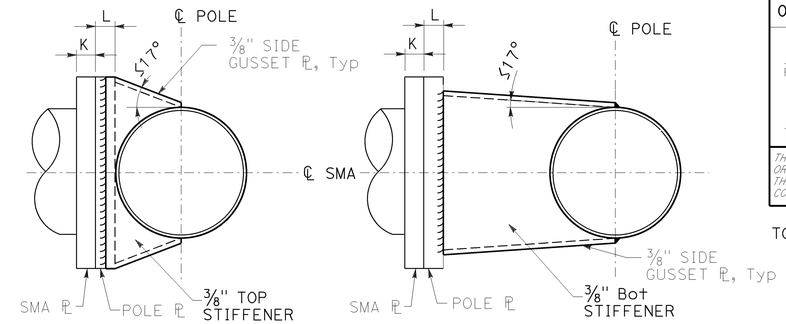





## TYPE 28-5-100
### ELEVATION A

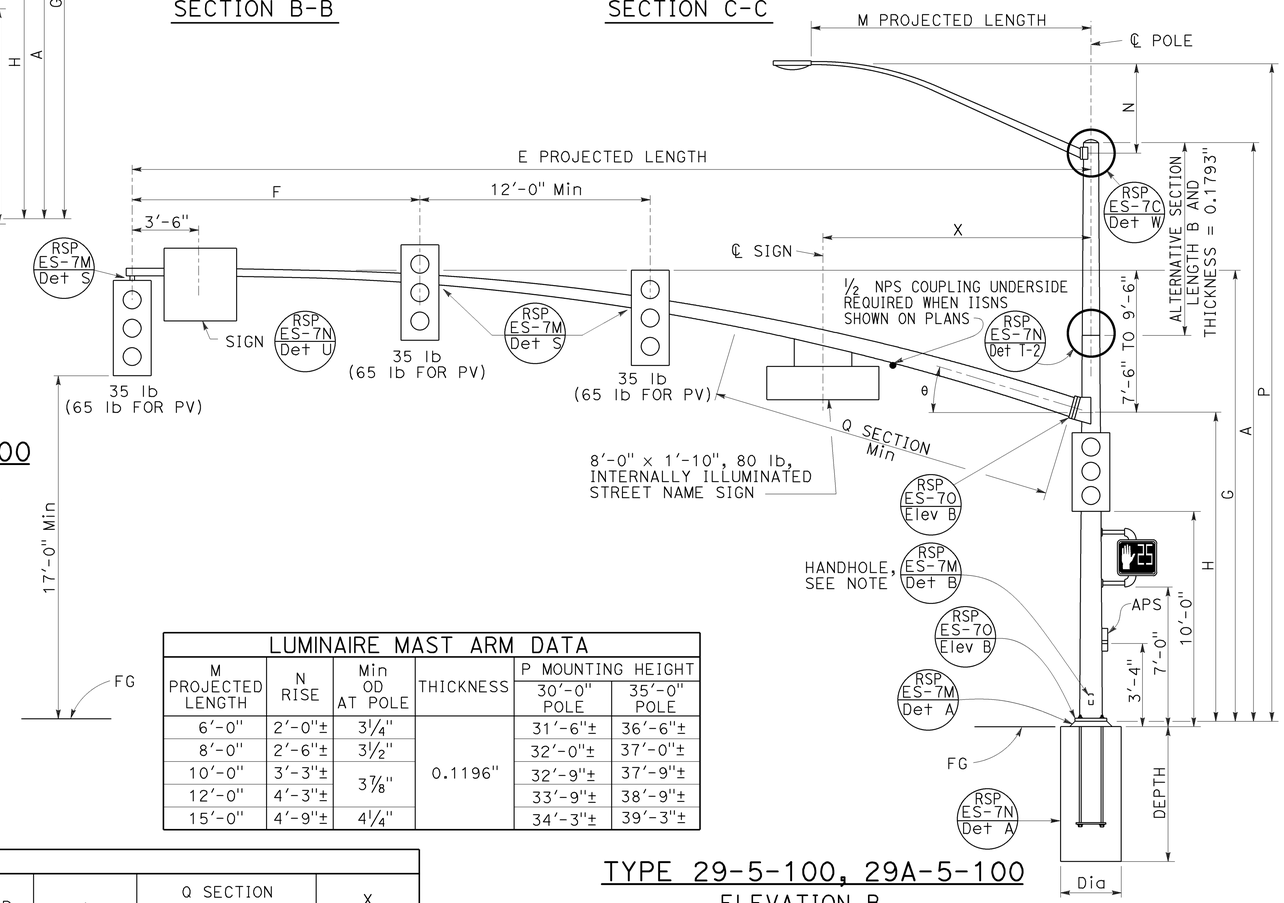


## TYPE 29-5-100, 29A-5-100
### ELEVATION B

| LUMINAIRE MAST ARM DATA | | | | | |
|---|---|---|---|---|---|
| M PROJECTED LENGTH | N RISE | Min OD AT POLE | THICKNESS | P MOUNTING HEIGHT 30'-0" POLE | P MOUNTING HEIGHT 35'-0" POLE |
| 6'-0" | 2'-0"± | 3¼" | 0.1196" | 31'-6"± | 36'-6"± |
| 8'-0" | 2'-6"± | 3½" | | 32'-0"± | 37'-0"± |
| 10'-0" | 3'-3"± | 3⅞" | | 32'-9"± | 37'-9"± |
| 12'-0" | 4'-3"± | | | 33'-9"± | 38'-9"± |
| 15'-0" | 4'-9"± | 4¼" | | 34'-3"± | 39'-3"± |

| SIGNAL MAST ARM DATA | | | | | | | | | | | | | | |
|---|---|---|---|---|---|---|---|---|---|---|---|---|---|---|
| E PROJECTED LENGTH | F Min SPACING | G MOUNTING HEIGHT | H | Min OD AT POLE | THICKNESS | I BOLT CIRCLE | HS CAP SCREWS | J PLATE SIZE | K MAST ARM ℙ THICKNESS | L POLE ℙ THICKNESS | θ | Q SECTION LENGTH | Q SECTION THICKNESS | X Max |
| 50'-0" | 15'-0" | 23'-7"± TO 25'-7"± | 16'-0" | 11 7/16" | 0.1793" | 16" | 1½"-6NC-3¼" | 1'-9" | 1¾" | 1¾" | 15° | 18'-0" | 0.2391" | 14'-0" |
| 55'-0" | | | | 1'-1¼" | | | | | | | | 23'-0" | | |

| POLE DATA | | | | | | | | | | BASE PLATE DATA | | | | | | | | |
|---|---|---|---|---|---|---|---|---|---|---|---|---|---|---|---|---|---|---|
| POLE TYPE | LOAD CASE | WIND VELOCITY (mph) | A HEIGHT | Min OD BASE | Min OD TOP | THICKNESS | ALTERNATIVE SECTION B LENGTH | ALTERNATIVE SECTION BOTTOM | ALTERNATIVE SECTION TOP | C | BC = BOLT CIRCLE | THICKNESS | ANCHOR BOLT SIZE | LUMINAIRE MAST ARM | SIGNAL MAST ARM | CIDH PILE FOUNDATION Dia | CIDH PILE FOUNDATION DEPTH |
| 28-5-100 | 5 | 100 | 17'-0" | 22" | 19 5/8" | 0.375" | | | | 2'-6" | 2'-4" | 3" | 2¼"Ø x 42" | NONE | 50'-0", 55'-0" | 4'-0" | 14'-0" |
| 29-5-100 | | | 30'-0" | | 17¾" | | 10'-0" | 19⅛" | 17¾" | | | | | 6'-15' [15'-0"] | | | |
| 29A-5-100 | | | 35'-0" | | 17" | | 15'-0" | | 17" | | | | | | | | |

[ ] INDICATES MAST ARM LENGTH TO BE USED UNLESS OTHERWISE NOTED ON PLANS.

STATE OF CALIFORNIA
DEPARTMENT OF TRANSPORTATION

# ELECTRICAL SYSTEMS (SIGNAL AND LIGHTING STANDARD, CASE 5 SIGNAL MAST ARM LOADING, WIND VELOCITY=100 MPH AND SIGNAL MAST ARM LENGTHS 50' TO 55')

NO SCALE

RSP ES-7G DATED JULY 15, 2016 SUPERSEDES RSP ES-7G DATED OCTOBER 30, 2015 AND RSP ES-7G DATED JULY 19, 2013 AND STANDARD PLAN ES-7G DATED MAY 20, 2011 - PAGE 468 OF THE STANDARD PLANS BOOK DATED 2010.

**REVISED STANDARD PLAN RSP ES-7G**

**2010 REVISED STANDARD PLAN RSP ES-7G**

6-20-16

| Dist | COUNTY | ROUTE | POST MILES TOTAL PROJECT | SHEET No. | TOTAL SHEETS |
|---|---|---|---|---|---|
| 06 | Tul | 65 | R15.1/18.0 | 311 | 324 |

REGISTERED CIVIL ENGINEER

July 15, 2016

PLANS APPROVAL DATE

Stanley P. Johnson No. C57793 Exp. 3-31-18 CIVIL STATE OF CALIFORNIA REGISTERED PROFESSIONAL ENGINEER

*THE STATE OF CALIFORNIA OR ITS OFFICERS OR AGENTS SHALL NOT BE RESPONSIBLE FOR THE ACCURACY OR COMPLETENESS OF SCANNED COPIES OF THIS PLAN SHEET.*

TO ACCOMPANY PLANS DATED 6-20-16

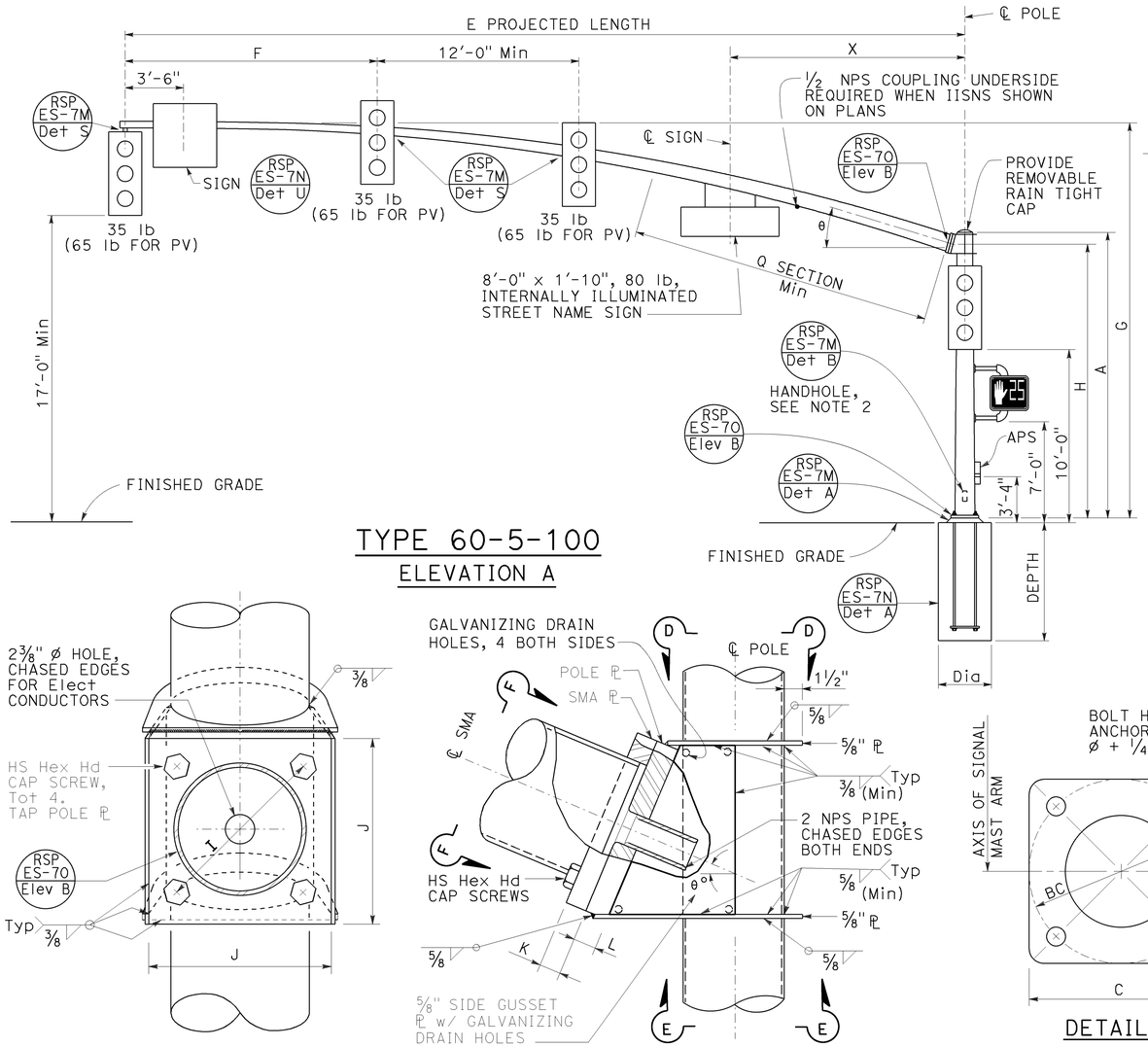


TYPE 60-5-100

ELEVATION A




SECTION F-F




ELEVATION

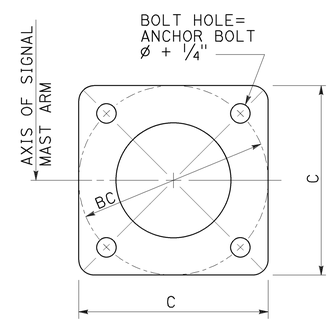


DETAIL B

BASE PLATE

SIGNAL MAST ARM CONNECTION

DETAIL B

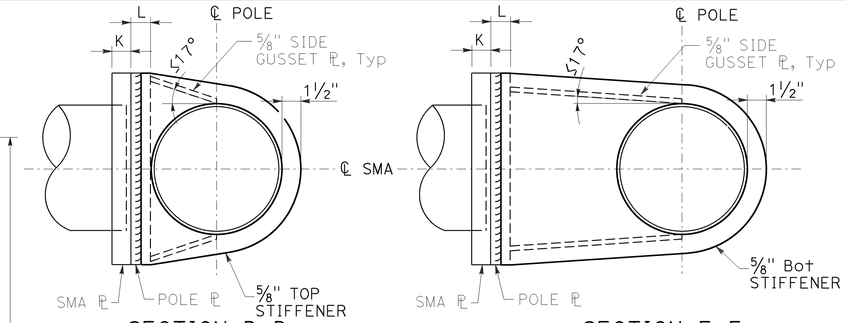


SECTION D-D

SECTION E-E

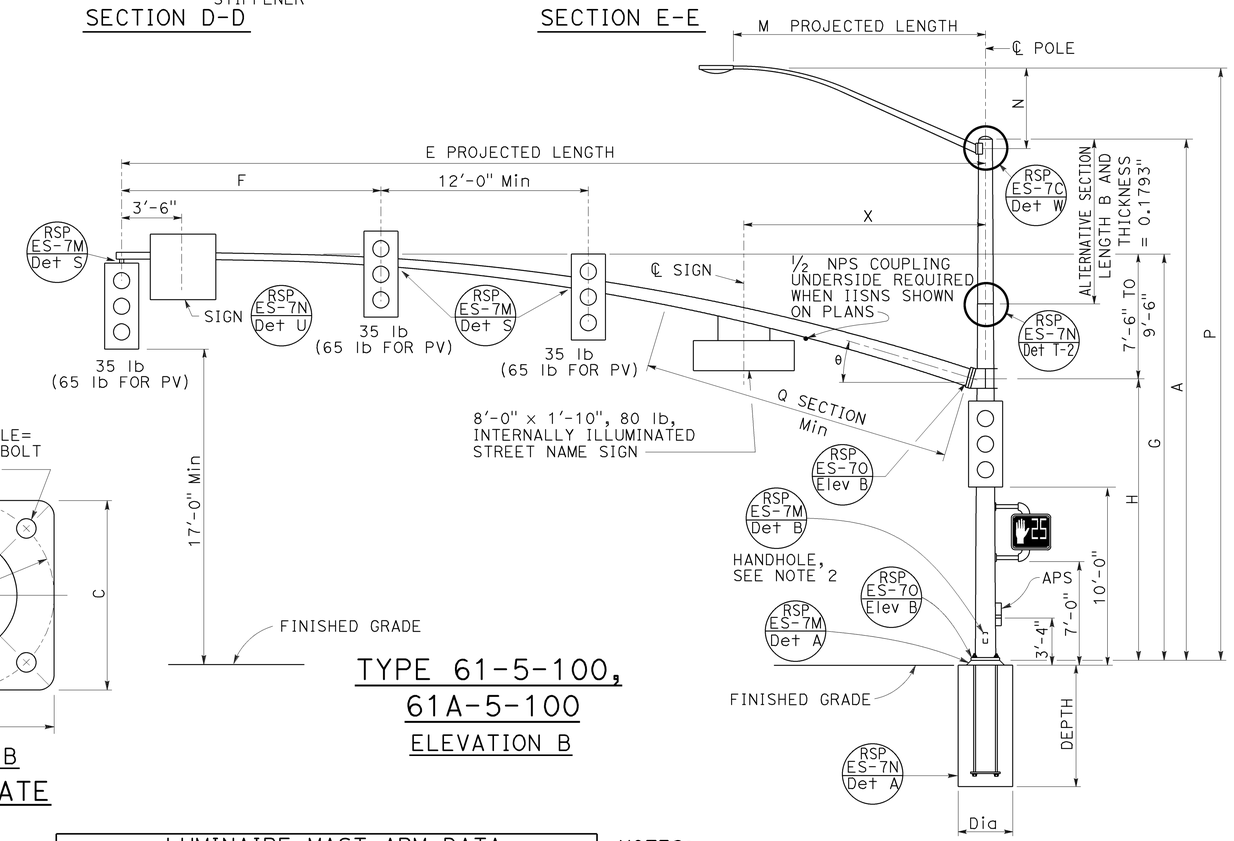


TYPE 61-5-100,

61A-5-100

ELEVATION B

| SIGNAL MAST ARM DATA | | | | | | | | | | | | | | |
|---|---|---|---|---|---|---|---|---|---|---|---|---|---|---|
| E PROJECTED LENGTH | F Min SPACING | G MOUNTING HEIGHT | H | Min OD AT POLE | THICKNESS | I BOLT CIRCLE | HS CAP SCREWS | J PLATE SIZE | K MAST ARM ℄ THICKNESS | L POLE ℄ THICKNESS | θ | Q SECTION LENGTH | Q SECTION THICKNESS | X Max |
| 60'-0" | 15'-0" | 23'-7" TO 25'-7" | 16'-0" | 1'-1½" | 0.1793" | 20" | 1½"-6NC-4" | 2'-0" | 2" | 2" | 15° | 24'-0" | 0.2391" | 14'-0" |
| 65'-0" | | | | | 0.2391" | | | | | | | 29'-0" | 0.3125" | |

| LUMINAIRE MAST ARM DATA | | | | | |
|---|---|---|---|---|---|
| M PROJECTED LENGTH | N RISE | Min OD AT POLE | THICKNESS | P MOUNTING HEIGHT 30'-0" POLE | P MOUNTING HEIGHT 35'-0" POLE |
| 6'-0" | 2'-0"± | 3¼" | 0.1196" | 31'-6"± | 36'-6"± |
| 8'-0" | 2'-6"± | 3½" | | 32'-0"± | 37'-0"± |
| 10'-0" | 3'-3"± | 3⅞" | | 32'-9"± | 37'-9"± |
| 12'-0" | 4'-3"± | | | 33'-9"± | 38'-9"± |
| 15'-0" | 4'-9"± | 4¼" | | 34'-3"± | 39'-3"± |

NOTES:

1. The radial separation between the face of the pole and the adjacent insides of the top and bottom gusset plates shall not exceed 3/16". Fillet weld size to be increased by amount of gap.
2. Handhole shall be located on the downstream side of traffic.

| POLE TYPE | LOAD CASE | WIND VELOCITY (mph) | POLE DATA A HEIGHT | Min OD BASE | Min OD TOP | THICKNESS | ALTERNATIVE SECTION B LENGTH | ALTERNATIVE SECTION BOTTOM | ALTERNATIVE SECTION TOP | BASE PLATE DATA C | BC = BOLT CIRCLE | THICKNESS | ANCHOR BOLT SIZE | LUMINAIRE MAST ARM | SIGNAL MAST ARM | CIDH PILE FOUNDATION Dia | CIDH PILE FOUNDATION DEPTH |
|---|---|---|---|---|---|---|---|---|---|---|---|---|---|---|---|---|---|
| 60-5-100 | 5 | 100 | 17'-0" | 22" | 19⅝" | 0.375" | | | | 2'-6" | 2'-4" | 3" | 2¼"ø x 42" | NONE | 50'-0", [55'-0"] | 4'-0" | 14'-0" |
| 61-5-100 | | | 30'-0" | 25" | 20¾" | | 10'-0" | 22⅛" | 20¾" | 2'-11" | 2'-9" | | 3"ø x 60" | 6'-15' [15'-0"] | | 4'-6" | 15'-0" |
| 61A-5-100 | | | 35'-0" | | 20" | | 15'-0" | | 20" | | | | | | | | |

[ ] INDICATES MAST ARM LENGTH TO BE USED UNLESS OTHERWISE NOTED ON PLANS.

STATE OF CALIFORNIA
DEPARTMENT OF TRANSPORTATION

# ELECTRICAL SYSTEMS (SIGNAL AND LIGHTING STANDARD, CASE 5 SIGNAL MAST ARM LOADING, WIND VELOCITY=100 MPH AND SIGNAL MAST ARM LENGTHS 60' TO 65')

NO SCALE

RSP ES-7H DATED JULY 15, 2016 SUPERSEDES RSP ES-7H DATED OCTOBER 30, 2015 AND RSP ES-7H DATED JULY 19, 2013 AND STANDARD PLAN ES-7H DATED MAY 20, 2011 - PAGE 469 OF THE STANDARD PLANS BOOK DATED 2010.

**REVISED STANDARD PLAN RSP ES-7H**

**2010 REVISED STANDARD PLAN RSP ES-7H**

6-20-16

| Dist | COUNTY | ROUTE | POST MILES TOTAL PROJECT | SHEET No. | TOTAL SHEETS |
|---|---|---|---|---|---|
| 06 | Tul | 65 | R15.1/18.0 | 312 | 324 |

REGISTERED CIVIL ENGINEER

April 15, 2016
PLANS APPROVAL DATE

REGISTERED PROFESSIONAL ENGINEER
Stanley P. Johnson
No. C57793
Exp. 3-31-18
CIVIL
STATE OF CALIFORNIA

*THE STATE OF CALIFORNIA OR ITS OFFICERS OR AGENTS SHALL NOT BE RESPONSIBLE FOR THE ACCURACY OR COMPLETENESS OF SCANNED COPIES OF THIS PLAN SHEET.*

TO ACCOMPANY PLANS DATED 6-20-16

**2010 REVISED STANDARD PLAN RSP ES-7K**

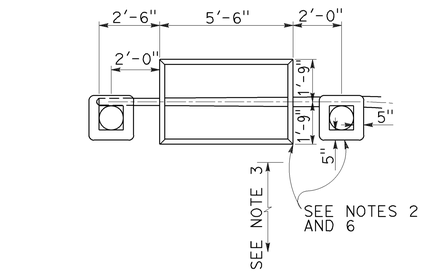


TYPE 9

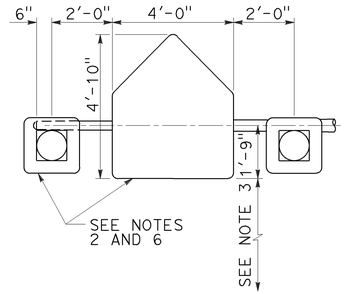


TYPE 9A

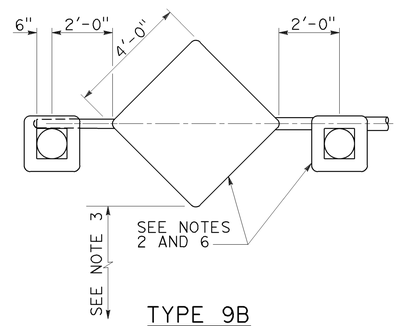


TYPE 9B

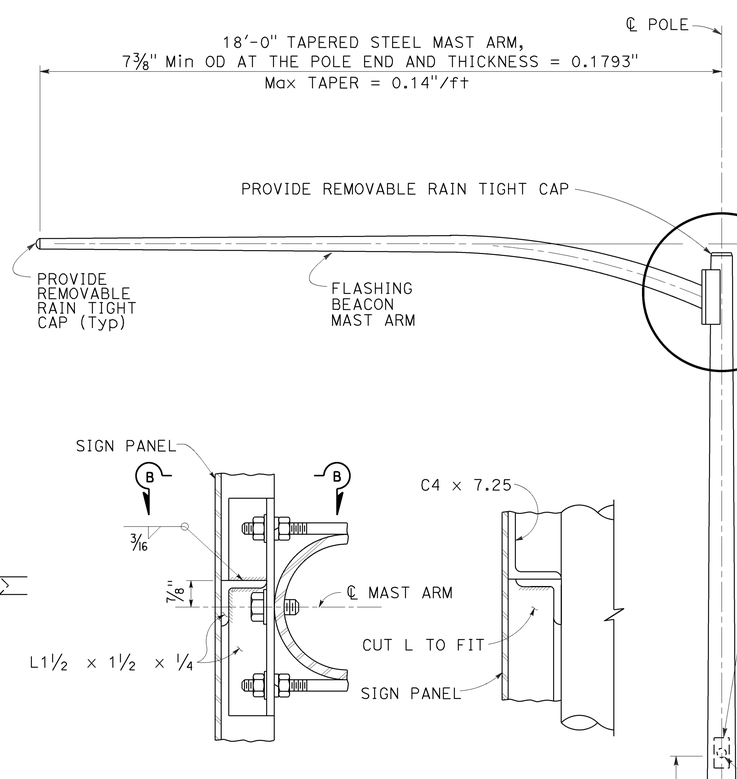


ELEVATION A

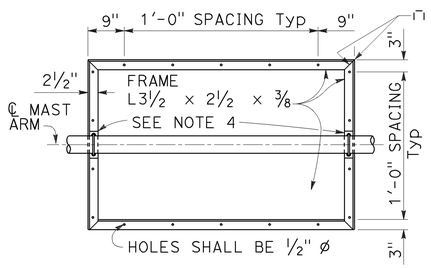


TYPE 9

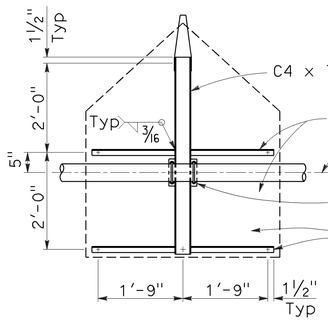


TYPE 9A

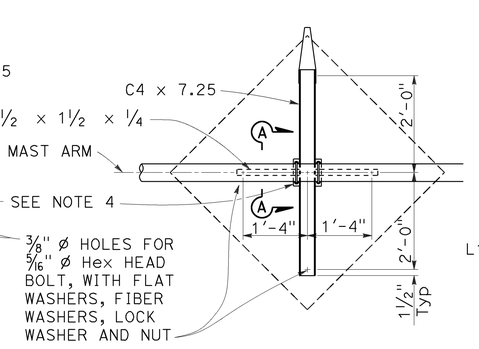


TYPE 9B

FRAME DETAILS
DETAIL A




SECTION A-A




SECTION B-B

TYPE 9B
DETAIL B

NOTES:

1. Handhole shall be located on the downstream side of traffic.
2. Install flashing beacons and sign frame. Flashing beacons shall be MAT mounted on pipe tenon (See Revised Standard Plan RSP ES-7M, Detail S).
3. Vertical clearance shall be 17'-0" minimum between roadway and bottom of signal panel.
4. See Revised Standard Plan RSP ES-7L, Detail B, for sign frame mounting details.
5. For additional notes and details, see Revised Standard Plan RSP ES-7L, Detail B-3.
6. 12" flashing beacon with signal indication, standard visor and 5" x 5" backplate (total 2).

STATE OF CALIFORNIA
DEPARTMENT OF TRANSPORTATION

# ELECTRICAL SYSTEMS (FLASHING BEACON WITH TYPE 9, 9A AND 9B SIGN)

NO SCALE

RSP ES-7K DATED APRIL 15, 2016 SUPERSEDES RSP ES-7K DATED OCTOBER 30, 2015 AND STANDARD PLAN ES-7K DATED MAY 20, 2011 - PAGE 472 OF THE STANDARD PLANS BOOK DATED 2010.

**REVISED STANDARD PLAN RSP ES-7K**

1-22-16

| Dist | COUNTY | ROUTE | POST MILES TOTAL PROJECT | SHEET No. | TOTAL SHEETS |
|---|---|---|---|---|---|
| 06 | Tul | 65 | R15.1/18.0 | 313 | 324 |

REGISTERED CIVIL ENGINEER

April 15, 2016
PLANS APPROVAL DATE

REGISTERED PROFESSIONAL ENGINEER
Stanley P. Johnson
No. C57793
Exp. 3-31-18
CIVIL
STATE OF CALIFORNIA

*THE STATE OF CALIFORNIA OR ITS OFFICERS OR AGENTS SHALL NOT BE RESPONSIBLE FOR THE ACCURACY OR COMPLETENESS OF SCANNED COPIES OF THIS PLAN SHEET.*

TO ACCOMPANY PLANS DATED 6-20-16

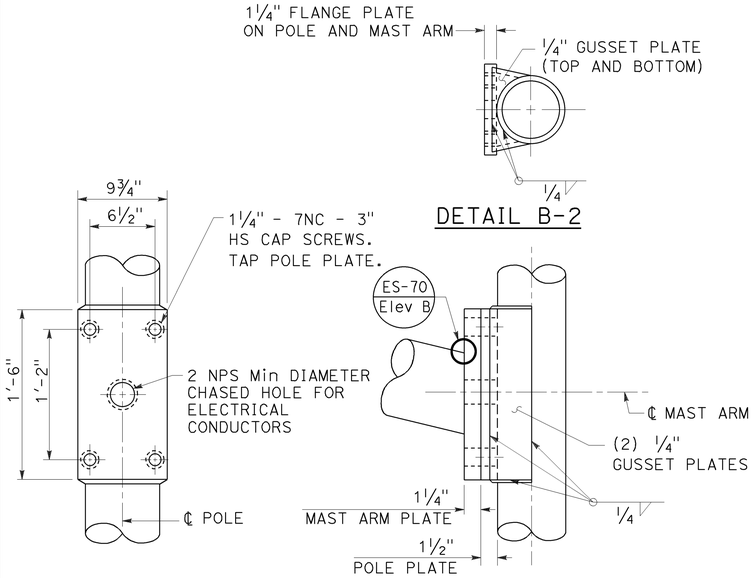


DETAIL B-2

FLASHING BEACON MAST ARM CONNECTION DETAILS

DETAIL B-1

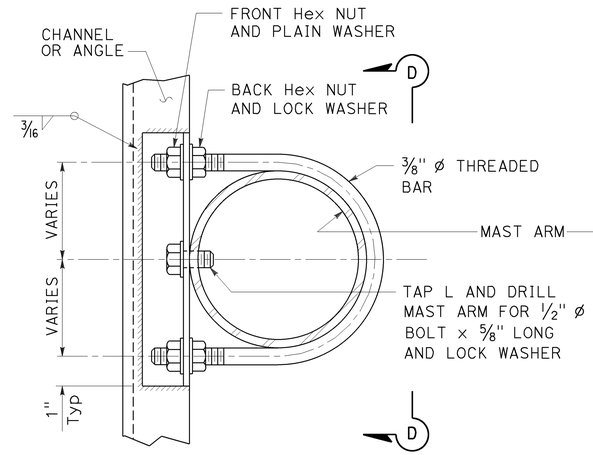


DETAIL B-3

NOTE: Tighten front Hex nuts first, then tighten back Hex nuts.

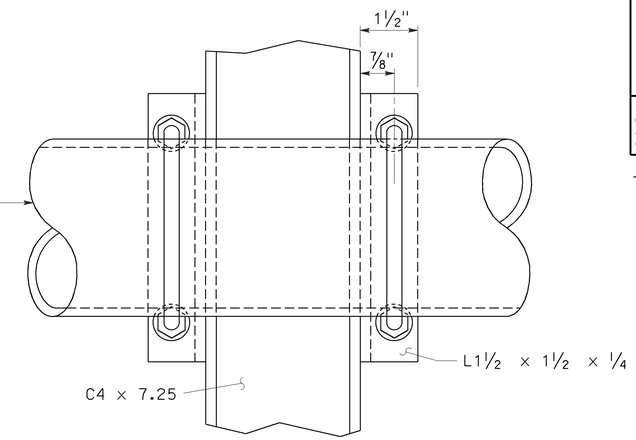


VIEW D-D

SIGN FRAME MOUNTING DETAILS

All types

DETAIL B

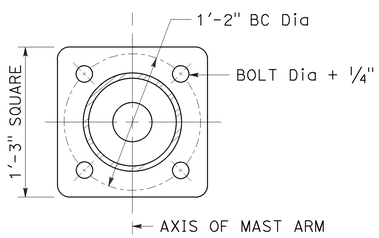


PLAN

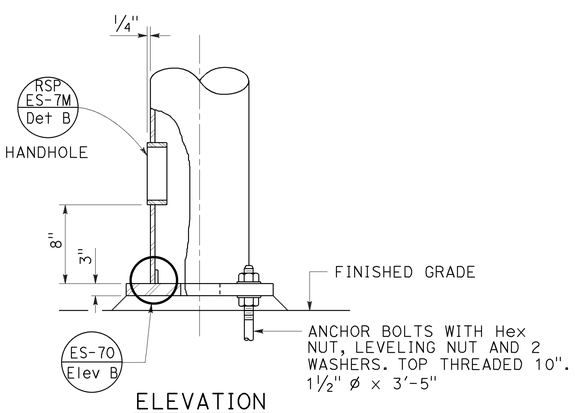


ELEVATION

BASE PLATE AND ANCHORAGE DETAIL

DETAIL C

STATE OF CALIFORNIA
DEPARTMENT OF TRANSPORTATION

# ELECTRICAL SYSTEMS (FLASHING BEACON WITH TYPE 9, 9A AND 9B SIGN)

NO SCALE

RSP ES-7L DATED APRIL 15, 2016 SUPERSEDES RSP ES-7L DATED OCTOBER 30, 2015 AND STANDARD PLAN ES-7L DATED MAY 20, 2011 - PAGE 473 OF THE STANDARD PLANS BOOK DATED 2010.

**REVISED STANDARD PLAN RSP ES-7L**

**2010 REVISED STANDARD PLAN RSP ES-7L**

1-22-16

| Dist | COUNTY | ROUTE | POST MILES TOTAL PROJECT | SHEET No. | TOTAL SHEETS |
|---|---|---|---|---|---|
| 06 | Tul | 65 | R15.1/18.0 | 314 | 324 |

REGISTERED CIVIL ENGINEER

July 15, 2016
PLANS APPROVAL DATE

REGISTERED PROFESSIONAL ENGINEER
Stanley P. Johnson
No. C57793
Exp. 3-31-18
CIVIL
STATE OF CALIFORNIA

*THE STATE OF CALIFORNIA OR ITS OFFICERS OR AGENTS SHALL NOT BE RESPONSIBLE FOR THE ACCURACY OR COMPLETENESS OF SCANNED COPIES OF THIS PLAN SHEET.*

TO ACCOMPANY PLANS DATED 6-20-16

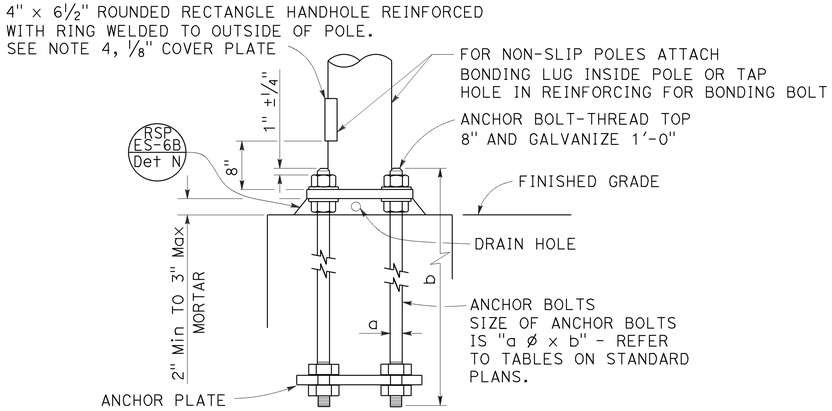


## HANDHOLE AND ANCHORAGE
### DETAIL A

## IDENTIFICATION NUMBER

1. Attach a stamped metal tag with pole's identification number above the handhole. ¼" high number, minimum.
2. Attach a stamped metal tag with mast arm's identification number to the bottom of the signal mast arm near the pole plate. ¼" high number, minimum.

Type — Load case (Use SL for special load case) — Design wind velocity (mph) — Signal mast arm length (ft) {Near handhole: Maximum signal mast arm length for pole type; Near pole plate: Installed signal mast arm length} — Standard plan year — Only for poles or mast arms using Detail F — Only for poles or mast arms using RSP ES-7D

26A - 3 - 100 - 45 - 10 - F or FB

## SAMPLE IDENTIFICATION NUMBER

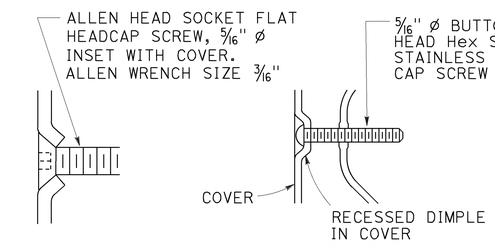


## TYPICAL DETAIL
### DETAIL B-1

## ALTERNATIVE DETAIL
### DETAIL B-2

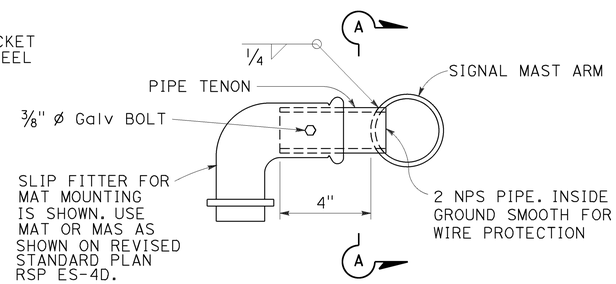


## SIDE TENON
### DETAIL S-1

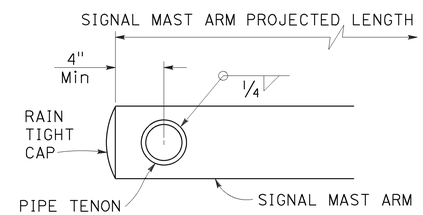


## SECTION A-A

## PIPE TENONS
### DETAIL S

## NOTES:

1. Provide a Hex nut, leveling nut and 2 washers for each bolt.
2. Luminaire mast arms shall be round, tapered steel tubes, taper of 0.1375" to 0.143-inch per foot with an end section 2⅜" OD for mounting hardware. Extensions of 2 NPS Standard pipe and 7" long may be used at the option of the manufacturer. When low pressure sodium luminaires are required, the extension shall be 1'-3".
3. Signal mast arms shall be round, tapered steel tubes, maximum taper 0.143-inch per foot.
4. Handhole reinforcement ring shall be ¼" x 2" for 0.1196" to 0.2391" thick poles, ⅜" x 2" for 0.3125" to 0.375" thick poles.
5. Handholes shall be located on the downstream side of traffic.
6. Detail F, fatigue resistant weld, is required at socket welded signal mast arm plate and pole base plate.
7. Cap screws shall be tightened by the turn-of-nut method ⅓ turn from a snug tight condition. No washer will be required.
8. Outside diameter, wall thickness, and corresponding section properties of poles and mast arms as shown in the Standard Plans are minimums. Unless otherwise specified, alternative sections shall require approval by the Engineer.
9. Design: AASHTO Standard Specifications for Structural Support for Highway Signs, Luminaires, and Traffic Signals, 6th Edition. Basic Wind Speed = 100 mph (3 seconds gust). Yearly Mean Wind Velocity = 15.6 mph.
10. Materials (Structural steel):
    fy = 55,000 psi (tapered steel tube and anchor bolts)
    fy = 50,000 psi (unless otherwise noted)
11. Materials (Reinforced concrete):
    f'c = 3,625 psi
    fy = 60,000 psi

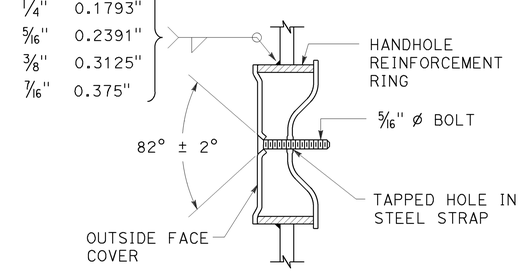


## TAMPER RESISTANT HANDHOLE COVER
### DETAIL B

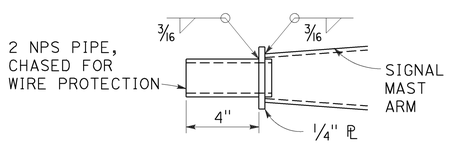


## TIP TENON
### DETAIL TL

This detail supersedes Detail S when so designated

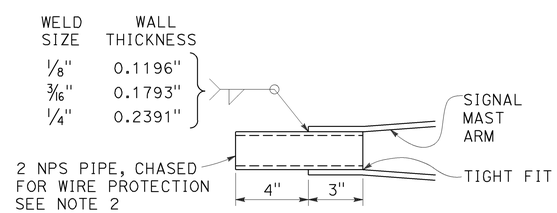


## TIP TENON
### DETAIL TS

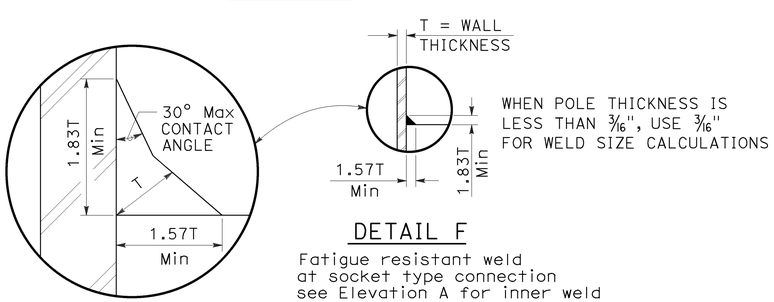


## DETAIL F

Fatigue resistant weld at socket type connection see Elevation A for inner weld

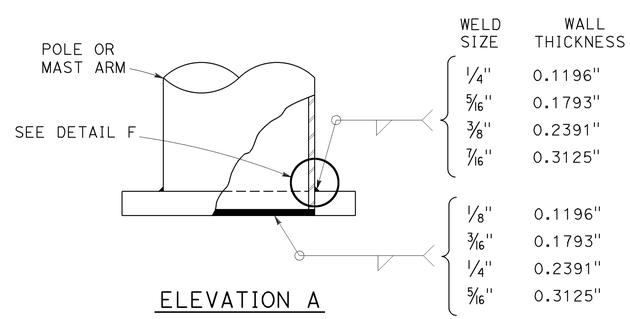


## ELEVATION A

STATE OF CALIFORNIA
DEPARTMENT OF TRANSPORTATION

# ELECTRICAL SYSTEMS (SIGNAL AND LIGHTING STANDARD, DETAIL No. 1)

NO SCALE

RSP ES-7M DATED JULY 15, 2016 SUPERSEDES RSP ES-7M DATED OCTOBER 30, 2015 AND STANDARD PLAN ES-7M DATED MAY 20, 2011 - PAGE 474 OF THE STANDARD PLANS BOOK DATED 2010.

**REVISED STANDARD PLAN RSP ES-7M**

**2010 REVISED STANDARD PLAN RSP ES-7M**

6-20-16

| Dist | COUNTY | ROUTE | POST MILES TOTAL PROJECT | SHEET No. | TOTAL SHEETS |
|---|---|---|---|---|---|
| 06 | Tul | 65 | R15.1/18.0 | 315 | 324 |

REGISTERED CIVIL ENGINEER

July 15, 2016
PLANS APPROVAL DATE

REGISTERED PROFESSIONAL ENGINEER
Stanley P. Johnson
No. C57793
Exp. 3-31-18
CIVIL
STATE OF CALIFORNIA

*THE STATE OF CALIFORNIA OR ITS OFFICERS OR AGENTS SHALL NOT BE RESPONSIBLE FOR THE ACCURACY OR COMPLETENESS OF SCANNED COPIES OF THIS PLAN SHEET.*

TO ACCOMPANY PLANS DATED 6-20-16

**2010 REVISED STANDARD PLAN RSP ES-7N**

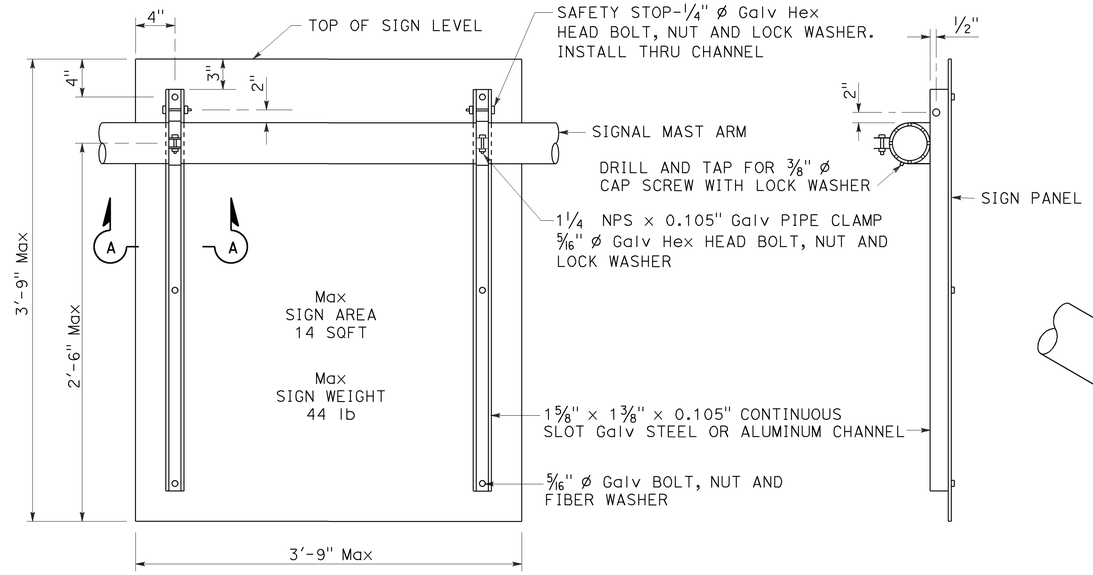


REAR VIEW

SIDE VIEW

## SIGN MOUNTING DETAILS
DETAIL U

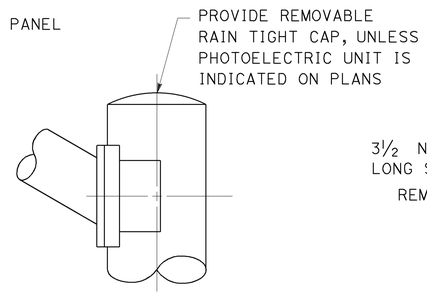


STANDARD TOP
DETAIL B-1

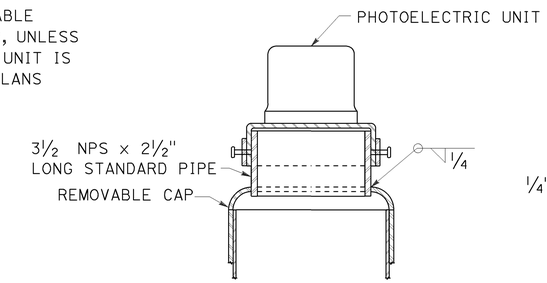


MOUNTING ADAPTER FOR
PHOTOELECTRIC UNIT
DETAIL B-2

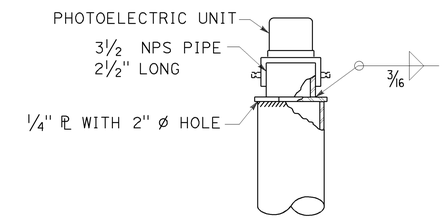


ALTERNATIVE
MOUNTING ADAPTER
DETAIL B-3

## POLE TOP DETAILS
DETAIL B

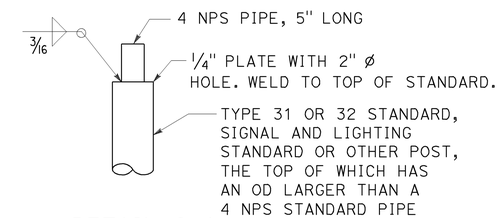


DETAIL C-1

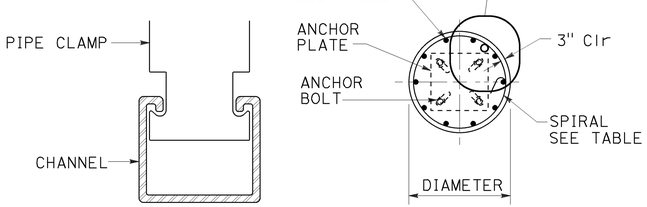


SECTION A-A

SECTION B-B

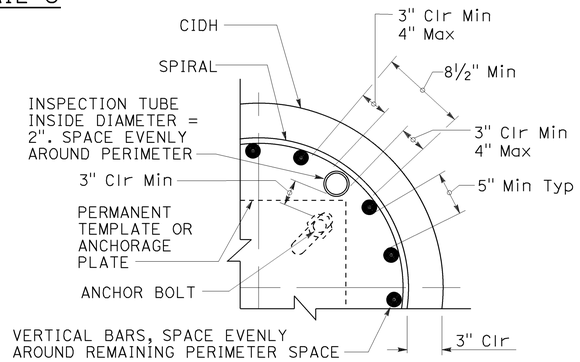


| CIDH REINFORCING AND INSPECTION TUBE SCHEDULE | | | |
|---|---|---|---|
| CIDH DIAMETER | VERTICAL BARS | SPIRAL | INSPECTION TUBE |
| 2 ft | 8-#5 | #4 AT 6 | 2 |
| 2.5 ft | 10-#6 | | 4* |
| 3 ft | 12-#7 | #5 AT 6 | |
| 3.5 ft | 14-#8 | | 4 |
| 4 ft | 18-#9 | 2-#4 AT 7 | 5 |
| 4.5 ft | 18-#9 | 2-#5 AT 7 | 5 |
| 5 ft | 22-#10 | 2-#5 AT 7 | 6 |
| 6 ft | 26-#11 | 2-#6 AT 7 | 7 |

* FOR SLIP BASE VERSIONS WITH 3 ANCHOR BOLTS USE 3 INSPECTION TUBES.

## INSPECTION TUBE PLACEMENT
DETAIL I

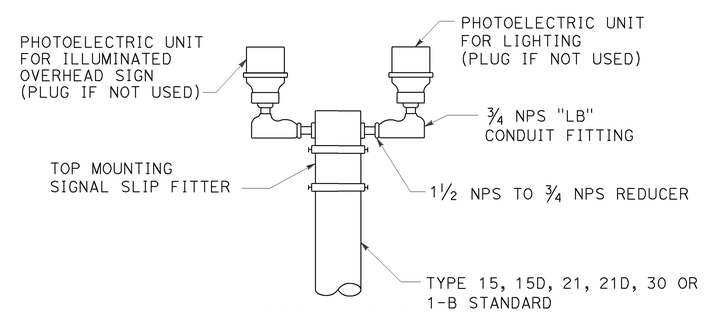


DETAIL C-2

## DUAL PHOTOELECTRIC UNIT MOUNTING DETAIL
DETAIL C

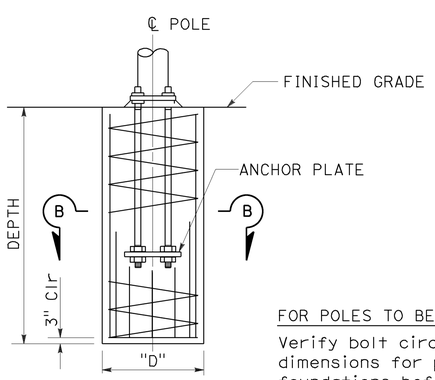


ELEVATION

FOR POLES TO BE INSTALLED ON EXISTING FOUNDATION:

Verify bolt circles, anchor bolt sizes and dependent dimensions for poles to be installed on existing foundations before fabricating the poles.

## CAST-IN-DRILLED-HOLE PILE FOUNDATION, REINFORCED PILE
DETAIL A

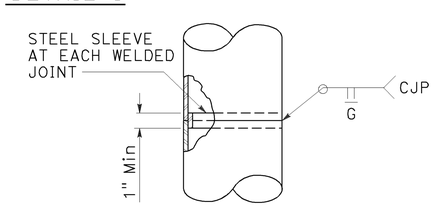


FOR UNIFORM TUBE THICKNESS
DETAIL T-1

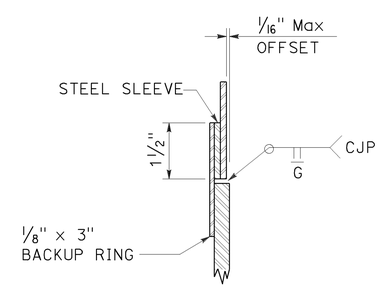


AT TUBE THICKNESS CHANGE
DETAIL T-2

## POLE SPLICES
DETAIL T

STATE OF CALIFORNIA
DEPARTMENT OF TRANSPORTATION

# ELECTRICAL SYSTEMS (SIGNAL AND LIGHTING STANDARD, DETAIL No. 2)

NO SCALE

RSP ES-7N DATED JULY 15, 2016 SUPERSEDES RSP ES-7N DATED OCTOBER 30, 2015 AND STANDARD PLAN ES-7N DATED MAY 20, 2011 - PAGE 475 OF THE STANDARD PLANS BOOK DATED 2010.

**REVISED STANDARD PLAN RSP ES-7N**

6-20-16

| DIST | COUNTY | ROUTE | POST MILES TOTAL PROJECT | SHEET NO. | TOTAL SHEETS |
|---|---|---|---|---|---|
| 06 | Tul | 65 | R15.1/18.0 | 316 | 324 |

Theresa Gabriel
REGISTERED ELECTRICAL ENGINEER

April 15, 2016
PLANS APPROVAL DATE

REGISTERED PROFESSIONAL ENGINEER
Theresa Aziz Gabriel
No. E15129
Exp. 6-30-16
ELECTRICAL
STATE OF CALIFORNIA

*THE STATE OF CALIFORNIA OR ITS OFFICERS OR AGENTS SHALL NOT BE RESPONSIBLE FOR THE ACCURACY OR COMPLETENESS OF SCANNED COPIES OF THIS PLAN SHEET.*

TO ACCOMPANY PLANS DATED 6-20-16

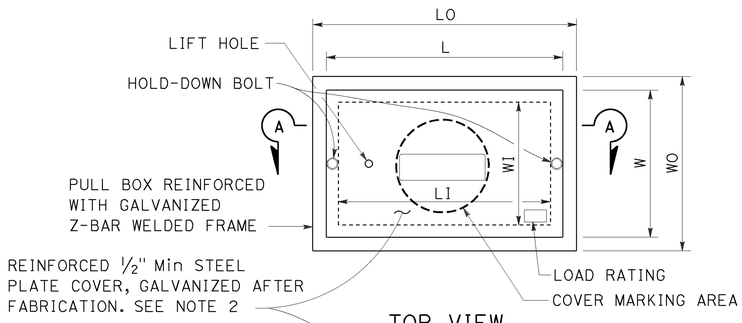


TOP VIEW

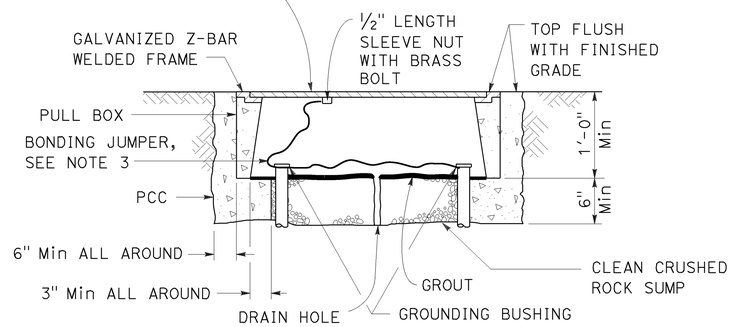


SECTION A-A

## No. 3½(T), No. 5(T) AND No. 6(T) TRAFFIC PULL BOX

## NOTES:

1. Traffic pull box shall be provided with steel cover and special concrete footing. Steel cover shall have embossed non-skid pattern.
2. Steel reinforcing shall be as regularly used in the standard products of the respective manufacturer.
3. Bonding jumper for metal covers shall be 3' long, minimum.
4. The nominal dimensions of the opening in which the cover sets shall be the same as the cover dimensions except the length and width dimensions shall be ⅛" greater.
5. Covers and boxes shall be interchangeable with California standard male and female gages. When interchanged with a standard male or female gage, the top surfaces shall be flush within ⅛".

DIMENSION TABLE

| PULL BOX | PULL BOX | | | | | | COVER | |
|---|---|---|---|---|---|---|---|---|
| | MINIMUM * THICKNESS | MINIMUM DEPTH BOX AND EXTENSION | LO | LI | WO | WI | L ** | W ** |
| No. 3½(T) | 1½" | 1'-0" | 1'-10" - 1'-11" | 1'-5" - 1'-6½" | 1'-3" - 1'-4" | 10" - 1'-0" | 1'-8" -1'-8½" | 1'-1" - 1'-2" |
| No. 5(T) | 1¾" | 1'-0" | 2'-5" - 2'-6" | 2'-0" - 2'-1" | 1'-6" - 1'-7" | 1'-1" - 1'-2" | 2'-3" - 2'-3½" | 1'-4" - 1'-4½" |
| No. 6(T) | 2" | 1'-0" | 2'-11" - 3'-1" | 2'-6" - 2'-7" | 1'-10" - 2'-0" | 1'-5" - 1'-6" | 2'-9" - 2'-9½" | 1'-8" - 1'-8½" |

* EXCLUDING CONDUIT WEB ** TOP DIMENSION

STATE OF CALIFORNIA
DEPARTMENT OF TRANSPORTATION

# ELECTRICAL SYSTEMS (TRAFFIC PULL BOX)

NO SCALE

RSP ES-8B DATED APRIL 15, 2016 SUPERSEDES RSP ES-8B DATED OCTOBER 30, 2015 AND RSP ES-8B DATED JULY 19, 2013 AND RSP ES-8B DATED JANUARY 20, 2012 THAT SUPPLEMENTS THE STANDARD PLANS BOOK DATED 2010.

**REVISED STANDARD PLAN RSP ES-8B**

**2010 REVISED STANDARD PLAN RSP ES-8B**

1-22-16

| Dist | COUNTY | ROUTE | POST MILES TOTAL PROJECT | SHEET No. | TOTAL SHEETS |
|---|---|---|---|---|---|
| 06 | Tul | 65 | R15.1/18.0 | 317 | 324 |

Theresa Gabriel
REGISTERED ELECTRICAL ENGINEER

October 30, 2015
PLANS APPROVAL DATE

REGISTERED PROFESSIONAL ENGINEER
Theresa Aziz Gabriel
No. E15129
Exp. 6-30-16
ELECTRICAL
STATE OF CALIFORNIA

*THE STATE OF CALIFORNIA OR ITS OFFICERS OR AGENTS SHALL NOT BE RESPONSIBLE FOR THE ACCURACY OR COMPLETENESS OF SCANNED COPIES OF THIS PLAN SHEET.*

TO ACCOMPANY PLANS DATED 6-20-16

**NOTE:**

Curves represent the minimum footcandle (FC).

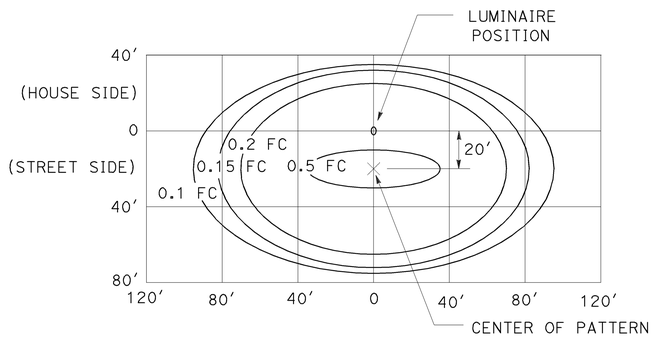


LED LUMINAIRE 165 W
34′ Mounting Height

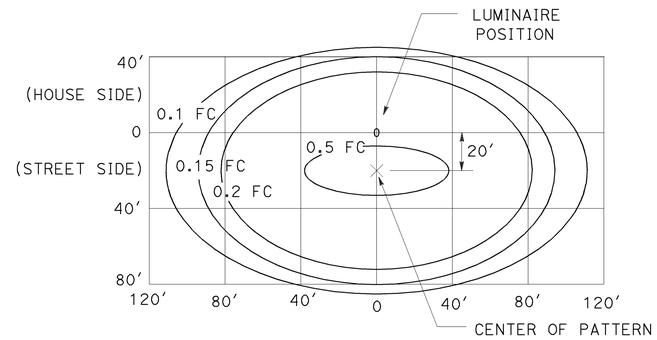


LED LUMINAIRE 235 W
40′ Mounting Height

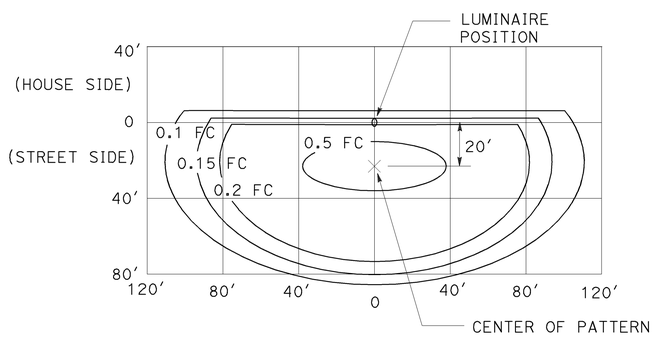


LED LUMINAIRE 235 W
40′ Mounting Height
with back side control

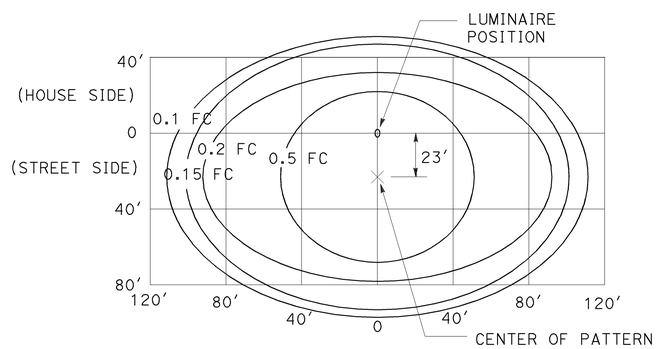


LED LUMINAIRE 300 W
40′ Mounting Height

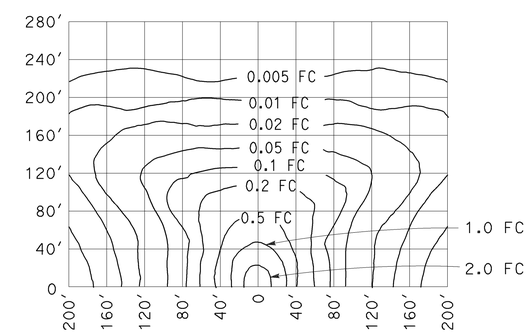


LOW-PRESSURE SODIUM LUMINAIRE 180 W
40′ Mounting Height
Lamp operated at 33,000 lm

STATE OF CALIFORNIA
DEPARTMENT OF TRANSPORTATION

# ELECTRICAL SYSTEMS (ISOFOOTCANDLE CURVES)

NO SCALE

RSP ES-10A DATED OCTOBER 30, 2015 SUPERSEDES RSP ES-10A DATED JULY 19, 2013 THAT SUPPLEMENTS THE STANDARD PLANS BOOK DATED 2010.

**REVISED STANDARD PLAN RSP ES-10A**

**2010 REVISED STANDARD PLAN RSP ES-10A**

9-29-15

| Dist | COUNTY | ROUTE | POST MILES TOTAL PROJECT | SHEET No. | TOTAL SHEETS |
|---|---|---|---|---|---|
| 06 | Tul | 65 | R15.1/18.0 | 318 | 324 |

REGISTERED CIVIL ENGINEER

July 15, 2016
PLANS APPROVAL DATE

REGISTERED PROFESSIONAL ENGINEER
Stanley P. Johnson
No. C57793
Exp. 3-31-18
CIVIL
STATE OF CALIFORNIA

*THE STATE OF CALIFORNIA OR ITS OFFICERS OR AGENTS SHALL NOT BE RESPONSIBLE FOR THE ACCURACY OR COMPLETENESS OF SCANNED COPIES OF THIS PLAN SHEET.*

TO ACCOMPANY PLANS DATED 6-20-16

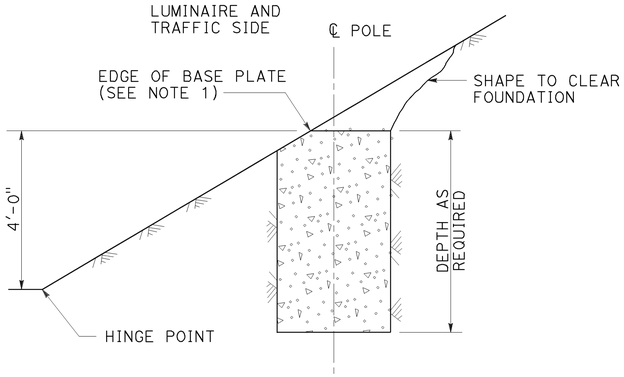


CUT SLOPES
STEEPER THAN 4:1,
LESS THAN 2:1
DETAIL A-1
See Note 2 and 3

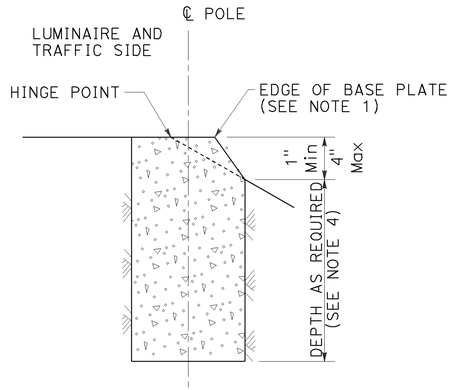


FILL SLOPES
STEEPER THAN 4:1,
LESS THAN 2:1
DETAIL A-2
See Note 2 and 3

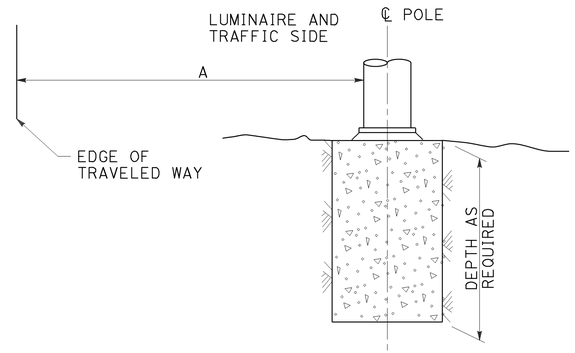


FLAT SECTIONS, CUT OR FILL SLOPES
4:1 OR FLATTER
DETAIL A-3
See Note 2

| STANDARD TYPE | SETBACK (DIMENSION A) |
|---|---|
| 32 | 30'-0" (Min) |
| 31 | 20'-0" (Min) |
| 15, 15D, 15-SB, 21, 21D, 30 | ARM LENGTH (Min) |

FOUNDATIONS ADJACENT TO ALL ROADWAYS EXCEPT
IN SIDEWALK, MEDIAN AND ISLAND AREAS
DETAIL A

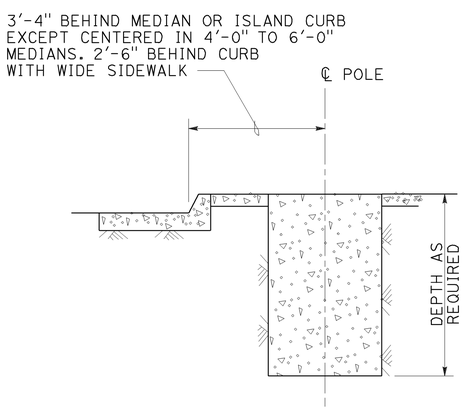


MEDIAN, ISLAND
OR WIDE SIDEWALK
DETAIL B-1
7' Wide and wider

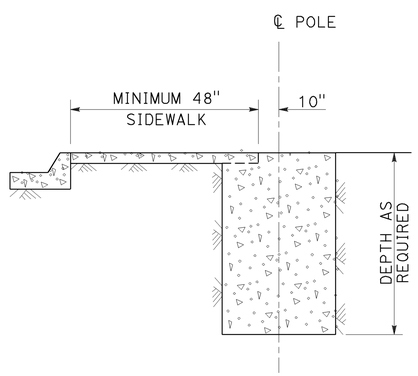


NARROW SIDEWALK
DETAIL B-2
Less than 7' wide

FOUNDATIONS IN SIDEWALK, MEDIAN AND ISLAND AREAS
DETAIL B

NOTES:

1. Where a portion of the foundation is above grade, the top edges shall have a 1" chamfer.
2. Slopes shall be horizontal to vertical ratio (Horizontal : Vertical).
3. Horizontal setbacks on cut and fill slopes steeper than 4:1 shall not exceed the distance shown for flat sections.
4. CIDH embedment depth shall be increased beyond standard depths by the diameter of the CIDH.

STATE OF CALIFORNIA
DEPARTMENT OF TRANSPORTATION

# ELECTRICAL SYSTEMS (FOUNDATION INSTALLATIONS)

NO SCALE

RSP ES-11 DATED JULY 15, 2016 SUPERSEDES RSP ES-11 DATED JULY 19, 2013 AND STANDARD PLAN ES-11 DATED MAY 20, 2011 - PAGE 488 OF THE STANDARD PLANS BOOK DATED 2010.

**REVISED STANDARD PLAN RSP ES-11**

**2010 REVISED STANDARD PLAN RSP ES-11**

| Dist | COUNTY | ROUTE | POST MILES TOTAL PROJECT | SHEET No. | TOTAL SHEETS |
|---|---|---|---|---|---|
| 06 | Tul | 65 | R15.1/18.0 | 319 | 324 |

Theresa Gabriel
REGISTERED ELECTRICAL ENGINEER

April 15, 2016
PLANS APPROVAL DATE

REGISTERED PROFESSIONAL ENGINEER
Theresa Aziz Gabriel
No. E15129
Exp. 6-30-16
ELECTRICAL
STATE OF CALIFORNIA

*THE STATE OF CALIFORNIA OR ITS OFFICERS OR AGENTS SHALL NOT BE RESPONSIBLE FOR THE ACCURACY OR COMPLETENESS OF SCANNED COPIES OF THIS PLAN SHEET.*

TO ACCOMPANY PLANS DATED 6-20-16

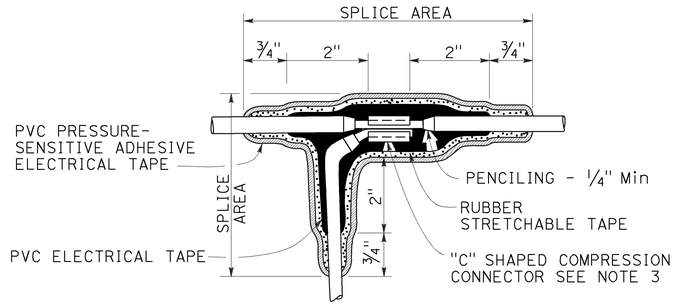


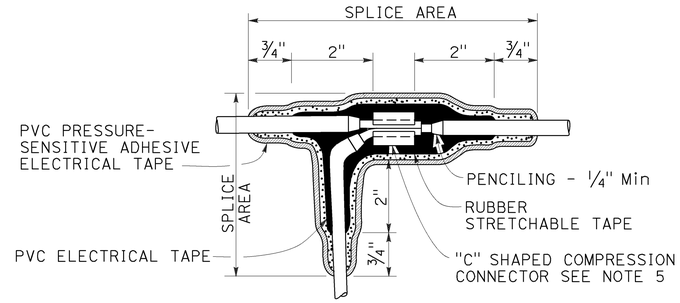


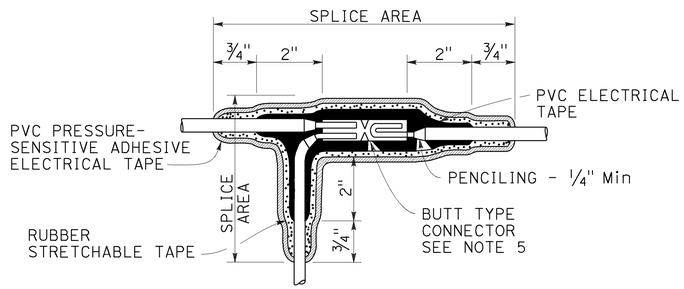


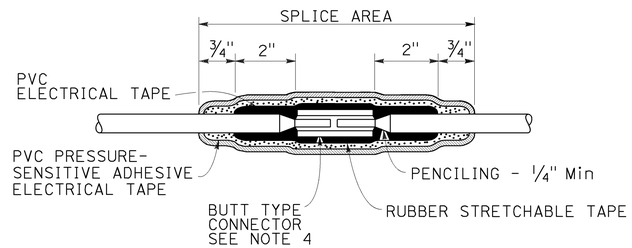


## TYPICAL SPLICE INSULATION METHOD B

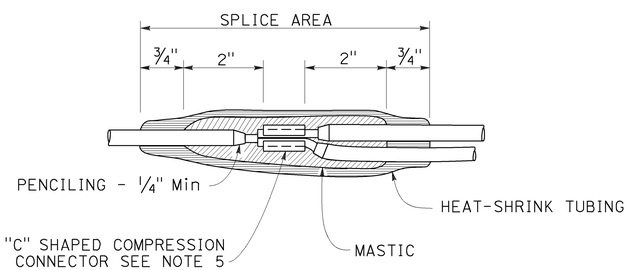


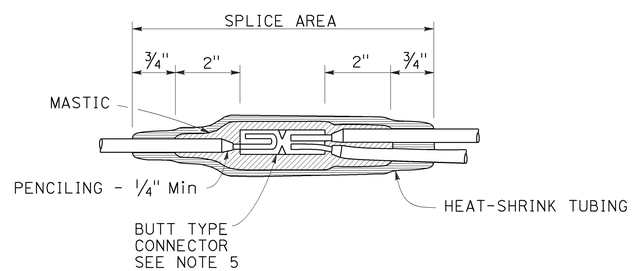


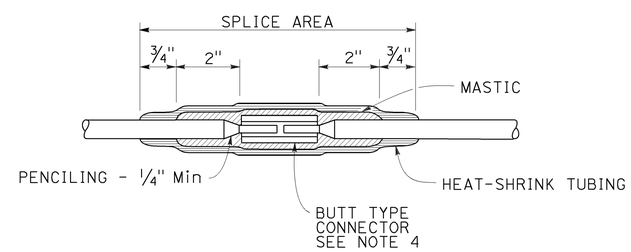


## TYPICAL SPLICE INSULATION HEAT-SHRINK TUBING

## NOTES:

1. Dimensions are minimum.
2. Rubber tapes shall be rolled after application.
3. Between 1 free-end and 1 through conductor.
4. Between 2 free-end conductors.
5. Between 3 free-end conductors.

STATE OF CALIFORNIA
DEPARTMENT OF TRANSPORTATION

# ELECTRICAL SYSTEMS (SPLICE INSULATION METHODS DETAILS)

NO SCALE

RSP ES-13A DATED APRIL 15, 2016 SUPERSEDES RSP ES-13A DATED OCTOBER 30, 2015 AND STANDARD PLAN ES-13A DATED MAY 20, 2011 - PAGE 491 OF THE STANDARD PLANS BOOK DATED 2010.

**REVISED STANDARD PLAN RSP ES-13A**

**2010 REVISED STANDARD PLAN RSP ES-13A**

1-22-16

| Dist | COUNTY | ROUTE | POST MILES TOTAL PROJECT | SHEET No. | TOTAL SHEETS |
|---|---|---|---|---|---|
| 06 | Tul | 65 | R15.1/18.0 | 320 | 324 |

Theresa Gabriel
REGISTERED ELECTRICAL ENGINEER

April 15, 2016
PLANS APPROVAL DATE

REGISTERED PROFESSIONAL ENGINEER Theresa Aziz Gabriel No. E15129 Exp. 6-30-16 ELECTRICAL STATE OF CALIFORNIA

*THE STATE OF CALIFORNIA OR ITS OFFICERS OR AGENTS SHALL NOT BE RESPONSIBLE FOR THE ACCURACY OR COMPLETENESS OF SCANNED COPIES OF THIS PLAN SHEET.*

TO ACCOMPANY PLANS DATED 6-20-16

| CIRCUIT VOLTAGE | FUSE VOLTAGE RATING | FUSE CURRENT RATING | | | | | | |
|---|---|---|---|---|---|---|---|---|
| | | HPS LAMP BALLAST | | LOW PRESSURE SODIUM BALLAST | INDUCTION SIGN LIGHTING | SINGLE PHASE (TWO WIRE) TRANSFORMERS (PRIMARY SIDE) | | |
| | | 70 W | 100 W | 180 W | 85 W | 1 kVA | 2 kVA | 3 kVA |
| 120 V | 250 V | 5 A | 5 A | 5 A | 5 A | 10 A | 20 A | 30 A |
| 240 V | 250 V | 5 A | 5 A | 5 A | 5 A | 6 A | 10 A | 20 A |
| 480 V | 500-600 V | 5 A | 5 A | 3 A | 1 A (SEE NOTE 2) | 3 A | 6 A | 10 A |

NOTES:

1. Primary lines of multiple ballasts shall be provided with fused connectors. Fuse ratings shall be as noted above.
2. See Revised Standard Plan RSP ES-15D, Type SC3 control.

## FUSE RATINGS FOR FUSED CONNECTORS

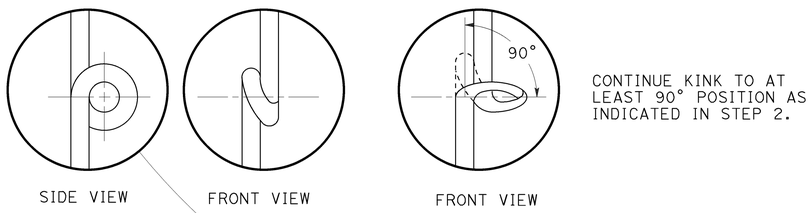


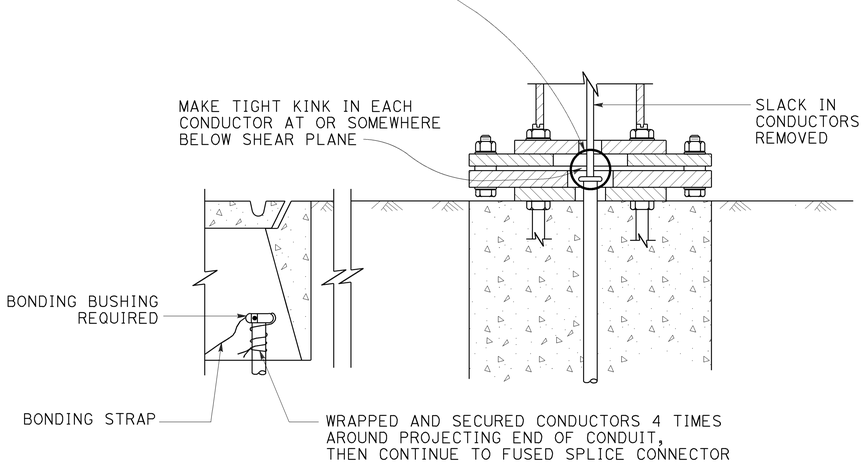


## KINKING DETAIL FOR SLIP BASE STANDARDS

DETAIL A

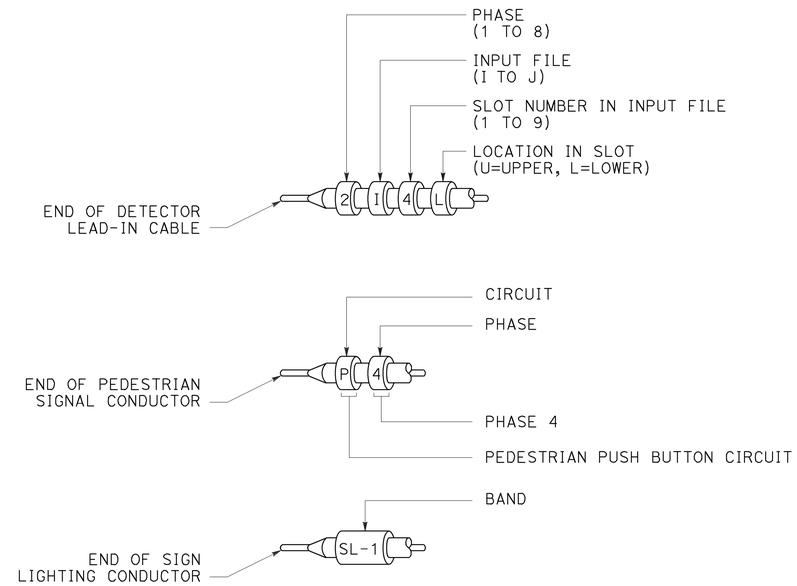


## TYPICAL BANDING DETAILS

DETAIL B

STATE OF CALIFORNIA
DEPARTMENT OF TRANSPORTATION

# ELECTRICAL SYSTEMS (FUSE RATING, KINKING AND BANDING DETAIL)

NO SCALE

RSP ES-13B DATED APRIL 15, 2016 SUPERSEDES STANDARD PLAN ES-13B DATED MAY 20, 2011 - PAGE 492 OF THE STANDARD PLANS BOOK DATED 2010.

**REVISED STANDARD PLAN RSP ES-13B**

**2010 REVISED STANDARD PLAN RSP ES-13B**

1-12-16

| Dist | COUNTY | ROUTE | POST MILES TOTAL PROJECT | SHEET No. | TOTAL SHEETS |
|---|---|---|---|---|---|
| 06 | Tul | 65 | R15.1/18.0 | 321 | 324 |

Theresa Gabriel
REGISTERED ELECTRICAL ENGINEER

April 15, 2016
PLANS APPROVAL DATE

REGISTERED PROFESSIONAL ENGINEER
Theresa Aziz Gabriel
No. E15129
Exp. 6-30-16
ELECTRICAL
STATE OF CALIFORNIA

*THE STATE OF CALIFORNIA OR ITS OFFICERS OR AGENTS SHALL NOT BE RESPONSIBLE FOR THE ACCURACY OR COMPLETENESS OF SCANNED COPIES OF THIS PLAN SHEET.*

TO ACCOMPANY PLANS DATED 6-20-16

**2010 REVISED STANDARD PLAN RSP ES-14B**

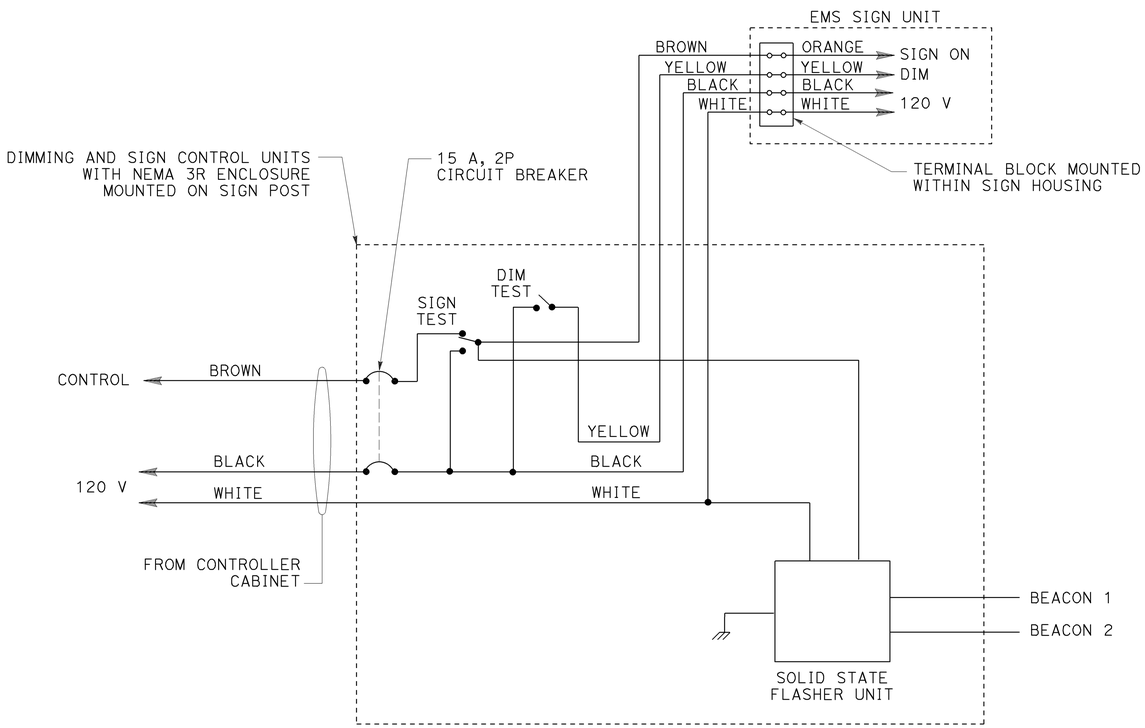


WIRING DIAGRAM
LED EXTINGUISHABLE MESSAGE SIGN
DETAIL A

THE FLASHER SHALL MATE WITH A CINCH-JONES SOCKET S-406-SB OR EQUAL AND CONNECTED AS FOLLOWS:

| PIN | CIRCUIT | PIN | CIRCUIT |
|---|---|---|---|
| 7 | LOAD | 10 | NEUTRAL |
| 8 | LOAD | 11 | LINE |
| 9 | CHASSIS GROUND | 12 | NOT USED |

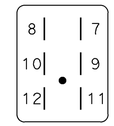


CONNECTOR SOCKET
SOLID STATE FLASHER UNIT

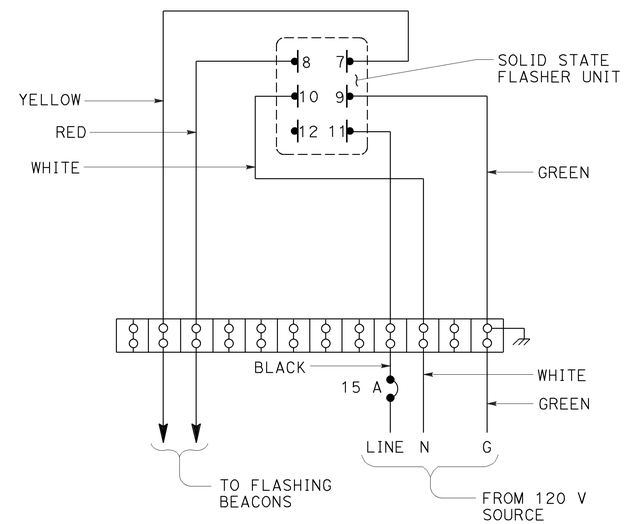


WIRING DIAGRAM
FLASHING BEACON CONTROL ASSEMBLY
DETAIL B

STATE OF CALIFORNIA
DEPARTMENT OF TRANSPORTATION

# ELECTRICAL SYSTEMS (CONTROL ASSEMBLY WIRING DIAGRAMS)

NO SCALE

RSP ES-14B DATED APRIL 15, 2016 SUPERSEDES STANDARD PLAN ES-14B DATED MAY 20, 2011 - PAGE 494 OF THE STANDARD PLANS BOOK DATED 2010.

**REVISED STANDARD PLAN RSP ES-14B**

1-22-16

| Dist | COUNTY | ROUTE | POST MILES TOTAL PROJECT | SHEET No. | TOTAL SHEETS |
|---|---|---|---|---|---|
| 06 | Tul | 65 | R15.1/18.0 | 322 | 324 |

Theresa Gabriel
REGISTERED ELECTRICAL ENGINEER

October 30, 2015
PLANS APPROVAL DATE

REGISTERED PROFESSIONAL ENGINEER Theresa Aziz Gabriel No. E15129 Exp. 6-30-16 ELECTRICAL STATE OF CALIFORNIA

*THE STATE OF CALIFORNIA OR ITS OFFICERS OR AGENTS SHALL NOT BE RESPONSIBLE FOR THE ACCURACY OR COMPLETENESS OF SCANNED COPIES OF THIS PLAN SHEET.*

TO ACCOMPANY PLANS DATED 6-20-16

**2010 REVISED STANDARD PLAN RSP ES-15C**

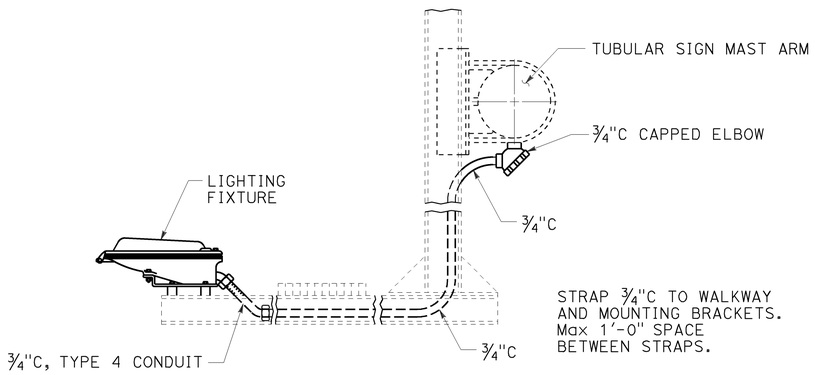


## TYPICAL SIGN ILLUMINATION EQUIPMENT INSTALLATION FOR OVERHEAD SIGNS TUBULAR

DETAIL A

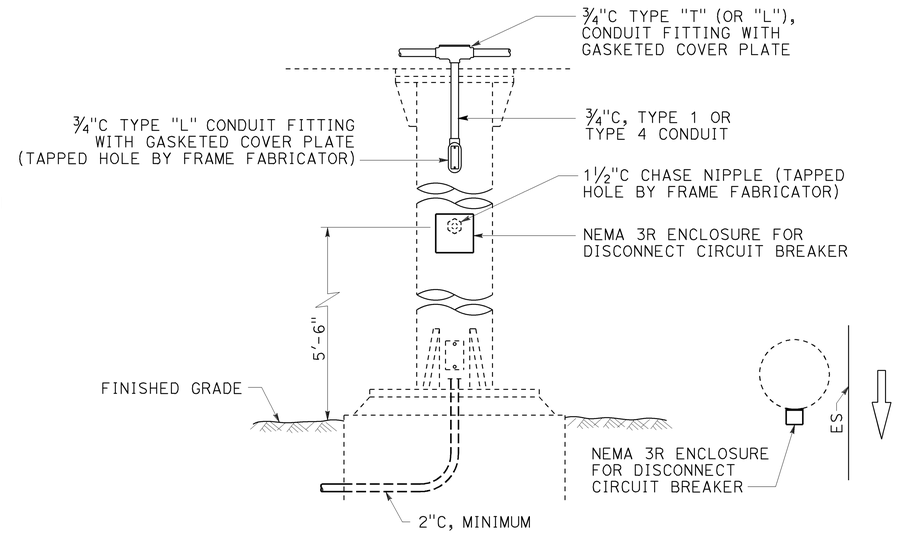


## TYPICAL SIGN ILLUMINATION EQUIPMENT INSTALLATION FOR OVERHEAD SIGNS ROUND POST

DETAIL B

### NOTES:

1. Type 4 conduit shall be secured to the nearest walkway bracket using one-hole galvanized malleable iron or steel straps and brass machine screws tapped into the bracket.
2. See Overhead Signs Standard Plans for overhead signs and frame juncture details for photoelectric unit installation.
3. Enclosures and straps shall be secured by ⅜" maximum size screws.
4. The Contactor and test switch enclosures shall be readily accessible from the sign walkway.

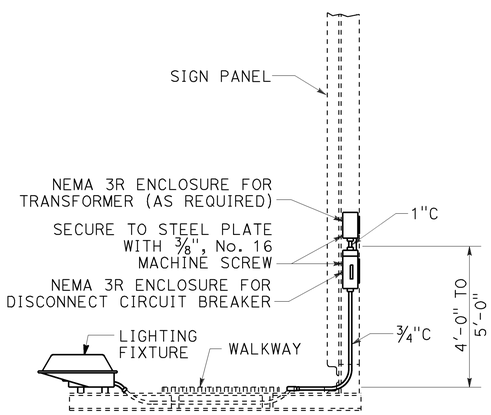


SIDE VIEW

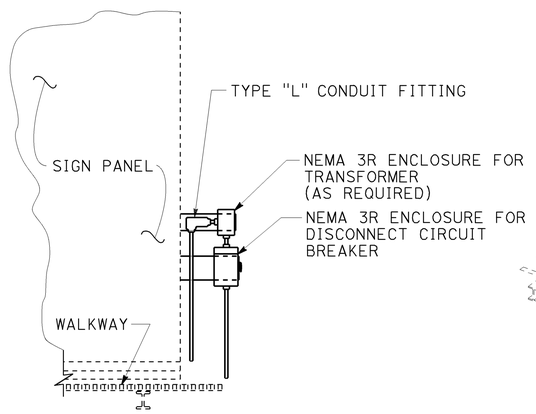


FRONT VIEW

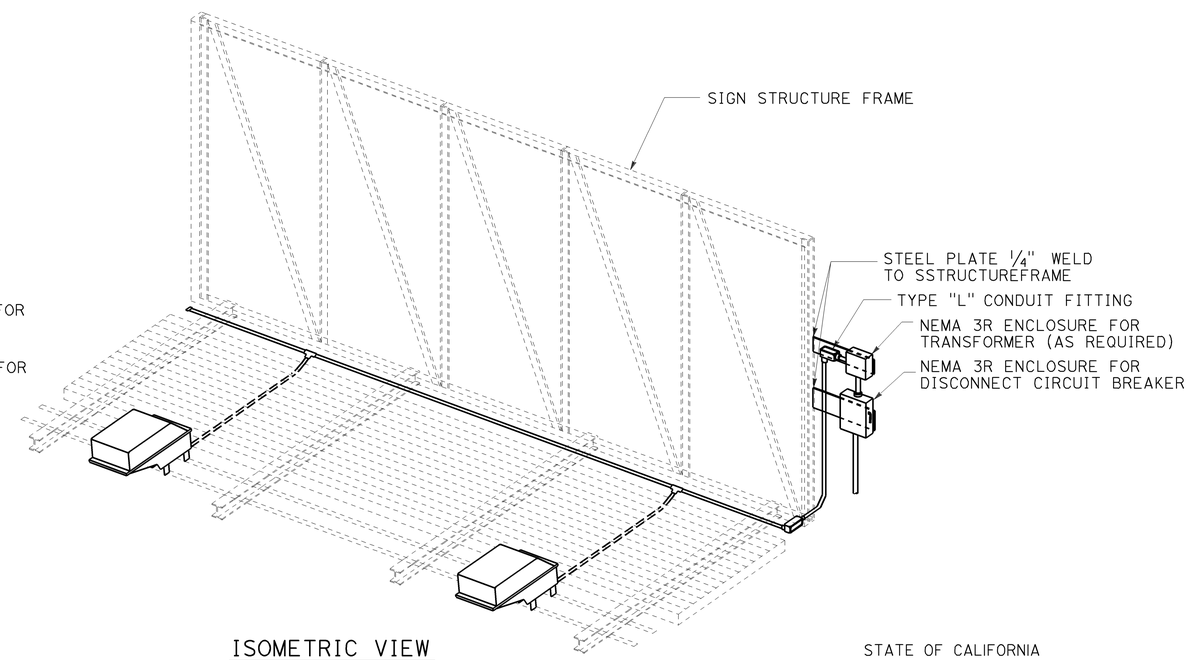


ISOMETRIC VIEW

## TYPICAL SIGN ILLUMINATION EQUIPMENT INSTALLATION FOR OVERHEAD SIGNS BRIDGE MOUNTED

DETAIL C

See Note 4

STATE OF CALIFORNIA
DEPARTMENT OF TRANSPORTATION

# ELECTRICAL SYSTEMS (SIGN ILLUMINATION EQUIPMENT)

NO SCALE

RSP ES-15C DATED OCTOBER 30, 2015 SUPERSEDES STANDARD PLAN ES-15C DATED MAY 20, 2011 - PAGE 498 OF THE STANDARD PLANS BOOK DATED 2010.

**REVISED STANDARD PLAN RSP ES-15C**

8-24-15

| Dist | COUNTY | ROUTE | POST MILES TOTAL PROJECT | SHEET No. | TOTAL SHEETS |
|---|---|---|---|---|---|
| 06 | Tul | 65 | R15.1/18.0 | 323 | 324 |

REGISTERED CIVIL ENGINEER

July 15, 2016
PLANS APPROVAL DATE

REGISTERED PROFESSIONAL ENGINEER
Stanley P. Johnson
No. C57793
Exp. 3-31-18
CIVIL
STATE OF CALIFORNIA

*THE STATE OF CALIFORNIA OR ITS OFFICERS OR AGENTS SHALL NOT BE RESPONSIBLE FOR THE ACCURACY OR COMPLETENESS OF SCANNED COPIES OF THIS PLAN SHEET.*

TO ACCOMPANY PLANS DATED 6-20-16

| POLE TYPE | POLE DATA | | | | BASE PLATE DATA | | | | CIDH | |
|---|---|---|---|---|---|---|---|---|---|---|
| | HEIGHT "h" | Min OD BASE | Min OD TOP | THICKNESS | "C" | THICKNESS | ANCHOR BOLT SIZE | BC = BOLT CIRCLE | Dia | "d" |
| CCTV 25 | 25′ | 7⅜" | 3¾" | 0.1793" | 1′-1" | 1" | 1½" ø x 36" | 11½" | 2′-6" | 7′-0" |
| CCTV 30 | 30′ | 8" | | | 1′-1½" | | | 1′-0" | | 7′-6" |
| CCTV 35 | 35′ | 8⅝" | | | 1′-2" | | | 1′-1" | | 8′-0" |
| CCTV 40 | 40′ | 9⅜" | | | 1′-3" | | | 1′-1½" | | 8′-6" |
| CCTV 45 | 45′ | 10" | | | | | | 1′-2" | | |

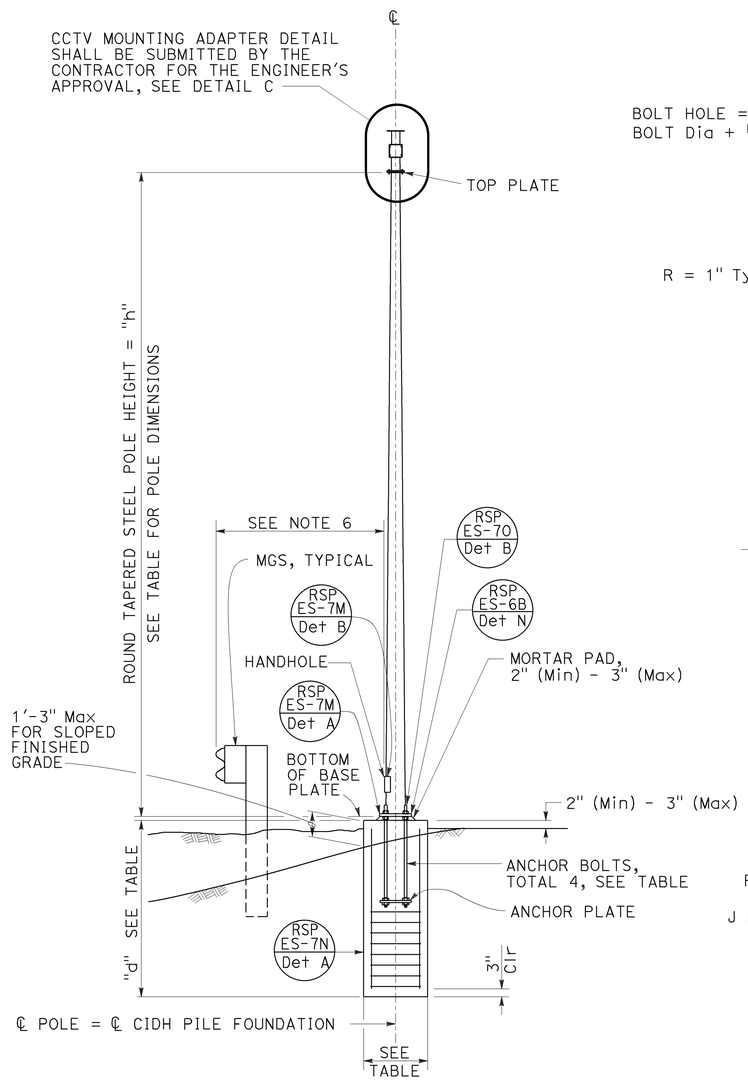


ELEVATION A

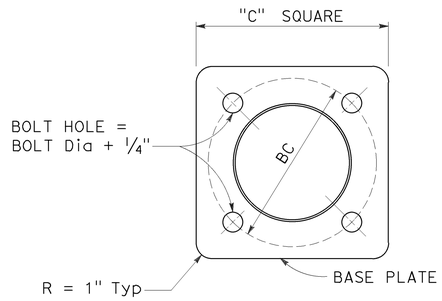


BASE PLATE

DETAIL A

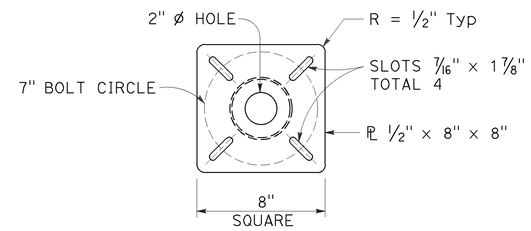


TOP PLATE

DETAIL B

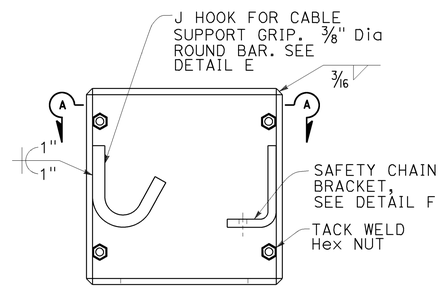


BOX ENCLOSURE

DETAIL D

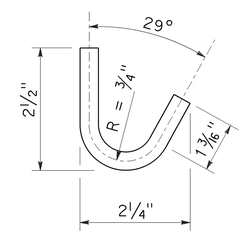


J HOOK

DETAIL E

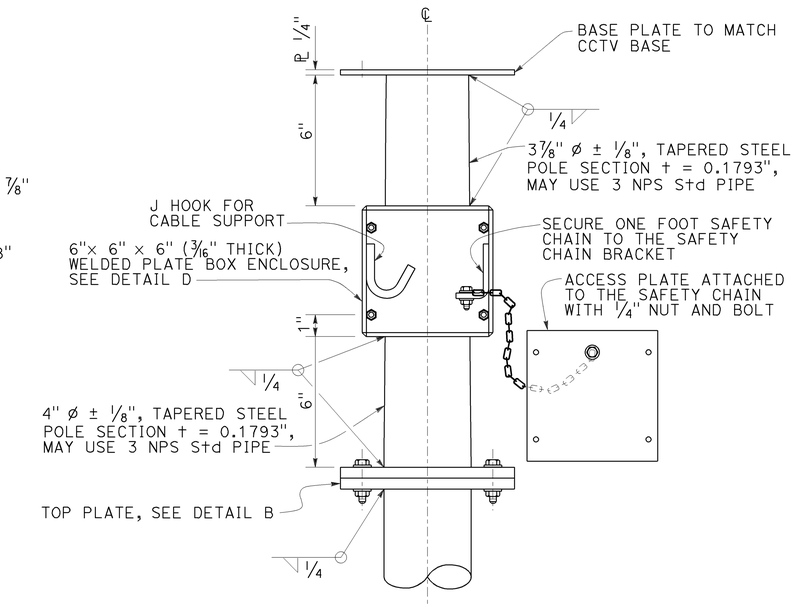


CLOSED CIRCUIT TELEVISION MOUNTING ADAPTER

DETAIL C

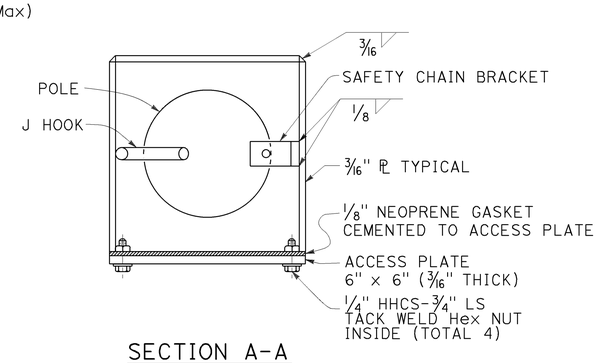


SECTION A-A

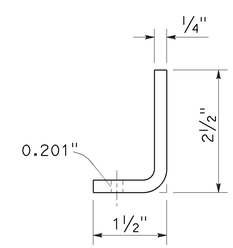


SAFETY CHAIN BRACKET

DETAIL F

NOTES:

1. Verify controlling field dimensions before ordering or fabricating any material.
2. During pole installation, the post shall be raked as necessary with the use of leveling nuts to provide a plumb pole axis.
3. For wind loading see RSP ES-7M.
4. Materials (Structural Steel):
   a. fy = 55,000 psi (tapered steel tube and anchor bolts)
   b. fy = 50,000 psi (unless otherwise noted)
5. Materials (Reinforced Concrete):
   a. f′c = 3,625 psi
   b. fy = 60,000 psi
6. See RSP A77R1 thru RSP A77R8

STATE OF CALIFORNIA
DEPARTMENT OF TRANSPORTATION

# ELECTRICAL SYSTEMS (CLOSED CIRCUIT TELEVISION, 25' TO 45' POLE)

NO SCALE

RSP ES-16B DATED JULY 15, 2016 SUPERSEDES RSP ES-16B DATED OCTOBER 30, 2015 AND STANDARD PLAN ES-16B DATED MAY 20, 2011 - PAGE 501 OF THE STANDARD PLANS BOOK DATED 2010.

**REVISED STANDARD PLAN RSP ES-16B**

**2010 REVISED STANDARD PLAN RSP ES-16B**

| Dist | COUNTY | ROUTE | POST MILES TOTAL PROJECT | SHEET No. | TOTAL SHEETS |
|---|---|---|---|---|---|
| 06 | Tul | 65 | R15.1/18.0 | 324 | 324 |

REGISTERED CIVIL ENGINEER

July 15, 2016
PLANS APPROVAL DATE

REGISTERED PROFESSIONAL ENGINEER
Stanley P. Johnson
No. C57793
Exp. 3-31-18
CIVIL
STATE OF CALIFORNIA

*THE STATE OF CALIFORNIA OR ITS OFFICERS OR AGENTS SHALL NOT BE RESPONSIBLE FOR THE ACCURACY OR COMPLETENESS OF SCANNED COPIES OF THIS PLAN SHEET.*

TO ACCOMPANY PLANS DATED 6-20-16

**2010 REVISED STANDARD PLAN RSP ES-16D**

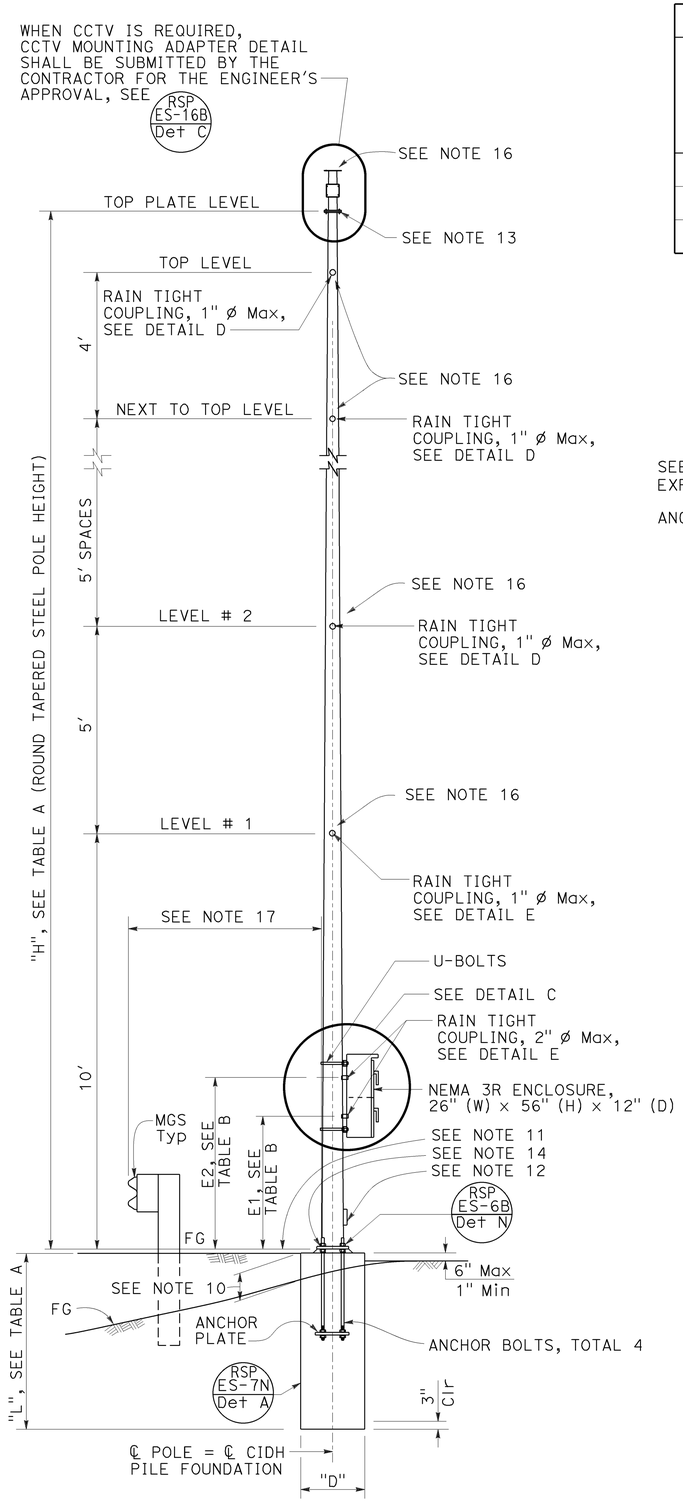


ELEVATION A

| TABLE A | | | | | | | | | | | |
|---|---|---|---|---|---|---|---|---|---|---|---|
| POLE TYPE | POLE DATA | | | | BASE PLATE DATA | | | | CIDH PILE DATA | | |
| | HEIGHT "H" | Min OD | | THICKNESS | "C" | THICKNESS | ANCHOR BOLTS SIZE | BC = BOLT CIRCLE | "D" | "L" | |
| | | BASE | TOP | | | | | | | LEVEL GROUND | UP TO 2:1 |
| VDS 30 | 30' | 8" | 3 7/8" | 0.1793" | 1'-1 1/2" | 1 1/2" | 1 1/2" ø x 3'-0" | 1'-0" | 2'-6" | 6'-0" | 8'-0" |
| VDS 35 | 35' | 8 3/4" | 3 11/16" | 0.1196" | | 2" | | | | 7'-0" | 9'-0" |
| VDS 40 | 40' | 12" | 8 7/8" | 0.1793" | 1'-6" | | | 1'-4" | 3'-0" | 9'-0" | 11'-0" |

| TABLE B | | |
|---|---|---|
| POLE TYPE | COUPLING | |
| | E1(Max) | E2(Max) |
| VDS 30 | 3'-6" | 4'-9" |
| VDS 35 | | |
| VDS 40 | | |

| TABLE C | | |
|---|---|---|
| SPREAD FOOTING | | |
| GROUND | FOOTING SIZE (LENGTH x WIDTH x DEPTH) | REINFORCEMENT TOP & BOTTOM |
| LEVEL | 8'-6" x 8'-6" x 2'-0" | 12 - #5 EW |
| UP TO 2:1 | 10'-0" x 10'-0" x 2'-0" | 15 - #5 EW |

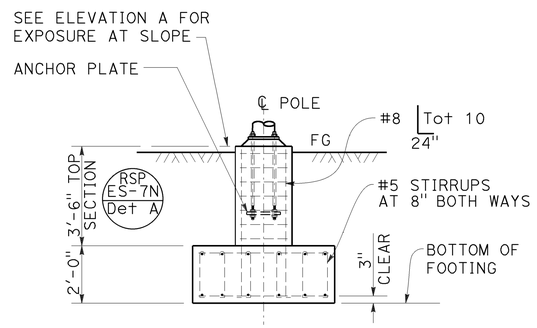


ALTERNATIVE FOOTING

ELEVATION B

| TABLE D - LIMITATION ON ATTACHMENTS * | | |
|---|---|---|
| LOCATION | MAXIMUM TOTAL EPA PER LEVEL (SQUARE FEET) | MAXIMUM TOTAL WEIGHT (lb) |
| LEVEL #1 | 14 | 200 |
| LEVEL #2 | | |
| LEVEL #3 | 10 *** | |
| LEVEL #4 (VDS 35 AND VDS 40 ONLY) | 2.5 | 50 |
| LEVEL #5 (VDS 40 ONLY) | | |
| NEXT TO TOP LEVEL | | |
| TOP LEVEL | | |
| ON TOP PLATE LEVEL ** | | |

* MAXIMUM HORIZONTAL EXTENT BEYOND POLE FACE IS 4 FEET.
** MAXIMUM EXTENT ABOVE TOP PLATE IS 3 FEET.
*** 14 IF LEVEL #1 IS ZERO.

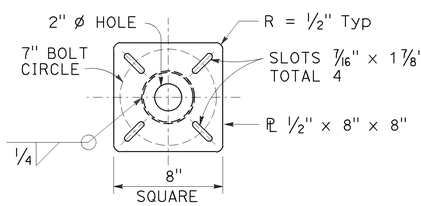


TOP PLATE

DETAIL A

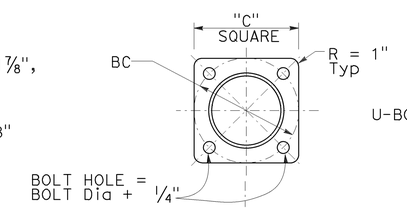


BASE PLATE

DETAIL B

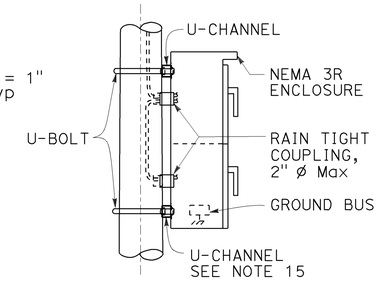


DETAIL C

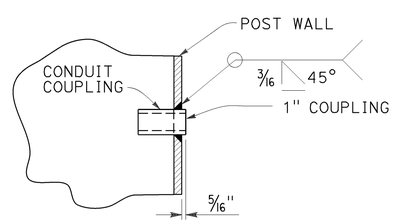


1" COUPLING

DETAIL D

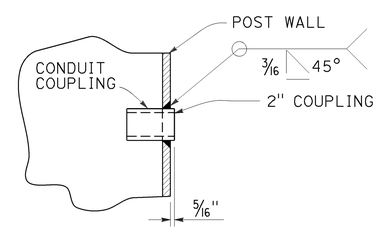


2" COUPLING

DETAIL E

## NOTES:

1. All steel shall be galvanized after fabrication.
2. The foundation shall be treated as level ground condition if the slope inclination is flatter than 4 : 1 (Horizontal : Vertical)
3. For devices mounted and mounting heights, see TABLE B.
4. For wind loading see RSP ES-7M.
5. Materials (Structural Steel):
   a. fy = 55,000 psi (tapered steel tube)
   b. fy = 50,000 psi (unless otherwise noted)
6. Anchor bolts: fy = 55,000 psi
7. Materials (Reinforced Concrete):
   a. f'c = 3,600 psi
   b. fy = 60,000 psi
8. Verify all controlling field dimension before ordering of fabricating any material.
9. When no barriers are used, the NEMA 3R enclosure shall be located on the downstream side and perpendicular to the roadway.

   1'-3" (Max) for sloped finished grade.
11. Bottom of base plate.
12. Handhole. RSP ES-7M Det B / RSP ES-7M Det A
13. Top plate.
    Install a blank flange on the top plate when closed circuit television is not used.
14. RSP ES-7O Elev B
15. U-channel with bracket.
16. Use the manufacturer's Effective Projected Area (EPA) for attachments. Assign attachments to nearest level and sum each level, see Table D for limitations.
17. See RSP A77R1 thru RSP A77R8

STATE OF CALIFORNIA
DEPARTMENT OF TRANSPORTATION

# ELECTRICAL SYSTEMS (CLOSED CIRCUIT TELEVISION WITH VEHICLE DETECTION SYSTEM, 30' TO 40' POLE)

NO SCALE

RSP ES-16D DATED JULY 15, 2016 SUPERSEDES RSP ES-16D DATED OCTOBER 30, 2015 AND RSP ES-16D DATED JULY 19, 2013 AND STANDARD PLAN ES-16D DATED MAY 20, 2011 - PAGE 503 OF THE STANDARD PLANS BOOK DATED 2010.

**REVISED STANDARD PLAN RSP ES-16D**

6-29-16