| DIST | COUNTY | ROUTE | POST MILES TOTAL PROJECT | SHEET NO | TOTAL SHEETS |
|---|---|---|---|---|---|
| 7 | LA | 5 | 29.4/31.6 | 1671 | 1931 |

Dah-Uei Yee 05-21-12
REGISTERED CIVIL ENGINEER DATE

05-21-12
PLANS APPROVAL DATE

REGISTERED PROFESSIONAL ENGINEER
DAH-UEI YEE
No. C 61029
Exp. 12/31/12
CIVIL
STATE OF CALIFORNIA

*The State of California or its officers or agents shall not be responsible for the accuracy or completeness of electronic copies of this plan sheet.*


**SCRRA**
279 EAST ARROW HIGHWAY
SAN DIMAS, CA 91773

**AECOM**
515 SOUTH FLOWER ST, 4TH FLOOR
LOS ANGELES, CA 90071


MATCH LINE STA 37+00.00
SEE DRAWING RR-RW-203

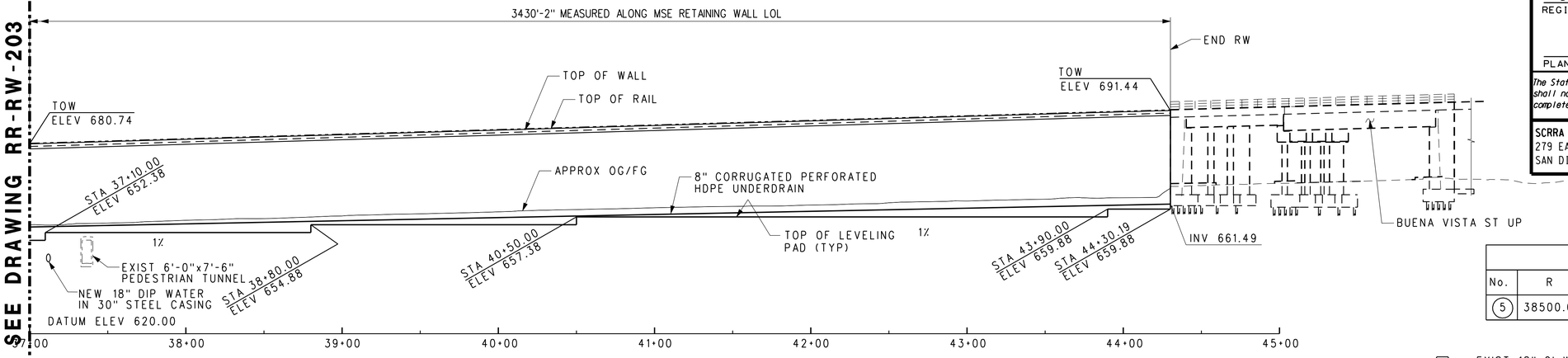


## DEVELOPED MIRROR ELEVATION

HORIZ 1" = 40'-0"
VERT 1" = 20'-0"

| CURVE DATA | | | | |
|---|---|---|---|---|
| No. | R | Δ | T | L |
| (5) | 38500.00' | 00°30'03.63" | 168.33' | 336.65' |

(3) EXIST 18" CI WATER IN 30" STEEL CASING (TO BE ABANDONED)
SEE "EXISTING UTILITY" RR-U-010

(4) EXIST 4'x2'-6" RC BOX CULVERT (TO BE PROTECTED IN PLACE)
SEE "EXISTING UTILITY" RR-U-010

(5) PROPOSED 18" DI WATER LINE IN 30" STEEL CASING
SEE RR-U-010

(6) EXIST ABANDONED 18" CI WATER LINE
SEE "EXISTING UTILITY" RR-U-010

(7) EXIST 6'-0"x 7'-6" PED TUNNEL
REMOVE INTERFERING PORTIONS AND
FILL WITH SLURRY CONCRETE. SEE RR-X-007.

MATCH LINE STA 37+00.00
SEE DRAWING RR-RW-203

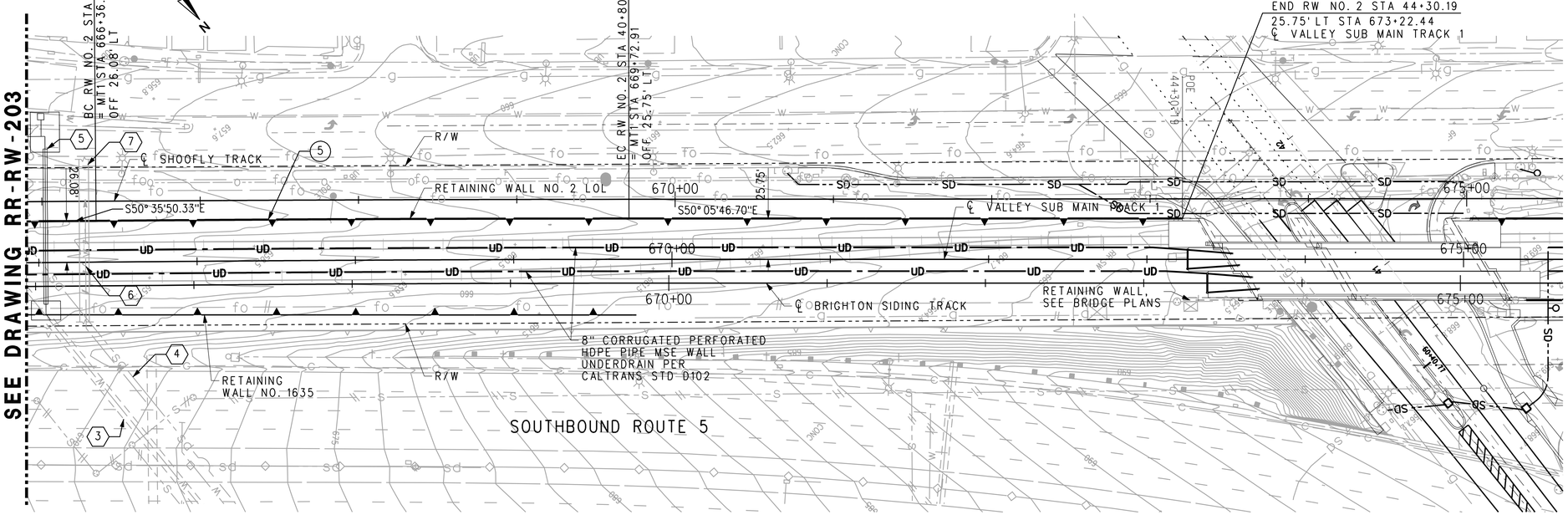


## PLAN

1" = 40'-0"

NOTE:
THE CONTRACTOR SHALL VERIFY ALL CONTROLLING FIELD DIMENSIONS BEFORE ORDERING OR FABRICATING ANY MATERIAL.

RR-RW-204
RAILROAD SHEET NO.
304 OF 394

| | | | | | | | |
|---|---|---|---|---|---|---|---|
| DESIGN OVERSIGHT | DESIGN | BY D. Yee | CHECKED A. Zheng | LOAD AND RESISTANCE FACTOR DESIGN | LIVE LOADING: COOPER E-80 AND MAINTENANCE VEHICLE | | |
| SIGN OFF DATE | DETAILS | BY J. WANG | CHECKED A. Zheng | LAYOUT | BY | CHECKED | |
| | QUANTITIES | BY | CHECKED | SPECIFICATIONS | BY | PLANS AND SPECS COMPARED | |

**PREPARED FOR THE STATE OF CALIFORNIA DEPARTMENT OF TRANSPORTATION**

A. DANIELIANS
PROJECT ENGINEER

BRIDGE NO.
POST MILES

# RR - RETAINING WALLS (MSE)
## RETAINING WALL NO. 2 LAYOUT - SHEET 4 OF 4

DESIGN GENERAL PLAN SHEET (ENGLISH) (REV.7/16/10)

ORIGINAL SCALE IN INCHES FOR REDUCED PLANS 0 1 2 3

PN: 07000211197
UNIT: 1812

DISREGARD PRINTS BEARING EARLIER REVISION DATES →

REVISION DATES (PRELIMINARY STAGE ONLY)

SHEET 4 OF 4

FILE => ...\Sheet\Walls\E737B-RW-204.sht

CONTRACT NO.:

PROJECT ID:

USERNAME => grandova DATE PLOTTED => 7/17/2012 TIME PLOTTED => 6:20:14 PM

| DIST | COUNTY | ROUTE | POST MILES TOTAL PROJECT | SHEET No | TOTAL SHEETS |
|---|---|---|---|---|---|
| 7 | LA | 5 | 29.4/31.6 | 1672 | 1931 |

Dah-Uei Yee 05-21-12
REGISTERED CIVIL ENGINEER DATE

REGISTERED PROFESSIONAL ENGINEER
DAH-UEI YEE
No. C 61029
Exp. 12/31/12
CIVIL
STATE OF CALIFORNIA

05-21-12
PLANS APPROVAL DATE

*The State of California or its officers or agents shall not be responsible for the accuracy or completeness of electronic copies of this plan sheet.*

**SCRRA**
279 EAST ARROW HIGHWAY
SAN DIMAS, CA 91773

**AECOM**
515 SOUTH FLOWER ST, 4TH FLOOR
LOS ANGELES, CA 90071

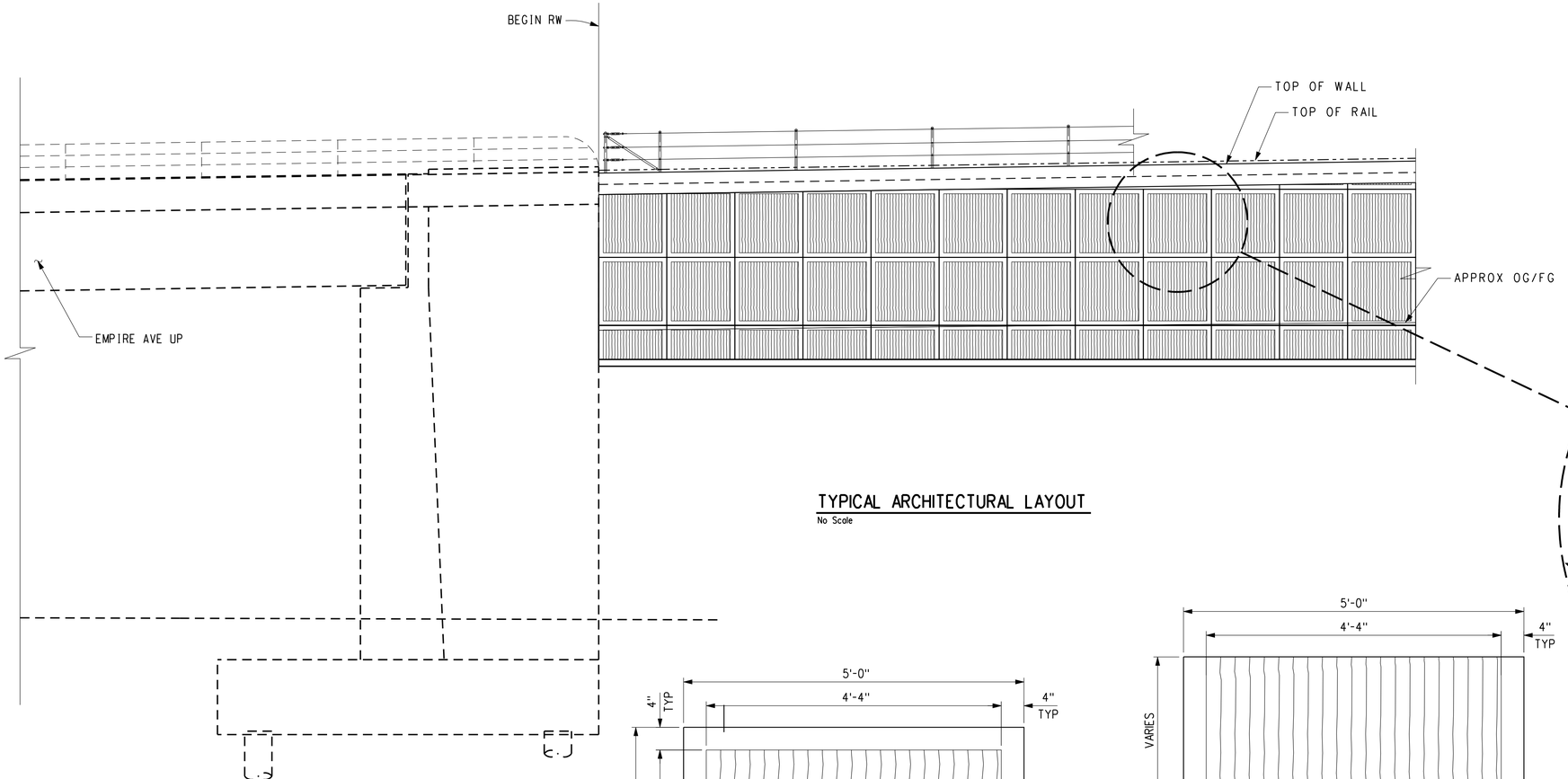


## TYPICAL ARCHITECTURAL LAYOUT
No Scale

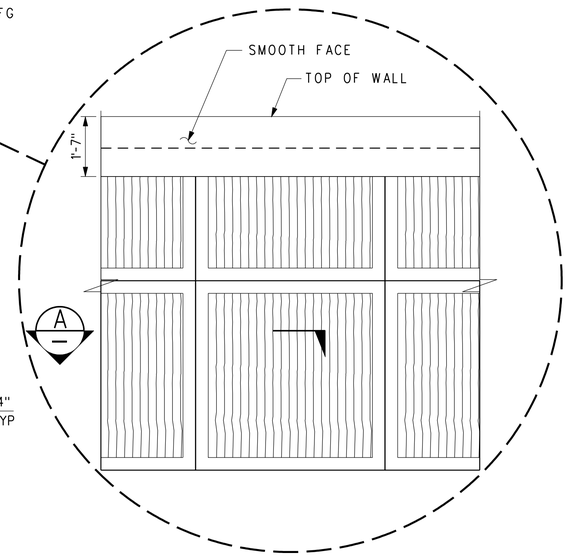


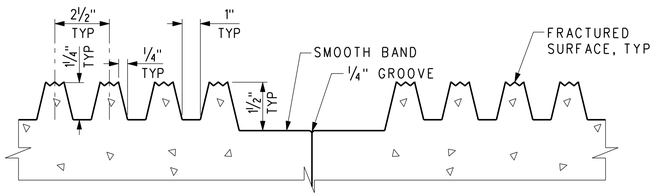


## SECTION A
No Scale
RR-RW-205

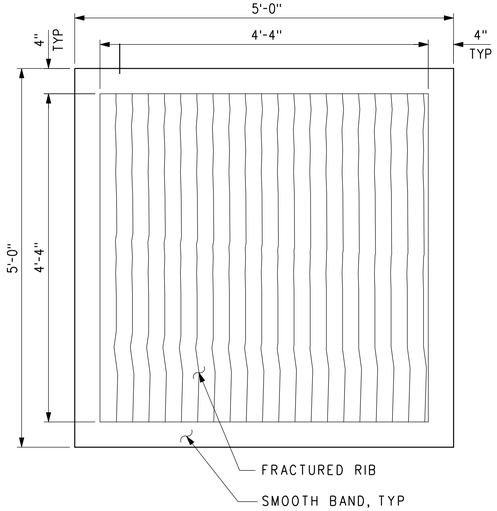


## INTERMEDIATE AND FULL HEIGHT PANELS

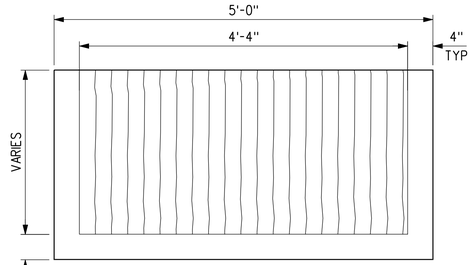


## TOP PANELS

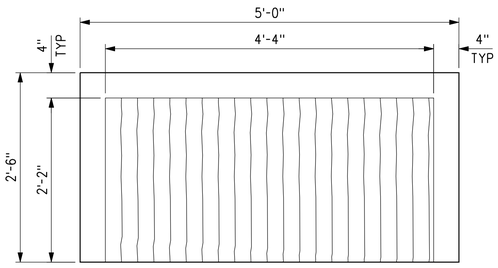


## BOTTOM HALF PANELS

## MSE WALL PANEL ELEVATION
No Scale

NOTE:
THE CONTRACTOR SHALL VERIFY ALL CONTROLLING FIELD DIMENSIONS BEFORE ORDERING OR FABRICATING ANY MATERIAL.

RR-RW-205
RAILROAD SHEET NO. 305 OF 394

DESIGN OVERSIGHT

SIGN OFF DATE

| | BY | CHECKED |
|---|---|---|
| DESIGN | D. Yee | A. Zheng |
| DETAILS | J. Wang | A. Zheng |
| QUANTITIES | A. Zheng | D. Yee |

PREPARED FOR THE STATE OF CALIFORNIA DEPARTMENT OF TRANSPORTATION

A. DANIELIANS
PROJECT ENGINEER

| BRIDGE NO. |
|---|
| x |
| POST MILES |
| x |

# RR - RETAINING WALLS (MSE)
## ARCHITECTURAL TREATMENT DETAILS - SHEET 1 OF 2

DESIGN DETAIL SHEET (ENGLISH) (REV.7/16/10)

ORIGINAL SCALE IN INCHES FOR REDUCED PLANS 0 1 2 3

PN: 07000211197
UNIT: 1812

DISREGARD PRINTS BEARING EARLIER REVISION DATES →

REVISION DATES (PRELIMINARY STAGE ONLY)

| SHEET | OF |
|---|---|
| 1 | 2 |

FILE => ...\Sheet\Walls\E737B-RW-205.sht

CONTRACT NO.:

PROJECT ID:

USERNAME => gromdova DATE PLOTTED => 7/17/2012 TIME PLOTTED => 6:20:18 PM

| DIST | COUNTY | ROUTE | POST MILES TOTAL PROJECT | SHEET No | TOTAL SHEETS |
|---|---|---|---|---|---|
| 7 | LA | 5 | 29.4/31.6 | 1673 | 1931 |

Dah-Uei Yee 05-21-12
REGISTERED CIVIL ENGINEER DATE

REGISTERED PROFESSIONAL ENGINEER
DAH-UEI YEE
No. C 61029
Exp. 12/31/12
CIVIL
STATE OF CALIFORNIA

05-21-12
PLANS APPROVAL DATE

*The State of California or its officers or agents shall not be responsible for the accuracy or completeness of electronic copies of this plan sheet.*

| | |
|---|---|
| **SCRRA**<br>279 EAST ARROW HIGHWAY<br>SAN DIMAS, CA 91773 | **AECOM**<br>515 SOUTH FLOWER ST, 4TH FLOOR<br>LOS ANGELES, CA 90071 |

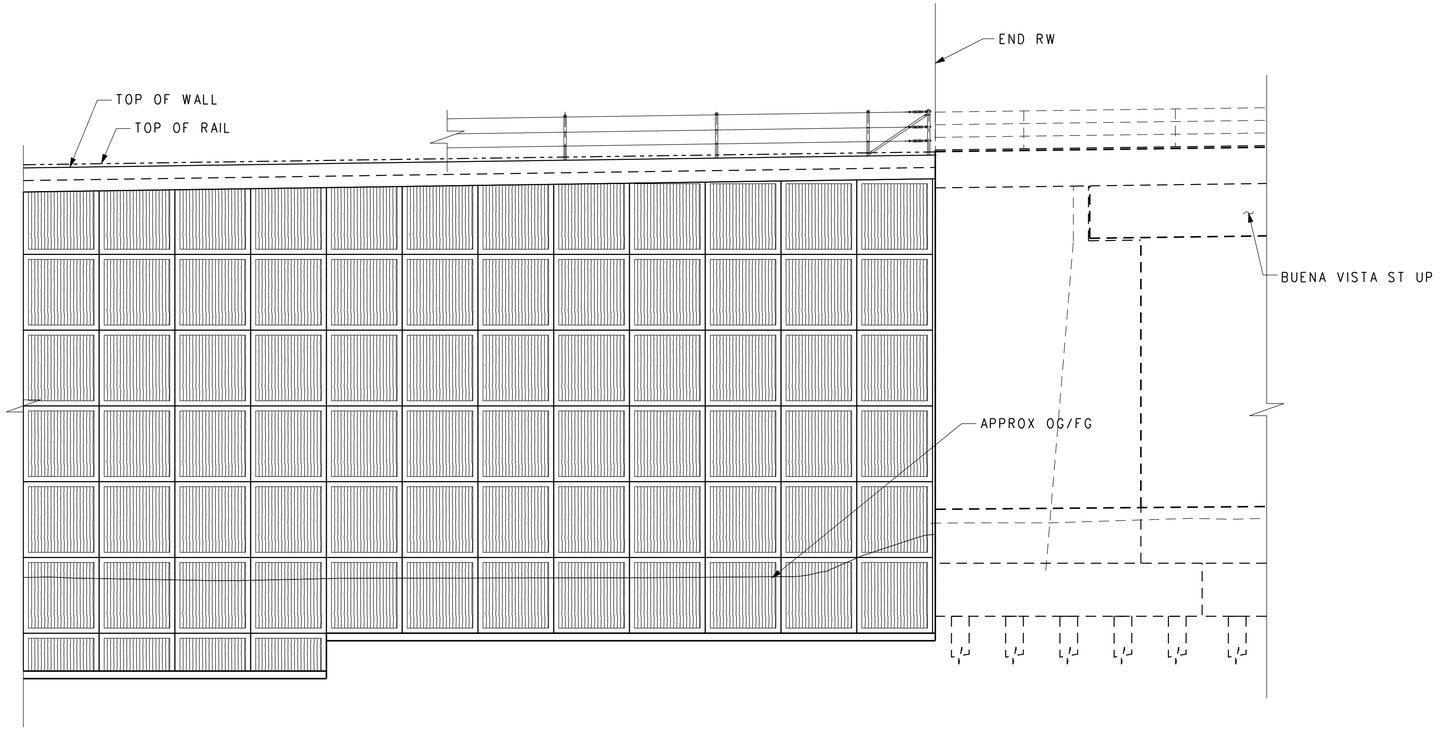


## TYPICAL ARCHITECTURAL LAYOUT
No Scale

NOTE:
FOR INFO NOT SHOWN, SEE SHEET "RR-RW-205"

NOTE:
THE CONTRACTOR SHALL VERIFY ALL CONTROLLING
FIELD DIMENSIONS BEFORE ORDERING OR FABRICATING ANY MATERIAL.

RR-RW-206
RAILROAD SHEET NO.
306 OF 394

DESIGN OVERSIGHT

SIGN OFF DATE

| | BY | CHECKED |
|---|---|---|
| DESIGN | D. Yee | A. Zheng |
| DETAILS | J. Wang | A. Zheng |
| QUANTITIES | A. Zheng | D. Yee |

**PREPARED FOR THE STATE OF CALIFORNIA DEPARTMENT OF TRANSPORTATION**

A. DANIELIANS
PROJECT ENGINEER

| BRIDGE NO. | POST MILES |
|---|---|
| x | x |

# RR - RETAINING WALLS (MSE)
## ARCHITECTURAL TREATMENT DETAILS - SHEET 2 OF 2

DESIGN DETAIL SHEET (ENGLISH) (REV.7/16/10)

ORIGINAL SCALE IN INCHES FOR REDUCED PLANS 0 1 2 3

PN: 07000211197
UNIT: 1812

DISREGARD PRINTS BEARING EARLIER REVISION DATES →

REVISION DATES (PRELIMINARY STAGE ONLY)

| SHEET | OF |
|---|---|
| 2 | 2 |

FILE => ...\Sheet\Walls\E737B-RW-206.sht

CONTRACT NO.:

PROJECT ID:

USERNAME => gromdova DATE PLOTTED => 7/17/2012 TIME PLOTTED => 6:20:20 PM

| DIST | COUNTY | ROUTE | POST MILES TOTAL PROJECT | SHEET No | TOTAL SHEETS |
|---|---|---|---|---|---|
| 7 | LA | 5 | 29.4/31.6 | 1674 | 1931 |

Dah-Uei Yee 05-21-12
REGISTERED CIVIL ENGINEER DATE

05-21-12
PLANS APPROVAL DATE

REGISTERED PROFESSIONAL ENGINEER — DAH-UEI YEE — No. C 61029 — Exp. 12/31/12 — CIVIL — STATE OF CALIFORNIA

*The State of California or its officers or agents shall not be responsible for the accuracy or completeness of electronic copies of this plan sheet.*


**SCRRA**
279 EAST ARROW HIGHWAY
SAN DIMAS, CA 91773

**AECOM**
515 SOUTH FLOWER ST, 4TH FLOOR
LOS ANGELES, CA 90071


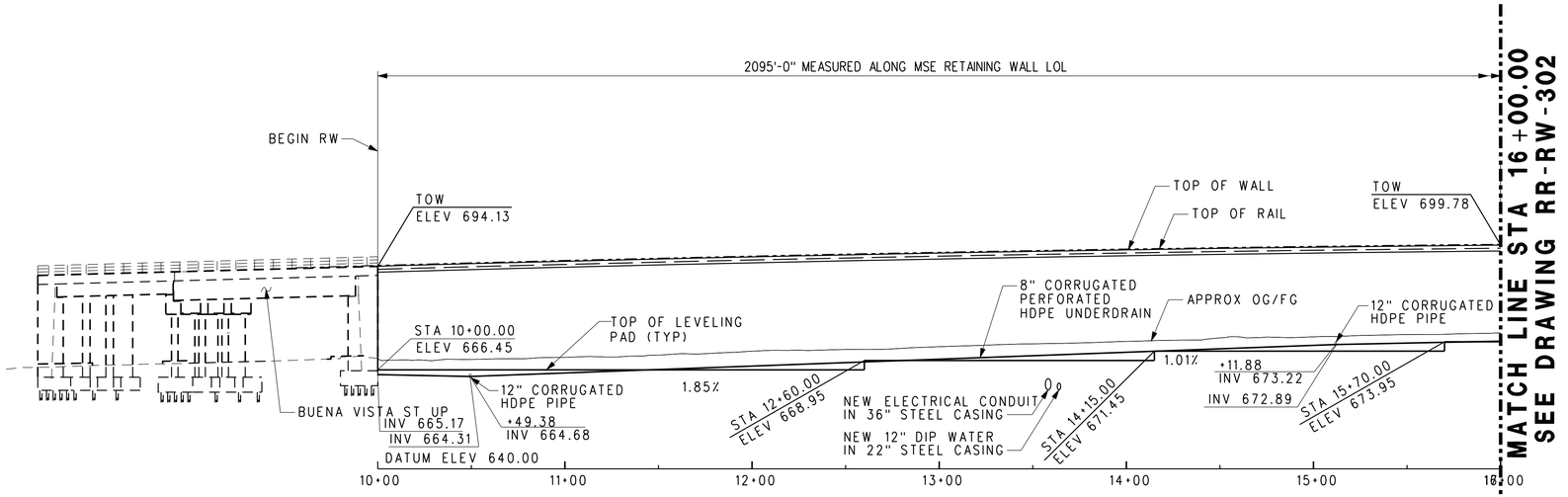


## DEVELOPED MIRROR ELEVATION

HORIZ 1" = 40'-0"
VERT 1" = 20'-0"

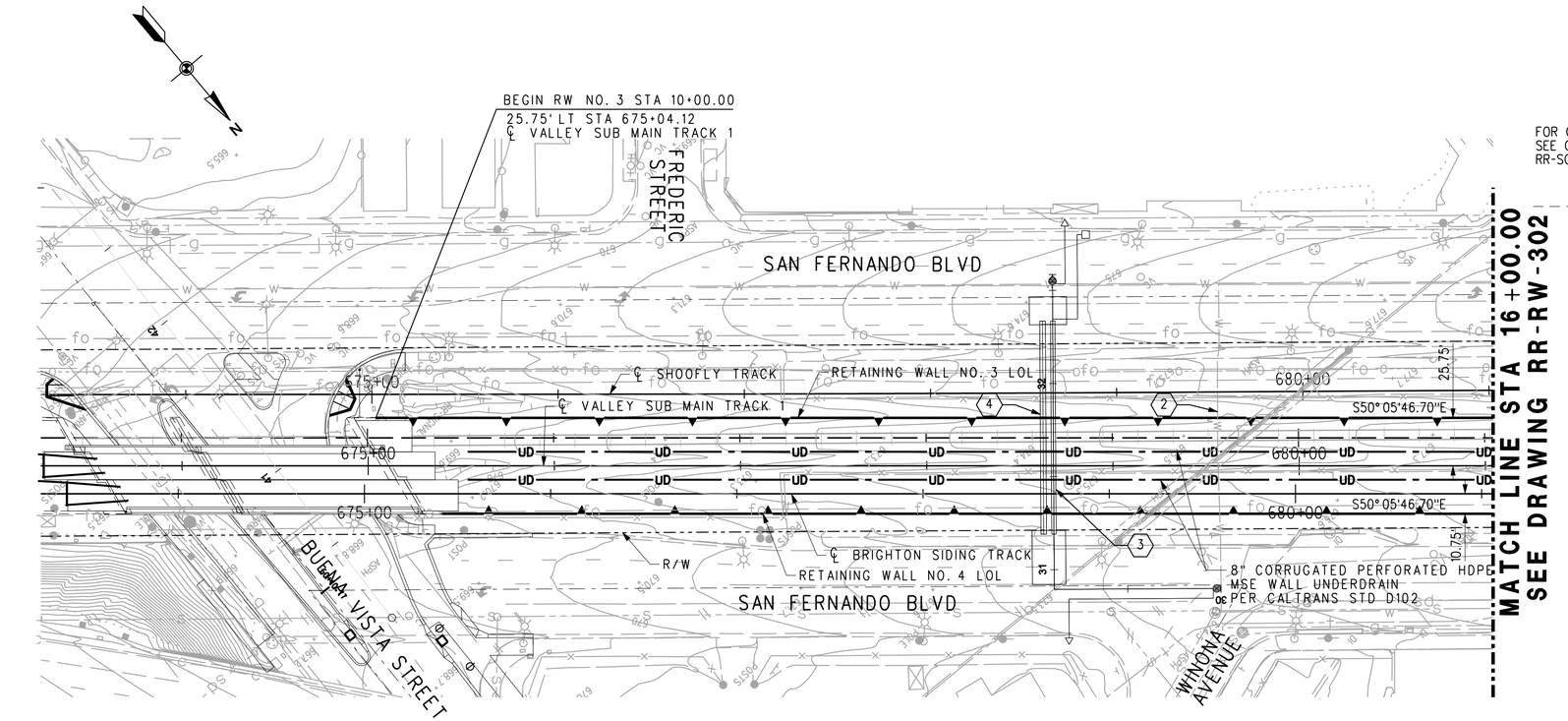


## PLAN

1" = 40'-0"

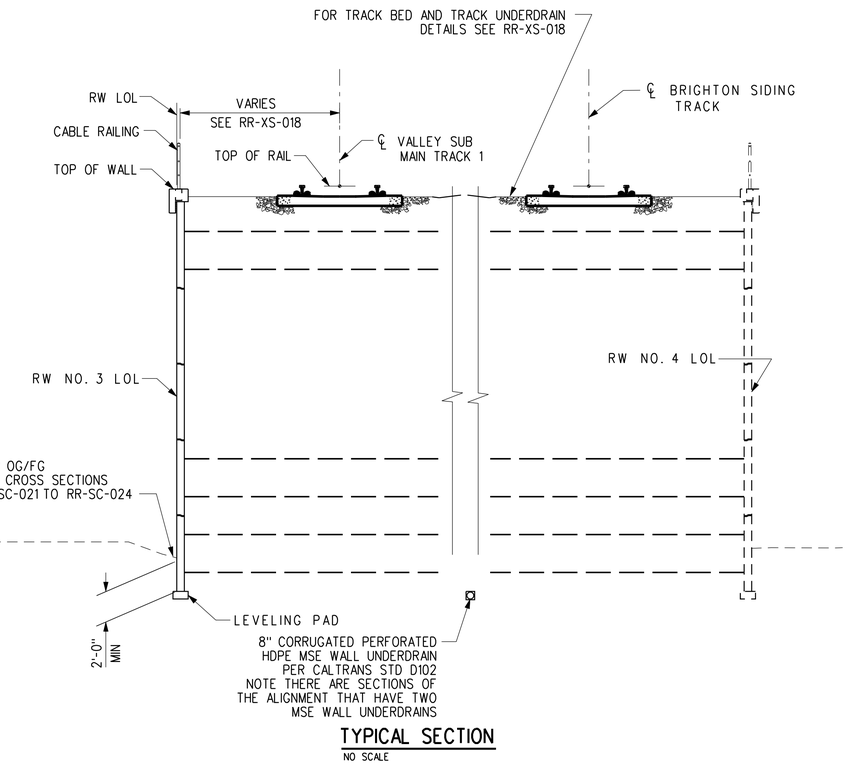


## TYPICAL SECTION

NO SCALE

LEGEND

INDICATES NEW RETAINING WALL

UD INDICATES NEW UNDERDRAIN

NOTE:
SEE DRAINAGE PROFILES RR-DR-021 TO RR-DR-043

(2) EXIST 12" CI WATER LINE
SEE "EXISTING UTIULITY" RR-U-012

(3) 12" DIP WATER LINE IN 22" STEEL CASING
SEE RR-U-011

(4) ELECTRICAL CONDUIT IN 36" STEEL CASING
SEE RR-U-011

NOTE:
THE CONTRACTOR SHALL VERIFY ALL CONTROLLING FIELD DIMENSIONS BEFORE ORDERING OR FABRICATING ANY MATERIAL.

RR-RW-301
RAILROAD SHEET NO.
307 OF 394

| | | | | | | | |
|---|---|---|---|---|---|---|---|
| DESIGN OVERSIGHT | DESIGN | BY D. Yee | CHECKED A. Zheng | LOAD AND RESISTANCE FACTOR DESIGN | LIVE LOADING: COOPER E-80 AND MAINTENANCE VEHICLE | | |
| SIGN OFF DATE | DETAILS | BY J. WANG | CHECKED A. Zheng | LAYOUT | BY | CHECKED | |
| | QUANTITIES | BY | CHECKED | SPECIFICATIONS | BY | PLANS AND SPECS COMPARED | |

**PREPARED FOR THE STATE OF CALIFORNIA DEPARTMENT OF TRANSPORTATION**

A. DANIELIANS
PROJECT ENGINEER

BRIDGE NO.
POST MILES

# RR - RETAINING WALLS (MSE)

## RETAINING WALL NO. 3 LAYOUT - SHEET 1 OF 3

DESIGN GENERAL PLAN SHEET (ENGLISH) (REV.7/16/10)

ORIGINAL SCALE IN INCHES FOR REDUCED PLANS 0 1 2 3

PN: 07000211197
UNIT: 1812

DISREGARD PRINTS BEARING EARLIER REVISION DATES →

REVISION DATES (PRELIMINARY STAGE ONLY)

SHEET 1 OF 3

FILE => ...\Sheet\Walls\E737B-RW-301.sht

CONTRACT NO.:

PROJECT ID:

USERNAME => grandovo DATE PLOTTED => 7/17/2012 TIME PLOTTED => 6:20:27 PM

| DIST | COUNTY | ROUTE | POST MILES TOTAL PROJECT | SHEET No | TOTAL SHEETS |
|---|---|---|---|---|---|
| 7 | LA | 5 | 29.4/31.6 | 1675 | 1931 |

Dah-Uei Yee 05-21-12
REGISTERED CIVIL ENGINEER DATE

05-21-12
PLANS APPROVAL DATE

REGISTERED PROFESSIONAL ENGINEER
DAH-UEI YEE
No. C 61029
Exp. 12/31/12
CIVIL
STATE OF CALIFORNIA

*The State of California or its officers or agents shall not be responsible for the accuracy or completeness of electronic copies of this plan sheet.*

**SCRRA**
279 EAST ARROW HIGHWAY
SAN DIMAS, CA 91773

**AECOM**
515 SOUTH FLOWER ST, 4TH FLOOR
LOS ANGELES, CA 90071

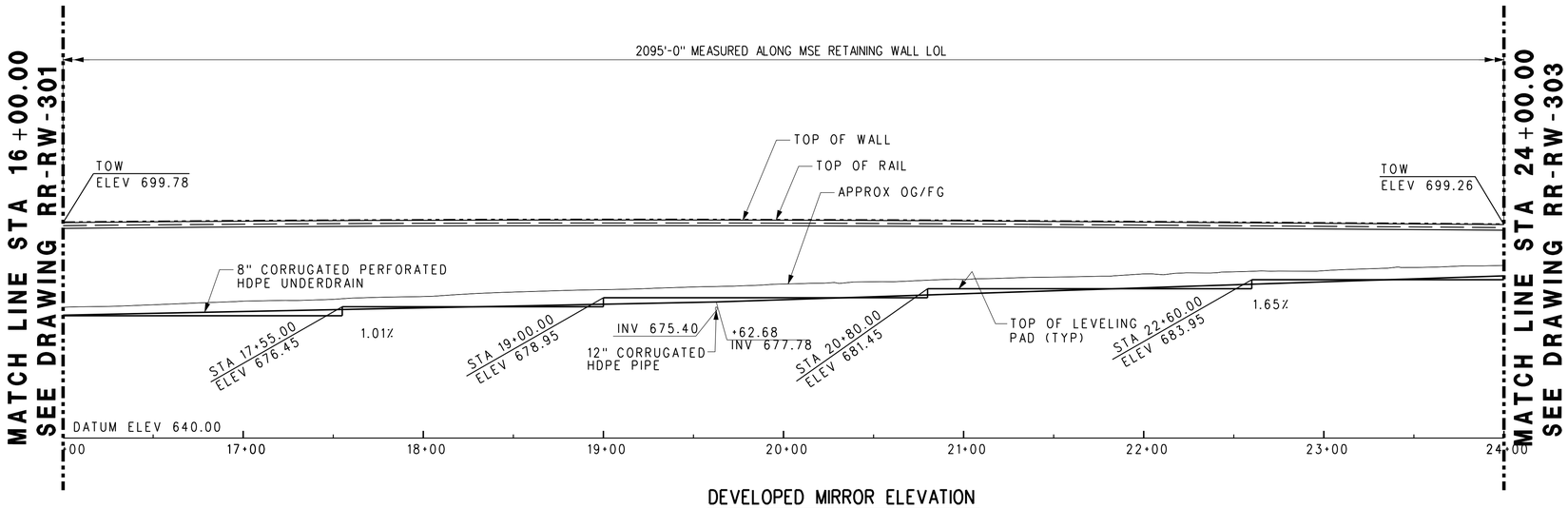


## DEVELOPED MIRROR ELEVATION

HORIZ 1" = 40'-0"
VERT 1" = 20'-0"

| CURVE DATA | | | | |
|---|---|---|---|---|
| No. | R | Δ | T | L |
| 6 | 50000.00' | 00° 20'27.36" | 148.76' | 297.52' |

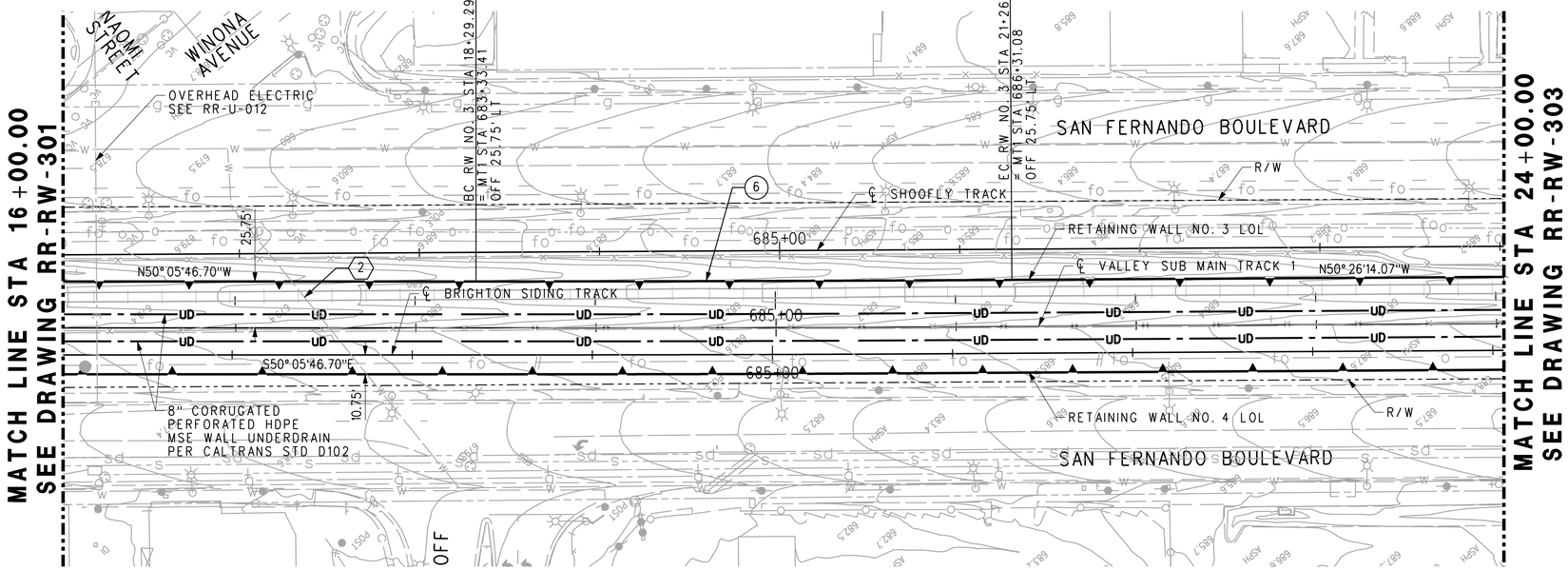


## PLAN

1" = 40'-0"

NOTE:
SEE DRAINAGE PROFILES RR-DR-021 TO RR-DR-043

(2) EXIST 6" CI WATER LINE (TO BE ABANDONED)
SEE "EXISTING UTILITY" RR-U-012

NOTE:
THE CONTRACTOR SHALL VERIFY ALL CONTROLLING FIELD DIMENSIONS BEFORE ORDERING OR FABRICATING ANY MATERIAL.

RR-RW-302
RAILROAD SHEET NO.
308 OF 394

| | | | | | | | |
|---|---|---|---|---|---|---|---|
| DESIGN OVERSIGHT | DESIGN | BY D. Yee | CHECKED A. Zheng | LOAD AND RESISTANCE FACTOR DESIGN | LIVE LOADING: COOPER E-80 AND MAINTENANCE VEHICLE | | |
| SIGN OFF DATE | DETAILS | BY J. WANG | CHECKED A. Zheng | LAYOUT | BY | CHECKED | |
| | QUANTITIES | BY | CHECKED | SPECIFICATIONS | BY | PLANS AND SPECS COMPARED | |

PREPARED FOR THE STATE OF CALIFORNIA
DEPARTMENT OF TRANSPORTATION

A. DANIELIANS
PROJECT ENGINEER

BRIDGE NO.
POST MILES

# RR - RETAINING WALLS (MSE)
## RETAINING WALL NO. 3 LAYOUT - SHEET 2 OF 3

DESIGN GENERAL PLAN SHEET (ENGLISH) (REV.7/16/10)

ORIGINAL SCALE IN INCHES FOR REDUCED PLANS 0 1 2 3

PN: 07000211197
UNIT: 1812

DISREGARD PRINTS BEARING EARLIER REVISION DATES →

REVISION DATES (PRELIMINARY STAGE ONLY)

SHEET 2 OF 3

FILE => ...\Sheet\Walls\E737B-RW-302.sht

CONTRACT NO.: PROJECT ID:

TIME PLOTTED => 6:20:31 PM
DATE PLOTTED => 7/17/2012
USERNAME => grandova

| DIST | COUNTY | ROUTE | POST MILES TOTAL PROJECT | SHEET No | TOTAL SHEETS |
|---|---|---|---|---|---|
| 7 | LA | 5 | 29.4/31.6 | 1676 | 1931 |

Dah-Uei Yee 05-21-12
REGISTERED CIVIL ENGINEER DATE

05-21-12
PLANS APPROVAL DATE

REGISTERED PROFESSIONAL ENGINEER
DAH-UEI YEE
No. C 61029
Exp. 12/31/12
CIVIL
STATE OF CALIFORNIA

*The State of California or its officers or agents shall not be responsible for the accuracy or completeness of electronic copies of this plan sheet.*

**SCRRA**
279 EAST ARROW HIGHWAY
SAN DIMAS, CA 91773

**AECOM**
515 SOUTH FLOWER ST, 4TH FLOOR
LOS ANGELES, CA 90071

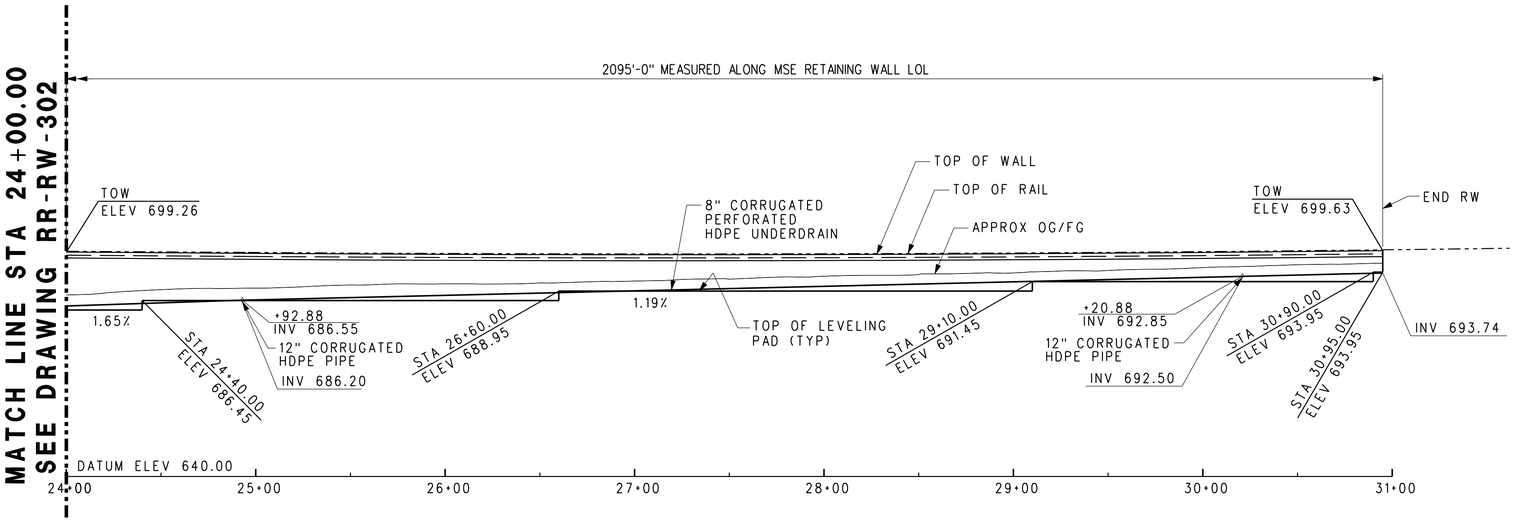


## DEVELOPED MIRROR ELEVATION

HORIZ 1" = 40'-0"
VERT 1" = 20'-0"

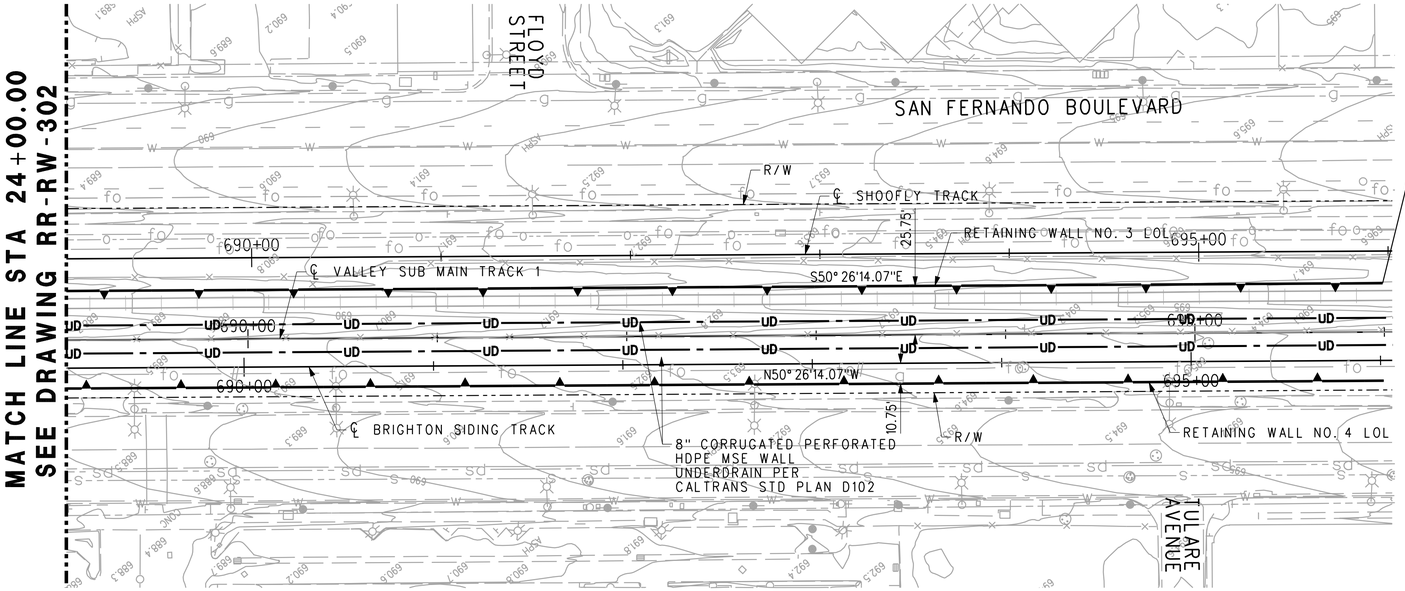


## PLAN

1" = 40'-0"

NOTE:
SEE DRAINAGE PROFILES RR-DR-021 TO RR-DR-043

NOTE:
THE CONTRACTOR SHALL VERIFY ALL CONTROLLING
FIELD DIMENSIONS BEFORE ORDERING OR FABRICATING ANY MATERIAL.

RR-RW-303
RAILROAD SHEET NO.
309 OF 394

| | | | | | | | |
|---|---|---|---|---|---|---|---|
| DESIGN OVERSIGHT | DESIGN | BY D. Yee | CHECKED A. Zheng | LOAD AND RESISTANCE FACTOR DESIGN | LIVE LOADING: COOPER E-80 AND MAINTENANCE VEHICLE | | |
| SIGN OFF DATE | DETAILS | BY J. WANG | CHECKED A. Zheng | LAYOUT | BY | CHECKED | |
| | QUANTITIES | BY | CHECKED | SPECIFICATIONS | BY | PLANS AND SPECS COMPARED | |

**PREPARED FOR THE STATE OF CALIFORNIA DEPARTMENT OF TRANSPORTATION**

A. DANIELIANS
PROJECT ENGINEER

BRIDGE NO.
POST MILES

# RR - RETAINING WALLS (MSE)

## RETAINING WALL NO. 3 LAYOUT - SHEET 3 OF 3

DESIGN GENERAL PLAN SHEET (ENGLISH) (REV.7/16/10)

ORIGINAL SCALE IN INCHES FOR REDUCED PLANS 0 1 2 3

PN: 07000211197
UNIT: 1812

DISREGARD PRINTS BEARING EARLIER REVISION DATES →

REVISION DATES (PRELIMINARY STAGE ONLY)

| SHEET | OF |
|---|---|
| 3 | 3 |

FILE => ...\Sheet\Walls\E737B-RW-303.sht

CONTRACT NO.:

PROJECT ID:

USERNAME => gcordova DATE PLOTTED => 7/17/2012 TIME PLOTTED => 6:20:35 PM

| DIST | COUNTY | ROUTE | POST MILES TOTAL PROJECT | SHEET No | TOTAL SHEETS |
|---|---|---|---|---|---|
| 7 | LA | 5 | 29.4/31.6 | 1677 | 1931 |

Dah-Uei Yee 05-21-12
REGISTERED CIVIL ENGINEER DATE

REGISTERED PROFESSIONAL ENGINEER
DAH-UEI YEE
No. C 61029
Exp. 12/31/12
CIVIL
STATE OF CALIFORNIA

05-21-12
PLANS APPROVAL DATE

*The State of California or its officers or agents shall not be responsible for the accuracy or completeness of electronic copies of this plan sheet.*

**SCRRA**
279 EAST ARROW HIGHWAY
SAN DIMAS, CA 91773

**AECOM**
515 SOUTH FLOWER ST, 4TH FLOOR
LOS ANGELES, CA 90071

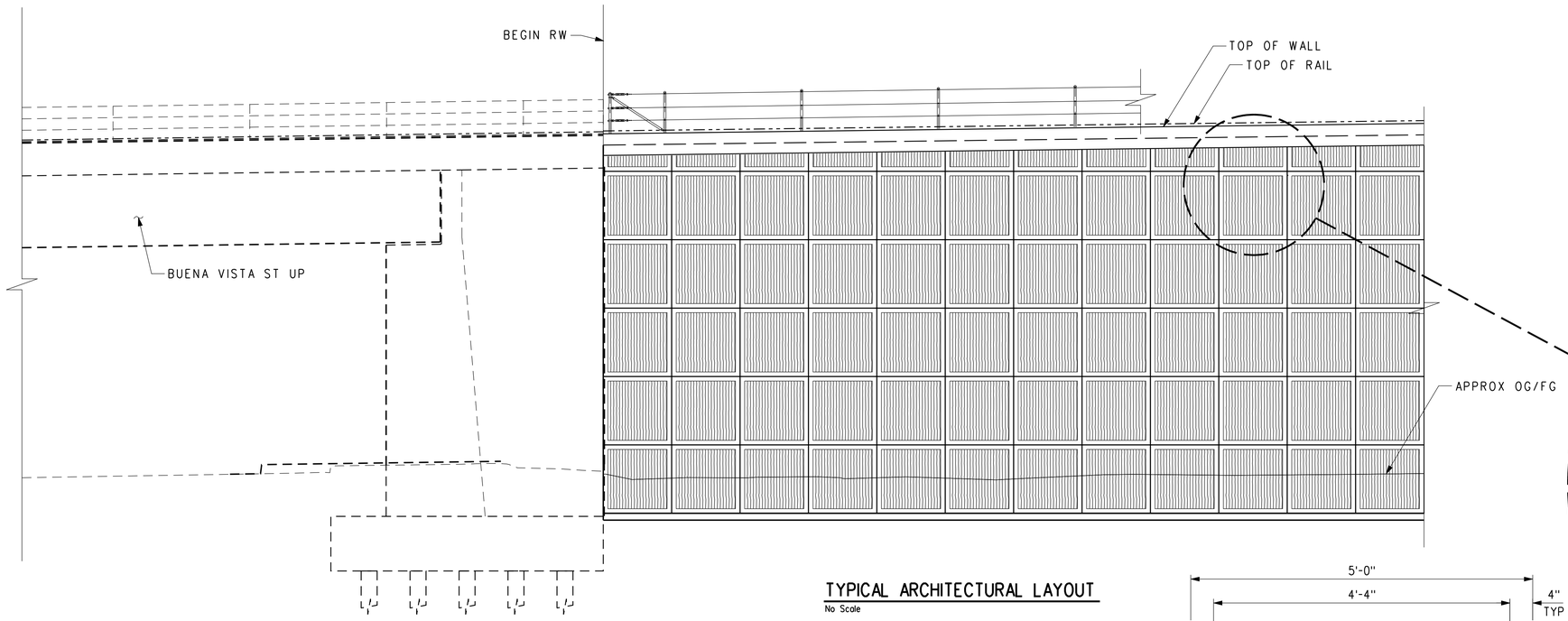


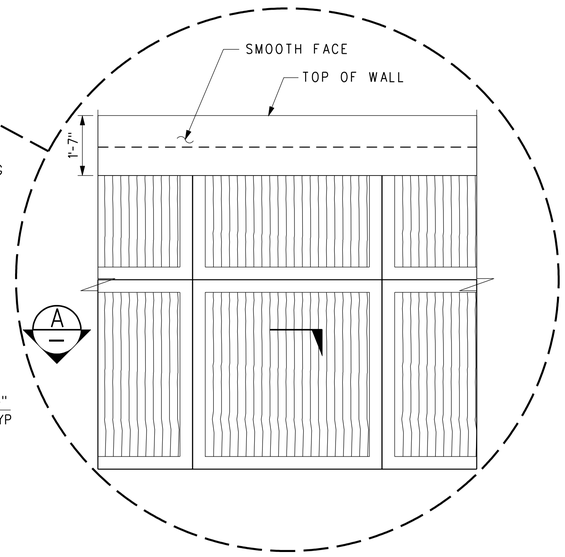


## TYPICAL ARCHITECTURAL LAYOUT
No Scale

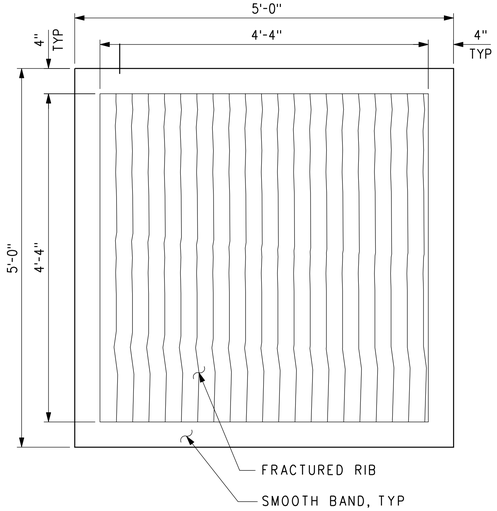


INTERMEDIATE AND FULL HEIGHT PANELS

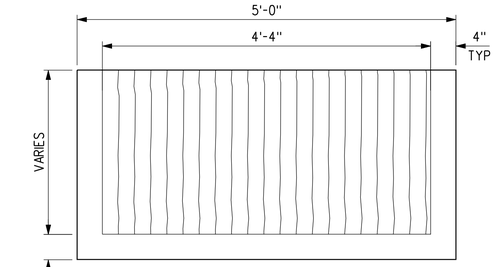


TOP PANELS

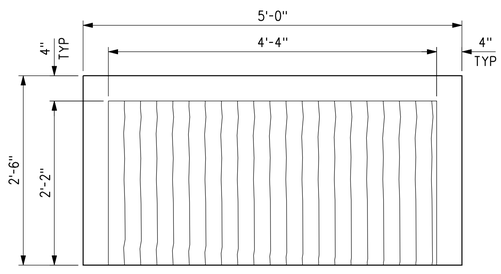


BOTTOM HALF PANELS

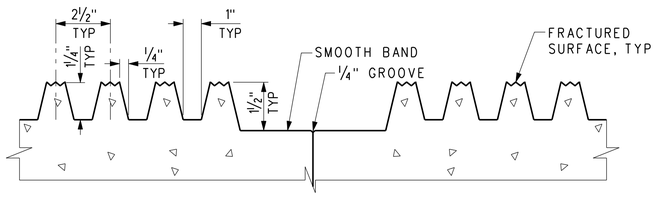


SECTION A
No Scale
RR-RW-304

## MSE WALL PANEL ELEVATION
No Scale

NOTE:
THE CONTRACTOR SHALL VERIFY ALL CONTROLLING FIELD DIMENSIONS BEFORE ORDERING OR FABRICATING ANY MATERIAL.

RR-RW-304
RAILROAD SHEET NO.
310 OF 394

DESIGN OVERSIGHT

SIGN OFF DATE

| | BY | CHECKED |
|---|---|---|
| DESIGN | D. Yee | A. Zheng |
| DETAILS | J. Wang | A. Zheng |
| QUANTITIES | A. Zheng | D. Yee |

PREPARED FOR THE STATE OF CALIFORNIA DEPARTMENT OF TRANSPORTATION

A. DANIELIANS
PROJECT ENGINEER

BRIDGE NO. x
POST MILES x

# RR - RETAINING WALLS (MSE)
# ARCHITECTURAL TREATMENT DETAILS

DESIGN DETAIL SHEET (ENGLISH) (REV.7/16/10)

ORIGINAL SCALE IN INCHES FOR REDUCED PLANS 0 1 2 3

PN: 07000211197
UNIT: 1812

DISREGARD PRINTS BEARING EARLIER REVISION DATES →

REVISION DATES (PRELIMINARY STAGE ONLY)

SHEET 1 OF 1

FILE => ...\Sheet\Walls\E737B-RW-304.sht

CONTRACT NO.:

PROJECT ID:

USERNAME => gromdova DATE PLOTTED => 7/17/2012 TIME PLOTTED => 6:20:39 PM

| DIST | COUNTY | ROUTE | POST MILES TOTAL PROJECT | SHEET NO | TOTAL SHEETS |
|---|---|---|---|---|---|
| 7 | LA | 5 | 29.4/31.6 | 1678 | 1931 |

Dah-Uei Yee 05-21-12
REGISTERED CIVIL ENGINEER DATE

05-21-12
PLANS APPROVAL DATE

REGISTERED PROFESSIONAL ENGINEER — DAH-UEI YEE — No. C 61029 — Exp. 12/31/12 — CIVIL — STATE OF CALIFORNIA

*The State of California or its officers or agents shall not be responsible for the accuracy or completeness of electronic copies of this plan sheet.*

**SCRRA**
279 EAST ARROW HIGHWAY
SAN DIMAS, CA 91773

**AECOM**
515 SOUTH FLOWER ST, 4TH FLOOR
LOS ANGELES, CA 90071

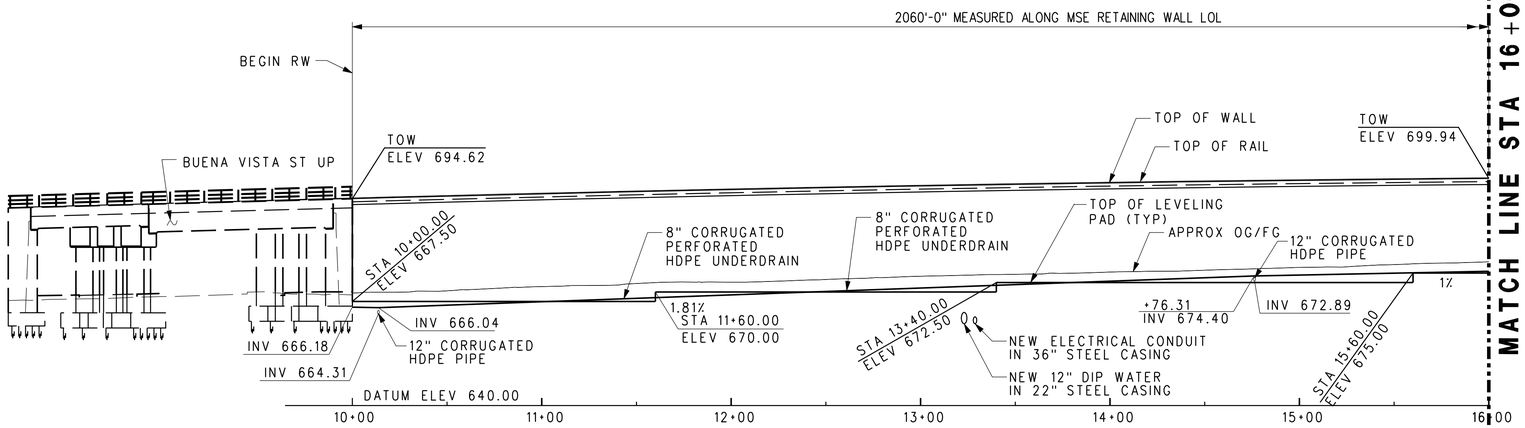


**MATCH LINE STA 16+00.00**
**SEE DRAWING RR-RW-402**

## DEVELOPED MIRROR ELEVATION

HORIZ 1" = 40'-0"
VERT 1" = 20'-0"

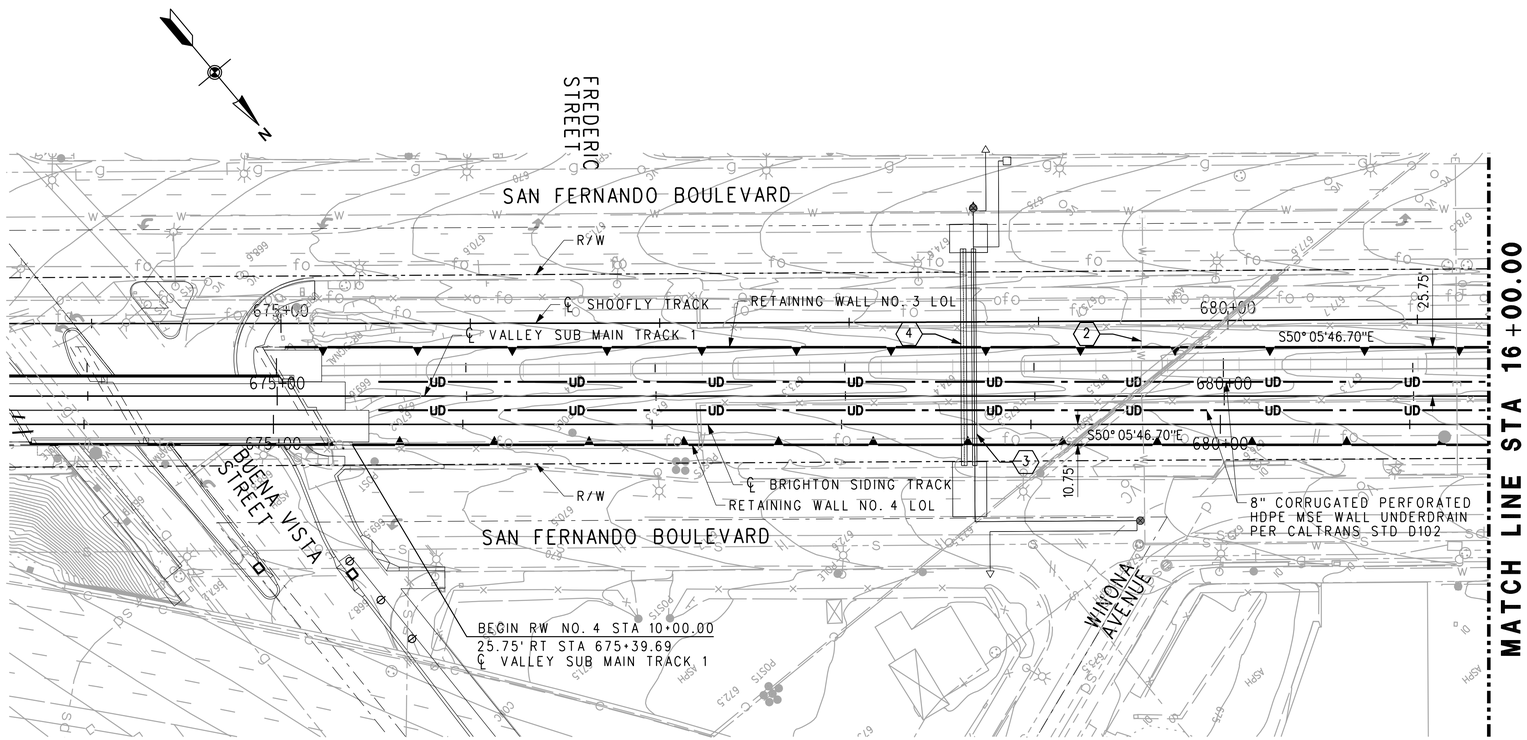


**MATCH LINE STA 16+00.00**
**SEE DRAWING RR-RW-402**

## PLAN

1" = 40'-0"

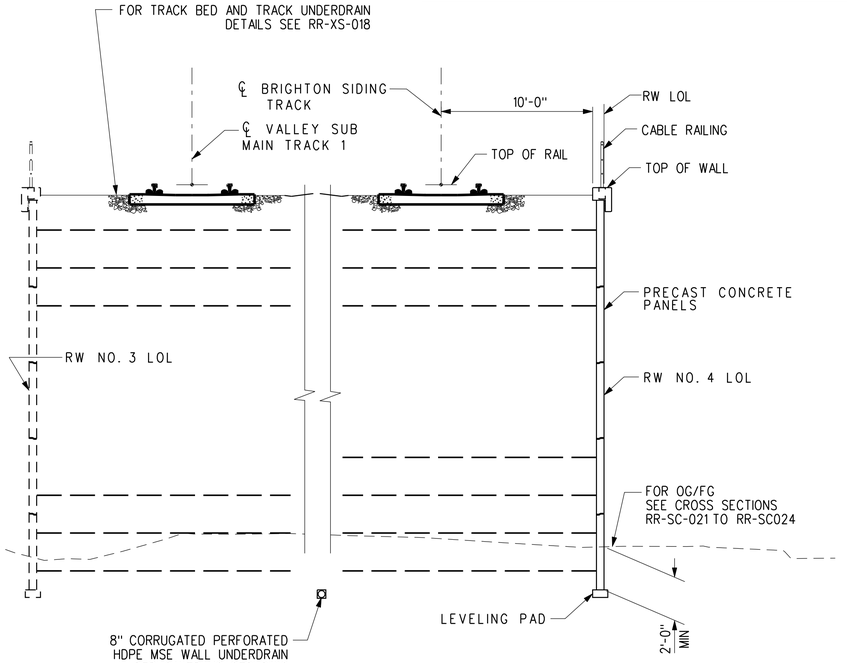


## TYPICAL SECTION

NO SCALE

LEGEND

INDICATES NEW RETAINING WALL

UD INDICATES NEW UNDERDRAIN

NOTE:
SEE DRAINAGE PROFILES RR-DR-021 TO RR-DR-043

(2) EXIST 12" CI WATER LINE (TO BE ABANDONED) SEE "EXISTING UTILITY" RR-U-012

(3) 12" DIP WATER LINE IN 22" STEEL CASING SEE RR-U-011

(4) ELECTRICAL CONDUIT IN 36" STEEL CASING SEE RR-U-011

NOTE:
THE CONTRACTOR SHALL VERIFY ALL CONTROLLING FIELD DIMENSIONS BEFORE ORDERING OR FABRICATING ANY MATERIAL.

RR-RW-401
RAILROAD SHEET NO. 312 OF 394

| | | | | | | | |
|---|---|---|---|---|---|---|---|
| DESIGN OVERSIGHT | DESIGN | BY D. Yee | CHECKED A. Zheng | LOAD AND RESISTANCE FACTOR DESIGN | LIVE LOADING: COOPER E-80 AND MAINTENANCE VEHICLE | | |
| SIGN OFF DATE | DETAILS | BY J. WANG | CHECKED A. Zheng | LAYOUT | BY | CHECKED | |
| | QUANTITIES | BY | CHECKED | SPECIFICATIONS | BY | PLANS AND SPECS COMPARED | |

**PREPARED FOR THE STATE OF CALIFORNIA DEPARTMENT OF TRANSPORTATION**

A. DANIELIANS
PROJECT ENGINEER

BRIDGE NO.
POST MILES

# RR - RETAINING WALLS (MSE)

## RETAINING WALL NO. 4 LAYOUT - SHEET 1 OF 3

DESIGN GENERAL PLAN SHEET (ENGLISH) (REV.7/16/10)

ORIGINAL SCALE IN INCHES FOR REDUCED PLANS 0 1 2 3

PN: 07000211197
UNIT: 1812

DISREGARD PRINTS BEARING EARLIER REVISION DATES →

REVISION DATES (PRELIMINARY STAGE ONLY)

SHEET 1 OF 3

FILE => ...\Sheet\Walls\E737B-RW-401.sht

CONTRACT NO.:

PROJECT ID:

USERNAME => grondova DATE PLOTTED => 7/17/2012 TIME PLOTTED => 6:20:44 PM

| DIST | COUNTY | ROUTE | POST MILES TOTAL PROJECT | SHEET No | TOTAL SHEETS |
|---|---|---|---|---|---|
| 7 | LA | 5 | 29.4/31.6 | 1679 | 1931 |

Dah-Uei Yee 05-21-12
REGISTERED CIVIL ENGINEER DATE

05-21-12
PLANS APPROVAL DATE

REGISTERED PROFESSIONAL ENGINEER
DAH-UEI YEE
No. C 61029
Exp. 12/31/12
CIVIL
STATE OF CALIFORNIA

*The State of California or its officers or agents shall not be responsible for the accuracy or completeness of electronic copies of this plan sheet.*


**SCRRA**
279 EAST ARROW HIGHWAY
SAN DIMAS, CA 91773

**AECOM**
515 SOUTH FLOWER ST, 4TH FLOOR
LOS ANGELES, CA 90071


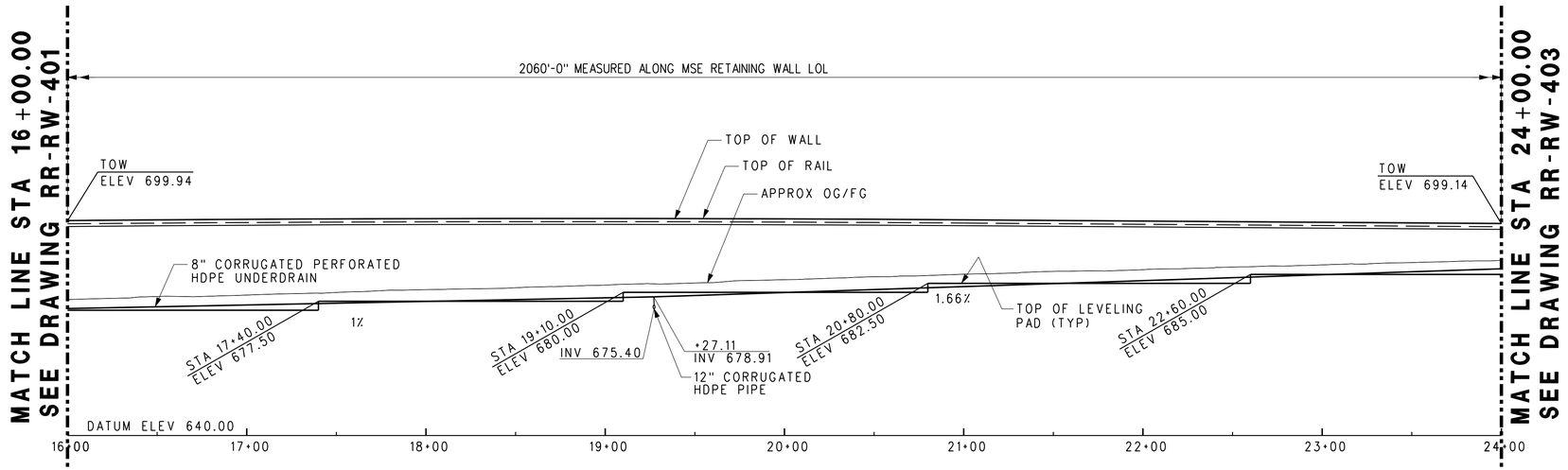


## DEVELOPED MIRROR ELEVATION

HORIZ 1" = 40'-0"
VERT 1" = 20'-0"

| CURVE DATA | | | | |
|---|---|---|---|---|
| No. | R | Δ | T | L |
| (8) | 38207.95' | 00° 20'27.36" | 113.68' | 227.35' |

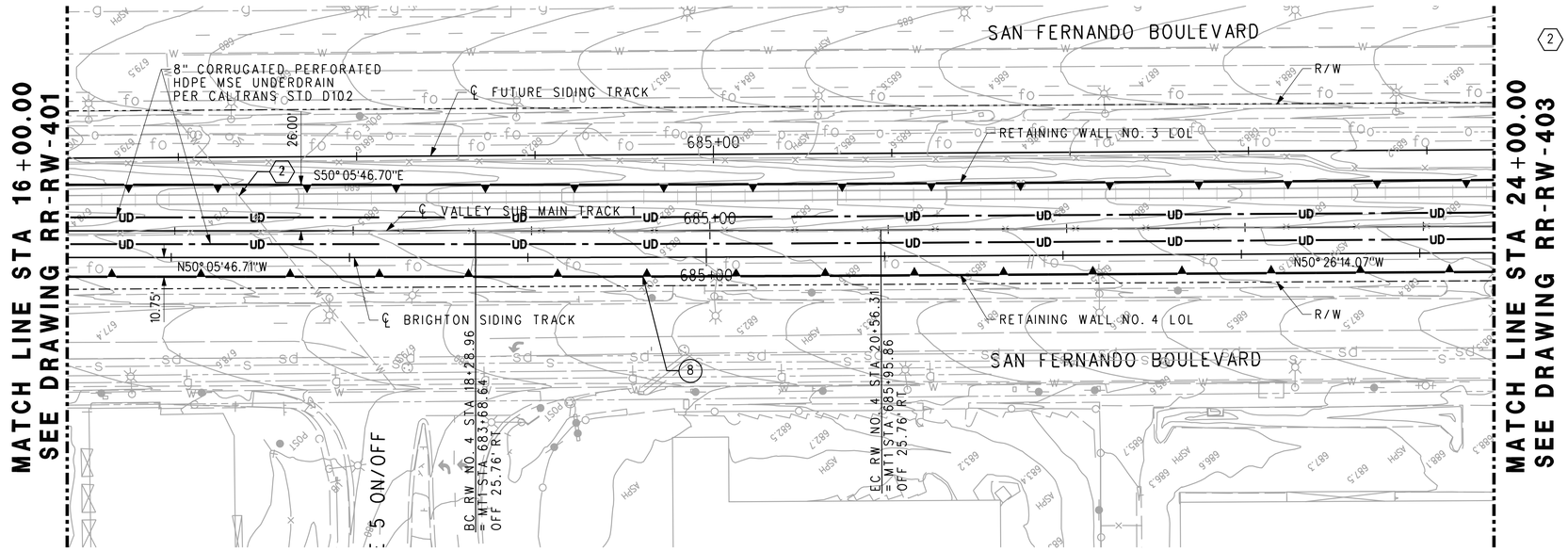


## PLAN

1" = 40'-0"

NOTE:
SEE DRAINAGE PROFILES RR-DR-021 TO RR-DR-043

(2) EXIST 6" CI WATER LINE (TO BE ABANDONED)
SEE "EXISTING UTILITY" RR-U-012

NOTE:
THE CONTRACTOR SHALL VERIFY ALL CONTROLLING
FIELD DIMENSIONS BEFORE ORDERING OR FABRICATING ANY MATERIAL.

RR-RW-402
RAILROAD SHEET NO.
313 OF 394

| | | | | | | | |
|---|---|---|---|---|---|---|---|
| DESIGN OVERSIGHT | DESIGN | BY D. Yee | CHECKED A. Zheng | LOAD AND RESISTANCE FACTOR DESIGN | LIVE LOADING: COOPER E-80 AND MAINTENANCE VEHICLE | | PREPARED FOR THE STATE OF CALIFORNIA DEPARTMENT OF TRANSPORTATION |
| SIGN OFF DATE | DETAILS | BY J. WANG | CHECKED A. Zheng | LAYOUT | BY | CHECKED | |
| | QUANTITIES | BY | CHECKED | SPECIFICATIONS | BY | PLANS AND SPECS COMPARED | |

A. DANIELIANS
PROJECT ENGINEER

BRIDGE NO.
POST MILES

# RR - RETAINING WALLS (MSE)
## RETAINING WALL NO. 4 LAYOUT - SHEET 2 OF 3

DESIGN GENERAL PLAN SHEET (ENGLISH) (REV.7/16/10)

ORIGINAL SCALE IN INCHES FOR REDUCED PLANS 0 1 2 3

PN: 07000211197
UNIT: 1812

DISREGARD PRINTS BEARING EARLIER REVISION DATES →

REVISION DATES (PRELIMINARY STAGE ONLY)

SHEET 2 OF 3

FILE => ...\Sheet\Walls\E737B-RW-402.sht

CONTRACT NO.:

PROJECT ID:

USERNAME => grondovo DATE PLOTTED => 7/17/2012 TIME PLOTTED => 6:20:47 PM

| DIST | COUNTY | ROUTE | POST MILES TOTAL PROJECT | SHEET No | TOTAL SHEETS |
|---|---|---|---|---|---|
| 7 | LA | 5 | 29.4/31.6 | 1680 | 1931 |

Dah-Uei Yee 05-21-12
REGISTERED CIVIL ENGINEER DATE

05-21-12
PLANS APPROVAL DATE

REGISTERED PROFESSIONAL ENGINEER
DAH-UEI YEE
No. C 61029
Exp. 12/31/12
CIVIL
STATE OF CALIFORNIA

*The State of California or its officers or agents shall not be responsible for the accuracy or completeness of electronic copies of this plan sheet.*

**SCRRA**
279 EAST ARROW HIGHWAY
SAN DIMAS, CA 91773

**AECOM**
515 SOUTH FLOWER ST, 4TH FLOOR
LOS ANGELES, CA 90071

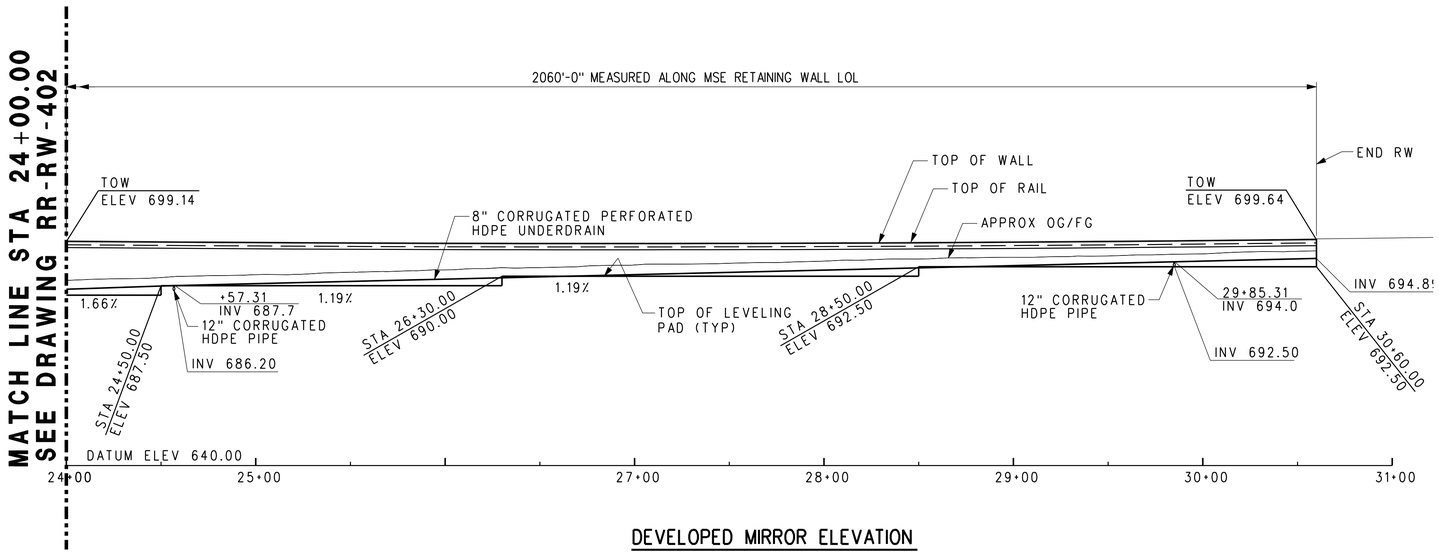


## DEVELOPED MIRROR ELEVATION

1" = 40'-0"

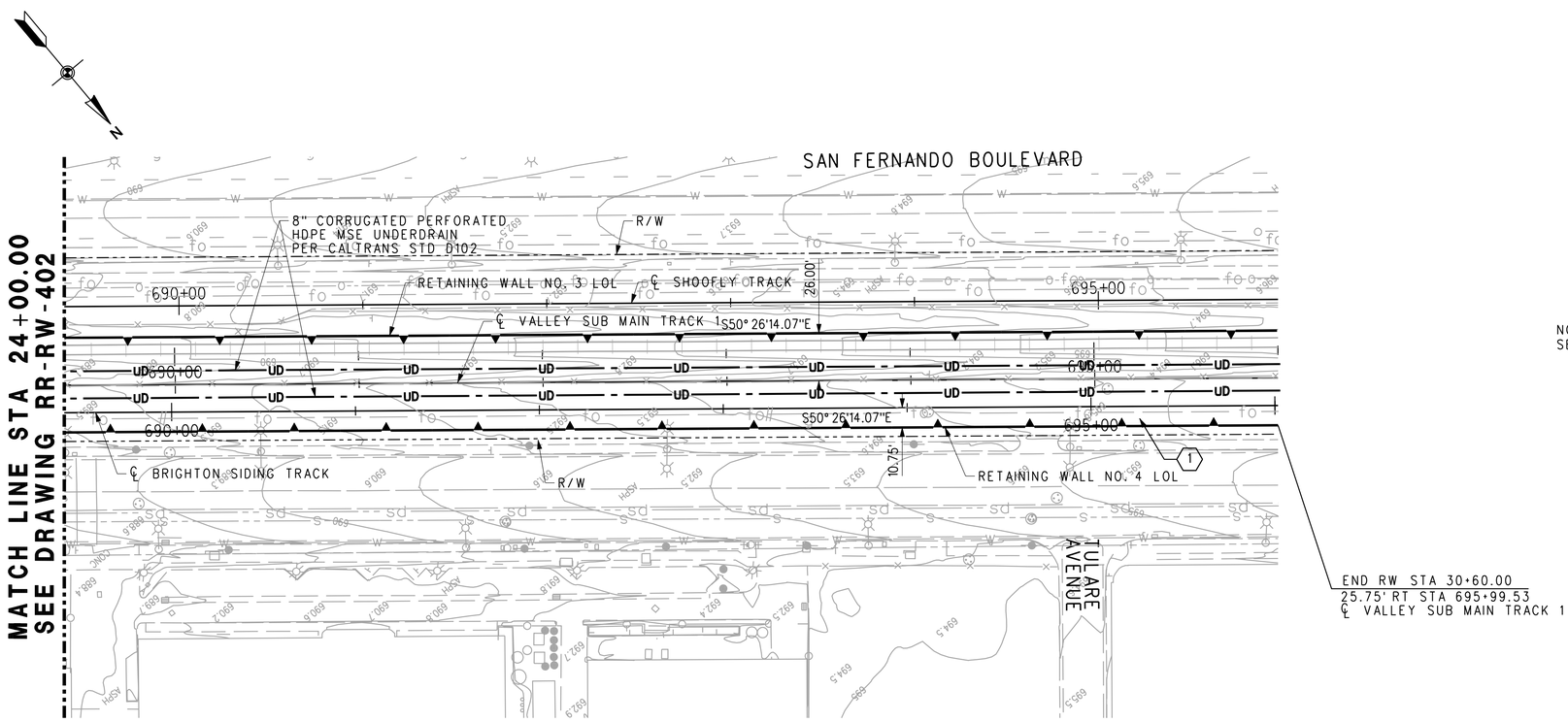


## PLAN

1" = 40'-0"

NOTE:
SEE DRAINAGE PROFILES RR-DR-021 TO RR-DR-043

NOTE:
THE CONTRACTOR SHALL VERIFY ALL CONTROLLING FIELD DIMENSIONS BEFORE ORDERING OR FABRICATING ANY MATERIAL.

RR-RW-403
RAILROAD SHEET NO.
314 OF 394

| | | | | | | | |
|---|---|---|---|---|---|---|---|
| DESIGN OVERSIGHT | DESIGN | BY D. Yee | CHECKED A. Zheng | LOAD AND RESISTANCE FACTOR DESIGN | LIVE LOADING: COOPER E-80 AND MAINTENANCE VEHICLE | | PREPARED FOR THE STATE OF CALIFORNIA DEPARTMENT OF TRANSPORTATION |
| SIGN OFF DATE | DETAILS | BY J. WANG | CHECKED A. Zheng | LAYOUT | BY | CHECKED | |
| | QUANTITIES | BY | CHECKED | SPECIFICATIONS | BY | PLANS AND SPECS COMPARED | |

A. DANIELIANS
PROJECT ENGINEER

BRIDGE NO.
POST MILES

# RR - RETAINING WALLS (MSE)
## RETAINING WALL NO. 4 LAYOUT - SHEET 3 OF 3

DESIGN GENERAL PLAN SHEET (ENGLISH) (REV.7/16/10)

ORIGINAL SCALE IN INCHES FOR REDUCED PLANS 0 1 2 3

PN: 07000211197
UNIT: 1812

DISREGARD PRINTS BEARING EARLIER REVISION DATES →

REVISION DATES (PRELIMINARY STAGE ONLY)

| SHEET | OF |
|---|---|
| 3 | 3 |

FILE => ...\Sheet\Walls\E737B-RW-403.sht

CONTRACT NO.:

PROJECT ID:

USERNAME => grandovo DATE PLOTTED => 7/17/2012 TIME PLOTTED => 6:20:53 PM

| DIST | COUNTY | ROUTE | POST MILES TOTAL PROJECT | SHEET No | TOTAL SHEETS |
|---|---|---|---|---|---|
| 7 | LA | 5 | 29.4/31.6 | 1681 | 1931 |

Dah-Uei Yee 05-21-12
REGISTERED CIVIL ENGINEER DATE

05-21-12
PLANS APPROVAL DATE

REGISTERED PROFESSIONAL ENGINEER — DAH-UEI YEE — No. C 61029 — Exp. 12/31/12 — CIVIL — STATE OF CALIFORNIA

*The State of California or its officers or agents shall not be responsible for the accuracy or completeness of electronic copies of this plan sheet.*


**SCRRA**
279 EAST ARROW HIGHWAY
SAN DIMAS, CA 91773

**AECOM**
515 SOUTH FLOWER ST, 4TH FLOOR
LOS ANGELES, CA 90071


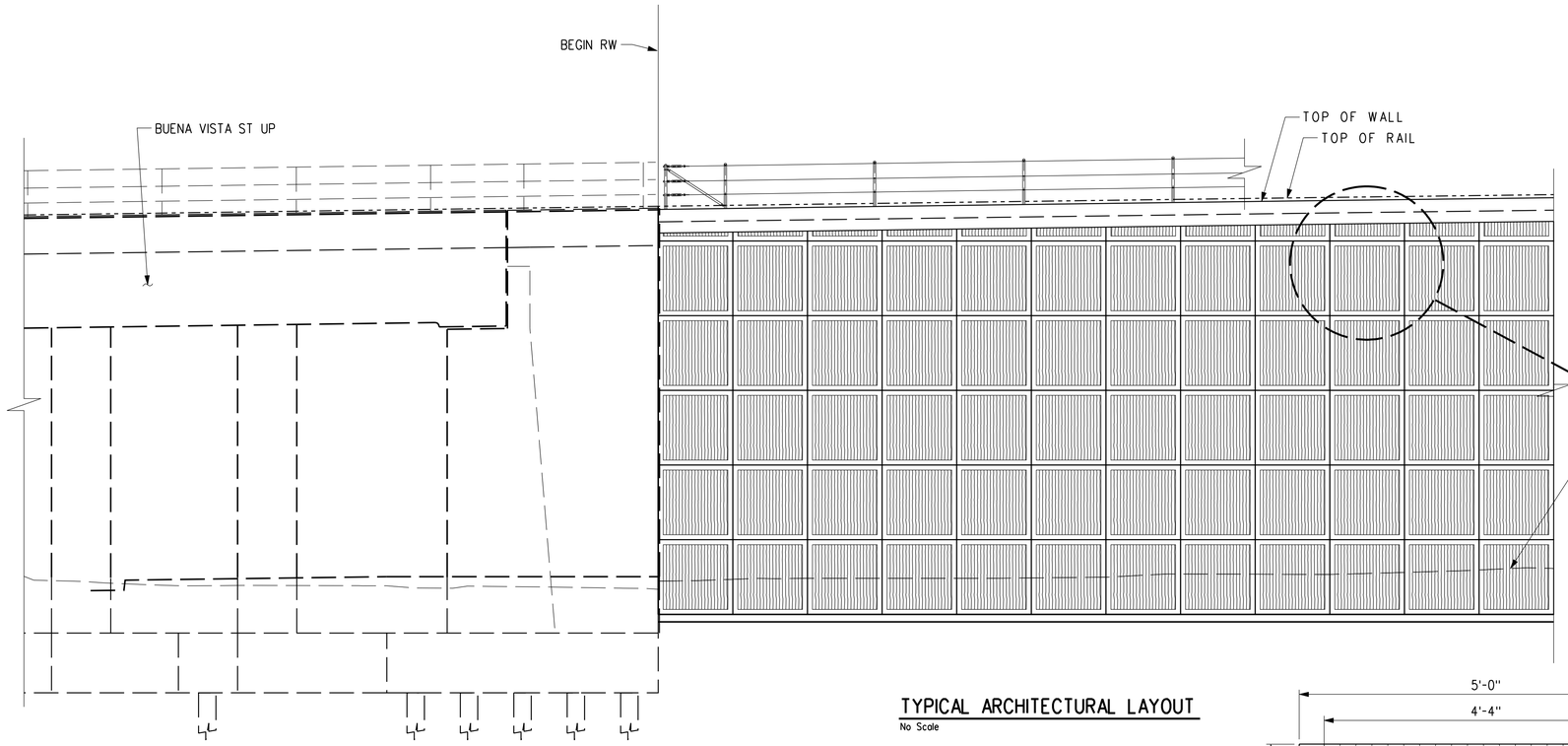


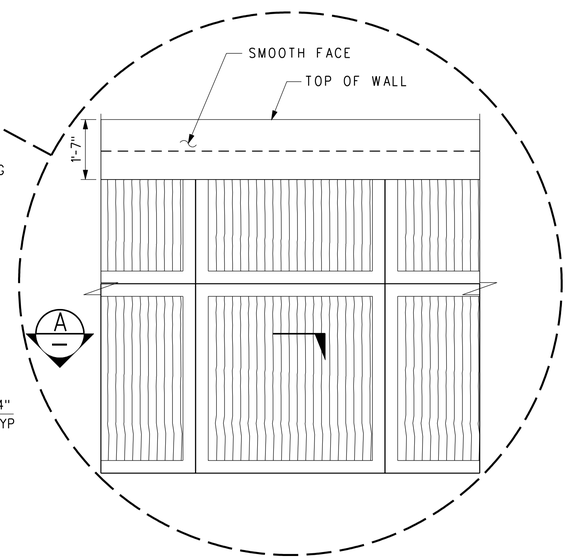


## TYPICAL ARCHITECTURAL LAYOUT

No Scale

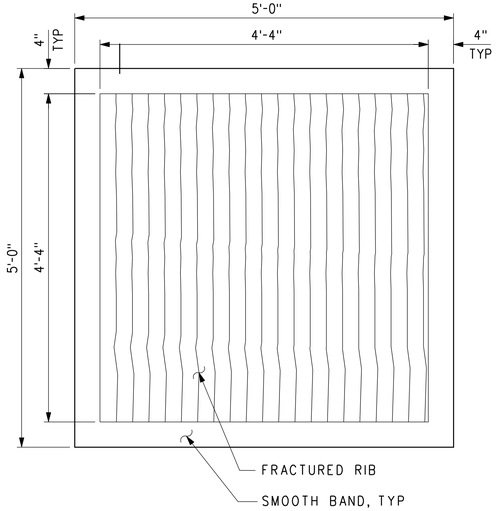


INTERMEDIATE AND FULL HEIGHT PANELS

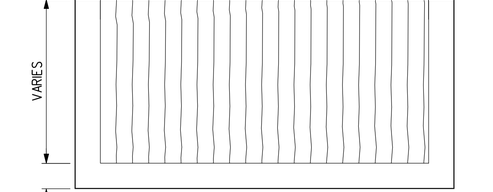


TOP PANELS

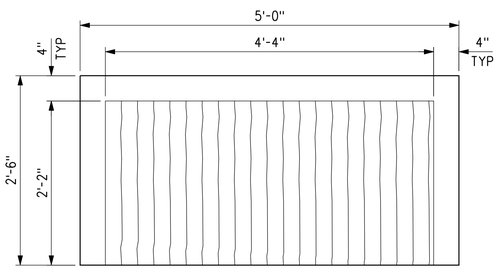


BOTTOM HALF PANELS

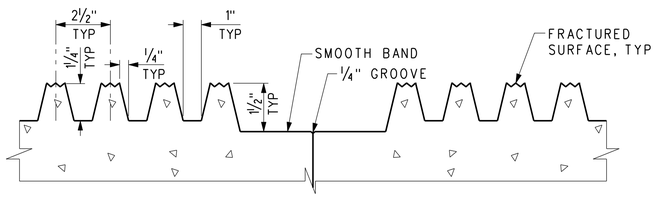


SECTION A
No Scale
RR-RW-404

## MSE WALL PANEL ELEVATION

No Scale

NOTE:
THE CONTRACTOR SHALL VERIFY ALL CONTROLLING FIELD DIMENSIONS BEFORE ORDERING OR FABRICATING ANY MATERIAL.

RR-RW-404
RAILROAD SHEET NO. 315 OF 394

| | | | | | |
|---|---|---|---|---|---|
| DESIGN OVERSIGHT | | DESIGN | BY D. Yee | CHECKED A. Zheng | PREPARED FOR THE STATE OF CALIFORNIA DEPARTMENT OF TRANSPORTATION |
| SIGN OFF DATE | | DETAILS | BY J. Wang | CHECKED A. Zheng | A. DANIELIANS PROJECT ENGINEER |
| DESIGN DETAIL SHEET (ENGLISH) (REV.7/16/10) | | QUANTITIES | BY A. Zheng | CHECKED D. Yee | BRIDGE NO. x / POST MILES x |

# RR - RETAINING WALLS (MSE)
# ARCHITECTURAL TREATMENT DETAILS

ORIGINAL SCALE IN INCHES FOR REDUCED PLANS 0 1 2 3

PN: 07000211197
UNIT: 1812

DISREGARD PRINTS BEARING EARLIER REVISION DATES →

REVISION DATES (PRELIMINARY STAGE ONLY)

SHEET 1 OF 1

FILE => ...\Sheet\Walls\E737B-RW-404.sht

CONTRACT NO.:

PROJECT ID:

USERNAME => gromdova DATE PLOTTED => 7/17/2012 TIME PLOTTED => 6:20:56 PM

| DIST | COUNTY | ROUTE | POST MILES TOTAL PROJECT | SHEET No | TOTAL SHEETS |
|---|---|---|---|---|---|
| 7 | LA | 5 | 29.4/31.6 | 1682 | 1931 |

Dah-Uei Yee 05-21-12
REGISTERED CIVIL ENGINEER DATE

05-21-12
PLANS APPROVAL DATE

REGISTERED PROFESSIONAL ENGINEER — DAH-UEI YEE — No. C 61029 — Exp. 12/31/12 — CIVIL — STATE OF CALIFORNIA

*The State of California or its officers or agents shall not be responsible for the accuracy or completeness of electronic copies of this plan sheet.*


**SCRRA**
279 EAST ARROW HIGHWAY
SAN DIMAS, CA 91773

**AECOM**
515 SOUTH FLOWER ST, 4TH FLOOR
LOS ANGELES, CA 90071


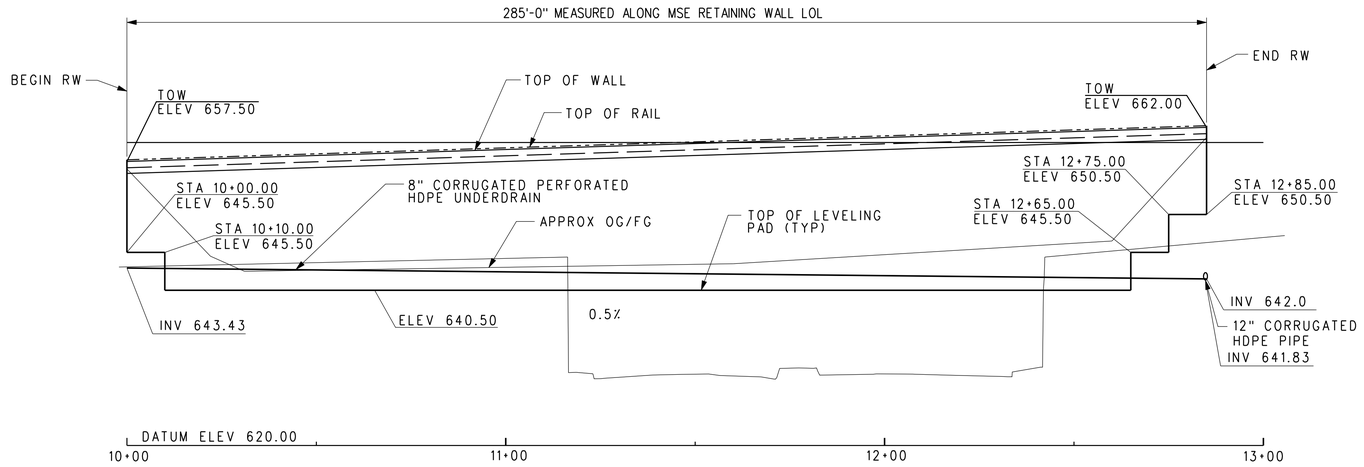


## ELEVATION
HORIZ 1" = 20'-0"
VERT 1" = 10'-0"

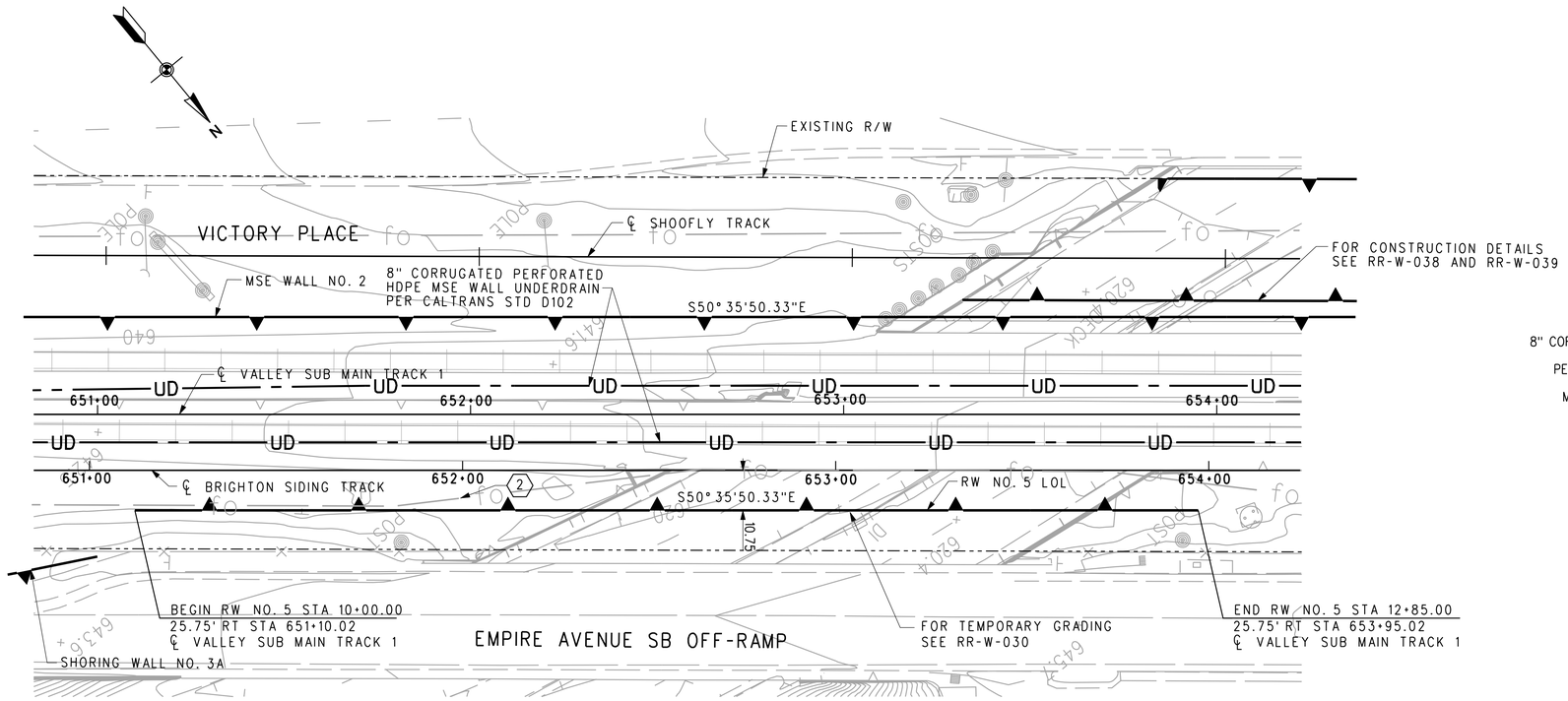


## PLAN
1" = 20'-0"

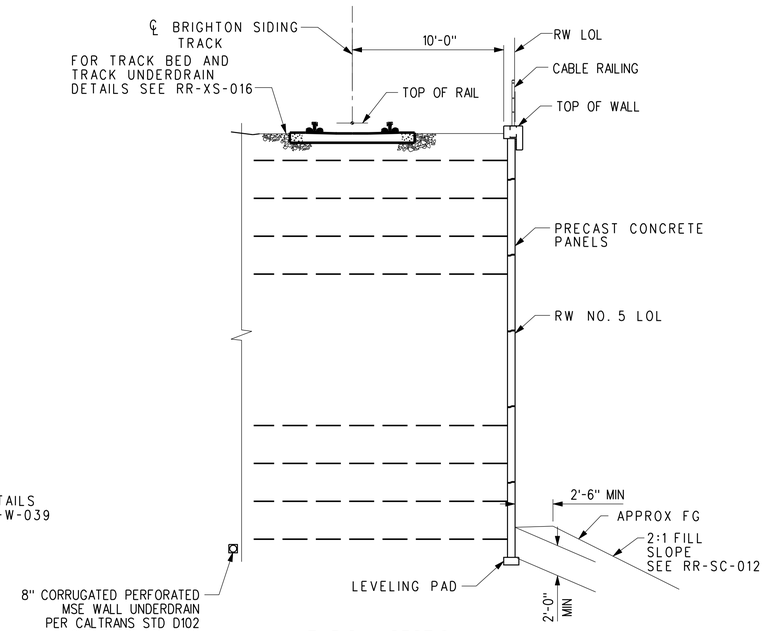


## TYPICAL SECTION
NO SCALE

LEGEND
INDICATES NEW RETAINING WALL
UD INDICATES NEW UNDERDRAIN

NOTE:
SEE DRAINAGE PROFILES RR-DR-021 TO RR-DR-043

(2) EXIST FO SPRINT LINE
SEE "EXISTING UTILITY" RR-U-009

NOTE:
THE CONTRACTOR SHALL VERIFY ALL CONTROLLING FIELD DIMENSIONS BEFORE ORDERING OR FABRICATING ANY MATERIAL.

RR-RW-501
RAILROAD SHEET NO. 316 OF 394

| | | | | | | | |
|---|---|---|---|---|---|---|---|
| DESIGN OVERSIGHT | DESIGN | BY D. Yee | CHECKED A. Zheng | LOAD AND RESISTANCE FACTOR DESIGN | LIVE LOADING: COOPER E-80 AND MAINTENANCE VEHICLE | | |
| SIGN OFF DATE | DETAILS | BY J. WANG | CHECKED A. Zheng | LAYOUT | BY | CHECKED | |
| | QUANTITIES | BY | CHECKED | SPECIFICATIONS | BY | PLANS AND SPECS COMPARED | |

**PREPARED FOR THE STATE OF CALIFORNIA DEPARTMENT OF TRANSPORTATION**

A. DANIELIANS
PROJECT ENGINEER

BRIDGE NO.
POST MILES

# RR - RETAINING WALLS (MSE)
# RETAINING WALL NO. 5 LAYOUT

DESIGN GENERAL PLAN SHEET (ENGLISH) (REV.7/16/10)

ORIGINAL SCALE IN INCHES FOR REDUCED PLANS 0 1 2 3

PN: 07000211197
UNIT: 1812

DISREGARD PRINTS BEARING EARLIER REVISION DATES →

REVISION DATES (PRELIMINARY STAGE ONLY)

SHEET 1 OF 1

FILE => ...\Sheet\Walls\E737B-RW-501.sht

CONTRACT NO.:

PROJECT ID:

USERNAME => grandovd DATE PLOTTED => 7/17/2012 TIME PLOTTED => 6:21:00 PM

| DIST | COUNTY | ROUTE | POST MILES TOTAL PROJECT | SHEET No | TOTAL SHEETS |
|---|---|---|---|---|---|
| 7 | LA | 5 | 29.4/31.6 | 1683 | 1931 |

Dah-Uei Yee 05-21-12
REGISTERED CIVIL ENGINEER DATE

05-21-12
PLANS APPROVAL DATE

REGISTERED PROFESSIONAL ENGINEER
DAH-UEI YEE
No. C 61029
Exp. 12/31/12
CIVIL
STATE OF CALIFORNIA

*The State of California or its officers or agents shall not be responsible for the accuracy or completeness of electronic copies of this plan sheet.*


**SCRRA**
279 EAST ARROW HIGHWAY
SAN DIMAS, CA 91773

**AECOM**
515 SOUTH FLOWER ST, 4TH FLOOR
LOS ANGELES, CA 90071


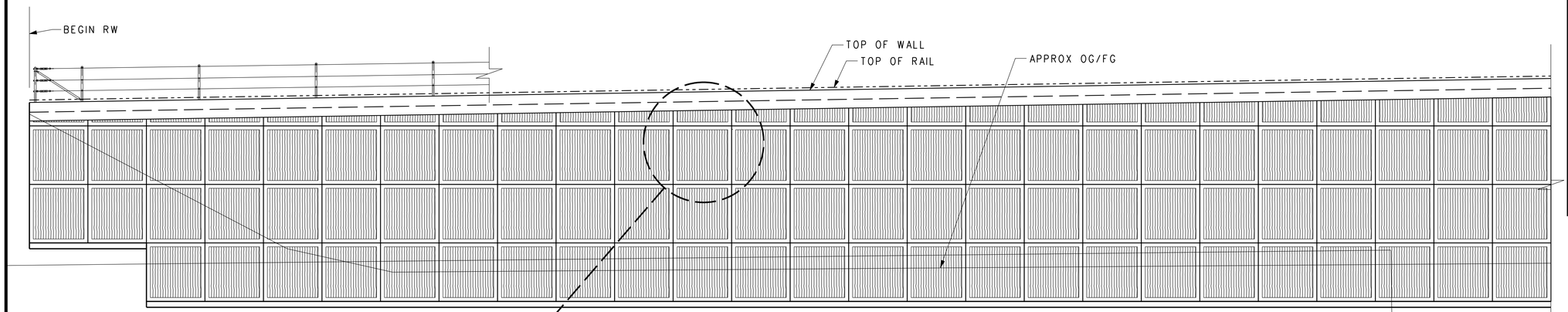


## TYPICAL ARCHITECTURAL LAYOUT
No Scale

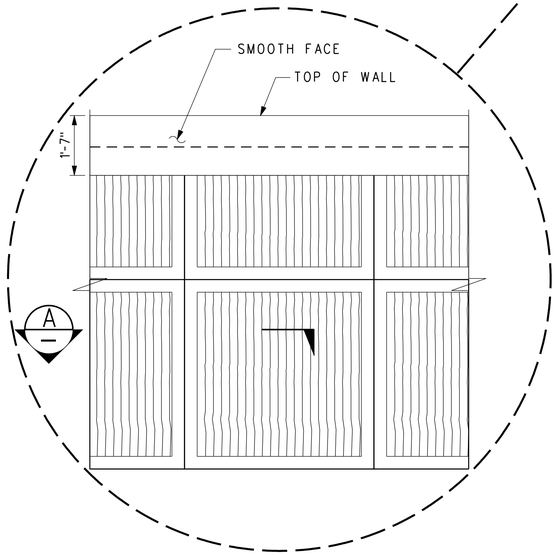


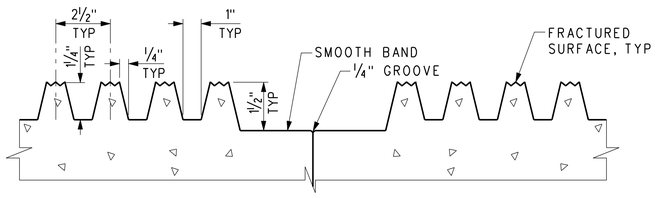


## SECTION
No Scale — A RR-RW-502

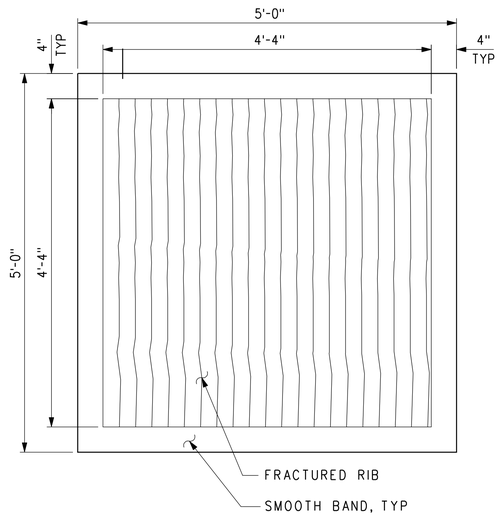


## INTERMEDIATE AND FULL HEIGHT PANELS

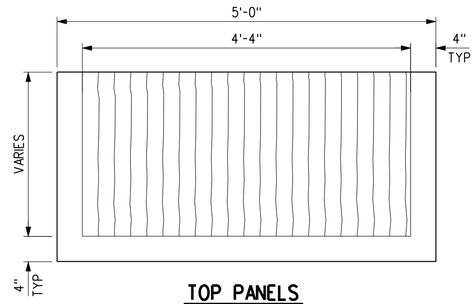


## TOP PANELS

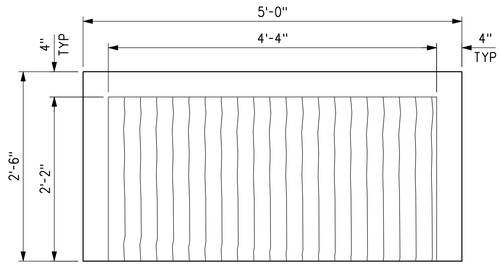


## BOTTOM HALF PANELS

## MSE WALL PANEL ELEVATION
No Scale

NOTE:
THE CONTRACTOR SHALL VERIFY ALL CONTROLLING FIELD DIMENSIONS BEFORE ORDERING OR FABRICATING ANY MATERIAL.

RR-RW-502
RAILROAD SHEET NO. 317 OF 394

DESIGN OVERSIGHT

SIGN OFF DATE

| | BY | CHECKED |
|---|---|---|
| DESIGN | D. Yee | A. Zheng |
| DETAILS | J. Wang | A. Zheng |
| QUANTITIES | A. Zheng | D. Yee |

PREPARED FOR THE STATE OF CALIFORNIA DEPARTMENT OF TRANSPORTATION

A. DANIELIANS
PROJECT ENGINEER

BRIDGE NO. x
POST MILES x

# RR - RETAINING WALLS (MSE)
# ARCHITECTURAL TREATMENT DETAILS

DESIGN DETAIL SHEET (ENGLISH) (REV.7/16/10)

ORIGINAL SCALE IN INCHES FOR REDUCED PLANS 0 1 2 3

PN: 07000211197
UNIT: 1812

DISREGARD PRINTS BEARING EARLIER REVISION DATES →

REVISION DATES (PRELIMINARY STAGE ONLY)

SHEET 1 OF 1

FILE => ...\Sheet\Walls\E737B-RW-502.sht

CONTRACT NO.:

PROJECT ID:

USERNAME => grandovc DATE PLOTTED => 7/17/2012 TIME PLOTTED => 6:21:02 PM

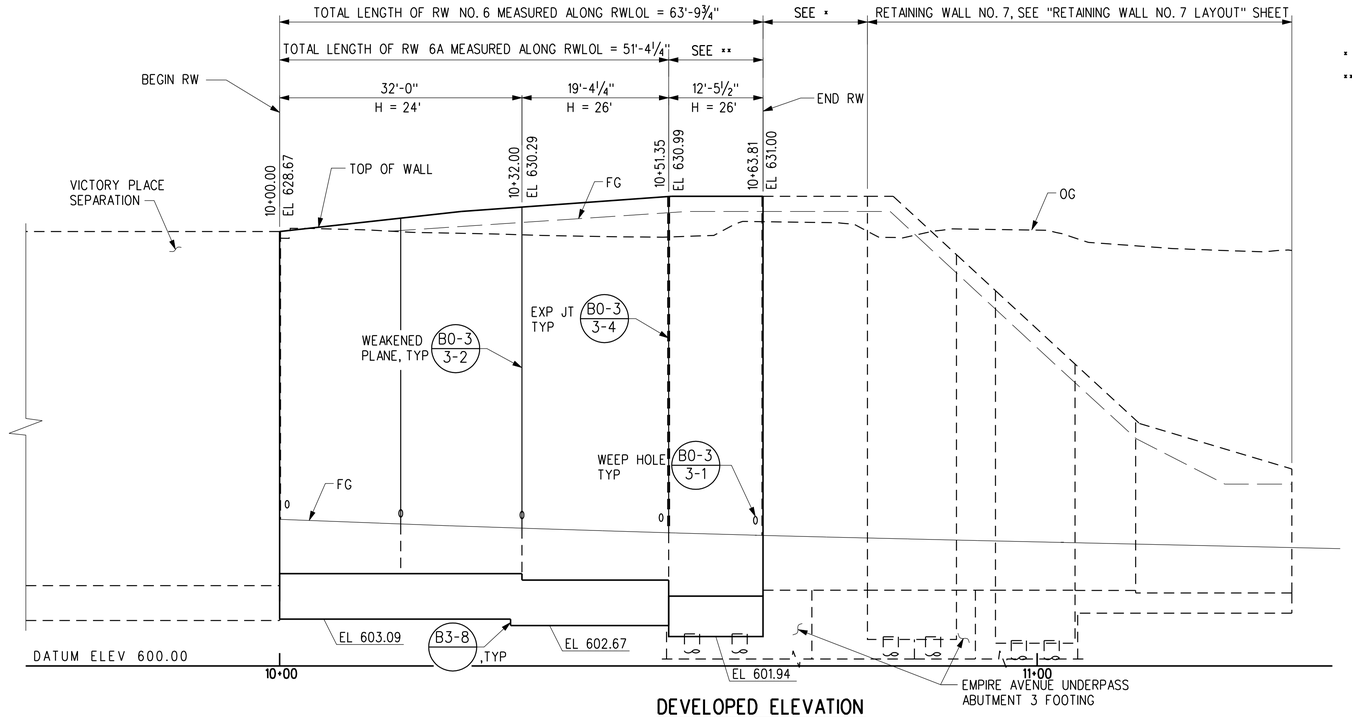


## DEVELOPED ELEVATION

HORIZ 1" = 10'-0"
VERT 1" = 5'-0"

* WALL ON ABUTMENT FOOTING, SEE BRIDGE PLANS

** TOTAL LENGTH OF RW 6B MEASURED ALONG RWLOL

| DIST | COUNTY | ROUTE | POST MILES TOTAL PROJECT | SHEET NO | TOTAL SHEETS |
|---|---|---|---|---|---|
| 7 | LA | 5 | 29.4/31.6 | 1684 | 1931 |

Dah-Uei Yee — REGISTERED CIVIL ENGINEER — 05-21-12 DATE

05-21-12 PLANS APPROVAL DATE

REGISTERED PROFESSIONAL ENGINEER — DAH-UEI YEE — No. C 61029 — Exp. 12/31/12 — CIVIL — STATE OF CALIFORNIA

*The State of California or its officers or agents shall not be responsible for the accuracy or completeness of electronic copies of this plan sheet.*

| | |
|---|---|
| **SCRRA**<br>279 EAST ARROW HIGHWAY<br>SAN DIMAS, CA 91773 | **AECOM**<br>515 SOUTH FLOWER ST, 4TH FLOOR<br>LOS ANGELES, CA 90071 |

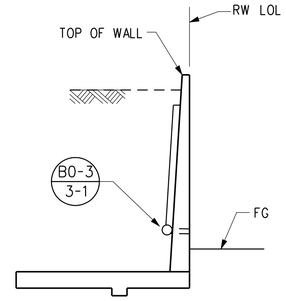


NOTE: BRIDGE STRUCTURE BEYOND NOT SHOWN FOR CLARITY.

## RW 6A TYPICAL SECTION

NO SCALE

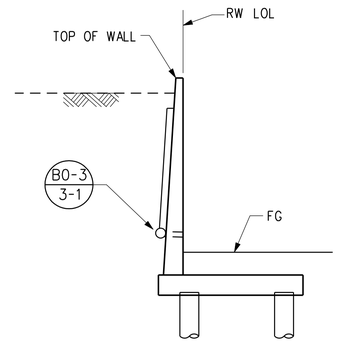


## RW 6B TYPICAL SECTION

NO SCALE

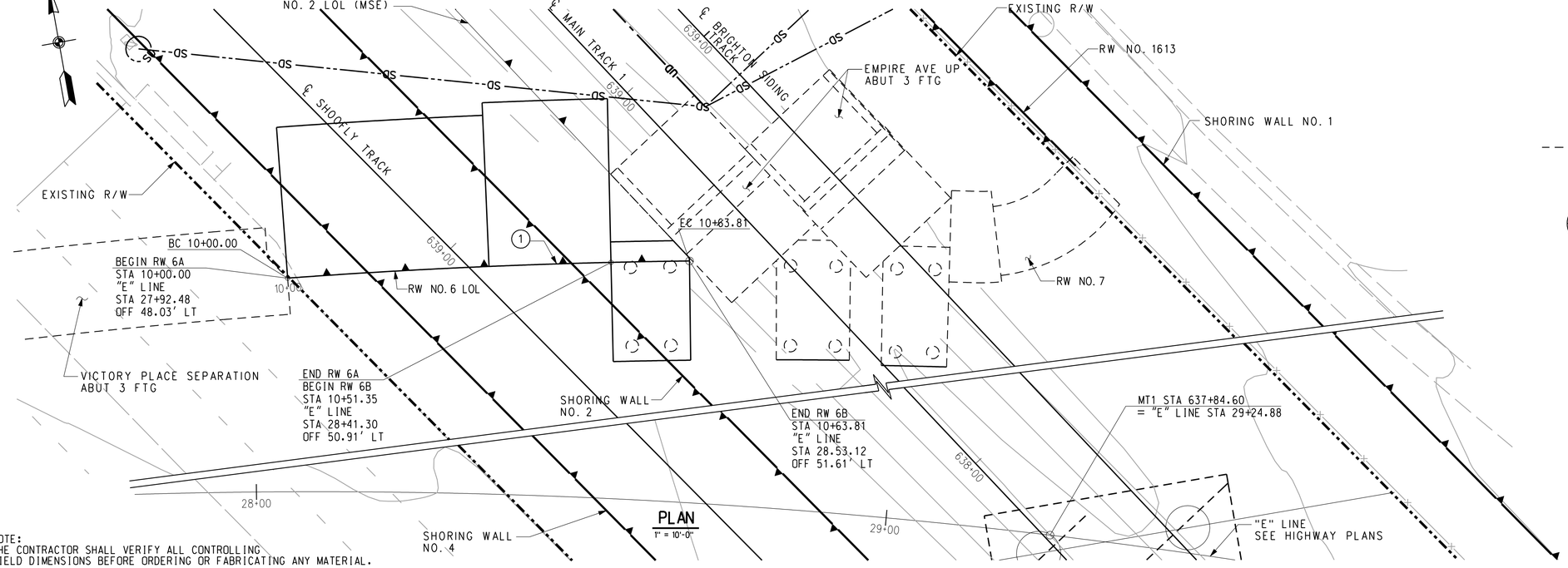


## PLAN

1" = 10'-0"

| CURVE DATA | | | | |
|---|---|---|---|---|
| No. | R | Δ | T | L |
| 1 | 1036.24' | 3° 31'41.53" | 31.92 | 63.81' |

NOTE:
THE CONTRACTOR SHALL VERIFY ALL CONTROLLING FIELD DIMENSIONS BEFORE ORDERING OR FABRICATING ANY MATERIAL.

RR-RW-601

RAILROAD SHEET NO. 318 OF 394

| | | | | | | | |
|---|---|---|---|---|---|---|---|
| DESIGN OVERSIGHT | DESIGN | BY D. Yee | CHECKED A. Zheng | LOAD AND RESISTANCE FACTOR DESIGN | LIVE LOADING: COOPER E-80 AND MAINTENANCE VEHICLE | | PREPARED FOR THE STATE OF CALIFORNIA DEPARTMENT OF TRANSPORTATION |
| | DETAILS | BY J. WANG | CHECKED A. Zheng | LAYOUT | BY | CHECKED | |
| SIGN OFF DATE | QUANTITIES | BY | CHECKED | SPECIFICATIONS | BY | PLANS AND SPECS COMPARED | |

A. DANIELIANS
PROJECT ENGINEER

BRIDGE NO.
POST MILES

# RR - RETAINING WALLS (CAST-IN-PLACE)
# RETAINING WALL NO. 6 LAYOUT

DESIGN GENERAL PLAN SHEET (ENGLISH) (REV.7/16/10)

ORIGINAL SCALE IN INCHES FOR REDUCED PLANS 0 1 2 3

PN: 07000211197
UNIT: 1812

DISREGARD PRINTS BEARING EARLIER REVISION DATES →

REVISION DATES (PRELIMINARY STAGE ONLY)

SHEET 1 OF 2

FILE => ...\Sheet\Walls\E737B-RW-601.sht

CONTRACT NO.:

PROJECT ID:

USERNAME => grondovo DATE PLOTTED => 7/17/2012 TIME PLOTTED => 6:21:06 PM

| DIST | COUNTY | ROUTE | POST MILES TOTAL PROJECT | SHEET NO | TOTAL SHEETS |
|---|---|---|---|---|---|
| 7 | LA | 5 | 29.4/31.6 | 1685 | 1931 |

Dah-Uei Yee 05-21-12
REGISTERED CIVIL ENGINEER DATE

REGISTERED PROFESSIONAL ENGINEER — DAH-UEI YEE — No. C 61029 — Exp. 12/31/12 — CIVIL — STATE OF CALIFORNIA

05-21-12
PLANS APPROVAL DATE

*The State of California or its officers or agents shall not be responsible for the accuracy or completeness of electronic copies of this plan sheet.*

**SCRRA**
279 EAST ARROW HIGHWAY
SAN DIMAS, CA 91773

**AECOM**
515 SOUTH FLOWER ST, 4TH FLOOR
LOS ANGELES, CA 90071

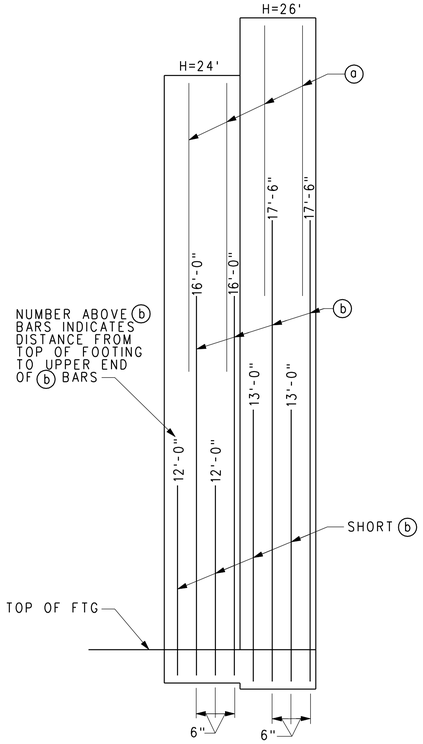


RW 6A ELEVATION
NO SCALE

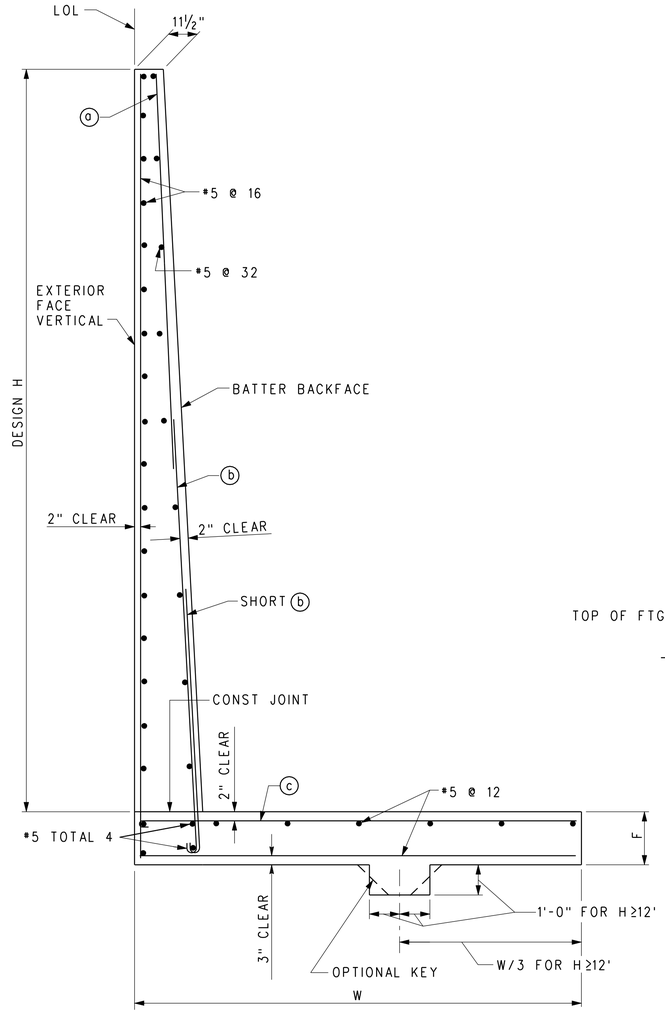


RW 6A SECTION
NO SCALE

| TABLE OF REINFORCING STEEL DIMENSIONS AND DATA - RW 6A | | | |
|---|---|---|---|
| DESIGN H | 24' | 26' | - |
| W | 24'-0" | 26'-0" | - |
| F | 3'-0" | 3'-0" | - |
| BATTER | 5/8:12 | 3/4:12 | - |
| ⓐ BARS | *8 @ 12 | *8 @ 12 | - |
| ⓑ BARS | *11 @ 6 | *11 @ 6 | - |
| ⓒ BARS | *11 @ 6 | *11 @ 6 | - |

DESIGN DATA

REINFORCED CONCRETE: $f_c$ = 1,450 psi
$f'_c$ = 3,600 psi
$f_s$ = 24,000 psi
$f_y$ = 60,000 psi
n = 8
EARTH = 120 lb/ft³
SURCHARGE = 240 lb/ft²

NOTES:
1. FOR DETAILS NOT SHOWN AND DRAINAGE NOTES SEE B3-8.
2. FOR WALL STEM JOINT DETAILS SEE B0-3 3-3 AND B0-3 3-4.

NOTE:
THE CONTRACTOR SHALL VERIFY ALL CONTROLLING FIELD DIMENSIONS BEFORE ORDERING OR FABRICATING ANY MATERIAL.

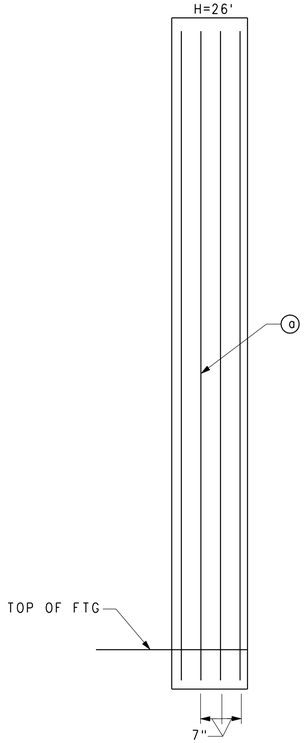


RW 6B ELEVATION
NO SCALE

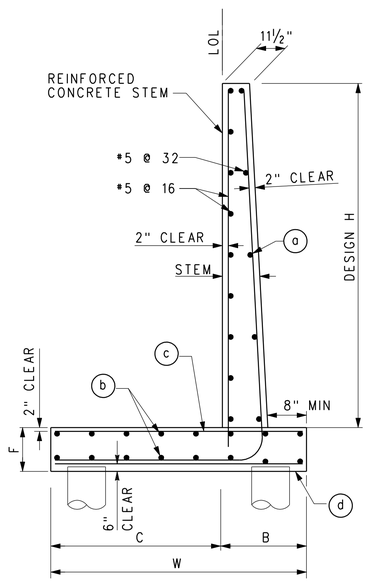


RW 6B SECTION
NO SCALE

| TABLE OF REINFORCING STEEL DIMENSIONS AND DATA - RW 6B | | | | |
|---|---|---|---|---|
| DESIGN H | 26' | - | - |
| W | 19'-0" | - | - |
| C | 15'-9" | - | - |
| B | 3'-3" | - | - |
| F | 3'-3" | - | - |
| BATTER | 3/4: 12 | - | - |
| ⓐ BARS | *11 @ 7 | - | - |
| ⓑ BARS | *6 @ 6 | - | - |
| ⓒ BARS | *9 @ 7 | - | - |
| ⓓ BARS | *6 @ 10 | - | - |

| PILE DATA TABLE | | | | | | | |
|---|---|---|---|---|---|---|---|
| DESIGN H | PILE TYPE | DESIGN LOADING (SERVICE) (KIPS) | NOMINAL RESISTANCE COMPRESSION (KIPS) | NOMINAL RESISTANCE TENSION (KIPS) | CUT-OFF ELEVATION (FT) | DESIGN TIP ELEV (FT) | SPECIFIED TIP ELEV (FT) |
| 26' | 24" CIDH | 370 | 740 | - | 602.19 | 547.19(1) 572.19(3) | 547.19 |

NOTE:
DESIGN TIP ELEVATION IS CONTROLLED BY THE FOLLOWING DEMANDS:
(1) COMPRESSION, (3) LATERAL LOAD

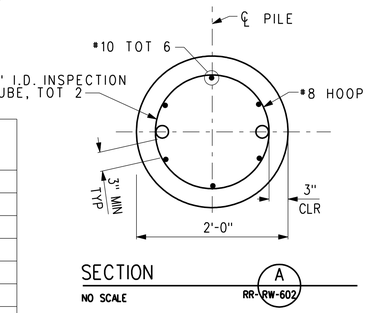


SECTION Ⓐ RR-RW-602
NO SCALE

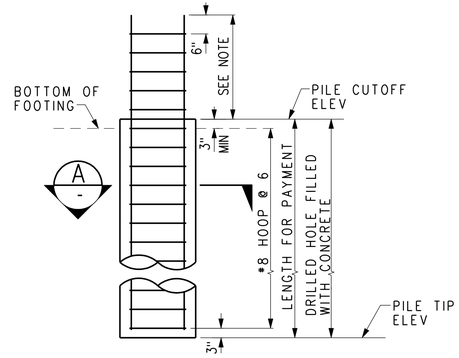


NOTES:
1. EXTEND PILE REINF TO TOP MAT OF FOOTING REINF.
2. INSPECTION TUBES ARE REQUIRED WHEN WATER IS ENCOUNTERED DURING DRILLING. WHEN NO WATER IS ENCOUNTERED, PLACE 6-#10 LONGITUDINAL REINFORCEMENT EVENLY AROUND PERIMETER.

24" CIDH CONCRETE PILE DETAILS
NO SCALE

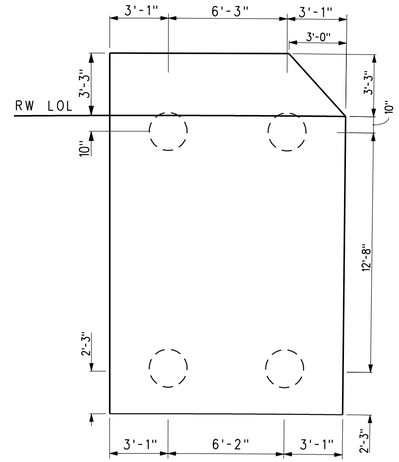


RW 6B FOOTING PLAN
NO SCALE

RR-RW-602
RAILROAD SHEET NO. 319 OF 394

| | | | | | |
|---|---|---|---|---|---|
| DESIGN OVERSIGHT | | DESIGN | BY D. Yee | CHECKED A. Zheng | PREPARED FOR THE STATE OF CALIFORNIA DEPARTMENT OF TRANSPORTATION |
| SIGN OFF DATE | | DETAILS | BY J. Wang | CHECKED A. Zheng | |
| | | QUANTITIES | BY A. Zheng | CHECKED D. Yee | |

A. DANIELIANS
PROJECT ENGINEER

| BRIDGE NO. | RR - RETAINING WALLS (CAST-IN-PLACE) |
|---|---|
| x | RETAINING WALL NO. 6 DETAILS |
| POST MILES x | |

DESIGN DETAIL SHEET (ENGLISH) (REV.7/16/10)

ORIGINAL SCALE IN INCHES FOR REDUCED PLANS 0 1 2 3

PN: 07000211197
UNIT: 1812

DISREGARD PRINTS BEARING EARLIER REVISION DATES →

REVISION DATES (PRELIMINARY STAGE ONLY)

SHEET 2 OF 2

FILE => ...\Sheet\Walls\E737B-RW-602.sht

CONTRACT NO.:

PROJECT ID:

USERNAME => gcordova DATE PLOTTED => 7/17/2012 TIME PLOTTED => 6:21:10 PM

| DIST | COUNTY | ROUTE | POST MILES TOTAL PROJECT | SHEET No | TOTAL SHEETS |
|---|---|---|---|---|---|
| 7 | LA | 5 | 29.4/31.6 | 1686 | 1931 |

Dah-Uei Yee 05-21-12
REGISTERED CIVIL ENGINEER DATE

05-21-12
PLANS APPROVAL DATE

REGISTERED PROFESSIONAL ENGINEER
DAH-UEI YEE
No. C 61029
Exp. 12/31/12
CIVIL
STATE OF CALIFORNIA

*The State of California or its officers or agents shall not be responsible for the accuracy or completeness of electronic copies of this plan sheet.*

**SCRRA**
279 EAST ARROW HIGHWAY
SAN DIMAS, CA 91773

**AECOM**
515 SOUTH FLOWER ST, 4TH FLOOR
LOS ANGELES, CA 90071

## DEVELOPED ELEVATION

HORIZ: 1" = 10'-0"
VERT: 1" = 5'-0"

* WALL ON ABUTMENT FOOTING, SEE BRIDGE PLANS
** TOTAL LENGTH OF RW 7B MEASURED ALONG RW LOL = 27'-5 7/8"
*** TOTAL LENGTH OF RW 7A MEASURED ALONG RW LOL = 28'-6 1/2"

| CURVE DATA | | | | |
|---|---|---|---|---|
| No. | R | △ | T | L |
| 1 | 1036.23' | 1° 45'24.51" | 15.89' | 31.77' |
| 2 | 24.61' | 56° 28'3.31" | 13.21' | 24.25' |

## PLAN

1" = 10'-0

NOTE: BRIDGE STRUCTURE BEYOND NOT SHOWN FOR CLARITY.

## RW 7A TYPICAL SECTION

NO SCALE

## RW 7B TYPICAL SECTION

NO SCALE

NOTE:
THE CONTRACTOR SHALL VERIFY ALL CONTROLLING FIELD DIMENSIONS BEFORE ORDERING OR FABRICATING ANY MATERIAL.

RR-RW-701
RAILROAD SHEET NO.
320 OF 394

| | | | |
|---|---|---|---|
| DESIGN | BY D. Yee | CHECKED A. Zheng | |
| DETAILS | BY J. WANG | CHECKED A. Zheng | |
| QUANTITIES | BY | CHECKED | |

DESIGN OVERSIGHT

SIGN OFF DATE

| | | |
|---|---|---|
| LOAD AND RESISTANCE FACTOR DESIGN | LIVE LOADING: COOPER E-80 AND MAINTENANCE VEHICLE | |
| LAYOUT | BY | CHECKED |
| SPECIFICATIONS | BY | PLANS AND SPECS COMPARED |

**PREPARED FOR THE**
**STATE OF CALIFORNIA**
**DEPARTMENT OF TRANSPORTATION**

A. DANIELIANS
PROJECT ENGINEER

BRIDGE NO.

POST MILES

# RR - RETAINING WALLS (CAST-IN-PLACE)
# RETAINING WALL NO. 7 LAYOUT

DESIGN GENERAL PLAN SHEET (ENGLISH) (REV.7/16/10)

ORIGINAL SCALE IN INCHES FOR REDUCED PLANS
0 1 2 3

PN: 07000211197
UNIT: 1812

DISREGARD PRINTS BEARING EARLIER REVISION DATES

REVISION DATES (PRELIMINARY STAGE ONLY)

SHEET 1 OF 2

FILE => ...\Sheet\Walls\E737B-RW-701.sht

CONTRACT NO.:

PROJECT ID:

USERNAME => grandova DATE PLOTTED => 7/17/2012 TIME PLOTTED => 6:21:14 PM

NOTES:

1. FOR DETAILS NOT SHOWN AND DRAINAGE NOTES SEE B3-8.
2. FOR WALL STEM JOINT DETAILS SEE BO-3 3-3 AND BO-3 3-4.

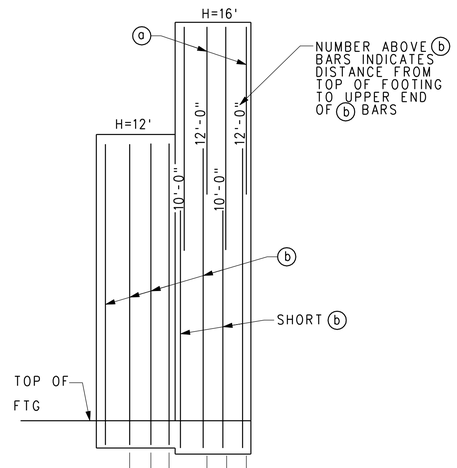


RW 7A ELEVATION

NO SCALE

| TABLE OF REINFORCING STEEL DIMENSIONS AND DATA - RW 7A | | | |
|---|---|---|---|
| DESIGN H | 12' | 16' | - |
| W | 11'-8" | 14'-6" | - |
| C | 2'-6" | 2'-11" | - |
| B | 9'-2" | 11'-7" | - |
| F | 1'-4" | 1'-6" | - |
| BATTER | 1/2:12 | 1/2:12 | - |
| a BARS | - | *5 @ 9 | - |
| b BARS | *6 @ 8 | *9 @ 9 | - |
| c BARS | *6 @ 8 | *9 @ 9 | - |

DESIGN DATA

REINFORCED CONCRETE: $f_c$ = 1,450 psi
$f'_c$ = 3,600 psi
$f_s$ = 24,000 psi
$f_y$ = 60,000 psi
n = 8
EARTH = 120 lb/ft$^3$
SURCHARGE = 240 lb/ft$^2$

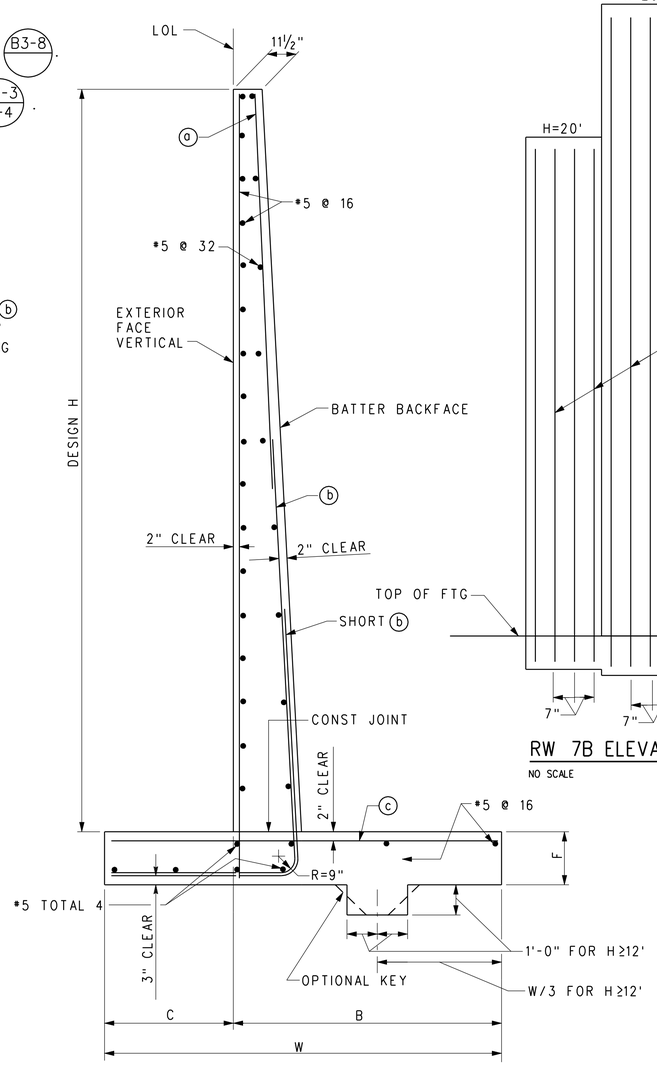


RW 7A SECTION

NO SCALE

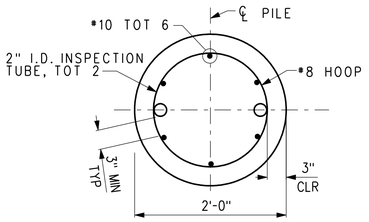


SECTION A RR-RW-702

NO SCALE

NOTE:
THE CONTRACTOR SHALL VERIFY ALL CONTROLLING FIELD DIMENSIONS BEFORE ORDERING OR FABRICATING ANY MATERIAL.

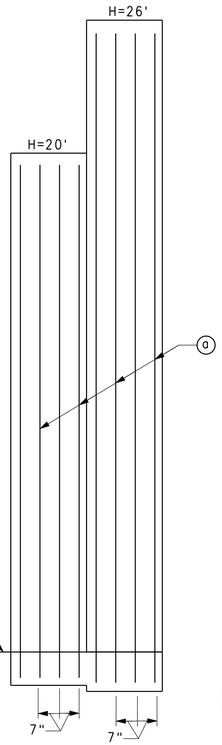


RW 7B ELEVATION

NO SCALE

| TABLE OF REINFORCING STEEL DIMENSIONS AND DATA - RW 7B | | | |
|---|---|---|---|
| DESIGN H | 20' | 26' | - |
| W | 19'-0" | 19'-0" | - |
| C | 16'-6" | 15'-9" | - |
| B | 2'-6" | 3'-3" | - |
| F | 3'-6" | 3'-3" | - |
| BATTER | 3/4: 12 | 3/4: 12 | - |
| a BARS | *11 @ 7 | *11 @ 7 | - |
| b BARS | *6 @ 6 | *6 @ 6 | - |
| c BARS | *9 @ 7 | *9 @ 7 | - |
| d BARS | *6 @ 10 | *6 @ 10 | - |

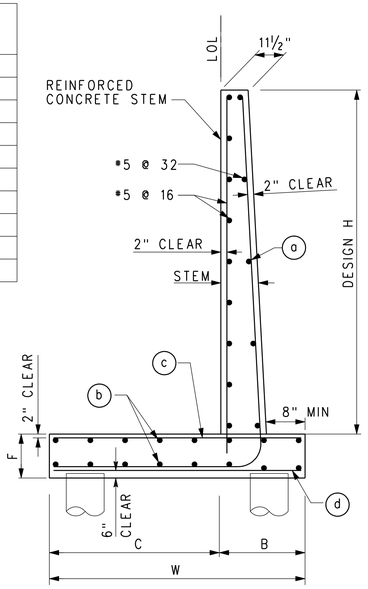


RW 7B SECTION

NO SCALE

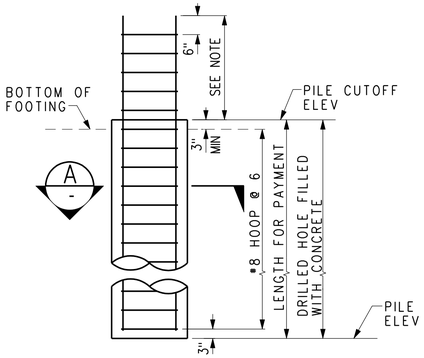


NOTES:

1. EXTEND PILE REINF TO TOP MAT OF FOOTING REINF.
2. INSPECTION TUBES ARE REQUIRED WHEN WATER IS ENCOUNTERED DURING DRILLING. WHEN NO WATER IS ENCOUNTERED, PLACE 6-*10 LONGITUDINAL REINFORCEMENT EVENLY AROUND PERIMETER.

24" CIDH CONCRETE PILE DETAILS

NO SCALE

| PILE DATA TABLE | | | | | | | |
|---|---|---|---|---|---|---|---|
| DESIGN H | PILE TYPE | DESIGN LOADING (SERVICE) (KIPS) | NOMINAL RESISTANCE COMPRESSION (KIPS) | NOMINAL RESISTANCE TENSION (KIPS) | CUT-OFF ELEVATION (FT) | DESIGN TIP ELEV (FT) | SPECIFIED TIP ELEV (FT) |
| 20' | 24" CIDH | 370 | 740 | - | 601.75 | 546.75(1) 571.75(3) | 546.75 |
| 26' | 24" CIDH | 370 | 740 | - | 602.00 | 547.00(1) 572.00(3) | 547.00 |

NOTE:

DESIGN TIP ELEVATION IS CONTROLLED BY THE FOLLOWING DEMANDS:
(1) COMPRESSION, (3) LATERAL LOAD

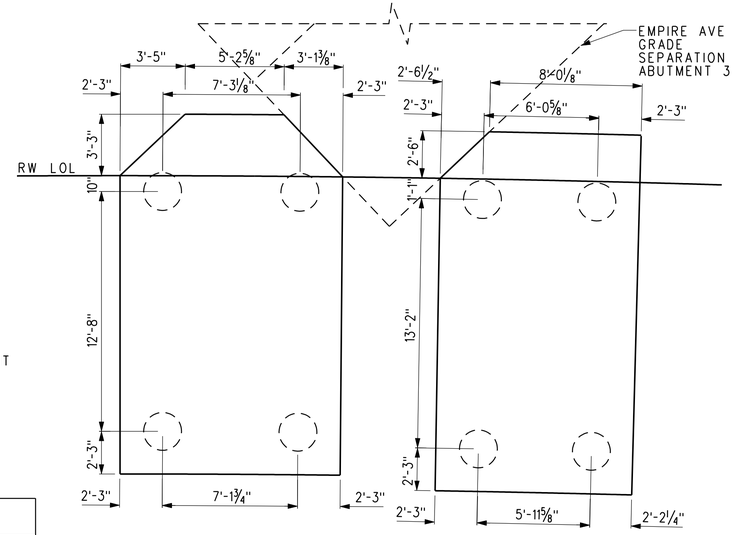


RW 7B FOOTING PLAN

NO SCALE

| DIST | COUNTY | ROUTE | POST MILES TOTAL PROJECT | SHEET No | TOTAL SHEETS |
|---|---|---|---|---|---|
| 7 | LA | 5 | 29.4/31.6 | 1687 | 1931 |

Dah-Uei Yee 05-21-12
REGISTERED CIVIL ENGINEER DATE

REGISTERED PROFESSIONAL ENGINEER — DAH-UEI YEE — No. C 61029 — Exp. 12/31/12 — CIVIL — STATE OF CALIFORNIA

05-21-12
PLANS APPROVAL DATE

*The State of California or its officers or agents shall not be responsible for the accuracy or completeness of electronic copies of this plan sheet.*

**SCRRA**
279 EAST ARROW HIGHWAY
SAN DIMAS, CA 91773

**AECOM**
515 SOUTH FLOWER ST, 4TH FLOOR
LOS ANGELES, CA 90071

RR-RW-702
RAILROAD SHEET NO.
321 OF 394

DESIGN OVERSIGHT
SIGN OFF DATE

| | BY | CHECKED |
|---|---|---|
| DESIGN | D. Yee | A. Zheng |
| DETAILS | J. Wang | A. Zheng |
| QUANTITIES | A. Zheng | D. Yee |

PREPARED FOR THE STATE OF CALIFORNIA DEPARTMENT OF TRANSPORTATION

A. DANIELIANS
PROJECT ENGINEER

BRIDGE NO. x
POST MILES x

# RR - RETAINING WALLS (CAST-IN-PLACE)
# RETAINING WALL NO. 7 DETAILS

DESIGN DETAIL SHEET (ENGLISH) (REV.7/16/10)

ORIGINAL SCALE IN INCHES FOR REDUCED PLANS 0 1 2 3

PN: 07000211197
UNIT: 1812

DISREGARD PRINTS BEARING EARLIER REVISION DATES →

REVISION DATES (PRELIMINARY STAGE ONLY)

SHEET 2 OF 2

FILE => ...\Sheet\Walls\E737B-RW-702.sht

CONTRACT NO.:

PROJECT ID:

USERNAME => gprandova DATE PLOTTED => 7/17/2012 TIME PLOTTED => 6:21:19 PM

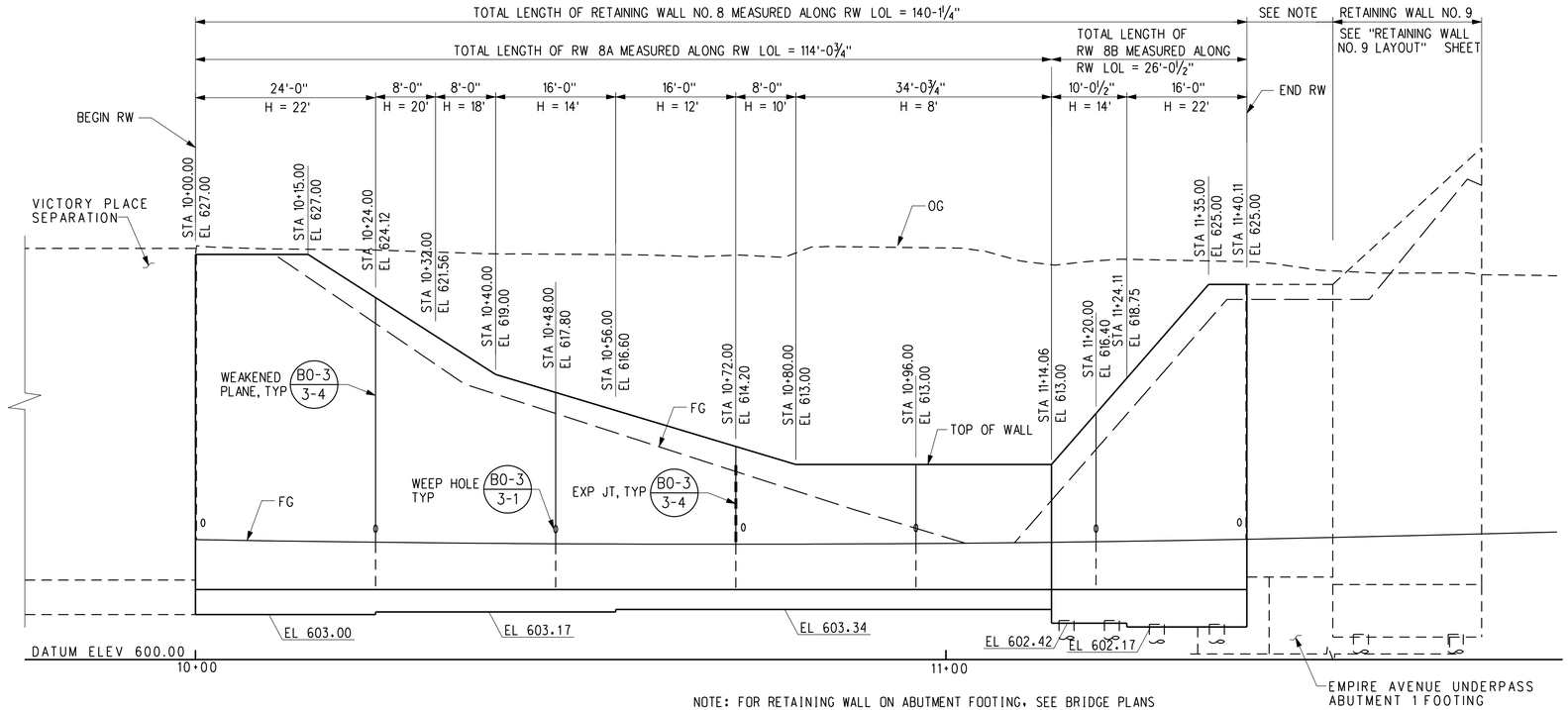


NOTE: FOR RETAINING WALL ON ABUTMENT FOOTING, SEE BRIDGE PLANS

## MIRROR DEVELOPED ELEVATION

HORIZ: 1" = 10'-0"
VERT: 1" = 5'-0"

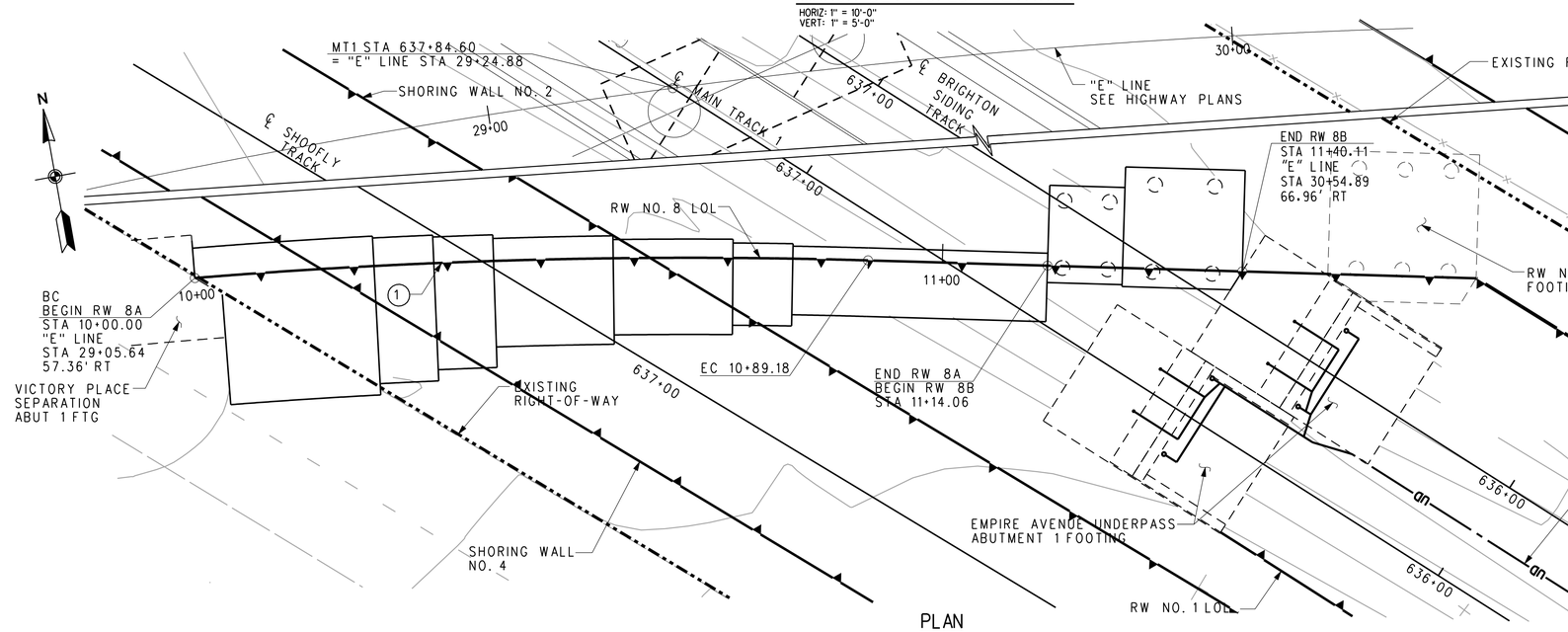


## PLAN

1" = 10'-0

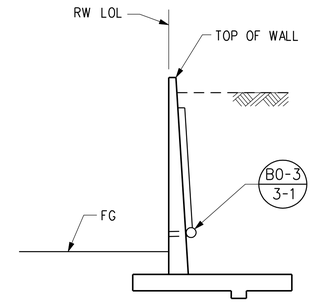


NOTE: BRIDGE STRUCTURE BEYOND NOT SHOWN FOR CLARITY.

## RW 8A TYPICAL SECTION

NO SCALE

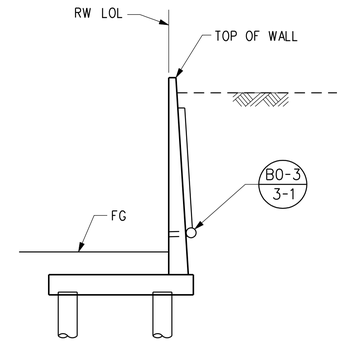


## RW 8B TYPICAL SECTION

NO SCALE

| CURVE DATA | | | | |
|---|---|---|---|---|
| No. | R | Δ | T | L |
| ① | 809.71' | 6°22'22.85" | 45.08' | 90.06' |

NOTE:
THE CONTRACTOR SHALL VERIFY ALL CONTROLLING FIELD DIMENSIONS BEFORE ORDERING OR FABRICATING ANY MATERIAL.

| DIST | COUNTY | ROUTE | POST MILES TOTAL PROJECT | SHEET NO | TOTAL SHEETS |
|---|---|---|---|---|---|
| 7 | LA | 5 | 29.4/31.6 | 1688 | 1931 |

Dah-Uei Yee — REGISTERED CIVIL ENGINEER — 05-21-12 DATE

05-21-12 PLANS APPROVAL DATE

REGISTERED PROFESSIONAL ENGINEER — DAH-UEI YEE — No. C 61029 — Exp. 12/31/12 — CIVIL — STATE OF CALIFORNIA

*The State of California or its officers or agents shall not be responsible for the accuracy or completeness of electronic copies of this plan sheet.*

| | |
|---|---|
| **SCRRA**<br>279 EAST ARROW HIGHWAY<br>SAN DIMAS, CA 91773 | **AECOM**<br>515 SOUTH FLOWER ST, 4TH FLOOR<br>LOS ANGELES, CA 90071 |

RR-RW-801
RAILROAD SHEET NO. 322 OF 394

| | | | | | | | |
|---|---|---|---|---|---|---|---|
| DESIGN OVERSIGHT | DESIGN | BY D. Yee | CHECKED A. Zheng | LOAD AND RESISTANCE FACTOR DESIGN | LIVE LOADING: COOPER E-80 AND MAINTENANCE VEHICLE | | PREPARED FOR THE STATE OF CALIFORNIA DEPARTMENT OF TRANSPORTATION |
| | DETAILS | BY J. WANG | CHECKED A. Zheng | LAYOUT | BY | CHECKED | |
| SIGN OFF DATE | QUANTITIES | BY | CHECKED | SPECIFICATIONS | BY | PLANS AND SPECS COMPARED | |

A. DANIELIANS
PROJECT ENGINEER

BRIDGE NO.
POST MILES

# RR - RETAINING WALLS (CAST-IN-PLACE)
# RETAINING WALL NO. 8 LAYOUT

DESIGN GENERAL PLAN SHEET (ENGLISH) (REV.7/16/10)

ORIGINAL SCALE IN INCHES FOR REDUCED PLANS 0 1 2 3

PN: 07000211197
UNIT: 1812

DISREGARD PRINTS BEARING EARLIER REVISION DATES →

REVISION DATES (PRELIMINARY STAGE ONLY)

SHEET 1 OF 2

FILE => ...\Sheet\Walls\E737B-RW-801.sht

CONTRACT NO.:

PROJECT ID:

USERNAME => grondovo DATE PLOTTED => 7/17/2012 TIME PLOTTED => 6:21:23 PM

DESIGN DATA

REINFORCED CONCRETE: $f_c$ = 1,450 psi
$f'_c$ = 3,600 psi
$f_s$ = 24,000 psi
$f_y$ = 60,000 psi
n = 8
EARTH = 120 lb/ft³
SURCHARGE = 240 lb/ft²

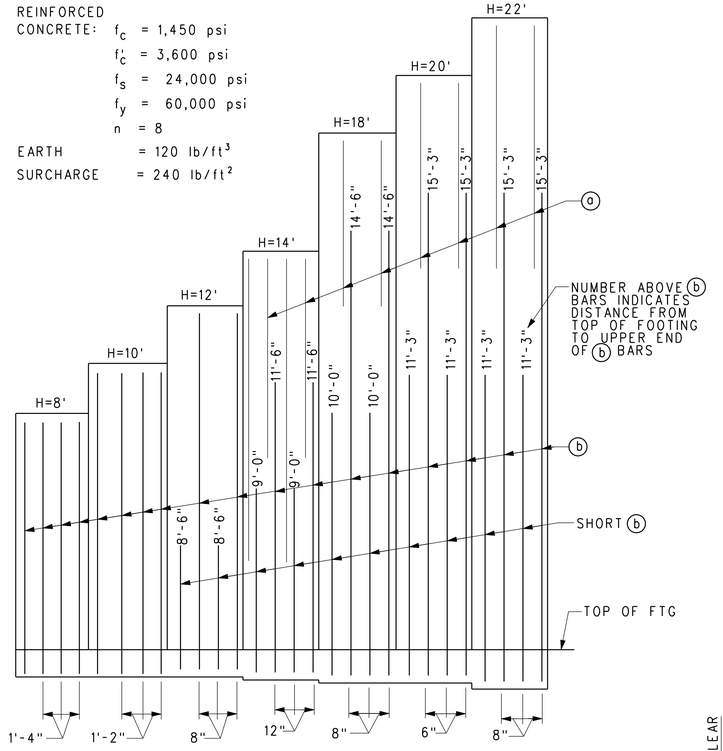


RW 8A ELEVATION
NO SCALE

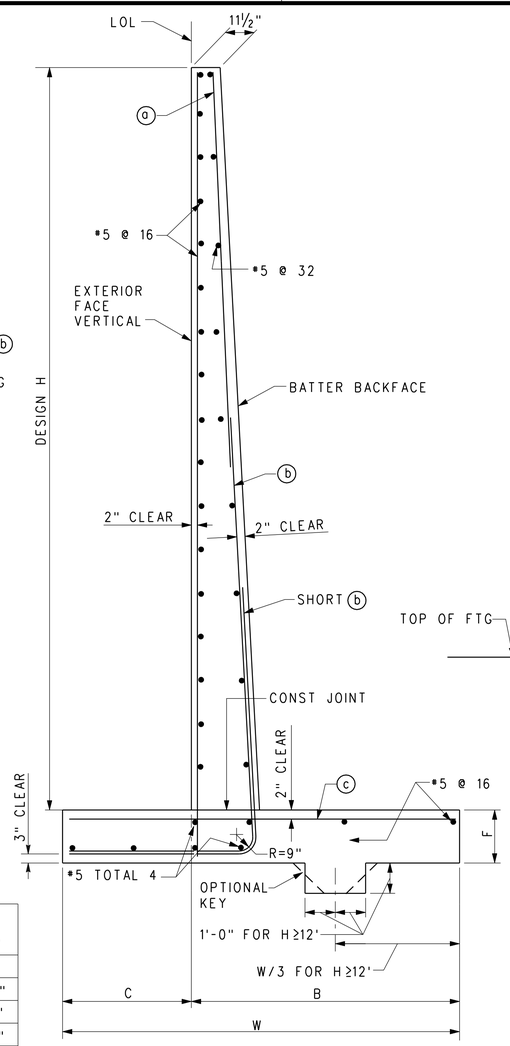


RW 8A SECTION
NO SCALE

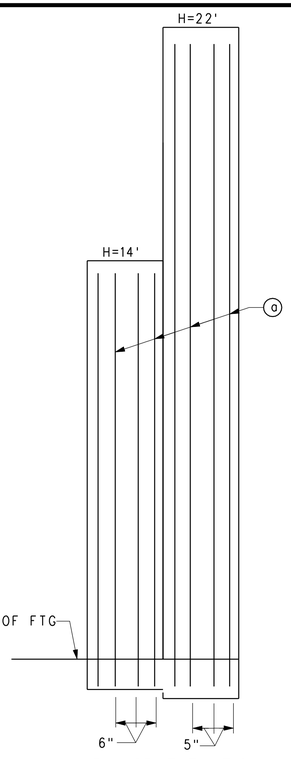


RW 8B ELEVATION
NO SCALE

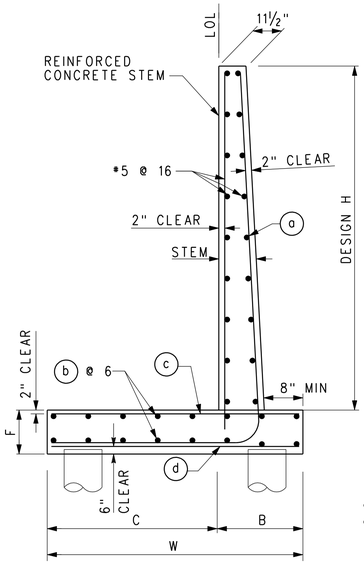


RW 8B SECTION
NO SCALE

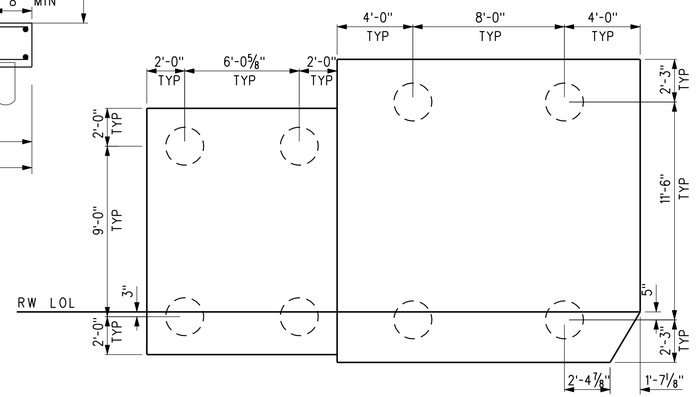


RW 8B FOOTING PLAN
NO SCALE

TABLE OF REINFORCING STEEL DIMENSIONS AND DATA - RW 8A

| DESIGN H | 8' | 10' | 12' | 14' | 18' | 20' | 22' |
|---|---|---|---|---|---|---|---|
| W | 7'-9" | 9'-6" | 11'-8" | 13'-0" | 15'-9" | 17'-3" | 18'-9" |
| C | 1'-8" | 2'-0" | 2'-6" | 2'-7" | 3'-3" | 3'-7" | 4'-0" |
| B | 6'-4" | 7'-6" | 9'-2" | 10'-5" | 12'-6" | 13'-8" | 14'-9" |
| F | 1'-4" | 1'-4" | 1'-4" | 1'-6" | 1'-6" | 1'-6" | 1'-8" |
| BATTER | ½:12 | ½:12 | ½:12 | ½:12 | ½:12 | ½:12 | ½:12 |
| (a) BARS | - | - | - | *5 @ 12 | *6 @ 16 | *8 @ 12 | *8 @ 16 |
| (b) BARS | *5 @ 16 | *6 @ 14 | *6 @ 8 | *8 @ 12 | *9 @ 8 | *9 @ 6 | *11 @ 8 |
| (c) BARS | *5 @ 16 | *6 @ 14 | *6 @ 8 | *8 @ 12 | *9 @ 8 | *9 @ 6 | *11 @ 8 |

NOTES:

1. FOR DETAILS NOT SHOWN AND DRAINAGE NOTES SEE B3-8.
2. FOR WALL STEM JOINT DETAILS SEE B0-3 3-3 AND B0-3 3-4.

TABLE OF REINFORCING STEEL DIMENSIONS AND DATA - RW 8B

| DESIGN H | 14' | 20' | - |
|---|---|---|---|
| W | 13'-0" | 16'-0" | - |
| C | 10'-9" | 13'-6" | - |
| B | 2'-3" | 2'-6" | - |
| F | 2'-3" | 2'-6" | - |
| BATTER | ½: 12 | ½: 12 | - |
| (a) BARS | *8 @ 6 | *9 @ 5 | - |
| TOTAL (b) BARS | *6 @ 6 | *6 @ 6 | - |
| TOTAL (c) BARS | *6 @ 6 | *8 @ 10 | - |
| TOTAL (d) BARS | *6 @ 12 | *6 @ 10 | - |

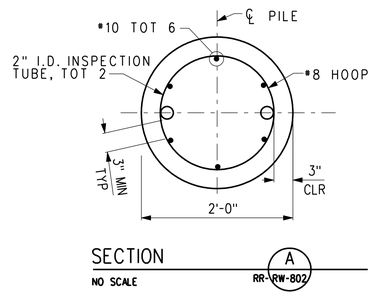


SECTION A
RR-RW-802
NO SCALE

PILE DATA TABLE

| DESIGN H | PILE TYPE | DESIGN LOADING (SERVICE) (KIPS) | NOMINAL RESISTANCE COMPRESSION (KIPS) | NOMINAL RESISTANCE TENSION (KIPS) | CUT-OFF ELEVATION (FT) | DESIGN TIP ELEV (FT) | SPECIFIED TIP ELEV (FT) |
|---|---|---|---|---|---|---|---|
| 14' | 24" CIDH | 370 | 740 | - | 602.67 | 547.67(1) 572.67(3) | 547.67 |
| 22' | 24" CIDH | 370 | 740 | - | 602.42 | 547.42(1) 572.42(3) | 547.42 |

NOTE:
DESIGN TIP ELEVATION IS CONTROLLED BY THE FOLLOWING DEMANDS:
(1) COMPRESSION, (3) LATERAL LOAD

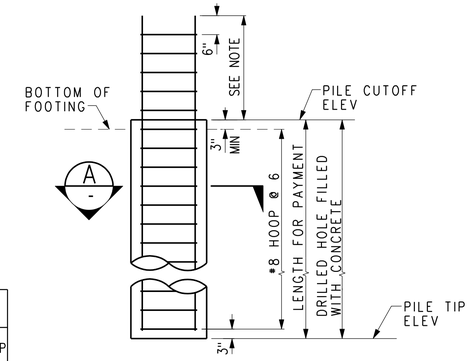


NOTES:

1. EXTEND PILE REINF TO TOP MAT OF FOOTING REINF.
2. INSPECTION TUBES ARE REQUIRED WHEN WATER IS ENCOUNTERED DURING DRILLING. WHEN NO WATER IS ENCOUNTERED, PLACE 6-*10 LONGITUDINAL REINFORCEMENT EVENLY AROUND PERIMETER.

24" CIDH CONCRETE PILE DETAILS
NO SCALE

NOTE:
THE CONTRACTOR SHALL VERIFY ALL CONTROLLING FIELD DIMENSIONS BEFORE ORDERING OR FABRICATING ANY MATERIAL.

| DIST | COUNTY | ROUTE | POST MILES TOTAL PROJECT | SHEET NO | TOTAL SHEETS |
|---|---|---|---|---|---|
| 7 | LA | 5 | 29.4/31.6 | 1689 | 1931 |

Dah-Uei Yee 05-21-12
REGISTERED CIVIL ENGINEER DATE

REGISTERED PROFESSIONAL ENGINEER — DAH-UEI YEE — No. C 61029 — Exp. 12/31/12 — CIVIL — STATE OF CALIFORNIA

05-21-12
PLANS APPROVAL DATE

*The State of California or its officers or agents shall not be responsible for the accuracy or completeness of electronic copies of this plan sheet.*


SCRRA
279 EAST ARROW HIGHWAY
SAN DIMAS, CA 91773

AECOM
515 SOUTH FLOWER ST, 4TH FLOOR
LOS ANGELES, CA 90071


RR-RW-802
RAILROAD SHEET NO. 323 OF 394

| | | | | |
|---|---|---|---|---|
| DESIGN | BY D. Yee | CHECKED A. Zheng | PREPARED FOR THE STATE OF CALIFORNIA DEPARTMENT OF TRANSPORTATION | A. DANIELIANS PROJECT ENGINEER |
| DETAILS | BY J. Wang | CHECKED A. Zheng | | |
| QUANTITIES | BY A. Zheng | CHECKED D. Yee | | |

DESIGN OVERSIGHT
SIGN OFF DATE

DESIGN DETAIL SHEET (ENGLISH) (REV.7/16/10)

ORIGINAL SCALE IN INCHES FOR REDUCED PLANS 0 1 2 3

PN: 07000211197
UNIT: 1812

BRIDGE NO. x
POST MILES x

DISREGARD PRINTS BEARING EARLIER REVISION DATES

# RR - RETAINING WALLS (CAST-IN-PLACE)
# RETAINING WALL NO. 8 DETAILS

REVISION DATES (PRELIMINARY STAGE ONLY)

SHEET 2 OF 2

FILE => ...\Sheet\Walls\E737B-RW-802.sht
CONTRACT NO.:
PROJECT ID:

USERNAME => grandovo DATE PLOTTED => 7/17/2012 TIME PLOTTED => 6:21:26 PM

| DIST | COUNTY | ROUTE | POST MILES TOTAL PROJECT | SHEET NO | TOTAL SHEETS |
|---|---|---|---|---|---|
| 7 | LA | 5 | 29.4/31.6 | 1690 | 1931 |

Dah-Uei Yee 05-21-12
REGISTERED CIVIL ENGINEER DATE

REGISTERED PROFESSIONAL ENGINEER — DAH-UEI YEE — No. C 61029 — Exp. 12/31/12 — CIVIL — STATE OF CALIFORNIA

05-21-12
PLANS APPROVAL DATE

*The State of California or its officers or agents shall not be responsible for the accuracy or completeness of electronic copies of this plan sheet.*


**SCRRA**
279 EAST ARROW HIGHWAY
SAN DIMAS, CA 91773

**AECOM**
515 SOUTH FLOWER ST, 4TH FLOOR
LOS ANGELES, CA 90071


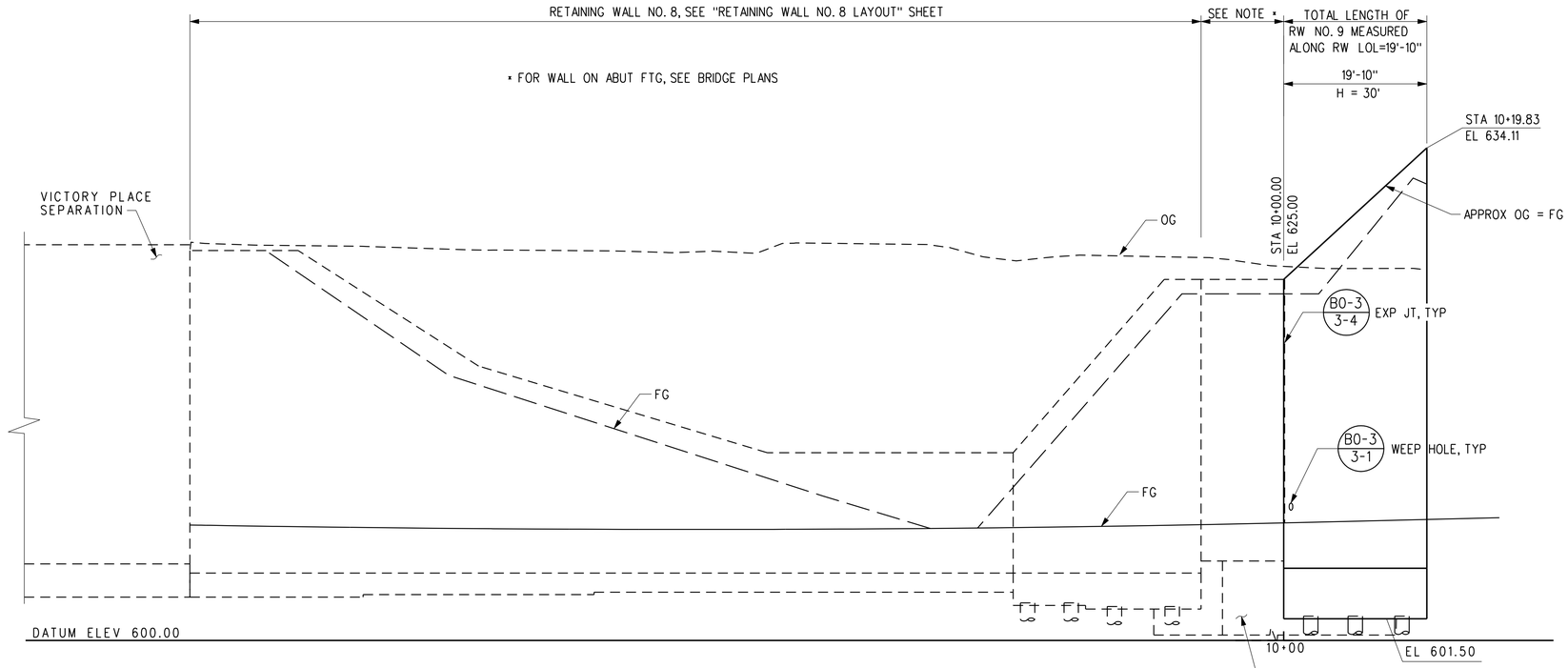


## MIRROR DEVELOPED ELEVATION

HORIZ: 1" = 10'-0"
VERT: 1" = 5'-0"

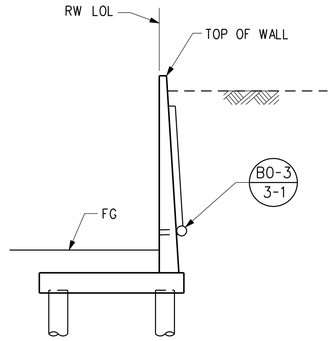


## RW NO. 9 TYPICAL SECTION

NO SCALE

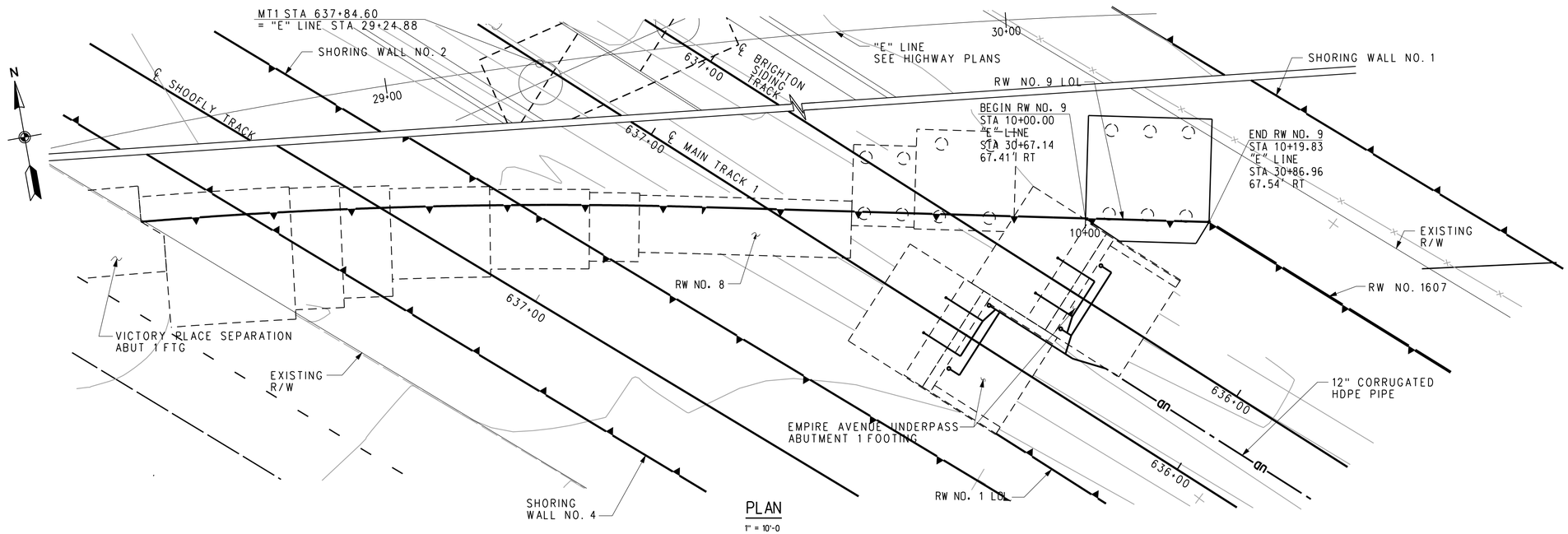


## PLAN

1" = 10'-0

NOTE:
THE CONTRACTOR SHALL VERIFY ALL CONTROLLING FIELD DIMENSIONS BEFORE ORDERING OR FABRICATING ANY MATERIAL.

RR-RW-901
RAILROAD SHEET NO. 324 OF 394

| | | | | | | | |
|---|---|---|---|---|---|---|---|
| DESIGN OVERSIGHT | DESIGN | BY D. Yee | CHECKED A. Zheng | LOAD AND RESISTANCE FACTOR DESIGN | LIVE LOADING: COOPER E-80 AND MAINTENANCE VEHICLE | | PREPARED FOR THE STATE OF CALIFORNIA DEPARTMENT OF TRANSPORTATION |
| | DETAILS | BY J. WANG | CHECKED A. Zheng | LAYOUT | BY | CHECKED | |
| SIGN OFF DATE | QUANTITIES | BY | CHECKED | SPECIFICATIONS | BY | PLANS AND SPECS COMPARED | |

A. DANIELIANS
PROJECT ENGINEER

BRIDGE NO.
POST MILES

# RR - RETAINING WALLS (CAST-IN-PLACE)
# RETAINING WALL NO. 9 LAYOUT

DESIGN GENERAL PLAN SHEET (ENGLISH) (REV.7/16/10)

ORIGINAL SCALE IN INCHES FOR REDUCED PLANS 0 1 2 3

PN: 07000211197
UNIT: 1812

DISREGARD PRINTS BEARING EARLIER REVISION DATES →

REVISION DATES (PRELIMINARY STAGE ONLY)

SHEET 1 OF 2

FILE => ...\Sheet\Walls\E737B-RW-901.sht

CONTRACT NO.:

PROJECT ID:

USERNAME => grondova DATE PLOTTED => 7/17/2012 TIME PLOTTED => 6:21:30 PM

| DIST | COUNTY | ROUTE | POST MILES TOTAL PROJECT | SHEET NO | TOTAL SHEETS |
|---|---|---|---|---|---|
| 7 | LA | 5 | 29.4/31.6 | 1691 | 1931 |

Dah-Uei Yee 05-21-12
REGISTERED CIVIL ENGINEER DATE

REGISTERED PROFESSIONAL ENGINEER — DAH-UEI YEE — No. C 61029 — Exp. 12/31/12 — CIVIL — STATE OF CALIFORNIA

05-21-12
PLANS APPROVAL DATE

*The State of California or its officers or agents shall not be responsible for the accuracy or completeness of electronic copies of this plan sheet.*

| SCRRA | AECOM |
|---|---|
| 279 EAST ARROW HIGHWAY | 515 SOUTH FLOWER ST. 4TH FLOOR |
| SAN DIMAS, CA 91773 | LOS ANGELES, CA 90071 |

DESIGN DATA

REINFORCED CONCRETE: $f_c$ = 1,450 psi
$f'_c$ = 3,600 psi
$f_s$ = 24,000 psi
$f_y$ = 60,000 psi
n = 10
EARTH = 120 lb/ft³
SURCHARGE = 240 lb/ft²

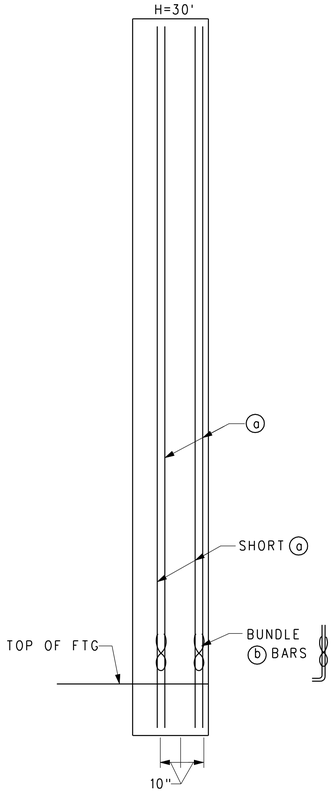


RW NO. 9 ELEVATION
NO SCALE

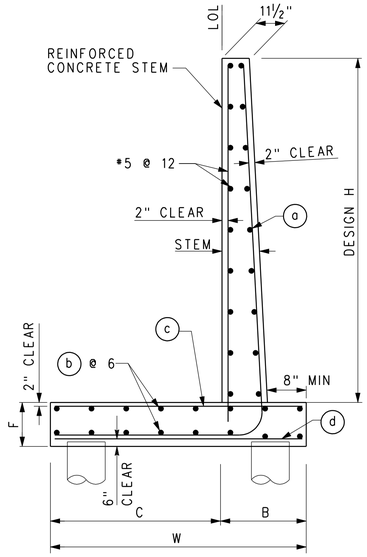


RW NO. 9 SECTION
NO SCALE

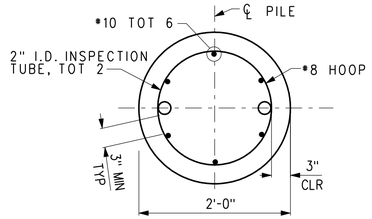


SECTION A
NO SCALE
RR-RW-902

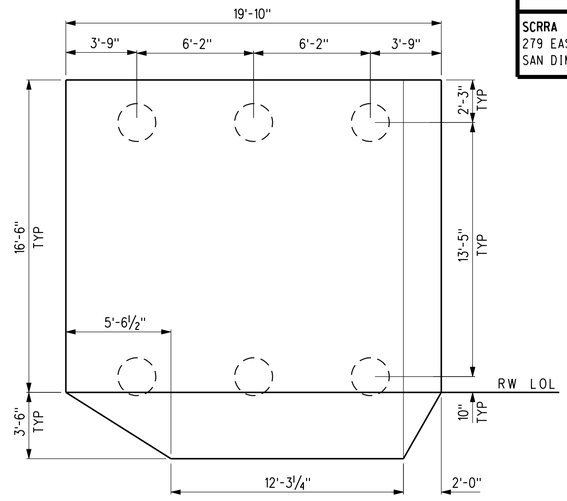


RW NO. 9 FOOTING PLAN
NO SCALE

TABLE OF REINFORCING STEEL DIMENSIONS AND DATA - RW NO. 9

| | | | |
|---|---|---|---|
| DESIGN H | 30' | - | - |
| W | 20'-0" | - | - |
| C | 16'-6" | - | - |
| B | 3'-6" | - | - |
| F | 3'-6" | - | - |
| BATTER | ¾: 12 | - | - |
| ⓐ BARS | *11 @ 9 ⚷ | - | - |
| ⓑ BARS | *6 @ 6 | - | - |
| ⓒ BARS | *9 @ 9 | - | - |
| ⓓ BARS | *6 @ 9 | - | - |

⚷ DENOTES A BUNDLE OF 2 BARS

NOTES:
1. FOR DETAILS NOT SHOWN AND DRAINAGE NOTES SEE B3-8.
2. FOR WALL STEM JOINT DETAILS SEE B0-3 3-3 AND B0-3 3-4.

PILE DATA TABLE

| DESIGN H | PILE TYPE | DESIGN LOADING (SERVICE) (KIPS) | NOMINAL RESISTANCE COMPRESSION (KIPS) | NOMINAL RESISTANCE TENSION (KIPS) | CUT-OFF ELEVATION (FT) | DESIGN TIP ELEV (FT) | SPECIFIED TIP ELEV (FT) |
|---|---|---|---|---|---|---|---|
| 30' | 24" CIDH | 370 | 740 | - | 601.75 | 546.75(1) 571.75(3) | 546.75 |

NOTE:
DESIGN TIP ELEVATION IS CONTROLLED BY THE FOLLOWING DEMANDS:
(1) COMPRESSION, (3) LATERAL LOAD

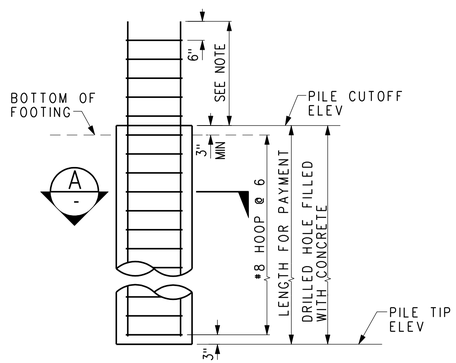


NOTES:
1. EXTEND PILE REINF TO TOP MAT OF FOOTING REINF.
2. INSPECTION TUBES ARE REQUIRED WHEN WATER IS ENCOUNTERED DURING DRILLING. WHEN NO WATER IS ENCOUNTERED, PLACE 6-*10 LONGITUDINAL REINFORCEMENT EVENLY AROUND PERIMETER.

24" CIDH CONCRETE PILE DETAILS
NO SCALE

NOTE:
THE CONTRACTOR SHALL VERIFY ALL CONTROLLING FIELD DIMENSIONS BEFORE ORDERING OR FABRICATING ANY MATERIAL.

RR-RW-902
RAILROAD SHEET NO. 325 OF 394

DESIGN OVERSIGHT
SIGN OFF DATE

| | BY | CHECKED |
|---|---|---|
| DESIGN | D. Yee | A. Zheng |
| DETAILS | J. Wang | A. Zheng |
| QUANTITIES | A. Zheng | D. Yee |

PREPARED FOR THE STATE OF CALIFORNIA DEPARTMENT OF TRANSPORTATION

A. DANIELIANS
PROJECT ENGINEER

| BRIDGE NO. | RR - RETAINING WALLS (CAST-IN-PLACE) |
|---|---|
| x | |
| POST MILES | RETAINING WALL NO. 9 DETAILS |
| x | |

DESIGN DETAIL SHEET (ENGLISH) (REV.7/16/10)

ORIGINAL SCALE IN INCHES FOR REDUCED PLANS 0 1 2 3

PN: 07000211197
UNIT: 1812

DISREGARD PRINTS BEARING EARLIER REVISION DATES →

REVISION DATES (PRELIMINARY STAGE ONLY)

SHEET 2 OF 2

FILE => ...\Sheet\Walls\E737B-RW-902.sht

CONTRACT NO.:

PROJECT ID:

USERNAME => grondovo DATE PLOTTED => 7/17/2012 TIME PLOTTED => 6:21:34 PM

| DIST | COUNTY | ROUTE | POST MILES TOTAL PROJECT | SHEET NO | TOTAL SHEETS |
|---|---|---|---|---|---|
| 7 | LA | 5 | 29.4/31.6 | 1692 | 1931 |

Dah-Uei Yee 05-21-12
REGISTERED CIVIL ENGINEER DATE

REGISTERED PROFESSIONAL ENGINEER — DAH-UEI YEE — No. C 61029 — Exp. 12/31/12 — CIVIL — STATE OF CALIFORNIA

05-21-12
PLANS APPROVAL DATE

*The State of California or its officers or agents shall not be responsible for the accuracy or completeness of electronic copies of this plan sheet.*

**SCRRA**
279 EAST ARROW HIGHWAY
SAN DIMAS, CA 91773

**AECOM**
515 SOUTH FLOWER ST, 4TH FLOOR
LOS ANGELES, CA 90071

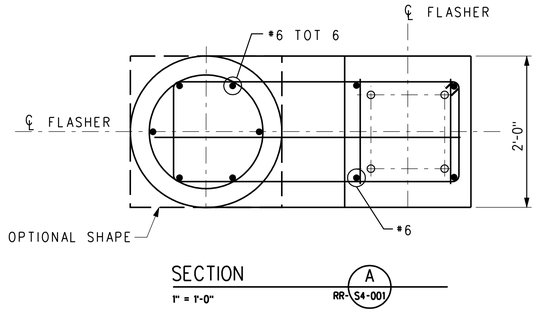


SECTION A
1" = 1'-0" RR-S4-001

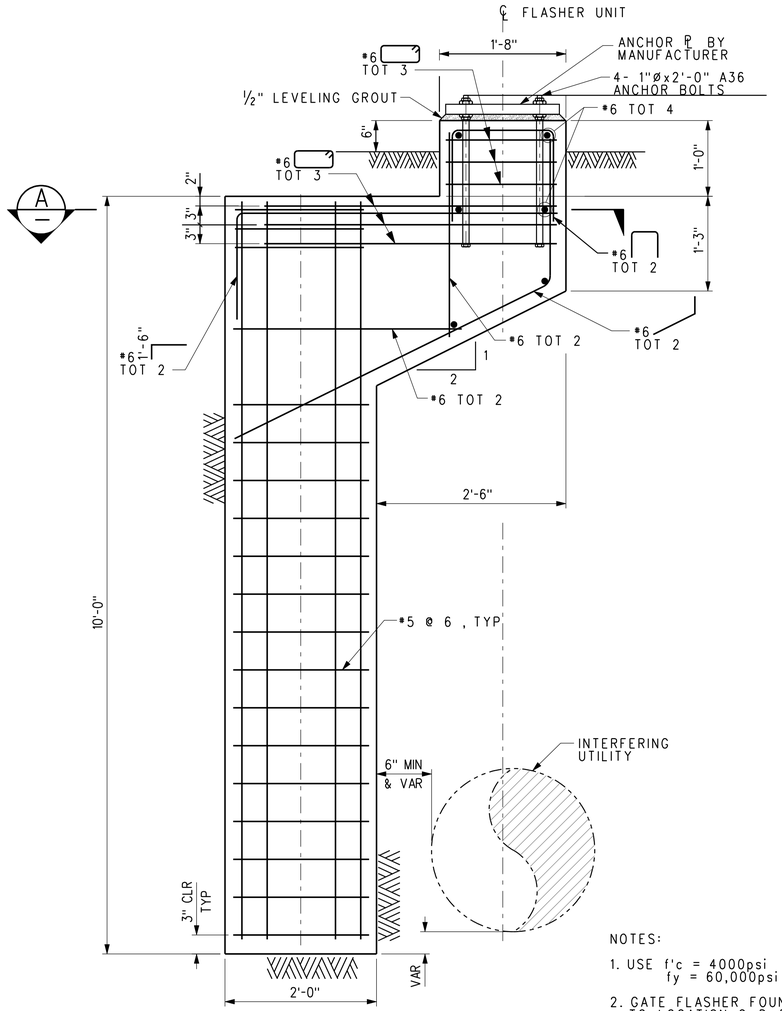


GATE FLASHER - FOOTING DETAIL
1" = 1'-0"

NOTES:
1. USE f'c = 4000psi
fy = 60,000psi
2. GATE FLASHER FOUNDATION IS APPLICABLE TO LOCATION C, D, E, F AND G ONLY.

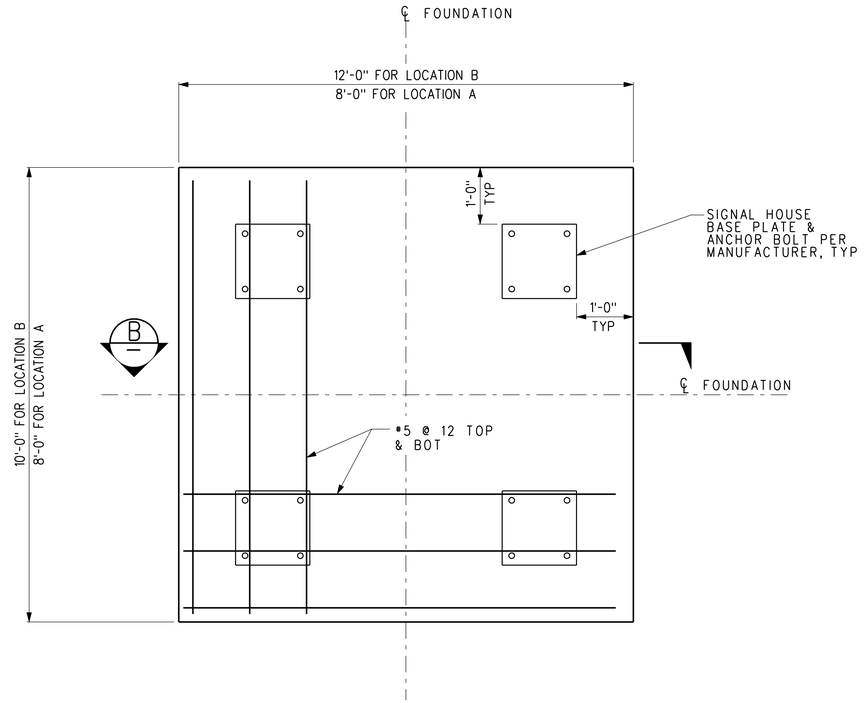


SIGNAL HOUSE - FOOTING LAYOUT
¾" = 1'-0"

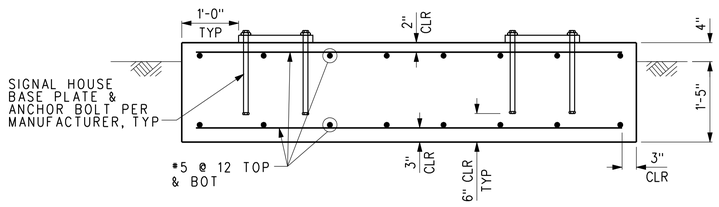


SECTION B
¾" = 1'-0" RR-S4-001

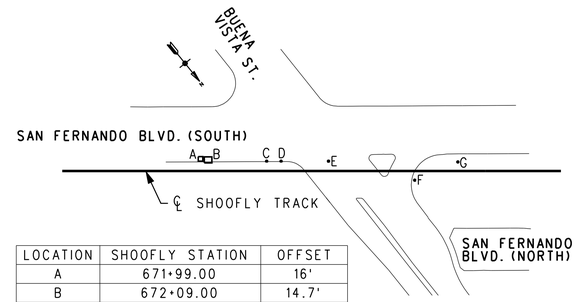


| LOCATION | SHOOFLY STATION | OFFSET |
|---|---|---|
| A | 671+99.00 | 16' |
| B | 672+09.00 | 14.7' |
| C | 672+86.32 | 13' |
| D | 673+05.34 | 13' |
| E | 673+67.96 | 13' |
| F | 674+81.70 | 12' |
| G | 675+38.20 | 12' |

□ SIGNAL HOUSE FOUNDATION
• GATE FLASHER FOUNDATION

FLASHER AND SIGNAL HOUSE FOUNDATION LOCATIONS
NO SCALE

NOTE:
THE CONTRACTOR SHALL VERIFY ALL CONTROLLING FIELD DIMENSIONS BEFORE ORDERING OR FABRICATING ANY MATERIAL.

RR-S4-001
RAILROAD SHEET NO.
326 OF 394

DESIGN OVERSIGHT

SIGN OFF DATE

| | BY | CHECKED |
|---|---|---|
| DESIGN | D. Yee | A. Zheng |
| DETAILS | J. Wang | A. Zheng |
| QUANTITIES | A. Zheng | D. Yee |

PREPARED FOR THE STATE OF CALIFORNIA DEPARTMENT OF TRANSPORTATION

A. DANIELIANS
PROJECT ENGINEER

BRIDGE NO. x
POST MILES x

# FLASHER SUPPORT FOUNDATION DETAILS

DESIGN DETAIL SHEET (ENGLISH) (REV.7/16/10)

ORIGINAL SCALE IN INCHES FOR REDUCED PLANS 0 1 2 3

PN: 07000211197
UNIT: 1812

DISREGARD PRINTS BEARING EARLIER REVISION DATES →

REVISION DATES (PRELIMINARY STAGE ONLY)

SHEET 1 OF 1

FILE => ...\E737B-S4-001.sht

CONTRACT NO.:

PROJECT ID:

USERNAME => grondova DATE PLOTTED => 7/17/2012 TIME PLOTTED => 6:21:40 PM

| Dist | COUNTY | ROUTE | POST MILES TOTAL PROJECT | SHEET No. | TOTAL SHEETS |
|---|---|---|---|---|---|
| 07 | LA | 5 | 29.4/31.6 | 1693 | 1931 |

BA Mascardo — 05-21-12
REGISTERED ELECTRICAL ENGINEER — DATE

05-21-12
PLANS APPROVAL DATE

REGISTERED PROFESSIONAL ENGINEER — BENJAMIN A. MASCARDO — No. E 8130 — Exp. 9-30-2012 — ELECTRICAL — STATE OF CALIFORNIA

*THE STATE OF CALIFORNIA OR ITS OFFICERS OR AGENTS SHALL NOT BE RESPONSIBLE FOR THE ACCURACY OR COMPLETENESS OF SCANNED COPIES OF THIS PLAN SHEET.*


SCRRA
279 E. ARROW HIGHWAY
SAN DIMAS, CA 91773

AECOM
515 SOUTH FLOWER ST. 4th FLOOR
LOS ANGELES, CA 90071


## GENERAL NOTES

1. ALL WORK SHALL BE DONE IN ACCORDANCE WITH THE STANDARD SPECIFICATIONS FOR PUBLIC WORKS CONSTRUCTION (2003 EDITION) AND NATIONAL ELECTRICAL CODE (NEC 2008), INCLUDING ALL SUPPLEMENTS THERETO.

2. SERVICE CONNECTION TO NEW METER PEDESTAL SHALL BE COORDINATED WITH BWP AND LADWP. UNDERGROUND CONDUIT SHALL BE INSTALLED PER BWP. CONNECTION TO BWP MANHOLE SHALL BE PER BWP SPECIFICATIONS, CONSTRUCTION METHODOLOGY AND SCHEDULE. THE SERVICE PLANNER FOR BWP IS: NAVEED SEDIQ – LOCAL PLANNER PHONE (818) 238-3564

3. SERVICE METER SHALL CONFORM TO BWP AND LADWP ELECTRICAL SERVICE REQUIREMENTS AND STANDARDS.

4. ALL WORK INDICATED AND SHOWN ON THE PLAN IN CONNECTION WITH THE LIGHTING INSTALLATION SHALL BE DONE BY THE CONTRACTOR AND ALL MATERIALS SHALL BE FURNISHED BY THE CONTRACTOR TO COMPLETE THE SYSTEM READY FOR OPERATION.

5. UPON COMPLETION OF THE WORK, THE CONTRACTOR SHALL PERFORM SUCH TESTS AS MAY BE REQUIRED BY THE ENGINEER. POWER FOR SUCH TESTS WILL BE OBTAINED FROM THE CITY OF BURBANK AND LADWP, ANY MATERIAL REVEALED BY THESE TESTS TO BE FAULTY IN ANY PART OF THE INSTALLATION SHALL BE REPAIRED AND CORRECTED BY THE CONTRACTOR AT ITS EXPENSE IN A MANNER PERMITTED BY THE ENGINEER, AND THE SAME TEST SHALL BE REPEATED UNTIL NO FAULT IS EVIDENT.

6. ALL CONDUCTORS SHALL BE STRANDED COPPER WITH THWN/THW INSULATION AND RATED FOR 600 VOLTS.

7. THE CONTRACTOR SHALL INSTALL CONDUCTORS NECESSARY TO COMPLETE THE LIGHTING SYSTEM AND MAKE IT READY FOR OPERATION.

8. ALL STREET LIGHT CIRCUIT BREAKERS SHALL BE "SWITCH DUTY" RATED FOR HIGH INTENSITY DISCHARGE LIGHTING AND SHALL BE MANUFACTURED BY CUTLER HAMMER, SQUARE D OR APPROVED EQUAL.

9. THE CONTRACTOR SHALL OBTAIN DAILY SAFETY CIRCUIT CLEARANCE FROM BWP AND LADWP WHEN ENTERING OR WORKING ON ENERGIZED ELECTRICAL VAULTS, CONDUITS OR PULL BOXES. CONTACT BURBANK WATER AND POWER CONSTRUCTION INSPECTOR AT (818) 548-3920, AT LEAST 48 HRS IN ADVANCE, TO ARRANGE FOR THIS WORK.

10. THE CONTRACTOR SHALL MAINTAIN THE EXISTING STREET LIGHTING SYSTEM IN PLACE AND KEEP OPERATIONAL UNTIL THE NEW LIGHTING SYSTEM IS CONSTRUCTED AND ENERGIZED. THE CONTRACTOR MAY, AT HIS OPTION, INSTALL TEMPORARY LIGHTING OF EQUAL OR BETTER INTENSITY IN LIEU OF MAINTAINING THE SYSTEM IN PLACE.

11. CONDUIT RUNS AND PULL BOX LOCATIONS SHOWN ARE DIAGRAMMATIC ONLY. INSTALLATION OF CONDUITS AND PULL BOXES SHALL SUIT FIELD CONDITIONS, WITH REVIEW AND APPROVAL BY ENGINEER.

12. NOTIFICATION AND INSPECTION:
PUBLIC WORKS DEPARTMENT SHALL BE NOTIFIED AT LEAST SEVENTY-TWO HOURS IN ADVANCE OF CONSTRUCTION AT (818) 238-3930. THE DEPARTMENT SHALL INSPECT EXCAVATIONS, FOUNDATIONS, CONDUITS, PULL BOXES IN COMPLIANCE WITH PLANS AND SPECIFICATIONS. AN INSPECTOR MUST BE PRESENT BEFORE ANY WORK IS COMMENCED.

BWP AND LADWP SHALL BE NOTIFIED AT LEAST FORTY-EIGHT (48) HOURS IN ADVANCE OF CONSTRUCTION AT (818)238-3575. THE DEPARTMENT SHALL INSPECT THE INSTALLATION OF WIRING, BONDING, AND CONDUCT THE FIVE (5) DAYS BURN TEST. AN INSPECTOR MUST BE PRESENT BEFORE ANY WORK OR TEST IS COMMENCED.

13. ACCEPTANCE: A FUNCTIONAL TEST SHALL BE MADE IN WHICH IT IS DEMONSTRATED TO THE ENGINEER THAT EACH AND EVERY PART OF THE SYSTEM FUNCTIONS AS SPECIFIED OR INTENDED. THE TEST MAY COMMENCE ONLY WITH THE APPROVAL OF THE ENGINEER. THE FUNCTIONAL TEST FOR EACH NEW OR MODIFIED ELECTRICAL SYSTEM SHALL CONSIST OF NOT LESS THAN FIVE (5) DAYS OF CONTINUOUS SATISFACTORY OPERATION. IF UNSATISFACTORY PERFORMANCE OF THE SYSTEMS DEVELOPS, THE CONDITION SHALL BE CORRECTED AND THE TEST SHALL BE REPEATED UNTIL THE FIVE (5) DAYS OF CONTINUOUS SATISFACTORY OPERATION ARE OBTAINED.

14. SUBMITTALS: THE SPECIFICATION SHEETS FOR ALL EQUIPMENT SUPPLIED BY THE CONTRACTOR SHALL BE SUBMITTED FOR APPROVAL TO THE RESPECTIVE AUTHORITY HAVING JURISDICTION:

| BURBANK WATER AND POWER | LOS ANGELES DEPTARTMENT OF WATER AND POWER |
|---|---|
| ATTN: VICTORIA FAMUYIBO | ATTN: HOVSEP MOVSSESIAN |
| 164 W. MAGNOLIA BLVD. | 7501 TYRONE AVENUE |
| BURBANK, CA 91502-1720 | VAN NUYS, CA 91405 |
| TEL # 818-238-3570 | TEL # 818-771-4074 |

14. ALL PULL BOXES SHALL BE PB NO. 3 1/2, UON.

## ELECTRICAL ABBREVIATIONS

| | |
|---|---|
| A | AMPERE, AMP METER |
| AC | ALTERNATING CURRENT |
| AFF | ABOVE FINISHED FLOOR |
| AFG | ABOVE FINISHED GRADE |
| AIC | AMPERES INTERRUPTING CAPACITY |
| AT | AMPERE TRIP |
| BC | BARE COPPER |
| BKR | BREAKER |
| BWP | BURBANK WATER AND POWER |
| C | CONDUIT |
| CALTRANS | CALIFORNIA DEPARTMENT OF TRANSPORTATION |
| CB | CIRCUIT BREAKER |
| CKT | CIRCUIT |
| CO | CONDUIT ONLY |
| DIA | DIAMETER |
| DISC | DISCONNECT |
| ELECT | ELECTRICAL |
| F | FUSE |
| GFCI | GROUND FAULT CIRCUIT INTERRUPTER |
| GND | GROUND |
| GRS | GALVANIZED RIGID STEEL |
| HID | HIGH INTENSITY DISCHARGE |
| HT | HEIGHT |
| J-BOX | JUNCTION BOX |
| KVA | KILOVOLT AMPERE |
| KWH | KILOWATT HOUR |
| LADWP | LOS ANGELES DEPARTMENT OF WATER AND POWER |
| LTG | LIGHTING |
| LV | LOW VOLTAGE |
| MH | MANHOLE |
| MIN | MINIMUM |
| MTG | MOUNTING |
| (N) | NEW |
| NEC | NATIONAL ELECTRICAL CODE |
| NIC | NOT IN CONTRACT |
| NTS | NOT TO SCALE |
| P | POWER |
| PB | PULL BOX |
| PH | PHASE |
| PNL | PANEL |
| PP | POWER POLE |
| PVC | POLYVINYL CHLORIDE |
| PWR | POWER |
| SPL1 | SERVICE PEDESTAL CABINET FOR UNDERPASS LIGHTING<br>1 - INDICATE ASSIGNED SEQUENTIAL CABINET NUMBER |
| SPS1 | SERVICE PEDESTAL METERED CABINET<br>FOR SIGNAL HOUSE PANEL<br>1 - INDICATE ASSIGNED SEQUENTIAL CABINET NUMBER |
| SPT1 | SERVICE PEDESTAL METERED CABINET<br>FOR TRAFFIC SIGNAL AND SAFETY LIGHTING<br>1 - INDICATE ASSIGNED SEQUENTIAL CABINET NUMBER |
| TBD | TO BE DETERMINED |
| TYP | TYPICAL |
| UON | UNLESS OTHERWISE NOTED |
| V | VOLT, VOLTMETER |
| VA | VOLT AMPERE |
| WP | WEATHERPROOF |
| XFMR | TRANSFORMER |

## SYMBOLS

| | |
|---|---|
| | SURFACE WALL MOUNTED, 100 W HPS, CATALOG # H1212FD-C-MW-100S-1-240-FS MANUFACTURED BY KENALL, OR APPROVED EQUAL. (CONTRACTOR TO SUBMIT EVIDENCE OF BRIDGE VIBRATION TEST OF THE LIGHT FIXTURE PER ANSI136.31) |
| | ELECTRICAL SERVICE PEDESTAL CABINET, 100 A, 240/120 V, 1 PH, 3W, GROUNDED, UON |
| J | JUNCTION BOX, 5"x6"x4", EMBEDDED IN STRUCTURE |
| | CALTRANS CONCRETE PULL BOX, SIZE AS INDICATED. |
| ---------- | CONDUIT EMBEDDED IN WALL, RIGID STEEL CONDUIT SIZE AS INDICATED ON PLAN |
| ---------- | CONDUIT BELOW GROUND, SCHEDULE 80 PVC, SIZE AS INDICATED ON PLAN |
| 60 A 2P | CIRCUIT BREAKER "60 A"<br>60 A - INDICATES TRIP SIZE<br>2P - INDICATES 2-POLE |
| | NORMALLY OPEN CONTACT |
| | NORMALLY CLOSED CONTACT |
| | UTILITY WOOD POLE |
| M | KWH METER |
| | KWH METER SOCKET |
| | GROUND ROD, 3/4" DIA. x 10' LONG, COPPER CLAD |
| | CONDUIT STUB WITH CAP |
| GFCI | DUPLEX RECEPTACLE, NEMA 5-20R, GROUNDING TYPE |
| T | TIMER |

APPROVED FOR RAILROAD WORK.

RR-E-101

RR – GENERAL NOTES, SYMBOLS AND ABBREVIATIONS

RAILROAD SHEET NO. 327 OF 394

LAST REVISION 00-00-00 NONE

DATE PLOTTED => 7/18/2012 TIME PLOTTED => 4:10:25 PM PLOT DRIVER => ...\Plotdrv\SCRRA_pdf8W.plt PEN TABLE => ...\CADD\Support\pen\PlotStamp.tbl

REVISED BY | DATE REVISED
JOHN KIM | RICHARD SILOS
CALCULATED-DESIGNED BY | CHECKED BY
PATRICK NICHOLSON | CONSULTANT FUNCTIONAL SUPERVISOR
STATE OF CALIFORNIA - DEPARTMENT OF TRANSPORTATION | DESIGN

BORDER LAST REVISED 7/2/2010
USERNAME => gharibiana
DGN FILE => ...\Sheet\E737B-E-101.sht
RELATIVE BORDER SCALE IS IN INCHES 0 1 2 3
UNIT 1812
PROJECT NUMBER & PHASE 07000211191

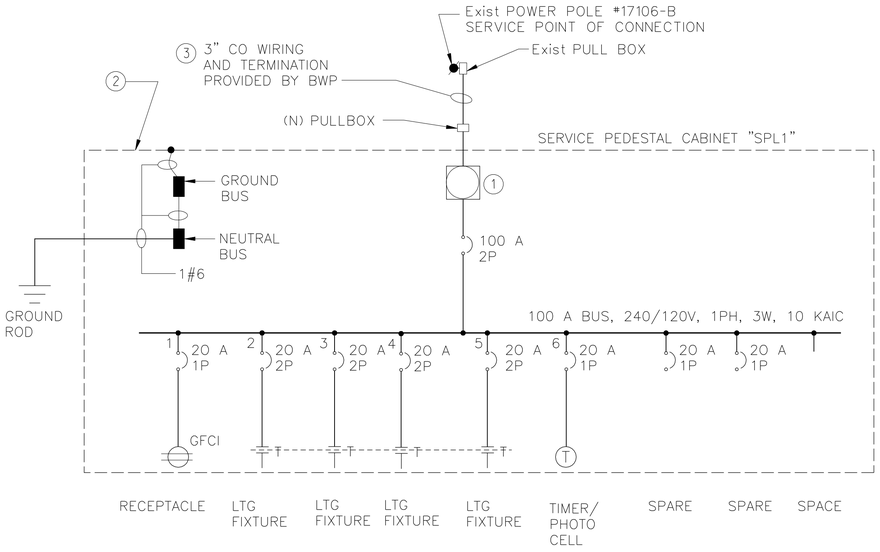


## SINGLE LINE DIAGRAM (BUENA VISTA STREET)

| LOAD SUMMARY "SPL1" | |
|---|---|
| DESCRIPTION | LOAD (VA) |
| LIGHTING FIXTURES, WALL MOUNTED(8) | 1104 |
| DUPLEX RECEPTACLE (1) | 180 |
| TIMER/PHOTO CELL | 200 |
| FUTURE LTG FIXTURES (4) | 552 |
| 25% LCL (LTG FIXTURES) | 414 |
| | |
| | |
| CONNECTED LOAD (VA) | 2450 |
| 25% SPARE | 613 |
| TOTAL CONNECTED LOAD (VA) | 3063 |
| TOTAL CONNECTED LOAD (AMPS) | 13.0 A @ 240 V, 1 PHASE |

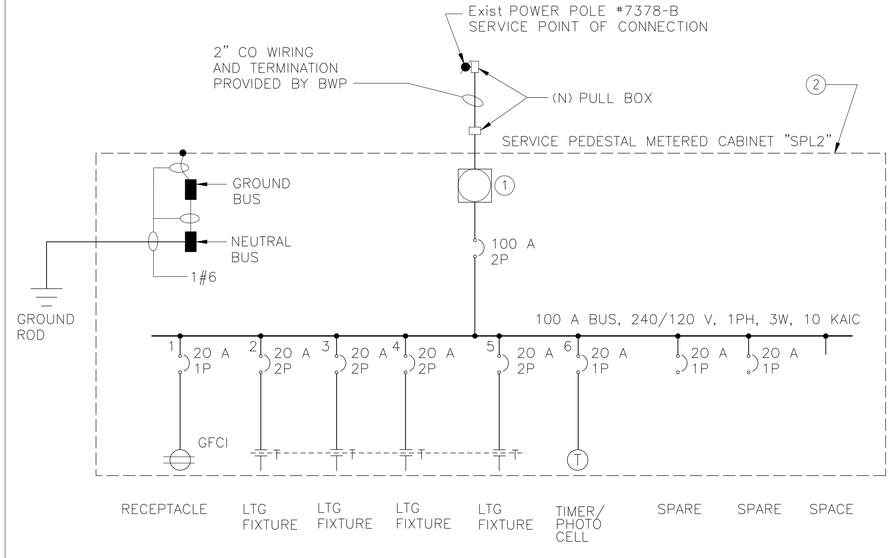


## SINGLE LINE DIAGRAM (EMPIRE AVENUE)

| LOAD SUMMARY "SPL2" | |
|---|---|
| DESCRIPTION | LOAD (VA) |
| LIGHTING FIXTURES, PENDANT MOUNTED (8) | 1104 |
| DUPLEX RECEPTACLE (1) | 180 |
| TIMER/PHOTO CELL | 200 |
| 25% LCL (LTG FIXTURES) | 276 |
| | |
| CONNECTED LOAD (VA) | 1760 |
| 25% SPARE | 440 |
| TOTAL CONNECTED LOAD (VA) | 2200 |
| TOTAL CONNECTED LOAD (AMPS) | 9.2 A @ 240 V, 1 PHASE |

| Dist | COUNTY | ROUTE | POST MILES TOTAL PROJECT | SHEET No. | TOTAL SHEETS |
|---|---|---|---|---|---|
| 07 | LA | 5 | 29.4/31.6 | 1694 | 1931 |

REGISTERED ELECTRICAL ENGINEER — DATE 05-21-12

PLANS APPROVAL DATE 05-21-12

REGISTERED PROFESSIONAL ENGINEER — BENJAMIN A. MASCARDO — No. E 8130 — Exp. 9-30-2012 ELECTRICAL — STATE OF CALIFORNIA

THE STATE OF CALIFORNIA OR ITS OFFICERS OR AGENTS SHALL NOT BE RESPONSIBLE FOR THE ACCURACY OR COMPLETENESS OF SCANNED COPIES OF THIS PLAN SHEET.

SCRRA
279 E. ARROW HIGHWAY
SAN DIMAS, CA 91773

AECOM
515 SOUTH FLOWER ST. 4th FLOOR
LOS ANGELES, CA 90071

## NOTES

1. KWH METER NOT REQUIRED. CITY OF BURBANK TO MAINTAIN STREET LIGHTING.
2. SEE BURBANK WATER AND POWER STD DWG S-459-B ON DWG RR-E-107.
3. REFER TO SHEET RR-E-121 FOR CONDUIT NOT SHOWN.

APPROVED FOR RAILROAD WORK.

RR-E-102

RAILROAD SHEET NO. 328 OF 394

RR – SINGLE LINE DIAGRAM AND LOAD SUMMARY
BUENA VISTA ST AND EMPIRE AVE UNDERPASS

NO SCALE

STATE OF CALIFORNIA - DEPARTMENT OF TRANSPORTATION — DESIGN — Caltrans®
CONSULTANT FUNCTIONAL SUPERVISOR: PATRICK NICHOLSON
CALCULATED-DESIGNED BY
CHECKED BY
REVISED BY: JOHN KIM — RICHARD SILOS
DATE REVISED

PEN TABLE => ...\CADD\Support\pen\PlotStamp.tbl
PLOT DRIVER => ...\Plotdrv\SCRRA_pdfBW.plt
TIME PLOTTED => 4:10:26 PM
DATE PLOTTED => 7/18/2012
LAST REVISION 00-00-00

BORDER LAST REVISED 7/2/2010
USERNAME => gharibiana
DGN FILE => ...\Sheet\E737B-E-102.sht
RELATIVE BORDER SCALE IS IN INCHES 0 1 2 3
UNIT 1812
PROJECT NUMBER & PHASE 07000211191

| Dist | COUNTY | ROUTE | POST MILES TOTAL PROJECT | SHEET No. | TOTAL SHEETS |
|---|---|---|---|---|---|
| 07 | LA | 5 | 29.4/31.6 | 1695 | 1931 |

BA Mascardo — 05-21-12
REGISTERED ELECTRICAL ENGINEER — DATE

05-21-12
PLANS APPROVAL DATE

REGISTERED PROFESSIONAL ENGINEER — BENJAMIN A. MASCARDO — No. E 8130 — Exp. 9-30-2012 — ELECTRICAL — STATE OF CALIFORNIA

*THE STATE OF CALIFORNIA OR ITS OFFICERS OR AGENTS SHALL NOT BE RESPONSIBLE FOR THE ACCURACY OR COMPLETENESS OF SCANNED COPIES OF THIS PLAN SHEET.*


SCRRA
279 E. ARROW HIGHWAY
SAN DIMAS, CA 91773

AECOM
515 SOUTH FLOWER ST. 4th FLOOR
LOS ANGELES, CA 90071


NOTES:

1. SERVICE POINT OF CONNECTION. COORDINATE WITH BWP FOR CONDUIT INSTALLATION REQUIREMENTS TO EXISTING PULL BOX.
2. (N) 17" X 30" PULL BOX. REFER TO BURBANK WATER AND POWER STANDARD DWG BSL-403-2 FROM DETAILS ON DWG RR-E-108.
3. 1-2"CO (PVC, SCHED 80 WITH PULL ROPE). WIRING AND TERMINATIONS PROVIDED BY BWP
4. REFER TO SHEET RR-E-121.
5. SEE DWG RR-TM-001 FOR THE REMOVAL OF THE Exist SERVICE METERED PEDESTAL CABINET AND Exist SIGNAL CONTROLLER.

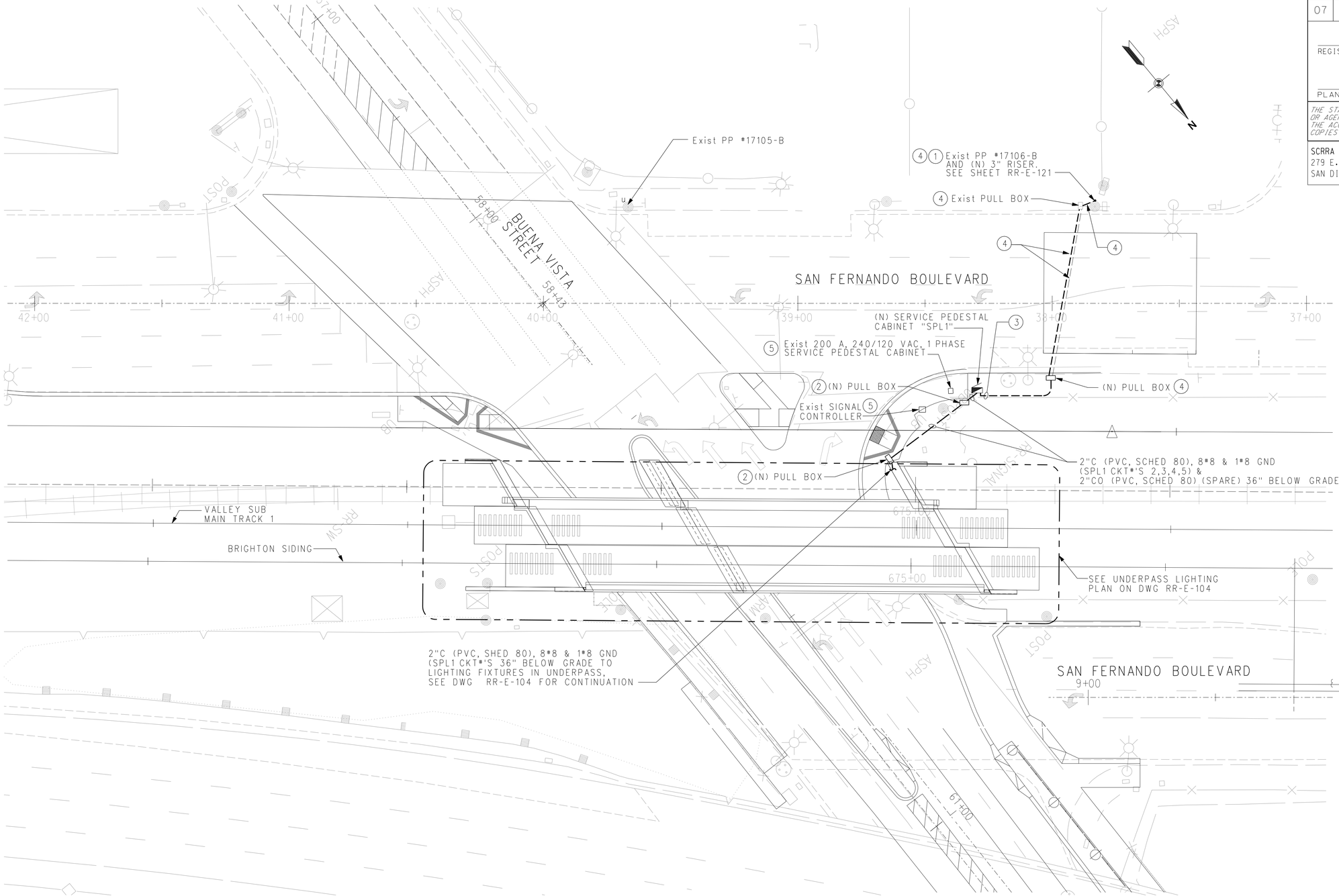


20 15 10 5 0 40 80
1" = 20'-0"

RR-E-103

RAILROAD SHEET NO. 329 OF 394

HORIZ 1"=20'

## RR – ELECTRICAL POWER DISTRIBUTION SITE PLAN BUENA VISTA ST/SAN FERNANDO ROAD

APPROVED FOR RAILROAD WORK.

STATE OF CALIFORNIA – DEPARTMENT OF TRANSPORTATION
DESIGN
CONSULTANT FUNCTIONAL SUPERVISOR: PATRICK NICHOLSON
CALCULATED-DESIGNED BY: JOHN KIM
CHECKED BY: RICHARD SILOS
REVISED BY | DATE REVISED

PLOT DRIVER => ...\Plotdrv\SCRRA_pdf8W.plt
PEN TABLE => ...\CADD\Support\pen\PlotStamp.tbl
TIME PLOTTED => 4:10:28 PM
DATE PLOTTED => 7/18/2012
LAST REVISION 00-00-00

BORDER LAST REVISED 7/2/2010
USERNAME => gharibiana
DGN FILE => ...\Sheet\E737B-E-103.sht
RELATIVE BORDER SCALE IS IN INCHES 0 1 2 3
UNIT 1812
PROJECT NUMBER & PHASE 07000211191

| Dist | COUNTY | ROUTE | POST MILES TOTAL PROJECT | SHEET No. | TOTAL SHEETS |
|---|---|---|---|---|---|
| 07 | LA | 5 | 29.4/31.6 | 1696 | 1931 |

B A Mascardo 05-21-12
REGISTERED ELECTRICAL ENGINEER DATE

05-21-12
PLANS APPROVAL DATE

REGISTERED PROFESSIONAL ENGINEER
BENJAMIN A. MASCARDO
No. E 8130
Exp. 9-30-2012
ELECTRICAL
STATE OF CALIFORNIA

THE STATE OF CALIFORNIA OR ITS OFFICERS OR AGENTS SHALL NOT BE RESPONSIBLE FOR THE ACCURACY OR COMPLETENESS OF SCANNED COPIES OF THIS PLAN SHEET.

SCRRA
279 E. ARROW HIGHWAY
SAN DIMAS, CA 91773

AECOM
515 SOUTH FLOWER ST, 4th FLOOR
LOS ANGELES, CA 90071

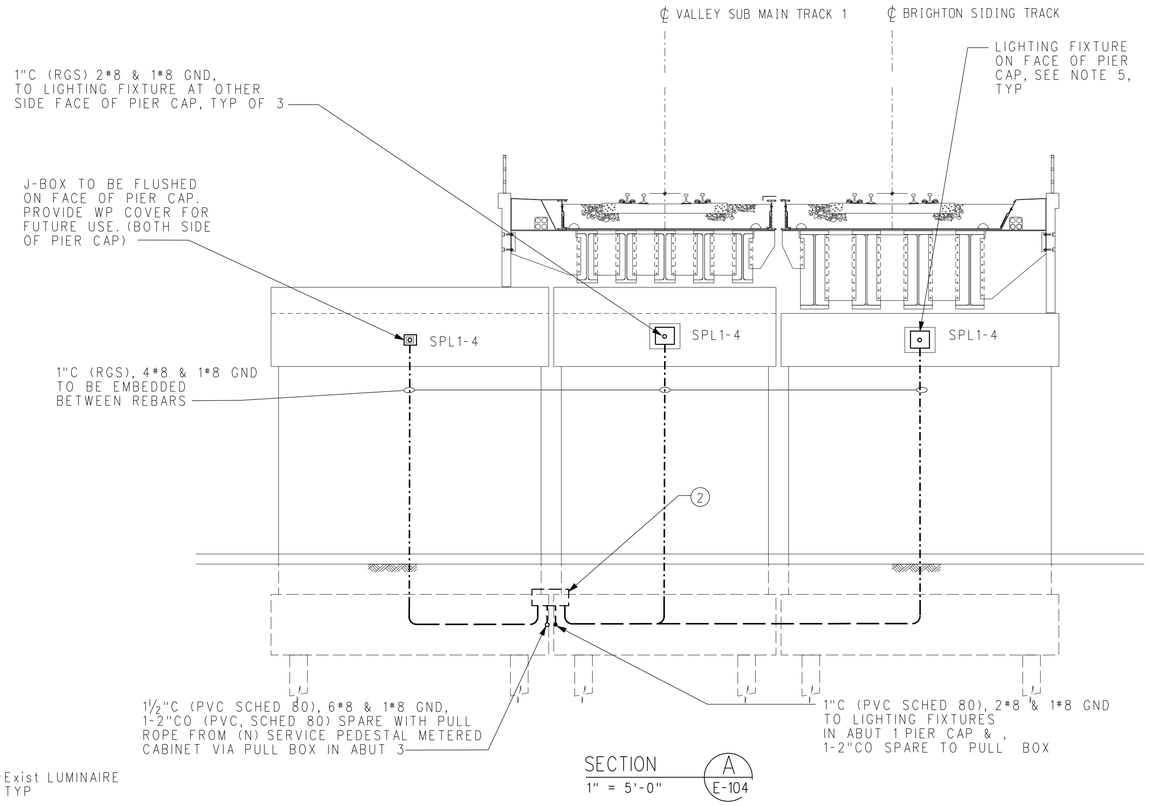


SECTION A
1" = 5'-0"
E-104

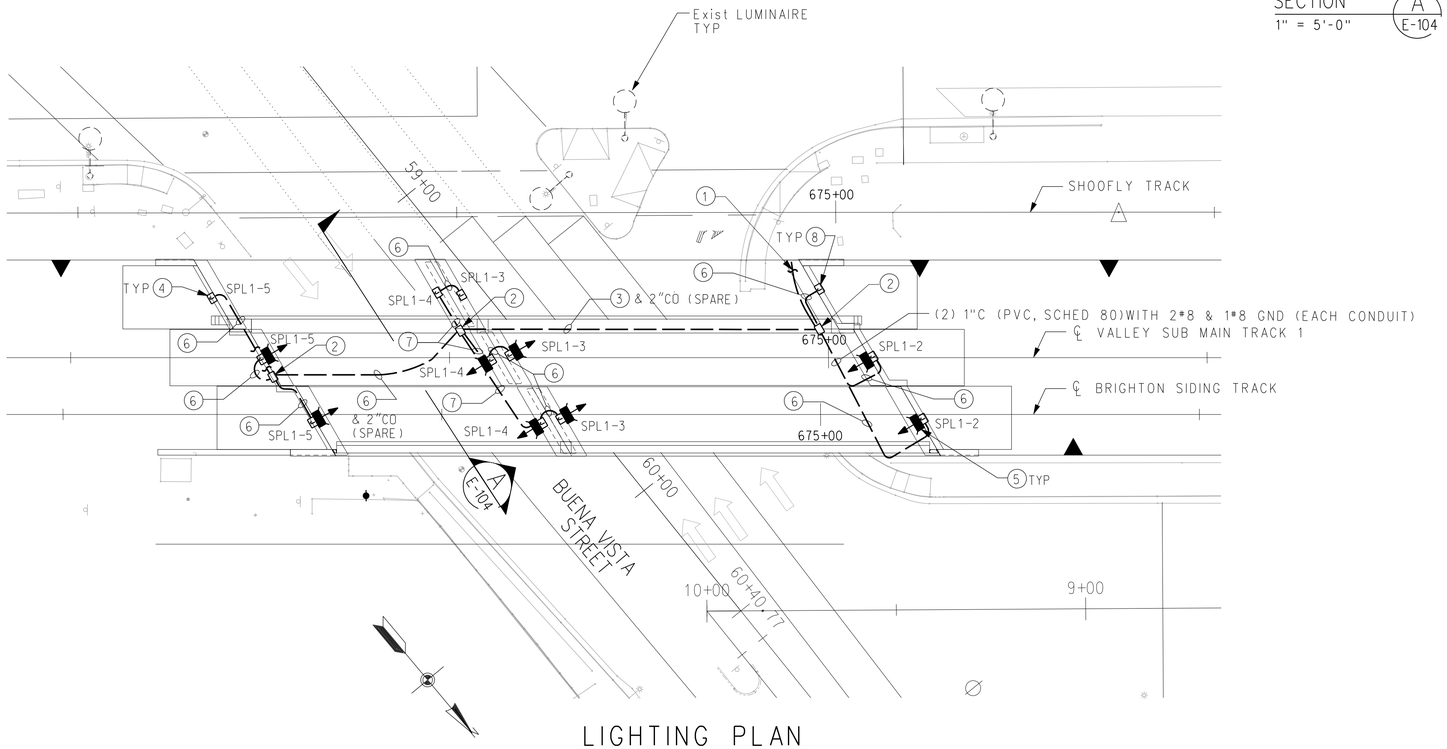


LIGHTING PLAN
1" = 20'-0"

## NOTES

1. 2"C (PVC, SCHED 80),8#8 & 1#8 GND (SPL1 CKT#'S 2,3,4,5) 36" BELOW GRADE TO (N) SERVICE PEDESTAL CABINET "SPL1". SEE DWG RR-E-103 FOR CONTINUATION.
2. (N) STREET LIGHTING PULL BOX. REFER TO BURBANK WATER AND POWER STANDARD DWG BSL-403-3 FOR SIZE AND INSTALLATION DETAILS ON DWG RR-E-108.
3. 1½"C (PVC, SCHED 80), 6#8 & 1#8 GND 36" BELOW GRADE.
4. PROVIDE 5"X6"X4" NEMA TYPE 4 JUNCTION BOX EMBEDDED IN STRUCTURE MOUNTED AT 15' ABOVE FINISHED PAVEMENT OR SIDEWALK TO CENTER OF J-BOX.
5. PROVIDE 100 W HPS WALL MOUNTED LUMINAIRE. LUMINAIRE SHALL BE SURFACE MOUNTED. LUMINAIRE INSTALLATION SHALL CONFORM TO CALTRANS STANDARD DRAWING ES-9E.
6. 1"C (PVC, SCHED 80) 2#8 & 1#8 GND 36" BELOW GRADE OR WALL. SEE PLAN FOR ROUTING.
7. 1"C (PVC, SCHED 80) 4#8 & 1#8 GND 36" BELOW GRADE.
8. PROVIDE 12" LENGTH OF COILED WIRES AND TAPE ENDS INSIDE J-BOX FOR FUTURE LIGHTING FIXTURE CONNECTION.

5 2.5 0 5 10
1" = 5'-0"

20 15 10 5 0 20 40
1" = 20'-0"

APPROVED FOR RAILROAD WORK.

RR-E-104

RAILROAD SHEET NO. 330 OF 394

AS NOTED

RR – ELECTRICAL LIGHTING PLAN
BUENA VISTA UNDERPASS

STATE OF CALIFORNIA - DEPARTMENT OF TRANSPORTATION
DESIGN
CONSULTANT FUNCTIONAL SUPERVISOR: PATRICK NICHOLSON
CALCULATED-DESIGNED BY: JOHN KIM
CHECKED BY: RICHARD SILOS
REVISED BY | DATE REVISED

PEN TABLE => ...\CADD\Support\pen\PlotStamp.tbl
PLOT DRIVER => ...\Plotdrv\SCRRA_pdfBW.plt
TIME PLOTTED => 4:10:30 PM
DATE PLOTTED => 7/18/2012
LAST REVISION 00-00-00

BORDER LAST REVISED 7/2/2010
USERNAME => ghariblana
DGN FILE => ...\Sheet\E737B-E-104.sht
RELATIVE BORDER SCALE IS IN INCHES 0 1 2 3
UNIT 1812
PROJECT NUMBER & PHASE 07000211191

| Dist | COUNTY | ROUTE | POST MILES TOTAL PROJECT | SHEET No. | TOTAL SHEETS |
|---|---|---|---|---|---|
| 07 | LA | 5 | 29.4/31.6 | 1697 | 1931 |

REGISTERED ELECTRICAL ENGINEER — DATE 05-21-12

PLANS APPROVAL DATE 05-21-12

REGISTERED PROFESSIONAL ENGINEER — BENJAMIN A. MASCARDO — No. E 8130 — Exp. 9-30-2012 ELECTRICAL — STATE OF CALIFORNIA

THE STATE OF CALIFORNIA OR ITS OFFICERS OR AGENTS SHALL NOT BE RESPONSIBLE FOR THE ACCURACY OR COMPLETENESS OF SCANNED COPIES OF THIS PLAN SHEET.

SCRRA
279 E. ARROW HIGHWAY
SAN DIMAS, CA 91773

AECOM
515 SOUTH FLOWER ST. 4th FLOOR
LOS ANGELES, CA 90071

EMPIRE AVENUE

VICTORY PLACE

(N) PVC SCHEDULE 80 RISER. COORDINATE WITH BWP FOR SIZE AND HEIGHT FROM FIN GRADE

Exist PP* 7378-B SERVICE POINT OF CONNECTION

Exist PP* 22288-B

Exist PP* 28004-B

2"C (PVC, SCHED 80), 8*8 & 1*8 GND (SPL2 CKT*'S 2,3,4,5) & 1-2"CO (SPARE), 36" BELOW GRADE

(N) PULL BOX MAIN TRACK 1 STA 640+08.05 51.46' LT

SHOOFLY TRACK

1-2" CO (PVC, SCHED 80), 36" BELOW GRADE (WIRING AND TERMINATION PROVIDED BY BURBANK WATER AND POWER)

(N) SERVICE PEDESTAL CABINET "SPL2" SEE BURBANK WATER AND POWER STANDARD DRAWING S-459-B FOR DETAILS ON DWG RR-E-107

(N) PULL BOX, SEE BURBANK WATER AND POWER STD DWG *BSL-403-3 FOR SIZE AND INSTALLATION DETAIL ON DWG RR-E-108, TYP. COORDINATE WITH BWP FOR FINAL LOCATION OF PULL BOX AND CONDUIT RISER PRIOR TO INSTALLATION

SEE DWG RR-E-106 FOR CONTINUATION

2"C (PVC, SCHED 80), 8*8 & 1*8 GND (SPL2 CKT*'S 2,3,4,5) & 1-2"CO (PVC, SCHED 80) (SPARE) 36" BELOW GRADE (TO LIGHTING FIXTURES IN UNDERPASS)

VALLEY SUB MAIN TRACK 1

BRIGHTON SIDING TRACK

SEE UNDERPASS LIGHTING PLAN ON DWG RR-E-106

637+00 638+00 639+00 640+00

630 625

20 15 10 5 0 20 40

1" = 20'-0"

RR-E-105

RAILROAD SHEET NO. 331 OF 394

# RR – ELECTRICAL POWER DISTRIBUTION SITE PLAN EMPIRE AVE/VICTORY PLACE

HORIZ 1"=20'

APPROVED FOR RAILROAD WORK.

STATE OF CALIFORNIA – DEPARTMENT OF TRANSPORTATION — DESIGN

CONSULTANT FUNCTIONAL SUPERVISOR: PATRICK NICHOLSON

CALCULATED–DESIGNED BY: JOHN KIM

CHECKED BY: RICHARD SILOS

| DATE REVISED | REVISED BY |
|---|---|

PLOT DRIVER => ...\Plotdrv\SCRRA_pdfBW.plt PEN TABLE => ...\CADD\Support\pen\PlotStamp.tbl

TIME PLOTTED => 4:10:32 PM

DATE PLOTTED => 7/18/2012

LAST REVISION 00-00-00

BORDER LAST REVISED 7/2/2010

USERNAME => gharibiana
DGN FILE => ...\Sheet\E737B-E-105.sht

RELATIVE BORDER SCALE IS IN INCHES 0 1 2 3

UNIT 1812

PROJECT NUMBER & PHASE 07000211191

| Dist | COUNTY | ROUTE | POST MILES TOTAL PROJECT | SHEET No. | TOTAL SHEETS |
|---|---|---|---|---|---|
| 07 | LA | 5 | 29.4/31.6 | 1698 | 1931 |

B A Mascardo — 05-21-12
REGISTERED ELECTRICAL ENGINEER — DATE

05-21-12
PLANS APPROVAL DATE

REGISTERED PROFESSIONAL ENGINEER — BENJAMIN A. MASCARDO — No. E 8130 — Exp. 9-30-2012 — ELECTRICAL — STATE OF CALIFORNIA

*THE STATE OF CALIFORNIA OR ITS OFFICERS OR AGENTS SHALL NOT BE RESPONSIBLE FOR THE ACCURACY OR COMPLETENESS OF SCANNED COPIES OF THIS PLAN SHEET.*

SCRRA
279 E. ARROW HIGHWAY
SAN DIMAS, CA 91773

AECOM
515 SOUTH FLOWER ST, 4th FLOOR
LOS ANGELES, CA 90071

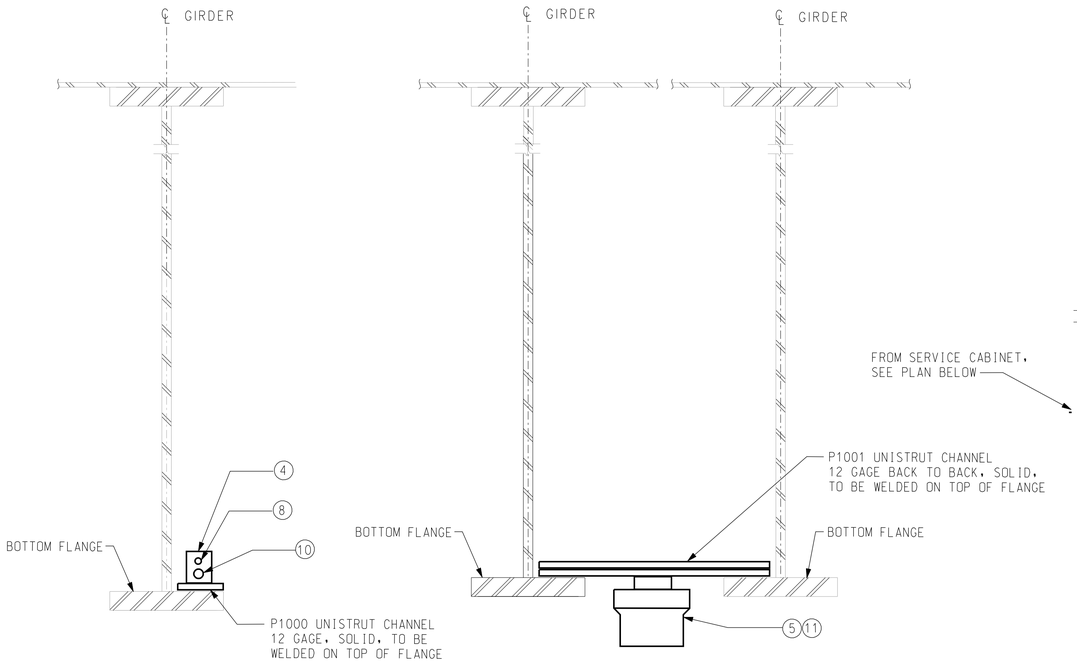


JUNCTION BOX MOUNTING DETAIL
NO SCALE




LIGHTING FIXTURE PENDANT MOUNTING DETAIL
NO SCALE

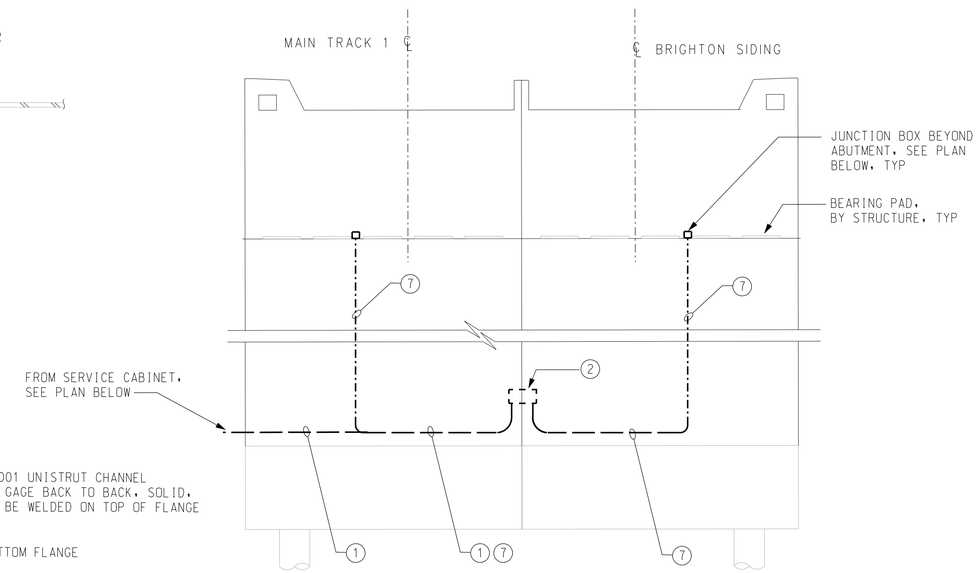


ABUTMENT 3 ELEVATION
NO SCALE

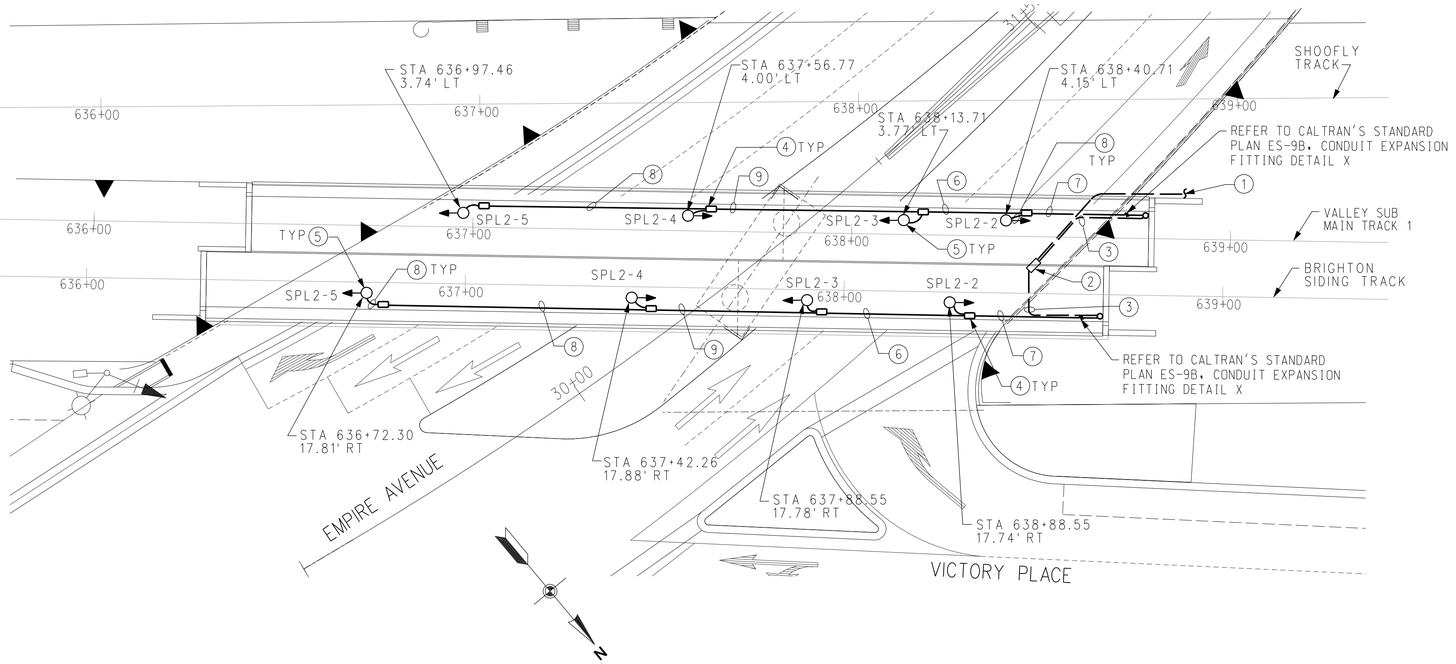


## NOTES

1. 2"C (PVC, SCHED 80), 8*8, 1*8 GND (SPL2 CKT#'S 2,3,4,5) & 1-2"CO SPARE 36" BELOW GRADE FROM (N) SERVICE PEDESTAL CABINET SEE RR-E-105 FOR LOCATION.
2. (N) STREET LIGHTING PULL BOX. REFER TO BURBANK WATER AND POWER STANDARD DWG BSL-403-3 FOR SIZE AND INSTALLATION DETAILS ON DWG RR-E-108.
3. 2"C (PVC, SCHED 80)8#8, 1#8 GND, (SPL2 CKT#'S 2,3,4,5), MINIMUM 18" BELOW GRADE.
4. 5"X6"X4" NEMA TYPE 4 JUNCTION BOX TO BE MOUNTED IN A UNISTRUT (UNISTRUT TO BE WELDED ON TOP OF FLANGE). SEE JUNCTION BOX MOUNTNG DETAIL THIS SHEET.
5. 100W HPS LIGHTING FIXTURE (PENDANT MOUNTED)TO BE MOUNTED ON A UNISTRUT (UNISTRUT TO BE WELDED ON TOP OF BOTTOM FLANGE) BETWEEN STEEL GIRDERS. LIGHTING FIXTURE MANUFACTURED BY KENALL CATALOG #H1212FD-CMW-100-S1-240-FS-QMS OR APPROVED EQUAL. CONTRACTOR SHALL SUBMIT EVIDENCE OF BRIDGE VIBRATION TEST OF THE LIGHT FIXTURE PER ANSI 136.31. DRILLING HOLES WITHIN THE STRUCTURE IS NOT ALLOWED WITHOUT AUTHORIZATION FROM THE STRUCTURAL ENGINEER. INSTALLATION SHALL CONFORM TO CALTRAN STANDARD DRAWING ES-9E. SEE LIGHTING FIXTURE MOUNTING DETAIL THIS SHEET.
6. 1½"C (RGS), 6#8, 1#8 GND (SPL2 CKT#'S 3,4,5) ROUT AND CLAMP ON TOP OF BOTTOM FLANGE. CLAMP TO BE WELDED.
7. 2"C (RGS) 8#8, 1#8 GND (SPL2 CKT#'S 2,3,4,5) ROUTE INSIDE ABUTMENT WALL PENETRATING BETWEEN BEARING PADS TO PULL BOX.
8. ¾"C (RGS)-2#8, 1#8 GND TO LIGHTING FIXTURE.
9. ROUTE AND CLAMP 1½"C, 4#8, 1#8 GND ON TOP OF BOTTOM FLANGE. CLAMP SHALL BE WELDED.
10. 1½" C (RGS) BETWEEN JUNCTION BOXES. ROUTE CONDUIT AND CLAMP ON TOP OF FLANGE. SEE PLAN BELOW FOR WIRING QUANTITY.
11. BOTTOM OF LENS TO BE 17'-0" MIN FROM FINISHED GRADE.

20 15 10 5 0 20 40
1" = 20'-0"

RR-E-106

RAILROAD SHEET NO. 332 OF 394

AS NOTED

RR - ELECTRICAL LIGHTING PLAN
EMPIRE AVE UNDERPASS

APPROVED FOR RAILROAD WORK.

REVISED BY | DATE REVISED
JOHN KIM | RICHARD SILOS
CALCULATED-DESIGNED BY | CHECKED BY
PATRICK NICHOLSON — CONSULTANT FUNCTIONAL SUPERVISOR
STATE OF CALIFORNIA - DEPARTMENT OF TRANSPORTATION
Caltrans® DESIGN

PEN TABLE => ...\CADD\Support\pen\PlotStamp.tbl
PLOT DRIVER => ...\Plotdrv\SCRRA_pdfBW.plt
TIME PLOTTED => 4:10:33 PM
DATE PLOTTED => 7/18/2012
LAST REVISION 00-00-00

BORDER LAST REVISED 7/2/2010
USERNAME => gharibiana
DGN FILE => ...\Sheet\E737B-E-106.sht
RELATIVE BORDER SCALE IS IN INCHES 0 1 2 3
UNIT 1812
PROJECT NUMBER & PHASE 07000211191

| Dist | COUNTY | ROUTE | POST MILES TOTAL PROJECT | SHEET No. | TOTAL SHEETS |
|---|---|---|---|---|---|
| 07 | LA | 5 | 29.4/31.6 | 1699 | 1931 |

B A Mascardo 05-21-12
REGISTERED ELECTRICAL ENGINEER DATE

05-21-12
PLANS APPROVAL DATE

REGISTERED PROFESSIONAL ENGINEER — BENJAMIN A. MASCARDO — No. E 8130 — Exp. 9-30-2012 — ELECTRICAL — STATE OF CALIFORNIA

*THE STATE OF CALIFORNIA OR ITS OFFICERS OR AGENTS SHALL NOT BE RESPONSIBLE FOR THE ACCURACY OR COMPLETENESS OF SCANNED COPIES OF THIS PLAN SHEET.*


SCRRA
279 E. ARROW HIGHWAY
SAN DIMAS, CA 91773

AECOM
515 SOUTH FLOWER ST. 4th FLOOR
LOS ANGELES, CA 90071


SEE NOTE #1

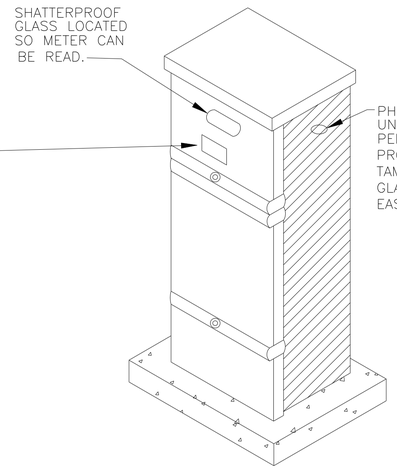


ORNAMENTAL HOUSING
16" WIDE, 17" DEEP, 48" HIGH
(TYPICAL INSTALLATION)

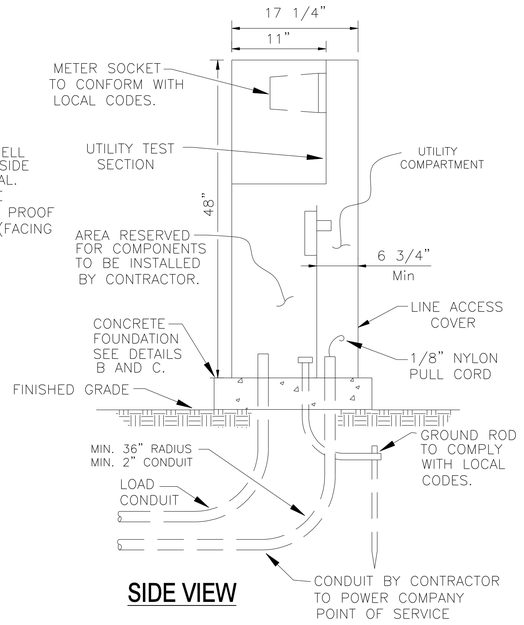


SIDE VIEW

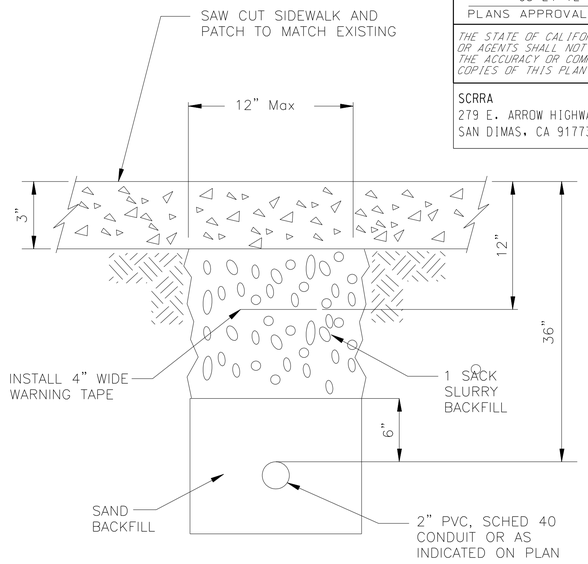


CONDUIT INSTALLATION DETAIL IN GRADE/SIDEWALK AREA

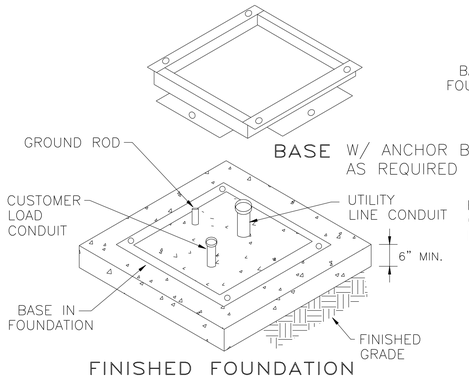


DETAIL "B"

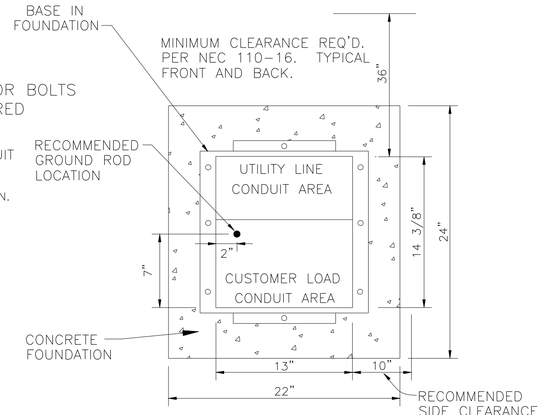


DETAIL "C"

PLAN VIEW

SERVICE PEDESTAL CABINET DETAIL (METERED/UNMETERED)

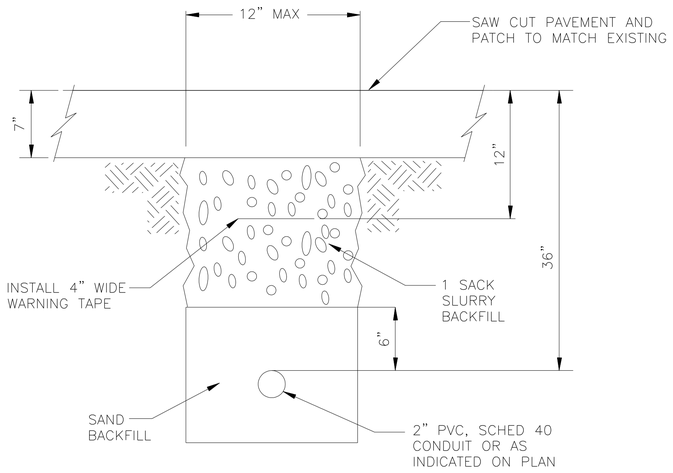


CONDUIT INSTALLATION DETAIL IN PAVED AREA

NOTES:

1. MYERS ELECTRICAL PRODUCTS MODEL MEUG16–M100 AND MODEL MEUG24–M100/M100 ENCLOSURES TYPE 3R RAINPROOF 120/240 V 1Ø 3 WIRE OR EQUIVALENT IS ACCEPTABLE.
2. CONTACT BURBANK WATER AND POWER ENGINEERING AT (818) 238–3575 FOR SERVICE CONFIRMATION AND EXACT LOCATION OF PEDESTAL AND CONDUITS PRIOR TO INSTALLATION.

APPROVED FOR RAILROAD WORK.

RR-E-107

RAILROAD SHEET NO. 333 OF 394

RR – ELECTRICAL DETAILS AND ELEVATIONS

NO SCALE

| REVISED BY | DATE REVISED |
|---|---|
| JOHN KIM | RICHARD SILOS |
| CALCULATED–DESIGNED BY | CHECKED BY |

STATE OF CALIFORNIA – DEPARTMENT OF TRANSPORTATION
DESIGN

Caltrans®

PATRICK NICHOLSON

USERNAME => gharibiana
DGN FILE => ...\Sheet\E737B-E-107.sht

PEN TABLE => ...\CADD\Support\pen\PlotStamp.tbl
PLOT DRIVER => ...\Plotdrv\SCRRA_pdfBW.plt
TIME PLOTTED => 4:10:35 PM
DATE PLOTTED => 7/18/2012
LAST REVISION 00-00-00

BORDER LAST REVISED 7/2/2010
RELATIVE BORDER SCALE IS IN INCHES 0 1 2 3
UNIT 1812
PROJECT NUMBER & PHASE 07000211191

| Dist | COUNTY | ROUTE | POST MILES TOTAL PROJECT | SHEET No. | TOTAL SHEETS |
|---|---|---|---|---|---|
| 07 | LA | 5 | 29.4/31.6 | 1700 | 1931 |

B A Mascardo 05-21-12
REGISTERED ELECTRICAL ENGINEER DATE

05-21-12
PLANS APPROVAL DATE

REGISTERED PROFESSIONAL ENGINEER — BENJAMIN A. MASCARDO — No. E 8130 — Exp. 9-30-2012 — ELECTRICAL — STATE OF CALIFORNIA

*THE STATE OF CALIFORNIA OR ITS OFFICERS OR AGENTS SHALL NOT BE RESPONSIBLE FOR THE ACCURACY OR COMPLETENESS OF SCANNED COPIES OF THIS PLAN SHEET.*

SCRRA
279 E. ARROW HIGHWAY
SAN DIMAS, CA 91773

AECOM
515 SOUTH FLOWER ST. 4th FLOOR
LOS ANGELES, CA 90071

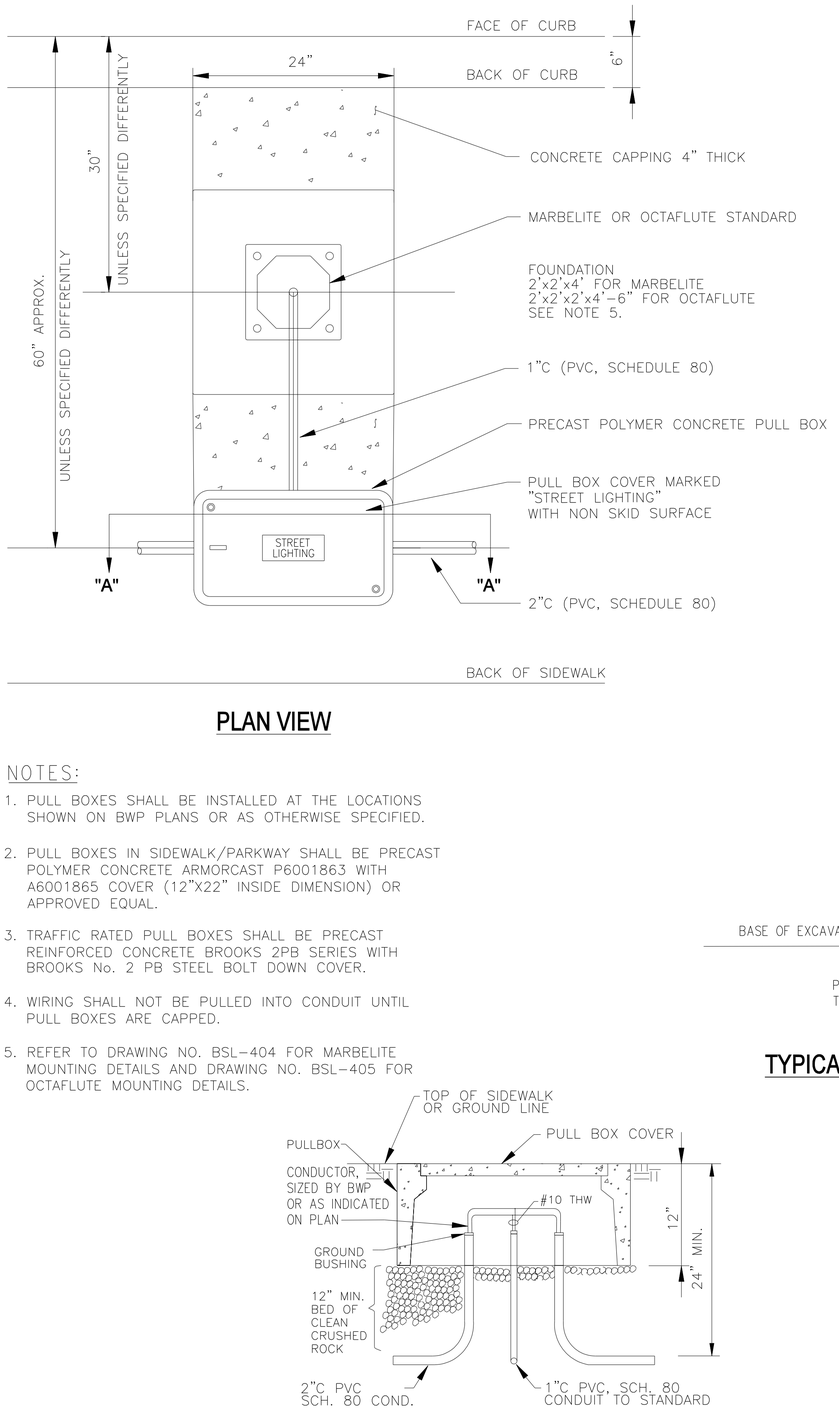


## PLAN VIEW

NOTES:

1. PULL BOXES SHALL BE INSTALLED AT THE LOCATIONS SHOWN ON BWP PLANS OR AS OTHERWISE SPECIFIED.
2. PULL BOXES IN SIDEWALK/PARKWAY SHALL BE PRECAST POLYMER CONCRETE ARMORCAST P6001863 WITH A6001865 COVER (12"X22" INSIDE DIMENSION) OR APPROVED EQUAL.
3. TRAFFIC RATED PULL BOXES SHALL BE PRECAST REINFORCED CONCRETE BROOKS 2PB SERIES WITH BROOKS No. 2 PB STEEL BOLT DOWN COVER.
4. WIRING SHALL NOT BE PULLED INTO CONDUIT UNTIL PULL BOXES ARE CAPPED.
5. REFER TO DRAWING NO. BSL-404 FOR MARBELITE MOUNTING DETAILS AND DRAWING NO. BSL-405 FOR OCTAFLUTE MOUNTING DETAILS.




## SECTION "A-A"

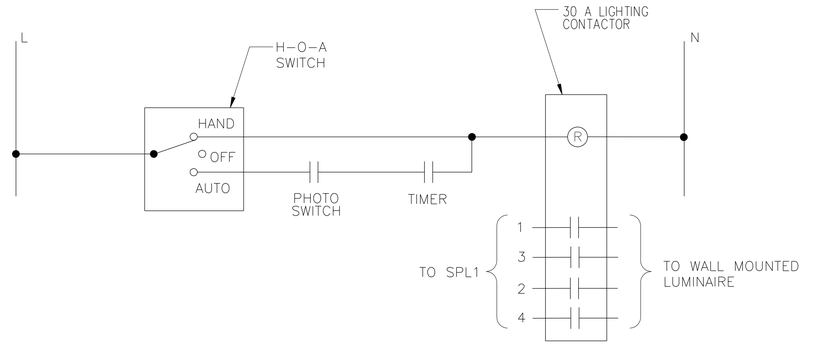


## TYPICAL LIGHTING CONTROL DIAGRAM

SPL1 SHOWN, TYPICAL FOR SPL2

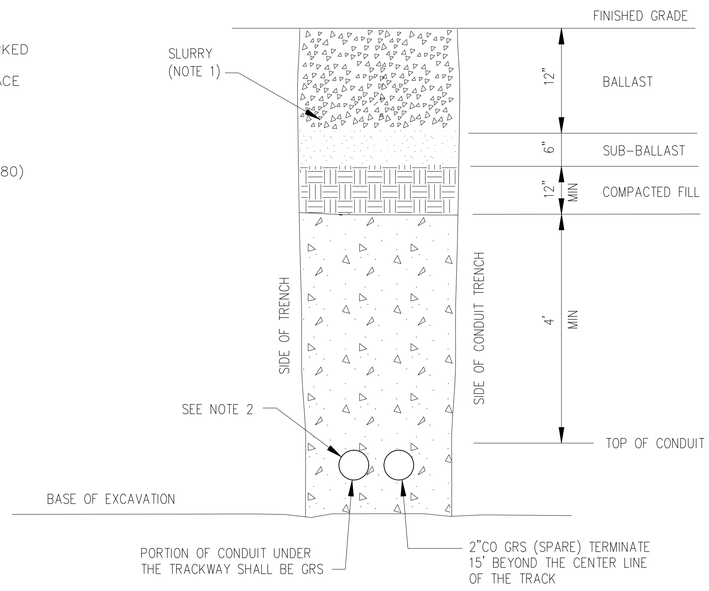


## TYPICAL CROSS-SECTION FOR CONDUIT UNDER NEW TRACKWAY - DETAIL 1

NOTES:

1. EXCEPT AS HEREIN SPECIFIED, SLURRY FILL SHALL CONFORM WITH THE REQUIREMENTS OF CALTRANS STANDARD SPECIFICATION SECTION 10-1 FOR "CONTROLLED LOW STRENGTH MATERIAL" FOR SLURRY FILL UNDER TRACKWAY. A MINIMUM 28-DAY COMPRESSIVE STRENGTH OF 100 PSI SHALL BE REQUIRED.
2. BOTTOM OF CONDUIT TRENCH SHALL BE FLAT AND FREE FROM SHARP STONES OR OTHER OBJECTS THAT MAY DAMAGE THE CONDUITS. CONDUITS SHALL BE HELD SECURE AND SEPARATED DURING SLURRY POUR BY USE OF MANUFACTURED INTERLOCKING MODULAR TYPE PVC ELECTRICAL CONDUIT SPACERS TO MAINTAIN A SPACING OF 3" CLEAR BETWEEN CONDUITS. SPACERS SHALL BE SET A MINIMUM OF 5'-0" ON CENTERS.

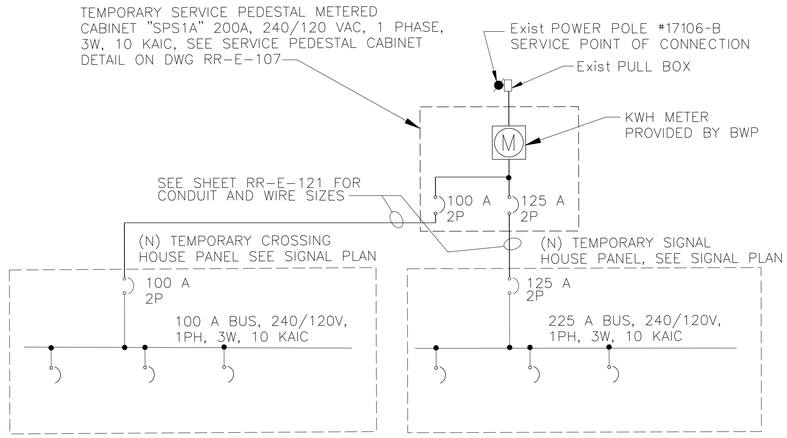


## TEMPORARY CROSSING HOUSE SINGLE LINE DIAGRAM

NO SCALE

## TEMPORARY SIGNAL HOUSE SINGLE LINE DIAGRAM

NO SCALE

APPROVED FOR RAILROAD WORK.

RR-E-108

RR – LIGHTING CONTROL DIAGRAMS AND DETAILS

RAILROAD SHEET NO. 334 OF 394

NO SCALE

STATE OF CALIFORNIA – DEPARTMENT OF TRANSPORTATION — DESIGN — Caltrans®
CONSULTANT FUNCTIONAL SUPERVISOR — PATRICK NICHOLSON
CALCULATED-DESIGNED BY — JOHN KIM
CHECKED BY — RICHARD SILOS
REVISED BY — DATE REVISED

PEN TABLE => ...\CADD\Support\pen\PlotStamp.tbl
PLOT DRIVER => ...\Plotdrv\SCRRA.pdfBW.plt
TIME PLOTTED => 4:10:36 PM
DATE PLOTTED => 7/18/2012
LAST REVISION 00-00-00

BORDER LAST REVISED 7/2/2010
USERNAME => gharibiana
DGN FILE => ...\Sheet\E737B-E-108.sht
RELATIVE BORDER SCALE IS IN INCHES 0 1 2 3
UNIT 1812
PROJECT NUMBER & PHASE 07000211191

## NOTES:

1. PROVIDE HOUSEKEEPING PAD PER BWP STANDARD DWG ON DWG NO. RR-E-107.
2. CONDUIT STUB-UP TO BE FLUSHED WITHIN HOUSEKEEPING PAD FINISHED AND SHALL BE PROVIDED WITH MALE PLUG FOR STUB UP EXTENSION TO FUTURE CABINET.
3. CONDUIT STUB-UP TO BE FLUSHED WITHIN HOUSEKEEPING PAD FINISHED AND SHALL BE PROVIDED WITH MALE PLUG FOR EXTENSION TO FUTURE SIGNAL HOUSE PANEL. SEE SIGNAL PLAN FOR PANEL LOCATION
4. SEE TYPICAL CROSS SECTION FOR CONDUIT UNDER TRACK WAY DETAIL 1 ON DWG RR-E-108 FOR INSTALLATION DETAIL.
5. FUTURE SIGNAL HOUSE BY OTHERS.
6. (N) PULL BOX (17" X 30"), REFER TO BWP STANDARD DRAWING BSL #403-2 FROM DETAILS ON SHEET RR-E-108 FOR INSTALLATION REQUIREMENTS. COORDINATE WITH BWP FOR PULL BOX FINAL LOCATION PRIOR TO INSTALLATION.
7. SEE METROLINK ENGINEERING STANDARDS ES-8225 FOR PULL BOX INSTALLATIONREQUIREMENTS NEAR TRACK.
8. KWH METER PROVIDED BY BWP.
9. SEE SIGNAL PLAN FOR SIGNAL HOUSE PANEL RATING, CIRCUIT BREAKER SIZE, QTY AND CIRCUIT ASSIGNMENTS. PANEL PROVIDED BY SIGNAL PLAN.
10. (N) 2" PVC CONDUIT SCHEDULE 80 WITH PULL ROPE (REFER TO CITY OF BURBANK WATER AND POWER DRAWING NO. S-707). CONTACT BWP STREET LIGHT ENGINEER AT 818-238-3570, 30 DAYS PRIOR TO CONSTRUCTION.
11. CONDUITS TO BE INSTALLED UNDER EXISTING TRACK SHALL BE TYPE PVC COATED RIGID STEEL CONDUIT UP TO 15 FEET FROM THE CENTER OF THE OUTER TRACKS. DRILLING OR BORING METHOD SHALL BE USED. DRILLING PITS SHALL BE PROVIDED 15 FEET FROM THE CENTER OF THE TRACKS ON BOTH SIDES. INSTALL CONDUIT 4 FEET BELOW TOP OF BALLAST.

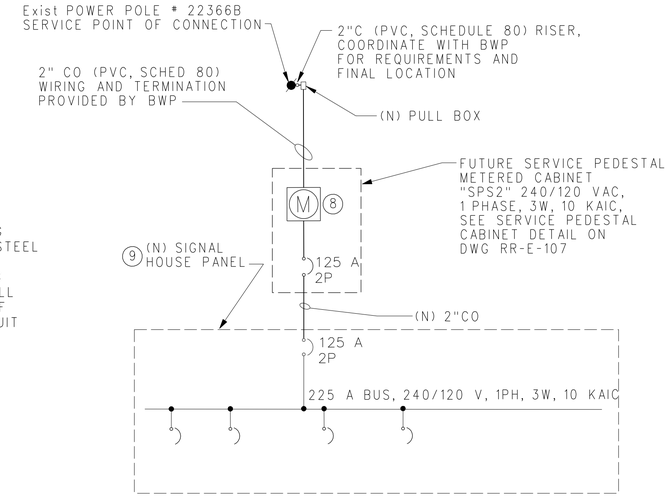


## SINGLE LINE DIAGRAM (SIGNAL HOUSE)

NO SCALE

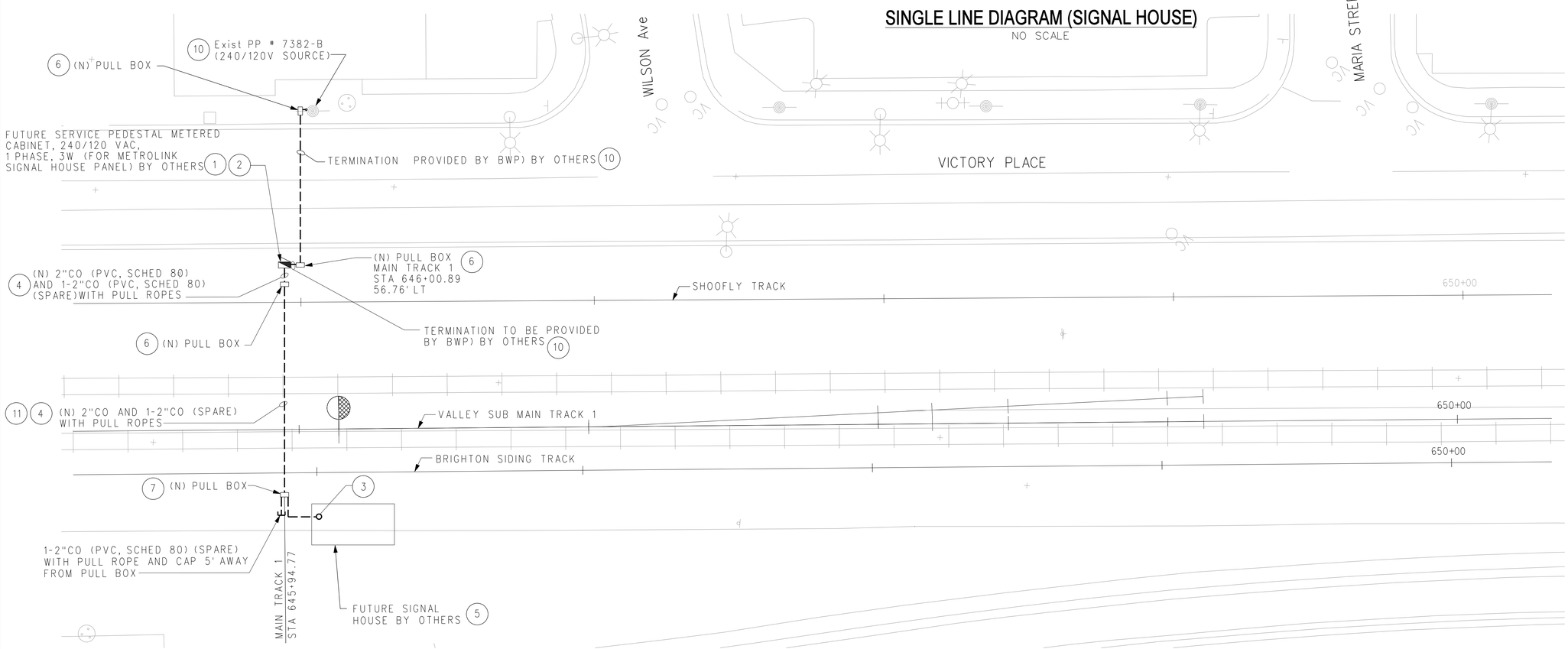


20 15 10 5 0 40 80

1" = 20'-0"

| Dist | COUNTY | ROUTE | POST MILES TOTAL PROJECT | SHEET No. | TOTAL SHEETS |
|---|---|---|---|---|---|
| 07 | LA | 5 | 29.4/31.6 | 1701 | 1931 |

REGISTERED ELECTRICAL ENGINEER — 05-21-12 DATE

05-21-12
PLANS APPROVAL DATE

REGISTERED PROFESSIONAL ENGINEER — BENJAMIN A. MASCARDO — No. E 8130 — Exp. 9-30-2012 — ELECTRICAL — STATE OF CALIFORNIA

THE STATE OF CALIFORNIA OR ITS OFFICERS OR AGENTS SHALL NOT BE RESPONSIBLE FOR THE ACCURACY OR COMPLETENESS OF SCANNED COPIES OF THIS PLAN SHEET.

SCRRA
279 E. ARROW HIGHWAY
SAN DIMAS, CA 91773

AECOM
515 SOUTH FLOWER ST, 4th FLOOR
LOS ANGELES, CA 90071

RR - ELECTRICAL POWER
FUTURE SIGNAL

RR-E-120

RAILROAD SHEET NO. 335 OF 394

HORIZ 1"=20'

APPROVED FOR RAILROAD WORK.

STATE OF CALIFORNIA - DEPARTMENT OF TRANSPORTATION
DESIGN
CONSULTANT FUNCTIONAL SUPERVISOR: PATRICK NICHOLSON
CALCULATED-DESIGNED BY: JOHN KIM
CHECKED BY: RICHARD SILOS
REVISED BY | DATE REVISED

PEN TABLE => ...\CADD\Support\pen\PlotStamp.tbl
PLOT DRIVER => ...\Plotdrv\SCRRA_pdfBW.plt
TIME PLOTTED => 4:10:38 PM
DATE PLOTTED => 7/18/2012
LAST REVISION 00-00-00

BORDER LAST REVISED 7/2/2010 | USERNAME => gharibiana | DGN FILE => ...\Sheet\E737B-E-120.sht | RELATIVE BORDER SCALE IS IN INCHES 0 1 2 3 | UNIT 1812 | PROJECT NUMBER & PHASE 07000211191

| Dist | COUNTY | ROUTE | POST MILES TOTAL PROJECT | SHEET No. | TOTAL SHEETS |
|---|---|---|---|---|---|
| 07 | LA | 5 | 29.4/31.6 | 1702 | 1931 |

REGISTERED ELECTRICAL ENGINEER — DATE 05-21-12

PLANS APPROVAL DATE 05-21-12

REGISTERED PROFESSIONAL ENGINEER — PATRICK BENJAMIN MICHOLSON CARDO — No. E 80903 — Exp. 9-30-2012 — ELECTRICAL — STATE OF CALIFORNIA

THE STATE OF CALIFORNIA OR ITS OFFICERS OR AGENTS SHALL NOT BE RESPONSIBLE FOR THE ACCURACY OR COMPLETENESS OF SCANNED COPIES OF THIS PLAN SHEET.

SCRRA
279 E. ARROW HIGHWAY
SAN DIMAS, CA 91773

AECOM
515 SOUTH FLOWER ST. 4th FLOOR
LOS ANGELES, CA 90071

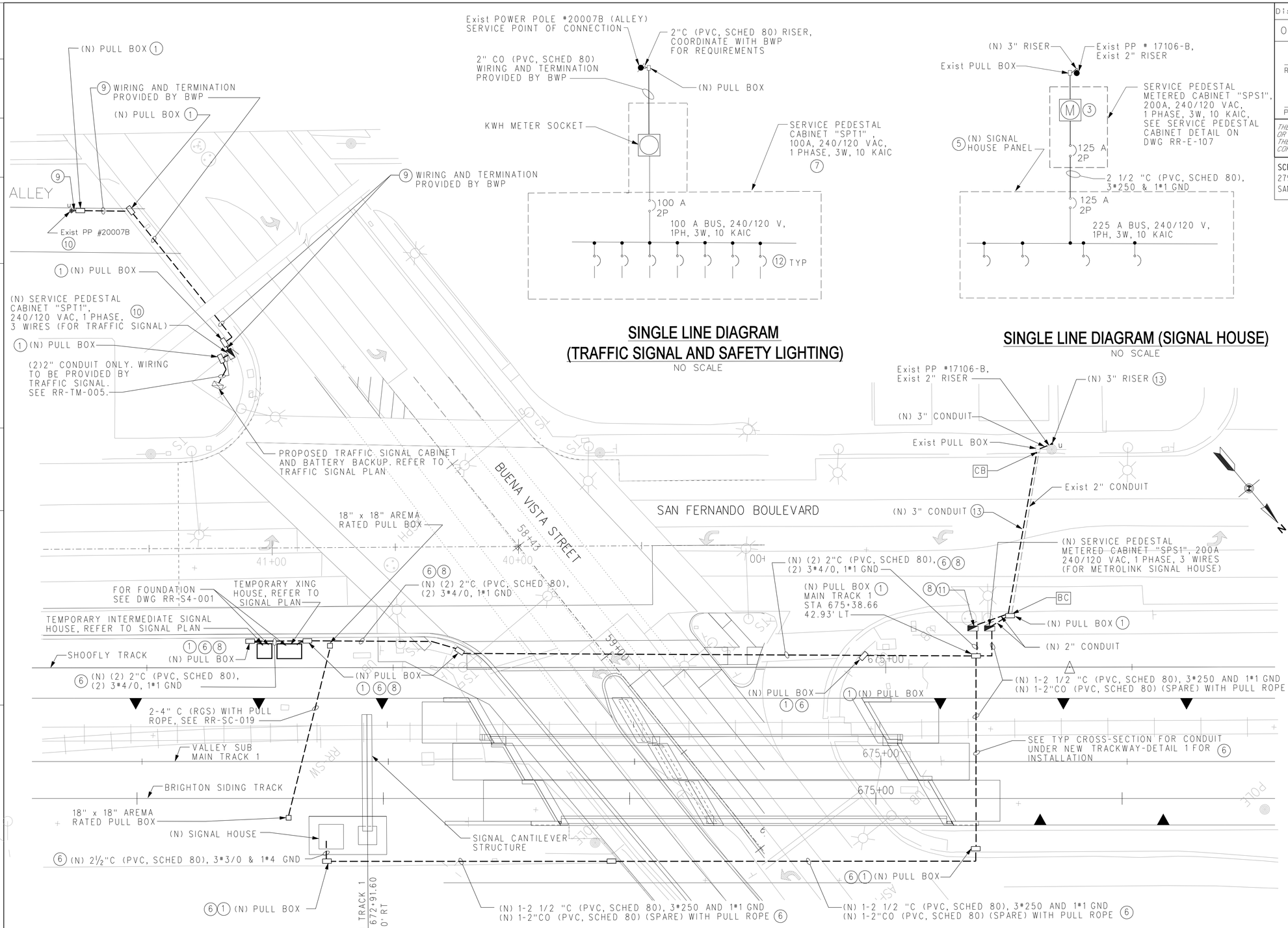


## SINGLE LINE DIAGRAM (TRAFFIC SIGNAL AND SAFETY LIGHTING)

NO SCALE




## SINGLE LINE DIAGRAM (SIGNAL HOUSE)

NO SCALE







NOTES:

1. (N) PULL BOX (17" X 30") SEE BURBANK WATER AND POWER STD DWG # BSL-403-2 FROM DETAIL ON DWG RR-E-108. PROVIDE TRAFFIC RATED PULL BOXES IN STREET INSTALLATION. FOR PULL BOX INSTALLATION NEAR TRACK, SEE METROLINK ENGINEERING STANDARDS ES-8225.
2. CONDUITS AND WIRES TO THE LOAD SIDE OF SIGNAL HOUSE PANEL SHALL BE PROVIDED BY SIGNAL PLAN.
3. KWH METER PROVIDED BY BURBANK WATER AND POWER.
4. SEE SIGNAL PLAN FOR SIGNAL HOUSE PANEL LOCATION PRIOR TO CONDUIT STUB-UP INSTALLATION.
5. SEE SIGNAL PLAN FOR SIGNAL HOUSE PANEL RATING, CIRCUIT BREAKER SIZE, QTY AND CIRCUIT ASSIGNMENTS.PANEL PROVIDED BY SIGNAL PLAN.
6. COORDINATE WITH SIGNAL PLAN FOR SEQUENCE OF SEGMENTS PRIOR TO INSTALLATION OF CONDUIT, WIRING AND PULL BOXES.
7. COORDINATE WITH TRAFFIC SIGNAL PLAN FOR CIRCUIT BREAKER RATINGS AND CIRCUIT ASSIGNMENTS.
8. AFTER THE MAINLINE TRACK IS PLACED BACK IN SERVICE,REMOVE ALL ELECTRICAL SERVICE FOR THE SHOOFLY TRACK.CONTRACTOR TO COORDINATE THE REMOVAL OF ELECTRICAL SERVICE WITH BURBANK DEPARTMENT OF WATER AND POWER.
9. (N) 2" PVC CONDUIT SCHEDULE 80 WITH PULL ROPE (REFER TO CITY OF BURBANK WATER AND POWER DRAWING NO. S-707). CONTACT BWP STREET LIGHT ENGINEER AT 818-238-3570, 30 DAYS PRIOR TO CONSTRUCTION.
10. APPROXIMATE DISTANCE BETWEEN SERVICE PEDESTAL CABINET "SPT1" AND Exist POWER POLE #20007-B IS 150 FEET.
11. (N) TEMPORARY SERVICE PEDESTAL METERED CABINET "SPS1A", 200A, 240/120 VAC, 1 PHASE, 3 WIRES (FOR METROLINK TEMPORARY SIGNAL HOUSE & CROSSING HOUSE PANELS). SEE SHEET RR-E-108 FOR SINGLE LINE DIAGRAM
12. CIRCUIT BREAKERS RATING AND CIRCUIT ASSIGNMENTS FOR TRAFFIC SIGNALS AND SAFETY LIGHTING TO BE COORDINATED WITH TRAFFIC SIGNAL PLANS.
13. (N) 3" PVC CONDUIT SCHEDULE 80 WITH PULL ROPE (REFER TO CITY OF BURBANK WATER AND POWER DRAWING NO. S-707). CONTACT BWP STREET LIGHT ENGINEER AT 818-238-3570, 30 DAYS PRIOR TO CONSTRUCTION.

20 15 10 5 0 40 80

1" = 20'-0"

RR-E-121

RAILROAD SHEET NO. 336 OF 394

HORIZ 1"=20'

## RR – ELECTRICAL POWER INTERMEDIATE SIGNAL

APPROVED FOR RAILROAD WORK.

CALCULATED-DESIGNED BY | CHECKED BY | CONSULTANT FUNCTIONAL SUPERVISOR | REVISED BY | DATE REVISED

JOHN KIM | RICHARD SILOS | PATRICK NICHOLSON

STATE OF CALIFORNIA - DEPARTMENT OF TRANSPORTATION — DESIGN — Caltrans®

PEN TABLE => ...\CADD\Support\pen\PlotStamp.tbl

PLOT DRIVER => ...\Plotdrv\SCRRA_pdfBW.plt

TIME PLOTTED => 4:10:40 PM

DATE PLOTTED => 7/18/2012

LAST REVISION 00-00-00

BORDER LAST REVISED 7/2/2010 | USERNAME => gharibiana | DGN FILE => ...\Sheet\E737B-E-121.sht | RELATIVE BORDER SCALE IS IN INCHES 0 1 2 3 | UNIT 1812 | PROJECT NUMBER & PHASE 07000211191

## NOTES:

1. SEE SIGNAL AND GRADING PLANS FOR SIGNAL HOUSE PANEL LOCATION PRIOR TO INSTALLATION OF CONDUIT STUB-UP.
2. CONDUITS AND WIRES TO THE LOAD SIDE OF SIGNAL HOUSE PANEL SHALL BE PROVIDED BY SIGNAL PLANS.
3. THIS PLAN ONLY PROVIDES THE FEEDER FROM THE SERVICE POINT OF CONNECTION. SERVICE PEDESTAL METERED CABINET AND TO THE SIGNAL HOUSE PANEL.
4. SEE SIGNAL PLAN FOR SIGNAL HOUSE PANEL RATING, CIRCUIT BREAKER SIZE, QTY AND CIRCUIT ASSIGNMENTS. PANEL PROVIDED BY SIGNAL PLAN.
5. (N) 2" PVC CONDUIT SCHEDULE 80 (GALVANIZED IF NEAR TRAFFIC) WITH PULL ROPE (REFER TO CITY OF BURBANK WATER AND POWER DRAWING NO. S-707). CONTACT BWP STREET LIGHT ENGINEER AT 818-238-3570, 30 DAYS PRIOR TO CONSTRUCTION.
6. KWH METER PROVIDED BY BWP.
7. (N) SERVICE METERED PEDESTAL CABINET, SEE BWP STD DWG S-459B FROM DETAILS ON DWG RR-E-107.
8. (N) PULL BOX (17" X 30"), REFER TO BWP STANDARD DRAWING BSL #403-2 FROM DETAILS ON SHEET RR-E-108 FOR INSTALLATION REQUIREMENTS. COORDINATE WITH BWP FOR PULL BOX FINAL LOCATION PRIOR TO INSTALLATION.
9. COORDINATE WITH BWP FOR SPECIFIC PULL BOX AND RISER LOCATIONS PRIOR TO INSTALLATION.
10. COORDINATE WITH SIGNAL PLANS FOR PANEL SPECIFIC LOCATION PRIOR TO INSTALLATION OF CONDUIT STUB-UP.
11. ELECTRICAL SERVICE FEED (CONDUIT AND WIRING) FROM SIGNAL HOUSE PANEL TO SIGNAL MAST TO BE PROVIDED BY SIGNAL PLANS.

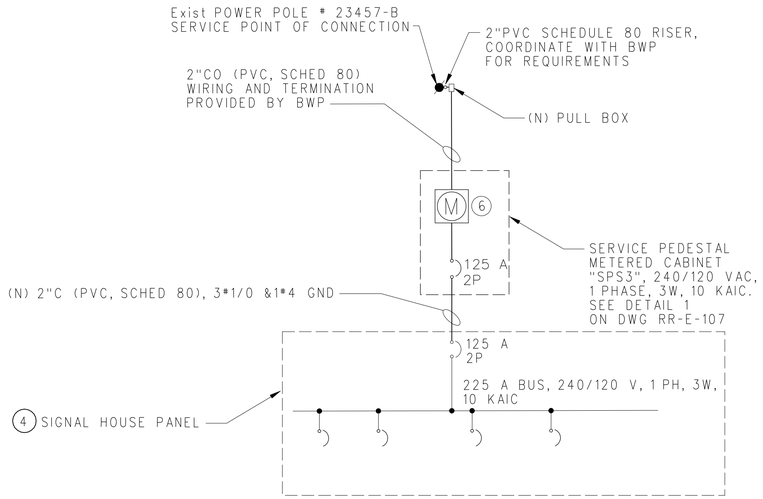


**SINGLE LINE DIAGRAM (SIGNAL HOUSE)**
NO SCALE

| Dist | COUNTY | ROUTE | POST MILES TOTAL PROJECT | SHEET No. | TOTAL SHEETS |
|---|---|---|---|---|---|
| 07 | LA | 5 | 29.4/31.6 | 1703 | 1931 |

BA Mascardo — 05-21-12
REGISTERED ELECTRICAL ENGINEER — DATE

05-21-12
PLANS APPROVAL DATE

REGISTERED PROFESSIONAL ENGINEER — BENJAMIN A. MASCARDO — No. E 8130 — Exp. 9-30-2012 — ELECTRICAL — STATE OF CALIFORNIA

THE STATE OF CALIFORNIA OR ITS OFFICERS OR AGENTS SHALL NOT BE RESPONSIBLE FOR THE ACCURACY OR COMPLETENESS OF SCANNED COPIES OF THIS PLAN SHEET.

SCRRA
279 E. ARROW HIGHWAY
SAN DIMAS, CA 91773

AECOM
515 SOUTH FLOWER ST. 4th FLOOR
LOS ANGELES, CA 90071

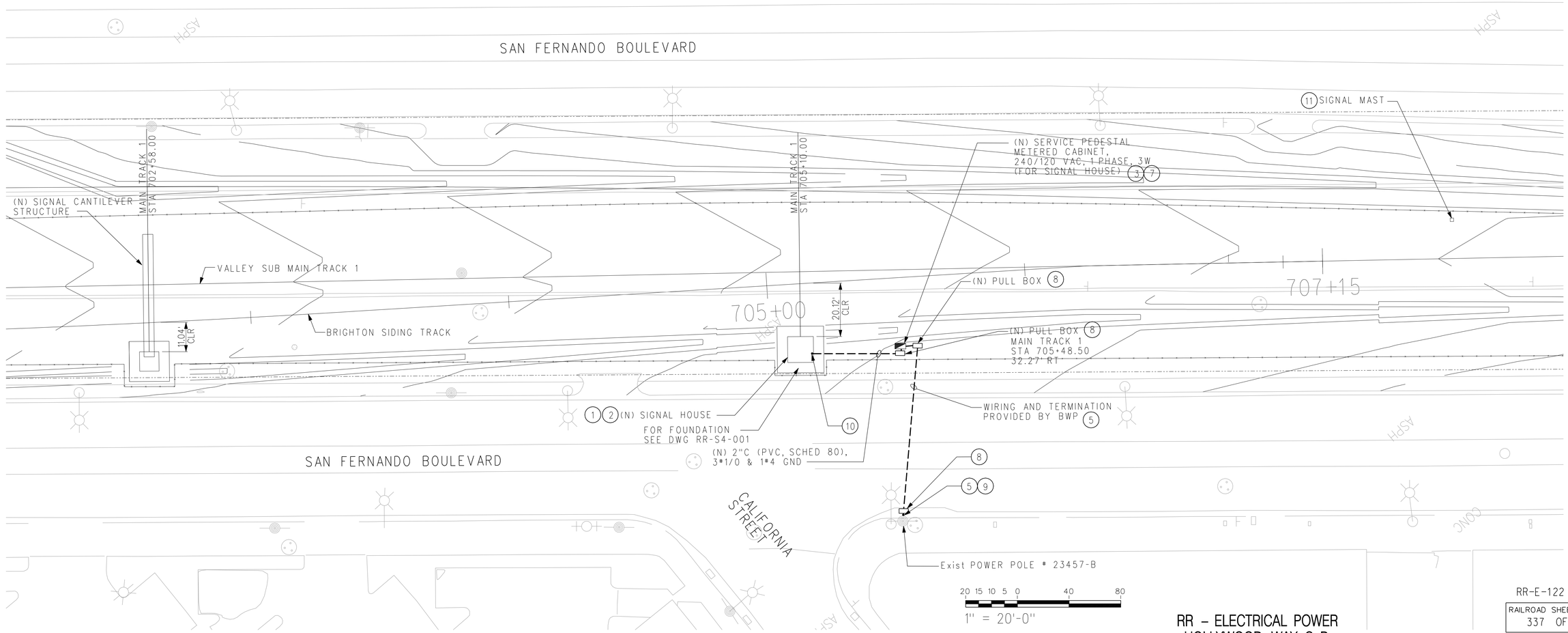


RR-E-122
RAILROAD SHEET NO. 337 OF 394
HORIZ 1"=20'

**RR – ELECTRICAL POWER**
**HOLLYWOOD WAY C.P.**

APPROVED FOR RAILROAD WORK.

STATE OF CALIFORNIA – DEPARTMENT OF TRANSPORTATION
DESIGN
CONSULTANT FUNCTIONAL SUPERVISOR: PATRICK NICHOLSON
CALCULATED-DESIGNED BY: JOHN KIM
CHECKED BY: RICHARD SILOS
REVISED BY | DATE REVISED

PEN TABLE => ...\CADD\Support\pen\PlotStamp.tbl
PLOT DRIVER => ...\Plotdrv\SCRRA_pdfBW.plt
TIME PLOTTED => 4:10:42 PM
DATE PLOTTED => 7/18/2012
LAST REVISION 00-00-00

BORDER LAST REVISED 7/2/2010
USERNAME => gharibiana
DGN FILE => ...\Sheet\E737B-E-122.sht
RELATIVE BORDER SCALE IS IN INCHES 0 1 2 3
UNIT 1812
PROJECT NUMBER & PHASE 07000211191

| Dist | COUNTY | ROUTE | POST MILES TOTAL PROJECT | SHEET No. | TOTAL SHEETS |
|---|---|---|---|---|---|
| 07 | LA | 5 | 29.4/31.6 | 1704 | 1931 |

BA Mascardo — 05-21-12
REGISTERED ELECTRICAL ENGINEER — DATE

05-21-12
PLANS APPROVAL DATE

REGISTERED PROFESSIONAL ENGINEER — BENJAMIN A. MASCARDO — No. E 8130 — Exp. 9-30-2012 — ELECTRICAL — STATE OF CALIFORNIA

*THE STATE OF CALIFORNIA OR ITS OFFICERS OR AGENTS SHALL NOT BE RESPONSIBLE FOR THE ACCURACY OR COMPLETENESS OF SCANNED COPIES OF THIS PLAN SHEET.*

SCRRA
279 E. ARROW HIGHWAY
SAN DIMAS, CA 91773

AECOM
515 SOUTH FLOWER ST, 4th FLOOR
LOS ANGELES, CA 90071

## DEMOLITION NOTES:

1. SIGNAL CONTRACTOR TO COORDINATE WITH THE OWNER (METROLINK) FOR DISCONNECTING THE POWER SERVICE PRIOR TO THE DEMOLITION OF (E) RR SIGNAL CP HOUSE AND (E) RR SIGNAL CROSSING HOUSE.
2. SIGNAL CONTRACTOR TO COORDINATE WITH OWNER (METROLINK) THE EXTENT OF DEMOLITION (i.e. EQUIPMENTS TO BE SALVAGED AND TO BE TURNED OVER TO THE OWNER, CONDUITS AND WIRES TO BE REMOVED OR ABANDONED).
3. SEE DRAWING RR-TM-001 FOR THE REMOVAL OF Exist SERVICE METERED PEDESTAL CABINET AND Exist SIGNAL CONTROLLER.
4. FOR DETAILED DEMOLITION OF (E) SIGNAL HOUSE AND SIGNAL CONTROLLER, REFER TO SIGNAL PLANS.

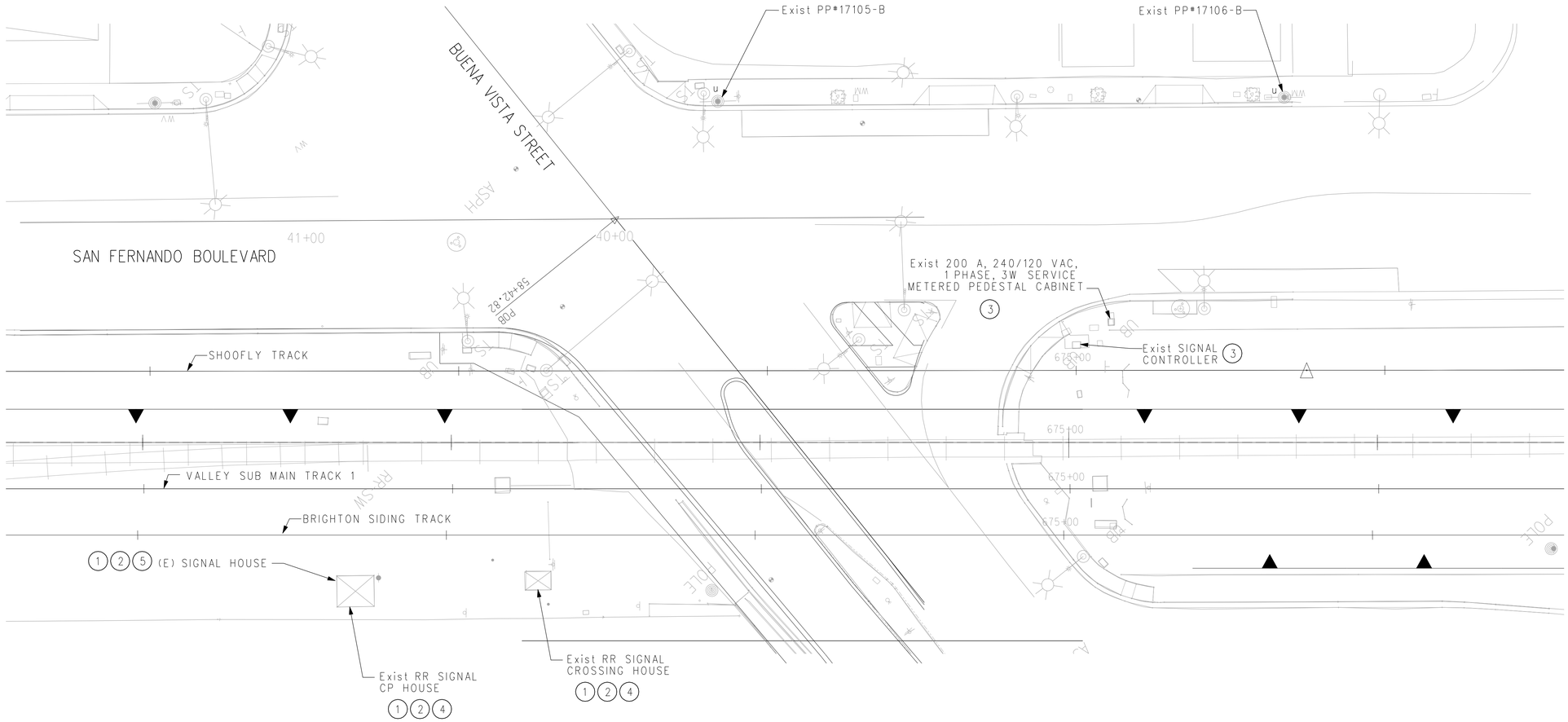


20 15 10 5 0 40 80
1" = 20'-0"

RR-E-123

RAILROAD SHEET NO. 338 OF 394

HORIZ 1"=20'

## RR – ELECTRICAL POWER DEMOLITION PLAN
## BUENA VISTA STREET

APPROVED FOR RAILROAD WORK.

STATE OF CALIFORNIA – DEPARTMENT OF TRANSPORTATION
DESIGN
CONSULTANT FUNCTIONAL SUPERVISOR: PATRICK NICHOLSON
CALCULATED-DESIGNED BY: RICHARD SILOS
CHECKED BY: JOHN KIM
REVISED BY | DATE REVISED

PLOT DRIVER => ...\Plotdrv\SCRRA_pdfBW.plt
PEN TABLE => ...\CADD\Support\pen\PlotStamp.tbl
TIME PLOTTED => 4:10:43 PM
DATE PLOTTED => 7/18/2012
LAST REVISION 00-00-00

BORDER LAST REVISED 7/2/2010
USERNAME => gharibiana
DGN FILE => ...\Sheet\E737B-E-123.sht
RELATIVE BORDER SCALE IS IN INCHES 0 1 2 3
UNIT 1812
PROJECT NUMBER & PHASE 07000211191

| Dist | COUNTY | ROUTE | POST MILES TOTAL PROJECT | SHEET No. | TOTAL SHEETS |
|---|---|---|---|---|---|
| 07 | LA | 5 | 29.4/31.6 | 1705 | 1931 |

BA Mascardo — 05-21-12
REGISTERED ELECTRICAL ENGINEER DATE

05-21-12
PLANS APPROVAL DATE

REGISTERED PROFESSIONAL ENGINEER — BENJAMIN A. MASCARDO — No. E 8130 — Exp. 9-30-2012 — ELECTRICAL — STATE OF CALIFORNIA

*THE STATE OF CALIFORNIA OR ITS OFFICERS OR AGENTS SHALL NOT BE RESPONSIBLE FOR THE ACCURACY OR COMPLETENESS OF SCANNED COPIES OF THIS PLAN SHEET.*


SCRRA
279 E. ARROW HIGHWAY
SAN DIMAS, CA 91773

AECOM
515 SOUTH FLOWER ST, 4th FLOOR
LOS ANGELES, CA 90071


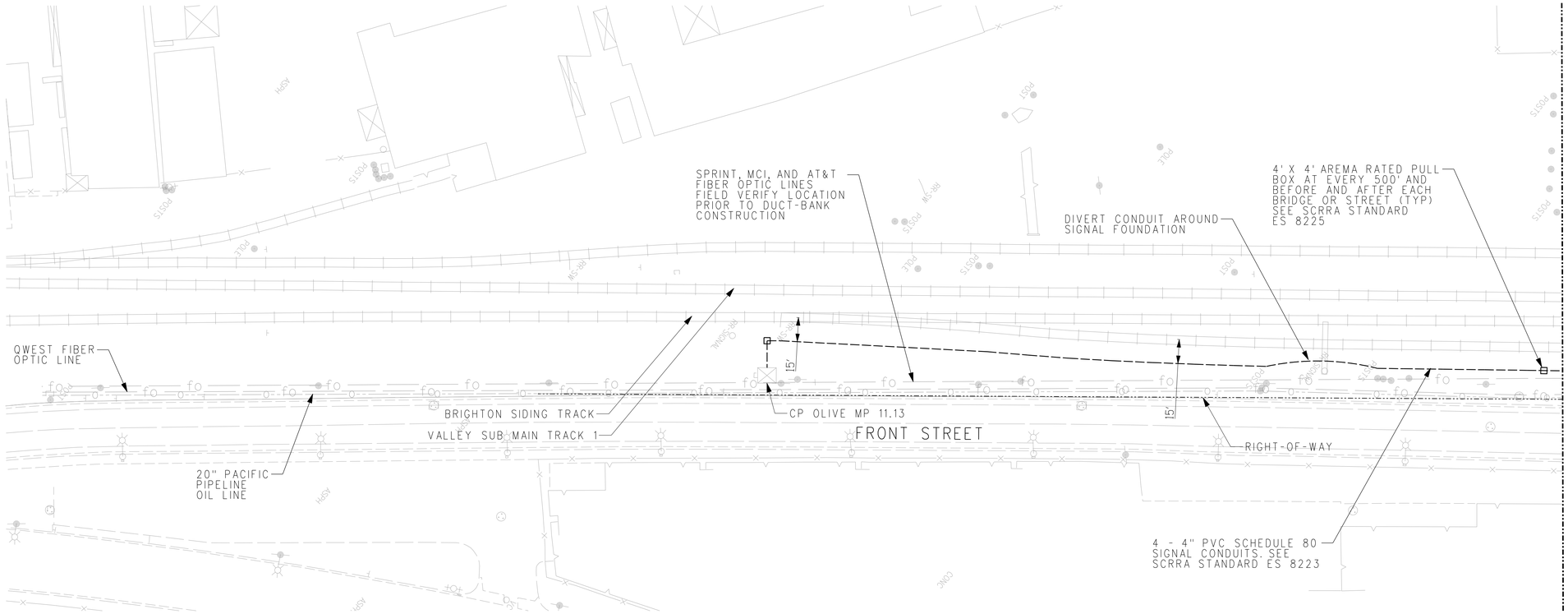


40 30 20 10 0 40 80
1" = 40'-0"

RR-E-501

RAILROAD SHEET NO. 339 OF 394

HORIZ 1"=40'

RR - SIGNAL CONDUIT LAYOUT
SHEET 1 OF 10

APPROVED FOR RAILROAD WORK.

STATE OF CALIFORNIA - DEPARTMENT OF TRANSPORTATION
DESIGN
CONSULTANT FUNCTIONAL SUPERVISOR: PATRICK NICHOLSON
CALCULATED-DESIGNED BY
CHECKED BY
PAUL LAUGHLIN
RICHARD SILOS
REVISED BY
DATE REVISED

PEN TABLE => ...\CADD\Support\pen\PlotStamp.tbl
PLOT DRIVER => ...\Plotdrv\SCRRA_pdfBW.plt
TIME PLOTTED => 4:10:47 PM
DATE PLOTTED => 7/18/2012
LAST REVISION 00-00-00

BORDER LAST REVISED 7/2/2010
USERNAME => gharibiana
DGN FILE => ...\Sheet\E737B-E-501.sht
RELATIVE BORDER SCALE IS IN INCHES 0 1 2 3
UNIT 1812
PROJECT NUMBER & PHASE 07000211191

| Dist | COUNTY | ROUTE | POST MILES TOTAL PROJECT | SHEET No. | TOTAL SHEETS |
|---|---|---|---|---|---|
| 07 | LA | 5 | 29.4/31.6 | 1706 | 1931 |

BA Mascardo 05-21-12
REGISTERED ELECTRICAL ENGINEER DATE

05-21-12
PLANS APPROVAL DATE

REGISTERED PROFESSIONAL ENGINEER
BENJAMIN A. MASCARDO
No. E 8130
Exp. 9-30-2012
ELECTRICAL
STATE OF CALIFORNIA

*THE STATE OF CALIFORNIA OR ITS OFFICERS OR AGENTS SHALL NOT BE RESPONSIBLE FOR THE ACCURACY OR COMPLETENESS OF SCANNED COPIES OF THIS PLAN SHEET.*

SCRRA
279 E. ARROW HIGHWAY
SAN DIMAS, CA 91773

AECOM
515 SOUTH FLOWER ST, 4th FLOOR
LOS ANGELES, CA 90071

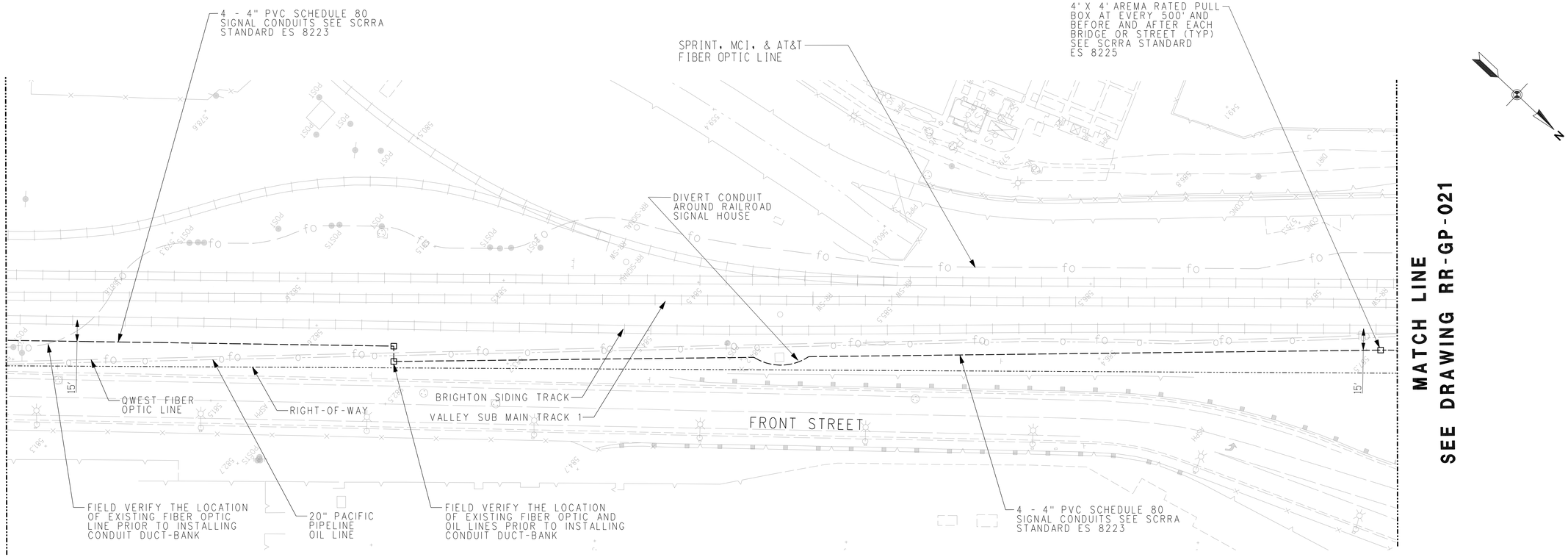


40 30 20 10 0 40 80
1" = 40'-0"

RR-E-502
RAILROAD SHEET NO. 340 OF 394
HORIZ 1"=40'

RR - SIGNAL CONDUIT LAYOUT
SHEET 2 OF 10

APPROVED FOR RAILROAD WORK.

STATE OF CALIFORNIA - DEPARTMENT OF TRANSPORTATION
DESIGN
CONSULTANT FUNCTIONAL SUPERVISOR: PATRICK NICHOLSON
CALCULATED-DESIGNED BY: PAUL LAUGHLIN
CHECKED BY: RICHARD SILOS
REVISED BY
DATE REVISED

PLOT DRIVER => ...\Plotdrv\SCRRA_pdfBW.plt
PEN TABLE => ...\CADD\Support\pen\PlotStamp.tbl
TIME PLOTTED => 4:10:50 PM
DATE PLOTTED => 7/18/2012
LAST REVISION 00-00-00

BORDER LAST REVISED 7/2/2010
USERNAME => gharibiana
DGN FILE => ...\Sheet\E737B-E-502.sht
RELATIVE BORDER SCALE IS IN INCHES 0 1 2 3
UNIT 1812
PROJECT NUMBER & PHASE 07000211191

| Dist | COUNTY | ROUTE | POST MILES TOTAL PROJECT | SHEET No. | TOTAL SHEETS |
|---|---|---|---|---|---|
| 07 | LA | 5 | 29.4/31.6 | 1707 | 1931 |

BA Mascardo — 05-21-12
REGISTERED ELECTRICAL ENGINEER — DATE

05-21-12
PLANS APPROVAL DATE

REGISTERED PROFESSIONAL ENGINEER — BENJAMIN A. MASCARDO — No. E 8130 — Exp. 9-30-2012 — ELECTRICAL — STATE OF CALIFORNIA

THE STATE OF CALIFORNIA OR ITS OFFICERS OR AGENTS SHALL NOT BE RESPONSIBLE FOR THE ACCURACY OR COMPLETENESS OF SCANNED COPIES OF THIS PLAN SHEET.

SCRRA
279 E. ARROW HIGHWAY
SAN DIMAS, CA 91773

AECOM
515 SOUTH FLOWER ST. 4th FLOOR
LOS ANGELES, CA 90071

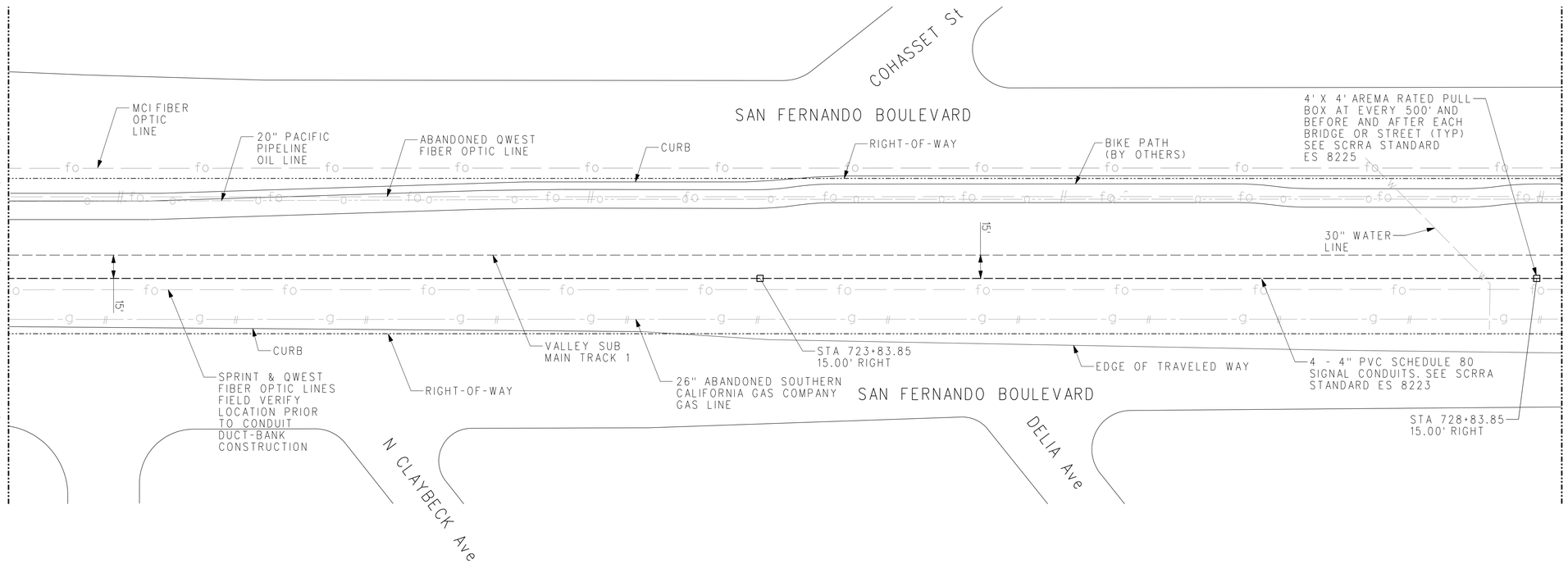


40 30 20 10 0 40 80
1" = 40'-0"

RR-E-503

RR - SIGNAL CONDUIT LAYOUT
SHEET 3 OF 10

RAILROAD SHEET NO. 341 OF 394

HORIZ 1"=40'

APPROVED FOR RAILROAD WORK.

STATE OF CALIFORNIA - DEPARTMENT OF TRANSPORTATION — DESIGN
CONSULTANT FUNCTIONAL SUPERVISOR: PATRICK NICHOLSON
CALCULATED-DESIGNED BY: PAUL LAUGHLIN
CHECKED BY: RICHARD SILOS
REVISED BY | DATE REVISED

LAST REVISION 00-00-00
DATE PLOTTED => 7/18/2012
TIME PLOTTED => 4:10:52 PM
PLOT DRIVER => ...\Plotdrv\SCRRA_pdfBW.plt
PEN TABLE => ...\CADD\Support\pen\PlotStamp.tbl

BORDER LAST REVISED 7/2/2010
USERNAME => gharibiana
DGN FILE => ...\Sheet\E737B-E-503.sht
RELATIVE BORDER SCALE IS IN INCHES 0 1 2 3
UNIT 1812
PROJECT NUMBER & PHASE 07000211191

| Dist | COUNTY | ROUTE | POST MILES TOTAL PROJECT | SHEET No. | TOTAL SHEETS |
|---|---|---|---|---|---|
| 07 | LA | 5 | 29.4/31.6 | 1708 | 1931 |

B A Mascardo — 05-21-12
REGISTERED ELECTRICAL ENGINEER — DATE

05-21-12
PLANS APPROVAL DATE

REGISTERED PROFESSIONAL ENGINEER — BENJAMIN A. MASCARDO — No. E 8130 — Exp. 9-30-2012 — ELECTRICAL — STATE OF CALIFORNIA

THE STATE OF CALIFORNIA OR ITS OFFICERS OR AGENTS SHALL NOT BE RESPONSIBLE FOR THE ACCURACY OR COMPLETENESS OF SCANNED COPIES OF THIS PLAN SHEET.

SCRRA
279 E. ARROW HIGHWAY
SAN DIMAS, CA 91773

AECOM
515 SOUTH FLOWER ST. 4th FLOOR
LOS ANGELES, CA 90071

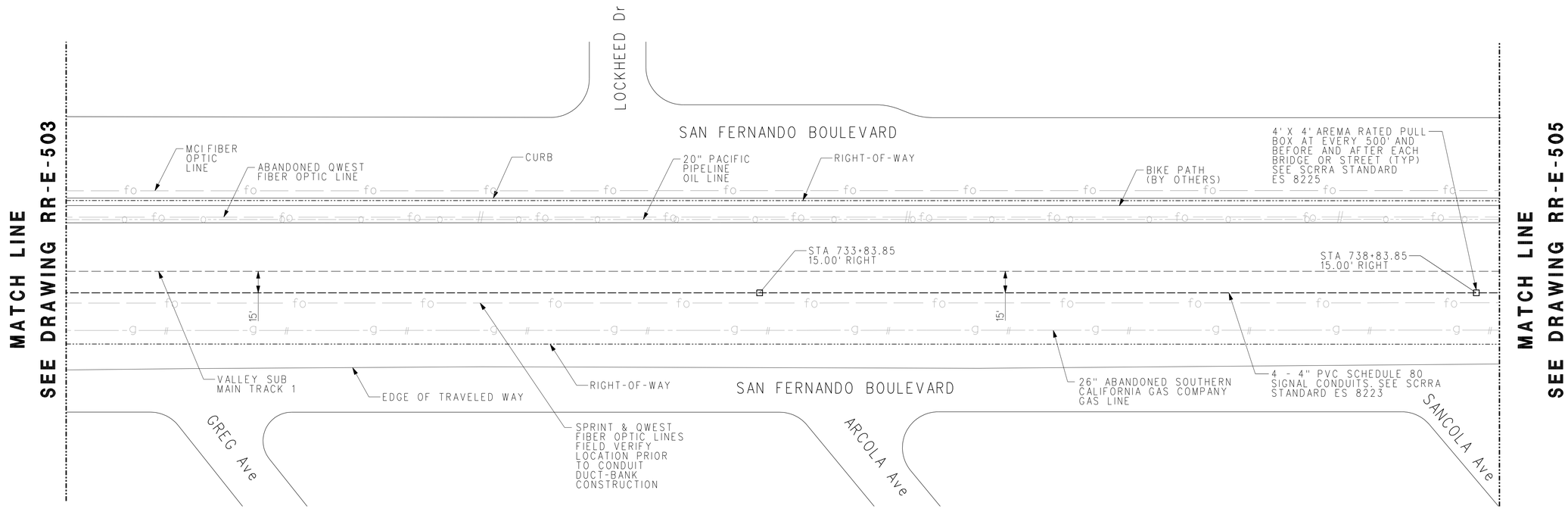


40 30 20 10 0 40 80
1" = 40'-0"

APPROVED FOR RAILROAD WORK.

RR-E-504

RR - SIGNAL CONDUIT LAYOUT
SHEET 4 OF 10

RAILROAD SHEET NO. 342 OF 394

HORIZ 1"=40'

LAST REVISION 00-00-00

DATE PLOTTED => 7/18/2012 TIME PLOTTED => 4:10:54 PM PLOT DRIVER => ...\Plotdrv\SCRRA_pdfBW.plt PEN TABLE => ...\CADD\Support\pen\PlotStamp.tbl

STATE OF CALIFORNIA - DEPARTMENT OF TRANSPORTATION
DESIGN
CONSULTANT FUNCTIONAL SUPERVISOR: PATRICK NICHOLSON
CALCULATED-DESIGNED BY: PAUL LAUGHLIN
CHECKED BY: RICHARD SILOS
REVISED BY
DATE REVISED

BORDER LAST REVISED 7/2/2010
USERNAME => gharibiana
DGN FILE => ...\Sheet\E737B-E-504.sht
RELATIVE BORDER SCALE IS IN INCHES 0 1 2 3
UNIT 1812
PROJECT NUMBER & PHASE 07000211191

| Dist | COUNTY | ROUTE | POST MILES TOTAL PROJECT | SHEET No. | TOTAL SHEETS |
|---|---|---|---|---|---|
| 07 | LA | 5 | 29.4/31.6 | 1709 | 1931 |

REGISTERED ELECTRICAL ENGINEER — DATE 05-21-12

PLANS APPROVAL DATE 05-21-12

REGISTERED PROFESSIONAL ENGINEER — BENJAMIN A. MASCARDO — No. E 8130 — Exp. 9-30-2012 — ELECTRICAL — STATE OF CALIFORNIA

THE STATE OF CALIFORNIA OR ITS OFFICERS OR AGENTS SHALL NOT BE RESPONSIBLE FOR THE ACCURACY OR COMPLETENESS OF SCANNED COPIES OF THIS PLAN SHEET.

SCRRA
279 E. ARROW HIGHWAY
SAN DIMAS, CA 91773

AECOM
515 SOUTH FLOWER ST. 4th FLOOR
LOS ANGELES, CA 90071

NOTES:

1. SEE SIGNAL PLANS FOR SIGNAL HOUSE TO BE RELOCATED.
2. FOR SIGNAL HOUSE NEW LOCATION, SEE RAILROAD SIGNAL PLANS.

LEGEND (THIS SHEET ONLY):

—— fo" —— CITY OF LOS ANGELES ATSAC FIBER OPTIC CONDUITS

—— e" —— CITY OF LOS ANGELES BLS ELECTRICAL CONDUITS

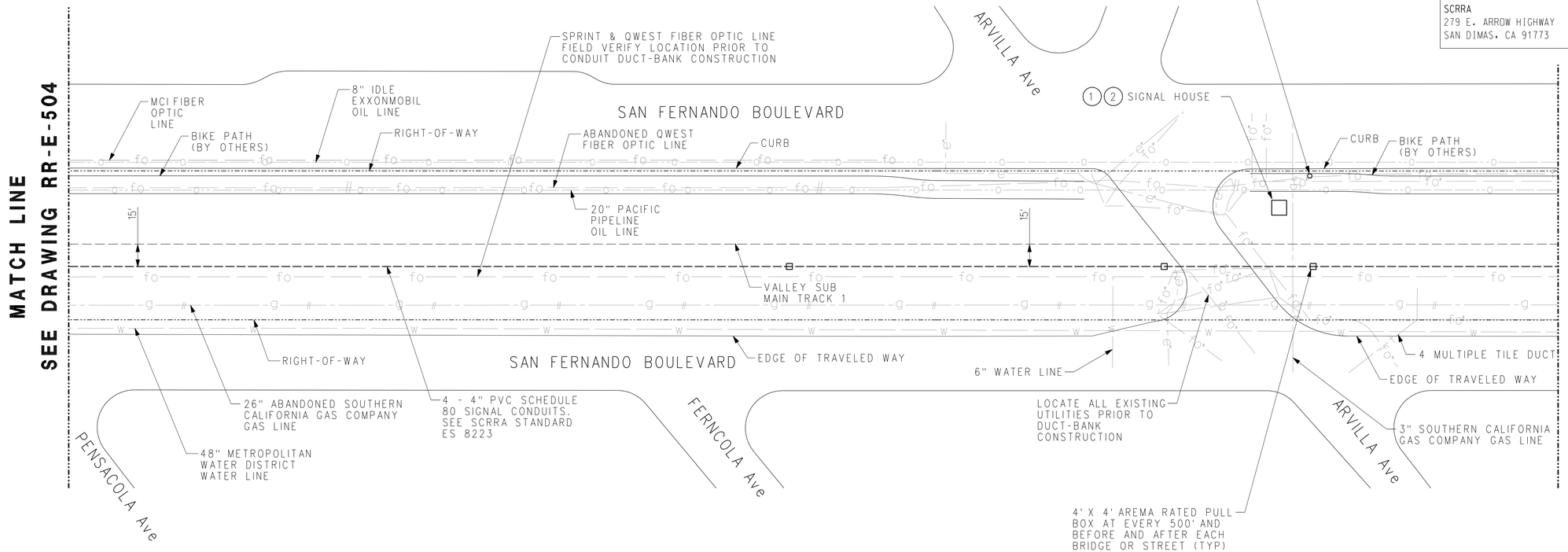


40 30 20 10 0 40 80

1" = 40'-0"

RR-E-505

RR - SIGNAL CONDUIT LAYOUT
SHEET 5 OF 10

RAILROAD SHEET NO. 343 OF 394

HORIZ 1"=40'

APPROVED FOR RAILROAD WORK.

STATE OF CALIFORNIA - DEPARTMENT OF TRANSPORTATION
DESIGN
CONSULTANT FUNCTIONAL SUPERVISOR: PATRICK NICHOLSON
CALCULATED-DESIGNED BY: PAUL LAUGHLIN
CHECKED BY: RICHARD SILOS
REVISED BY
DATE REVISED

DATE PLOTTED => 7/18/2012
TIME PLOTTED => 4:10:56 PM
LAST REVISION 00-00-00
PLOT DRIVER => ...\Plotdrv\SCRRA_pdf8W.plt
PEN TABLE => ...\CADD\Support\pen\PlotStamp.tbl

BORDER LAST REVISED 7/2/2010
USERNAME => gharibiana
DGN FILE => ...\Sheet\E737B-E-505.sht
RELATIVE BORDER SCALE IS IN INCHES 0 1 2 3
UNIT 1812
PROJECT NUMBER & PHASE 07000211191

| Dist | COUNTY | ROUTE | POST MILES TOTAL PROJECT | SHEET No. | TOTAL SHEETS |
|---|---|---|---|---|---|
| 07 | LA | 5 | 29.4/31.6 | 1710 | 1931 |

BA Mascardo — 05-21-12
REGISTERED ELECTRICAL ENGINEER — DATE

05-21-12
PLANS APPROVAL DATE

REGISTERED PROFESSIONAL ENGINEER — BENJAMIN A. MASCARDO — No. E 8130 — Exp. 9-30-2012 — ELECTRICAL — STATE OF CALIFORNIA

*THE STATE OF CALIFORNIA OR ITS OFFICERS OR AGENTS SHALL NOT BE RESPONSIBLE FOR THE ACCURACY OR COMPLETENESS OF SCANNED COPIES OF THIS PLAN SHEET.*

SCRRA
279 E. ARROW HIGHWAY
SAN DIMAS, CA 91773

AECOM
515 SOUTH FLOWER ST. 4th FLOOR
LOS ANGELES, CA 90071

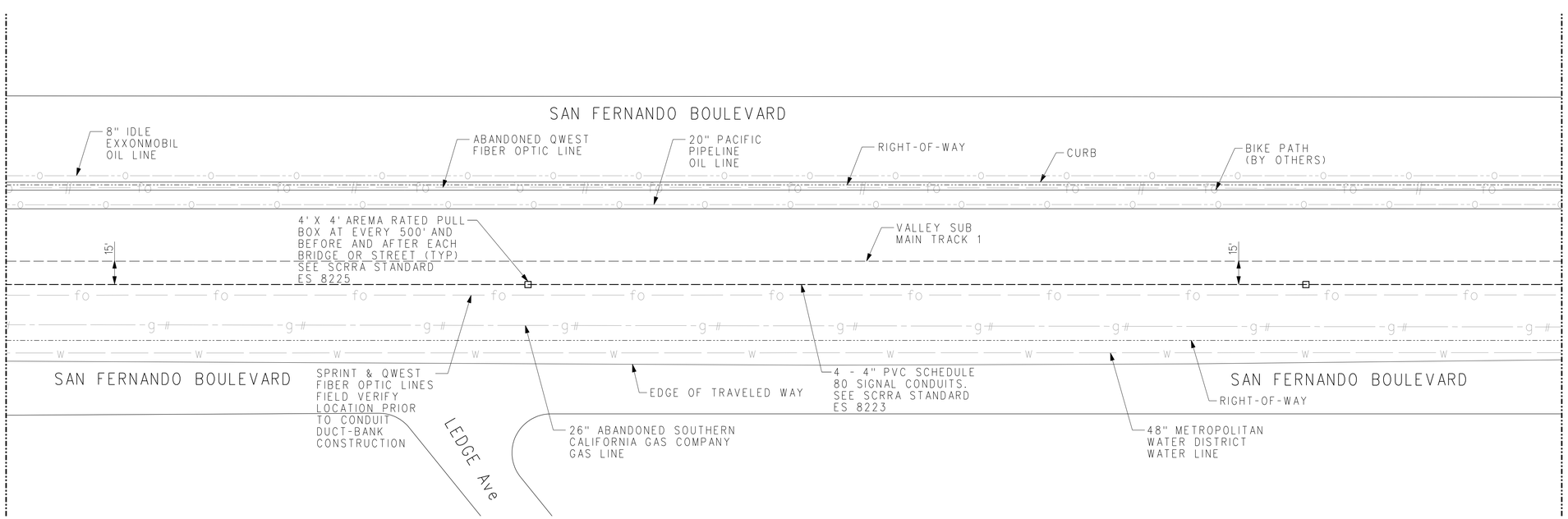


40 30 20 10 0 40 80
1" = 40'-0"

RR-E-506

RAILROAD SHEET NO. 344 OF 394

HORIZ 1"=40'

RR - SIGNAL CONDUIT LAYOUT
SHEET 6 OF 10

APPROVED FOR RAILROAD WORK.

STATE OF CALIFORNIA - DEPARTMENT OF TRANSPORTATION
DESIGN
CONSULTANT FUNCTIONAL SUPERVISOR: PATRICK NICHOLSON
CALCULATED-DESIGNED BY: PAUL LAUGHLIN
CHECKED BY: RICHARD SILOS
REVISED BY
DATE REVISED

BORDER LAST REVISED 7/2/2010
USERNAME => gharibiana
DGN FILE => ...\Sheet\E737B-E-506.sht
RELATIVE BORDER SCALE IS IN INCHES 0 1 2 3
UNIT 1812
PROJECT NUMBER & PHASE 07000211191

PLOT DRIVER => ...\Plotdrv\SCRRA_pdfBW.plt
PEN TABLE => ...\CADD\Support\pen\PlotStamp.tbl
TIME PLOTTED => 4:10:57 PM
DATE PLOTTED => 7/18/2012
LAST REVISION 00-00-00

| Dist | COUNTY | ROUTE | POST MILES TOTAL PROJECT | SHEET No. | TOTAL SHEETS |
|---|---|---|---|---|---|
| 07 | LA | 5 | 29.4/31.6 | 1711 | 1931 |

B A Mascardo 05-21-12
REGISTERED ELECTRICAL ENGINEER DATE

05-21-12
PLANS APPROVAL DATE

REGISTERED PROFESSIONAL ENGINEER — BENJAMIN A. MASCARDO — No. E 8130 — Exp. 9-30-2012 — ELECTRICAL — STATE OF CALIFORNIA

THE STATE OF CALIFORNIA OR ITS OFFICERS OR AGENTS SHALL NOT BE RESPONSIBLE FOR THE ACCURACY OR COMPLETENESS OF SCANNED COPIES OF THIS PLAN SHEET.

SCRRA
279 E. ARROW HIGHWAY
SAN DIMAS, CA 91773

AECOM
515 SOUTH FLOWER ST. 4th FLOOR
LOS ANGELES, CA 90071

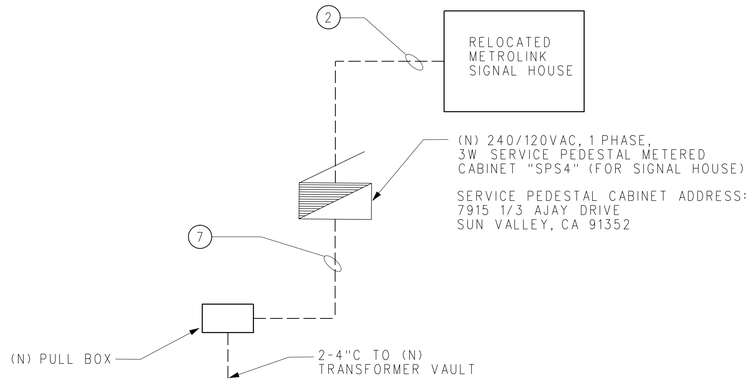


## SERVICE PEDESTAL METERED CABINET ENLARGED PLAN

NO SCALE

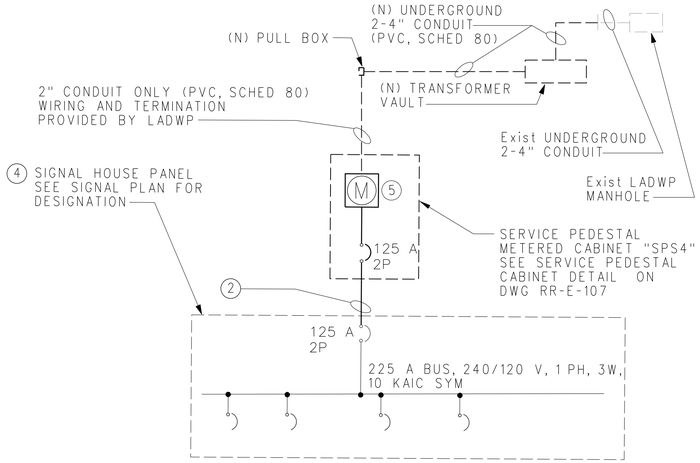


## SINGLE LINE DIAGRAM (SIGNAL HOUSE)

NO SCALE

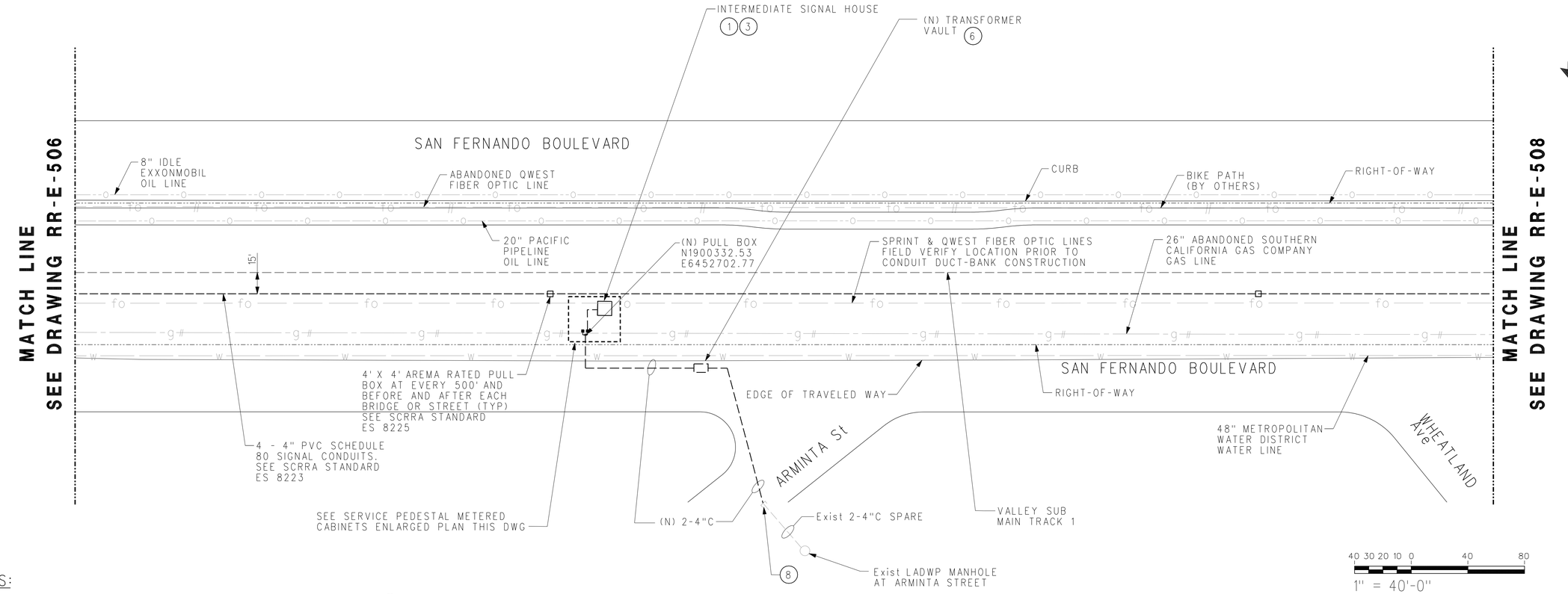


NOTES:

1. SEE SIGNAL PLANS FOR FINAL LOCATION OF RELOCATED SIGNAL HOUSE.
2. (N) 2"C WITH 3#1/0 & 1#4 GND.
3. SEE SIGNAL PLANS FOR FINAL LOCATION OF PANEL INSIDE SIGNAL HOUSE PRIOR TO CONDUIT INSTALLATION.
4. SEE SIGNAL PLAN FOR SIGNAL HOUSE PANEL RATING, CIRCUIT BREAKER SIZE, QTY AND CIRCUIT ASSIGNMENTS. PANEL, CIRCUIT BREAKERS PROVIDED BY SIGNAL PLAN.
5. KWH METER PROVIDED BY LADWP.
6. VAULT SIZE AND INSTALLATION REQUIREMENTS PER LADWP.
7. 2-4"CO. WIRES AND TERMINATIONS PROVIDED BY LADWP
8. INTERCEPT AND EXTEND CONDUITS AS SHOWN. LADWP TO PROVIDE LOCATION OF EXISTING 2-4" CONDUITS.

APPROVED FOR RAILROAD WORK.

## RR - SIGNAL CONDUIT LAYOUT
## SHEET 7 OF 10

RR-E-507

RAILROAD SHEET NO. 345 OF 394

HORIZ 1"=40'

STATE OF CALIFORNIA - DEPARTMENT OF TRANSPORTATION — DESIGN — Caltrans®
CONSULTANT FUNCTIONAL SUPERVISOR — PATRICK NICHOLSON
CALCULATED-DESIGNED BY — PAUL LAUGHLIN
CHECKED BY — RICHARD SILOS
REVISED BY
DATE REVISED

PEN TABLE => ...\CADD\Support\pen\PlotStamp.tbl
PLOT DRIVER => ...\Plotdrv\SCRRA_pdfBW.plt
TIME PLOTTED => 4:10:59 PM
DATE PLOTTED => 7/18/2012
LAST REVISION 00-00-00

BORDER LAST REVISED 7/2/2010
USERNAME => gharibiana
DGN FILE => ...\Sheet\E737B-E-507.sht
RELATIVE BORDER SCALE IS IN INCHES 0 1 2 3
UNIT 1812
PROJECT NUMBER & PHASE 07000211191

| Dist | COUNTY | ROUTE | POST MILES TOTAL PROJECT | SHEET No. | TOTAL SHEETS |
|---|---|---|---|---|---|
| 07 | LA | 5 | 29.4/31.6 | 1712 | 1931 |

B A Mascardo 05-21-12
REGISTERED ELECTRICAL ENGINEER DATE

05-21-12
PLANS APPROVAL DATE

REGISTERED PROFESSIONAL ENGINEER
BENJAMIN A. MASCARDO
No. E 8130
Exp. 9-30-2012
ELECTRICAL
STATE OF CALIFORNIA

THE STATE OF CALIFORNIA OR ITS OFFICERS OR AGENTS SHALL NOT BE RESPONSIBLE FOR THE ACCURACY OR COMPLETENESS OF SCANNED COPIES OF THIS PLAN SHEET.

SCRRA
279 E. ARROW HIGHWAY
SAN DIMAS, CA 91773

AECOM
515 SOUTH FLOWER ST. 4th FLOOR
LOS ANGELES, CA 90071

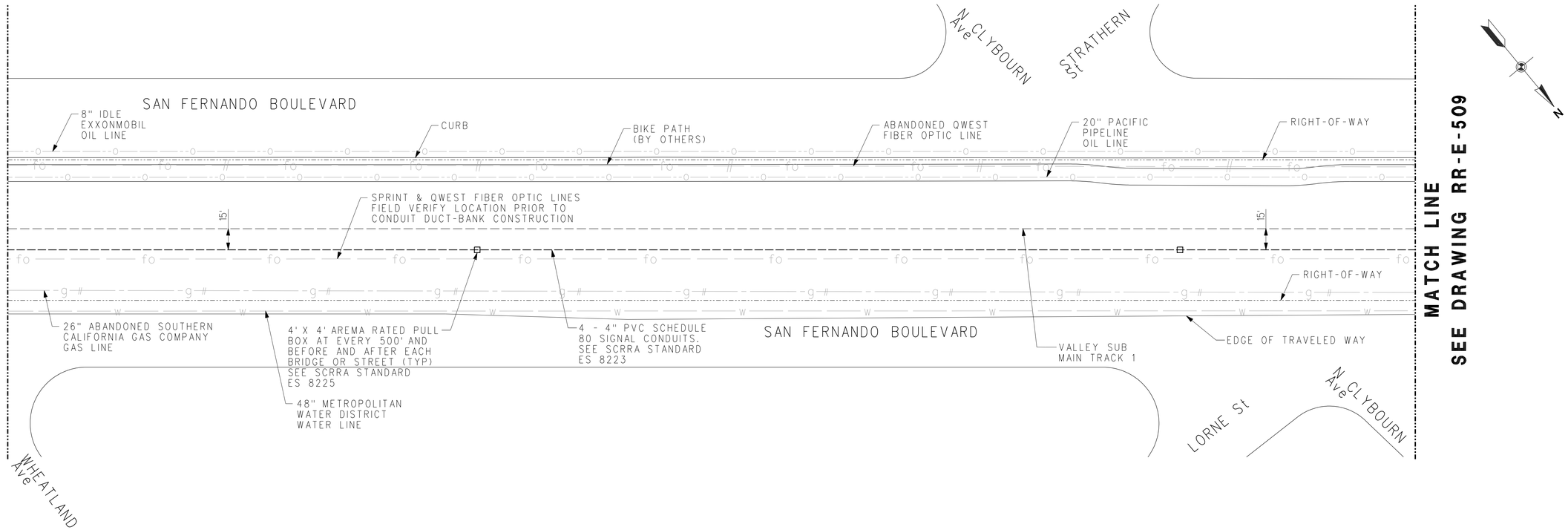


40 30 20 10 0 40 80
1" = 40'-0"

RR-E-508

RAILROAD SHEET NO. 346 OF 394

HORIZ 1"=40'

RR - SIGNAL CONDUIT LAYOUT
SHEET 8 OF 10

APPROVED FOR RAILROAD WORK.

STATE OF CALIFORNIA - DEPARTMENT OF TRANSPORTATION
DESIGN
CONSULTANT FUNCTIONAL SUPERVISOR: PATRICK NICHOLSON
CALCULATED-DESIGNED BY: PAUL LAUGHLIN
CHECKED BY: RICHARD SILOS
REVISED BY
DATE REVISED

PEN TABLE => ...\CADD\Support\pen\PlotStamp.tbl
PLOT DRIVER => ...\Plotdrv\SCRRA_pdf8W.plt
TIME PLOTTED => 4:11:01 PM
DATE PLOTTED => 7/18/2012
LAST REVISION 00-00-00

BORDER LAST REVISED 7/2/2010
USERNAME => ghariblana
DGN FILE => ...\Sheet\E737B-E-508.sht
RELATIVE BORDER SCALE IS IN INCHES 0 1 2 3
UNIT 1812
PROJECT NUMBER & PHASE 07000211191

| Dist | COUNTY | ROUTE | POST MILES TOTAL PROJECT | SHEET No. | TOTAL SHEETS |
|---|---|---|---|---|---|
| 07 | LA | 5 | 29.4/31.6 | 1713 | 1931 |

BA Mascardo 05-21-12
REGISTERED ELECTRICAL ENGINEER DATE

05-21-12
PLANS APPROVAL DATE

REGISTERED PROFESSIONAL ENGINEER
BENJAMIN A. MASCARDO
No. E 8130
Exp. 9-30-2012
ELECTRICAL
STATE OF CALIFORNIA

*THE STATE OF CALIFORNIA OR ITS OFFICERS OR AGENTS SHALL NOT BE RESPONSIBLE FOR THE ACCURACY OR COMPLETENESS OF SCANNED COPIES OF THIS PLAN SHEET.*

SCRRA
279 E. ARROW HIGHWAY
SAN DIMAS, CA 91773

AECOM
515 SOUTH FLOWER ST. 4th FLOOR
LOS ANGELES, CA 90071

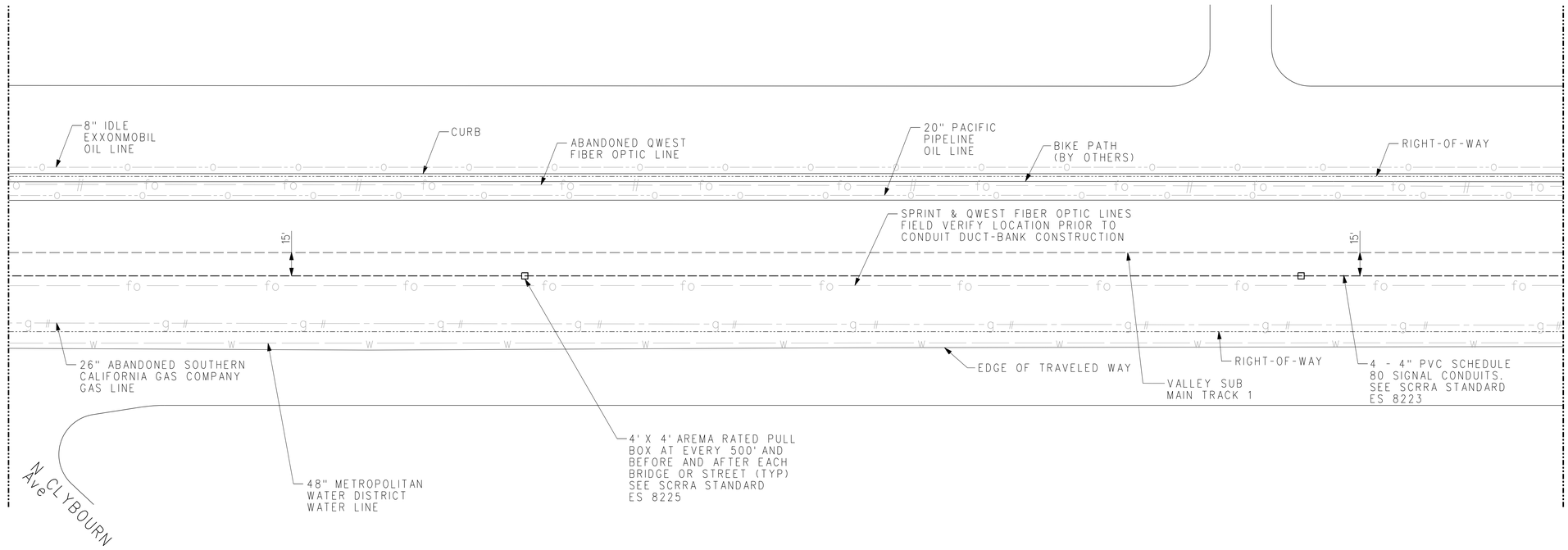


40 30 20 10 0 40 80
1" = 40'-0"

RR-E-509

RAILROAD SHEET NO. 347 OF 394

HORIZ 1"=40'

RR - SIGNAL CONDUIT LAYOUT
SHEET 9 OF 10

APPROVED FOR RAILROAD WORK.

STATE OF CALIFORNIA - DEPARTMENT OF TRANSPORTATION
DESIGN
CONSULTANT FUNCTIONAL SUPERVISOR: PATRICK NICHOLSON
CALCULATED-DESIGNED BY: PAUL LAUGHLIN
CHECKED BY: RICHARD SILOS
REVISED BY
DATE REVISED

PEN TABLE => ...\CADD\Support\pen\PlotStamp.tbl
PLOT DRIVER => ...\Plotdrv\SCRRA_pdfBW.plt
TIME PLOTTED => 4:11:02 PM
DATE PLOTTED => 7/18/2012
LAST REVISION 00-00-00

BORDER LAST REVISED 7/2/2010
USERNAME => gharibiana
DGN FILE => ...\Sheet\E737B-E-509.sht
RELATIVE BORDER SCALE IS IN INCHES 0 1 2 3
UNIT 1812
PROJECT NUMBER & PHASE 07000211191

| Dist | COUNTY | ROUTE | POST MILES TOTAL PROJECT | SHEET No. | TOTAL SHEETS |
|---|---|---|---|---|---|
| 07 | LA | 5 | 29.4/31.6 | 1714 | 1931 |

B A Mascardo 05-21-12
REGISTERED ELECTRICAL ENGINEER DATE

05-21-12
PLANS APPROVAL DATE

REGISTERED PROFESSIONAL ENGINEER — BENJAMIN A. MASCARDO — No. E 8130 — Exp. 9-30-2012 — ELECTRICAL — STATE OF CALIFORNIA

THE STATE OF CALIFORNIA OR ITS OFFICERS OR AGENTS SHALL NOT BE RESPONSIBLE FOR THE ACCURACY OR COMPLETENESS OF SCANNED COPIES OF THIS PLAN SHEET.

SCRRA
279 E. ARROW HIGHWAY
SAN DIMAS, CA 91773

AECOM
515 SOUTH FLOWER ST. 4th FLOOR
LOS ANGELES, CA 90071

## NOTES:

1. SEE SIGNAL PLANS FOR SIGNAL HOUSE TO BE RELOCATED.
2. COORDINATE WITH THE OWNER (METROLINK) FOR DISCONNECTING THE POWER PRIOR TO RELOCATION OF THE SIGNAL HOUSE.
3. FOR SIGNAL HOUSE NEW LOCATION, SEE RAILROAD SIGNAL PLANS.

## LEGEND (THIS SHEET ONLY):

- fo — CITY OF LOS ANGELES ATSAC FIBER OPTIC CONDUITS
- e — CITY OF LOS ANGELES BLS ELECTRICAL CONDUITS

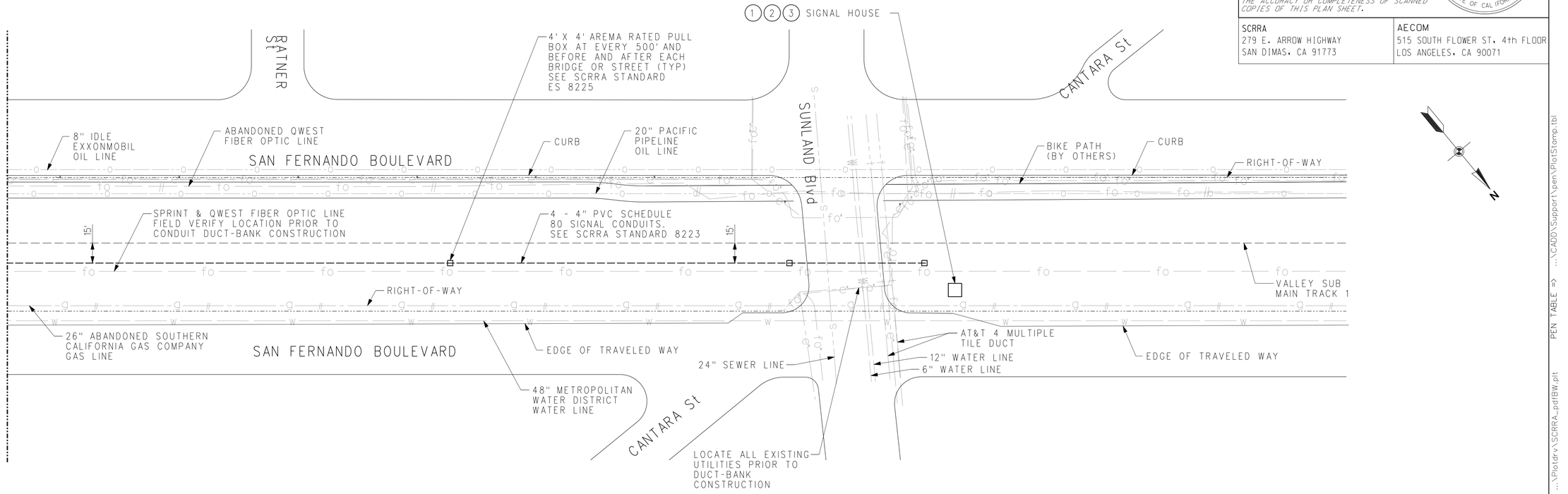


40 30 20 10 0 40 80
1" = 40'-0"

RR-E-510

RAILROAD SHEET NO. 348 OF 394

HORIZ 1"=40'

## RR - SIGNAL CONDUIT LAYOUT
## SHEET 10 OF 10

APPROVED FOR RAILROAD WORK.

STATE OF CALIFORNIA - DEPARTMENT OF TRANSPORTATION
DESIGN
CONSULTANT FUNCTIONAL SUPERVISOR: PATRICK NICHOLSON
CALCULATED-DESIGNED BY: PAUL LAUGHLIN
CHECKED BY: RICHARD SILOS
REVISED BY / DATE REVISED

LAST REVISION 00-00-00
DATE PLOTTED => 7/18/2012
TIME PLOTTED => 4:11:03 PM
PLOT DRIVER => ...\Plotdrv\SCRRA_pdfBW.plt
PEN TABLE => ...\CADD\Support\pen\PlotStamp.tbl

BORDER LAST REVISED 7/2/2010
USERNAME => gharibiana
DGN FILE => ...\Sheet\E737B-E-510.sht
RELATIVE BORDER SCALE IS IN INCHES 0 1 2 3
UNIT 1812
PROJECT NUMBER & PHASE 07000211191

| Dist | COUNTY | ROUTE | POST MILES TOTAL PROJECT | SHEET No. | TOTAL SHEETS |
|---|---|---|---|---|---|
| 07 | LA | 5 | 29.4/31.6 | 1715 | 1931 |

BA Mascardo 05-21-12
REGISTERED ELECTRICAL ENGINEER DATE

05-21-12
PLANS APPROVAL DATE

REGISTERED PROFESSIONAL ENGINEER
BENJAMIN A. MASCARDO
No. E 8130
Exp. 9-30-2012
ELECTRICAL
STATE OF CALIFORNIA

THE STATE OF CALIFORNIA OR ITS OFFICERS OR AGENTS SHALL NOT BE RESPONSIBLE FOR THE ACCURACY OR COMPLETENESS OF SCANNED COPIES OF THIS PLAN SHEET.

SCRRA
279 E. ARROW HIGHWAY
SAN DIMAS, CA 91773

AECOM
515 SOUTH FLOWER ST. 4th FLOOR
LOS ANGELES, CA 90071

## ELECTRICAL QUANTITIES SUMMARY

| | | |
|---|---|---|
| LIGHTING FIXTURE WALL MOUNTED (N) | EA | 8 |
| LIGHTING FIXTURE PENDANT MOUNTED (N) | EA | 8 |
| SERVICE PEDESTAL CABINET SINGLE METER SOCKET, 240/120V, 1 PHASE (N) | EA | 7 |
| SERVICE PEDESTAL CABINET DUAL METER SOCKET, 240/120V, 1 PHASE (N) | EA | 1 |
| PULL BOX (N) | EA | 27 |
| NEMA TYPE 4 JUNCTION BOX 5" X 6" X 4" (N) | EA | 20 |
| 250 KCMIL | LF | 1,400 |
| #4/0 awg (N) | LF | 2,100 |
| #3/0 AWG (N) | LF | 2,000 |
| #1 AWG (N) | LF | 500 |
| #2 AWG (N) | LF | 680 |
| #4 AWG (N) | LF | 700 |
| #8 AWG (N) | LF | 6,550 |
| 4"C (PVC, SCHEDULE) 80 (N) | LF | 220 |
| TRANSFORMER VAULT (LADWP) (N) | LS | 1 |
| 3"C( PVC, SCHEDULE 80) RISER (1 LOCATION1) (N) | LF | 10 |
| 3"CO (PVC SCHEDULE 80) WITH PULL ROPE(N) | LF | 80 |
| 2 1/2"C (PVC, SCHEDULE 80) (N) | LF | 640 |
| 2"C( PVC, SCHEDULE 80) RISER (4 LOCATIONS) (N) | LF | 40 |
| 2"CO (PVC SCHEDULE 80) WITH PULL ROPE(N) | LF | 500 |
| SPARE 2"CO (PVC, SCHEDULE 80) WITH PULL ROPE (N) | LF | 800 |
| 2"C (PVC, SCHEDULE 80) (N) | LF | 1,400 |
| 1 1/2"C (PVC, SCHEDULE) 80 (N) | LF | 100 |
| 1"C (PVC, SCHEDULE 80) (N) | LF | 60 |
| 2"C (RGS)(N) | LF | 50 |
| 1 1/2"C (RGS) (N) | LF | 300 |
| 4" WIDE WARNING TAPE (N) | LF | 2,400 |
| SLURRY BACKFILL (N) | CY | 400 |
| 3/4"C (RGS) (N) | LF | 130 |
| EXISTING SERVICE PEDESTAL CABINET & ASOCCIATED CONDUITS AND WIRING REMOVAL(RR-E-123) (N) | LS | 1 |
| 4' X 4' AREMA PULL BOX (SIGNAL) (N) | EA | 53 |
| CONDUIT 4" PVC SCHEDULE 80 (SIGNAL)(N) | LF | 84,640 |
| CONCRETE ENCASEMENT (14" X 14" X 83,910') (SIGNAL)(N) | CY | 4,255 |
| TRENCHING AND BACKFILL(14" X 50" X 83,910) (SIGNAL)(N) | CY | 15,163 |

(N) = NOT A SEPARATE PAY ITEM (FOR INFORMATION ONLY)

APPROVED FOR RAILROAD WORK.

RR-EQ-001

RR – ELECTRICAL QUANTITIES SUMMARY SHEET

RAILROAD SHEET NO. 349 OF 394

NO SCALE

REVISED BY | DATE REVISED
ANGELKA GRANDOV | RICHARD SILOS
CALCULATED-DESIGNED BY | CHECKED BY
CONSULTANT FUNCTIONAL SUPERVISOR | PATRICK NICHOLSON
STATE OF CALIFORNIA - DEPARTMENT OF TRANSPORTATION | DESIGN
Caltrans®

PEN TABLE => ...\CADD\Support\pen\PlotStamp.tbl
PLOT DRIVER => ...\Plotdrv\SCRRA_pdfBW.plt
TIME PLOTTED => 4:11:05 PM
DATE PLOTTED => 7/18/2012
LAST REVISION 00-00-00

BORDER LAST REVISED 7/2/2010
USERNAME => gharibiana
DGN FILE => ...\Sheet\E737B-EQ-001.sht
RELATIVE BORDER SCALE IS IN INCHES 0 1 2 3
UNIT 1812
PROJECT NUMBER & PHASE 07000211191

# TRAFFIC CONTROL PLAN

# BUENA VISTA STREET AT SAN FERNANDO BOULEVARD

| Dist | COUNTY | ROUTE | POST MILES TOTAL PROJECT | SHEET No. | TOTAL SHEETS |
|---|---|---|---|---|---|
| 07 | LA | 5 | 29.4/31.6 | 1716 | 1931 |

REGISTERED CIVIL ENGINEER — 5-21-12 DATE

05-21-12
PLANS APPROVAL DATE

REGISTERED PROFESSIONAL ENGINEER — KAREN M. HANKINSON — No. C54175 — Exp. 6/30/13 — CIVIL — STATE OF CALIFORNIA

*THE STATE OF CALIFORNIA OR ITS OFFICERS OR AGENTS SHALL NOT BE RESPONSIBLE FOR THE ACCURACY OR COMPLETENESS OF SCANNED COPIES OF THIS PLAN SHEET.*

SCRRA
309 E. ARROW HIGHWAY
SAN DIMAS, CA 91773

RAILPROS
1 ADA PARKWAY, SUITE 200
IRVINE, CA 92618

## BENCH MARKS

LACFCD DISK STAMPED NGS BM 38-239 IN TOP OF NORTHEAST CURB SAN FERNANDO 163.4 FT SOUTHEAST OF WINONA AVENUE 85 FT± NORTHWEST OF CENTERLINE OF DRIVEWAY TO CALTRANS YARD.
ELEVATION = 672.190 FT.

NGS DISK STAMPED P 970 1964 SET VERTICALLY IN THE SOUTH FACE OF THE NORTH ABUTMENT OF INTERSTATE 5 OVERPASS 176 FEET NORTHEAST OF THE CENTERLINE OF SAN FERNANDO BLVD. 3.0 FEET ABOVE THE SIDEWALK AND 0.7 FEET EAST OF THE WEST END OF THE ABUTMENT.
ELEVATION = 676.360 FT.

## SHEET INDEX:


BUENA VISTA STREET AT SAN FERNANDO BOULEVARD
RR-TRAFFIC CONTROL PLAN-NOTES SHEET ..... RR-TC-001
RR-TRAFFIC CONTROL PLAN-SIGN DETAILS ..... RR-TC-002
RR-TRAFFIC CONTROL PLAN-DETAIL SHEET-DETOURS - SHEET 1 ..... RR-TC-003
RR-TRAFFIC CONTROL PLAN-DETAIL SHEET-DETOURS - SHEET 2 ..... RR-TC-004
RR-TRAFFIC CONTROL PLAN-SEGMENT 1 ..... RR-TC-005
RR-TRAFFIC CONTROL PLAN-SEGMENT 2 ..... RR-TC-006
RR-TRAFFIC CONTROL PLAN CIVIL DETAILS-SEGMENTS 2-4 ..... RR-TC-007
RR-TRAFFIC CONTROL PLAN-SEGMENT 3 ..... RR-TC-008
RR-TRAFFIC CONTROL PLAN-TEMPORARY TRAFFIC SIGNAL MODIFICATION PLAN-SEGMENT 3 - SHEET 1 ..... RR-TC-009
RR-TRAFFIC CONTROL PLAN-TEMPORARY TRAFFIC SIGNAL MODIFICATION PLAN-SEGMENT 3 - SHEET 2 ..... RR-TC-010
RR-TRAFFIC CONTROL PLAN-TEMPORARY TRAFFIC SIGNAL MODIFICATION PLAN-SEGMENT 3 - SHEET 3 ..... RR-TC-011
RR-TRAFFIC CONTROL PLAN-SEGMENT 4 - SHEET 1 ..... RR-TC-012
RR-TRAFFIC CONTROL PLAN-SEGMENT 4 - SHEET 2 ..... RR-TC-013
RR-TRAFFIC CONTROL PLAN-CROSSING DETAIL PLAN - SEGMENT 4 ..... RR-TC-014
RR-TRAFFIC CONTROL PLAN-TEMPORARY TRAFFIC SIGNAL MODIFICATION PLAN-SEGMENTS 4-12 - SHEET 1 ..... RR-TC-015
RR-TRAFFIC CONTROL PLAN-TEMPORARY TRAFFIC SIGNAL MODIFICATION PLAN-SEGMENTS 4-12 - SHEET 2 ..... RR-TC-016
RR-TRAFFIC CONTROL PLAN-TEMPORARY TRAFFIC SIGNAL MODIFICATION PLAN-SEGMENTS 4-12 - SHEET 3 ..... RR-TC-017
RR-TRAFFIC CONTROL PLAN-SEGMENT 5 ..... RR-TC-018
RR-TRAFFIC CONTROL PLAN-SEGMENT 6 ..... RR-TC-019
RR-TRAFFIC CONTROL PLAN CIVIL DETAILS-SEGMENT 6 ..... RR-TC-020
RR-TRAFFIC CONTROL PLAN-SEGMENT 7 ..... RR-TC-021
RR-TRAFFIC CONTROL PLAN-SEGMENT 8 ..... RR-TC-022
RR-TRAFFIC CONTROL PLAN-CROSSING DETAIL PLAN - SEGMENTS 8 & 9 ..... RR-TC-023
RR-TRAFFIC CONTROL PLAN-CIVIL DETAILS-SEGMENT 8 ..... RR-TC-024
RR-TRAFFIC CONTROL PLAN-SEGMENT 9 ..... RR-TC-025
RR-TRAFFIC CONTROL PLAN-SEGMENT 10 ..... RR-TC-026
RR-TRAFFIC CONTROL PLAN-SEGMENT 11 ..... RR-TC-027
RR-TRAFFIC CONTROL PLAN-SEGMENT 12 ..... RR-TC-028
RR-TRAFFIC CONTROL PLAN-SEGMENT 13 ..... RR-TC-029
RR-TRAFFIC CONTROL PLAN-FINAL ROADWAY LAYOUT PLAN ..... RR-TC-030


## TRAFFIC CONTROL GENERAL NOTES:

1. ALL OPEN TRENCHES SHALL BE COVERED WITH NON-SKID STEEL PLATES OR TEMPORARY ASPHALT PAVEMENT BEFORE AND AFTER WORK HOURS.
2. ALL SIGNS, DELINEATORS, BARRICADES, ETC. SHALL CONFORM TO THE STATE OF CALIFORNIA STANDARD SPECIFICATIONS, LATEST EDITION, THE CALIFORNIA DEPARTMENT OF TRANSPORTATION "MANUAL OF TRAFFIC CONTROL FOR CONSTRUCTION AND MAINTENANCE WORK ZONES", LATEST EDITION, AND THE "WATCH MANUAL", LATEST EDITION.
3. WHERE NECESSARY, THE CONTRACTOR SHALL PROPERLY POST CITY-ISSUED AND APPROVED "TEMPORARY NO PARKING ANYTIME" SIGNS AT LEAST 48 HOURS BEFORE START OF WORK. THE CONTRACTOR SHALL NOTIFY THE BURBANK POLICE DEPARTMENT AT (818) 238-3000 IMMEDIATELY UPON POSTING SIGNS.
4. PROTECT TRAFFIC SIGNAL DETECTORS IN PLACE OR REPLACE WITHIN 5 CALENDAR DAYS OF FINAL PAVING. ALL DETECTORS DAMAGED BY THE WORK SHALL BE REPLACED TO THE STANDARDS OF THE CITY PUBLIC WORKS DEPARTMENT.
5. NOTIFY TRAFFIC ENGINEERING AT (818) 238-3965 AT LEAST 48 HOURS PRIOR TO ANY WORK IN THE CITY OF BURBANK RIGHT-OF-WAY.
6. ANY REVISIONS TO THE TRAFFIC CONTROL PLANS OR REQUIREMENTS SHALL BE APPROVED BY THE CITY TRAFFIC ENGINEER.
7. THE CONTRACTOR SHALL TAKE ALL NECESSARY AND PROPER PRECAUTIONS TO PROTECT ADJACENT PROPERTIES FROM ANY DAMAGE THAT MAY OCCUR DURING THE PERFORMANCE OF THE WORK.
8. EXISTING UTILITIES SHALL BE MAINTAINED IN PLACE BY THE CONTRACTOR UNLESS OTHERWISE NOTED.
9. CONTRACTOR SHALL NOTIFY UNDERGROUND SERVICE ALERT THREE (3) WORKING DAYS PRIOR TO THE START OF CONSTRUCTION AT TELEPHONE: (800) 422-4133.
10. CONTRACTOR SHALL COORDINATE RELOCATION AND/OR ADJUSTMENT OF STREET LIGHT PULLBOXES, GUY WIRES, STREET LIGHT POLES, WATER METER BOXES, WATER VALVES, ETC. WITH CITY OF BURBANK WATER AND POWER (BWP) ELECTRICAL DIVISION (818) 238-3575 AND/OR WATER DIVISION (818) 238-3500.
11. PROTECT IN PLACE CENTERLINE ROADWAY TIES OR RE-ESTABLISH PER CITY OF BURBANK STANDARDS.
12. NEW PULL BOXES LOCATED IN ROADWAYS, DRIVEWAYS OR ANYWHERE WITHIN 50' OF A RAILROAD TRACK CENTERLINE SHALL BE TRAFFIC-RATED PULL BOXES WITH STEEL COVERS AND SPECIAL CONCRETE FOOTINGS IN ACCORDANCE WITH CALTRANS STANDARD PLAN ES-8 REGARDLESS OF ANY DESIGNATION OTHERWISE ON CONTRACT DRAWINGS. STEEL COVER SHALL HAVE EMBOSSED NON-SKID PATTERN. OTHER PULL BOX REQUIREMENTS ARE AS INDICATED ON THE CONTRACT DRAWINGS AND OTHER CONTRACT DOCUMENTS.

APPROVED FOR RAILROAD WORK.

## TRAFFIC REFERENCE STANDARD PLANS AND DRAWINGS:

TRAFFIC WORK SHALL CONFORM TO THE LATEST CALTRANS STANDARD PLANS AND STANDARD SPECIFICATIONS AND ALSO 2010 CALIFORNIA MUTCD.

## RR-TRAFFIC CONTROL PLAN NOTES SHEET BUENA VISTA STREET AT SAN FERNANDO BOULEVARD

| REVISED BY | DATE REVISED |
|---|---|
| | |
| | |
| | |
| JOE DONALDSON | KAREN M. HANKINSON |
| | |
| | |
| | |

CALCULATED-DESIGNED BY: KAREN M. HANKINSON
CHECKED BY:

CONSULTANT FUNCTIONAL SUPERVISOR: KAREN M. HANKINSON

STATE OF CALIFORNIA - DEPARTMENT OF TRANSPORTATION
DESIGN

CITY OF BURBANK
PUBLIC WORKS DEPARTMENT

RECOMMENDED: _____ CITY ENGINEER _____ DATE
APPROVED: _____ PUBLIC WORKS DIRECTOR _____ DATE

| FIELD BOOK | | PAGE | |
|---|---|---|---|
| DESIGNED | JD | DATE | 3/8/12 |
| DRAWN | SW | DATE | 4/15/12 |
| CHECKED | KMH | DATE | 5/1/12 |
| REVIEWED | CC | DATE | 5/8/12 |

SHEET 350 OF 394

BID SCHEDULE NO.

WORK ORDER NO.

PLAN NO. RR-TC-001

LAST REVISION 06-04-12
DATE PLOTTED => Jul 18, 12
TIME PLOTTED => 7:38:53am

BORDER LAST REVISED 7/2/2010
USERNAME =>Donaldson
DGN FILE => TC-001
RELATIVE BORDER SCALE IS IN INCHES 0 1 2 3
UNIT 1812
PROJECT NUMBER & PHASE 07000211191

| Dist | COUNTY | ROUTE | POST MILES TOTAL PROJECT | SHEET No. | TOTAL SHEETS |
|---|---|---|---|---|---|
| 07 | LA | 5 | 29.4/31.6 | 1717 | 1931 |

REGISTERED CIVIL ENGINEER — DATE 5-21-12

PLANS APPROVAL DATE 05-21-12

REGISTERED PROFESSIONAL ENGINEER — KAREN M. HANKINSON — No. C54175 — Exp. 6/30/13 — CIVIL — STATE OF CALIFORNIA

*THE STATE OF CALIFORNIA OR ITS OFFICERS OR AGENTS SHALL NOT BE RESPONSIBLE FOR THE ACCURACY OR COMPLETENESS OF SCANNED COPIES OF THIS PLAN SHEET.*

SCRRA
279 E. ARROW HIGHWAY
SAN DIMAS, CA 91773

RAILPROS
1 ADA PARKWAY, SUITE 200
IRVINE, CA 92618

CITY OF BURBANK
PUBLIC WORKS DEPARTMENT

# SIGN LEGEND DETAILS

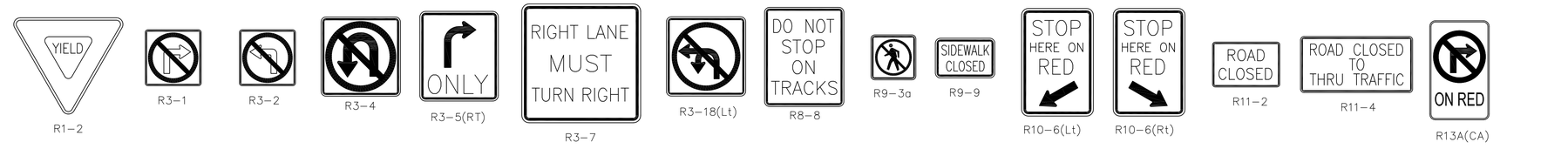


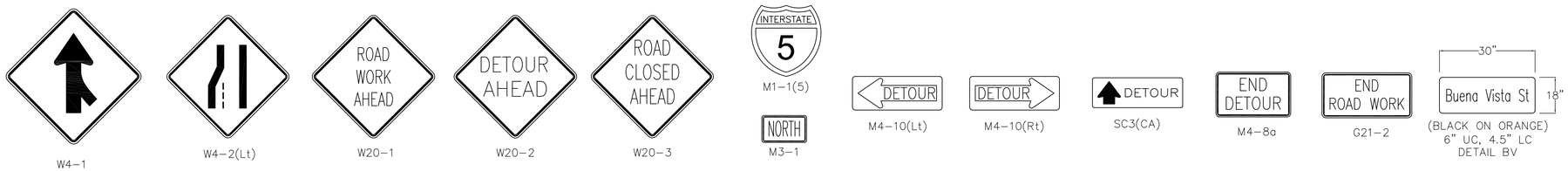


# PEDESTRIAN SIGNAGE DETAILS

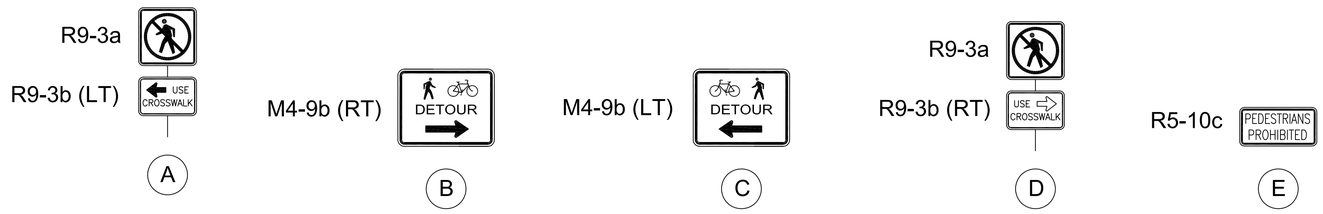


NOTE: ALL NEW SIGNS SHALL CONFORM TO THE CALIFORNIA MANUAL ON UNIFORM TRAFFIC CONTROL DEVICES FOR STREETS AND HIGHWAYS (CAMUTCD), LATEST EDITION.
ALL SIGN SIZES SHALL BE THE STANDARD SIZE SHOWN IN THAT PUBLICATION UNLESS NOTED OTHERWISE ON THE PLAN.

CONSTRUCTION AREA SIGN QUANTITIES

| SHEET NO. | MUTCD SIGN CODE | PANEL SIZE | REMARKS | No. OF SIGNS |
|---|---|---|---|---|
| TC – 003 | W20-2 | 36"x36" | MOUNT ON NEW STANDARD POST | 1 |
| | M4-8a | 24"x18" | MOUNT ON NEW STANDARD POST | 1 |
| | SC3 | 48"x18" | MOUNT ON NEW STANDARD POST | 1 |
| | SC3 | 48"x18" | MOUNT ON NEW STANDARD POST | 1 |
| | SC3 | 48"x18" | STRAP AND SADDLE BRACKET METHOD ON TRAFFIC SIGNAL POLE | 1 |
| | M4-10 (RT) | 48"x18" | MOUNT ON NEW STANDARD POST | 1 |
| | M4-10 (RT) | 48"x18" | MOUNT ON NEW STANDARD POST | 1 |
| | M4-10 (RT) | 48"x18" | MOUNT ON NEW STANDARD POST | 1 |
| | SC3 | 48"x18" | MOUNT ON NEW STANDARD POST | 1 |
| | SC3 | 48"x18" | MOUNT ON NEW STANDARD POST | 1 |
| | M4-10 (RT) | 48"x18" | MOUNT ON NEW STANDARD POST | 1 |
| | M4-10 (RT) | 48"x18" | MOUNT ON NEW STANDARD POST | 1 |
| | M4-10 (RT) | 48"x18" | MOUNT ON NEW STANDARD POST | 1 |
| | M4-10 (RT) | 48"x18" | MOUNT ON NEW STANDARD POST | 1 |
| | M4-10 (RT) | 48"x18" | MOUNT ON NEW STANDARD POST | 1 |
| | M4-10 (RT) | 48"x18" | MOUNT ON NEW STANDARD POST | 1 |
| | M4-10 (RT) | 48"x18" | MOUNT ON NEW STANDARD POST | 1 |
| | M4-10 (LT) | 48"x18" | MOUNT ON NEW STANDARD POST | 1 |
| | M4-10 (LT) | 48"x18" | MOUNT ON NEW STANDARD POST | 1 |
| | M4-10 (LT) | 48"x18" | MOUNT ON NEW STANDARD POST | 1 |
| | SC3 | 48"x18" | MOUNT ON NEW STANDARD POST | 1 |
| | M4-10 (RT) | 48"x18" | MOUNT ON NEW STANDARD POST | 1 |
| | M4-10 (RT) | 48"x18" | MOUNT ON NEW STANDARD POST | 1 |
| | M4-10 (LT) | 48"x18" | MOUNT ON NEW STANDARD POST | 1 |
| | M4-10 (LT) | 48"x18" | MOUNT ON NEW STANDARD POST | 1 |
| | SC3 | 48"x18" | MOUNT ON NEW STANDARD POST | 1 |
| | SC3 | 48"x18" | MOUNT ON NEW STANDARD POST | 1 |
| | M4-8a | 24"x18" | MOUNT ON NEW STANDARD POST | 1 |
| | W20-3 | 36"x36" | MOUNT ON NEW STANDARD POST | 1 |
| | W20-3 | 36"x36" | MOUNT ON NEW STANDARD POST | 1 |
| | M4-10 (RT) | 48"x18" | MOUNT ON NEW STANDARD POST | 1 |

CONSTRUCTION AREA SIGN QUANTITIES

| SHEET NO. | MUTCD SIGN CODE | PANEL SIZE | REMARKS | No. OF SIGNS |
|---|---|---|---|---|
| TC – 003 | M4-10 (RT) | 48"x18" | MOUNT ON NEW STANDARD POST | 1 |
| | M4-10 (RT) | 48"x18" | MOUNT ON NEW STANDARD POST | 1 |
| | M4-10 (LT) | 48"x18" | MOUNT ON NEW STANDARD POST | 1 |
| | M4-10 (LT) | 48"x18" | MOUNT ON NEW STANDARD POST | 1 |
| | SC3 | 48"x18" | MOUNT ON NEW STANDARD POST | 1 |
| | SC3 | 48"x18" | MOUNT ON NEW STANDARD POST | 1 |
| | SC3 | 48"x18" | MOUNT ON NEW STANDARD POST | 1 |
| | SC3 | 48"x18" | MOUNT ON NEW STANDARD POST | 1 |
| | SC3 | 48"x18" | MOUNT ON NEW STANDARD POST | 1 |
| | SC3 | 48"x18" | MOUNT ON NEW STANDARD POST | 1 |
| | W20-2 | 36"x36" | MOUNT ON NEW STANDARD POST | 1 |
| | W20-2 | 36"x36" | MOUNT ON NEW STANDARD POST | 1 |
| | W20-2 | 36"x36" | MOUNT ON NEW STANDARD POST | 1 |
| | SC3 | 48"x18" | MOUNT ON NEW STANDARD POST | 1 |
| | SC3 | 48"x18" | MOUNT ON NEW STANDARD POST | 1 |
| | SC3 | 48"x18" | MOUNT ON NEW STANDARD POST | 1 |
| | SC3 | 48"x18" | MOUNT ON NEW STANDARD POST | 1 |
| | SC3 | 48"x18" | MOUNT ON NEW STANDARD POST | 1 |
| | M4-10 (RT) | 48"x18" | MOUNT ON NEW STANDARD POST | 1 |
| TC – 004 | W20-1 | 36"x36" | MOUNT ON NEW STANDARD POST | 1 |
| | W20-1 | 36"x36" | MOUNT ON NEW STANDARD POST | 1 |
| | W20-1 | 36"x36" | MOUNT ON NEW STANDARD POST | 1 |
| | W20-1 | 36"x36" | MOUNT ON NEW STANDARD POST | 1 |
| | W20-1 | 36"x36" | MOUNT ON NEW STANDARD POST | 1 |
| | R9-3a | 18"x18" | MOUNT ON NEW STANDARD POST | 1 |
| | R9-3b (LT) | 18"x12" | | 1 |
| | R9-3a | 18"x18" | MOUNT ON NEW STANDARD POST | 1 |
| | R9-3b (LT) | 18"x12" | | 1 |
| | M4-9b (RT) | 30"x24" | MOUNT ON NEW STANDARD POST | 1 |
| | M4-9b (RT) | 30"x24" | MOUNT ON NEW STANDARD POST | 1 |
| | M4-9b (LT) | 30"x24" | MOUNT ON NEW STANDARD POST | 1 |
| | M4-9b (LT) | 30"x24" | MOUNT ON NEW STANDARD POST | 1 |
| | R9-3a | 18"x18" | MOUNT ON NEW STANDARD POST | 1 |
| | R9-3b (LT) | 18"x12" | | 1 |

CONSTRUCTION AREA SIGN QUANTITIES

| SHEET NO. | MUTCD SIGN CODE | PANEL SIZE | REMARKS | No. OF SIGNS |
|---|---|---|---|---|
| TC – 005 | R10-6 (LT) | 24"x36" | STRAP AND SADDLE BRACKET METHOD ON TRAFFIC SIGNAL POLE | 1 |
| TC – 006 | R8-8 | 24"x30" | RELOCATED AND MOUNTED ON NEW STANDARD POST | 1 |
| | R13A | 18"x30" | | 1 |
| TC – 008 | R3-18 | 24"x24" | MOUNT ON TYPE II BARRICADE | 1 |
| | R3-18 | 24"x24" | MOUNT ON TYPE II BARRICADE | 1 |
| | R3-18 | 24"x24" | STRAP AND SADDLE BRACKET METHOD ON TRAFFIC MAST ARM | 1 |
| TC – 012 | R10-6 | 24"x36" | STRAP AND SADDLE BRACKET METHOD ON NEW TRAFFIC SIGNAL POLE | 1 |
| | W20-3 | 36"x36" | MOUNT ON FLAG TREE | 1 |
| TC – 013 | W20-3 | 36"x36" | MOUNT ON FLAG TREE | 1 |
| | W20-2 | 36"x36" | MOUNT ON FLAG TREE | 1 |
| | W20-3 | 36"x36" | MOUNT ON FLAG TREE | 1 |
| | C30 | 30"x30" | MOUNT ON FLAG TREE | 1 |
| | W20-5 | 36"x36" | MOUNT ON FLAG TREE | 1 |
| | R3-5 (RT) | 30"x36" | MOUNT ON TYPE II BARRICADE | 1 |
| | W20-3 | 36"x36" | MOUNT ON TYPE II BARRICADE | 1 |
| | C30 | 30"x30" | MOUNT ON TYPE II BARRICADE | 1 |
| | R3-2 (RT) | 24"x24" | MOUNT ON TYPE II BARRICADE | 1 |
| | C30 | 30"x30" | MOUNT ON TYPE II BARRICADE | 1 |
| | R3-18 | 24"x24" | | 1 |
| | R3-1 (RT) | 24"x24" | MOUNT ON TYPE II BARRICADE | 1 |
| | R11-2 | 48"x30" | MOUNT ON TEMPORARY RAILING (TYPE K) | 1 |
| | M4-10 | 48"x18" | | 1 |
| TC – 015 | R8-8 | 24"x30" | STRAP AND SADDLE BRACKET METHOD ON TRAFFIC SIGNAL POLE | 1 |
| | R10-6 | 24"x36" | | 1 |
| | R8-8 | 24"x30" | STRAP AND SADDLE BRACKET METHOD ON RELOCATED TRAFFIC SIGNAL POLE | 1 |
| | R8-8 | 24"x30" | STRAP AND SADDLE BRACKET METHOD ON TRAFFIC SIGNAL POLE | 1 |
| | R8-8 | 24"x30" | STRAP AND SADDLE BRACKET METHOD ON TRAFFIC SIGNAL POLE | 1 |
| TC – 018 | R9-3 | 48"x18" | MOUNT ON METAL POST (TYP.) | 1 |
| | M4-8a | 24"x18" | | 1 |
| TC – 023 | R9-3a | 18"x18" | MOUNT ON TEMPORARY RAILING (TYPE K) | 1 |
| | M4-9 (RT) | 30"x24" | | 1 |
| | R9-3a | 18"x18" | MOUNT ON NEW STANDARD POST | 1 |
| | M4-9 (RT) | 30"x24" | | 1 |

CONSTRUCTION AREA SIGN QUANTITIES

| SHEET NO. | MUTCD SIGN CODE | PANEL SIZE | REMARKS | No. OF SIGNS |
|---|---|---|---|---|
| TC – 023 | R9-3a | 18"x18" | MOUNT ON NEW STANDARD POST | 1 |
| | M4-10 (RT) | 30"x24" | | 1 |
| | R9-3a | 18"x18" | MOUNT ON NEW STANDARD POST | 1 |
| | M4-10 (LT) | 30"x24" | | 1 |
| | R9-3a | 18"x18" | MOUNT ON NEW STANDARD POST | 1 |
| | M4-9 (RT) | 30"x24" | | 1 |
| TC – 025 | R9-9 | 18"x30" | MOUNT ON TYPE III BARRICADE | 1 |
| TC – 026 | R9-3a | 18"x18" | MOUNT ON NEW STANDARD POST | 1 |
| | M4-9 (LT) | 30"x24" | | 1 |
| TC – 025 | R3-4 | 24"x24" | STRAP AND SADDLE BRACKET METHOD ON TRAFFIC SIGNAL POLE | 1 |
| GRAND TOTAL NO. OF CONSTRUCTION AREA SIGNS | | | | 113 |

APPROVED FOR RAILROAD WORK.

# RR-TRAFFIC CONTROL PLAN
# SIGN DETAILS
# BUENA VISTA STREET AT SAN FERNANDO BOULEVARD

| REVISED BY | DATE REVISED |
|---|---|
| JOE DONALDSON | KAREN M. HANKINSON |

CALCULATED–DESIGNED BY
CHECKED BY

CONSULTANT FUNCTIONAL SUPERVISOR — KAREN M. HANKINSON

STATE OF CALIFORNIA – DEPARTMENT OF TRANSPORTATION — DESIGN

RECOMMENDED: PUBLIC WORKS DIRECTOR — DATE
APPROVED: CITY ENGINEER — DATE

| | | | |
|---|---|---|---|
| FIELD BOOK | PAGE | | |
| DESIGNED | JD | DATE | 3/8/12 |
| DRAWN | SW | DATE | 4/15/12 |
| CHECKED | KMH | DATE | 5/1/12 |
| REVIEWED | CC | DATE | 5/8/12 |

SHEET 351 OF 394

BID SCHEDULE NO.

WORK ORDER NO. PLAN NO. RR-TC-002

LAST REVISION 06-04-12 DATE PLOTTED => Jul 18, 12 TIME PLOTTED => 11:25:47am

BORDER LAST REVISED 7/2/2010 | USERNAME =>Donaldson DGN FILE =>TC-002 | RELATIVE BORDER SCALE IS IN INCHES 0 1 2 3 | UNIT 1812 | PROJECT NUMBER & PHASE 07000211191

| Dist | COUNTY | ROUTE | POST MILES TOTAL PROJECT | SHEET No. | TOTAL SHEETS |
|---|---|---|---|---|---|
| 07 | LA | 5 | 29.4/31.6 | 1718 | 1931 |

REGISTERED CIVIL ENGINEER — 5-21-12 DATE

05-21-12 PLANS APPROVAL DATE

REGISTERED PROFESSIONAL ENGINEER — KAREN M. HANKINSON — No. C54175 — Exp. 6/30/13 — CIVIL — STATE OF CALIFORNIA

*THE STATE OF CALIFORNIA OR ITS OFFICERS OR AGENTS SHALL NOT BE RESPONSIBLE FOR THE ACCURACY OR COMPLETENESS OF SCANNED COPIES OF THIS PLAN SHEET.*

SCRRA
279 E. ARROW HIGHWAY
SAN DIMAS, CA 91773

RAILPROS
1 ADA PARKWAY, SUITE 200
IRVINE, CA 92618

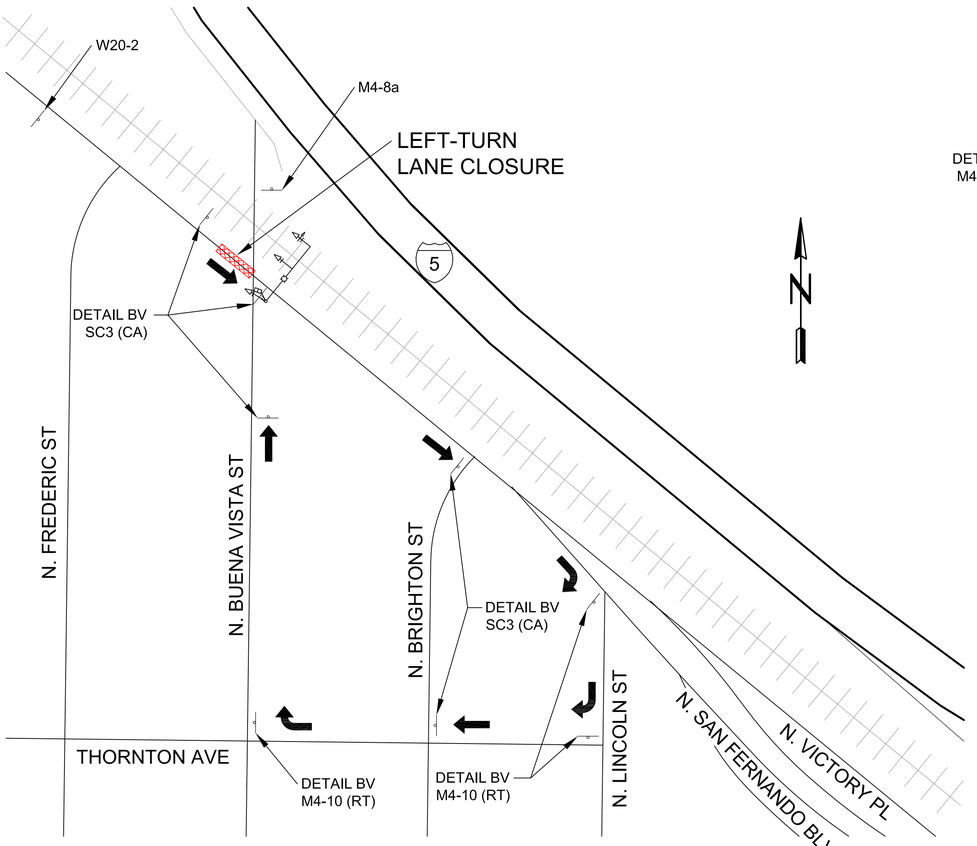


Detour 1: Closure of EB San Fernando Blvd Left-Turn Lane at Buena Vista St

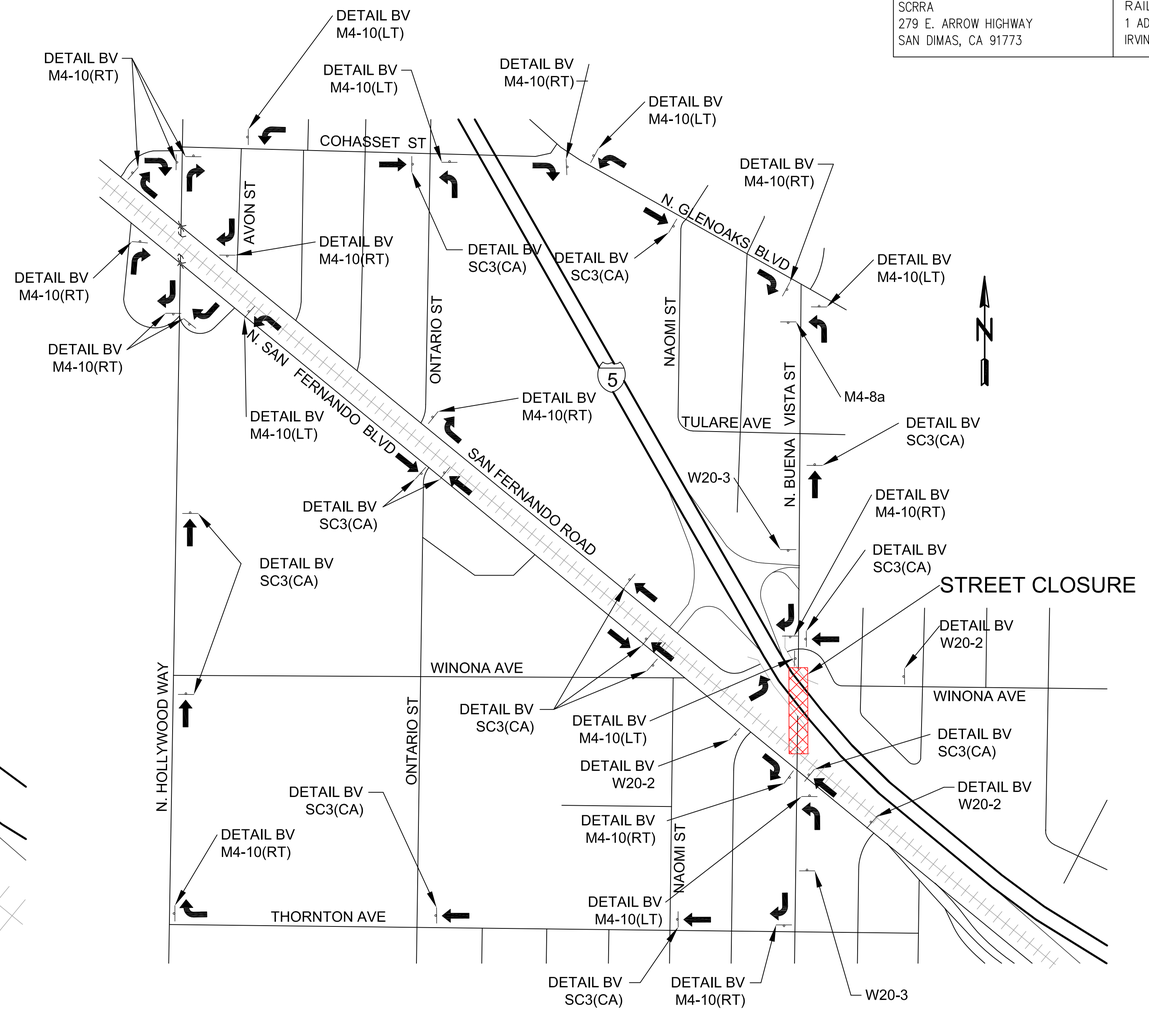


Detour 2: Closure of Buena Vista St from N. San Fernando Blvd to Winona Ave

NOTE: SEE SHEET RR-TC-002 FOR SIGN DETAILS.

APPROVED FOR RAILROAD WORK.

# RR-TRAFFIC CONTROL PLAN
# DETAIL SHEET - DETOURS - SHEET 1
# BUENA VISTA STREET AT SAN FERNANDO BOULEVARD

CITY OF BURBANK
PUBLIC WORKS DEPARTMENT

RECOMMENDED: _____ DATE _____ CITY ENGINEER
APPROVED: _____ DATE _____ PUBLIC WORKS DIRECTOR

FIELD BOOK _____ PAGE _____
DESIGNED JD DATE 3/8/12
DRAWN SW DATE 4/15/12
CHECKED KMH DATE 5/1/12
REVIEWED CC DATE 5/4/12

SHEET 352 OF 394

BID SCHEDULE NO. _____

WORK ORDER NO. _____ PLAN NO. RR-TC-003

LAST REVISION 06-04-12 DATE PLOTTED => Jul 16, 12
TIME PLOTTED => 10:59:56am

STATE OF CALIFORNIA – DEPARTMENT OF TRANSPORTATION
Caltrans
DESIGN

CONSULTANT FUNCTIONAL SUPERVISOR: KAREN M. HANKINSON

CALCULATED–DESIGNED BY: JOE DONALDSON
CHECKED BY: KAREN M. HANKINSON

REVISED BY | DATE REVISED

BORDER LAST REVISED 7/2/2010
USERNAME =>Donaldson
DGN FILE =>TC-003
RELATIVE BORDER SCALE IS IN INCHES 0 1 2 3
UNIT 1812
PROJECT NUMBER & PHASE 07000211191

| Dist | COUNTY | ROUTE | POST MILES TOTAL PROJECT | SHEET No. | TOTAL SHEETS |
|---|---|---|---|---|---|
| 07 | LA | 5 | 29.4/31.6 | 1719 | 1931 |

REGISTERED CIVIL ENGINEER — 5-21-12 DATE

05-21-12
PLANS APPROVAL DATE

REGISTERED PROFESSIONAL ENGINEER — KAREN M. HANKINSON — No. C54175 — Exp. 6/30/13 — CIVIL — STATE OF CALIFORNIA

*THE STATE OF CALIFORNIA OR ITS OFFICERS OR AGENTS SHALL NOT BE RESPONSIBLE FOR THE ACCURACY OR COMPLETENESS OF SCANNED COPIES OF THIS PLAN SHEET.*

SCRRA
279 E. ARROW HIGHWAY
SAN DIMAS, CA 91773

RAILPROS
1 ADA PARKWAY, SUITE 200
IRVINE, CA 92618

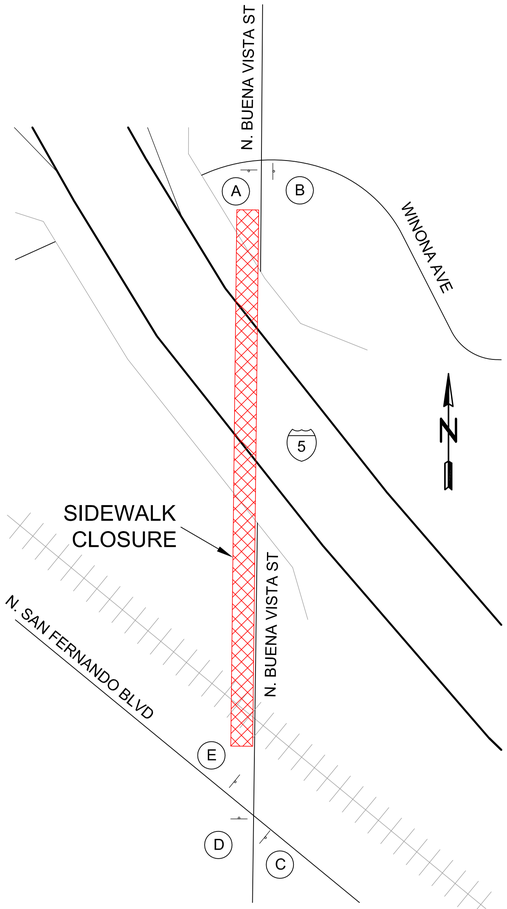


Ped Detour 1: Closure of sidewalk on west side of Buena Vista between Winona and N. San Fernando Blvd.

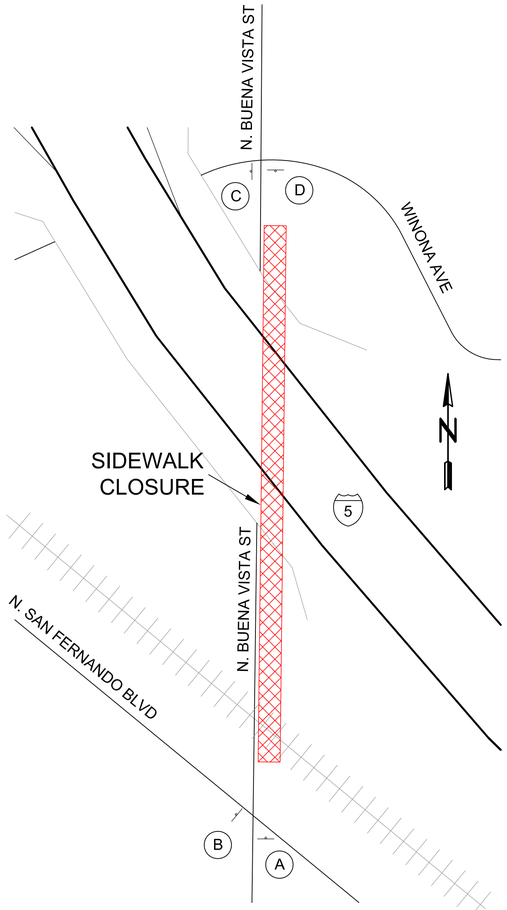


Ped Detour 2: Closure of sidewalk on east side of Buena Vista between Winona and N. San Fernando Blvd.

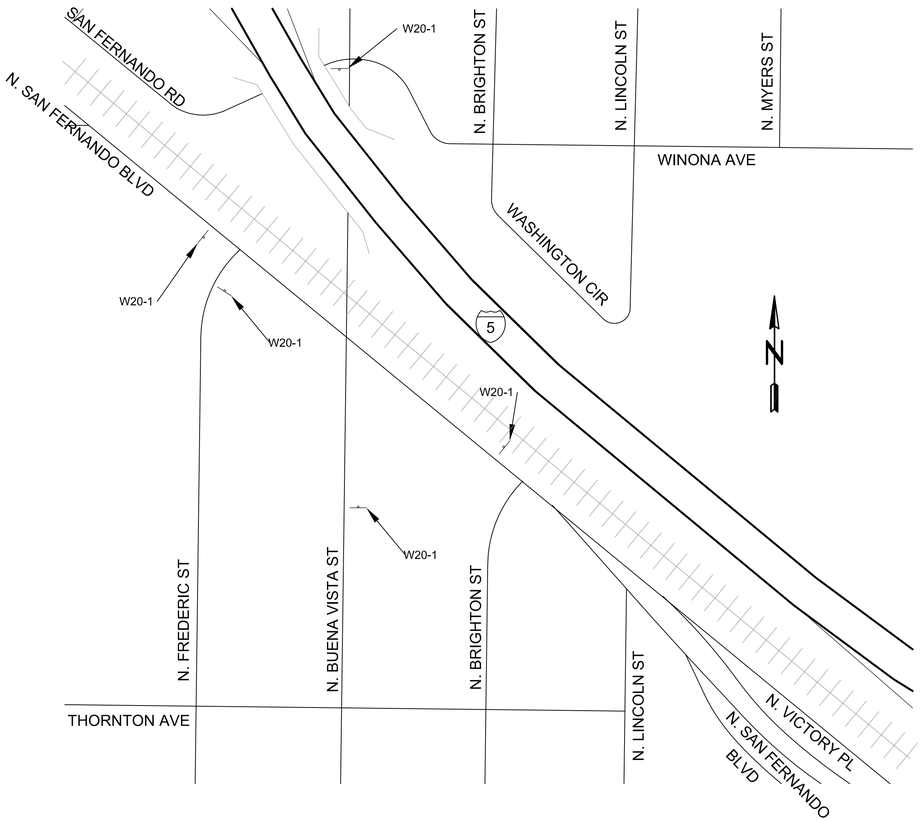


Advanced Notice Signage
During Construction (All Phases)

NOTE: SEE SHEET RR-TC-002 FOR SIGN DETAILS.

APPROVED FOR RAILROAD WORK.

# RR-TRAFFIC CONTROL PLAN
# DETAIL SHEET - DETOURS - SHEET 2
# BUENA VISTA STREET AT
# SAN FERNANDO BOULEVARD

CITY OF BURBANK
PUBLIC WORKS DEPARTMENT

RECOMMENDED: _____ DATE _____ CITY ENGINEER
APPROVED: _____ DATE _____ PUBLIC WORKS DIRECTOR

FIELD BOOK — PAGE
DESIGNED JD DATE 3/6/12
DRAWN SW DATE 4/15/12
CHECKED KMH DATE 5/1/12
REVIEWED CC DATE 5/6/12

SHEET 353 OF 394

BID SCHEDULE NO.

WORK ORDER NO.

PLAN NO. RR-TC-004

LAST REVISION 06-04-12 | DATE PLOTTED => Jul 16, 12 | TIME PLOTTED => 11:00:30am

| REVISED BY | DATE REVISED |
|---|---|
| JOE DONALDSON | KAREN M. HANKINSON |

CALCULATED-DESIGNED BY
CHECKED BY

CONSULTANT FUNCTIONAL SUPERVISOR — KAREN M. HANKINSON

STATE OF CALIFORNIA — DEPARTMENT OF TRANSPORTATION — DESIGN

Caltrans

BORDER LAST REVISED 7/2/2010 | USERNAME =>Donaldson DGN FILE =>TC-004 | RELATIVE BORDER SCALE IS IN INCHES 0 1 2 3 | UNIT 1812 | PROJECT NUMBER & PHASE 07000211191

| Dist | COUNTY | ROUTE | POST MILES TOTAL PROJECT | SHEET No. | TOTAL SHEETS |
|---|---|---|---|---|---|
| 07 | LA | 5 | 29.4/31.6 | 1720 | 1931 |

REGISTERED CIVIL ENGINEER — DATE 5-21-12

PLANS APPROVAL DATE 05-21-12

KAREN M. HANKINSON No. C54175 Exp. 6/30/13 CIVIL — REGISTERED PROFESSIONAL ENGINEER — STATE OF CALIFORNIA

THE STATE OF CALIFORNIA OR ITS OFFICERS OR AGENTS SHALL NOT BE RESPONSIBLE FOR THE ACCURACY OR COMPLETENESS OF SCANNED COPIES OF THIS PLAN SHEET.

SCRRA
279 E. ARROW HIGHWAY
SAN DIMAS, CA 91773

RAILPROS
1 ADA PARKWAY, SUITE 200
IRVINE, CA 92618

# LEGEND

- FLASHING ARROW PANEL (FAP)
- TYPE II BARRICADE WITH SIGN(S)
- SURFACE MOUNTED CHANNELIZER
- PORTABLE DELINEATOR
- (S) SIGNALIZED INTERSECTION
- EXISTING STRIPING, MARKING & PAVEMENT LEGEND TO REMAIN
- EXISTING STRIPING, MARKING & PAVEMENT LEGEND TO BE REMOVED
- STRIPING, MARKING & PAVEMENT LEGEND
- (#) CALTRANS STRIPING DETAIL NUMBER
- EXISTING EQUIPMENT TO REMAIN
- EXISTING EQUIPMENT TO BE REMOVED
- EQUIPMENT TO BE INSTALLED
- LANE CLOSURE (DURING CONSTRUCTION HOURS ONLY)
- WORK ZONE

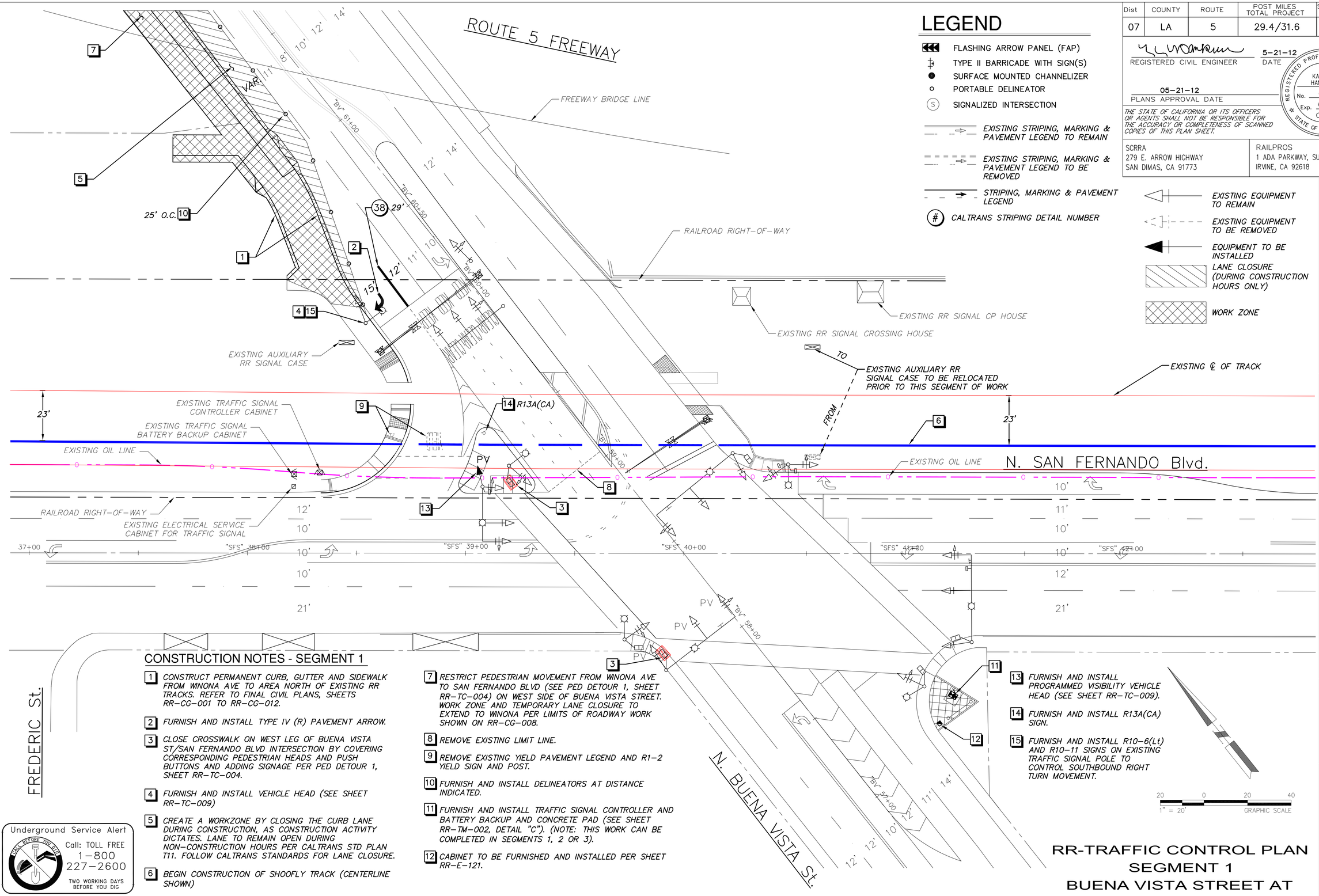


## CONSTRUCTION NOTES - SEGMENT 1

1. CONSTRUCT PERMANENT CURB, GUTTER AND SIDEWALK FROM WINONA AVE TO AREA NORTH OF EXISTING RR TRACKS. REFER TO FINAL CIVIL PLANS, SHEETS RR-CG-001 TO RR-CG-012.
2. FURNISH AND INSTALL TYPE IV (R) PAVEMENT ARROW.
3. CLOSE CROSSWALK ON WEST LEG OF BUENA VISTA ST/SAN FERNANDO BLVD INTERSECTION BY COVERING CORRESPONDING PEDESTRIAN HEADS AND PUSH BUTTONS AND ADDING SIGNAGE PER PED DETOUR 1, SHEET RR-TC-004.
4. FURNISH AND INSTALL VEHICLE HEAD (SEE SHEET RR-TC-009)
5. CREATE A WORKZONE BY CLOSING THE CURB LANE DURING CONSTRUCTION, AS CONSTRUCTION ACTIVITY DICTATES. LANE TO REMAIN OPEN DURING NON-CONSTRUCTION HOURS PER CALTRANS STD PLAN T11. FOLLOW CALTRANS STANDARDS FOR LANE CLOSURE.
6. BEGIN CONSTRUCTION OF SHOOFLY TRACK (CENTERLINE SHOWN)
7. RESTRICT PEDESTRIAN MOVEMENT FROM WINONA AVE TO SAN FERNANDO BLVD (SEE PED DETOUR 1, SHEET RR-TC-004) ON WEST SIDE OF BUENA VISTA STREET. WORK ZONE AND TEMPORARY LANE CLOSURE TO EXTEND TO WINONA PER LIMITS OF ROADWAY WORK SHOWN ON RR-CG-008.
8. REMOVE EXISTING LIMIT LINE.
9. REMOVE EXISTING YIELD PAVEMENT LEGEND AND R1-2 YIELD SIGN AND POST.
10. FURNISH AND INSTALL DELINEATORS AT DISTANCE INDICATED.
11. FURNISH AND INSTALL TRAFFIC SIGNAL CONTROLLER AND BATTERY BACKUP AND CONCRETE PAD (SEE SHEET RR-TM-002, DETAIL "C"). (NOTE: THIS WORK CAN BE COMPLETED IN SEGMENTS 1, 2 OR 3).
12. CABINET TO BE FURNISHED AND INSTALLED PER SHEET RR-E-121.
13. FURNISH AND INSTALL PROGRAMMED VISIBILITY VEHICLE HEAD (SEE SHEET RR-TC-009).
14. FURNISH AND INSTALL R13A(CA) SIGN.
15. FURNISH AND INSTALL R10-6(Lt) AND R10-11 SIGNS ON EXISTING TRAFFIC SIGNAL POLE TO CONTROL SOUTHBOUND RIGHT TURN MOVEMENT.

20 0 20 40
1" = 20' GRAPHIC SCALE

Underground Service Alert
CALL BEFORE YOU DIG
Call: TOLL FREE 1-800 227-2600
TWO WORKING DAYS BEFORE YOU DIG

APPROVED FOR RAILROAD WORK.

# RR-TRAFFIC CONTROL PLAN SEGMENT 1 BUENA VISTA STREET AT SAN FERNANDO BOULEVARD

CITY OF BURBANK
PUBLIC WORKS DEPARTMENT

RECOMMENDED: CITY ENGINEER DATE
APPROVED: PUBLIC WORKS DIRECTOR DATE

| FIELD BOOK | PAGE |
|---|---|
| DESIGNED JD | DATE 3/8/12 |
| DRAWN SW | DATE 4/15/12 |
| CHECKED KMH | DATE 5/1/12 |
| REVIEWED CC | DATE 5/8/12 |

SHEET 354 OF 394

BID SCHEDULE NO.

WORK ORDER NO.

PLAN NO. RR-TC-005

LAST REVISION 06-04-12 DATE PLOTTED => Jul 16, 12
TIME PLOTTED => 11:01:32am

| REVISED BY | DATE REVISED |
|---|---|
| JOE DONALDSON | KAREN M. HANKINSON |

| CALCULATED-DESIGNED BY | CHECKED BY |
|---|---|
| CONSULTANT FUNCTIONAL SUPERVISOR | KAREN M. HANKINSON |

STATE OF CALIFORNIA - DEPARTMENT OF TRANSPORTATION — DESIGN

BORDER LAST REVISED 7/2/2010 | USERNAME =>Donaldson DGN FILE =>TC-005 | RELATIVE BORDER SCALE IS IN INCHES 0 1 2 3 | UNIT 1812 | PROJECT NUMBER & PHASE 07000211191

| Dist | COUNTY | ROUTE | POST MILES TOTAL PROJECT | SHEET No. | TOTAL SHEETS |
|---|---|---|---|---|---|
| 07 | LA | 5 | 29.4/31.6 | 1721 | 1931 |

REGISTERED CIVIL ENGINEER — 5-21-12 DATE

05-21-12 PLANS APPROVAL DATE

REGISTERED PROFESSIONAL ENGINEER — KAREN M. HANKINSON — No. C54175 — Exp. 6/30/13 — CIVIL — STATE OF CALIFORNIA

THE STATE OF CALIFORNIA OR ITS OFFICERS OR AGENTS SHALL NOT BE RESPONSIBLE FOR THE ACCURACY OR COMPLETENESS OF SCANNED COPIES OF THIS PLAN SHEET.

SCRRA
279 E. ARROW HIGHWAY
SAN DIMAS, CA 91773

RAILPROS
1 ADA PARKWAY, SUITE 200
IRVINE, CA 92618

## LEGEND

- FLASHING ARROW PANEL (FAP)
- TYPE II BARRICADE WITH SIGN(S)
- SURFACE MOUNTED CHANNELIZER
- PORTABLE DELINEATOR
- (S) SIGNALIZED INTERSECTION
- EXISTING STRIPING, MARKING & PAVEMENT LEGEND TO REMAIN
- EXISTING STRIPING, MARKING & PAVEMENT LEGEND TO BE REMOVED
- STRIPING, MARKING & PAVEMENT LEGEND
- (#) CALTRANS STRIPING DETAIL NUMBER

- EXISTING EQUIPMENT TO REMAIN
- EXISTING EQUIPMENT TO BE REMOVED
- EQUIPMENT TO BE INSTALLED
- LANE CLOSURE (DURING CONSTRUCTION HOURS ONLY)
- WORK ZONE

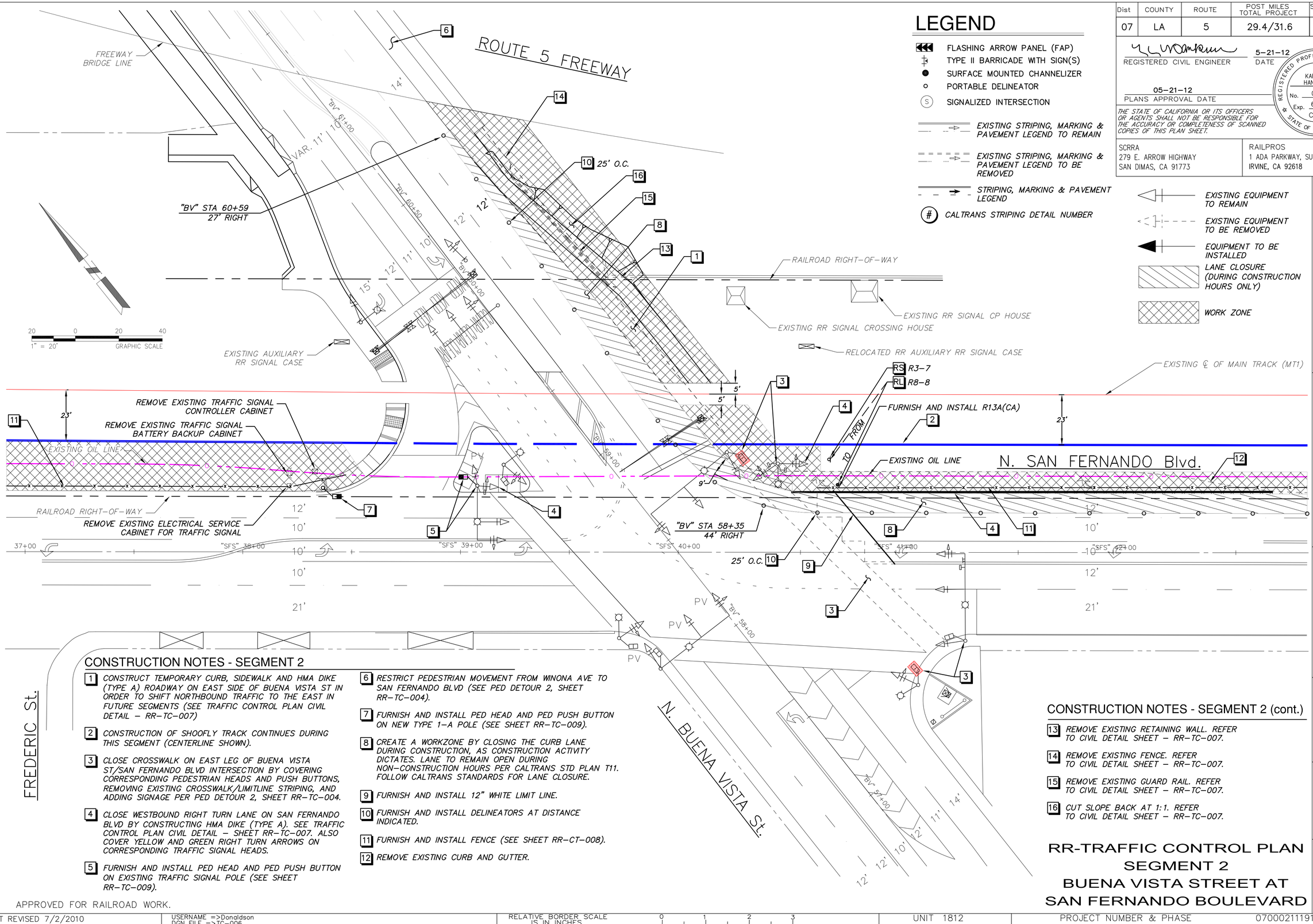


## CONSTRUCTION NOTES - SEGMENT 2

1. CONSTRUCT TEMPORARY CURB, SIDEWALK AND HMA DIKE (TYPE A) ROADWAY ON EAST SIDE OF BUENA VISTA ST IN ORDER TO SHIFT NORTHBOUND TRAFFIC TO THE EAST IN FUTURE SEGMENTS (SEE TRAFFIC CONTROL PLAN CIVIL DETAIL – RR–TC–007)
2. CONSTRUCTION OF SHOOFLY TRACK CONTINUES DURING THIS SEGMENT (CENTERLINE SHOWN).
3. CLOSE CROSSWALK ON EAST LEG OF BUENA VISTA ST/SAN FERNANDO BLVD INTERSECTION BY COVERING CORRESPONDING PEDESTRIAN HEADS AND PUSH BUTTONS, REMOVING EXISTING CROSSWALK/LIMITLINE STRIPING, AND ADDING SIGNAGE PER PED DETOUR 2, SHEET RR–TC–004.
4. CLOSE WESTBOUND RIGHT TURN LANE ON SAN FERNANDO BLVD BY CONSTRUCTING HMA DIKE (TYPE A). SEE TRAFFIC CONTROL PLAN CIVIL DETAIL – SHEET RR–TC–007. ALSO COVER YELLOW AND GREEN RIGHT TURN ARROWS ON CORRESPONDING TRAFFIC SIGNAL HEADS.
5. FURNISH AND INSTALL PED HEAD AND PED PUSH BUTTON ON EXISTING TRAFFIC SIGNAL POLE (SEE SHEET RR–TC–009).
6. RESTRICT PEDESTRIAN MOVEMENT FROM WINONA AVE TO SAN FERNANDO BLVD (SEE PED DETOUR 2, SHEET RR–TC–004).
7. FURNISH AND INSTALL PED HEAD AND PED PUSH BUTTON ON NEW TYPE 1–A POLE (SEE SHEET RR–TC–009).
8. CREATE A WORKZONE BY CLOSING THE CURB LANE DURING CONSTRUCTION, AS CONSTRUCTION ACTIVITY DICTATES. LANE TO REMAIN OPEN DURING NON–CONSTRUCTION HOURS PER CALTRANS STD PLAN T11. FOLLOW CALTRANS STANDARDS FOR LANE CLOSURE.
9. FURNISH AND INSTALL 12" WHITE LIMIT LINE.
10. FURNISH AND INSTALL DELINEATORS AT DISTANCE INDICATED.
11. FURNISH AND INSTALL FENCE (SEE SHEET RR–CT–008).
12. REMOVE EXISTING CURB AND GUTTER.

## CONSTRUCTION NOTES - SEGMENT 2 (cont.)

13. REMOVE EXISTING RETAINING WALL. REFER TO CIVIL DETAIL SHEET – RR–TC–007.
14. REMOVE EXISTING FENCE. REFER TO CIVIL DETAIL SHEET – RR–TC–007.
15. REMOVE EXISTING GUARD RAIL. REFER TO CIVIL DETAIL SHEET – RR–TC–007.
16. CUT SLOPE BACK AT 1:1. REFER TO CIVIL DETAIL SHEET – RR–TC–007.

APPROVED FOR RAILROAD WORK.

# RR-TRAFFIC CONTROL PLAN SEGMENT 2 BUENA VISTA STREET AT SAN FERNANDO BOULEVARD

CITY OF BURBANK
PUBLIC WORKS DEPARTMENT

RECOMMENDED: CITY ENGINEER — DATE
APPROVED: PUBLIC WORKS DIRECTOR — DATE

PAGE
FIELD BOOK — DESIGNED — KBH — DATE 3/9/12
DRAWN — SW — DATE 4/15/12
CHECKED — MBH — DATE 5/1/12
REVIEWED — KBH — DATE 5/9/12

SHEET 355 OF 394

BID SCHEDULE NO.

WORK ORDER NO.

PLAN NO. RR-TC-006

LAST REVISION 06-04-12
DATE PLOTTED => Jul 16, 12
TIME PLOTTED => 11:04:10am

| REVISED BY | DATE REVISED |
|---|---|
| JOE DONALDSON | KAREN M. HANKINSON |

CALCULATED–DESIGNED BY
CHECKED BY
CONSULTANT FUNCTIONAL SUPERVISOR — KAREN M. HANKINSON
STATE OF CALIFORNIA – DEPARTMENT OF TRANSPORTATION — DESIGN

BORDER LAST REVISED 7/2/2010
USERNAME =>Donaldson
DGN FILE =>TC-006
RELATIVE BORDER SCALE IS IN INCHES 0 1 2 3
UNIT 1812
PROJECT NUMBER & PHASE 07000211191

| Dist | COUNTY | ROUTE | POST MILES TOTAL PROJECT | SHEET No. | TOTAL SHEETS |
|---|---|---|---|---|---|
| 07 | LA | 5 | 29.4/31.6 | 1722 | 1931 |

REGISTERED CIVIL ENGINEER — 5-21-12 DATE

05-21-12
PLANS APPROVAL DATE

REGISTERED PROFESSIONAL ENGINEER — CHRIS COFFMAN No. C53173 Exp. 6/30/13 CIVIL — STATE OF CALIFORNIA

THE STATE OF CALIFORNIA OR ITS OFFICERS OR AGENTS SHALL NOT BE RESPONSIBLE FOR THE ACCURACY OR COMPLETENESS OF SCANNED COPIES OF THIS PLAN SHEET.

SCRRA
279 E. ARROW HIGHWAY
SAN DIMAS, CA 91773

RAILPROS
1 ADA PARKWAY, SUITE 200
IRVINE, CA 92618

# KEY NOTES:

1. CURB AND GUTTER
2. CHAIN LINK FENCE (TYPE CL-4)
3. 3" ACP WALKWAY ON COMPACTED SUBGRADE
4. HMA PAVEMENT (TYPE A)
5. HMA DIKE (TYPE A)(SEE DATA TABLE 1)
6. MEDIAN
7. DETECTABLE WARNING SURFACE PER CALTRANS RSP A88A
8. SIDEWALK

# LEGEND:

- REMOVE
- PROTECT IN PLACE
- CONSTRUCT/INSTALL/PERFORM PER KEY NOTES (THIS SHEET) AND AS DETAILED IN THE SPECIFICATIONS
- SAWCUT
- HMA PAVEMENT (TYPE A) OVER CMB AND TOTAL AREA OF DEMOLITION
- AREA OF SAWCUT

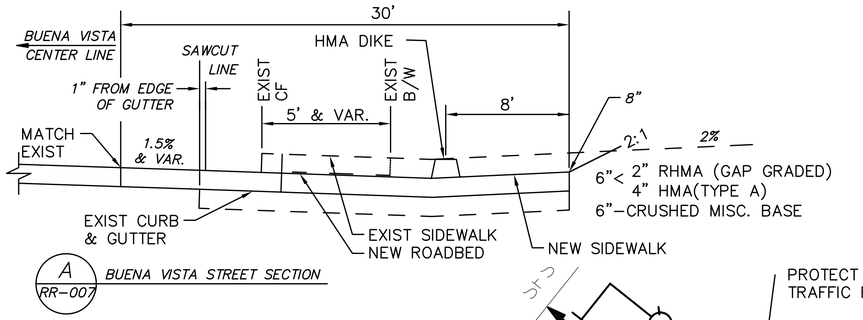


A RR-007 BUENA VISTA STREET SECTION




B RR-007 3" SLOT
SCALE: NTS




8" HMA DIKE (TYPE A) (MOD)
SCALE: NTS

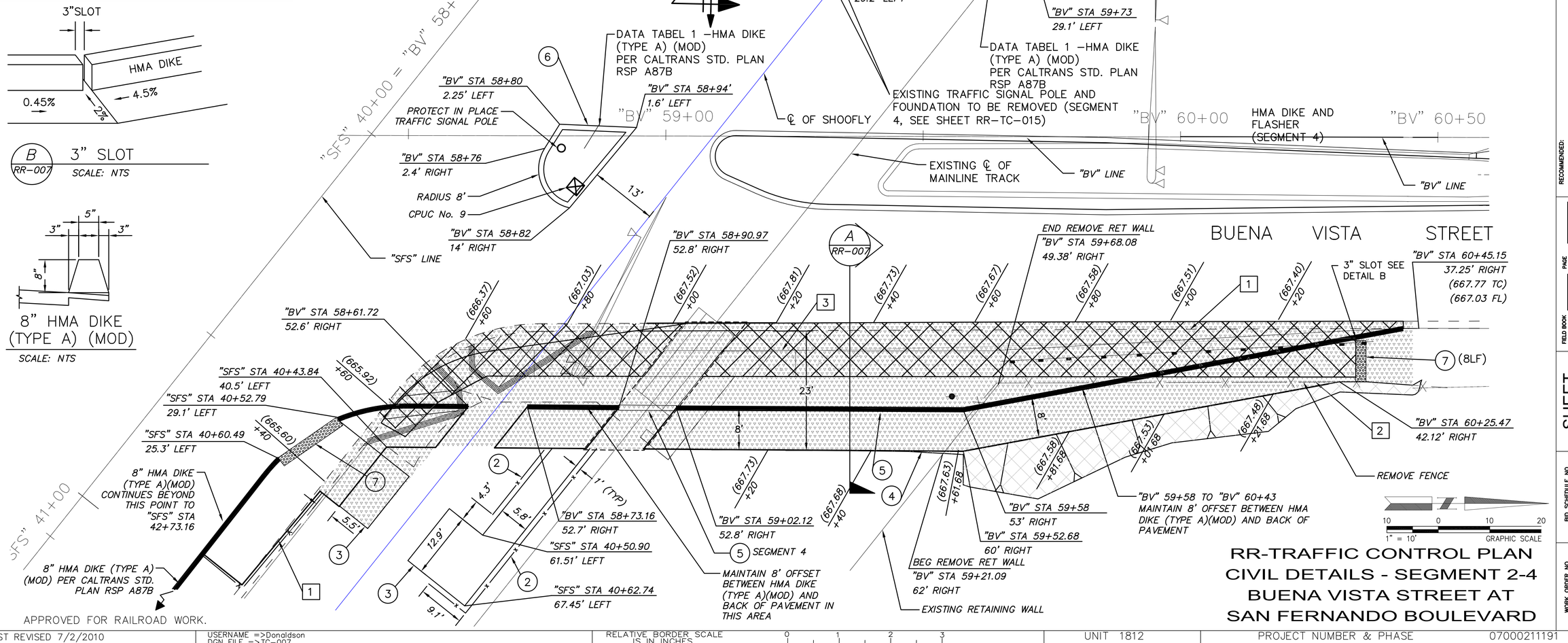


## DATA TABLE 2 - HMA DIKE (TYPE A)

| POINT | ALIGNMENT | STATION | OFFSET | DIRECTION | NOTES |
|---|---|---|---|---|---|
| 1 | BV LINE | 58+30 | 59' | RIGHT | BEGIN CURVE (35' RADIUS) |
| 2 | BV LINE | 58+49 | 53' | RIGHT | END CURVE |
| 3 | BV LINE | 58+62 | 53' | RIGHT | |
| 4 | BV LINE | 58+73 | 52' | RIGHT | |
| 5 | BV LINE | 58+91 | 53' | RIGHT | |
| 6 | BV LINE | 59+02 | 53' | RIGHT | |
| 7 | BV LINE | 59+58 | 53' | RIGHT | |
| 8 | BV LINE | 60+45 | 30' | RIGHT | OFFSET TO ALTERNATE ALIGNMENT |
| 9 | SFS LINE | 40+61 | 26' | LEFT | |
| 10 | SFS LINE | 40+52 | 27' | LEFT | NOT SHOWN ON PLAN |

CITY OF BURBANK
PUBLIC WORKS DEPARTMENT

RECOMMENDED: CITY ENGINEER DATE
APPROVED: PUBLIC WORKS DIRECTOR DATE

| FIELD BOOK | PAGE | DATE |
|---|---|---|
| DESIGNED | JD | 3/8/12 |
| DRAWN | SW | 4/15/12 |
| CHECKED | MM | 5/1/12 |
| REVIEWED | CC | 5/8/12 |

SHEET 356 OF 394

BID SCHEDULE NO.

WORK ORDER NO.

PLAN NO. RR-TC-007

LAST REVISION 06-04-12 DATE PLOTTED => Jul 18, 12
TIME PLOTTED => 11:52:08am

# RR-TRAFFIC CONTROL PLAN
# CIVIL DETAILS - SEGMENT 2-4
# BUENA VISTA STREET AT SAN FERNANDO BOULEVARD

| REVISED BY | DATE REVISED |
|---|---|
| JOE DONALDSON | CHRIS COFFMAN |

CALCULATED-DESIGNED BY
CHECKED BY

CONSULTANT FUNCTIONAL SUPERVISOR
CHRIS COFFMAN

STATE OF CALIFORNIA - DEPARTMENT OF TRANSPORTATION
DESIGN

Caltrans

BORDER LAST REVISED 7/2/2010 | USERNAME =>Donaldson DGN FILE =>TC-007 | RELATIVE BORDER SCALE IS IN INCHES 0 1 2 3 | UNIT 1812 | PROJECT NUMBER & PHASE 07000211191

| Dist | COUNTY | ROUTE | POST MILES TOTAL PROJECT | SHEET No. | TOTAL SHEETS |
|---|---|---|---|---|---|
| 07 | LA | 5 | 29.4/31.6 | 1723 | 1931 |

REGISTERED CIVIL ENGINEER — DATE 5-21-12

KAREN M. HANKINSON No. C54175 Exp. 6/30/13 CIVIL — REGISTERED PROFESSIONAL ENGINEER — STATE OF CALIFORNIA

05-21-12
PLANS APPROVAL DATE

THE STATE OF CALIFORNIA OR ITS OFFICERS OR AGENTS SHALL NOT BE RESPONSIBLE FOR THE ACCURACY OR COMPLETENESS OF SCANNED COPIES OF THIS PLAN SHEET.

SCRRA
279 E. ARROW HIGHWAY
SAN DIMAS, CA 91773

RAILPROS
1 ADA PARKWAY, SUITE 200
IRVINE, CA 92618

## RAILROAD CONSTRUCTION NOTES (SEE RR-TC-013 FOR DETAILS)

1. INSTALL CPUC No. 9 PED GATE SCRRA STD. ES8309 & ES8390
2. INSTALL CPUC No. 9 PER SCRRA STD. ES4015 DEVICE WILL NOT BE ACTIVATED UNTIL SEGMENT 4.
3. INSTALL DETECTABLE WARNING STRIPS PER SCRRA STD. ES4018
4. INSTALL PED SWING GATE PER SCRRA STD. ES4018

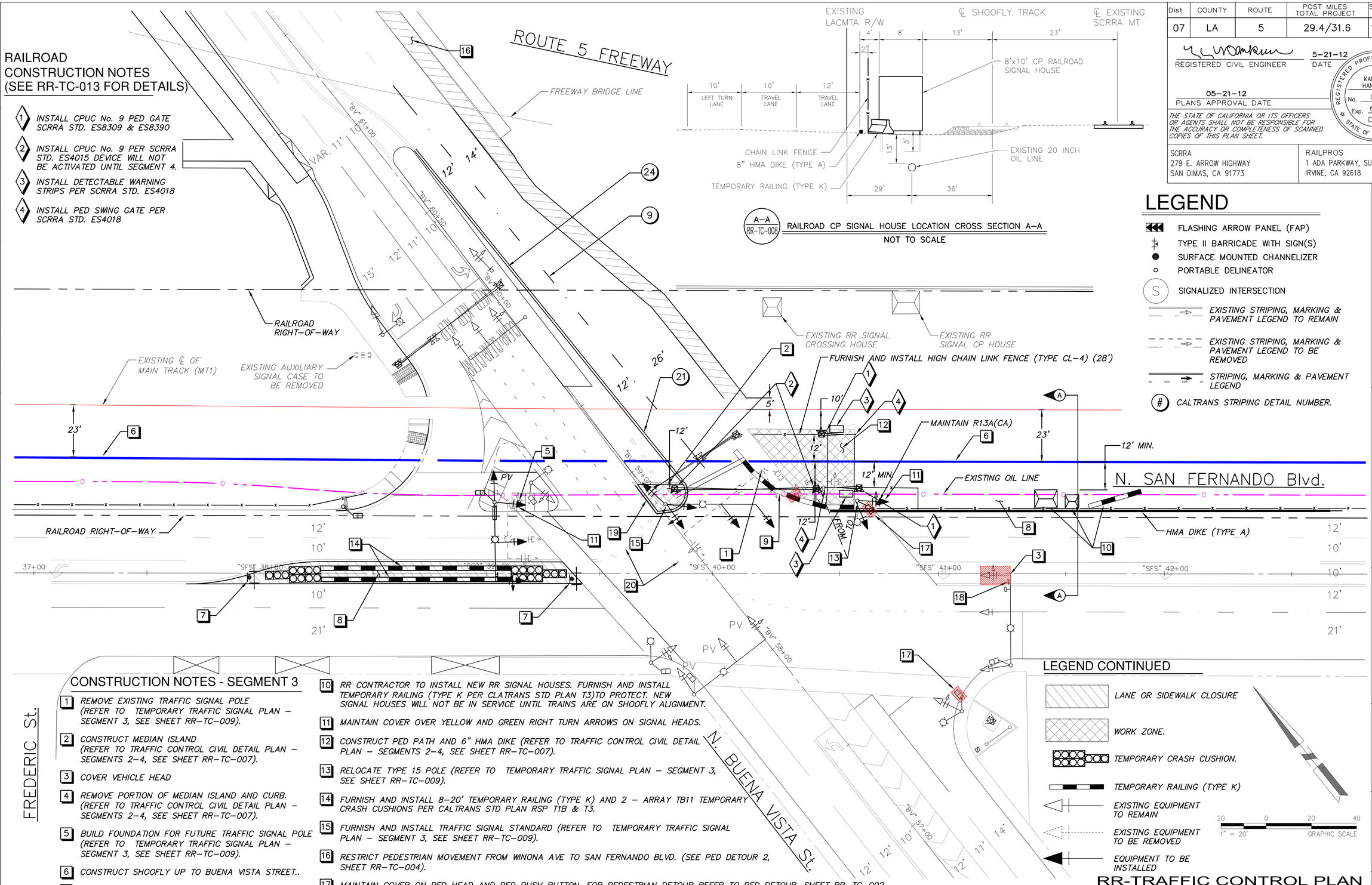





A-A RR-TC-008 RAILROAD CP SIGNAL HOUSE LOCATION CROSS SECTION A-A
NOT TO SCALE

## LEGEND

- FLASHING ARROW PANEL (FAP)
- TYPE II BARRICADE WITH SIGN(S)
- SURFACE MOUNTED CHANNELIZER
- PORTABLE DELINEATOR
- (S) SIGNALIZED INTERSECTION
- EXISTING STRIPING, MARKING & PAVEMENT LEGEND TO REMAIN
- EXISTING STRIPING, MARKING & PAVEMENT LEGEND TO BE REMOVED
- STRIPING, MARKING & PAVEMENT LEGEND
- (#) CALTRANS STRIPING DETAIL NUMBER.

## CONSTRUCTION NOTES - SEGMENT 3

1. REMOVE EXISTING TRAFFIC SIGNAL POLE (REFER TO TEMPORARY TRAFFIC SIGNAL PLAN – SEGMENT 3, SEE SHEET RR-TC-009).
2. CONSTRUCT MEDIAN ISLAND (REFER TO TRAFFIC CONTROL CIVIL DETAIL PLAN – SEGMENTS 2-4, SEE SHEET RR-TC-007).
3. COVER VEHICLE HEAD
4. REMOVE PORTION OF MEDIAN ISLAND AND CURB. (REFER TO TRAFFIC CONTROL CIVIL DETAIL PLAN – SEGMENTS 2-4, SEE SHEET RR-TC-007).
5. BUILD FOUNDATION FOR FUTURE TRAFFIC SIGNAL POLE (REFER TO TEMPORARY TRAFFIC SIGNAL PLAN – SEGMENT 3, SEE SHEET RR-TC-009).
6. CONSTRUCT SHOOFLY UP TO BUENA VISTA STREET..
7. FURNISH AND INSTALL A R3-18(Lt) SIGN.
8. CLOSE LANE AS SHOWN.
9. FURNISH AND INSTALL TEMPORARY RAILING (TYPE K).
10. RR CONTRACTOR TO INSTALL NEW RR SIGNAL HOUSES. FURNISH AND INSTALL TEMPORARY RAILING (TYPE K PER CLATRANS STD PLAN T3)TO PROTECT. NEW SIGNAL HOUSES WILL NOT BE IN SERVICE UNTIL TRAINS ARE ON SHOOFLY ALIGNMENT.
11. MAINTAIN COVER OVER YELLOW AND GREEN RIGHT TURN ARROWS ON SIGNAL HEADS.
12. CONSTRUCT PED PATH AND 6" HMA DIKE (REFER TO TRAFFIC CONTROL CIVIL DETAIL PLAN – SEGMENTS 2-4, SEE SHEET RR-TC-007).
13. RELOCATE TYPE 15 POLE (REFER TO TEMPORARY TRAFFIC SIGNAL PLAN – SEGMENT 3, SEE SHEET RR-TC-009).
14. FURNISH AND INSTALL 8-20' TEMPORARY RAILING (TYPE K) AND 2 – ARRAY TB11 TEMPORARY CRASH CUSHIONS PER CALTRANS STD PLAN RSP T1B & T3.
15. FURNISH AND INSTALL TRAFFIC SIGNAL STANDARD (REFER TO TEMPORARY TRAFFIC SIGNAL PLAN – SEGMENT 3, SEE SHEET RR-TC-009).
16. RESTRICT PEDESTRIAN MOVEMENT FROM WINONA AVE TO SAN FERNANDO BLVD. (SEE PED DETOUR 2, SHEET RR-TC-004).
17. MAINTAIN COVER ON PED HEAD AND PED PUSH BUTTON. FOR PEDESTRIAN DETOUR REFER TO PED DETOUR, SHEET RR-TC-002.
18. TEMPORARILY REMOVE EXISTING R3-4 (NO U-TURN) SIGN. FURNISH AND INSTALL A R3-18(Lt) SIGN USING THE SAME MOUNTING BRACKETS. (REFER TO SHEET RR-TC-009)
19. FURNISH AND INSTALL TYPE H MARKERS ON FACE OF MEDIAN CURB AT 12' OC
20. REMOVE EXISTING CONFLICTING STRIPING.

APPROVED FOR RAILROAD WORK.

## LEGEND CONTINUED

- LANE OR SIDEWALK CLOSURE
- WORK ZONE.
- TEMPORARY CRASH CUSHION.
- TEMPORARY RAILING (TYPE K)
- EXISTING EQUIPMENT TO REMAIN
- EXISTING EQUIPMENT TO BE REMOVED
- EQUIPMENT TO BE INSTALLED

20 0 20 40
1" = 20' GRAPHIC SCALE

# RR-TRAFFIC CONTROL PLAN SEGMENT 3 BUENA VISTA STREET AT SAN FERNANDO BOULEVARD

CITY OF BURBANK
PUBLIC WORKS DEPARTMENT

RECOMMENDED: CITY ENGINEER — DATE
APPROVED: PUBLIC WORKS DIRECTOR — DATE

PAGE
FIELD BOOK — DESIGNED KMH DATE 3/8/12
DRAWN SW DATE 4/15/12
CHECKED JD DATE 5/1/12
REVIEWED KMH DATE 5/8/12

SHEET 357 OF 394

BID SCHEDULE NO.

WORK ORDER NO.

PLAN NO. RR-TC-008

LAST REVISION 06-04-12
DATE PLOTTED => Jul 16, 12
TIME PLOTTED => 11:06:49am

| REVISED BY | DATE REVISED |
|---|---|
| JOE DONALDSON | KAREN M. HANKINSON |

CALCULATED-DESIGNED BY
CHECKED BY
CONSULTANT FUNCTIONAL SUPERVISOR KAREN M. HANKINSON
STATE OF CALIFORNIA – DEPARTMENT OF TRANSPORTATION DESIGN
Caltrans

BORDER LAST REVISED 7/2/2010
USERNAME =>Donaldson
DGN FILE =>TC-008
RELATIVE BORDER SCALE IS IN INCHES 0 1 2 3
UNIT 1812
PROJECT NUMBER & PHASE 07000211191

## CONSTRUCTION NOTES:

1. FURNISH AND INSTALL CALTRANS MODEL 170E COMPLETE WITH MODEL 332 CABINET, POWER SUPPLIES, ISOLATORS, MODEL 210 P CM, 412C PROM BOARD, MODEL 404 MODEM AND ALL OTHER MISCELLANEOUS AUXILIARY EQUIPMENT TO PROVIDE SPECIFIED OPERATION. CONFORM TO CITY OF BURBANK TRAFFIC SIGNAL CONTROLLER SPECIFICATION, STATE TYPE 170E. LOOP DETECTORS SHALL BE RENO A&E'S VEHICLE DETECTOR MODEL C-170 OR EQUIVALENT. TESTING OF CONTROLLER TO CITY SPECIFIED OPERATIONS DETAILED ON PLANS REQUIRED TO CITY'S SATISFACTION PRIOR TO INSTALLATION IN THE FIELD.
2. FURNISH AND INSTALL BATTERY BACKUP CABINET WITH CLARY BATTERY BACKUP SYSTEM. CONTRACTOR SUBMITTAL REQUIRED. SYSTEM SHALL HAVE REMOTE NOTIFYING AND 8 HOUR CAPABILITIES. UNIT SHALL PROVIDE "ON BATTERY", "LOW BATTERY" AND "TIMER" OUTPUTS TO SIGNAL CONTROLLER.
3. 120/240V ELECTRIC SERVICE ENCLOSURE. PROVIDE 1 – 50AMP (UNMETERED) SIGNAL BREAKER, 1 – 30AMP (UNMETERED) LIGHTING BREAKER TO BE FURNISHED AND INSTALLED PER SHEET RR-E-121.
4. PED HEAD AND PED PUSH BUTTON TO BE TEMPORARILY INSTALLED IN SEGMENT 2 ON EXISTING POLE I. WHEN NEW POLE I IS INSTALLED, RELOCATE PED HEAD AND PED PUSH BUTTON TO THE NEW POLE.
5. REMOVE AND SALVAGE EXISTING POLE, MASTARM AND EQUIPMENT.
6. FURNISH AND INSTALL 3" CONDUIT WITH RAILROAD SIC (9PR #14 AND 2 PR DLC PER I-EEE 1570 PROTOCO) FOR RAILROAD COMMUNICATION TO RAILROAD SIGNAL HOUSE AND ISPI SYSTEM. SCRRA TO CONNECT CONDUIT AND CABLE TO RAILROAD EQUIPMENT.
7. COVER VEHICLE OR PEDESTRIAN HEAD WITH APPROPRIATELY SIZED HEAD BAG COVER. CONTRACTOR RESPONSIBLE TO MAINTAIN COVERS AT ALL TIMES DURING CONSTRUCTION.
8. REMOVE AND SALVAGE EXISTING BLANKOUT SIGN.
9. RELOCATE BLANKOUT SIGN AND MOUNTING HARDWARE TO POLE A AT 14' ABOVE GRADE. SEE DETAIL "B", SHEET RR-TC-010.
10. COVER YELLOW AND GREEN RIGHT ARROWS ON 5 SECTION HEAD. SEE DETAIL "C", SHEET RR-TC-010.
11. FURNISH AND INSTALL STANDARD 3-SECTION VEHICLE HEAD AND MOUNTING.
12. VEHICLE HEAD TO BE INSTALLED IN SEGMENT 1.
13. FURNISH AND INSTALL SIGN AS NOTED.
14. INSTALL 17"X30", BOLT-DOWN TRAFFIC RATED PULL-BOX WITH A STEEL COVER MARKED "BURBANK ELECTRIC TO BE FURNISHED AND INSTALLED PER SHEET RR-E-121.
15. 2" CONDUIT WITH PULLROPE AT A DEPTH OF 30" AND 4' SWEEP TO BWP FEED POINT TO BE FURNISHED AND INSTALLED PER SHEET RR-E-121.
16. CONTRACTOR TO STORE EQUIPMENT FOR USE IN FUTURE SEGMENT.
17. INSTALL CITY-FURNISHED CCTV CAMERA AND MOUNTING. CITY TO SPECIFY EXACT LOCATION ON TRAFFIC SIGNAL POLE.
18. TRAFFIC CONTRACTOR TO COIL ENOUGH CABLE IN LAST PULLBOX FOR RAILROAD CONTRACTOR TO CONNECT CONDUIT AND CABLE TO RAILROAD EQUIPMENT.
19. REMOVE EXISTING CONDUCTORS AND DLC. FURNISH AND INSTALL 2 DLC. CONNECT TO EXISTING ADVANCE LOOPS.
20. CONTRACTOR TO REWORK IRRIGATION LINES AND DRAINAGE AS NEEDED FOR THIS INSTALLATION TO PROVIDE COVERAGE TO ALL REMAINING LANDSCAPING, BUT KEEP IRRIGATION AWAY FROM TRAFFIC SIGNAL AND SERVICE CABINETS AND PULL BOXES.
21. DISCONNECT TSIC FROM EXISTING TRAFFIC SIGNAL CONTROLLER PULL BACK TO THIS PULLBOX. INSTALL TSIC BACK THROUGH NEW CONDUIT AND CONNECT TO NEW TRAFFIC SIGNAL CONTROLLER.
22. FURNISH AND INSTALL 3" CONDUIT FOR CONNECTION TO RAILROAD HOUSE.
23. PULL BACK EXISTING TSIC FROM EXISTING CONTROLLER TO THIS PULLBOX.

### POLE SCHEDULE ●

| NO. | STANDARD TYPE | SIG. M.A. | LUM M.A. | LUMINAIRE HPSV | VEH. SIG. MTG. MAST ARM | VEH. SIG. MTG. POLE | PED. SIG. MTG. | PPB Ø | PPB QUAD | PPB ARROW | R.S.N.S. | POLE LOCATION A | B | C | D | E | BLANK OUT SIGN MOUNTING | NOTES |
|---|---|---|---|---|---|---|---|---|---|---|---|---|---|---|---|---|---|---|
| A | 26-4-100(N) | 40'(N) | 15'(N) | 400W(N) | 2-MAS(N) | SV-3-T(N) | - | - | - | - | San Fernando Blvd (RL) | 2' | - | - | - | 2' | RELOCATE SIGN AND MOUNTING TO THIS POLE MOUNT AT 14' HIGH | SEE NOTE 9 |
| B | TYPE 15(RL) | - | 12' | 400W | - | SV-2-T | SP-1-CS | 8 | W | RT | - | 0' | - | - | - | 2.5' | EXISTING | - |
| C | 24-4-80 | 35' | 12' | 400W | 2-MAS | SV-1-T | SP-1-CS | - | - | - | Buena Vista St ← Airport | EXISTING | | | | | - | - |
| D | PPB POST | - | - | - | - | - | - | 8 | W | LT | | EXISTING | | | | | - | - |
| E | TYPE 15 | - | 12' | 400W | - | SV-1-T | SP-1-CS | 2 | N | RT | - | EXISTING | | | | | - | - |
| F | 24-4-80 | 35' | 12' | 400W | 2-MAS(N) | SV-1-T | SP-1-CS | 2 | N | LT | San Fernando Blvd | EXISTING | | | | | - | MAST ARM VEHICLE HEADS MOUNTED HORIZONTALLY SEE NOTE 17 |
| G | TYPE 15 | - | 12' | 400W | - | SV-1-T | SP-1-CS | 4 | E | RT | - | EXISTING | | | | | - | - |
| H | C-1 | - | 12' | 400W | 2-MAS(N) | SV-2-T | SP-1-CS | 6 | N | LT | Buena Vista St ← Airport (RL) | EXISTING | | | | | - | CCTV CAMERA ON TOP OF POLE |
| I | 24-4-100(N) | 35'(N) | 15'(N) | 400W(N) | | SV-2-T(N) | SP-1-CS(N) | 4/6 | E(N)/N(N) | LT/RT | - | - | - | - | 1' | 3' | - | SEE NOTE 4 |
| J | 1-A(N) (7') | - | - | - | - | - | TP-1-CS(N) | 6 | N(N) | LT | - | - | - | 0' | - | 2.5' | - | INSTALL IN SEGMENT 2 |
| K | TYPE 26 | - | 12' | 400W | - | SV-1-T (N) | - | - | - | - | - | EXISTING | | | | | - | INSTALL VEHICLE HEAD AND MOUNTING IN SEGMENT 1 |
| L | 1-A | - | - | - | - | TV-1-T | - | - | - | - | - | EXISTING | | | | | - | - |
| M | 18-4-100 | 30' | - | - | 3-MAS | - | - | - | - | - | - | EXISTING | | | | | - | MAST ARM VEHICLE HEADS MOUNTED HORIZONTALLY |

R.S.N.S. REFLECTORIZED STREET NAME SIGN (BOTH SIDES). (N) NEW EQUIPMENT OR POLE
● ALL EQUIPMENT IS EXISTING UNLESS OTHERWISE SPECIFIED. (RL) RELOCATED EQUIPMENT

## CONSTRUCTION NOTES:

F THIS WORK IS PART OF FINAL TRAFFIC SIGNAL MODIFICATION PLANS (REFER TO SHEET RR-TM-001). IT IS SHOWN HERE FOR CONSTRUCTION SEQUENCING PURPOSES AND IT NOT A SEPARATE PAY ITEM FOR THIS PLAN SHEET OR WORK SEGMENT.

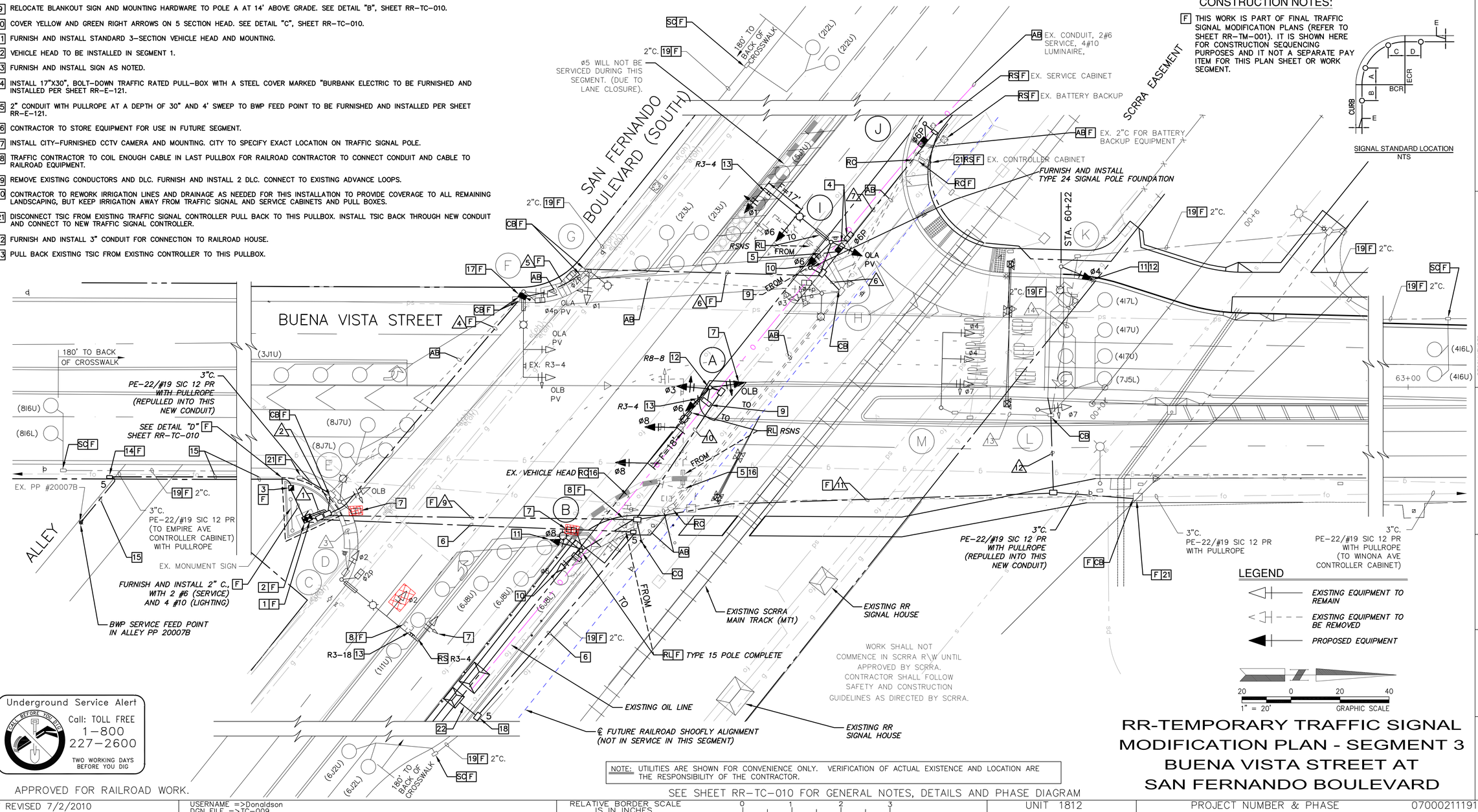


NOTE: UTILITIES ARE SHOWN FOR CONVENIENCE ONLY. VERIFICATION OF ACTUAL EXISTENCE AND LOCATION ARE THE RESPONSIBILITY OF THE CONTRACTOR.

SEE SHEET RR-TC-010 FOR GENERAL NOTES, DETAILS AND PHASE DIAGRAM

Underground Service Alert
CALL BEFORE YOU DIG
Call: TOLL FREE 1-800 227-2600
TWO WORKING DAYS BEFORE YOU DIG

APPROVED FOR RAILROAD WORK.

# RR-TEMPORARY TRAFFIC SIGNAL MODIFICATION PLAN - SEGMENT 3 BUENA VISTA STREET AT SAN FERNANDO BOULEVARD

| Dist | COUNTY | ROUTE | POST MILES TOTAL PROJECT | SHEET No. | TOTAL SHEETS |
|---|---|---|---|---|---|
| 07 | LA | 5 | 29.4/31.6 | 1724 | 1931 |

REGISTERED CIVIL ENGINEER — 5-21-12 DATE

05-21-12 PLANS APPROVAL DATE

REGISTERED PROFESSIONAL ENGINEER — KAREN M. HANKINSON No. C54175 Exp. 6/30/13 CIVIL — STATE OF CALIFORNIA

THE STATE OF CALIFORNIA OR ITS OFFICERS OR AGENTS SHALL NOT BE RESPONSIBLE FOR THE ACCURACY OR COMPLETENESS OF SCANNED COPIES OF THIS PLAN SHEET.

SCRRA
279 E. ARROW HIGHWAY
SAN DIMAS, CA 91773

RAILPROS
1 ADA PARKWAY, SUITE 200
IRVINE, CA 92618

CITY OF BURBANK
PUBLIC WORKS DEPARTMENT

RECOMMENDED: CITY ENGINEER DATE
APPROVED: PUBLIC WORKS DIRECTOR DATE

FIELD BOOK PAGE
DESIGNED JD DATE 3/8/12
DRAWN SW DATE 4/15/12
CHECKED KMH DATE 5/1/12
REVIEWED CC DATE 5/8/12

SHEET 358 OF 394

BID SCHEDULE NO.

WORK ORDER NO.

PLAN NO. RR-TC-009

LAST REVISION DATE PLOTTED => Jul 16, 12
06-05-12 TIME PLOTTED => 11:07:29am

| REVISED BY | DATE REVISED |
|---|---|
| JOE DONALDSON | KAREN M. HANKINSON |

CALCULATED-DESIGNED BY
CHECKED BY
SUPERVISOR KAREN M. HANKINSON
CONSULTANT FUNCTIONAL SUPERVISOR
STATE OF CALIFORNIA – DEPARTMENT OF TRANSPORTATION
Caltrans® DESIGN

BORDER LAST REVISED 7/2/2010 | USERNAME =>Donaldson DGN FILE =>TC-009 | RELATIVE BORDER SCALE IS IN INCHES 0 1 2 3 | UNIT 1812 | PROJECT NUMBER & PHASE 07000211191

| Dist | COUNTY | ROUTE | POST MILES TOTAL PROJECT | SHEET No. | TOTAL SHEETS |
|---|---|---|---|---|---|
| 07 | LA | 5 | 29.4/31.6 | 1725 | 1931 |

REGISTERED CIVIL ENGINEER — DATE 5-21-12

PLANS APPROVAL DATE 05-21-12

REGISTERED PROFESSIONAL ENGINEER — KAREN M. HANKINSON — No. C54175 — Exp. 6/30/13 — CIVIL — STATE OF CALIFORNIA

THE STATE OF CALIFORNIA OR ITS OFFICERS OR AGENTS SHALL NOT BE RESPONSIBLE FOR THE ACCURACY OR COMPLETENESS OF SCANNED COPIES OF THIS PLAN SHEET.

SCRRA
279 E. ARROW HIGHWAY
SAN DIMAS, CA 91773

RAILPROS
1 ADA PARKWAY, SUITE 200
IRVINE, CA 92618

CITY OF BURBANK
PUBLIC WORKS DEPARTMENT

## GENERAL NOTES: (SHEETS RR-TC-009, RR-TC-010, AND RR-TC-011)

1. ALL WORK AND MATERIAL INDICATED ON THESE PLANS SHALL CONFORM TO THE PROVISIONS OF THE STANDARD SPECIFICATIONS AND STANDARD PLANS OF THE STATE OF CALIFORNIA, DEPARTMENT OF TRANSPORTATION, LATEST EDITION, THE SPECIAL PROVISIONS, AND PROJECT SPECIFICATIONS.
2. IT SHALL BE THE CONTRACTOR'S RESPONSIBILITY TO ASCERTAIN THE LOCATION OF SUCH UNDERGROUND IMPROVEMENTS OR FACILITIES WHICH MAY BE SUBJECT TO DAMAGE BY HIS OPERATIONS. THIS SHALL INCLUDE BUT NOT BE LIMITED TO POT HOLING TO EXPOSE ALL UTILITY CROSSINGS WITH PROPOSED CONDUIT RUNS, TRAFFIC SIGNAL FOUNDATIONS, ETC.
3. ALL WIRING SHALL BE MARKED (TAGGED) WITHIN THE CONTROLLER CABINET FOR PHASE IDENTIFICATION.
4. SIGNAL POLES, DETECTOR LOOPS, CONTROLLER CABINET, AND SERVICE CABINET SHALL BE LOCATED BY THE ENGINEER IN THE FIELD. PERFORM PRELIMINARY STRIPING LAYOUT PRIOR TO LOOP DETECTOR LAYOUT.
5. ALL SAFETY LIGHTING SHALL BE 400 W, 120 VOLT, HPSV, CUT OFF TYPE, INDIVIDUAL PHOTOCELL CONTROLLED, AND UNMETERED.
6. ALL SIGNAL HEADS SHALL BE 12-INCH WITH ALUMINUM HOUSING. MINIMUM HEIGHT SHALL BE TEN FEET FROM BOTTOM OF BRACKET TO ROADWAY, SIDEWALK, OR MEDIAN GRADE. ALL TRAFFIC SIGNAL SECTIONS SHALL BE PROVIDED WITH DIALIGHT 433 SERIES LIGHT EMITTING DIODE "LED" MODULE, OR EQUIVALENT, AND SHALL CONFORM TO THE CALIFORNIA DEPARTMENT OF TRANSPORTATION "CALTRANS" SPECIFICATIONS.
7. CONDUCTOR SCHEDULE IS FURNISHED AS AN INSTALLATION GUIDE ONLY; 14/28-SBX 87526 CALTRANS TYPE 28 CONDUCTOR CABLE SHALL BE INSTALLED IN LIEU OF INDIVIDUAL CONDUCTORS. IT SHALL BE THE CONTRACTOR'S RESPONSIBILITY TO PROVIDE MORE CABLES REQUIRED FOR THE INTENDED OPERATION. AT EACH TRAFFIC SIGNAL POLE 5 CONDUCTOR SIGNAL CABLE SHALL BE SPLICED TO THE 28 CONDUCTOR CABLE AND INSTALLED WITHOUT SPLICES TO EACH VEHICLE AND PEDESTRIAN HEAD. ONE 3 CONDUCTOR SIGNAL CABLE SHALL BE SPLICED TO THE 28 CONDUCTOR CABLE AND INSTALLED WITHOUT SPLICES TO EACH PEDESTRIAN PUSH BUTTON.
8. ALL PEDESTRIAN HEADS SHALL BE STATE TYPE A (ICC 7090 OR EQUIVALENT) WITH CLAM SHELL (CS) MOUNT. MINIMUM HEIGHT SHALL BE SEVEN FEET FROM THE BOTTOM OF HOUSING TO SIDEWALK GRADE. THE UPRAISED HAND UNIT AND THE WALKING UNIT SHALL BE LED MODULE AND COUNTDOWN TYPE, AND SHALL CONFORM TO CALTRANS SPECIAL PROVISIONS. ALL PEDESTRIAN PUSH BUTTONS SHALL BE POLARA ENGINEERING BULLDOG TYPE.
9. EXCEPT AS OTHERWISE NOTED, INDUCTIVE LOOPS SHALL BE SIX-FEET DIAMETER, SPACED TEN-FEET APART CENTERED IN LANES. PLACE LINE LOOPS ZERO FEET PAST CROSSWALK, OR LIMIT LINE IF NO CROSSWALK. EACH LOOP ASSIGNMENT SHALL HAVE A SEPARATE LEAD-IN CABLE.
10. CONTRACTOR SHALL OBTAIN ALL LICENSES, PERMITS, AND INSURANCE PRIOR TO START OF WORK.
11. CONTRACTOR SHALL BE RESPONSIBLE FOR MAKING HIMSELF FAMILIAR WITH ALL UNDERGROUND UTILITIES, PIPES AND STRUCTURES. CONTRACTOR SHALL TAKE SOLE RESPONSIBILITY FOR COST INCURRED DUE TO DAMAGE AND REPLACEMENT OF SAID UTILITIES. HAND DIG FOUNDATIONS UNTIL CLEAR OF OBSTRUCTIONS.
12. EXISTING SUBSURFACE UTILITIES INDICATED ON PLANS ARE FOR CONVENIENCE ONLY. CONTRACTOR SHALL VERIFY PRECISE LOCATION OF SUBSURFACE UTILITIES WITH THE APPROPRIATE AGENCIES PRIOR TO CONSTRUCTION. AT LEAST 48 HOURS PRIOR TO EXCAVATING, THE CONTRACTOR SHALL NOTIFY UNDERGROUND SERVICE ALERT (PHONE: 1-800-227-2600) TO ASSIST IN LOCATION OF UNDERGROUND UTILITIES.
13. CONTRACTOR SHALL BE RESPONSIBLE FOR ANY COORDINATION WITH SUBCONTRACTORS AS REQUIRED TO ACCOMPLISH OPERATIONS.
14. CONTRACTOR SHALL VISIT SITE PRIOR TO BID. NO CHANGE IN CONTRACT PRICE WILL BE ALLOWED FOR ACTUAL OR CLAIMED DISCREPANCY BETWEEN EXISTING SITE CONDITIONS AND THOSE SHOWN ON PLANS.
15. THE CONTRACTOR SHALL PREVENT THE DISCHARGE OR ANY WATER, SAND, MUD, OIL, PETROLEUM OR OTHER POLLUTANTS FROM LEAVING THE CONSTRUCTION AREA AND ENTERING A PUBLIC STREET, STORM DRAIN OR FLOOD CONTROL CHANNEL.
16. ANY MODIFICATIONS OF OR CHANGES IN APPROVED PLANS MUST BE APPROVED BY THE TRAFFIC ENGINEER.
17. ALL MATERIALS ARE EXISTING EXCEPT WHEN OTHERWISE NOTED.
18. ALL PEDESTRIAN PUSH BUTTONS SHALL BE TYPE "B" WITH APPROPRIATE INTERNATIONAL SYMBOL SIGNS, INSTALLED 40' FROM SIDEWALK GRADE.
19. ALL NEW PULL BOXES SHALL BE NO. 6E UNLESS OTHERWISE SPECIFIED.
20. SIGNAL CONTROLLER AND CABINET SHALL BE DELIVERED TO THE CITY OF BURBANK AT LEAST 14 DAYS PRIOR TO INSTALLATION FOR SHOP TESTING.
21. ALL NEW PROGRAMMED VISIBILITY (PV) HEADS SHALL BE MCCAIN PROGRAMMABLE TRAFFIC SIGNAL HEADS OR APPROVED EQUAL.

### CONDUCTOR SCHEDULE ●

| AWG | CIRCUIT | RUN NUMBER 1 | 2 | 3 | 4 | 5 | 6 | 7 | 8 | 9 | 10 | 11 | 12 | 13 | 14 |
|---|---|---|---|---|---|---|---|---|---|---|---|---|---|---|---|
| 28C CABLE | VEHICLE PED AND PPB | 6 | 1 | 1 | 3 | 3 | 2 | 1 | 1 | 2 | 1 | 1 | 1 | 1 | 1 |
| #10 | LUMINAIRE | 4 | 2 | 2 | 2 | 2 | 2 | - | 2 | 2 | 2 | 2 | 2 | - | 2 |
| DLC TYPE "B" | Ø1 | 1 | - | - | - | - | - | - | - | 1 | - | - | - | - | - |
| | Ø2 | 4 | - | - | 4 | 4 | - | - | - | - | - | - | - | - | - |
| | Ø3 | 1 | - | - | 1 | - | - | - | - | - | - | - | - | - | - |
| | Ø4 | 4 | - | - | - | - | - | - | - | 4 | - | 4 | 4 | - | 1 |
| | Ø5 | 1 | - | 1 | 1 | - | - | - | - | - | - | - | - | - | - |
| | Ø6 | 5 | - | - | - | - | - | - | - | 5 | - | - | - | - | - |
| | Ø7 | 1 | - | - | - | - | - | - | - | 1 | - | 1 | 1 | - | - |
| | Ø8 | 4 | 4 | - | - | - | - | - | - | - | - | - | - | - | - |
| | TOTAL | 21 | 4 | 1 | 6 | 4 | - | - | - | 11 | - | 5 | 5 | - | 2 |
| PE-22/12PR #19 TSIC | | 2(RL) | 1(RL) | - | - | - | - | 1(RL) | - | 1(RL) | - | 1(RL) | - | - | - |
| CCTV CABLE COHV CA 295E | | 1 | - | - | 1 | - | - | - | - | - | - | - | - | - | - |
| CONDUIT SIZE | | 2-4" | 3" | 3" | 4" | 4" | 3" | 3" | 3" | 4" | 3"(E) | 3" | 3" | 3"(E) | 3"(E) |

● ALL CONDUIT AND CONDUCTORS ARE NEW UNLESS OTHERWISE SPECIFIED.
(E) EXISTING
(RL) RELOCATED/REPULLED INTO NEW CONDUIT

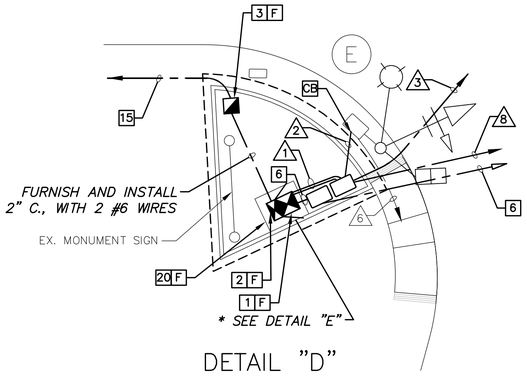


DETAIL "D"
CABINET LAYOUT – SE CORNER
NOT TO SCALE

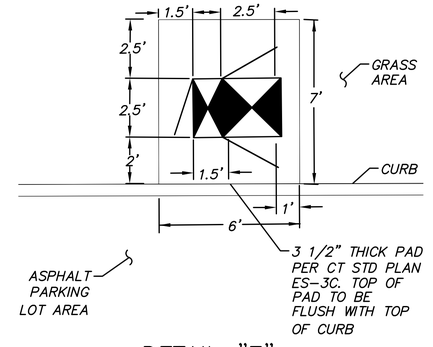


DETAIL "E"
CONCRETE PAD
NOT TO SCALE

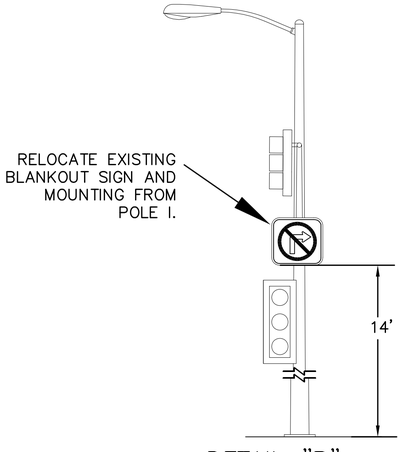


DETAIL "B"
POLE LOCATION Ⓐ
NOT TO SCALE

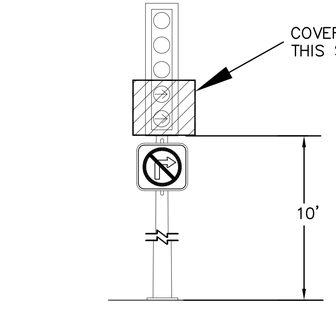


DETAIL "C"
POLE LOCATION Ⓑ
NOT TO SCALE

20 0 20 40
1" = 20' GRAPHIC SCALE

# RR-TEMPORARY TRAFFIC SIGNAL MODIFICATION PLAN - SEGMENT 3 BUENA VISTA STREET AT SAN FERNANDO BOULEVARD

APPROVED FOR RAILROAD WORK.

STATE OF CALIFORNIA – DEPARTMENT OF TRANSPORTATION — DESIGN
CONSULTANT FUNCTIONAL SUPERVISOR — KAREN M. HANKINSON
CALCULATED–DESIGNED BY — KAREN M. HANKINSON
CHECKED BY — JOE DONALDSON

| DATE REVISED | REVISED BY |
|---|---|

RECOMMENDED: CITY ENGINEER — DATE
APPROVED: PUBLIC WORKS DIRECTOR — DATE

| | | | |
|---|---|---|---|
| FIELD BOOK | | PAGE | |
| DESIGNED | JD | DATE | 3/8/12 |
| DRAWN | SW | DATE | 4/15/12 |
| CHECKED | KMH | DATE | 5/1/12 |
| REVIEWED | CC | DATE | 5/8/12 |

SHEET 359 OF 394

BID SCHEDULE NO.

WORK ORDER NO.

PLAN NO. RR-TC-010

LAST REVISION 05-08-12 DATE PLOTTED => Jul 16, 12 TIME PLOTTED => 11:08:06am

BORDER LAST REVISED 7/2/2010 | USERNAME =>Donaldson DGN FILE =>TC-010 | RELATIVE BORDER SCALE IS IN INCHES 0 1 2 3 | UNIT 1812 | PROJECT NUMBER & PHASE 07000211191

# PHASE DIAGRAM FOR BUENA VISTA STREET AT SAN FERNANDO BOULEVARD – SEGMENT 3

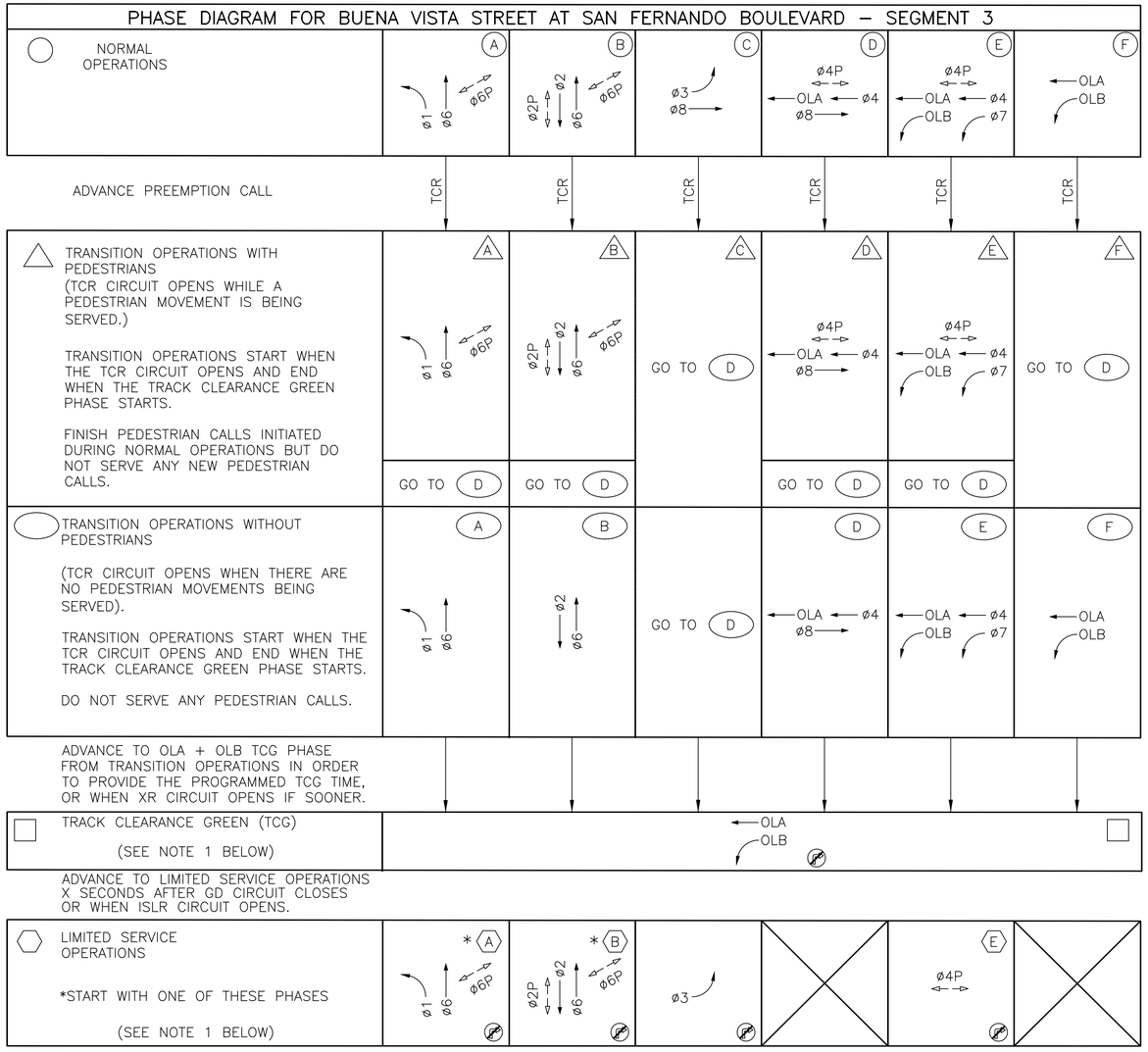


NOTES:

1. (ø) = BLANK OUT LED SIGN R3–1 IS LIT WHEN XR CIRCUIT IS OPEN.

RAILROAD CIRCUITS AND THEIR TRAFFIC SIGNAL OPERATIONAL FUNCTIONS

ADVANCE PREEMPT MESSAGE
TRAFFIC CONTROL RELAY CIRCUITS
REVIEW THE RAILROAD OUTPUT LOGIC FOR FUNCTIONAL OPERATION. WHEN ALL CIRCUITS ARE "NON ACTIVE", THE TRAFFIC SIGNAL INTERSECTION SHALL OPERATE IN THE NORMAL NON FLASHING SEQUENCE.

THE "TCR ACTIVE" MESSAGE INDICATES A TRAIN IS APPROACHING THE CROSSING.

WHEN "ACTIVE" THIS MESSAGE SHALL CAUSE THE INTERSECTION TO COMPLETE ANY ACTIVE PEDESTRIAN INTERVALS AND LIMIT PEDESTRIAN AND SELECTED VEHICLE MOVEMENTS DURING THIS CONDITION.

TRACK CLEARANCE PREEMPT MESSAGE
CROSSING RELAY CIRCUITS
REVIEW THE RAILROAD OUTPUT LOGIC FOR FUNCTIONAL OPERATION. WHEN ALL CIRCUITS ARE "NON ACTIVE", THE TRAFFIC SIGNAL INTERSECTION SHALL OPERATE IN THE NORMAL NON FLASHING SEQUENCE.

THE "XR ACTIVE" MESSAGE INDICATES A TRAIN IS APPROACHING THE INTERSECTION AND CLEARANCE OF THE VEHICLES FROM THE RAILROAD TRACKS IS NEEDED.

WHEN "ACTIVE" THIS MESSAGE SHALL CAUSE THE INTERSECTION TO ADVANCE TO THE TRACK CLEAR VEHICLE MOVEMENTS AND WAIT FOR THE GATE DOWN MESSAGE.

GATE DOWN PREEMPT MESSAGE
GATE DOWN CIRCUITS
REVIEW THE RAILROAD OUTPUT LOGIC FOR FUNCTIONAL OPERATION. WHEN ALL CIRCUITS ARE "NON ACTIVE", THE TRAFFIC SIGNAL INTERSECTION SHALL OPERATE IN THE NORMAL NON FLASHING SEQUENCE.

THE "GD ACTIVE" MESSAGE INDICATES THAT THE RAILROAD GATES ARE DOWN AT THE CROSSING.

WHEN "ACTIVE" THIS MESSAGE SHALL CAUSE THE INTERSECTION TO SEQUENCED TO THE MINIMAL VEHICLE AND PEDESTRIAN SERVICE MOVEMENTS (LIMITED SERVICE), CYCLING UNTIL PREEMPTION IS COMPLETE.

NOTE:
THE ISLAND RELAY CIRCUIT (ISLR) CIRCUIT IS A SUBSET OF THE GD CIRCUIT. THE TRAFFIC SIGNAL CONTROLLER WILL RECEIVE ONE MESSAGE FROM THE RAILROAD REGARDING THESE CIRCUITS. IF THE RAILROAD GATES ARE NOT FUNCTIONING, THE ISLR CIRCUIT INTERRUPTS THE GD CIRCUIT TO ALLOW TRANSITION TO LIMITED SERVICE OPERATIONS.

WHEN PREEMPTION IS COMPLETE OR INTERRUPTED, ALL ACTIVE CIRCUITS WILL RETURN TO THE "NON ACTIVE" STATE.

APPROVED FOR RAILROAD WORK.

# RR PREEMPTION INTERCONNECT WIRING

## SERIAL INTERCONNECT (PRIMARY)

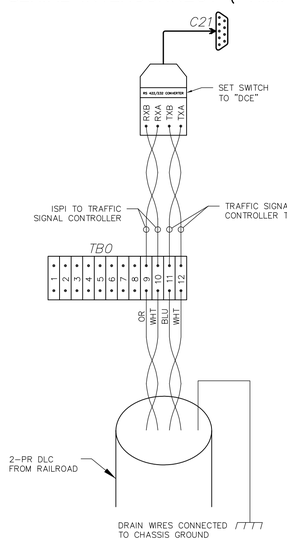


## HARD WIRE RELAY BACK–UP (SECONDARY)

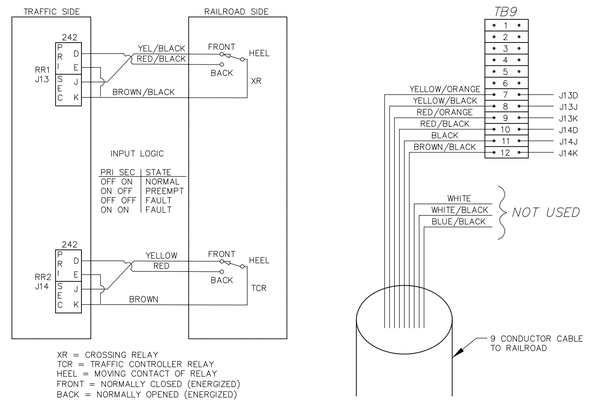


XR = CROSSING RELAY
TCR = TRAFFIC CONTROLLER RELAY
HEEL = MOVING CONTACT OF RELAY
FRONT = NORMALLY CLOSED (ENERGIZED)
BACK = NORMALLY OPENED (ENERGIZED)

NOTE: SERIAL INTERCONNECT TO TAKE HIERARCHY IN COMMUNICATION WITH TRAFFIC SIGNAL CONTROLLER. RR SIGNAL HARD WIRE RELAYS SERVE AS A BACK–UP, SHOULD THE SERIAL CONNECTION FAIL FOR ANY REASON.

| Dist | COUNTY | ROUTE | POST MILES TOTAL PROJECT | SHEET No. | TOTAL SHEETS |
|---|---|---|---|---|---|
| 07 | LA | 5 | 29.4/31.6 | 1726 | 1931 |

REGISTERED CIVIL ENGINEER — DATE 5–21–12

PLANS APPROVAL DATE 05–21–12

REGISTERED PROFESSIONAL ENGINEER — KAREN M. HANKINSON — No. C54175 — Exp. 6/30/13 — CIVIL — STATE OF CALIFORNIA

THE STATE OF CALIFORNIA OR ITS OFFICERS OR AGENTS SHALL NOT BE RESPONSIBLE FOR THE ACCURACY OR COMPLETENESS OF SCANNED COPIES OF THIS PLAN SHEET.

SCRRA
279 E. ARROW HIGHWAY
SAN DIMAS, CA 91773

RAILPROS
1 ADA PARKWAY, SUITE 200
IRVINE, CA 92618

CITY OF BURBANK
PUBLIC WORKS DEPARTMENT

RECOMMENDED: CITY ENGINEER — DATE
APPROVED: PUBLIC WORKS DIRECTOR — DATE

| FIELD BOOK | | PAGE | |
|---|---|---|---|
| DESIGNED | JD | DATE | 3/8/12 |
| DRAWN | SW | DATE | 4/15/12 |
| CHECKED | KMH | DATE | 5/1/12 |
| REVIEWED | CC | DATE | 5/8/12 |

SHEET 360 OF 394

BID SCHEDULE NO. RR-TC-011

WORK ORDER NO.

PLAN NO.

LAST REVISION 06–05–12 DATE PLOTTED => Jul 16, 12 TIME PLOTTED => 11:08:46am

# RR-TEMPORARY TRAFFIC SIGNAL MODIFICATION PLAN - SEGMENT 3 BUENA VISTA STREET AT SAN FERNANDO BOULEVARD

| REVISED BY | DATE REVISED |
|---|---|
| JOE DONALDSON | KAREN M. HANKINSON |

CALCULATED–DESIGNED BY
CHECKED BY

CONSULTANT FUNCTIONAL SUPERVISOR — KAREN M. HANKINSON

STATE OF CALIFORNIA – DEPARTMENT OF TRANSPORTATION — DESIGN

Caltrans

BORDER LAST REVISED 7/2/2010 | USERNAME =>Donaldson DGN FILE =>TC–011 | RELATIVE BORDER SCALE IS IN INCHES 0 1 2 3 | UNIT 1812 | PROJECT NUMBER & PHASE 07000211191

| Dist | COUNTY | ROUTE | POST MILES TOTAL PROJECT | SHEET No. | TOTAL SHEETS |
|---|---|---|---|---|---|
| 07 | LA | 5 | 29.4/31.6 | 1727 | 1931 |

REGISTERED CIVIL ENGINEER — 5-21-12 DATE

05-21-12 PLANS APPROVAL DATE

REGISTERED PROFESSIONAL ENGINEER — KAREN M. HANKINSON — No. C54175 — Exp. 6/30/13 — CIVIL — STATE OF CALIFORNIA

THE STATE OF CALIFORNIA OR ITS OFFICERS OR AGENTS SHALL NOT BE RESPONSIBLE FOR THE ACCURACY OR COMPLETENESS OF SCANNED COPIES OF THIS PLAN SHEET.

SCRRA
279 E. ARROW HIGHWAY
SAN DIMAS, CA 91773

RAILPROS
1 ADA PARKWAY, SUITE 200
IRVINE, CA 92618

CITY OF BURBANK
PUBLIC WORKS DEPARTMENT

RECOMMENDED: CITY ENGINEER DATE

APPROVED: PUBLIC WORKS DIRECTOR DATE

| FIELD BOOK | PAGE | |
|---|---|---|
| DESIGNED | KMH | DATE 3/6/12 |
| DRAWN | SW | DATE 4/15/12 |
| CHECKED | JD | DATE 5/1/12 |
| REVIEWED | KMH | DATE 5/6/12 |

SHEET 361 OF 394

BID SCHEDULE NO.

WORK ORDER NO.

PLAN NO. RR-TC-012

LAST REVISION 06-05-12 DATE PLOTTED => Jul 16, 12
TIME PLOTTED => 2:13:11pm

| REVISED BY | DATE REVISED |
|---|---|
| JOE DONALDSON | KAREN M. HANKINSON |

| CALCULATED-DESIGNED BY | CHECKED BY |
|---|---|

SUPERVISOR: KAREN M. HANKINSON

CONSULTANT FUNCTIONAL SUPERVISOR

STATE OF CALIFORNIA – DEPARTMENT OF TRANSPORTATION

Caltrans DESIGN

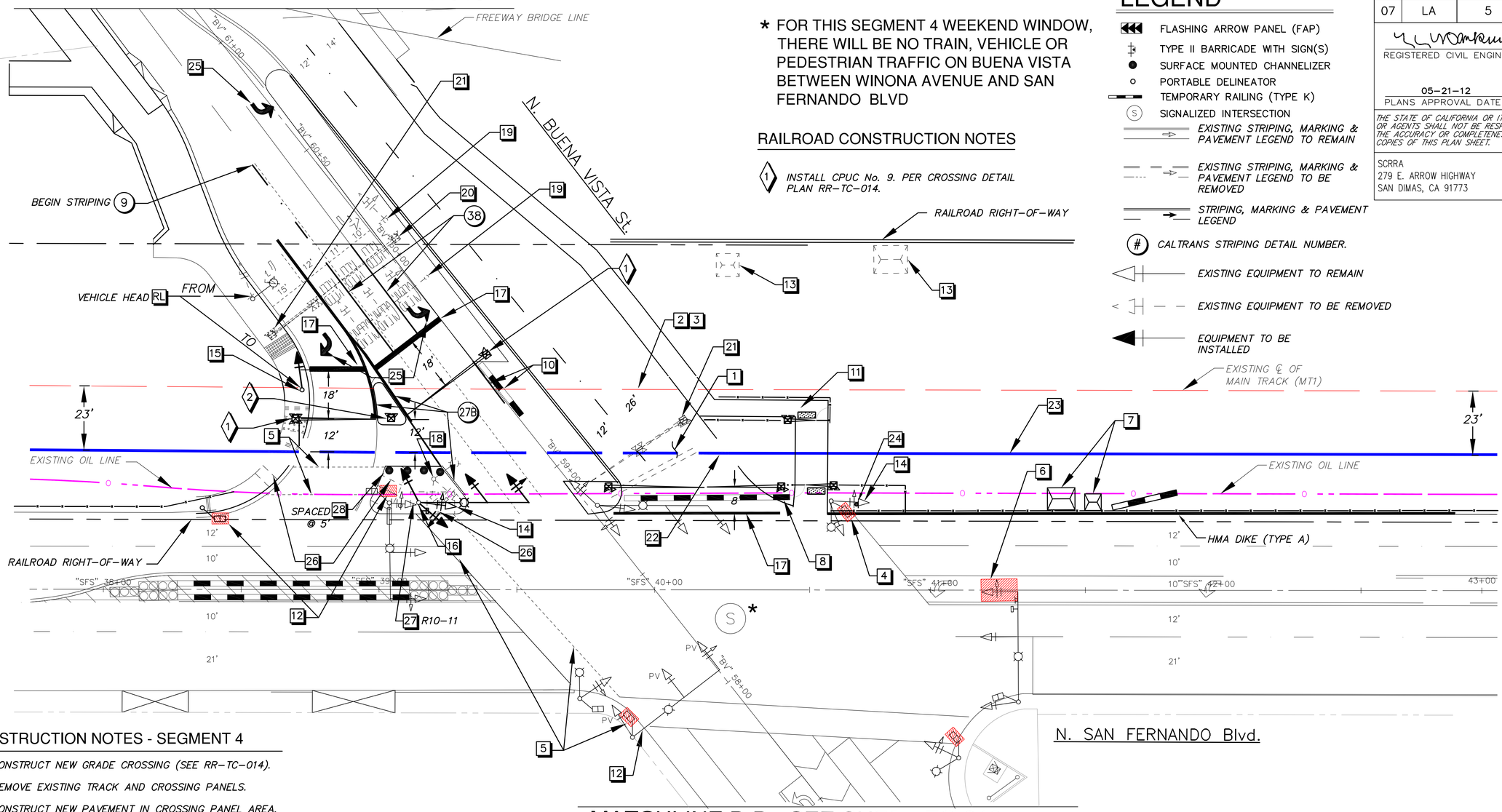


## LEGEND

- FLASHING ARROW PANEL (FAP)
- TYPE II BARRICADE WITH SIGN(S)
- SURFACE MOUNTED CHANNELIZER
- PORTABLE DELINEATOR
- TEMPORARY RAILING (TYPE K)
- (S) SIGNALIZED INTERSECTION
- EXISTING STRIPING, MARKING & PAVEMENT LEGEND TO REMAIN
- EXISTING STRIPING, MARKING & PAVEMENT LEGEND TO BE REMOVED
- STRIPING, MARKING & PAVEMENT LEGEND
- (#) CALTRANS STRIPING DETAIL NUMBER.
- EXISTING EQUIPMENT TO REMAIN
- EXISTING EQUIPMENT TO BE REMOVED
- EQUIPMENT TO BE INSTALLED

* FOR THIS SEGMENT 4 WEEKEND WINDOW, THERE WILL BE NO TRAIN, VEHICLE OR PEDESTRIAN TRAFFIC ON BUENA VISTA BETWEEN WINONA AVENUE AND SAN FERNANDO BLVD

## RAILROAD CONSTRUCTION NOTES

1. INSTALL CPUC No. 9. PER CROSSING DETAIL PLAN RR-TC-014.

## CONSTRUCTION NOTES - SEGMENT 4

1. CONSTRUCT NEW GRADE CROSSING (SEE RR-TC-014).
2. REMOVE EXISTING TRACK AND CROSSING PANELS.
3. CONSTRUCT NEW PAVEMENT IN CROSSING PANEL AREA.
4. MAINTAIN COVER ON PED HEAD AND PED PUSH BUTTON. FOR PEDESTRIAN DETOUR REFER TO PED DETOUR, SHEET RR-TC-004.
5. REMOVE CROSSWALK AND COVER PED HEADS. LEAVE LIMIT LINE FOR EASTBOUND SAN FERNANDO BLVD TRAFFIC.
6. MAINTAIN COVER ON TRAFFIC SIGNAL HEADS.
7. SERVICE TO NEW RAILROAD HOUSE. ACTIVATED BY RAILROAD
8. REMOVE K-RAIL AND DELINEATORS AFTER RAILROAD EQUIPMENT IS REMOVED.
9. RESTRICT PEDESTRIAN MOVEMENT FROM WINONA AVE TO SAN FERNANDO BLVD. SEE PED DETOUR 2, SHEET RR-TC-004.
10. FURNISH AND INSTALL TEMPORARY RAILING (TYPE K) AND LEFT EDGE LINE (CALTRANS DETAIL 24).
11. CONSTRUCT PED PATH AND RAILING WHERE SHOWN (REFER TO RR-TC-007).
12. COVER ON PED HEAD AND PED PUSH BUTTON. FOR PEDESTRIAN DETOUR REFER TO PED DETOUR, SHEET RR-TC-004.
13. EXISTING RAILROAD HOUSE TO BE TAKEN OUT OF SERVICE AND REMOVED BY RAILROAD SIGNAL CONTRACTOR.
14. MAINTAIN COVER OVER YELLOW AND GREEN RIGHT TURN ARROWS ON SIGNAL HEADS.
15. FURNISH AND INSTALL 1-A POLE AND R10-6 (Lt) SIGN (REFER TO RR-TC-009 AND RR-TC-010).
16. FURNISH AND INSTALL TRAFFIC SIGNAL POLE WITH MASTARM ON FOUNDATION INSTALLED IN PREVIOUS SEGMENT (REFER TO RR-TC-015, RR-TC-016, AND RR-TC-017).
17. INSTALL 24" WHITE LIMIT LINE.
18. REMOVE C-1 POLE AND FOUNDATION COMPLETE (REFER TO RR-TC-015, RR-TC-016, AND RR-TC-017).
19. REMOVE AND SALVAGE EXISTING PRESIGNAL TRAFFIC POLES (REFER TO RR-TC-015, RR-TC-016, AND RR-TC-017).
20. REMOVE AND SALVAGE CPUC No.9.
21. REMOVE AND SALVAGE CPUC No.9a.
22. REMOVE AND SALVAGE TEMPORARY RAIL (TYPE K).
23. MOVE TRAIN SERVICE TO SHOOFLY AT END OF THIS SEGMENT.
24. COVER EXISTING R13A(CA). INSTALL TRAFFIC CONTROL PER 2012 CALIFORNIA MUTCD TA-24A(CA).
25. FURNISH AND INSTALL TYPE IV PAVEMENT ARROW.
26. REMOVE EXISTING PED RAMPS.
27. FURNISH AND INSTALL SIGN AS INDICATED.
28. FURNISH AND INSTALL SURFACE MOUNTED CHANNELIZERS AT DISTANCE INDICATED.

APPROVED FOR RAILROAD WORK.

20 0 20 40
1" = 20' GRAPHIC SCALE

# RR-TRAFFIC CONTROL PLAN SEGMENT 4 (1 OF 2) BUENA VISTA STREET AT SAN FERNANDO BOULEVARD

BORDER LAST REVISED 7/2/2010 | USERNAME =>Donaldson DGN FILE =>TC-012 | RELATIVE BORDER SCALE IS IN INCHES 0 1 2 3 | UNIT 1812 | PROJECT NUMBER & PHASE 07000211191

* FOR THIS SEGMENT 4 WEEKEND WINDOW, THERE WILL BE NO TRAIN, VEHICLE OR PEDESTRIAN TRAFFIC ON BUENA VISTA BETWEEN WINONA AVENUE AND SAN FERNANDO ROAD

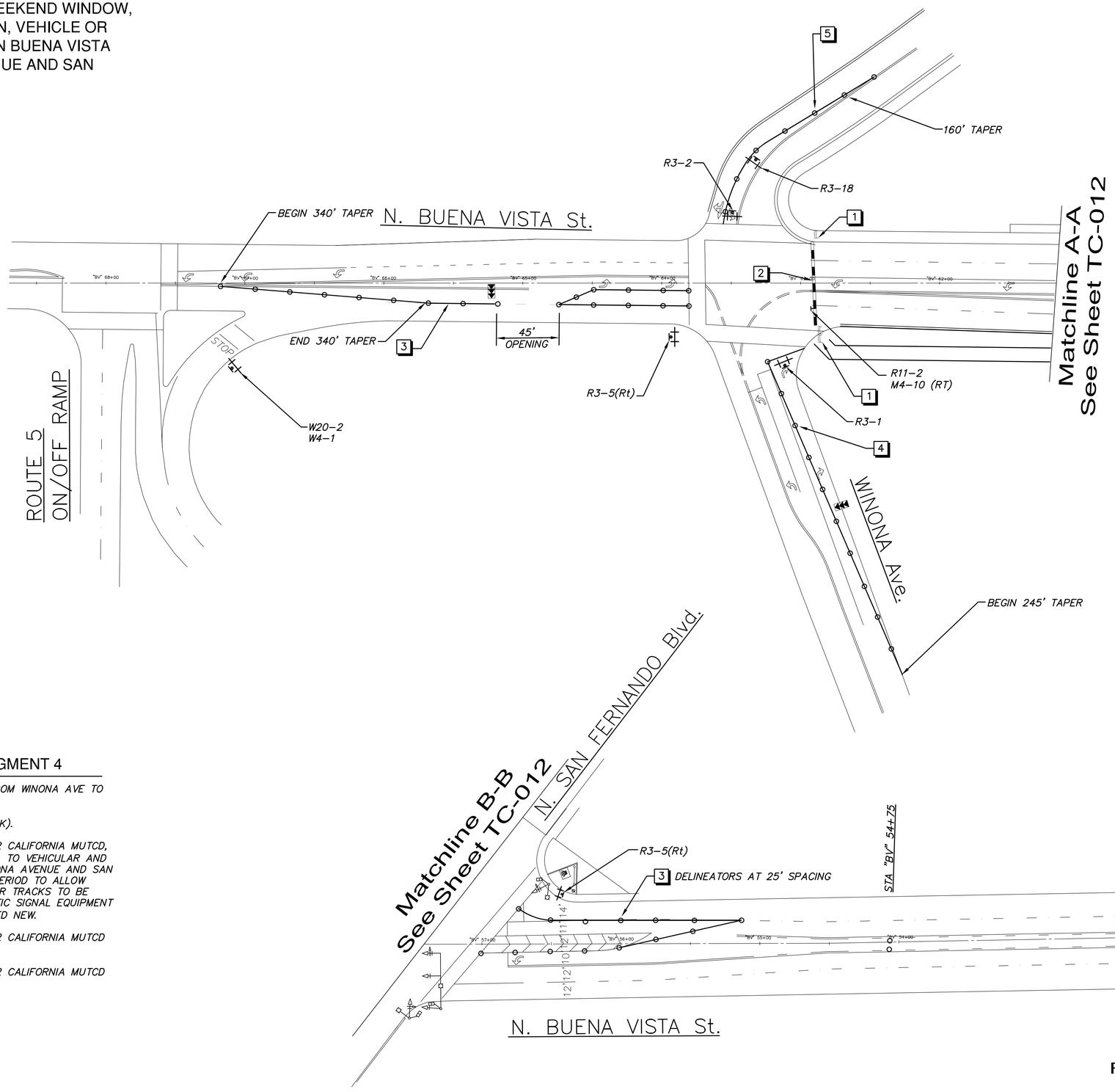


## CONSTRUCTION NOTES - SEGMENT 4

1. *RESTRICT PEDESTRIAN MOVEMENT FROM WINONA AVE TO SAN FERNANDO BLVD.*
2. *INSTALL TEMPORARY RAILING (TYPE K).*
3. *INSTALL TRAFFIC CONTROL PER 2012 CALIFORNIA MUTCD, TA-25A(CA) TO CLOSE BUENA VISTA TO VEHICULAR AND PEDESTRIAN TRAFFIC, BETWEEN WINONA AVENUE AND SAN FERNANDO ROAD FOR A WEEKEND PERIOD TO ALLOW SHOOFLY TO BE PUT IN, MAINLINE RR TRACKS TO BE REMOVED AND RAILROAD AND TRAFFIC SIGNAL EQUIPMENT TO BE RELOCATED AND/OR INSTALLED NEW.*
4. *INSTALL TRAFFIC CONTROL PER 2012 CALIFORNIA MUTCD TA-22B(CA).*
5. *INSTALL TRAFFIC CONTROL PER 2012 CALIFORNIA MUTCD TA-23.*

Underground Service Alert
CALL BEFORE YOU DIG
Call: TOLL FREE
1-800
227-2600
TWO WORKING DAYS BEFORE YOU DIG

APPROVED FOR RAILROAD WORK.

## LEGEND

- FLASHING ARROW PANEL (FAP)
- TYPE II BARRICADE WITH SIGN(S)
- PORTABLE DELINEATOR
- TEMPORARY RAILING (TYPE K)
- (S) SIGNALIZED INTERSECTION
- *EXISTING STRIPING, MARKING & PAVEMENT LEGEND TO REMAIN*
- *EXISTING STRIPING, MARKING & PAVEMENT LEGEND TO BE REMOVED*
- *STRIPING, MARKING & PAVEMENT LEGEND*
- (#) *CALTRANS STRIPING DETAIL NUMBER.*
- *EXISTING EQUIPMENT TO REMAIN*
- *EXISTING EQUIPMENT TO BE REMOVED*
- *EQUIPMENT*

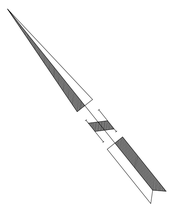

40 0 40 80
1" = 40' GRAPHIC SCALE

# RR-TRAFFIC CONTROL PLAN SEGMENT 4 - SHEET 2 BUENA VISTA STREET AT SAN FERNANDO BOULEVARD

| Dist | COUNTY | ROUTE | POST MILES TOTAL PROJECT | SHEET No. | TOTAL SHEETS |
|---|---|---|---|---|---|
| 07 | LA | 5 | 29.4/31.6 | 1728 | 1931 |

REGISTERED CIVIL ENGINEER — DATE 5-21-12

KAREN M. HANKINSON No. C54175 Exp. 6/30/13 CIVIL — REGISTERED PROFESSIONAL ENGINEER — STATE OF CALIFORNIA

05-21-12
PLANS APPROVAL DATE

THE STATE OF CALIFORNIA OR ITS OFFICERS OR AGENTS SHALL NOT BE RESPONSIBLE FOR THE ACCURACY OR COMPLETENESS OF SCANNED COPIES OF THIS PLAN SHEET.

SCRRA
279 E. ARROW HIGHWAY
SAN DIMAS, CA 91773

RAILPROS
1 ADA PARKWAY, SUITE 200
IRVINE, CA 92618

CITY OF BURBANK
PUBLIC WORKS DEPARTMENT

RECOMMENDED: CITY ENGINEER — DATE
APPROVED: PUBLIC WORKS DIRECTOR — DATE

FIELD BOOK — PAGE
DESIGNED KMH DATE 3/6/12
DRAWN SW DATE 4/15/12
CHECKED JD DATE 5/1/12
REVIEWED KMH DATE 5/6/12

SHEET 362 OF 394

BID SCHEDULE NO.

WORK ORDER NO.

PLAN NO. RR-TC-013

LAST REVISION 06-05-12
DATE PLOTTED => Jul 16, 12
TIME PLOTTED => 11:38:20am

| REVISED BY | DATE REVISED |
|---|---|
| JOE DONALDSON | KAREN M. HANKINSON |

CALCULATED-DESIGNED BY
CHECKED BY

CONSULTANT FUNCTIONAL SUPERVISOR: KAREN M. HANKINSON

STATE OF CALIFORNIA - DEPARTMENT OF TRANSPORTATION
DESIGN

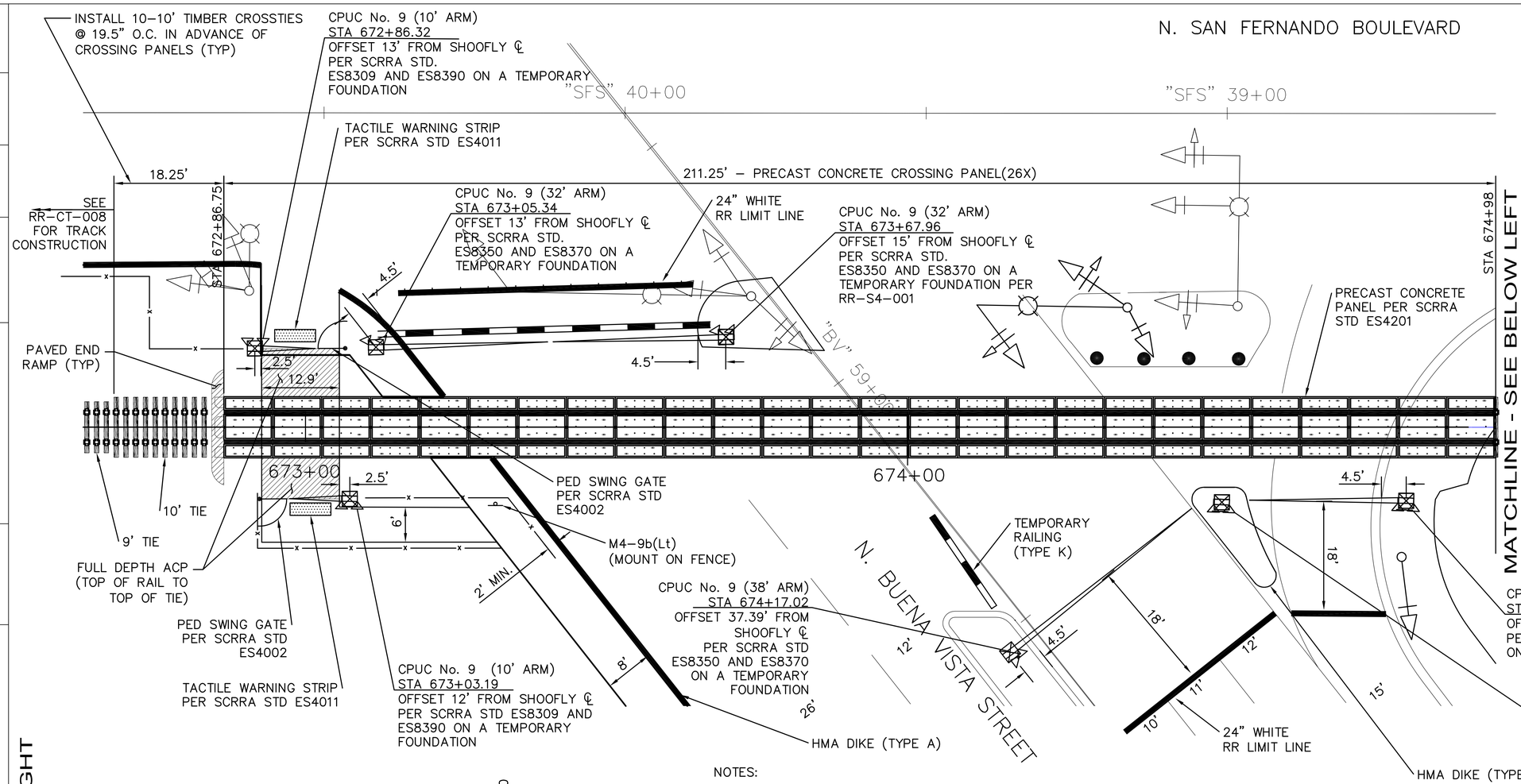


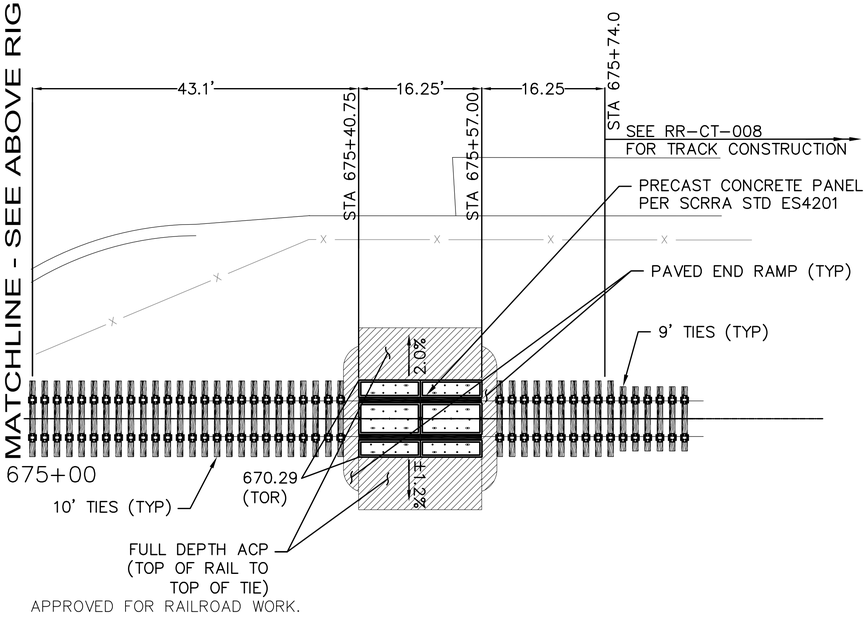


NOTES:

1. THESE STANDARDS ARE NOT INTENDED TO REPLACE EXISTING REGULATORY STANDARDS, NOR TO BE A SUBSTITUTE FOR ENGINEERING KNOWLEDGE, EXPERIENCE AND JUDGMENT. THEY ARE REQUIREMENTS, WHICH ARE IMPORTANT FOR SAFE CONSTRUCTION, MAINTENANCE AND OPERATION OF PEDESTRIAN FACILITIES AT HIGHWAY–RAIL GRADE CROSSINGS. SINCE THE ACTUAL DESIGN WILL TYPICALLY BE SITE SPECIFIC, INFORMATION SHOWN ON THIS DRAWING WILL BE MODIFIED AS NECESSARY IN CLOSE COLLABORATION WITH CALTRANS.
2. FOLLOW CALIFORNIA MUTCD FOR STRIPING, SIGNING, AND OTHER TRAFFIC WARNING DEVICES.
3. REFER TO THE FOLLOWING FOR ADDITIONAL DESIGN INFORMATION:
   a. SCRRA ENGINEERING STANDARD ES4201 FOR CONCRETE PANELS AND PAVED END RAMP.
   b. SCRRA ENGINEERING STANDARD ES5107 FOR SECURITY ACCESS GATE, K–RAIL AND BOLLARDS.
   c. SCRRA ENGINEERING STANDARD ES4001 FOR TRACK SECTIONS AND ASPHALT CONCRETE PAVEMENT DETAILS.
   d. SCRRA ENGINEERING STANDARD ES4002 FOR SWING GATE DETAILS.
   e. SCRRA ENGINEERING STANDARD ES8300 FOR VEHICLE GATE DETAILS.
   f. SCRRA ENGINEERING STANDARD ES8308 AND ES8309 FOR PEDESTRIAN WARNING DEVICES.
   g. CALTRANS STANDARD PLANS A20A FOR TRAFFIC LINES (STRIPES) AND RSP A88A FOR DETECTABLE WARNING SURFACE (STRIPE).
   h. CALTRANS STANDARD PLANS A20B DETAIL 27B AND A20C TYPE "G" FOR PAVEMENT MARKERS.
   i. CALTRANS STANDARD. PLANS A85, A85A AND A85B FOR 4' CHAIN LINK FENCE.
4. FENCING AND STEEL TUBE RAIL LOCATIONS SHALL BE ADJUSTED AS NECESSARY TO PROVIDE SCRRA MAINTENANCE VEHICLES ACCESS TO RIGHT–OF–WAY AND SIGNAL & TRACK FACILITIES WITH SCRRA APPROVAL.
5. PREEMPTION AND TOTAL WARNING TIME SHALL TAKE INTO CONSIDERATION THE PEDESTRIAN WALKING DISTANCE AND CLEARANCE TIME AND SHALL MEET THE REGULATIONS AND REQUIREMENTS OF THE AMERICAN WITH DISABILITIES ACT (ADA) AND CA MUTCD.
6. FOR NON–STANDARD FLASHER SUPPORT FOUNDATION DETAILS, SEE DWG RR–S4–001.

10 0 10 20
1" = 10' GRAPHIC SCALE

# RR-TRAFFIC CONTROL PLAN
# CROSSING DETAIL PLAN - SEGMENT 4
# BUENA VISTA STREET AT SAN FERNANDO BOULEVARD

| Dist | COUNTY | ROUTE | POST MILES TOTAL PROJECT | SHEET No. | TOTAL SHEETS |
|---|---|---|---|---|---|
| 07 | LA | 5 | 29.4/31.6 | 1729 | 1931 |

REGISTERED CIVIL ENGINEER — 5–21–12 DATE

CHRIS COFFMAN No. C53173 Exp. 6/30/13 CIVIL — REGISTERED PROFESSIONAL ENGINEER — STATE OF CALIFORNIA

05–21–12
PLANS APPROVAL DATE

THE STATE OF CALIFORNIA OR ITS OFFICERS OR AGENTS SHALL NOT BE RESPONSIBLE FOR THE ACCURACY OR COMPLETENESS OF SCANNED COPIES OF THIS PLAN SHEET.

SCRRA
279 E. ARROW HIGHWAY
SAN DIMAS, CA 91773

RAILPROS
1 ADA PARKWAY, SUITE 200
IRVINE, CA 92618

CITY OF BURBANK
PUBLIC WORKS DEPARTMENT

RECOMMENDED: CITY ENGINEER DATE
APPROVED: PUBLIC WORKS DIRECTOR DATE

PAGE
FIELD BOOK — DESIGNED KAH DATE 3/8/12
DRAWN SW DATE 4/15/12
CHECKED JD DATE 5/1/12
REVIEWED KAH DATE 5/8/12

SHEET 363 OF 394

BID SCHEDULE NO. RR-TC-014

WORK ORDER NO.

PLAN NO.

LAST REVISION 06–05–12
DATE PLOTTED => Jul 18, 12
TIME PLOTTED => 8:14:16am

| REVISED BY | DATE REVISED |
|---|---|
| JOE DONALDSON | CHRIS COFFMAN |

CALCULATED–DESIGNED BY
CHECKED BY
CONSULTANT FUNCTIONAL SUPERVISOR CHRIS COFFMAN
STATE OF CALIFORNIA – DEPARTMENT OF TRANSPORTATION DESIGN
Caltrans

BORDER LAST REVISED 7/2/2010
USERNAME =>Donaldson
DGN FILE =>TC–014
RELATIVE BORDER SCALE IS IN INCHES 0 1 2 3
UNIT 1812
PROJECT NUMBER & PHASE 07000211191

## CONSTRUCTION NOTES:

1. PROTECT EXISTING TYPE 170 CONTROLLER AND ENCLOSURE IN PLACE.
2. PROTECT EXISTING ELECTRIC SERVICE EQUIPMENT ENCLOSURE IN PLACE.
3. PROTECT EXISTING CABINET WITH BATTERY BACKUP IN PLACE.
4. REMOVE AND SALVAGE EXISTING TRAFFIC SIGNAL POLE COMPLETE. REMOVE EXISTING FOUNDATION COMPLETE.
5. MAINTAIN COVER YELLOW AND GREEN RIGHT ARROWS ON 5 SECTION HEAD.
6. FURNISH AND INSTALL SIGN AS NOTED.
7. COVER VEHICLE OR PEDESTRIAN HEAD WITH APPROPRIATELY SIZED HEAD BAG COVER.
8. REMOVE EXISTING C-1 POLE AND FOUNDATION COMPLETE.
9. CONTRACTOR TO REPROGRAM PV VEHICLE HEADS TO CITY'S SATISFACTION.
10. MOUNT VEHICLE HEADS HORIZONTALLY. SEE DETAIL "A".
11. REPLACE 3-SECTION VEHICLE HEAD WITH 4-SECTION VEHICLE HEAD FOR SPLIT PHASE SIGNAL OPERATIONS IN SEGMENTS 6-11.
F. THIS WORK IS PART OF FINAL TRAFFIC SIGNAL MODIFICATION PLANS (REFER TO SHEET RR-TM-001). IT IS SHOWN HERE FOR CONSTRUCTION SEQUENCING PURPOSE AND IT NOT A SEPARATE PAY ITEM FOR THIS PLANSHEET OR WORK SEGMENT.

**POLE SCHEDULE ●**

| NO. | STANDARD TYPE | SIG. M.A. | LUM M.A. | LUMINAIRE HPSV | VEH. SIG. MTG. MAST ARM | VEH. SIG. MTG. POLE | PED. SIG. MTG. | PPB Ø | PPB QUAD | PPB ARROW | R.S.N.S. | POLE LOCATION A | B | C | D | E | BLANK OUT SIGN MOUNTING | NOTES |
|---|---|---|---|---|---|---|---|---|---|---|---|---|---|---|---|---|---|---|
| A | 26-4-100 | 40' | 15' | 400W | 2-MAS | SV-3-T | - | - | - | - | San Fernando Blvd | | EXISTING | | | | EXISTING | SEE NOTE 11 |
| B | TYPE 15 | - | 12' | 400W | - | SV-2-T | SP-1-CS | 8 | W | RT | - | | EXISTING | | | | EXISTING | SEE NOTE 5 |
| C | 24-4-80 | 35' | 12' | 400W | 2-MAS | SV-1-T | SP-1-CS | - | - | - | Buena Vista St ← Airport | | EXISTING | | | | - | SEE NOTE 7 |
| D | PPB POST | - | - | - | - | - | - | 8 | W | LT | - | | EXISTING | | | | - | - |
| E | TYPE 15 | - | 12' | 400W | - | SV-1-T | SP-1-CS | 2 | N | RT | - | | EXISTING | | | | - | - |
| F | 24-4-80 | 35' | 12' | 400W | 2-MAS | SV-1-T | SP-1-CS | 2 | N | LT | San Fernando Blvd | | EXISTING | | | | - | CCTV CAMERA MOUNTED ON POLE SHAFT. SEE NOTES 7, 9, 11<br>MAST ARM VEHICLE HEADS MOUNTED HORIZONTALLY |
| G | TYPE 15 | - | 12' | 400W | - | SV-1-T | SP-1-CS | 4 | E | RT | - | | EXISTING | | | | - | - |
| H | 24-4-100(N) | 35'(N) | 15'(N) | 400W(N) | 2-MAS(N) | SV-3-T(N) | SP-1-CS(N) | - | - | - | - | 12.5' | - | - | - | 3' | - | SEE DETAIL 2-3. SEE NOTES 6, 7, 10<br>MAST ARM VEHICLE HEADS MOUNTED HORIZONTALLY |
| I | 24-4-100 | 35' | 15' | 400W | 2-MAS | - | SP-1-CS(N) | 4 | E | LT | Buena Vista St ← Airport | | EXISTING | | | | - | - |
| J | 1-A(7') | - | - | - | - | - | TP-1-CS | 6 | N | LT | - | | EXISTING | | | | - | SEE NOTE 7 |
| K | 1-A (10')(N) | - | - | - | - | TV-1-T (N) | - | - | - | - | - | 23' | - | - | - | 3' | - | - |

R.S.N.S. REFLECTORIZED STREET NAME SIGN (BOTH SIDES). (N) = NEW
● ALL EQUIPMENT IS EXISTING UNLESS OTHERWISE SPECIFIED. (RL) = RELOCATED EQUIPMENT



SIGNAL STANDARD LOCATION
NTS

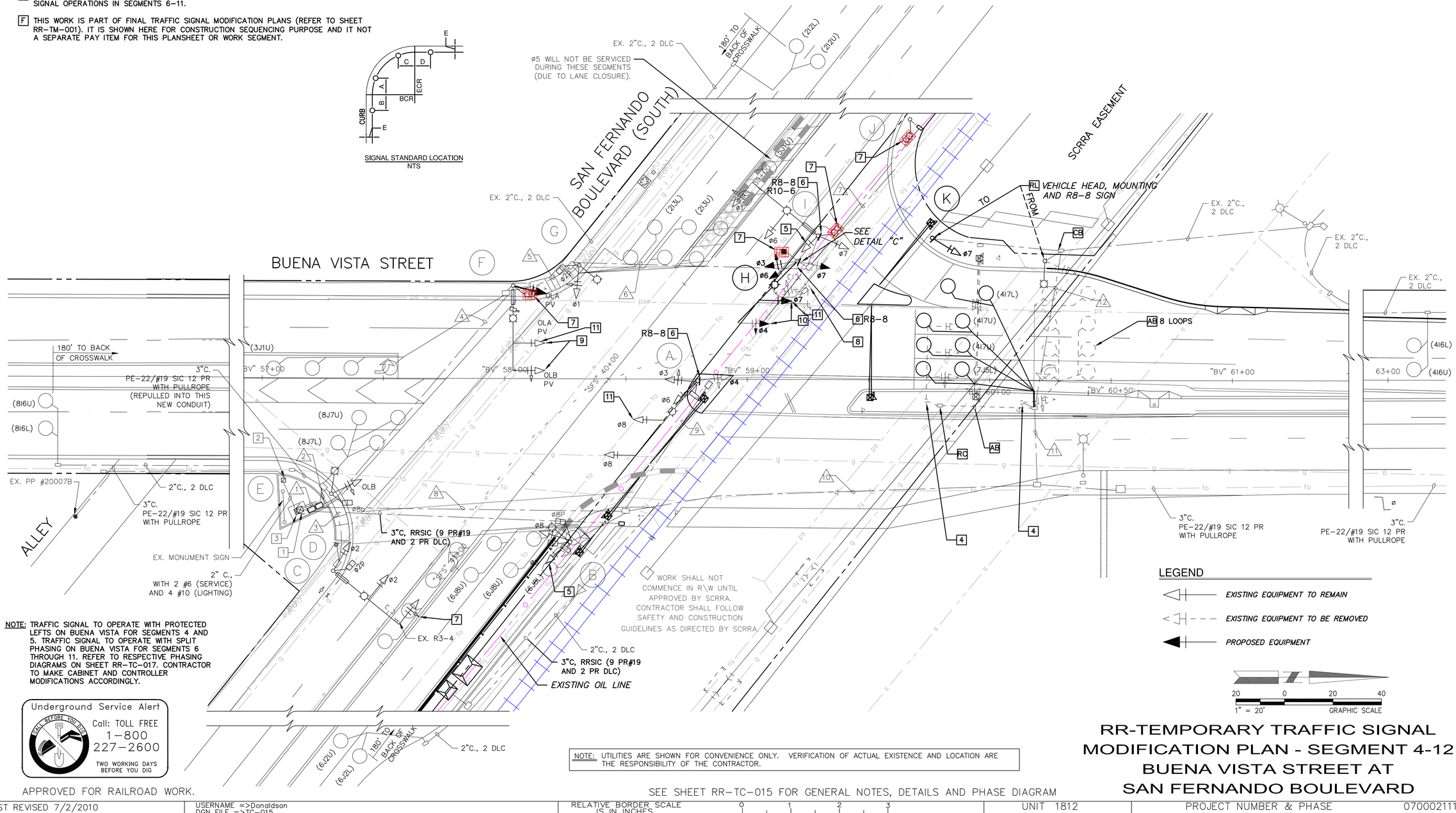


NOTE: TRAFFIC SIGNAL TO OPERATE WITH PROTECTED LEFTS ON BUENA VISTA FOR SEGMENTS 4 AND 5. TRAFFIC SIGNAL TO OPERATE WITH SPLIT PHASING ON BUENA VISTA FOR SEGMENTS 6 THROUGH 11. REFER TO RESPECTIVE PHASING DIAGRAMS ON SHEET RR-TC-017. CONTRACTOR TO MAKE CABINET AND CONTROLLER MODIFICATIONS ACCORDINGLY.

Underground Service Alert
CALL BEFORE YOU DIG
Call: TOLL FREE 1-800 227-2600
TWO WORKING DAYS BEFORE YOU DIG

NOTE: UTILITIES ARE SHOWN FOR CONVENIENCE ONLY. VERIFICATION OF ACTUAL EXISTENCE AND LOCATION ARE THE RESPONSIBILITY OF THE CONTRACTOR.

APPROVED FOR RAILROAD WORK.

SEE SHEET RR-TC-015 FOR GENERAL NOTES, DETAILS AND PHASE DIAGRAM

# RR-TEMPORARY TRAFFIC SIGNAL MODIFICATION PLAN - SEGMENT 4-12 BUENA VISTA STREET AT SAN FERNANDO BOULEVARD

| Dist | COUNTY | ROUTE | POST MILES TOTAL PROJECT | SHEET No. | TOTAL SHEETS |
|---|---|---|---|---|---|
| 07 | LA | 5 | 29.4/31.6 | 1730 | 1931 |

REGISTERED CIVIL ENGINEER — DATE 5-21-12

REGISTERED PROFESSIONAL ENGINEER — KAREN M. HANKINSON — No. C54175 — Exp. 6/30/13 — CIVIL — STATE OF CALIFORNIA

05-21-12
PLANS APPROVAL DATE

THE STATE OF CALIFORNIA OR ITS OFFICERS OR AGENTS SHALL NOT BE RESPONSIBLE FOR THE ACCURACY OR COMPLETENESS OF SCANNED COPIES OF THIS PLAN SHEET.

SCRRA
279 E. ARROW HIGHWAY
SAN DIMAS, CA 91773

RAILPROS
1 ADA PARKWAY, SUITE 200
IRVINE, CA 92618

CITY OF BURBANK
PUBLIC WORKS DEPARTMENT

RECOMMENDED: CITY ENGINEER — DATE
APPROVED: PUBLIC WORKS DIRECTOR — DATE

FIELD BOOK — PAGE
DESIGNED JD — DATE 3/9/12
DRAWN SW — DATE 4/15/12
CHECKED KMH — DATE 5/1/12
REVIEWED CC — DATE 5/9/12

SHEET 364 OF 394

BID SCHEDULE NO.

WORK ORDER NO.

PLAN NO. RR-TC-015

LAST REVISION 06-05-12
DATE PLOTTED => Jul 18, 12
TIME PLOTTED => 8:31:43am

| REVISED BY | DATE REVISED |
|---|---|
| JOE DONALDSON | KAREN M. HANKINSON |

CALCULATED-DESIGNED BY
CHECKED BY

CONSULTANT FUNCTIONAL SUPERVISOR KAREN M. HANKINSON

STATE OF CALIFORNIA - DEPARTMENT OF TRANSPORTATION DESIGN

Caltrans

| Dist | COUNTY | ROUTE | POST MILES TOTAL PROJECT | SHEET No. | TOTAL SHEETS |
|---|---|---|---|---|---|
| 07 | LA | 5 | 29.4/31.6 | 1731 | 1931 |

REGISTERED CIVIL ENGINEER — DATE 5-21-12

PLANS APPROVAL DATE 05-21-12

KAREN M. HANKINSON No. C54175 Exp. 6/30/13 CIVIL — REGISTERED PROFESSIONAL ENGINEER — STATE OF CALIFORNIA

*THE STATE OF CALIFORNIA OR ITS OFFICERS OR AGENTS SHALL NOT BE RESPONSIBLE FOR THE ACCURACY OR COMPLETENESS OF SCANNED COPIES OF THIS PLAN SHEET.*

SCRRA
279 E. ARROW HIGHWAY
SAN DIMAS, CA 91773

RAILPROS
1 ADA PARKWAY, SUITE 200
IRVINE, CA 92618

## GENERAL NOTES: (SHEETS RR-TC-009, RR-TC-016, AND RR-TC-017)

1. ALL WORK AND MATERIAL INDICATED ON THESE PLANS SHALL CONFORM TO THE PROVISIONS OF THE STANDARD SPECIFICATIONS AND STANDARD PLANS OF THE STATE OF CALIFORNIA, DEPARTMENT OF TRANSPORTATION, LATEST EDITION, THE SPECIAL PROVISIONS, AND PROJECT SPECIFICATIONS.
2. IT SHALL BE THE CONTRACTOR'S RESPONSIBILITY TO ASCERTAIN THE LOCATION OF SUCH UNDERGROUND IMPROVEMENTS OR FACILITIES WHICH MAY BE SUBJECT TO DAMAGE BY HIS OPERATIONS. THIS SHALL INCLUDE BUT NOT BE LIMITED TO POT HOLING TO EXPOSE ALL UTILITY CROSSINGS WITH PROPOSED CONDUIT RUNS, TRAFFIC SIGNAL FOUNDATIONS, ETC.
3. ALL WIRING SHALL BE MARKED (TAGGED) WITHIN THE CONTROLLER CABINET FOR PHASE IDENTIFICATION.
4. SIGNAL POLES, DETECTOR LOOPS, CONTROLLER CABINET, AND SERVICE CABINET SHALL BE LOCATED BY THE ENGINEER IN THE FIELD. PERFORM PRELIMINARY STRIPING LAYOUT PRIOR TO LOOP DETECTOR LAYOUT.
5. ALL SAFETY LIGHTING SHALL BE 400 W, 120 VOLT, HPSV, CUT OFF TYPE, INDIVIDUAL PHOTOCELL CONTROLLED, AND UNMETERED.
6. ALL SIGNAL HEADS SHALL BE 12-INCH WITH ALUMINUM HOUSING. MINIMUM HEIGHT SHALL BE TEN FEET FROM BOTTOM OF BRACKET TO ROADWAY, SIDEWALK, OR MEDIAN GRADE. ALL TRAFFIC SIGNAL SECTIONS SHALL BE PROVIDED WITH DIALIGHT 433 SERIES LIGHT EMITTING DIODE "LED" MODULE, OR EQUIVALENT, AND SHALL CONFORM TO THE CALIFORNIA DEPARTMENT OF TRANSPORTATION "CALTRANS" SPECIFICATIONS.
7. CONDUCTOR SCHEDULE IS FURNISHED AS AN INSTALLATION GUIDE ONLY; 14/28-SBX 87526 CALTRANS TYPE 28 CONDUCTOR CABLE SHALL BE INSTALLED IN LIEU OF INDIVIDUAL CONDUCTORS. IT SHALL BE THE CONTRACTOR'S RESPONSIBILITY TO PROVIDE MORE CABLES REQUIRED FOR THE INTENDED OPERATION. AT EACH TRAFFIC SIGNAL POLE 5 CONDUCTOR SIGNAL CABLE SHALL BE SPLICED TO THE 28 CONDUCTOR CABLE AND INSTALLED WITHOUT SPLICES TO EACH VEHICLE AND PEDESTRIAN HEAD. ONE 3 CONDUCTOR SIGNAL CABLE SHALL BE SPLICED TO THE 28 CONDUCTOR CABLE AND INSTALLED WITHOUT SPLICES TO EACH PEDESTRIAN PUSH BUTTON.
8. ALL PEDESTRIAN HEADS SHALL BE STATE TYPE A (ICC 7090 OR EQUIVALENT) WITH CLAM SHELL (CS) MOUNT. MINIMUM HEIGHT SHALL BE SEVEN FEET FROM THE BOTTOM OF HOUSING TO SIDEWALK GRADE. THE UPRAISED HAND UNIT AND THE WALKING UNIT SHALL BE LED MODULE AND COUNTDOWN TYPE, AND SHALL CONFORM TO CALTRANS SPECIAL PROVISIONS. ALL PEDESTRIAN PUSH BUTTONS SHALL BE POLARA ENGINEERING BULLDOG TYPE.
9. EXCEPT AS OTHERWISE NOTED, INDUCTIVE LOOPS SHALL BE SIX-FEET DIAMETER, SPACED TEN-FEET APART CENTERED IN LANES. PLACE LINE LOOPS ZERO FEET PAST CROSSWALK, OR LIMIT LINE IF NO CROSSWALK. EACH LOOP ASSIGNMENT SHALL HAVE A SEPARATE LEAD-IN CABLE.
10. CONTRACTOR SHALL OBTAIN ALL LICENSES, PERMITS, AND INSURANCE PRIOR TO START OF WORK.
11. CONTRACTOR SHALL BE RESPONSIBLE FOR MAKING HIMSELF FAMILIAR WITH ALL UNDERGROUND UTILITIES, PIPES AND STRUCTURES. CONTRACTOR SHALL TAKE SOLE RESPONSIBILITY FOR COST INCURRED DUE TO DAMAGE AND REPLACEMENT OF SAID UTILITIES. HAND DIG FOUNDATIONS UNTIL CLEAR OF OBSTRUCTIONS.
12. EXISTING SUBSURFACE UTILITIES INDICATED ON PLANS ARE FOR CONVENIENCE ONLY. CONTRACTOR SHALL VERIFY PRECISE LOCATION OF SUBSURFACE UTILITIES WITH THE APPROPRIATE AGENCIES PRIOR TO CONSTRUCTION. AT LEAST 48 HOURS PRIOR TO EXCAVATING, THE CONTRACTOR SHALL NOTIFY UNDERGROUND SERVICE ALERT (PHONE: 1-800-227-2600) TO ASSIST IN LOCATION OF UNDERGROUND UTILITIES.
13. CONTRACTOR SHALL BE RESPONSIBLE FOR ANY COORDINATION WITH SUBCONTRACTORS AS REQUIRED TO ACCOMPLISH OPERATIONS.
14. CONTRACTOR SHALL VISIT SITE PRIOR TO BID. NO CHANGE IN CONTRACT PRICE WILL BE ALLOWED FOR ACTUAL OR CLAIMED DISCREPANCY BETWEEN EXISTING SITE CONDITIONS AND THOSE SHOWN ON PLANS.
15. THE CONTRACTOR SHALL PREVENT THE DISCHARGE OR ANY WATER, SAND, MUD, OIL, PETROLEUM OR OTHER POLLUTANTS FROM LEAVING THE CONSTRUCTION AREA AND ENTERING A PUBLIC STREET, STORM DRAIN OR FLOOD CONTROL CHANNEL.
16. ANY MODIFICATIONS OF OR CHANGES IN APPROVED PLANS MUST BE APPROVED BY THE TRAFFIC ENGINEER.
17. ALL MATERIALS ARE EXISTING EXCEPT WHEN OTHERWISE NOTED.
18. ALL PEDESTRIAN PUSH BUTTONS SHALL BE TYPE "B" WITH APPROPRIATE INTERNATIONAL SYMBOL SIGNS, INSTALLED 40" FROM SIDEWALK GRADE.
19. ALL NEW PULL BOXES SHALL BE NO. 6E UNLESS OTHERWISE SPECIFIED.
20. SIGNAL CONTROLLER AND CABINET SHALL BE DELIVERED TO THE CITY OF BURBANK AT LEAST 14 DAYS PRIOR TO INSTALLATION FOR SHOP TESTING.
21. ALL NEW PROGRAMMED VISIBILITY (PV) HEADS SHALL BE MCCAIN PROGRAMMABLE TRAFFIC SIGNAL HEADS OR APPROVED EQUAL.

### CONDUCTOR SCHEDULE ●

| AWG | CIRCUIT | RUN NUMBER 1 | 2 | 3 | 4 | 5 | 6 | 7 | 8 | 9 | 10 | 11 | 12 |
|---|---|---|---|---|---|---|---|---|---|---|---|---|---|
| 12C CABLE | VEHICLE PED AND PPB | 6 | 1 | 1 | 3 | 3 | 2 | 1 | 2 | 1 | 1 | 1 | 1 |
| #10 | LUMINAIRE | 4 | 2 | 2 | 2 | 2 | 2 | - | 2 | 2 | 2 | - | 2 |
| DLC TYPE "B" | Ø1 | 1 | - | - | - | - | - | - | 1 | - | - | - | - |
| | Ø2 | 4 | - | 1 | 4 | 4 | - | - | - | - | - | - | - |
| | Ø3 | 1 | - | - | 1 | - | - | - | - | - | - | - | - |
| | Ø4 | 4 | - | 4 | - | - | - | - | 4 | - | 4 | 4 | 1 |
| | Ø5 | 1 | - | - | 1 | 1 | - | - | - | - | - | - | - |
| | Ø6 | 5 | - | - | - | - | - | - | 5 | - | - | - | - |
| | Ø7 | 1 | - | - | - | - | - | - | 1 | - | 1 | 1 | - |
| | Ø8 | 4 | 4 | - | - | - | - | - | - | - | - | - | - |
| | TOTAL | 22 | 4 | 6 | 6 | 5 | - | - | 12 | - | 6 | 6 | 3 |
| PE-22/12PR #19 TSIC | | 2 | 1 | - | - | - | - | - | 1 | - | 1 | - | - |
| CCTV CABLE COHV CA 295E | | 1 | - | - | 1 | - | - | - | - | - | - | - | - |
| CONDUIT SIZE | | 2-4" | 3" | 3" | 4" | 4" | 3" | 3" | 4" | 3"(E) | 3" | 3" | 3"(E) |

● ALL CONDUIT AND CONDUCTORS ARE EXISTING UNLESS OTHERWISE SPECIFIED.
(E) EXISTING

APPROVED FOR RAILROAD WORK.

### PHASE DIAGRAM - SEGMENT 4

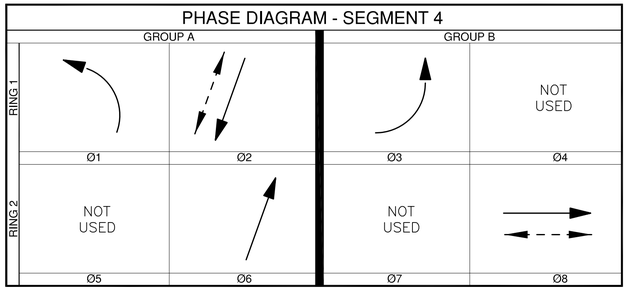


NOTE: RR TRACKS OUT OF SERVICE DURING THIS SEGMENT

### PHASE DIAGRAM FOR BUENA VISTA STREET AT SAN FERNANDO BOULEVARD – SEGMENT 5

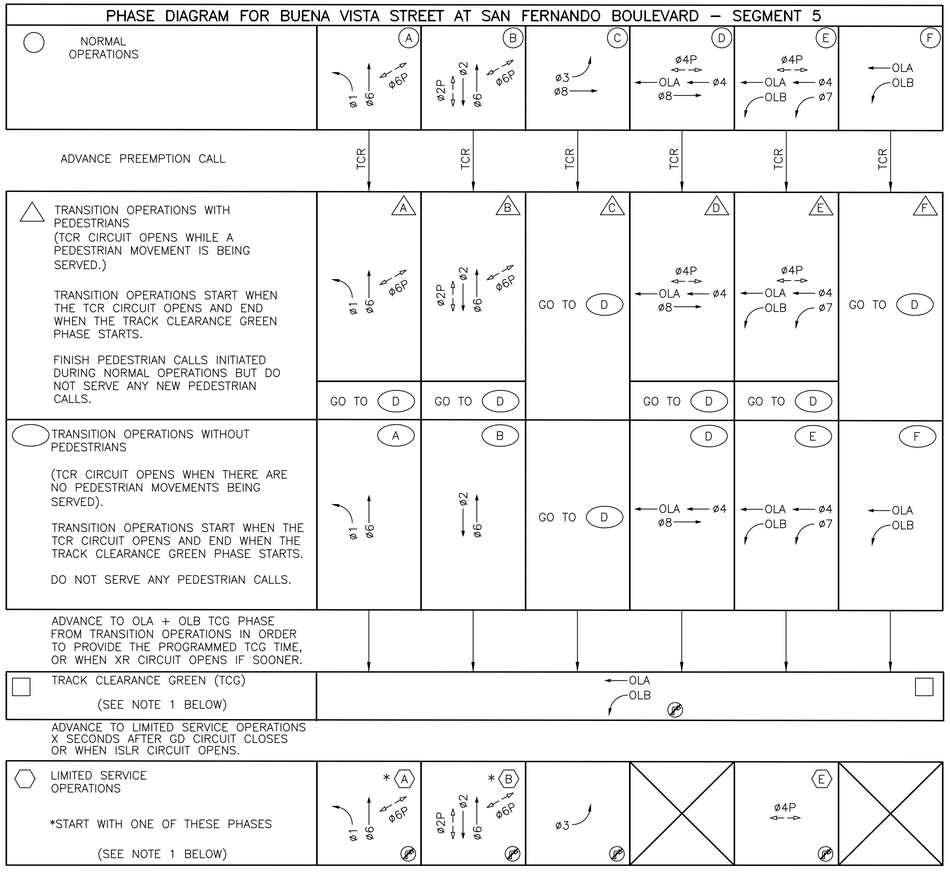


NOTES:

1. ⊘ = BLANK OUT LED SIGN R3-1 IS LIT WHEN XR CIRCUIT IS OPEN.

20 0 20 40
1" = 20' GRAPHIC SCALE

RAILROAD CIRCUITS AND THEIR TRAFFIC SIGNAL OPERATIONAL FUNCTIONS

ADVANCE PREEMPT MESSAGE
TRAFFIC CONTROL RELAY CIRCUITS
REVIEW THE RAILROAD OUTPUT LOGIC FOR FUNCTIONAL OPERATION. WHEN ALL CIRCUITS ARE "NON ACTIVE", THE TRAFFIC SIGNAL INTERSECTION SHALL OPERATE IN THE NORMAL NON FLASHING SEQUENCE.

THE "TCR ACTIVE" MESSAGE INDICATES A TRAIN IS APPROACHING THE CROSSING.

WHEN "ACTIVE" THIS MESSAGE SHALL CAUSE THE INTERSECTION TO COMPLETE ANY ACTIVE PEDESTRIAN INTERVALS AND LIMIT PEDESTRIAN AND SELECTED VEHICLE MOVEMENTS DURING THIS CONDITION.

TRACK CLEARANCE PREEMPT MESSAGE
CROSSING RELAY CIRCUITS
REVIEW THE RAILROAD OUTPUT LOGIC FOR FUNCTIONAL OPERATION. WHEN ALL CIRCUITS ARE "NON ACTIVE", THE TRAFFIC SIGNAL INTERSECTION SHALL OPERATE IN THE NORMAL NON FLASHING SEQUENCE.

THE "XR ACTIVE" MESSAGE INDICATES A TRAIN IS APPROACHING THE INTERSECTION AND CLEARANCE OF THE VEHICLES FROM THE RAILROAD TRACKS IS NEEDED.

WHEN "ACTIVE" THIS MESSAGE SHALL CAUSE THE INTERSECTION TO ADVANCE TO THE TRACK CLEAR VEHICLE MOVEMENTS AND WAIT FOR THE GATE DOWN MESSAGE.

GATE DOWN PREEMPT MESSAGE
GATE DOWN CIRCUITS
REVIEW THE RAILROAD OUTPUT LOGIC FOR FUNCTIONAL OPERATION. WHEN ALL CIRCUITS ARE "NON ACTIVE", THE TRAFFIC SIGNAL INTERSECTION SHALL OPERATE IN THE NORMAL NON FLASHING SEQUENCE.

THE "GD ACTIVE" MESSAGE INDICATES THAT THE RAILROAD GATES ARE DOWN AT THE CROSSING.

WHEN "ACTIVE" THIS MESSAGE SHALL CAUSE THE INTERSECTION TO SEQUENCED TO THE MINIMAL VEHICLE AND PEDESTRIAN SERVICE MOVEMENTS (LIMITED SERVICE), CYCLING UNTIL PREEMPTION IS COMPLETE.

NOTE:
THE ISLAND RELAY CIRCUIT (ISLR) CIRCUIT IS A SUBSET OF THE GD CIRCUIT. THE TRAFFIC SIGNAL CONTROLLER WILL RECEIVE ONE MESSAGE FROM THE RAILROAD REGARDING THESE CIRCUITS. IF THE RAILROAD GATES ARE NOT FUNCTIONING, THE ISLR CIRCUIT INTERRUPTS THE GD CIRCUIT TO ALLOW TRANSITION TO LIMITED SERVICE OPERATIONS.

WHEN PREEMPTION IS COMPLETE OR INTERRUPTED, ALL ACTIVE CIRCUITS WILL RETURN TO THE "NON ACTIVE" STATE.

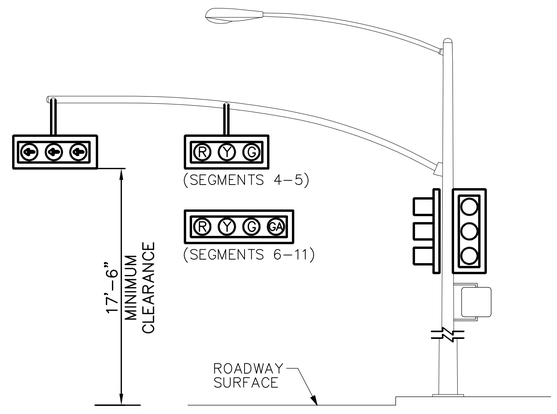


DETAIL "C"
POLE LOCATION Ⓗ
NOT TO SCALE

# RR-TEMPORARY TRAFFIC SIGNAL MODIFICATION PLAN - SEGMENT 4-12 BUENA VISTA STREET AT SAN FERNANDO BOULEVARD

CITY OF BURBANK
PUBLIC WORKS DEPARTMENT

RECOMMENDED: CITY ENGINEER — DATE
APPROVED: PUBLIC WORKS DIRECTOR — DATE

FIELD BOOK — PAGE
DESIGNED KMH — DATE 3/9/12
DRAWN SW — DATE 4/15/12
CHECKED JD — DATE 5/1/12
REVIEWED KMH — DATE 5/9/12

SHEET 365 OF 394

BID SCHEDULE NO.

WORK ORDER NO.

PLAN NO. RR-TC-016

LAST REVISION 06-05-12 — DATE PLOTTED => Jul 16, 12 — TIME PLOTTED => 11:58:55am

| REVISED BY | DATE REVISED |
|---|---|
| JOE DONALDSON | KAREN M. HANKINSON |

CALCULATED–DESIGNED BY
CHECKED BY

CONSULTANT FUNCTIONAL SUPERVISOR — KAREN M. HANKINSON

STATE OF CALIFORNIA – DEPARTMENT OF TRANSPORTATION — DESIGN

BORDER LAST REVISED 7/2/2010 | USERNAME =>Donaldson DGN FILE =>TC-016 | RELATIVE BORDER SCALE IS IN INCHES 0 1 2 3 | UNIT 1812 | PROJECT NUMBER & PHASE 07000211191

# PHASE DIAGRAM FOR BUENA VISTA STREET AT SAN FERNANDO BOULEVARD – SEGMENTS 6–11

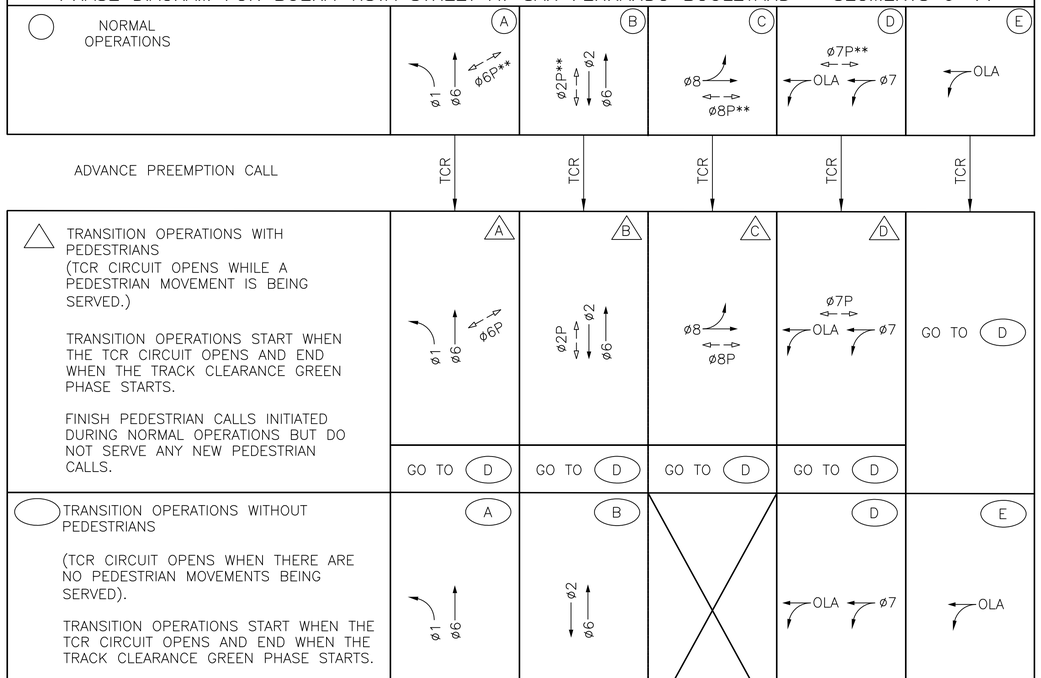


NOTES:

1. (Ø) = BLANK OUT LED SIGN R3–1 IS LIT WHEN XR CIRCUIT IS OPEN.
   ** = ONLY CERTAIN PED MOVEMENTS ARE ALLOWED DURING EACH CONSTRUCTION SEGMENT AS FOLLOWS: ø2 (ALL SEGMENTS), ø7 (SEGMENT 9), ø8 (SEGMENTS 6–8, 10–11).

RAILROAD CIRCUITS AND THEIR TRAFFIC SIGNAL OPERATIONAL FUNCTIONS

ADVANCE PREEMPT MESSAGE
TRAFFIC CONTROL RELAY CIRCUITS
REVIEW THE RAILROAD OUTPUT LOGIC FOR FUNCTIONAL OPERATION. WHEN ALL CIRCUITS ARE "NON ACTIVE", THE TRAFFIC SIGNAL INTERSECTION SHALL OPERATE IN THE NORMAL NON FLASHING SEQUENCE.

THE "TCR ACTIVE" MESSAGE INDICATES A TRAIN IS APPROACHING THE CROSSING.

WHEN "ACTIVE" THIS MESSAGE SHALL CAUSE THE INTERSECTION TO COMPLETE ANY ACTIVE PEDESTRIAN INTERVALS AND LIMIT PEDESTRIAN AND SELECTED VEHICLE MOVEMENTS DURING THIS CONDITION.

TRACK CLEARANCE PREEMPT MESSAGE
CROSSING RELAY CIRCUITS
REVIEW THE RAILROAD OUTPUT LOGIC FOR FUNCTIONAL OPERATION. WHEN ALL CIRCUITS ARE "NON ACTIVE", THE TRAFFIC SIGNAL INTERSECTION SHALL OPERATE IN THE NORMAL NON FLASHING SEQUENCE.

THE "XR ACTIVE" MESSAGE INDICATES A TRAIN IS APPROACHING THE INTERSECTION AND CLEARANCE OF THE VEHICLES FROM THE RAILROAD TRACKS IS NEEDED.

WHEN "ACTIVE" THIS MESSAGE SHALL CAUSE THE INTERSECTION TO ADVANCE TO THE TRACK CLEAR VEHICLE MOVEMENTS AND WAIT FOR THE GATE DOWN MESSAGE.

GATE DOWN PREEMPT MESSAGE
GATE DOWN CIRCUITS
REVIEW THE RAILROAD OUTPUT LOGIC FOR FUNCTIONAL OPERATION. WHEN ALL CIRCUITS ARE "NON ACTIVE", THE TRAFFIC SIGNAL INTERSECTION SHALL OPERATE IN THE NORMAL NON FLASHING SEQUENCE.

THE "GD ACTIVE" MESSAGE INDICATES THAT THE RAILROAD GATES ARE DOWN AT THE CROSSING.

WHEN "ACTIVE" THIS MESSAGE SHALL CAUSE THE INTERSECTION TO SEQUENCED TO THE MINIMAL VEHICLE AND PEDESTRIAN SERVICE MOVEMENTS (LIMITED SERVICE), CYCLING UNTIL PREEMPTION IS COMPLETE.

NOTE:
THE ISLAND RELAY CIRCUIT (ISLR) CIRCUIT IS A SUBSET OF THE GD CIRCUIT. THE TRAFFIC SIGNAL CONTROLLER WILL RECEIVE ONE MESSAGE FROM THE RAILROAD REGARDING THESE CIRCUITS. IF THE RAILROAD GATES ARE NOT FUNCTIONING, THE ISLR CIRCUIT INTERRUPTS THE GD CIRCUIT TO ALLOW TRANSITION TO LIMITED SERVICE OPERATIONS.

WHEN PREEMPTION IS COMPLETE OR INTERRUPTED, ALL ACTIVE CIRCUITS WILL RETURN TO THE "NON ACTIVE" STATE.

APPROVED FOR RAILROAD WORK.

## PHASE DIAGRAM - SEGMENT 12

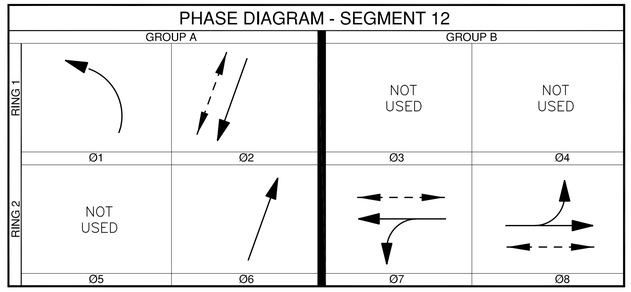


NOTE: RR TRACKS OUT OF SERVICE DURING THIS SEGMENT

## RR PREEMPTION INTERCONNECT WIRING

### SERIAL INTERCONNECT (PRIMARY)

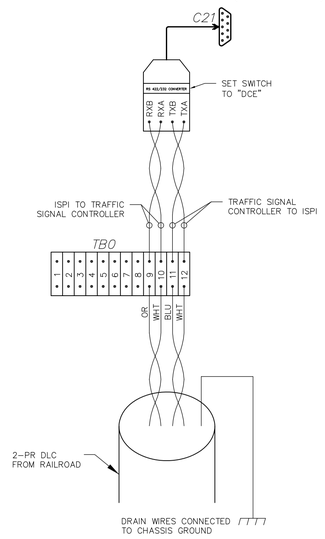


### HARD WIRE RELAY BACK–UP (SECONDARY)

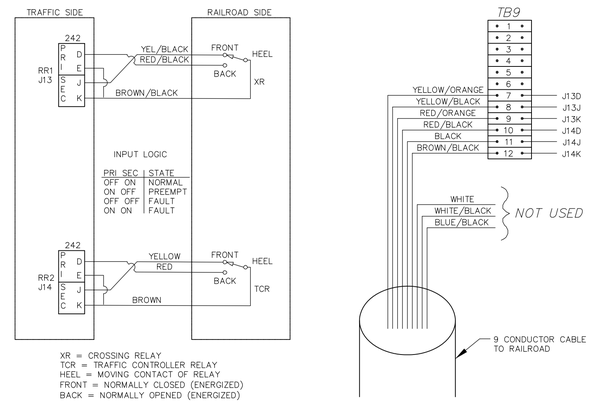


NOTE: SERIAL INTERCONNECT TO TAKE HIERARCHY IN COMMUNICATION WITH TRAFFIC SIGNAL CONTROLLER. RR SIGNAL HARD WIRE RELAYS SERVE AS A BACK–UP, SHOULD THE SERIAL CONNECTION FAIL FOR ANY REASON.

| Dist | COUNTY | ROUTE | POST MILES TOTAL PROJECT | SHEET No. | TOTAL SHEETS |
|---|---|---|---|---|---|
| 07 | LA | 5 | 29.4/31.6 | 1732 | 1931 |

REGISTERED CIVIL ENGINEER — DATE 5–21–12

PLANS APPROVAL DATE 05–21–12

REGISTERED PROFESSIONAL ENGINEER — KAREN M. HANKINSON — No. C54175 — Exp. 6/30/13 — CIVIL — STATE OF CALIFORNIA

THE STATE OF CALIFORNIA OR ITS OFFICERS OR AGENTS SHALL NOT BE RESPONSIBLE FOR THE ACCURACY OR COMPLETENESS OF SCANNED COPIES OF THIS PLAN SHEET.

SCRRA
279 E. ARROW HIGHWAY
SAN DIMAS, CA 91773

RAILPROS
1 ADA PARKWAY, SUITE 200
IRVINE, CA 92618

CITY OF BURBANK
PUBLIC WORKS DEPARTMENT

| | DATE |
|---|---|
| RECOMMENDED: | |
| CITY ENGINEER | |
| APPROVED: | |
| PUBLIC WORKS DIRECTOR | |

| | PAGE | DATE |
|---|---|---|
| FIELD BOOK | | |
| DESIGNED | JD | 3/8/12 |
| DRAWN | SW | 4/15/12 |
| CHECKED | KMH | 5/1/12 |
| REVIEWED | CC | 5/6/12 |

SHEET 366 OF 394

BID SCHEDULE NO.

WORK ORDER NO.

PLAN NO. RR-TC-017

LAST REVISION 06–05–12
DATE PLOTTED => Jul 16, 12
TIME PLOTTED => 11:59:27am

# RR-TEMPORARY TRAFFIC SIGNAL MODIFICATION PLAN - SEGMENT 4-12 BUENA VISTA STREET AT SAN FERNANDO BOULEVARD

| REVISED BY | DATE REVISED |
|---|---|
| | |
| | |
| JOE DONALDSON | KAREN M. HANKINSON |
| CALCULATED–DESIGNED BY | CHECKED BY |
| CONSULTANT FUNCTIONAL SUPERVISOR | KAREN M. HANKINSON |
| STATE OF CALIFORNIA – DEPARTMENT OF TRANSPORTATION | DESIGN |

BORDER LAST REVISED 7/2/2010 | USERNAME =>Donaldson DGN FILE =>TC–017 | RELATIVE BORDER SCALE IS IN INCHES 0 1 2 3 | UNIT 1812 | PROJECT NUMBER & PHASE 07000211191

| Dist | COUNTY | ROUTE | POST MILES TOTAL PROJECT | SHEET No. | TOTAL SHEETS |
|---|---|---|---|---|---|
| 07 | LA | 5 | 29.4/31.6 | 1733 | 1931 |

REGISTERED CIVIL ENGINEER — DATE 5-21-12

PLANS APPROVAL DATE 05-21-12

REGISTERED PROFESSIONAL ENGINEER — KAREN M. HANKINSON — No. C54175 — Exp. 6/30/13 — CIVIL — STATE OF CALIFORNIA

THE STATE OF CALIFORNIA OR ITS OFFICERS OR AGENTS SHALL NOT BE RESPONSIBLE FOR THE ACCURACY OR COMPLETENESS OF SCANNED COPIES OF THIS PLAN SHEET.

SCRRA
279 E. ARROW HIGHWAY
SAN DIMAS, CA 91773

RAILPROS
1 ADA PARKWAY, SUITE 200
IRVINE, CA 92618

## LEGEND

- FLASHING ARROW PANEL (FAP)
- TYPE II BARRICADE WITH SIGN(S)
- SURFACE MOUNTED CHANNELIZER
- PORTABLE DELINEATOR
- (S) SIGNALIZED INTERSECTION
- EXISTING STRIPING, MARKING & PAVEMENT LEGEND TO REMAIN
- EXISTING STRIPING, MARKING & PAVEMENT LEGEND TO BE REMOVED
- STRIPING, MARKING & PAVEMENT LEGEND
- (#) CALTRANS STRIPING DETAIL NUMBER.
- WORK ZONE
- LANE OR SIDEWALK CLOSURE
- TEMPORARY CRASH CUSHION
- TEMPORARY RAILING (TYPE K)
- EXISTING EQUIPMENT TO REMAIN
- EXISTING EQUIPMENT TO BE REMOVED
- EQUIPMENT TO BE INSTALLED

Underground Service Alert
CALL BEFORE YOU DIG
Call: TOLL FREE 1-800 227-2600
TWO WORKING DAYS BEFORE YOU DIG

"BV" STA 60+92
23.14' RIGHT
JOIN EXISTING STRIPING

"BV" STA 60+75
13.92' RIGHT
JOIN EXISTING STRIPING

"BV" STA 60+58
13.94' RIGHT

ROUTE 5 FREEWAY

FREEWAY BRIDGE LINE

"BV" STA 60+24
16.79' RIGHT

RADIUS=200'

"BV" STA 59+87
23.21' RIGHT

"BV" STA 59+63
24.50' RIGHT

RADIUS=200'

HMA DIKE (TYPE A)

8' SIDEWALK

"BV" STA 59+00
23.99' RIGHT

"BV" STA 58+78
19.11' RIGHT

6' SIDEWALK

RR SIGNAL HOUSE

SHOOFLY

N. SAN FERNANDO Blvd.

RAILROAD RIGHT-OF-WAY

OIL LINE

"BV" STA 58+74
10.74' RIGHT
BEGIN STRIPING

"BV" STA 58+84
27.07' RIGHT

"BV" STA 57+01
22.00' RIGHT

"BV" STA 57+01
12.00' RIGHT

FREDERIC St.

N. BUENA VISTA St.

R9-3a
M4-9b(Rt)

20 0 20 40
1" = 20' GRAPHIC SCALE

## CONSTRUCTION NOTES - SEGMENT 5

1. INSTALL 3-20' TEMPORARY RAILING (TYPE K) ON TOP OF CURB FACE TO CREATE WORK ZONE FOR RR ABUTMENT FOUNDATION CONSTRUCTION.
2. CONSTRUCT ABUTMENT FOOTINGS ON THE WEST SIDE OF BUENA VISTA STREET FOR RR OVERCROSSING (REFER TO STRUCTURAL BRIDGE PLANS).
3. CONSTRUCT ABUTMENT WALL AND BENT CAPS ON THE WEST SIDE OF BUENA VISTA STREET FOR RR OVERCROSSING (REFER TO STRUCTURAL BRIDGE PLANS).
4. INSTALL 3-20' TEMPORARY RAILING (TYPE K) AND ARRAY 'TU11' TEMPORARY CRASH CUSHION TO CREATE WORK ZONE FOR RR BRIDGE CONSTRUCTION, PER CALTRANS STD. PLAN RSP T1A.
5. RESTRICT PEDESTRIAN MOVEMENT FROM WINONA AVE TO SAN FERNANDO BLVD. (SEE PED DETOUR 1, SHEET RR-TC-004).
6. MAINTAIN COVER ON VEHICLE HEAD.
7. MAINTAIN COVER ON PED HEAD AND PED PUSH BUTTON, AND SIGNAGE PER PED DETOUR 1, SHEET RR-TC-002.
8. INSTALL 4" WHITE SOLID LANE LINE STRIPE.
9. UNCOVER PED HEAD ON NORTHEAST AND SOUTHEAST CORNER.
10. MAINTAIN COVER OVER YELLOW AND GREEN RIGHT TURN ARROWS ON SIGNAL HEADS.
11. INSTALL 12" WHITE CROSSWALK.
12. INSTALL 1-20' TEMPORARY RAILING (TYPE K).

# RR-TRAFFIC CONTROL PLAN SEGMENT 5 BUENA VISTA STREET AT SAN FERNANDO BOULEVARD

APPROVED FOR RAILROAD WORK.

| REVISED BY | DATE REVISED |
|---|---|
| JOE DONALDSON | KAREN M. HANKINSON |

CALCULATED-DESIGNED BY | CHECKED BY

CONSULTANT FUNCTIONAL SUPERVISOR: KAREN M. HANKINSON

STATE OF CALIFORNIA - DEPARTMENT OF TRANSPORTATION — DESIGN

CITY OF BURBANK
PUBLIC WORKS DEPARTMENT

RECOMMENDED: CITY ENGINEER — DATE
APPROVED: PUBLIC WORKS DIRECTOR — DATE

FIELD BOOK — PAGE
DESIGNED KMH — DATE 3/9/12
DRAWN SW — DATE 4/15/12
CHECKED JD — DATE 5/1/12
REVIEWED KMH — DATE 5/9/12

SHEET 367 OF 394

BID SCHEDULE NO.

WORK ORDER NO.

PLAN NO. RR-TC-018

LAST REVISION 06-05-12
DATE PLOTTED => Jul 18, 12
TIME PLOTTED => 8:38:07am

BORDER LAST REVISED 7/2/2010 | USERNAME =>Donaldson DGN FILE =>TC-018 | RELATIVE BORDER SCALE IS IN INCHES 0 1 2 3 | UNIT 1812 | PROJECT NUMBER & PHASE 07000211191

| Dist | COUNTY | ROUTE | POST MILES TOTAL PROJECT | SHEET No. | TOTAL SHEETS |
|---|---|---|---|---|---|
| 07 | LA | 5 | 29.4/31.6 | 1734 | 1931 |

REGISTERED CIVIL ENGINEER — DATE 5-21-12

PLANS APPROVAL DATE 05-21-12

REGISTERED PROFESSIONAL ENGINEER — KAREN M. HANKINSON — No. C54175 — Exp. 6/30/13 — CIVIL — STATE OF CALIFORNIA

THE STATE OF CALIFORNIA OR ITS OFFICERS OR AGENTS SHALL NOT BE RESPONSIBLE FOR THE ACCURACY OR COMPLETENESS OF SCANNED COPIES OF THIS PLAN SHEET.

SCRRA
279 E. ARROW HIGHWAY
SAN DIMAS, CA 91773

RAILPROS
1 ADA PARKWAY, SUITE 200
IRVINE, CA 92618

## LEGEND

- FLASHING ARROW PANEL (FAP)
- TYPE II BARRICADE WITH SIGN(S)
- SURFACE MOUNTED CHANNELIZER
- PORTABLE DELINEATOR
- (S) SIGNALIZED INTERSECTION
- EXISTING STRIPING, MARKING & PAVEMENT LEGEND TO REMAIN
- EXISTING STRIPING, MARKING & PAVEMENT LEGEND TO BE REMOVED
- STRIPING, MARKING & PAVEMENT LEGEND
- (#) CALTRANS STRIPING DETAIL NUMBER.
- WORK ZONE
- LANE OR SIDEWALK CLOSURE.
- TEMPORARY CRASH CUSHION.
- TEMPORARY RAILING (TYPE K)
- EXISTING EQUIPMENT TO REMAIN
- EXISTING EQUIPMENT TO BE REMOVED
- EQUIPMENT TO BE INSTALLED

ROUTE 5 FREEWAY

FREEWAY BRIDGE LINE

"BV" STA 61+37.01
12.87' LEFT
END STRIPING

"BV" STA 60+82.99
14.07' LEFT

"BV" STA 60+34.92
11.4' LEFT

"BV" STA 59+84.62
19.46' LEFT

"BV" STA 59+40.97
20.5' LEFT
BEGIN STRIPING

"BV" STA 58+88.79
17.2' LEFT
END STRIPING

"BV" STA 59+14.73
18.9' LEFT
BEGIN STRIPING

RADIUS=230'

RADIUS=292'

VAR 11'

10'

11'

17'

14'

12'

HMA DIKE (TYPE A)

RAILROAD RIGHT-OF-WAY

FROM

TO

OIL LINE

RR SIGNAL HOUSE

SHOOFLY

N. SAN FERNANDO Blvd.

FREDERIC St.

N. BUENA VISTA St.

"SFS" 38+00

"SFS" 39+00

"SFS" 40+00

"SFS" 41+00

"SFS" 42+00

"BV" 58+00

"BV" 57+00

37+00

PV

S *

## CONSTRUCTION NOTES - SEGMENT 6

1. CONSTRUCT ADDITIONAL MEDIAN ISLAND (REFER TO TRAFFIC CONTROL PLAN – CIVIL DETAILS, SHEET (RR–TC–020).
2. MAINTAIN COVER ON PED HEAD AND PED PUSH BUTTON, AND PROVIDE SIGNAGE PER PED DETOUR 1, SHEET RR–TC–004.
3. MAINTAIN COVER ON VEHICLE HEAD.
4. REMOVE MEDIAN ISLAND (REFER TO TRAFFIC CONTROL PLAN – CIVIL DETAILS, SHEET RR–TC–020).
5. RESTRICT PEDESTRIAN MOVEMENT FROM WINONA AVE TO SAN FERNANDO BLVD. (SEE PED DETOUR 1, SHEET RR–TC–004).
6. CLOSE SOUTHBOUND LEFT–TURN LANE ON BUENA VISTA ST.
7. INSTALL TEMPORARY RAILING (TYPE K) AND TEMPORARY CRASH CUSHION TO CREATE WORK ZONE FOR RR BRIDGE CONSTRUCTION.
8. FURNISH AND INSTALL SURFACE MOUNTED CHANNELIZERS.
9. REMOVE STICKDOWN DELINEATORS.
10. INSTALL MEDIAN ISLAND USING HMA DIKE (TYPE A) AND CREATING A "0" LEVEL PEDESTRIAN LANDING (REFER TO TRAFFIC CONTROL PLAN – CIVIL DETAILS, SHEET RR–TC–020).
11. MAINTAIN COVER OVER YELLOW AND GREEN RIGHT TURN ARROWS ON SIGNAL HEADS.
12. REMOVE HMA DIKE (TYPE A)
13. INSTALL 24" RR LIMIT LINE

* NOTE:
FOR SEGMENTS 6–12, NORTHBOUND/SOUTHBOUND TRAFFIC ON BUENA VISTA WILL BE RUN ON SPLIT PHASE SIGNAL OPERATIONS.

## RAILROAD CONSTRUCTION NOTES

1. RR CONTRACTOR TO RELOCATE EXISTING CPUC No. 9 TO NEW LOCATION AFTER K–RAIL AND RESTRIPING OF SOUTHBOUND BUENA VISTA STREET IS COMPLETE (REFER TO SHEET RR–TC–023).
2. RR CONTRACTOR TO ADJUST ARMS ACCORDINGLY AFTER RELOCATING EXISTING CPUC No. 9 IN MEDIAN.
3. RR CONTRACTOR TO REMOVE No.8 FLASHER.

20 0 20 40
1" = 20' GRAPHIC SCALE

APPROVED FOR RAILROAD WORK.

# RR-TRAFFIC CONTROL PLAN SEGMENT 6 BUENA VISTA STREET AT SAN FERNANDO BOULEVARD

CITY OF BURBANK
PUBLIC WORKS DEPARTMENT

RECOMMENDED: CITY ENGINEER — DATE
APPROVED: PUBLIC WORKS DIRECTOR — DATE

| | PAGE | DATE |
|---|---|---|
| FIELD BOOK | | |
| DESIGNED | KMH | 3/8/12 |
| DRAWN | SW | 4/15/12 |
| CHECKED | JD | 5/1/12 |
| REVIEWED | KMH | 5/8/12 |

SHEET 368 OF 394

BID SCHEDULE NO.

WORK ORDER NO.

PLAN NO. RR-TC-019

LAST REVISION 06-05-12
DATE PLOTTED => Jul 18, 12
TIME PLOTTED => 8:43:01am

CALCULATED–DESIGNED BY
CHECKED BY

REVISED BY — JOE DONALDSON
DATE REVISED — KAREN M. HANKINSON

CONSULTANT FUNCTIONAL SUPERVISOR — KAREN M. HANKINSON

STATE OF CALIFORNIA – DEPARTMENT OF TRANSPORTATION — DESIGN

BORDER LAST REVISED 7/2/2010

USERNAME =>Donaldson
DGN FILE =>TC-019

RELATIVE BORDER SCALE IS IN INCHES 0 1 2 3

UNIT 1812

PROJECT NUMBER & PHASE 07000211191

| Dist | COUNTY | ROUTE | POST MILES TOTAL PROJECT | SHEET No. | TOTAL SHEETS |
|---|---|---|---|---|---|
| 07 | LA | 5 | 29.4/31.6 | 1735 | 1931 |

REGISTERED CIVIL ENGINEER — 5-21-12 DATE

REGISTERED PROFESSIONAL ENGINEER — CHRIS COFFMAN No. C53173 Exp. 6/30/13 CIVIL — STATE OF CALIFORNIA

05-21-12
PLANS APPROVAL DATE

THE STATE OF CALIFORNIA OR ITS OFFICERS OR AGENTS SHALL NOT BE RESPONSIBLE FOR THE ACCURACY OR COMPLETENESS OF SCANNED COPIES OF THIS PLAN SHEET.

SCRRA
279 E. ARROW HIGHWAY
SAN DIMAS, CA 91773

RAILPROS
1 ADA PARKWAY, SUITE 200
IRVINE, CA 92618

# KEY NOTES:

1. CURB AND GUTTER
2. CHAIN LINK FENCE (TYPE CL-4)
3. 3" ACP ON COMPACTED SUBGRADE
4. HMA PAVEMENT (TYPE A)
5. HMA DIKE (TYPE A)(MOD) (SEE DATA TABLE 1)
6. MEDIAN
7. DETECTABLE WARNING SURFACE PER CALTRANS RSP A88A

# LEGEND:

- REMOVE
- PROTECT IN PLACE
- CONSTRUCT/INSTALL/PERFORM PER KEY NOTES (THIS SHEET) AND AS DETAILED IN THE SPECIFICATIONS
- SAWCUT
- HMA PAVEMENT (TYPE A) OVER CMB AND TOTAL AREA OF DEMOLITION
- AREA OF SAWCUT

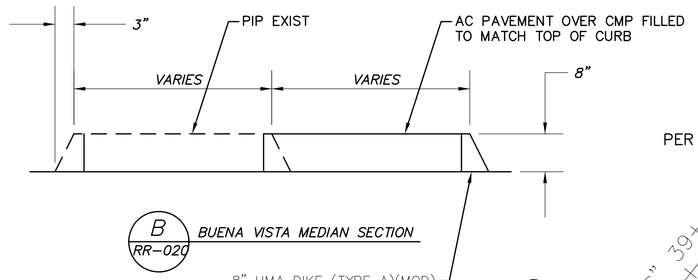


B RR-020 BUENA VISTA MEDIAN SECTION

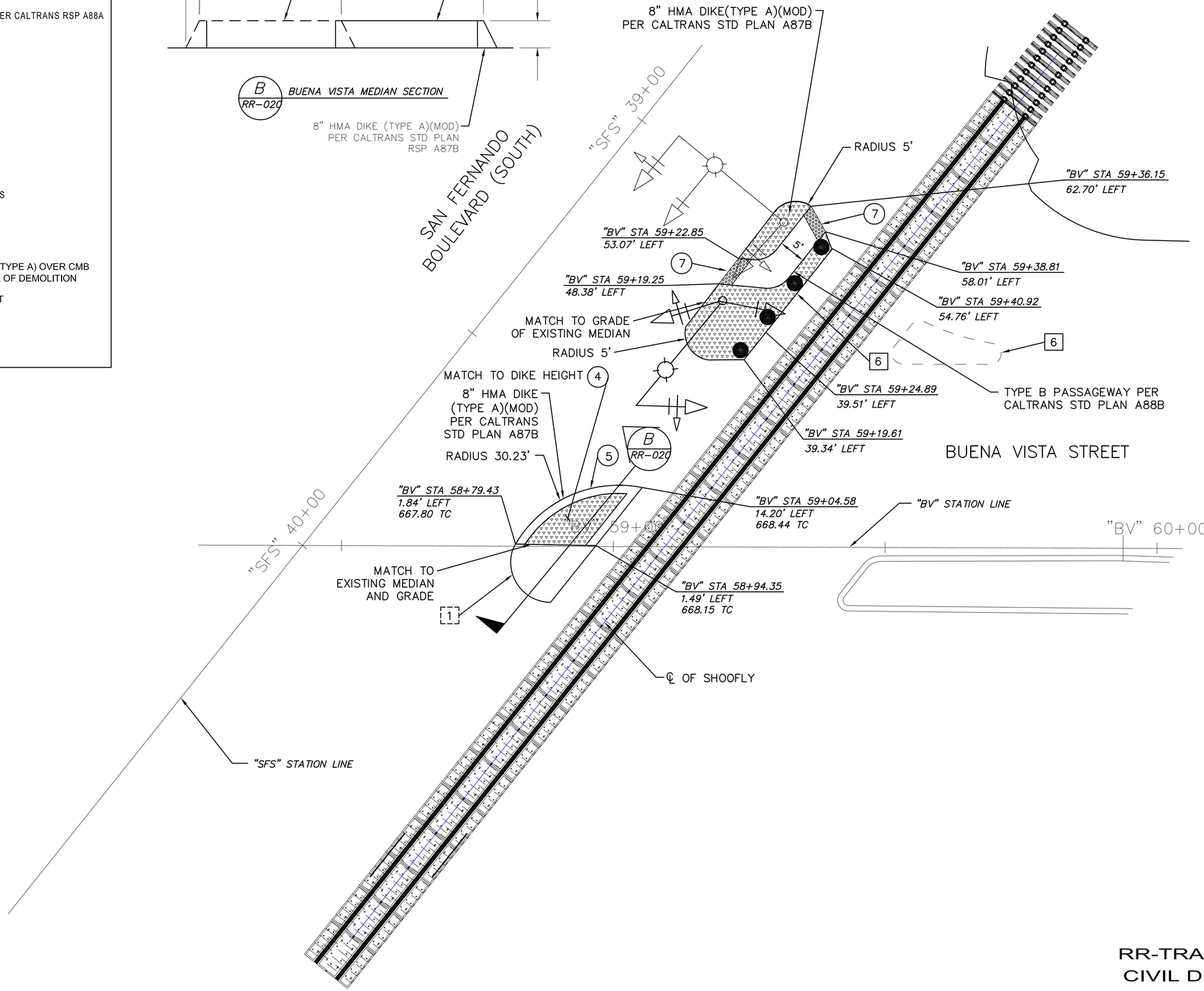


B RR-020

10 0 10 20
1" = 10' GRAPHIC SCALE

# RR-TRAFFIC CONTROL PLAN
# CIVIL DETAILS - SEGMENT 6
# BUENA VISTA STREET AT SAN FERNANDO BOULEVARD

APPROVED FOR RAILROAD WORK.

CITY OF BURBANK
PUBLIC WORKS DEPARTMENT

RECOMMENDED: CITY ENGINEER — DATE
APPROVED: PUBLIC WORKS DIRECTOR — DATE

| | PAGE |
|---|---|
| FIELD BOOK | |
| DESIGNED KMH | DATE 3/8/12 |
| DRAWN SW | DATE 4/15/12 |
| CHECKED JD | DATE 5/1/12 |
| REVIEWED KMH | DATE 5/8/12 |

SHEET 369 OF 394

BID SCHEDULE NO.

WORK ORDER NO.

PLAN NO. RR-TC-020

LAST REVISION 06-05-12
DATE PLOTTED => Jul 18, 12
TIME PLOTTED => 8:45:00am

| REVISED BY | DATE REVISED |
|---|---|
| JOE DONALDSON | CHRIS COFFMAN |

CALCULATED-DESIGNED BY: CHRIS COFFMAN
CHECKED BY:
CONSULTANT FUNCTIONAL SUPERVISOR: CHRIS COFFMAN

STATE OF CALIFORNIA - DEPARTMENT OF TRANSPORTATION
DESIGN

BORDER LAST REVISED 7/2/2010
USERNAME =>Donaldson
DGN FILE =>TC-020
RELATIVE BORDER SCALE IS IN INCHES 0 1 2 3
UNIT 1812
PROJECT NUMBER & PHASE 07000211191

| Dist | COUNTY | ROUTE | POST MILES TOTAL PROJECT | SHEET No. | TOTAL SHEETS |
|---|---|---|---|---|---|
| 07 | LA | 5 | 29.4/31.6 | 1736 | 1931 |

REGISTERED CIVIL ENGINEER — DATE 5-21-12

PLANS APPROVAL DATE 05-21-12

KAREN M. HANKINSON No. C54175 Exp. 6/30/13 CIVIL — REGISTERED PROFESSIONAL ENGINEER — STATE OF CALIFORNIA

THE STATE OF CALIFORNIA OR ITS OFFICERS OR AGENTS SHALL NOT BE RESPONSIBLE FOR THE ACCURACY OR COMPLETENESS OF SCANNED COPIES OF THIS PLAN SHEET.

SCRRA
279 E. ARROW HIGHWAY
SAN DIMAS, CA 91773

RAILPROS
1 ADA PARKWAY, SUITE 200
IRVINE, CA 92618

## LEGEND

- FLASHING ARROW PANEL (FAP)
- TYPE II BARRICADE WITH SIGN(S)
- SURFACE MOUNTED CHANNELIZER
- PORTABLE DELINEATOR
- (S) SIGNALIZED INTERSECTION
- TEMPORARY RAILING (TYPE K)
- *EXISTING STRIPING, MARKING & PAVEMENT LEGEND TO REMAIN*
- *EXISTING STRIPING, MARKING & PAVEMENT LEGEND TO BE REMOVED*
- *STRIPING, MARKING & PAVEMENT LEGEND*
- (#) *CALTRANS STRIPING DETAIL NUMBER.*
- *WORK ZONE*
- *LANE OR SIDEWALK CLOSURE*
- *EXISTING EQUIPMENT TO REMAIN*
- *EXISTING EQUIPMENT TO BE REMOVED*
- *EQUIPMENT TO BE INSTALLED*

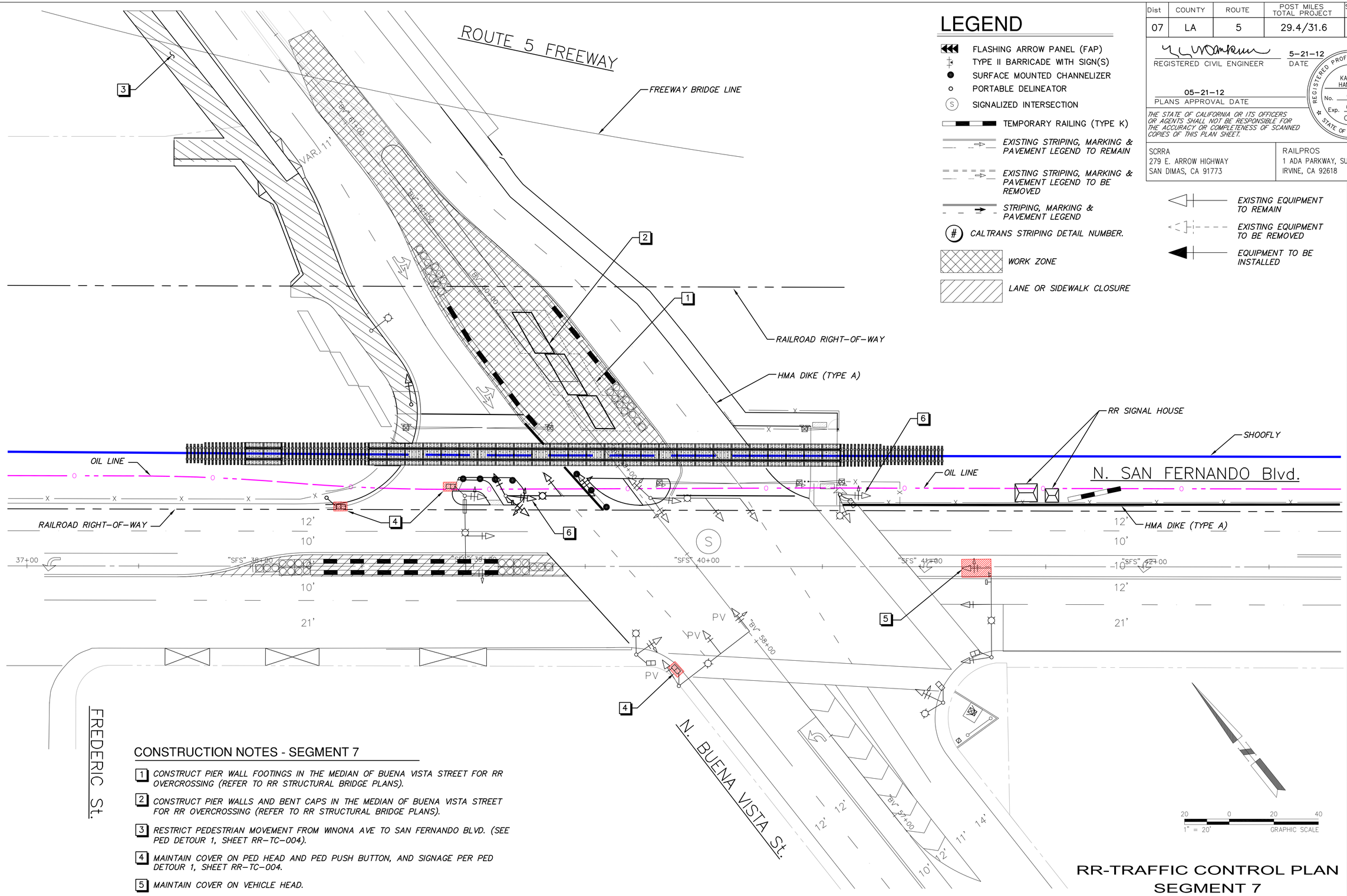


## CONSTRUCTION NOTES - SEGMENT 7

1. *CONSTRUCT PIER WALL FOOTINGS IN THE MEDIAN OF BUENA VISTA STREET FOR RR OVERCROSSING (REFER TO RR STRUCTURAL BRIDGE PLANS).*
2. *CONSTRUCT PIER WALLS AND BENT CAPS IN THE MEDIAN OF BUENA VISTA STREET FOR RR OVERCROSSING (REFER TO RR STRUCTURAL BRIDGE PLANS).*
3. *RESTRICT PEDESTRIAN MOVEMENT FROM WINONA AVE TO SAN FERNANDO BLVD. (SEE PED DETOUR 1, SHEET RR-TC-004).*
4. *MAINTAIN COVER ON PED HEAD AND PED PUSH BUTTON, AND SIGNAGE PER PED DETOUR 1, SHEET RR-TC-004.*
5. *MAINTAIN COVER ON VEHICLE HEAD.*
6. *MAINTAIN COVER OVER YELLOW AND GREEN RIGHT TURN ARROWS ON SIGNAL HEADS.*

APPROVED FOR RAILROAD WORK.

# RR-TRAFFIC CONTROL PLAN SEGMENT 7 BUENA VISTA STREET AT SAN FERNANDO BOULEVARD

CITY OF BURBANK
PUBLIC WORKS DEPARTMENT

RECOMMENDED: CITY ENGINEER — DATE
APPROVED: PUBLIC WORKS DIRECTOR — DATE

| | | PAGE |
|---|---|---|
| FIELD BOOK | KMH | DATE 3/6/12 |
| DESIGNED | SW | DATE 4/15/12 |
| DRAWN | JD | DATE 5/1/12 |
| CHECKED | KMH | DATE 5/6/12 |
| REVIEWED | | |

SHEET 370 OF 394

BID SCHEDULE NO.

WORK ORDER NO.

PLAN NO. RR-TC-021

LAST REVISION 06-05-12 DATE PLOTTED => Jul 18, 12 TIME PLOTTED => 8:48:46am

| REVISED BY | DATE REVISED |
|---|---|
| JOE DONALDSON | KAREN M. HANKINSON |

CALCULATED-DESIGNED BY
CHECKED BY

CONSULTANT FUNCTIONAL SUPERVISOR
KAREN M. HANKINSON

STATE OF CALIFORNIA – DEPARTMENT OF TRANSPORTATION
DESIGN

BORDER LAST REVISED 7/2/2010 | USERNAME =>Donaldson DGN FILE =>TC-021 | RELATIVE BORDER SCALE IS IN INCHES 0 1 2 3 | UNIT 1812 | PROJECT NUMBER & PHASE 07000211191

| Dist | COUNTY | ROUTE | POST MILES TOTAL PROJECT | SHEET No. | TOTAL SHEETS |
|---|---|---|---|---|---|
| 07 | LA | 5 | 29.4/31.6 | 1737 | 1931 |

REGISTERED CIVIL ENGINEER — DATE 5-21-12

KAREN M. HANKINSON No. C54175 Exp. 6/30/13 CIVIL — REGISTERED PROFESSIONAL ENGINEER — STATE OF CALIFORNIA

05-21-12
PLANS APPROVAL DATE

*THE STATE OF CALIFORNIA OR ITS OFFICERS OR AGENTS SHALL NOT BE RESPONSIBLE FOR THE ACCURACY OR COMPLETENESS OF SCANNED COPIES OF THIS PLAN SHEET.*

SCRRA
279 E. ARROW HIGHWAY
SAN DIMAS, CA 91773

RAILPROS
1 ADA PARKWAY, SUITE 200
IRVINE, CA 92618

## LEGEND

- FLASHING ARROW PANEL (FAP)
- TYPE II BARRICADE WITH SIGN(S)
- SURFACE MOUNTED CHANNELIZER
- PORTABLE DELINEATOR
- (S) SIGNALIZED INTERSECTION
- EXISTING STRIPING, MARKING & PAVEMENT LEGEND TO REMAIN
- EXISTING STRIPING, MARKING & PAVEMENT LEGEND TO BE REMOVED
- STRIPING, MARKING & PAVEMENT LEGEND
- (#) CALTRANS STRIPING DETAIL NUMBER.
- SIDEWALK CLOSURE.
- WORK ZONE.
- TEMPORARY RAILING (TYPE K)
- EXISTING EQUIPMENT TO REMAIN
- EXISTING EQUIPMENT TO BE REMOVED
- EQUIPMENT TO BE INSTALLED

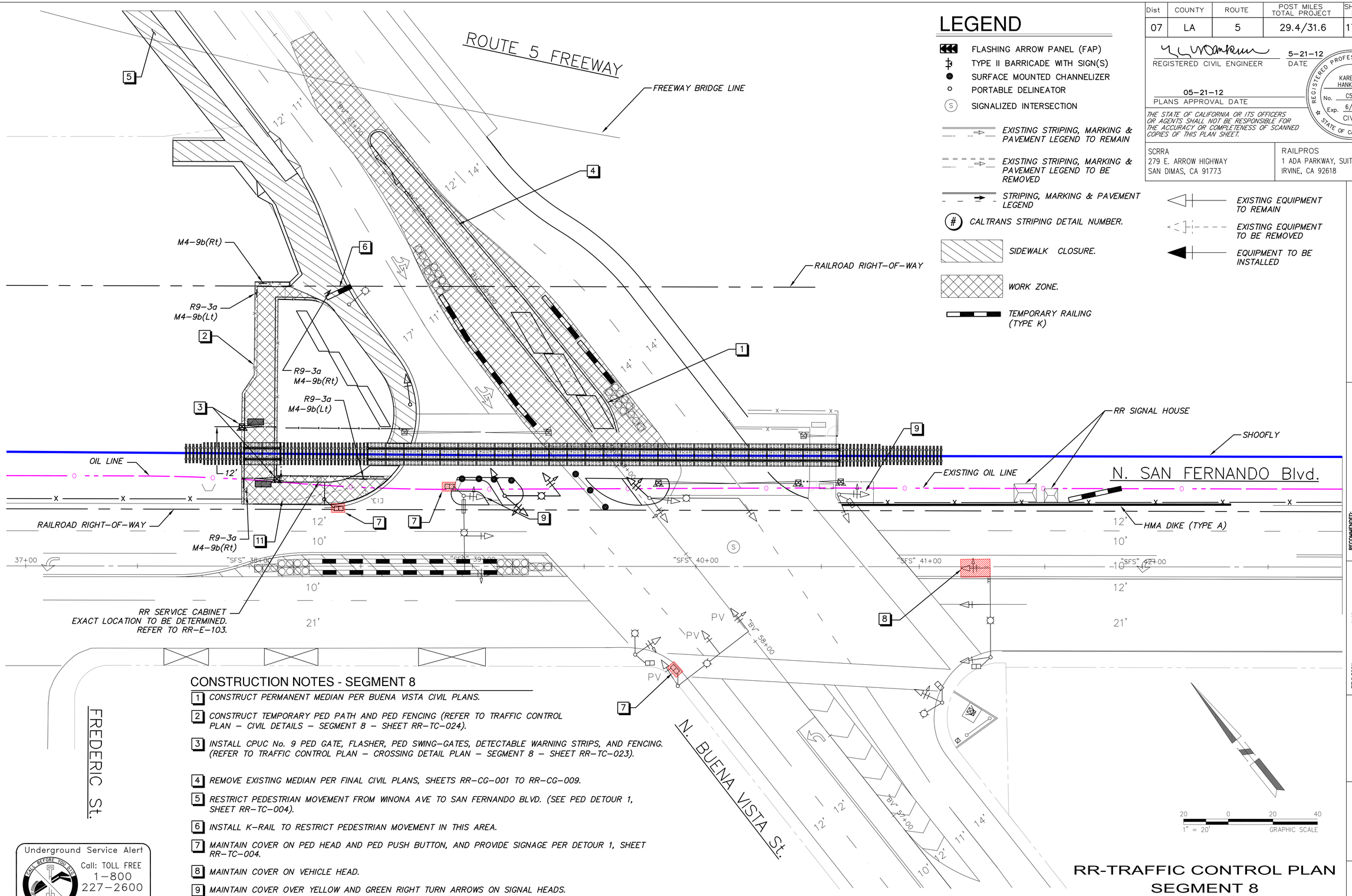


## CONSTRUCTION NOTES - SEGMENT 8

1. CONSTRUCT PERMANENT MEDIAN PER BUENA VISTA CIVIL PLANS.
2. CONSTRUCT TEMPORARY PED PATH AND PED FENCING (REFER TO TRAFFIC CONTROL PLAN – CIVIL DETAILS – SEGMENT 8 – SHEET RR-TC-024).
3. INSTALL CPUC No. 9 PED GATE, FLASHER, PED SWING-GATES, DETECTABLE WARNING STRIPS, AND FENCING. (REFER TO TRAFFIC CONTROL PLAN – CROSSING DETAIL PLAN – SEGMENT 8 – SHEET RR-TC-023).
4. REMOVE EXISTING MEDIAN PER FINAL CIVIL PLANS, SHEETS RR-CG-001 TO RR-CG-009.
5. RESTRICT PEDESTRIAN MOVEMENT FROM WINONA AVE TO SAN FERNANDO BLVD. (SEE PED DETOUR 1, SHEET RR-TC-004).
6. INSTALL K-RAIL TO RESTRICT PEDESTRIAN MOVEMENT IN THIS AREA.
7. MAINTAIN COVER ON PED HEAD AND PED PUSH BUTTON, AND PROVIDE SIGNAGE PER DETOUR 1, SHEET RR-TC-004.
8. MAINTAIN COVER ON VEHICLE HEAD.
9. MAINTAIN COVER OVER YELLOW AND GREEN RIGHT TURN ARROWS ON SIGNAL HEADS.
10. RELOCATE TYPE 1-A (7').
11. REMOVE EXISTING CHAIN LINK FENCE.

Underground Service Alert
CALL BEFORE YOU DIG
Call: TOLL FREE 1-800 227-2600
TWO WORKING DAYS BEFORE YOU DIG

APPROVED FOR RAILROAD WORK.

# RR-TRAFFIC CONTROL PLAN SEGMENT 8 BUENA VISTA STREET AT SAN FERNANDO BOULEVARD

CITY OF BURBANK
PUBLIC WORKS DEPARTMENT

RECOMMENDED: CITY ENGINEER — DATE
APPROVED: PUBLIC WORKS DIRECTOR — DATE

| | | PAGE |
|---|---|---|
| FIELD BOOK | | |
| DESIGNED | KMH | DATE 3/9/12 |
| DRAWN | SW | DATE 4/15/12 |
| CHECKED | JD | DATE 5/1/12 |
| REVIEWED | KMH | DATE 5/9/12 |

SHEET 371 OF 394

BID SCHEDULE NO.

WORK ORDER NO.

PLAN NO. RR-TC-022

LAST REVISION 06-05-12
DATE PLOTTED => Jul 18, 12
TIME PLOTTED => 10:51:12am

CALCULATED-DESIGNED BY | CHECKED BY
CONSULTANT FUNCTIONAL SUPERVISOR | KAREN M. HANKINSON
STATE OF CALIFORNIA – DEPARTMENT OF TRANSPORTATION | DESIGN
Caltrans

| REVISED BY | DATE REVISED |
|---|---|
| JOE DONALDSON | KAREN M. HANKINSON |

BORDER LAST REVISED 7/2/2010 | USERNAME =>Donaldson DGN FILE =>TC-022 | RELATIVE BORDER SCALE IS IN INCHES 0 1 2 3 | UNIT 1812 | PROJECT NUMBER & PHASE 07000211191

| Dist | COUNTY | ROUTE | POST MILES TOTAL PROJECT | SHEET No. | TOTAL SHEETS |
|---|---|---|---|---|---|
| 07 | LA | 5 | 29.4/31.6 | 1738 | 1931 |

REGISTERED CIVIL ENGINEER — DATE: 5-21-12

05-21-12
PLANS APPROVAL DATE

REGISTERED PROFESSIONAL ENGINEER — CHRIS COFFMAN — No. C53173 — Exp. 6/30/13 — CIVIL — STATE OF CALIFORNIA

THE STATE OF CALIFORNIA OR ITS OFFICERS OR AGENTS SHALL NOT BE RESPONSIBLE FOR THE ACCURACY OR COMPLETENESS OF SCANNED COPIES OF THIS PLAN SHEET.

SCRRA
279 E. ARROW HIGHWAY
SAN DIMAS, CA 91773

RAILPROS
1 ADA PARKWAY, SUITE 200
IRVINE, CA 92618

CITY OF BURBANK
PUBLIC WORKS DEPARTMENT

RECOMMENDED: _____ DATE _____ CITY ENGINEER
APPROVED: _____ DATE _____ PUBLIC WORKS DIRECTOR

FIELD BOOK _____ PAGE _____
DESIGNED KMH DATE 3/8/12
DRAWN SW DATE 4/15/12
CHECKED JD DATE 5/1/12
REVIEWED KMH DATE 5/6/12

SHEET 372 OF 394

BID SCHEDULE NO. _____

PLAN NO. RR-TC-023

WORK ORDER NO. _____

LAST REVISION 06-05-12
DATE PLOTTED => Jul 18, 12
TIME PLOTTED => 11:06:34am

REVISED BY | DATE REVISED
JOE DONALDSON | KAREN M. HANKINSON
CALCULATED-DESIGNED BY | CHECKED BY
CONSULTANT FUNCTIONAL SUPERVISOR | KAREN M. HANKINSON
STATE OF CALIFORNIA – DEPARTMENT OF TRANSPORTATION | DESIGN
Caltrans

N. SAN FERNANDO BOULEVARD

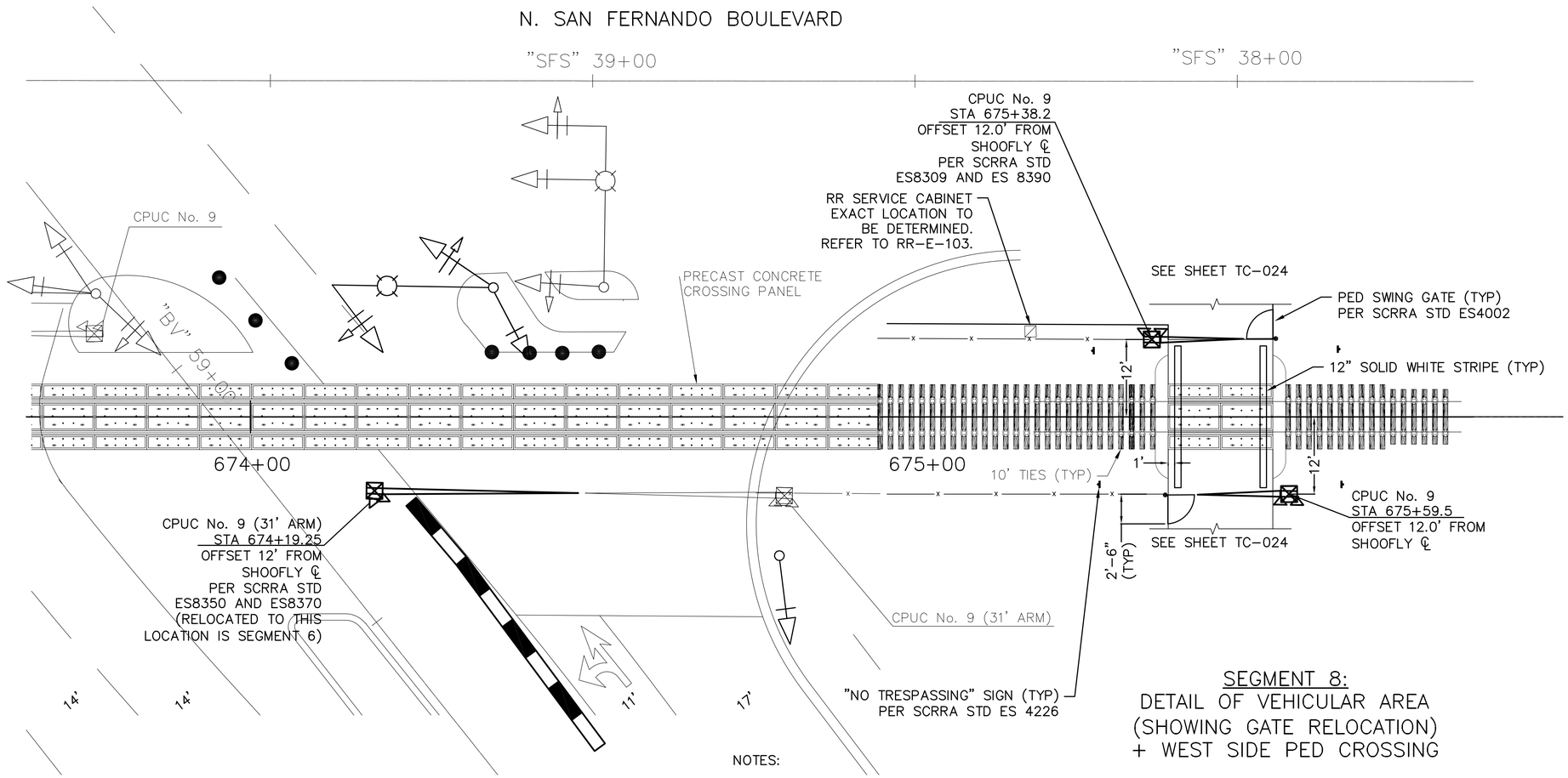


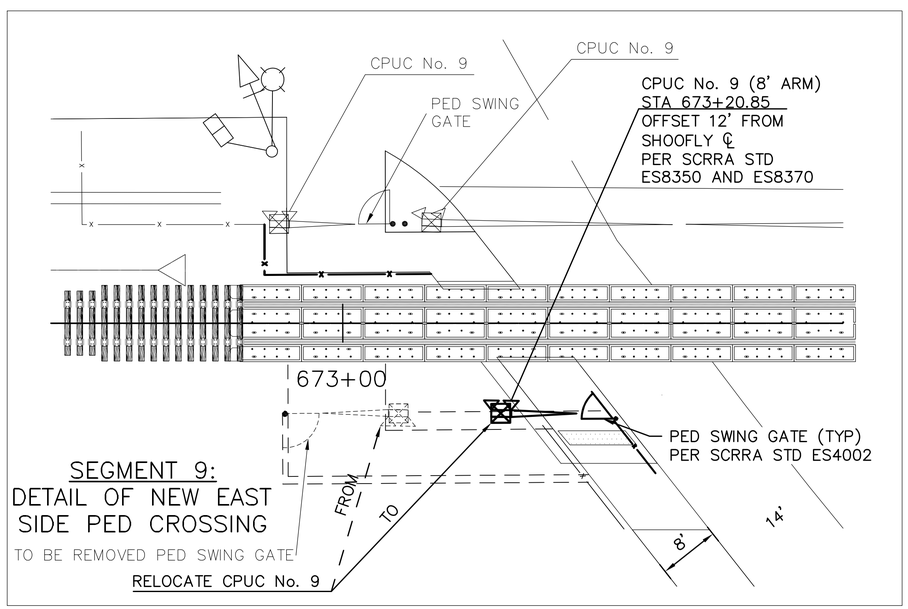


SEGMENT 9:
DETAIL OF NEW EAST SIDE PED CROSSING
TO BE REMOVED PED SWING GATE
RELOCATE CPUC No. 9

APPROVED FOR RAILROAD WORK.

SEGMENT 8:
DETAIL OF VEHICULAR AREA (SHOWING GATE RELOCATION) + WEST SIDE PED CROSSING

NOTES:

1. THESE STANDARDS ARE NOT INTENDED TO REPLACE EXISTING REGULATORY STANDARDS, NOR TO BE A SUBSTITUTE FOR ENGINEERING KNOWLEDGE, EXPERIENCE AND JUDGMENT. THEY ARE REQUIREMENTS, WHICH ARE IMPORTANT FOR SAFE CONSTRUCTION, MAINTENANCE AND OPERATION OF PEDESTRIAN FACILITIES AT HIGHWAY–RAIL GRADE CROSSINGS. SINCE THE ACTUAL DESIGN WILL TYPICALLY BE SITE SPECIFIC, INFORMATION SHOWN ON THIS DRAWING WILL BE MODIFIED AS NECESSARY IN CLOSE COLLABORATION WITH CALTRANS.
2. FOLLOW CALIFORNIA MUTCD FOR STRIPING, SIGNING, AND OTHER TRAFFIC WARNING DEVICES.
3. REFER TO THE FOLLOWING FOR ADDITIONAL DESIGN INFORMATION:
   a. SCRRA ENGINEERING STANDARD ES4201 FOR CONCRETE PANELS AND PAVED END RAMP.
   b. SCRRA ENGINEERING STANDARD ES5107 FOR SECURITY ACCESS GATE, K–RAIL AND BOLLARDS.
   c. SCRRA ENGINEERING STANDARD ES4001 FOR TRACK SECTIONS AND ASPHALT CONCRETE PAVEMENT DETAILS.
   d. SCRRA ENGINEERING STANDARD ES4002 FOR SWING GATE DETAILS.
   e. SCRRA ENGINEERING STANDARD ES8308 AND ES8309 FOR PEDESTRIAN WARNING DEVICES.
   f. CALTRANS STANDARD PLANS A20A FOR TRAFFIC LINES (STRIPES) AND RSP A88A FOR DETECTABLE WARNING SURFACE (STRIPE).
   g. CALTRANS STANDARD PLANS A20B DETAIL 27B AND A20C TYPE "G" FOR PAVEMENT MARKERS.
   h. CALTRANS STANDARD. PLANS A85, A85A AND A85B FOR 4' CHAIN LINK FENCE.
4. FENCING AND STEEL TUBE RAIL LOCATIONS SHALL BE ADJUSTED AS NECESSARY TO PROVIDE SCRRA MAINTENANCE VEHICLES ACCESS TO RIGHT–OF–WAY AND SIGNAL & TRACK FACILITIES WITH SCRRA APPROVAL.
5. PREEMPTION AND TOTAL WARNING TIME SHALL TAKE INTO CONSIDERATION THE PEDESTRIAN WALKING DISTANCE AND CLEARANCE TIME AND SHALL MEET THE REGULATIONS AND REQUIREMENTS OF THE AMERICAN WITH DISABILITIES ACT (ADA) AND CA MUTCD.
6. FOR NON–STANDARD FLASHER SUPPORT FOUNDATION DETAILS, SEE DWG RR–S4–001.

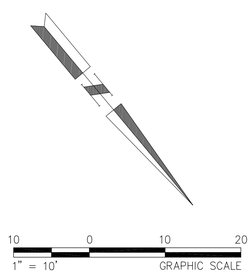


# RR-TRAFFIC CONTROL PLAN
# CROSSING DETAIL - SEGMENTS 8 AND 9
# BUENA VISTA STREET AT
# SAN FERNANDO BOULEVARD

BORDER LAST REVISED 7/2/2010 | USERNAME =>Donaldson DGN FILE =>TC-023 | RELATIVE BORDER SCALE IS IN INCHES 0 1 2 3 | UNIT 1812 | PROJECT NUMBER & PHASE 07000211191

| Dist | COUNTY | ROUTE | POST MILES TOTAL PROJECT | SHEET No. | TOTAL SHEETS |
|---|---|---|---|---|---|
| 07 | LA | 5 | 29.4/31.6 | 1739 | 1931 |

REGISTERED CIVIL ENGINEER — 5-21-12 DATE

CHRIS COFFMAN No. C53173 Exp. 6/30/13 CIVIL — REGISTERED PROFESSIONAL ENGINEER — STATE OF CALIFORNIA

05-21-12
PLANS APPROVAL DATE

THE STATE OF CALIFORNIA OR ITS OFFICERS OR AGENTS SHALL NOT BE RESPONSIBLE FOR THE ACCURACY OR COMPLETENESS OF SCANNED COPIES OF THIS PLAN SHEET.

SCRRA
279 E. ARROW HIGHWAY
SAN DIMAS, CA 91773

RAILPROS
1 ADA PARKWAY, SUITE 200
IRVINE, CA 92618

## KEY NOTES:

1. CURB AND GUTTER
2. CHAIN LINK FENCE (TYPE CL-4)
3. 3" ACP WALKWAY ON COMPACTED SUBGRADE
4. HMA PAVEMENT (TYPE A)
5. HMA DIKE (TYPE A)(SEE DATA TABLE 1)
6. MEDIAN
7. DETECTABLE WARNING SURFACE PER CALTRANS RSP A88A
8. SIDEWALK

## LEGEND:

REMOVE

PROTECT IN PLACE

CONSTRUCT/INSTALL/PERFORM PER KEY NOTES (THIS SHEET) AND AS DETAILED IN THE SPECIFICATIONS

N. SAN FERNANDO BOULEVARD

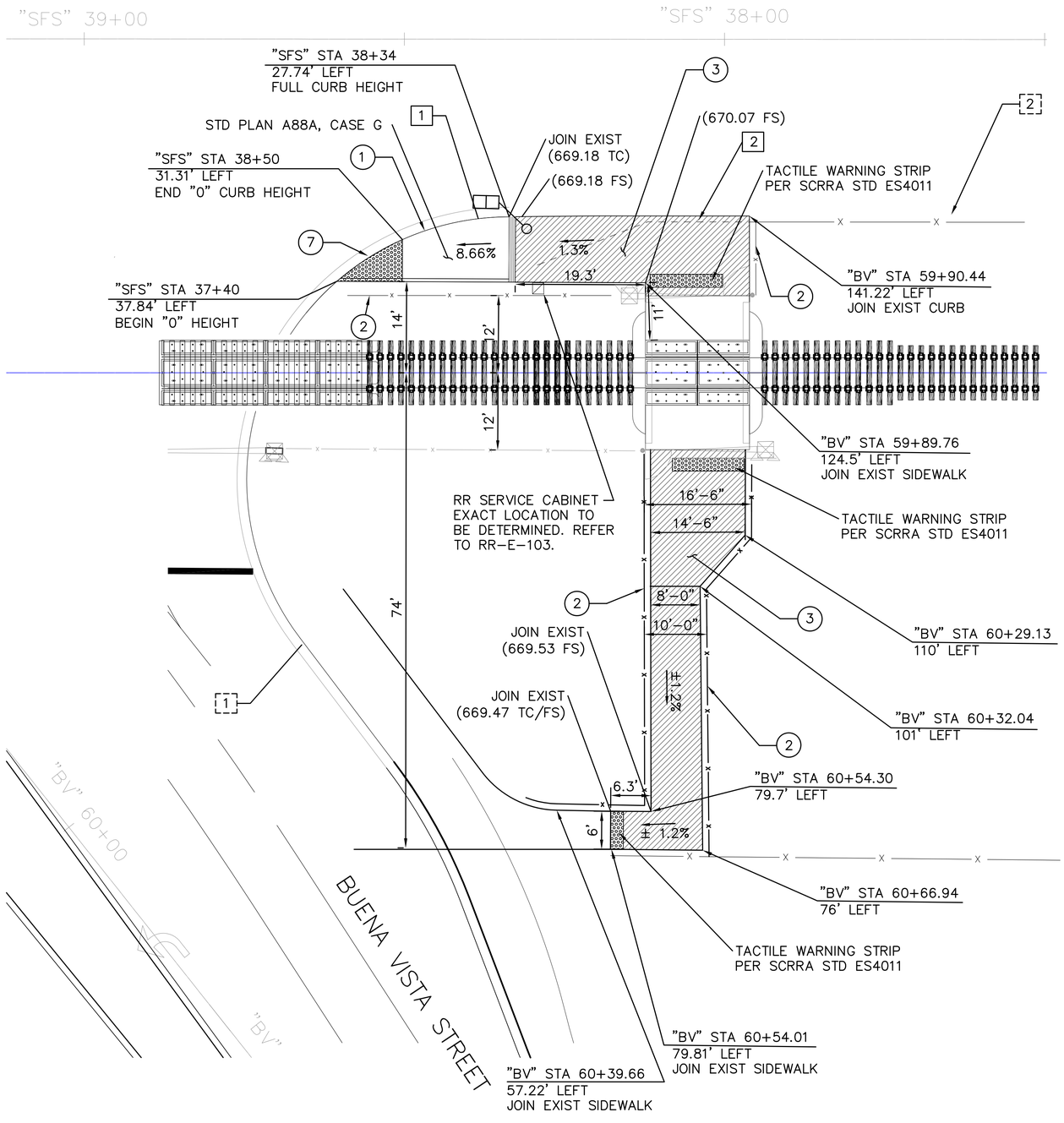


10 0 10 20
1" = 10' GRAPHIC SCALE

# RR-TRAFFIC CONTROL PLAN
# CIVIL DETAILS - SEGMENT 8
# BUENA VISTA STREET AT
# SAN FERNANDO BOULEVARD

APPROVED FOR RAILROAD WORK.

CITY OF BURBANK
PUBLIC WORKS DEPARTMENT

RECOMMENDED: CITY ENGINEER — DATE
APPROVED: PUBLIC WORKS DIRECTOR — DATE

| | | | |
|---|---|---|---|
| FIELD BOOK | | PAGE | |
| DESIGNED | KMH | DATE | 3/9/12 |
| DRAWN | SW | DATE | 4/15/12 |
| CHECKED | JD | DATE | 5/1/12 |
| REVIEWED | KMH | DATE | 5/9/12 |

SHEET 373 OF 394

BID SCHEDULE NO.

WORK ORDER NO.

PLAN NO. RR-TC-024

LAST REVISION 06-05-12
DATE PLOTTED => Jul 18, 12
TIME PLOTTED => 11:15:50am

| REVISED BY | DATE REVISED |
|---|---|
| JOE DONALDSON | KAREN M. HANKINSON |

CALCULATED-DESIGNED BY
CHECKED BY

STATE OF CALIFORNIA – DEPARTMENT OF TRANSPORTATION
DESIGN

CONSULTANT FUNCTIONAL SUPERVISOR
KAREN M. HANKINSON

BORDER LAST REVISED 7/2/2010

USERNAME =>Donaldson
DGN FILE =>TC-024

RELATIVE BORDER SCALE IS IN INCHES 0 1 2 3

UNIT 1812

PROJECT NUMBER & PHASE 07000211191

# LEGEND

- FLASHING ARROW PANEL (FAP)
- TYPE II BARRICADE WITH SIGN(S)
- SURFACE MOUNTED CHANNELIZER
- PORTABLE DELINEATOR
- (S) SIGNALIZED INTERSECTION
- EXISTING STRIPING, MARKING & PAVEMENT LEGEND TO REMAIN
- EXISTING STRIPING, MARKING & PAVEMENT LEGEND TO BE REMOVED
- STRIPING, MARKING & PAVEMENT LEGEND
- (#) CALTRANS STRIPING DETAIL NUMBER.
- EXISTING EQUIPMENT TO REMAIN
- EXISTING EQUIPMENT TO BE REMOVED
- EQUIPMENT TO BE INSTALLED
- LANE OR SIDEWALK CLOSURE.
- WORK ZONE.
- TEMPORARY RAILING (TYPE K)

## CONSTRUCTION NOTES - SEGMENT 9

11 PEDESTRIANS RESTRICTED IN THE AREA SHOWN.

12 AS CONSTRUCTION ACTIVITY DICTATES, CREATE A WORK ZONE FOR CURB AND GUTTER INSTALLATION, BY HAVING NORTHBOUND No. 2 LANE TRAFFIC TURN RIGHT AT SAN FERNANDO BLVD. AND WESTBOUND SAN FERNANDO BLVD.TRAFFIC TURNING RIGHT INTO THE No. 1 LANE. LANE TO REMAIN OPEN DURING NON-CONSTRUCTION HOURS. ESTIMATED TIMELINE FOR THIS TEMPORARY LANE CLOSURE 5 DAYS.

13 RESTRICT PEDESTRIAN MOVEMENT FROM WINONA AVE TO SAN FERNANDO BLVD. (SEE PED DETOUR 2 SHEET RR-TC-004)

14 MAINTAIN COVER OVER YELLOW AND GREEN RIGHT TURN ARROWS ON SIGNAL HEADS.

15 INSTALL FENCE AND HMA DIKE (TYPE A)

16 INSTALL DETECTABLE WARNING STRIPS PER SCRRA STD. ES4018.

| Dist | COUNTY | ROUTE | POST MILES TOTAL PROJECT | SHEET No. | TOTAL SHEETS |
|---|---|---|---|---|---|
| 07 | LA | 5 | 29.4/31.6 | 1740 | 1931 |

REGISTERED CIVIL ENGINEER — DATE 5-21-12

PLANS APPROVAL DATE 05-21-12

REGISTERED PROFESSIONAL ENGINEER — KAREN M. HANKINSON — No. C54175 — Exp. 6/30/13 — CIVIL — STATE OF CALIFORNIA

THE STATE OF CALIFORNIA OR ITS OFFICERS OR AGENTS SHALL NOT BE RESPONSIBLE FOR THE ACCURACY OR COMPLETENESS OF SCANNED COPIES OF THIS PLAN SHEET.

SCRRA
279 E. ARROW HIGHWAY
SAN DIMAS, CA 91773

RAILPROS
1 ADA PARKWAY, SUITE 200
IRVINE, CA 92618

CITY OF BURBANK
PUBLIC WORKS DEPARTMENT

RECOMMENDED: CITY ENGINEER — DATE
APPROVED: PUBLIC WORKS DIRECTOR — DATE

| FIELD BOOK | PAGE | DATE |
|---|---|---|
| DESIGNED | KMH | 3/8/12 |
| DRAWN | SW | 4/15/12 |
| CHECKED | JD | 5/1/12 |
| REVIEWED | KMH | 5/6/12 |

SHEET 374 OF 394

BID SCHEDULE NO. RR-TC-025

WORK ORDER NO.

PLAN NO.

LAST REVISION 06-05-12 — DATE PLOTTED => Jul 18, 12 — TIME PLOTTED => 11:16:52am

| REVISED BY | DATE REVISED |
|---|---|
| JOE DONALDSON | KAREN M. HANKINSON |

| CALCULATED-DESIGNED BY | CHECKED BY |
|---|---|

CONSULTANT FUNCTIONAL SUPERVISOR — KAREN M. HANKINSON

STATE OF CALIFORNIA - DEPARTMENT OF TRANSPORTATION — DESIGN

Caltrans®

Underground Service Alert
DIG ALERT BEFORE YOU DIG
Call: TOLL FREE 1-800 227-2600
TWO WORKING DAYS BEFORE YOU DIG

APPROVED FOR RAILROAD WORK.

## CONSTRUCTION NOTES - SEGMENT 9

1 CALTRANS TO CONSTRUCT ABUTMENT FOR THEIR BRIDGE STRUCTURE.

2 CONSTRUCT ABUTMENT FOOTINGS ON THE EAST SIDE OF BUENA VISTA STREET FOR RR OVERCROSSING (SEE STRUCTURAL BRIDGE PLANS).

3 CONSTRUCT ABUTMENT WALLS ON THE EAST SIDE OF BUENA VISTA STREET FOR RR OVERCROSSING (SEE STRUCTURAL BRIDGE PLANS).

4 CONSTRUCT PERMANENT CURB AND GUTTER ON EAST SIDE OF BUENA VISTA STREET.

5 REMOVE AND RELOCATE CPUC PED GATE AND SWING GATE. NEW INSTALLATION TO BE DONE AT THE END OF THIS SEGMENT OR AFTER THE ABUTMENTS ARE IN PLACE.

6 MAINTAIN COVER ON VEHICLE HEAD.

7 CONSTRUCT RETAINING WALLS FOR THE RR OVERPASS APPROACH, EAST OF BUENA VISTA STREET.

8 CLOSE CROSSWALK ON EAST LEG OF BUENA VISTA STREET/SAN FERNANDO BOULEVARD INTERSECTION BY COVERING PED HEADS. REMOVE PED PATH. RESTRICT PEDESTRIAN MOVEMENT FROM WINONA AVE TO SAN FERNANDO BLVD. (SEE PED DETOUR 2, SHEET RR-TC-004).

9 INSTALL 12" WHITE CROSSWALK IN WEST LEG OF BUENA VISTA STREET AND SAN FERNANDO BOULEVARD, UNCOVER PED HEADS AND PUSH BUTTONS.

10 CONSTRUCT SIDEWALK AFTER EAST ABUTMENT FOUNDATIONS ARE FINISHED.

FREDERIC St.

FREEWAY BRIDGE LINE

TYPE III BARRICADE WITH R9-9

ROUTE 5 FREEWAY

"BV" STA 60+53.92
23.14' RIGHT
END STRIPING

"BV" STA 58+83.73
29.7' RIGHT
BEGIN STRIPING

RAILROAD RIGHT-OF-WAY

SHOOFLY

OIL LINE

N. SAN FERNANDO Blvd.

RR SIGNAL HOUSE

HMA DIKE (TYPE A)

RR SERVICE CABINET
(LOCATION TO BE DETERMINED)
SEE ELECTRICAL PLAN RR-E-103.

R=62.86'

"BV" STA 57+56.63
22.0' RIGHT
END DETAIL 9 STRIPING

"BV" STA 57+01.64
22.0' RIGHT
BEGIN DETAIL 9 STRIPING

20 0 20 40
1" = 20' GRAPHIC SCALE

N. BUENA VISTA St.

"BV" STA 58+35.48
53.56' RIGHT

# RR-TRAFFIC CONTROL PLAN SEGMENT 9 BUENA VISTA STREET AT SAN FERNANDO BOULEVARD

BORDER LAST REVISED 7/2/2010 | USERNAME =>Donaldson DGN FILE =>TC-025 | RELATIVE BORDER SCALE IS IN INCHES 0 1 2 3 | UNIT 1812 | PROJECT NUMBER & PHASE 07000211191

| Dist | COUNTY | ROUTE | POST MILES TOTAL PROJECT | SHEET No. | TOTAL SHEETS |
|---|---|---|---|---|---|
| 07 | LA | 5 | 29.4/31.6 | 1741 | 1931 |

REGISTERED CIVIL ENGINEER — 5-21-12 DATE

05-21-12
PLANS APPROVAL DATE

KAREN M. HANKINSON No. C54175 Exp. 6/30/13 CIVIL — REGISTERED PROFESSIONAL ENGINEER — STATE OF CALIFORNIA

THE STATE OF CALIFORNIA OR ITS OFFICERS OR AGENTS SHALL NOT BE RESPONSIBLE FOR THE ACCURACY OR COMPLETENESS OF SCANNED COPIES OF THIS PLAN SHEET.

SCRRA
279 E. ARROW HIGHWAY
SAN DIMAS, CA 91773

RAILPROS
1 ADA PARKWAY, SUITE 200
IRVINE, CA 92618

## LEGEND

- FLASHING ARROW PANEL (FAP)
- TYPE II BARRICADE WITH SIGN(S)
- SURFACE MOUNTED CHANNELIZER
- PORTABLE DELINEATOR
- (S) SIGNALIZED INTERSECTION
- EXISTING STRIPING, MARKING & PAVEMENT LEGEND TO REMAIN
- EXISTING STRIPING, MARKING & PAVEMENT LEGEND TO BE REMOVED
- STRIPING, MARKING & PAVEMENT LEGEND
- (#) CALTRANS STRIPING DETAIL NUMBER.
- LANE OR SIDEWALK CLOSURE.
- WORK ZONE.
- TEMPORARY RAILING (TYPE K)
- EXISTING EQUIPMENT TO REMAIN
- EXISTING EQUIPMENT TO BE REMOVED
- EQUIPMENT TO BE INSTALLED

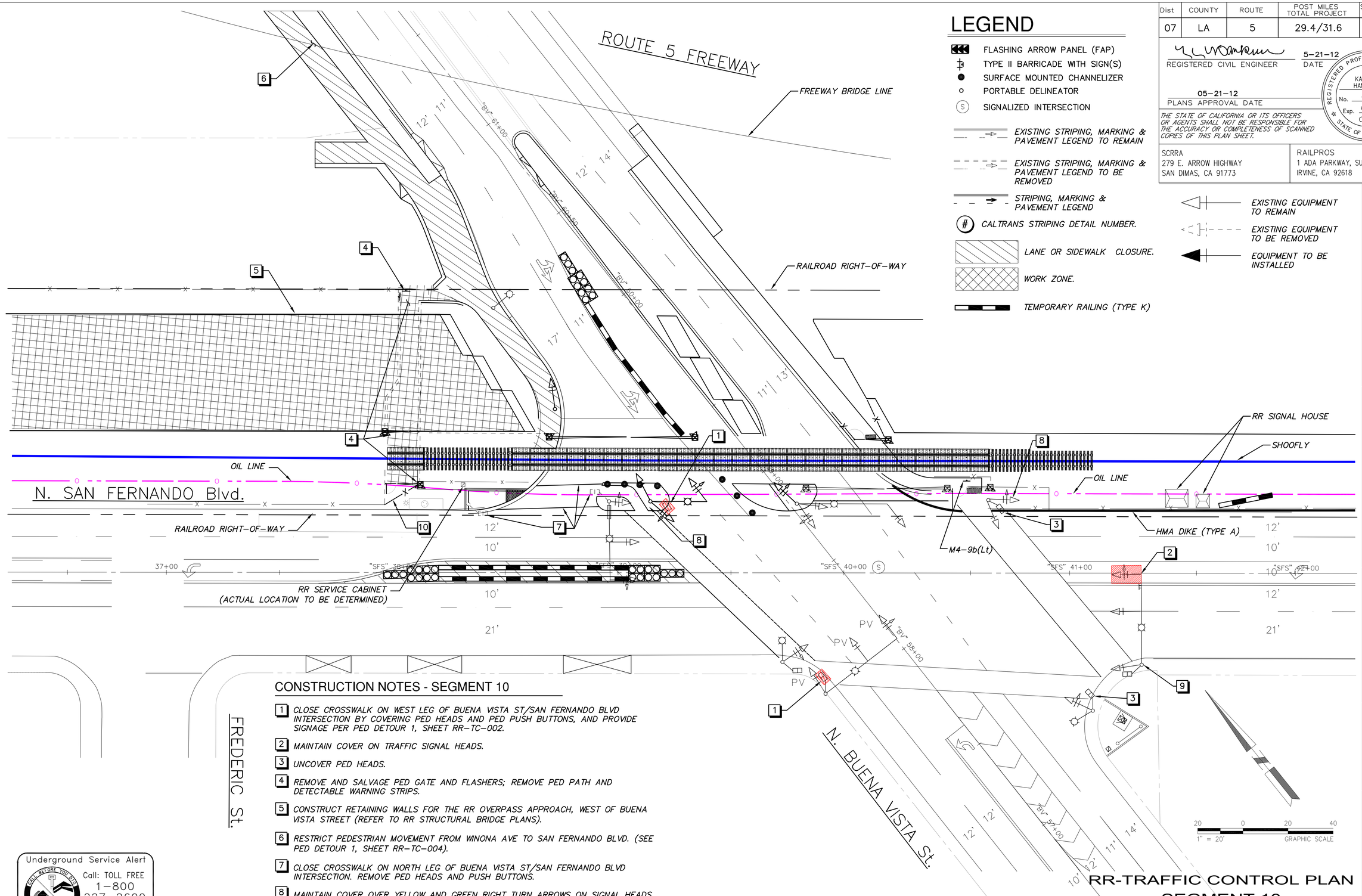


## CONSTRUCTION NOTES - SEGMENT 10

1. CLOSE CROSSWALK ON WEST LEG OF BUENA VISTA ST/SAN FERNANDO BLVD INTERSECTION BY COVERING PED HEADS AND PED PUSH BUTTONS, AND PROVIDE SIGNAGE PER PED DETOUR 1, SHEET RR-TC-002.
2. MAINTAIN COVER ON TRAFFIC SIGNAL HEADS.
3. UNCOVER PED HEADS.
4. REMOVE AND SALVAGE PED GATE AND FLASHERS; REMOVE PED PATH AND DETECTABLE WARNING STRIPS.
5. CONSTRUCT RETAINING WALLS FOR THE RR OVERPASS APPROACH, WEST OF BUENA VISTA STREET (REFER TO RR STRUCTURAL BRIDGE PLANS).
6. RESTRICT PEDESTRIAN MOVEMENT FROM WINONA AVE TO SAN FERNANDO BLVD. (SEE PED DETOUR 1, SHEET RR-TC-004).
7. CLOSE CROSSWALK ON NORTH LEG OF BUENA VISTA ST/SAN FERNANDO BLVD INTERSECTION. REMOVE PED HEADS AND PUSH BUTTONS.
8. MAINTAIN COVER OVER YELLOW AND GREEN RIGHT TURN ARROWS ON SIGNAL HEADS.
9. UNCOVER PEDESTRIAN PUSH BUTTON.
10. INSTALL ROW FENCE IN THIS SECTION

Underground Service Alert
CALL BEFORE YOU DIG
Call: TOLL FREE
1-800
227-2600
TWO WORKING DAYS BEFORE YOU DIG

APPROVED FOR RAILROAD WORK.

# RR-TRAFFIC CONTROL PLAN SEGMENT 10 BUENA VISTA STREET AT SAN FERNANDO BOULEVARD

CITY OF BURBANK
PUBLIC WORKS DEPARTMENT

RECOMMENDED: CITY ENGINEER — DATE
APPROVED: PUBLIC WORKS DIRECTOR — DATE

FIELD BOOK — PAGE
DESIGNED KMH — DATE 3/8/12
DRAWN SW — DATE 4/15/12
CHECKED JD — DATE 5/1/12
REVIEWED KMH — DATE 5/8/12

SHEET 375 OF 394

BID SCHEDULE NO.

WORK ORDER NO.

PLAN NO. RR-TC-026

LAST REVISION 06-05-12
DATE PLOTTED => Jul 18, 12
TIME PLOTTED => 11:18:20am

| REVISED BY | DATE REVISED |
|---|---|
| JOE DONALDSON | KAREN M. HANKINSON |

CALCULATED-DESIGNED BY
CHECKED BY
CONSULTANT FUNCTIONAL SUPERVISOR KAREN M. HANKINSON
STATE OF CALIFORNIA - DEPARTMENT OF TRANSPORTATION DESIGN
Caltrans

BORDER LAST REVISED 7/2/2010 | USERNAME =>Donaldson DGN FILE =>TC-026 | RELATIVE BORDER SCALE IS IN INCHES 0 1 2 3 | UNIT 1812 | PROJECT NUMBER & PHASE 07000211191

| Dist | COUNTY | ROUTE | POST MILES TOTAL PROJECT | SHEET No. | TOTAL SHEETS |
|---|---|---|---|---|---|
| 07 | LA | 5 | 29.4/31.6 | 1742 | 1931 |

REGISTERED CIVIL ENGINEER — DATE 5-21-12

PLANS APPROVAL DATE 05-21-12

KAREN M. HANKINSON No. C54175 Exp. 6/30/13 CIVIL — REGISTERED PROFESSIONAL ENGINEER — STATE OF CALIFORNIA

THE STATE OF CALIFORNIA OR ITS OFFICERS OR AGENTS SHALL NOT BE RESPONSIBLE FOR THE ACCURACY OR COMPLETENESS OF SCANNED COPIES OF THIS PLAN SHEET.

SCRRA
279 E. ARROW HIGHWAY
SAN DIMAS, CA 91773

RAILPROS
1 ADA PARKWAY, SUITE 200
IRVINE, CA 92618

## LEGEND

- FLASHING ARROW PANEL (FAP)
- TYPE II BARRICADE WITH SIGN(S)
- SURFACE MOUNTED CHANNELIZER
- PORTABLE DELINEATOR
- (S) SIGNALIZED INTERSECTION
- TEMPORARY RAILING (TYPE K)
- EXISTING STRIPING, MARKING & PAVEMENT LEGEND TO REMAIN
- EXISTING STRIPING, MARKING & PAVEMENT LEGEND TO BE REMOVED
- STRIPING, MARKING & PAVEMENT LEGEND
- (#) CALTRANS STRIPING DETAIL NUMBER.
- LANE OR SIDEWALK CLOSURE.
- EXISTING EQUIPMENT TO REMAIN
- EXISTING EQUIPMENT TO BE REMOVED
- EQUIPMENT TO BE INSTALLED

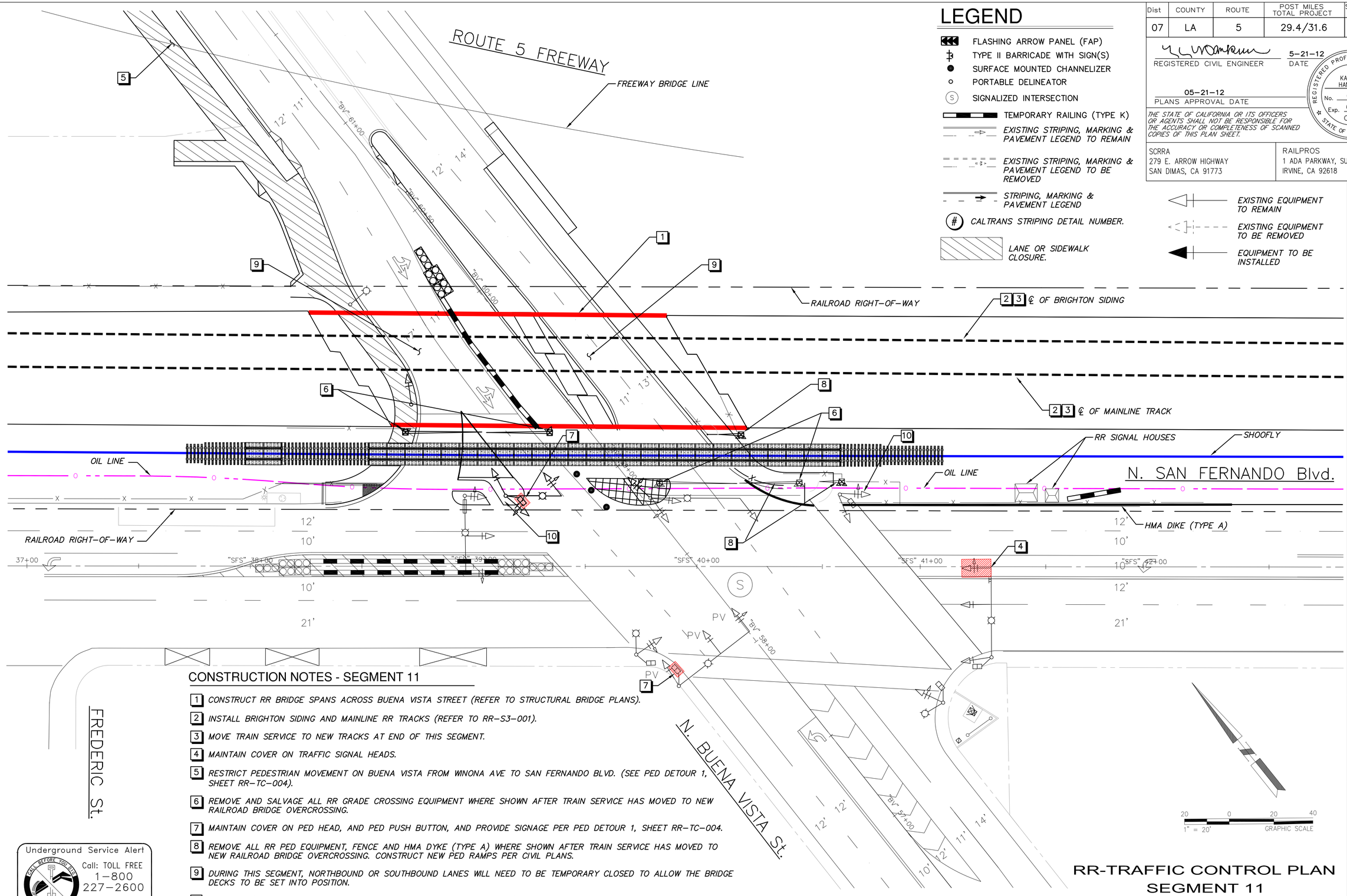


## CONSTRUCTION NOTES - SEGMENT 11

1. CONSTRUCT RR BRIDGE SPANS ACROSS BUENA VISTA STREET (REFER TO STRUCTURAL BRIDGE PLANS).
2. INSTALL BRIGHTON SIDING AND MAINLINE RR TRACKS (REFER TO RR-S3-001).
3. MOVE TRAIN SERVICE TO NEW TRACKS AT END OF THIS SEGMENT.
4. MAINTAIN COVER ON TRAFFIC SIGNAL HEADS.
5. RESTRICT PEDESTRIAN MOVEMENT ON BUENA VISTA FROM WINONA AVE TO SAN FERNANDO BLVD. (SEE PED DETOUR 1, SHEET RR-TC-004).
6. REMOVE AND SALVAGE ALL RR GRADE CROSSING EQUIPMENT WHERE SHOWN AFTER TRAIN SERVICE HAS MOVED TO NEW RAILROAD BRIDGE OVERCROSSING.
7. MAINTAIN COVER ON PED HEAD, AND PED PUSH BUTTON, AND PROVIDE SIGNAGE PER PED DETOUR 1, SHEET RR-TC-004.
8. REMOVE ALL RR PED EQUIPMENT, FENCE AND HMA DYKE (TYPE A) WHERE SHOWN AFTER TRAIN SERVICE HAS MOVED TO NEW RAILROAD BRIDGE OVERCROSSING. CONSTRUCT NEW PED RAMPS PER CIVIL PLANS.
9. DURING THIS SEGMENT, NORTHBOUND OR SOUTHBOUND LANES WILL NEED TO BE TEMPORARY CLOSED TO ALLOW THE BRIDGE DECKS TO BE SET INTO POSITION.
10. MAINTAIN COVER OVER YELLOW AND GREEN RIGHT TURN ARROWS ON SIGNAL HEADS.

Underground Service Alert
CALL BEFORE YOU DIG
Call: TOLL FREE 1-800 227-2600
TWO WORKING DAYS BEFORE YOU DIG

APPROVED FOR RAILROAD WORK.

20 0 20 40
1" = 20' GRAPHIC SCALE

# RR-TRAFFIC CONTROL PLAN SEGMENT 11 BUENA VISTA STREET AT SAN FERNANDO BOULEVARD

CITY OF BURBANK
PUBLIC WORKS DEPARTMENT

RECOMMENDED: CITY ENGINEER — DATE
APPROVED: PUBLIC WORKS DIRECTOR — DATE

FIELD BOOK — PAGE
DESIGNED KMH — DATE 3/9/12
DRAWN SW — DATE 4/15/12
CHECKED JD — DATE 5/1/12
REVIEWED KMH — DATE 5/9/12

SHEET 376 OF 394

BID SCHEDULE NO.

WORK ORDER NO.

PLAN NO. RR-TC-027

LAST REVISION 06-05-12
DATE PLOTTED => Jul 18, 12
TIME PLOTTED => 11:22:28am

| REVISED BY | DATE REVISED |
|---|---|
| JOE DONALDSON | KAREN M. HANKINSON |

CALCULATED-DESIGNED BY
CHECKED BY

CONSULTANT FUNCTIONAL SUPERVISOR
KAREN M. HANKINSON

STATE OF CALIFORNIA - DEPARTMENT OF TRANSPORTATION
DESIGN

BORDER LAST REVISED 7/2/2010
USERNAME =>Donaldson
DGN FILE =>TC-027
RELATIVE BORDER SCALE IS IN INCHES 0 1 2 3
UNIT 1812
PROJECT NUMBER & PHASE 07000211191

| Dist | COUNTY | ROUTE | POST MILES TOTAL PROJECT | SHEET No. | TOTAL SHEETS |
|---|---|---|---|---|---|
| 07 | LA | 5 | 29.4/31.6 | 1743 | 1931 |

REGISTERED CIVIL ENGINEER — DATE 5-21-12

PLANS APPROVAL DATE 05-21-12

KAREN M. HANKINSON No. C54175 Exp. 6/30/13 CIVIL — REGISTERED PROFESSIONAL ENGINEER — STATE OF CALIFORNIA

THE STATE OF CALIFORNIA OR ITS OFFICERS OR AGENTS SHALL NOT BE RESPONSIBLE FOR THE ACCURACY OR COMPLETENESS OF SCANNED COPIES OF THIS PLAN SHEET.

SCRRA
279 E. ARROW HIGHWAY
SAN DIMAS, CA 91773

RAILPROS
1 ADA PARKWAY, SUITE 200
IRVINE, CA 92618

## LEGEND

- FLASHING ARROW PANEL (FAP)
- TYPE II BARRICADE WITH SIGN(S)
- SURFACE MOUNTED CHANNELIZER
- PORTABLE DELINEATOR
- (S) SIGNALIZED INTERSECTION
- EXISTING STRIPING, MARKING & PAVEMENT LEGEND TO REMAIN
- EXISTING STRIPING, MARKING & PAVEMENT LEGEND TO BE REMOVED
- STRIPING, MARKING & PAVEMENT LEGEND
- (#) CALTRANS STRIPING DETAIL NUMBER.
- TEMPORARY RAILING (TYPE K)
- [F] WORK PER FINAL IMPROVEMENT PLAN
- LANE OR SIDEWALK CLOSURE
- WORK ZONE
- EXISTING EQUIPMENT TO REMAIN
- EXISTING EQUIPMENT TO BE REMOVED
- EQUIPMENT TO BE INSTALLED

ROUTE 5 FREEWAY

FREEWAY BRIDGE LINE

RAILROAD RIGHT-OF-WAY

℄ OF BRIGHTON SIDING

℄ OF MAINLINE TRACK

DELINEATORS AT 10' C-C

OIL LINE

N. SAN FERNANDO BLVD.

FREDERIC ST.

N. BUENA VISTA ST.

"BVI" 64+00

"BVI" 60+50

"BVI" 60+00

"BVI" 59+00

"BVI" 58+00

"BVI" 57+00

"SFS" 38+00

"SFS" 39+00

"SFS" 40+00

"SFS" 41+00

"SFS" 42+00

37+00

12' 11' 12' 14' 11' 13' 17' 11' 12' 12' 10' 12' 11' 14' 10' 10' 10' 12' 21'

## CONSTRUCTION NOTES - SEGMENT 12

1. INSTALL TRAFFIC SIGNAL POLES ON NORTHEAST CORNER OF BUENA VISTA STREET AND SAN FERNANDO BOULEVARD (REFER TO FINAL TRAFFIC SIGNAL MODIFICATION PLAN, SHEET RR-TS-001).
2. REMOVE TEMPORARY RAISED MEDIAN.
3. RESTRICT PEDESTRIAN MOVEMENT FROM WINONA AVE TO SAN FERNANDO BLVD. (SEE PED DETOUR 1, SHEET RR-TC-004).
4. RAILROAD SIGNAL TO BE REMOVED AND SALVAGED.
5. INSTALL CURB (REFER TO FINAL CIVIL PLAN SHEET RR-CG-006 AND REMOVE HMA DIKE (TYPE A), RIGHT OF WAY FENCE AND TEMPORARY RAILING ON SAN FERNANDO BOULEVARD TO REOPEN WESTBOUND RIGHT-TURN LANE.
6. REOPEN EASTBOUND LEFT-TURN LANE (REFER TO FINAL SIGNING AND STRIPING PLANS, SHEET RR-SS-001).
7. REMOVE AND SALVAGE EXISTING TRAFFIC SIGNAL POLE. FOUNDATIONS TO BE REMOVED COMPLETELY.
8. MAINTAIN COVER ON PED HEAD AND PED PUSH BUTTON, AND PROVIDE SIGNAGE PER PED DETOUR 1, SHEET RR-TC-004. REMOVE SHOOFLY TRACK. RAILROAD GRADE CROSSING
9. PANELS WILL NEED TO BE REMOVED AND RHMA INSTALLED FOR BUENA VISTA STREET ACCORDINGLY (REFER TO FINAL CIVIL PLAN, SHEET RR-CG-001 TO RR-CG-009).
10. INSTALL PROPOSED SIDEWALK AND RAMPS AFTER SHOOFLY HAS BEEN REMOVED (REFER TO FINAL CIVIL PLAN, SHEET RR-CG-001 TO RR-CG-009).
11. REMOVE TEMPORARY CROSSWALK.
12. INSTALL CROSSWALK AND LANE LINE STRIPING (REFER TO FINAL SIGNING AND STRIPING PLANS, SHEET RR-SS-001).
13. INSTALL TYPE IV (R) PAVEMENT ARROW (REFER TO FINAL SIGNING AND STRIPING PLANS, SHEET RR-SS-001).
14. INSTALL TYPE IV (L) PAVEMENT ARROW(REFER TO FINAL SIGNING AND STRIPING PLANS, SHEET RR-SS-001).
15. REMOVE EXISTING R3-18 (NO LEFT OR U-TURNS). INSTALL R3-4 (NO U-TURN) SIGN.
16. UNCOVER VEHICLE HEAD.
17. REMOVE AND SALVAGE VEHICLE HEAD.

APPROVED FOR RAILROAD WORK.

20 0 20 40
1" = 20' GRAPHIC SCALE

# RR-TRAFFIC CONTROL PLAN SEGMENT 12 BUENA VISTA STREET AT SAN FERNANDO BOULEVARD

CITY OF BURBANK
PUBLIC WORKS DEPARTMENT

RECOMMENDED: CITY ENGINEER — DATE
APPROVED: PUBLIC WORKS DIRECTOR — DATE

| PAGE | | DATE |
|---|---|---|
| FIELD BOOK | KMH | 3/6/12 |
| DESIGNED | KMH | 3/6/12 |
| DRAWN | SW | 4/15/12 |
| CHECKED | JD | 5/1/12 |
| REVIEWED | KMH | 5/6/12 |

SHEET 377 OF 394

BID SCHEDULE NO.

WORK ORDER NO.

PLAN NO. RR-TC-028

LAST REVISION 06-05-12
DATE PLOTTED => Jul 18, 12
TIME PLOTTED => 11:27:49am

| REVISED BY | DATE REVISED |
|---|---|
| JOE DONALDSON | KAREN M. HANKINSON |

CALCULATED-DESIGNED BY — KAREN M. HANKINSON
CHECKED BY

CONSULTANT FUNCTIONAL SUPERVISOR — KAREN M. HANKINSON

STATE OF CALIFORNIA - DEPARTMENT OF TRANSPORTATION — DESIGN

Caltrans

BORDER LAST REVISED 7/2/2010 | USERNAME =>Donaldson DGN FILE =>TC-028 | RELATIVE BORDER SCALE IS IN INCHES 0 1 2 3 | UNIT 1812 | PROJECT NUMBER & PHASE 07000211191

| Dist | COUNTY | ROUTE | POST MILES TOTAL PROJECT | SHEET No. | TOTAL SHEETS |
|---|---|---|---|---|---|
| 07 | LA | 5 | 29.4/31.6 | 1744 | 1931 |

REGISTERED CIVIL ENGINEER 5-21-12 DATE

05-21-12 PLANS APPROVAL DATE

REGISTERED PROFESSIONAL ENGINEER KAREN M. HANKINSON No. C54175 Exp. 6/30/13 CIVIL STATE OF CALIFORNIA

*THE STATE OF CALIFORNIA OR ITS OFFICERS OR AGENTS SHALL NOT BE RESPONSIBLE FOR THE ACCURACY OR COMPLETENESS OF SCANNED COPIES OF THIS PLAN SHEET.*

SCRRA
279 E. ARROW HIGHWAY
SAN DIMAS, CA 91773

RAILPROS
1 ADA PARKWAY, SUITE 200
IRVINE, CA 92618

# LEGEND

- FLASHING ARROW PANEL (FAP)
- TYPE II BARRICADE WITH SIGN(S)
- SURFACE MOUNTED CHANNELIZER
- PORTABLE DELINEATOR
- (S) SIGNALIZED INTERSECTION
- EXISTING STRIPING, MARKING & PAVEMENT LEGEND TO REMAIN
- EXISTING STRIPING, MARKING & PAVEMENT LEGEND TO BE REMOVED
- STRIPING, MARKING & PAVEMENT LEGEND
- (#) CALTRANS STRIPING DETAIL NUMBER.
- [F] WORK PER FINAL IMPROVEMENT PLAN
- EXISTING EQUIPMENT TO REMAIN
- EXISTING EQUIPMENT TO BE REMOVED
- EQUIPMENT TO BE INSTALLED

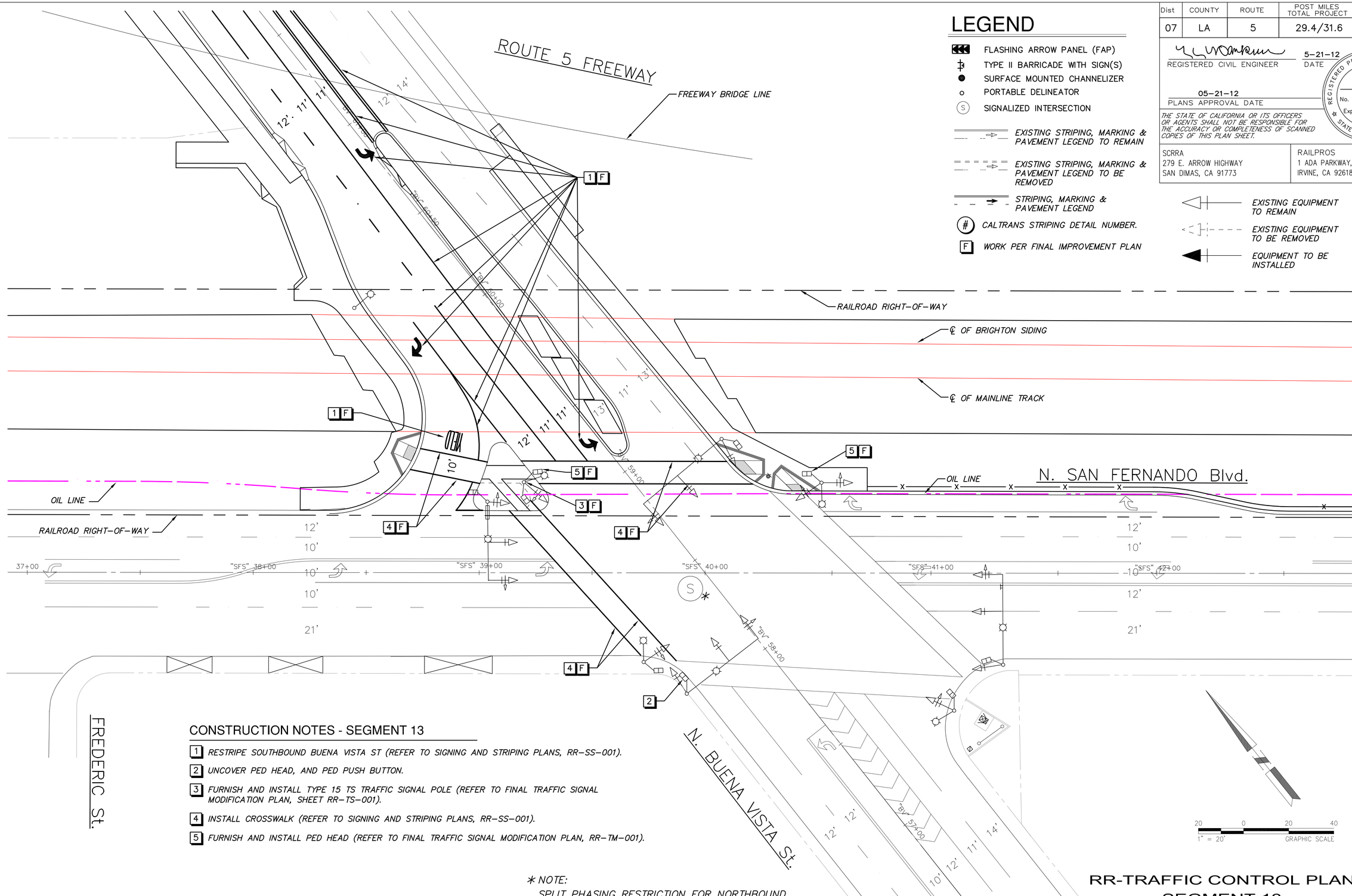


## CONSTRUCTION NOTES - SEGMENT 13

1. RESTRIPE SOUTHBOUND BUENA VISTA ST (REFER TO SIGNING AND STRIPING PLANS, RR-SS-001).
2. UNCOVER PED HEAD, AND PED PUSH BUTTON.
3. FURNISH AND INSTALL TYPE 15 TS TRAFFIC SIGNAL POLE (REFER TO FINAL TRAFFIC SIGNAL MODIFICATION PLAN, SHEET RR-TS-001).
4. INSTALL CROSSWALK (REFER TO SIGNING AND STRIPING PLANS, RR-SS-001).
5. FURNISH AND INSTALL PED HEAD (REFER TO FINAL TRAFFIC SIGNAL MODIFICATION PLAN, RR-TM-001).

* NOTE:
SPLIT PHASING RESTRICTION FOR NORTHBOUND AND SOUTHBOUND BUENA VISTA TRAFFIC TO BE REMOVED WITH RESTRIPING OF SOUTHBOUND LANES.

APPROVED FOR RAILROAD WORK.

# RR-TRAFFIC CONTROL PLAN
# SEGMENT 13
# BUENA VISTA STREET AT SAN FERNANDO BOULEVARD

CITY OF BURBANK
PUBLIC WORKS DEPARTMENT

RECOMMENDED: CITY ENGINEER DATE
APPROVED: PUBLIC WORKS DIRECTOR DATE

FIELD BOOK PAGE
DESIGNED KMH DATE 3/8/12
DRAWN SW DATE 4/15/12
CHECKED JD DATE 5/1/12
REVIEWED KMH DATE 5/8/12

SHEET 378 OF 394

BID SCHEDULE NO.

WORK ORDER NO.

PLAN NO. RR-TC-029

DATE PLOTTED => Jul 18, 12
TIME PLOTTED => 11:30:34am

LAST REVISION 06-05-12

STATE OF CALIFORNIA - DEPARTMENT OF TRANSPORTATION
Caltrans
DESIGN

CONSULTANT FUNCTIONAL SUPERVISOR: KAREN M. HANKINSON
CALCULATED-DESIGNED BY: JOE DONALDSON
CHECKED BY: KAREN M. HANKINSON
REVISED BY
DATE REVISED

| Dist | COUNTY | ROUTE | POST MILES TOTAL PROJECT | SHEET No. | TOTAL SHEETS |
|---|---|---|---|---|---|
| 07 | LA | 5 | 29.4/31.6 | 1745 | 1931 |

REGISTERED CIVIL ENGINEER — 5-21-12 DATE

05-21-12
PLANS APPROVAL DATE

REGISTERED PROFESSIONAL ENGINEER — CHRIS COFFMAN No. C53173 Exp. 6/30/13 CIVIL — STATE OF CALIFORNIA

*THE STATE OF CALIFORNIA OR ITS OFFICERS OR AGENTS SHALL NOT BE RESPONSIBLE FOR THE ACCURACY OR COMPLETENESS OF SCANNED COPIES OF THIS PLAN SHEET.*

WORK SHALL NOT COMMENCE IN METRO R/W UNTIL APPROVED BY SCRRA. CONTRACTOR SHALL FOLLOW SAFETY AND CONSTRUCTION GUIDELINES AS DIRECTED BY SCRRA.

SCRRA
279 E. ARROW HIGHWAY
SAN DIMAS, CA 91773

RAILPROS
1 ADA PARKWAY, SUITE 200
IRVINE, CA 92618

N. SAN FERNANDO BOULEVARD

N. BUENA VISTA STREET

"BV" 57+00 "BV" 58+00 "BV" 59+00 "BV" 60+00 "BV" 60+50 "BV" 61+00 "BV" 62+00

"SFS" 40+00 "SFS" 41+00 "SFS" 42+00

"BV" 59+00

SD SD SD

RR BRIDGE LIMITS

FREEWAY BRIDGE LIMITS

ROUTE 5 FREEWAY

RESTORE/CONSTRUCT PCC SIDEWALK AND CURB AND GUTTER SEE CIVIL SHEETS RR-CG-001 TO RR-CG-009 FOR DETAILS

MAINLINE TRACK 1

BRIGHTON SIDING TRACK

10 0 10 20
1" = 10' GRAPHIC SCALE

# RR-TRAFFIC CONTROL PLAN
# FINAL ROADWAY LAYOUT PLAN
# BUENA VISTA STREET AT SAN FERNANDO BOULEVARD

* NOTE:
THIS SHEET IS FOR REFERENCE PURPOSES ONLY.

APPROVED FOR RAILROAD WORK.

CITY OF BURBANK
PUBLIC WORKS DEPARTMENT

RECOMMENDED: _____ CITY ENGINEER _____ DATE
APPROVED: _____ PUBLIC WORKS DIRECTOR _____ DATE

| FIELD BOOK | | PAGE | |
|---|---|---|---|
| DESIGNED | KMH | DATE | 3/9/12 |
| DRAWN | SW | DATE | 4/15/12 |
| CHECKED | JD | DATE | 5/1/12 |
| REVIEWED | KMH | DATE | 5/9/12 |

SHEET 379 OF 394

BID SCHEDULE NO.

WORK ORDER NO.

PLAN NO. RR-TC-030

LAST REVISION 06-05-12
DATE PLOTTED => Jul 16, 12
TIME PLOTTED => 2:09:39pm

| REVISED BY | DATE REVISED |
|---|---|
| JOE DONALDSON | CHRIS COFFMAN |

CALCULATED-DESIGNED BY

CHECKED BY

CONSULTANT FUNCTIONAL SUPERVISOR — CHRIS COFFMAN

STATE OF CALIFORNIA - DEPARTMENT OF TRANSPORTATION — DESIGN

Caltrans

BORDER LAST REVISED 7/2/2010 | USERNAME =>Donaldson DGN FILE =>TC-030 | RELATIVE BORDER SCALE IS IN INCHES 0 1 2 3 | UNIT 1812 | PROJECT NUMBER & PHASE 07000211191

# STREET IMPROVEMENTS AT BUENA VISTA STREET

# AT SAN FERNANDO BOULEVARD AND WINONA AVENUE

| Dist | COUNTY | ROUTE | POST MILES TOTAL PROJECT | SHEET No. | TOTAL SHEETS |
|---|---|---|---|---|---|
| 07 | LA | 5 | 29.4/31.6 | 1746 | 1931 |

Pat Nicholson 05-21-12
REGISTERED CIVIL ENGINEER DATE

05-21-12
PLANS APPROVAL DATE

REGISTERED PROFESSIONAL ENGINEER — PATRICK NICHOLSON — No. C 40993 — Exp. 3-31-2013 — CIVIL — STATE OF CALIFORNIA

THE STATE OF CALIFORNIA OR ITS OFFICERS OR AGENTS SHALL NOT BE RESPONSIBLE FOR THE ACCURACY OR COMPLETENESS OF SCANNED COPIES OF THIS PLAN SHEET.


SCRRA
279 E. ARROW HIGHWAY
SAN DIMAS, CA 91773

AECOM
515 SOUTH FLOWER ST, 4th FLOOR
LOS ANGELES, CA 90071


## BENCH MARKS

SET 2" BRASS CAP STAMPED "SCRRA 2009 L.S. 5282 PSOMAS" "4" IN CONCRETE SIDEWALK AT THE S/E CORNER OF THE INTERSECTION OF SAN FERNANDO BLVD. AND THE BUENA VISTA ST.
ELEVATION = 664.20 FT.

SET 2" BRASS CAP STAMPED "SCRRA 2009 L.S. 5282 PSOMAS" "5" IN CONCRETE APRON AT THE N/W CORNER OF THE INTERSECTION OF SAN FERNANDO BLVD. AND BUENA VISTA ST.
ELEVATION = 668.42 FT.

## BASIS OF BEARING

THE CALIFORNIA COORDINATE SYSTEM OF 1983, ZONE 5, BASED ON THE NORTH AMERICAN DATUM OF 1983 (HORIZONTAL), 1991.35 EPOCH AS DETERMINED LOCALLY FROM CALTRANS MONUMENTS AS SHOWN IN CALTRANS FIELDBOOK FB 94-158 AND THE NORTH AMERICAN VERTICAL DATUM OF 1998 (VERTICAL) AS DETERMINED LOCALLY FROM NGS BENCHMARKS W-1469, 1631, X-1469, AND 970, 1995 ADJUSTMENT.

## KEY NOTES:

1. PORTLAND CEMENT CONCRETE INTEGRAL CURB AND GUTTER PER CITY OF BURBANK STD. BS-100, CF = PER PLAN (MINOR CONCRETE)
2. CURB AND GUTTER (TYPE A2-6) (MINOR CONCRETE)
3. PORTLAND CEMENT CONCRETE SIDEWALK, t = 4" (MINOR CONCRETE)
4. PORTLAND CEMENT CONCRETE CURB RAMP (MINOR CONCRETE)
5. PORTLAND CEMENT CONCRETE STAMPED CONCRETE (MINOR CONCRETE)
6. INLET DEPRESSION ON GRADE (MINOR CONCRETE)
7. TYPE OS INLET (MINOR CONCRETE(MINOR STRUCTURE))
8. RCP STORM DRAIN, SIZE PER PLAN
9. HMA PAVEMENT, t = PER SECTION
10. NOT USED
11. NOT USED
12. NOT USED
13. NOT USED
14. NOT USED
15. PARKWAY DRAIN, SEE DETAIL ON DWG RR-CG-012 (MINOR CONCRETE(MINOR STRUCTURE))
16. SAWCUT (NOT A PAY ITEM)
17. NOT USED
18. NOT USED
19. NOT USED
20. NOT USED
21. NOT USED
22. CRUSHED MISCELLANEOUS BASE t = PER SECTION
23. NOT USED
24. TYPE OS (MOD), SEE DETAIL ON DWG RR-CG-012 (MINOR CONCRETE(MINOR STRUCTURE))
25. 24" RCP WITH TYPE L-3 COLLAR SEE DETAIL ON DWG RR-DR-041
26. CHAIN LINK FENCE (TYPE CL-6)
27. NOT USED
28. PORTLAND CEMENT CONCRETE 6" CURB (MINOR CONCRETE)
29. CABLE RAILING
30. PORTLAND CEMENT CONCRETE 7" CURB PER CITY OF BURBANK BS-100 (MINOR CONCRETE)

## LEGEND:

- REMOVE
- EXISTING, PROTECT IN PLACE
- CONSTRUCT/INSTALL/PERFORM PER APPLICABLE NOTES AND DETAILS IN THE SPECIFICATIONS
- RELOCATE
- ADJUST TO FINISHED GRADE
- REMODEL

## ABBREVIATIONS:

| | |
|---|---|
| RHMA | RUBBERIZED HOT MIX ASPHALT |
| HMA | HOT MIX ASPHALT |
| BV | BUENA VISTA ST. |
| CF | CURB FACE |
| D | DIAMETER |
| EC | END CURVE |
| LP | LOW POINT |
| M | WIDTH OF WARPED GUTTER AT CATCH BASIN |
| S | SLOPE OF PIPE |
| SCRRA | SOUTHERN CALIFORNIA REGIONAL RAIL AUTHORITY |
| SFN | SAN FERNANDO BLVD. (NORTH) |
| SFS | SAN FERNANDO BLVD. (SOUTH) |
| t | THICKNESS |
| V | DIFFERENCE BETWEEN TOP OF CURB TO INVERT |
| W | WIDTH OF GUTTER |

## DRAWING INDEX:


| | |
|---|---|
| TITLE SHEET | RR-CG-001 |
| INTERSECTION AND CURB RAMP DETAILS | RR-CG-002 |
| TYPICAL SECTIONS | RR-CG-003 |
| ROADWAY IMPROVEMENT PLAN - SHEET 1 OF 6 | RR-CG-004 |
| ROADWAY IMPROVEMENT PROFILE - SHEET 2 OF 6 | RR-CG-005 |
| ROADWAY IMPROVEMENT PLAN - SHEET 3 OF 6 | RR-CG-006 |
| ROADWAY IMPROVEMENT PROFILE - SHEET 4 OF 6 | RR-CG-007 |
| ROADWAY IMPROVEMENT PLAN - SHEET 5 OF 6 | RR-CG-008 |
| ROADWAY IMPROVEMENT PROFILE - SHEET 6 OF 6 | RR-CG-009 |
| DRAINAGE PLAN | RR-CG-010 |
| DRAINAGE PROFILE | RR-CG-011 |
| DRAINAGE DETAILS | RR-CG-012 |


## GENERAL NOTES:

1. THE CONTRACTOR SHALL TAKE ALL NECESSARY AND PROPER PRECAUTIONS TO PROTECT ADJACENT PROPERTIES FROM ANY DAMAGE THAT MAY OCCUR DURING THE PERFORMANCE OF THE WORK.
2. EXISTING UTILITIES SHALL BE MAINTAINED IN PLACE BY THE CONTRACTOR UNLESS OTHERWISE NOTED.
3. THE CONTRACTOR SHALL COORDINATE RELOCATION OR ADJUSTMENT OF STREET LIGHT PULL BOXES, GUY WIRES, STREET LIGHT POLES, WATER METER BOXES, WATER VALVES, ETC. WITH CITY OF BURBANK WATER AND POWER (BWP) ELECTRICAL DIVISION (818) 238-3575 OR WATER DIVISION (818) 238-3500.
4. PROTECT IN PLACE CENTERLINE TIES OR RE-ESTABLISH PER CITY OF BURBANK STANDARDS.
5. FOR QUANTITIES SUMMARY, SEE DWG RR-WQ-001.

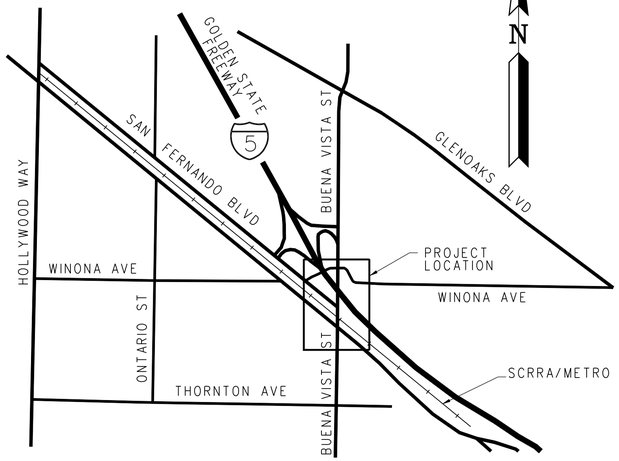


## VICINITY MAP

NOT TO SCALE

## CIVIL REFERENCE STANDARD PLANS AND DRAWINGS:

### CITY OF BURBANK

| | |
|---|---|
| BS-100 | CURB AND GUTTER |
| BS-101 | CURB AND GUTTER-MOUNTABLE |
| BS-104-1 | SIDEWALK |

### CALTRANS STANDARD PLANS

| | |
|---|---|
| RSP A88A | CURB RAMP DETAILS |
| A88B | ISLAND PASSAGEWAY DETAILS |
| RSP A85 | CHAIN LINK FENCE |

Underground Service Alert
DIG! BEFORE YOU DIG
Call: TOLL FREE 1-800 227-2600
TWO WORKING DAYS BEFORE YOU DIG

APPROVED FOR RAILROAD WORK.

# BUENA VISTA STREET AT SAN FERNANDO BOULEVARD
# RR - ROADWAY IMPROVEMENT
# TITLE SHEET

CITY OF BURBANK
PUBLIC WORKS DEPARTMENT

RECOMMENDED: CITY ENGINEER DATE
APPROVED: PUBLIC WORKS DIRECTOR DATE

PAGE NO. N/A
FIELD BOOK DATE
DESIGNED DATE
DRAWN DATE
CHECKED DATE
REVIEWED DATE

SHEET 380 OF 394

PLAN NO. RR-CG-001

LAST REVISION 00-00-00
DATE PLOTTED => 7/17/2012
TIME PLOTTED => 6:23:57 PM
PLOT DRIVER => ...\Plotdrv\SCRRA_pdfBW.plt
PEN TABLE => ...\CADD\Support\pen\PlotStamp.tbl

WORK ORDER NO.
BID SCHEDULE NO.

STATE OF CALIFORNIA - DEPARTMENT OF TRANSPORTATION
DESIGN
CONSULTANT FUNCTIONAL SUPERVISOR: PATRICK NICHOLSON
CALCULATED-DESIGNED BY: PAUL LAUGHLIN
CHECKED BY: RICHARD SILOS
REVISED BY
DATE REVISED

| Dist | COUNTY | ROUTE | POST MILES TOTAL PROJECT | SHEET No. | TOTAL SHEETS |
|---|---|---|---|---|---|
| 07 | LA | 5 | 29.4/31.6 | 1747 | 1931 |

Pat Nicholson 05-21-12
REGISTERED CIVIL ENGINEER DATE

05-21-12
PLANS APPROVAL DATE

REGISTERED PROFESSIONAL ENGINEER — PATRICK NICHOLSON — No. C 40993 — Exp. 3-31-2013 — CIVIL — STATE OF CALIFORNIA

THE STATE OF CALIFORNIA OR ITS OFFICERS OR AGENTS SHALL NOT BE RESPONSIBLE FOR THE ACCURACY OR COMPLETENESS OF SCANNED COPIES OF THIS PLAN SHEET.

SCRRA
279 E. ARROW HIGHWAY
SAN DIMAS, CA 91773

AECOM
515 SOUTH FLOWER ST, 4th FLOOR
LOS ANGELES, CA 90071

CITY OF BURBANK
PUBLIC WORKS DEPARTMENT

...\CADD\Support\pen\PlotStamp.tbl

PEN TABLE =>

RECOMMENDED: CITY ENGINEER — DATE

APPROVED: PUBLIC WORKS DIRECTOR — DATE

PLOT DRIVER => ...\Plotdrv\SCRRA_pdfBW.plt

TIME PLOTTED => 6:24:04 PM

DATE PLOTTED => 7/17/2012

LAST REVISION 00-00-00

PAGE NO. N/A

FIELD BOOK — DATE
DESIGNED — DATE
DRAWN — DATE
CHECKED — DATE
REVIEWED — DATE

SHEET 381 OF 394

BID SCHEDULE NO.

WORK ORDER NO.

PLAN NO. RR-CG-002

REVISED BY — DATE REVISED

PAUL LAUGHLIN — RICHARD SILOS

CALCULATED-DESIGNED BY — CHECKED BY

CONSULTANT FUNCTIONAL SUPERVISOR — PATRICK NICHOLSON

STATE OF CALIFORNIA - DEPARTMENT OF TRANSPORTATION — DESIGN

Caltrans®

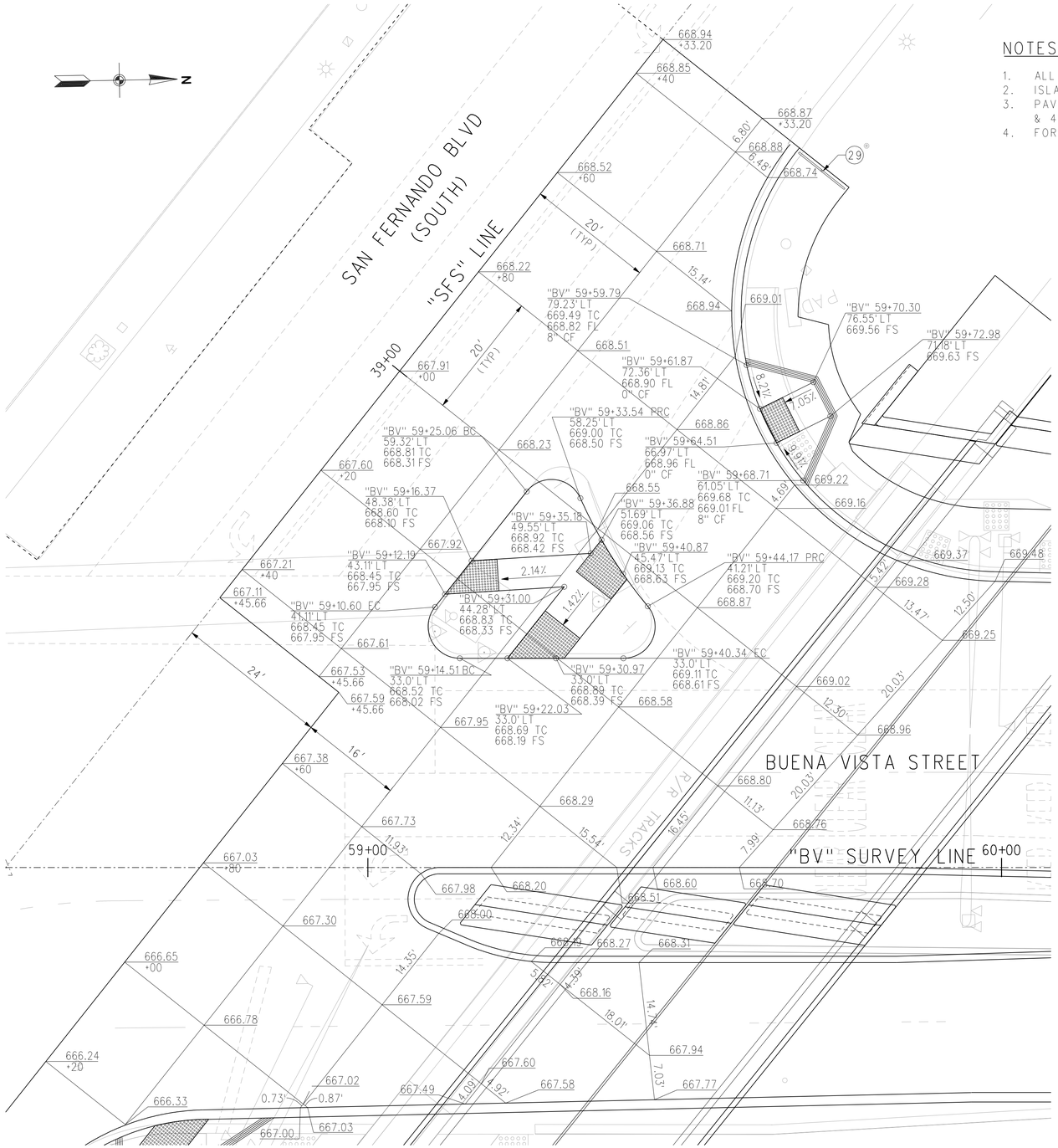


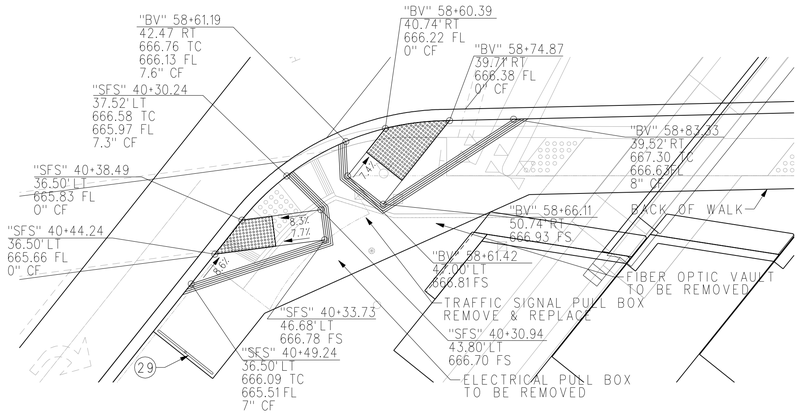


## CURB RAMP DETAIL

## NOTES:

1. ALL RAMPS SHALL HAVE TRUNCATED DOMES PER CALTRANS RSP A88A
2. ISLAND PASSAGEWAY TO BE CONSTRUCTED PER CALTRANS STD A88B
3. PAVEMENT SECTIONS TO CONSIST OF 2" RHMA (GAP GRADED) SURFACE COURSE & 4" HMA (TYPE A) BASE COURSE OVER 6" CMB
4. FOR LEGEND SEE SHEET RR-CG-001

Underground Service Alert
DIAL BEFORE YOU DIG
Call: TOLL FREE
1-800
227-2600
TWO WORKING DAYS BEFORE YOU DIG

APPROVED FOR RAILROAD WORK.

## BUENA VISTA STREET AND SAN FERNANDO ROAD (SOUTH) INTERSECTION DETAILS

10 5 0 10 20
1" = 10'-0"

# BUENA VISTA STREET AT SAN FERNANDO BOULEVARD RR - ROADWAY IMPROVEMENT INTERSECTION & CURB RETURN DETAILS

BORDER LAST REVISED 7/2/2010

USERNAME => grandova
DGN FILE => ...\Civil\Sheet\E737B-CG-002.sht

RELATIVE BORDER SCALE IS IN INCHES 0 1 2 3

UNIT 1812

PROJECT NUMBER & PHASE 07000211191

| Dist | COUNTY | ROUTE | POST MILES TOTAL PROJECT | SHEET No. | TOTAL SHEETS |
|---|---|---|---|---|---|
| 07 | LA | 5 | 29.4/31.6 | 1748 | 1931 |

Pat Nicholson 05-21-12
REGISTERED CIVIL ENGINEER DATE

05-21-12
PLANS APPROVAL DATE

REGISTERED PROFESSIONAL ENGINEER — PATRICK NICHOLSON — No. C 40993 — Exp. 3-31-2013 — CIVIL — STATE OF CALIFORNIA

*THE STATE OF CALIFORNIA OR ITS OFFICERS OR AGENTS SHALL NOT BE RESPONSIBLE FOR THE ACCURACY OR COMPLETENESS OF SCANNED COPIES OF THIS PLAN SHEET.*

SCRRA
279 E. ARROW HIGHWAY
SAN DIMAS, CA 91773

AECOM
515 SOUTH FLOWER ST. 4th FLOOR
LOS ANGELES, CA 90071

## NOTES:

1. ALL RAMPS SHALL HAVE TRUNCATED DOMES PER CALTRANS RSP A88A
2. ISLAND PASSAGEWAY TO BE CONSTRUCTED PER CALTRANS STD A88B
3. PAVEMENT SECTIONS TO CONSIST OF 2" RHMA (GAP GRADED) SURFACE COURSE AND 4" HMA (TYPE A) BASE COURSE OVER 6" CMB
4. FOR LEGEND SEE SHEET CG-001

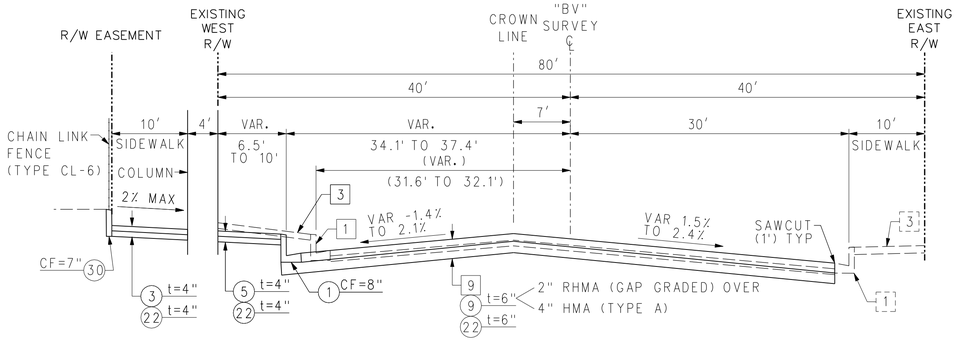


## BUENA VISTA STREET TYPICAL SECTION

STA 60+80.66 TO STA 62+40.00
NO SCALE

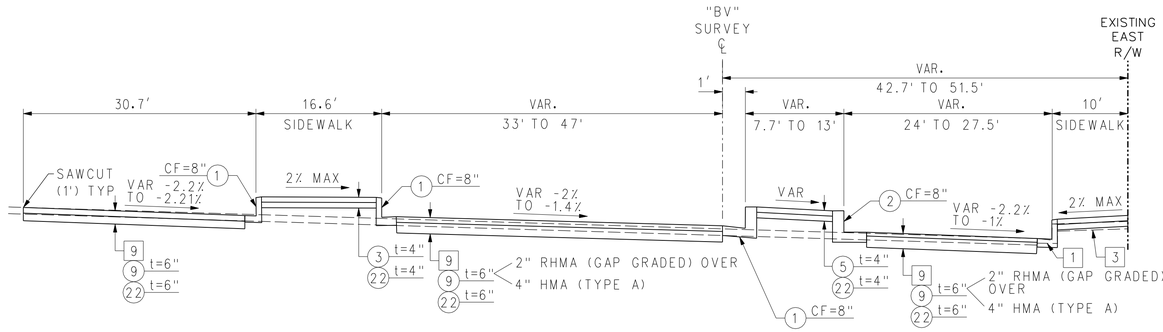


## BUENA VISTA STREET TYPICAL SECTION

STA 60+47.08 TO STA 60+80.66
NO SCALE

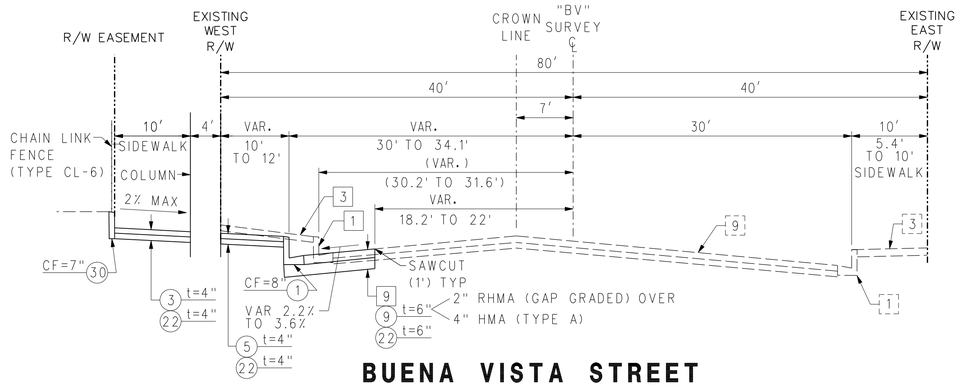


## BUENA VISTA STREET TYPICAL SECTION

STA 62+40.00 TO STA 64+19.01
NO SCALE

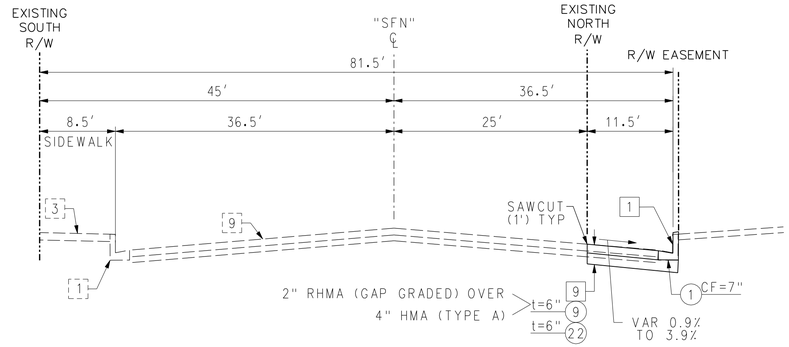


## SAN FERNANDO BOULEVARD (SOUTH) TYPICAL SECTION

STA 40+38.64 TO STA 42+73.27
NO SCALE

Underground Service Alert
Call: TOLL FREE
1-800
227-2600
TWO WORKING DAYS BEFORE YOU DIG

APPROVED FOR RAILROAD WORK.

20 15 10 5 0 20 40
1" = 20'-0"

# BUENA VISTA STREET AT SAN FERNANDO BOULEVARD
# RR - ROADWAY IMPROVEMENT
# TYPICAL SECTION SHEET

CITY OF BURBANK
PUBLIC WORKS DEPARTMENT

RECOMMENDED: CITY ENGINEER DATE
APPROVED: PUBLIC WORKS DIRECTOR DATE

PAGE N/A
FIELD BOOK DATE
DESIGNED DATE
DRAWN DATE
CHECKED DATE
REVIEWED DATE

PLOT DRIVER => ...\Plotdrv\SCRRA_pdfBW.plt
PEN TABLE => ...\CADD\Support\pen\PlotStamp.tbl
TIME PLOTTED => 6:24:07 PM

SHEET 382 OF 394

BID SCHEDULE NO.

WORK ORDER NO.

PLAN NO. RR-CG-003

LAST REVISION DATE PLOTTED => 7/17/2012
00-00-00

STATE OF CALIFORNIA - DEPARTMENT OF TRANSPORTATION
DESIGN
CONSULTANT FUNCTIONAL SUPERVISOR: PATRICK NICHOLSON
CALCULATED-DESIGNED BY: PAUL LAUGHLIN
CHECKED BY: RICHARD SILOS
REVISED BY
DATE REVISED

BORDER LAST REVISED 7/2/2010
USERNAME => grandova
DGN FILE => ...\Civil\Sheet\E737B-CG-003.sht
RELATIVE BORDER SCALE IS IN INCHES 0 1 2 3
UNIT 1812
PROJECT NUMBER & PHASE 07000211191

## CURVE DATA:

| | L | R | △ | TAN |
|---|---|---|---|---|
| C1 | 90.99 | 41.00' | 127° 8'55" | 82.50' |
| C2 | 24.22' | 85.35' | 16° 15'37" | 12.19' |
| C3 | 24.22' | 85.35' | 16° 15'37" | 12.19' |
| C4 | 10.96' | 4.00' | 156° 58'18" | 19.64' |
| C5 | 14.07' | 35.00' | 23° 1'42" | 7.13' |
| C6 | 12.20' | 3.88' | 180° 00'00" | – |
| C7 | 30.69' | 35.00' | 50° 14'49" | 16.41' |

## NOTES:

1. ALL RAMPS SHALL HAVE BLUE TRUNCATED DOMES PER CALTRANS RSP A88A
2. ISLAND PASSAGEWAY TO BE CONSTRUCTED PER CALTRANS STD A88B
3. SEE SHEET RR-CG-002 FOR CURB RAMP AND ISLAND DETAIL
4. "BV" CONSTRUCTION CENTERLINE IS AT THE PAVEMENT CROWN AND IS OFFSET, AT SAME BEARING, OF THE SURVEY CENTERLINE BY 7 FT WEST
5. "BV" EAST TOP-OF-CURB PROFILE IS SHOWN ON SHEET RR-CG-004
6. MINIMUM 4" CMB SHALL BE PLACED UNDERNEATH SIDEWALKS, MEDIANS, AND CURB RAMPS
7. FOR STORM DRAIN PLAN AND PROFILE WITH CATCH BASIN LOCATIONS, SEE SHEET RR-CG-010 AND RR-CG-011
8. FOR LEGEND SEE SHEET RR-CG-001

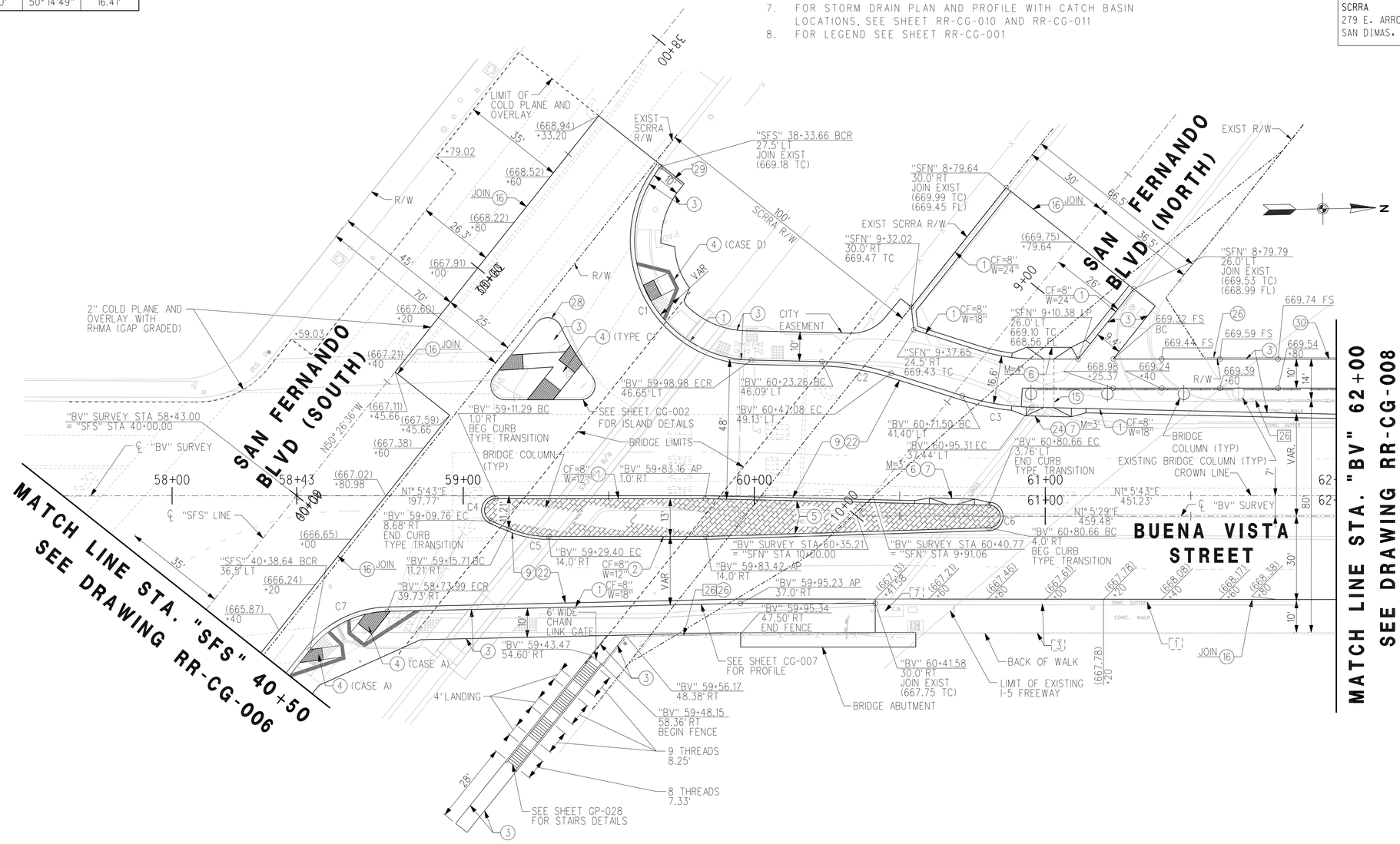


| Dist | COUNTY | ROUTE | POST MILES TOTAL PROJECT | SHEET No. | TOTAL SHEETS |
|---|---|---|---|---|---|
| 07 | LA | 5 | 29.4/31.6 | 1749 | 1931 |

Pat Nicholson 05-21-12
REGISTERED CIVIL ENGINEER DATE

PATRICK NICHOLSON No. C 40993 Exp. 3-31-2013 CIVIL — REGISTERED PROFESSIONAL ENGINEER — STATE OF CALIFORNIA

05-21-12
PLANS APPROVAL DATE

THE STATE OF CALIFORNIA OR ITS OFFICERS OR AGENTS SHALL NOT BE RESPONSIBLE FOR THE ACCURACY OR COMPLETENESS OF SCANNED COPIES OF THIS PLAN SHEET.

SCRRA
279 E. ARROW HIGHWAY
SAN DIMAS, CA 91773

AECOM
515 SOUTH FLOWER ST. 4th FLOOR
LOS ANGELES, CA 90071

CITY OF BURBANK
PUBLIC WORKS DEPARTMENT

RECOMMENDED: CITY ENGINEER DATE
APPROVED: PUBLIC WORKS DIRECTOR DATE

PAGE N/A
FIELD BOOK
DESIGNED DATE
DRAWN DATE
CHECKED DATE
REVIEWED DATE

PLOT DRIVER => ...\Plotdrv\SCRRA_pdf.plt PEN TABLE => ...\CADD\Support\pen\PlotStamp.tbl
TIME PLOTTED => 6:24:12 PM
DATE PLOTTED => 7/17/2012

SHEET 383 OF 394

BID SCHEDULE NO.

WORK ORDER NO.

PLAN NO. RR-CG-004

LAST REVISION 00-00-00

REVISED BY | DATE REVISED
PAUL LAUGHLIN | RICHARD SILOS
CALCULATED-DESIGNED BY | CHECKED BY
SUPERVISOR | CONSULTANT FUNCTIONAL SUPERVISOR
PATRICK NICHOLSON

STATE OF CALIFORNIA - DEPARTMENT OF TRANSPORTATION
DESIGN

Underground Service Alert
DIAL BEFORE YOU DIG
Call: TOLL FREE 1-800 227-2600
TWO WORKING DAYS BEFORE YOU DIG

APPROVED FOR RAILROAD WORK.

# BUENA VISTA STREET AT SAN FERNANDO BOULEVARD
# RR - ROADWAY IMPROVEMENT
# PLAN - SHEET 1 OF 6

BORDER LAST REVISED 7/2/2010
USERNAME => grandova
DGN FILE => ...\Civil\Sheet\E737B-CG-004.sht
RELATIVE BORDER SCALE IS IN INCHES 0 1 2 3
UNIT 1812
PROJECT NUMBER & PHASE 07000211191

| Dist | COUNTY | ROUTE | POST MILES TOTAL PROJECT | SHEET No. | TOTAL SHEETS |
|---|---|---|---|---|---|
| 07 | LA | 5 | 29.4/31.6 | 1750 | 1931 |

Pat Nicholson 05-21-12
REGISTERED CIVIL ENGINEER DATE

PATRICK NICHOLSON No. C 40993 Exp. 3-31-2013 CIVIL — REGISTERED PROFESSIONAL ENGINEER — STATE OF CALIFORNIA

05-21-12
PLANS APPROVAL DATE

THE STATE OF CALIFORNIA OR ITS OFFICERS OR AGENTS SHALL NOT BE RESPONSIBLE FOR THE ACCURACY OR COMPLETENESS OF SCANNED COPIES OF THIS PLAN SHEET.

SCRRA
279 E. ARROW HIGHWAY
SAN DIMAS, CA 91773

AECOM
515 SOUTH FLOWER ST, 4th FLOOR
LOS ANGELES, CA 90071

NOTES:

1. "BV" CONSTRUCTION CENTERLINE IS AT THE PAVEMENT CROWN AND IS OFFSET, AT SAME BEARING, OF THE SURVEY CENTERLINE BY 7 FT WEST
2. "BV" EAST TOP-OF-CURB PROFILE IS SHOWN ON SHEET CG-004
3. FOR STORM DRAIN PLAN AND PROFILE WITH CATCH BASIN LOCATIONS, SEE SHEET CG-010 AND CG-011
4. FOR LEGEND SEE SHEET CG-001

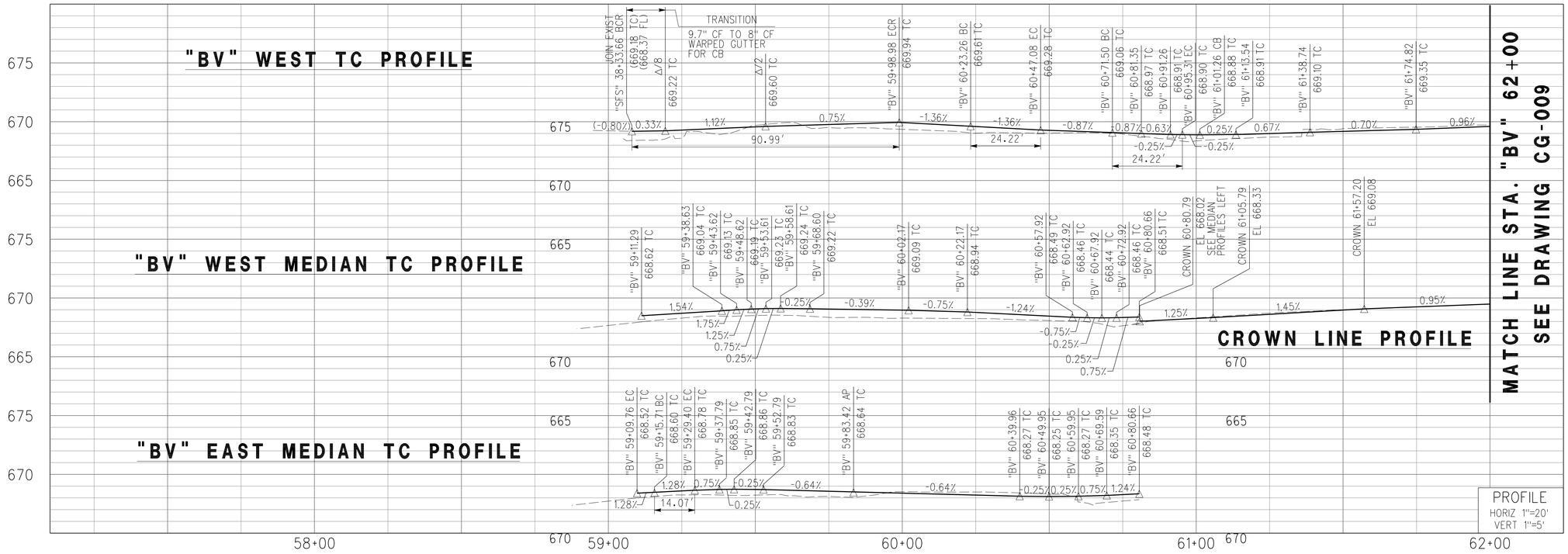


Underground Service Alert
Call: TOLL FREE
1-800
227-2600
TWO WORKING DAYS BEFORE YOU DIG

APPROVED FOR RAILROAD WORK.

# BUENA VISTA STREET AT SAN FERNANDO BOULEVARD
# RR - ROADWAY IMPROVEMENT
# PROFILE - SHEET 2 OF 6

CITY OF BURBANK
PUBLIC WORKS DEPARTMENT

RECOMMENDED: CITY ENGINEER DATE
APPROVED: PUBLIC WORKS DIRECTOR DATE
PEN TABLE => ...\CADD\Support\pen\PlotStamp.tbl
PLOT DRIVER => ...\Plotdrv\SCRRA_pdfBW.plt
PAGE NO/A. FIELD BOOK DESIGNED DRAWN CHECKED REVIEWED DATE
SHEET 384 OF 394
TIME PLOTTED => 6:24:17 PM
DATE PLOTTED => 7/17/2012
LAST REVISION 00-00-00
WORK ORDER NO. BID SCHEDULE NO. PLAN NO. RR-CG-005

| REVISED BY | DATE REVISED |
|---|---|
| PAUL LAUGHLIN | |
| RICHARD SILOS | |

CALCULATED-DESIGNED BY
CHECKED BY

STATE OF CALIFORNIA - DEPARTMENT OF TRANSPORTATION
CONSULTANT FUNCTIONAL SUPERVISOR
PATRICK NICHOLSON
DESIGN

BORDER LAST REVISED 7/2/2010
USERNAME => grandova
DGN FILE => ...\Civil\Sheet\E737B-CG-005.sht
RELATIVE BORDER SCALE IS IN INCHES 0 1 2 3
UNIT 1812
PROJECT NUMBER & PHASE 07000211191

| Dist | COUNTY | ROUTE | POST MILES TOTAL PROJECT | SHEET No. | TOTAL SHEETS |
|---|---|---|---|---|---|
| 07 | LA | 5 | 29.4/31.6 | 1751 | 1931 |

Pat Nicholson 05-21-12
REGISTERED CIVIL ENGINEER DATE

05-21-12
PLANS APPROVAL DATE

REGISTERED PROFESSIONAL ENGINEER PATRICK NICHOLSON No. C 40993 Exp. 3-31-2013 CIVIL STATE OF CALIFORNIA

*THE STATE OF CALIFORNIA OR ITS OFFICERS OR AGENTS SHALL NOT BE RESPONSIBLE FOR THE ACCURACY OR COMPLETENESS OF SCANNED COPIES OF THIS PLAN SHEET.*

SCRRA
279 E. ARROW HIGHWAY
SAN DIMAS, CA 91773

AECOM
515 SOUTH FLOWER ST, 4th FLOOR
LOS ANGELES, CA 90071

## CURVE DATA:

| | L | R | △ | TAN |
|---|---|---|---|---|
| C1 | 20.10' | 96.00' | 11° 59'49" | 10.09' |
| C2 | 20.10' | 96.00' | 11° 59'49" | 10.09' |

## NOTES:

1. PAVEMENT SECTION TO CONSIST OF 2" RHMA (GAP GRADED) SURFACE COURSE AND 4" HMA (TYPE A) BASE COURSE OVER 6" CMB
2. MINIMUM 4" CMB SHALL BE PLACED UNDERNEATH SIDEWALK
3. FOR LEGEND SEE SHEET RR-CG-001

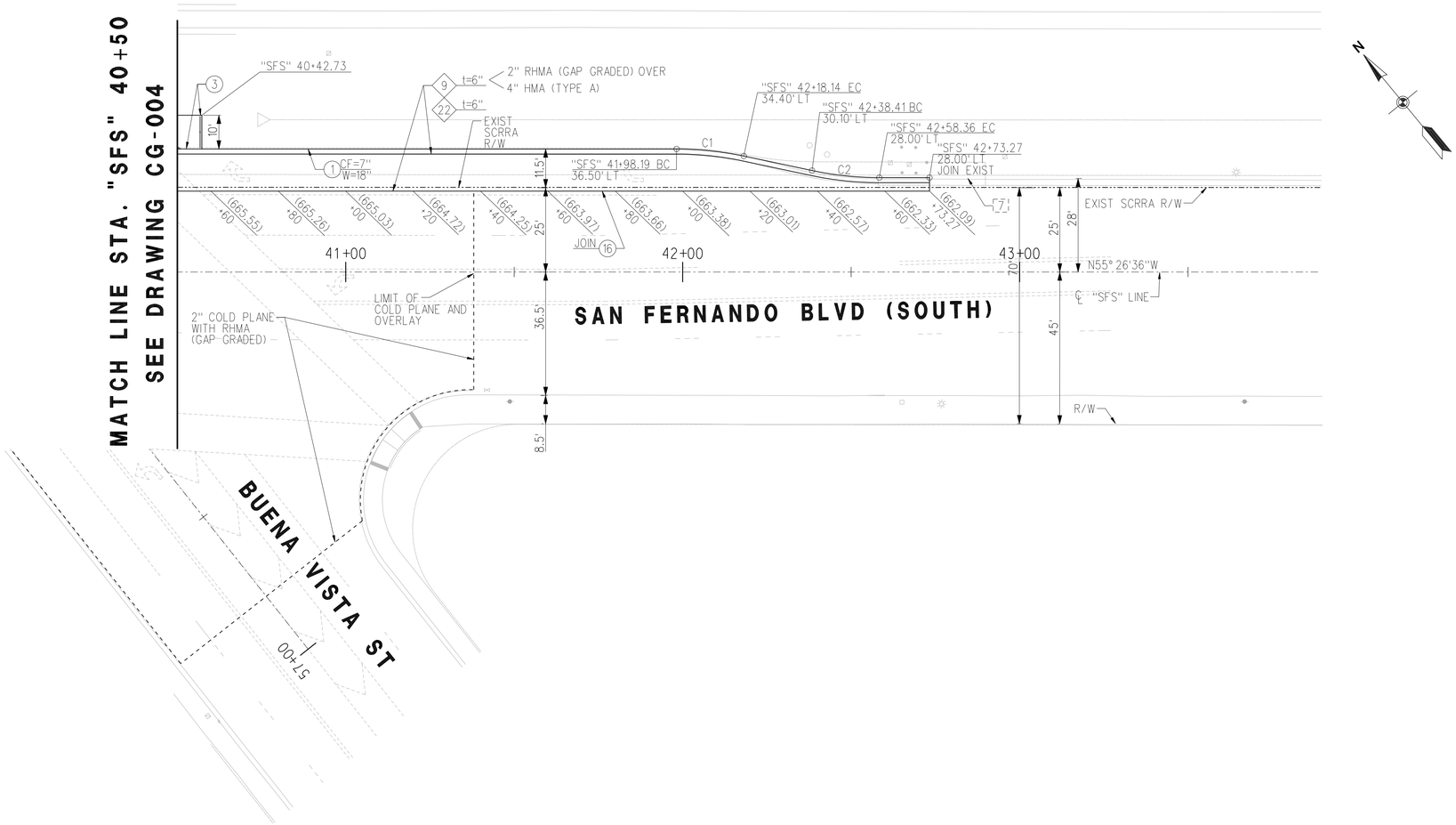


Underground Service Alert
Call: TOLL FREE
1-800
227-2600
TWO WORKING DAYS BEFORE YOU DIG

APPROVED FOR RAILROAD WORK.

20 15 10 5 0 20 40
1" = 20'-0"

# BUENA VISTA STREET AT SAN FERNANDO BOULEVARD
## RR - ROADWAY IMPROVEMENT
## PLAN - SHEET 3 OF 6

CITY OF BURBANK
PUBLIC WORKS DEPARTMENT

RECOMMENDED: CITY ENGINEER DATE
APPROVED: PUBLIC WORKS DIRECTOR DATE

FIELD BOOK PAGE NON/A
DESIGNED DATE
DRAWN DATE
CHECKED DATE
REVIEWED DATE

SHEET 385 OF 394

PLAN NO. RR-CG-006

WORK ORDER NO. BID SCHEDULE NO.

LAST REVISION 00-00-00 DATE PLOTTED => 7/17/2012 TIME PLOTTED => 6:24:21 PM PLOT DRIVER => ...\Plotdrv\SCRRA_pdfBW.plt PEN TABLE => ...\CADD\Support\pen\PlotStamp.tbl

STATE OF CALIFORNIA - DEPARTMENT OF TRANSPORTATION
Caltrans
DESIGN
CONSULTANT FUNCTIONAL SUPERVISOR PATRICK NICHOLSON
CALCULATED-DESIGNED BY PAUL LAUGHLIN
CHECKED BY RICHARD SILOS
REVISED BY
DATE REVISED

| Dist | COUNTY | ROUTE | POST MILES TOTAL PROJECT | SHEET No. | TOTAL SHEETS |
|---|---|---|---|---|---|
| 07 | LA | 5 | 29.4/31.6 | 1752 | 1931 |

Pat Nicholson 05-21-12
REGISTERED CIVIL ENGINEER DATE

PATRICK NICHOLSON
No. C 40993
Exp. 3-31-2013
CIVIL
REGISTERED PROFESSIONAL ENGINEER
STATE OF CALIFORNIA

05-21-12
PLANS APPROVAL DATE

THE STATE OF CALIFORNIA OR ITS OFFICERS OR AGENTS SHALL NOT BE RESPONSIBLE FOR THE ACCURACY OR COMPLETENESS OF SCANNED COPIES OF THIS PLAN SHEET.


SCRRA
279 E. ARROW HIGHWAY
SAN DIMAS, CA 91773

AECOM
515 SOUTH FLOWER ST, 4th FLOOR
LOS ANGELES, CA 90071


NOTES:

1. FOR LEGEND SEE SHEET CG-001

**SEE SHEET CG-004 FOR PLAN VIEW**

**SEE SHEET CG-006 FOR PLAN VIEW**

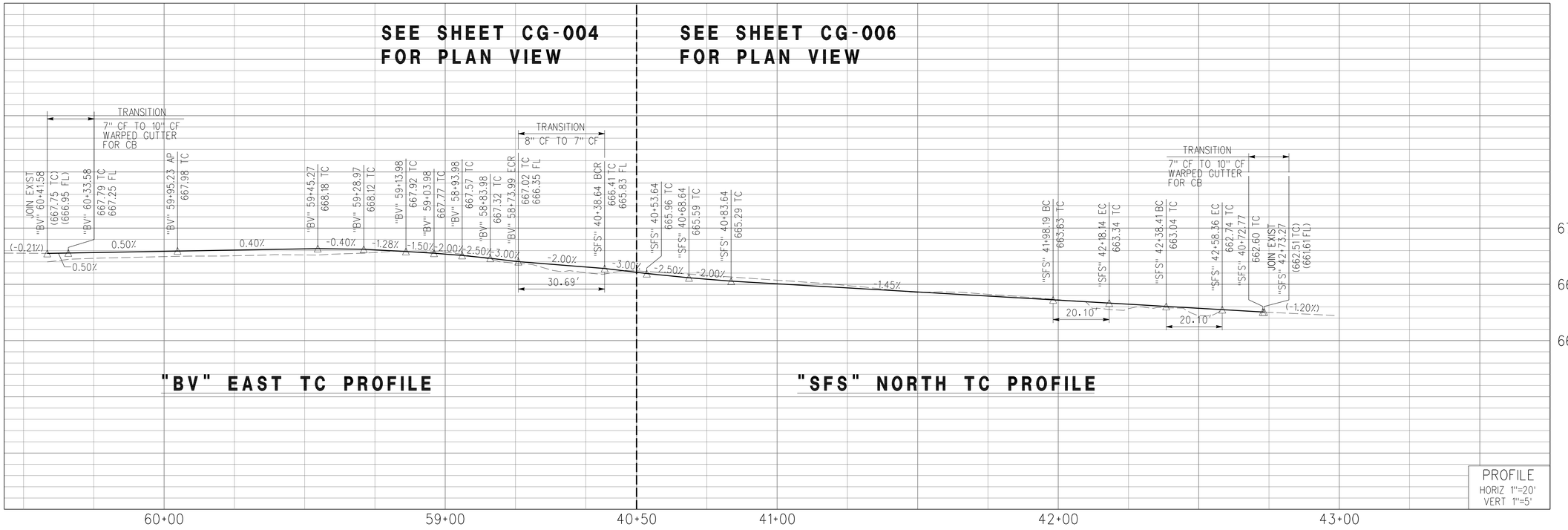


Underground Service Alert
Call: TOLL FREE
1-800
227-2600
TWO WORKING DAYS
BEFORE YOU DIG

APPROVED FOR RAILROAD WORK.

# BUENA VISTA STREET AT SAN FERNANDO BOULEVARD
# RR - ROADWAY IMPROVEMENT
# PROFILE - SHEET 4 OF 6

CITY OF BURBANK
PUBLIC WORKS DEPARTMENT

RECOMMENDED: DATE
CITY ENGINEER
APPROVED: DATE
PUBLIC WORKS DIRECTOR

PAGE N/A
FIELD BOOK — DESIGNED — DATE — DRAWN — DATE — CHECKED — DATE — REVIEWED — DATE

SHEET 386 OF 394

PLOT DRIVER => ...\Plotdrv\SCRRA_pdfBW.plt
PEN TABLE => ...\CADD\Support\pen\PlotStamp.tbl
TIME PLOTTED => 6:24:25 PM
DATE PLOTTED => 7/17/2012

BID SCHEDULE NO.
WORK ORDER NO.
PLAN NO. RR-CG-007
LAST REVISION 00-00-00

| CALCULATED-DESIGNED BY | CHECKED BY | REVISED BY | DATE REVISED |
|---|---|---|---|
| PAUL LAUGHLIN | RICHARD SILOS | | |

STATE OF CALIFORNIA - DEPARTMENT OF TRANSPORTATION
CONSULTANT FUNCTIONAL SUPERVISOR: PATRICK NICHOLSON
DESIGN
Caltrans

BORDER LAST REVISED 7/2/2010
USERNAME => grandova
DGN FILE => ...\Civil\Sheet\E737B-CG-007.sht
RELATIVE BORDER SCALE IS IN INCHES 0 1 2 3
UNIT 1812
PROJECT NUMBER & PHASE 07000211191

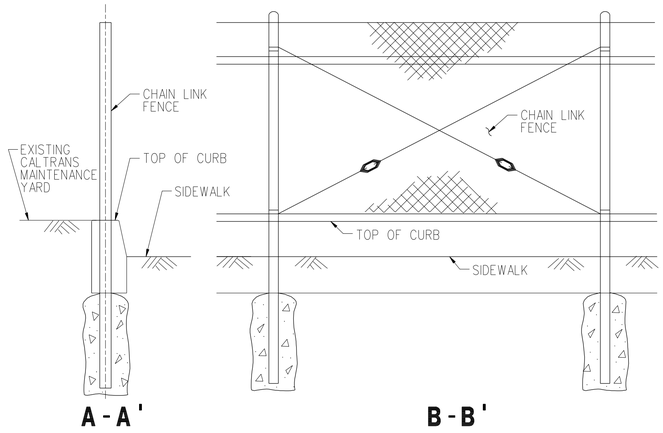


## CURB AND CHAIN LINK FENCE COMBINATION

PER CALTRANS STD RSP A85
AND RSP A87A (TYPE A1-8)

NOTES:

1. MINIMUM 4" CMB SHALL BE PLACED UNDERNEATH SIDEWALK
2. FOR LEGEND SEE SHEET CG-001

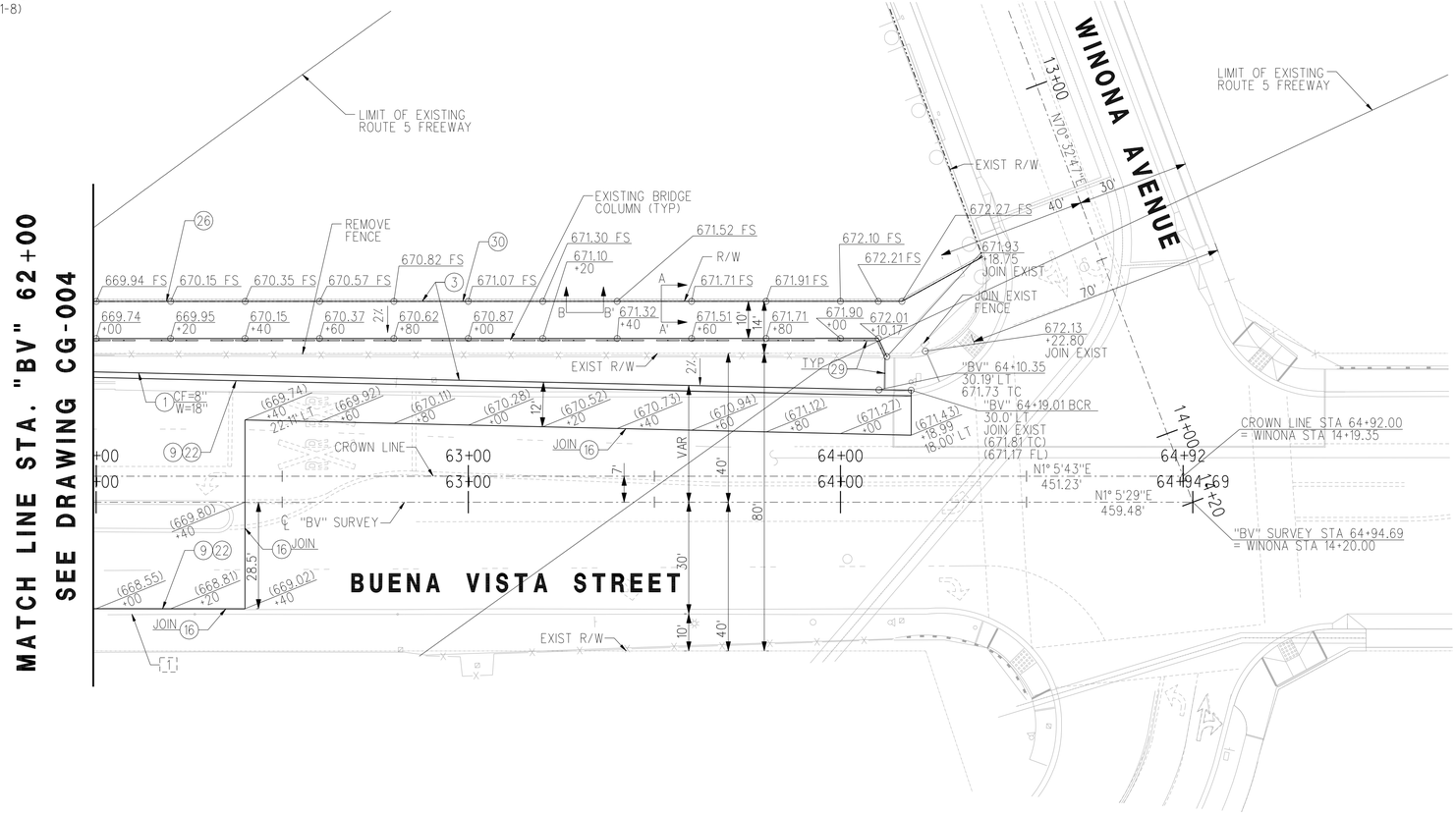


20 15 10 5 0 20 40
1" = 20'-0"

# BUENA VISTA STREET AT SAN FERNANDO BOULEVARD
# RR - ROADWAY IMPROVEMENT
# PLAN - SHEET 5 OF 6

| Dist | COUNTY | ROUTE | POST MILES TOTAL PROJECT | SHEET No. | TOTAL SHEETS |
|---|---|---|---|---|---|
| 07 | LA | 5 | 29.4/31.6 | 1753 | 1931 |

Pat Nicholson 05-21-12
REGISTERED CIVIL ENGINEER DATE

PATRICK NICHOLSON No. C 40993 Exp. 3-31-2013 CIVIL — REGISTERED PROFESSIONAL ENGINEER — STATE OF CALIFORNIA

05-21-12
PLANS APPROVAL DATE

THE STATE OF CALIFORNIA OR ITS OFFICERS OR AGENTS SHALL NOT BE RESPONSIBLE FOR THE ACCURACY OR COMPLETENESS OF SCANNED COPIES OF THIS PLAN SHEET.

SCRRA
279 E. ARROW HIGHWAY
SAN DIMAS, CA 91773

AECOM
515 SOUTH FLOWER ST. 4th FLOOR
LOS ANGELES, CA 90071

CITY OF BURBANK
PUBLIC WORKS DEPARTMENT

RECOMMENDED: CITY ENGINEER DATE
APPROVED: PUBLIC WORKS DIRECTOR DATE

FIELD BOOK PAGE N/A
DESIGNED DATE
DRAWN DATE
CHECKED DATE
REVIEWED DATE

PLOT DRIVER => ...\Plotdrv\SCRRA_pdf8W.plt
PEN TABLE => ...\CADD\Support\pen\PlotStamp.tbl
TIME PLOTTED => 6:24:28 PM

SHEET 387 OF 394

BID SCHEDULE NO.

WORK ORDER NO.

PLAN NO. RR-CG-008

LAST REVISION 00-00-00
DATE PLOTTED => 7/17/2012

CALCULATED-DESIGNED BY
CHECKED BY
PAUL LAUGHLIN
RICHARD SILOS
REVISED BY
DATE REVISED

STATE OF CALIFORNIA - DEPARTMENT OF TRANSPORTATION
DESIGN
CONSULTANT FUNCTIONAL SUPERVISOR
PATRICK NICHOLSON

Underground Service Alert
DIG ALERT BEFORE YOU DIG
Call: TOLL FREE
1-800
227-2600
TWO WORKING DAYS BEFORE YOU DIG

APPROVED FOR RAILROAD WORK.

BORDER LAST REVISED 7/2/2010
USERNAME => grandova
DGN FILE => ...\Civil\Sheet\E737B-CG-008.sht
RELATIVE BORDER SCALE IS IN INCHES 0 1 2 3
UNIT 1812
PROJECT NUMBER & PHASE 07000211191

| Dist | COUNTY | ROUTE | POST MILES TOTAL PROJECT | SHEET No. | TOTAL SHEETS |
|---|---|---|---|---|---|
| 07 | LA | 5 | 29.4/31.6 | 1754 | 1931 |

Pat Nicholson 05-21-12
REGISTERED CIVIL ENGINEER DATE

PATRICK NICHOLSON No. C 40993 Exp. 3-31-2013 CIVIL — REGISTERED PROFESSIONAL ENGINEER — STATE OF CALIFORNIA

05-21-12
PLANS APPROVAL DATE

*THE STATE OF CALIFORNIA OR ITS OFFICERS OR AGENTS SHALL NOT BE RESPONSIBLE FOR THE ACCURACY OR COMPLETENESS OF SCANNED COPIES OF THIS PLAN SHEET.*


SCRRA
279 E. ARROW HIGHWAY
SAN DIMAS, CA 91773

AECOM
515 SOUTH FLOWER ST, 4th FLOOR
LOS ANGELES, CA 90071


NOTES:

1. FOR LEGEND SEE SHEET CG-001

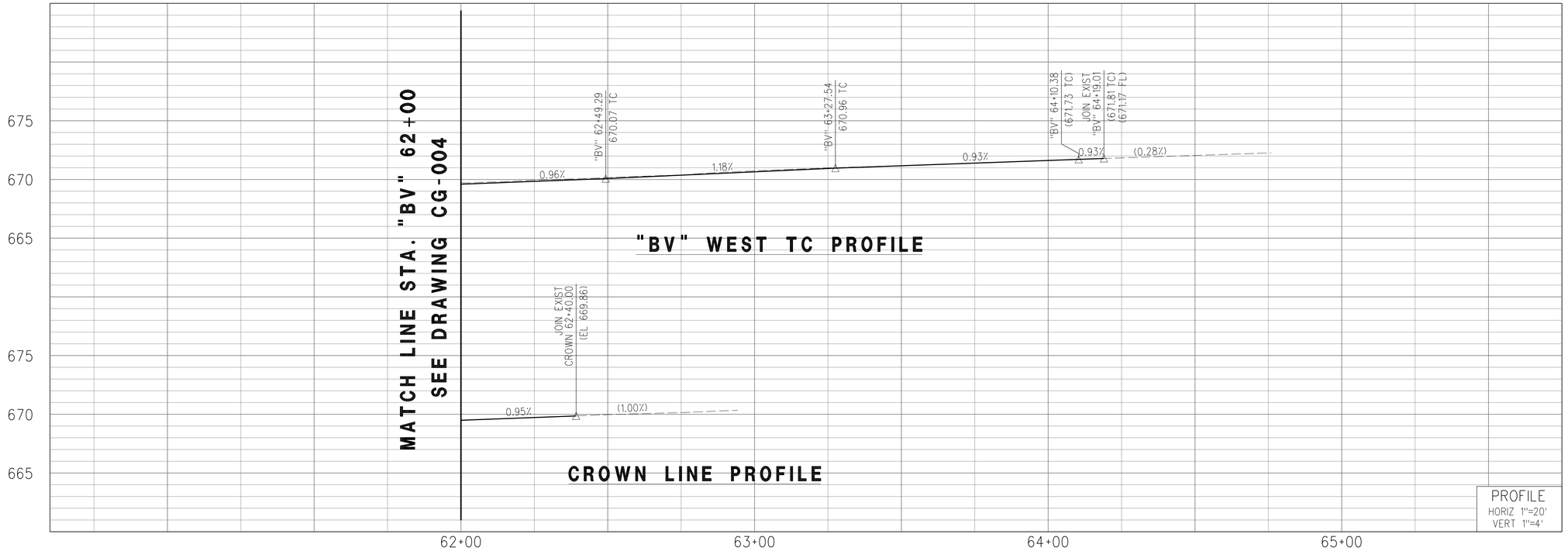


Underground Service Alert
Call: TOLL FREE
1-800
227-2600
TWO WORKING DAYS BEFORE YOU DIG

APPROVED FOR RAILROAD WORK.

# BUENA VISTA STREET AT SAN FERNANDO BOULEVARD
# RR - ROADWAY IMPROVEMENT
# PROFILE - SHEET 6 OF 6

CITY OF BURBANK
PUBLIC WORKS DEPARTMENT

RECOMMENDED: CITY ENGINEER DATE
APPROVED: PUBLIC WORKS DIRECTOR DATE

FIELD BOOK PAGE N/A
DESIGNED DATE
DRAWN DATE
CHECKED DATE
REVIEWED DATE

SHEET 388 OF 394

PLAN NO. RR-CG-009

WORK ORDER NO.
BID SCHEDULE NO.

LAST REVISION DATE PLOTTED => 7/17/2012
00-00-00

PEN TABLE => ...\CADD\Support\pen\PlotStamp.tbl
PLOT DRIVER => ...\Plotdrv\SCRRA_pdfBW.plt
TIME PLOTTED => 6:24:32 PM

STATE OF CALIFORNIA - DEPARTMENT OF TRANSPORTATION
Caltrans®
DESIGN

CONSULTANT FUNCTIONAL SUPERVISOR: PATRICK NICHOLSON
CALCULATED-DESIGNED BY: PAUL LAUGHLIN
CHECKED BY: RICHARD SILOS

| REVISED BY | DATE REVISED |
|---|---|

BORDER LAST REVISED 7/2/2010

USERNAME => grandova
DGN FILE => ...\Civil\Sheet\E737B-CG-009.sht

RELATIVE BORDER SCALE IS IN INCHES 0 1 2 3

UNIT 1812

PROJECT NUMBER & PHASE 07000211191

| Dist | COUNTY | ROUTE | POST MILES TOTAL PROJECT | SHEET No. | TOTAL SHEETS |
|---|---|---|---|---|---|
| 07 | LA | 5 | 29.4/31.6 | 1755 | 1931 |

Pat Nicholson 05-21-12
REGISTERED CIVIL ENGINEER DATE

PATRICK NICHOLSON
No. C 40993
Exp. 3-31-2013
CIVIL
REGISTERED PROFESSIONAL ENGINEER
STATE OF CALIFORNIA

05-21-12
PLANS APPROVAL DATE

*THE STATE OF CALIFORNIA OR ITS OFFICERS OR AGENTS SHALL NOT BE RESPONSIBLE FOR THE ACCURACY OR COMPLETENESS OF SCANNED COPIES OF THIS PLAN SHEET.*

SCRRA
279 E. ARROW HIGHWAY
SAN DIMAS, CA 91773

AECOM
515 SOUTH FLOWER ST, 4th FLOOR
LOS ANGELES, CA 90071

NOTES:

1. USE CASE III BEDDING FOR 24" RCP
2. FOR LEGEND SEE SHEET CG-001

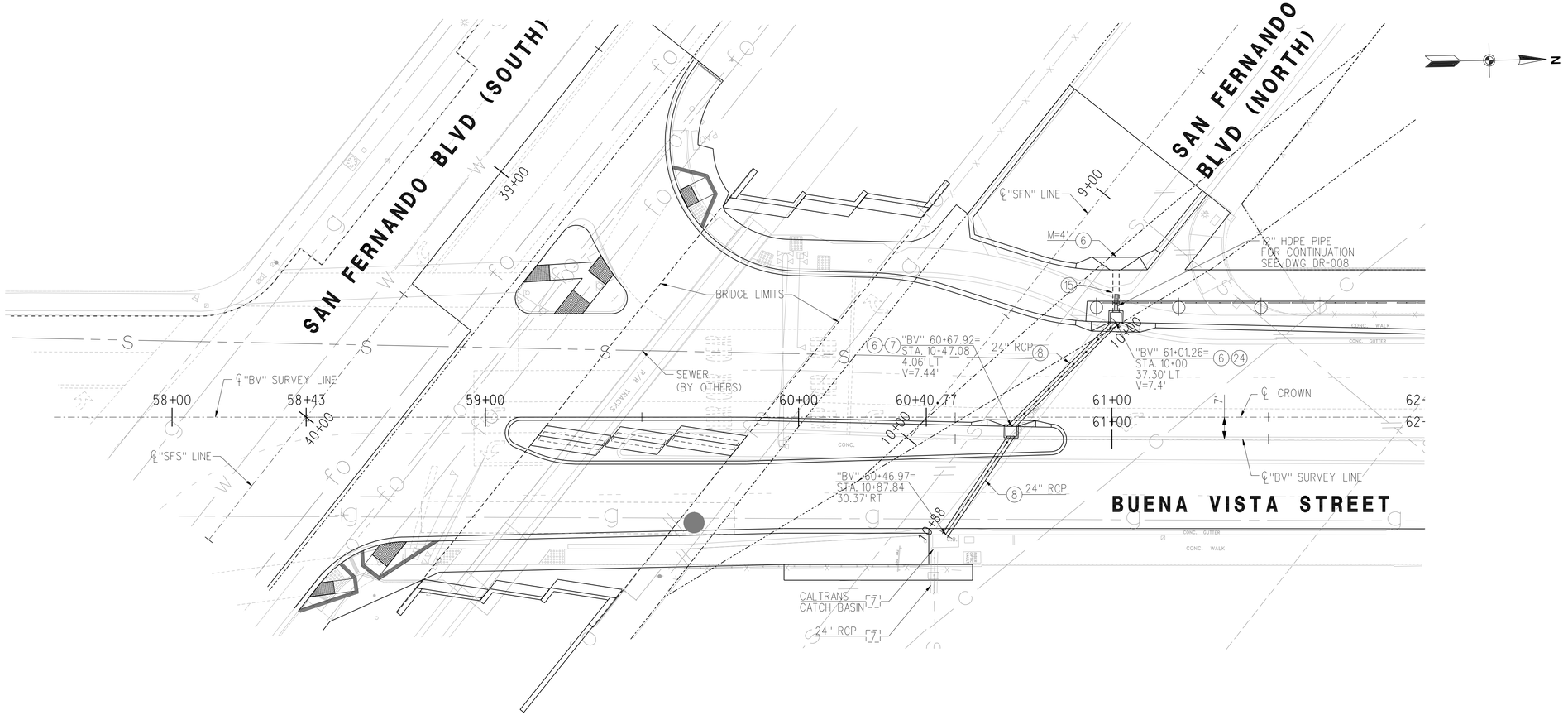


Underground Service Alert
Call: TOLL FREE 1-800 227-2600
TWO WORKING DAYS BEFORE YOU DIG

APPROVED FOR RAILROAD WORK.

20 15 10 5 0 20 40
1" = 20'-0"

# BUENA VISTA STREET AT SAN FERNANDO BOULEVARD
# RR - ROADWAY IMPROVEMENT
# DRAINAGE PLAN SHEET

CITY OF BURBANK
PUBLIC WORKS DEPARTMENT

RECOMMENDED: CITY ENGINEER DATE
APPROVED: PUBLIC WORKS DIRECTOR DATE

PEN TABLE => ...\CADD\Support\pen\PlotStamp.tbl
PLOT DRIVER => ...\Plotdrv\SCRRA_pdfBW.plt
TIME PLOTTED => 6:24:36 PM
DATE PLOTTED => 7/17/2012
LAST REVISION 00-00-00

FIELD BOOK — PAGE N/A
DESIGNED — DATE
DRAWN — DATE
CHECKED — DATE
REVIEWED — DATE

SHEET 389 OF 394

PLAN NO. RR-CG-010

WORK ORDER NO. — BID SCHEDULE NO.

STATE OF CALIFORNIA - DEPARTMENT OF TRANSPORTATION
DESIGN
CONSULTANT FUNCTIONAL SUPERVISOR: PATRICK NICHOLSON
CALCULATED-DESIGNED BY: PAUL LAUGHLIN
CHECKED BY: RICHARD SILOS
REVISED BY — DATE REVISED

BORDER LAST REVISED 7/2/2010
USERNAME => grandova
DGN FILE => ...\Civil\Sheet\E737B-CG-010.sht
RELATIVE BORDER SCALE IS IN INCHES 0 1 2 3
UNIT 1812
PROJECT NUMBER & PHASE 07000211191

| Dist | COUNTY | ROUTE | POST MILES TOTAL PROJECT | SHEET No. | TOTAL SHEETS |
|---|---|---|---|---|---|
| 07 | LA | 5 | 29.4/31.6 | 1756 | 1931 |

Pat Nicholson 05-21-12
REGISTERED CIVIL ENGINEER DATE

REGISTERED PROFESSIONAL ENGINEER
PATRICK NICHOLSON
No. C 40993
Exp. 3-31-2013
CIVIL
STATE OF CALIFORNIA

05-21-12
PLANS APPROVAL DATE

*THE STATE OF CALIFORNIA OR ITS OFFICERS OR AGENTS SHALL NOT BE RESPONSIBLE FOR THE ACCURACY OR COMPLETENESS OF SCANNED COPIES OF THIS PLAN SHEET.*


SCRRA
279 E. ARROW HIGHWAY
SAN DIMAS, CA 91773

AECOM
515 SOUTH FLOWER ST, 4th FLOOR
LOS ANGELES, CA 90071


NOTES:

1. FOR LEGEND SEE SHEET CG-001
2. STORM DRAIN IS OWNED AND MAINTAINED BY CITY OF BURBANK

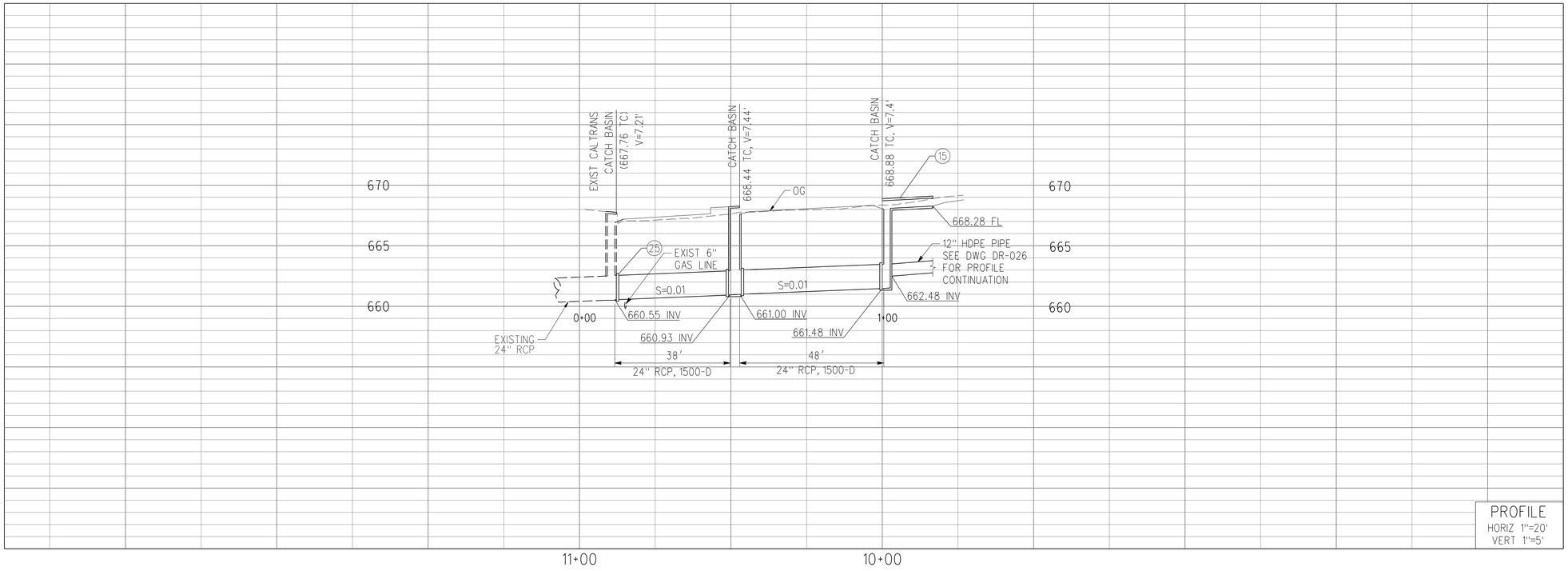


Underground Service Alert
Call: TOLL FREE
1-800
227-2600
TWO WORKING DAYS BEFORE YOU DIG

APPROVED FOR RAILROAD WORK.

# BUENA VISTA STREET AT SAN FERNANDO BOULEVARD
# RR - ROADWAY IMPROVEMENT
# DRAINAGE PROFILE SHEET

CITY OF BURBANK
PUBLIC WORKS DEPARTMENT

RECOMMENDED: CITY ENGINEER DATE
APPROVED: PUBLIC WORKS DIRECTOR DATE
PEN TABLE => ...\CADD\Support\pen\PlotStamp.tbl
PLOT DRIVER => ...\Plotdrv\SCRRA_pdfBW.plt
PAGE NO/A
FIELD BOOK
DESIGNED DATE
DRAWN DATE
CHECKED DATE
REVIEWED DATE
SHEET 390 OF 394
TIME PLOTTED => 6:24:40 PM
BID SCHEDULE NO.
WORK ORDER NO.
PLAN NO. RR-CG-011
DATE PLOTTED => 7/17/2012
LAST REVISION 00-00-00

STATE OF CALIFORNIA - DEPARTMENT OF TRANSPORTATION
Caltrans®
DESIGN
CONSULTANT FUNCTIONAL SUPERVISOR
PATRICK NICHOLSON
CALCULATED-DESIGNED BY
PAUL LAUGHLIN
CHECKED BY
RICHARD SILOS
REVISED BY
DATE REVISED

BORDER LAST REVISED 7/2/2010
USERNAME => grandova
DGN FILE => ...\Civil\Sheet\E737B-CG-011.sht
RELATIVE BORDER SCALE IS IN INCHES 0 1 2 3
UNIT 1812
PROJECT NUMBER & PHASE 07000211191

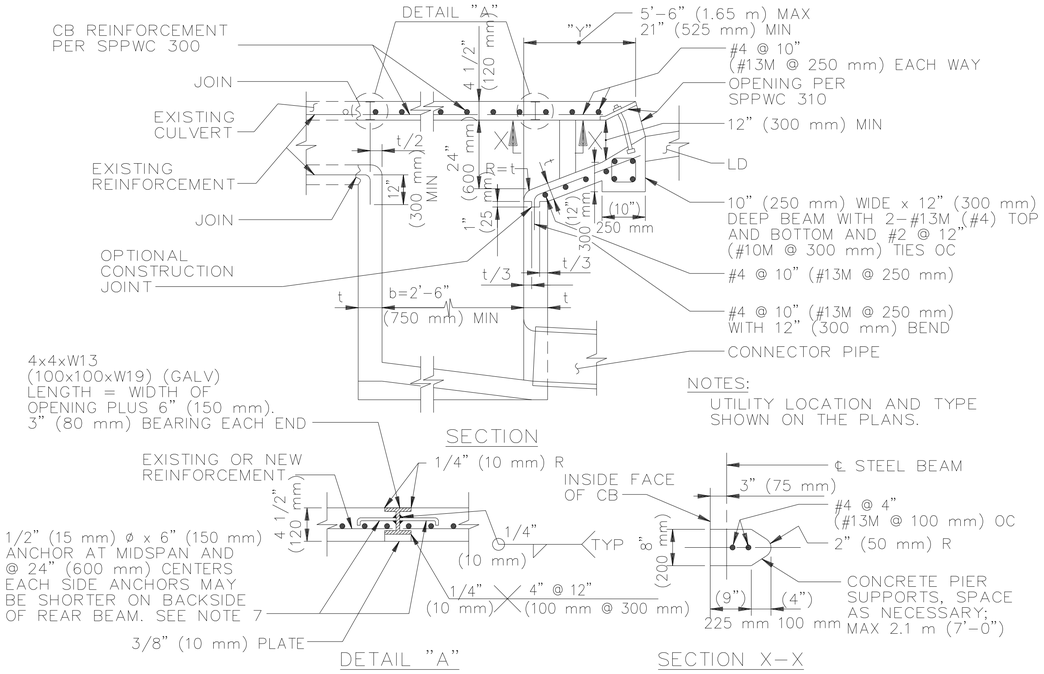


# CASE 1
# CATCH BASIN MODIFICATION WITH REAR CULVERT ENTRANCE AND/OR ENTRANCE PROJECTION

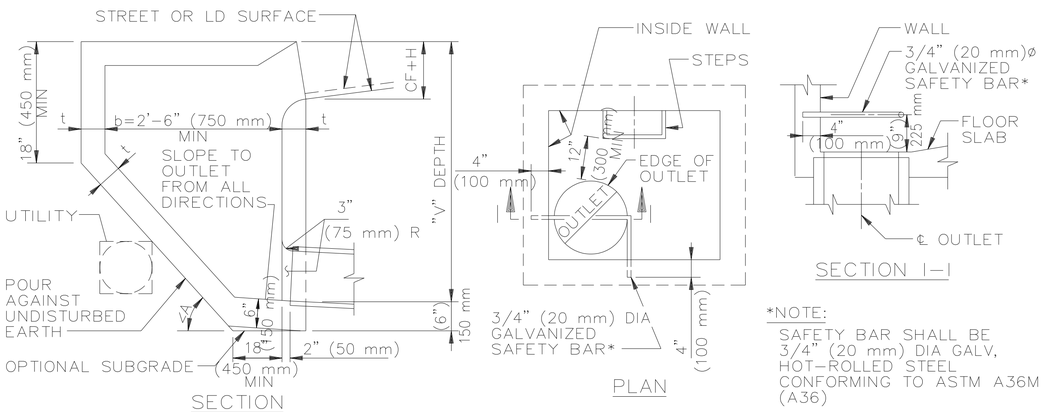


*NOTE:
SAFETY BAR SHALL BE 3/4" (20 mm) DIA GALV, HOT-ROLLED STEEL CONFORMING TO ASTM A36M (A36)

# CASE 2
# CATCH BASIN MODIFICATION TO AVOID EXISTING UTILITY

# CASE 3
# SAFETY BAR FOR DROP OUTLET CATCH BASIN

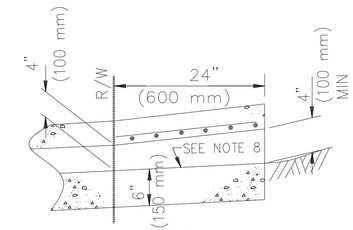





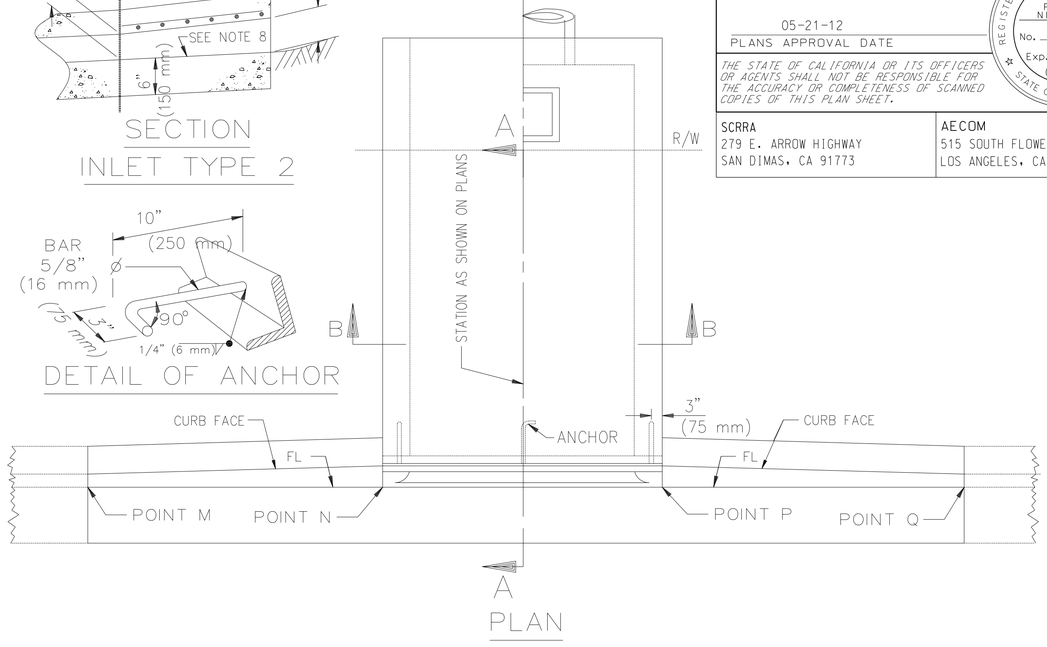


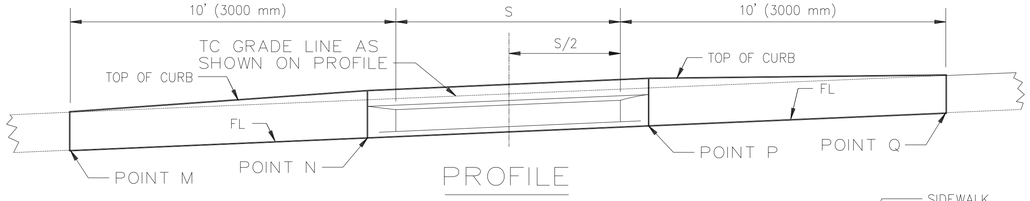


| S, INCHES (mm) | J BAR SPACING |
|---|---|
| 12" (300) | 7" (240) |
| 18" (450) | 7" (240) |
| 24" (600) | 7" (240) |
| 30" (750) | 7" (240) |
| 36" (900) | 7" (240) |
| 42" (1050) | 6" (210) |
| 48" (1200) | 5" (180) |
| 54" (1350) | 6-1/2" (225) |
| 60" (1500) | 5" (180) |
| 66" (1650) | 4" (180) |
| 72" (1800) | 3-1/2" (120) |

FOR S = 30" (750 mm) AND LESS, USE 2 ANCHORS. OTHERWISE, USE 3 ANCHORS.

FOR S = 48" (1200 mm) AND LESS, B = 3" (75 mm) USE 2-1/2"x2"x3/8" (64x51x9.5) GALVANIZED STEEL ANGLE.

OTHERWISE, B = 4" (100 mm).USE 3-1/2"x3"x1/2" (89x76x12.7) GALVANIZED STEEL ANGLE.

J BARS ARE #3 (#10M).

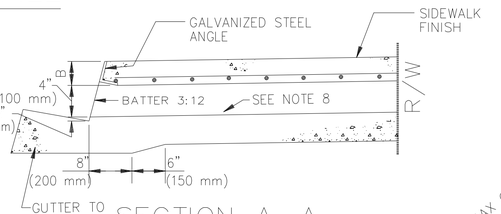


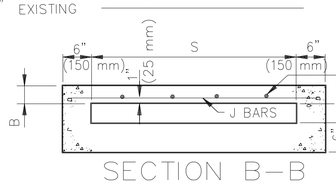


Underground Service Alert
Call: TOLL FREE 1-800 227-2600
TWO WORKING DAYS BEFORE YOU DIG

APPROVED FOR RAILROAD WORK.

# BUENA VISTA STREET AT SAN FERNANDO BOULEVARD
# RR - ROADWAY IMPROVEMENT
# DRAINAGE DETAILS SHEET

| Dist | COUNTY | ROUTE | POST MILES TOTAL PROJECT | SHEET No. | TOTAL SHEETS |
|---|---|---|---|---|---|
| 07 | LA | 5 | 29.4/31.6 | 1757 | 1931 |

Pat Nicholson 05-21-12
REGISTERED CIVIL ENGINEER DATE

05-21-12
PLANS APPROVAL DATE

REGISTERED PROFESSIONAL ENGINEER — PATRICK NICHOLSON — No. C 40993 — Exp. 3-31-2013 — CIVIL — STATE OF CALIFORNIA

THE STATE OF CALIFORNIA OR ITS OFFICERS OR AGENTS SHALL NOT BE RESPONSIBLE FOR THE ACCURACY OR COMPLETENESS OF SCANNED COPIES OF THIS PLAN SHEET.

SCRRA
279 E. ARROW HIGHWAY
SAN DIMAS, CA 91773

AECOM
515 SOUTH FLOWER ST. 4th FLOOR
LOS ANGELES, CA 90071

CITY OF BURBANK
PUBLIC WORKS DEPARTMENT

RECOMMENDED: CITY ENGINEER DATE
APPROVED: PUBLIC WORKS DIRECTOR DATE
PEN TABLE => ...\CADD\Support\pen\PlotStamp.tbl
PLOT DRIVER => ...\Plotdrv\SCRRA_pdfBW.plt
PAGE N/A
FIELD BOOK
DESIGNED
DRAWN
CHECKED
REVIEWED
DATE
TIME PLOTTED => 6:24:43 PM
DATE PLOTTED => 7/17/2012
LAST REVISION 00-00-00

SHEET 391 OF 394
BID SCHEDULE NO.
WORK ORDER NO.
PLAN NO. RR-CG-012

REVISED BY | DATE REVISED
PAUL LAUGHLIN | RICHARD SILOS
CALCULATED-DESIGNED BY | CHECKED BY
CONSULTANT FUNCTIONAL SUPERVISOR: PATRICK NICHOLSON
STATE OF CALIFORNIA - DEPARTMENT OF TRANSPORTATION
DESIGN

BORDER LAST REVISED 7/2/2010
USERNAME => grandova
DGN FILE => ...\Civil\Sheet\E737B-CG-012.sht
RELATIVE BORDER SCALE IS IN INCHES 0 1 2 3
UNIT 1812
PROJECT NUMBER & PHASE 07000211191

## CONSTRUCTION NOTES:

1. FURNISH AND INSTALL CALTRANS MODEL 170E COMPLETE WITH MODEL 332 CABINET, POWER SUPPLIES, ISOLATORS, MODEL 210 P CM, 412C PROM BOARD, MODEL 404 MODEM AND ALL OTHER MISCELLANEOUS AUXILIARY EQUIPMENT TO PROVIDE SPECIFIED OPERATION. CONFORM TO CITY OF BURBANK TRAFFIC SIGNAL CONTROLLER SPECIFICATION, STATE TYPE 170E. LOOP DETECTORS SHALL BE RENO A&E'S VEHICLE DETECTOR MODEL C-170 OR EQUIVALENT. TESTING OF CONTROLLER TO CITY SPECIFIED OPERATIONS DETAILED ON PLANS REQUIRED TO CITY'S SATISFACTION PRIOR TO INSTALLATION IN THE FIELD.

2. FURNISH AND INSTALL BATTERY BACKUP CABINET WITH CLARY BATTERY BACKUP. SYSTEM CONTRACTOR SUBMITTAL REQUIRED. SYSTEM SHALL HAVE REMOTE NOTIFYING AND 8 HOUR CAPABILITIES. UNIT SHALL PROVIDE "ON BATTERY", "LOW BATTERY" AND "TIMER" OUTPUTS TO SIGNAL CONTROLLER.

3. 120/240V ELECTRIC SERVICE ENCLOSURE. PROVIDE 1 – 50AMP(UNMETERED) SIGNAL BREAKER, 1 – 30AMP (UNMETERED) LIGHTING BREAKER TO BE FURNISHED AND INSTALLED PER SHEET RR-E-121.

4. 2" CONDUIT WITH PULLROPE AT A DEPTH OF 30" AND 4' SWEEP TO BWP FEED POINT TO BE FURNISHED AND INSTALLED PER SHEET RR-E-121.

5. INSTALL CITY-FURNISHED CCTV CAMERA AND MOUNTING. CITY TO APPROVE EXACT PLACEMENT PRIOR TO INSTALLATION.

6. REMOVE EXISTING CONDUCTORS, FURNISH AND INSTALL 2 – #10 (LIGHTING) AND 2 DLC. CONNECT DLC TO EXISTING ADVANCE LOOPS.

7. REMOVE EXISTING DLC, FURNISH AND INSTALL 2 DLC. CONNECT DLC TO EXISTING ADVANCE LOOPS.

8. 17"X30", BOLT-DOWN TRAFFIC RATED PULL-BOX WITH A STEEL COVER MARKED "BURBANK ELECTRIC TO BE FURNISHED AND INSTALLED PER SHEET RR-E-121.

9. CONTRACTOR TO REWORK IRRIGATION LINES AND DRAINAGE AS NEEDED FOR THIS INSTALLATION TO PROVIDE COVERAGE TO ALL REMAINING LANDSCAPING, BUT KEEP IRRIGATION AWAY FROM TRAFFIC SIGNAL AND SERVICE CABINETS AND PULL BOXES.

10. DISCONNECT TSIC FROM EXISTING TRAFFIC SIGNAL CONTROLLER PULL BACK TO THIS PULLBOX. INSTALL TSIC BACK THROUGH NEW CONDUIT AND CONNECT TO NEW TRAFFIC SIGNAL CONTROLLER.

### POLE SCHEDULE ●

| NO. | STANDARD TYPE | SIG. M.A. | LUM M.A. | LUMINAIRE HPSV | VEH. SIG. MTG. MAST ARM | VEH. SIG. MTG. POLE | PED. SIGNAL MTG. | PPB Ø | PPB QUAD | PPB ARROW | R.S.N.S. | POLE LOCATION A | B | C | D | E | NOTES |
|---|---|---|---|---|---|---|---|---|---|---|---|---|---|---|---|---|---|
| A | 26-4-80(RL) | 45' | 12' | 400W | 2-MAS | SV-1-T | SP-1-CS | - | - | - | San Fernando Blvd | - | - | - | 10' | 3' | |
| B | PPB POST(N) | - | - | - | - | - | - | 6/8 | N(N)/E(N) | RT(N)/LT(N) | - | 12.5' | - | - | - | 3' | |
| C | TYPE 15(RL) | - | 12' | 400W | - | SV-2-T | SP-1-CS (N) | - | - | - | - | - | 12.5' | - | - | 3' | |
| D | 24-4-80 | 35' | 12' | 400W | 2-MAS | SV-1-T | SP-1-CS | - | - | - | - | EXISTING | | | | | |
| E | PPB POST | - | - | - | - | - | - | 8 | W | LT | Buena Vista St ← Airport | EXISTING | | | | | |
| F | TYPE 15 | - | 12' | 400W | - | SV-1-T | SP-1-CS | 2 | N | RT | - | EXISTING | | | | | |
| G | 24-4-80 | 35' | 12' | 400W | 2-MAS(N) | SV-1-T(N) | SP-1-CS | 2 | N | LT | San Fernando Blvd | EXISTING | | | | | SEE DETAIL "A" 5 |
| H | TYPE 15 | - | 12' | 400W | - | SV-1-T | SP-1-CS | 4 | E | RT | - | EXISTING | | | | | |
| I | 24-4-100(N) | 35' | 15' | 400W | 2-MAS | SV-1-T(N) | SP-1-CS(N) | 4 | E(N) | LT | Buena Vista St ← Airport (RL) | - | - | - | 1' | 3' | |
| J | TYPE 15(N) | - | 12' | 400W | - | SV-2-T(N) | SP-1-CS(N) | 6 | N(N) | LT | - | - | 6.3' | - | - | 3' | |

R.S.N.S. REFLECTORIZED STREET NAME SIGN (2-SIDED). (N) NEW EQUIPMENT, (RL) RELOCATED EQUIPMENT

● ALL EQUIPMENT IS EXISTING UNLESS OTHERWISE SPECIFIED.




NOTE: "E" SHALL BE 2'-6" UNLESS OTHERWISE SPECIFIED

SIGNAL STANDARD LOCATION
NTS

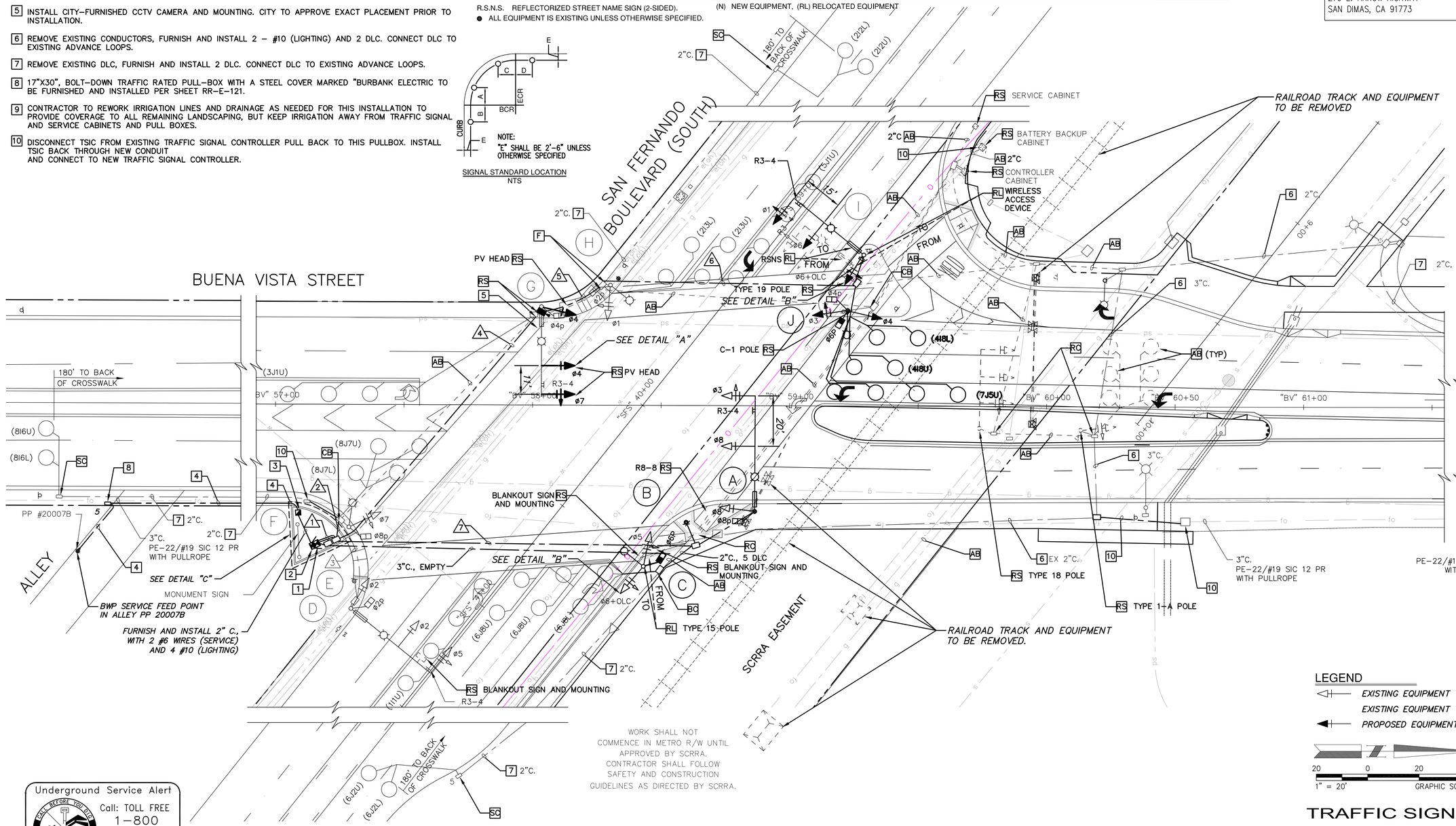


WORK SHALL NOT COMMENCE IN METRO R/W UNTIL APPROVED BY SCRRA. CONTRACTOR SHALL FOLLOW SAFETY AND CONSTRUCTION GUIDELINES AS DIRECTED BY SCRRA.

LEGEND

- EXISTING EQUIPMENT TO REMAIN
- EXISTING EQUIPMENT TO BE REMOVED
- PROPOSED EQUIPMENT

20 0 20 40
1" = 20' GRAPHIC SCALE

Underground Service Alert
Call: TOLL FREE 1-800 227-2600
TWO WORKING DAYS BEFORE YOU DIG

NOTE: UTILITIES ARE SHOWN FOR CONVENIENCE ONLY. VERIFICATION OF ACTUAL EXISTENCE AND LOCATION ARE THE RESPONSIBILITY OF THE CONTRACTOR.

APPROVED FOR RAILROAD WORK.

SEE SHEET RR-TM-002 FOR GENERAL NOTES, DETAILS AND PHASE DIAGRAM

# TRAFFIC SIGNAL MODIFICATION PLAN BUENA VISTA STREET AT SAN FERNANDO BOULEVARD

| Dist | COUNTY | ROUTE | POST MILES TOTAL PROJECT | SHEET No. | TOTAL SHEETS |
|---|---|---|---|---|---|
| 07 | LA | 5 | 29.4/31.6 | 1758 | 1931 |

REGISTERED CIVIL ENGINEER — 5-21-12 DATE

KAREN M. HANKINSON No. C54175 Exp. 6/30/13 CIVIL — REGISTERED PROFESSIONAL ENGINEER — STATE OF CALIFORNIA

05-21-12
PLANS APPROVAL DATE

THE STATE OF CALIFORNIA OR ITS OFFICERS OR AGENTS SHALL NOT BE RESPONSIBLE FOR THE ACCURACY OR COMPLETENESS OF SCANNED COPIES OF THIS PLAN SHEET.

SCRRA
279 E. ARROW HIGHWAY
SAN DIMAS, CA 91773

RAILPROS
1 ADA PARKWAY, SUITE 200
IRVINE, CA 92618

CITY OF BURBANK
PUBLIC WORKS DEPARTMENT

RECOMMENDED: CITY ENGINEER — DATE
APPROVED: PUBLIC WORKS DIRECTOR — DATE

FIELD BOOK — PAGE
DESIGNED JD — DATE 3/6/12
DRAWN SW — DATE 4/15/12
CHECKED KMH — DATE 5/1/12
REVIEWED CC — DATE 5/6/12

SHEET 392 OF 394

BID SCHEDULE NO. RR-TM-001

WORK ORDER NO.

PLAN NO.

LAST REVISION 06-05-12
DATE PLOTTED => Jul 18, 12
TIME PLOTTED => 7:30:26am

| REVISED BY | DATE REVISED |
|---|---|
| JOE DONALDSON | KAREN M. HANKINSON |

CALCULATED-DESIGNED BY
CHECKED BY

CONSULTANT FUNCTIONAL SUPERVISOR
KAREN M. HANKINSON

STATE OF CALIFORNIA – DEPARTMENT OF TRANSPORTATION
DESIGN

Caltrans

BORDER LAST REVISED 7/2/2010
USERNAME =>Donaldson
DGN FILE =>
RELATIVE BORDER SCALE IS IN INCHES 0 1 2 3
UNIT 1812
PROJECT NUMBER & PHASE 07000211191

| Dist | COUNTY | ROUTE | POST MILES TOTAL PROJECT | SHEET No. | TOTAL SHEETS |
|---|---|---|---|---|---|
| 07 | LA | 5 | 29.4/31.6 | 1759 | 1931 |

REGISTERED CIVIL ENGINEER — DATE 5-21-12

PLANS APPROVAL DATE 05-21-12

REGISTERED PROFESSIONAL ENGINEER — KAREN M. HANKINSON — No. C54175 — Exp. 6/30/13 — CIVIL — STATE OF CALIFORNIA

THE STATE OF CALIFORNIA OR ITS OFFICERS OR AGENTS SHALL NOT BE RESPONSIBLE FOR THE ACCURACY OR COMPLETENESS OF SCANNED COPIES OF THIS PLAN SHEET.

SCRRA
279 E. ARROW HIGHWAY
SAN DIMAS, CA 91773

RAILPROS
1 ADA PARKWAY, SUITE 200
IRVINE, CA 92618

CITY OF BURBANK
PUBLIC WORKS DEPARTMENT

## GENERAL NOTES: (SHEETS RR-TC-009, RR-TM-001, AND RR-TM-002)

1. ALL WORK AND MATERIAL INDICATED ON THESE PLANS SHALL CONFORM TO THE PROVISIONS OF THE STANDARD SPECIFICATIONS AND STANDARD PLANS OF THE STATE OF CALIFORNIA, DEPARTMENT OF TRANSPORTATION, LATEST EDITION, THE SPECIAL PROVISIONS, AND PROJECT SPECIFICATIONS.
2. IT SHALL BE THE CONTRACTOR'S RESPONSIBILITY TO ASCERTAIN THE LOCATION OF SUCH UNDERGROUND IMPROVEMENTS OR FACILITIES WHICH MAY BE SUBJECT TO DAMAGE BY HIS OPERATIONS. THIS SHALL INCLUDE BUT NOT BE LIMITED TO POT HOLING TO EXPOSE ALL UTILITY CROSSINGS WITH PROPOSED CONDUIT RUNS, TRAFFIC SIGNAL FOUNDATIONS, ETC.
3. ALL WIRING SHALL BE MARKED (TAGGED) WITHIN THE CONTROLLER CABINET FOR PHASE IDENTIFICATION.
4. SIGNAL POLES, DETECTOR LOOPS, CONTROLLER CABINET, AND SERVICE CABINET SHALL BE LOCATED BY THE ENGINEER IN THE FIELD. PERFORM PRELIMINARY STRIPING LAYOUT PRIOR TO LOOP DETECTOR LAYOUT.
5. ALL SAFETY LIGHTING SHALL BE 400 W, 120 VOLT, HPSV, CUT OFF TYPE, INDIVIDUAL PHOTOCELL CONTROLLED, AND UNMETERED.
6. ALL SIGNAL HEADS SHALL BE 12-INCH WITH ALUMINUM HOUSING. MINIMUM HEIGHT SHALL BE TEN FEET FROM BOTTOM OF BRACKET TO ROADWAY, SIDEWALK, OR MEDIAN GRADE. ALL TRAFFIC SIGNAL SECTIONS SHALL BE PROVIDED WITH DIALIGHT 433 SERIES LIGHT EMITTING DIODE "LED" MODULE, OR EQUIVALENT, AND SHALL CONFORM TO THE CALIFORNIA DEPARTMENT OF TRANSPORTATION "CALTRANS" SPECIFICATIONS.
7. CONDUCTOR SCHEDULE IS FURNISHED AS AN INSTALLATION GUIDE ONLY; 14/28-SBX 87526 CALTRANS TYPE 28 CONDUCTOR CABLE SHALL BE INSTALLED IN LIEU OF INDIVIDUAL CONDUCTORS. IT SHALL BE THE CONTRACTOR'S RESPONSIBILITY TO PROVIDE MORE CABLES REQUIRED FOR THE INTENDED OPERATION. AT EACH TRAFFIC SIGNAL POLE 5 CONDUCTOR SIGNAL CABLE SHALL BE SPLICED TO THE 28 CONDUCTOR CABLE AND INSTALLED WITHOUT SPLICES TO EACH VEHICLE AND PEDESTRIAN HEAD. ONE 3 CONDUCTOR SIGNAL CABLE SHALL BE SPLICED TO THE 28 CONDUCTOR CABLE AND INSTALLED WITHOUT SPLICES TO EACH PEDESTRIAN PUSH BUTTON.
8. ALL PEDESTRIAN HEADS SHALL BE STATE TYPE A (ICC 7090 OR EQUIVALENT) WITH CLAM SHELL (CS) MOUNT. MINIMUM HEIGHT SHALL BE SEVEN FEET FROM THE BOTTOM OF HOUSING TO SIDEWALK GRADE. THE UPRAISED HAND UNIT AND THE WALKING UNIT SHALL BE LED MODULE AND COUNTDOWN TYPE, AND SHALL CONFORM TO CALTRANS SPECIAL PROVISIONS. ALL PEDESTRIAN PUSH BUTTONS SHALL BE POLARA ENGINEERING BULLDOG TYPE.
9. EXCEPT AS OTHERWISE NOTED, INDUCTIVE LOOPS SHALL BE SIX-FEET DIAMETER, SPACED TEN-FEET APART CENTERED IN LANES. PLACE LINE LOOPS ZERO FEET PAST CROSSWALK, OR LIMIT LINE IF NO CROSSWALK. EACH LOOP ASSIGNMENT SHALL HAVE A SEPARATE LEAD-IN CABLE.
10. CONTRACTOR SHALL OBTAIN ALL LICENSES, PERMITS, AND INSURANCE PRIOR TO START OF WORK.
11. CONTRACTOR SHALL BE RESPONSIBLE FOR MAKING HIMSELF FAMILIAR WITH ALL UNDERGROUND UTILITIES, PIPES AND STRUCTURES. CONTRACTOR SHALL TAKE SOLE RESPONSIBILITY FOR COST INCURRED DUE TO DAMAGE AND REPLACEMENT OF SAID UTILITIES. HAND DIG FOUNDATIONS UNTIL CLEAR OF OBSTRUCTIONS.
12. EXISTING SUBSURFACE UTILITIES INDICATED ON PLANS ARE FOR CONVENIENCE ONLY. CONTRACTOR SHALL VERIFY PRECISE LOCATION OF SUBSURFACE UTILITIES WITH THE APPROPRIATE AGENCIES PRIOR TO CONSTRUCTION. AT LEAST 48 HOURS PRIOR TO EXCAVATING, THE CONTRACTOR SHALL NOTIFY UNDERGROUND SERVICE ALERT (PHONE: 1-800-227-2600) TO ASSIST IN LOCATION OF UNDERGROUND UTILITIES.
13. CONTRACTOR SHALL BE RESPONSIBLE FOR ANY COORDINATION WITH SUBCONTRACTORS AS REQUIRED TO ACCOMPLISH OPERATIONS.
14. CONTRACTOR SHALL VISIT SITE PRIOR TO BID. NO CHANGE IN CONTRACT PRICE WILL BE ALLOWED FOR ACTUAL OR CLAIMED DISCREPANCY BETWEEN EXISTING SITE CONDITIONS AND THOSE SHOWN ON PLANS.
15. THE CONTRACTOR SHALL PREVENT THE DISCHARGE OR ANY WATER, SAND, MUD, OIL, PETROLEUM OR OTHER POLLUTANTS FROM LEAVING THE CONSTRUCTION AREA AND ENTERING A PUBLIC STREET, STORM DRAIN OR FLOOD CONTROL CHANNEL.
16. ANY MODIFICATIONS OF OR CHANGES IN APPROVED PLANS MUST BE APPROVED BY THE TRAFFIC ENGINEER.
17. ALL MATERIALS ARE EXISTING EXCEPT WHEN OTHERWISE NOTED.
18. ALL PEDESTRIAN PUSH BUTTONS SHALL BE TYPE "B" WITH APPROPRIATE INTERNATIONAL SYMBOL SIGNS, INSTALLED 40' FROM SIDEWALK GRADE.
19. ALL NEW PULL BOXES SHALL BE NO. 6E UNLESS OTHERWISE SPECIFIED.
20. SIGNAL CONTROLLER AND CABINET SHALL BE DELIVERED TO THE CITY OF BURBANK AT LEAST 14 DAYS PRIOR TO INSTALLATION FOR SHOP TESTING.
21. ALL NEW PROGRAMMED VISIBILITY (PV) HEADS SHALL BE MCCAIN PROGRAMMABLE TRAFFIC SIGNAL HEADS OR APPROVED EQUAL.

| CONDUCTOR SCHEDULE ● | | | | | | | | |
|---|---|---|---|---|---|---|---|---|
| AWG | CIRCUIT | RUN NUMBER | | | | | | |
| | | 1 | 2 | 3 | 4 | 5 | 6 | 7 |
| 12C CABLE | VEHICLE PED AND PPB | 6 | 1 | 1 | 3 | 3 | 2 | 2 |
| #10 | LUMINAIRE | 4 | 2 | 2 | 2 | 2 | 2 | 2 |
| DLC TYPE "B" | Ø1 | 1 | - | - | - | - | 1 | 1 |
| | Ø2 | 4 | - | - | 4 | 4 | - | - |
| | Ø3 | 1 | - | - | 1 | - | - | - |
| | Ø4 | 4 | - | - | - | - | 4 | 4 |
| | Ø5 | 1 | - | - | 1 | 1 | - | - |
| | Ø6 | 5 | - | - | - | - | 5 | 5 |
| | Ø7 | 1 | - | - | - | - | 1 | 1 |
| | Ø8 | 4 | 4 | - | - | - | - | - |
| | TOTAL | 21 | 4 | - | 6 | 5 | 11 | 11 |
| PE-22/12PR #19 TSIC | | 2 | 1 | - | - | - | 1 | 1 |
| CCTV CABLE COHV CA 295E | | 1 | - | - | 1 | - | - | - |
| CONDUIT SIZE | | 2-4" | 3" | 3" | 4" | 4" | 3" | 4" |

● ALL CONDUIT AND CONDUCTORS ARE NEW UNLESS OTHERWISE SPECIFIED.

NOTE: CONDUCTORS SHOWN ACCOMMODATE INTERIM TRAFFIC SIGNAL CONFIGURATIONS DURING CONSTRUCTION.

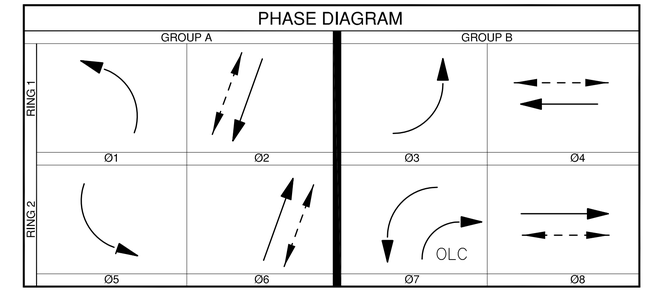


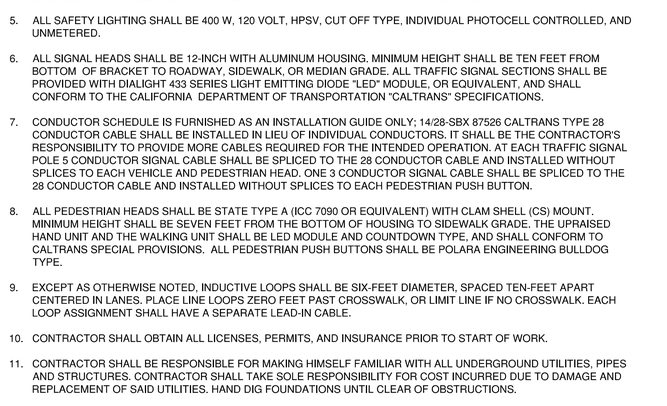


DETAIL "A"
POLE TYPE 24-4-80
LOCATION (G)
NOT TO SCALE

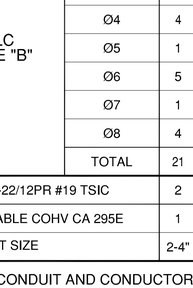


DETAIL "B"
12", 5-SECTION VEHICLE HEAD
NOT TO SCALE

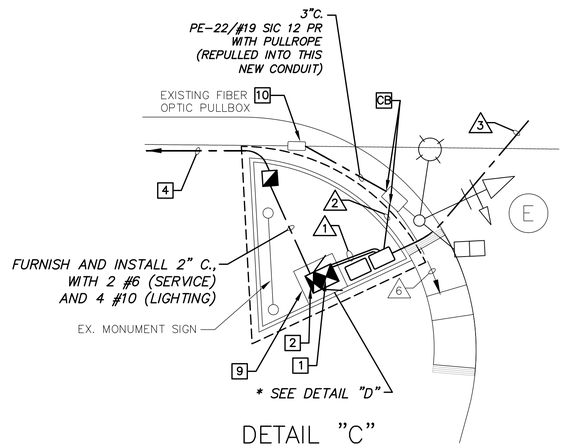


DETAIL "C"
CABINET LAYOUT – SE CORNER
NOT TO SCALE

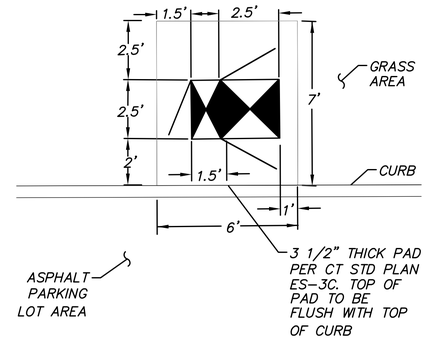


DETAIL "D"
CONTROLLER CABINET CONCRETE PAD
NOT TO SCALE

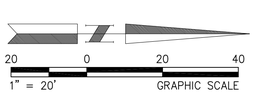


# TRAFFIC SIGNAL MODIFICATION PLAN BUENA VISTA STREET AT SAN FERNANDO BOULEVARD

APPROVED FOR RAILROAD WORK.

| RECOMMENDED: | | DATE |
|---|---|---|
| | CITY ENGINEER | |
| APPROVED: | | DATE |
| | PUBLIC WORKS DIRECTOR | |

| FIELD BOOK | PAGE | | |
|---|---|---|---|
| DESIGNED | JD | DATE 3/8/12 | |
| DRAWN | SW | DATE 4/15/12 | |
| CHECKED | KMH | DATE 5/1/12 | |
| REVIEWED | CC | DATE 5/8/12 | |

SHEET 393 OF 394

BID SCHEDULE NO.

PLAN NO. RR-TM-002

WORK ORDER NO.

LAST REVISION 06-05-12
DATE PLOTTED => Jul 18, 12
TIME PLOTTED => 7:33:34am

| REVISED BY | DATE REVISED |
|---|---|
| JOE DONALDSON | KAREN M. HANKINSON |

| CALCULATED-DESIGNED BY | CHECKED BY |
|---|---|
| CONSULTANT FUNCTIONAL SUPERVISOR | KAREN M. HANKINSON |

STATE OF CALIFORNIA – DEPARTMENT OF TRANSPORTATION — DESIGN

Caltrans

BORDER LAST REVISED 7/2/2010 | USERNAME => Donaldson | DGN FILE => | RELATIVE BORDER SCALE IS IN INCHES 0 1 2 3 | UNIT 1812 | PROJECT NUMBER & PHASE 07000211191

## GENERAL NOTES

1. TRAFFIC SIGNING AND STRIPING SHALL CONFORM TO CALTRANS STANDARD PLANS, SPECIFICATIONS, CALIFORNIA MUTCD, LATEST EDITION, THIS PLAN, AND THE SPECIAL PROVISIONS.
2. INSTALL TWO-WAY BLUE REFLECTIVE MARKER AT EVERY FIRE HYDRANT.
3. REMOVAL OF EXISTING STRIPING, ARROW, OR LEGEND SHALL BE BY WET SANDBLASTING, OR GRINDING.
4. PRIOR TO SANDBLASTING OR GRINDING, THE CONTRACTOR SHALL BE REQUIRED TO HAVE A SAMPLE OF THE EXISTING STRIPING PAINT ANALYZED FOR LEAD CONTENT. REMOVAL METHODS SHALL COMPLY WITH CAL/OSHA REGULATIONS FOR LEAD IN CONSTRUCTION.
5. ALL STRIPING SHALL BE 2-COAT PAINT UNLESS NOTED OTHERWISE.

## CONSTRUCTION NOTES

1. INSTALL 12" WHITE PAVEMENT MARKING (THERMOPLASTIC).
2. INSTALL TYPE IV PAVEMENT MARKING (THERMOPLASTIC).
3. INSTALL 3 TYPE D PAVEMENT MARKERS AT 2' SPACING 6" OFF FACE OF MEDIAN.
4. FURNISH AND INSTALL NEW SIGN ON EXISTING POST, NEW/EXISTING STREET LIGHT POLE, OR NEW/EXISTING TRAFFIC SIGNAL POLE.
5. REMOVE SIGN AND POST AS NOTED.
6. REMOVE SIGN AS NOTED, EXISTING POST OR TRAFFIC SIGNAL POLE TO REMAIN.
7. FURNISH AND INSTALL NEW SIGN ON NEW POST.

| Dist | COUNTY | ROUTE | POST MILES TOTAL PROJECT | SHEET No. | TOTAL SHEETS |
|---|---|---|---|---|---|
| 07 | LA | 5 | 29.4/31.6 | 1760 | 1931 |

REGISTERED CIVIL ENGINEER — DATE 5-21-12

PLANS APPROVAL DATE 05-21-12

REGISTERED PROFESSIONAL ENGINEER — KAREN M. HANKINSON — No. C54175 — Exp. 6/30/13 — CIVIL — STATE OF CALIFORNIA

THE STATE OF CALIFORNIA OR ITS OFFICERS OR AGENTS SHALL NOT BE RESPONSIBLE FOR THE ACCURACY OR COMPLETENESS OF SCANNED COPIES OF THIS PLAN SHEET.

SCRRA
279 E. ARROW HIGHWAY
SAN DIMAS, CA 91773

RAILPROS
1 ADA PARKWAY, SUITE 200
IRVINE, CA 92618

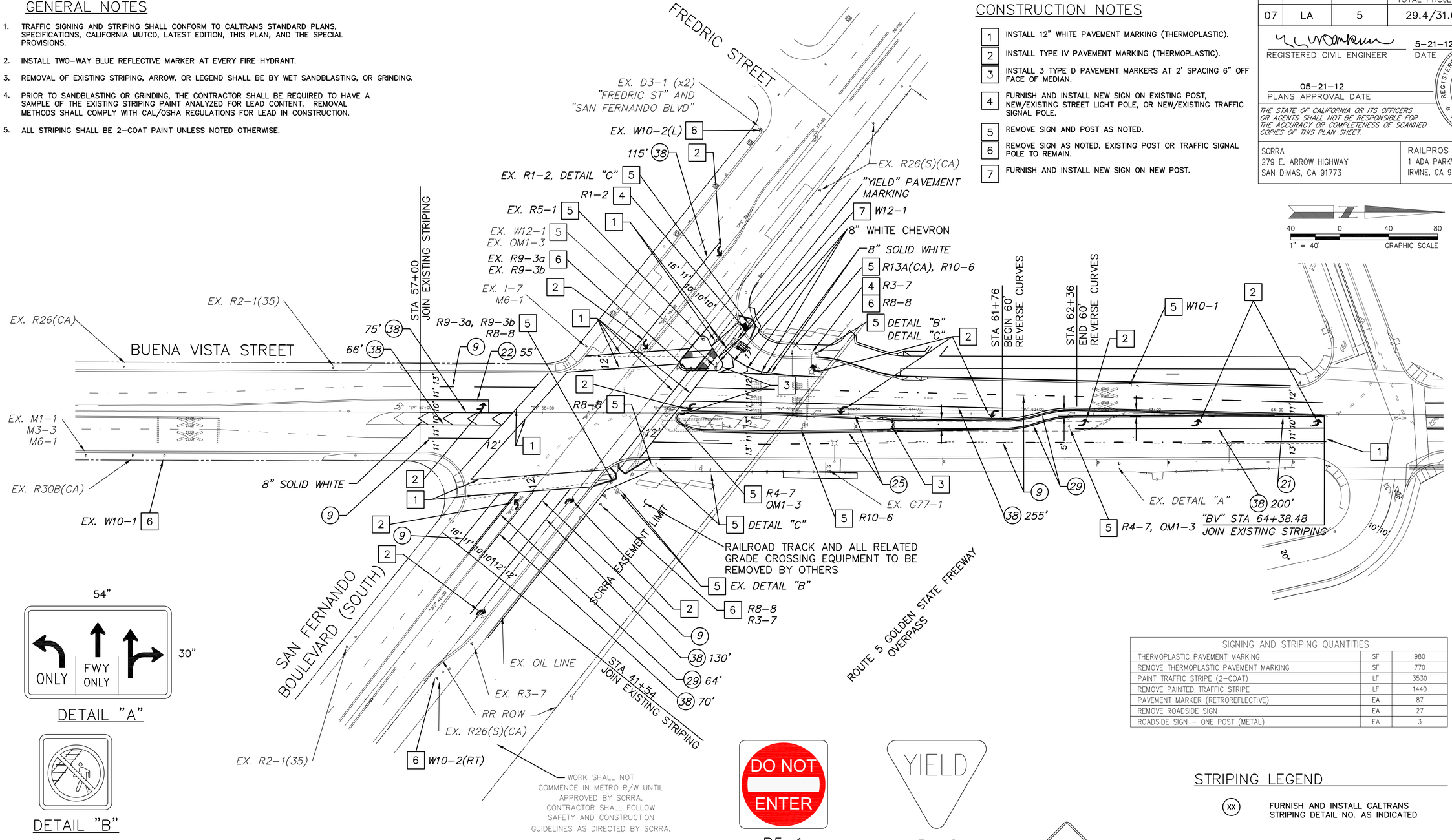


| SIGNING AND STRIPING QUANTITIES | | |
|---|---|---|
| THERMOPLASTIC PAVEMENT MARKING | SF | 980 |
| REMOVE THERMOPLASTIC PAVEMENT MARKING | SF | 770 |
| PAINT TRAFFIC STRIPE (2-COAT) | LF | 3530 |
| REMOVE PAINTED TRAFFIC STRIPE | LF | 1440 |
| PAVEMENT MARKER (RETROREFLECTIVE) | EA | 87 |
| REMOVE ROADSIDE SIGN | EA | 27 |
| ROADSIDE SIGN - ONE POST (METAL) | EA | 3 |

DETAIL "A"




DETAIL "B"



DETAIL "C"

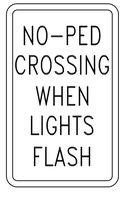


R2-1(35)

R3-7

R4-7

R8-8

R10-6

W10-1

W10-2(L)

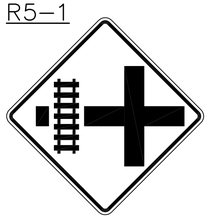

OM1-3

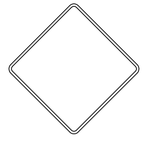

R5-1




R1-2




W12-1

APPROVED FOR RAILROAD WORK.

## STRIPING LEGEND

- (xx) FURNISH AND INSTALL CALTRANS STRIPING DETAIL NO. AS INDICATED
- EXISTING STRIPING, MARKING & PAVEMENT LEGEND TO BE REMOVED
- EXISTING STRIPING, MARKING & PAVEMENT LEGEND TO REMAIN
- PROPOSED STRIPING, MARKING & PAVEMENT LEGEND

# RR-TRAFFIC SIGNING & STRIPING PLAN-FINAL BUENA VISTA STREET AT SAN FERNANDO BOULEVARD

CITY OF BURBANK
PUBLIC WORKS DEPARTMENT

RECOMMENDED: _____ CITY ENGINEER _____ DATE _____
APPROVED: _____ PUBLIC WORKS DIRECTOR _____ DATE _____

FIELD BOOK — PAGE
DESIGNED KMH DATE 3/6/12
DRAWN JD DATE 4/15/12
CHECKED SM DATE 5/1/12
REVIEWED KMH DATE 5/6/12

SHEET 394 OF 394

BID SCHEDULE NO.

WORK ORDER NO.

PLAN NO. RR-SS-001

DATE PLOTTED => Jul 16, 12
TIME PLOTTED => 10:53:32am

LAST REVISION 06-05-12

REVISED BY — DATE REVISED
JOE DONALDSON — KAREN M. HANKINSON
CALCULATED-DESIGNED BY — CHECKED BY
CONSULTANT FUNCTIONAL SUPERVISOR — KAREN M. HANKINSON
STATE OF CALIFORNIA - DEPARTMENT OF TRANSPORTATION — DESIGN
Caltrans

| Dist | COUNTY | ROUTE | POST MILES TOTAL PROJECT | SHEET No. | TOTAL SHEETS |
|---|---|---|---|---|---|
| 07 | LA | 5 | 29.4/31.6 | 1761 | 1931 |

David McCord 05-21-12
REGISTERED CIVIL ENGINEER DATE

05-21-12
PLANS APPROVAL DATE

REGISTERED PROFESSIONAL ENGINEER — DAVID WILLIAM McCORD — No. E-15317 Exp. June 30, 2013 — ELECTRICAL — STATE OF CALIFORNIA

THE STATE OF CALIFORNIA OR ITS OFFICERS OR AGENTS SHALL NOT BE RESPONSIBLE FOR THE ACCURACY OR COMPLETENESS OF SCANNED COPIES OF THIS PLAN SHEET.

SCRRA
279 E. ARROW HIGHWAY
SAN DIMAS, CA 91773

XORAIL
201 NORTH INDIAN HILL BLVD
SUITE 201
CLAREMONT, CA 91711

600 590 580 570 560 550 540

599+35 PS
598+85 PS
595+40 PS
594+80 PS
594+56 IJ
593+44 IJ
587+48 IJ
583+97 PS
583+66 IJ
580+80

11

+0.76 +0.94 +1.20 +0.86

10.49-1 0°18′ 0°20′ 0°33′ 10.35-1 0°20′ 10.23-1 0°20′

10.29-2 0°39′ 0°20′ 0°23′ 0°21′ 10.07-2 0°27′

CP BURBANK JCT. CP OLIVE BURBANK STATION

WEST

7430′

9400′

R10 2W A B B/R EC EC EC TJC TJC TJC 3A 5A *20 *20 3 5 7 *10 4WA 4WB A B C D 19C#14 U.G. 2B/10 SIG B/R10 F D C *14 TB TA B A 2L 1L 2R 1R 1.1KHZ 1.1KHZ 211HZ 211HZ NBS-2 348HZ NBS-2 348HZ 4-11 19C#14 U.G. 19C#14 U.G. BUS COMM

9400′

7430′

GRADES

LEGEND

#1 CURVES #2

- (W) = METER SERVICE
- 5 = MS 500
- H = HXP BI-DIRECTIONAL
- H = HXP UNI-DIRECTIONAL
- 3 = GCP 3000 BI-DIRECTIONAL
- 3 = GCP 3000 UNI-DIRECTIONAL
- 4 = GCP 4000 BI-DIRECTIONAL
- 4 = GCP 4000 UNI-DIRECTIONAL
- = PREDICTION LIMITS
- = ADVANCED PREEMTION LIMITS
- = DAX FEED FROM THIS LOCATION
- = NARROW BAND SHUNT
- = WIDE BAND SHUNT
- EC = TRACK CODE
- LC = LINE CODE
- DWBS = DUAL WIDE BAND SHUNT AROUND INSULATED JOINT, EACH RAIL
- = DRAGGING EQUIPMENT DETECTOR
- = HOT BOX DETECTOR
- = HIGH/WIDE LOAD DETECTOR
- = STOP SIGN
- $ = SPRING SWITCH
- = POWER SWITCH
- = ELECTRIC LOCK
- = SELECTOR WIRED SWITCH
- TJC = TUNED JOINT COUPLER AROUND INSULATED JOINT, EACH RAIL
- BSC = BI-DIRECTIONAL SIMULATION CONFIGURATION
- = HIGH WATER DETECTOR
- = PERMISSIVE PLATE
- = UNDERPASS
- = OVERPASS
- = CROSSING

# SIGNAL STAGE 1

RR-SP-001

= IN
= OUT

BURBANK BL
VY-11.37
DOT 746786F

79 MPH/50 MPH | 79 MPH/55 MPH

THIS PLAN ACCURATE FOR RAILROAD WORK ONLY.

MAGNOLIA BL
VY-10.95
DOT 746787M

BURBANK STATION PED XING
VY-10.80

BURBANK STATION
VY-10.80

OLIVE AVE
VY-10.72
DOT 746788U

0 500
SCALE IN FEET

I-5 FWY
VY-10.37
DOT 746791C

RAILROAD SHEET NO.
1 OF 171

CENTRALIZED TRAFFIC CONTROL
CP BURBANK JCT.-
SONORA AVE.
VY 8-11
SH. 1 OF 2
01/19/99

LAST REVISION 00-00-00 | DATE PLOTTED = 7/18/2012 | TIME PLOTTED = 2:46:59 PM

STATE OF CALIFORNIA - DEPARTMENT OF TRANSPORTATION
CONSULTANT FUNCTIONAL SUPERVISOR: GLENN BREINDEL
CALCULATED-DESIGNED BY: RAMON VALDEZ
CHECKED BY:
DATE REVISED
REVISED BY

Gtrans

BORDER LAST REVISED 7/2/2010

USERNAME = gharibiana
DGN FILE = ...\moc\xorail\sheet\SP-001-.sht

RELATIVE BORDER SCALE IS IN INCHES 0 1 2 3

UNIT 1812

PROJECT NUMBER & PHASE 07000211191

| Dist | COUNTY | ROUTE | POST MILES TOTAL PROJECT | SHEET No. | TOTAL SHEETS |
|---|---|---|---|---|---|
| 07 | LA | 5 | 29.4/31.6 | 1762 | 1931 |

David McCord 05-21-12
REGISTERED CIVIL ENGINEER DATE

05-21-12
PLANS APPROVAL DATE

REGISTERED PROFESSIONAL ENGINEER DAVID WILLIAM McCORD No. E-15317 Exp. June 30, 2013 ELECTRICAL STATE OF CALIFORNIA

*THE STATE OF CALIFORNIA OR ITS OFFICERS OR AGENTS SHALL NOT BE RESPONSIBLE FOR THE ACCURACY OR COMPLETENESS OF SCANNED COPIES OF THIS PLAN SHEET.*

SCRRA
279 E. ARROW HIGHWAY
SAN DIMAS, CA 91773

XORAIL
201 NORTH INDIAN HILL BLVD
SUITE 201
CLAREMONT, CA 91711

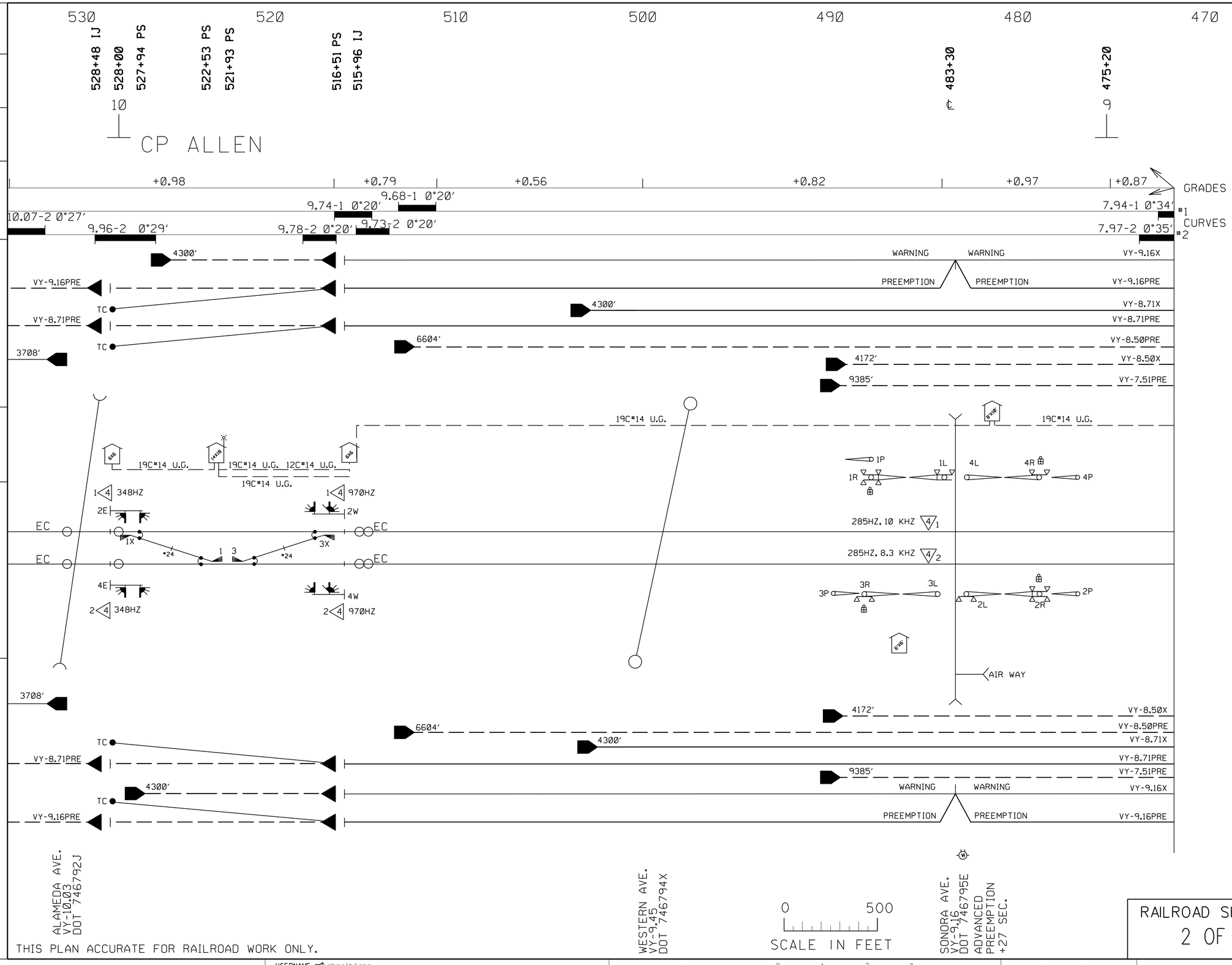


THIS PLAN ACCURATE FOR RAILROAD WORK ONLY.

LEGEND

- W = METER SERVICE
- 5 = MS 500
- H = HXP BI-DIRECTIONAL
- H = HXP UNI-DIRECTIONAL
- 3 = GCP 3000 BI-DIRECTIONAL
- 3 = GCP 3000 UNI-DIRECTIONAL
- 4 = GCP 4000 BI-DIRECTIONAL
- 4 = GCP 4000 UNI-DIRECTIONAL
- = PREDICTION LIMITS
- = ADVANCED PREEMTION LIMITS
- = DAX FEED FROM THIS LOCATION
- = NARROW BAND SHUNT
- = WIDE BAND SHUNT
- EC = TRACK CODE
- LC = LINE CODE
- DWBS = DUAL WIDE BAND SHUNT AROUND INSULATED JOINT, EACH RAIL
- = DRAGGING EQUIPMENT DETECTOR
- H = HOT BOX DETECTOR
- H L = HIGH/WIDE LOAD DETECTOR
- L = STOP SIGN
- $ = SPRING SWITCH
- = POWER SWITCH
- = ELECTRIC LOCK
- = SELECTOR WIRED SWITCH
- TJC = TUNED JOINT COUPLER AROUND INSULATED JOINT, EACH RAIL
- BSC = BI-DIRECTIONAL SIMULATION CONFIGURATION
- W = HIGH WATER DETECTOR
- P = PERMISSIVE PLATE
- = UNDERPASS
- = OVERPASS
- = CROSSING

# SIGNAL STAGE 1

RR-SP-002

RAILROAD SHEET NO.
2 OF 171

CENTRALIZED TRAFFIC CONTROL
CP BURBANK JCT.-
SONORA AVE.
VY 8-11
SH. 2 OF 2
01/19/99

STATE OF CALIFORNIA - DEPARTMENT OF TRANSPORTATION
Caltrans

CONSULTANT FUNCTIONAL SUPERVISOR: GLENN BREINDEL
CALCULATED-DESIGNED BY: RAMON VALDEZ
CHECKED BY:
REVISED BY
DATE REVISED

LAST REVISION 00-00-00
DATE PLOTTED = 7/18/2012
TIME PLOTTED = 2:47:00 PM

BORDER LAST REVISED 7/2/2010
USERNAME = gharibiana
DGN FILE = ...\moc\xorail\sheet\SP-002-.sht
RELATIVE BORDER SCALE IS IN INCHES 0 1 2 3
UNIT 1812
PROJECT NUMBER & PHASE 07000211191

| Dist | COUNTY | ROUTE | POST MILES TOTAL PROJECT | SHEET No. | TOTAL SHEETS |
|---|---|---|---|---|---|
| 07 | LA | 5 | 29.4/31.6 | 1763 | 1931 |

David McCord 05-21-12
REGISTERED CIVIL ENGINEER DATE

05-21-12
PLANS APPROVAL DATE

REGISTERED PROFESSIONAL ENGINEER DAVID WILLIAM McCORD No. E-15317 Exp. June 30, 2013 ELECTRICAL STATE OF CALIFORNIA

*THE STATE OF CALIFORNIA OR ITS OFFICERS OR AGENTS SHALL NOT BE RESPONSIBLE FOR THE ACCURACY OR COMPLETENESS OF SCANNED COPIES OF THIS PLAN SHEET.*

SCRRA
279 E. ARROW HIGHWAY
SAN DIMAS, CA 91773

XORAIL
201 NORTH INDIAN HILL BLVD
SUITE 201
CLAREMONT, CA 91711

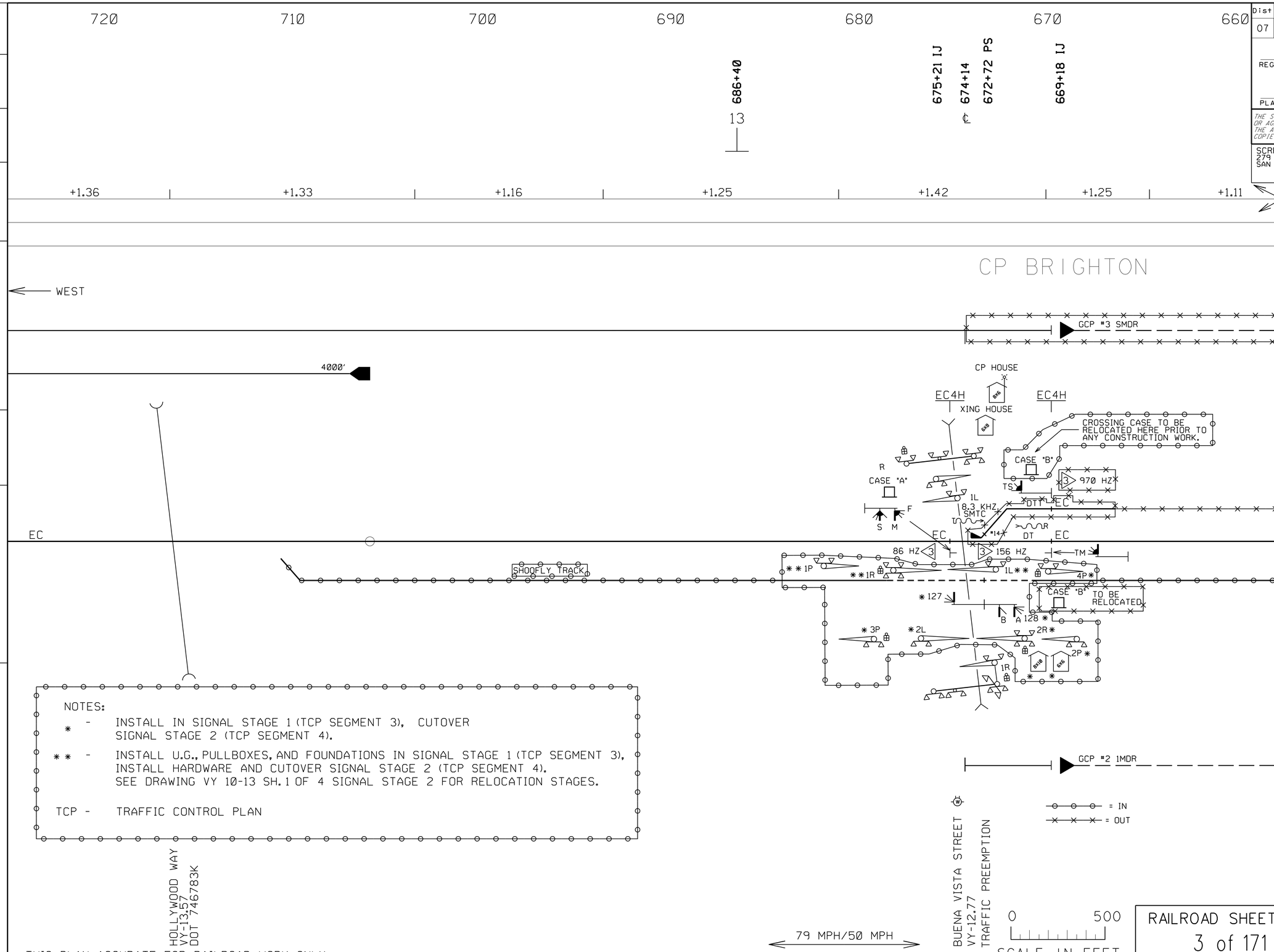


NOTES:

* - INSTALL IN SIGNAL STAGE 1 (TCP SEGMENT 3), CUTOVER SIGNAL STAGE 2 (TCP SEGMENT 4).

** - INSTALL U.G., PULLBOXES, AND FOUNDATIONS IN SIGNAL STAGE 1 (TCP SEGMENT 3), INSTALL HARDWARE AND CUTOVER SIGNAL STAGE 2 (TCP SEGMENT 4). SEE DRAWING VY 10-13 SH. 1 OF 4 SIGNAL STAGE 2 FOR RELOCATION STAGES.

TCP - TRAFFIC CONTROL PLAN

THIS PLAN ACCURATE FOR RAILROAD WORK ONLY.

LEGEND

- W = METER SERVICE
- 5 = MS 500
- H = HXP BI-DIRECTIONAL
- H = HXP UNI-DIRECTIONAL
- 3 = GCP 3000 BI-DIRECTIONAL
- 3 = GCP 3000 UNI-DIRECTIONAL
- 4 = GCP 4000 BI-DIRECTIONAL
- 4 = GCP 4000 UNI-DIRECTIONAL
- = PREDICTION LIMITS
- = ADVANCED PREEMTION LIMITS
- = DAX FEED FROM THIS LOCATION
- = NARROW BAND SHUNT
- = WIDE BAND SHUNT
- EC = TRACK CODE
- LC = LINE CODE
- DWBS = DUAL WIDE BAND SHUNT AROUND INSULATED JOINT, EACH RAIL
- = DRAGGING EQUIPMENT DETECTOR
- H = HOT BOX DETECTOR
- H = HIGH/WIDE LOAD DETECTOR
- L = STOP SIGN
- $ = SPRING SWITCH
- = POWER SWITCH
- = ELECTRIC LOCK
- = SELECTOR WIRED SWITCH
- TJC = TUNED JOINT COUPLER AROUND INSULATED JOINT, EACH RAIL
- BSC = BI-DIRECTIONAL SIMULATION CONFIGURATION
- W = HIGH WATER DETECTOR
- P = PERMISSIVE PLATE
- = UNDERPASS
- = OVERPASS
- = CROSSING

# SIGNAL STAGE 1

RR-SP-003

CENTRALIZED TRAFFIC CONTROL
SUN VALLEY
SIDING PROJECT
VY 11-13

SH. 1 OF 2 10/12/99

RAILROAD SHEET NO.
3 of 171

STATE OF CALIFORNIA - DEPARTMENT OF TRANSPORTATION
Caltrans DESIGN

CONSULTANT FUNCTIONAL SUPERVISOR: GLENN BREINDEL
CALCULATED-DESIGNED BY: RAMON VALDEZ
CHECKED BY
REVISED BY
DATE REVISED

LAST REVISION 00-00-00
DATE PLOTTED = 7/18/2012
TIME PLOTTED = 2:47:01 PM

BORDER LAST REVISED 7/2/2010
USERNAME = gharibiana
DGN FILE = ...\moc\xorail\sheet\SP-003-.sht
RELATIVE BORDER SCALE IS IN INCHES 0 1 2 3
UNIT 1812
PROJECT NUMBER & PHASE 07000211191

| Dist | COUNTY | ROUTE | POST MILES TOTAL PROJECT | SHEET No. | TOTAL SHEETS |
|---|---|---|---|---|---|
| 07 | LA | 5 | 29.4/31.6 | 1764 | 1931 |

David McCord 05-21-12
REGISTERED CIVIL ENGINEER DATE

05-21-12
PLANS APPROVAL DATE

REGISTERED PROFESSIONAL ENGINEER DAVID WILLIAM McCORD No. E-15317 Exp. June 30, 2013 ELECTRICAL STATE OF CALIFORNIA

*THE STATE OF CALIFORNIA OR ITS OFFICERS OR AGENTS SHALL NOT BE RESPONSIBLE FOR THE ACCURACY OR COMPLETENESS OF SCANNED COPIES OF THIS PLAN SHEET.*

SCRRA
279 E. ARROW HIGHWAY
SAN DIMAS, CA 91773

XORAIL
201 NORTH INDIAN HILL BLVD
SUITE 201
CLAREMONT, CA 91711

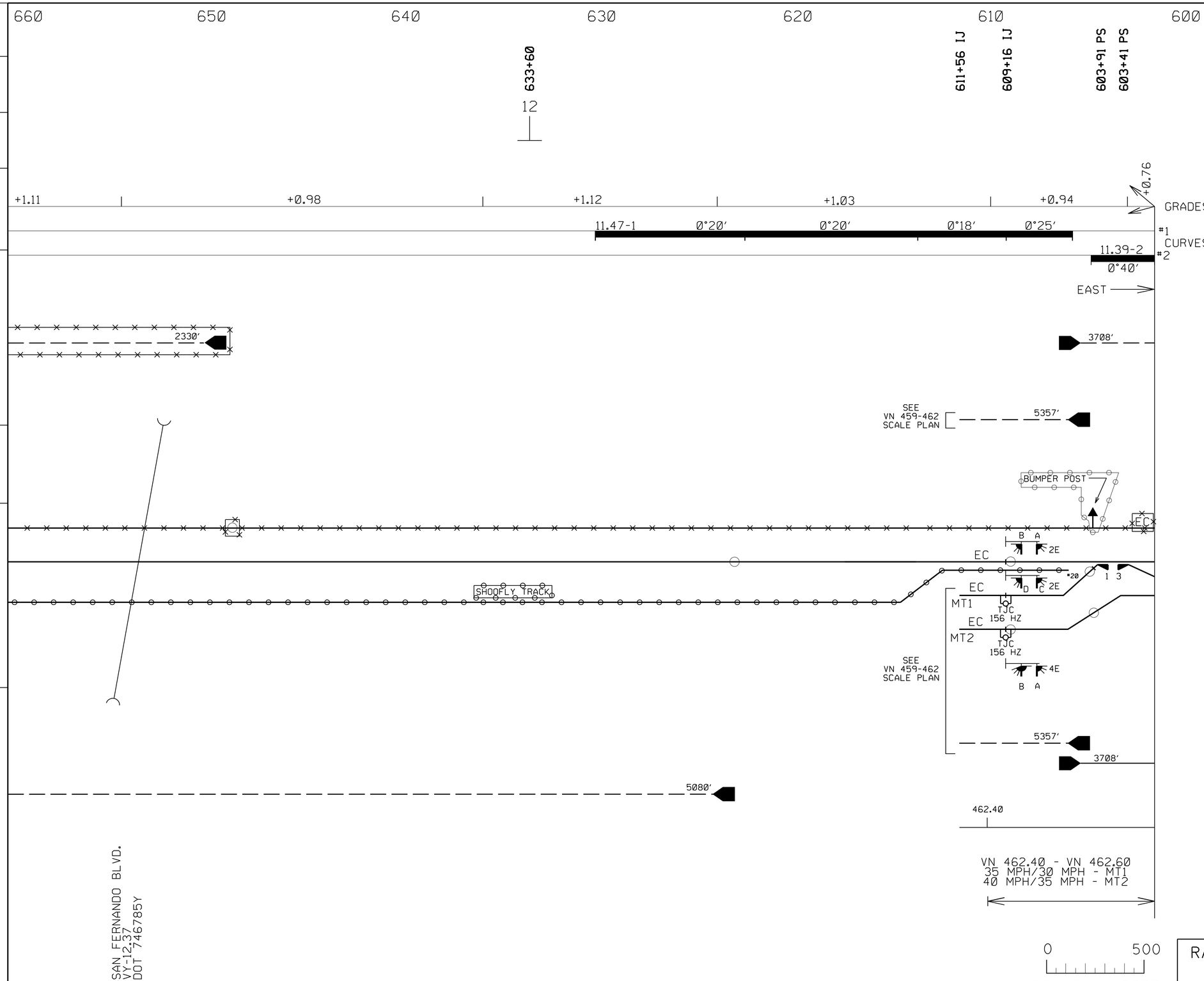


THIS PLAN ACCURATE FOR RAILROAD WORK ONLY.

0 500
SCALE IN FEET

LEGEND

- W = METER SERVICE
- 5 = MS 500
- H = HXP BI-DIRECTIONAL
- H = HXP UNI-DIRECTIONAL
- 3 = GCP 3000 BI-DIRECTIONAL
- 3 = GCP 3000 UNI-DIRECTIONAL
- 4 = GCP 4000 BI-DIRECTIONAL
- 4 = GCP 4000 UNI-DIRECTIONAL
- = PREDICTION LIMITS
- = ADVANCED PREEMTION LIMITS
- = DAX FEED FROM THIS LOCATION
- = NARROW BAND SHUNT
- = WIDE BAND SHUNT
- EC = TRACK CODE
- LC = LINE CODE
- DWBS = DUAL WIDE BAND SHUNT AROUND INSULATED JOINT, EACH RAIL
- = DRAGGING EQUIPMENT DETECTOR
- H = HOT BOX DETECTOR
- H L = HIGH/WIDE LOAD DETECTOR
- = STOP SIGN
- $ = SPRING SWITCH
- = POWER SWITCH
- = ELECTRIC LOCK
- = SELECTOR WIRED SWITCH
- TJC = TUNED JOINT COUPLER AROUND INSULATED JOINT, EACH RAIL
- BSC = BI-DIRECTIONAL SIMULATION CONFIGURATION
- W = HIGH WATER DETECTOR
- P = PERMISSIVE PLATE
- = UNDERPASS
- = OVERPASS
- = CROSSING

= IN
= OUT

# SIGNAL STAGE 1

RR-SP-004

CENTRALIZED TRAFFIC CONTROL
SUN VALLEY
SIDING PROJECT
VY 11-13
SH. 2 OF 2
10/12/99

RAILROAD SHEET NO.
4 OF 171

STATE OF CALIFORNIA - DEPARTMENT OF TRANSPORTATION
Caltrans
DESIGN
CONSULTANT FUNCTIONAL SUPERVISOR: GLENN BREINDEL
CALCULATED-DESIGNED BY: RAMON VALDEZ
CHECKED BY
REVISED BY
DATE REVISED

LAST REVISION 00-00-00
DATE PLOTTED = 7/18/2012
TIME PLOTTED = 2:47:02 PM


BORDER LAST REVISED 7/2/2010
USERNAME = gharibiana
DGN FILE = ...\moc\xorail\sheet\SP-004-.sht
RELATIVE BORDER SCALE IS IN INCHES 0 1 2 3
UNIT 1812
PROJECT NUMBER & PHASE 07000211191

| Dist | COUNTY | ROUTE | POST MILES TOTAL PROJECT | SHEET No. | TOTAL SHEETS |
|---|---|---|---|---|---|
| 07 | LA | 5 | 29.4/31.6 | 1765 | 1931 |

David McCord 05-21-12
REGISTERED CIVIL ENGINEER DATE

05-21-12
PLANS APPROVAL DATE

REGISTERED PROFESSIONAL ENGINEER — DAVID WILLIAM McCORD — No. E-15317 Exp. June 30, 2013 — ELECTRICAL — STATE OF CALIFORNIA

THE STATE OF CALIFORNIA OR ITS OFFICERS OR AGENTS SHALL NOT BE RESPONSIBLE FOR THE ACCURACY OR COMPLETENESS OF SCANNED COPIES OF THIS PLAN SHEET.

SCRRA
279 E. ARROW HIGHWAY
SAN DIMAS, CA 91773

XORAIL
201 NORTH INDIAN HILL BLVD
SUITE 201
CLAREMONT, CA 91711

720 710 700 690 680 670 660

686+40
13

674+14
℄

CP BRIGHTON

+1.36 | +1.33 | +1.16 | +1.25 | +1.42 | +1.25 | +1.11

WEST

4100'

4000'

CP HOUSE
EC5
EC4H
EC4H
XING HOUSE
CASE "B"
CASE "A"
TS
8.3 KHZ SMTC
EC
EC
EC
IL
4P
1P
1R
86 HZ
F
TM
156 HZ
S
M
86HZ
8.3KHZ
86HZ
3P
2L
2R
2P
127
128
B
A
1R
GCP #2 1MDR

SHOOFLY TRACK

= IN
= OUT

NOTE:
** - PUT IN SERVICE IN THIS STAGE
[ PEDESTRIAN GATE 4P SHOWN IN FINAL LOCATION (TCP SEGMENT 8) ].

0 500
SCALE IN FEET

BUENA VISTA STREET
VY-12.77
(ADVANCED TRAFFIC PREEMPTION 32 SEC) *

* - SPEED REDUCED TO 60 MPH

79 MPH/50 MPH

HOLLYWOOD WAY
VY-13.57
DOT 746783K

THIS PLAN ACCURATE FOR RAILROAD WORK ONLY.

GRADES

#1 CURVES #2

LEGEND

- (W) = METER SERVICE
- 5 = MS 500
- H = HXP BI-DIRECTIONAL
- H = HXP UNI-DIRECTIONAL
- 3 = GCP 3000 BI-DIRECTIONAL
- 3 = GCP 3000 UNI-DIRECTIONAL
- 4 = GCP 4000 BI-DIRECTIONAL
- 4 = GCP 4000 UNI-DIRECTIONAL
- = PREDICTION LIMITS
- = ADVANCED PREEMTION LIMITS
- = DAX FEED FROM THIS LOCATION
- = NARROW BAND SHUNT
- = WIDE BAND SHUNT
- EC = TRACK CODE
- LC = LINE CODE
- DWBS = DUAL WIDE BAND SHUNT AROUND INSULATED JOINT, EACH RAIL
- = DRAGGING EQUIPMENT DETECTOR
- H = HOT BOX DETECTOR
- H = HIGH/WIDE LOAD DETECTOR
- = STOP SIGN
- = SPRING SWITCH
- = POWER SWITCH
- = ELECTRIC LOCK
- = SELECTOR WIRED SWITCH
- TJC = TUNED JOINT COUPLER AROUND INSULATED JOINT, EACH RAIL
- BSC = BI-DIRECTIONAL SIMULATION CONFIGURATION
- W = HIGH WATER DETECTOR
- P = PERMISSIVE PLATE
- = UNDERPASS
- = OVERPASS
- = CROSSING

# SIGNAL STAGE 2 (PHASE 1)

RR-SP-005

CENTRALIZED TRAFFIC CONTROL
SUN VALLEY
SIDING PROJECT
VY 11-13

SH. 1 OF 2

10/12/99

RAILROAD SHEET NO.
5 OF 171

LAST REVISION 00-00-00
DATE PLOTTED = 7/18/2012
TIME PLOTTED = 2:47:03 PM

REVISED BY | DATE REVISED

CALCULATED-DESIGNED BY: RAMON VALDEZ
CHECKED BY:
CONSULTANT FUNCTIONAL SUPERVISOR: GLENN BREINDEL
STATE OF CALIFORNIA - DEPARTMENT OF TRANSPORTATION
DESIGN

BORDER LAST REVISED 7/2/2010

USERNAME = gharibiana
DGN FILE = ...\moc\xorail\sheet\SP-005-.sht

RELATIVE BORDER SCALE IS IN INCHES 0 1 2 3

UNIT 1812

PROJECT NUMBER & PHASE 07000211191

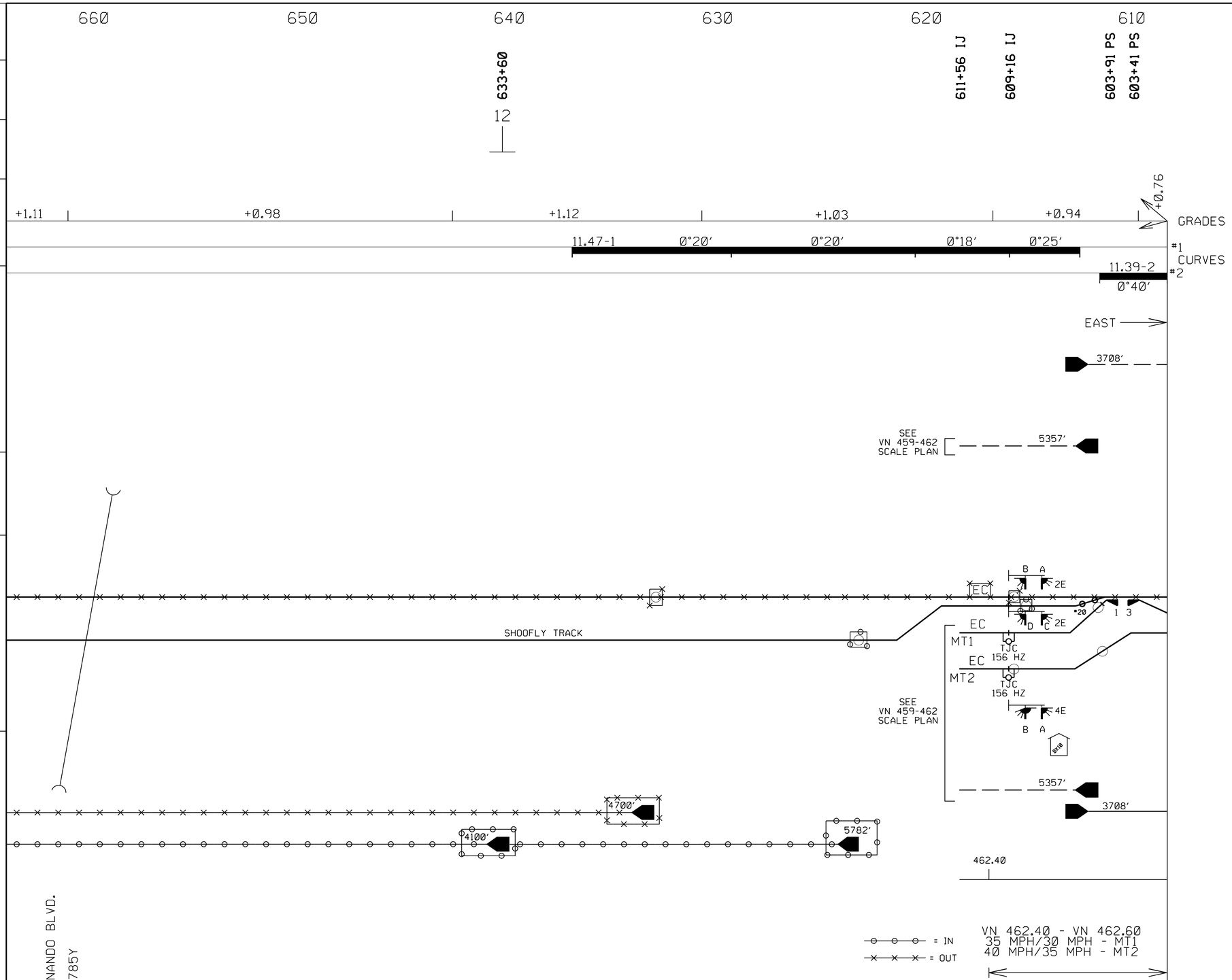


| Dist | COUNTY | ROUTE | POST MILES TOTAL PROJECT | SHEET No. | TOTAL SHEETS |
|---|---|---|---|---|---|
| 07 | LA | 5 | 29.4/31.6 | 1766 | 1931 |

David McCord 05-21-12
REGISTERED CIVIL ENGINEER DATE

05-21-12
PLANS APPROVAL DATE

REGISTERED PROFESSIONAL ENGINEER — DAVID WILLIAM McCORD — No. E-15317 Exp. June 30, 2013 — ELECTRICAL — STATE OF CALIFORNIA

THE STATE OF CALIFORNIA OR ITS OFFICERS OR AGENTS SHALL NOT BE RESPONSIBLE FOR THE ACCURACY OR COMPLETENESS OF SCANNED COPIES OF THIS PLAN SHEET.

SCRRA
279 E. ARROW HIGHWAY
SAN DIMAS, CA 91773

XORAIL
201 NORTH INDIAN HILL BLVD
SUITE 201
CLAREMONT, CA 91711

LEGEND

- (W) = METER SERVICE
- (5) = MS 500
- (HB) = HXP BI-DIRECTIONAL
- (H) = HXP UNI-DIRECTIONAL
- (3) = GCP 3000 BI-DIRECTIONAL
- (3) = GCP 3000 UNI-DIRECTIONAL
- (4) = GCP 4000 BI-DIRECTIONAL
- (4) = GCP 4000 UNI-DIRECTIONAL
- = PREDICTION LIMITS
- = ADVANCED PREEMTION LIMITS
- = DAX FEED FROM THIS LOCATION
- = NARROW BAND SHUNT
- = WIDE BAND SHUNT
- EC = TRACK CODE
- LC = LINE CODE
- DWBS = DUAL WIDE BAND SHUNT AROUND INSULATED JOINT, EACH RAIL
- = DRAGGING EQUIPMENT DETECTOR
- (H) = HOT BOX DETECTOR
- (H) = HIGH/WIDE LOAD DETECTOR
- (L)
- = STOP SIGN
- ($) = SPRING SWITCH
- = POWER SWITCH
- = ELECTRIC LOCK
- = SELECTOR WIRED SWITCH
- TJC = TUNED JOINT COUPLER AROUND INSULATED JOINT, EACH RAIL
- BSC = BI-DIRECTIONAL SIMULATION CONFIGURATION
- (W) = HIGH WATER DETECTOR
- (P) = PERMISSIVE PLATE
- = UNDERPASS
- = OVERPASS
- = CROSSING

# SIGNAL STAGE 2 (PHASE 1)

RR-SP-006

CENTRALIZED TRAFFIC CONTROL
SUN VALLEY
SIDING PROJECT
VY 11-13

SH. 2 OF 2 10/12/99

RAILROAD SHEET NO.
6 OF 171

LAST REVISION 00-00-00
DATE PLOTTED = 7/18/2012
TIME PLOTTED = 2:47:04 PM

STATE OF CALIFORNIA - DEPARTMENT OF TRANSPORTATION
DESIGN
CONSULTANT FUNCTIONAL SUPERVISOR: GLENN BREINDEL
CALCULATED-DESIGNED BY: RAMON VALDEZ
CHECKED BY
REVISED BY | DATE REVISED

BORDER LAST REVISED 7/2/2010
USERNAME = gharibiana
DGN FILE = ...\moc\xorail\sheet\SP-006-.sht
RELATIVE BORDER SCALE IS IN INCHES 0 1 2 3
UNIT 1812
PROJECT NUMBER & PHASE 07000211191

| Dist | COUNTY | ROUTE | POST MILES TOTAL PROJECT | SHEET No. | TOTAL SHEETS |
|---|---|---|---|---|---|
| 07 | LA | 5 | 29.4/31.6 | 1767 | 1931 |

David McCord 05-21-12
REGISTERED CIVIL ENGINEER DATE

05-21-12
PLANS APPROVAL DATE

REGISTERED PROFESSIONAL ENGINEER DAVID WILLIAM McCORD No. E-15317 Exp. June 30, 2013 ELECTRICAL STATE OF CALIFORNIA

*THE STATE OF CALIFORNIA OR ITS OFFICERS OR AGENTS SHALL NOT BE RESPONSIBLE FOR THE ACCURACY OR COMPLETENESS OF SCANNED COPIES OF THIS PLAN SHEET.*

SCRRA
279 E. ARROW HIGHWAY
SAN DIMAS, CA 91773

XORAIL
201 NORTH INDIAN HILL BLVD
SUITE 201
CLAREMONT, CA 91711

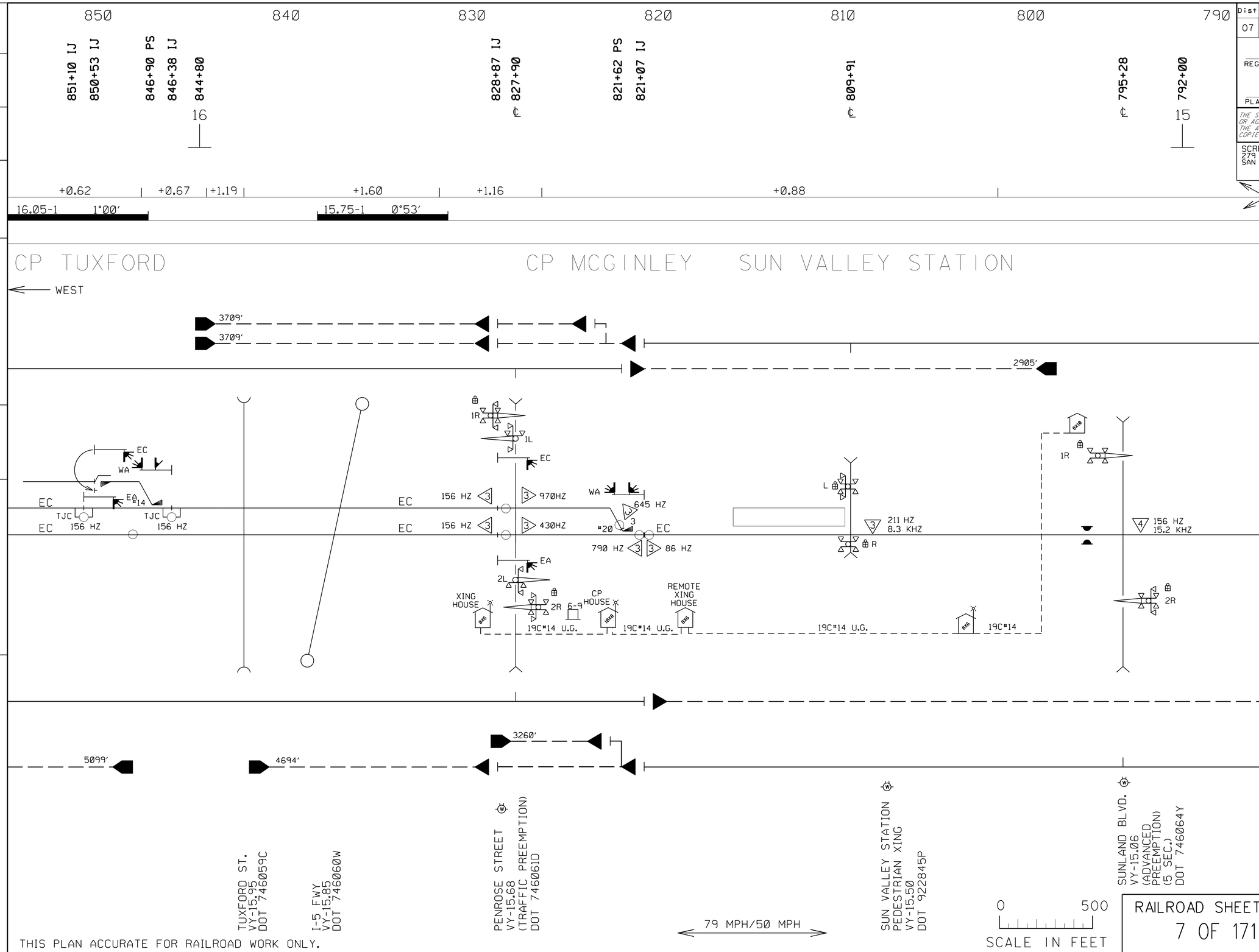


GRADES
#1
CURVES
#2

LEGEND

- W = METER SERVICE
- 5 = MS 500
- H = HXP BI-DIRECTIONAL
- H = HXP UNI-DIRECTIONAL
- 3 = GCP 3000 BI-DIRECTIONAL
- 3 = GCP 3000 UNI-DIRECTIONAL
- 4 = GCP 4000 BI-DIRECTIONAL
- 4 = GCP 4000 UNI-DIRECTIONAL
- = PREDICTION LIMITS
- = ADVANCED PREEMTION LIMITS
- = DAX FEED FROM THIS LOCATION
- = NARROW BAND SHUNT
- = WIDE BAND SHUNT
- EC = TRACK CODE
- LC = LINE CODE
- DWBS = DUAL WIDE BAND SHUNT AROUND INSULATED JOINT, EACH RAIL
- = DRAGGING EQUIPMENT DETECTOR
- H = HOT BOX DETECTOR
- H L = HIGH/WIDE LOAD DETECTOR
- L = STOP SIGN
- $ = SPRING SWITCH
- = POWER SWITCH
- = ELECTRIC LOCK
- = SELECTOR WIRED SWITCH
- TJC = TUNED JOINT COUPLER AROUND INSULATED JOINT, EACH RAIL
- BSC = BI-DIRECTIONAL SIMULATION CONFIGURATION
- W = HIGH WATER DETECTOR
- P = PERMISSIVE PLATE
- = UNDERPASS
- = OVERPASS
- = CROSSING

# SIGNAL STAGE 2 (PHASE 1)

RR-SP-007

CENTRALIZED TRAFFIC CONTROL
SUN VALLEY
SIDING PROJECT
VY 13-16
SH. 1 OF 2
10/12/99

RAILROAD SHEET NO.
7 OF 171

THIS PLAN ACCURATE FOR RAILROAD WORK ONLY.

STATE OF CALIFORNIA - DEPARTMENT OF TRANSPORTATION
Caltrans DESIGN
CONSULTANT FUNCTIONAL SUPERVISOR GLENN BREINDEL
CALCULATED-DESIGNED BY RAMON VALDEZ
CHECKED BY
REVISED BY
DATE REVISED

LAST REVISION 00-00-00
DATE PLOTTED 7/18/2012
TIME PLOTTED 2:47:05 PM

BORDER LAST REVISED 7/2/2010
USERNAME gharibiana
DGN FILE ...\moc\xorail\sheet\SP-007-.sht
RELATIVE BORDER SCALE IS IN INCHES 0 1 2 3
UNIT 1812
PROJECT NUMBER & PHASE 07000211191

780 770 760 750 740 730

747+48 IJ
℄ 746+49
739+20
14

+0.92 | +1.05 | +1.38 | +1.07 | +1.13 | +1.36

GRADES
#1
CURVES
#2

EAST →

3750′
4000′
5099′
4690′
6175′
5500′

141
285 HZ 3 3 285 HZ
EC EC EC
141 CL CL 142
141A
BNS BNS

= IN
= OUT

ARVILLA AVE.
VY-14.14
(TRAFFIC PREEMPTION)
DOT 746782D

79 MPH/50 MPH

THIS PLAN ACCURATE FOR RAILROAD WORK ONLY.

0 500
SCALE IN FEET

LEGEND

- W = METER SERVICE
- 5 = MS 500
- H = HXP BI-DIRECTIONAL
- H = HXP UNI-DIRECTIONAL
- 3 = GCP 3000 BI-DIRECTIONAL
- 3 = GCP 3000 UNI-DIRECTIONAL
- 4 = GCP 4000 BI-DIRECTIONAL
- 4 = GCP 4000 UNI-DIRECTIONAL
- = PREDICTION LIMITS
- = ADVANCED PREEMTION LIMITS
- = DAX FEED FROM THIS LOCATION
- = NARROW BAND SHUNT
- = WIDE BAND SHUNT
- EC = TRACK CODE
- LC = LINE CODE
- DWBS = DUAL WIDE BAND SHUNT AROUND INSULATED JOINT, EACH RAIL
- = DRAGGING EQUIPMENT DETECTOR
- H = HOT BOX DETECTOR
- V = HIGH/WIDE LOAD DETECTOR
- = STOP SIGN
- $ = SPRING SWITCH
- = POWER SWITCH
- = ELECTRIC LOCK
- = SELECTOR WIRED SWITCH
- TJC = TUNED JOINT COUPLER AROUND INSULATED JOINT, EACH RAIL
- BSC = BI-DIRECTIONAL SIMULATION CONFIGURATION
- W = HIGH WATER DETECTOR
- P = PERMISSIVE PLATE
- = UNDERPASS
- = OVERPASS
- = CROSSING

# SIGNAL STAGE 2 (PHASE 1)

RR-SP-008

CENTRALIZED TRAFFIC CONTROL
SUN VALLEY
SIDING PROJECT
VY 13-16
SH. 2 OF 2
10/12/99

RAILROAD SHEET NO.
8 OF 171

| Dist | COUNTY | ROUTE | POST MILES TOTAL PROJECT | SHEET NO. | TOTAL SHEETS |
|---|---|---|---|---|---|
| 07 | LA | 5 | 29.4/31.6 | 1768 | 1931 |

David McCord 05-21-12
REGISTERED CIVIL ENGINEER DATE

05-21-12
PLANS APPROVAL DATE

REGISTERED PROFESSIONAL ENGINEER — DAVID WILLIAM McCORD — No. E-15317 Exp. June 30, 2013 — ELECTRICAL — STATE OF CALIFORNIA

THE STATE OF CALIFORNIA OR ITS OFFICERS OR AGENTS SHALL NOT BE RESPONSIBLE FOR THE ACCURACY OR COMPLETENESS OF SCANNED COPIES OF THIS PLAN SHEET.

SCRRA
279 E. ARROW HIGHWAY
SAN DIMAS, CA 91773

XORAIL
201 NORTH INDIAN HILL BLVD
SUITE 201
CLAREMONT, CA 91711

REVISED BY | DATE REVISED
RAMON VALDEZ
CALCULATED-DESIGNED BY | CHECKED BY
CONSULTANT FUNCTIONAL SUPERVISOR
GLENN BREINDEL
STATE OF CALIFORNIA - DEPARTMENT OF TRANSPORTATION
DESIGN
Caltrans

LAST REVISION | DATE PLOTTED = 7/18/2012
00-00-00 | TIME PLOTTED = 2:47:06 PM

BORDER LAST REVISED 7/2/2010
USERNAME = gharibiana
DGN FILE = ...\moc\xorail\sheet\SP-008-.sht
RELATIVE BORDER SCALE IS IN INCHES 0 1 2 3
UNIT 1812
PROJECT NUMBER & PHASE 07000211191

| Dist | COUNTY | ROUTE | POST MILES TOTAL PROJECT | SHEET No. | TOTAL SHEETS |
|---|---|---|---|---|---|
| 07 | LA | 5 | 29.4/31.6 | 1769 | 1931 |

David McCord 05-21-12
REGISTERED CIVIL ENGINEER DATE

05-21-12
PLANS APPROVAL DATE

REGISTERED PROFESSIONAL ENGINEER DAVID WILLIAM McCORD No. E-15317 Exp. June 30, 2013 ELECTRICAL STATE OF CALIFORNIA

*THE STATE OF CALIFORNIA OR ITS OFFICERS OR AGENTS SHALL NOT BE RESPONSIBLE FOR THE ACCURACY OR COMPLETENESS OF SCANNED COPIES OF THIS PLAN SHEET.*

SCRRA
279 E. ARROW HIGHWAY
SAN DIMAS, CA 91773

XORAIL
201 NORTH INDIAN HILL BLVD
SUITE 201
CLAREMONT, CA 91711

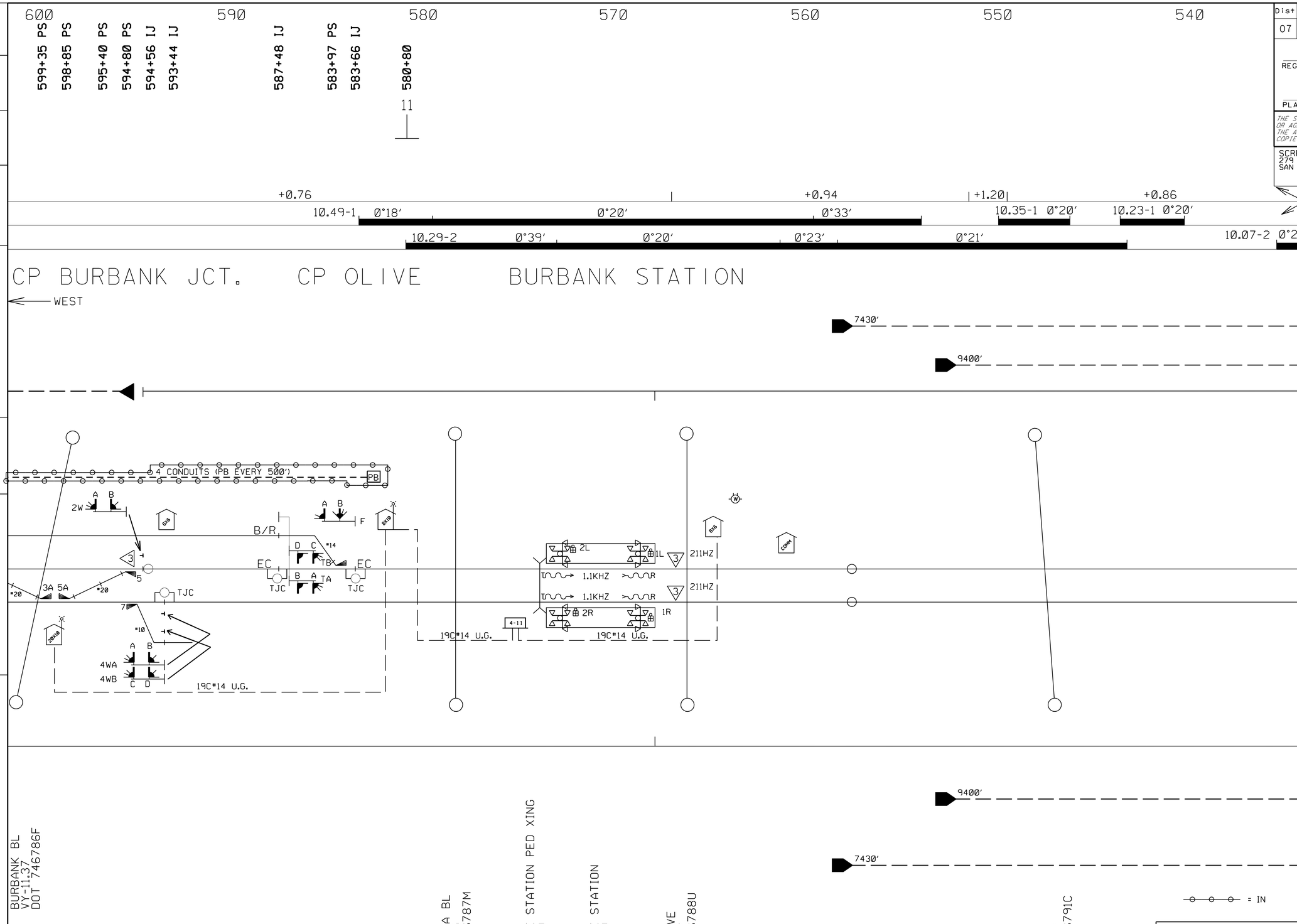


THIS PLAN ACCURATE FOR RAILROAD WORK ONLY.

0 500
SCALE IN FEET

= IN

LEGEND

- = METER SERVICE
- = MS 500
- = HXP BI-DIRECTIONAL
- = HXP UNI-DIRECTIONAL
- = GCP 3000 BI-DIRECTIONAL
- = GCP 3000 UNI-DIRECTIONAL
- = GCP 4000 BI-DIRECTIONAL
- = GCP 4000 UNI-DIRECTIONAL
- = PREDICTION LIMITS
- = ADVANCED PREEMTION LIMITS
- = DAX FEED FROM THIS LOCATION
- = NARROW BAND SHUNT
- = WIDE BAND SHUNT
- EC = TRACK CODE
- LC = LINE CODE
- DWBS = DUAL WIDE BAND SHUNT AROUND INSULATED JOINT, EACH RAIL
- = DRAGGING EQUIPMENT DETECTOR
- = HOT BOX DETECTOR
- = HIGH/WIDE LOAD DETECTOR
- = STOP SIGN
- = SPRING SWITCH
- = POWER SWITCH
- = ELECTRIC LOCK
- = SELECTOR WIRED SWITCH
- TJC = TUNED JOINT COUPLER AROUND INSULATED JOINT, EACH RAIL
- BSC = BI-DIRECTIONAL SIMULATION CONFIGURATION
- = HIGH WATER DETECTOR
- = PERMISSIVE PLATE
- = UNDERPASS
- = OVERPASS
- = CROSSING

# SIGNAL STAGE 2 (PHASE 2 & 3)

RR-SP-009

SCAX
CENTRALIZED TRAFFIC CONTROL
CP BURBANK JCT.-
SONORA AVE.
VY 8-11
SH. 1 OF 2
01/19/99

RAILROAD SHEET NO.
9 OF 171

STATE OF CALIFORNIA - DEPARTMENT OF TRANSPORTATION
Caltrans DESIGN

CONSULTANT FUNCTIONAL SUPERVISOR: GLENN BREINDEL
CALCULATED-DESIGNED BY: RAMON VALDEZ
CHECKED BY
REVISED BY
DATE REVISED

LAST REVISION 00-00-00
DATE PLOTTED 7/18/2012
TIME PLOTTED 2:47:07 PM

| Dist | COUNTY | ROUTE | POST MILES TOTAL PROJECT | SHEET No. | TOTAL SHEETS |
|---|---|---|---|---|---|
| 07 | LA | 5 | 29.4/31.6 | 1770 | 1931 |

David McCord 05-21-12
REGISTERED CIVIL ENGINEER DATE

05-21-12
PLANS APPROVAL DATE

REGISTERED PROFESSIONAL ENGINEER DAVID WILLIAM McCORD No. E-15317 Exp. June 30, 2013 ELECTRICAL STATE OF CALIFORNIA

*THE STATE OF CALIFORNIA OR ITS OFFICERS OR AGENTS SHALL NOT BE RESPONSIBLE FOR THE ACCURACY OR COMPLETENESS OF SCANNED COPIES OF THIS PLAN SHEET.*

SCRRA
279 E. ARROW HIGHWAY
SAN DIMAS, CA 91773

XORAIL
201 NORTH INDIAN HILL BLVD
SUITE 201
CLAREMONT, CA 91711

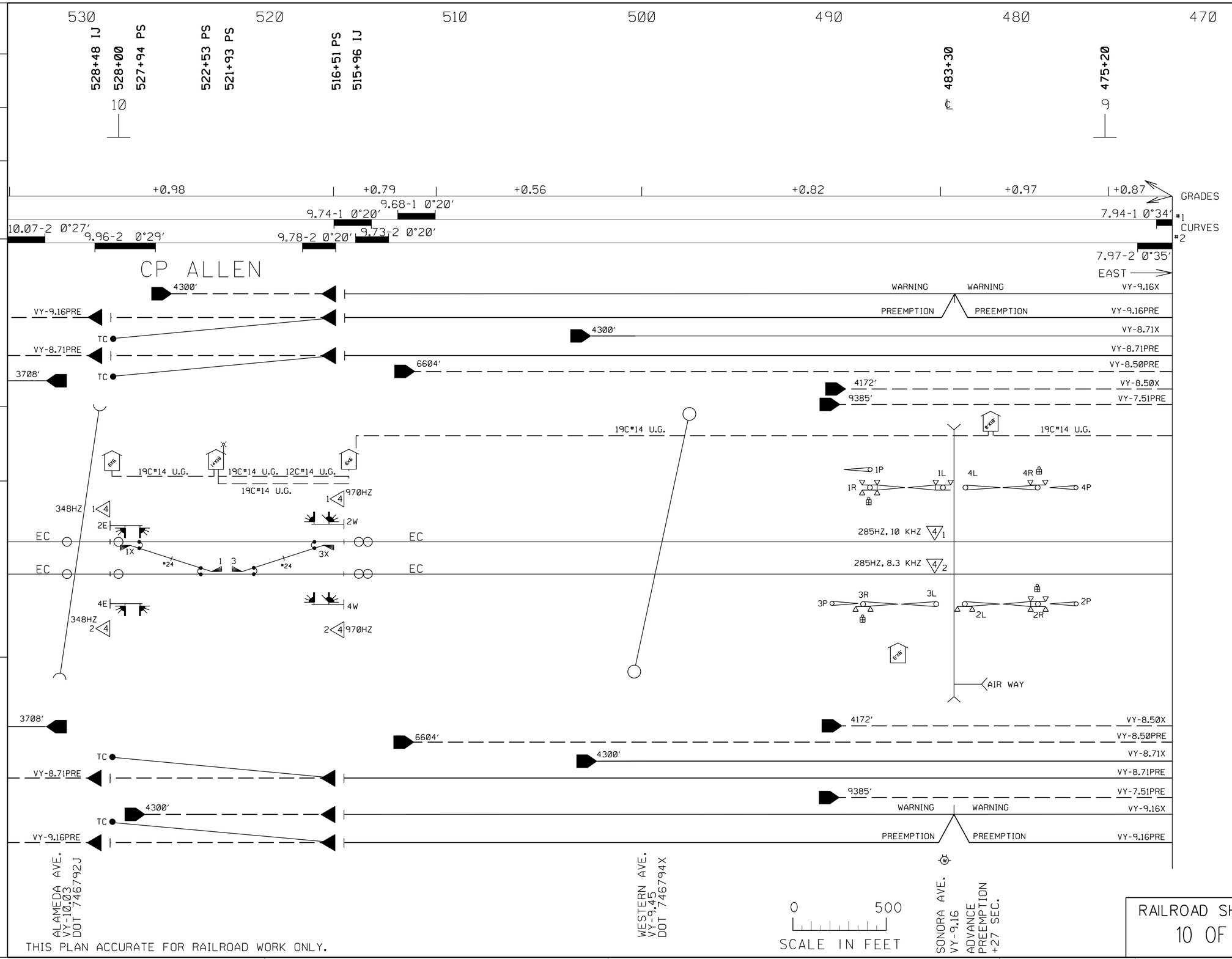


THIS PLAN ACCURATE FOR RAILROAD WORK ONLY.

LEGEND

- = METER SERVICE
- = MS 500
- = HXP BI-DIRECTIONAL
- = HXP UNI-DIRECTIONAL
- = GCP 3000 BI-DIRECTIONAL
- = GCP 3000 UNI-DIRECTIONAL
- = GCP 4000 BI-DIRECTIONAL
- = GCP 4000 UNI-DIRECTIONAL
- = PREDICTION LIMITS
- = ADVANCED PREEMTION LIMITS
- = DAX FEED FROM THIS LOCATION
- = NARROW BAND SHUNT
- = WIDE BAND SHUNT
- EC = TRACK CODE
- LC = LINE CODE
- DWBS = DUAL WIDE BAND SHUNT AROUND INSULATED JOINT, EACH RAIL
- = DRAGGING EQUIPMENT DETECTOR
- = HOT BOX DETECTOR
- = HIGH/WIDE LOAD DETECTOR
- = STOP SIGN
- = SPRING SWITCH
- = POWER SWITCH
- = ELECTRIC LOCK
- = SELECTOR WIRED SWITCH
- TJC = TUNED JOINT COUPLER AROUND INSULATED JOINT, EACH RAIL
- BSC = BI-DIRECTIONAL SIMULATION CONFIGURATION
- = HIGH WATER DETECTOR
- = PERMISSIVE PLATE
- = UNDERPASS
- = OVERPASS
- = CROSSING

# SIGNAL STAGE 2 (PHASE 2 & 3)

RR-SP-010

SCAX

CENTRALIZED TRAFFIC CONTROL
CP BURBANK JCT.-
SONORA AVE.
VY 8-11

SH. 2 OF 2 01/19/99

RAILROAD SHEET NO.
10 OF 171

STATE OF CALIFORNIA - DEPARTMENT OF TRANSPORTATION
Caltrans
DESIGN
CONSULTANT FUNCTIONAL SUPERVISOR GLENN BREINDEL
CALCULATED-DESIGNED BY RAMON VALDEZ
CHECKED BY
REVISED BY
DATE REVISED

DATE PLOTTED = 7/18/2012
TIME PLOTTED = 2:47:07 PM
LAST REVISION 00-00-00