Dist	COUNTY	ROUTE	POST MILES TOTAL PROJECT	SHEET No.	TOTAL SHEETS
07	LA,Ven	101	29.3/38.2, 0.0/1.2	1	265

ACNH-Q101(304)E

STATE OF CALIFORNIA
DEPARTMENT OF TRANSPORTATION

PROJECT PLANS FOR CONSTRUCTION ON
STATE HIGHWAY
IN LOS ANGELES AND VENTURA COUNTIES
AT
VARIOUS LOCATIONS

TO BE SUPPLEMENTED BY STANDARD PLANS DATED 2010

INDEX OF PLANS

SHEET No.	DESCRIPTION
1	TITLE AND LOCATION MAP
2	LOCATIONS OF CONSTRUCTION
3	TYPICAL CROSS SECTIONS
4-30	LAYOUTS
31-45	CONSTRUCTION DETAILS
46-104	WATER POLLUTION PLANS, PROFILES, DETAILS AND QUANTITIES
105-131	CONTOUR GRADING PLANS
132-158	UTILITY PLANS
159	CONSTRUCTION AREA SIGNS
160-190	TRAFFIC HANDLING PLANS AND DETAILS
191-192	SUMMARY OF QUANTITIES
193-220	LANDSCAPE PLANS
221-227	ELECTRICAL PLANS
228-265	REVISED STANDARD PLANS

THE STANDARD PLANS LIST APPLICABLE TO THIS CONTRACT IS INCLUDED IN THE NOTICE TO BIDDERS AND SPECIAL PROVISIONS BOOK.

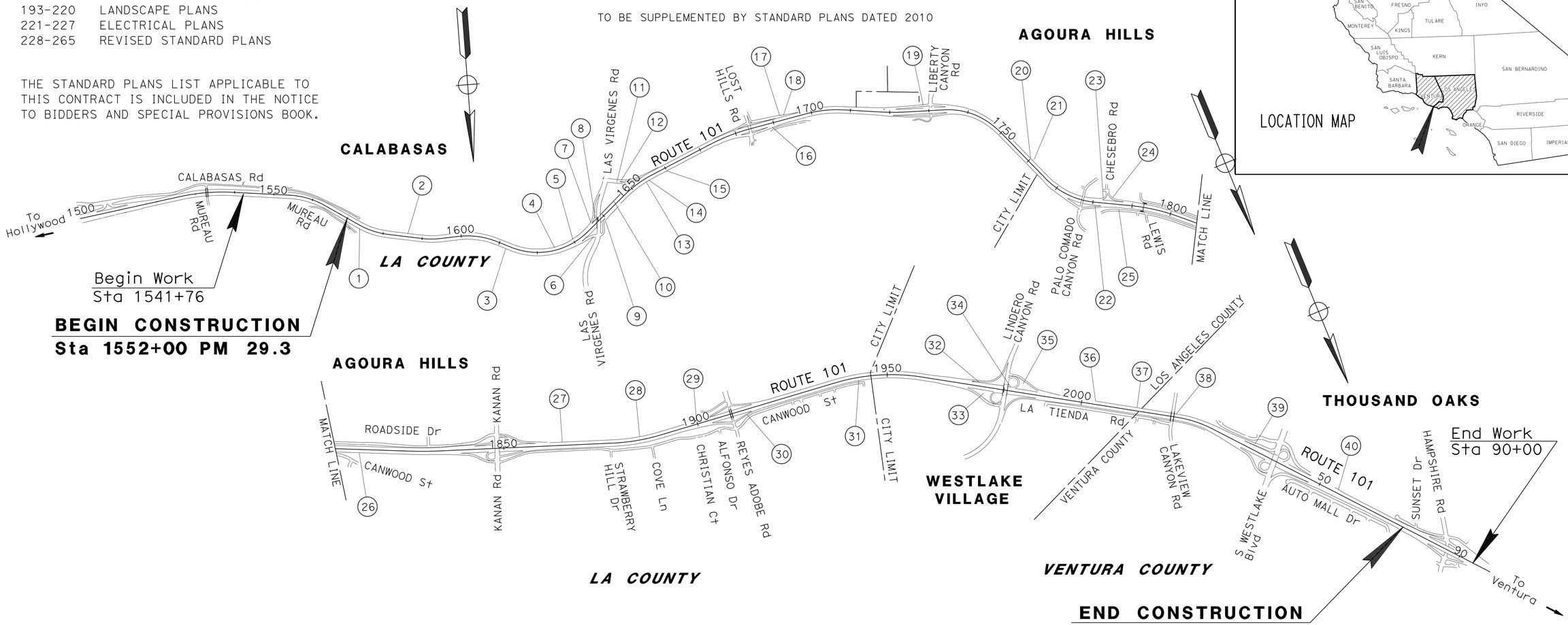

NOTE:
THE TABLE OF LOCATIONS IS SHOWN ON THE LOCATIONS OF CONSTRUCTION SHEET

THE CONTRACTOR SHALL POSSESS THE CLASS (OR CLASSES) OF LICENSE AS SPECIFIED IN THE "NOTICE TO BIDDERS."

NO SCALE

PROJECT ENGINEER REGISTERED CIVIL ENGINEER — DATE 12-18-15

REGISTERED PROFESSIONAL ENGINEER — ARTURO LAO — No. 56687 — Exp. 6-30-17 — CIVIL — STATE OF CALIFORNIA

April 25, 2016
PLANS APPROVAL DATE

THE STATE OF CALIFORNIA OR ITS OFFICERS OR AGENTS SHALL NOT BE RESPONSIBLE FOR THE ACCURACY OR COMPLETENESS OF SCANNED COPIES OF THIS PLAN SHEET.

CONTRACT No.	07-281504
PROJECT ID	0700000552

PROJECT MANAGER: RAVI GHATE
DESIGN MANAGER: REFUGIO DOMINGUEZ

LAST REVISION 00-00-00 — DATE PLOTTED => 01-AUG-2016 — TIME PLOTTED => 13:54

Dist	COUNTY	ROUTE	POST MILES TOTAL PROJECT	SHEET No.	TOTAL SHEETS
07	LA,Ven	101	29.3/38.2, 0.0/1.2	2	265

REGISTERED CIVIL ENGINEER 12-18-15 DATE

4-25-16
PLANS APPROVAL DATE

REGISTERED PROFESSIONAL ENGINEER ARTURO LAO No. 56687 Exp. 6-30-17 CIVIL STATE OF CALIFORNIA

THE STATE OF CALIFORNIA OR ITS OFFICERS OR AGENTS SHALL NOT BE RESPONSIBLE FOR THE ACCURACY OR COMPLETENESS OF SCANNED COPIES OF THIS PLAN SHEET.

LOCATIONS OF CONSTRUCTION

Loc No. ⓗ	BMP No.	DIRECTION	DEVICE TYPE	COUNTY	PM	PLAN SHEET	DRAINAGE PLAN	SYSTEM No.
1	146	N/B	BST	LA	29.8	L-1		
2	150	S/B	AVSF	LA	30.1	L-2	W-1	1
3	178	N/B	AVSF	LA	30.5	L-3	W-2	2
4	177	S/B	BSW	LA	30.8	L-4	W-3	5
5	159	S/B	BSW	LA	30.9	L-4	W-3	3
6	160	N/B	BSW	LA	31.0	L-4	W-3	4
7	176	S/B	BST	LA	31.0	L-4		
8	162	S/B	BST	LA	31.0	L-4		
9	166	N/B	BSW	LA	31.0	L-5	W-4	6
10	164	S/B	BST	LA	31.1	L-6		
11	172	S/B	BST	LA	31.3	L-6		
12	168	S/B	BST	LA	31.3	L-6		
13	167B	N/B	BST	LA	31.3	L-6		
14	167A	N/B	BSW	LA	31.4	L-6	W-5	7
15	174	N/B	BSW	LA	31.5	L-7	W-6	8
16	244	N/B	BSW	LA	32.1	L-8	W-7	11
17	245B	S/B	BSW	LA	32.1	L-8	W-7	10
18	245A	S/B	BSW	LA	32.1	L-8	W-7	9
19	247	S/B	BST	LA	32.8	L-9		
20	251	S/B	AVSF	LA	33.4	L-10	W-8	12
21	257	S/B	BSW	LA	33.5	L-10	W-8	13
22	259B	N/B	BSW	LA	33.8	L-11	W-9	14
23	261	S/B	BST	LA	33.7	L-11		
24	262	S/B	BST	LA	33.8	L-12		
25	259A	N/B	BST	LA	33.9	L-12		
26	263	N/B	BST	LA	34.2	L-13,14		
27	273	S/B	BST	LA	35.3	L-15		
28	274	S/B	AVSF	LA	35.7	L-16	W-10	15
29	277	S/B	AVSF	LA	36.0	L-17	W-11	16
30	279	N/B	BSW	LA	36.3	L-18	W-12	17
31	280	N/B	BST	LA	36.8	L-19,20		
32	283B	S/B	BST	LA	37.5	L-21		
33	284A	N/B	BSW	LA	37.5	L-21	W-13	18
34	287	S/B	BST	LA	37.6	L-21		
35	288B	S/B	BSW	LA	37.7	L-22	W-14	19
36	292A	S/B	AVSF	LA	38.0	L-23	W-15	20
37	291	S/B	BSW	LA	38.2	L-24	W-16	21
38	1	S/B	BSW	Ven	0.20	L-25	W-17	22
39	4	S/B	AVSF	Ven	0.60	L-26	W-18	23
40	7	S/B	BSW	Ven	1.00	L-27	W-19	24

LOCATIONS OF CONSTRUCTION

LC-1

REVISED BY | DATE REVISED

ARTURO LAO | REFUGIO DOMINGUEZ

CALCULATED-DESIGNED BY | CHECKED BY

FUNCTIONAL SUPERVISOR | REFUGIO DOMINGUEZ

STATE OF CALIFORNIA - DEPARTMENT OF TRANSPORTATION

Caltrans® DESIGN

LAST REVISION 00-00-00 | DATE PLOTTED => 01-AUG-2016 | TIME PLOTTED => 13:54

Dist	COUNTY	ROUTE	POST MILES TOTAL PROJECT	SHEET No.	TOTAL SHEETS
07	LA,Ven	101	29.3/38.2, 0.0/1.2	3	265

REGISTERED CIVIL ENGINEER 12-18-15 DATE

4-25-16
PLANS APPROVAL DATE

REGISTERED PROFESSIONAL ENGINEER ARTURO LAO No. 56682 Exp. 6-30-17 CIVIL STATE OF CALIFORNIA

THE STATE OF CALIFORNIA OR ITS OFFICERS OR AGENTS SHALL NOT BE RESPONSIBLE FOR THE ACCURACY OR COMPLETENESS OF SCANNED COPIES OF THIS PLAN SHEET.

NOTE:

1. DIMENSIONS OF THE PAVEMENT STRUCTURES (STRUCTURAL SECTIONS) ARE SUBJECT TO TOLERANCES SPECIFIED IN THE STANDARD SPECIFICATIONS.

PROPOSED STRUCTURAL SECTIONS

[1] 0.20′ RUBBERIZED HOT MIX ASPHALT (GAP GRADED)
0.20′ HOT MIX ASPHALT (TYPE A)
0.40′ LEAN CONCRETE BASE
0.65′ CLASS 3 AGGREGATE BASE

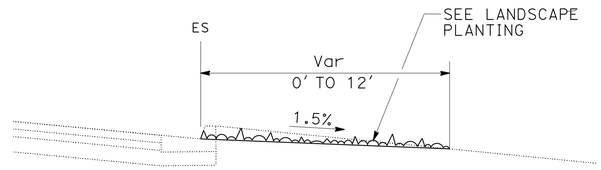

BIOFILTRATION STRIP SECTION

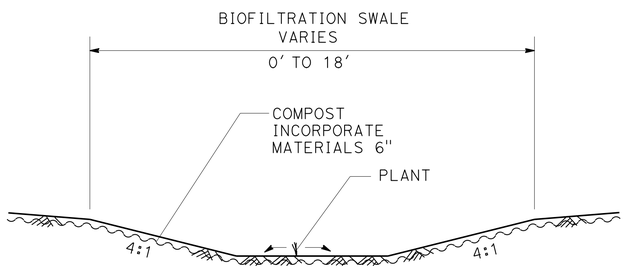

BIOFILTRATION SWALE

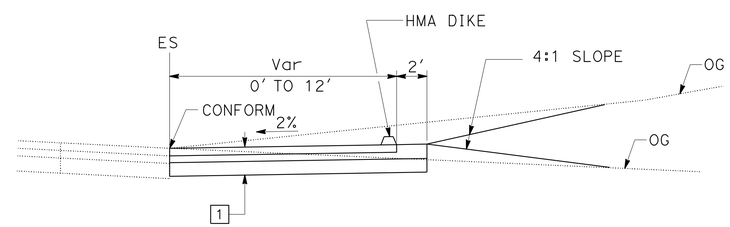

Sta 1626+84, 37+55.7, 32+45, 39+15, 46+20.6, 1660+90, 90+05, 90+75, 1721+93, 1778+40, 1783+92, 1783+25, 1783+90, 1802+72, 1860+56, 14+03.2, 53+21

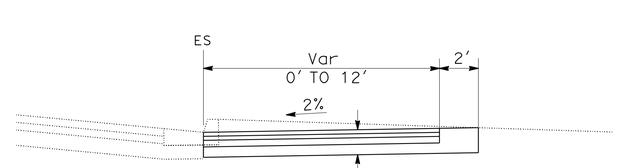

Sta 1570+84, 49+68, 1943+16, 1984+80, 0+40, 11+78.5

MAINTENANCE VEHICLE PULLOUT (MVP)

TYPICAL CROSS SECTIONS

NO SCALE

X-1

STATE OF CALIFORNIA - DEPARTMENT OF TRANSPORTATION
Caltrans® DESIGN

FUNCTIONAL SUPERVISOR: REFUGIO DOMINGUEZ
CALCULATED-DESIGNED BY: RICHARD DOUGHERTY
CHECKED BY: ARTURO LAO
REVISED BY
DATE REVISED

LAST REVISION 00-00-00 | DATE PLOTTED => 01-AUG-2016 | TIME PLOTTED => 13:54

Dist	COUNTY	ROUTE	POST MILES TOTAL PROJECT	SHEET No.	TOTAL SHEETS
07	LA,Ven	101	29.3/38.2, 0.0/1.2	4	265

12-18-15
REGISTERED CIVIL ENGINEER DATE

4-25-16
PLANS APPROVAL DATE

REGISTERED PROFESSIONAL ENGINEER
ARTURO LAO
No. 56687
Exp. 6-30-17
CIVIL
STATE OF CALIFORNIA

THE STATE OF CALIFORNIA OR ITS OFFICERS OR AGENTS SHALL NOT BE RESPONSIBLE FOR THE ACCURACY OR COMPLETENESS OF SCANNED COPIES OF THIS PLAN SHEET.

NOTE:

FOR ACCURATE RIGHT OF WAY DATA, CONTACT RIGHT OF WAY ENGINEERING AT THE DISTRICT OFFICE.

LEGEND:

AVSF - AUSTIN VAULT SAND FILTER

BSW - BIOFILTRATION SWALE

BST - BIOFILTRATION STRIP

- BIOFILTRATION STRIP

- MVP - MAINTENANCE VEHICLE PULLOUT
SEE CONSTRUCTION DETAIL C-1

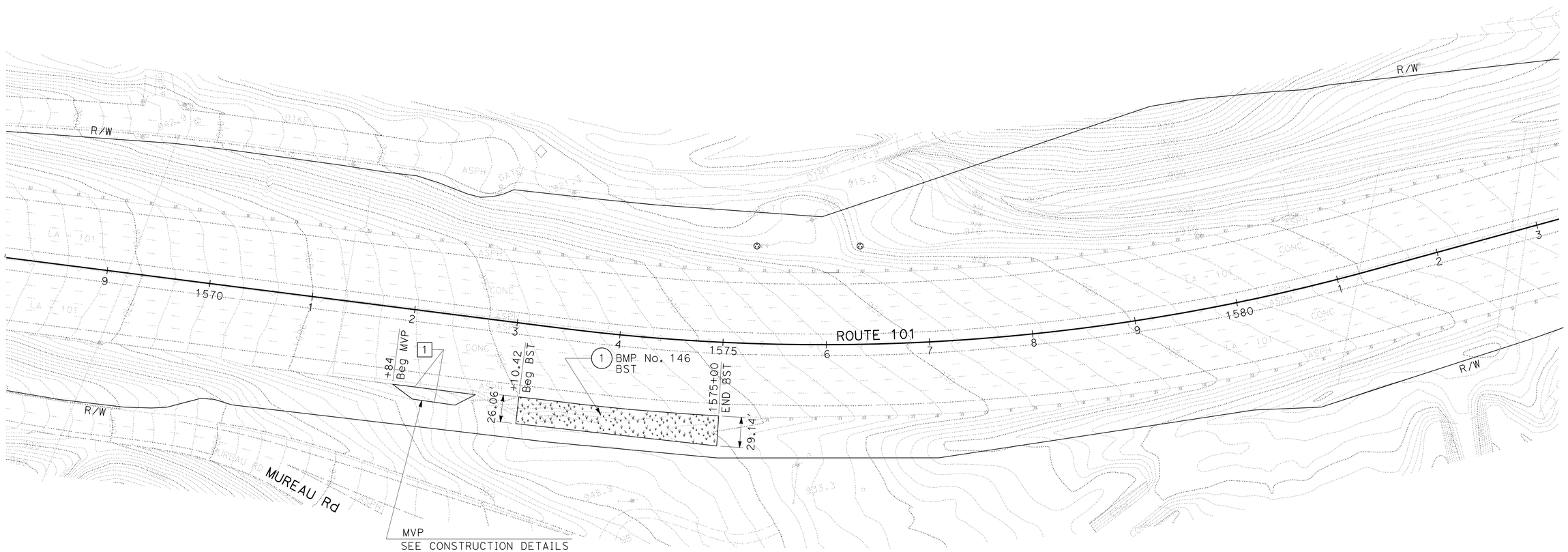

LAYOUT

SCALE: 1" = 50'

L-1

STATE OF CALIFORNIA - DEPARTMENT OF TRANSPORTATION
Caltrans
DESIGN

FUNCTIONAL SUPERVISOR: REFUGIO DOMINGUEZ

CALCULATED-DESIGNED BY: MOHAMMAD MOHSENZADEH
CHECKED BY: ARTURO LAO

REVISED BY | DATE REVISED

LAST REVISION 00-00-00 | DATE PLOTTED => 01-AUG-2016 | TIME PLOTTED => 13:54

Dist	COUNTY	ROUTE	POST MILES TOTAL PROJECT	SHEET No.	TOTAL SHEETS
07	LA,Ven	101	29.3/38.2, 0.0/1.2	5	265

REGISTERED CIVIL ENGINEER 12-18-15 DATE

4-25-16
PLANS APPROVAL DATE

REGISTERED PROFESSIONAL ENGINEER ARTURO LAO No. 56687 Exp. 6-30-17 CIVIL STATE OF CALIFORNIA

THE STATE OF CALIFORNIA OR ITS OFFICERS OR AGENTS SHALL NOT BE RESPONSIBLE FOR THE ACCURACY OR COMPLETENESS OF SCANNED COPIES OF THIS PLAN SHEET.

NOTE:

FOR ACCURATE RIGHT OF WAY DATA, CONTACT RIGHT OF WAY ENGINEERING AT THE DISTRICT OFFICE.

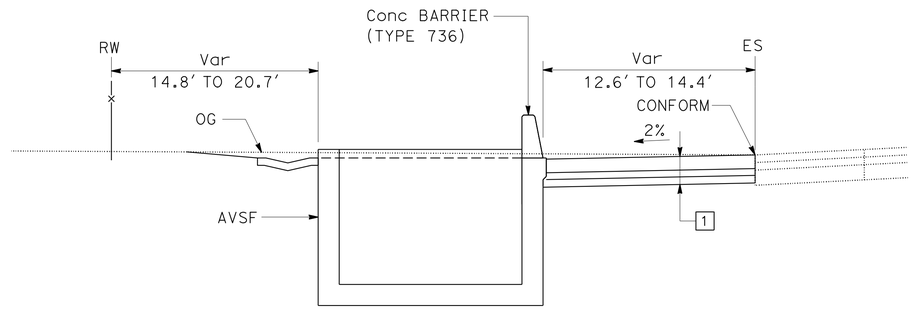

SECTION A-A
NO SCALE

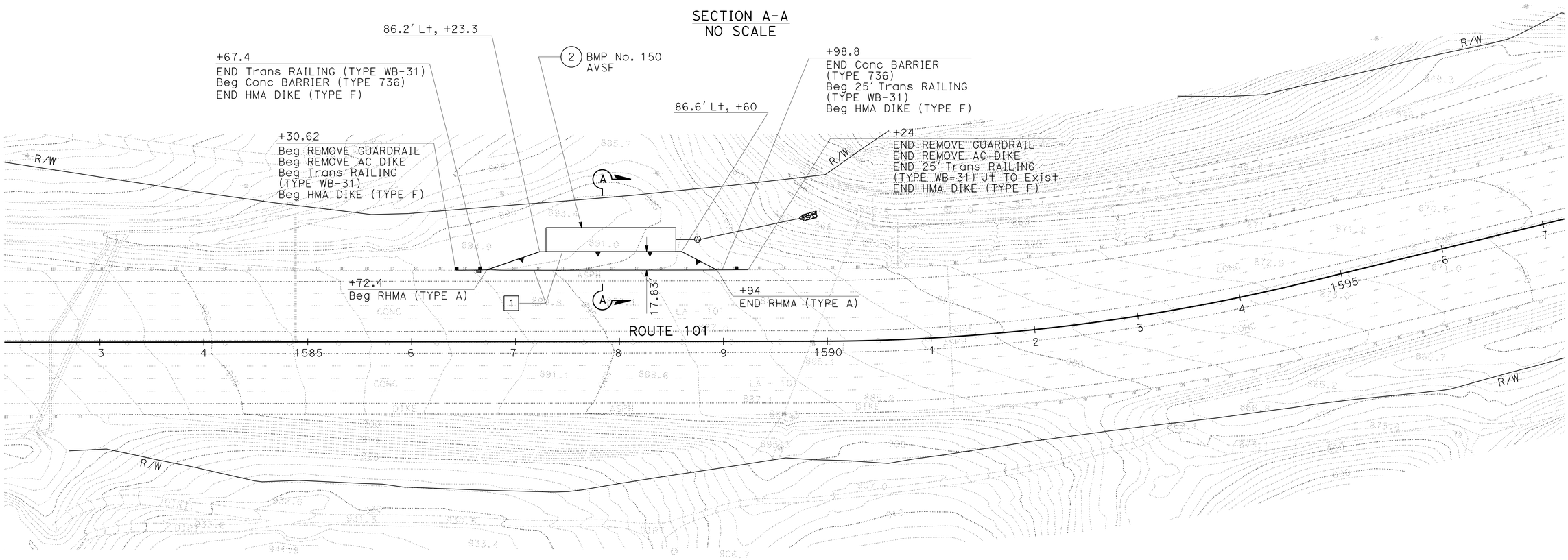

LAYOUT
SCALE: 1" = 50'

L-2

STATE OF CALIFORNIA - DEPARTMENT OF TRANSPORTATION
Caltrans
DESIGN

FUNCTIONAL SUPERVISOR: REFUGIO DOMINGUEZ
CALCULATED-DESIGNED BY: RICHARD DOUGHERTY
CHECKED BY: ARTURO LAO
REVISED BY
DATE REVISED

LAST REVISION 00-00-00
DATE PLOTTED => 01-AUG-2016
TIME PLOTTED => 13:54

Dist	COUNTY	ROUTE	POST MILES TOTAL PROJECT	SHEET No.	TOTAL SHEETS
07	LA,Ven	101	29.3/38.2, 0.0/1.2	6	265

REGISTERED CIVIL ENGINEER 12-18-15 DATE

4-25-16
PLANS APPROVAL DATE

REGISTERED PROFESSIONAL ENGINEER ARTURO LAO No. 56687 Exp. 6-30-17 CIVIL STATE OF CALIFORNIA

THE STATE OF CALIFORNIA OR ITS OFFICERS OR AGENTS SHALL NOT BE RESPONSIBLE FOR THE ACCURACY OR COMPLETENESS OF SCANNED COPIES OF THIS PLAN SHEET.

NOTE:

FOR ACCURATE RIGHT OF WAY DATA, CONTACT RIGHT OF WAY ENGINEERING AT THE DISTRICT OFFICE.

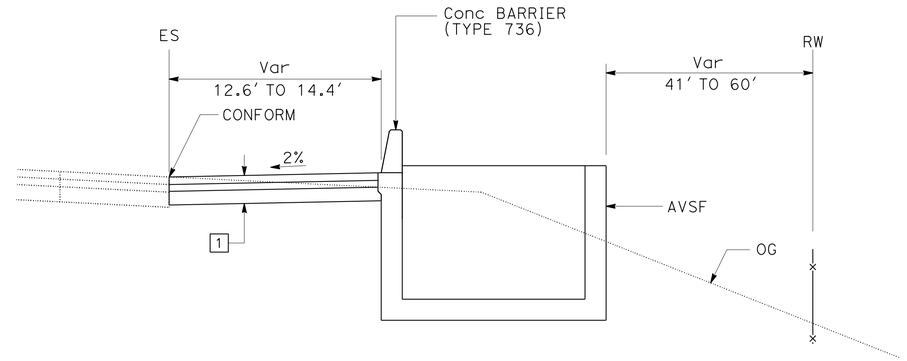

SECTION B-B
NO SCALE

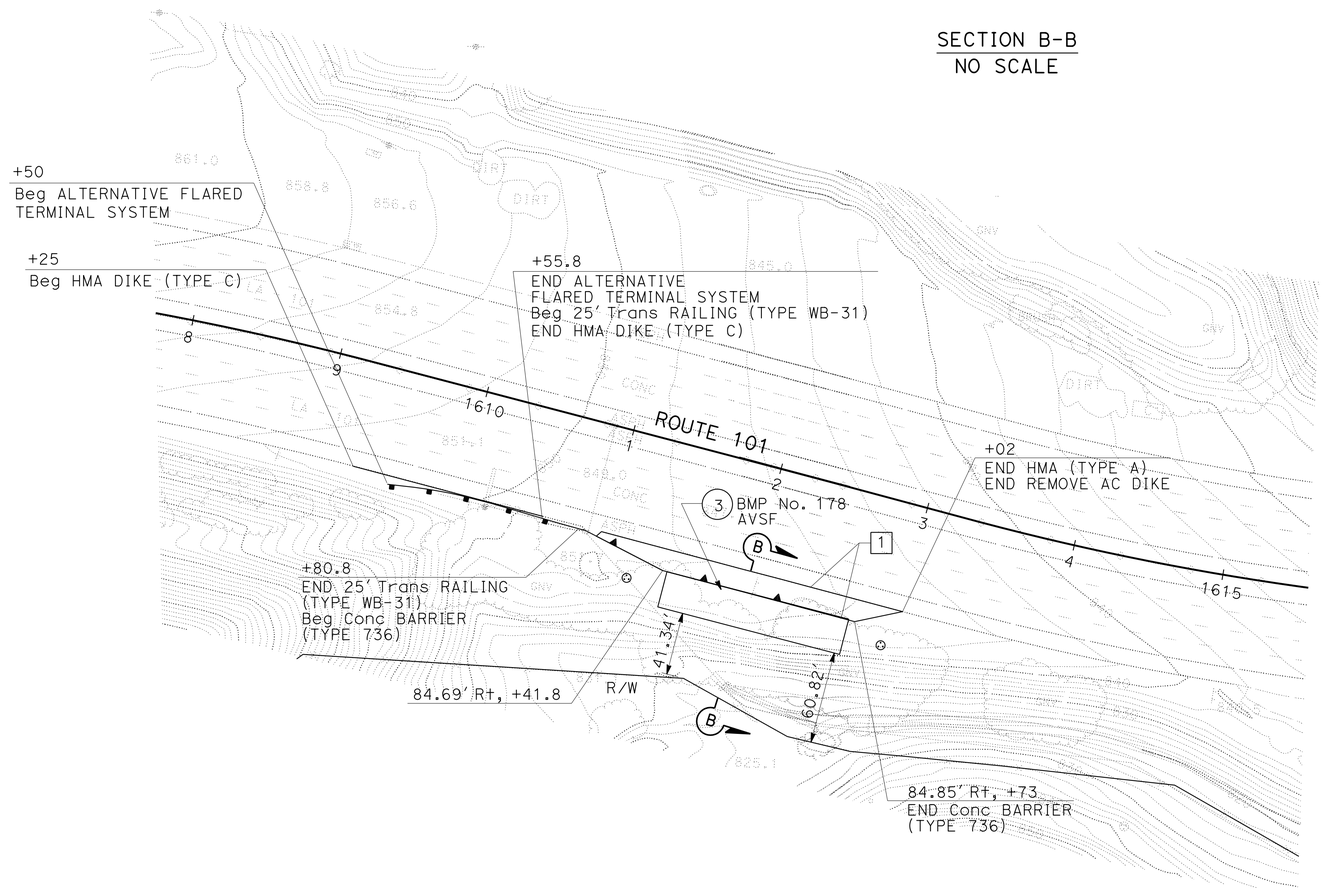

LAYOUT

SCALE: 1" = 50'

L-3

STATE OF CALIFORNIA - DEPARTMENT OF TRANSPORTATION
Caltrans
DESIGN

FUNCTIONAL SUPERVISOR: REFUGIO DOMINGUEZ
CALCULATED-DESIGNED BY: MOHAMMAD MOHSENZADEH
CHECKED BY: ARTURO LAO
REVISED BY
DATE REVISED

LAST REVISION 00-00-00
DATE PLOTTED => 01-AUG-2016
TIME PLOTTED => 13:54

Dist	COUNTY	ROUTE	POST MILES TOTAL PROJECT	SHEET No.	TOTAL SHEETS
07	LA,Ven	101	29.3/38.2, 0.0/1.2	7	265

REGISTERED CIVIL ENGINEER 12-18-15 DATE

4-25-16
PLANS APPROVAL DATE

REGISTERED PROFESSIONAL ENGINEER ARTURO LAO No. 56687 Exp. 6-30-17 CIVIL STATE OF CALIFORNIA

THE STATE OF CALIFORNIA OR ITS OFFICERS OR AGENTS SHALL NOT BE RESPONSIBLE FOR THE ACCURACY OR COMPLETENESS OF SCANNED COPIES OF THIS PLAN SHEET.

NOTE:

FOR ACCURATE RIGHT OF WAY DATA, CONTACT RIGHT OF WAY ENGINEERING AT THE DISTRICT OFFICE.

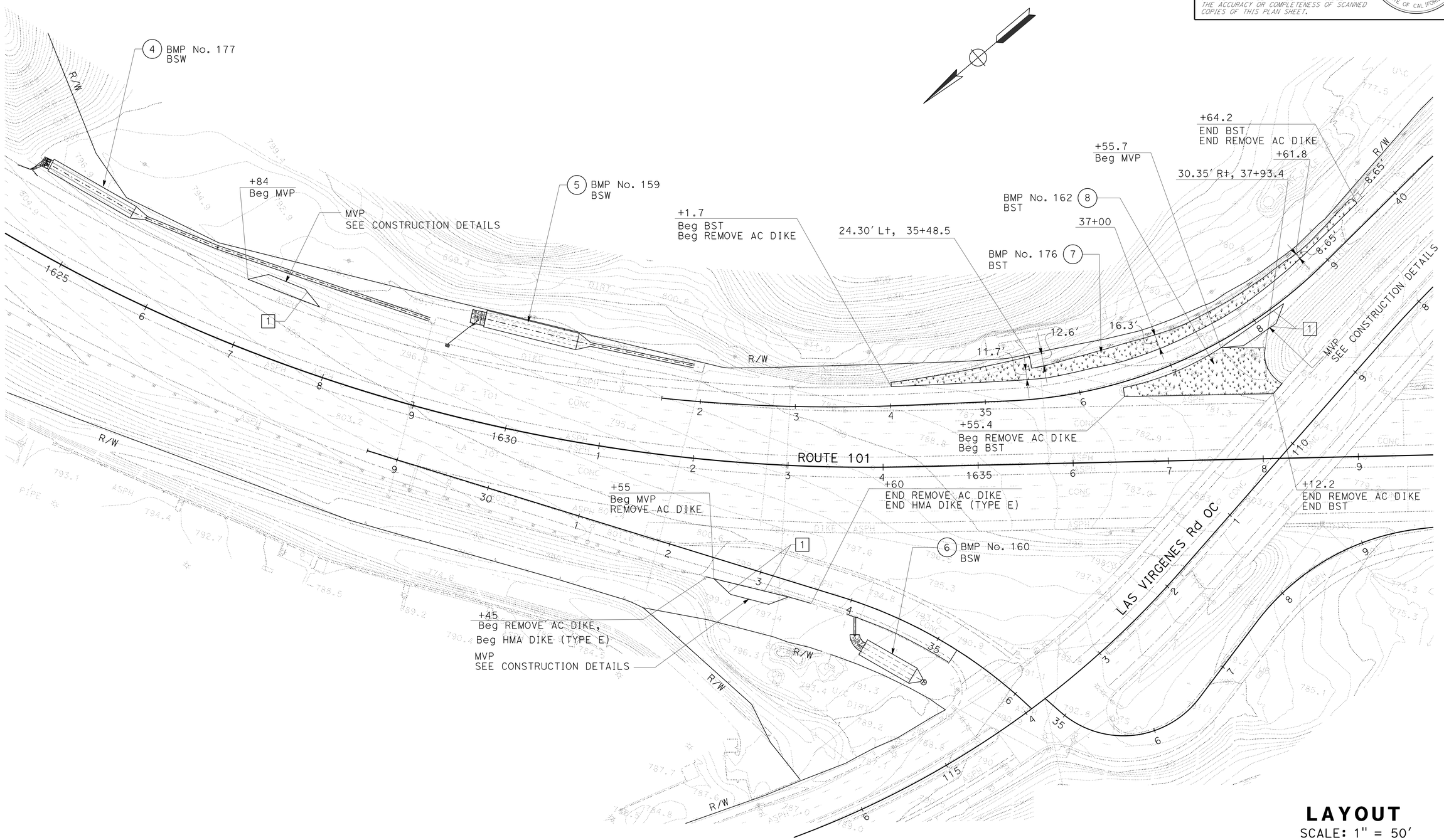

LAYOUT
SCALE: 1" = 50'

L-4

STATE OF CALIFORNIA - DEPARTMENT OF TRANSPORTATION
Caltrans
DESIGN

FUNCTIONAL SUPERVISOR: REFUGIO DOMINGUEZ
CALCULATED-DESIGNED BY: MOHAMMAD MOHSENZADEH
CHECKED BY: ARTURO LAO
REVISED BY
DATE REVISED

LAST REVISION 00-00-00
DATE PLOTTED => 01-AUG-2016
TIME PLOTTED => 13:54

Dist	COUNTY	ROUTE	POST MILES TOTAL PROJECT	SHEET No.	TOTAL SHEETS
07	LA,Ven	101	29.3/38.2, 0.0/1.2	8	265

REGISTERED CIVIL ENGINEER 12-18-15 DATE

4-25-16
PLANS APPROVAL DATE

REGISTERED PROFESSIONAL ENGINEER ARTURO LAO No. 56687 Exp. 6-30-17 CIVIL STATE OF CALIFORNIA

THE STATE OF CALIFORNIA OR ITS OFFICERS OR AGENTS SHALL NOT BE RESPONSIBLE FOR THE ACCURACY OR COMPLETENESS OF SCANNED COPIES OF THIS PLAN SHEET.

NOTE:

FOR ACCURATE RIGHT OF WAY DATA, CONTACT RIGHT OF WAY ENGINEERING AT THE DISTRICT OFFICE.

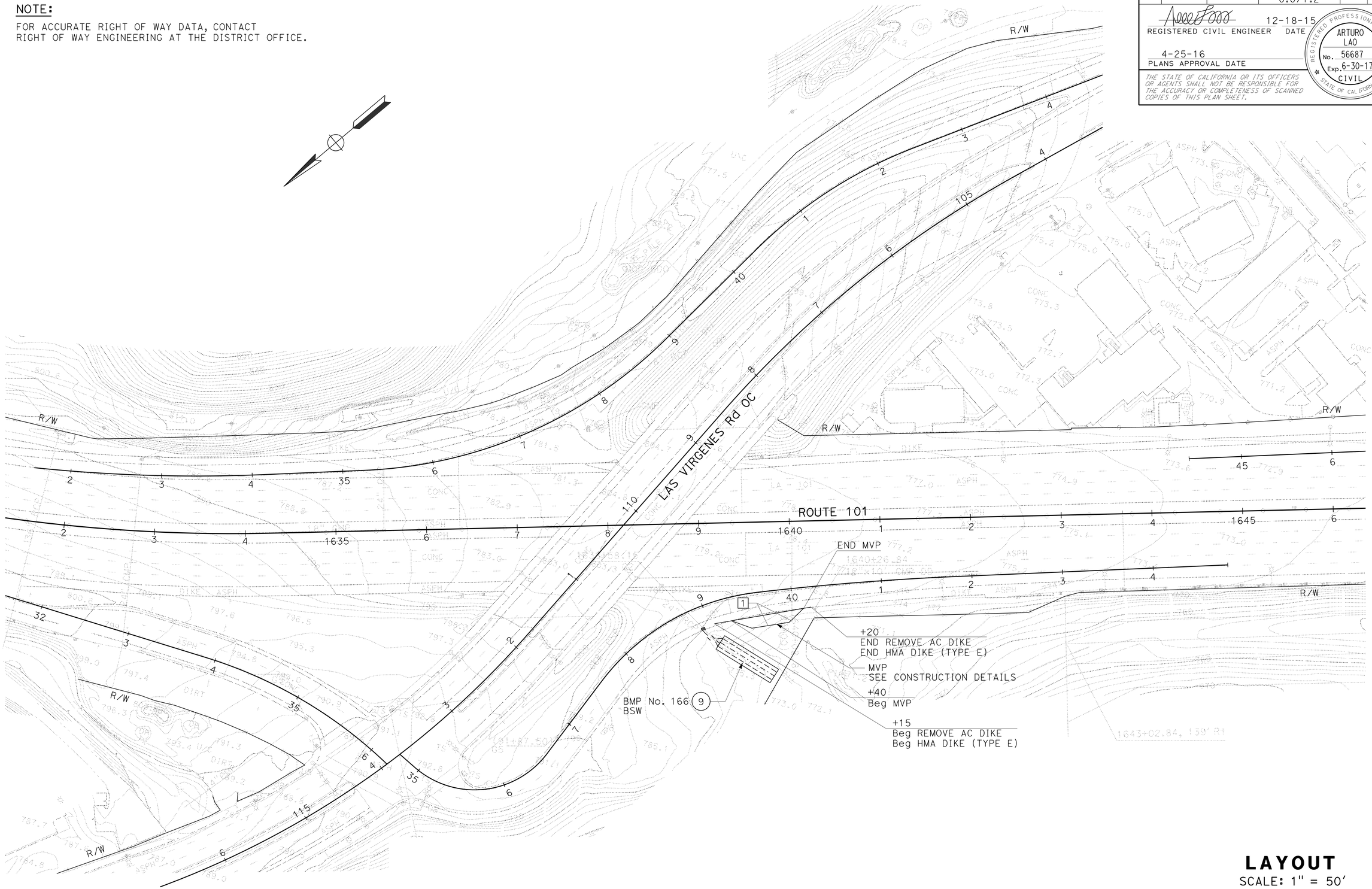

LAYOUT

SCALE: 1" = 50'

L-5

STATE OF CALIFORNIA - DEPARTMENT OF TRANSPORTATION

Caltrans®

DESIGN

FUNCTIONAL SUPERVISOR: REFUGIO DOMINGUEZ

CALCULATED-DESIGNED BY: MOHAMMAD MOHSENZADEH

CHECKED BY: ARTURO LAO

REVISED BY

DATE REVISED

LAST REVISION 00-00-00

DATE PLOTTED => 01-AUG-2016
TIME PLOTTED => 13:54

Dist	COUNTY	ROUTE	POST MILES TOTAL PROJECT	SHEET No.	TOTAL SHEETS
07	LA,Ven	101	29.3/38.2, 0.0/1.2	9	265

REGISTERED CIVIL ENGINEER 12-18-15 DATE

4-25-16
PLANS APPROVAL DATE

REGISTERED PROFESSIONAL ENGINEER ARTURO LAO No. 56687 Exp. 6-30-17 CIVIL STATE OF CALIFORNIA

THE STATE OF CALIFORNIA OR ITS OFFICERS OR AGENTS SHALL NOT BE RESPONSIBLE FOR THE ACCURACY OR COMPLETENESS OF SCANNED COPIES OF THIS PLAN SHEET.

NOTE:

FOR ACCURATE RIGHT OF WAY DATA, CONTACT RIGHT OF WAY ENGINEERING AT THE DISTRICT OFFICE.

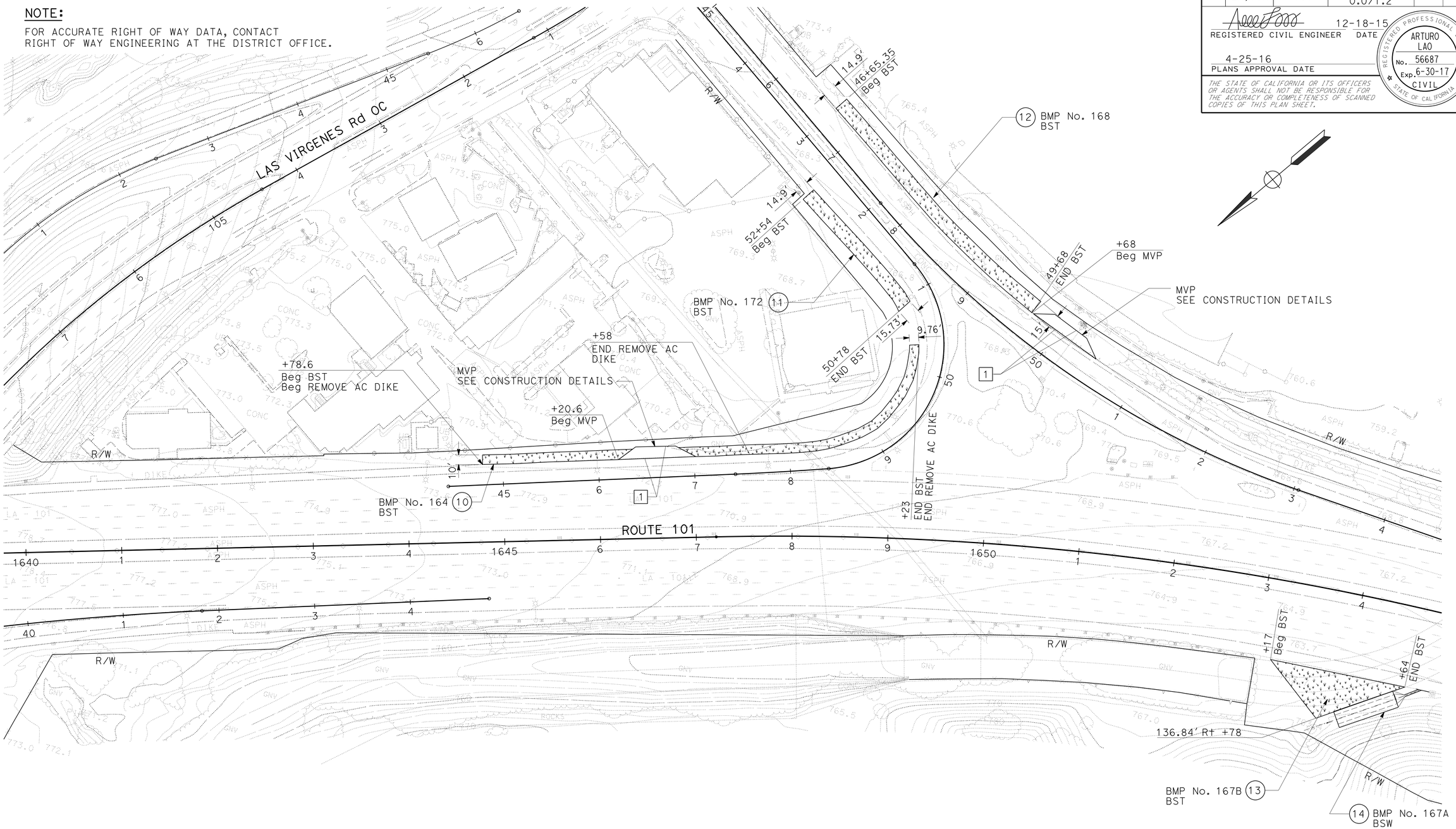

LAYOUT

SCALE: 1" = 50'

L-6

STATE OF CALIFORNIA - DEPARTMENT OF TRANSPORTATION

Caltrans

DESIGN

FUNCTIONAL SUPERVISOR: REFUGIO DOMINGUEZ

CALCULATED-DESIGNED BY: MOHAMMAD MOHSENZADEH

CHECKED BY: ARTURO LAO

REVISED BY

DATE REVISED

LAST REVISION 00-00-00

DATE PLOTTED => 01-AUG-2016

TIME PLOTTED => 13:54

Dist	COUNTY	ROUTE	POST MILES TOTAL PROJECT	SHEET No.	TOTAL SHEETS
07	LA,Ven	101	29.3/38.2, 0.0/1.2	10	265

REGISTERED CIVIL ENGINEER 12-18-15 DATE

4-25-16
PLANS APPROVAL DATE

REGISTERED PROFESSIONAL ENGINEER ARTURO LAO No. 56687 Exp. 6-30-17 CIVIL STATE OF CALIFORNIA

THE STATE OF CALIFORNIA OR ITS OFFICERS OR AGENTS SHALL NOT BE RESPONSIBLE FOR THE ACCURACY OR COMPLETENESS OF SCANNED COPIES OF THIS PLAN SHEET.

NOTE:

FOR ACCURATE RIGHT OF WAY DATA, CONTACT RIGHT OF WAY ENGINEERING AT THE DISTRICT OFFICE.

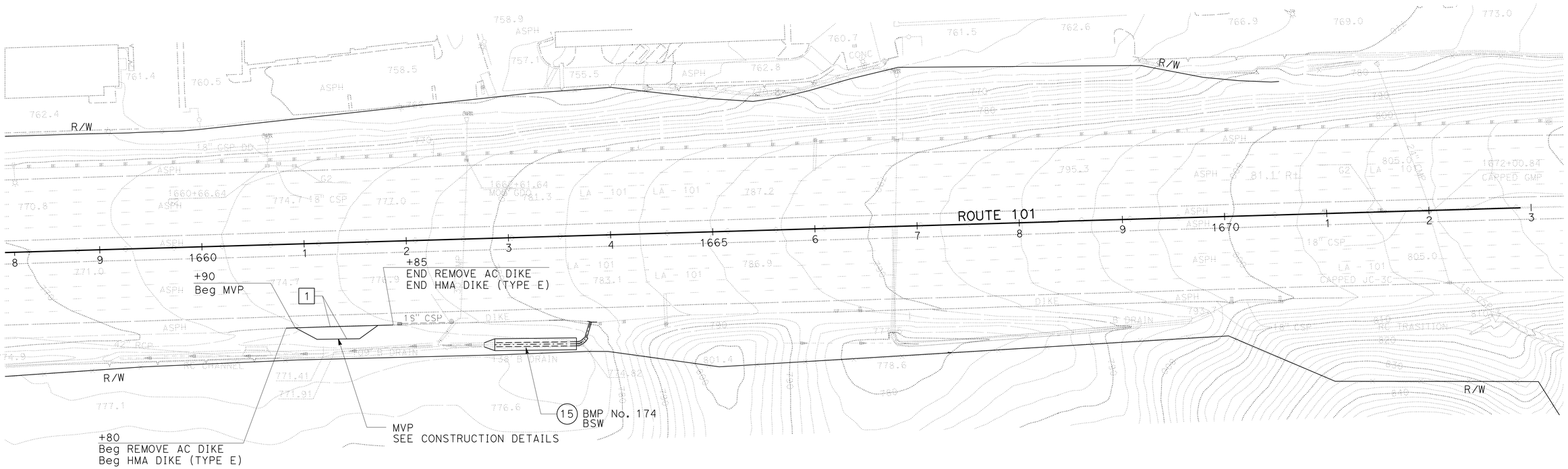

LAYOUT
SCALE: 1" = 50'

L-7

STATE OF CALIFORNIA - DEPARTMENT OF TRANSPORTATION
Caltrans
DESIGN

FUNCTIONAL SUPERVISOR: REFUGIO DOMINGUEZ
CALCULATED-DESIGNED BY: MOHAMMAD MOHSENZADEH
CHECKED BY: ARTURO LAO
REVISED BY
DATE REVISED

LAST REVISION 00-00-00
DATE PLOTTED => 01-AUG-2016
TIME PLOTTED => 13:54

Dist	COUNTY	ROUTE	POST MILES TOTAL PROJECT	SHEET No.	TOTAL SHEETS
07	LA,Ven	101	29.3/38.2, 0.0/1.2	11	265

REGISTERED CIVIL ENGINEER 12-18-15 DATE

4-25-16
PLANS APPROVAL DATE

REGISTERED PROFESSIONAL ENGINEER ARTURO LAO No. 56687 Exp. 6-30-17 CIVIL STATE OF CALIFORNIA

THE STATE OF CALIFORNIA OR ITS OFFICERS OR AGENTS SHALL NOT BE RESPONSIBLE FOR THE ACCURACY OR COMPLETENESS OF SCANNED COPIES OF THIS PLAN SHEET.

NOTE:

FOR ACCURATE RIGHT OF WAY DATA, CONTACT RIGHT OF WAY ENGINEERING AT THE DISTRICT OFFICE.

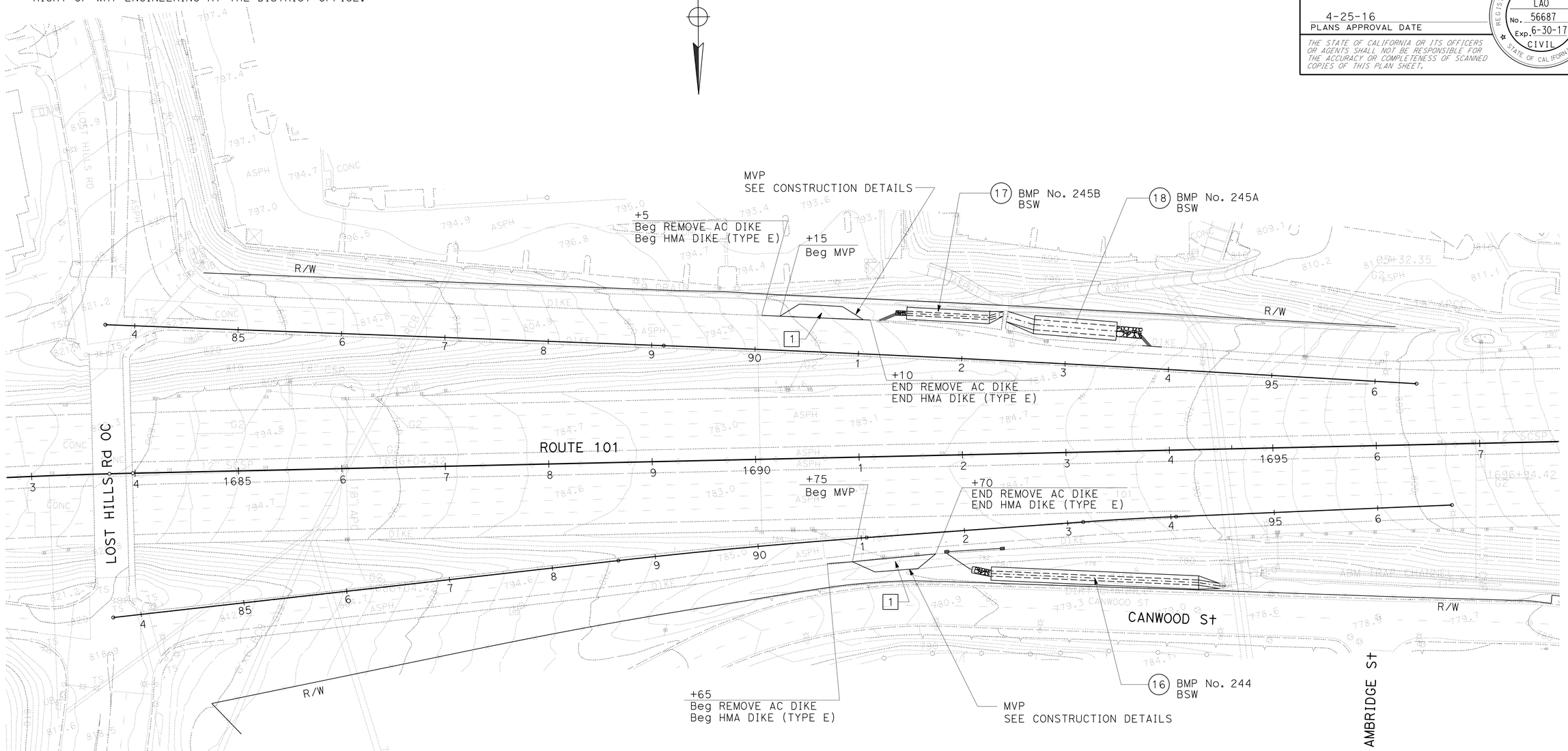

LAYOUT
SCALE: 1" = 50'

L-8

STATE OF CALIFORNIA - DEPARTMENT OF TRANSPORTATION
Caltrans® **DESIGN**

FUNCTIONAL SUPERVISOR: REFUGIO DOMINGUEZ

RICHARD DOUGHERTY | ARTURO LAO

CALCULATED-DESIGNED BY | CHECKED BY

REVISED BY | DATE REVISED

LAST REVISION 00-00-00 | DATE PLOTTED => 01-AUG-2016 | TIME PLOTTED => 13:54

Dist	COUNTY	ROUTE	POST MILES TOTAL PROJECT	SHEET No.	TOTAL SHEETS
07	LA,Ven	101	29.3/38.2, 0.0/1.2	12	265

REGISTERED CIVIL ENGINEER 12-18-15 DATE

4-25-16
PLANS APPROVAL DATE

REGISTERED PROFESSIONAL ENGINEER
ARTURO LAO
No. 56687
Exp. 6-30-17
CIVIL
STATE OF CALIFORNIA

THE STATE OF CALIFORNIA OR ITS OFFICERS OR AGENTS SHALL NOT BE RESPONSIBLE FOR THE ACCURACY OR COMPLETENESS OF SCANNED COPIES OF THIS PLAN SHEET.

NOTE:

FOR ACCURATE RIGHT OF WAY DATA, CONTACT RIGHT OF WAY ENGINEERING AT THE DISTRICT OFFICE.

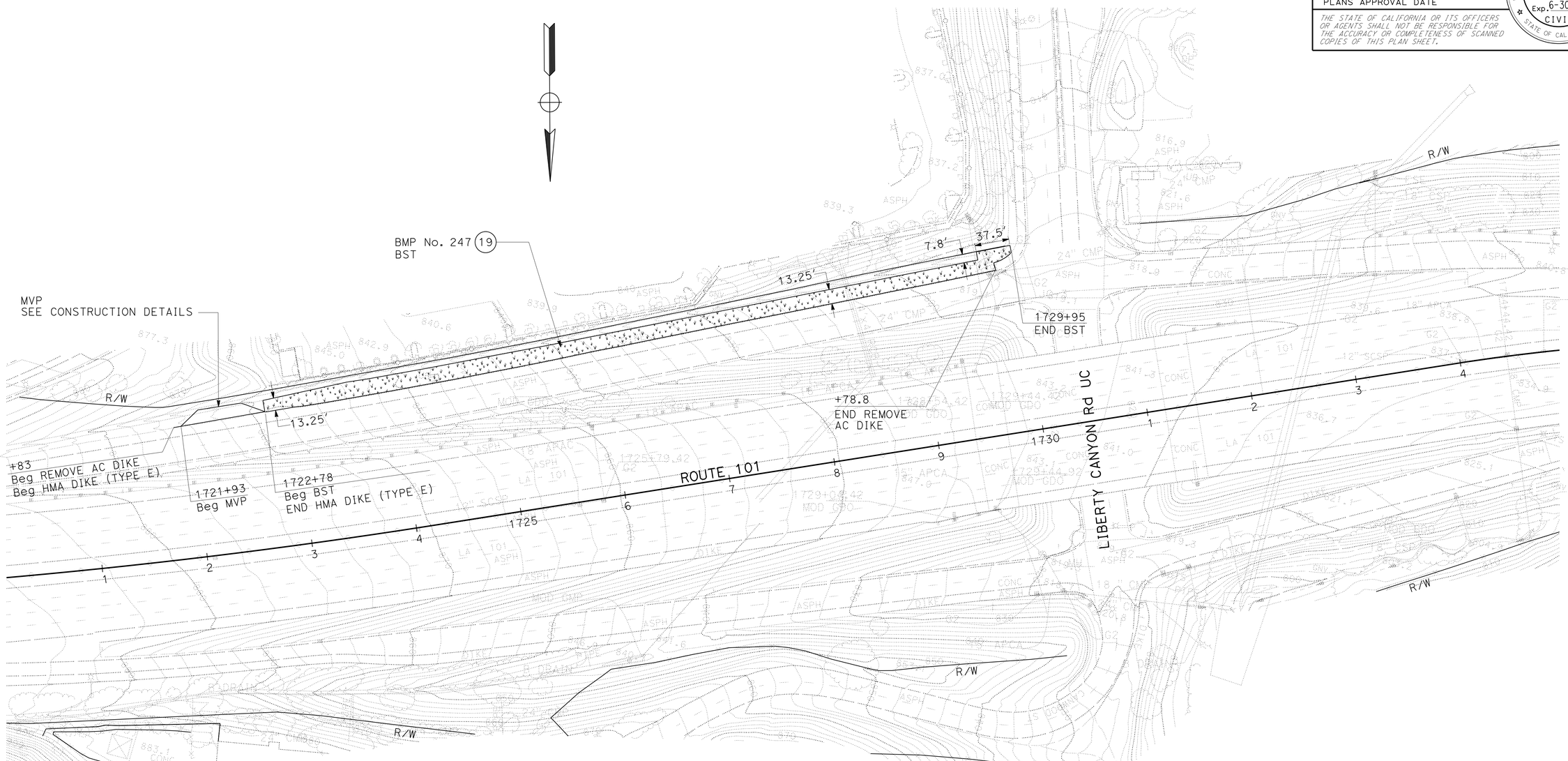

LAYOUT
SCALE: 1" = 50'

L-9

STATE OF CALIFORNIA - DEPARTMENT OF TRANSPORTATION
Caltrans
DESIGN

FUNCTIONAL SUPERVISOR: REFUGIO DOMINGUEZ
CALCULATED-DESIGNED BY: RICHARD DOUGHERTY
CHECKED BY: ARTURO LAO
REVISED BY
DATE REVISED

LAST REVISION 00-00-00
DATE PLOTTED => 01-AUG-2016
TIME PLOTTED => 13:54

Dist	COUNTY	ROUTE	POST MILES TOTAL PROJECT	SHEET No.	TOTAL SHEETS
07	LA,Ven	101	29.3/38.2, 0.0/1.2	13	265

REGISTERED CIVIL ENGINEER 12-18-15 DATE

4-25-16
PLANS APPROVAL DATE

REGISTERED PROFESSIONAL ENGINEER ARTURO LAO No. 56687 Exp. 6-30-17 CIVIL STATE OF CALIFORNIA

THE STATE OF CALIFORNIA OR ITS OFFICERS OR AGENTS SHALL NOT BE RESPONSIBLE FOR THE ACCURACY OR COMPLETENESS OF SCANNED COPIES OF THIS PLAN SHEET.

NOTE:

FOR ACCURATE RIGHT OF WAY DATA, CONTACT RIGHT OF WAY ENGINEERING AT THE DISTRICT OFFICE.

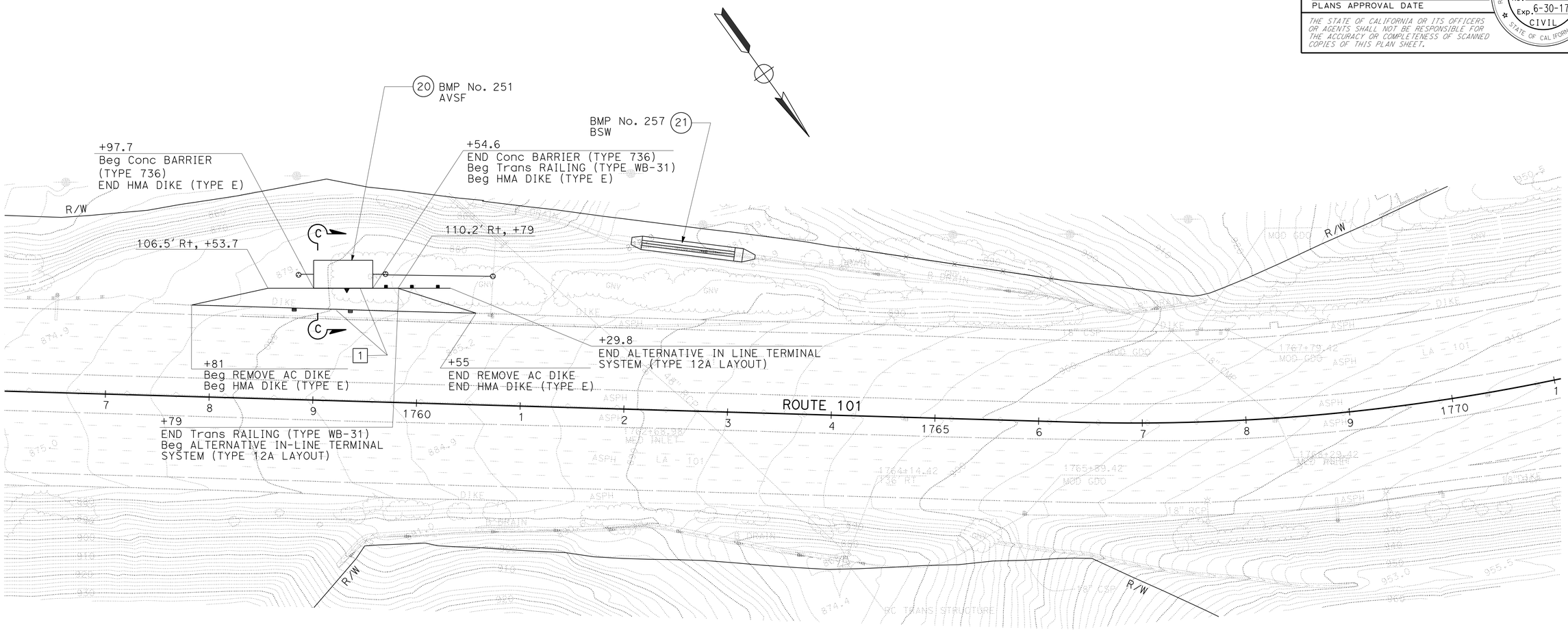

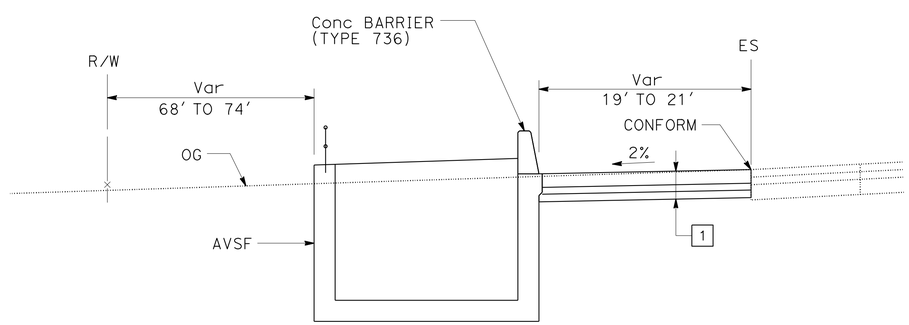

SECTION C-C
NO SCALE

LAYOUT
SCALE: 1" = 50'

L-10

STATE OF CALIFORNIA - DEPARTMENT OF TRANSPORTATION
Caltrans
DESIGN

FUNCTIONAL SUPERVISOR: REFUGIO DOMINGUEZ
CALCULATED-DESIGNED BY: MOHAMMAD MOHSENZADEH
CHECKED BY: ARTURO LAO
REVISED BY
DATE REVISED

LAST REVISION 00-00-00
DATE PLOTTED => 01-AUG-2016
TIME PLOTTED => 13:54

Dist	COUNTY	ROUTE	POST MILES TOTAL PROJECT	SHEET No.	TOTAL SHEETS
07	LA,Ven	101	29.3/38.2, 0.0/1.2	14	265

REGISTERED CIVIL ENGINEER 12-18-15 DATE

4-25-16
PLANS APPROVAL DATE

REGISTERED PROFESSIONAL ENGINEER ARTURO LAO No. 56687 Exp. 6-30-17 CIVIL STATE OF CALIFORNIA

THE STATE OF CALIFORNIA OR ITS OFFICERS OR AGENTS SHALL NOT BE RESPONSIBLE FOR THE ACCURACY OR COMPLETENESS OF SCANNED COPIES OF THIS PLAN SHEET.

NOTE:

FOR ACCURATE RIGHT OF WAY DATA, CONTACT RIGHT OF WAY ENGINEERING AT THE DISTRICT OFFICE.

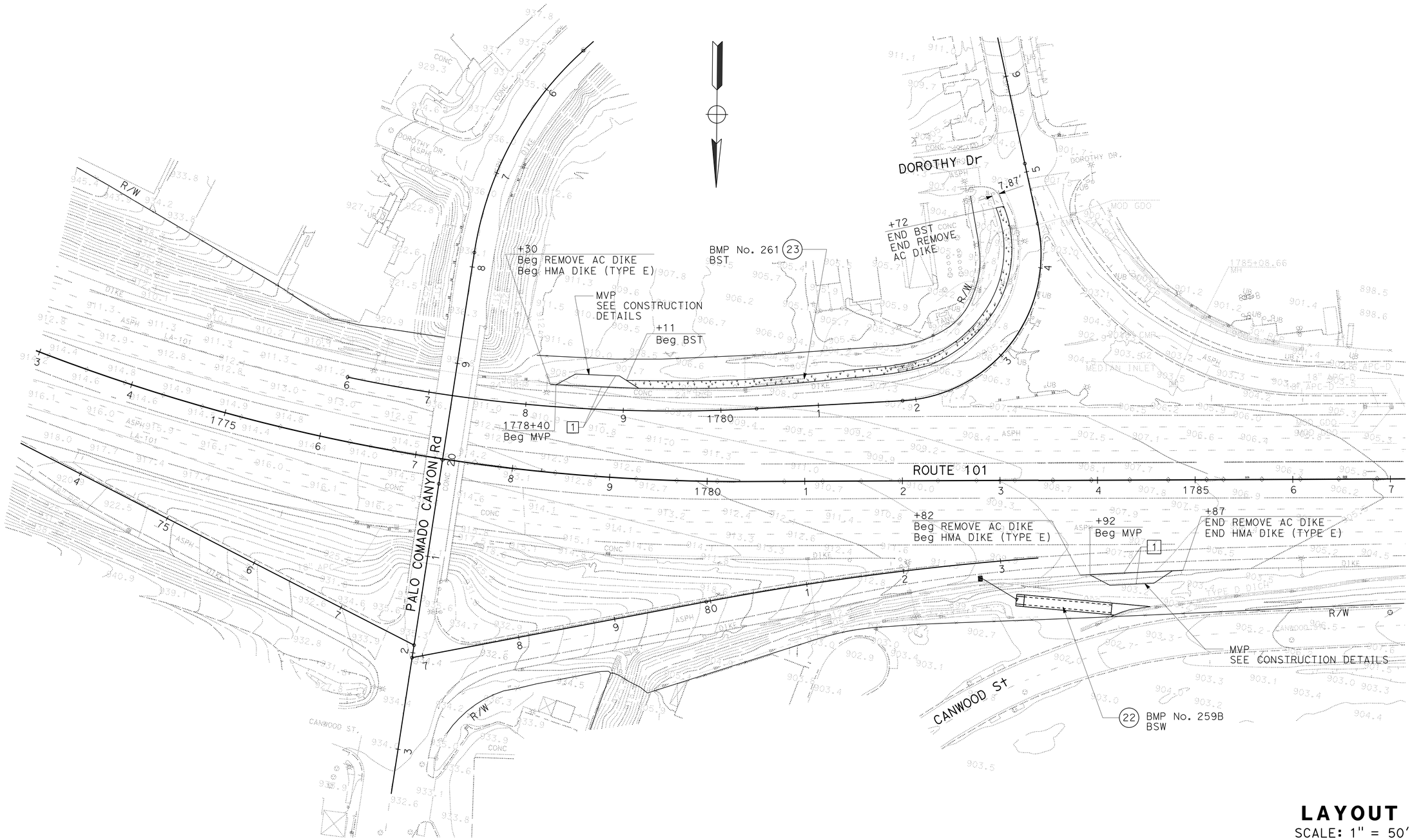

LAYOUT

SCALE: 1" = 50'

L-11

STATE OF CALIFORNIA - DEPARTMENT OF TRANSPORTATION

Caltrans

DESIGN

FUNCTIONAL SUPERVISOR: REFUGIO DOMINGUEZ

CALCULATED-DESIGNED BY: RICHARD DOUGHERTY

CHECKED BY: ARTURO LAO

REVISED BY

DATE REVISED

LAST REVISION 00-00-00

DATE PLOTTED => 01-AUG-2016

TIME PLOTTED => 13:54

Dist	COUNTY	ROUTE	POST MILES TOTAL PROJECT	SHEET No.	TOTAL SHEETS
07	LA,Ven	101	29.3/38.2, 0.0/1.2	15	265

REGISTERED CIVIL ENGINEER 12-18-15 DATE

4-25-16
PLANS APPROVAL DATE

REGISTERED PROFESSIONAL ENGINEER ARTURO LAO No. 56687 Exp. 6-30-17 CIVIL STATE OF CALIFORNIA

THE STATE OF CALIFORNIA OR ITS OFFICERS OR AGENTS SHALL NOT BE RESPONSIBLE FOR THE ACCURACY OR COMPLETENESS OF SCANNED COPIES OF THIS PLAN SHEET.

NOTE:

FOR ACCURATE RIGHT OF WAY DATA, CONTACT RIGHT OF WAY ENGINEERING AT THE DISTRICT OFFICE.

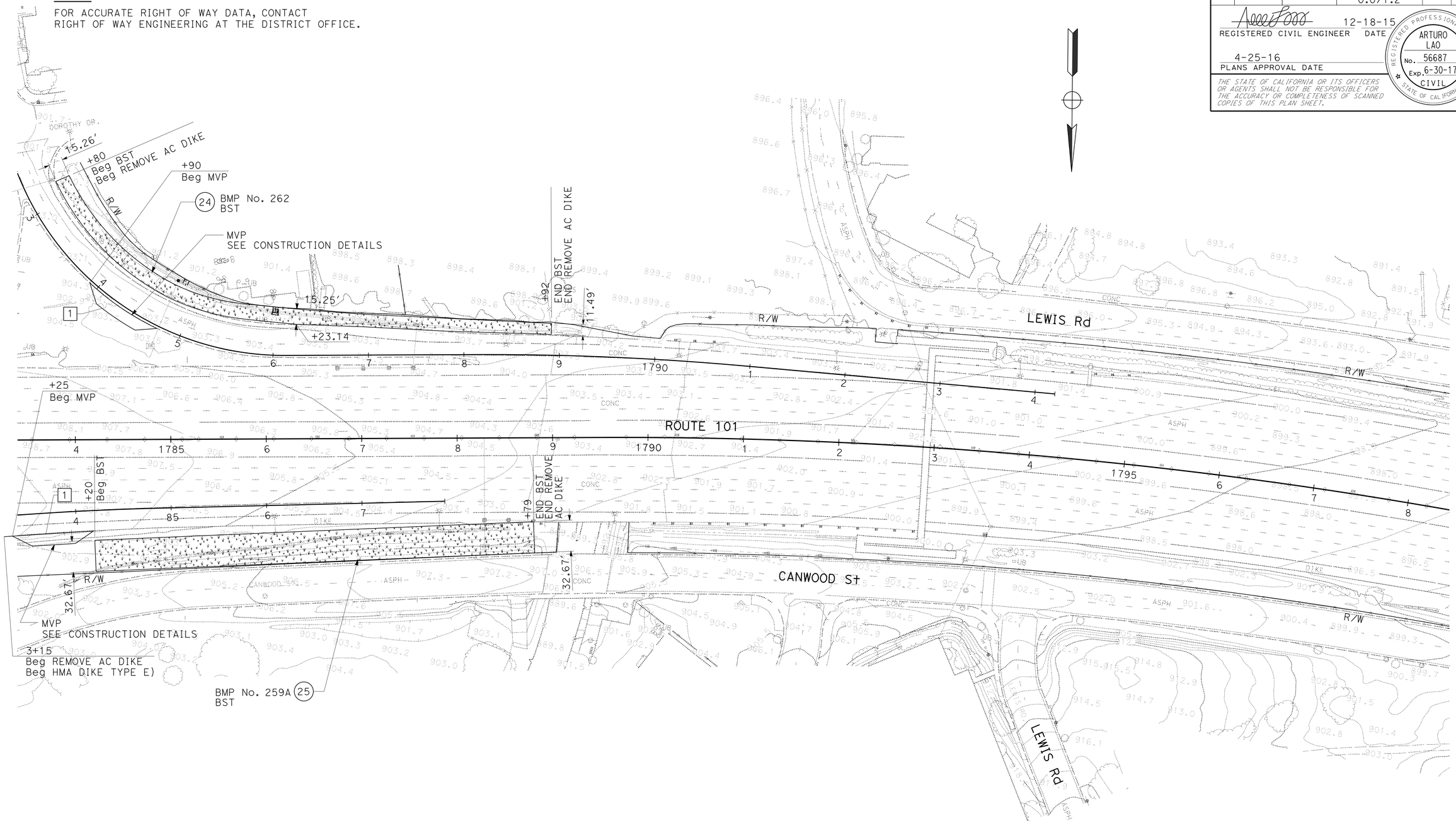

LAYOUT

SCALE: 1" = 50'

L-12

STATE OF CALIFORNIA - DEPARTMENT OF TRANSPORTATION

DESIGN

FUNCTIONAL SUPERVISOR: REFUGIO DOMINGUEZ

RICHARD DOUGHERTY | ARTURO LAO

CALCULATED-DESIGNED BY | CHECKED BY | REVISED BY | DATE REVISED

LAST REVISION 00-00-00 | DATE PLOTTED => 01-AUG-2016 | TIME PLOTTED => 13:54

Dist	COUNTY	ROUTE	POST MILES TOTAL PROJECT	SHEET No.	TOTAL SHEETS
07	LA,Ven	101	29.3/38.2, 0.0/1.2	16	265

REGISTERED CIVIL ENGINEER 12-18-15 DATE

4-25-16
PLANS APPROVAL DATE

REGISTERED PROFESSIONAL ENGINEER ARTURO LAO No. 56687 Exp. 6-30-17 CIVIL STATE OF CALIFORNIA

THE STATE OF CALIFORNIA OR ITS OFFICERS OR AGENTS SHALL NOT BE RESPONSIBLE FOR THE ACCURACY OR COMPLETENESS OF SCANNED COPIES OF THIS PLAN SHEET.

NOTE:

FOR ACCURATE RIGHT OF WAY DATA, CONTACT RIGHT OF WAY ENGINEERING AT THE DISTRICT OFFICE.

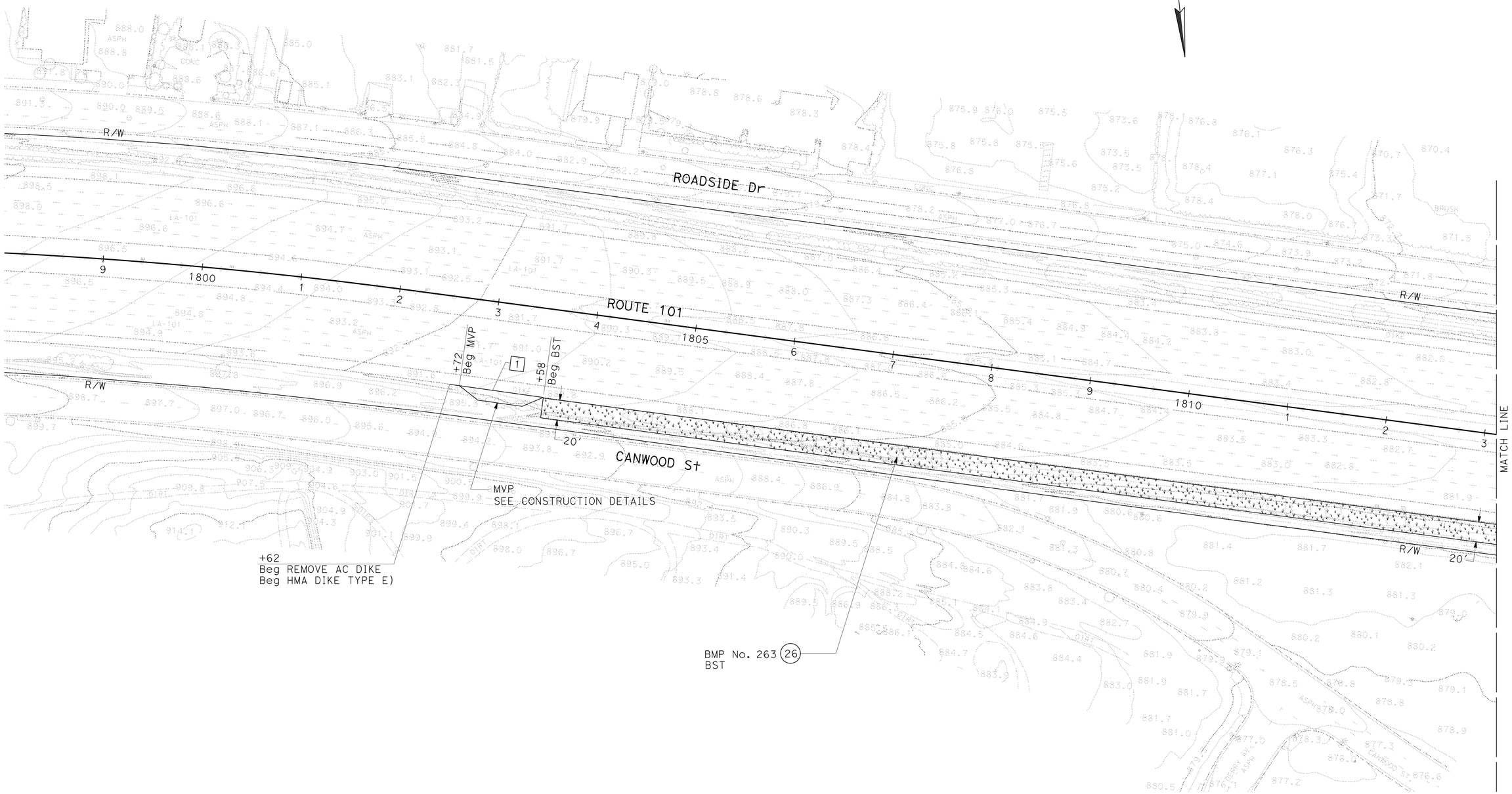

LAYOUT

SCALE: 1" = 50'

L-13

STATE OF CALIFORNIA - DEPARTMENT OF TRANSPORTATION

Caltrans® DESIGN

FUNCTIONAL SUPERVISOR: REFUGIO DOMINGUEZ

CALCULATED-DESIGNED BY: RICHARD DOUGHERTY

CHECKED BY: ARTURO LAO

REVISED BY

DATE REVISED

LAST REVISION 00-00-00

DATE PLOTTED => 01-AUG-2016

TIME PLOTTED => 13:54

Dist	COUNTY	ROUTE	POST MILES TOTAL PROJECT	SHEET No.	TOTAL SHEETS
07	LA,Ven	101	29.3/38.2, 0.0/1.2	17	265

REGISTERED CIVIL ENGINEER 12-18-15 DATE

4-25-16
PLANS APPROVAL DATE

REGISTERED PROFESSIONAL ENGINEER
ARTURO LAO
No. 56687
Exp. 6-30-17
CIVIL
STATE OF CALIFORNIA

THE STATE OF CALIFORNIA OR ITS OFFICERS OR AGENTS SHALL NOT BE RESPONSIBLE FOR THE ACCURACY OR COMPLETENESS OF SCANNED COPIES OF THIS PLAN SHEET.

NOTE:

FOR ACCURATE RIGHT OF WAY DATA, CONTACT
RIGHT OF WAY ENGINEERING AT THE DISTRICT OFFICE.

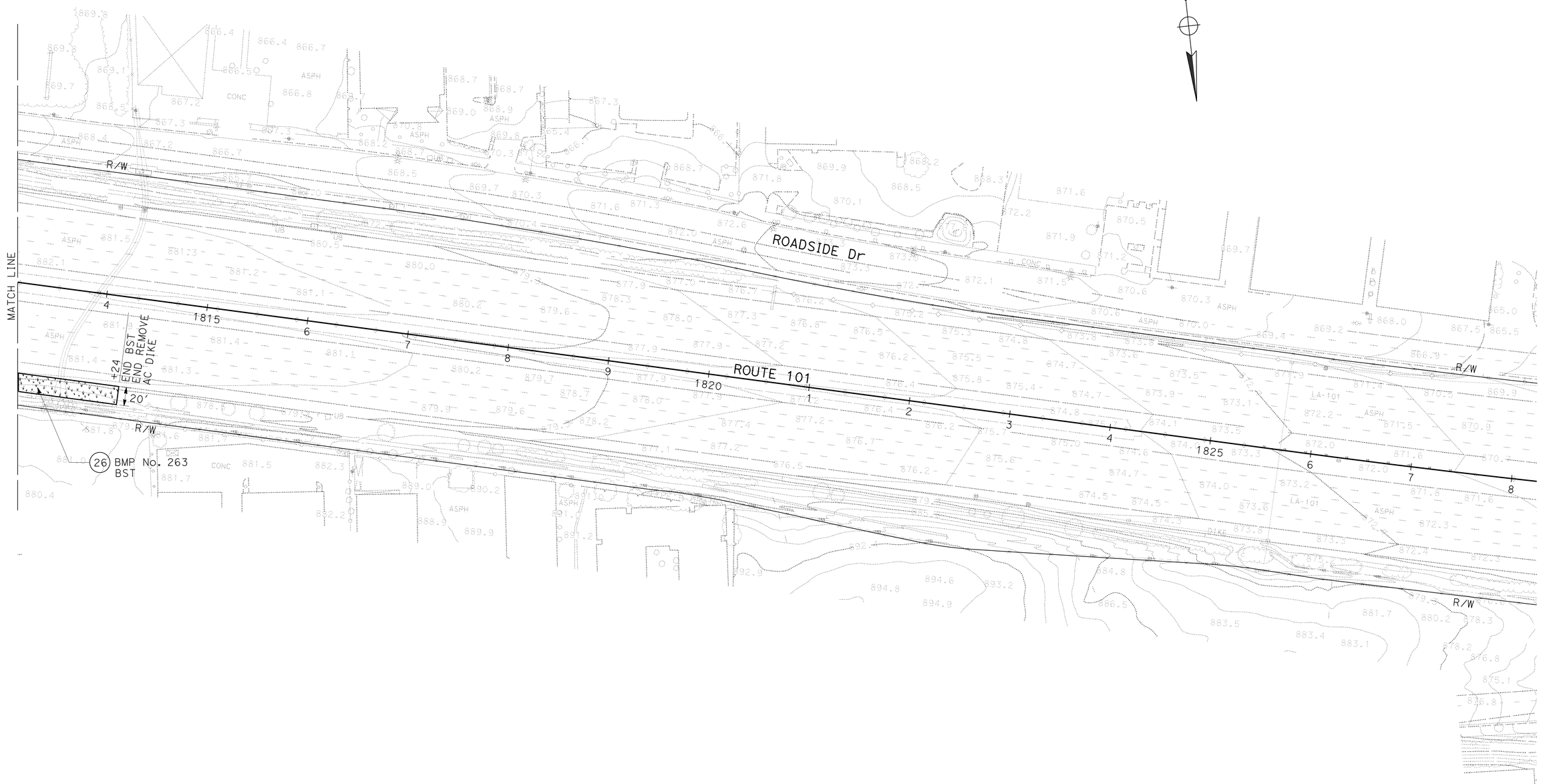

LAYOUT

SCALE: 1" = 50'

L-14

REVISED BY	DATE REVISED
RICHARD DOUGHERTY	ARTURO LAO

CALCULATED-DESIGNED BY
CHECKED BY

FUNCTIONAL SUPERVISOR
REFUGIO DOMINGUEZ

STATE OF CALIFORNIA - DEPARTMENT OF TRANSPORTATION
Caltrans
DESIGN

LAST REVISION 00-00-00
DATE PLOTTED => 01-AUG-2016
TIME PLOTTED => 13:54

Dist	COUNTY	ROUTE	POST MILES TOTAL PROJECT	SHEET No.	TOTAL SHEETS
07	LA,Ven	101	29.3/38.2, 0.0/1.2	18	265

REGISTERED CIVIL ENGINEER 12-18-15 DATE

4-25-16
PLANS APPROVAL DATE

REGISTERED PROFESSIONAL ENGINEER ARTURO LAO No. 56687 Exp. 6-30-17 CIVIL STATE OF CALIFORNIA

THE STATE OF CALIFORNIA OR ITS OFFICERS OR AGENTS SHALL NOT BE RESPONSIBLE FOR THE ACCURACY OR COMPLETENESS OF SCANNED COPIES OF THIS PLAN SHEET.

NOTE:

FOR ACCURATE RIGHT OF WAY DATA, CONTACT RIGHT OF WAY ENGINEERING AT THE DISTRICT OFFICE.

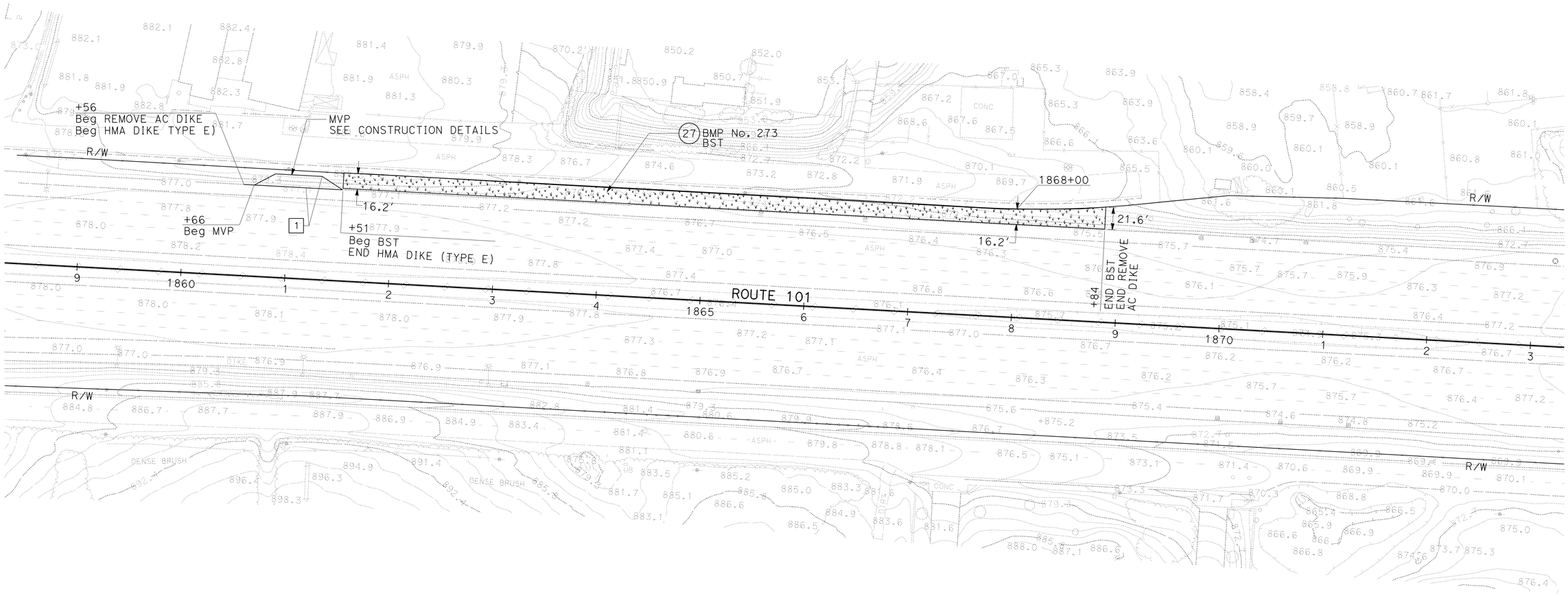

LAYOUT

SCALE: 1" = 50'

L-15

REVISED BY	DATE REVISED

CALCULATED-DESIGNED BY: MOHAMMAD MOHSENZADEH
CHECKED BY: ARTURO LAO
FUNCTIONAL SUPERVISOR: REFUGIO DOMINGUEZ

STATE OF CALIFORNIA - DEPARTMENT OF TRANSPORTATION
Caltrans
DESIGN

LAST REVISION 00-00-00
DATE PLOTTED => 01-AUG-2016
TIME PLOTTED => 13:54

Dist	COUNTY	ROUTE	POST MILES TOTAL PROJECT	SHEET No.	TOTAL SHEETS
07	LA,Ven	101	29.3/38.2, 0.0/1.2	19	265

REGISTERED CIVIL ENGINEER 12-18-15 DATE

4-25-16
PLANS APPROVAL DATE

REGISTERED PROFESSIONAL ENGINEER ARTURO LAO No. 56687 Exp. 6-30-17 CIVIL STATE OF CALIFORNIA

THE STATE OF CALIFORNIA OR ITS OFFICERS OR AGENTS SHALL NOT BE RESPONSIBLE FOR THE ACCURACY OR COMPLETENESS OF SCANNED COPIES OF THIS PLAN SHEET.

NOTE:

FOR ACCURATE RIGHT OF WAY DATA, CONTACT RIGHT OF WAY ENGINEERING AT THE DISTRICT OFFICE.

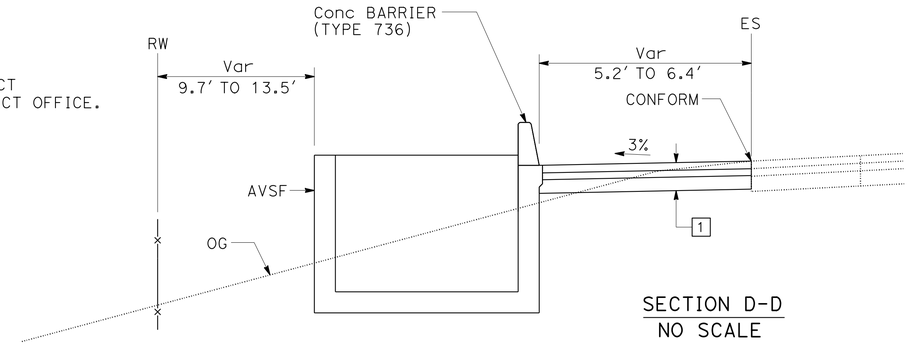

SECTION D-D
NO SCALE

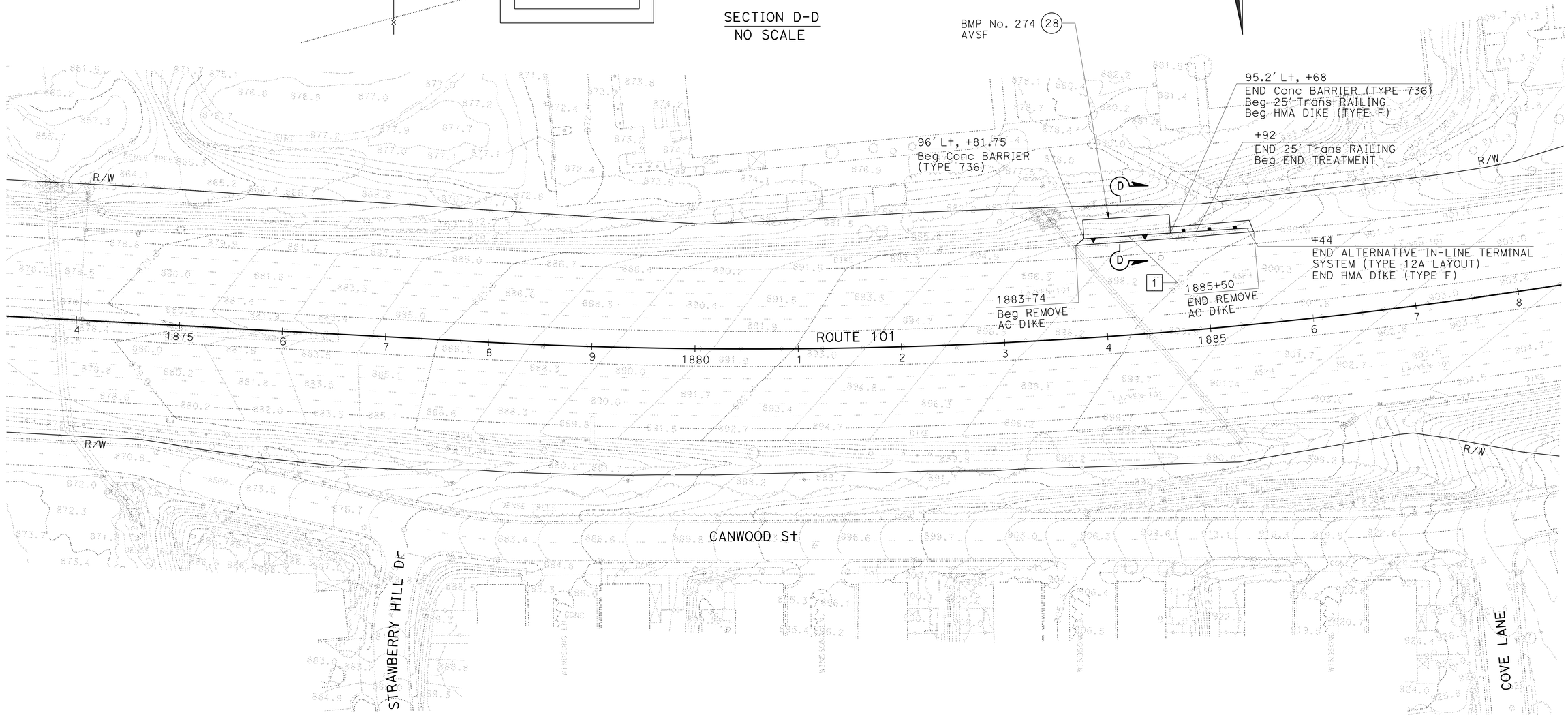

LAYOUT
SCALE: 1" = 50'

L-16

STATE OF CALIFORNIA - DEPARTMENT OF TRANSPORTATION
Caltrans
DESIGN

FUNCTIONAL SUPERVISOR: REFUGIO DOMINGUEZ
CALCULATED-DESIGNED BY: MOHAMMAD MOHSENZADEH
CHECKED BY: ARTURO LAO
REVISED BY
DATE REVISED

LAST REVISION 00-00-00
DATE PLOTTED => 01-AUG-2016
TIME PLOTTED => 13:54

Dist	COUNTY	ROUTE	POST MILES TOTAL PROJECT	SHEET No.	TOTAL SHEETS
07	LA,Ven	101	29.3/38.2, 0.0/1.2	20	265

REGISTERED CIVIL ENGINEER 12-18-15 DATE

4-25-16
PLANS APPROVAL DATE

REGISTERED PROFESSIONAL ENGINEER ARTURO LAO No. 56687 Exp. 6-30-17 CIVIL STATE OF CALIFORNIA

THE STATE OF CALIFORNIA OR ITS OFFICERS OR AGENTS SHALL NOT BE RESPONSIBLE FOR THE ACCURACY OR COMPLETENESS OF SCANNED COPIES OF THIS PLAN SHEET.

NOTE:

FOR ACCURATE RIGHT OF WAY DATA, CONTACT RIGHT OF WAY ENGINEERING AT THE DISTRICT OFFICE.

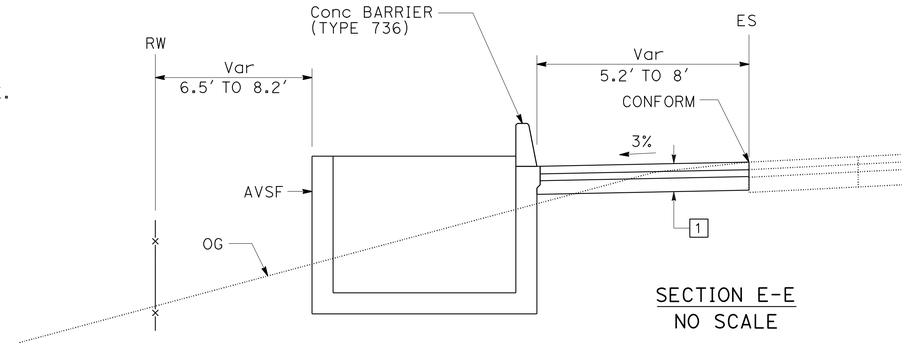

SECTION E-E
NO SCALE

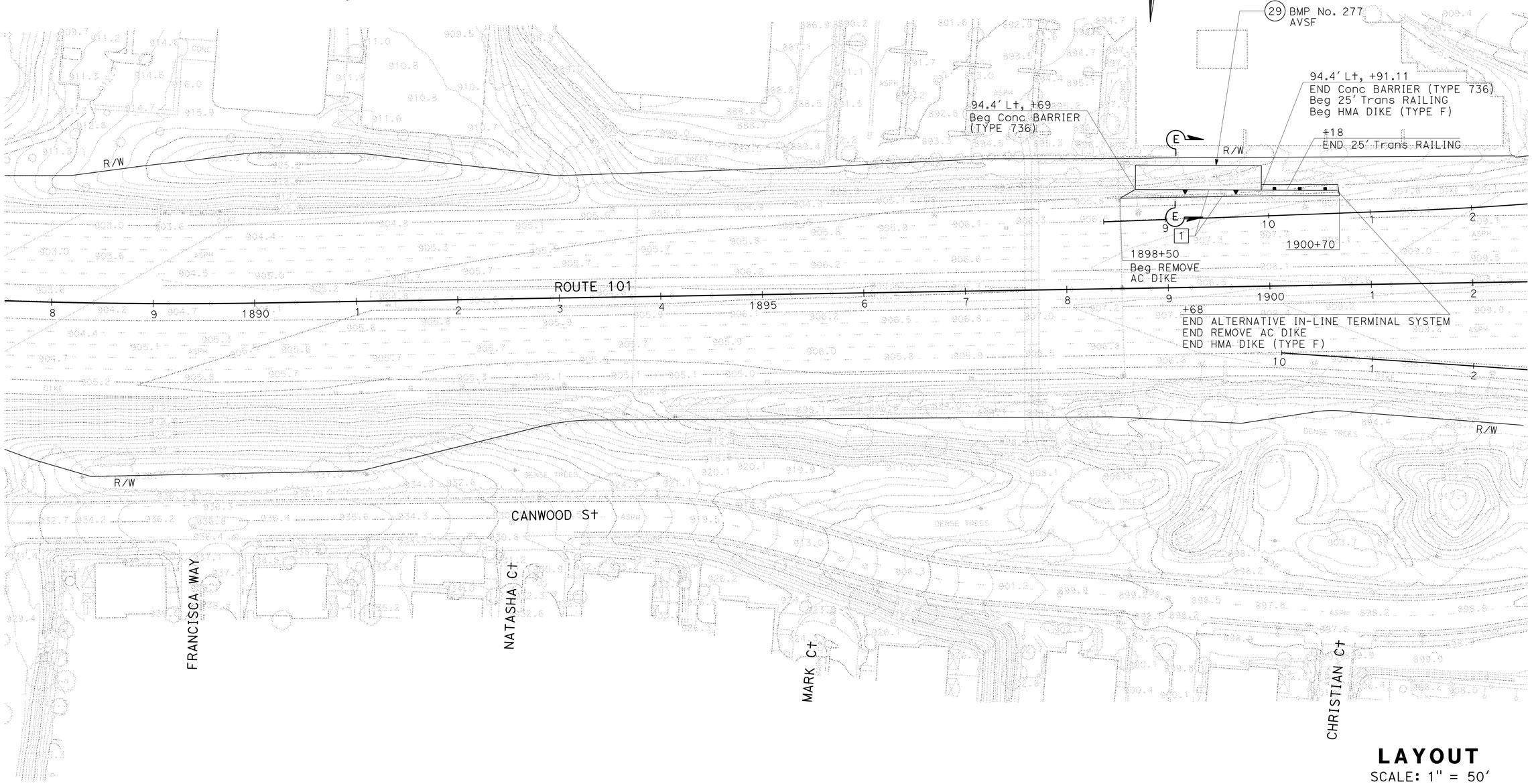

LAYOUT
SCALE: 1" = 50'

L-17

STATE OF CALIFORNIA - DEPARTMENT OF TRANSPORTATION
Caltrans
DESIGN

FUNCTIONAL SUPERVISOR: REFUGIO DOMINGUEZ
CALCULATED-DESIGNED BY: ARTURO LAO
CHECKED BY
REVISED BY: REFUGIO DOMINGUEZ
DATE REVISED

LAST REVISION 00-00-00
DATE PLOTTED => 01-AUG-2016
TIME PLOTTED => 13:54

Dist	COUNTY	ROUTE	POST MILES TOTAL PROJECT	SHEET No.	TOTAL SHEETS
07	LA,Ven	101	29.3/38.2, 0.0/1.2	21	265

REGISTERED CIVIL ENGINEER 12-18-15 DATE

4-25-16
PLANS APPROVAL DATE

REGISTERED PROFESSIONAL ENGINEER ARTURO LAO No. 56687 Exp. 6-30-17 CIVIL STATE OF CALIFORNIA

THE STATE OF CALIFORNIA OR ITS OFFICERS OR AGENTS SHALL NOT BE RESPONSIBLE FOR THE ACCURACY OR COMPLETENESS OF SCANNED COPIES OF THIS PLAN SHEET.

NOTE:

FOR ACCURATE RIGHT OF WAY DATA, CONTACT RIGHT OF WAY ENGINEERING AT THE DISTRICT OFFICE.

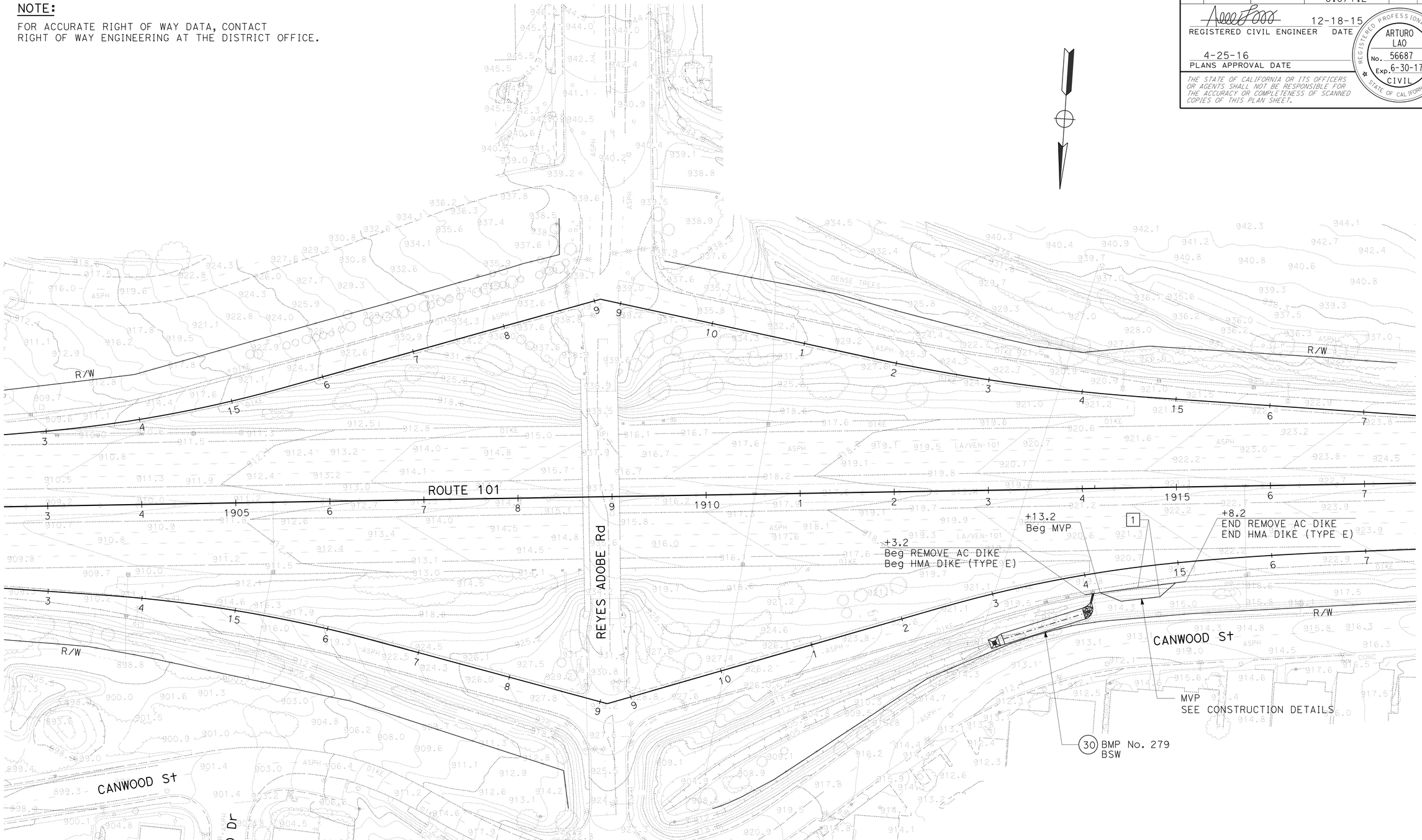

LAYOUT

SCALE: 1" = 50'

L-18

STATE OF CALIFORNIA - DEPARTMENT OF TRANSPORTATION

Caltrans

DESIGN

FUNCTIONAL SUPERVISOR: REFUGIO DOMINGUEZ

CALCULATED-DESIGNED BY: MOHAMMAD MOHSENZADEH

CHECKED BY: ARTURO LAO

REVISED BY

DATE REVISED

LAST REVISION 00-00-00

DATE PLOTTED => 01-AUG-2016

TIME PLOTTED => 13:54

Dist	COUNTY	ROUTE	POST MILES TOTAL PROJECT	SHEET No.	TOTAL SHEETS
07	LA,Ven	101	29.3/38.2, 0.0/1.2	22	265

REGISTERED CIVIL ENGINEER 12-18-15 DATE

4-25-16
PLANS APPROVAL DATE

REGISTERED PROFESSIONAL ENGINEER ARTURO LAO No. 56687 Exp. 6-30-17 CIVIL STATE OF CALIFORNIA

THE STATE OF CALIFORNIA OR ITS OFFICERS OR AGENTS SHALL NOT BE RESPONSIBLE FOR THE ACCURACY OR COMPLETENESS OF SCANNED COPIES OF THIS PLAN SHEET.

NOTE:

FOR ACCURATE RIGHT OF WAY DATA, CONTACT
RIGHT OF WAY ENGINEERING AT THE DISTRICT OFFICE.

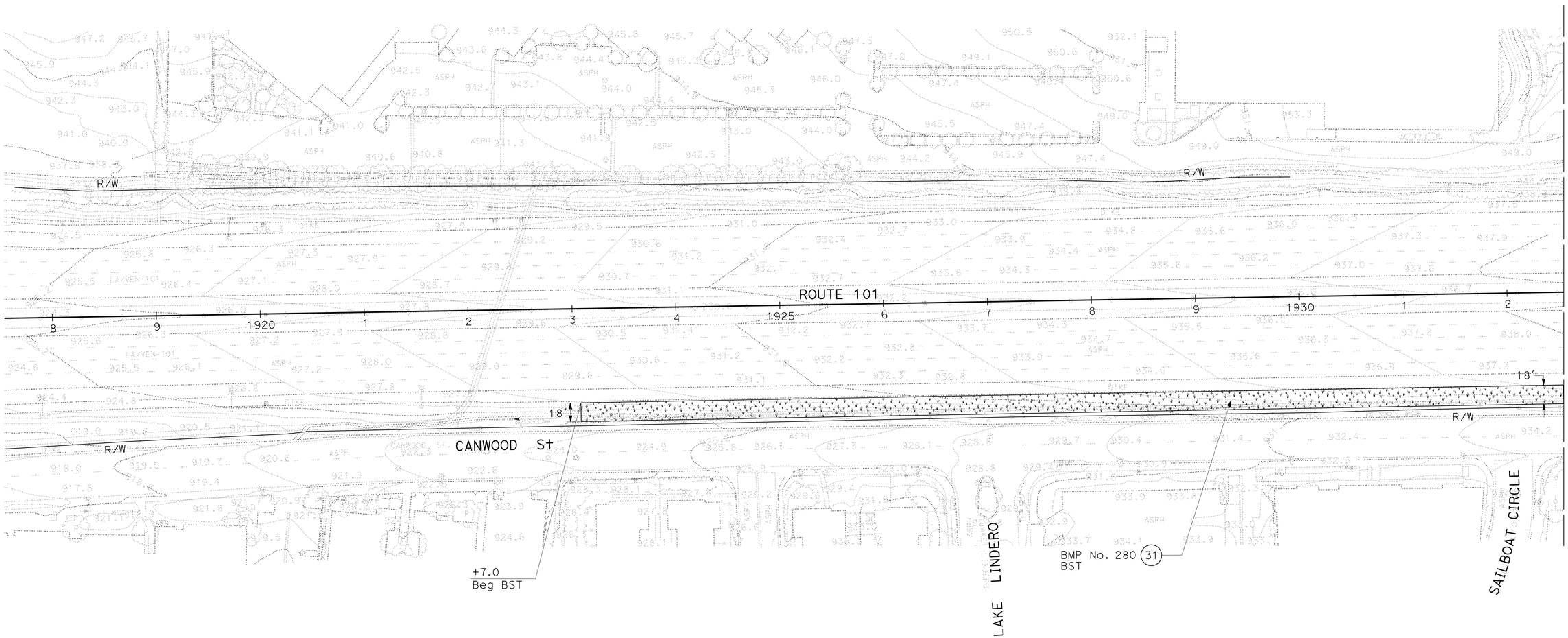

LAYOUT
SCALE: 1" = 50'

L-19

STATE OF CALIFORNIA - DEPARTMENT OF TRANSPORTATION
Caltrans
DESIGN

FUNCTIONAL SUPERVISOR: REFUGIO DOMINGUEZ
CALCULATED-DESIGNED BY: MOHAMMAD MOHSENZADEH
CHECKED BY: ARTURO LAO
REVISED BY
DATE REVISED

LAST REVISION 00-00-00
DATE PLOTTED => 01-AUG-2016
TIME PLOTTED => 13:54

Dist	COUNTY	ROUTE	POST MILES TOTAL PROJECT	SHEET No.	TOTAL SHEETS
07	LA,Ven	101	29.3/38.2, 0.0/1.2	23	265

REGISTERED CIVIL ENGINEER 12-18-15 DATE

4-25-16
PLANS APPROVAL DATE

REGISTERED PROFESSIONAL ENGINEER ARTURO LAO No. 56687 Exp. 6-30-17 CIVIL STATE OF CALIFORNIA

THE STATE OF CALIFORNIA OR ITS OFFICERS OR AGENTS SHALL NOT BE RESPONSIBLE FOR THE ACCURACY OR COMPLETENESS OF SCANNED COPIES OF THIS PLAN SHEET.

NOTE:

FOR ACCURATE RIGHT OF WAY DATA, CONTACT RIGHT OF WAY ENGINEERING AT THE DISTRICT OFFICE.

LAYOUT

SCALE: 1" = 50'

L-20

STATE OF CALIFORNIA - DEPARTMENT OF TRANSPORTATION

Caltrans

DESIGN

FUNCTIONAL SUPERVISOR: REFUGIO DOMINGUEZ

CALCULATED-DESIGNED BY: ARTURO LAO

CHECKED BY: REFUGIO DOMINGUEZ

REVISED BY

DATE REVISED

LAST REVISION 00-00-00

DATE PLOTTED => 01-AUG-2016

TIME PLOTTED => 13:54

Dist	COUNTY	ROUTE	POST MILES TOTAL PROJECT	SHEET No.	TOTAL SHEETS
07	LA,Ven	101	29.3/38.2, 0.0/1.2	24	265

REGISTERED CIVIL ENGINEER 12-18-15 DATE

4-25-16
PLANS APPROVAL DATE

REGISTERED PROFESSIONAL ENGINEER ARTURO LAO No. 56687 Exp. 6-30-17 CIVIL STATE OF CALIFORNIA

THE STATE OF CALIFORNIA OR ITS OFFICERS OR AGENTS SHALL NOT BE RESPONSIBLE FOR THE ACCURACY OR COMPLETENESS OF SCANNED COPIES OF THIS PLAN SHEET.

NOTE:

FOR ACCURATE RIGHT OF WAY DATA, CONTACT RIGHT OF WAY ENGINEERING AT THE DISTRICT OFFICE.

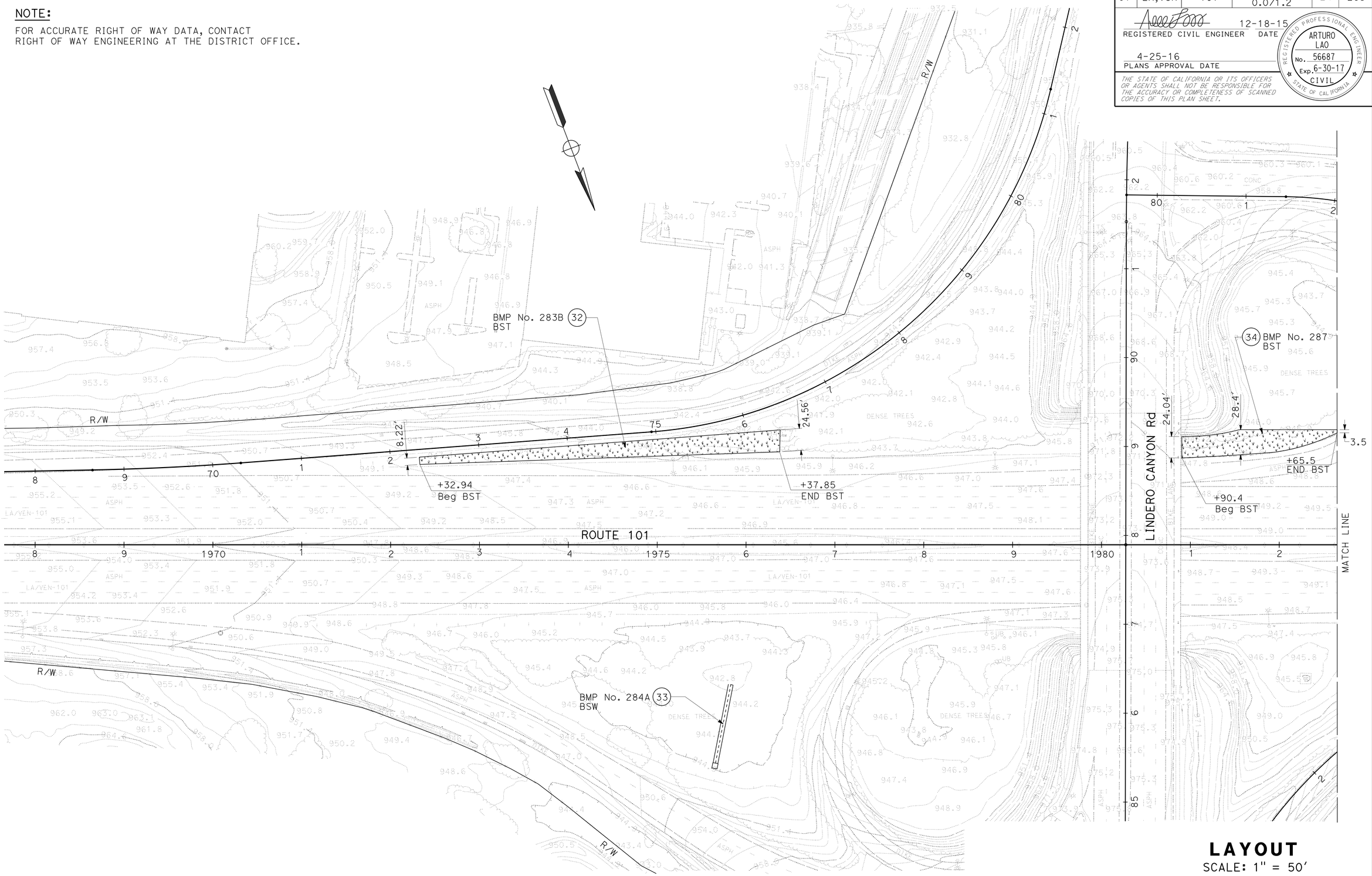

LAYOUT

SCALE: 1" = 50'

L-21

REVISED BY	DATE REVISED

CALCULATED-DESIGNED BY	CHECKED BY
RICHARD DOUGHERTY	ARTURO LAO

FUNCTIONAL SUPERVISOR: REFUGIO DOMINGUEZ

STATE OF CALIFORNIA - DEPARTMENT OF TRANSPORTATION

Caltrans

DESIGN

LAST REVISION 00-00-00 | DATE PLOTTED => 01-AUG-2016 | TIME PLOTTED => 13:54

Dist	COUNTY	ROUTE	POST MILES TOTAL PROJECT	SHEET No.	TOTAL SHEETS
07	LA,Ven	101	29.3/38.2, 0.0/1.2	25	265

REGISTERED CIVIL ENGINEER 12-18-15 DATE

4-25-16
PLANS APPROVAL DATE

REGISTERED PROFESSIONAL ENGINEER ARTURO LAO No. 56687 Exp. 6-30-17 CIVIL STATE OF CALIFORNIA

THE STATE OF CALIFORNIA OR ITS OFFICERS OR AGENTS SHALL NOT BE RESPONSIBLE FOR THE ACCURACY OR COMPLETENESS OF SCANNED COPIES OF THIS PLAN SHEET.

NOTE:

FOR ACCURATE RIGHT OF WAY DATA, CONTACT RIGHT OF WAY ENGINEERING AT THE DISTRICT OFFICE.

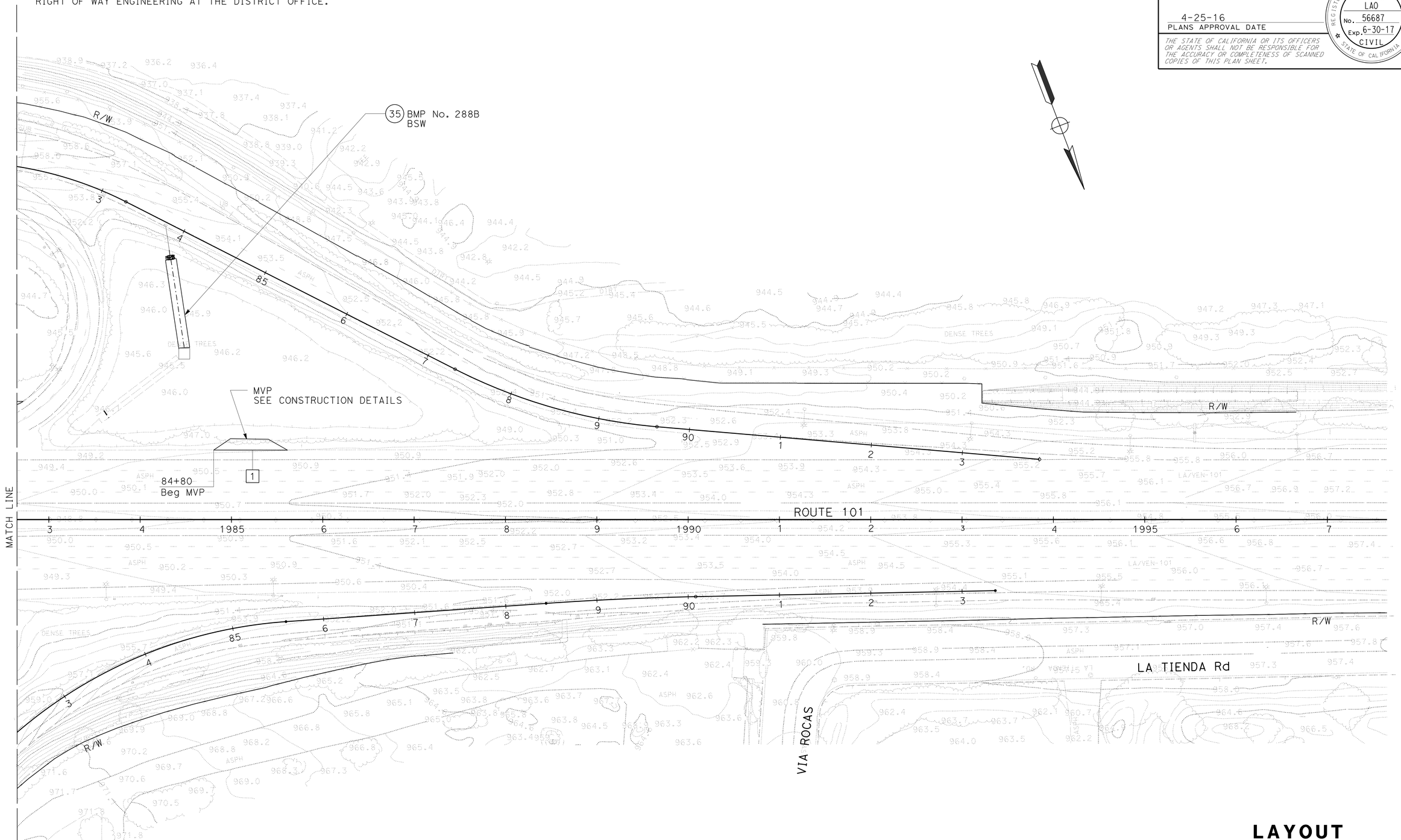

LAYOUT

SCALE: 1" = 50'

L-22

STATE OF CALIFORNIA - DEPARTMENT OF TRANSPORTATION

Caltrans

DESIGN

FUNCTIONAL SUPERVISOR: REFUGIO DOMINGUEZ

CALCULATED-DESIGNED BY: RICHARD DOUGHERTY

CHECKED BY: ARTURO LAO

REVISED BY

DATE REVISED

LAST REVISION 00-00-00

DATE PLOTTED => 01-AUG-2016
TIME PLOTTED => 13:55

Dist	COUNTY	ROUTE	POST MILES TOTAL PROJECT	SHEET No.	TOTAL SHEETS
07	LA,Ven	101	29.3/38.2, 0.0/1.2	26	265

REGISTERED CIVIL ENGINEER 12-18-15 DATE

4-25-16
PLANS APPROVAL DATE

REGISTERED PROFESSIONAL ENGINEER ARTURO LAO No. 56687 Exp. 6-30-17 CIVIL STATE OF CALIFORNIA

THE STATE OF CALIFORNIA OR ITS OFFICERS OR AGENTS SHALL NOT BE RESPONSIBLE FOR THE ACCURACY OR COMPLETENESS OF SCANNED COPIES OF THIS PLAN SHEET.

NOTE:

FOR ACCURATE RIGHT OF WAY DATA, CONTACT RIGHT OF WAY ENGINEERING AT THE DISTRICT OFFICE.

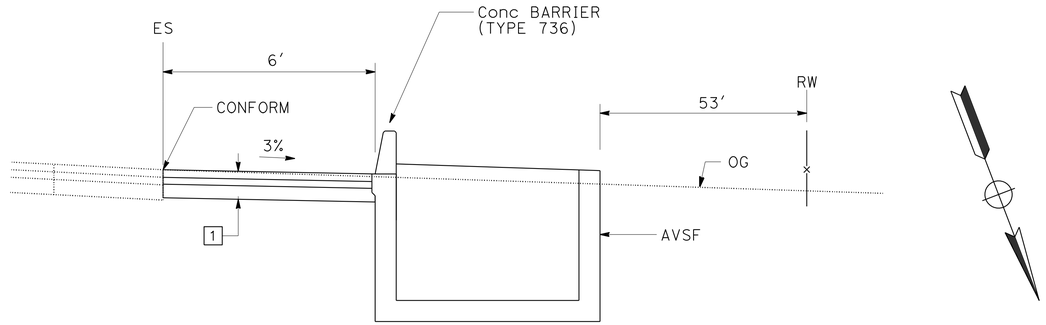

SECTION F-F
NO SCALE

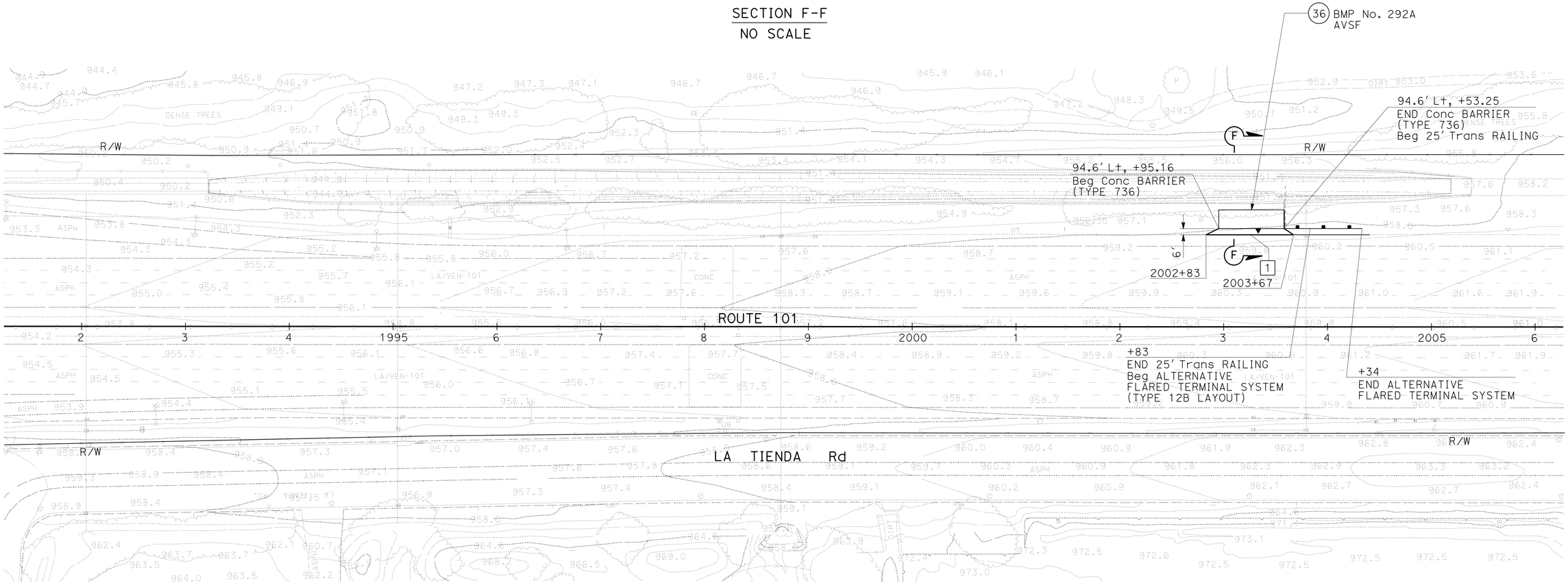

LAYOUT
SCALE: 1" = 50′

L-23

STATE OF CALIFORNIA - DEPARTMENT OF TRANSPORTATION
Caltrans
DESIGN

FUNCTIONAL SUPERVISOR: REFUGIO DOMINGUEZ
CALCULATED-DESIGNED BY: ARTURO LAO
CHECKED BY: RICHARD DOUGHERTY
REVISED BY
DATE REVISED

LAST REVISION 00-00-00
DATE PLOTTED => 01-AUG-2016
TIME PLOTTED => 13:55

Dist	COUNTY	ROUTE	POST MILES TOTAL PROJECT	SHEET No.	TOTAL SHEETS
07	LA,Ven	101	29.3/38.2, 0.0/1.2	27	265

REGISTERED CIVIL ENGINEER 12-18-15 DATE

4-25-16
PLANS APPROVAL DATE

REGISTERED PROFESSIONAL ENGINEER ARTURO LAO No. 56687 Exp. 6-30-17 CIVIL STATE OF CALIFORNIA

THE STATE OF CALIFORNIA OR ITS OFFICERS OR AGENTS SHALL NOT BE RESPONSIBLE FOR THE ACCURACY OR COMPLETENESS OF SCANNED COPIES OF THIS PLAN SHEET.

NOTE:

FOR ACCURATE RIGHT OF WAY DATA, CONTACT
RIGHT OF WAY ENGINEERING AT THE DISTRICT OFFICE.

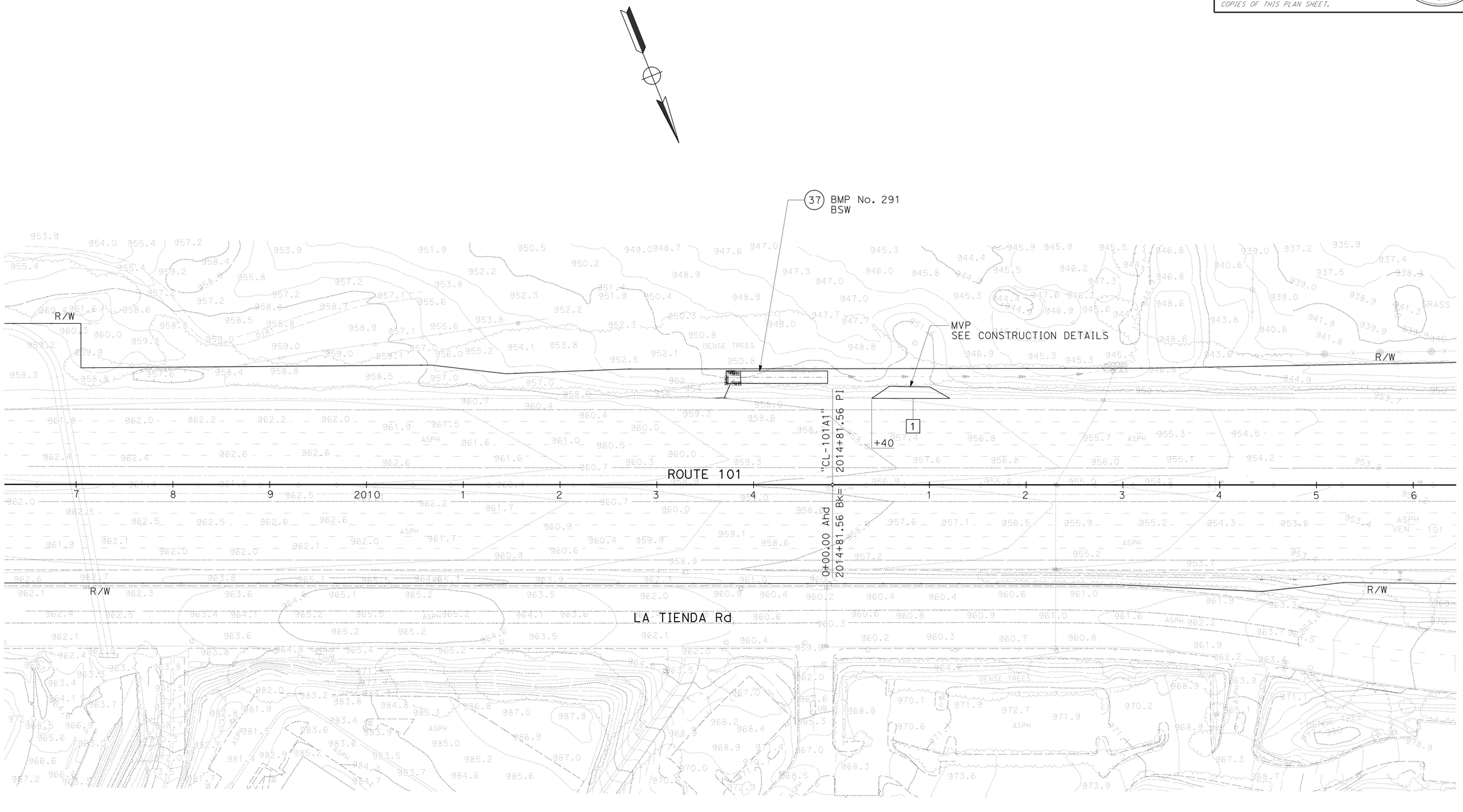

LAYOUT
SCALE: 1" = 50'

L-24

STATE OF CALIFORNIA - DEPARTMENT OF TRANSPORTATION
Caltrans®
DESIGN

FUNCTIONAL SUPERVISOR: REFUGIO DOMINGUEZ
CALCULATED-DESIGNED BY: RICHARD DOUGHERTY
CHECKED BY: ARTURO LAO
REVISED BY
DATE REVISED

LAST REVISION 00-00-00
DATE PLOTTED => 01-AUG-2016
TIME PLOTTED => 13:55

Dist	COUNTY	ROUTE	POST MILES TOTAL PROJECT	SHEET No.	TOTAL SHEETS
07	LA,Ven	101	29.3/38.2, 0.0/1.2	28	265

REGISTERED CIVIL ENGINEER 12-18-15 DATE

4-25-16
PLANS APPROVAL DATE

REGISTERED PROFESSIONAL ENGINEER ARTURO LAO No. 56687 Exp. 6-30-17 CIVIL STATE OF CALIFORNIA

THE STATE OF CALIFORNIA OR ITS OFFICERS OR AGENTS SHALL NOT BE RESPONSIBLE FOR THE ACCURACY OR COMPLETENESS OF SCANNED COPIES OF THIS PLAN SHEET.

NOTE:

FOR ACCURATE RIGHT OF WAY DATA, CONTACT RIGHT OF WAY ENGINEERING AT THE DISTRICT OFFICE.

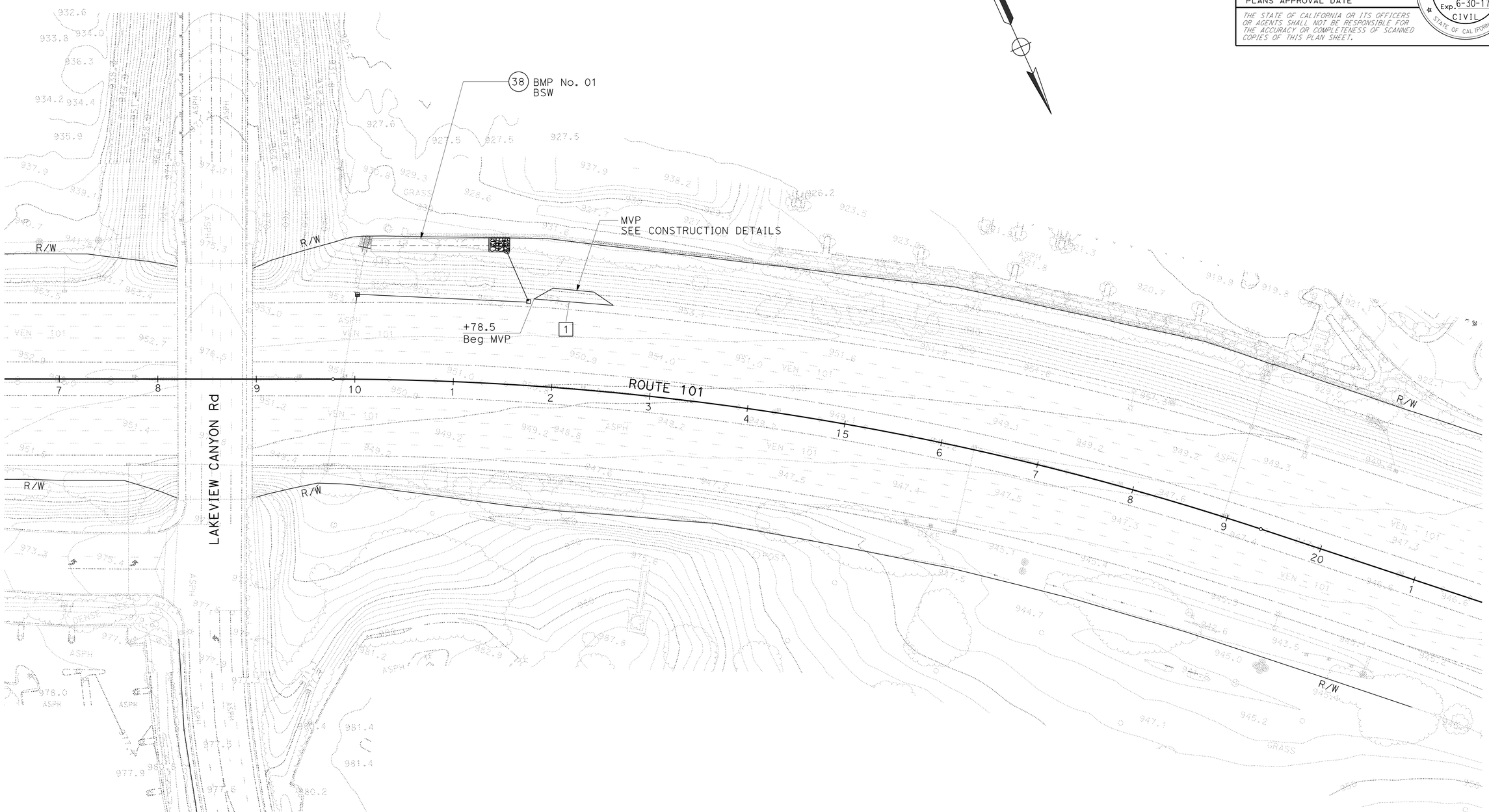

LAYOUT
SCALE: 1" = 50'

L-25

STATE OF CALIFORNIA - DEPARTMENT OF TRANSPORTATION
Caltrans
DESIGN

FUNCTIONAL SUPERVISOR: REFUGIO DOMINGUEZ
CALCULATED-DESIGNED BY: RICHARD DOUGHERTY
CHECKED BY: ARTURO LAO
REVISED BY
DATE REVISED

LAST REVISION 00-00-00
DATE PLOTTED => 01-AUG-2016
TIME PLOTTED => 13:55

Dist	COUNTY	ROUTE	POST MILES TOTAL PROJECT	SHEET No.	TOTAL SHEETS
07	LA,Ven	101	29.3/38.2, 0.0/1.2	29	265

REGISTERED CIVIL ENGINEER 12-18-15 DATE

4-25-16
PLANS APPROVAL DATE

REGISTERED PROFESSIONAL ENGINEER ARTURO LAO No. 56687 Exp. 6-30-17 CIVIL STATE OF CALIFORNIA

THE STATE OF CALIFORNIA OR ITS OFFICERS OR AGENTS SHALL NOT BE RESPONSIBLE FOR THE ACCURACY OR COMPLETENESS OF SCANNED COPIES OF THIS PLAN SHEET.

NOTE:

FOR ACCURATE RIGHT OF WAY DATA, CONTACT RIGHT OF WAY ENGINEERING AT THE DISTRICT OFFICE.

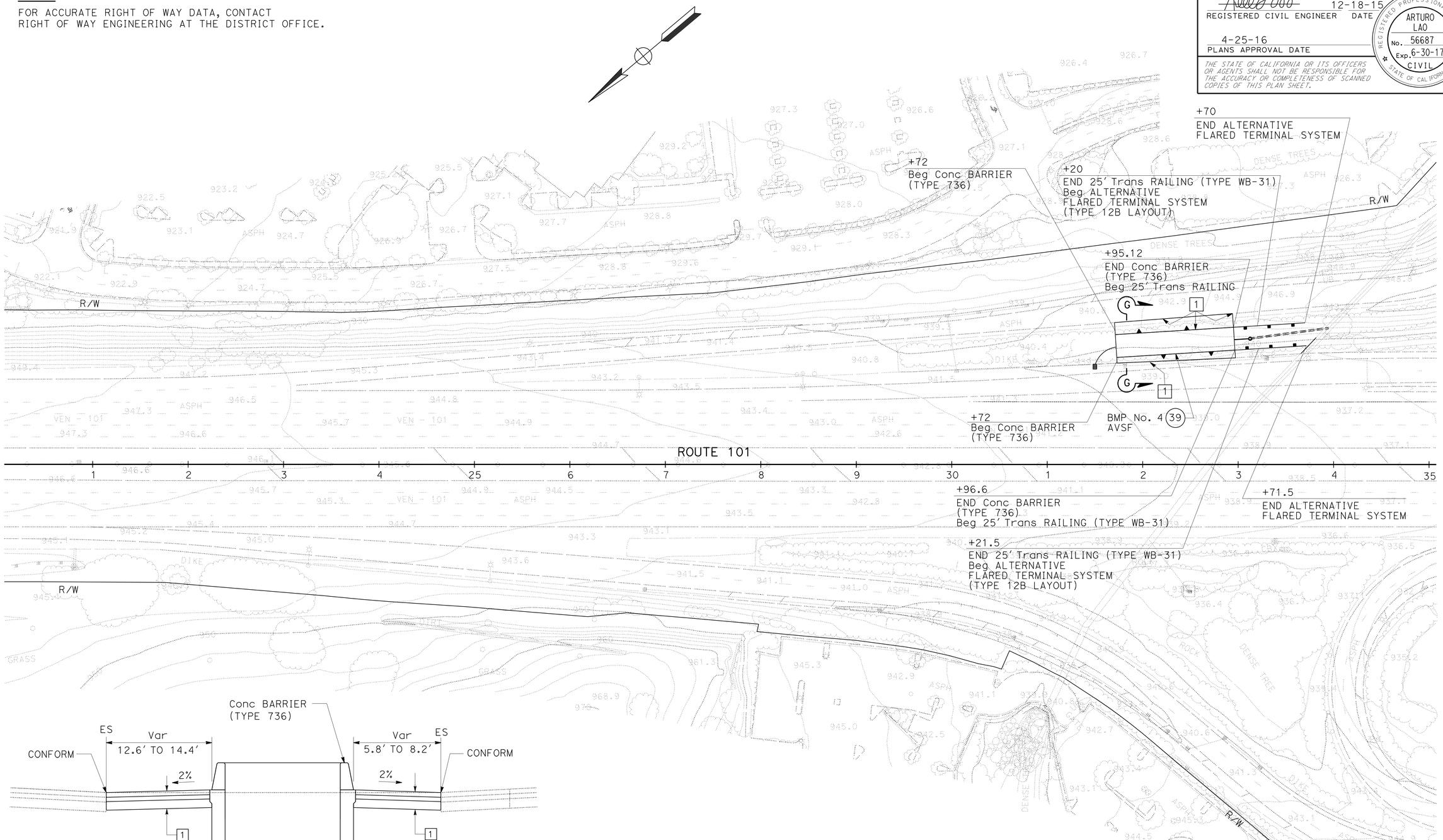

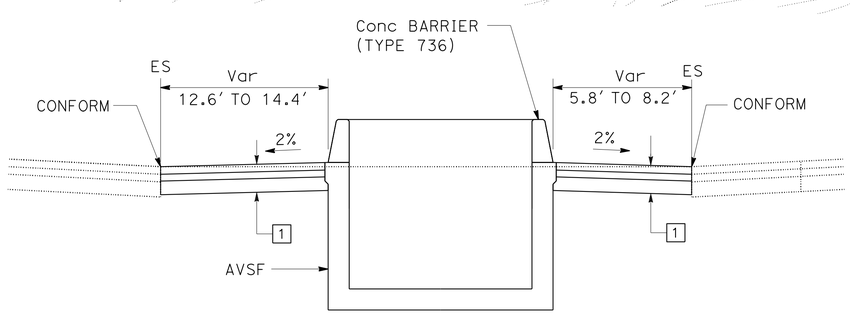

SECTION G-G
NO SCALE

LAYOUT

SCALE: 1" = 50'

L-26

REVISED BY | DATE REVISED
RICHARD DOUGHERTY | ARTURO LAO
CALCULATED-DESIGNED BY | CHECKED BY
FUNCTIONAL SUPERVISOR
REFUGIO DOMINGUEZ

STATE OF CALIFORNIA - DEPARTMENT OF TRANSPORTATION
Caltrans
DESIGN

LAST REVISION 00-00-00 | DATE PLOTTED => 01-AUG-2016 | TIME PLOTTED => 13:55

Dist	COUNTY	ROUTE	POST MILES TOTAL PROJECT	SHEET No.	TOTAL SHEETS
07	LA,Ven	101	29.3/38.2, 0.0/1.2	30	265

12-18-15
REGISTERED CIVIL ENGINEER DATE

4-25-16
PLANS APPROVAL DATE

REGISTERED PROFESSIONAL ENGINEER
ARTURO LAO
No. 56687
Exp. 6-30-17
CIVIL
STATE OF CALIFORNIA

THE STATE OF CALIFORNIA OR ITS OFFICERS OR AGENTS SHALL NOT BE RESPONSIBLE FOR THE ACCURACY OR COMPLETENESS OF SCANNED COPIES OF THIS PLAN SHEET.

NOTE:

FOR ACCURATE RIGHT OF WAY DATA, CONTACT
RIGHT OF WAY ENGINEERING AT THE DISTRICT OFFICE.

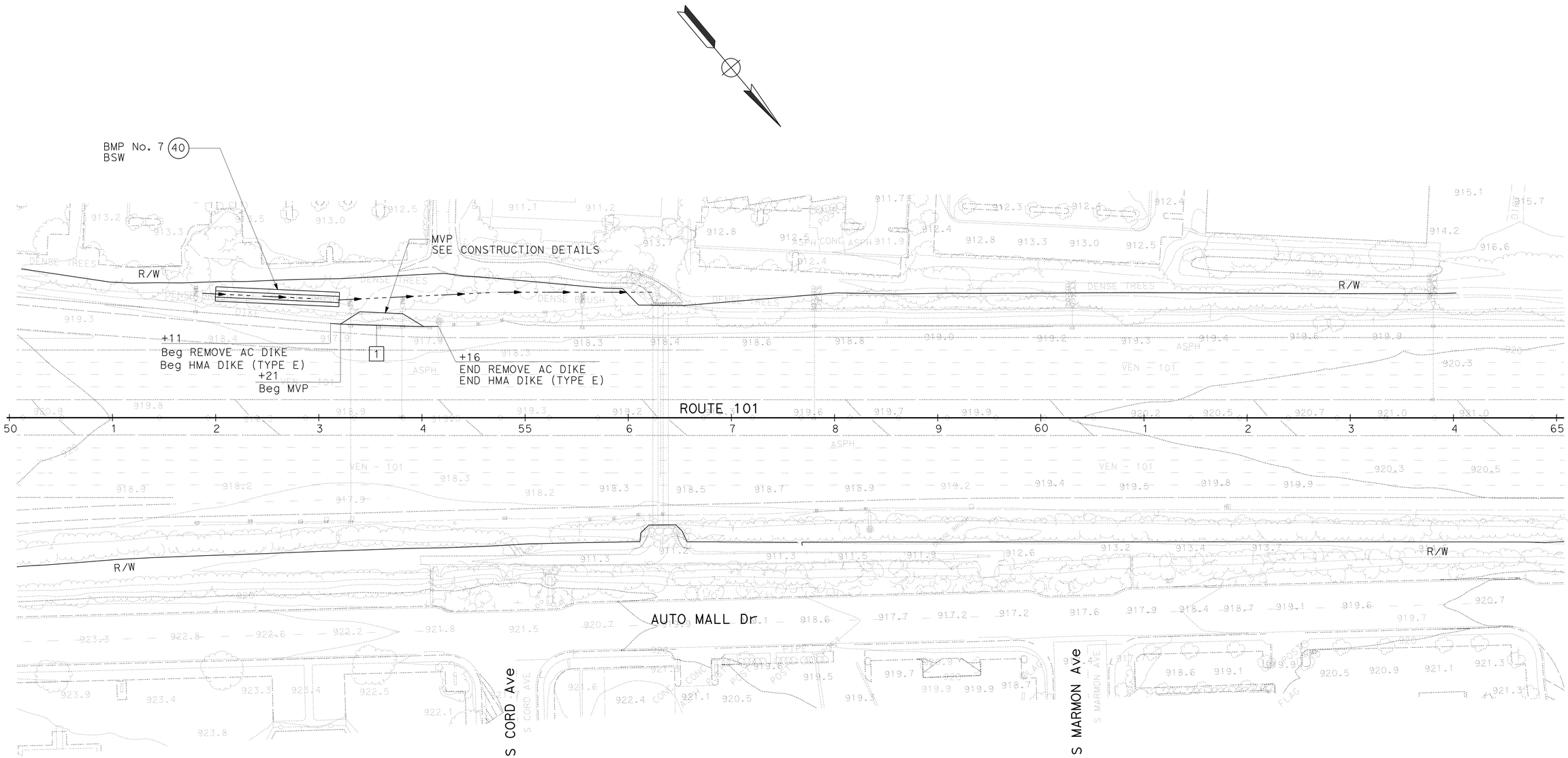

LAYOUT
SCALE: 1" = 50'

L-27

STATE OF CALIFORNIA - DEPARTMENT OF TRANSPORTATION
Caltrans
DESIGN

FUNCTIONAL SUPERVISOR: REFUGIO DOMINGUEZ
CALCULATED-DESIGNED BY: RICHARD DOUGHERTY
CHECKED BY: ARTURO LAO
REVISED BY
DATE REVISED

LAST REVISION 00-00-00
DATE PLOTTED => 01-AUG-2016
TIME PLOTTED => 13:55

Dist	COUNTY	ROUTE	POST MILES TOTAL PROJECT	SHEET No.	TOTAL SHEETS
07	LA,Ven	101	29.3/38.2, 0.0/1.2	31	265

12-18-15
REGISTERED CIVIL ENGINEER DATE

4-25-16
PLANS APPROVAL DATE

REGISTERED PROFESSIONAL ENGINEER
ARTURO LAO
No. 56687
Exp. 6-30-17
CIVIL
STATE OF CALIFORNIA

THE STATE OF CALIFORNIA OR ITS OFFICERS OR AGENTS SHALL NOT BE RESPONSIBLE FOR THE ACCURACY OR COMPLETENESS OF SCANNED COPIES OF THIS PLAN SHEET.

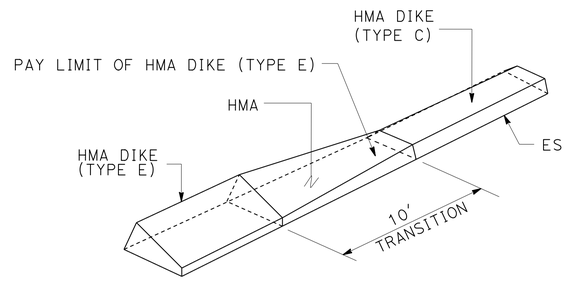

HMA DIKE (TYPE E) TO HMA DIKE (TYPE C)
DIKE TRANSITION

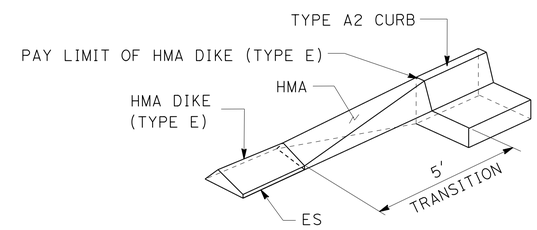

HMA DIKE (TYPE E) TO TYPE A2 CURB

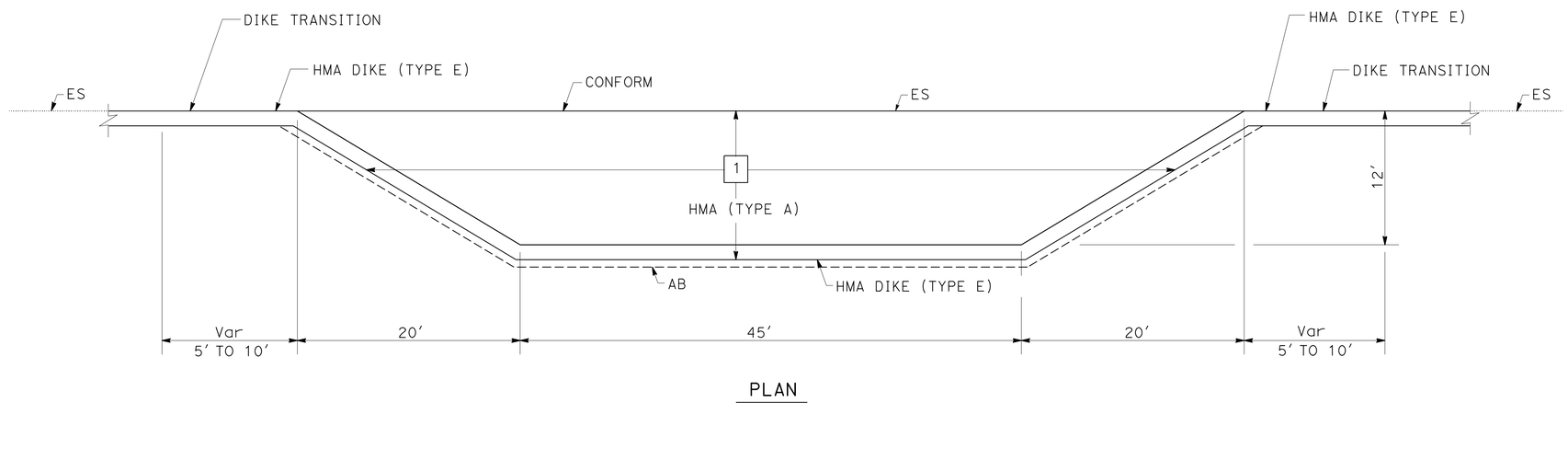

PLAN

MAINTENANCE VEHICLE PULLOUT

CONSTRUCTION DETAILS

NO SCALE

C-1

STATE OF CALIFORNIA - DEPARTMENT OF TRANSPORTATION
Caltrans
DESIGN

FUNCTIONAL SUPERVISOR: REFUGIO DOMINGUEZ

CALCULATED-DESIGNED BY: ARTURO LAO
CHECKED BY: REFUGIO DOMINGUEZ

REVISED BY
DATE REVISED

LAST REVISION 00-00-00
DATE PLOTTED => 01-AUG-2016
TIME PLOTTED => 13:55

Dist	COUNTY	ROUTE	POST MILES TOTAL PROJECT	SHEET No.	TOTAL SHEETS
07	LA,Ven	101	29.3/38.2, 0.0/1.2	32	265

REGISTERED CIVIL ENGINEER 12-18-15 DATE

4-25-16
PLANS APPROVAL DATE

REGISTERED PROFESSIONAL ENGINEER ARTURO LAO No. 56682 Exp. 6-30-17 CIVIL STATE OF CALIFORNIA

THE STATE OF CALIFORNIA OR ITS OFFICERS OR AGENTS SHALL NOT BE RESPONSIBLE FOR THE ACCURACY OR COMPLETENESS OF SCANNED COPIES OF THIS PLAN SHEET.

NOTE:

FOR ACCURATE RIGHT OF WAY DATA, CONTACT RIGHT OF WAY ENGINEERING AT THE DISTRICT OFFICE.

LEGEND:

ROADWAY EXCAVATION (TYPE Z-2) (AERIALLY DEPOSITED LEAD)

ROADWAY EXCAVATION (TYPE Z-3) (AERIALLY DEPOSITED LEAD)

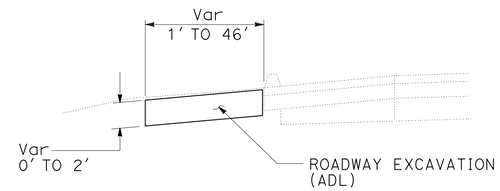

TYPICAL ADL ROADWAY EXCAVATION SECTION

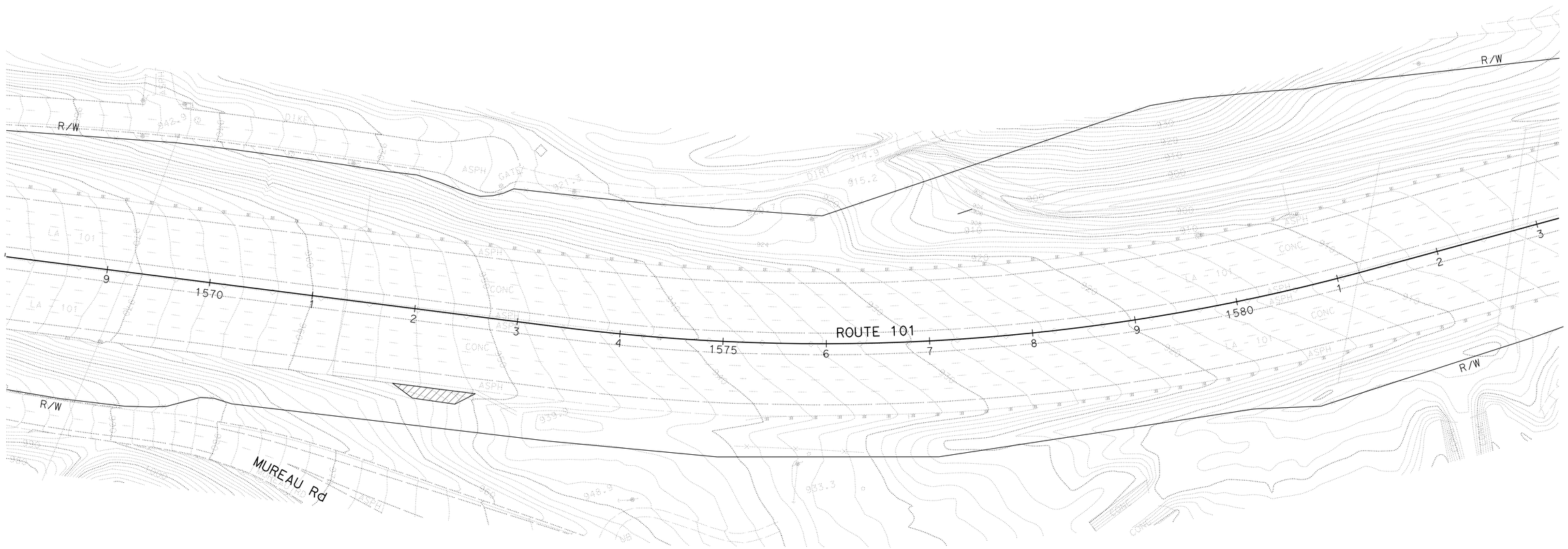

CONSTRUCTION DETAILS

AERIALLY DEPOSITED LEAD

SCALE: 1" = 50'

C-2

STATE OF CALIFORNIA - DEPARTMENT OF TRANSPORTATION

Caltrans

DESIGN

FUNCTIONAL SUPERVISOR: REFUGIO DOMINGUEZ

CALCULATED-DESIGNED BY: MOHAMMAD MOHSENZADEH

CHECKED BY: ARTURO LAO

REVISED BY | DATE REVISED

LAST REVISION 00-00-00 | DATE PLOTTED => 01-AUG-2016 | TIME PLOTTED => 13:55

Dist	COUNTY	ROUTE	POST MILES TOTAL PROJECT	SHEET No.	TOTAL SHEETS
07	LA,Ven	101	29.3/38.2, 0.0/1.2	33	265

12-18-15
REGISTERED CIVIL ENGINEER DATE

4-25-16
PLANS APPROVAL DATE

REGISTERED PROFESSIONAL ENGINEER
ARTURO LAO
No. 56682
Exp. 6-30-17
CIVIL
STATE OF CALIFORNIA

THE STATE OF CALIFORNIA OR ITS OFFICERS OR AGENTS SHALL NOT BE RESPONSIBLE FOR THE ACCURACY OR COMPLETENESS OF SCANNED COPIES OF THIS PLAN SHEET.

NOTE:

FOR ACCURATE RIGHT OF WAY DATA, CONTACT
RIGHT OF WAY ENGINEERING AT THE DISTRICT OFFICE.

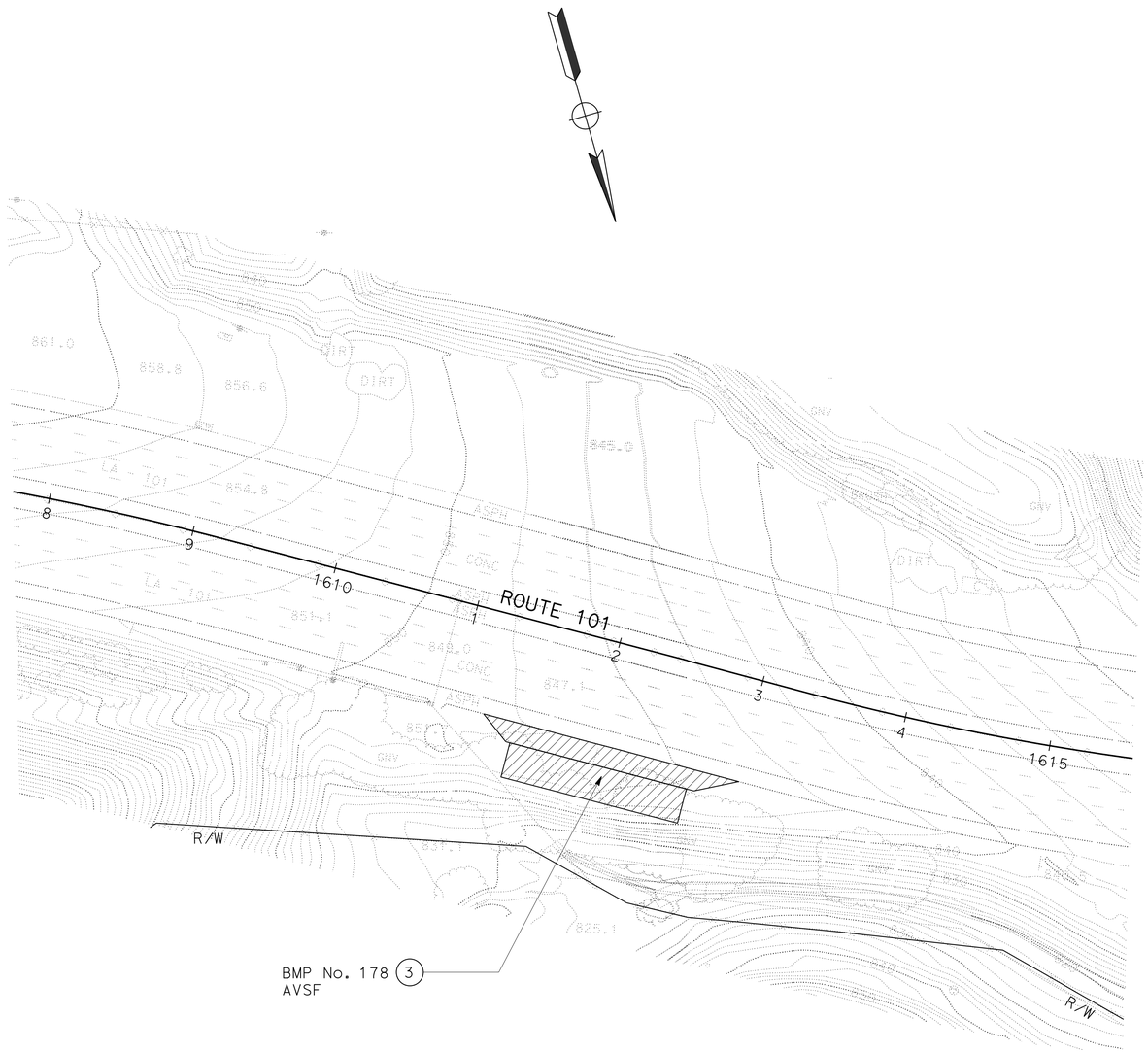

CONSTRUCTION DETAILS
AERIALLY DEPOSITED LEAD

SCALE: 1" = 50'

C-3

STATE OF CALIFORNIA - DEPARTMENT OF TRANSPORTATION
Caltrans
DESIGN

FUNCTIONAL SUPERVISOR: REFUGIO DOMINGUEZ
CALCULATED-DESIGNED BY: MOHAMMAD MOHSENZADEH
CHECKED BY: ARTURO LAO
REVISED BY
DATE REVISED

LAST REVISION 00-00-00
DATE PLOTTED => 01-AUG-2016
TIME PLOTTED => 13:55

Dist	COUNTY	ROUTE	POST MILES TOTAL PROJECT	SHEET No.	TOTAL SHEETS
07	LA,Ven	101	29.3/38.2, 0.0/1.2	34	265

REGISTERED CIVIL ENGINEER 12-18-15 DATE

4-25-16
PLANS APPROVAL DATE

REGISTERED PROFESSIONAL ENGINEER ARTURO LAO No. 56682 Exp. 6-30-17 CIVIL STATE OF CALIFORNIA

THE STATE OF CALIFORNIA OR ITS OFFICERS OR AGENTS SHALL NOT BE RESPONSIBLE FOR THE ACCURACY OR COMPLETENESS OF SCANNED COPIES OF THIS PLAN SHEET.

NOTE:

FOR ACCURATE RIGHT OF WAY DATA, CONTACT RIGHT OF WAY ENGINEERING AT THE DISTRICT OFFICE.

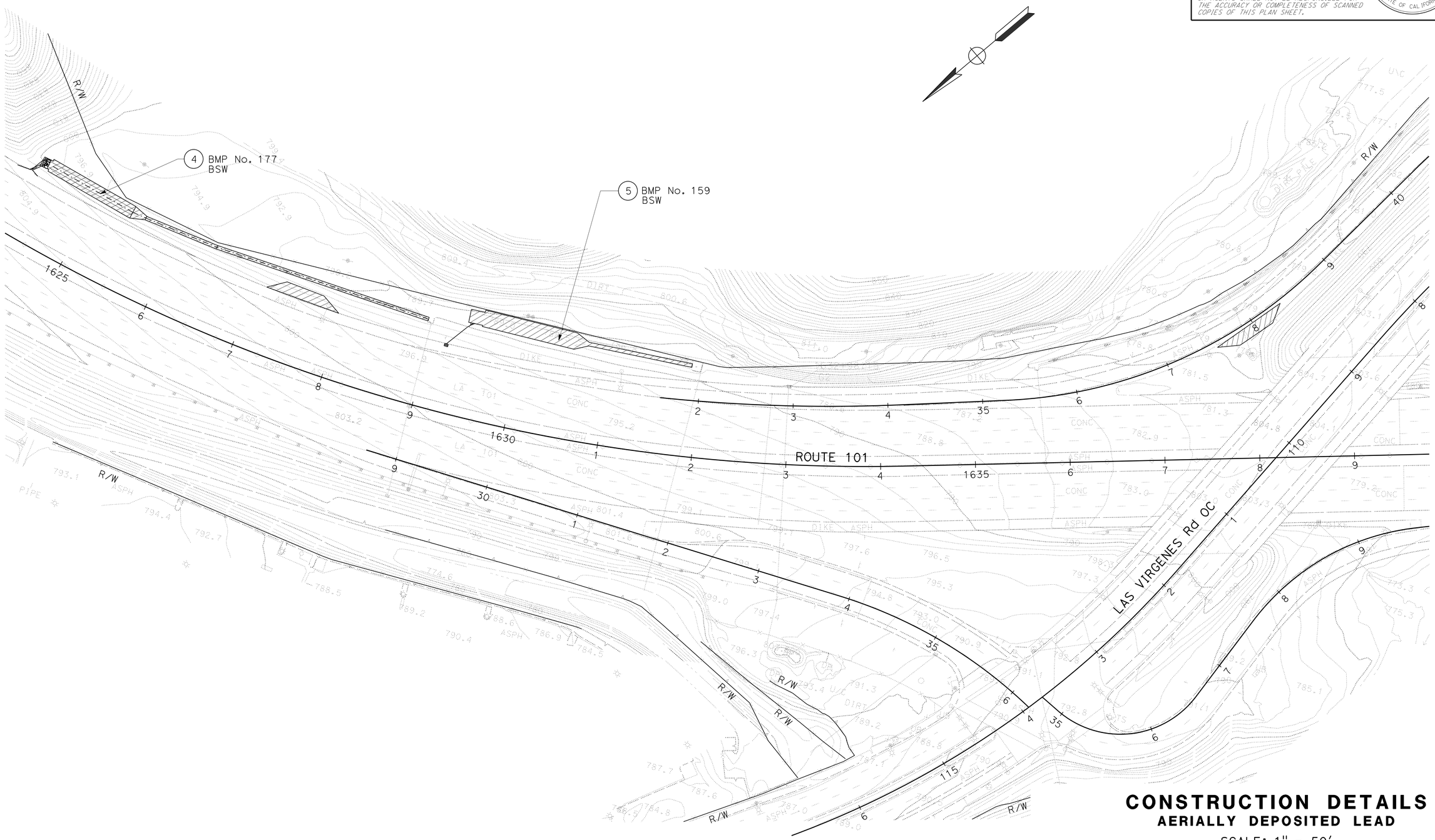

CONSTRUCTION DETAILS

AERIALLY DEPOSITED LEAD

SCALE: 1" = 50'

C-4

STATE OF CALIFORNIA - DEPARTMENT OF TRANSPORTATION

Caltrans

DESIGN

FUNCTIONAL SUPERVISOR: REFUGIO DOMINGUEZ

CALCULATED-DESIGNED BY: MOHAMMAD MOHSENZADEH

CHECKED BY: ARTURO LAO

REVISED BY

DATE REVISED

LAST REVISION 00-00-00

DATE PLOTTED => 01-AUG-2016
TIME PLOTTED => 13:55

Dist	COUNTY	ROUTE	POST MILES TOTAL PROJECT	SHEET No.	TOTAL SHEETS
07	LA,Ven	101	29.3/38.2, 0.0/1.2	35	265

REGISTERED CIVIL ENGINEER 12-18-15 DATE

4-25-16
PLANS APPROVAL DATE

REGISTERED PROFESSIONAL ENGINEER ARTURO LAO No. 56682 Exp. 6-30-17 CIVIL STATE OF CALIFORNIA

THE STATE OF CALIFORNIA OR ITS OFFICERS OR AGENTS SHALL NOT BE RESPONSIBLE FOR THE ACCURACY OR COMPLETENESS OF SCANNED COPIES OF THIS PLAN SHEET.

NOTE:

FOR ACCURATE RIGHT OF WAY DATA, CONTACT RIGHT OF WAY ENGINEERING AT THE DISTRICT OFFICE.

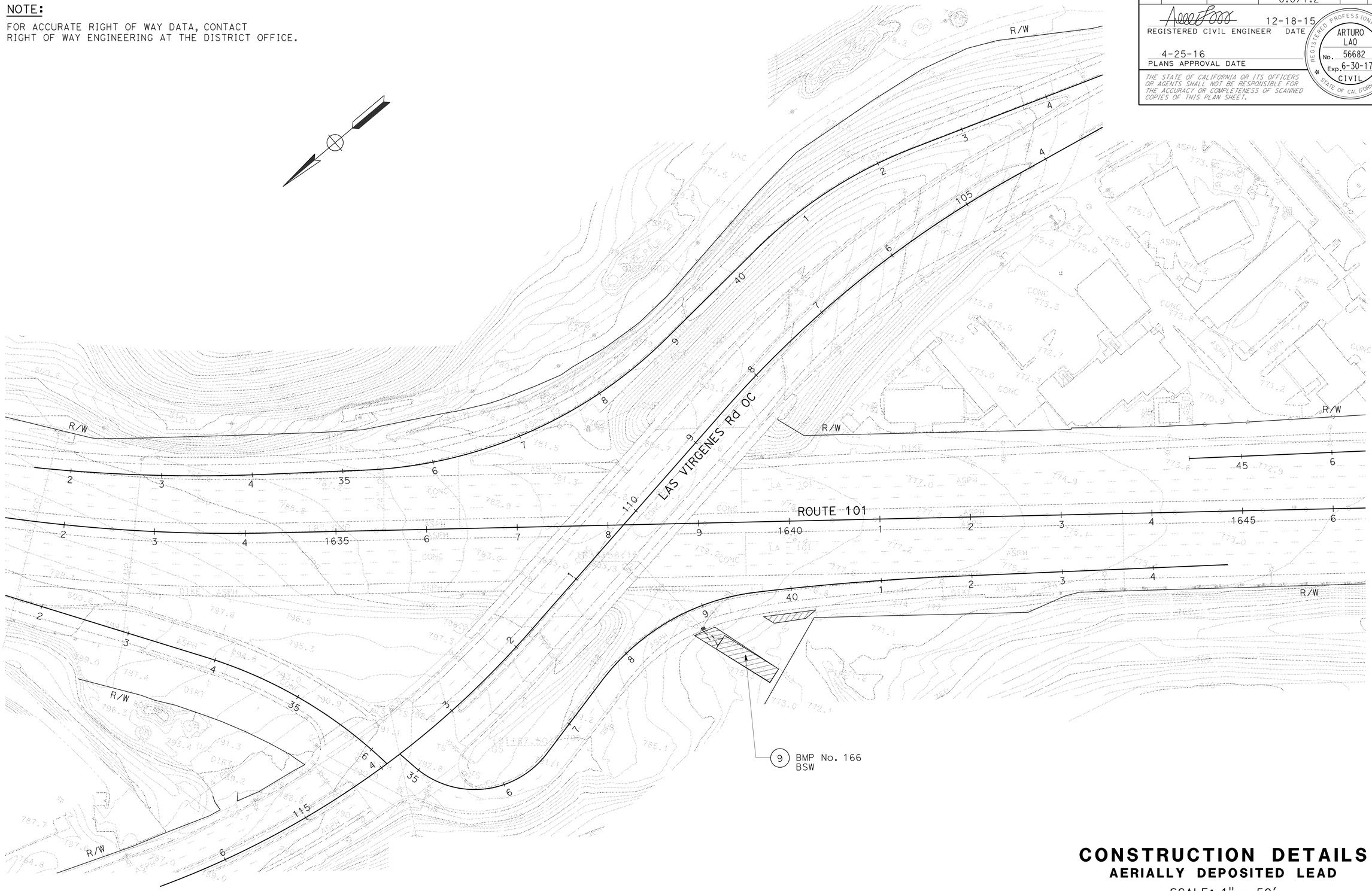

CONSTRUCTION DETAILS

AERIALLY DEPOSITED LEAD

SCALE: 1" = 50'

C-5

STATE OF CALIFORNIA - DEPARTMENT OF TRANSPORTATION

Caltrans

DESIGN

FUNCTIONAL SUPERVISOR: REFUGIO DOMINGUEZ

CALCULATED-DESIGNED BY: MOHAMMAD MOHSENZADEH

CHECKED BY: ARTURO LAO

REVISED BY

DATE REVISED

LAST REVISION 00-00-00

DATE PLOTTED => 01-AUG-2016
TIME PLOTTED => 13:55

Dist	COUNTY	ROUTE	POST MILES TOTAL PROJECT	SHEET No.	TOTAL SHEETS
07	LA,Ven	101	29.3/38.2, 0.0/1.2	36	265

REGISTERED CIVIL ENGINEER 12-18-15 DATE

4-25-16
PLANS APPROVAL DATE

REGISTERED PROFESSIONAL ENGINEER ARTURO LAO No. 56682 Exp. 6-30-17 CIVIL STATE OF CALIFORNIA

THE STATE OF CALIFORNIA OR ITS OFFICERS OR AGENTS SHALL NOT BE RESPONSIBLE FOR THE ACCURACY OR COMPLETENESS OF SCANNED COPIES OF THIS PLAN SHEET.

NOTE:

FOR ACCURATE RIGHT OF WAY DATA, CONTACT RIGHT OF WAY ENGINEERING AT THE DISTRICT OFFICE.

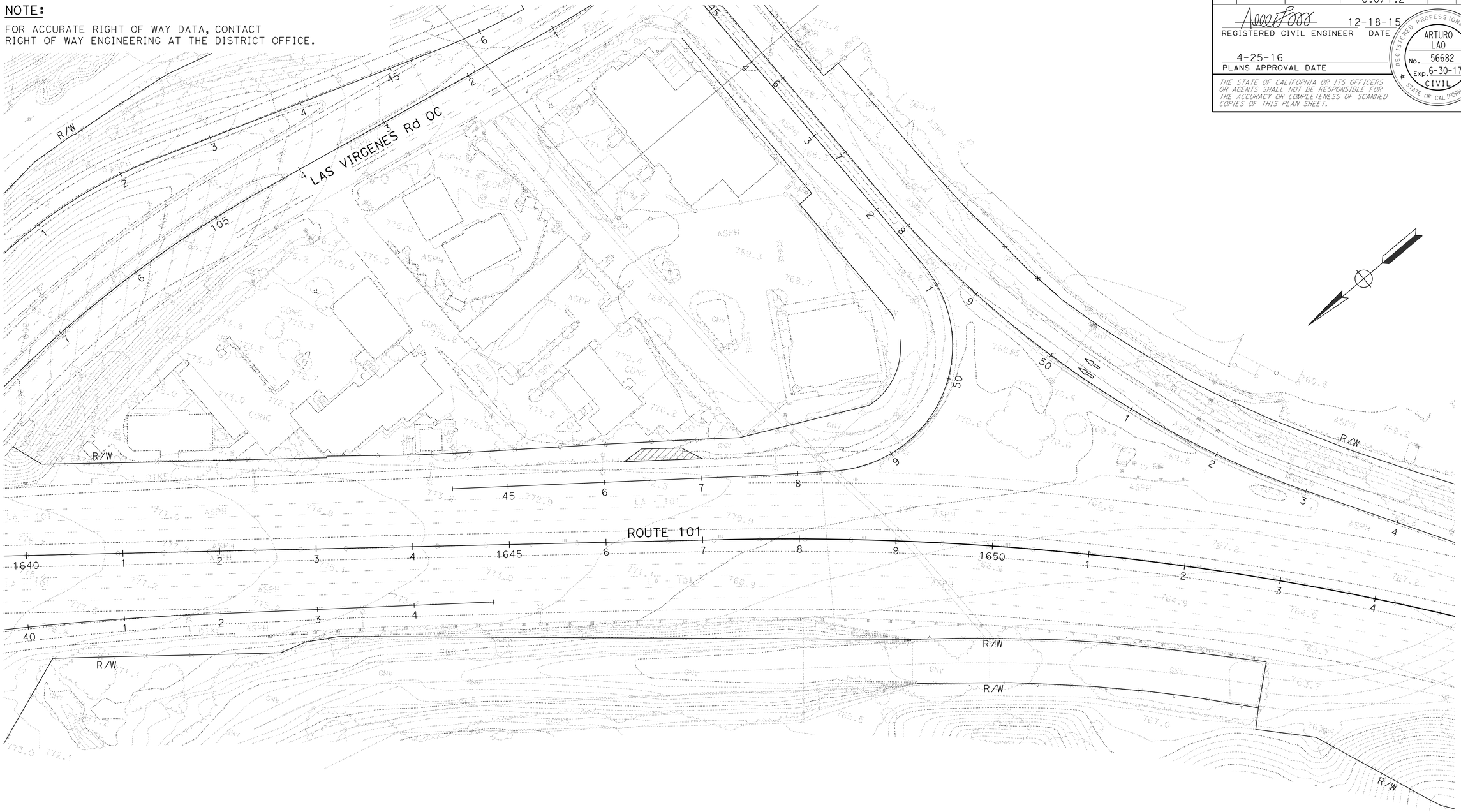

CONSTRUCTION DETAILS

AERIALLY DEPOSITED LEAD

SCALE: 1" = 50'

C-6

STATE OF CALIFORNIA - DEPARTMENT OF TRANSPORTATION

Caltrans

DESIGN

FUNCTIONAL SUPERVISOR: REFUGIO DOMINGUEZ

CALCULATED-DESIGNED BY: MOHAMMAD MOHSENZADEH

CHECKED BY: ARTURO LAO

REVISED BY

DATE REVISED

LAST REVISION 00-00-00

DATE PLOTTED => 01-AUG-2016

TIME PLOTTED => 13:55

Dist	COUNTY	ROUTE	POST MILES TOTAL PROJECT	SHEET No.	TOTAL SHEETS
07	LA,Ven	101	29.3/38.2, 0.0/1.2	37	265

REGISTERED CIVIL ENGINEER 12-18-15 DATE

4-25-16
PLANS APPROVAL DATE

REGISTERED PROFESSIONAL ENGINEER
ARTURO LAO
No. 56682
Exp. 6-30-17
CIVIL
STATE OF CALIFORNIA

THE STATE OF CALIFORNIA OR ITS OFFICERS OR AGENTS SHALL NOT BE RESPONSIBLE FOR THE ACCURACY OR COMPLETENESS OF SCANNED COPIES OF THIS PLAN SHEET.

NOTE:

FOR ACCURATE RIGHT OF WAY DATA, CONTACT
RIGHT OF WAY ENGINEERING AT THE DISTRICT OFFICE.

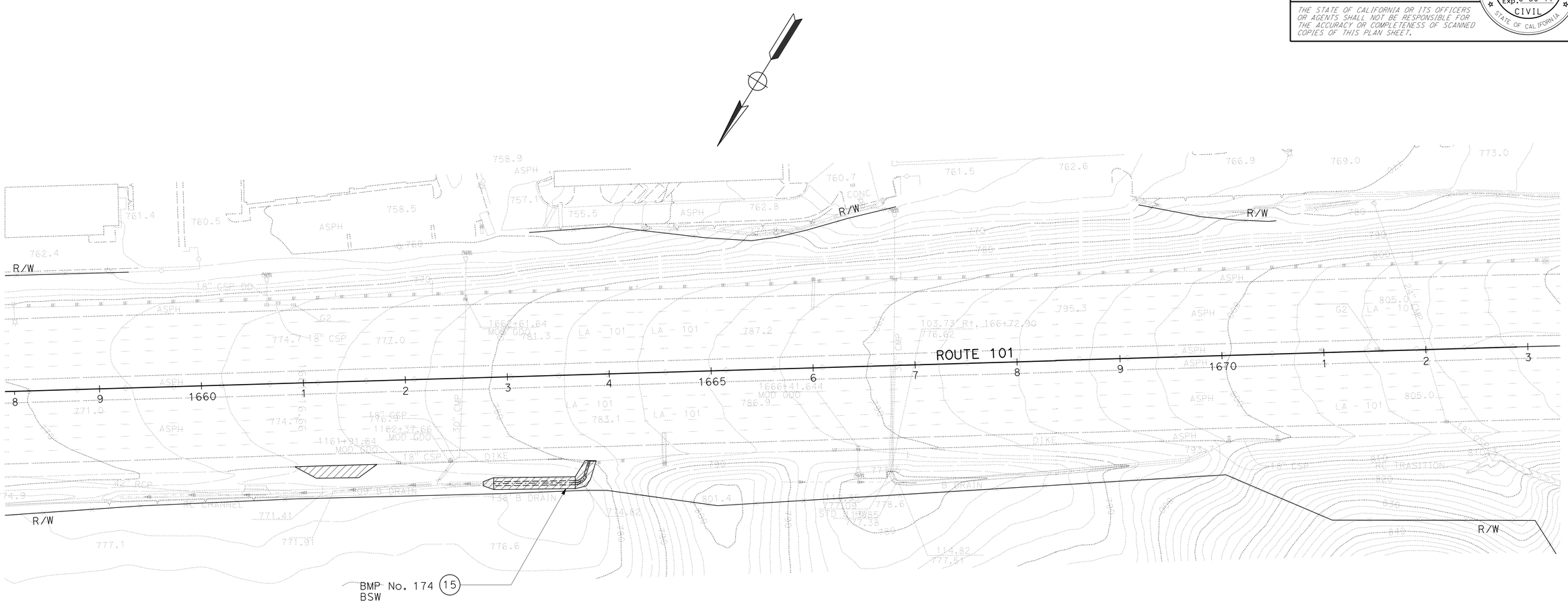

CONSTRUCTION DETAILS
AERIALLY DEPOSITED LEAD

SCALE: 1" = 50'

C-7

STATE OF CALIFORNIA - DEPARTMENT OF TRANSPORTATION
Caltrans®
DESIGN

FUNCTIONAL SUPERVISOR: REFUGIO DOMINGUEZ
CALCULATED-DESIGNED BY: MOHAMMAD MOHSENZADEH
CHECKED BY: ARTURO LAO
REVISED BY
DATE REVISED

LAST REVISION 00-00-00
DATE PLOTTED => 01-AUG-2016
TIME PLOTTED => 13:55

Dist	COUNTY	ROUTE	POST MILES TOTAL PROJECT	SHEET No.	TOTAL SHEETS
07	LA,Ven	101	29.3/38.2, 0.0/1.2	38	265

12-18-15
REGISTERED CIVIL ENGINEER DATE

4-25-16
PLANS APPROVAL DATE

REGISTERED PROFESSIONAL ENGINEER
ARTURO LAO
No. 56682
Exp. 6-30-17
CIVIL
STATE OF CALIFORNIA

THE STATE OF CALIFORNIA OR ITS OFFICERS OR AGENTS SHALL NOT BE RESPONSIBLE FOR THE ACCURACY OR COMPLETENESS OF SCANNED COPIES OF THIS PLAN SHEET.

NOTE:

FOR ACCURATE RIGHT OF WAY DATA, CONTACT
RIGHT OF WAY ENGINEERING AT THE DISTRICT OFFICE.

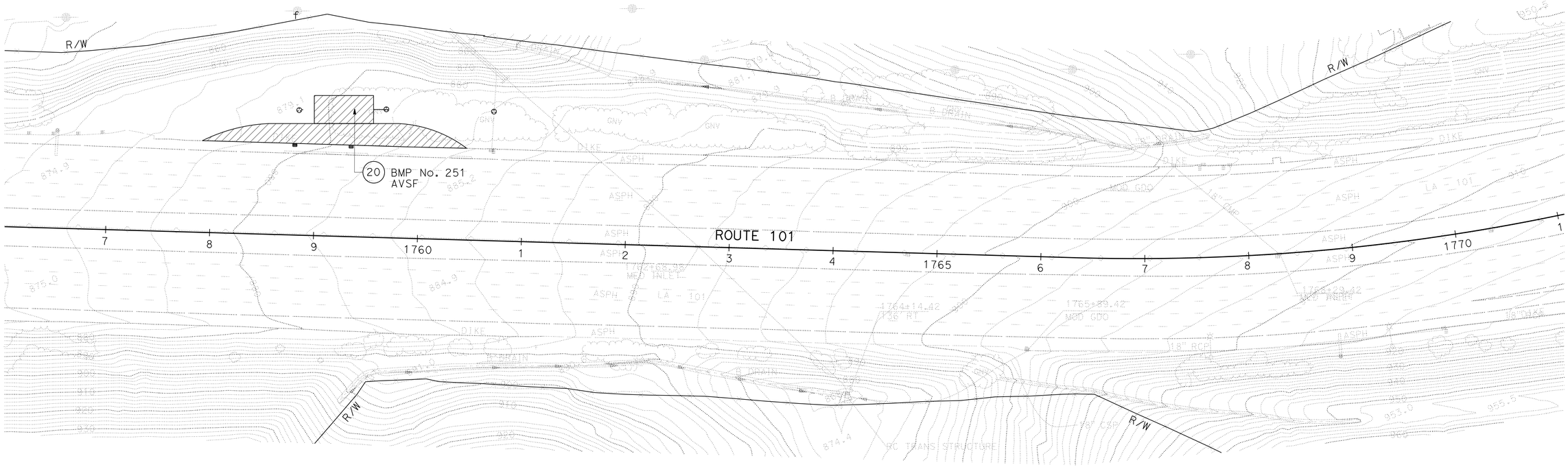

CONSTRUCTION DETAILS
AERIALLY DEPOSITED LEAD

SCALE: 1" = 50'

C-8

REVISED BY | DATE REVISED
MOHAMMAD MOHSENZADEH | ARTURO LAO
CALCULATED-DESIGNED BY | CHECKED BY
FUNCTIONAL SUPERVISOR
REFUGIO DOMINGUEZ

STATE OF CALIFORNIA - DEPARTMENT OF TRANSPORTATION
Caltrans
DESIGN

LAST REVISION 00-00-00 | DATE PLOTTED => 01-AUG-2016 | TIME PLOTTED => 13:55

Dist	COUNTY	ROUTE	POST MILES TOTAL PROJECT	SHEET No.	TOTAL SHEETS
07	LA,Ven	101	29.3/38.2, 0.0/1.2	39	265

REGISTERED CIVIL ENGINEER 12-18-15 DATE

4-25-16
PLANS APPROVAL DATE

REGISTERED PROFESSIONAL ENGINEER
ARTURO LAO
No. 56682
Exp. 6-30-17
CIVIL
STATE OF CALIFORNIA

THE STATE OF CALIFORNIA OR ITS OFFICERS OR AGENTS SHALL NOT BE RESPONSIBLE FOR THE ACCURACY OR COMPLETENESS OF SCANNED COPIES OF THIS PLAN SHEET.

NOTE:

FOR ACCURATE RIGHT OF WAY DATA, CONTACT
RIGHT OF WAY ENGINEERING AT THE DISTRICT OFFICE.

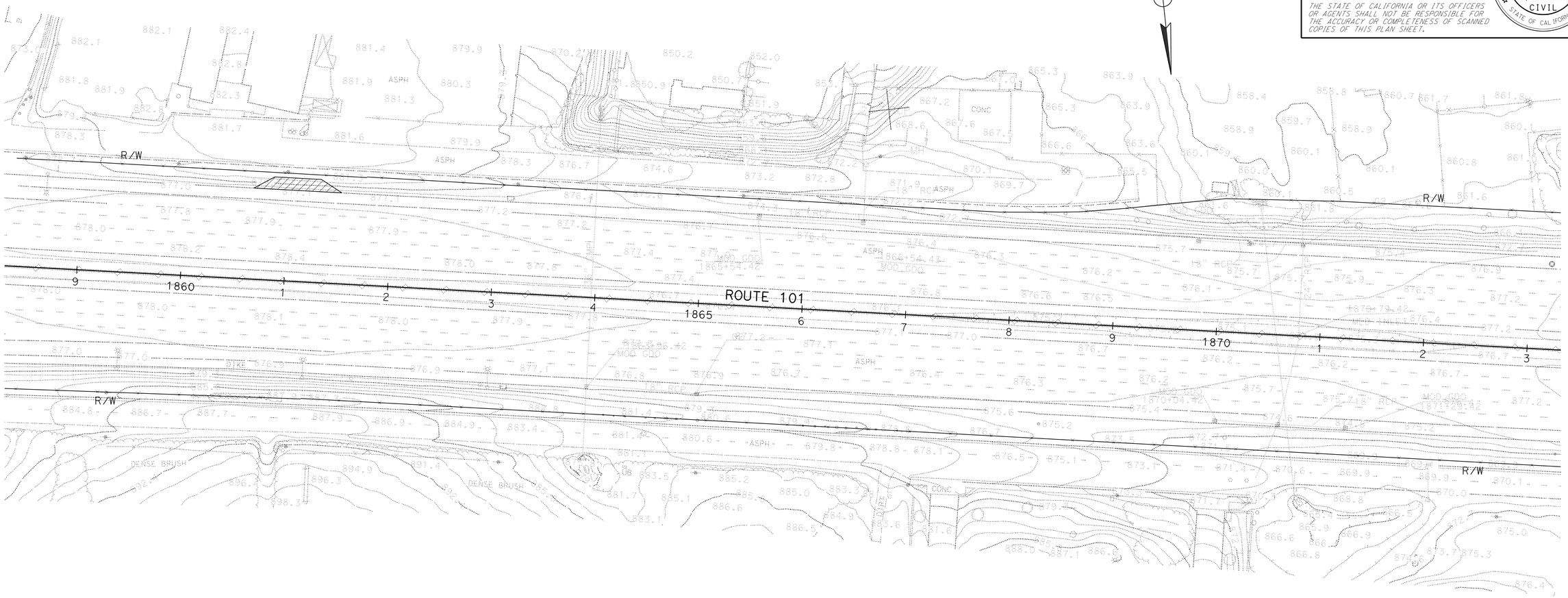

CONSTRUCTION DETAILS
AERIALLY DEPOSITED LEAD

SCALE: 1" = 50'

C-9

REVISED BY | DATE REVISED

MOHAMMAD MOHSENZADEH | ARTURO LAO

CALCULATED-DESIGNED BY | CHECKED BY

FUNCTIONAL SUPERVISOR: REFUGIO DOMINGUEZ

STATE OF CALIFORNIA - DEPARTMENT OF TRANSPORTATION
Caltrans
DESIGN

LAST REVISION 00-00-00 | DATE PLOTTED => 01-AUG-2016 | TIME PLOTTED => 13:55

Dist	COUNTY	ROUTE	POST MILES TOTAL PROJECT	SHEET No.	TOTAL SHEETS
07	LA,Ven	101	29.3/38.2, 0.0/1.2	40	265

REGISTERED CIVIL ENGINEER 12-18-15 DATE

4-25-16
PLANS APPROVAL DATE

REGISTERED PROFESSIONAL ENGINEER ARTURO LAO No. 56682 Exp. 6-30-17 CIVIL STATE OF CALIFORNIA

THE STATE OF CALIFORNIA OR ITS OFFICERS OR AGENTS SHALL NOT BE RESPONSIBLE FOR THE ACCURACY OR COMPLETENESS OF SCANNED COPIES OF THIS PLAN SHEET.

NOTE:

FOR ACCURATE RIGHT OF WAY DATA, CONTACT RIGHT OF WAY ENGINEERING AT THE DISTRICT OFFICE.

CONSTRUCTION DETAILS
AERIALLY DEPOSITED LEAD

SCALE: 1" = 50'

C-10

REVISED BY | DATE REVISED

ARTURO LAO | REFUGIO DOMINGUEZ

CALCULATED-DESIGNED BY | CHECKED BY

FUNCTIONAL SUPERVISOR | REFUGIO DOMINGUEZ

STATE OF CALIFORNIA - DEPARTMENT OF TRANSPORTATION

Caltrans® DESIGN

LAST REVISION 00-00-00 | DATE PLOTTED => 01-AUG-2016 TIME PLOTTED => 13:55

Dist	COUNTY	ROUTE	POST MILES TOTAL PROJECT	SHEET No.	TOTAL SHEETS
07	LA,Ven	101	29.3/38.2, 0.0/1.2	41	265

REGISTERED CIVIL ENGINEER 12-18-15 DATE

4-25-16
PLANS APPROVAL DATE

REGISTERED PROFESSIONAL ENGINEER ARTURO LAO No. 56682 Exp. 6-30-17 CIVIL STATE OF CALIFORNIA

THE STATE OF CALIFORNIA OR ITS OFFICERS OR AGENTS SHALL NOT BE RESPONSIBLE FOR THE ACCURACY OR COMPLETENESS OF SCANNED COPIES OF THIS PLAN SHEET.

NOTE:

FOR ACCURATE RIGHT OF WAY DATA, CONTACT RIGHT OF WAY ENGINEERING AT THE DISTRICT OFFICE.

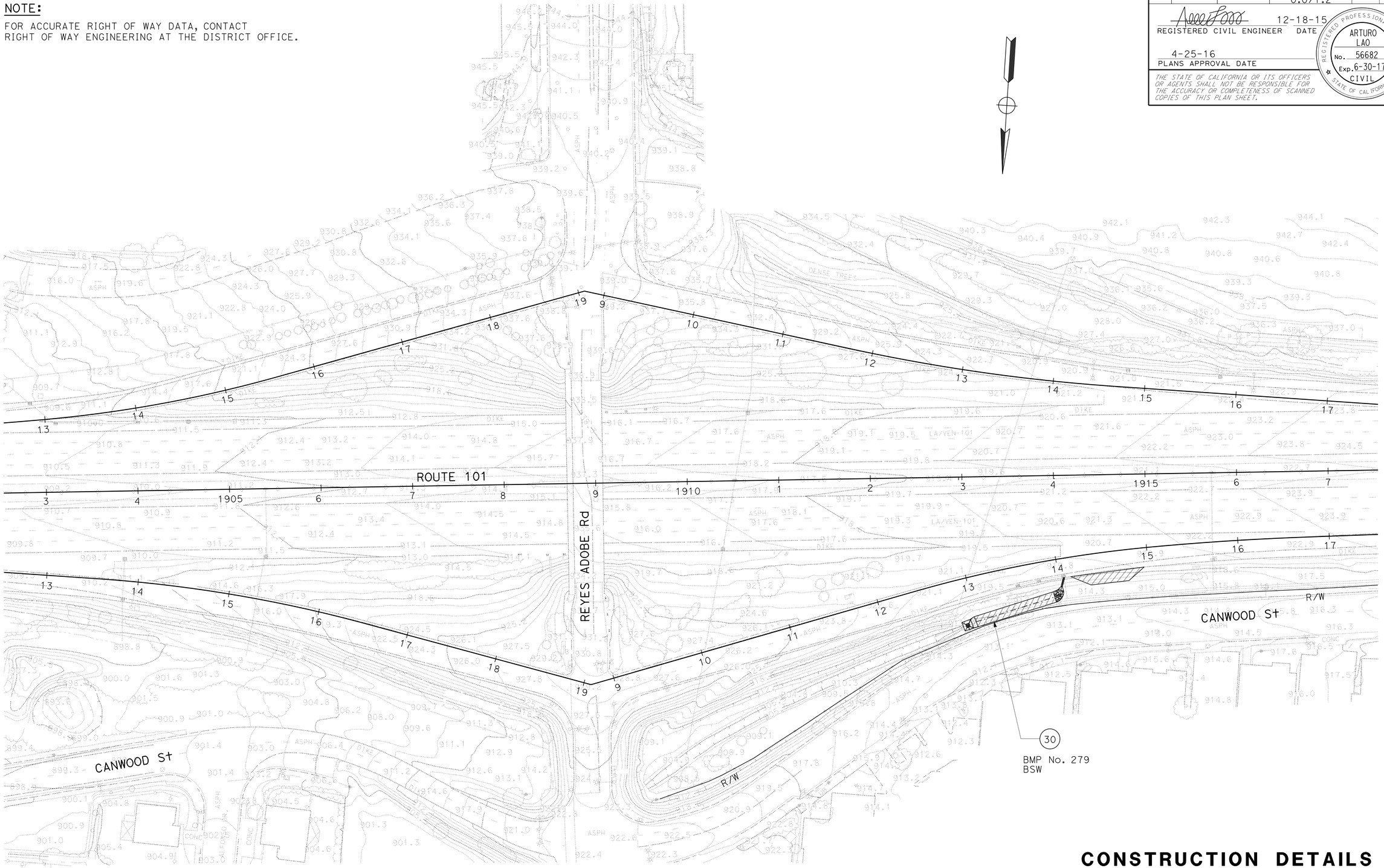

CONSTRUCTION DETAILS

AERIALLY DEPOSITED LEAD

SCALE: 1" = 50'

C-11

REVISED BY | DATE REVISED

MOHAMMAD MOHSENZADEH | ARTURO LAO

CALCULATED-DESIGNED BY | CHECKED BY

FUNCTIONAL SUPERVISOR: REFUGIO DOMINGUEZ

STATE OF CALIFORNIA - DEPARTMENT OF TRANSPORTATION

Caltrans

DESIGN

LAST REVISION 00-00-00 | DATE PLOTTED => 01-AUG-2016 | TIME PLOTTED => 13:55

Dist	COUNTY	ROUTE	POST MILES TOTAL PROJECT	SHEET No.	TOTAL SHEETS
07	LA,Ven	101	29.3/38.2, 0.0/1.2	42	265

REGISTERED CIVIL ENGINEER 12-18-15 DATE

4-25-16
PLANS APPROVAL DATE

REGISTERED PROFESSIONAL ENGINEER ARTURO LAO No. 56682 Exp. 6-30-17 CIVIL STATE OF CALIFORNIA

THE STATE OF CALIFORNIA OR ITS OFFICERS OR AGENTS SHALL NOT BE RESPONSIBLE FOR THE ACCURACY OR COMPLETENESS OF SCANNED COPIES OF THIS PLAN SHEET.

NOTE:

FOR ACCURATE RIGHT OF WAY DATA, CONTACT RIGHT OF WAY ENGINEERING AT THE DISTRICT OFFICE.

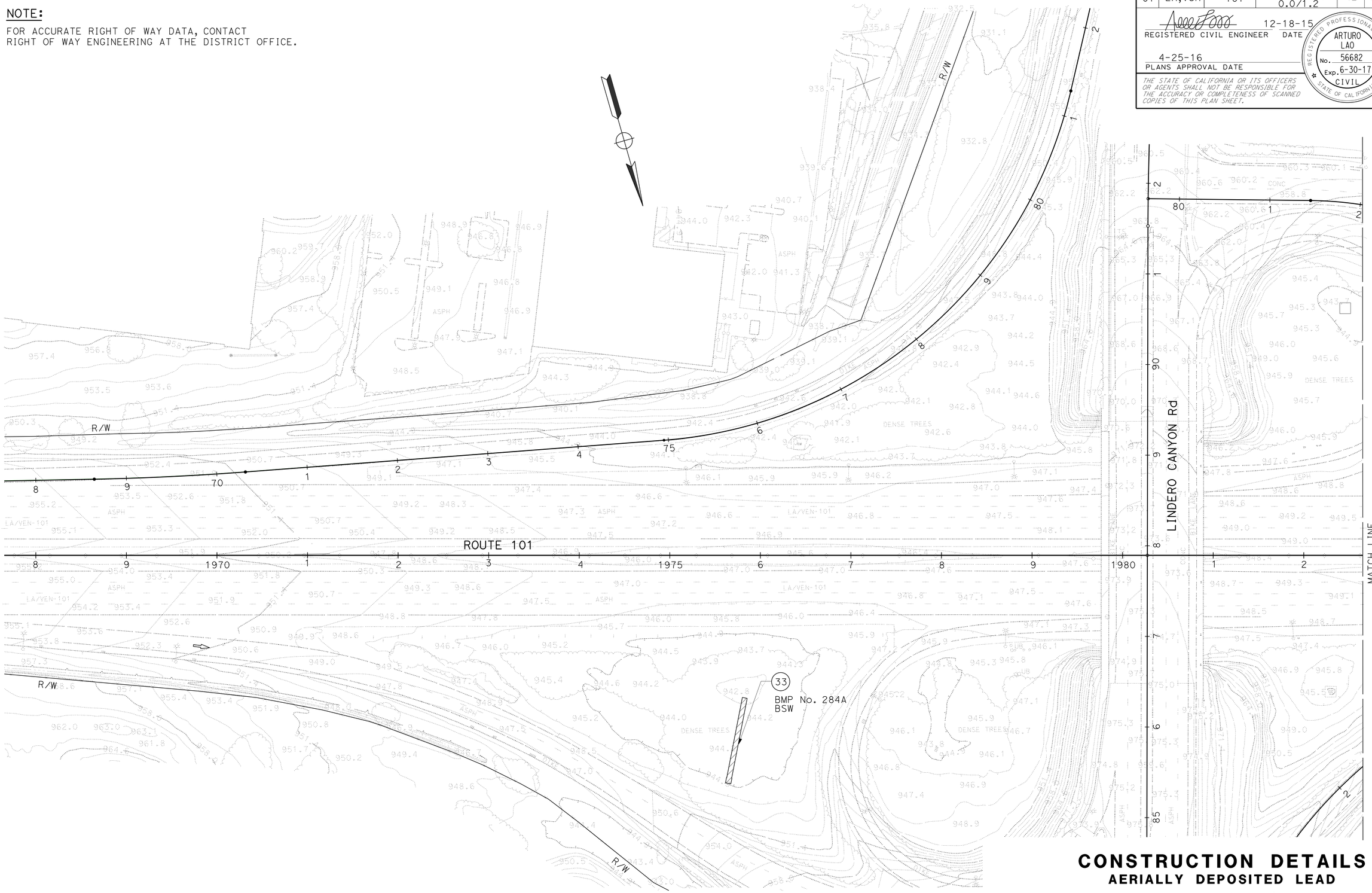

CONSTRUCTION DETAILS

AERIALLY DEPOSITED LEAD

SCALE: 1" = 50'

C-12

STATE OF CALIFORNIA - DEPARTMENT OF TRANSPORTATION

Caltrans

DESIGN

FUNCTIONAL SUPERVISOR: REFUGIO DOMINGUEZ

CALCULATED-DESIGNED BY: RICHARD DOUGHERTY

CHECKED BY: ARTURO LAO

REVISED BY

DATE REVISED

LAST REVISION 00-00-00

DATE PLOTTED => 01-AUG-2016
TIME PLOTTED => 13:55

Dist	COUNTY	ROUTE	POST MILES TOTAL PROJECT	SHEET No.	TOTAL SHEETS
07	LA,Ven	101	29.3/38.2, 0.0/1.2	43	265

12-18-15
REGISTERED CIVIL ENGINEER DATE

4-25-16
PLANS APPROVAL DATE

REGISTERED PROFESSIONAL ENGINEER
ARTURO LAO
No. 56682
Exp. 6-30-17
CIVIL
STATE OF CALIFORNIA

THE STATE OF CALIFORNIA OR ITS OFFICERS OR AGENTS SHALL NOT BE RESPONSIBLE FOR THE ACCURACY OR COMPLETENESS OF SCANNED COPIES OF THIS PLAN SHEET.

NOTE:

FOR ACCURATE RIGHT OF WAY DATA, CONTACT
RIGHT OF WAY ENGINEERING AT THE DISTRICT OFFICE.

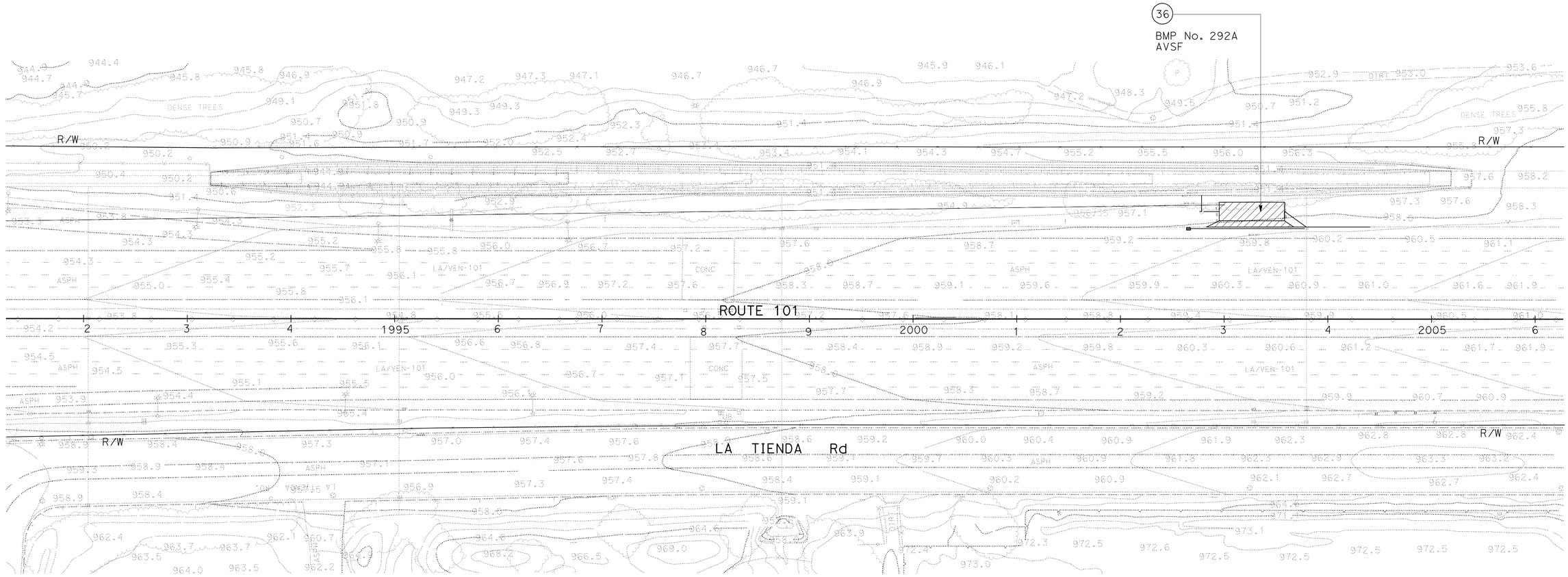

CONSTRUCTION DETAILS

AERIALLY DEPOSITED LEAD

SCALE: 1" = 50'

C-13

STATE OF CALIFORNIA - DEPARTMENT OF TRANSPORTATION
Caltrans
DESIGN

FUNCTIONAL SUPERVISOR: REFUGIO DOMINGUEZ
CALCULATED-DESIGNED BY: ARTURO LAO
CHECKED BY: RICHARD DOUGHERTY
REVISED BY
DATE REVISED

LAST REVISION 00-00-00
DATE PLOTTED => 01-AUG-2016
TIME PLOTTED => 13:55

Dist	COUNTY	ROUTE	POST MILES TOTAL PROJECT	SHEET No.	TOTAL SHEETS
07	LA,Ven	101	29.3/38.2, 0.0/1.2	44	265

REGISTERED CIVIL ENGINEER 12-18-15 DATE

4-25-16
PLANS APPROVAL DATE

REGISTERED PROFESSIONAL ENGINEER ARTURO LAO No. 56682 Exp. 6-30-17 CIVIL STATE OF CALIFORNIA

THE STATE OF CALIFORNIA OR ITS OFFICERS OR AGENTS SHALL NOT BE RESPONSIBLE FOR THE ACCURACY OR COMPLETENESS OF SCANNED COPIES OF THIS PLAN SHEET.

NOTE:

FOR ACCURATE RIGHT OF WAY DATA, CONTACT RIGHT OF WAY ENGINEERING AT THE DISTRICT OFFICE.

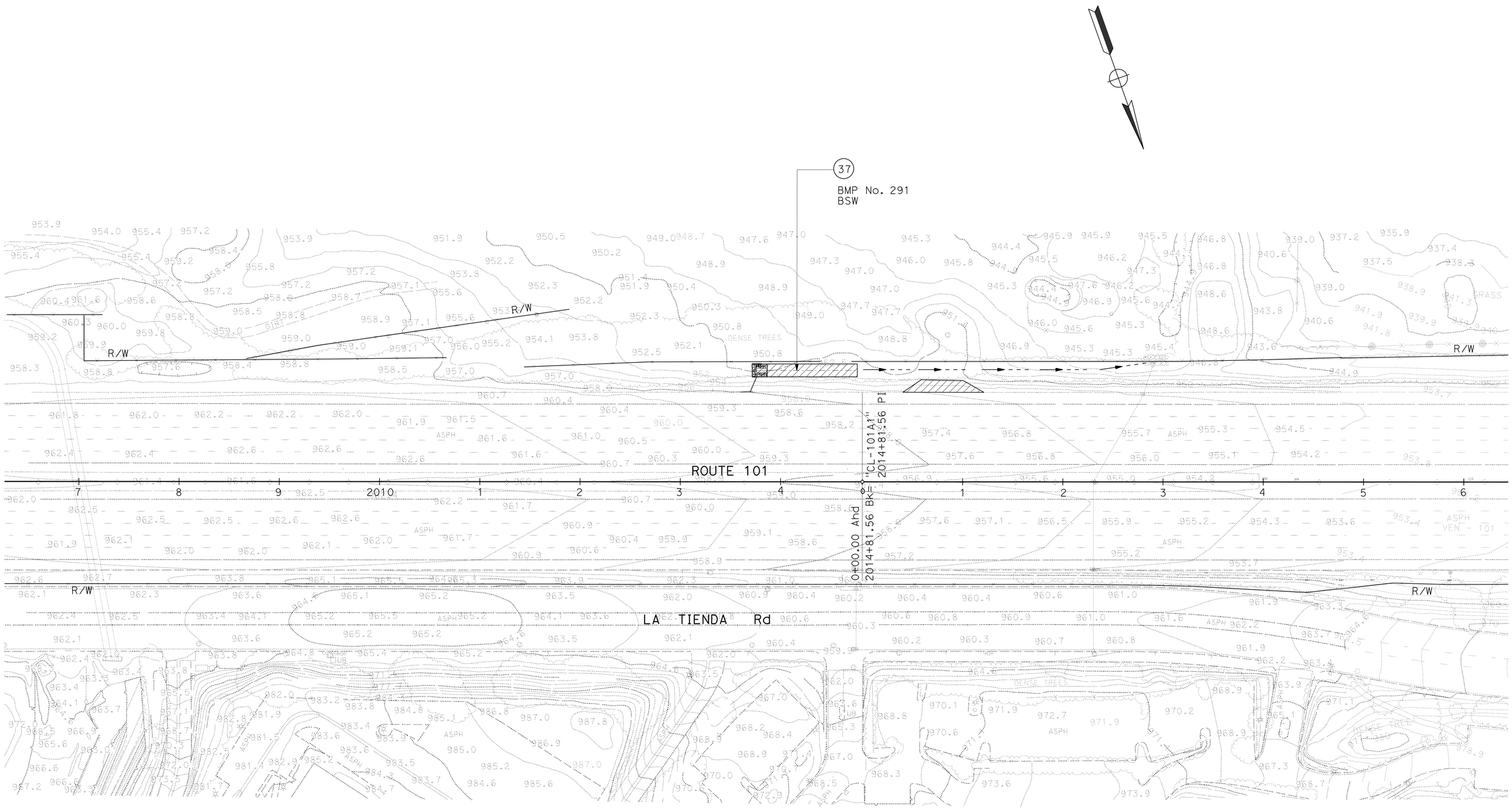

CONSTRUCTION DETAILS

AERIALLY DEPOSITED LEAD

SCALE: 1" = 50'

C-14

STATE OF CALIFORNIA - DEPARTMENT OF TRANSPORTATION

Caltrans®

DESIGN

FUNCTIONAL SUPERVISOR: REFUGIO DOMINGUEZ

CALCULATED-DESIGNED BY: RICHARD DOUGHERTY

CHECKED BY: ARTURO LAO

REVISED BY

DATE REVISED

LAST REVISION 00-00-00

DATE PLOTTED => 01-AUG-2016
TIME PLOTTED => 13:55

Dist	COUNTY	ROUTE	POST MILES TOTAL PROJECT	SHEET No.	TOTAL SHEETS
07	LA,Ven	101	29.3/38.2, 0.0/1.2	45	265

REGISTERED CIVIL ENGINEER 12-18-15 DATE

4-25-16
PLANS APPROVAL DATE

REGISTERED PROFESSIONAL ENGINEER ARTURO LAO No. 56682 Exp. 6-30-17 CIVIL STATE OF CALIFORNIA

THE STATE OF CALIFORNIA OR ITS OFFICERS OR AGENTS SHALL NOT BE RESPONSIBLE FOR THE ACCURACY OR COMPLETENESS OF SCANNED COPIES OF THIS PLAN SHEET.

NOTE:

FOR ACCURATE RIGHT OF WAY DATA, CONTACT RIGHT OF WAY ENGINEERING AT THE DISTRICT OFFICE.

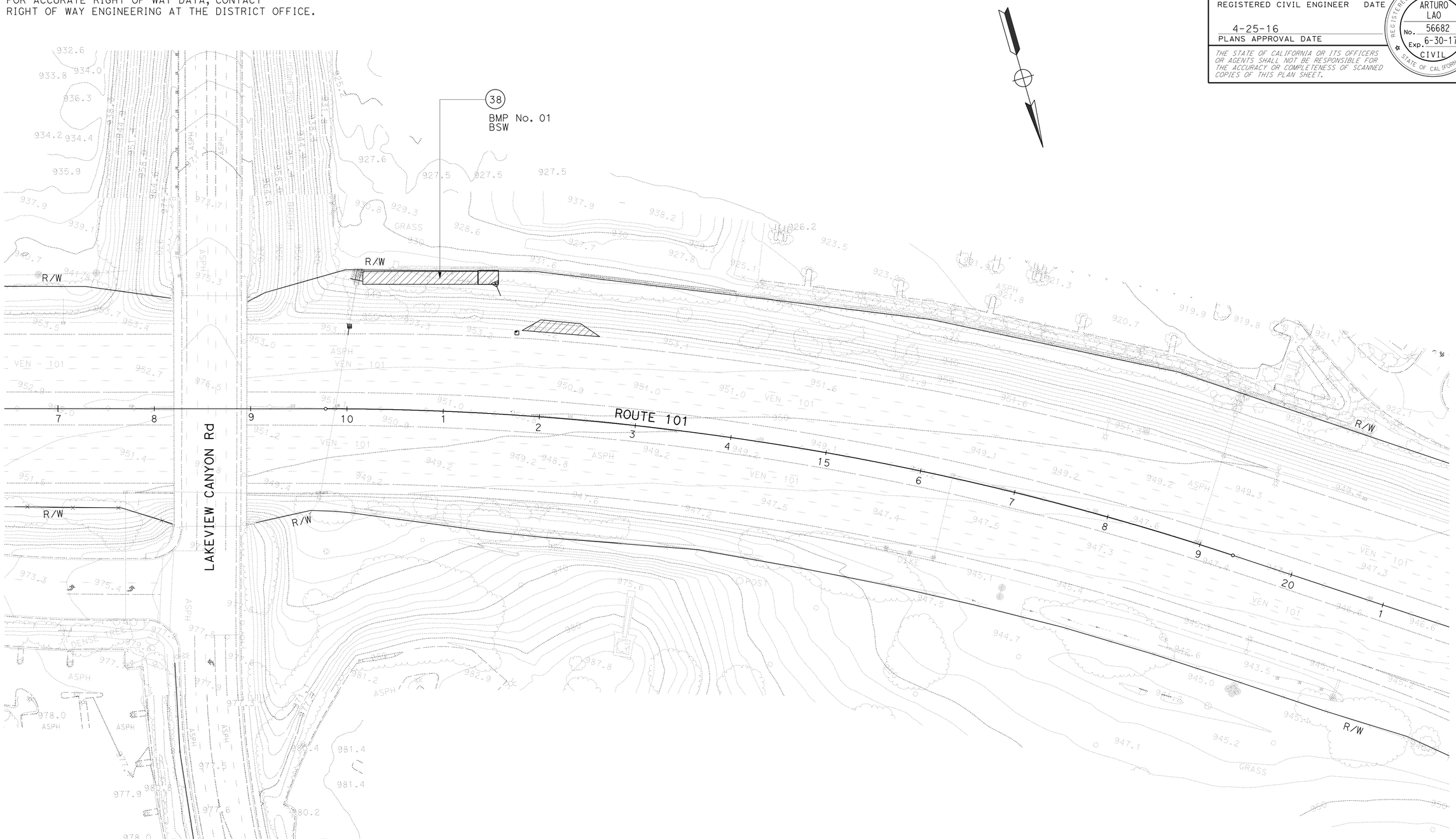

CONSTRUCTION DETAILS

AERIALLY DEPOSITED LEAD

SCALE: 1" = 50'

C-15

STATE OF CALIFORNIA - DEPARTMENT OF TRANSPORTATION

Caltrans

DESIGN

FUNCTIONAL SUPERVISOR: REFUGIO DOMINGUEZ

CALCULATED-DESIGNED BY: RICHARD DOUGHERTY

CHECKED BY: ARTURO LAO

REVISED BY

DATE REVISED

LAST REVISION 00-00-00

DATE PLOTTED => 01-AUG-2016

TIME PLOTTED => 13:55

Dist	COUNTY	ROUTE	POST MILES TOTAL PROJECT	SHEET No.	TOTAL SHEETS
07	LA,Ven	101	29.3/38.2, 0.0/1.2	46	265

REGISTERED CIVIL ENGINEER 4-20-16 DATE

4-25-16
PLANS APPROVAL DATE

REGISTERED PROFESSIONAL ENGINEER DAVE BHALLA No. 34350 Exp. 9-30-17 CIVIL STATE OF CALIFORNIA

THE STATE OF CALIFORNIA OR ITS OFFICERS OR AGENTS SHALL NOT BE RESPONSIBLE FOR THE ACCURACY OR COMPLETENESS OF SCANNED COPIES OF THIS PLAN SHEET.

NOTE:

FOR ACCURATE RIGHT OF WAY DATA, CONTACT RIGHT OF WAY ENGINEERING AT THE DISTRICT OFFICE.

LEGEND:

No. — WATER POLLUTION CONTROL SYSTEM NUMBER

xx — WATER POLLUTION CONTROL ITEM

ABBREVIATIONS:

AVSF - AUSTIN VAULT SAND FILTER

BSW - BIOFILTRATION SWALE

JC - JUNCTION CHAMBER

WE1: 109.83′ Lt 1587+29.43 ℄ Fwy
WE3: 109.68′ Lt 1588+54.41 ℄ Fwy
WE4: 86.50′ Lt 1588+54.39 ℄ Fwy
WE6: 86.66′ Lt 1587+29.40 ℄ Fwy

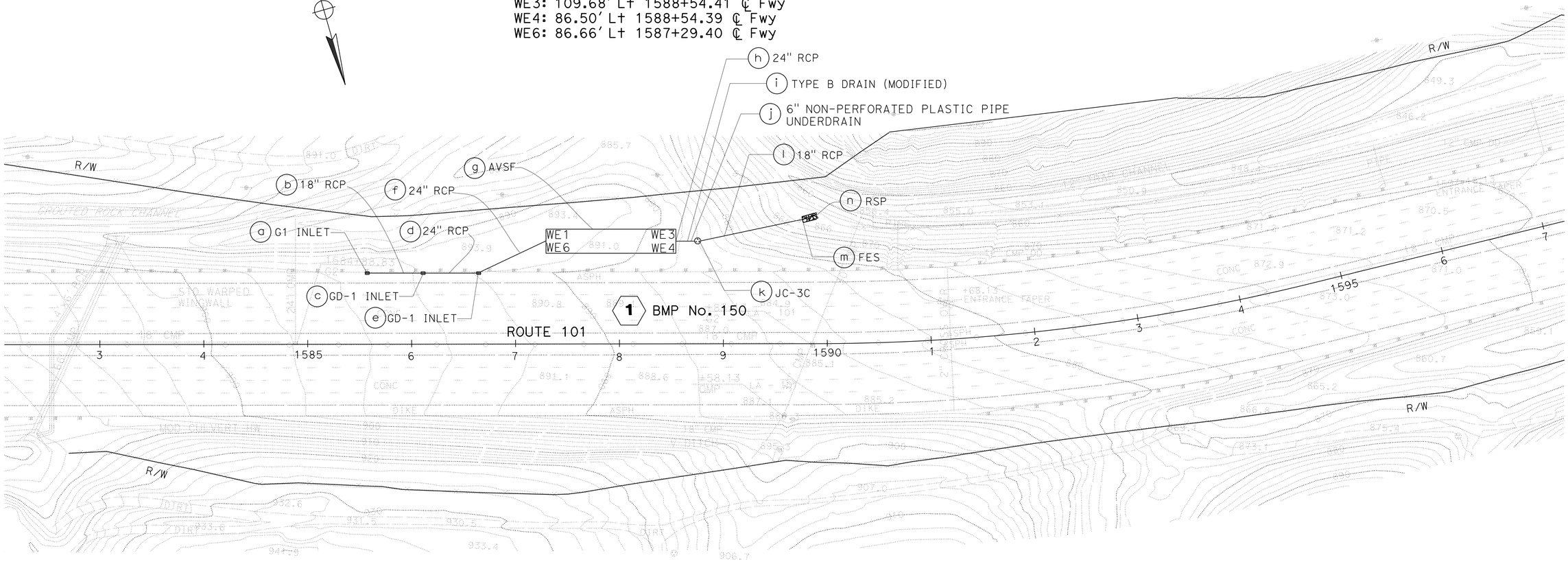

WATER POLLUTION CONTROL PLAN

SCALE: 1" = 50′

W-1

APPROVED FOR WATER POLLUTION CONTROL WORK ONLY

STATE OF CALIFORNIA - DEPARTMENT OF TRANSPORTATION
Caltrans
HYDRAULICS

FUNCTIONAL SUPERVISOR: MARIA QUINONEZ
CALCULATED-DESIGNED BY: TAN HOANG
CHECKED BY: DAVE BHALLA
REVISED BY
DATE REVISED

LAST REVISION 00-00-00
DATE PLOTTED => 01-AUG-2016
TIME PLOTTED => 13:55

Dist	COUNTY	ROUTE	POST MILES TOTAL PROJECT	SHEET No.	TOTAL SHEETS
07	LA,Ven	101	29.3/38.2, 0.0/1.2	47	265

REGISTERED CIVIL ENGINEER 4-20-16 DATE

4-25-16
PLANS APPROVAL DATE

REGISTERED PROFESSIONAL ENGINEER
DAVE BHALLA
No. 34350
Exp. 9-30-17
CIVIL
STATE OF CALIFORNIA

THE STATE OF CALIFORNIA OR ITS OFFICERS OR AGENTS SHALL NOT BE RESPONSIBLE FOR THE ACCURACY OR COMPLETENESS OF SCANNED COPIES OF THIS PLAN SHEET.

NOTE:

FOR ACCURATE RIGHT OF WAY DATA, CONTACT RIGHT OF WAY ENGINEERING AT THE DISTRICT OFFICE.

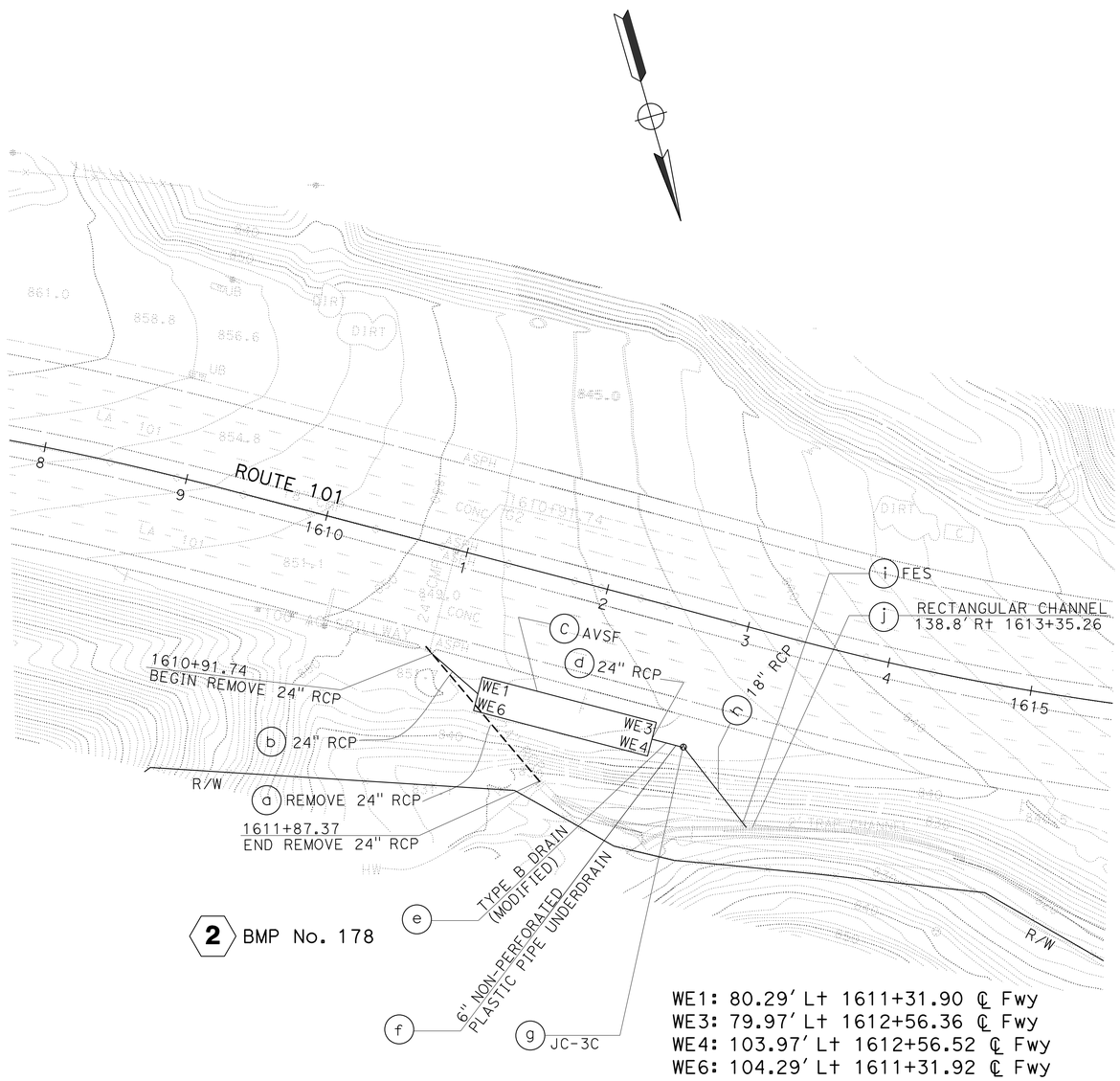

WATER POLLUTION CONTROL PLAN

SCALE: 1" = 50'

W-2

APPROVED FOR WATER POLLUTION CONTROL WORK ONLY

STATE OF CALIFORNIA - DEPARTMENT OF TRANSPORTATION
Caltrans
HYDRAULICS

FUNCTIONAL SUPERVISOR: MARIA QUINONEZ

CALCULATED-DESIGNED BY: TAN HOANG
CHECKED BY: DAVE BHALLA

REVISED BY
DATE REVISED

LAST REVISION 00-00-00
DATE PLOTTED => 01-AUG-2016
TIME PLOTTED => 13:55

Dist	COUNTY	ROUTE	POST MILES TOTAL PROJECT	SHEET No.	TOTAL SHEETS
07	LA,Ven	101	29.3/38.2, 0.0/1.2	48	265

REGISTERED CIVIL ENGINEER 4-20-16 DATE

4-25-16
PLANS APPROVAL DATE

REGISTERED PROFESSIONAL ENGINEER DAVE BHALLA No. 34350 Exp. 9-30-17 CIVIL STATE OF CALIFORNIA

THE STATE OF CALIFORNIA OR ITS OFFICERS OR AGENTS SHALL NOT BE RESPONSIBLE FOR THE ACCURACY OR COMPLETENESS OF SCANNED COPIES OF THIS PLAN SHEET.

NOTE:

FOR ACCURATE RIGHT OF WAY DATA, CONTACT RIGHT OF WAY ENGINEERING AT THE DISTRICT OFFICE.

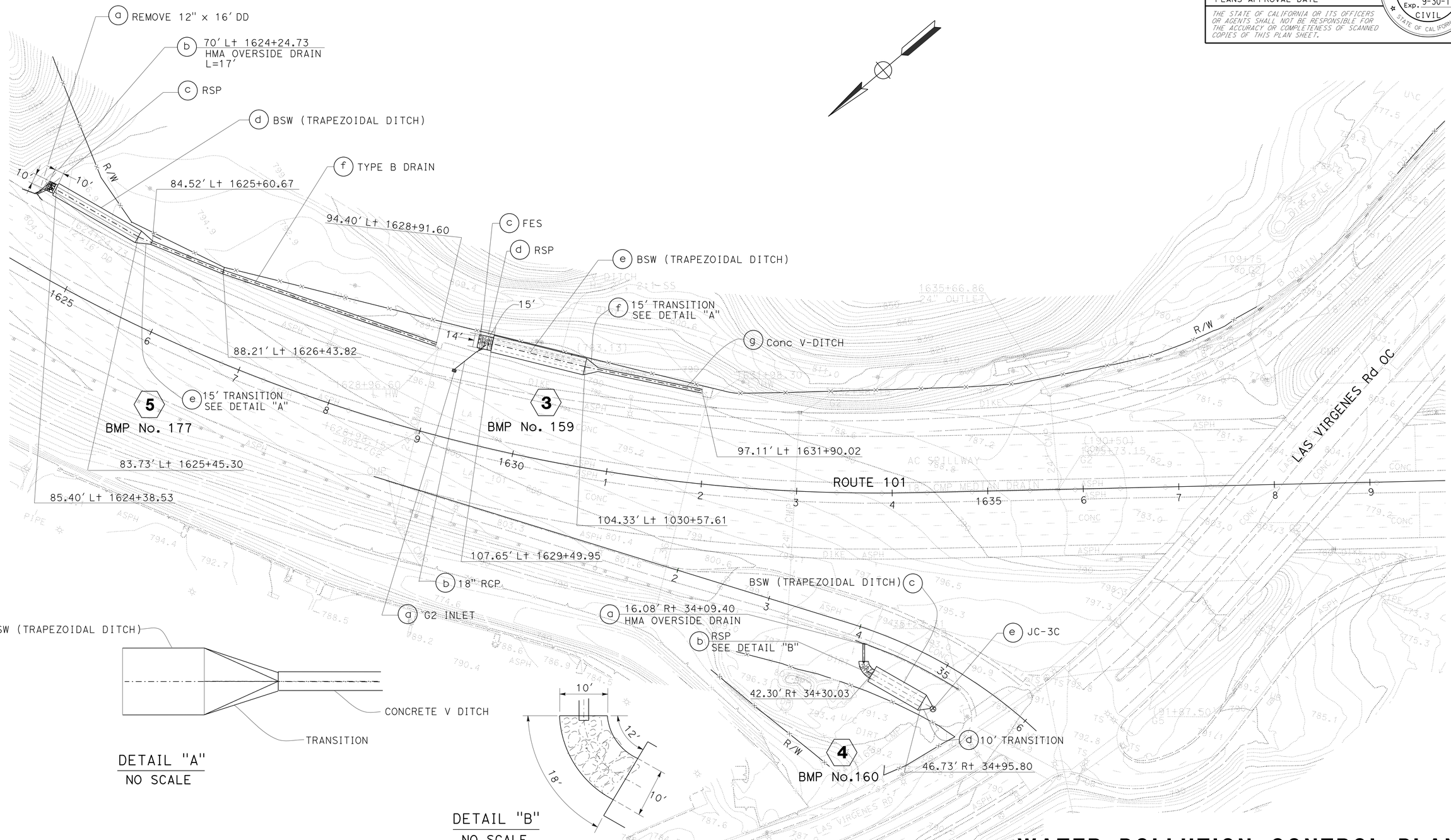

WATER POLLUTION CONTROL PLAN

SCALE: 1" = 50'

W-3

APPROVED FOR WATER POLLUTION CONTROL WORK ONLY

STATE OF CALIFORNIA - DEPARTMENT OF TRANSPORTATION
Caltrans
HYDRAULICS
FUNCTIONAL SUPERVISOR MARICA QUINONEZ
CALCULATED-DESIGNED BY TAN HOANG
CHECKED BY DAVE BHALLA
REVISED BY
DATE REVISED

LAST REVISION 00-00-00
DATE PLOTTED => 01-AUG-2016
TIME PLOTTED => 13:55

Dist	COUNTY	ROUTE	POST MILES TOTAL PROJECT	SHEET No.	TOTAL SHEETS
07	LA,Ven	101	29.3/38.2, 0.0/1.2	49	265

REGISTERED CIVIL ENGINEER 4-20-16 DATE

4-25-16
PLANS APPROVAL DATE

REGISTERED PROFESSIONAL ENGINEER
DAVE BHALLA
No. 34350
Exp. 9-30-17
CIVIL
STATE OF CALIFORNIA

THE STATE OF CALIFORNIA OR ITS OFFICERS OR AGENTS SHALL NOT BE RESPONSIBLE FOR THE ACCURACY OR COMPLETENESS OF SCANNED COPIES OF THIS PLAN SHEET.

NOTE:

FOR ACCURATE RIGHT OF WAY DATA, CONTACT RIGHT OF WAY ENGINEERING AT THE DISTRICT OFFICE.

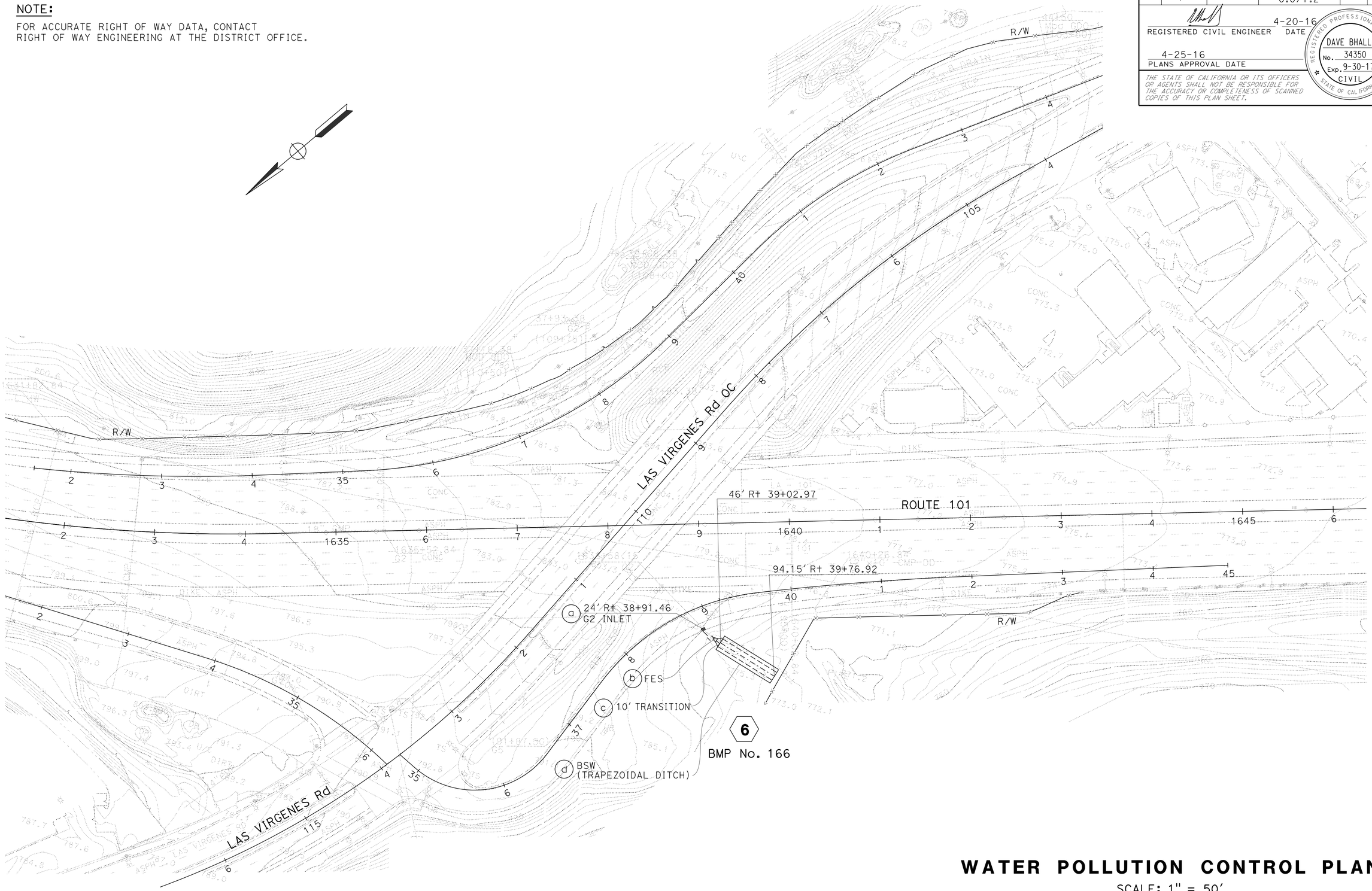

APPROVED FOR WATER POLLUTION CONTROL WORK ONLY

WATER POLLUTION CONTROL PLAN

SCALE: 1" = 50'

W-4

STATE OF CALIFORNIA - DEPARTMENT OF TRANSPORTATION
Caltrans
HYDRAULICS

FUNCTIONAL SUPERVISOR: MARIA QUINONEZ

CALCULATED-DESIGNED BY: TAN HOANG
CHECKED BY: DAVE BHALLA

REVISED BY
DATE REVISED

LAST REVISION 00-00-00
DATE PLOTTED => 01-AUG-2016
TIME PLOTTED => 13:55

Dist	COUNTY	ROUTE	POST MILES TOTAL PROJECT	SHEET No.	TOTAL SHEETS
07	LA,Ven	101	29.3/38.2, 0.0/1.2	50	265

REGISTERED CIVIL ENGINEER 4-20-16 DATE

4-25-16
PLANS APPROVAL DATE

REGISTERED PROFESSIONAL ENGINEER
DAVE BHALLA
No. 34350
Exp. 9-30-17
CIVIL
STATE OF CALIFORNIA

THE STATE OF CALIFORNIA OR ITS OFFICERS OR AGENTS SHALL NOT BE RESPONSIBLE FOR THE ACCURACY OR COMPLETENESS OF SCANNED COPIES OF THIS PLAN SHEET.

NOTE:

FOR ACCURATE RIGHT OF WAY DATA, CONTACT RIGHT OF WAY ENGINEERING AT THE DISTRICT OFFICE.

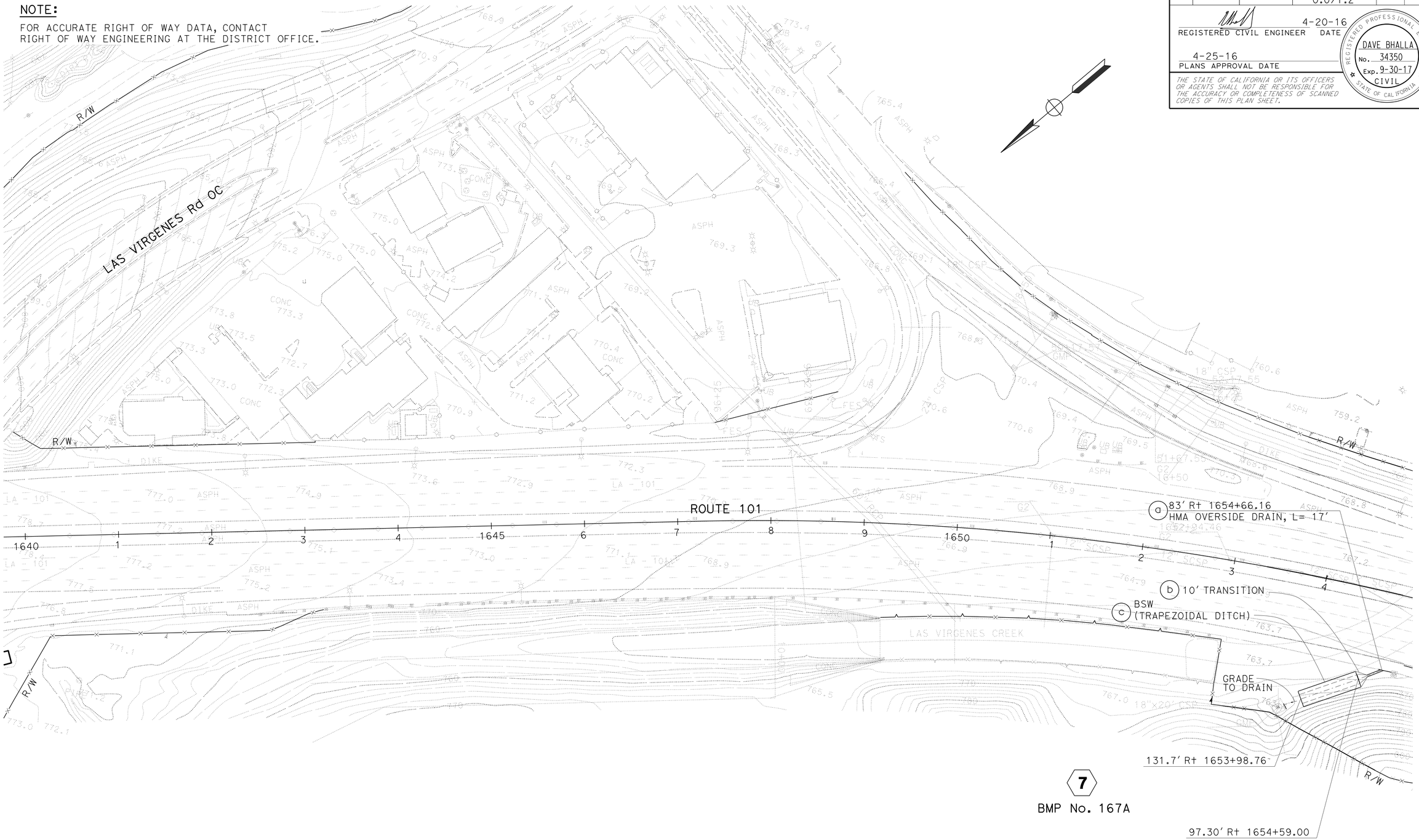

WATER POLLUTION CONTROL PLAN

SCALE: 1" = 50'

W-5

APPROVED FOR WATER POLLUTION CONTROL WORK ONLY

STATE OF CALIFORNIA - DEPARTMENT OF TRANSPORTATION
Caltrans®
HYDRAULICS

FUNCTIONAL SUPERVISOR: MARIA QUINONEZ

CALCULATED-DESIGNED BY: TAN HOANG
CHECKED BY: DAVE BHALLA

REVISED BY
DATE REVISED

LAST REVISION DATE PLOTTED => 01-AUG-2016
TIME PLOTTED => 13:55

Dist	COUNTY	ROUTE	POST MILES TOTAL PROJECT	SHEET No.	TOTAL SHEETS
07	LA,Ven	101	29.3/38.2, 0.0/1.2	51	265

REGISTERED CIVIL ENGINEER 4-20-16 DATE

4-25-16
PLANS APPROVAL DATE

REGISTERED PROFESSIONAL ENGINEER
DAVE BHALLA
No. 34350
Exp. 9-30-17
CIVIL
STATE OF CALIFORNIA

THE STATE OF CALIFORNIA OR ITS OFFICERS OR AGENTS SHALL NOT BE RESPONSIBLE FOR THE ACCURACY OR COMPLETENESS OF SCANNED COPIES OF THIS PLAN SHEET.

NOTE:

FOR ACCURATE RIGHT OF WAY DATA, CONTACT RIGHT OF WAY ENGINEERING AT THE DISTRICT OFFICE.

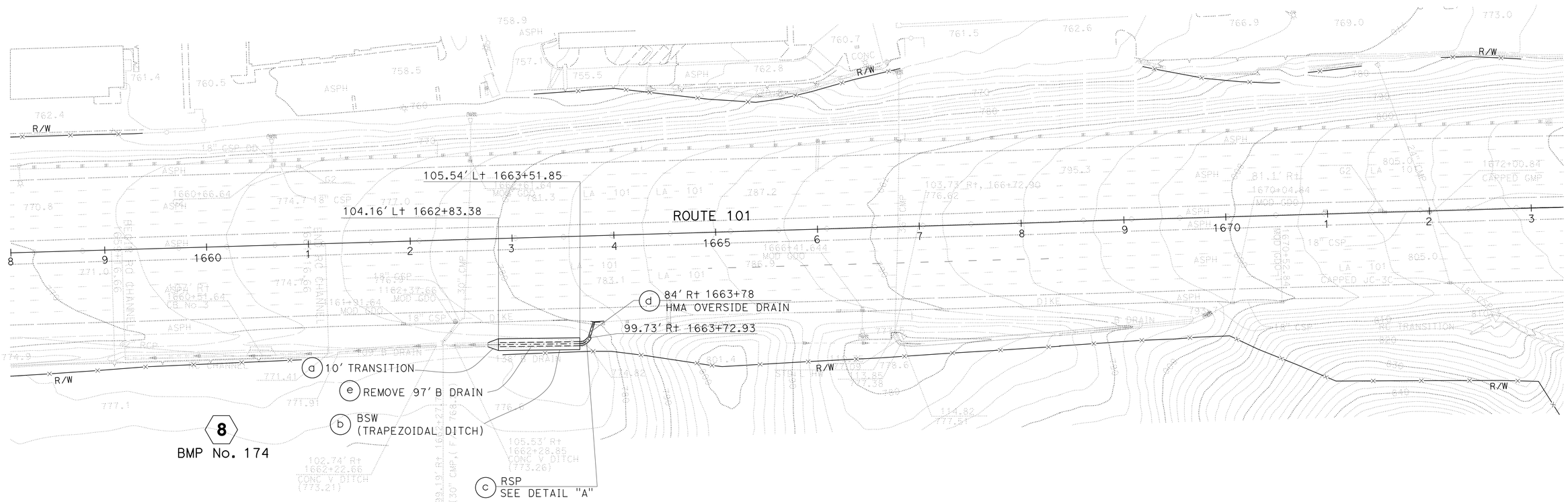

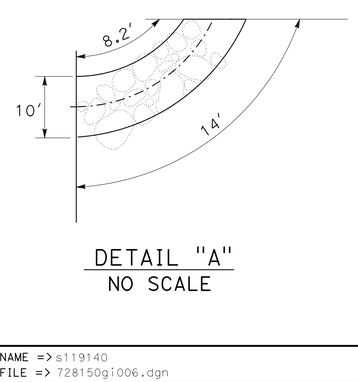

DETAIL "A"
NO SCALE

WATER POLLUTION CONTROL PLAN

SCALE: 1" = 50'

W-6

APPROVED FOR WATER POLLUTION CONTROL WORK ONLY

STATE OF CALIFORNIA - DEPARTMENT OF TRANSPORTATION
Caltrans
HYDRAULICS

FUNCTIONAL SUPERVISOR: MARIA QUINONEZ
CALCULATED-DESIGNED BY: TAN HOANG
CHECKED BY: DAVE BHALLA
REVISED BY
DATE REVISED

LAST REVISION 00-00-00
DATE PLOTTED => 01-AUG-2016
TIME PLOTTED => 13:55

BORDER LAST REVISED 7/2/2010
USERNAME => s119140
DGN FILE => 728150gi006.dgn
RELATIVE BORDER SCALE IS IN INCHES 0 1 2 3
UNIT 1837
PROJECT NUMBER & PHASE 07000005521

Dist	COUNTY	ROUTE	POST MILES TOTAL PROJECT	SHEET No.	TOTAL SHEETS
07	LA,Ven	101	29.3/38.2, 0.0/1.2	52	265

REGISTERED CIVIL ENGINEER 4-20-16 DATE

4-25-16
PLANS APPROVAL DATE

REGISTERED PROFESSIONAL ENGINEER DAVE BHALLA No. 34350 Exp. 9-30-17 CIVIL STATE OF CALIFORNIA

THE STATE OF CALIFORNIA OR ITS OFFICERS OR AGENTS SHALL NOT BE RESPONSIBLE FOR THE ACCURACY OR COMPLETENESS OF SCANNED COPIES OF THIS PLAN SHEET.

NOTE:

FOR ACCURATE RIGHT OF WAY DATA, CONTACT RIGHT OF WAY ENGINEERING AT THE DISTRICT OFFICE.

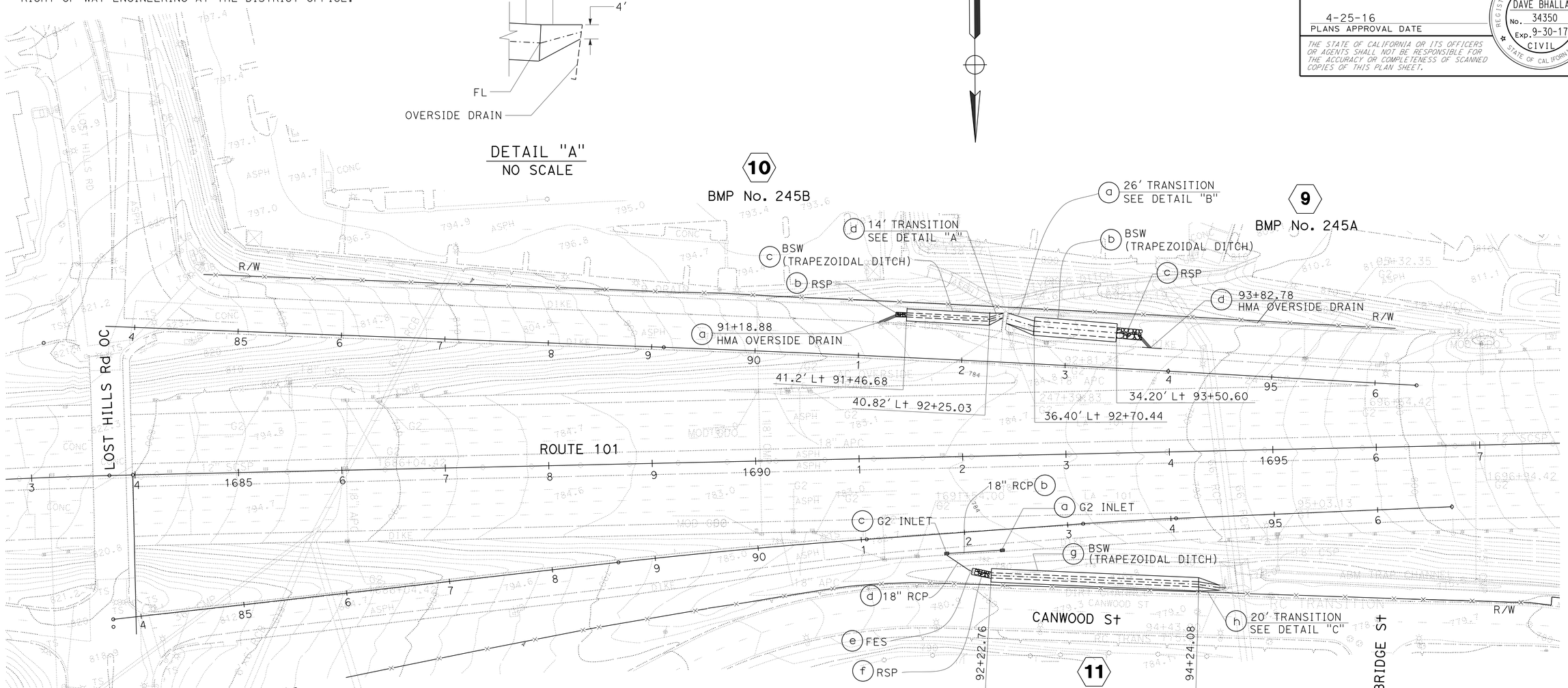

WATER POLLUTION CONTROL PLAN

SCALE: 1" = 50'

W-7

APPROVED FOR WATER POLLUTION CONTROL WORK ONLY

STATE OF CALIFORNIA - DEPARTMENT OF TRANSPORTATION
Caltrans
HYDRAULICS

FUNCTIONAL SUPERVISOR: MARIA QUINONEZ

CALCULATED-DESIGNED BY: TAN HOANG
CHECKED BY: DAVE BHALLA

REVISED BY | DATE REVISED

LAST REVISION 00-00-00 | DATE PLOTTED => 01-AUG-2016 | TIME PLOTTED => 13:55

Dist	COUNTY	ROUTE	POST MILES TOTAL PROJECT	SHEET No.	TOTAL SHEETS
07	LA,Ven	101	29.3/38.2, 0.0/1.2	53	265

REGISTERED CIVIL ENGINEER 4-20-16 DATE

4-25-16
PLANS APPROVAL DATE

REGISTERED PROFESSIONAL ENGINEER
DAVE BHALLA
No. 34350
Exp. 9-30-17
CIVIL
STATE OF CALIFORNIA

THE STATE OF CALIFORNIA OR ITS OFFICERS OR AGENTS SHALL NOT BE RESPONSIBLE FOR THE ACCURACY OR COMPLETENESS OF SCANNED COPIES OF THIS PLAN SHEET.

NOTE:

FOR ACCURATE RIGHT OF WAY DATA, CONTACT RIGHT OF WAY ENGINEERING AT THE DISTRICT OFFICE.

WE1: 134.80′ Lt 1758+96.90 ℄ Fwy
WE3: 136.45′ Lt 1759+53.88 ℄ Fwy
WE4: 109.46′ Lt 1759+54.66 ℄ Fwy
WE6: 107.81′ Lt 1758+97.69 ℄ Fwy

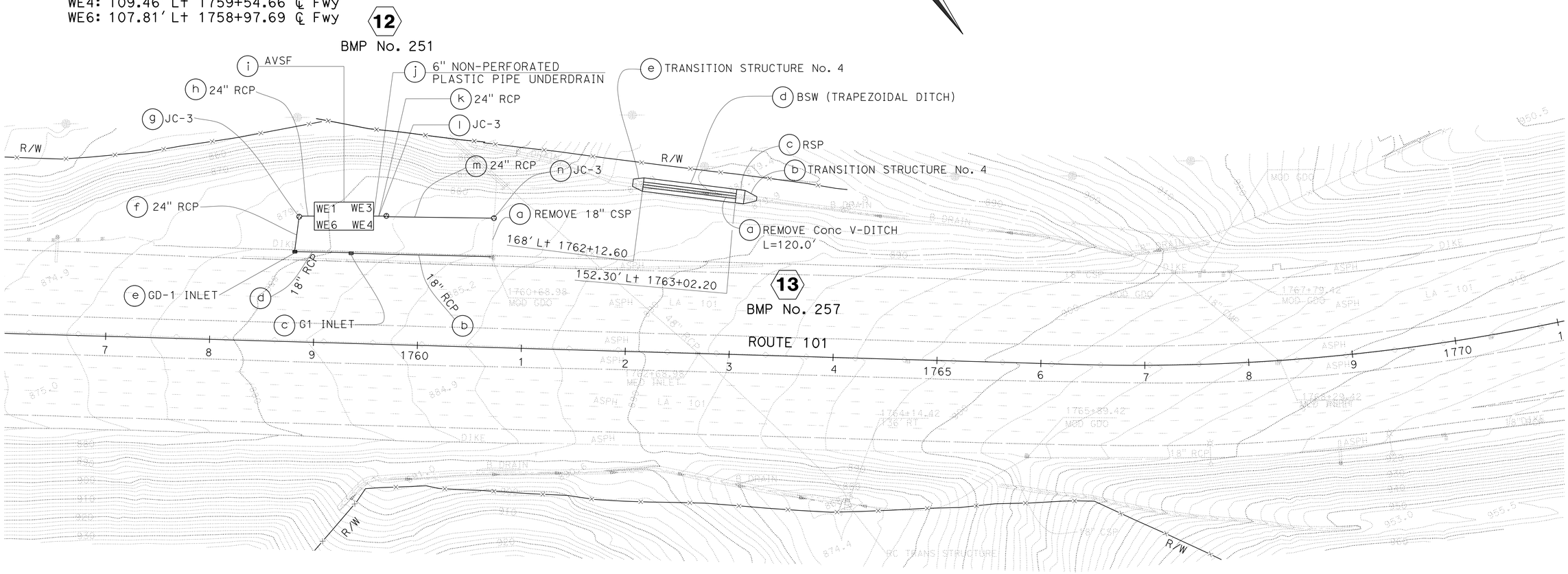

WATER POLLUTION CONTROL PLAN

SCALE: 1" = 50′

W-8

APPROVED FOR WATER POLLUTION CONTROL WORK ONLY

STATE OF CALIFORNIA - DEPARTMENT OF TRANSPORTATION
Caltrans
HYDRAULICS

FUNCTIONAL SUPERVISOR: MARIA QUINONEZ
CALCULATED-DESIGNED BY: TAN HOANG
CHECKED BY: DAVE BHALLA
REVISED BY
DATE REVISED

LAST REVISION 00-00-00
DATE PLOTTED => 01-AUG-2016
TIME PLOTTED => 13:55

Dist	COUNTY	ROUTE	POST MILES TOTAL PROJECT	SHEET No.	TOTAL SHEETS
07	LA,Ven	101	29.3/38.2, 0.0/1.2	54	265

REGISTERED CIVIL ENGINEER 4-20-16 DATE

4-25-16
PLANS APPROVAL DATE

REGISTERED PROFESSIONAL ENGINEER
DAVE BHALLA
No. 34350
Exp. 9-30-17
CIVIL
STATE OF CALIFORNIA

THE STATE OF CALIFORNIA OR ITS OFFICERS OR AGENTS SHALL NOT BE RESPONSIBLE FOR THE ACCURACY OR COMPLETENESS OF SCANNED COPIES OF THIS PLAN SHEET.

NOTE:

FOR ACCURATE RIGHT OF WAY DATA, CONTACT RIGHT OF WAY ENGINEERING AT THE DISTRICT OFFICE.

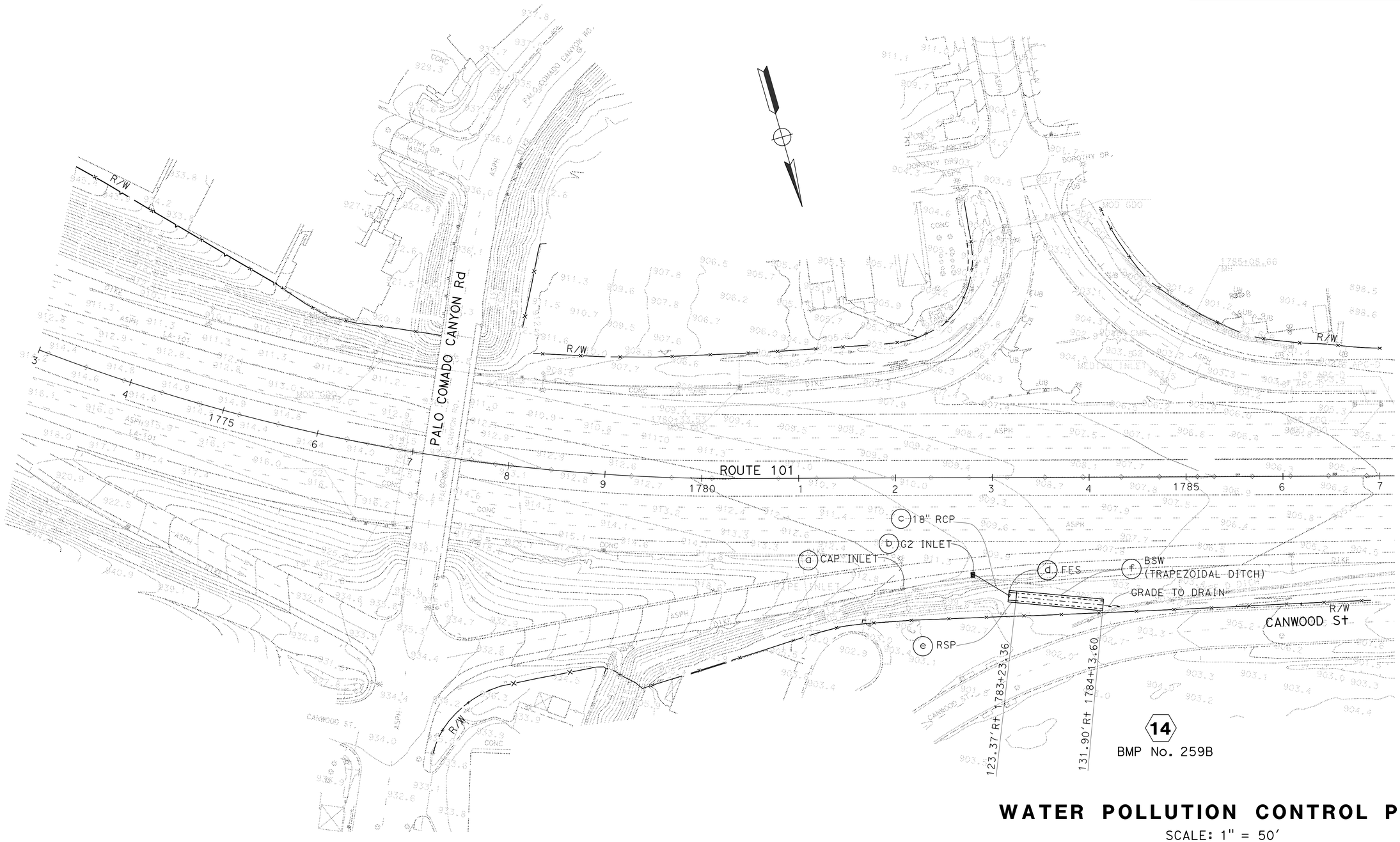

WATER POLLUTION CONTROL PLAN

SCALE: 1" = 50'

W-9

APPROVED FOR WATER POLLUTION CONTROL WORK ONLY

STATE OF CALIFORNIA - DEPARTMENT OF TRANSPORTATION
Caltrans
HYDRAULICS

FUNCTIONAL SUPERVISOR: MARIA QUINONEZ
CALCULATED-DESIGNED BY: TAN HOANG
CHECKED BY: DAVE BHALLA
REVISED BY
DATE REVISED

LAST REVISION 00-00-00
DATE PLOTTED => 01-AUG-2016
TIME PLOTTED => 13:55

Dist	COUNTY	ROUTE	POST MILES TOTAL PROJECT	SHEET No.	TOTAL SHEETS
07	LA,Ven	101	29.3/38.2, 0.0/1.2	55	265

REGISTERED CIVIL ENGINEER 4-20-16 DATE

4-25-16
PLANS APPROVAL DATE

REGISTERED PROFESSIONAL ENGINEER DAVE BHALLA No. 34350 Exp. 9-30-17 CIVIL STATE OF CALIFORNIA

THE STATE OF CALIFORNIA OR ITS OFFICERS OR AGENTS SHALL NOT BE RESPONSIBLE FOR THE ACCURACY OR COMPLETENESS OF SCANNED COPIES OF THIS PLAN SHEET.

NOTE:

FOR ACCURATE RIGHT OF WAY DATA, CONTACT RIGHT OF WAY ENGINEERING AT THE DISTRICT OFFICE.

WE1: 95.24′ Lt 1884+68.91 ℄ Fwy
WE3: 96.11′ Lt 1883+83.27 ℄ Fwy
WE4: 114.11′ Lt 1883+83.34 ℄ Fwy
WE6: 113.24′ Lt 1884+69.25 ℄ Fwy

STORM DRAIN CURVE DATA 2

L= 18′
R= 28.5′
Δ= 37°11′.31"
T= 9.6′

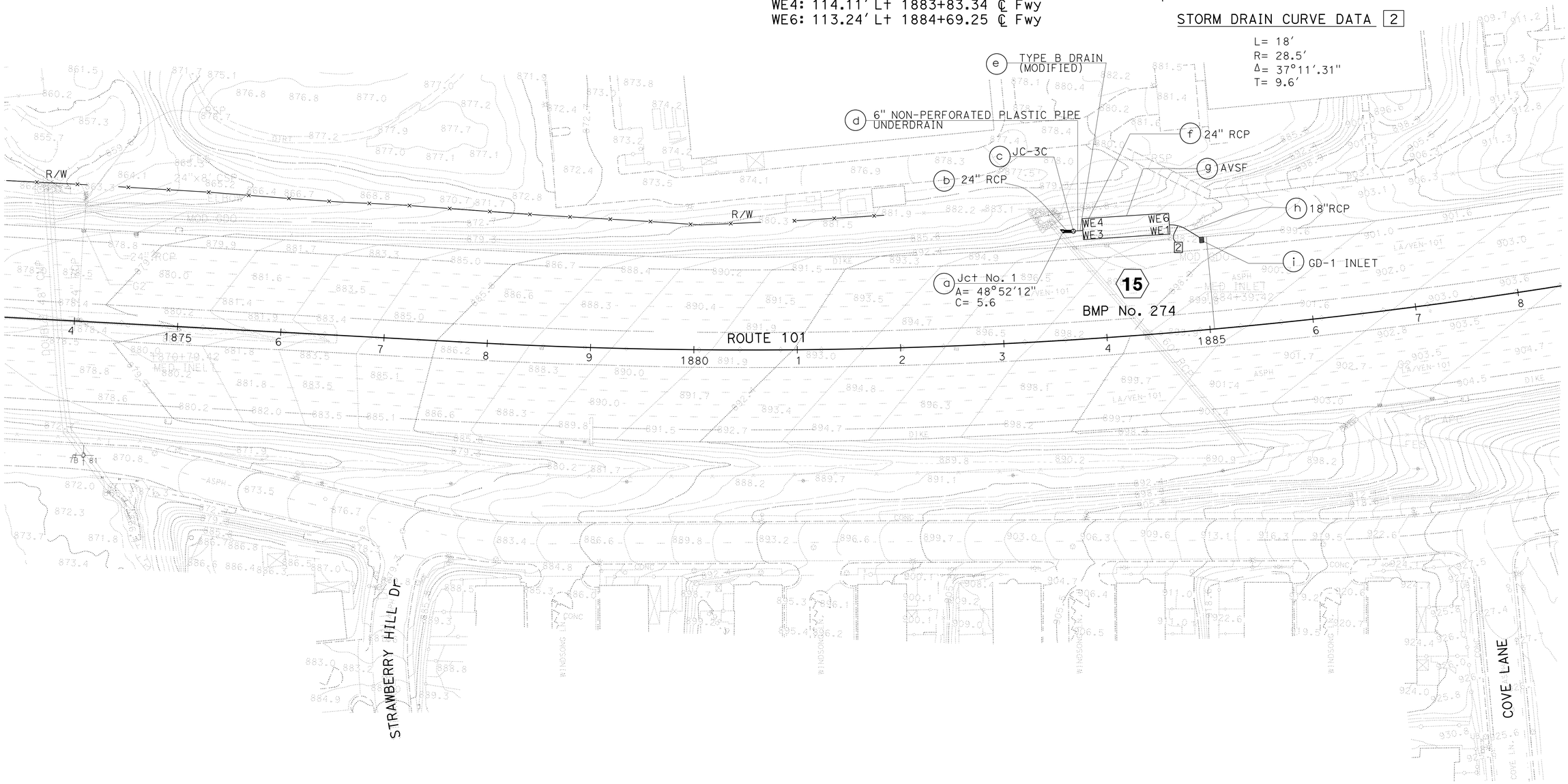

WATER POLLUTION CONTROL PLAN

SCALE: 1" = 50′

W-10

APPROVED FOR WATER POLLUTION CONTROL WORK ONLY

STATE OF CALIFORNIA - DEPARTMENT OF TRANSPORTATION
Caltrans
HYDRAULICS

FUNCTIONAL SUPERVISOR: MARIA QUINONEZ
CALCULATED-DESIGNED BY: TAN HOANG
CHECKED BY: DAVE BHALLA
REVISED BY
DATE REVISED

LAST REVISION 00-00-00
DATE PLOTTED => 01-AUG-2016
TIME PLOTTED => 13:55

Dist	COUNTY	ROUTE	POST MILES TOTAL PROJECT	SHEET No.	TOTAL SHEETS
07	LA,Ven	101	29.3/38.2, 0.0/1.2	56	265

REGISTERED CIVIL ENGINEER 4-20-16 DATE

4-25-16
PLANS APPROVAL DATE

REGISTERED PROFESSIONAL ENGINEER DAVE BHALLA No. 34350 Exp. 9-30-17 CIVIL STATE OF CALIFORNIA

THE STATE OF CALIFORNIA OR ITS OFFICERS OR AGENTS SHALL NOT BE RESPONSIBLE FOR THE ACCURACY OR COMPLETENESS OF SCANNED COPIES OF THIS PLAN SHEET.

NOTE:

FOR ACCURATE RIGHT OF WAY DATA, CONTACT RIGHT OF WAY ENGINEERING AT THE DISTRICT OFFICE.

WE1: 94.63′ Lt 1899+93.14 ℄ Fwy
WE3: 97.36′ Lt 1898+69.17 ℄ Fwy
WE4: 121.36′ Lt 1898+69.70 ℄ Fwy
WE6: 118.63′ Lt 1899+93.67 ℄ Fwy

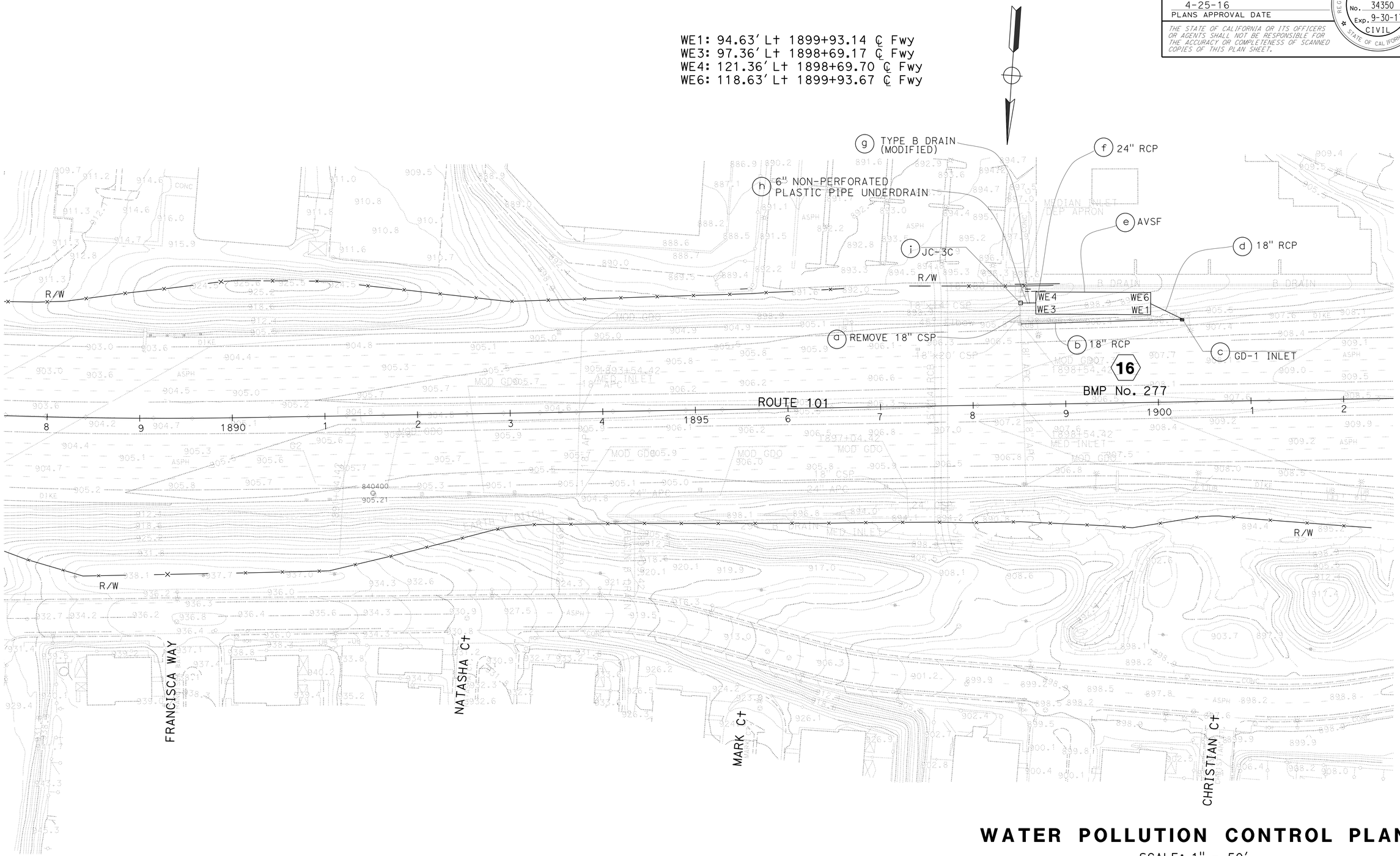

WATER POLLUTION CONTROL PLAN

SCALE: 1" = 50′

W-11

APPROVED FOR WATER POLLUTION CONTROL WORK ONLY

STATE OF CALIFORNIA - DEPARTMENT OF TRANSPORTATION
Caltrans
HYDRAULICS

FUNCTIONAL SUPERVISOR: MARIA QUINONEZ
CALCULATED-DESIGNED BY: TAN HOANG
CHECKED BY: DAVE BHALLA
REVISED BY
DATE REVISED

LAST REVISION 00-00-00
DATE PLOTTED => 01-AUG-2016
TIME PLOTTED => 13:55

Dist	COUNTY	ROUTE	POST MILES TOTAL PROJECT	SHEET No.	TOTAL SHEETS
07	LA,Ven	101	29.3/38.2, 0.0/1.2	57	265

REGISTERED CIVIL ENGINEER 4-20-16 DATE

4-25-16
PLANS APPROVAL DATE

REGISTERED PROFESSIONAL ENGINEER
DAVE BHALLA
No. 34350
Exp. 9-30-17
CIVIL
STATE OF CALIFORNIA

THE STATE OF CALIFORNIA OR ITS OFFICERS OR AGENTS SHALL NOT BE RESPONSIBLE FOR THE ACCURACY OR COMPLETENESS OF SCANNED COPIES OF THIS PLAN SHEET.

NOTE:

FOR ACCURATE RIGHT OF WAY DATA, CONTACT RIGHT OF WAY ENGINEERING AT THE DISTRICT OFFICE.

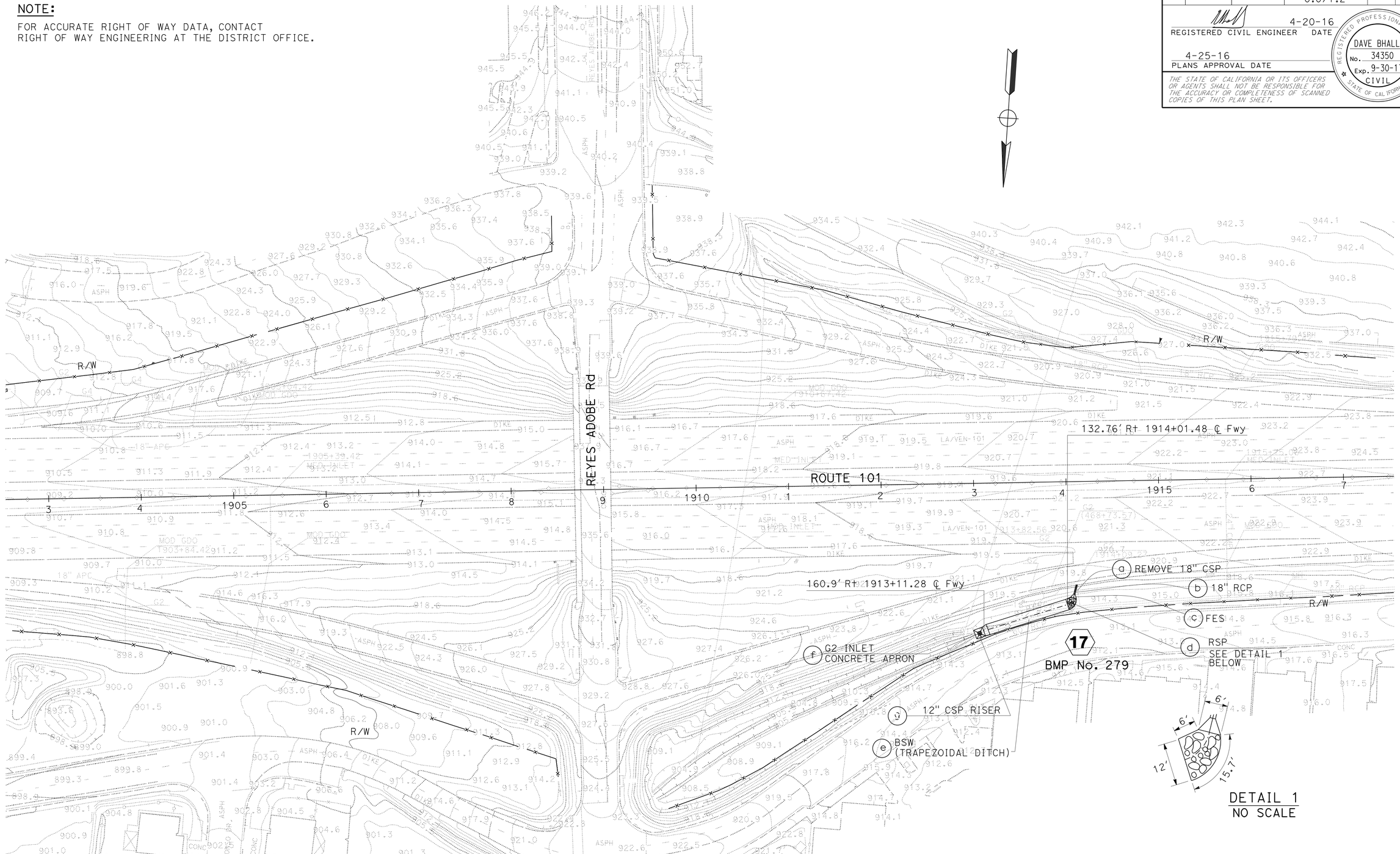

WATER POLLUTION CONTROL PLAN

SCALE: 1" = 50'

W-12

APPROVED FOR WATER POLLUTION CONTROL WORK ONLY

STATE OF CALIFORNIA - DEPARTMENT OF TRANSPORTATION
Caltrans
HYDRAULICS
FUNCTIONAL SUPERVISOR: MARIA QUINONEZ
CALCULATED-DESIGNED BY: TAN HOANG
CHECKED BY: DAVE BHALLA
REVISED BY
DATE REVISED

LAST REVISION 00-00-00
DATE PLOTTED => 01-AUG-2016
TIME PLOTTED => 13:55

Dist	COUNTY	ROUTE	POST MILES TOTAL PROJECT	SHEET No.	TOTAL SHEETS
07	LA,Ven	101	29.3/38.2, 0.0/1.2	58	265

REGISTERED CIVIL ENGINEER 4-20-16 DATE

4-25-16
PLANS APPROVAL DATE

REGISTERED PROFESSIONAL ENGINEER
DAVE BHALLA
No. 34350
Exp. 9-30-17
CIVIL
STATE OF CALIFORNIA

THE STATE OF CALIFORNIA OR ITS OFFICERS OR AGENTS SHALL NOT BE RESPONSIBLE FOR THE ACCURACY OR COMPLETENESS OF SCANNED COPIES OF THIS PLAN SHEET.

NOTE:

FOR ACCURATE RIGHT OF WAY DATA, CONTACT RIGHT OF WAY ENGINEERING AT THE DISTRICT OFFICE.

WATER POLLUTION CONTROL PLAN

SCALE: 1" = 50'

W-13

APPROVED FOR WATER POLLUTION CONTROL WORK ONLY

REVISED BY | DATE REVISED

TAN HOANG | DAVE BHALLA

CALCULATED-DESIGNED BY | CHECKED BY

FUNCTIONAL SUPERVISOR: MARIA QUINONEZ

STATE OF CALIFORNIA - DEPARTMENT OF TRANSPORTATION

Caltrans

HYDRAULICS

LAST REVISION 00-00-00 | DATE PLOTTED => 01-AUG-2016 | TIME PLOTTED => 13:56

Dist	COUNTY	ROUTE	POST MILES TOTAL PROJECT	SHEET No.	TOTAL SHEETS
07	LA,Ven	101	29.3/38.2, 0.0/1.2	59	265

REGISTERED CIVIL ENGINEER 4-20-16 DATE

4-25-16
PLANS APPROVAL DATE

REGISTERED PROFESSIONAL ENGINEER
DAVE BHALLA
No. 34350
Exp. 9-30-17
CIVIL
STATE OF CALIFORNIA

THE STATE OF CALIFORNIA OR ITS OFFICERS OR AGENTS SHALL NOT BE RESPONSIBLE FOR THE ACCURACY OR COMPLETENESS OF SCANNED COPIES OF THIS PLAN SHEET.

NOTE:

FOR ACCURATE RIGHT OF WAY DATA, CONTACT RIGHT OF WAY ENGINEERING AT THE DISTRICT OFFICE.

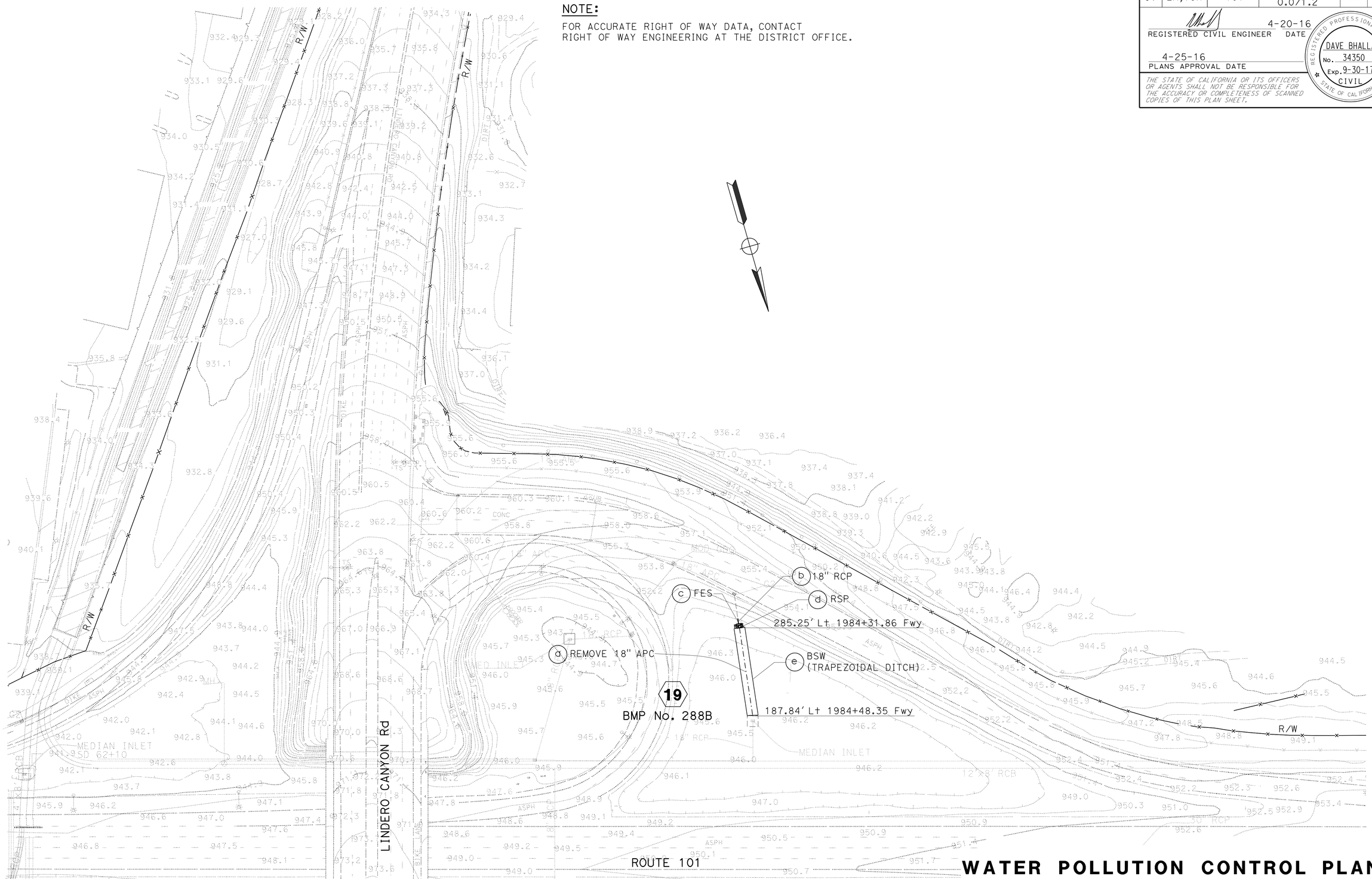

WATER POLLUTION CONTROL PLAN

SCALE: 1" = 50'

W-14

APPROVED FOR WATER POLLUTION CONTROL WORK ONLY

STATE OF CALIFORNIA - DEPARTMENT OF TRANSPORTATION

Caltrans

HYDRAULICS

FUNCTIONAL SUPERVISOR: MARIA QUINONEZ

CALCULATED-DESIGNED BY: TAN HOANG

CHECKED BY: DAVE BHALLA

REVISED BY

DATE REVISED

LAST REVISION 00-00-00

DATE PLOTTED => 01-AUG-2016

TIME PLOTTED => 13:56

Dist	COUNTY	ROUTE	POST MILES TOTAL PROJECT	SHEET No.	TOTAL SHEETS
07	LA,Ven	101	29.3/38.2, 0.0/1.2	60	265

REGISTERED CIVIL ENGINEER 4-20-16 DATE

4-25-16
PLANS APPROVAL DATE

REGISTERED PROFESSIONAL ENGINEER
DAVE BHALLA
No. 34350
Exp. 9-30-17
CIVIL
STATE OF CALIFORNIA

THE STATE OF CALIFORNIA OR ITS OFFICERS OR AGENTS SHALL NOT BE RESPONSIBLE FOR THE ACCURACY OR COMPLETENESS OF SCANNED COPIES OF THIS PLAN SHEET.

NOTE:

FOR ACCURATE RIGHT OF WAY DATA, CONTACT RIGHT OF WAY ENGINEERING AT THE DISTRICT OFFICE.

WE1: 94.93' Lt 2003+58.36 ℄ Fwy
WE3: 94.89' Lt 2002+74.36 ℄ Fwy
WE4: 112.89' Lt 2002+74.35 ℄ Fwy
WE6: 112.93' Lt 2003+58.35 ℄ Fwy

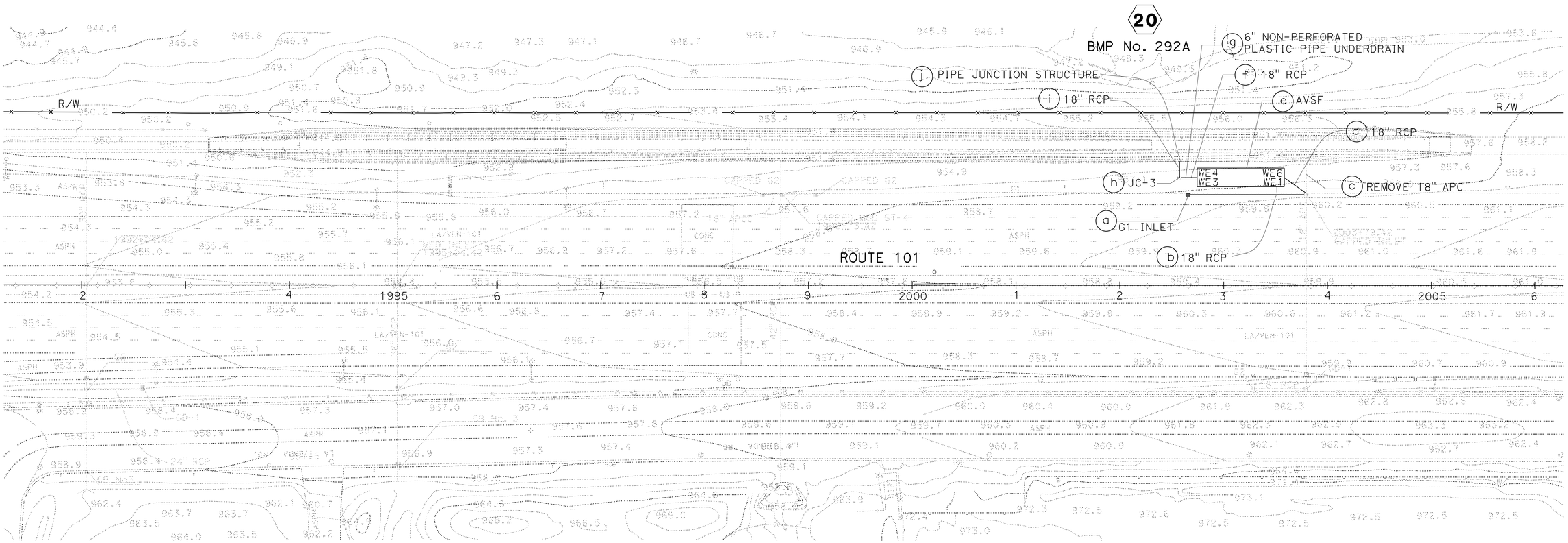

WATER POLLUTION CONTROL PLAN

SCALE: 1" = 50'

APPROVED FOR WATER POLLUTION CONTROL WORK ONLY

W-15

STATE OF CALIFORNIA - DEPARTMENT OF TRANSPORTATION
Caltrans
HYDRAULICS

FUNCTIONAL SUPERVISOR: MARIA QUINONEZ
CALCULATED-DESIGNED BY: TAN HOANG
CHECKED BY: DAVE BHALLA
REVISED BY
DATE REVISED

LAST REVISION 00-00-00
DATE PLOTTED => 01-AUG-2016
TIME PLOTTED => 13:56

Dist	COUNTY	ROUTE	POST MILES TOTAL PROJECT	SHEET No.	TOTAL SHEETS
07	LA,Ven	101	29.3/38.2, 0.0/1.2	61	265

REGISTERED CIVIL ENGINEER 4-20-16 DATE

4-25-16
PLANS APPROVAL DATE

REGISTERED PROFESSIONAL ENGINEER
DAVE BHALLA
No. 34350
Exp. 9-30-17
CIVIL
STATE OF CALIFORNIA

THE STATE OF CALIFORNIA OR ITS OFFICERS OR AGENTS SHALL NOT BE RESPONSIBLE FOR THE ACCURACY OR COMPLETENESS OF SCANNED COPIES OF THIS PLAN SHEET.

NOTE:

FOR ACCURATE RIGHT OF WAY DATA, CONTACT
RIGHT OF WAY ENGINEERING AT THE DISTRICT OFFICE.

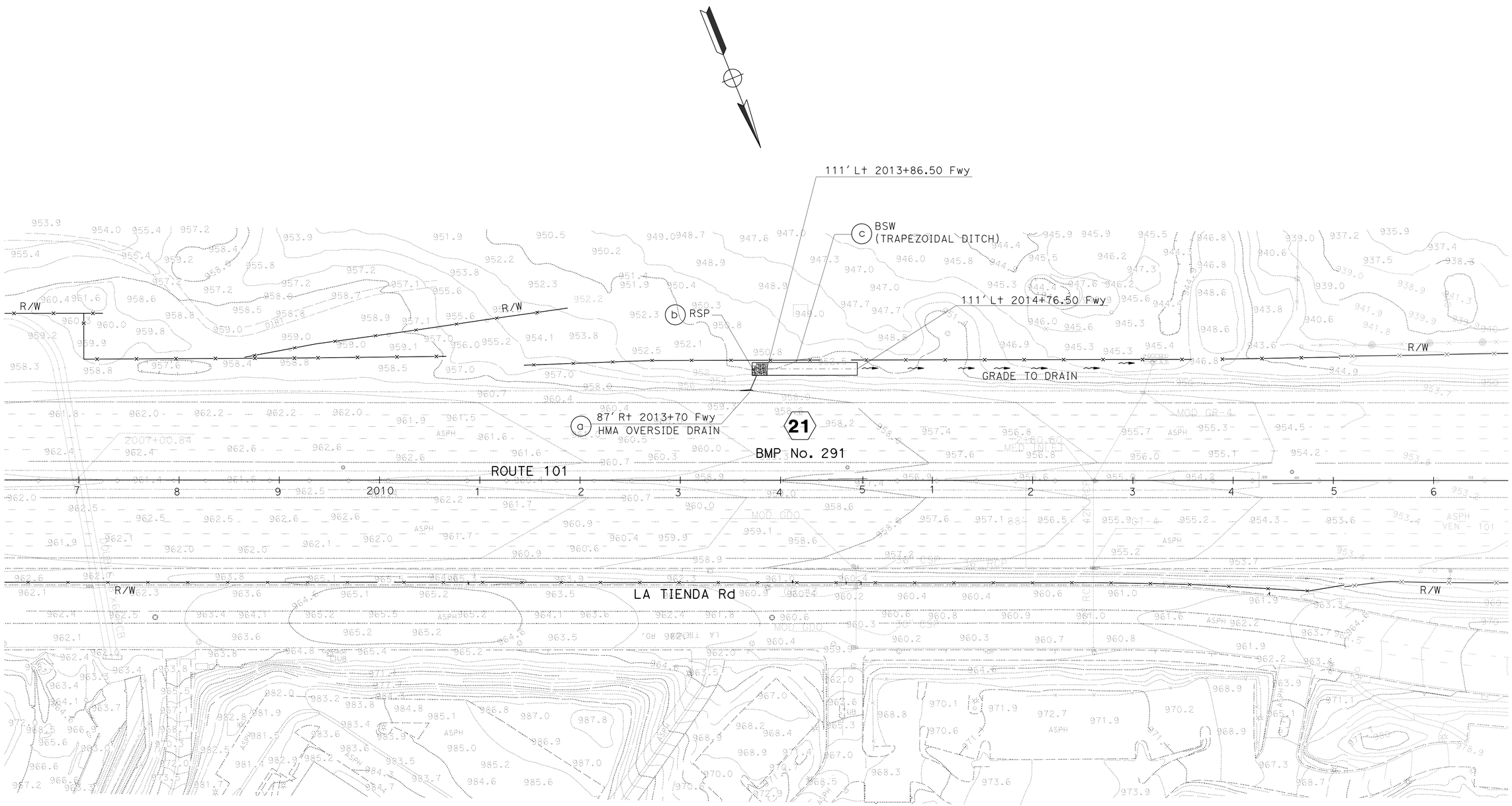

WATER POLLUTION CONTROL PLAN

SCALE: 1" = 50'

W-16

APPROVED FOR WATER POLLUTION CONTROL WORK ONLY

STATE OF CALIFORNIA - DEPARTMENT OF TRANSPORTATION
Caltrans
HYDRAULICS

FUNCTIONAL SUPERVISOR: MARIA QUINONEZ
CALCULATED-DESIGNED BY: TAN HOANG
CHECKED BY: DAVE BHALLA
REVISED BY
DATE REVISED

LAST REVISION 00-00-00
DATE PLOTTED => 01-AUG-2016
TIME PLOTTED => 13:56

Dist	COUNTY	ROUTE	POST MILES TOTAL PROJECT	SHEET No.	TOTAL SHEETS
07	LA,Ven	101	29.3/38.2, 0.0/1.2	62	265

REGISTERED CIVIL ENGINEER 4-20-16 DATE

4-25-16
PLANS APPROVAL DATE

REGISTERED PROFESSIONAL ENGINEER
DAVE BHALLA
No. 34350
Exp. 9-30-17
CIVIL
STATE OF CALIFORNIA

THE STATE OF CALIFORNIA OR ITS OFFICERS OR AGENTS SHALL NOT BE RESPONSIBLE FOR THE ACCURACY OR COMPLETENESS OF SCANNED COPIES OF THIS PLAN SHEET.

NOTE:

FOR ACCURATE RIGHT OF WAY DATA, CONTACT RIGHT OF WAY ENGINEERING AT THE DISTRICT OFFICE.

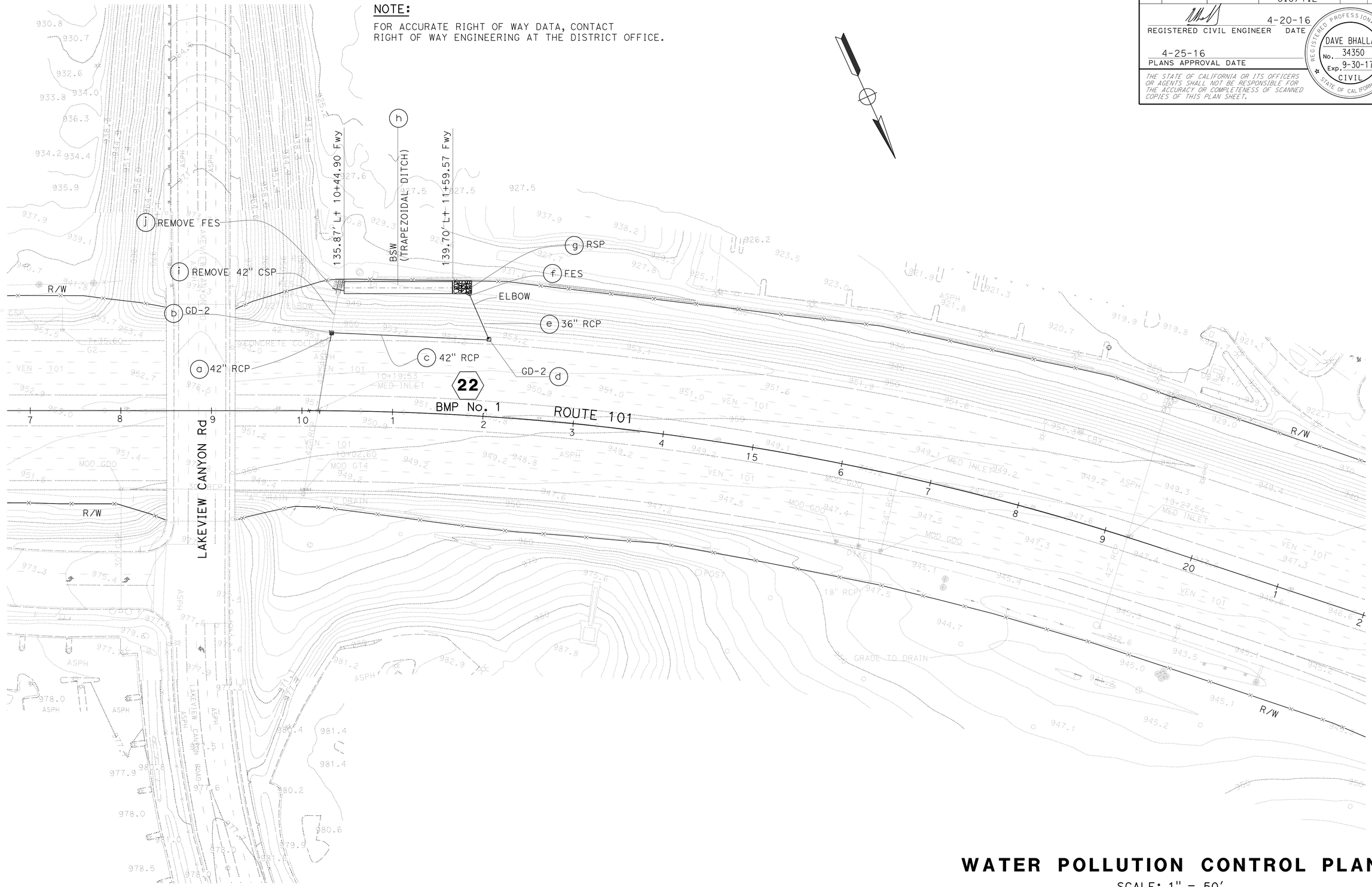

WATER POLLUTION CONTROL PLAN

SCALE: 1" = 50'

W-17

APPROVED FOR WATER POLLUTION CONTROL WORK ONLY

STATE OF CALIFORNIA - DEPARTMENT OF TRANSPORTATION
Caltrans
HYDRAULICS

FUNCTIONAL SUPERVISOR: MARIA QUINONEZ
CALCULATED-DESIGNED BY: TAN HOANG
CHECKED BY: DAVE BHALLA
REVISED BY
DATE REVISED

LAST REVISION 00-00-00
DATE PLOTTED => 01-AUG-2016
TIME PLOTTED => 13:56

Dist	COUNTY	ROUTE	POST MILES TOTAL PROJECT	SHEET No.	TOTAL SHEETS
07	LA,Ven	101	29.3/38.2, 0.0/1.2	63	265

REGISTERED CIVIL ENGINEER 4-20-16 DATE

4-25-16
PLANS APPROVAL DATE

REGISTERED PROFESSIONAL ENGINEER DAVE BHALLA No. 34350 Exp. 9-30-17 CIVIL STATE OF CALIFORNIA

THE STATE OF CALIFORNIA OR ITS OFFICERS OR AGENTS SHALL NOT BE RESPONSIBLE FOR THE ACCURACY OR COMPLETENESS OF SCANNED COPIES OF THIS PLAN SHEET.

NOTE:

FOR ACCURATE RIGHT OF WAY DATA, CONTACT RIGHT OF WAY ENGINEERING AT THE DISTRICT OFFICE.

WE1: 136.14′ Lt 32+01.44 ℄ Fwy
WE3: 143.74′ Lt 33+25.20 ℄ Fwy
WE4: 119.78′ Lt 33+26.99 ℄ Fwy
WE6: 112.17′ Lt 32+02.93 ℄ Fwy

STORM DRAIN CURVE DATA 1

R = 26.7′
L = 29′
T = 16′
△ = 62°13′52″

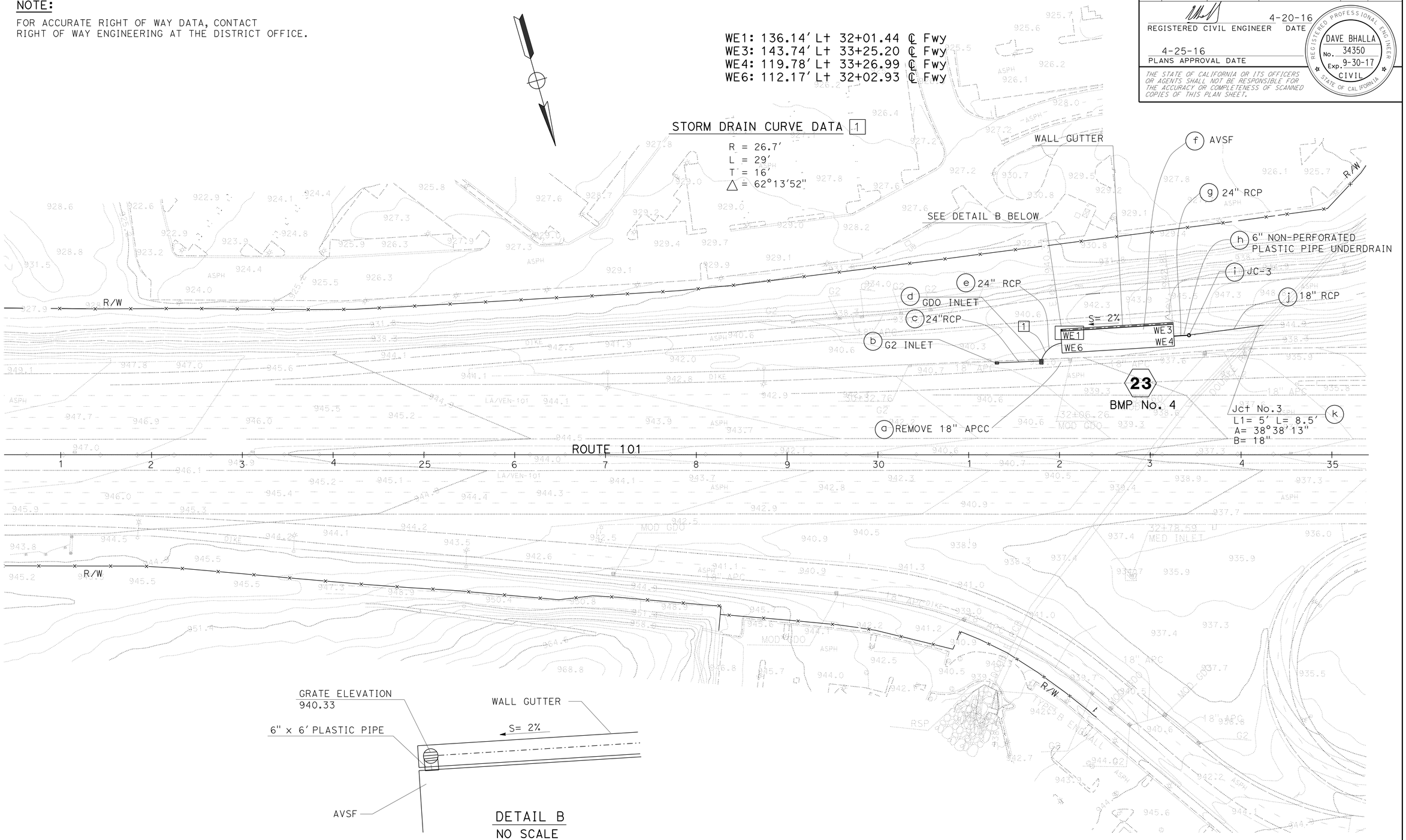

WATER POLLUTION CONTROL PLAN

SCALE: 1" = 50′

APPROVED FOR WATER POLLUTION CONTROL WORK ONLY

W-18

STATE OF CALIFORNIA - DEPARTMENT OF TRANSPORTATION
Caltrans
HYDRAULICS
FUNCTIONAL SUPERVISOR: MARIA QUINONEZ
CALCULATED-DESIGNED BY: TAN HOANG
CHECKED BY: DAVE BHALLA
REVISED BY
DATE REVISED

LAST REVISION 00-00-00
DATE PLOTTED => 01-AUG-2016
TIME PLOTTED => 13:56

Dist	COUNTY	ROUTE	POST MILES TOTAL PROJECT	SHEET No.	TOTAL SHEETS
07	LA,Ven	101	29.3/38.2, 0.0/1.2	64	265

REGISTERED CIVIL ENGINEER 4-20-16 DATE

4-25-16
PLANS APPROVAL DATE

REGISTERED PROFESSIONAL ENGINEER
DAVE BHALLA
No. 34350
Exp. 9-30-17
CIVIL
STATE OF CALIFORNIA

THE STATE OF CALIFORNIA OR ITS OFFICERS OR AGENTS SHALL NOT BE RESPONSIBLE FOR THE ACCURACY OR COMPLETENESS OF SCANNED COPIES OF THIS PLAN SHEET.

NOTE:

FOR ACCURATE RIGHT OF WAY DATA, CONTACT RIGHT OF WAY ENGINEERING AT THE DISTRICT OFFICE.

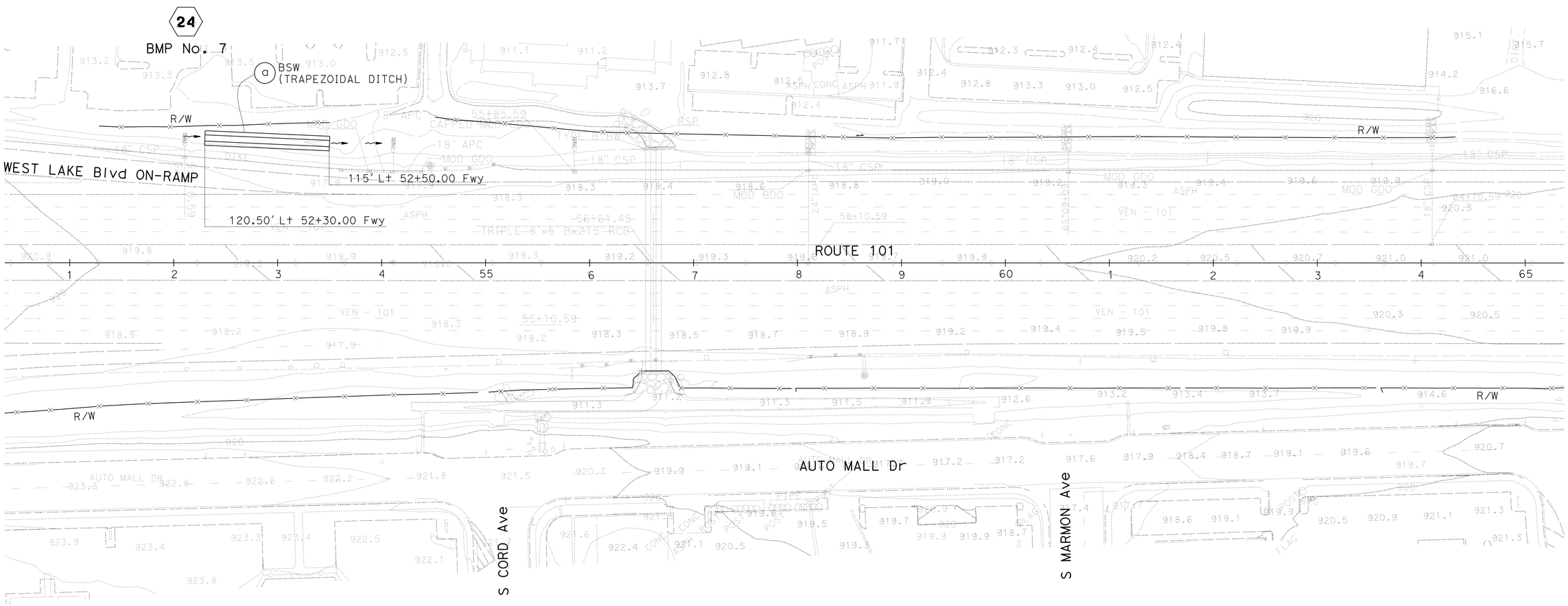

WATER POLLUTION CONTROL PLAN

SCALE: 1" = 50'

W-19

APPROVED FOR WATER POLLUTION CONTROL WORK ONLY

STATE OF CALIFORNIA - DEPARTMENT OF TRANSPORTATION
Caltrans
HYDRAULICS

FUNCTIONAL SUPERVISOR: MARIA QUINONEZ

CALCULATED-DESIGNED BY: TAN HOANG
CHECKED BY: DAVE BHALLA

REVISED BY | DATE REVISED

LAST REVISION 00-00-00
DATE PLOTTED => 01-AUG-2016
TIME PLOTTED => 13:56

Dist	COUNTY	ROUTE	POST MILES TOTAL PROJECT	SHEET No.	TOTAL SHEETS
07	LA,Ven	101	29.3/38.2, 0.0/1.2	65	265

REGISTERED CIVIL ENGINEER 4-20-16 DATE

4-25-16
PLANS APPROVAL DATE

REGISTERED PROFESSIONAL ENGINEER DAVE BHALLA No. 34350 Exp. 9-30-17 CIVIL STATE OF CALIFORNIA

THE STATE OF CALIFORNIA OR ITS OFFICERS OR AGENTS SHALL NOT BE RESPONSIBLE FOR THE ACCURACY OR COMPLETENESS OF SCANNED COPIES OF THIS PLAN SHEET.

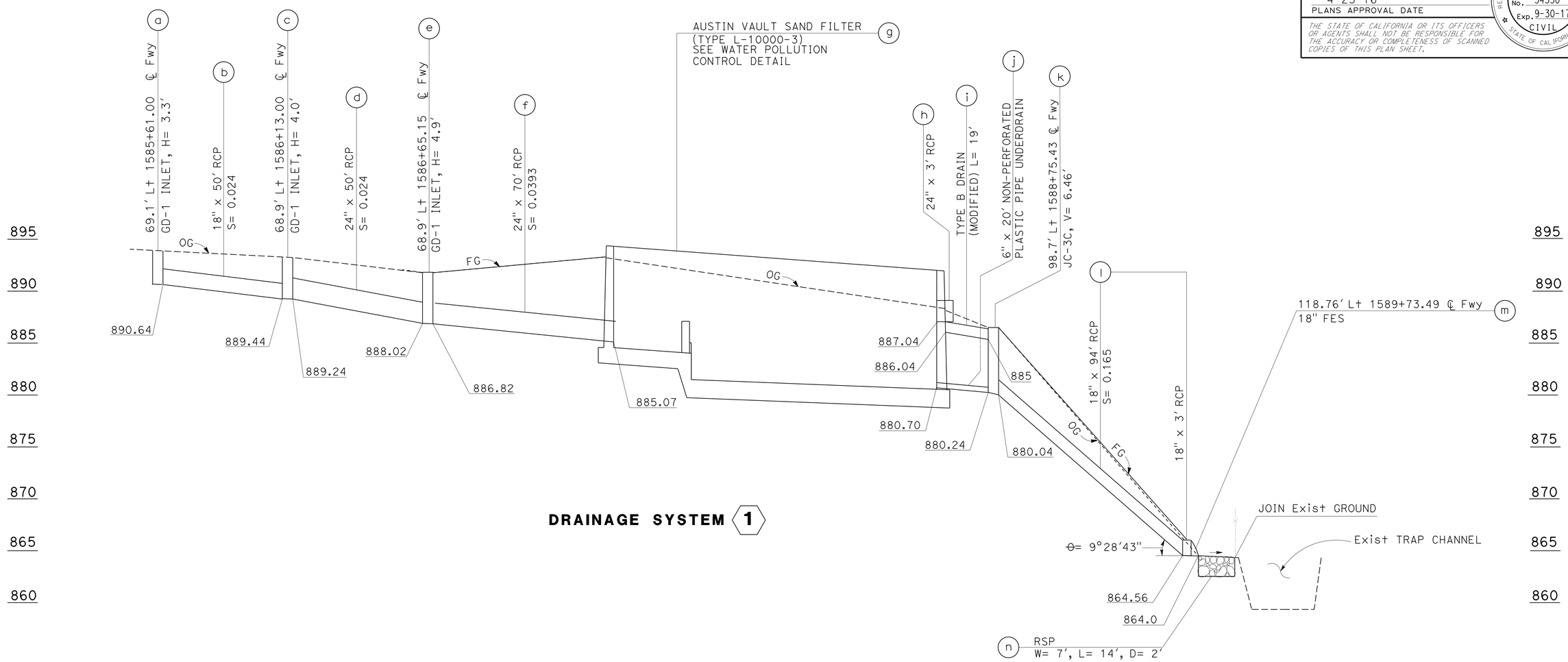

DRAINAGE SYSTEM 1

AVSF L-1000-3

WALL DESIGN TABLE

DESIGN BASIN WALL	DESIGN WALL HEIGHT H	TOP OF WALL ELEVATION						TOP OF FOOTING ELEVATION					
		WE1	WE2	WE3	WE4	WE5	WE6	FE0	FE1	FE2	FE3	FE4	FE5
SEDIMENT	12'	894.35	893.78	892.00	888.50	892.44	893.70	884.61	884.57	883.97	881.47	880.53	880.51
FILL	14'												

WATER POLLUTION CONTROL PROFILES

SCALE: Horiz 1" = 20'
Vert 1" = 5'

WP-1

STATE OF CALIFORNIA - DEPARTMENT OF TRANSPORTATION
Caltrans
HYDRAULICS

FUNCTIONAL SUPERVISOR: MARIA QUINONEZ
CALCULATED-DESIGNED BY: TAN HOANG
CHECKED BY: DAVE BHALLA
REVISED BY
DATE REVISED

LAST REVISION 00-00-00 | DATE PLOTTED => 01-AUG-2016 | TIME PLOTTED => 13:56

Dist	COUNTY	ROUTE	POST MILES TOTAL PROJECT	SHEET No.	TOTAL SHEETS
07	LA,Ven	101	29.3/38.2, 0.0/1.2	66	265

REGISTERED CIVIL ENGINEER 4-20-16 DATE

4-25-16
PLANS APPROVAL DATE

REGISTERED PROFESSIONAL ENGINEER DAVE BHALLA No. 34350 Exp. 9-30-17 CIVIL STATE OF CALIFORNIA

THE STATE OF CALIFORNIA OR ITS OFFICERS OR AGENTS SHALL NOT BE RESPONSIBLE FOR THE ACCURACY OR COMPLETENESS OF SCANNED COPIES OF THIS PLAN SHEET.

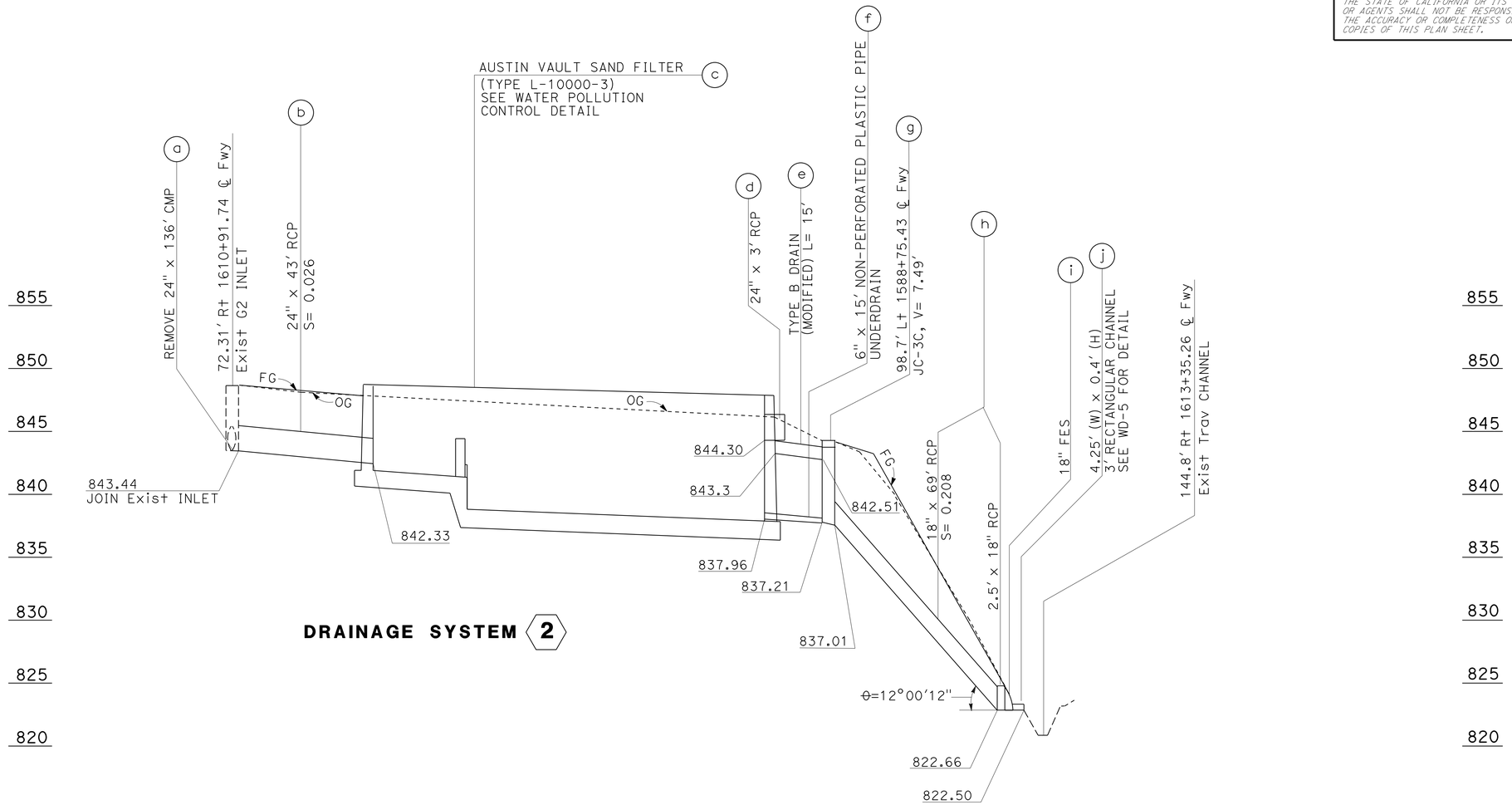

DRAINAGE SYSTEM 2

AVSF L-1000-3

WALL DESIGN TABLE

DESIGN BASIN WALL	DESIGN WALL HEIGHT H	TOP OF WALL ELEVATION						TOP OF FOOTING ELEVATION					
		WE1	WE2	WE3	WE4	WE5	WE6	FE0	FE1	FE2	FE3	FE4	FE5
SEDIMENT	8'	848.65	848.49	848.00	848.00	848.00	848.00	841.87	841.83	841.23	838.73	837.79	837.77
FILL	12'												

WATER POLLUTION CONTROL PROFILES

SCALE: Horiz 1" = 20'
Vert 1" = 5'

WP-2

STATE OF CALIFORNIA - DEPARTMENT OF TRANSPORTATION
Caltrans
HYDRAULICS

FUNCTIONAL SUPERVISOR: MARIA QUINONEZ
CALCULATED-DESIGNED BY: TAN HOANG
CHECKED BY: DAVE BHALLA
REVISED BY
DATE REVISED

LAST REVISION 00-00-00
DATE PLOTTED => 01-AUG-2016
TIME PLOTTED => 13:56

Dist	COUNTY	ROUTE	POST MILES TOTAL PROJECT	SHEET No.	TOTAL SHEETS
07	LA,Ven	101	29.3/38.2, 0.0/1.2	67	265

REGISTERED CIVIL ENGINEER 4-20-16 DATE

4-25-16
PLANS APPROVAL DATE

REGISTERED PROFESSIONAL ENGINEER
DAVE BHALLA
No. 34350
Exp. 9-30-17
CIVIL
STATE OF CALIFORNIA

THE STATE OF CALIFORNIA OR ITS OFFICERS OR AGENTS SHALL NOT BE RESPONSIBLE FOR THE ACCURACY OR COMPLETENESS OF SCANNED COPIES OF THIS PLAN SHEET.

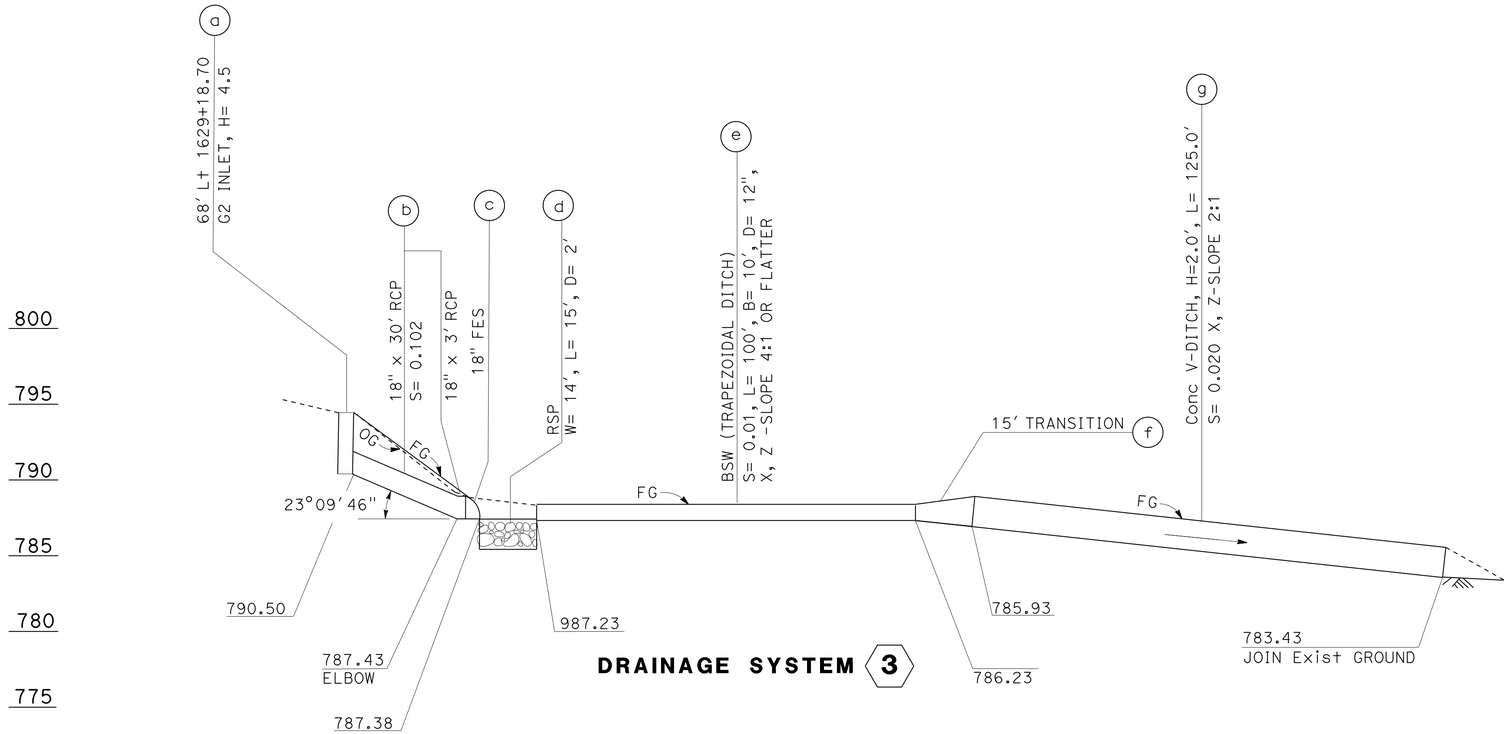

DRAINAGE SYSTEM 3

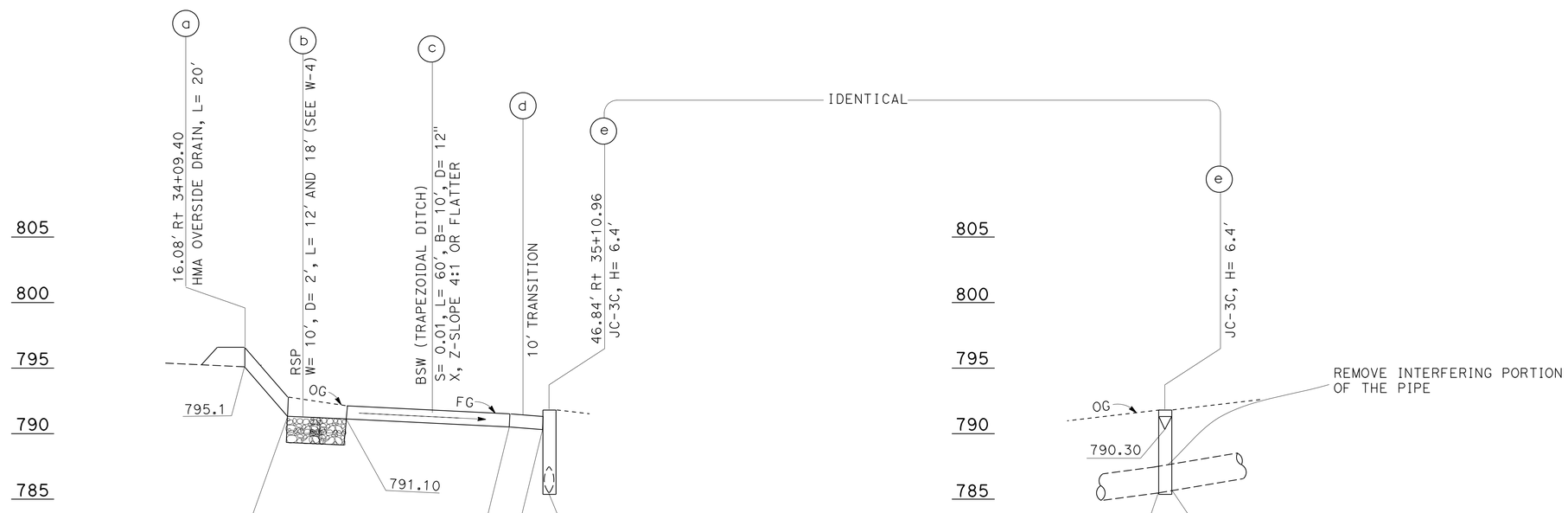

DRAINAGE SYSTEM 4

WATER POLLUTION CONTROL PROFILES

SCALE: Horiz 1" = 20'
Vert 1" = 5'

WP-3

STATE OF CALIFORNIA - DEPARTMENT OF TRANSPORTATION
Caltrans
HYDRAULICS

FUNCTIONAL SUPERVISOR: MARIA QUINONEZ
CALCULATED-DESIGNED BY: TAN HOANG
CHECKED BY: DAVE BHALLA
REVISED BY
DATE REVISED

LAST REVISION 00-00-00
DATE PLOTTED => 01-AUG-2016
TIME PLOTTED => 13:56

Dist	COUNTY	ROUTE	POST MILES TOTAL PROJECT	SHEET No.	TOTAL SHEETS
07	LA,Ven	101	29.3/38.2, 0.0/1.2	68	265

REGISTERED CIVIL ENGINEER 4-20-16 DATE

4-25-16
PLANS APPROVAL DATE

REGISTERED PROFESSIONAL ENGINEER
DAVE BHALLA
No. 34350
Exp. 9-30-17
CIVIL
STATE OF CALIFORNIA

THE STATE OF CALIFORNIA OR ITS OFFICERS OR AGENTS SHALL NOT BE RESPONSIBLE FOR THE ACCURACY OR COMPLETENESS OF SCANNED COPIES OF THIS PLAN SHEET.

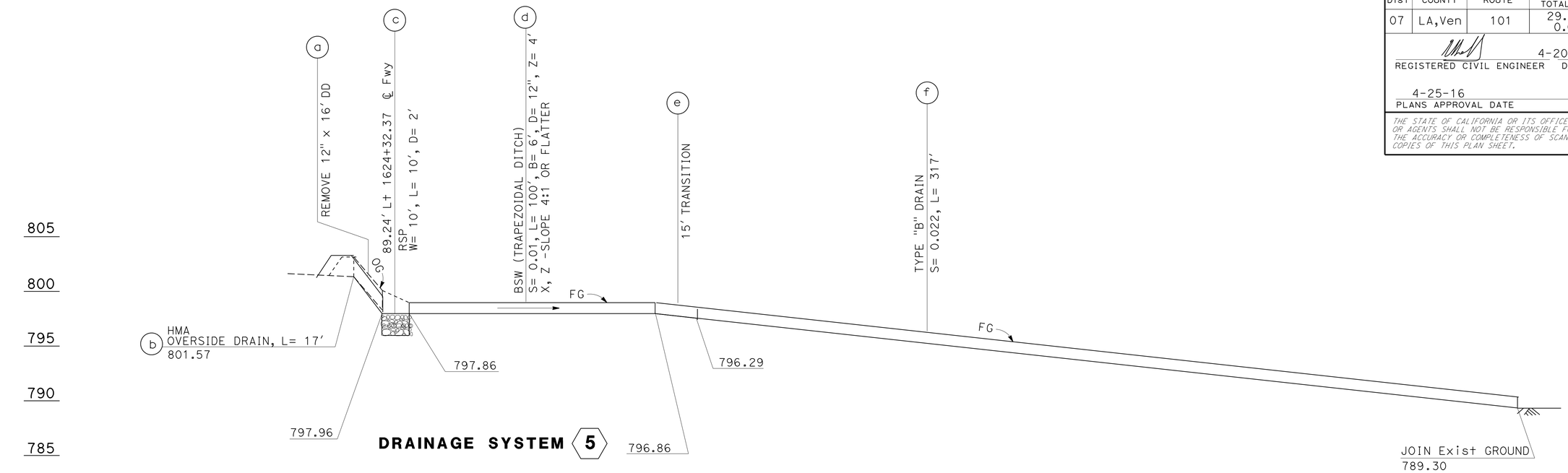

DRAINAGE SYSTEM 5

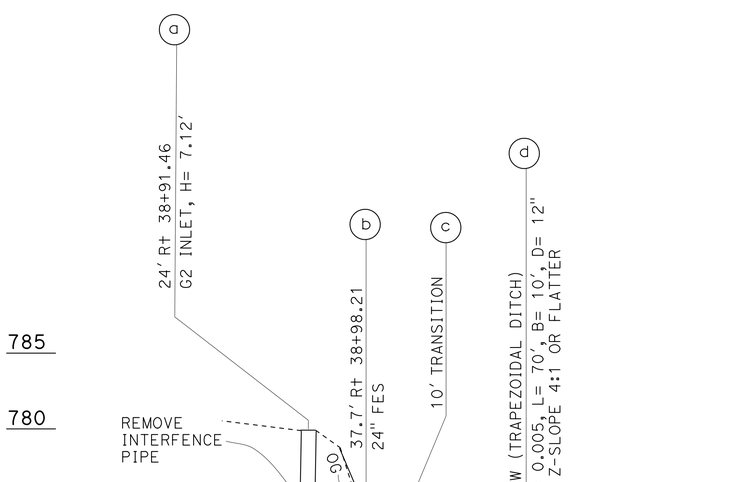

DRAINAGE SYSTEM 6

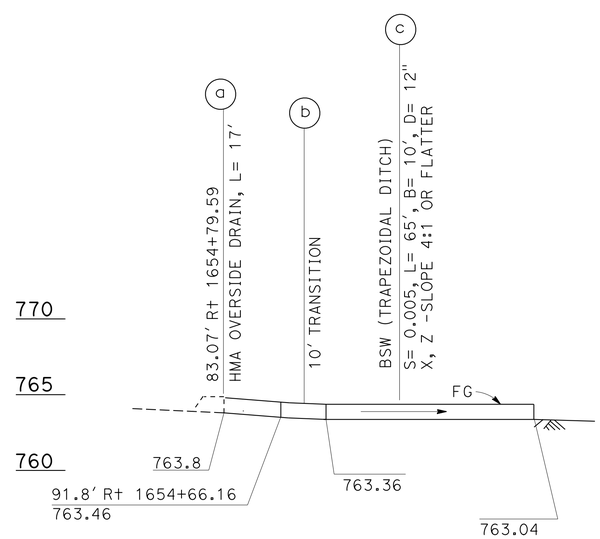

DRAINAGE SYSTEM 7

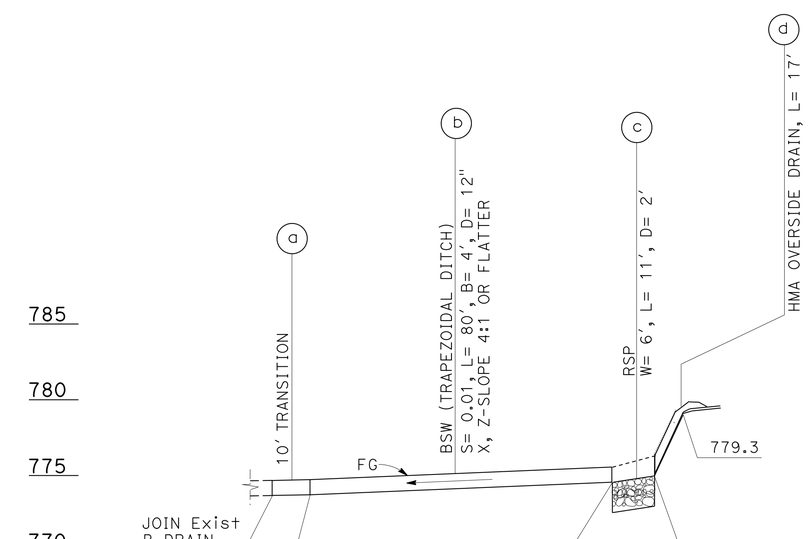

DRAINAGE SYSTEM 8

WATER POLLUTION CONTROL PROFILES

SCALE: Horiz 1" = 20'
Vert 1" = 5'

WP-4

STATE OF CALIFORNIA - DEPARTMENT OF TRANSPORTATION
Caltrans
HYDRAULICS

FUNCTIONAL SUPERVISOR: MARIA QUINONEZ
CALCULATED-DESIGNED BY: TAN HOANG
CHECKED BY: DAVE BHALLA
REVISED BY
DATE REVISED

LAST REVISION 00-00-00
DATE PLOTTED => 01-AUG-2016
TIME PLOTTED => 13:56

Dist	COUNTY	ROUTE	POST MILES TOTAL PROJECT	SHEET No.	TOTAL SHEETS
07	LA,Ven	101	29.3/38.2, 0.0/1.2	69	265

REGISTERED CIVIL ENGINEER 4-20-16 DATE

4-25-16
PLANS APPROVAL DATE

REGISTERED PROFESSIONAL ENGINEER DAVE BHALLA No. 34350 Exp. 9-30-17 CIVIL STATE OF CALIFORNIA

THE STATE OF CALIFORNIA OR ITS OFFICERS OR AGENTS SHALL NOT BE RESPONSIBLE FOR THE ACCURACY OR COMPLETENESS OF SCANNED COPIES OF THIS PLAN SHEET.

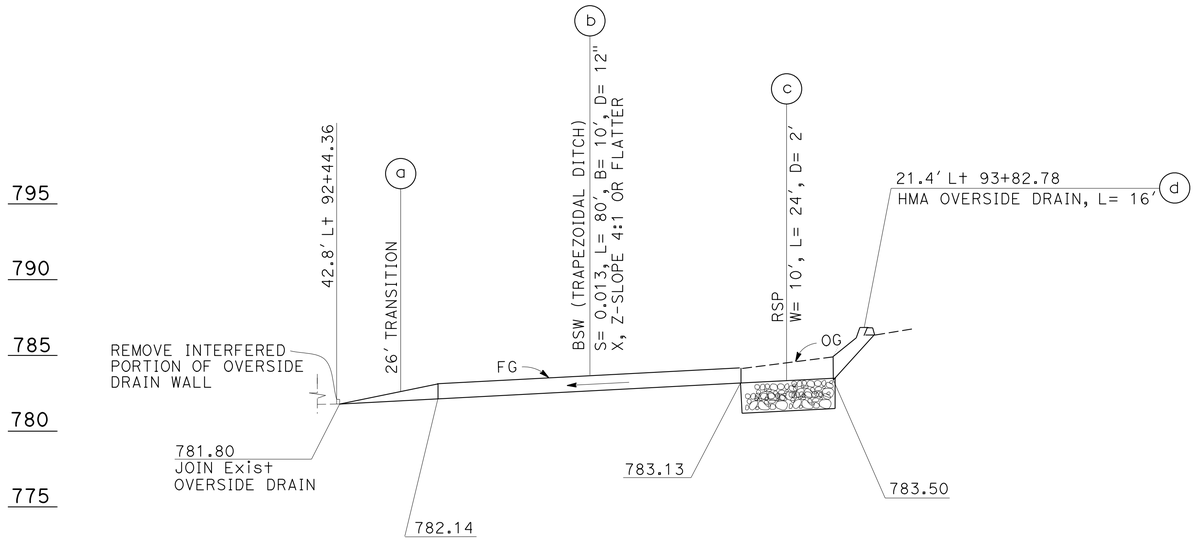

DRAINAGE SYSTEM 9

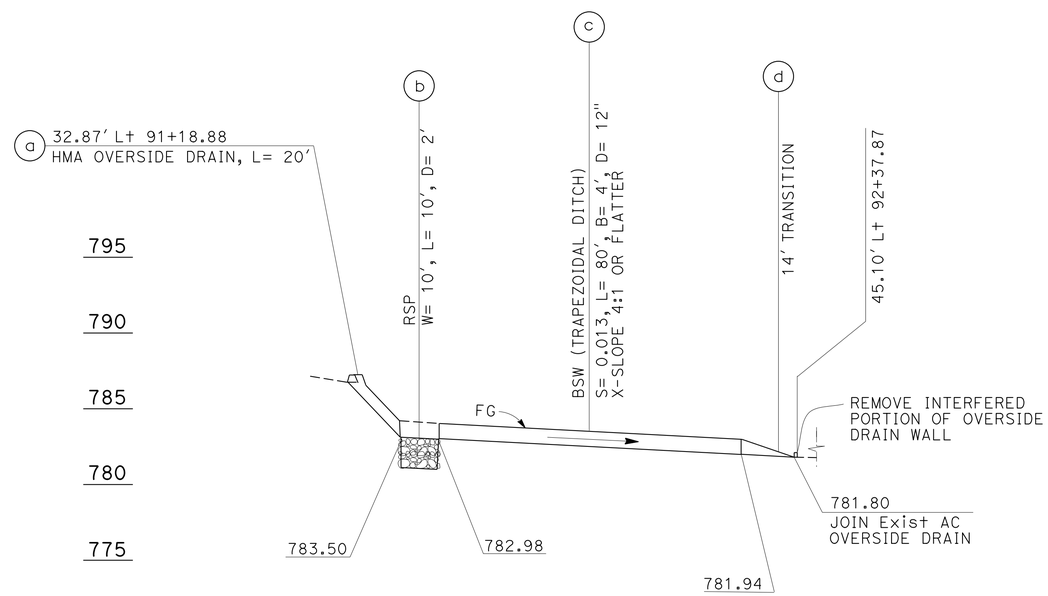

DRAINAGE SYSTEM 10

WATER POLLUTION CONTROL PROFILES

SCALE: Horiz 1" = 20′
Vert 1" = 5′

WP-5

STATE OF CALIFORNIA - DEPARTMENT OF TRANSPORTATION
Caltrans
HYDRAULICS

FUNCTIONAL SUPERVISOR: MARIA QUINONEZ
CALCULATED-DESIGNED BY: TAN HOANG
CHECKED BY: DAVE BHALLA
REVISED BY
DATE REVISED

LAST REVISION 00-00-00
DATE PLOTTED => 01-AUG-2016
TIME PLOTTED => 13:56

Dist	COUNTY	ROUTE	POST MILES TOTAL PROJECT	SHEET No.	TOTAL SHEETS
07	LA,Ven	101	29.3/38.2, 0.0/1.2	70	265

REGISTERED CIVIL ENGINEER 4-20-16 DATE

4-25-16
PLANS APPROVAL DATE

REGISTERED PROFESSIONAL ENGINEER
DAVE BHALLA
No. 34350
Exp. 9-30-17
CIVIL
STATE OF CALIFORNIA

THE STATE OF CALIFORNIA OR ITS OFFICERS OR AGENTS SHALL NOT BE RESPONSIBLE FOR THE ACCURACY OR COMPLETENESS OF SCANNED COPIES OF THIS PLAN SHEET.

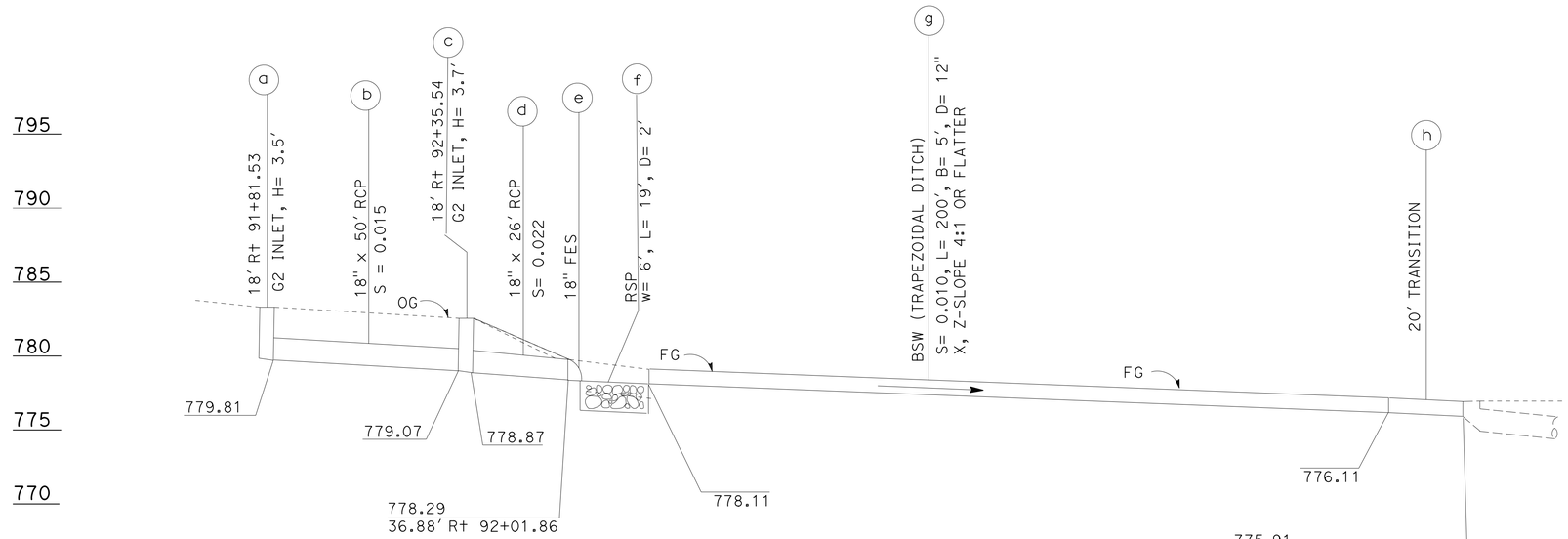

DRAINAGE SYSTEM 11

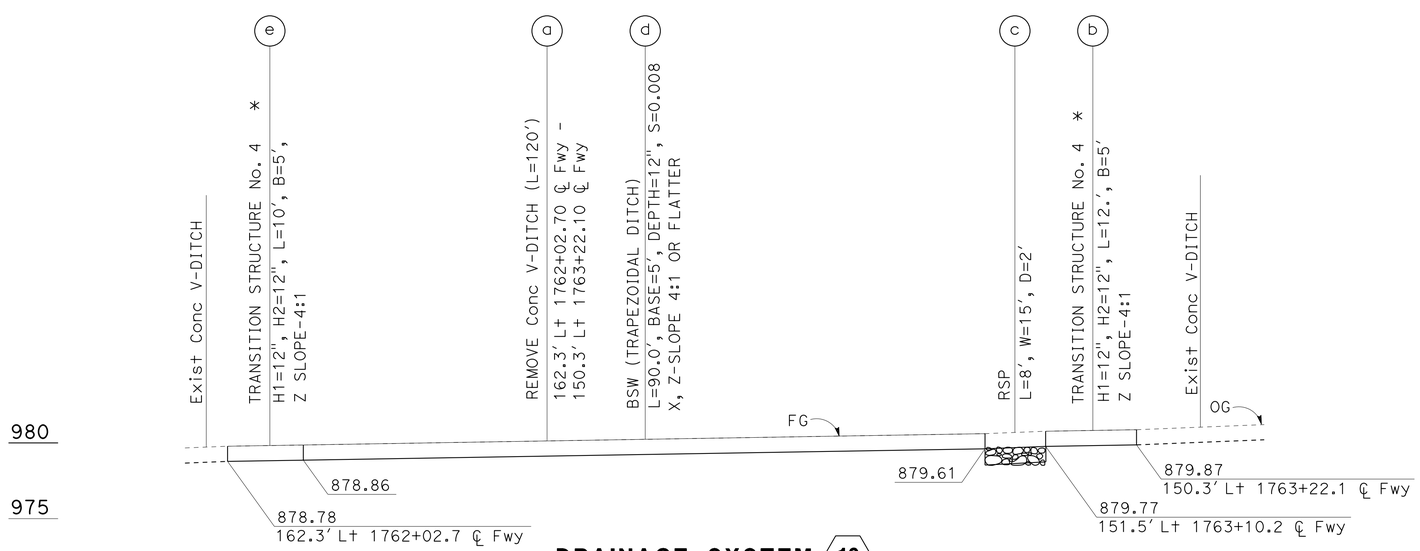

DRAINAGE SYSTEM 13

SCALE: Horiz 1" = 10'
Vert 1" = 5'

* NOTE: REINFORCEMENT IS NOT REQUIRED

WATER POLLUTION CONTROL PROFILES

SCALE: Horiz 1" = 20'
Vert 1" = 5'

WP-6

STATE OF CALIFORNIA - DEPARTMENT OF TRANSPORTATION
Caltrans
HYDRAULICS

FUNCTIONAL SUPERVISOR: MARIA QUINONEZ
CALCULATED-DESIGNED BY: TAN HOANG
CHECKED BY: DAVE BHALLA
REVISED BY
DATE REVISED

LAST REVISION 00-00-00
DATE PLOTTED => 01-AUG-2016
TIME PLOTTED => 13:56

Dist	COUNTY	ROUTE	POST MILES TOTAL PROJECT	SHEET No.	TOTAL SHEETS
07	LA,Ven	101	29.3/38.2, 0.0/1.2	71	265

REGISTERED CIVIL ENGINEER 4-20-16 DATE

4-25-16
PLANS APPROVAL DATE

REGISTERED PROFESSIONAL ENGINEER DAVE BHALLA No. 34350 Exp. 9-30-17 CIVIL STATE OF CALIFORNIA

THE STATE OF CALIFORNIA OR ITS OFFICERS OR AGENTS SHALL NOT BE RESPONSIBLE FOR THE ACCURACY OR COMPLETENESS OF SCANNED COPIES OF THIS PLAN SHEET.

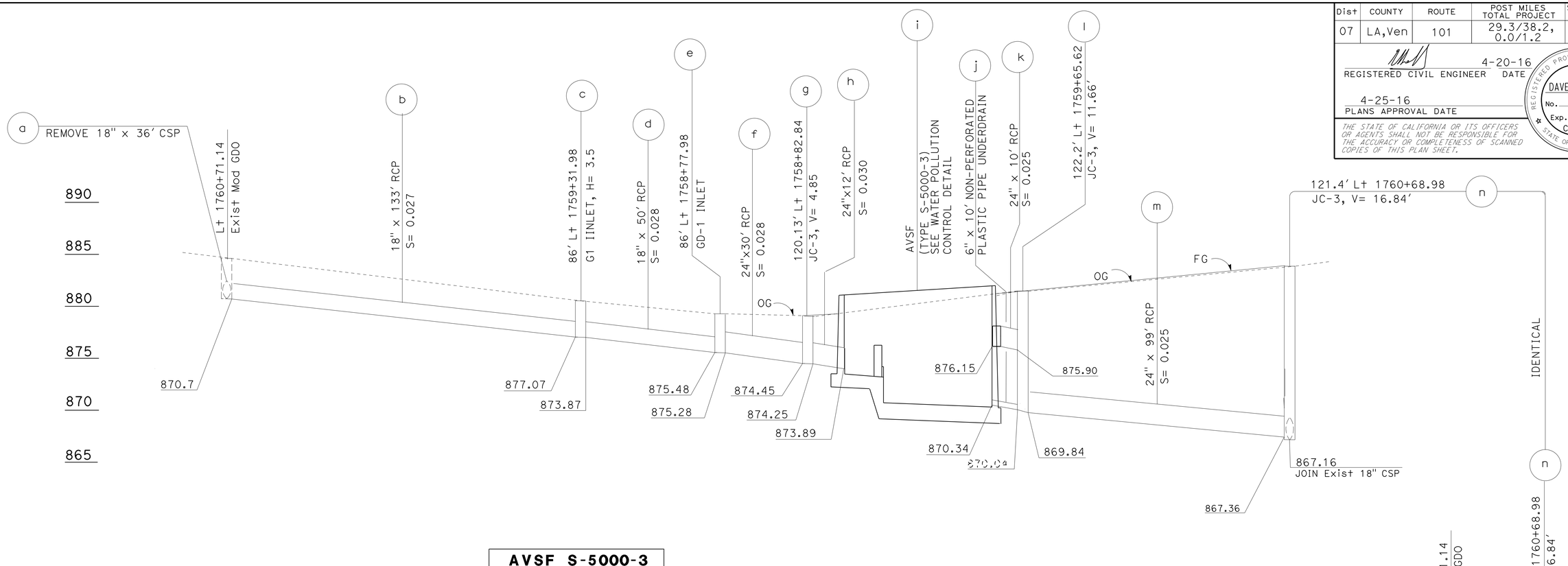

AVSF S-5000-3

WALL DESIGN TABLE

DESIGN BASIN WALL	DESIGN WALL HEIGHT H	TOP OF WALL ELEVATION						TOP OF FOOTING ELEVATION					
		WE1	WE2	WE3	WE4	WE5	WE6	FE0	FE1	FE2	FE3	FE4	FE5
SEDIMENT	10'	880.50	880.76	881.50	882.00	881.26	881.00	873.43	873.39	873.09	870.59	870.17	870.15
FILL	12'												

DRAINAGE SYSTEM 12

SCALE: Horiz 1" = 20'
Vert 1" = 5'

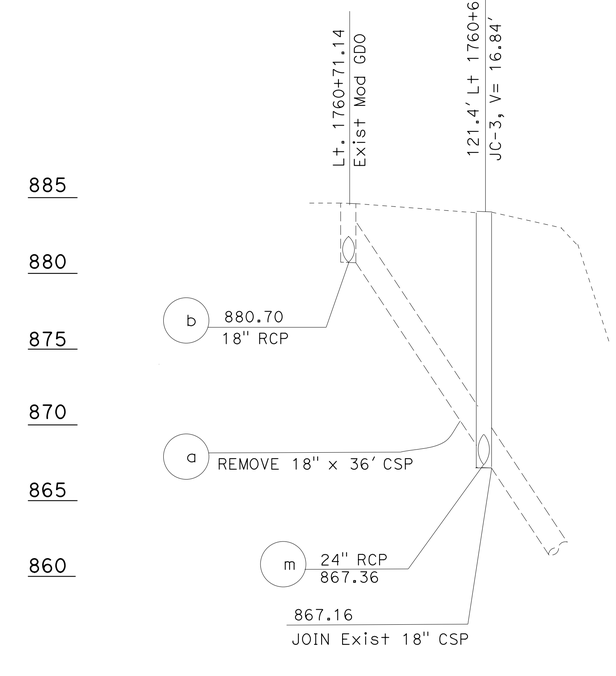

WATER POLLUTION CONTROL PROFILES

WP-7

STATE OF CALIFORNIA - DEPARTMENT OF TRANSPORTATION
Caltrans
HYDRAULICS

FUNCTIONAL SUPERVISOR: MARIA QUINONEZ
CALCULATED-DESIGNED BY: TAN HOANG
CHECKED BY: DAVE BHALLA
REVISED BY
DATE REVISED

LAST REVISION 00-00-00
DATE PLOTTED => 01-AUG-2016
TIME PLOTTED => 13:56

Dist	COUNTY	ROUTE	POST MILES TOTAL PROJECT	SHEET No.	TOTAL SHEETS
07	LA,Ven	101	29.3/38.2, 0.0/1.2	72	265

REGISTERED CIVIL ENGINEER 4-20-16 DATE

4-25-16
PLANS APPROVAL DATE

REGISTERED PROFESSIONAL ENGINEER
DAVE BHALLA
No. 34350
Exp. 9-30-17
CIVIL
STATE OF CALIFORNIA

THE STATE OF CALIFORNIA OR ITS OFFICERS OR AGENTS SHALL NOT BE RESPONSIBLE FOR THE ACCURACY OR COMPLETENESS OF SCANNED COPIES OF THIS PLAN SHEET.

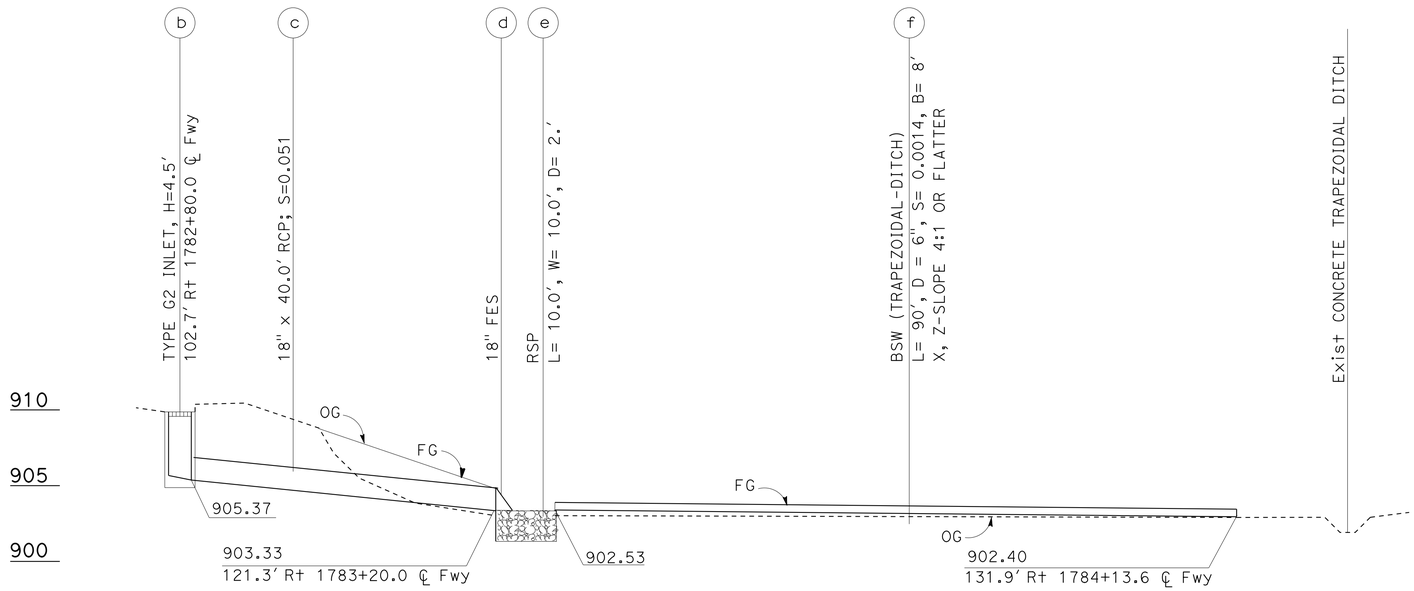

DRAINAGE SYSTEM 14
SCALE: Horiz 1" = 10'
Vert 1" = 5'

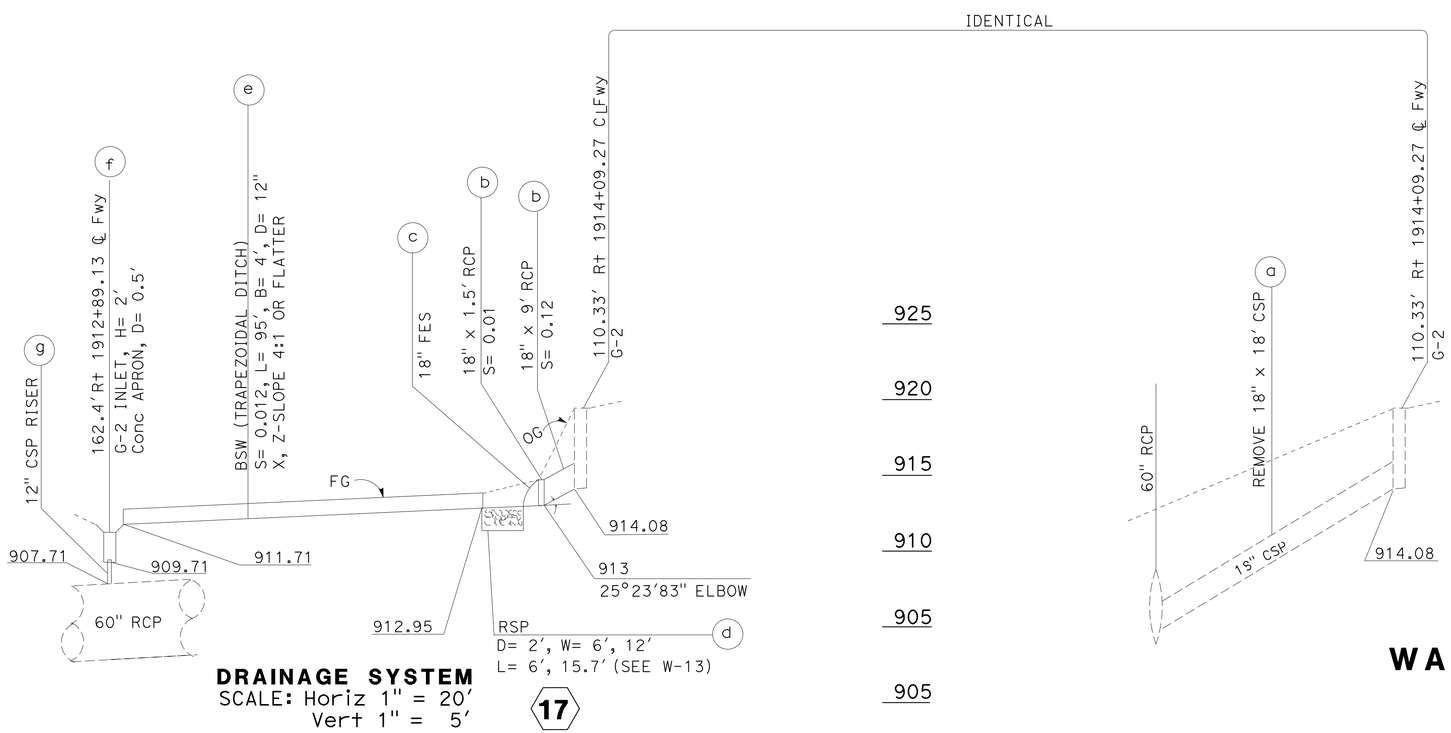

DRAINAGE SYSTEM 17
SCALE: Horiz 1" = 20'
Vert 1" = 5'

WATER POLLUTION CONTROL PROFILES
WP-8

STATE OF CALIFORNIA - DEPARTMENT OF TRANSPORTATION
Caltrans
HYDRAULICS

FUNCTIONAL SUPERVISOR: MARIA QUINONEZ
CALCULATED-DESIGNED BY: TAN HOANG
CHECKED BY: DAVE BHALLA
REVISED BY
DATE REVISED

LAST REVISION 00-00-00
DATE PLOTTED => 01-AUG-2016
TIME PLOTTED => 13:56

Dist	COUNTY	ROUTE	POST MILES TOTAL PROJECT	SHEET No.	TOTAL SHEETS
07	LA,Ven	101	29.3/38.2, 0.0/1.2	73	265

REGISTERED CIVIL ENGINEER 4-20-16 DATE

4-25-16
PLANS APPROVAL DATE

REGISTERED PROFESSIONAL ENGINEER DAVE BHALLA No. 34350 Exp. 9-30-17 CIVIL STATE OF CALIFORNIA

THE STATE OF CALIFORNIA OR ITS OFFICERS OR AGENTS SHALL NOT BE RESPONSIBLE FOR THE ACCURACY OR COMPLETENESS OF SCANNED COPIES OF THIS PLAN SHEET.

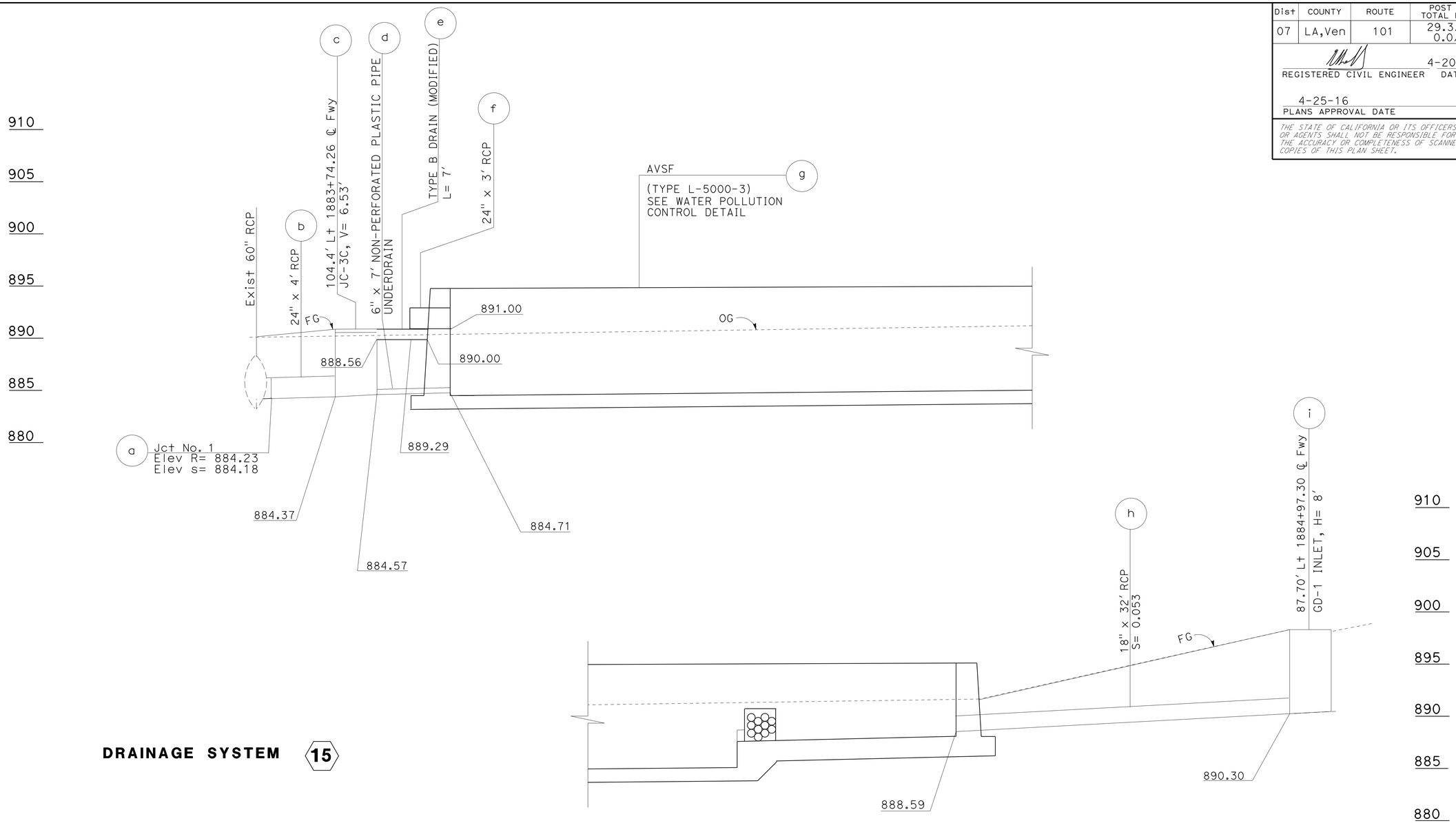

DRAINAGE SYSTEM 15

AVSF L-5000-3

WALL DESIGN TABLE

DESIGN BASIN WALL	DESIGN WALL HEIGHT H	TOP OF WALL ELEVATION						TOP OF FOOTING ELEVATION					
		WE1	WE2	WE3	WE4	WE5	WE6	FE0	FE1	FE2	FE3	FE4	FE5
SEDIMENT	10'	897.50	896.65	894.10	893	894.13	894.50	888.13	888.09	887.67	885.17	884.54	884.52
FILL	14'												

WATER POLLUTION CONTROL PROFILES

SCALE: Horiz 1" = 5'
Vert 1" = 5'

WP-9

STATE OF CALIFORNIA - DEPARTMENT OF TRANSPORTATION
Caltrans®
HYDRAULICS

FUNCTIONAL SUPERVISOR: MARIA QUINONEZ
CALCULATED-DESIGNED BY: TAN HOANG
CHECKED BY: DAVE BHALLA
REVISED BY
DATE REVISED

LAST REVISION 00-00-00
DATE PLOTTED => 01-AUG-2016
TIME PLOTTED => 13:56

Dist	COUNTY	ROUTE	POST MILES TOTAL PROJECT	SHEET No.	TOTAL SHEETS
07	LA,Ven	101	29.3/38.2, 0.0/1.2	74	265

REGISTERED CIVIL ENGINEER 4-20-16 DATE

4-25-16
PLANS APPROVAL DATE

REGISTERED PROFESSIONAL ENGINEER
DAVE BHALLA
No. 34350
Exp. 9-30-17
CIVIL
STATE OF CALIFORNIA

THE STATE OF CALIFORNIA OR ITS OFFICERS OR AGENTS SHALL NOT BE RESPONSIBLE FOR THE ACCURACY OR COMPLETENESS OF SCANNED COPIES OF THIS PLAN SHEET.

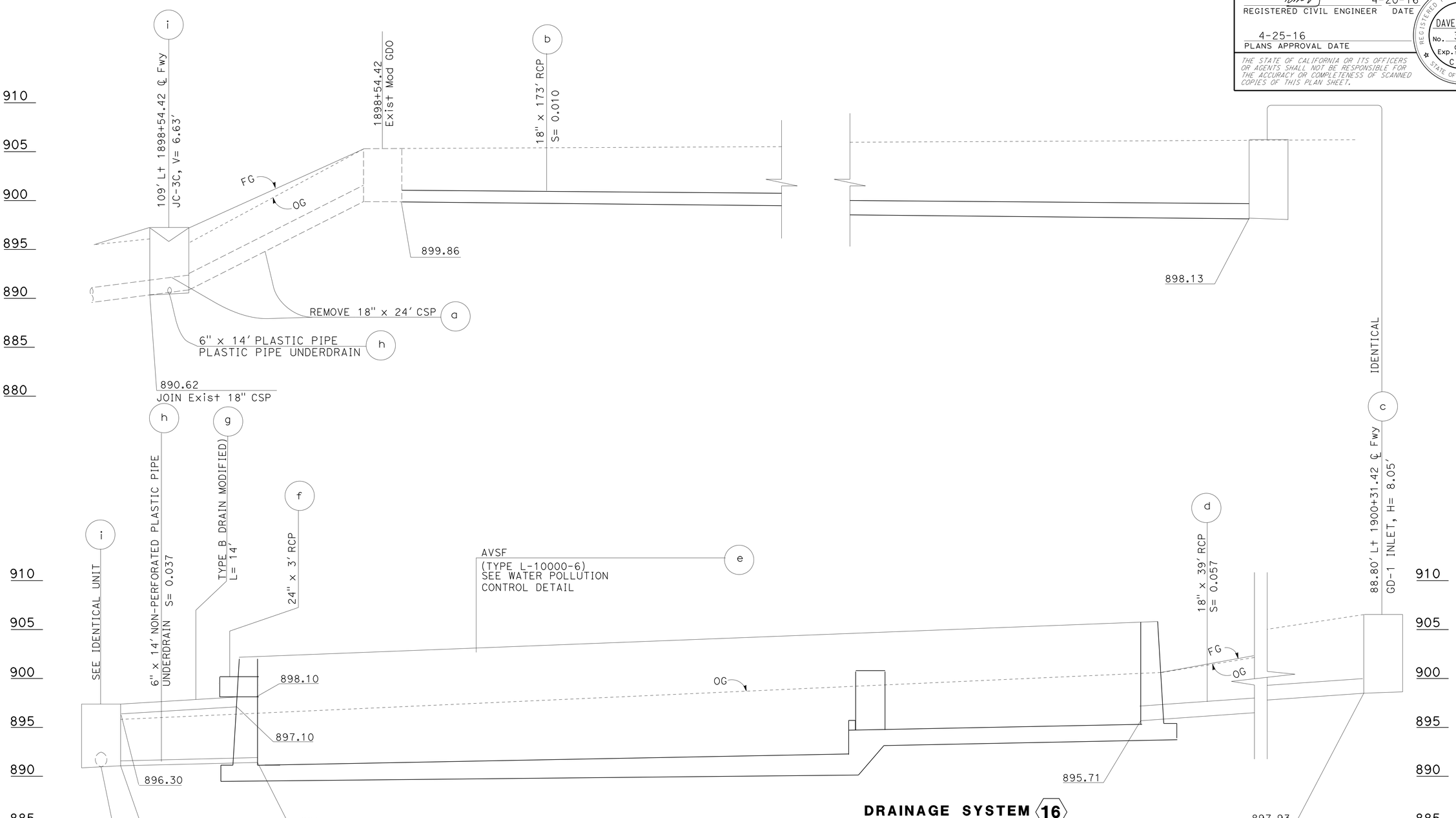

DRAINAGE SYSTEM 16

AVSF L-1000-6

WALL DESIGN TABLE

DESIGN BASIN WALL	DESIGN WALL HEIGHT H	TOP OF WALL ELEVATION						TOP OF FOOTING ELEVATION					
		WE1	WE2	WE3	WE4	WE5	WE6	FE0	FE1	FE2	FE3	FE4	FE5
SEDIMENT	12'	905.50	904.65	902.00	901.70	900.26	899.80	895.25	895.21	894.61	892.11	891.17	891.15
FILL	14'												

WATER POLLUTION CONTROL PROFILES

SCALE: Horiz 1" = 5'
Vert 1" = 5'

WP-10

STATE OF CALIFORNIA - DEPARTMENT OF TRANSPORTATION
Caltrans
HYDRAULICS

FUNCTIONAL SUPERVISOR: MARIA QUINONEZ
CALCULATED-DESIGNED BY: TAN HOANG
CHECKED BY: DAVE BHALLA
REVISED BY
DATE REVISED

LAST REVISION 00-00-00
DATE PLOTTED => 01-AUG-2016
TIME PLOTTED => 13:56

Dist	COUNTY	ROUTE	POST MILES TOTAL PROJECT	SHEET No.	TOTAL SHEETS
07	LA,Ven	101	29.3/38.2, 0.0/1.2	75	265

REGISTERED CIVIL ENGINEER 4-20-16 DATE

4-25-16
PLANS APPROVAL DATE

REGISTERED PROFESSIONAL ENGINEER
DAVE BHALLA
No. 34350
Exp. 9-30-17
CIVIL
STATE OF CALIFORNIA

THE STATE OF CALIFORNIA OR ITS OFFICERS OR AGENTS SHALL NOT BE RESPONSIBLE FOR THE ACCURACY OR COMPLETENESS OF SCANNED COPIES OF THIS PLAN SHEET.

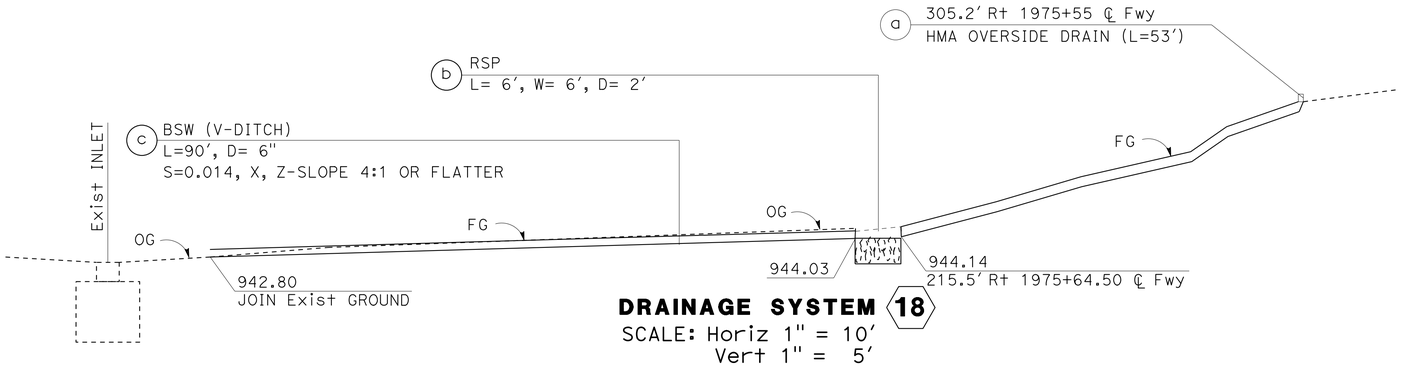

DRAINAGE SYSTEM 18
SCALE: Horiz 1" = 10'
Vert 1" = 5'

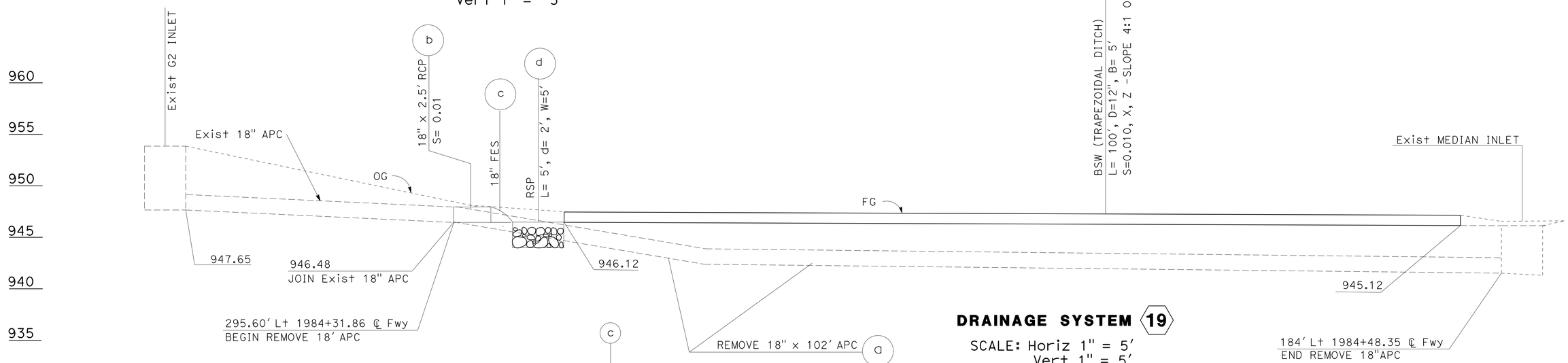

DRAINAGE SYSTEM 19
SCALE: Horiz 1" = 5'
Vert 1" = 5'

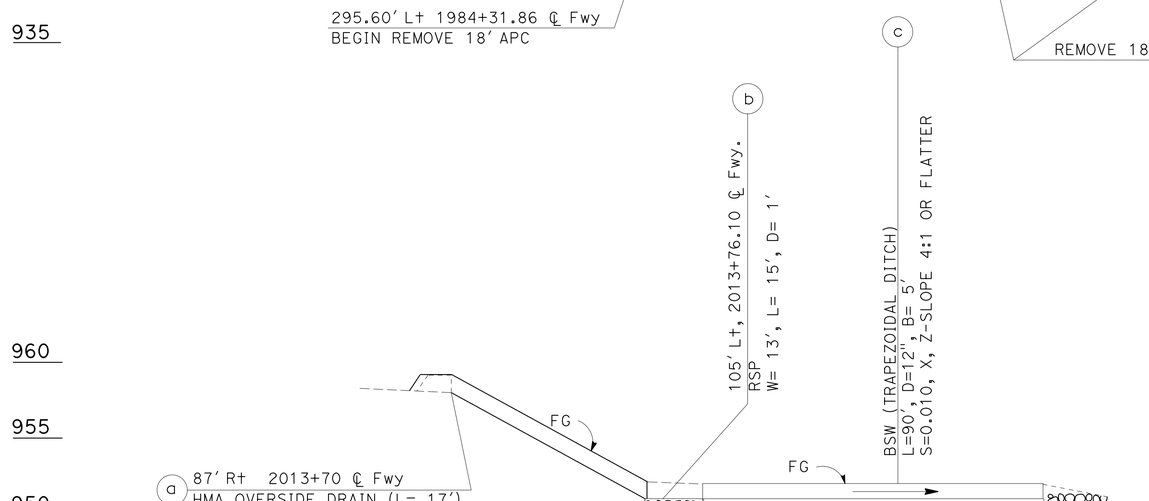

DRAINAGE SYSTEM 21
SCALE: Horiz 1" = 20'
Vert 1" = 5'

WATER POLLUTION CONTROL PROFILES
WP-11

STATE OF CALIFORNIA - DEPARTMENT OF TRANSPORTATION
Caltrans
HYDRAULICS

FUNCTIONAL SUPERVISOR: MARIA QUINONEZ
CALCULATED-DESIGNED BY: TAN HOANG
CHECKED BY: DAVE BHALLA
REVISED BY
DATE REVISED

LAST REVISION 00-00-00
DATE PLOTTED => 01-AUG-2016
TIME PLOTTED => 13:56

Dist	COUNTY	ROUTE	POST MILES TOTAL PROJECT	SHEET No.	TOTAL SHEETS
07	LA,Ven	101	29.3/38.2, 0.0/1.2	76	265

REGISTERED CIVIL ENGINEER 4-20-16 DATE

4-25-16
PLANS APPROVAL DATE

REGISTERED PROFESSIONAL ENGINEER DAVE BHALLA No. 34350 Exp. 9-30-17 CIVIL STATE OF CALIFORNIA

THE STATE OF CALIFORNIA OR ITS OFFICERS OR AGENTS SHALL NOT BE RESPONSIBLE FOR THE ACCURACY OR COMPLETENESS OF SCANNED COPIES OF THIS PLAN SHEET.

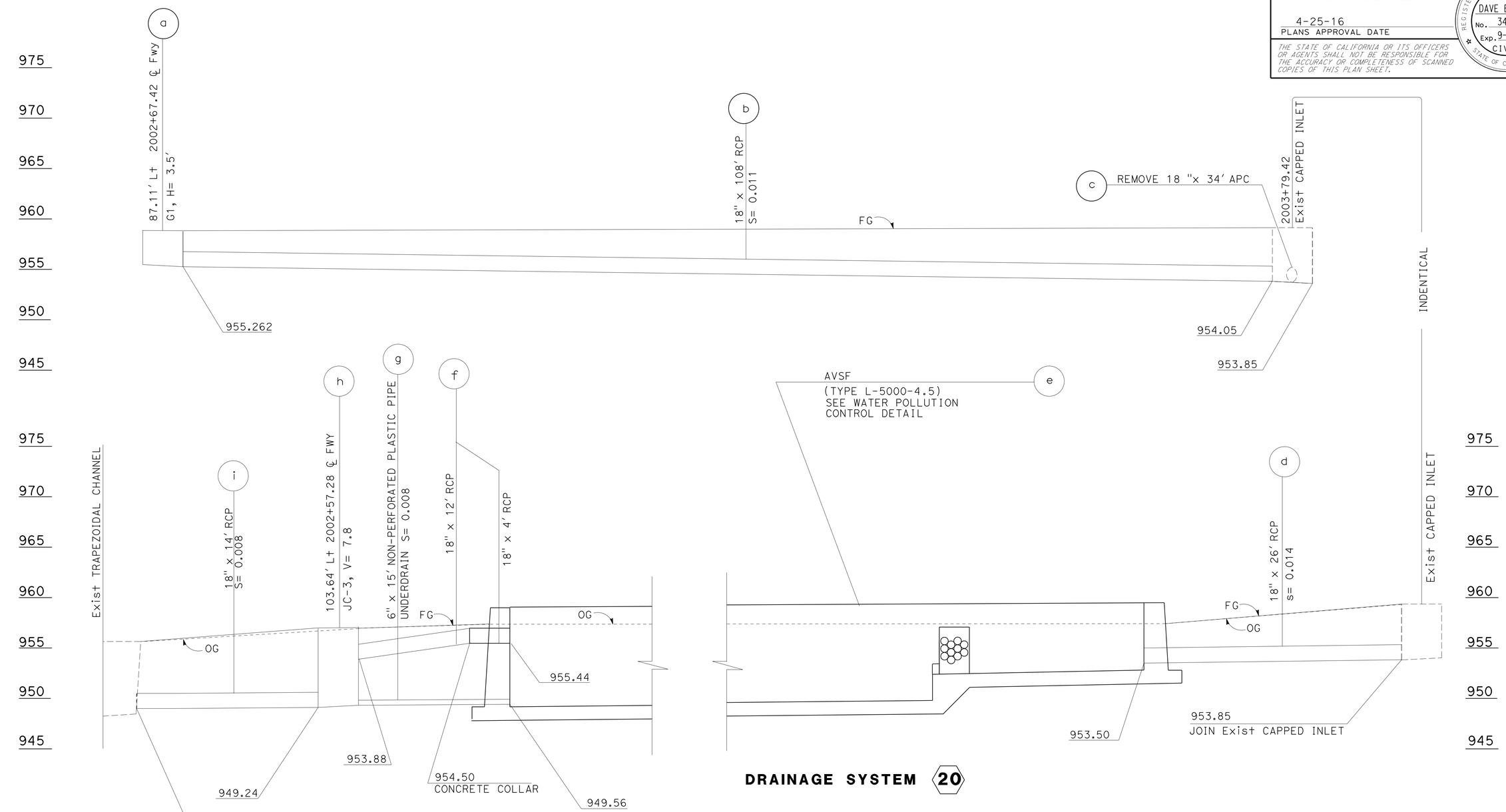

DRAINAGE SYSTEM 20

AVSF L-5000-4.5

WALL DESIGN TABLE

DESIGN BASIN WALL	DESIGN WALL HEIGHT H	TOP OF WALL ELEVATION						TOP OF FOOTING ELEVATION					
		WE1	WE2	WE3	WE4	WE5	WE6	FE0	FE1	FE2	FE3	FE4	FE5
SEDIMENT	8'	959.50	959.38	959.00	958.50	958.88	959.00	952.98	952.94	952.52	950.02	949.39	949.37
FILL	10'												

WATER POLLUTION CONTROL PROFILES

SCALE: Horiz 1" = 5'
Vert 1" = 5'

WP-12

STATE OF CALIFORNIA - DEPARTMENT OF TRANSPORTATION
Caltrans
HYDRAULICS

FUNCTIONAL SUPERVISOR: MARIA QUINONEZ
CALCULATED-DESIGNED BY: TAN HOANG
CHECKED BY: DAVE BHALLA
REVISED BY
DATE REVISED

LAST REVISION 00-00-00
DATE PLOTTED => 01-AUG-2016
TIME PLOTTED => 13:56

Dist	COUNTY	ROUTE	POST MILES TOTAL PROJECT	SHEET No.	TOTAL SHEETS
07	LA,Ven	101	29.3/38.2, 0.0/1.2	77	265

REGISTERED CIVIL ENGINEER 4-20-16 DATE

4-25-16
PLANS APPROVAL DATE

REGISTERED PROFESSIONAL ENGINEER
DAVE BHALLA
No. 34350
Exp. 9-30-17
CIVIL
STATE OF CALIFORNIA

THE STATE OF CALIFORNIA OR ITS OFFICERS OR AGENTS SHALL NOT BE RESPONSIBLE FOR THE ACCURACY OR COMPLETENESS OF SCANNED COPIES OF THIS PLAN SHEET.

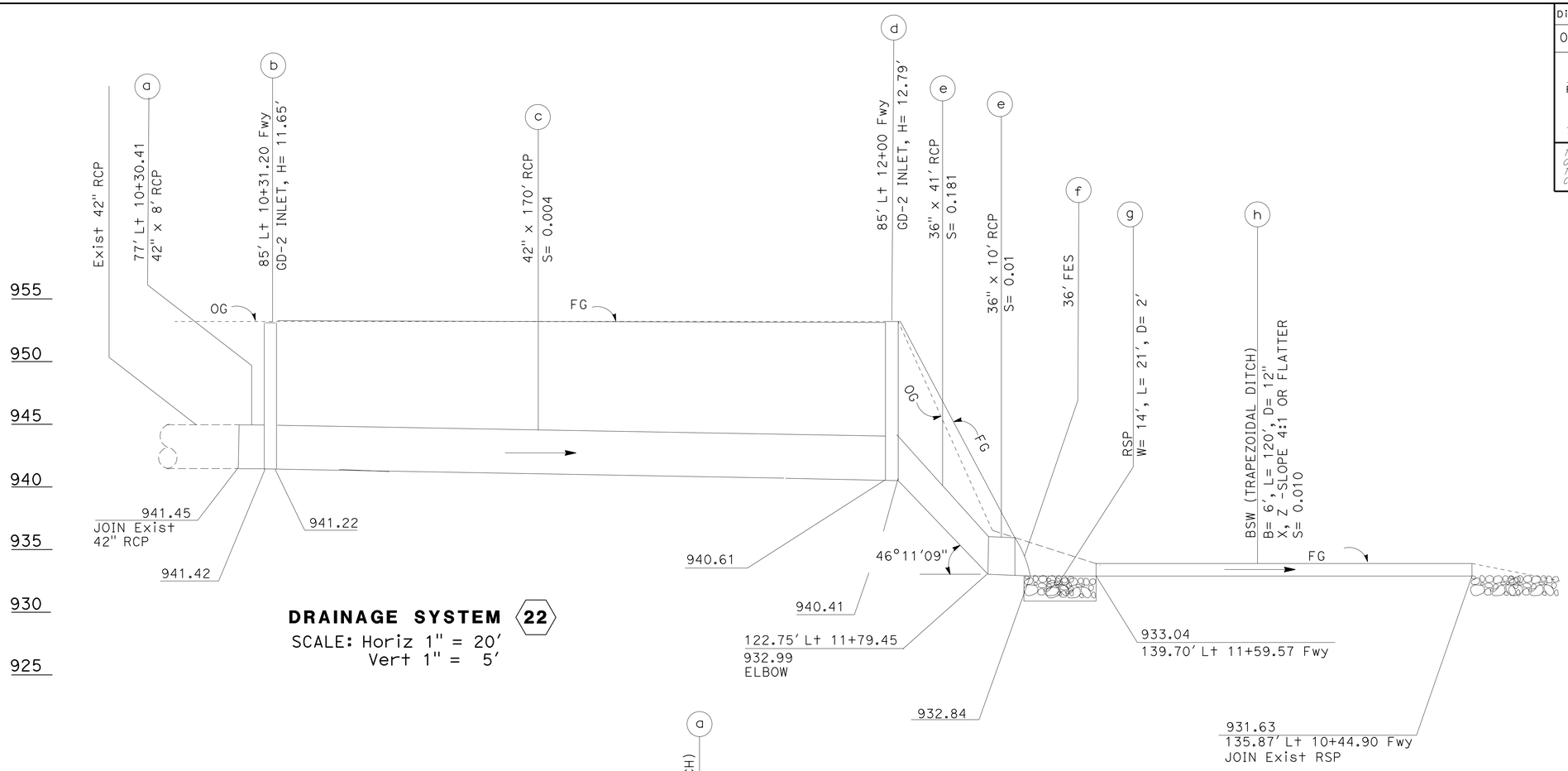

DRAINAGE SYSTEM 22
SCALE: Horiz 1" = 20'
Vert 1" = 5'

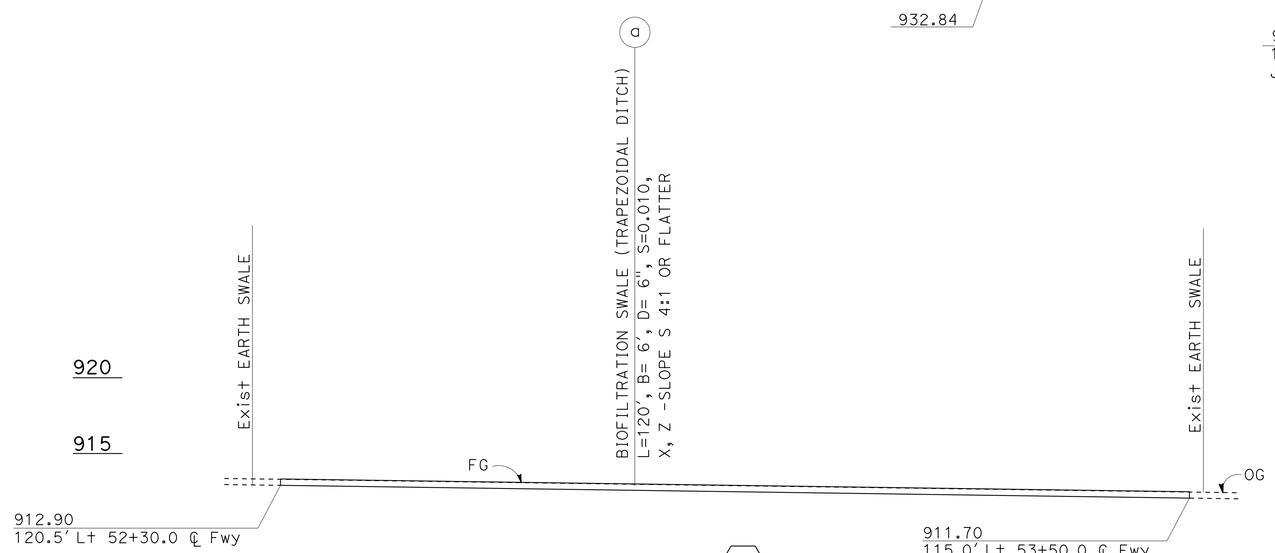

DRAINAGE SYSTEM 24
SCALE: Horiz 1" = 10'
Vert 1" = 5'

WATER POLLUTION CONTROL PROFILES

SCALE: Horiz 1" = 20'
Vert 1" = 5'

WP-13

STATE OF CALIFORNIA - DEPARTMENT OF TRANSPORTATION
Caltrans
HYDRAULICS

FUNCTIONAL SUPERVISOR: MARIA QUINONEZ
CALCULATED-DESIGNED BY: TAN HOANG
CHECKED BY: DAVE BHALLA
REVISED BY
DATE REVISED

LAST REVISION 00-00-00
DATE PLOTTED => 01-AUG-2016
TIME PLOTTED => 13:56

Dist	COUNTY	ROUTE	POST MILES TOTAL PROJECT	SHEET No.	TOTAL SHEETS
07	LA,Ven	101	29.3/38.2, 0.0/1.2	78	265

REGISTERED CIVIL ENGINEER 4-20-16 DATE

4-25-16
PLANS APPROVAL DATE

REGISTERED PROFESSIONAL ENGINEER DAVE BHALLA No. 34350 Exp. 9-30-17 CIVIL STATE OF CALIFORNIA

THE STATE OF CALIFORNIA OR ITS OFFICERS OR AGENTS SHALL NOT BE RESPONSIBLE FOR THE ACCURACY OR COMPLETENESS OF SCANNED COPIES OF THIS PLAN SHEET.

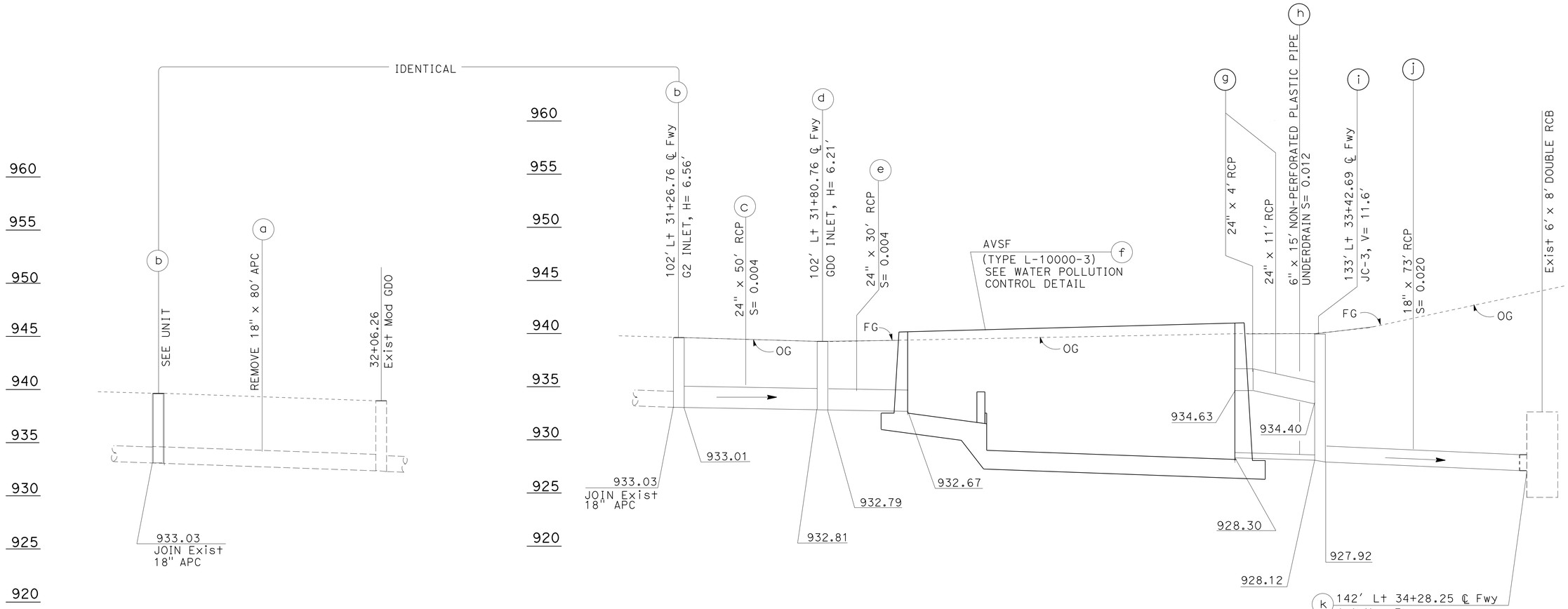

DRAINAGE SYSTEM 23

AVSF L-1000-3

WALL DESIGN TABLE

DESIGN BASIN WALL	DESIGN WALL HEIGHT H	TOP OF WALL ELEVATION						TOP OF FOOTING ELEVATION					
		WE1	WE2	WE3	WE4	WE5	WE6	FE0	FE1	FE2	FE3	FE4	FE5
SEDIMENT	14'	943.00	943.24	944.00	941.00	940.24	940.00	932.21	932.17	931.57	929.07	928.13	928.11
FILL	16'												

WATER POLLUTION CONTROL PROFILES

SCALE: Horiz 1" = 20'
Vert 1" = 5'

WP-14

STATE OF CALIFORNIA - DEPARTMENT OF TRANSPORTATION
Caltrans
HYDRAULICS

FUNCTIONAL SUPERVISOR: MARIA QUINONEZ
CALCULATED-DESIGNED BY: TAN HOANG
CHECKED BY: DAVE BHALLA
REVISED BY
DATE REVISED

LAST REVISION 00-00-00
DATE PLOTTED => 01-AUG-2016
TIME PLOTTED => 13:56

Dist	COUNTY	ROUTE	POST MILES TOTAL PROJECT	SHEET No.	TOTAL SHEETS
07	LA,Ven	101	29.3/38.2, 0.0/1.2	79	265

REGISTERED CIVIL ENGINEER 4-20-16 DATE

4-25-16
PLANS APPROVAL DATE

REGISTERED PROFESSIONAL ENGINEER DAVE BHALLA No. 34350 Exp. 9-30-17 CIVIL STATE OF CALIFORNIA

THE STATE OF CALIFORNIA OR ITS OFFICERS OR AGENTS SHALL NOT BE RESPONSIBLE FOR THE ACCURACY OR COMPLETENESS OF SCANNED COPIES OF THIS PLAN SHEET.

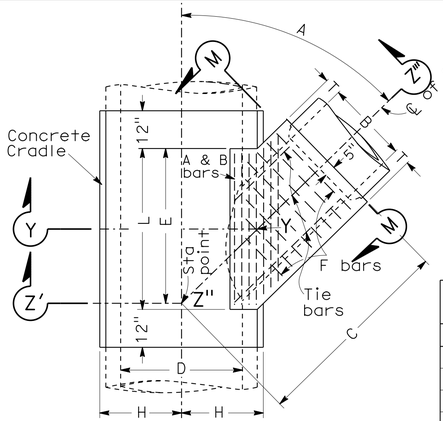

PLAN

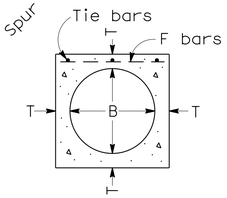

SECTION M-M

Table of Values For T	
B	T
12"	4"
15"	4 1/4"
18"	4 1/2"
21"	5"
24"	5 1/4"
27"	5 1/2"
30"	6"
33"	6 1/4"
36"	6 1/2"
39"	7"

Minimum depth of top and bottom slabs shall be $\frac{D}{12}$ + 2"

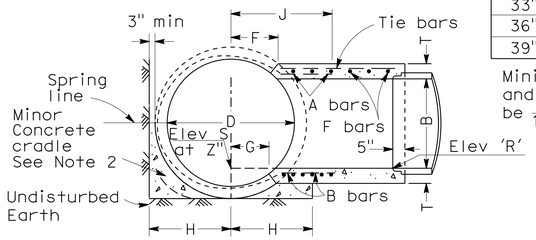

SECTION Z'-Z"-Z" '
Projected on Y-Y-Z"

NOTES:

1. VALUES for 'A', 'B', 'C', 'D', 'E', 'F', 'G', 'L', Elev 'R' and Elev 'S' shown on Drainage Plans.
2. PIPE shall be cradled in concrete extending longitudinally to 1' beyond limits of 'L'. H=1/2 outside diameter of pipe plus 3" as a minimum. Cradle may be omitted on side opposite lateral inlet when constructed in connection with existing pipe storm drain.
3. A and B BARS shall be carried to a point not less than J distance from center line. J= D + 6.
4. RECTANGULAR OPENING in main line pipe shall be cut within limits of 'F', 'G', and 'L' normal to pipe surface without damaging steel.
5. TRANSVERSE REINFORCEMENT in pipe shall be cut in center of opening
6. OPTIONAL CONSTRUCTION: When Junction Structure #1 is specified on Drainage Plan, the Contractor shall have the option of constructing Junction Structure #2, in which case construction data will be furnished by the Engineer.
7. REINFORCING STEEL shall be 1½" clear from face of concrete unless otherwise shown.
8. STEEL SCHEDULE: A and B bars - #5 @ 3" C-C
   F bars - #4 @ 6" C-C
   Tie bars - #3 @ 18" C-C
9. MONOLITHIC ARCH: When Junction Structure #1 is specified with reinforced monolithic arch storm drain, value 'D' shall refer to the clear span of arch. Reinforcing steel shall be cut and bent into junction structure the same as for pipe. Concrete cradle under reinforced monolithic arch is not required.
10. FLOOR of structure shall be steel-troweled to spring line.
11. ELEVATION 'S' applies at center of main line on prolongation of invert spur.

JUNCTION STRUCTURE No. 1 (JS 1)

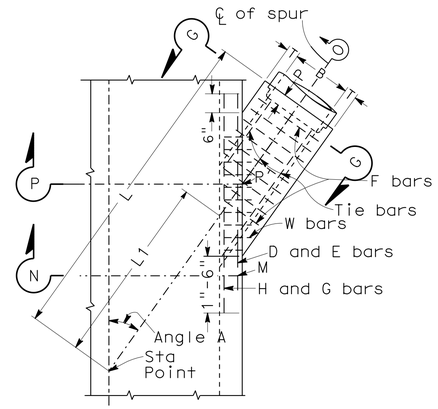

PLAN

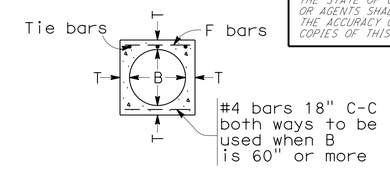

SECTION G-G

TABLE OF VALUES FOR T			
B	T	B	T
12"	4"	63"	10"
15"	4 1/4"	66"	10 1/4"
18"	4 1/2"	69"	10 3/4"
21"	5"	72"	11"
24"	5 1/4"	78"	11 3/4"
27"	5 1/2"	84"	12 1/2"
30"	6"	90"	13 1/4"
33"	6 1/4"	96"	14"
36"	6 1/2"	102"	15 1/2"
39"	7"	108"	16"
42"	7 1/2"	114"	16 1/2"
45"	7 3/4"	120"	17"
48"	8"	126"	17"
51"	8 1/2"	132"	17 1/2"
54"	9"	138"	17 1/2"
57"	9 1/4"	144"	18"
60"	9 1/2"		

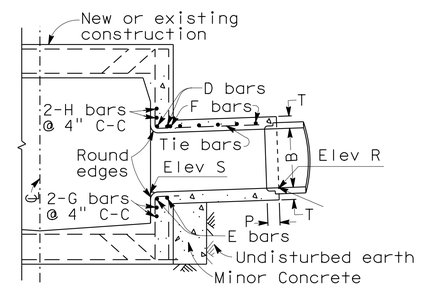

SECTION N-M-P'-O
Projected on P-P'-O

NOTES:

1. VALUES for 'A', 'B', 'L', 'L1', 'Elev R' and 'Elev S' are shown on Drainage Plan.
2. STATIONS specified in Drainage Plan apply at intersection of centerlines of main line and lateral.
3. EMBEDMENT 'P' shall be 5" for pipe diameters 12" to 96" and 8" for pipe diameters 102" to 144".
4. REINFORCING STEEL shall be 1½" clear from face of concrete unless otherwise shown. W BARS are of size and spacing specified for wall steel on Drainage Plan, and shall be cut in center of opening and bent into top and bottom of junction structure. OMIT H BARS when soffit of spur is 1' or less below soffit of main line, and omit G bars when invert of spur is 1' or less above floor of main line.
5. STEEL SCHEDULE:

Dia B	D,E,H,G Bars	F Bars
12" to 39"	#5	#4 @ 6" C-C
42" to 84"	#6	#5 @ 6" C-C
90" to 144"	#7	#6 @ 6" C-C
Tie bars - #3 @ 18" C-C		

6. JUNCTION STRUCTURE shall be poured monolithic with main line storm drain or manhole.
7. FLOOR of structure shall be steel-troweled.

JUNCTION STRUCTURE No. 3 (JS 3)

WATER POLLUTION CONTROL DETAILS

NO SCALE

WD-1

STATE OF CALIFORNIA - DEPARTMENT OF TRANSPORTATION
Caltrans® HYDRAULICS
FUNCTIONAL SUPERVISOR MARIA QUINONEZ
CALCULATED-DESIGNED BY TAN HOANG
CHECKED BY DAVE BHALLA
REVISED BY
DATE REVISED

LAST REVISION 01-01-16
DATE PLOTTED => 01-AUG-2016
TIME PLOTTED => 13:56

Dist	COUNTY	ROUTE	POST MILES TOTAL PROJECT	SHEET No.	TOTAL SHEETS
07	LA,Ven	101	29.3/38.2, 0.0/1.2	80	265

REGISTERED CIVIL ENGINEER 4-20-16 DATE

4-25-16
PLANS APPROVAL DATE

REGISTERED PROFESSIONAL ENGINEER DAVE BHALLA No. 34350 Exp. 9-30-17 CIVIL STATE OF CALIFORNIA

THE STATE OF CALIFORNIA OR ITS OFFICERS OR AGENTS SHALL NOT BE RESPONSIBLE FOR THE ACCURACY OR COMPLETENESS OF SCANNED COPIES OF THIS PLAN SHEET.

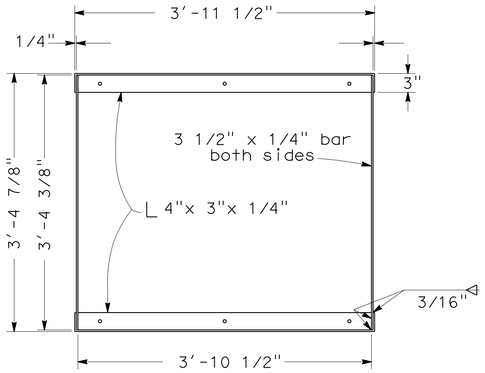

GRATE FRAME DETAIL

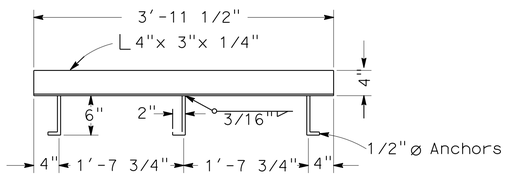

ANCHOR PLACEMENT DETAIL

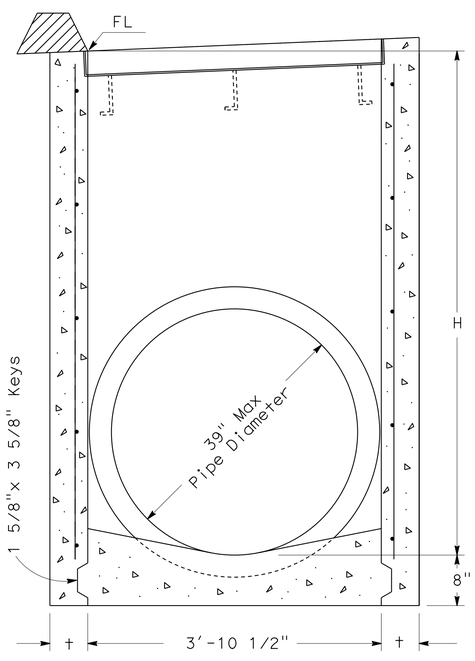

SECTION A-A

(For pipe diameters 39" or less)

GD-1

NOTES:

1. 'H' is the difference in elevation between the outlet pipe flow line and the flow line of the grates.
2. Steps - None required when 'H' is 3'-6" or less. Install one step 16"± above floor when 'H' is more than 3'-6" and less than 5'-0". Where 'H' is more than 5'-0" steps shall be evenly spaced @ 12"± intervals from 16"± above floor to within 12"± of the top of the box. Place steps in wall without pipe openings. See Standard Plan D74C for step detail.
3. Pipe(s) can be placed in any wall.
4. Reinforcing steel not required in walls when H=6' or less.
5. Reinforcing steel in walls shall be #4 bars @ 18"± centers placed 1 1/2" clear to inside of box.

MISCELLANEOUS IRON & STEEL

Inlet Type	Grate Type	Weight
GD-1 & GD-2	24 - 12	580
	24 - 10C	379
	24 - 10S	433
	24 - 12X	453
	24 - 13	351
GD-3	24 - 12	652

H	t
8'-0" or less	6"
8'1" to 20'- 0"	8"

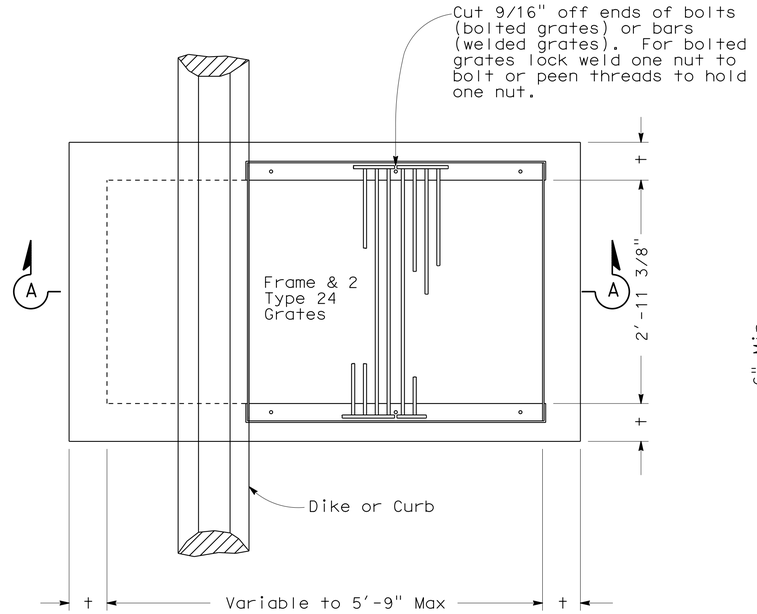

PLAN

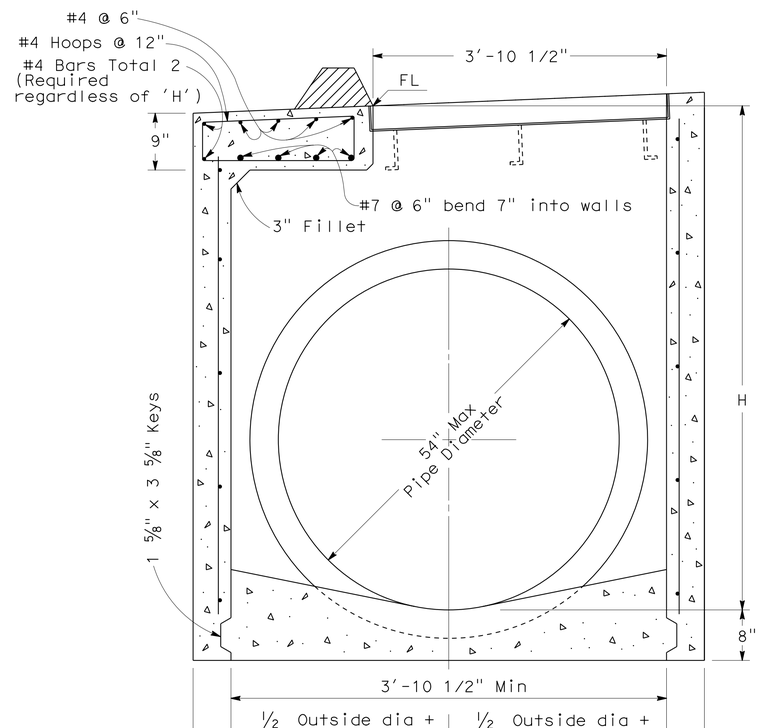

SECTION A-A

GD-2

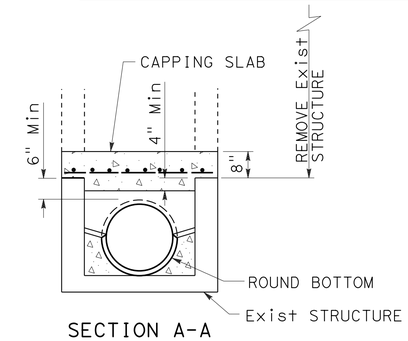

SECTION A-A

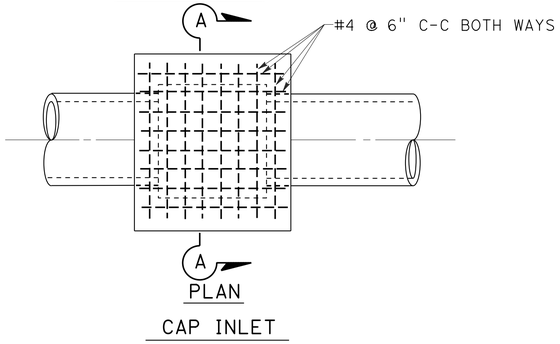

PLAN

CAP INLET

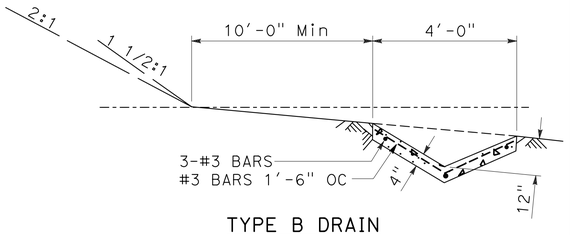

TYPE B DRAIN

WATER POLLUTION CONTROL DETAILS

NO SCALE

WD-2

STATE OF CALIFORNIA - DEPARTMENT OF TRANSPORTATION
Caltrans
HYDRAULICS

FUNCTIONAL SUPERVISOR: MARIA QUINONEZ
CALCULATED-DESIGNED BY: TAN HOANG
CHECKED BY: DAVE BHALLA
REVISED BY
DATE REVISED

LAST REVISION 01-01-16
DATE PLOTTED => 01-AUG-2016
TIME PLOTTED => 13:56

Dist	COUNTY	ROUTE	POST MILES TOTAL PROJECT	SHEET No.	TOTAL SHEETS
07	LA,Ven	101	29.3/38.2, 0.0/1.2	81	265

REGISTERED CIVIL ENGINEER 4-20-16 DATE

4-25-16
PLANS APPROVAL DATE

REGISTERED PROFESSIONAL ENGINEER DAVE BHALLA No. 34350 Exp. 9-30-17 CIVIL STATE OF CALIFORNIA

THE STATE OF CALIFORNIA OR ITS OFFICERS OR AGENTS SHALL NOT BE RESPONSIBLE FOR THE ACCURACY OR COMPLETENESS OF SCANNED COPIES OF THIS PLAN SHEET.

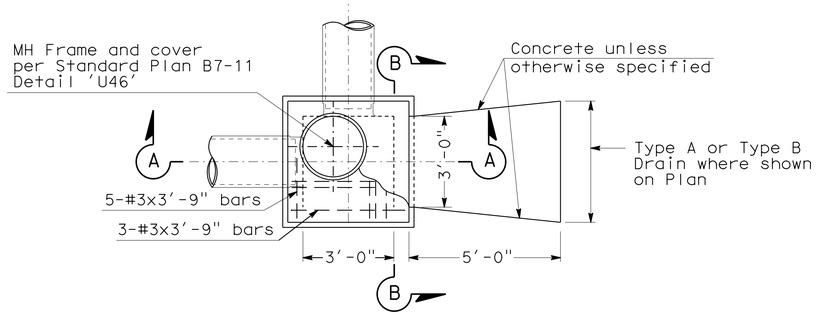

PLAN

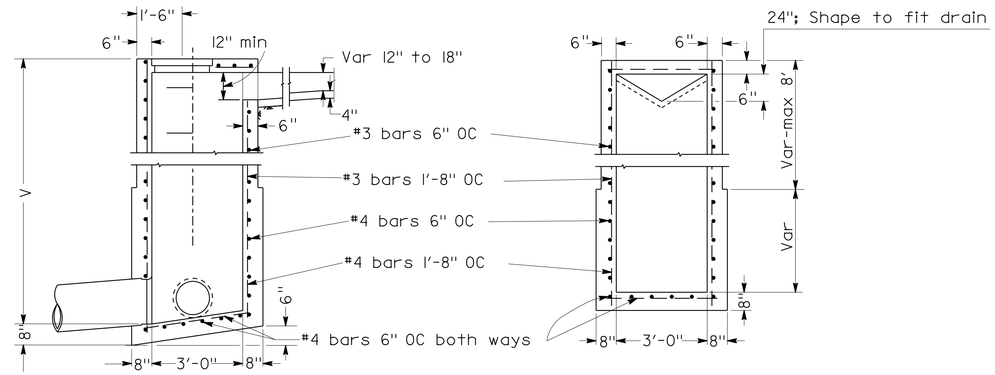

SECTION A-A

SECTION B-B

JUNCTION CHAMBER No. 3-C (JC 3-C)

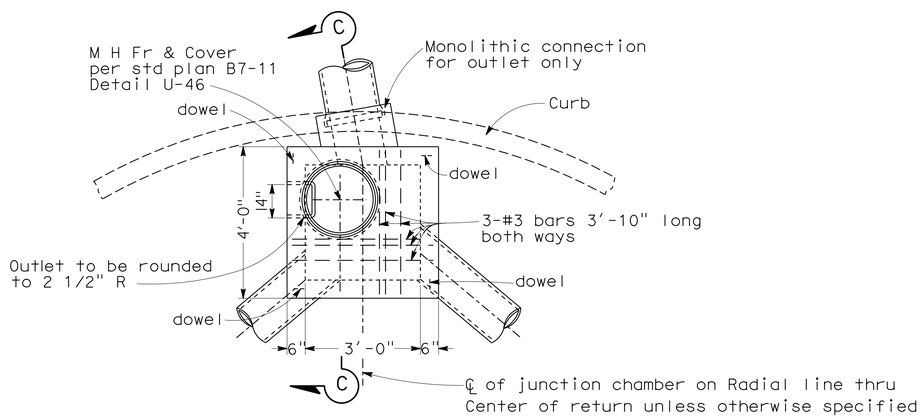

PLAN

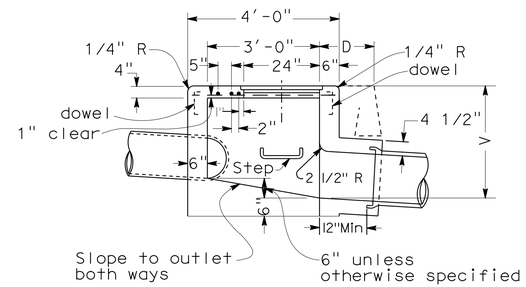

SECTION C-C

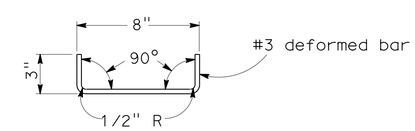

DETAIL OF DOWEL

One at each corner to be used
when top is poured separate

JUNCTION CHAMBER No. 3 (JC 3)

NOTES:

1. CONNECTION pipes may be placed in any position around the walls provided they point in the proper direction and the position is otherwise consistent with the Drainage Plan.
2. DIMENSIONS: V=3'-6" unless otherwise specified.
3. EXPOSED SURFACE of the Junction Chamber shall conform in slope, grade, color, finish and scoring to existing sidewalk adjacent to the Junction Chamber. Where no sidewalk exists, the top shall be finished to conform to standard sidewalk slopeand finish, and scoring lines shall conform as nearly as possible to 20" squares.
4. FLOOR of chamber shall be given a steel-troweled finish and shall slope from all directions to outlet.
5. MANHOLE shall be placed in corner nearest outlet.
6. OUTLET pipe shall be connected to Junction Chamber with Monolithic Connection.
7. REINFORCING steel not required in walls when V=6' or less.
8. STEPS: None required where V=3'-6" or less.
   Install one step 16"± above floor when V is more than 3'-6" and less than 5'-0".
   Where V is more than 5'-0" steps shall be evenly spaced at 12"± intervals from 16"± above floor to within 12"± of the top of the box.

WATER POLLUTION CONTROL DETAILS

NO SCALE

WD-3

REVISED BY | DATE REVISED
TAN HOANG | DAVE BHALLA
CALCULATED-DESIGNED BY | CHECKED BY
FUNCTIONAL SUPERVISOR: MARIA QUINONEZ

STATE OF CALIFORNIA - DEPARTMENT OF TRANSPORTATION
Caltrans
HYDRAULICS

LAST REVISION 01-01-16 | DATE PLOTTED => 01-AUG-2016 | TIME PLOTTED => 13:56

Dist	COUNTY	ROUTE	POST MILES TOTAL PROJECT	SHEET No.	TOTAL SHEETS
07	LA,Ven	101	29.3/38.2, 0.0/1.2	82	265

REGISTERED CIVIL ENGINEER 4-20-16 DATE

4-25-16
PLANS APPROVAL DATE

REGISTERED PROFESSIONAL ENGINEER DAVE BHALLA No. 34350 Exp. 9-30-17 CIVIL STATE OF CALIFORNIA

THE STATE OF CALIFORNIA OR ITS OFFICERS OR AGENTS SHALL NOT BE RESPONSIBLE FOR THE ACCURACY OR COMPLETENESS OF SCANNED COPIES OF THIS PLAN SHEET.

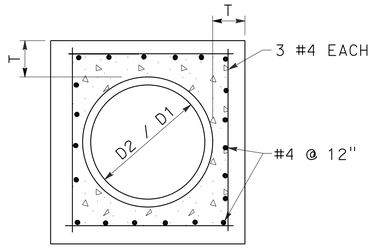

SECTION B-B

D	L	T
12"	1.0'	4"
18"	1.0'	5"
24"	1.0'	6"
36"	1.5'	8"
48"	1.5'	10"
54"	1.5'	10"
60"	1.75'	11"
66"	1.75'	11"
72"	2.0'	12"

NOTES:

1. WHERE PIPES OF DIFFERENT DIAMETERS ARE JOINED WITH A CONCRETE COLLAR, 'L' AND 'T' SHALL BE THOSE OF THE LARGER PIPE. D=D1 OR D2, WHICHEVER IS GREATER.
2. FOR PIPE SIZE NOT LISTED USE NEXT SIZE LARGER.
3. OMIT REINFORCING ON PIPES 24" AND LESS IN DIAMETER AND ON ALL PIPES WHERE ANGLE A IS LESS THAN 10°.
4. JOIN PIPES AT INVERTS.
5. REINFORCEMENT SHALL BE PLACED 1 1/2" CLEAR FROM OUTSIDE DIAMETER OF PIPE.

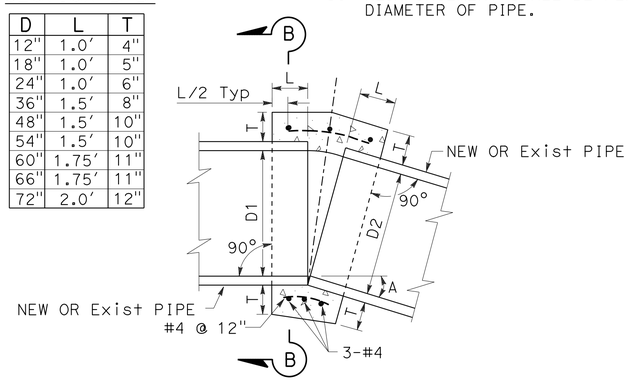

CONCRETE COLLAR

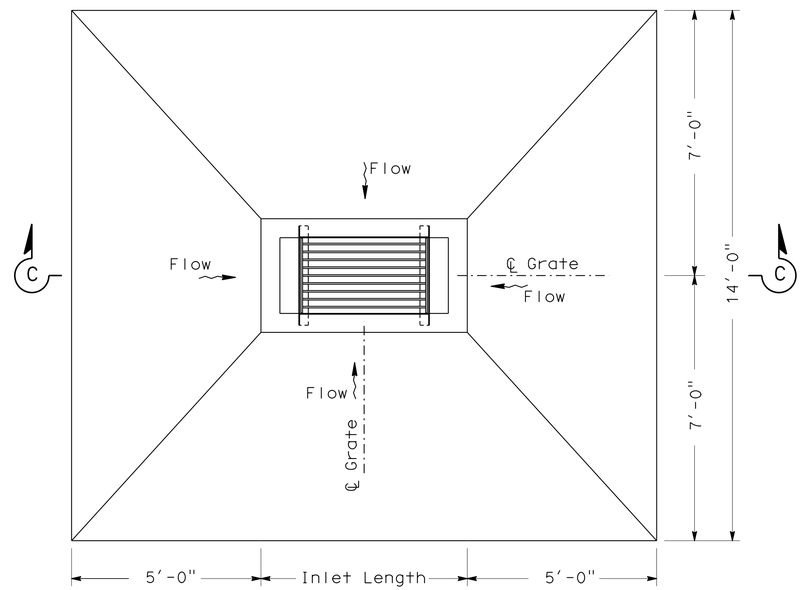

PLAN

CONCRETE APRON

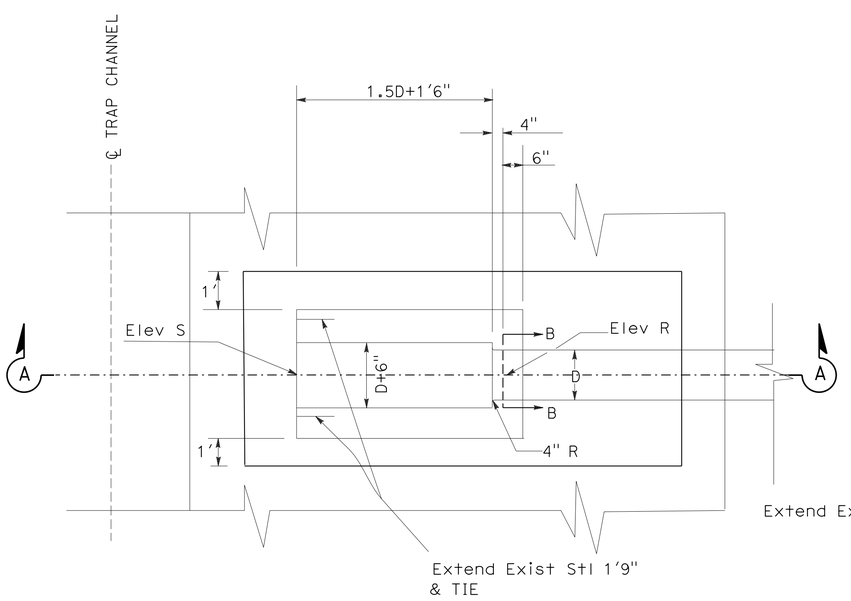

PIPE JUNCTION STRUCTURE

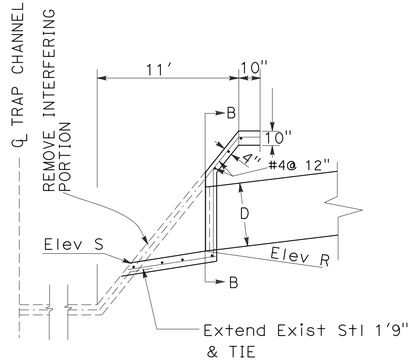

SECTION A-A

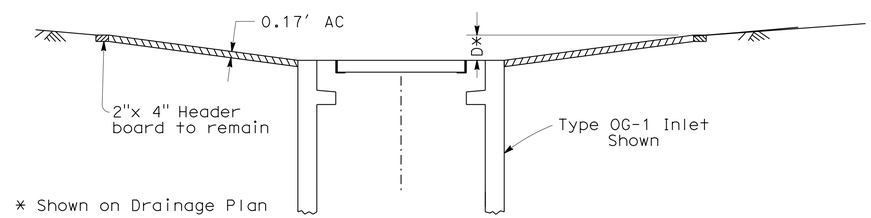

SECTION C-C

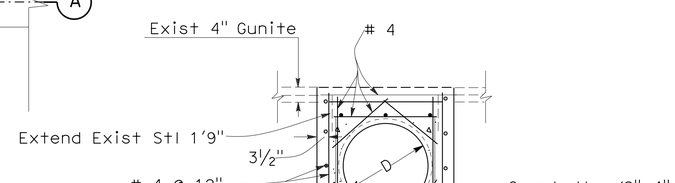

SECTION B-B

WATER POLLUTION CONTROL DETAILS

NO SCALE

WD-4

STATE OF CALIFORNIA - DEPARTMENT OF TRANSPORTATION
Caltrans® HYDRAULICS

FUNCTIONAL SUPERVISOR: MARIA QUINONEZ
CALCULATED-DESIGNED BY: TAN HOANG
CHECKED BY: DAVE BHALLA
REVISED BY
DATE REVISED

LAST REVISION 01-01-16
DATE PLOTTED => 01-AUG-2016
TIME PLOTTED => 13:56

Dist	COUNTY	ROUTE	POST MILES TOTAL PROJECT	SHEET No.	TOTAL SHEETS
07	LA,Ven	101	29.3/38.2, 0.0/1.2	83	265

REGISTERED CIVIL ENGINEER 4-20-16 DATE

4-25-16
PLANS APPROVAL DATE

REGISTERED PROFESSIONAL ENGINEER DAVE BHALLA No. 34350 Exp. 9-30-17 CIVIL STATE OF CALIFORNIA

THE STATE OF CALIFORNIA OR ITS OFFICERS OR AGENTS SHALL NOT BE RESPONSIBLE FOR THE ACCURACY OR COMPLETENESS OF SCANNED COPIES OF THIS PLAN SHEET.

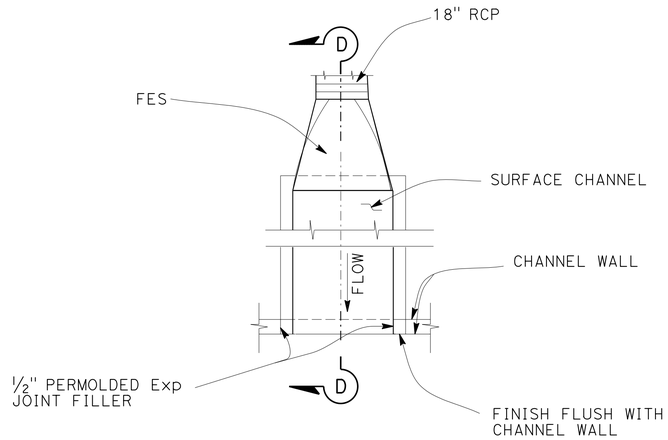

PLAN

TYPICAL RECTANGULAR SURFACE CHANNEL

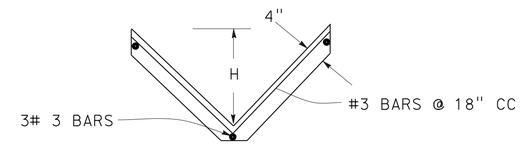

CONCRETE V-DITCH

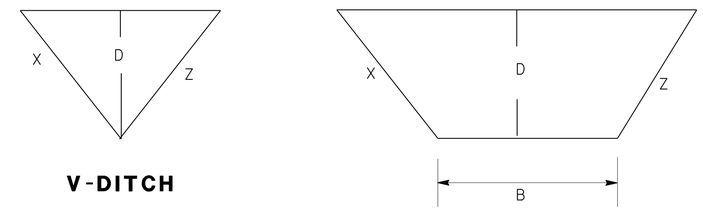

V-DITCH

TRAPEZOIDAL-DITCH

TYPICAL BSW

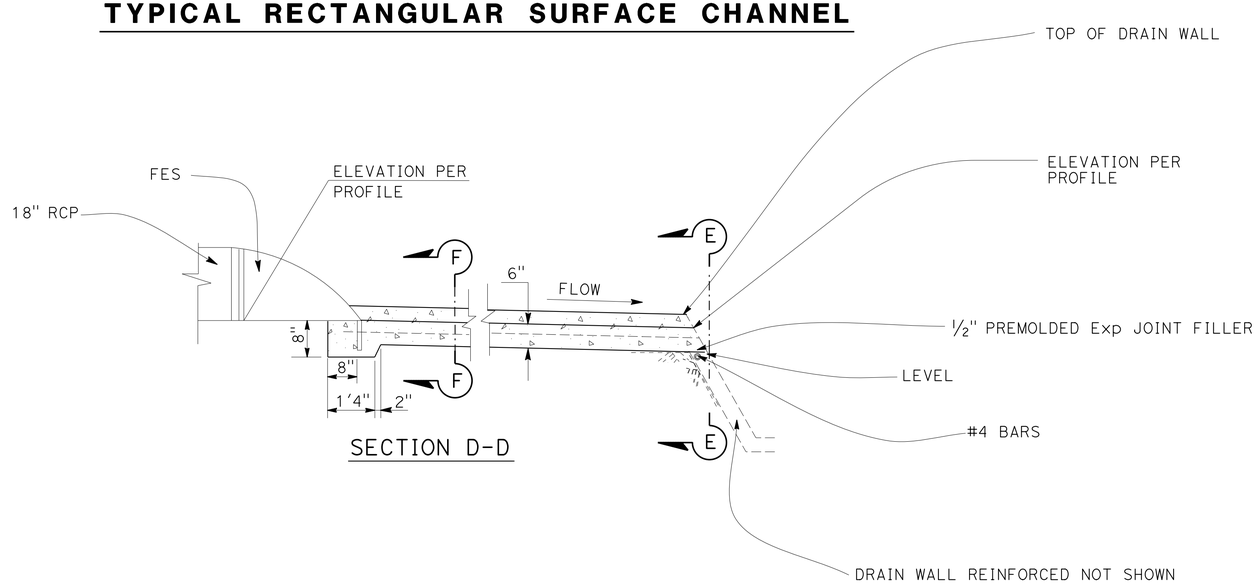

SECTION D-D

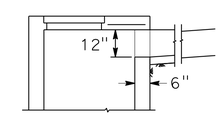

BSW TO JC-3C

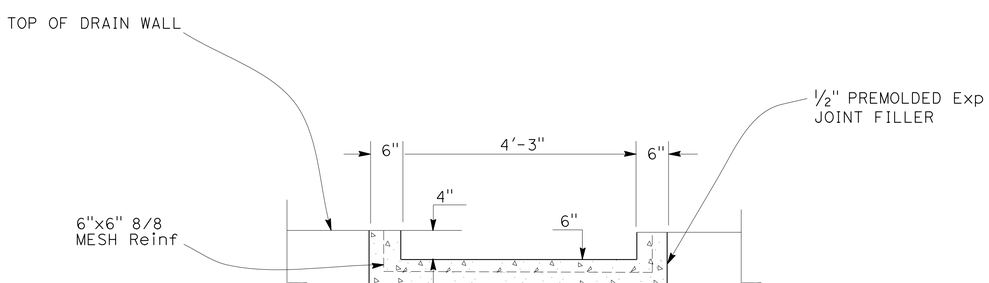

SECTION E-E

SECTION F-F

WATER POLLUTION CONTROL DETAILS

NO SCALE

WD-5

STATE OF CALIFORNIA - DEPARTMENT OF TRANSPORTATION
Caltrans® HYDRAULICS

FUNCTIONAL SUPERVISOR: MARIA QUIÑONEZ

CALCULATED-DESIGNED BY: TAN HOANG
CHECKED BY: DAVE BHALLA

REVISED BY
DATE REVISED

LAST REVISION 01-01-16 | DATE PLOTTED => 01-AUG-2016 | TIME PLOTTED => 13:56

Dist	COUNTY	ROUTE	POST MILES TOTAL PROJECT	SHEET No.	TOTAL SHEETS
07	LA,Ven	101	29.3/38.2, 0.0/1.2	84	265

REGISTERED CIVIL ENGINEER 4-20-16 DATE

4-25-16
PLANS APPROVAL DATE

REGISTERED PROFESSIONAL ENGINEER DAVE BHALLA No. 34350 Exp. 9-30-17 CIVIL STATE OF CALIFORNIA

THE STATE OF CALIFORNIA OR ITS OFFICERS OR AGENTS SHALL NOT BE RESPONSIBLE FOR THE ACCURACY OR COMPLETENESS OF SCANNED COPIES OF THIS PLAN SHEET.

ABBREVIATIONS:

AVSF - AUSTIN VAULT SAND FILTER
GSRD - GROSS SOLIDS REMOVAL DEVICE

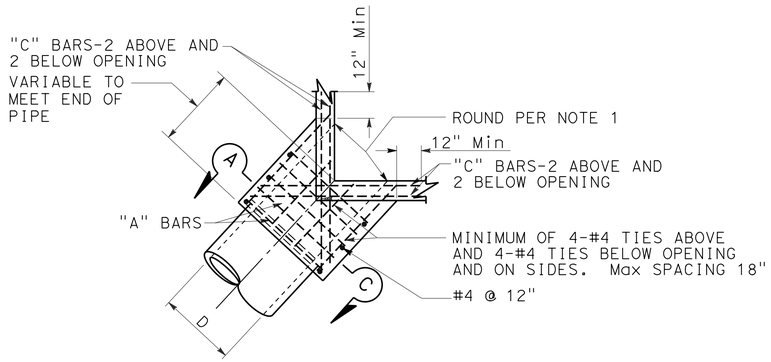

PLAN
CORNER CONNECTION

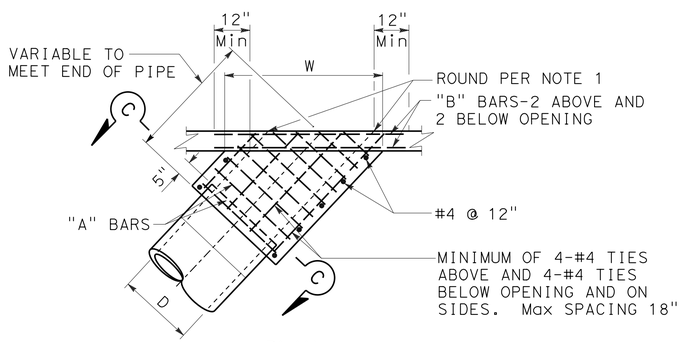

PLAN
SIDE CONNECTION

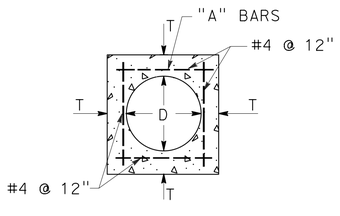

SECTION C-C

D	T	"A"	"B"-"C"
12"	4-½"	#4 @ 6"	#5
15"	4-½"		
18"	5"		
21"	5-½"		
24"	6"		
27"	6-½"		
30"	7"		
33"	7"		
36"	7-½"		
39"	8"		
42"	8"		
45"	8"	#5 @ 6"	#6
48"	8"		
51"	8"		
54"	8"		
57"	10"		
60"	10"		
63"	10"		
66"	11"		
69"	11"		
72"	11"		

MONOLITHIC CONNECTION

FOR PIPES 12" TO 72" INCLUSIVE

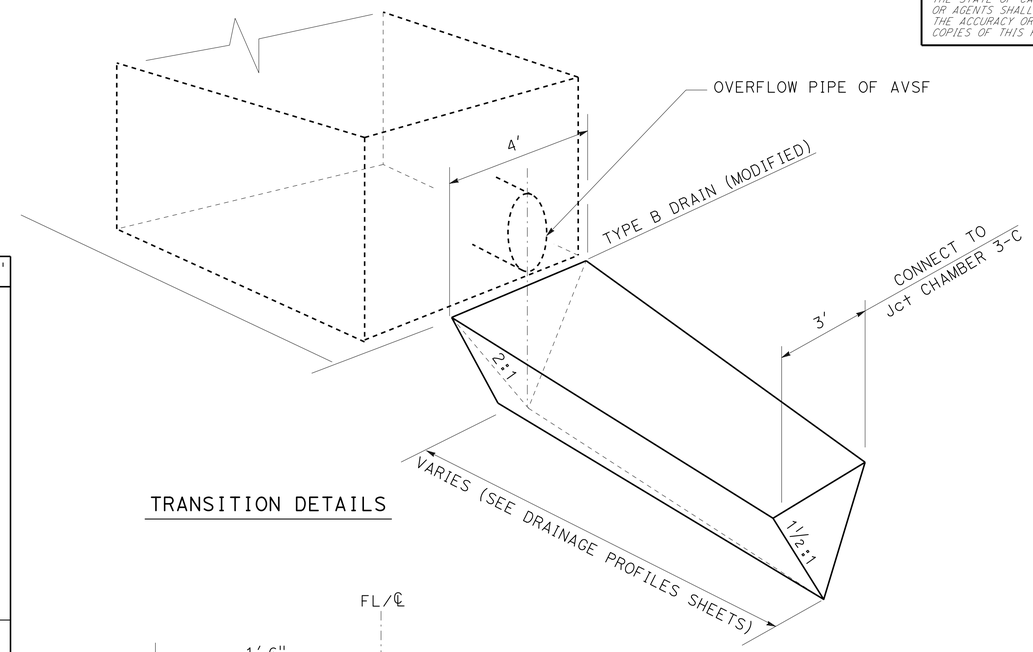

TRANSITION DETAILS

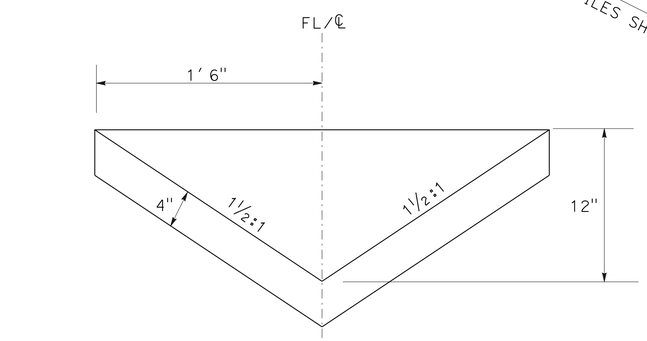

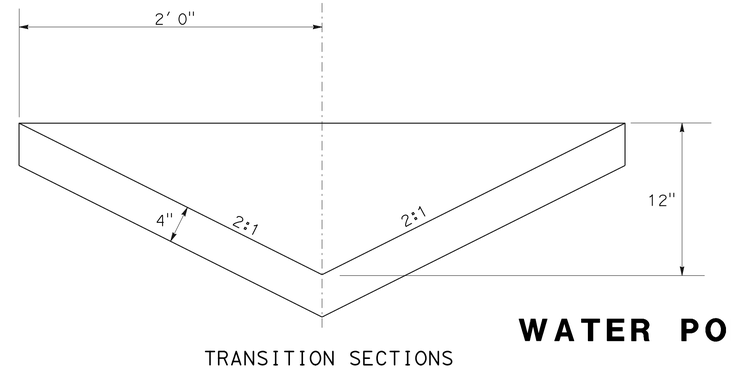

TRANSITION SECTIONS

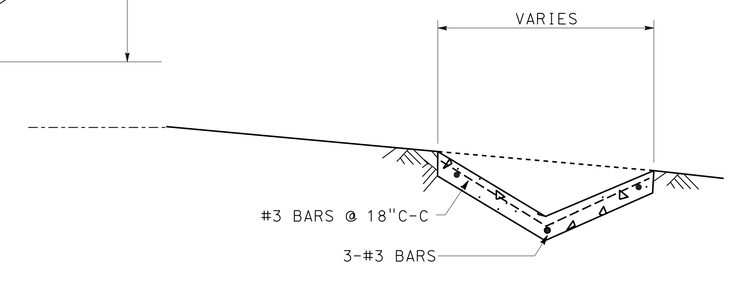

TYPICAL SECTION

TYPE B DRAIN (MODIFIED)

NOTES:

1. ROUND EDGE OF OUTLET TO 3" RADIUS.
2. REINFORCEMENT SHALL BE 1½" CLEAR FROM THE FACE OF CONCRETE.
3. IN CONNECTING TO AN EXISTING STRUCTURE BREAK OUT PORTIONS OF THE EXISTING STRUCTURE SIX INCHES OUTSIDE ITS INTERSECTION WITH THE NEW CONNECTION. BEND ENDS OF #4 BARS OVER CONNECTION OPENING AS REQUIRED.

WATER POLLUTION CONTROL DETAILS

NO SCALE

WD-6

STATE OF CALIFORNIA - DEPARTMENT OF TRANSPORTATION
Caltrans
HYDRAULICS

FUNCTIONAL SUPERVISOR: MARIA QUINONEZ
CALCULATED-DESIGNED BY: TAN HOANG
CHECKED BY: DAVE BHALLA
REVISED BY
DATE REVISED

LAST REVISION 01-01-16
DATE PLOTTED => 01-AUG-2016
TIME PLOTTED => 13:56

Dist	COUNTY	ROUTE	POST MILES TOTAL PROJECT	SHEET No.	TOTAL SHEETS
07	LA,Ven	101	29.3/38.2, 0.0/1.2	85	265

Timothy G Sobelman 11-16-12
REGISTERED CIVIL ENGINEER DATE

4-25-16
PLANS APPROVAL DATE

REGISTERED PROFESSIONAL ENGINEER TIMOTHY B. SOBELMAN No. 59249 Exp. 6-30-17 CIVIL STATE OF CALIFORNIA

THE STATE OF CALIFORNIA OR ITS OFFICERS OR AGENTS SHALL NOT BE RESPONSIBLE FOR THE ACCURACY OR COMPLETENESS OF SCANNED COPIES OF THIS PLAN SHEET.

GENERAL NOTES

Designation:
Partial Austin Vault Sand Filters (AVSFs) are open air reinforced concrete vaults utilizing both sedimentation and sand filtration basins. Type designation is based on length configuration, water quality volume to be drained in a 24 hour period, and average depth of water.

Standard configurations are noted for the following design water quality volumes (WQV): 5,000, 10,000, and 15,000 cubic feet. Length configurations are either short (S) or long (L). The average water depth can be either 3 ft, 4.5 ft, or 6 ft as designed in Design Water Quality Volumes (WQV) table.

Special Reinforcement Coverage:
AVSF Standard Details are not to be used in a corrosive environment or where there is a severe abrasive flow condition or in freeze-thaw locations.

Special Design:
Required for the following conditions: ground water conditions above bottom of AVSF, surcharge loads exceeding HS20 truck load, design bearing pressures or sizes greater than those on this plan, inlet velocities which exceed 8.0 ft/sec at gabion wall, and settlement due to liquefaction.

DESIGN WATER QUALITY VOLUMES (WQV)

AVSF Type*	WQV (ft^3)	W(ft)	L_s(ft)	L_f(ft)	H_w(ft)
S-3500-3	3,500	21	14	38	3
L-3500-3	3,500	15	18	53	3
S-3500-4.5	4,380	21	14	38	4.5
L-3500-4.5	4,380	15	18	53	4.5
S-3500-6	5,260	21	14	38	6
L-3500-6	5,260	15	18	53	6
S-5000-3	5,000	27	15	42	3
L-5000-3	5,000	18	21	63	3
S-5000-4.5	6,250	27	15	42	4.5
L-5000-4.5	6,250	18	21	63	4.5
S-5000-6	7,500	27	15	42	6
L-5000-6	7,500	18	21	63	6
S-10000-3	10,000	36	21	63	3
L-10000-3	10,000	24	30	94	3
S-10000-4.5	12,500	36	21	63	4.5
L-10000-4.5	12,500	24	30	94	4.5
S-10000-6	15,000	36	21	63	6
L-10000-6	15,000	24	30	94	6
S-15000-3	15,000	45	25	76	3
L-15000-3	15,000	30	37	115	3
S-15000-4.5	18,750	45	25	76	4.5
L-15000-4.5	18,750	30	37	115	4.5
S-15000-6	22,500	45	25	76	6
L-15000-6	22,500	30	37	115	6

* AVSF TYPE = LENGTH CONFIGURATION (S OR L) - WATER QUALITY VOLUME (CF) - DESIGN WATER DEPTH (H_W ELEVATION)

DESIGN NOTES

Specifications:
Design:
Bridge Design Specification April 2000 (LFD) (1996 AASHTO) with interims and revisions by Caltrans

Wall & Footing (LFD): 1.5 D + 1.5 E + 1.5 W + 1.5 SC
Where D = Dead Load
E = Earth Load
W = Water Load
SC = Surcharge

Capacity reduction factor is included.

Earth Load:
125 lb/ft^3 vertical,

Water Load:
62.4 lb/ft^3 horizontal/vertical,

Earth pressure for 2:1 unlimited slope determined from Rankine's formula with $\phi = 33°42'$ (Case II).

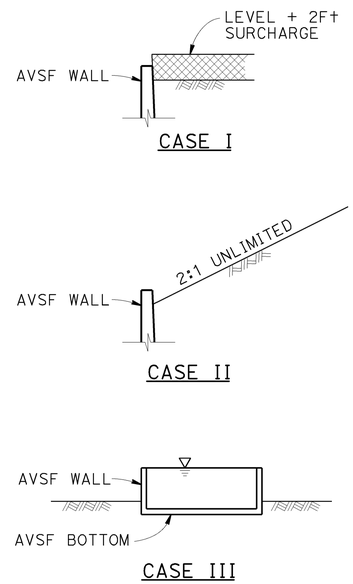

DETAIL OF DESIGN LOADING CASES

CASE I LEVEL + 2FT SURCHARGE, AVSF EMPTY
CASE II 2:1 UNLIMITED SLOPE, AVSF EMPTY
CASE III AVSF FULL OF WATER, NO SOIL PRESSURE

UNIT STRESSES:
$f'c$ = 4,000 psi
fy = 60,000 psi

ABBREVIATIONS

AVSF - AUSTIN VAULT SAND FILTER
EWT&B - EACH WAY TOP AND BOTTOM
H_W - GABION WALL HEIGHT (TYPICALLY SET AT DESIGN WATER DEPTH)
L_f - LENGTH OF FILTRATION BASIN
L_S - LENGTH OF SEDIMENT BASIN
T - WALL THICKNESS
W - WIDTH OF AVSF
WQV - WATER QUALITY VOLUME

LEGEND

DESIGN WATER DEPTH
STANDARD PLAN SHEET No.
DETAIL No.

NOTES

Expansion joints:
Inverts and sidewalls - Place ½" expansion joint filler and waterstop where indicated. See "Austin Vault Sand Filter Details No. 2" sheet for specific wall & invert details.

Construction Joints:
Must be placed where indicated on plans.

Backfill:
See Standard Specifications, except the difference in backfill must not exceed 8'-0" between side walls and inlet and outlet walls.

Earthwork:
Limits of payment for excavation and backfill.

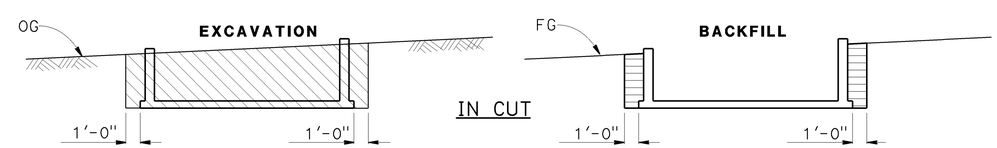

LEGEND:
STRUCTURE EXCAVATION
STRUCTURE BACKFILL

NOTES:
1. Slope or shore excavation sides as necessary.
2. Dimensions shown are minimum.
3. 95% compaction 1'-0" below floor slabs.

AUSTIN VAULT SAND FILTER

WATER POLLUTION CONTROL DETAILS
AUSTIN VAULT SAND FILTER
LEGEND
NO SCALE

WD-7

STATE OF CALIFORNIA - DEPARTMENT OF TRANSPORTATION
DIVISION OF DESIGN
OFFICE OF STORM WATER MANAGEMENT
Caltrans

FUNCTIONAL SUPERVISOR: TIMOTHY B. SOBELMAN
CALCULATED-DESIGNED BY: D. WANG
CHECKED BY: L. HE
REVISED BY
DATE REVISED

LAST REVISION 04-12-13
DATE PLOTTED => 25-JUN-2015
TIME PLOTTED => 08:58

Dist	COUNTY	ROUTE	POST MILES TOTAL PROJECT	SHEET No.	TOTAL SHEETS
07	LA,Ven	101	29.3/38.2, 0.0/1.2	86	265

Timothy B Sobelman 11-16-12
REGISTERED CIVIL ENGINEER DATE

4-25-16
PLANS APPROVAL DATE

REGISTERED PROFESSIONAL ENGINEER TIMOTHY B. SOBELMAN No. 59249 Exp. 6-30-17 CIVIL STATE OF CALIFORNIA

THE STATE OF CALIFORNIA OR ITS OFFICERS OR AGENTS SHALL NOT BE RESPONSIBLE FOR THE ACCURACY OR COMPLETENESS OF SCANNED COPIES OF THIS PLAN SHEET.

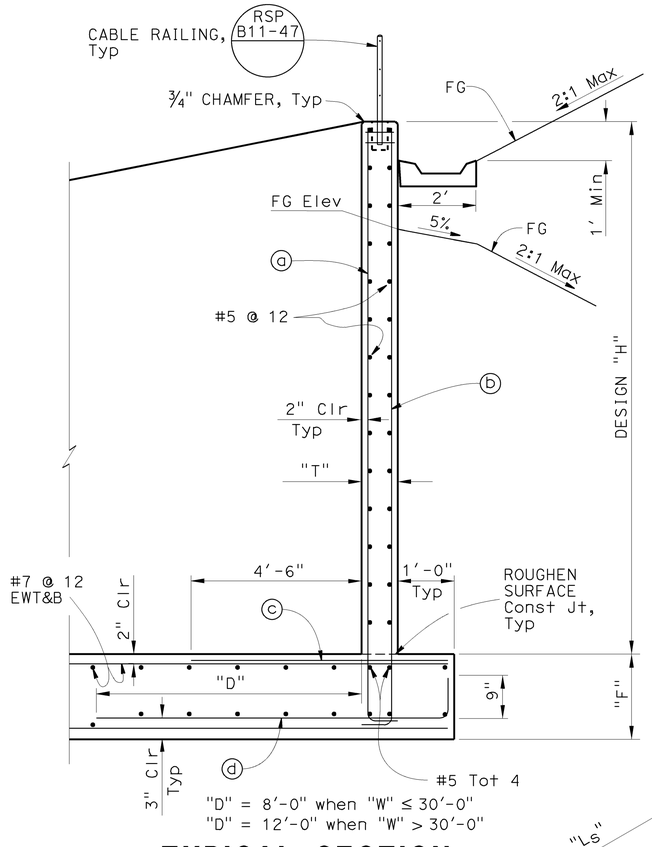

TYPICAL SECTION

REINFORCING STEEL AND DATA FOR WALLS

Design "H"	6'	8'	10'	12'	14'	16'
"T"	12"	12"	12"	12"	14"	14"
"F"	1'-3"	1'-3"	1'-3"	1'-6"	1'-9"	1'-9"
ⓐ bars ⌊	#6 @ 12	#6 @ 12	#6 @ 8	#7 @ 8	#8 @ 8	#9 @ 6
ⓑ bars ⌋	#6 @ 12	#6 @ 12	#6 @ 8	#7 @ 8	#8 @ 8	#8 @ 6
ⓒ bars	#6 @ 12	#6 @ 12	#6 @ 8	#6 @ 8	#7 @ 8	#7 @ 6
ⓓ bars ⌣	#6 @ 12	#6 @ 12	#6 @ 8	#6 @ 8	#7 @ 8	#7 @ 6

NOTES (THIS SHEET ONLY):

1. For dimensions "W", "Ls", "Lf" and "Hw", see Design WQV table on "Austin Vault Sand Filter Legend" sheet.
2. For footing details not shown, see "Austin Wall Sand Filter Details No. 1 and No. 2" sheets.
3. The contractor has the option of matching the Sedimentation Basin wall thickness with the Filtration Basin wall thickness. Thicker design wall must be used at no additional cost to the Department.
4. For additional corner reinforcement not shown see Typical Corner Detail on "Austin Wall Sand Filter Details No. 1" sheet.
5. * - For details see "Drainage Plans".
6. For project specific AVFS elevations, see Wall Design Elevation Table on the drainage profile sheets.

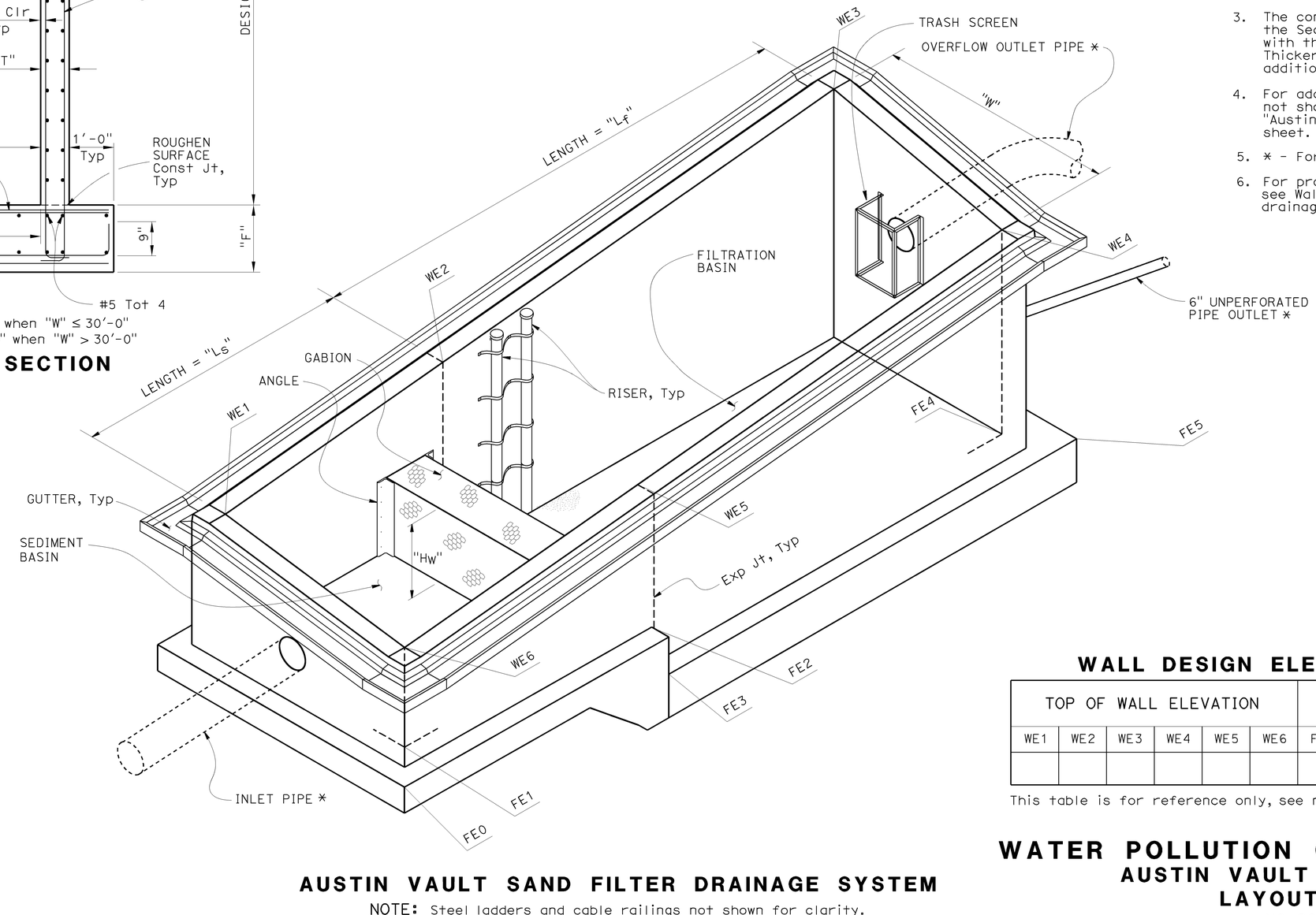

AUSTIN VAULT SAND FILTER DRAINAGE SYSTEM

NOTE: Steel ladders and cable railings not shown for clarity.

WALL DESIGN ELEVATION TABLE

TOP OF WALL ELEVATION						TOP OF FOOTING ELEVATION					
WE1	WE2	WE3	WE4	WE5	WE6	FE0	FE1	FE2	FE3	FE4	FE5

This table is for reference only, see note 6.

WATER POLLUTION CONTROL DETAILS
AUSTIN VAULT SAND FILTER
LAYOUT No. 1

NO SCALE

WD-8

STATE OF CALIFORNIA - DEPARTMENT OF TRANSPORTATION
Caltrans
DIVISION OF DESIGN
OFFICE OF STORM WATER MANAGEMENT

FUNCTIONAL SUPERVISOR: TIMOTHY B. SOBELMAN
CALCULATED-DESIGNED BY: D. WANG
CHECKED BY: L. HE
REVISED BY
DATE REVISED

LAST REVISION 04-12-13
DATE PLOTTED => 25-JUN-2015
TIME PLOTTED => 08:58

Dist	COUNTY	ROUTE	POST MILES TOTAL PROJECT	SHEET No.	TOTAL SHEETS
07	LA,Ven	101	29.3/38.2, 0.0/1.2	87	265

Timothy G Sobelman 11-16-12
REGISTERED CIVIL ENGINEER DATE

4-25-16
PLANS APPROVAL DATE

REGISTERED PROFESSIONAL ENGINEER TIMOTHY B. SOBELMAN No. 59249 Exp. 6-30-17 CIVIL STATE OF CALIFORNIA

THE STATE OF CALIFORNIA OR ITS OFFICERS OR AGENTS SHALL NOT BE RESPONSIBLE FOR THE ACCURACY OR COMPLETENESS OF SCANNED COPIES OF THIS PLAN SHEET.

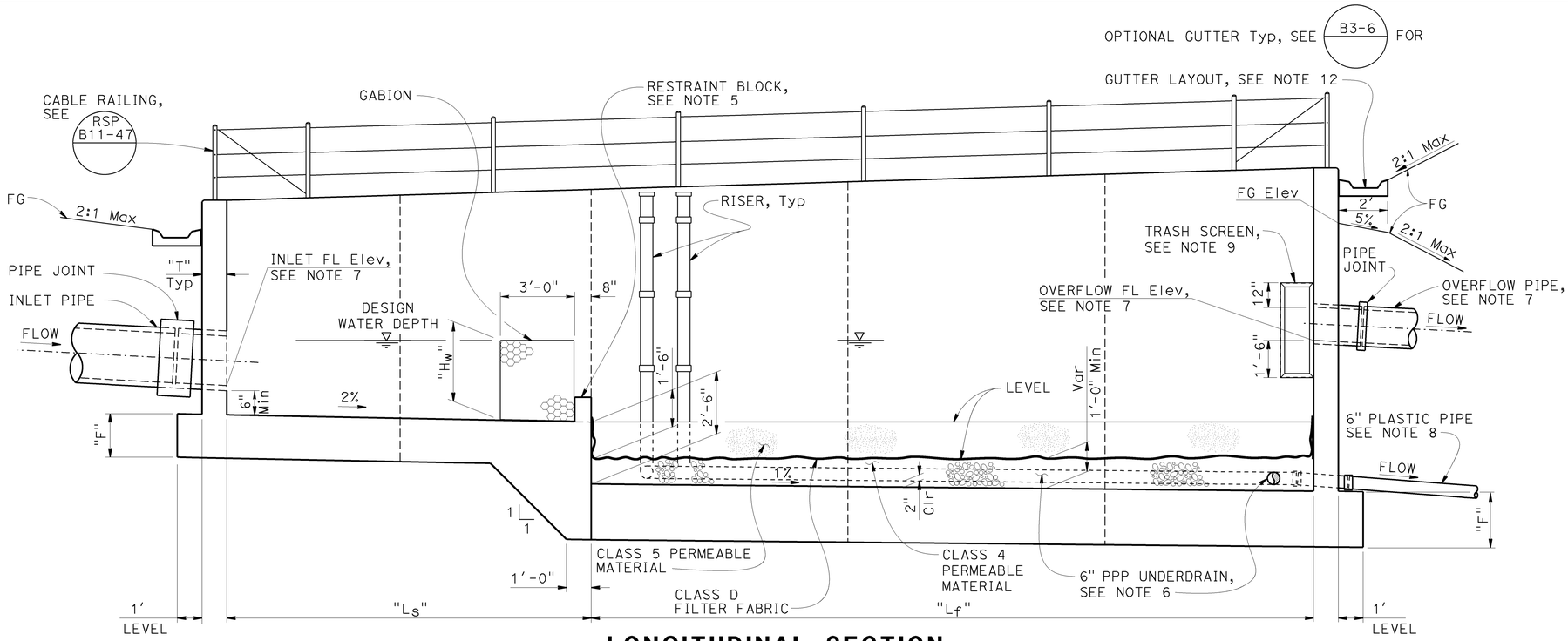

LONGITUDINAL SECTION

NOTE: Ladder not shown for clarity.

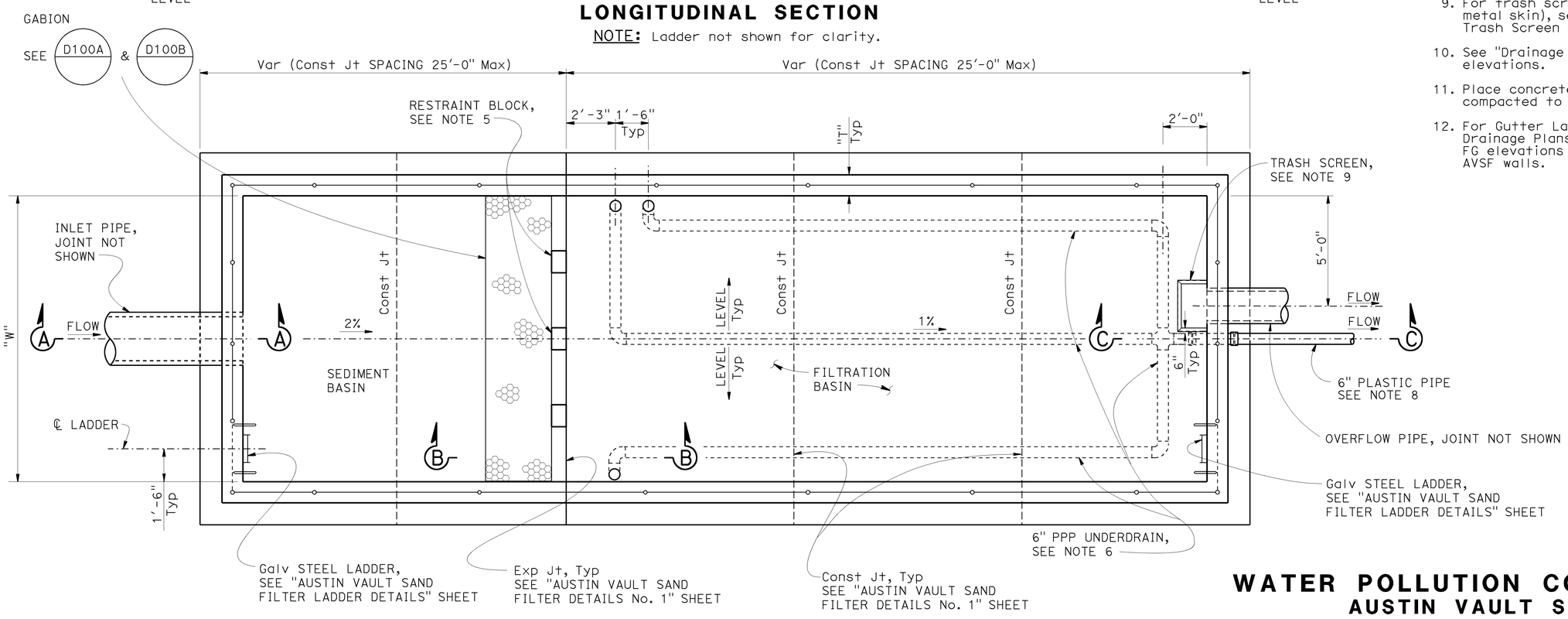

PLAN

NOTE: Gutter not shown for clarity.

NOTES (THIS SHEET ONLY)

1. For dimensions "W", "Ls", "Lf" and "Hw", see Design WQV table on "Austin Vault Sand Filter Legend" sheet.
2. For dimensions "T" and "F", see "Austin Vault Sand Filter Layout No. 1" sheet.
3. For Typical Section, see "Austin Vault Sand Filter Layout No. 1" sheet.
4. For Section A-A, B-B and C-C, see "Austin Vault Sand Filter Details No. 1" sheet.
5. For restraint block details, see "Austin Vault Sand Filter Details No. 1" and "Details No. 2" sheets.
6. For details of PPP underdrain system, see "Austin Vault Sand Filter Underdrain Details" sheet.
7. For Layout and FL elevations of inlet and overflow pipe, see "Drainage Plans and Drainage Profiles" sheets.
8. For slope of outlet plastic pipe, see "Drainage Profiles".
9. For trash screen details (frame and perforated metal skin), see "Austin Vault Sand Filter Trash Screen Details" sheet.
10. See "Drainage Profiles" for top of wall elevations.
11. Place concrete on base or native material compacted to 95% relative compaction.
12. For Gutter Layout and FL elevations, see Drainage Plans and Drainage Profiles. Show FG elevations at all grade breaks along the AVSF walls.

WATER POLLUTION CONTROL DETAILS
AUSTIN VAULT SAND FILTER
LAYOUT No. 2

NO SCALE

WD-9

REVISED BY	DATE REVISED

CALCULATED-DESIGNED BY: D. WANG
CHECKED BY: L. HE
FUNCTIONAL SUPERVISOR: TIMOTHY B. SOBELMAN

STATE OF CALIFORNIA - DEPARTMENT OF TRANSPORTATION
DIVISION OF DESIGN
OFFICE OF STORM WATER MANAGEMENT
Caltrans

LAST REVISION 04-12-13 | DATE PLOTTED => 25-JUN-2015 | TIME PLOTTED => 08:58

Dist	COUNTY	ROUTE	POST MILES TOTAL PROJECT	SHEET No.	TOTAL SHEETS
07	LA,Ven	101	29.3/38.2, 0.0/1.2	88	265

Timothy G Sobelman 11-16-12
REGISTERED CIVIL ENGINEER DATE

4-25-16
PLANS APPROVAL DATE

REGISTERED PROFESSIONAL ENGINEER TIMOTHY B. SOBELMAN No. 59249 Exp. 6-30-17 CIVIL STATE OF CALIFORNIA

THE STATE OF CALIFORNIA OR ITS OFFICERS OR AGENTS SHALL NOT BE RESPONSIBLE FOR THE ACCURACY OR COMPLETENESS OF SCANNED COPIES OF THIS PLAN SHEET.

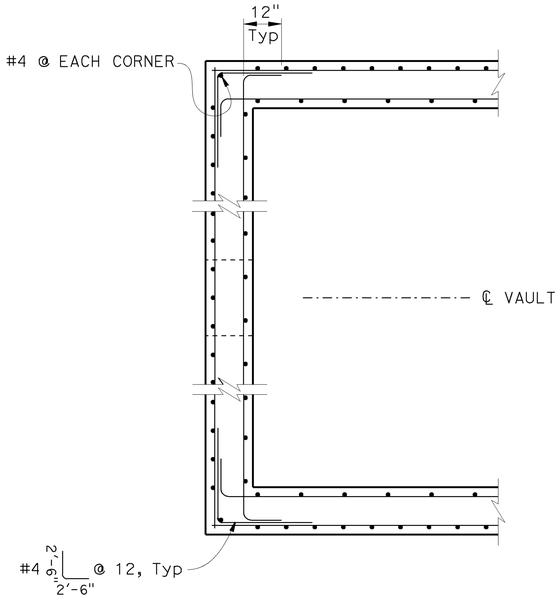

TYPICAL CORNER DETAIL

Inlet wall shown, outlet wall similar.

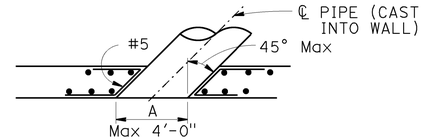

SECTION D-D

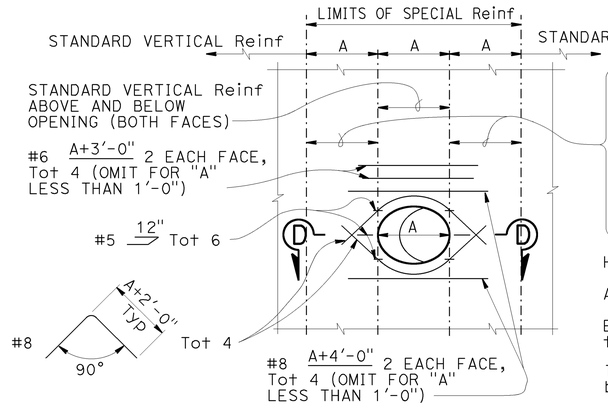

Standard vertical reinforcement plus additional vertical bars corresponding in size and number to bars cut by the opening. Place half on each side. Extend the additional bars into the footing the same as other vertical wall reinforcement and to a minimum of 60 bar diameters above the top of utility opening if wall height permits. Bundle bars as required.

Horizontal Reinf to be standard except as shown.

All Reinf to clear opening by 2" minimum.

Expansion joints must not be located within the limits of special reinforcing.

The rebar lengths shown are maximum and must be adjusted due to the limitations of space.

WALL OPENING DETAIL

To be used at inlet, outlet and overflow pipe locations

NOTES (THIS SHEET ONLY):

1. For locations of section A-A, B-B, and C-C, see "Austin Vault Sand Filter Layout No. 2" sheet.
2. For wall and footing reinforcement details, see Typical Section on "Austin Vault Sand Filter Layout No. 1" sheet.

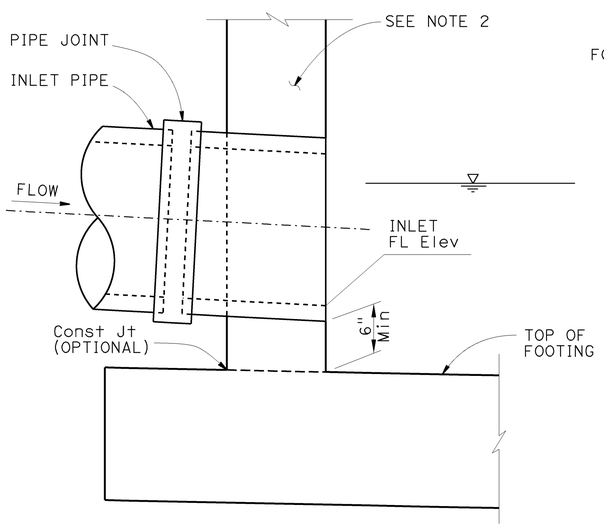

SECTION A-A

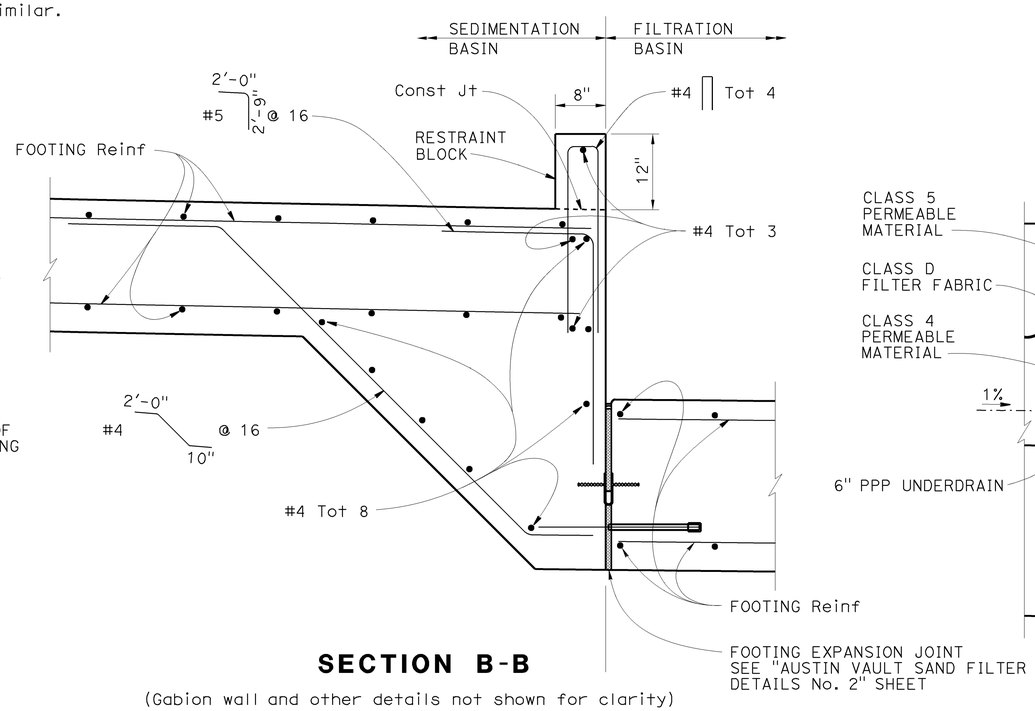

SECTION B-B

(Gabion wall and other details not shown for clarity)

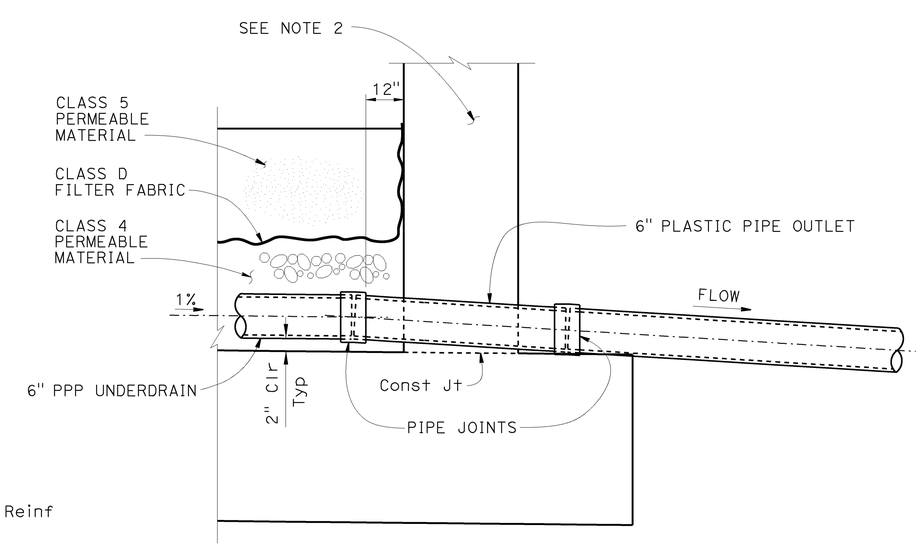

SECTION C-C

WATER POLLUTION CONTROL DETAILS
AUSTIN VAULT SAND FILTER
DETAILS No. 1

NO SCALE

WD-10

STATE OF CALIFORNIA - DEPARTMENT OF TRANSPORTATION
DIVISION OF DESIGN
OFFICE OF STORM WATER MANAGEMENT
Caltrans

FUNCTIONAL SUPERVISOR: TIMOTHY B. SOBELMAN
CALCULATED-DESIGNED BY: D. WANG
CHECKED BY: L. HE
REVISED BY
DATE REVISED

LAST REVISION 04-12-13
DATE PLOTTED => 25-JUN-2015
TIME PLOTTED => 08:58

Dist	COUNTY	ROUTE	POST MILES TOTAL PROJECT	SHEET No.	TOTAL SHEETS
07	LA,Ven	101	29.3/38.2, 0.0/1.2	89	265

REGISTERED CIVIL ENGINEER 11-16-12 DATE

4-25-16
PLANS APPROVAL DATE

REGISTERED PROFESSIONAL ENGINEER TIMOTHY B. SOBELMAN No. 59249 Exp. 6-30-17 CIVIL STATE OF CALIFORNIA

THE STATE OF CALIFORNIA OR ITS OFFICERS OR AGENTS SHALL NOT BE RESPONSIBLE FOR THE ACCURACY OR COMPLETENESS OF SCANNED COPIES OF THIS PLAN SHEET.

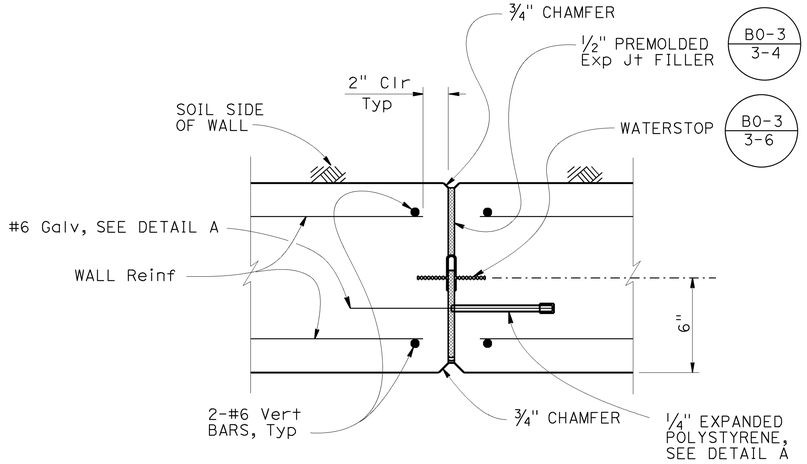

WALL EXPANSION JOINT DETAIL - PLAN SECTION

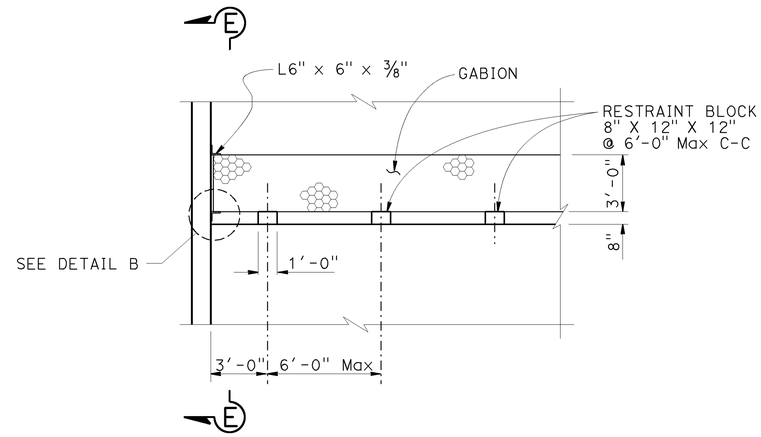

RESTRAINT BLOCK DETAIL

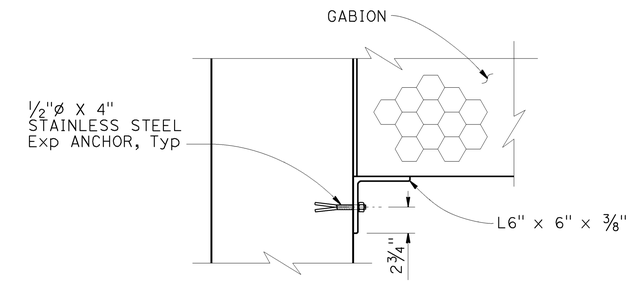

DETAIL B

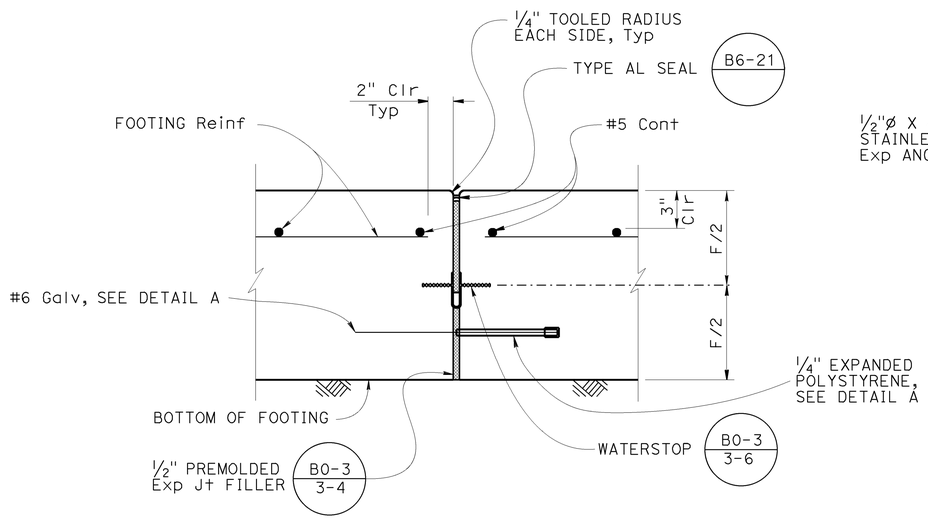

FOOTING EXPANSION JOINT DETAIL

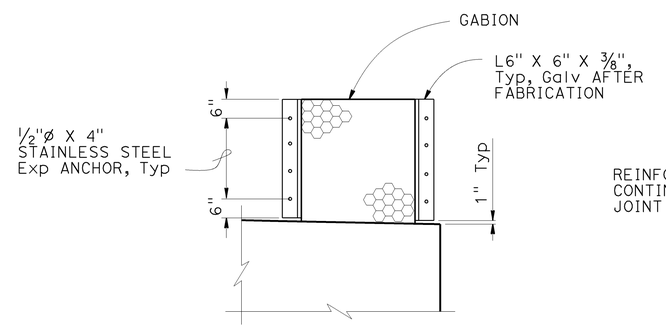

SECTION E-E

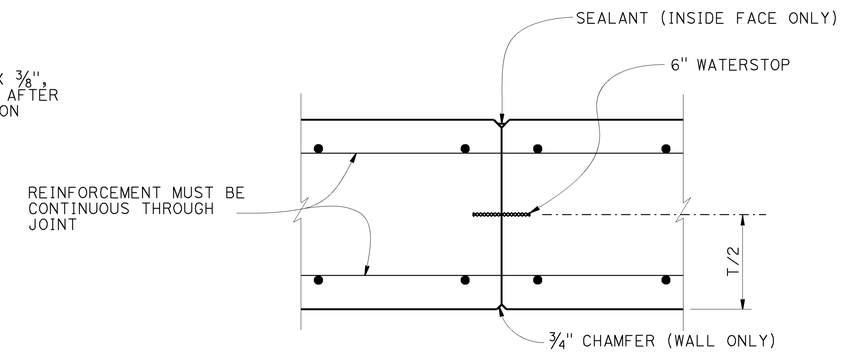

WALL CONSTRUCTION JOINT DETAIL

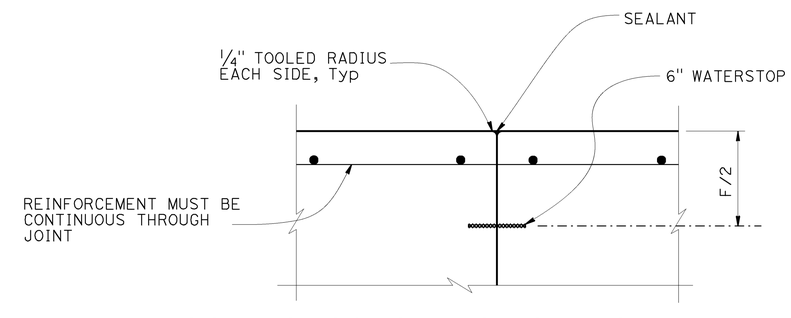

FOOTING CONSTRUCTION JOINT DETAIL

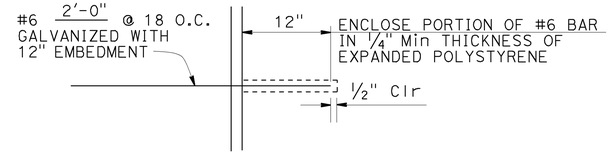

DETAIL A

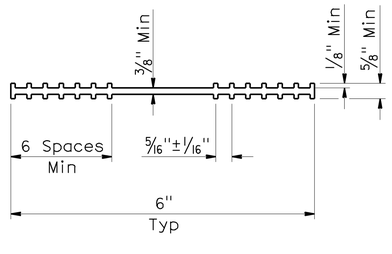

6" WATERSTOP DETAIL

WATER POLLUTION CONTROL DETAILS
AUSTIN VAULT SAND FILTER
DETAILS No. 2

NO SCALE

WD-11

STATE OF CALIFORNIA - DEPARTMENT OF TRANSPORTATION
DIVISION OF DESIGN
OFFICE OF STORM WATER MANAGEMENT

FUNCTIONAL SUPERVISOR: TIMOTHY B. SOBELMAN
CALCULATED-DESIGNED BY: D. WANG
CHECKED BY: L. HE
REVISED BY
DATE REVISED

LAST REVISION 04-12-13
DATE PLOTTED => 25-JUN-2015
TIME PLOTTED => 08:58

Dist	COUNTY	ROUTE	POST MILES TOTAL PROJECT	SHEET No.	TOTAL SHEETS
07	LA,Ven	101	29.3/38.2, 0.0/1.2	90	265

Timothy G Sobelman 11-16-12
REGISTERED CIVIL ENGINEER DATE

4-25-16
PLANS APPROVAL DATE

REGISTERED PROFESSIONAL ENGINEER TIMOTHY B. SOBELMAN No. 59249 Exp. 6-30-17 CIVIL STATE OF CALIFORNIA

THE STATE OF CALIFORNIA OR ITS OFFICERS OR AGENTS SHALL NOT BE RESPONSIBLE FOR THE ACCURACY OR COMPLETENESS OF SCANNED COPIES OF THIS PLAN SHEET.

NOTES (THIS SHEET ONLY):

1. All angles, screws and perforated metal must be galvanized.
2. Paint all weld joints with zinc rich paint or galvanize after welding.
3. Dimension "D1" is to be equal to inside diameter of overflow pipe.

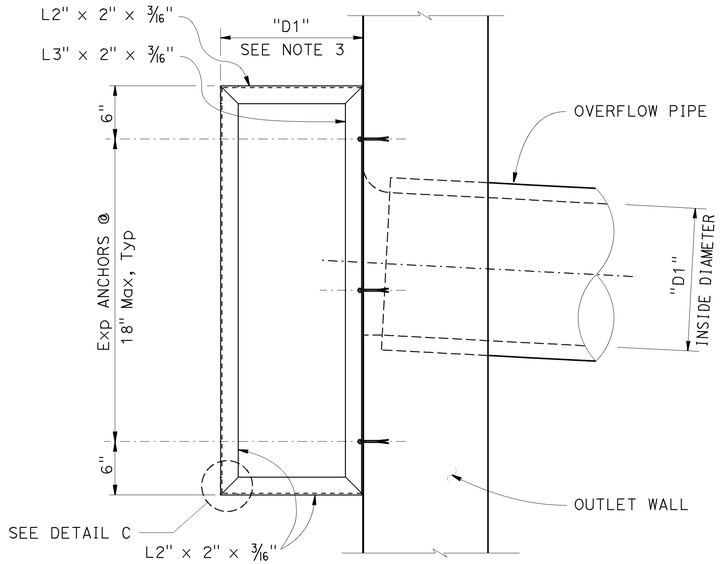

ELEVATION

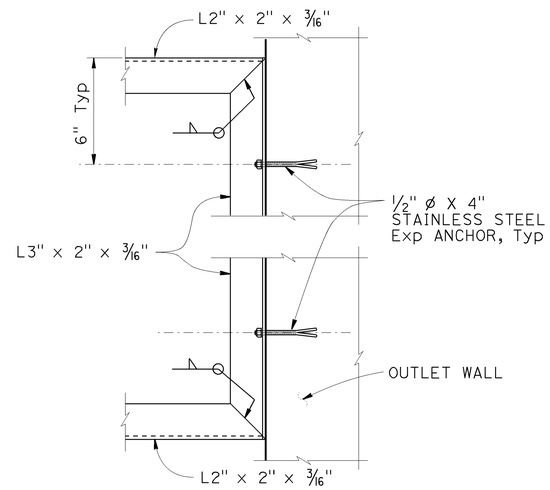

SECTION F - F

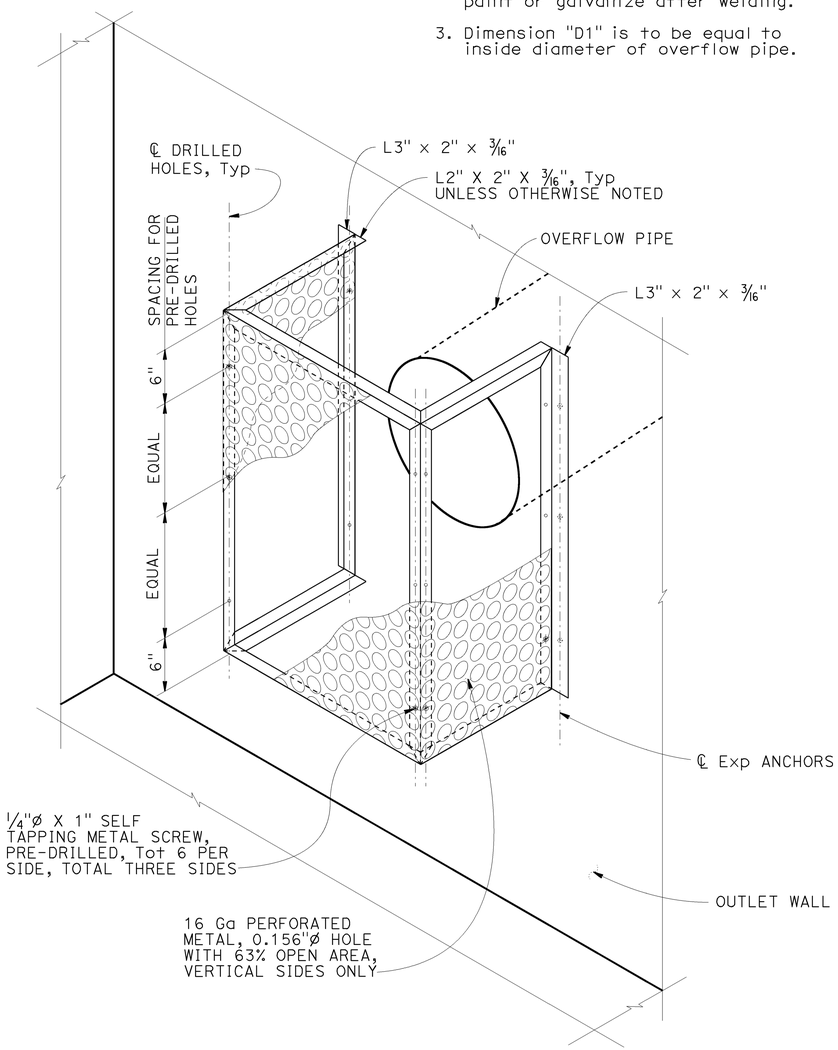

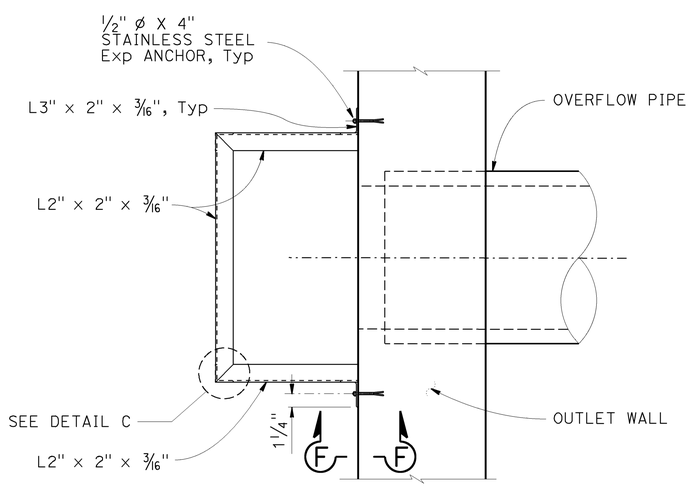

PLAN

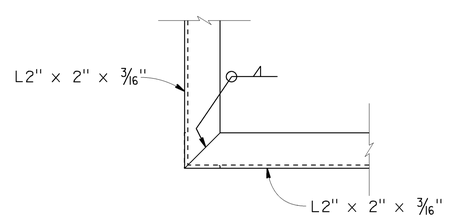

DETAIL C
TYPICAL CORNER DETAIL

WATER POLLUTION CONTROL DETAILS
AUSTIN VAULT SAND FILTER
TRASH SCREEN DETAILS

NO SCALE

WD-12

STATE OF CALIFORNIA - DEPARTMENT OF TRANSPORTATION
DIVISION OF DESIGN
OFFICE OF STORM WATER MANAGEMENT

FUNCTIONAL SUPERVISOR: TIMOTHY B. SOBELMAN
CALCULATED-DESIGNED BY: D. WANG
CHECKED BY: L. HE
REVISED BY
DATE REVISED

LAST REVISION 04-12-13
DATE PLOTTED => 25-JUN-2015
TIME PLOTTED => 08:58

Dist	COUNTY	ROUTE	POST MILES TOTAL PROJECT	SHEET No.	TOTAL SHEETS
07	LA,Ven	101	29.3/38.2, 0.0/1.2	91	265

REGISTERED CIVIL ENGINEER — DATE 11-16-12

4-25-16
PLANS APPROVAL DATE

REGISTERED PROFESSIONAL ENGINEER — TIMOTHY B. SOBELMAN — No. 59249 — Exp. 6-30-17 — CIVIL — STATE OF CALIFORNIA

THE STATE OF CALIFORNIA OR ITS OFFICERS OR AGENTS SHALL NOT BE RESPONSIBLE FOR THE ACCURACY OR COMPLETENESS OF SCANNED COPIES OF THIS PLAN SHEET.

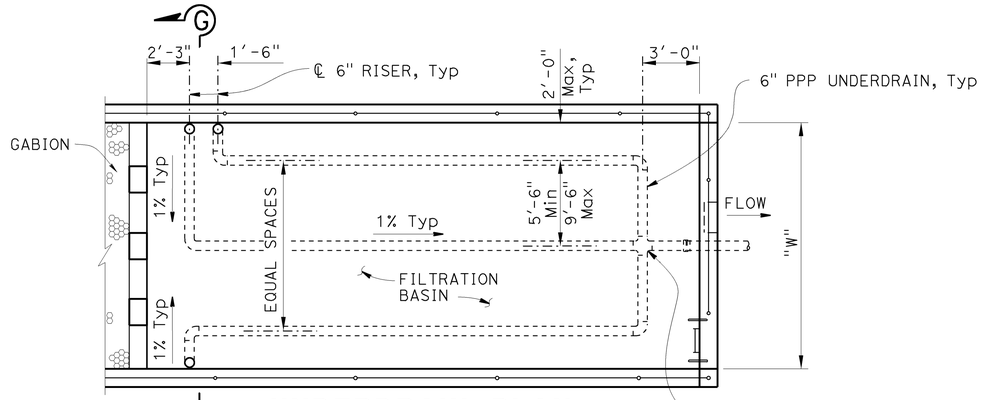

UNDERDRAIN PLAN (FILTRATION BASIN)

"W" = 15' or 21'
AVSF Type = (S or L 3,500)

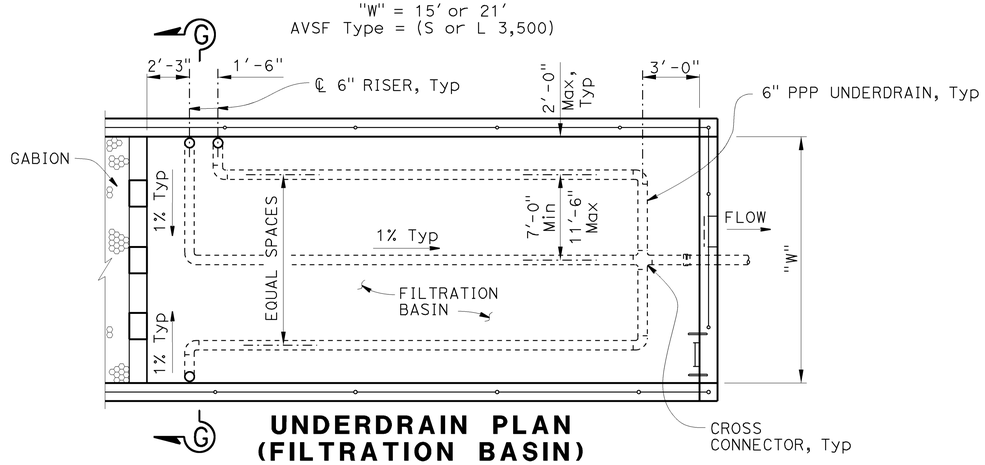

UNDERDRAIN PLAN (FILTRATION BASIN)

"W" = 18', 24' or 27'
AVSF Type = (S or L 5,000, L 10,000)

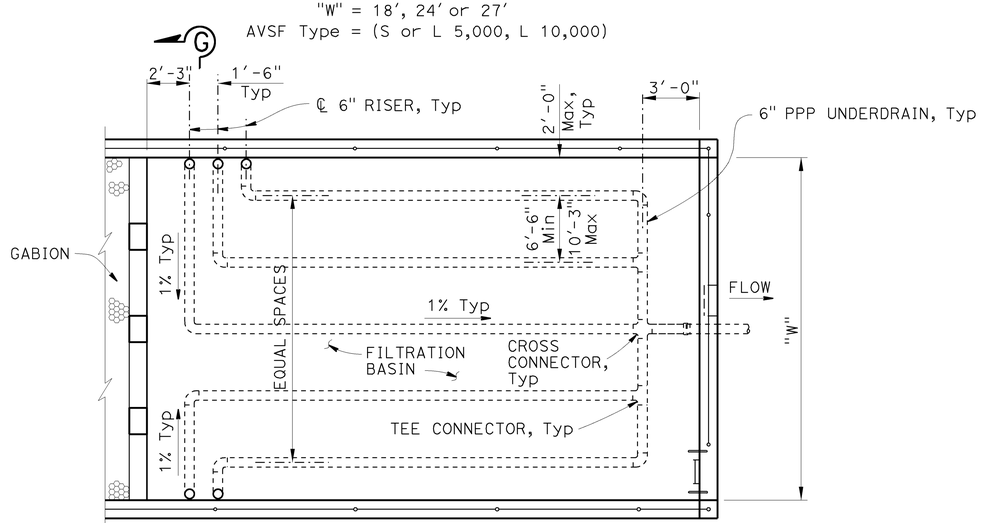

UNDERDRAIN PLAN (FILTRATION BASIN)

"W" = 30', 36' or 45'
AVSF Type = (S 10,000, S or L 15,000)

NOTE (THIS SHEET ONLY):

1. For typical cover and depth of permeable material, see "Austin Vault Sand Filter Layout No. 2" sheet.

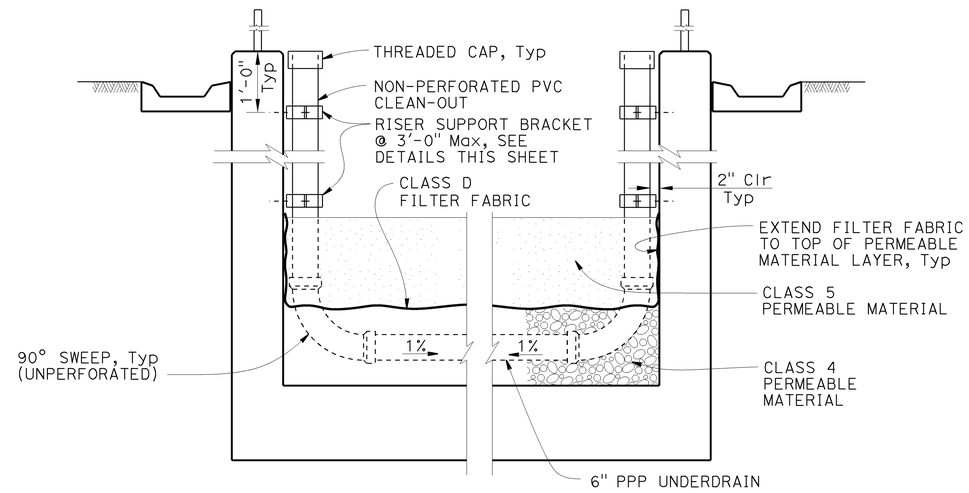

SECTION G - G

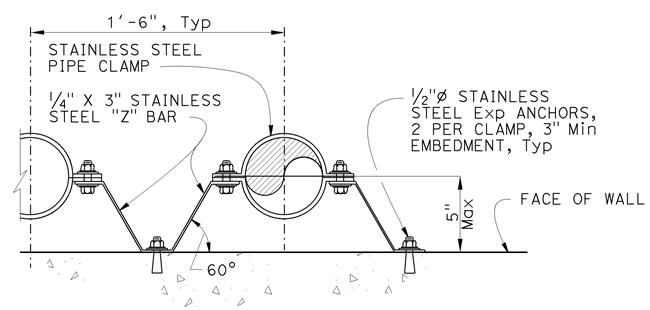

RISER SUPPORT BRACKET DETAIL

WATER POLLUTION CONTROL DETAILS
AUSTIN VAULT SAND FILTER UNDERDRAIN DETAILS

NO SCALE

WD-13

STATE OF CALIFORNIA - DEPARTMENT OF TRANSPORTATION
DIVISION OF DESIGN
OFFICE OF STORM WATER MANAGEMENT

FUNCTIONAL SUPERVISOR: TIMOTHY B. SOBELMAN
CALCULATED-DESIGNED BY: D. WANG
CHECKED BY: L. HE
REVISED BY
DATE REVISED

LAST REVISION 04-12-13
DATE PLOTTED => 25-JUN-2015
TIME PLOTTED => 08:58

Dist	COUNTY	ROUTE	POST MILES TOTAL PROJECT	SHEET No.	TOTAL SHEETS
07	LA,Ven	101	29.3/38.2, 0.0/1.2	92	265

Timothy G Sobelman 11-16-12
REGISTERED CIVIL ENGINEER DATE

4-25-16
PLANS APPROVAL DATE

REGISTERED PROFESSIONAL ENGINEER TIMOTHY B SOBELMAN No. 59249 Exp. 6-30-17 CIVIL STATE OF CALIFORNIA

THE STATE OF CALIFORNIA OR ITS OFFICERS OR AGENTS SHALL NOT BE RESPONSIBLE FOR THE ACCURACY OR COMPLETENESS OF SCANNED COPIES OF THIS PLAN SHEET.

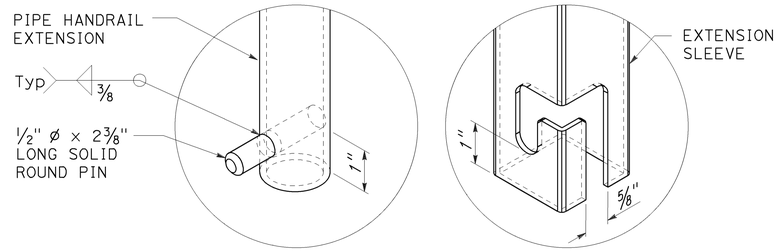

EXTENDABLE HANDRAIL LATCH

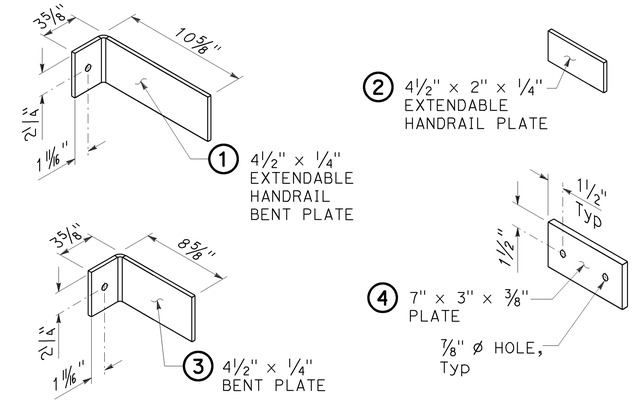

BRACKET DETAILS

NOTES (THIS SHEET ONLY):

1. Rungs must be skid resistant.
2. Use wall mounted handrail for vault depths between 4'-0" and 6'-6". For deeper vaults use extendable handrail detail. Vault depth is distance between top of wall and either top of floor slab or top of filter media material (use which ever distance is less). Ladders must not extend into filter media material.
3. No handrail required for Linear Radial GSRD 4'-0" depth, due to grate conflict.

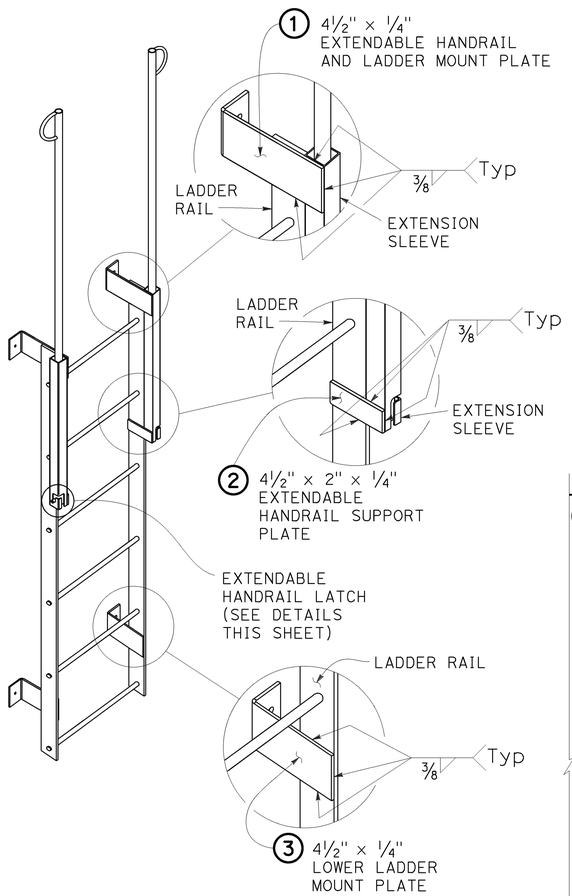

LADDER

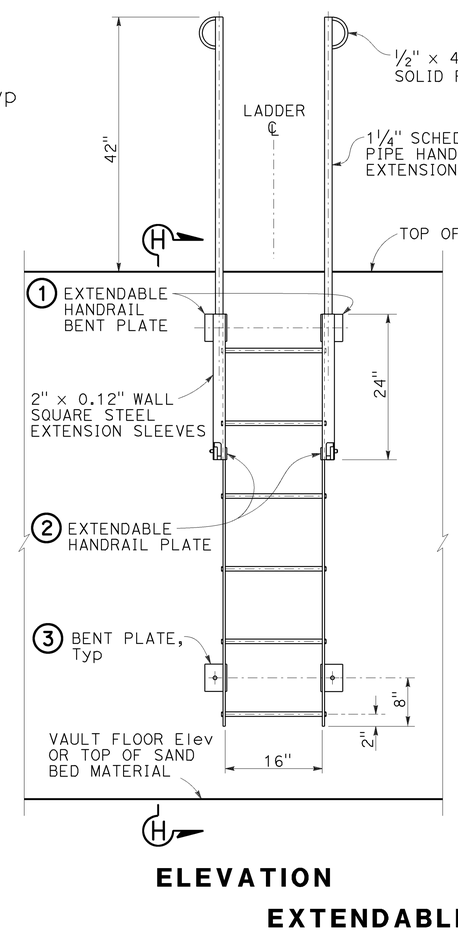

ELEVATION

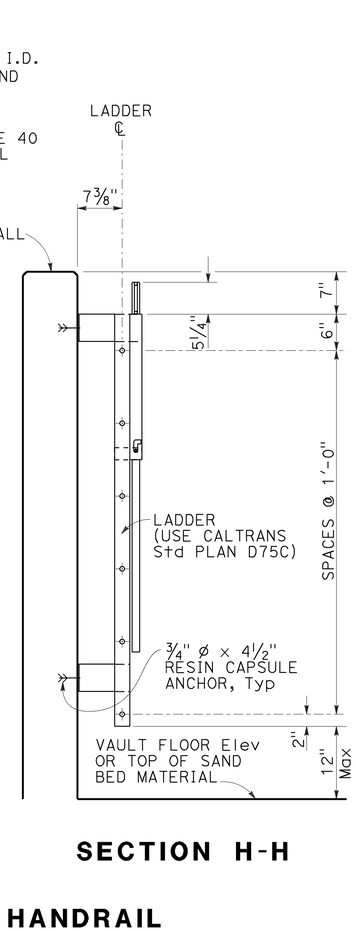

SECTION H-H

EXTENDABLE HANDRAIL

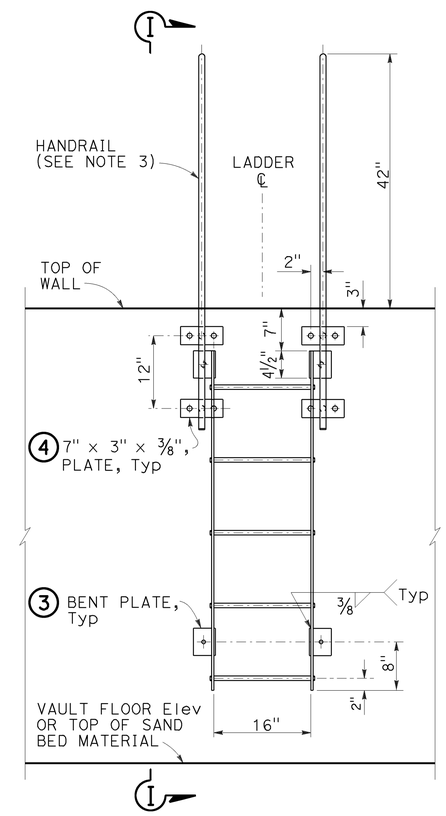

ELEVATION

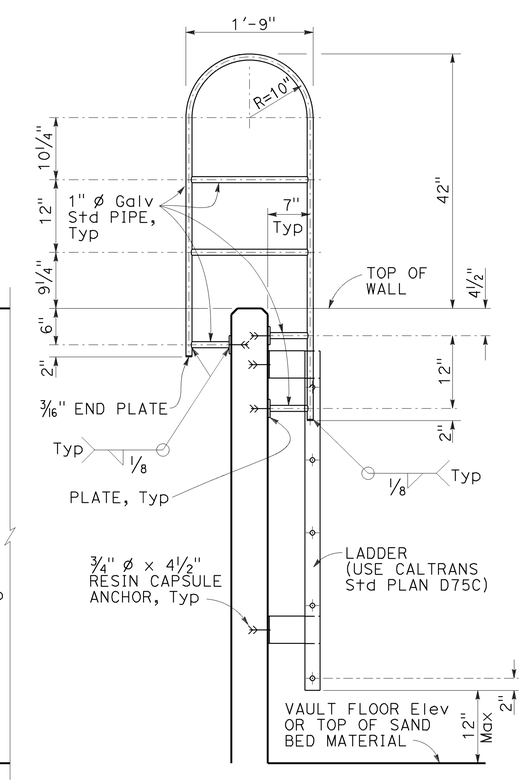

SECTION I-I

WALL MOUNTED HANDRAIL

WATER POLLUTION CONTROL DETAILS
AUSTIN VAULT SAND FILTER
LADDER DETAILS

NO SCALE

WD-14

STATE OF CALIFORNIA - DEPARTMENT OF TRANSPORTATION
DIVISION OF DESIGN
OFFICE OF STORM WATER MANAGEMENT
Caltrans

FUNCTIONAL SUPERVISOR: TIMOTHY B. SOBELMAN
CALCULATED-DESIGNED BY: D. WANG
CHECKED BY: L. HE
REVISED BY
DATE REVISED

LAST REVISION 04-12-13
DATE PLOTTED => 25-JUN-2015
TIME PLOTTED => 08:58

NOTES:

1. PIPE JOINTS ARE STANDARD OR AS NOTED ON PLANS.
2. (N) NOT A SEPARATE PAY ITEM, FOR INFORMATION ONLY.

Dist	COUNTY	ROUTE	POST MILES TOTAL PROJECT	SHEET No.	TOTAL SHEETS
07	LA,Ven	101	29.3/38.2, 0.0/1.2	93	265

REGISTERED CIVIL ENGINEER 4-20-16 DATE

4-25-16
PLANS APPROVAL DATE

REGISTERED PROFESSIONAL ENGINEER DAVE BHALLA No. 34350 Exp. 9-30-17 CIVIL STATE OF CALIFORNIA

THE STATE OF CALIFORNIA OR ITS OFFICERS OR AGENTS SHALL NOT BE RESPONSIBLE FOR THE ACCURACY OR COMPLETENESS OF SCANNED COPIES OF THIS PLAN SHEET.

WATER POLLUTION CONTROL QUANTITIES

WATER POLLUTION CONTROL SHEET No.	WATER POLLUTION CONTROL SYSTEM No.	WATER POLLUTION CONTROL UNIT	HEIGHT OF INLET H OR V (N)	MINOR CONCRETE (MINOR STRUCTURE)	MISCELLANEOUS IRON AND STEEL	CONCRETE (DITCH LINING)	ROCK SLOPE PROTECTION (FACING, METHOD B)	ROCK SLOPE PROTECTION FABRIC (CLASS 8)	18" CONCRETE FLARED END SECTION	24" CONCRETE FLARED END SECTION	DITCH EXCAVATION	REMOVE FES	36" CONCRETE FLARED END SECTION	CAP INLET	REMOVE PIPE	REMOVE OVERSIDE DRAIN	REMOVE CONCRETE (CHANNEL)	18" REINFORCED CONCRETE PIPE	24" REINFORCED CONCRETE PIPE	36" REINFORCED CONCRETE PIPE	48" REINFORCED CONCRETE PIPE	HOT MIX ASPHALT(TYPE A)	PLACE HOT MIX ASPHALT (Misc AREA)	12" CORRUGATED STEEL PIPE RISER (.079" THICK)	TYPE 24-12 FRAME AND GRATE	(N) MANHOLE FRAME AND COVER	(N) MAXIMUM COVER	AVSF (AUSTIN VAULT SAND FILTER) STRUCTURAL CONCRETE	STRUCTURE EXCAVATION	STRUCTURE BACKFILL	CLASS 5 PERMEABLE MATERIAL	BAR REINFORCING STEEL	GABION	CABLE RAILING	CLASS D FILTER FABRIC	CLASS 4 PERMEABLE MATERIAL	MISCELLANEOUS METAL	6" NON-PERFORATED PLASTIC PIPE UNDERDRAIN	6" PERFORATED PLASTIC PIPE UNDERDRAIN	JOINT SEAL (TYPE AL)	6" PLASTIC PIPE (SCHEDULE 40) (SUPPLY LINE)	MINOR CONCRETE (GUTTER)	DESCRIPTION	STATION
			Ft	CY	LB	CY	CY	SQYD	EA	EA	CY	EA	EA	EA	LF	EA	CY	LF	LF	LF	LF	TON	SQYD	EA	EA	EA	Ft	CY	CY	CY	CY	LB	CY	LF	SQYD	CY	LB	LF	LF	LF	LF	CY		
W-1	1	a	3.3	1.44	580																				2																		GD-1 INLET	69.1′ Lt 1585+61.00 ℄ Fwy
		b																50									2.5																18" RCP	
		c	4.0	1.64	580																				2																		GD-1 INLET	68.9′ Lt 1586+13.00 ℄ Fwy
		d																	50								2.9																24" RCP	
		e	4.9	1.90	580																																						GD-1 INLET	68.9′ Lt 1575+33.75 ℄ Fwy
		f																	70								6.1																24" RCP	
		g																										381	1,885	123	125	89,637	8	169	290	123	115	45	306	55		AUSTIN VAULT SAND FILTER L-10000-3	
		h																	3																								24" RCP	
		i				1.93																																					TYPE B DRAIN (MODIFIED)	
		j																																				20					6" NON-PERFORATED PLASTIC PIPE UNDERDRAIN	
		k	6.5	2.38	250																																						JUNCTION CHAMBER -3C	98.7′ Lt 1588+75.43 ℄ Fwy
		l		0.27														97									5.0																18" RCP	
		m							1																																		18" CONCRETE FES	118.8′ Lt 1589+73.49 ℄ Fwy
		n					7.30	22																																			RSP (FACING, METHOD B)	
SHEET TOTAL			3.8	1,990	1.9	7.3	22	1										147	173									381	1,885	123	125	89,637	8	169	290	123	115	65	306	55			

WATER POLLUTION CONTROL QUANTITIES
WQ-1

REVISED BY | DATE REVISED
CHRIS NGUYEN | TAN HOANG
CALCULATED-DESIGNED BY | CHECKED BY
FUNCTIONAL SUPERVISOR
MARIA QUINONEZ

STATE OF CALIFORNIA - DEPARTMENT OF TRANSPORTATION
Caltrans
HYDRAULICS

LAST REVISION 01-01-16 | DATE PLOTTED => 01-AUG-2016 | TIME PLOTTED => 13:56

Dist	COUNTY	ROUTE	POST MILES TOTAL PROJECT	SHEET No.	TOTAL SHEETS
07	LA,Ven	101	29.3/38.2, 0.0/1.2	94	265

REGISTERED CIVIL ENGINEER 4-20-16 DATE

4-25-16
PLANS APPROVAL DATE

REGISTERED PROFESSIONAL ENGINEER DAVE BHALLA No. 34350 Exp. 9-30-17 CIVIL STATE OF CALIFORNIA

THE STATE OF CALIFORNIA OR ITS OFFICERS OR AGENTS SHALL NOT BE RESPONSIBLE FOR THE ACCURACY OR COMPLETENESS OF SCANNED COPIES OF THIS PLAN SHEET.

NOTES:

1. PIPE JOINTS ARE STANDARD OR AS NOTED ON PLANS.
2. (N) NOT A SEPARATE PAY ITEM, FOR INFORMATION ONLY.

WATER POLLUTION CONTROL QUANTITIES

WATER POLLUTION CONTROL SHEET No.	WATER POLLUTION CONTROL SYSTEM No.	WATER POLLUTION CONTROL UNIT	HEIGHT OF INLET H OR V (N)	MINOR CONCRETE (MINOR STRUCTURE)	MISCELLANEOUS IRON AND STEEL	CONCRETE (DITCH LINING)	ROCK SLOPE PROTECTION (FACING, METHOD B)	ROCK SLOPE PROTECTION FABRIC (CLASS 8)	18" CONCRETE FLARED END SECTION	24" CONCRETE FLARED END SECTION	DITCH EXCAVATION	REMOVE FES	36" CONCRETE FLARED END SECTION	CAP INLET	REMOVE PIPE	REMOVE OVERSIDE DRAIN	REMOVE CONCRETE (CHANNEL)	18" REINFORCED CONCRETE PIPE	24" REINFORCED CONCRETE PIPE	36" REINFORCED CONCRETE PIPE	42" REINFORCED CONCRETE PIPE	HOT MIX ASPHALT(TYPE A)	PLACE HOT MIX ASPHALT (Misc AREA)	12" CORRUGATED STEEL PIPE RISER (.079" THICK)	TYPE 24-12 FRAME AND GRATE (N)	MANHOLE FRAME AND COVER (N)	MAXIMUM COVER (N)	AVSF (AUSTIN VAULT SAND FILTER) STRUCTURAL CONCRETE	STRUCTURE EXCAVATION	STRUCTURE BACKFILL	CLASS 5 PERMEABLE MATERIAL	BAR REINFORCING STEEL	GABION	CABLE RAILING	CLASS D FILTER FABRIC	CLASS 4 PERMEABLE MATERIAL	MISCELLANEOUS METAL	6" NON-PERFORATED PLASTIC PIPE UNDERDRAIN	6" PERFORATED PLASTIC PIPE UNDERDRAIN	JOINT SEAL (TYPE AL)	6" PLASTIC PIPE (SCHEDULE 40) (SUPPLY LINE)	MINOR CONCRETE (GUTTER)	DESCRIPTION	STATION
			F†	CY	LB	CY	CY	SQYD	EA	EA	CY	EA	EA	EA	LF	EA	CY	LF	LF	LF	LF	TON	SQYD	EA	EA	EA	F†	CY	CY	CY	CY	LB	CY	LF	SQYD	CY	LB	LF	LF	LF	LF	CY		
W-2	2	a													136																												REMOVE 24" RCP	
		b																	43																								24" RCP	
		c																										310	1,527	243	125	69,565	8	169	290	123	115	39	306	51			AUSTIN VAULT SAND FILTER L-10000-3	
		d																	3																								24" RCP	
		e				1.53																																					TYPE B DRAIN (MODIFIED)	
		f																																				15					6" NON-PERFORATED PLASTIC PIPE UNDERDRAIN	
		g	7.5	2.51	250																																						JUNCTION CHAMBER - 3C	98.7′ L† 1588+75.43 ℄ Fwy
		h		0.27														71.5									6.0																18" RCP	
		i							1																																		18" CONCRETE FES	
		j				0.34																																					4.25′W x 0.4′H x 3.0′L RECTANGULAR CHANNEL	
W-3	3	a	4.5	1.69	326																																						TYPE G2 INLET	68.0′ L† 1629+18.70 ℄ Fwy
		b																33																									18" RCP	
		c							1																																		18" CONCRETE FES	
		d					15.80	36																																			ROCK SLOPE PROTECTION (FACING, METHOD B)	
		e									103.7																																BIOFILTRATION SWALE TRAPEZOIDAL, L=100.0′	107.65′ L† 1629+49.55 TO 104.33′ L† 1630+57.61 ℄ Fwy
		f									6.7																																15′ DIRT TRANSITION	
		g				25.45																																					Conc V-DITCH, 2:1 X-SLOPE L=125.0′	104.33′ L† 1630+72.61 TO 97.11′ L† 1631+90.02 ℄ Fwy
SHEET TOTAL				4.5	576	27.3	15.8	36	2		110.4				136			104.5	46									310	1,527	243	125	69,565	8	169	290	123	115	54	306	51				

WATER POLLUTION CONTROL QUANTITIES
WQ-2

STATE OF CALIFORNIA - DEPARTMENT OF TRANSPORTATION
Caltrans® HYDRAULICS

FUNCTIONAL SUPERVISOR: MARIA QUINONEZ
CALCULATED-DESIGNED BY: TAN HOANG
CHECKED BY: CHRIS NGUYEN
REVISED BY / DATE REVISED

LAST REVISION 01-01-16
DATE PLOTTED => 01-AUG-2016
TIME PLOTTED => 13:56

NOTES:

1. PIPE JOINTS ARE STANDARD OR AS NOTED ON PLANS.
2. (N) NOT A SEPARATE PAY ITEM, FOR INFORMATION ONLY.

WATER POLLUTION CONTROL QUANTITIES

Dist	COUNTY	ROUTE	POST MILES TOTAL PROJECT	SHEET No.	TOTAL SHEETS
07	LA,Ven	101	29.3/38.2, 0.0/1.2	95	265

REGISTERED CIVIL ENGINEER 4-20-16 DATE

4-25-16
PLANS APPROVAL DATE

REGISTERED PROFESSIONAL ENGINEER DAVE BHALLA No. 34350 Exp. 9-30-17 CIVIL STATE OF CALIFORNIA

THE STATE OF CALIFORNIA OR ITS OFFICERS OR AGENTS SHALL NOT BE RESPONSIBLE FOR THE ACCURACY OR COMPLETENESS OF SCANNED COPIES OF THIS PLAN SHEET.

WATER POLLUTION CONTROL SHEET No.	WATER POLLUTION CONTROL SYSTEM No. ⬡	WATER POLLUTION CONTROL UNIT ○	HEIGHT OF INLET H OR V (N)	MINOR CONCRETE (MINOR STRUCTURE)	MISCELLANEOUS IRON AND STEEL	CONCRETE (DITCH LINING)	ROCK SLOPE PROTECTION (FACING, METHOD B)	ROCK SLOPE PROTECTION FABRIC (CLASS 8)	18" CONCRETE FLARED END SECTION	24" CONCRETE FLARED END SECTION	DITCH EXCAVATION	REMOVE FES	36" CONCRETE FLARED END SECTION	CAP INLET	REMOVE PIPE	REMOVE OVERSIDE DRAIN	REMOVE CONCRETE (CHANNEL)	18" REINFORCED CONCRETE PIPE	24" REINFORCED CONCRETE PIPE	36" REINFORCED CONCRETE PIPE	42" REINFORCED CONCRETE PIPE	HOT MIX ASPHALT (TYPE A)	PLACE HOT MIX ASPHALT (Misc AREA)	12" CORRUGATED STEEL PIPE RISER (.079" THICK)	TYPE 24-12 FRAME AND GRATE (N)	MANHOLE FRAME AND COVER (N)	MAXIMUM COVER (N)	AVSF (AUSTIN VAULT SAND FILTER) STRUCTURAL CONCRETE	STRUCTURE EXCAVATION	STRUCTURE BACKFILL	CLASS 5 PERMEABLE MATERIAL	BAR REINFORCING STEEL	GABION	CABLE RAILING	CLASS D FILTER FABRIC	CLASS 4 PERMEABLE MATERIAL	MISCELLANEOUS METAL	6" NON-PERFORATED PLASTIC PIPE UNDERDRAIN	6" PERFORATED PLASTIC PIPE UNDERDRAIN	JOINT SEAL (TYPE AL)	6" PLASTIC PIPE (SCHEDULE 40) (SUPPLY LINE)	MINOR CONCRETE (GUTTER)	DESCRIPTION	STATION
			F†	CY	LB	CY	CY	SQYD	EA	EA	CY	EA	EA	EA	LF	EA	CY	LF	LF	LF	LF	TON	SQYD	EA	EA	EA	F†	CY	CY	CY	CY	LB	CY	LF	SQYD	CY	LB	LF	LF	LF	LF	CY		
W-3	4	a																				1.2	7.4																				HMA OVERSIDE DRAIN,L=20.0′	16.1′ R† 34+09.00 TO 34.0′ R† 34+16.15 OFF-RAMP
		b					11.11	29.6																																			ROCK SLOPE PROTECTION (FACING, METHOD B)	34.0′ R† 34+16.15 TO 42.3′ R† 34+30.03 OFF-RAMP
		c									31.1																																BIOFILTRATION SWALE TRAPEZOIDAL, L=60.0′	42.3′ R† 34+30.03 TO 46.73′ R† 34+95.80 OFF-RAMP
		d									2.1																																10.0′ DIRT TRANSITION	
		e	6.40	2.22	250										3																												JUNCTION CHAMBER - 3C	46.84′ R† 35+10.96 OFF-RAMP
	5	a														1																											REMOVE DOWNDRAIN	
		b																				1.0	6.3																				HMA OVERSIDE DRAIN,L=17.0′	70.0′ L† 1624+24.73 ℄ Fwy
		c					7.41	21.8																																			ROCK SLOPE PROTECTION (FACING, METHOD B)	89.24′ L† 1624+32.37 ℄ Fwy
		d									37.0																																BIOFILTRATION SWALE TRAPEZOIDAL, L=100.0′	85.4′ L† 1624+38.53 TO 83.73′ L† 1625+45.30 ℄ Fwy
		e									5.0																																10.0′ DIRT TRANSITION	
		f				17.5																																					TYPE B DRAIN, L=317.0′	84.52′ L† 1625+60.67 TO 91.79′ L† 1628+91.60 ℄ Fwy
W-4	6	a	7.10	2.36	326										3																												TYPE G2 INLET	24.0′ R† 38+91.46 ON-RAMP
		b								1																																	24" CONCRETE FES	37.7′ R† 38+98.21 ON-RAMP
		c									3.9																																10.0′ DIRT TRANSITION	
		d									36.3																																BIOFILTRATION SWALE TRAPEZOIDAL, L=70.0′	46.0′ R† 39+02.97 TO 94.15′ R† 39+76.92 ON-RAMP
SHEET TOTAL				4.6	576	17.5	18.5	51.4		1	110.4				6	1						3.2	13.7																					

WATER POLLUTION CONTROL QUANTITIES
WQ-3

STATE OF CALIFORNIA - DEPARTMENT OF TRANSPORTATION
Caltrans HYDRAULICS

FUNCTIONAL SUPERVISOR: MARIA QUINONEZ
CALCULATED-DESIGNED BY: CHRIS NGUYEN
CHECKED BY: TAN HOANG
REVISED BY / DATE REVISED

LAST REVISION 01-01-16 | DATE PLOTTED => 01-AUG-2016 | TIME PLOTTED => 13:56

NOTES:

1. PIPE JOINTS ARE STANDARD OR AS NOTED ON PLANS.
2. (N) NOT A SEPARATE PAY ITEM, FOR INFORMATION ONLY.

Dist	COUNTY	ROUTE	POST MILES TOTAL PROJECT	SHEET No.	TOTAL SHEETS
07	LA,Ven	101	29.3/38.2, 0.0/1.2	96	265

REGISTERED CIVIL ENGINEER 4-20-16 DATE

4-25-16
PLANS APPROVAL DATE

REGISTERED PROFESSIONAL ENGINEER DAVE BHALLA No. 34350 Exp. 9-30-17 CIVIL STATE OF CALIFORNIA

THE STATE OF CALIFORNIA OR ITS OFFICERS OR AGENTS SHALL NOT BE RESPONSIBLE FOR THE ACCURACY OR COMPLETENESS OF SCANNED COPIES OF THIS PLAN SHEET.

WATER POLLUTION CONTROL QUANTITIES

WATER POLLUTION CONTROL SHEET No.	WATER POLLUTION CONTROL SYSTEM No.	WATER POLLUTION CONTROL UNIT	HEIGHT OF INLET H OR V (N)	MINOR CONCRETE (MINOR STRUCTURE)	MISCELLANEOUS IRON AND STEEL	CONCRETE (DITCH LINING)	ROCK SLOPE PROTECTION (FACING, METHOD B)	ROCK SLOPE PROTECTION FABRIC (CLASS 8)	18" CONCRETE FLARED END SECTION	24" CONCRETE FLARED END SECTION	DITCH EXCAVATION	36" CONCRETE FLARED END SECTION	CAP INLET	REMOVE PIPE	REMOVE OVERSIDE DRAIN	REMOVE CONCRETE (CHANNEL)	18" REINFORCED CONCRETE PIPE	24" REINFORCED CONCRETE PIPE	36" REINFORCED CONCRETE PIPE	42" REINFORCED CONCRETE PIPE	HOT MIX ASPHALT (TYPE A)	PLACE HOT MIX ASPHALT (Misc AREA)	12" CORRUGATED METAL PIPE	TYPE 24-12 FRAME AND GRATE (N)	MANHOLE FRAME AND COVER (N)	MAXIMUM COVER (N)	AVSF (AUSTIN VAULT SAND FILTER) STRUCTURAL CONCRETE	STRUCTURE EXCAVATION	STRUCTURE BACKFILL	CLASS 5 PERMEABLE MATERIAL	BAR REINFORCING STEEL	GABION	CABLE RAILING	CLASS D FILTER FABRIC	CLASS 4 PERMEABLE MATERIAL	MISCELLANEOUS METAL	6" NON-PERFORATED PLASTIC PIPE UNDERDRAIN	6" PERFORATED PLASTIC PIPE UNDERDRAIN	JOINT SEAL (TYPE AL)	6" PLASTIC PIPE (SCHEDULE 40) (SUPPLY LINE)	MINOR CONCRETE (GUTTER)	DESCRIPTION	STATION
			F†	CY	LB	CY	CY	SQYD	EA	EA	CY	EA	EA	LF	EA	CY	LF	LF	LF	LF	TON	SQYD	LF	EA	EA	F†	CY	CY	CY	CY	LB	CY	LF	SQYD	CY	LB	LF	LF	LF	LF	CY		
W-5	7	a																			1.0	6.3																				HMA OVERSIDE DRAIN L=17′	83.0′ R† 1654+66.16 ℄ Fwy
		b									3.0																															10′ DIRT TRANSITION	
		c									33.7																															BIOFILTRATION SWALE TRAPEZOIDAL, L=65′	97.3′ R† 1654+59.00 TO 131.7′ L† 1653+98.76 ℄ Fwy
W-6	8	a									3																															10.0′ DIRT TRANSITION	
		b									23.7																															BIOFILTRATION SWALE TRAPEZOIDAL, L=80′	105.4′ R† 1663+51.85 TO 104.2′ R† 1662+83.38 ℄ Fwy
		c					4.9	16.7																																		RSP (FACING, METHOD B)	
		d																			1.0	6.3																				HMA OVERSIDE DRAIN L=17′	
		e														5.4																										REMOVE 97′ B DRAIN	105.4′ R† 1663+51.85 TO 103.7′ R† 1662+73.38 ℄ Fwy
W-7	9	a									13.8																															26′ DIRT TRANSITION	42.8′ L† 92+44.36 TO 36.4′ L† 92+70.44 "LSHB3"
		b									41.5																															BIOFILTRATION SWALE TRAPEZOIDAL, L=80.0′	36.4′ L† 92+70.44 TO 34.2′ L† 93+50.60 "LSHB3"
		c					17.8	43.6																																		RSP (FACING, METHOD B)	
		d																			1.0	5.9																				HMA OVERSIDE DRAIN L=16′	21.4′ L† 93+82.78 "LSHB3"
SHEET TOTAL							4.9	60.3			118.7					5.4					3.0	18.5																					

WATER POLLUTION CONTROL QUANTITIES
WQ-4

STATE OF CALIFORNIA - DEPARTMENT OF TRANSPORTATION
Caltrans®
HYDRAULICS

FUNCTIONAL SUPERVISOR: MARIA QUINONEZ
CALCULATED-DESIGNED BY: CHRIS NGUYEN
CHECKED BY: TAN HOANG
REVISED BY
DATE REVISED

LAST REVISION 01-01-16
DATE PLOTTED => 01-AUG-2016
TIME PLOTTED => 13:56

NOTES:

1. PIPE JOINTS ARE STANDARD OR AS NOTED ON PLANS.
2. (N) NOT A SEPARATE PAY ITEM, FOR INFORMATION ONLY.

Dist	COUNTY	ROUTE	POST MILES TOTAL PROJECT	SHEET No.	TOTAL SHEETS
07	LA,Ven	101	29.3/38.2, 0.0/1.2	97	265

REGISTERED CIVIL ENGINEER DATE 4-20-16

4-25-16
PLANS APPROVAL DATE

REGISTERED PROFESSIONAL ENGINEER DAVE BHALLA No. 34350 Exp. 9-30-17 CIVIL STATE OF CALIFORNIA

THE STATE OF CALIFORNIA OR ITS OFFICERS OR AGENTS SHALL NOT BE RESPONSIBLE FOR THE ACCURACY OR COMPLETENESS OF SCANNED COPIES OF THIS PLAN SHEET.

WATER POLLUTION CONTROL QUANTITIES

WATER POLLUTION CONTROL SHEET No.	WATER POLLUTION CONTROL SYSTEM No. ⬡	WATER POLLUTION CONTROL UNIT ◯	HEIGHT OF INLET H OR V (N)	MINOR CONCRETE (MINOR STRUCTURE)	MISCELLANEOUS IRON AND STEEL	CONCRETE (DITCH LINING)	ROCK SLOPE PROTECTION (FACING, METHOD B)	ROCK SLOPE PROTECTION FABRIC (CLASS 8)	18" CONCRETE FLARED END SECTION	24" CONCRETE FLARED END SECTION	DITCH EXCAVATION	REMOVE FES	36" CONCRETE FLARED END SECTION	CAP INLET	REMOVE PIPE	REMOVE OVERSIDE DRAIN	REMOVE CONCRETE (CHANNEL)	18" REINFORCED CONCRETE PIPE	24" REINFORCED CONCRETE PIPE	36" REINFORCED CONCRETE PIPE	42" REINFORCED CONCRETE PIPE	HOT MIX ASPHALT (TYPE A)	PLACE HOT MIX ASPHALT (Misc AREA)	12" CORRUGATED METAL PIPE	TYPE 24-12 FRAME AND GRATE (N)	MANHOLE FRAME AND COVER (N)	MAXIMUM COVER (N)	AVSF (AUSTIN VAULT SAND FILTER) STRUCTURAL CONCRETE	STRUCTURE EXCAVATION	STRUCTURE BACKFILL	CLASS 5 PERMEABLE MATERIAL	BAR REINFORCING STEEL	GABION	CABLE RAILING	CLASS D FILTER FABRIC	CLASS 4 PERMEABLE MATERIAL	MISCELLANEOUS METAL	6" NON-PERFORATED PLASTIC PIPE UNDERDRAIN	6" PERFORATED PLASTIC PIPE UNDERDRAIN	JOINT SEAL (TYPE AL)	6" PLASTIC PIPE (SCHEDULE 40) (SUPPLY LINE)	MINOR CONCRETE (GUTTER)	DESCRIPTION	STATION
			Ft	CY	LB	CY	CY	SQYD	EA	EA	CY	EA	EA	EA	LF	EA	CY	LF	LF	LF	LF	TON	SQYD	LF	EA	EA	Ft	CY	CY	CY	CY	LB	CY	LF	SQYD	CY	LB	LF	LF	LF	LF	CY		
W-7	10	a																				1.0	5.9																					HMA OVERSIDE DRAIN L=20.0′	32.87′ Lt 91+18.88 "LSHB3"
		b					7.4	21.8																																				RSP (FACING, METHOD B)	
		c									23.7																																	BIOFILTRATION SWALE TRAPEZOIDAL, L=80.0′	41.2′ Lt 91+16.68 TO 40.82′ Lt 92+25.03 "LSHB3"
		d									4.0																																	14.0′ DIRT TRANSITION	40.82′ Lt 92+25.03 TO 45.10′ Lt 92+37.87 "LSHB3"
	11	a	3.5	1.44	326																				1																			TYPE G2 INLET	18.0′ R+ 91+81.53 "LSHB4"
		b																50									2.7																	18" RCP	
		c	3.7	1.49	326																				1																			TYPE G2 INLET	18.0′ R+ 92+35.54 "LSHB4"
		d																26									2.7																	18" RCP	
		e							1																																			18" CONCRETE FES	
		f					8.5	25.6																																				RSP (FACING, METHOD B)	
		g									66.7																																	BIOFILTRATION SWALE TRAPEZOIDAL, L=200.0′	43.55′ R+ 92+22.76 TO 64.49′ R+ 94+24.08 "LSHB4"
		h									6.7																																	20.0′ DIRT TRANSITION	
SHEET TOTAL				2.9	652		15.9	47.4	1		101.1							76				1.0	5.9																					

WATER POLLUTION CONTROL QUANTITIES
WQ-5

CHRIS NGUYEN — REVISED BY
TAN HOANG — DATE REVISED
CALCULATED-DESIGNED BY
CHECKED BY
FUNCTIONAL SUPERVISOR
MARIA QUINONEZ

STATE OF CALIFORNIA - DEPARTMENT OF TRANSPORTATION
Caltrans
HYDRAULICS

LAST REVISION 01-01-16 | DATE PLOTTED => 01-AUG-2016 | TIME PLOTTED => 13:56

NOTES:

1. PIPE JOINTS ARE STANDARD OR AS NOTED ON PLANS.
2. (N) NOT A SEPARATE PAY ITEM, FOR INFORMATION ONLY.

Dist	COUNTY	ROUTE	POST MILES TOTAL PROJECT	SHEET No.	TOTAL SHEETS
07	LA,Ven	101	29.3/38.2, 0.0/1.2	98	265

REGISTERED CIVIL ENGINEER 4-20-16 DATE

4-25-16
PLANS APPROVAL DATE

REGISTERED PROFESSIONAL ENGINEER DAVE BHALLA No. 34350 Exp. 9-30-17 CIVIL STATE OF CALIFORNIA

THE STATE OF CALIFORNIA OR ITS OFFICERS OR AGENTS SHALL NOT BE RESPONSIBLE FOR THE ACCURACY OR COMPLETENESS OF SCANNED COPIES OF THIS PLAN SHEET.

WATER POLLUTION CONTROL QUANTITIES

WATER POLLUTION CONTROL SHEET No.	WATER POLLUTION CONTROL SYSTEM No.	WATER POLLUTION CONTROL UNIT	HEIGHT OF INLET H OR V (N)	MINOR CONCRETE (MINOR STRUCTURE)	MISCELLANEOUS IRON AND STEEL	CONCRETE (DITCH LINING)	ROCK SLOPE PROTECTION (FACING, METHOD B)	ROCK SLOPE PROTECTION FABRIC (CLASS 8)	18" CONCRETE FLARED END SECTION	24" CONCRETE FLARED END SECTION	DITCH EXCAVATION	REMOVE FES	36" CONCRETE FLARED END SECTION	CAP INLET	REMOVE PIPE	REMOVE OVERSIDE DRAIN	REMOVE CONCRETE (CHANNEL)	18" REINFORCED CONCRETE PIPE	24" REINFORCED CONCRETE PIPE	36" REINFORCED CONCRETE PIPE	42" REINFORCED CONCRETE PIPE	HOT MIX ASPHALT (TYPE A)	PLACE HOT MIX ASPHALT (Misc AREA)	12" CORRUGATED STEEL PIPE RISER (0.079" THICK)	TYPE 24-12 FRAME AND GRATE (N)	MANHOLE FRAME AND COVER (N)	MAXIMUM COVER (N)	AVSF (AUSTIN VAULT SAND FILTER) STRUCTURAL CONCRETE	STRUCTURE EXCAVATION	STRUCTURE BACKFILL	CLASS 5 PERMEABLE MATERIAL	BAR REINFORCING STEEL	GABION	CABLE RAILING	CLASS D FILTER FABRIC	CLASS 4 PERMEABLE MATERIAL	MISCELLANEOUS METAL	6" NON-PERFORATED PLASTIC PIPE UNDERDRAIN	6" PERFORATED PLASTIC PIPE UNDERDRAIN	JOINT SEAL (TYPE AL)	6" PLASTIC PIPE (SCHEDULE 40) (SUPPLY LINE)	MINOR CONCRETE (GUTTER)	DESCRIPTION	STATION
			F+	CY	LB	CY	CY	SQYD	EA	EA	CY	EA	EA	EA	LF	EA	CY	LF	LF	LF	LF	TON	SQYD	LF	EA	EA	F+	CY	CY	CY	CY	LB	CY	LF	SQYD	CY	LB	LF	LF	LF	LF	CY		
W-8	12	a													36																													REMOVE 18" CSP	
		b																133									3.9																18" RCP	
		c	3.5	1.06	326																				1																		TYPE G1 INLET	86.0′ L+ 1759+31.98 ℄ Fwy
		d																50									3.7																18" RCP	
		e	3.7	1.55	580																				2																		GD-1 INLET	86.0′ L+ 1758+77.98 ℄ Fwy
		f																	30								4.6																24" RCP	
		g	4.9	1.67	250																					1																	JUNCTION CHAMBER - 3	120.1′ L+ 1758+82.84 ℄ Fwy
		h																	12								7.1																24" RCP	
		i																										173	870	137	63	41,357	9	108	149	51	115	39	154	54			AUSTIN VAULT SAND FILTER S-5000-3	
		j																																				10					6" NON-PERFORATED PLASTIC PIPE UNDERDRAIN	
		k																	10								6.5																24" RCP	
		l	11.7	3.43	250																					1																	JUNCTION CHAMBER - 3	122.2′ L+ 1759+65.62 ℄ Fwy
		m																	99								16.8																24" RCP	
		n	16.8	4.75	250																					1																	JUNCTION CHAMBER - 3	121.4′ L+ 1760+68.98 ℄ Fwy
SHEET TOTAL				12.5	1,656										36			183	151									173	870	137	63	41,357	9	108	149	51	115	49	154	54				

WATER POLLUTION CONTROL QUANTITIES
WQ-6

STATE OF CALIFORNIA - DEPARTMENT OF TRANSPORTATION
Caltrans® HYDRAULICS

FUNCTIONAL SUPERVISOR: MARIA QUINONEZ
CALCULATED-DESIGNED BY: CHRIS NGUYEN
CHECKED BY: TAN HOANG
REVISED BY
DATE REVISED

LAST REVISION 01-01-16
DATE PLOTTED => 01-AUG-2016
TIME PLOTTED => 13:56

NOTES:

1. PIPE JOINTS ARE STANDARD OR AS NOTED ON PLANS.
2. (N) NOT A SEPARATE PAY ITEM, FOR INFORMATION ONLY.

Dist	COUNTY	ROUTE	POST MILES TOTAL PROJECT	SHEET No.	TOTAL SHEETS
07	LA,Ven	101	29.3/38.2, 0.0/1.2	99	265

REGISTERED CIVIL ENGINEER 4-20-16 DATE

4-25-16
PLANS APPROVAL DATE

REGISTERED PROFESSIONAL ENGINEER DAVE BHALLA No. 34350 Exp. 9-30-17 CIVIL STATE OF CALIFORNIA

THE STATE OF CALIFORNIA OR ITS OFFICERS OR AGENTS SHALL NOT BE RESPONSIBLE FOR THE ACCURACY OR COMPLETENESS OF SCANNED COPIES OF THIS PLAN SHEET.

WATER POLLUTION CONTROL QUANTITIES

WATER POLLUTION CONTROL SHEET No.	WATER POLLUTION CONTROL SYSTEM No.	WATER POLLUTION CONTROL UNIT	HEIGHT OF INLET H OR V (N)	MINOR CONCRETE (MINOR STRUCTURE)	MISCELLANEOUS IRON AND STEEL	CONCRETE (DITCH LINING)	ROCK SLOPE PROTECTION (FACING, METHOD B)	ROCK SLOPE PROTECTION FABRIC (CLASS 8)	18" CONCRETE FLARED END SECTION	24" CONCRETE FLARED END SECTION	DITCH EXCAVATION	REMOVE FES	36" CONCRETE FLARED END SECTION	CAP INLET	REMOVE PIPE	REMOVE OVERSIDE DRAIN	REMOVE CONCRETE (CHANNEL)	18" REINFORCED CONCRETE PIPE	24" REINFORCED CONCRETE PIPE	36" REINFORCED CONCRETE PIPE	42" REINFORCED CONCRETE PIPE	HOT MIX ASPHALT (TYPE A)	PLACE HOT MIX ASPHALT (Misc AREA)	12" CORRUGATED STEEL PIPE RISER (0.079" THICK)	TYPE 24-12 FRAME AND GRATE	(N) MANHOLE FRAME AND COVER	(N) MAXIMUM COVER	(N) AVSF (AUSTIN VAULT SAND FILTER) STRUCTURAL CONCRETE	STRUCTURE EXCAVATION	STRUCTURE BACKFILL	CLASS 5 PERMEABLE MATERIAL	BAR REINFORCING STEEL	GABION	CABLE RAILING	CLASS D FILTER FABRIC	CLASS 4 PERMEABLE MATERIAL	MISCELLANEOUS METAL	6" NON-PERFORATED PLASTIC PIPE UNDERDRAIN	6" PERFORATED PLASTIC PIPE UNDERDRAIN	JOINT SEAL (TYPE AL)	6" PLASTIC PIPE (SCHEDULE 40) (SUPPLY LINE)	MINOR CONCRETE (GUTTER)	DESCRIPTION	STATION
			Ft	CY	LB	CY	CY	SQYD	EA	EA	CY	EA	EA	EA	LF	EA	CY	LF	LF	LF	LF	TON	SQYD	LF	EA	EA	Ft	CY	CY	CY	CY	LB	CY	LF	SQYD	CY	LB	LF	LF	LF	LF	CY		
W-8	13	a															6.6																											REMOVE Conc V-DITCH	162.3' Lt 1762+02.7 ℄ Fwy - 150.3' Lt 1763+22.1 ℄ Fwy
		b				1.78																																						TRANSITION STRUCTURE No. 4	
		c					8.9	25.3																																				ROCK SLOPE PROTECTION (FACING, METHOD B)	
		d									238																																	BIOFILTRATION SWALE (TRAPEZOIDAL DITCH)	
		e				1.48																																						TRANSITION STRUCTURE No. 4	
W-9	14	a												1																														CAP INLET	113.6' Rt 1782+06.90 ℄ Fwy
		b	4.5	1.65	326																				1																			TYPE G2 INLET	102.7' Rt 1782+80.00 ℄ Fwy
		c																40									4.5																	18" RCP	
		d							1																																			18" CONCRETE FES	
		e					7.4	22.0																																				ROCK SLOPE PROTECTION (FACING, METHOD B)	
		f									20.0																																	BIOFILTRATION SWALE TRAPEZOIDAL, L=90.0'	123.4' Rt 1783+24.06 ℄ Fwy TO 131.9' Rt 1784+13.60 ℄ Fwy
W-10	15	a		0.4																																								JUNCTION STRUCTURE No. 1	
		b																	4								4.5																	24" RCP	
		c	6.5	2.25	250																					1																		JUNCTION CHAMBER - 3C	104.4' Lt 1883+74.26 ℄ Fwy
		d																																					7					6" NON-PERFORATED PLASTIC PIPE UNDERDRAIN	
SHEET TOTAL				4.3	576	3.3	16.3	47.3	1		258.0			1			6.6	40	4																			7						

WATER POLLUTION CONTROL QUANTITIES
WQ-7

REVISED BY | DATE REVISED
CHRIS NGUYEN | TAN HOANG
CALCULATED-DESIGNED BY | CHECKED BY
FUNCTIONAL SUPERVISOR: MARIA QUINONEZ
STATE OF CALIFORNIA - DEPARTMENT OF TRANSPORTATION
Caltrans®
HYDRAULICS

LAST REVISION 01-01-16 | DATE PLOTTED => 01-AUG-2016 | TIME PLOTTED => 13:56

NOTES:

1. PIPE JOINTS ARE STANDARD OR AS NOTED ON PLANS.
2. (N) NOT A SEPARATE PAY ITEM, FOR INFORMATION ONLY.

Dist	COUNTY	ROUTE	POST MILES TOTAL PROJECT	SHEET No.	TOTAL SHEETS
07	LA,Ven	101	29.3/38.2, 0.0/1.2	100	265

REGISTERED CIVIL ENGINEER 4-20-16 DATE

4-25-16
PLANS APPROVAL DATE

REGISTERED PROFESSIONAL ENGINEER DAVE BHALLA No. 34350 Exp. 9-30-17 CIVIL STATE OF CALIFORNIA

THE STATE OF CALIFORNIA OR ITS OFFICERS OR AGENTS SHALL NOT BE RESPONSIBLE FOR THE ACCURACY OR COMPLETENESS OF SCANNED COPIES OF THIS PLAN SHEET.

WATER POLLUTION CONTROL QUANTITIES

WATER POLLUTION CONTROL SHEET No	WATER POLLUTION CONTROL SYSTEM No	WATER POLLUTION CONTROL UNIT	HEIGHT OF INLET H OR V (N)	MINOR CONCRETE (MINOR STRUCTURE)	MISCELLANEOUS IRON AND STEEL	CONCRETE (DITCH LINING)	ROCK SLOPE PROTECTION (FACING, METHOD B)	ROCK SLOPE PROTECTION FABRIC (CLASS 8)	18" CONCRETE FLARED END SECTION	24" CONCRETE FLARED END SECTION	DITCH EXCAVATION	REMOVE FES	36" CONCRETE FLARED END SECTION	CAP INLET	REMOVE PIPE	REMOVE OVERSIDE DRAIN	REMOVE CONCRETE (CHANNEL)	18" REINFORCED CONCRETE PIPE	24" REINFORCED CONCRETE PIPE	36" REINFORCED CONCRETE PIPE	42" REINFORCED CONCRETE PIPE	HOT MIX ASPHALT (TYPE A)	PLACE HOT MIX ASPHALT (Misc AREA)	12" CORRUGATED STEEL PIPE RISER (0.079" THICK)	TYPE 24-12 FRAME AND GRATE (N)	MANHOLE FRAME AND COVER (N)	MAXIMUM COVER (N)	AVSF (AUSTIN VAULT SAND FILTER) STRUCTURAL CONCRETE	STRUCTURE EXCAVATION	STRUCTURE BACKFILL	CLASS 5 PERMEABLE MATERIAL	BAR REINFORCING STEEL	GABION	CABLE RAILING	CLASS D FILTER FABRIC	CLASS 4 PERMEABLE MATERIAL	MISCELLANEOUS METAL	6" NON-PERFORATED PLASTIC PIPE UNDERDRAIN	6" PERFORATED PLASTIC PIPE UNDERDRAIN	JOINT SEAL (TYPE AL)	6" PLASTIC PIPE (SCHEDULE 40) (SUPPLY LINE)	MINOR CONCRETE (GUTTER)	DESCRIPTION	STATION
			Ft	CY	LB	CY	CY	SQYD	EA	EA	CY	EA	EA	EA	LF	EA	CY	LF	LF	LF	LF	TON	SQYD	LF	EA	EA	Ft	CY	CY	CY	CY	LB	CY	LF	SQYD	CY	LB	LF	LF	LF	LF	CY		
W-10	15	e				0.39																																					TYPE B DRAIN (MODIFIED)	
		f																	3																								24" RCP	
		g																										212	775	156	63	52,444	6	117	153	55	115	45	204	49			AUSTIN VAULT SAND FILTER L-5000-3	
		h																32									8.0																18" RCP	
		i	8.0	2.8	580																																						GD-1 INLET	87.70' Lt 1884+97.30 ℄ Fwy
W-11	16	a													24																												REMOVE PIPE	
		b																173									6.6																18" RCP	
		c	8.1	3.83	580																																						GD-1 INLET	88.80' Lt 1900+31.42 ℄ Fwy
		d																39									6.6																18" RCP	
		e																										364	1,564	246	125	85,382	16	169	290	123	115	45	306	55			AUSTIN VAULT SAND FILTER L-10000-6	
		f																	3																								24" RCP	
		g				0.66																																					TYPE B DRAIN (MODIFIED)	
		h																																				14					6" NON-PERFORATED PLASTIC PIPE UNDERDRAIN	
		i	6.63	2.59	250																																						JUNCTION CHAMBER - 3C	109.5' Lt 1898+52.82 ℄ Fwy
W-12	17	a													18																												REMOVE 18" CSP	
		b																11									3.5																18" RCP	
SHEET TOTAL				9.2	1,410	1.1									42			255	6						4			576	2,339	402	188	137,826	22	286	443	178	230	90	510	104				

WATER POLLUTION CONTROL QUANTITIES
WQ-8

STATE OF CALIFORNIA - DEPARTMENT OF TRANSPORTATION
Caltrans® HYDRAULICS

FUNCTIONAL SUPERVISOR: MARIA QUINONEZ
CALCULATED-DESIGNED BY: CHRIS NGUYEN
CHECKED BY: TAN HOANG
REVISED BY
DATE REVISED

LAST REVISION 01-01-16
DATE PLOTTED => 01-AUG-2016
TIME PLOTTED => 13:56