Dist	COUNTY	ROUTE	POST MILES TOTAL PROJECT	SHEET No.	TOTAL SHEETS
07	LA	110	23.6/25.5	23	50

REGISTERED ELECTRICAL ENGINEER 3/11/16 DATE

5-2-16
PLANS APPROVAL DATE

REGISTERED PROFESSIONAL ENGINEER G.S. TOOR No. E15613 Exp. 12/31/17 ELECTRICAL STATE OF CALIFORNIA

THE STATE OF CALIFORNIA OR ITS OFFICERS OR AGENTS SHALL NOT BE RESPONSIBLE FOR THE ACCURACY OR COMPLETENESS OF SCANNED COPIES OF THIS PLAN SHEET.

NOTE: (THIS SHEET ONLY)

1. ITEMS SHOWN IN THIS TABLE ARE NOT A SEPARATE PAY ITEM, FOR INFORMATION ONLY.

MODIFYING EXISTING ELECTRICAL SYSTEM

2

SHEET No.	1"C	2"C	No. 5 PB, WITH TAMPER RESISTANT COVER	No. 6 PB, WITH TAMPER RESISTANT COVER	TYPE 3R NEMA	TYPE 30 L+g STANDARD, & FOUNDATION	DECORATIVE Lum (310 W HPS)	No. 6 CONDUCTOR	No. 8 (G) CONDUCTOR	CIRCUIT BREAKER	WALL MOUNTED SOFFIT Lum (70 W HPS)	TYPE 30 L+g STANDARD, & FOUNDATION (MODIFIED HEIGHT)	TYPE 31L+g STANDARD, & FOUNDATION (MODIFIED HEIGHT)	R2-1(30) SIGN 48"X60"	~~No.5 PULL BOX~~	VSF POLE & FOUNDATION	VSF SIGN & ASSEMBLY
	LF	LF	EA	EA	EA	EA	EA	LF	LF	EA	EA	EA	EA	EA	~~EA~~	EA	EA
E-1		2000	12			12	12	4200	2200								
E-2		1100	6			5	5	2400	1200								
E-3		1500	8			8	8	3200	1700								
E-4		1700	10			4	8	3500	1800	1		1	3				
E-5		2300	15	1		11	14	5160	2550	2		2	1				
E-6		630	11			2	5	2240	1120	1		1	2				
E-7		1200	12			2	8	3300	1650	2			6				
E-8	20	250	4		4	1	3	1470	735		4	1	1				
E-9		110	1					200	130	1				1	~~1~~	1	1

2

2 REPLACED PER ADDENDUM No. 2 DATED SEPTEMBER 1, 2016

ELECTRICAL QUANTITIES

E-14

STATE OF CALIFORNIA - DEPARTMENT OF TRANSPORTATION
Caltrans® **TRAFFIC DESIGN**

FUNCTIONAL SUPERVISOR: OSWALD ELIZONDO
CALCULATED-DESIGNED BY: LIEN VO
CHECKED BY: OSWALD ELIZONDO
REVISED BY
DATE REVISED

LAST REVISION 03-07-16 | DATE PLOTTED => 29-AUG-2016 | TIME PLOTTED => 10:17

DIST	COUNTY	ROUTE	POST MILES TOTAL PROJECT	SHEET No.	TOTAL SHEETS
07	LA	110	23.6/25.5	24	50

Eliseo Lopez 8-12-15
REGISTERED CIVIL ENGINEER DATE

5-2-16
PLANS APPROVAL DATE

REGISTERED PROFESSIONAL ENGINEER ELISEO LOPEZ No. C72910 Exp. 12/31/16 CIVIL STATE OF CALIFORNIA

The State of California or its officers or agents shall not be responsible for the accuracy or completeness of scanned copies of this plan sheet.

TABLE A

POLE TYPE	POLE DATA				BASE PLATE DATA				"D" 2'-6" Ø CIDH PILE
	HEIGHT "H"	Min OD		THICKNESS	"C"	THICKNESS	ANCHOR BOLTS		
		BASE	TOP				SIZE	BC = BOLT CIRCLE	LEVEL GROUND
VSF POLE	25'	10"	6½"	0.1793"	1'-2"	2"	1½" X 3'-0"	1'-2"	10'-0"

TABLE B

ATTACHMENT	MOUNTING HEIGHT	WEIGHT LIMITS (Max)
R2-1 (30) SIGN	9'-6"	30 lbs
VEHICLE SPEED FEEDBACK SIGN	17'-6"	90 lbs

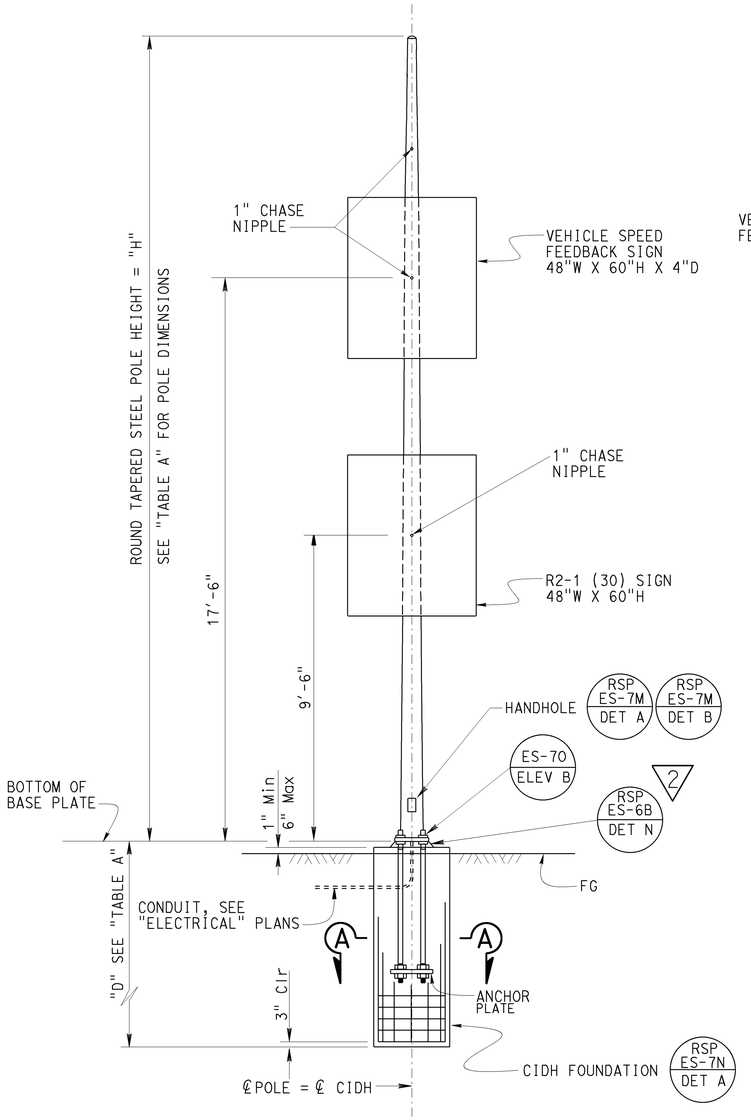

FRONT VIEW ELEVATION

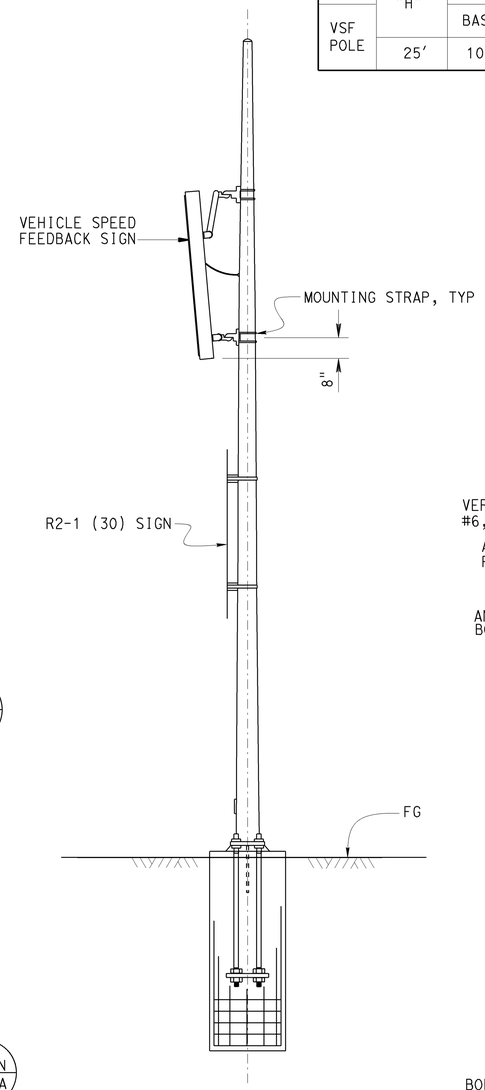

SIDE VIEW ELEVATION

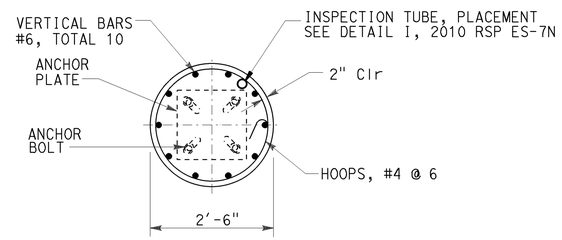

SECTION A-A
SEE 2010 RSP ES-7N

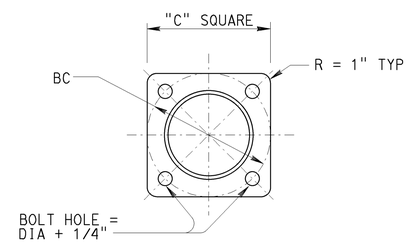

BASE PLATE

GENERAL NOTES:

SPECIFICATIONS

Design: AASHTO Standard Specifications for Structural Supports for Highway Signs, Luminaires and Traffic Signals, Sixth Edition

LOADING

Wind Loading : (3 sec gust) 100 mph

UNIT STRESSES

Structural Steel: fy = 55,000 psi tapered steel tube
fy = 50,000 psi unless otherwise noted.

Anchor bolts: fy = 55,000 psi unless otherwise noted.

Reinforced Concrete: f'c = 3,600 psi
fy = 60,000 psi

NOTES:

1. All steel must be galvanized after fabrication.
2. During pole erection the post shall be raked as necessary with the use of leveling nuts to provide a plumb pole axis.
3. Foundation design is based on AASHTO LTS-6 article 13.6 Broms' approximate procedure assuming a cohesionless material. The angle of internal friction used is 30 degrees and unit weight of soil used is 120 lbs/ft³.
4. Paint back of new vehicle speed feedback sign, and R2-1 Sign with exterior flat latex black.
5. Drill and tap 1" chase nipple and plug with raintight plugs. 1" chase nipple per attachment per pole. Plug should only be removed if chase nipple is used.
6. All attachments, unless otherwise noted, must be mounted to pole with stainless steel straps or other method without drilling holes in pole.
7. For details not shown, see "2010 STANDARD PLANS" and "2010 REVISED STANDARD PLANS".

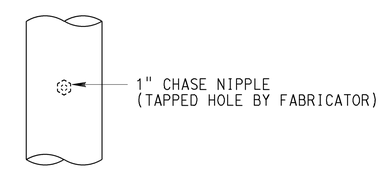

CHASE NIPPLE DETAIL

THE CONTRACTOR MUST VERIFY ALL CONTROLLING FIELD DIMENSIONS BEFORE ORDERING OR FABRICATING ANY MATERIAL.

2 **REPLACED PER ADDENDUM No. 2 DATED SEPTEMPER 1, 2016**

NO SCALE

STANDARD PLAN SHEET No.
DETAIL SHEET No.

BRANCH CHIEF JEFFREY B WOODY

	BY	CHECKED
DESIGN	E. LOPEZ	J. DATILES
DETAILS	T. NGUYEN	E. LOPEZ
QUANTITIES		

STATE OF CALIFORNIA
DEPARTMENT OF TRANSPORTATION

DIVISION OF ENGINEERING SERVICES
DESIGN AND TECHNICAL SERVICES
SPECIAL DESIGNS BRANCH A

BRIDGE NO. N/A
POST MILE 23.69/25.48

VEHICLE SPEED FEEDBACK (VSF) SIGN POLE AND MOUNTING DETAILS

SES-1

(ENGLISH) SPECIAL DESIGNS BRANCH BORDER SHEET (REV. 7-1-09)

ORIGINAL SCALE IN INCHES FOR REDUCED PLANS 0 1 2 3

UNIT: 3619
PROJECT NUMBER & PHASE: 0713000224-1
CONTRACT NO.: 07-297701

DISREGARD PRINTS BEARING EARLIER REVISION DATES
REVISION DATES 7/24/15 2/19/16 8/25/16 10/28/16

SHEET 1 OF 1

FILE => 2015 07-297701_ses1(8-12-15).dgn

USERNAME => s129055 DATE PLOTTED => 25-AUG-2016 TIME PLOTTED => 10:49

DIST	COUNTY	ROUTE	POST MILES TOTAL PROJECT	SHEET No	TOTAL SHEETS
07	LA	110	23.6/25.5	28	50

Matt Bruce 10-14-15
REGISTERED CIVIL ENGINEER DATE

5-2-16
PLANS APPROVAL DATE

The State of California or its officers or agents shall not be responsible for the accuracy or completeness of electronic copies of this plan sheet.

REGISTERED PROFESSIONAL ENGINEER MATTHEW H. BRUCE No. C70813 Exp. 6/30/17 CIVIL STATE OF CALIFORNIA

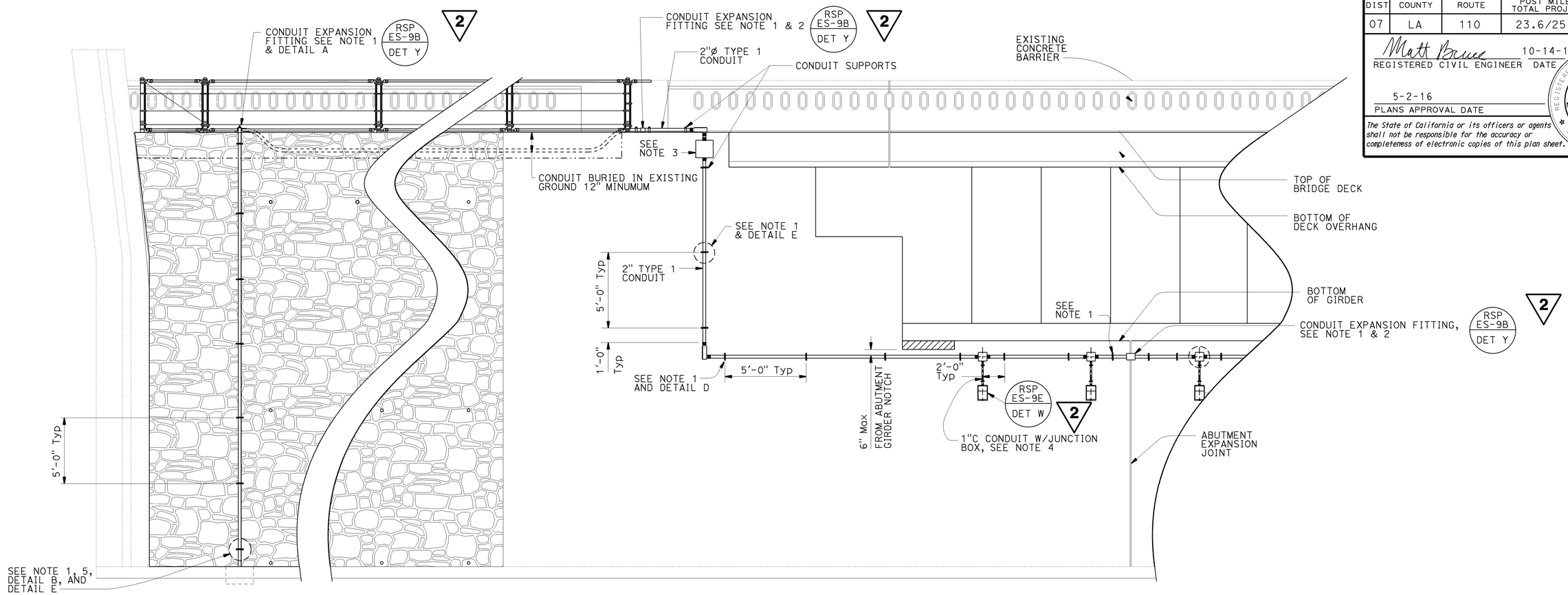

EXISTING RETAINING WALL ELEVATION

NO SCALE

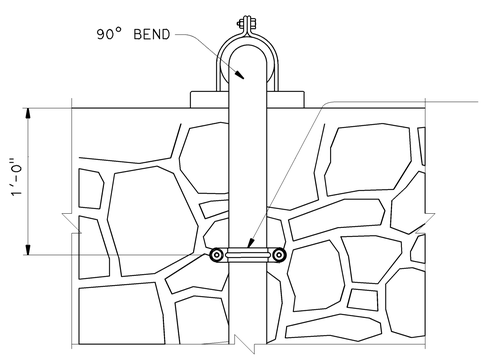

DETAIL A

NO SCALE

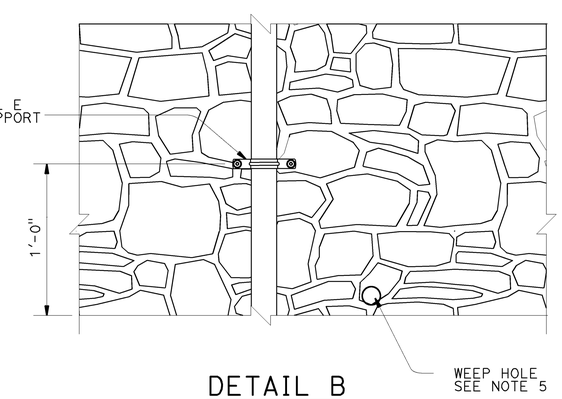

DETAIL B

NO SCALE

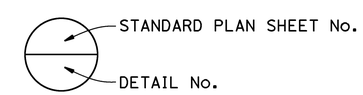

NOTES:

1. Conduit supports to be spaced at 5' intervals except at expansion joints, light fixtures, and junction boxes. Spacing at those components shall be at 2' intervals and 1' at conduit bends.
2. Locate conduit expansion fitting adjacent to existing bridge expansion joint.
3. Junction box with conduit drop to be located at bridge barrier and abutment face intersection layout.
4. Total of four light fixtures to be equally spaced underneath bridge.
5. The 2" conduit mount and cover placed on the retaining wall shall be placed to avoid weep holes.

NOTE:
The contractor must verify all controlling field dimensions before ordering or fabricating any material.

2 **REPLACED PER ADDENDUM No. 2 DATED SEPTEMBER 1, 2016**

BRANCH CHIEF	DAVID A. NEUMANN	DESIGN	BY M BRUCE / CHECKED J MAGANA
		DETAILS	BY B EDWARDS / CHECKED M BRUCE
		QUANTITIES	BY / CHECKED

STATE OF CALIFORNIA
DEPARTMENT OF TRANSPORTATION

DIVISION OF ENGINEERING SERVICES
DESIGN AND TECHNICAL SERVICES
SPECIAL DESIGNS BRANCH B

BRIDGE NO. 53-0042L
POST MILE 25.48L

ELECTRICAL CONDUIT SUPPORTS
MISCELLANEOUS DETAILS No. 1

SES-5

(ENGLISH) SPECIAL DESIGNS BRANCH BORDER SHEET (REV. 7-1-09)

ORIGINAL SCALE IN INCHES FOR REDUCED PLANS 0 1 2 3

UNIT: 3619
PROJECT ID & PHASE: 0713000224-1
CONTRACT No.: 07-297701

DISREGARD PRINTS BEARING EARLIER REVISION DATES → REVISION DATES 3/4/15 3/10/15 2/17/16 2-25-16

SHEET 1 OF 2

FILE => 07-297701-uh-misc-ses-dt05.dgn

USERNAME => $USER DATE PLOTTED => $DATE TIME PLOTTED => $TIME

DIST	COUNTY	ROUTE	POST MILES TOTAL PROJECT	SHEET No.	TOTAL SHEETS
07	LA	110	23.6/25.5	29	50

Matt Bruce 10-14-15
REGISTERED CIVIL ENGINEER DATE

5-2-16
PLANS APPROVAL DATE

The State of California or its officers or agents shall not be responsible for the accuracy or completeness of scanned copies of this plan sheet.

REGISTERED PROFESSIONAL ENGINEER MATTHEW H. BRUCE No. C70813 Exp. 6/30/17 CIVIL STATE OF CALIFORNIA

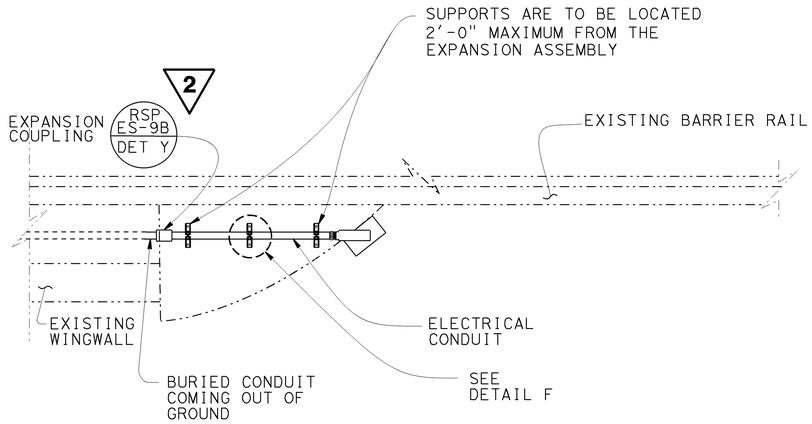

PLAN
ELECTRICAL CONDUIT

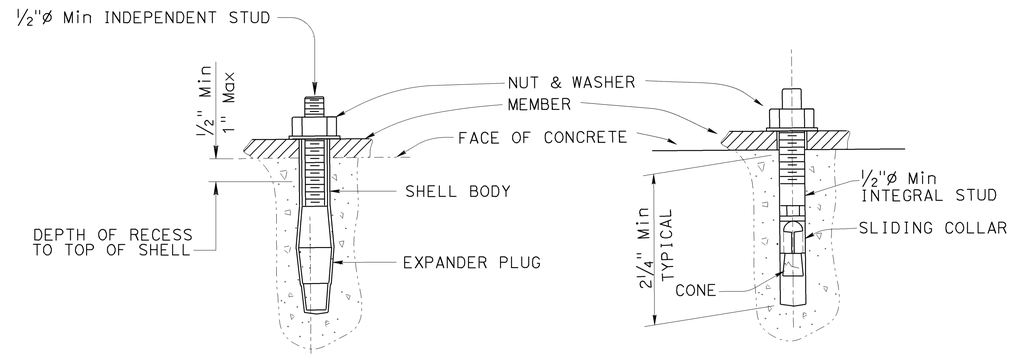

TYPICAL SHELL-TYPE TYPICAL STUD TYPE

MECHANICAL EXPANSION ANCHOR (MEA) BOLTS

DETAIL C
NO SCALE

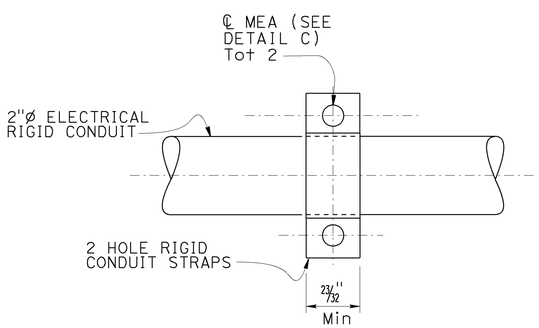

BRIDGE ABUTMENT ELEVATION
Horizontal run shown, vertical riser drops similar

DETAIL D
NO SCALE

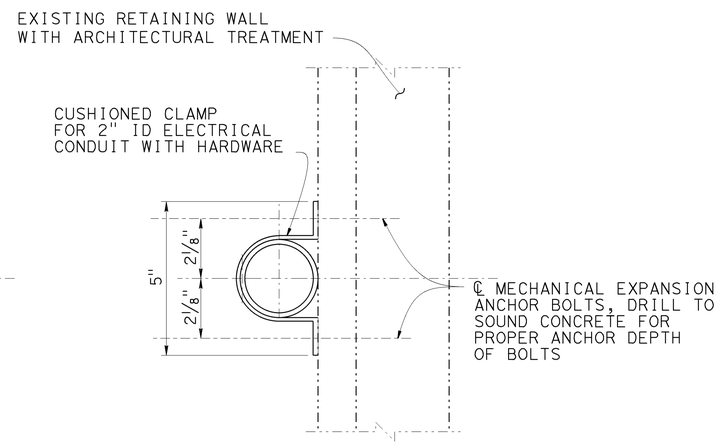

EXISTING RETAINING WALL PLAN

DETAIL E
NO SCALE

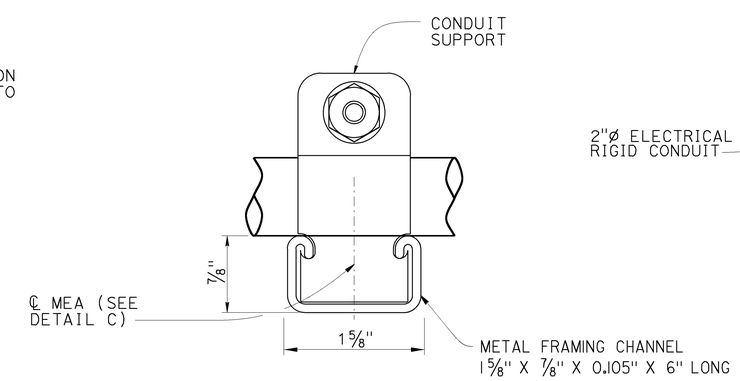

ELEVATION

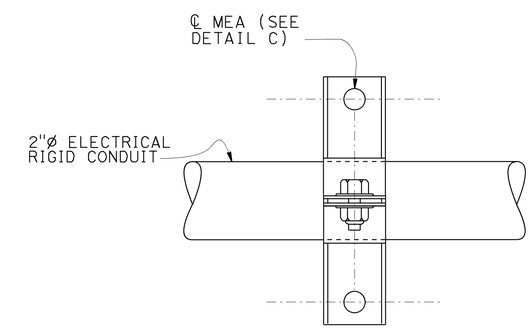

PLAN

DETAIL F
NO SCALE

NOTE:
THE CONTRACTOR SHALL VERIFY ALL CONTROLLING FIELD DIMENSIONS BEFORE ORDERING OR FABRICATING ANY MATERIAL.

2 REPLACED PER ADDENDUM No. 2 DATED SEPTEMBER 1, 2016

BRANCH CHIEF DAVID A. NEUMANN	DESIGN	BY M BRUCE	CHECKED J MAGANA
	DETAILS	BY B EDWARDS	CHECKED M BRUCE
	QUANTITIES	BY	CHECKED

STATE OF CALIFORNIA
DEPARTMENT OF TRANSPORTATION

DIVISION OF ENGINEERING SERVICES
DESIGN AND TECHNICAL SERVICES
SPECIAL DESIGNS BRANCH B

BRIDGE No. 53-0042L
POST MILE 25.48L

ELECTRICAL CONDUIT SUPPORTS
MISCELLANEOUS DETAILS No. 2

SES-6

SPECIAL DESIGNS BRANCH BORDER SHEET (REV. 8-27-14) Bob Edwards

ORIGINAL SCALE IN INCHES FOR REDUCED PLANS 0 1 2 3

UNIT: 3619
PROJECT NUMBER & PHASE: 0713000224-1 CONTRACT No.: 07-297701

DISREGARD PRINTS BEARING EARLIER REVISION DATES → 9-1-15 9-10-15 2-12-16 8-25-16

SHEET 2 OF 2

FILE => 07-297701-uh-misc-ses-dt06.dgn

USERNAME => s136236 DATE PLOTTED => 23-AUG-2016 TIME PLOTTED => 11:08

Dist	COUNTY	ROUTE	POST MILES TOTAL PROJECT	SHEET No.	TOTAL SHEETS
07	LA	110	23.6/25.5	39A	50

REGISTERED CIVIL ENGINEER

July 15, 2016
PLANS APPROVAL DATE

REGISTERED PROFESSIONAL ENGINEER
Stanley P. Johnson
No. C57793
Exp. 3-31-18
CIVIL
STATE OF CALIFORNIA

THE STATE OF CALIFORNIA OR ITS OFFICERS OR AGENTS SHALL NOT BE RESPONSIBLE FOR THE ACCURACY OR COMPLETENESS OF SCANNED COPIES OF THIS PLAN SHEET.

2

TO ACCOMPANY PLANS DATED 5-2-16

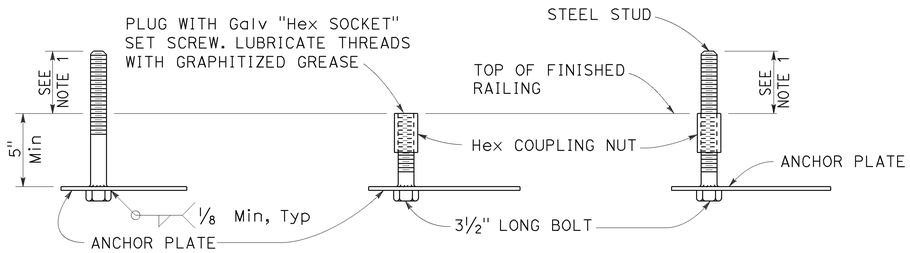

FOR IMMEDIATE INSTALLATION
DETAIL B-1

FOR FUTURE INSTALLATION WITH PLUG
DETAIL B-2

FOR INSTALLATION ON FUTURE ANCHORAGE WITH STUD
DETAIL B-3

ELECTROLIER ANCHORAGES
DETAIL B

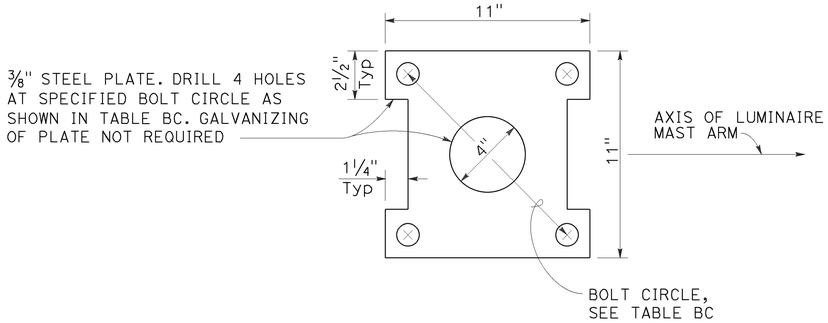

ANCHOR PLATE
DETAIL A

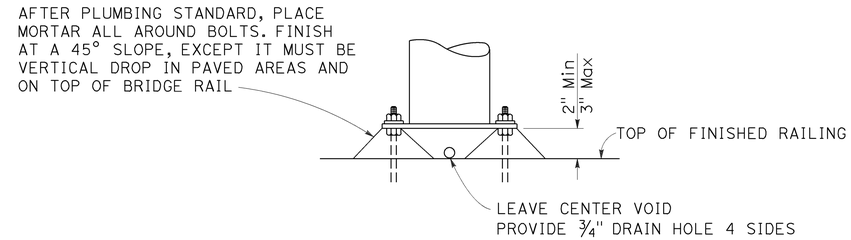

GROUTING AT ELECTROLIER
DETAIL N

NOTES:

1. Anchor bolt or stud length shall be such that thread extends 1/2" maximum above nut on level base plate after grouting. See Detail N.
2. Electrolier anchor bolts shall be held in position for pouring by means of anchor plates and suitable templates. Deviation from the true position, vertical and height shall not exceed 1/16".
3. See railing sheets for reinforcement and structural details at electroliers and pull boxes.

TABLE BC

TYPE	BC = BOLT CIRCLE	ANCHOR BOLT DIAMETER	COUPLING NUT BASIC LENGTH	SET SCREW LENGTH DETAIL B-2
15	1'-0"	1"	3"	1 1/2"
21		1 1/4"	3 3/4"	1 7/8"

2 **ADDED PER ADDENDUM No. 2 DATED SEPTEMBER 1, 2016**

STATE OF CALIFORNIA
DEPARTMENT OF TRANSPORTATION

ELECTRICAL SYSTEMS (ELECTROLIER ANCHORAGE AND GROUTING FOR TYPE 15 AND TYPE 21 BARRIER RAIL MOUNTED)

NO SCALE

RSP ES-6B DATED JULY 15, 2016 SUPERSEDES STANDARD PLAN ES-6B DATED OCTOBER 30, 2015 - PAGE 450 OF THE STANDARD PLANS BOOK DATED 2015.

REVISED STANDARD PLAN RSP ES-6B

2015 REVISED STANDARD PLAN RSP ES-6B

4-15-16

Dist	COUNTY	ROUTE	POST MILES TOTAL PROJECT	SHEET No.	TOTAL SHEETS
07	LA	110	23.6/25.5	43A	50

Theresa Gabriel
REGISTERED ELECTRICAL ENGINEER

April 15, 2016
PLANS APPROVAL DATE

REGISTERED PROFESSIONAL ENGINEER Theresa Aziz Gabriel No. E15129 Exp. 6-30-16 ELECTRICAL STATE OF CALIFORNIA

THE STATE OF CALIFORNIA OR ITS OFFICERS OR AGENTS SHALL NOT BE RESPONSIBLE FOR THE ACCURACY OR COMPLETENESS OF SCANNED COPIES OF THIS PLAN SHEET.

2

TO ACCOMPANY PLANS DATED 5-2-16

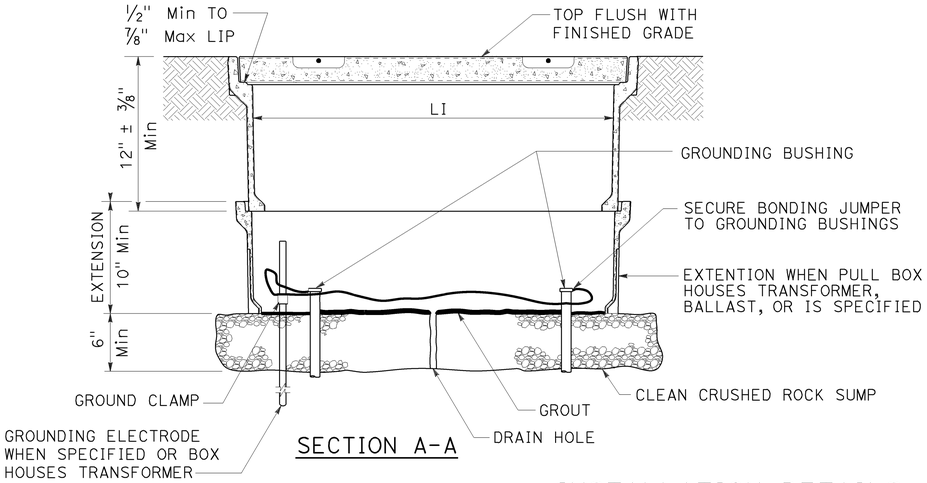

SECTION A-A

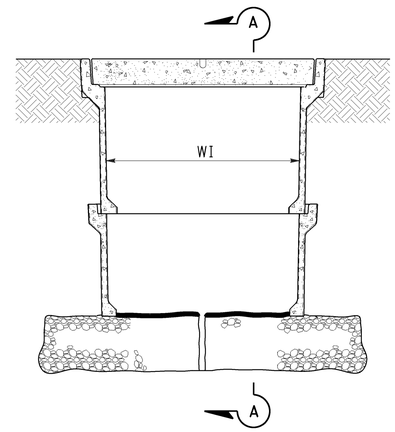

SIDE VIEW

INSTALLATION DETAILS

DETAIL A

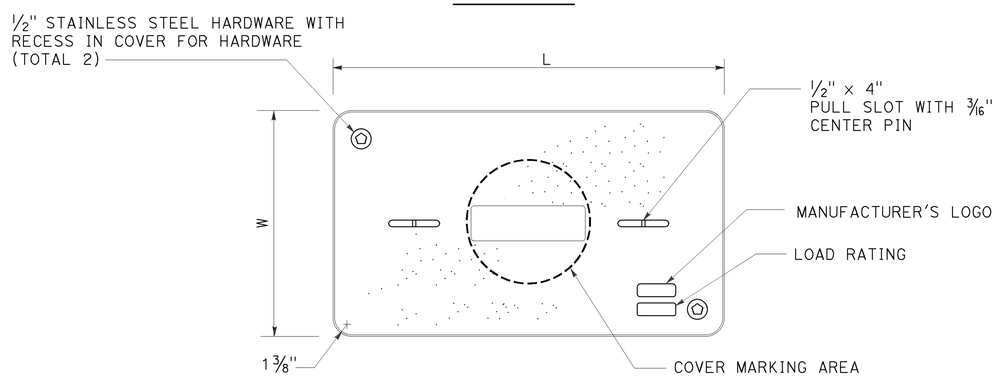

COVER TOP VIEW

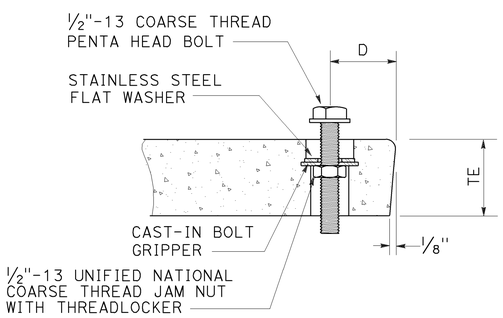

TYPICAL COVER CAPTIVE BOLT

OR SIMILAR

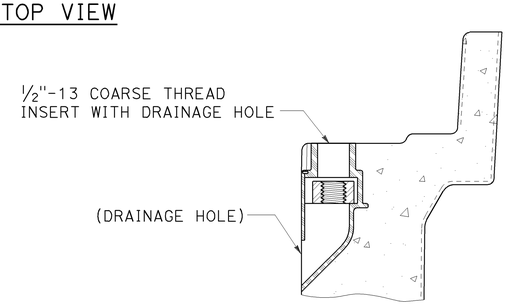

TYPICAL THREADED INSERT

OR SIMILAR

DIMENSION TABLE										
PULL BOX	PULL BOX					COVER				
	MINIMUM DEPTH BOX	MINIMUM DEPTH EXTENSION	MINIMUM WEIGHT	LI Min	WI Min	TE	D	L	W	MINIMUM WEIGHT
No. 3 1/2	12"	N/A	40 lb	1' - 3"	9"	1 3/4"	1 3/4"	1'-3 1/4" - 1'-3 3/8"	10" - 10 1/8"	30 lb
No. 5	12"	10"	55 lb	1' - 8"	11"	2"	1 3/4"	1'-11 1/4"	1'-1 3/4"	60 lb
No. 6	12"	10"	70 lb	2' - 4 1/4"	1' - 3 1/4"	2"	2"	2'-6 1/2"	1'-5 1/2"	85 lb

NOTES:

1. The nominal dimensions of the opening in which the cover sets shall be the same as the cover dimensions except the length and width dimensions shall be 1/8" greater.
2. Covers and boxes shall be interchangeable with California standard male and female gages. When interchanged with a standard male or female gage, the top surfaces shall be flush within 1/8". Top outside radius of covers and pull boxes shall have a 1/8" radius.
3. Dimensions for the cover for non-traffic pull box are nominal values.

2 **ADDED PER ADDENDUM No. 2 DATED SEPTEMBER 1, 2016**

STATE OF CALIFORNIA
DEPARTMENT OF TRANSPORTATION

ELECTRICAL SYSTEMS (NON-TRAFFIC PULL BOX)

NO SCALE

RSP ES-8A DATED APRIL 15, 2016 SUPERSEDES STANDARD PLAN ES-8A DATED OCTOBER 30, 2015 - PAGE 473 OF THE STANDARD PLANS BOOK DATED 2015.

REVISED STANDARD PLAN RSP ES-8A

2015 REVISED STANDARD PLAN RSP ES-8A

1-22-16

Dist	COUNTY	ROUTE	POST MILES TOTAL PROJECT	SHEET No.	TOTAL SHEETS
07	LA	110	23.6/25.5	43B	50

Jaswinder S. Gill
REGISTERED ELECTRICAL ENGINEER

October 30, 2015
PLANS APPROVAL DATE

REGISTERED PROFESSIONAL ENGINEER Jaswinder S. Gill No. E18551 Exp. 12-31-16 ELECTRICAL STATE OF CALIFORNIA

THE STATE OF CALIFORNIA OR ITS OFFICERS OR AGENTS SHALL NOT BE RESPONSIBLE FOR THE ACCURACY OR COMPLETENESS OF SCANNED COPIES OF THIS PLAN SHEET.

2

TO ACCOMPANY PLANS DATED 5-2-16

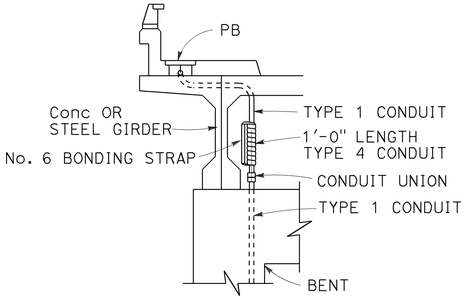

CONDUIT RISER CONNECTION

DETAIL R

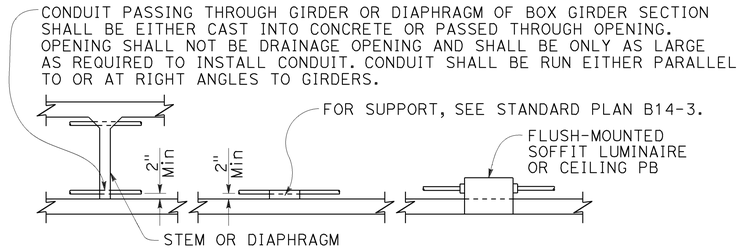

CONDUIT INSTALLATION WITHIN BOX GIRDER SECTIONS

DETAIL S

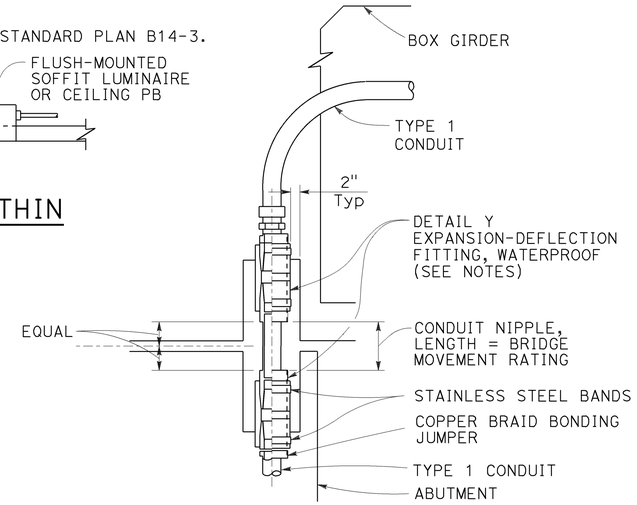

NOTES:

1. Fitting and pocket required only where movement can occur between girder and abutment.
2. Fill pocket around fitting with resilient waterproof compound.

CONDUIT RISER CONNECTION AT COLUMN, ABUTMENT OR STRUCTURE WING WALL

DETAIL U

NOTES:

1. Except for sidewalk joints, a conduit expansion fitting or expansion-deflection fitting shall be installed at each ½" or greater structure joint, hinge or abutment.
2. Fittings or combination of fittings shall be installed to accommodate the movement rating as shown on the structure plans.
3. Fittings shall be installed parallel to superstructure girders.
4. Where lateral movement greater than ¼" may occur, a neoprene sleeve expansion-deflection fitting shall be installed straddling the joint.

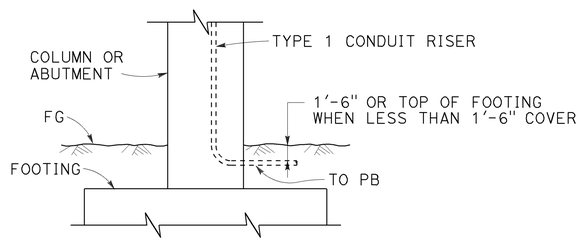

LOWER END OF CONDUIT RISER AT COLUMN OR ABUTMENT

DETAIL T

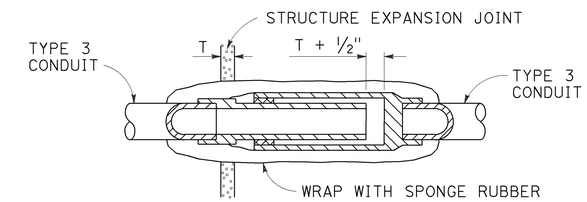

NON-METALLIC CONDUIT EXPANSION FITTING INSTALLATION DETAIL

To be used only when shown or specified on Project Plans

DETAIL V

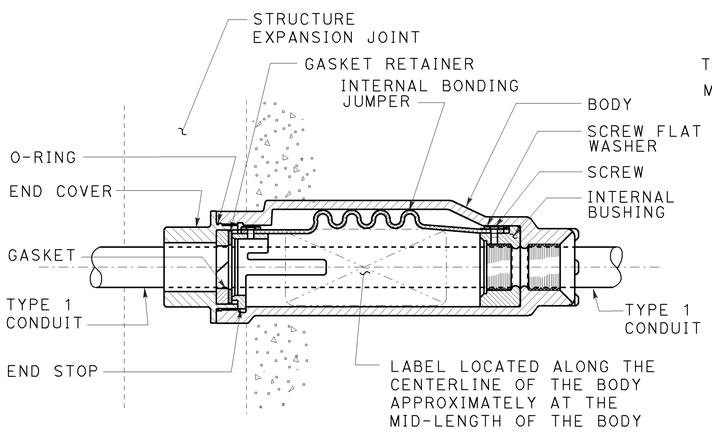

CONDUIT EXPANSION FITTING

DETAIL X

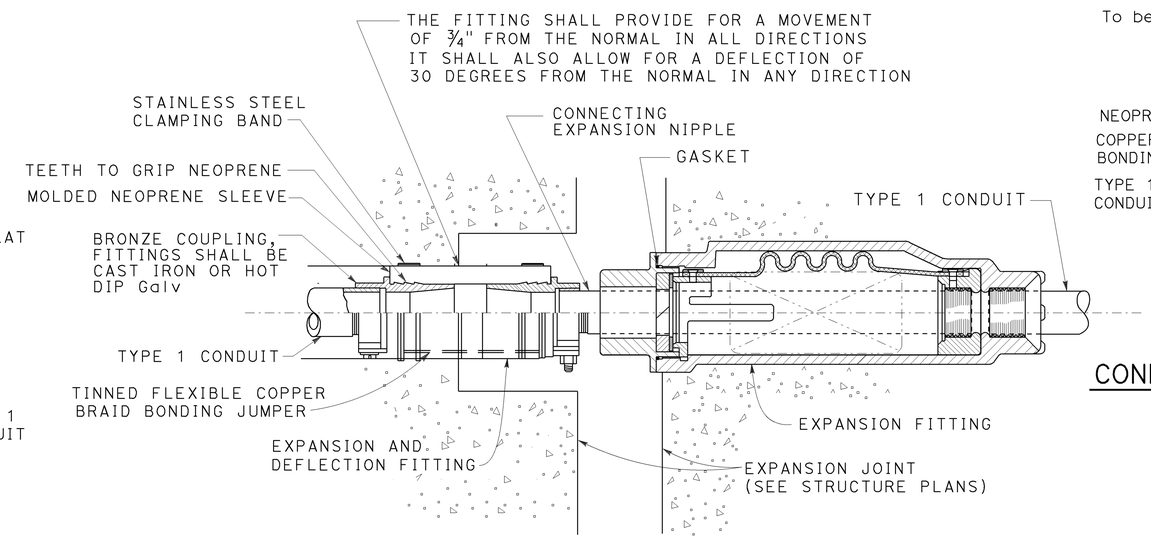

COMBINATION EXPANSION-DEFLECTION FITTINGS

METALLIC CONDUIT INSTALLATION

DETAIL XY

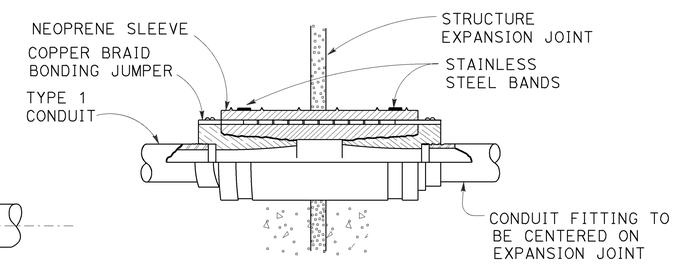

CONDUIT EXPANSION-DEFLECTION FITTING

DETAIL Y

STATE OF CALIFORNIA
DEPARTMENT OF TRANSPORTATION

ELECTRICAL SYSTEMS (CONDUIT RISER AND EXPANSION FITTING, STRUCTURE INSTALLATIONS)

NO SCALE

RSP ES-9B DATED OCTOBER 30, 2015 SUPERSEDES STANDARD PLAN ES-9B DATED MAY 20, 2011 - PAGE 482 OF THE STANDARD PLANS BOOK DATED 2010.

2 **ADDED PER ADDENDUM No. 2 DATED SEPTEMBER 1, 2016**

REVISED STANDARD PLAN RSP ES-9B

2010 REVISED STANDARD PLAN RSP ES-9B

9-1-15

DIST	COUNTY	ROUTE	POST MILES TOTAL PROJECT	SHEET NO.	TOTAL SHEETS
07	LA	110	23.6/25.5	44	50

Theresa Gabriel
REGISTERED ELECTRICAL ENGINEER

October 30, 2015
PLANS APPROVAL DATE

REGISTERED PROFESSIONAL ENGINEER Theresa Aziz Gabriel No. E15129 Exp. 6-30-16 ELECTRICAL STATE OF CALIFORNIA

THE STATE OF CALIFORNIA OR ITS OFFICERS OR AGENTS SHALL NOT BE RESPONSIBLE FOR THE ACCURACY OR COMPLETENESS OF SCANNED COPIES OF THIS PLAN SHEET.

TO ACCOMPANY PLANS DATED 5-2-16

2 DELETED PER ADDENDUM No. 2 DATED SEPTEMBER 1, 2016

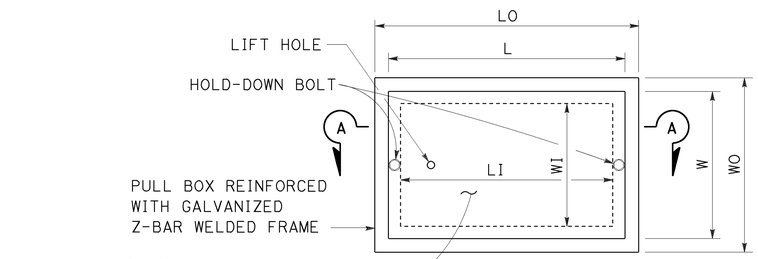

TOP VIEW

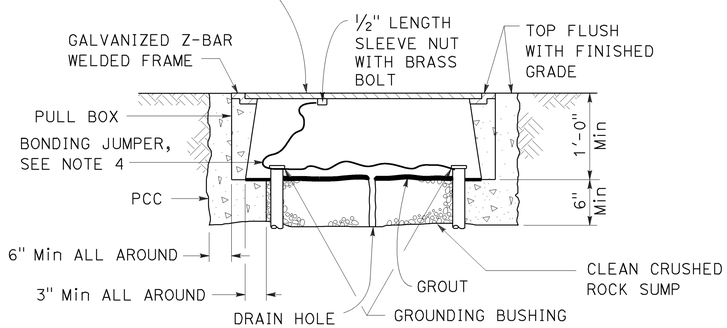

SECTION A-A

No. 3½(T), No. 5(T) AND No. 6(T) TRAFFIC PULL BOX

NOTES:

1. Traffic pull box shall be provided with steel cover and special concrete footing. Steel cover shall have embossed non-skid pattern.
2. Steel reinforcing shall be as regularly used in the standard products of the respective manufacturer.
3. Pull box covers shall be marked as follows: "SERVICE" Service circuits between service point and service disconnect; "SPRINKLER-CONTROL" Sprinkler control circuits, 50 V or less; "CALTRANS" On all pull boxes, except pull boxes marked "SPRINKLER-CONTROL"; and "TELEPHONE" Telephone service.
   A) No. 3½(T) pull box.
      1) "SIGNAL" - Traffic signal circuits with or without lighting or sign lighting circuits.
      2) "LIGHTING" - Lighting or sign lighting circuits where voltage is under 600 V.
   B) No. 5(T) or 6(T) pull box.
      1) "TRAFFIC SIGNAL" - Traffic signal circuits with or without lighting or sign lighting circuits.
      2) "LIGHTING" - Lighting or sign lighting circuits where voltage is under 600 V.
      3) "LIGHTING-HIGH VOLTAGE" - Lighting or sign lighting circuits where voltage is above 600 V.
      4) "IRRIGATION" - Circuits to irrigation controller 120 V or more.
      5) "RAMP METER" - Ramp meter circuits.
      6) "COUNT STATION" - Count or speed monitor circuits.
      7) "COMMUNICATION" - Communication circuits.
      8) "TOS COMMUNICATIONS" - TOS communications line.
      9) "TOS POWER" - TOS power.
      10) "TDC POWER" - Telephone demarcation cabinet power.
      11) "CCTV" - Closed circuit television circuits.
      12) "TMS" - Traffic monitoring station circuits.
      13) "CMS" - Changeable message sign circuits.
      14) "HAR" - Highway advisory radio circuits.
      15) "BOOSTER PUMP" - Booster pump circuit.
4. Bonding jumper for metal covers shall be 3' long, minimum.
5. The nominal dimensions of the opening in which the cover sets shall be the same as the cover dimensions except the length and width dimensions shall be ⅛" greater.
6. Covers and boxes shall be interchangeable with California standard male and female gages. When interchanged with a standard male or female gage, the top surfaces shall be flush within ⅛".

DIMENSION TABLE

PULL BOX	PULL BOX						COVER	
	MINIMUM * THICKNESS	MINIMUM DEPTH BOX AND EXTENSION	LO	LI	WO	WI	L **	W **
No. 3½(T)	1½"	1'-0"	1'-10" - 1'-11"	1'-5" - 1'-6½"	1'-3" - 1'-4"	10" - 1'-0"	1'-8" -1'-8½"	1'-1" - 1'-2"
No. 5(T)	1¾"	1'-0"	2'-5" - 2'-6"	2'-0" - 2'-1"	1'-6" - 1'-7"	1'-1" - 1'-2"	2'-3" - 2'-3½"	1'-4" - 1'-4½"
No. 6(T)	2"	1'-0"	2'-11" - 3'-1"	2'-6" - 2'-7"	1'-10" - 2'-0"	1'-5" - 1'-6"	2'-9" - 2'-9½"	1'-8" - 1'-8½"

* EXCLUDING CONDUIT WEB ** TOP DIMENSION

STATE OF CALIFORNIA
DEPARTMENT OF TRANSPORTATION

ELECTRICAL SYSTEMS (TRAFFIC PULL BOX)

NO SCALE

RSP ES-8B DATED OCTOBER 30, 2015 SUPERSEDES RSP ES-8B DATED JULY 19, 2013 AND RSP ES-8B DATED JANUARY 20, 2012 THAT SUPPLEMENTS THE STANDARD PLANS BOOK DATED 2010.

REVISED STANDARD PLAN RSP ES-8B

2010 REVISED STANDARD PLAN RSP ES-8B

8-25-15

Dist	COUNTY	ROUTE	POST MILES TOTAL PROJECT	SHEET No.	TOTAL SHEETS
07	LA	110	23.6/25.5	46	50

Theresa Gabriel
REGISTERED ELECTRICAL ENGINEER

October 30, 2015
PLANS APPROVAL DATE

REGISTERED PROFESSIONAL ENGINEER
Theresa Aziz Gabriel
No. E15129
Exp. 6-30-16
ELECTRICAL
STATE OF CALIFORNIA

THE STATE OF CALIFORNIA OR ITS OFFICERS OR AGENTS SHALL NOT BE RESPONSIBLE FOR THE ACCURACY OR COMPLETENESS OF SCANNED COPIES OF THIS PLAN SHEET.

TO ACCOMPANY PLANS DATED 5-2-16

2 DELETED PER ADDENDUM No. 2 DATED SEPTEMBER 1, 2016

NOTE:
Curves represent the minimum footcandle (FC).

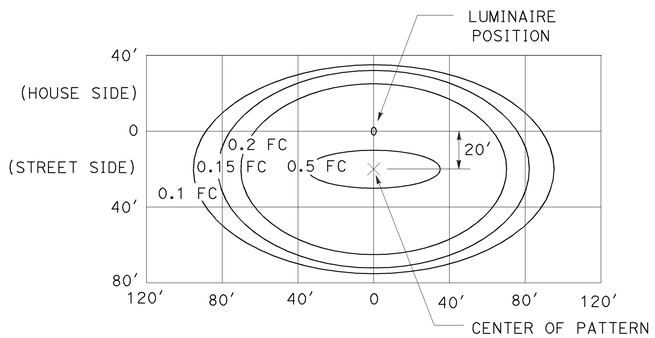

LED LUMINAIRE 165 W
34′ Mounting Height

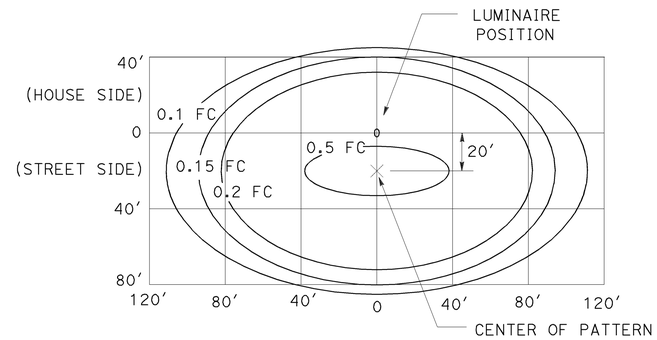

LED LUMINAIRE 235 W
40′ Mounting Height

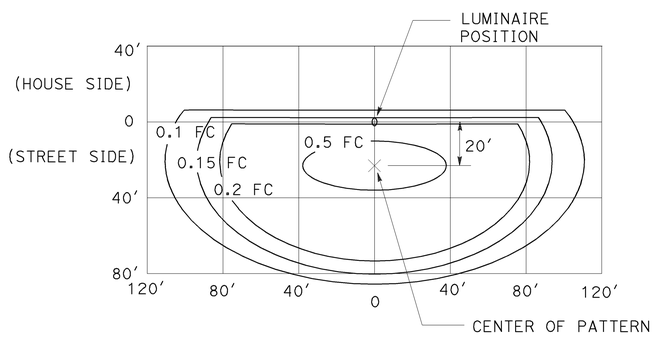

LED LUMINAIRE 235 W
40′ Mounting Height
with back side control

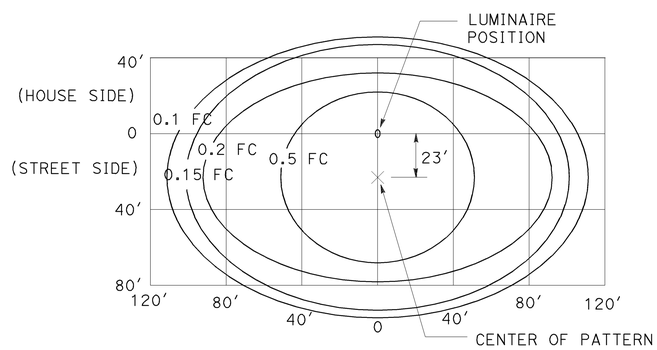

LED LUMINAIRE 300 W
40′ Mounting Height

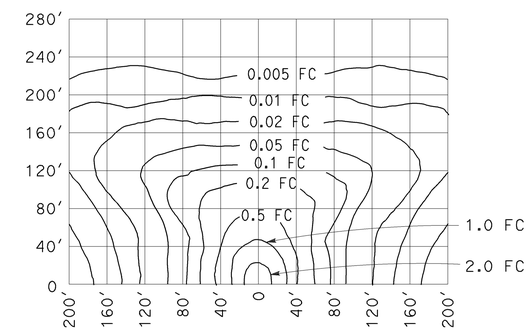

LOW-PRESSURE SODIUM LUMINAIRE 180 W
40′ Mounting Height
Lamp operated at 33,000 lm

STATE OF CALIFORNIA
DEPARTMENT OF TRANSPORTATION

ELECTRICAL SYSTEMS (ISOFOOTCANDLE CURVES)

NO SCALE

RSP ES-10A DATED OCTOBER 30, 2015 SUPERSEDES RSP ES-10A DATED JULY 19, 2013 THAT SUPPLEMENTS THE STANDARD PLANS BOOK DATED 2010.

REVISED STANDARD PLAN RSP ES-10A

2010 REVISED STANDARD PLAN RSP ES-10A

9-29-15