DIST	COUNTY	ROUTE	POST MILES TOTAL PROJECT	SHEET No.	TOTAL SHEETS
08	SBd	15	171.8/173.8	101	128

REGISTERED CIVIL ENGINEER — DATE 09-11-14

04-06-15
PLANS APPROVAL DATE

REGISTERED PROFESSIONAL ENGINEER — LARRY WU — No. 57035 — Exp. 6-30-15 — CIVIL — STATE OF CALIFORNIA

The State of California or its officers or agents shall not be responsible for the accuracy or completeness of scanned copies of this plan sheet.

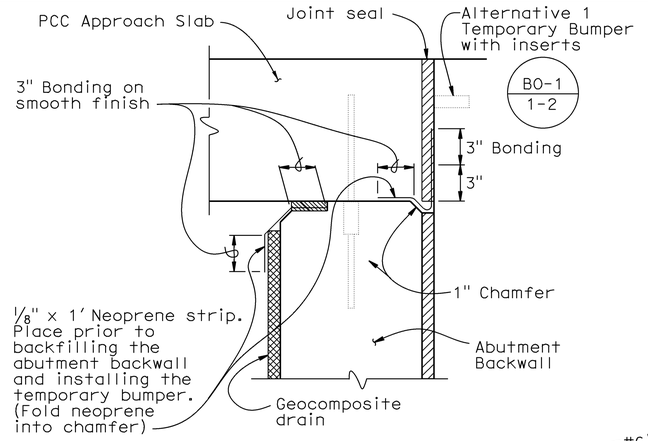

JOINT PROTECTION DETAIL

No Scale

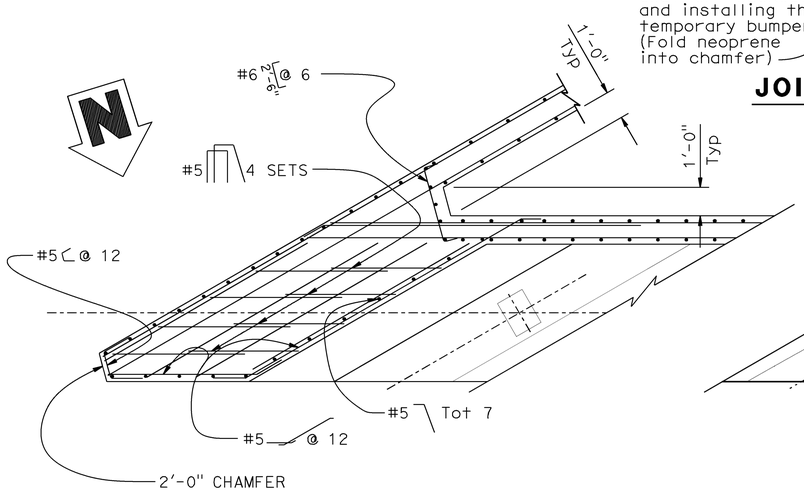

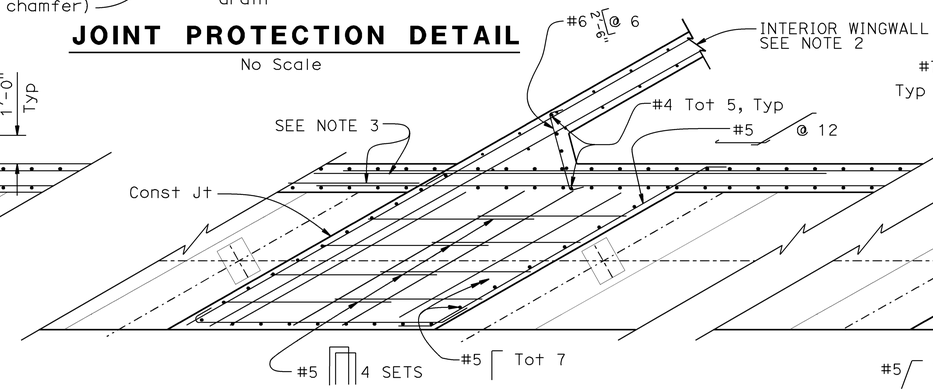

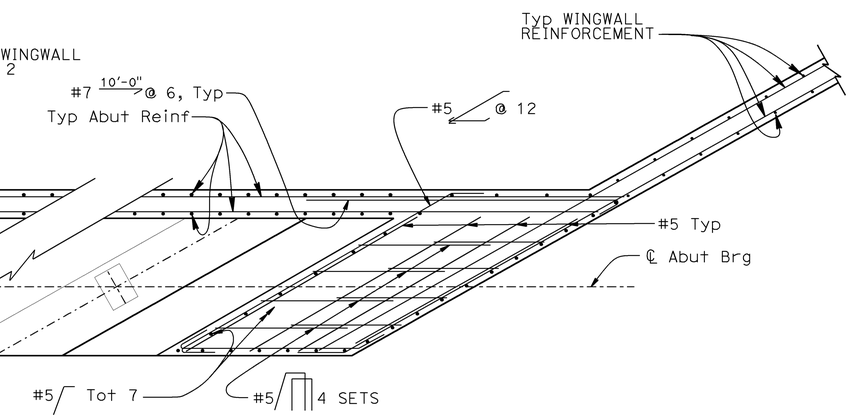

PART SECTION B-B

3/8" = 1'-0"

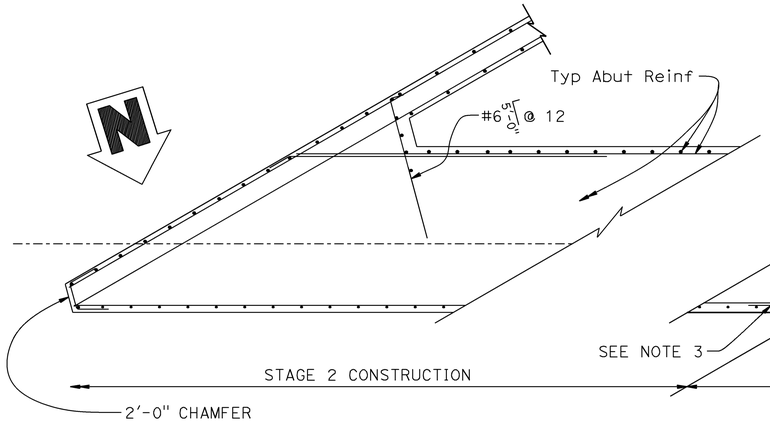

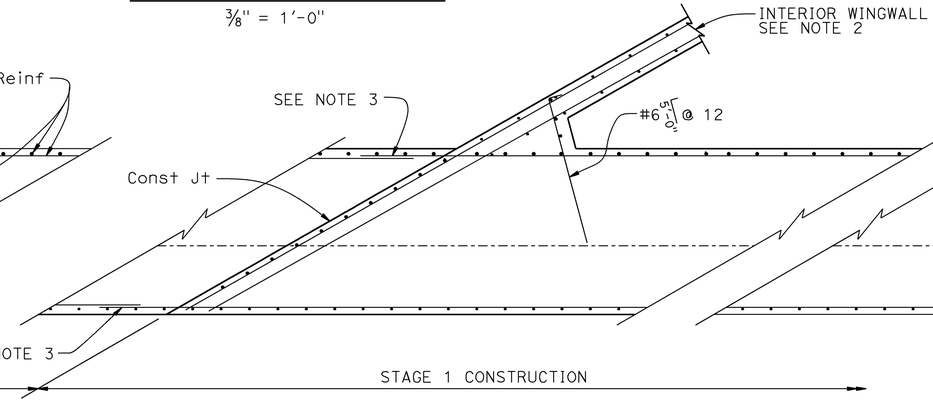

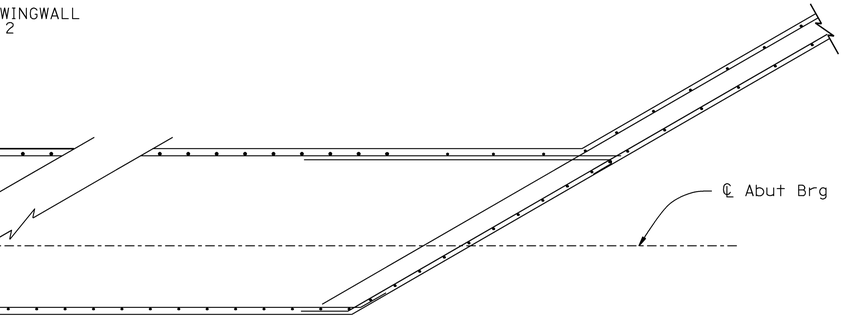

PART SECTION C-C

3/8" = 1'-0"

NOTES:

1. For Typical Wingwall Reinforcement, see "ABUTMENT DETAILS NO. 3" sheet.
2. Interior Wingwall for stage construction, see Details on "ABUTMENT DETAILS NO. 3" sheet.
3. Mechanical splice abutment backwall and footing reinforcement between two stages.
4. For locations of "PART SECTION B-B" and "PART SECTION C-C", see "ABUTMENT LAYOUT-STAGE 1" and "ABUTMENT LAYOUT-STAGE 2" sheets.
5. Abutment 1 shown, Abutment 4 similar.

NOTE:
THE CONTRACTOR MUST VERIFY ALL CONTROLLING FIELD DIMENSIONS BEFORE ORDERING OR FABRICATING ANY MATERIAL.

	BY	CHECKED
DESIGN	L. Wu	D. Balbas
DETAILS	G. Hallstrom	D. Balbas
QUANTITIES	T. Sanderson	H. Vu

STATE OF CALIFORNIA
DEPARTMENT OF TRANSPORTATION

DIVISION OF ENGINEERING SERVICES
STRUCTURE DESIGN
DESIGN BRANCH 10

BRIDGE NO. 54-1308L
POST MILE 172.11

CENDA DITCH BRIDGE LEFT (REPLACE)

ABUTMENT DETAILS NO. 2

STRUCTURES DESIGN DETAIL SHEET (ENGLISH) (REV. 09-01-10)

ORIGINAL SCALE IN INCHES FOR REDUCED PLANS 0 1 2 3

UNIT: 3589
PROJECT NUMBER & PHASE: 0800000472
CONTRACT NO.: 08-0M2804

DISREGARD PRINTS BEARING EARLIER REVISION DATES

REVISION DATES: 02-20-14 04-23-14 06-02-14

SHEET 11 OF 24

FILE => 541308lfadt11.dgn

USERNAME => s130406 DATE PLOTTED => 14-JAN-2015 TIME PLOTTED => 14:24

DIST	COUNTY	ROUTE	POST MILES TOTAL PROJECT	SHEET No.	TOTAL SHEETS
08	SBd	15	171.8/173.8	102	128

REGISTERED CIVIL ENGINEER 09-11-14 DATE

04-06-15
PLANS APPROVAL DATE

REGISTERED PROFESSIONAL ENGINEER LARRY WU No. 57035 Exp. 6-30-15 CIVIL STATE OF CALIFORNIA

The State of California or its officers or agents shall not be responsible for the accuracy or completeness of scanned copies of this plan sheet.

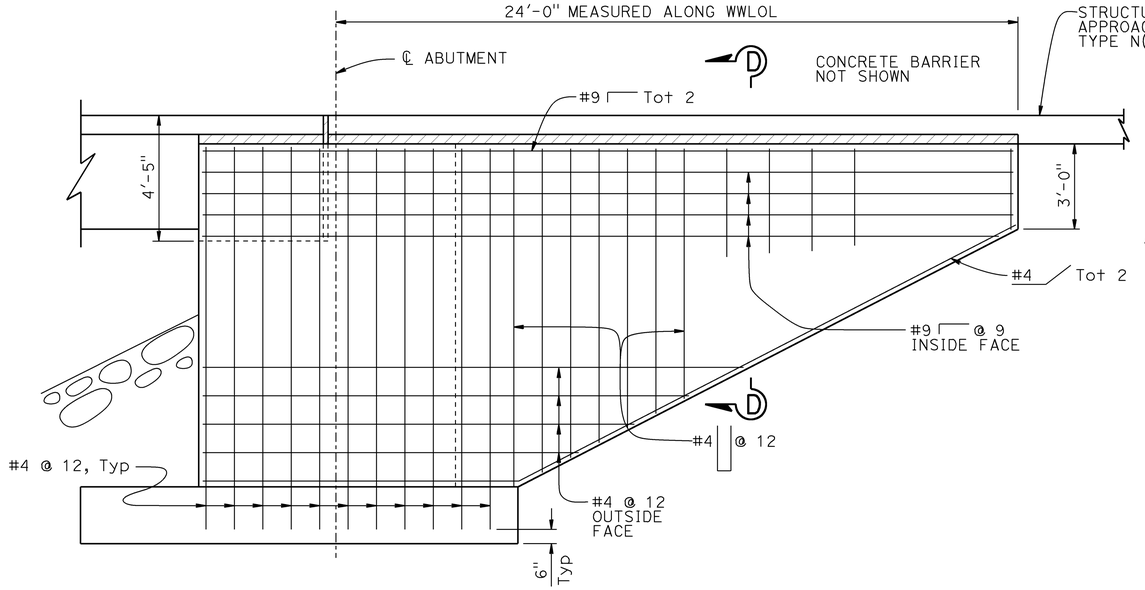

NOTE: Abut 1 Left shown, Abut 1 Right, Abut 4 Left, and Abut 4 Right similar.

WINGWALL ELEVATION

3/8"=1'-0"

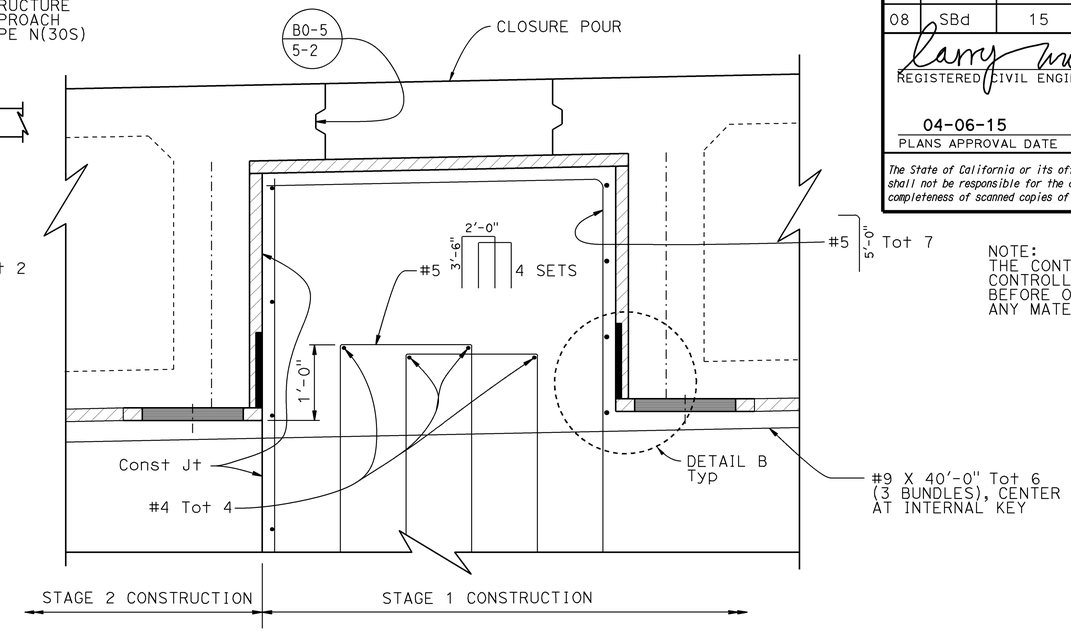

NOTE:
THE CONTRACTOR MUST VERIFY ALL CONTROLLING FIELD DIMENSIONS BEFORE ORDERING OR FABRICATING ANY MATERIAL.

ELEVATION - INTERNAL KEY

1"=1'-0"

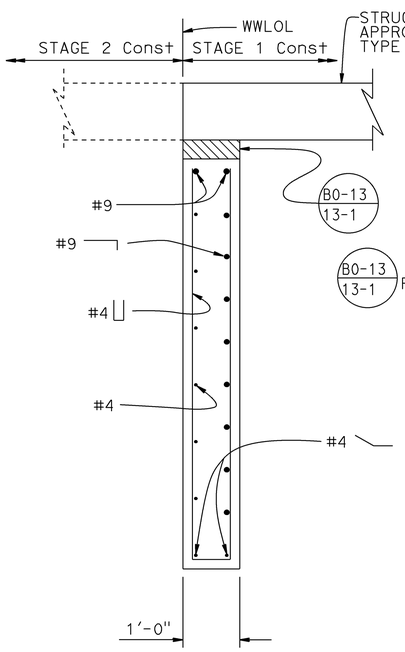

SECTION E-E

3/4"=1'-0"

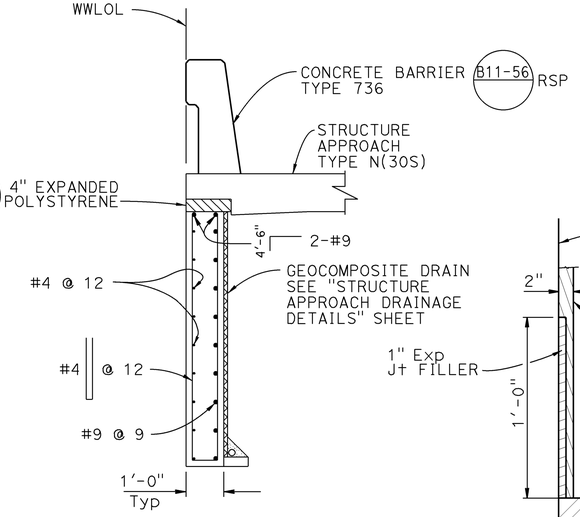

SECTION D-D

1/2"=1'-0"

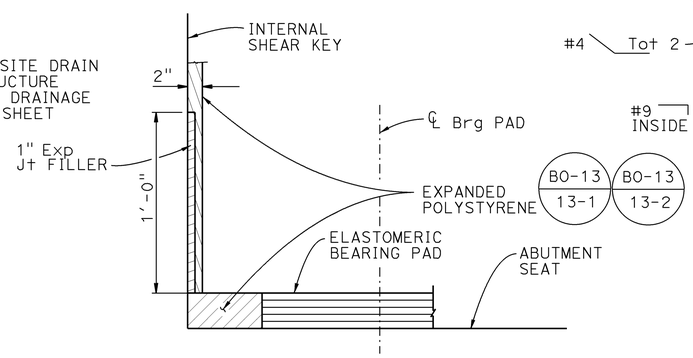

DETAIL B

NO SCALE

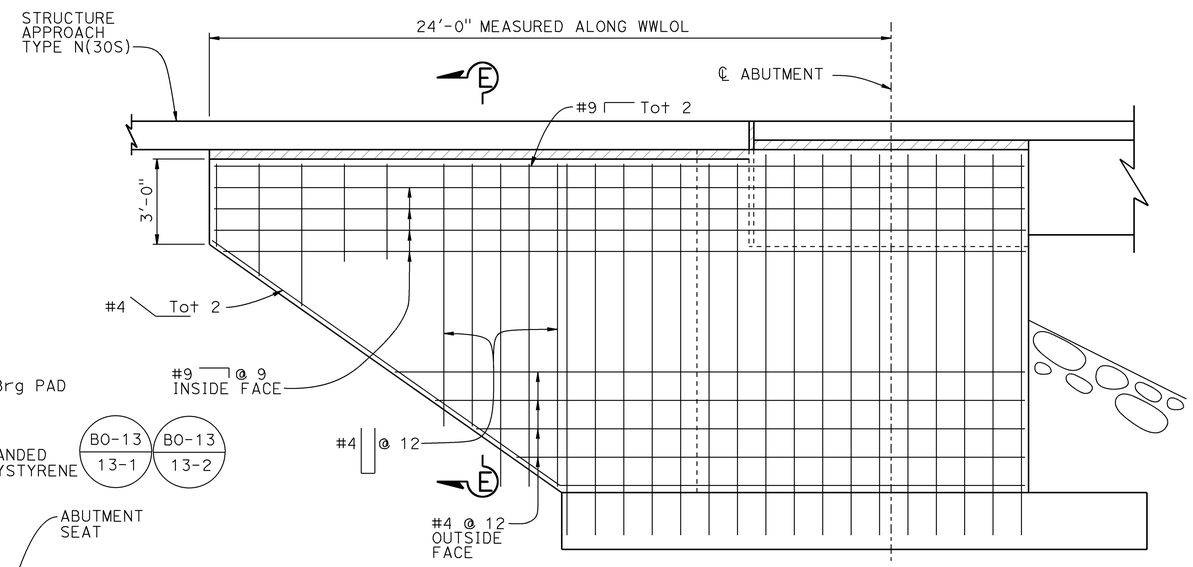

INTERIOR WINGWALL ELEVATION

3/8"=1'-0"

DESIGN	BY L. Wu	CHECKED D. Balbas	
DETAILS	BY G. Hallstrom/Y. Tang	CHECKED D. Balbas	
QUANTITIES	BY T. Sanderson	CHECKED H. Vu	

STATE OF CALIFORNIA
DEPARTMENT OF TRANSPORTATION

DIVISION OF ENGINEERING SERVICES
STRUCTURE DESIGN
DESIGN BRANCH 10

BRIDGE NO. 54-1308L
POST MILE 172.11

CENDA DITCH BRIDGE LEFT (REPLACE)
ABUTMENT DETAILS NO. 3

STRUCTURES DESIGN DETAIL SHEET (ENGLISH) (REV. 09-01-10)

ORIGINAL SCALE IN INCHES FOR REDUCED PLANS 0 1 2 3

UNIT: 3589
PROJECT NUMBER & PHASE: 0800000472
CONTRACT NO.: 08-0M2804

DISREGARD PRINTS BEARING EARLIER REVISION DATES

REVISION DATES 02-24-14 04-29-14 06-02-14

SHEET 12 OF 24

FILE => 5413081fadt12.dgn

USERNAME => s130406 DATE PLOTTED => 14-JAN-2015 TIME PLOTTED => 14:24

DIST	COUNTY	ROUTE	POST MILES TOTAL PROJECT	SHEET No.	TOTAL SHEETS
08	SBd	15	171.8/173.8	103	128

REGISTERED CIVIL ENGINEER 09-11-14 DATE

04-06-15
PLANS APPROVAL DATE

REGISTERED PROFESSIONAL ENGINEER LARRY WU No. 57035 Exp. 6-30-15 CIVIL STATE OF CALIFORNIA

The State of California or its officers or agents shall not be responsible for the accuracy or completeness of scanned copies of this plan sheet.

NOTES:

1. For SECTION A-A, SECTION B-B, and SECTION C-C, see "BENT DETAILS" sheet.
2. Place stirrups normal to ℄ Bent and space along ℄ Bent.
3. Limits for distribution of J-hooks, total 24 per column.
4. Place 3'-0" hook on one end and 5'-0" hook on other end along top of bottom bundled bars as shown in "ELEVATION".
5. Use service splices for bent cap main bars
6. Bent 2 shown, Bent 3 similar. Typical all columns.
7. No splices allowed in main column Reinf, all hoops are "ultimate" butt spliced continous.

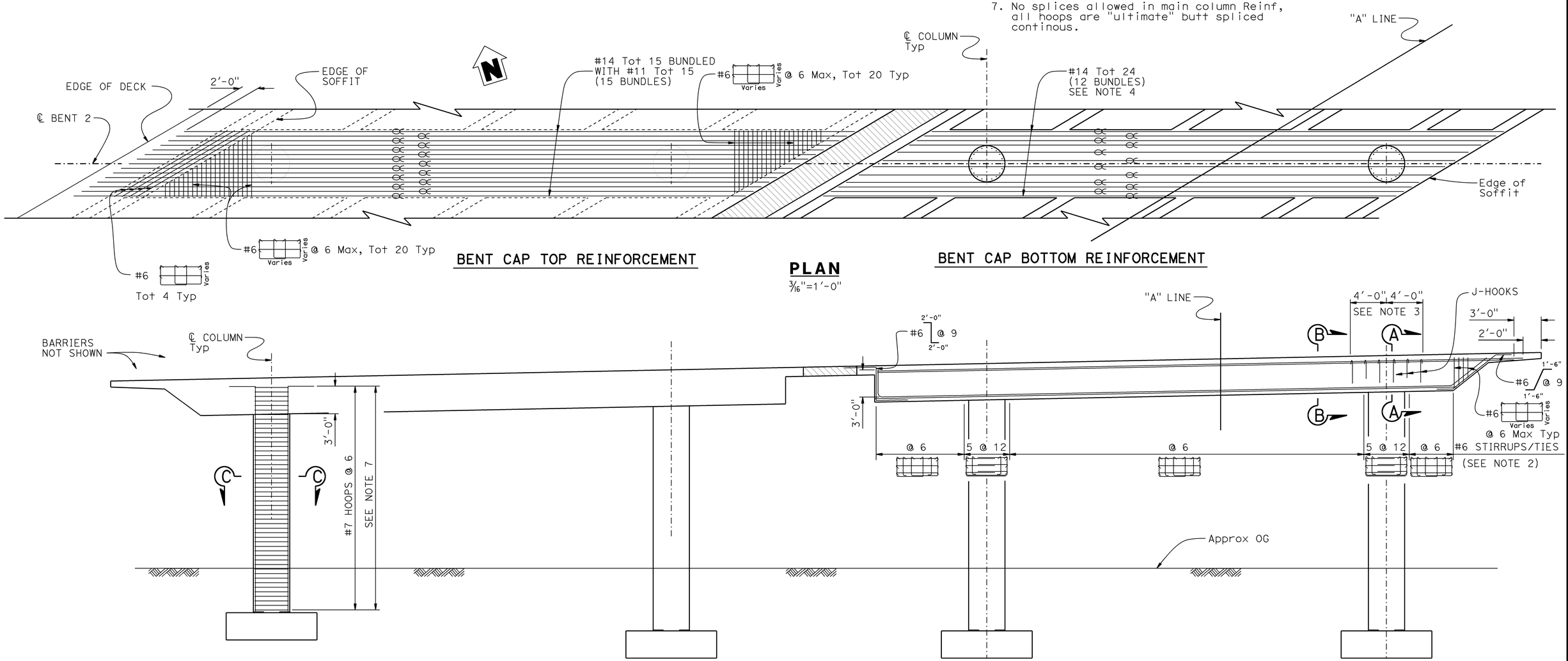

NOTE:
THE CONTRACTOR MUST VERIFY ALL CONTROLLING FIELD DIMENSIONS BEFORE ORDERING OR FABRICATING ANY MATERIAL.

LEGEND:

Indicates Deck Closure Pour

Indicates bundled bars

	BY	CHECKED
DESIGN	L. Wu	R. Wang
DETAILS	G. Hallstrom	R. Wang
QUANTITIES	T. Sanderson	H. Vu

STATE OF CALIFORNIA
DEPARTMENT OF TRANSPORTATION

DIVISION OF ENGINEERING SERVICES
STRUCTURE DESIGN
DESIGN BRANCH 10

BRIDGE NO. 54-1308L
POST MILE 172.11

CENDA DITCH BRIDGE LEFT (REPLACE)
BENT LAYOUT

STRUCTURES DESIGN DETAIL SHEET (ENGLISH) (REV. 09-01-10)

ORIGINAL SCALE IN INCHES FOR REDUCED PLANS 0 1 2 3

UNIT: 3589
PROJECT NUMBER & PHASE: 0800000472
CONTRACT NO.: 08-0M2804

DISREGARD PRINTS BEARING EARLIER REVISION DATES

REVISION DATES 02-24-14 05-01-14

SHEET 13 OF 24

FILE => 541308lhb_to13.dgn

USERNAME => s130406 DATE PLOTTED => 14-JAN-2015 TIME PLOTTED => 14:24

DIST	COUNTY	ROUTE	POST MILES TOTAL PROJECT	SHEET No.	TOTAL SHEETS
08	SBd	15	171.8/173.8	104	128

REGISTERED CIVIL ENGINEER — DATE 09-11-14

04-06-15
PLANS APPROVAL DATE

REGISTERED PROFESSIONAL ENGINEER — LARRY WU No. 57035 Exp. 6-30-15 CIVIL — STATE OF CALIFORNIA

The State of California or its officers or agents shall not be responsible for the accuracy or completeness of scanned copies of this plan sheet.

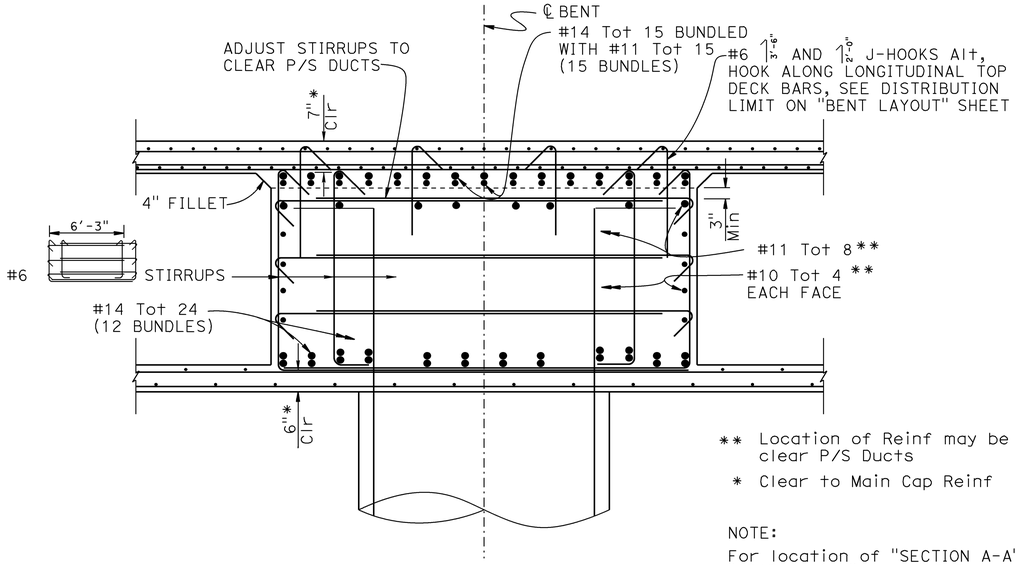

** Location of Reinf may be adjusted to clear P/S Ducts

* Clear to Main Cap Reinf

NOTE:
For location of "SECTION A-A", "SECTION B-B", and "SECTION C-C", see "BENT LAYOUT" sheet.

SECTION A-A

3/4"=1'-0"

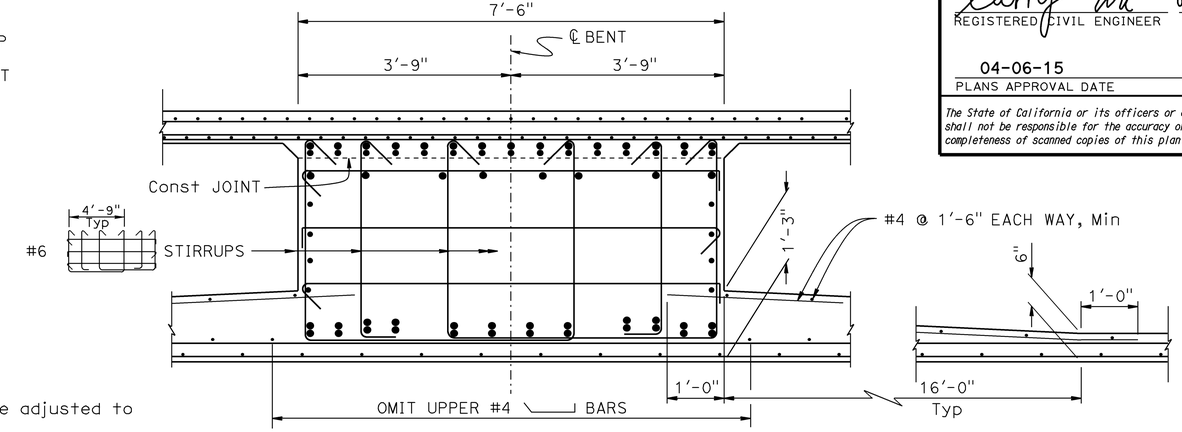

SECTION B-B

3/4"=1'-0"

Note: For details not shown, see "SECTION A-A"

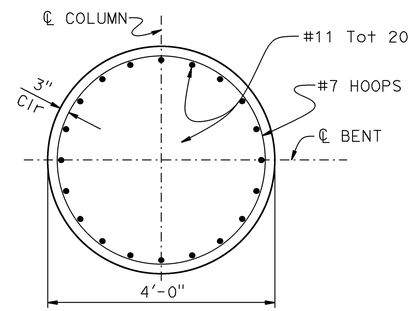

SECTION C-C

3/4"=1'-0"

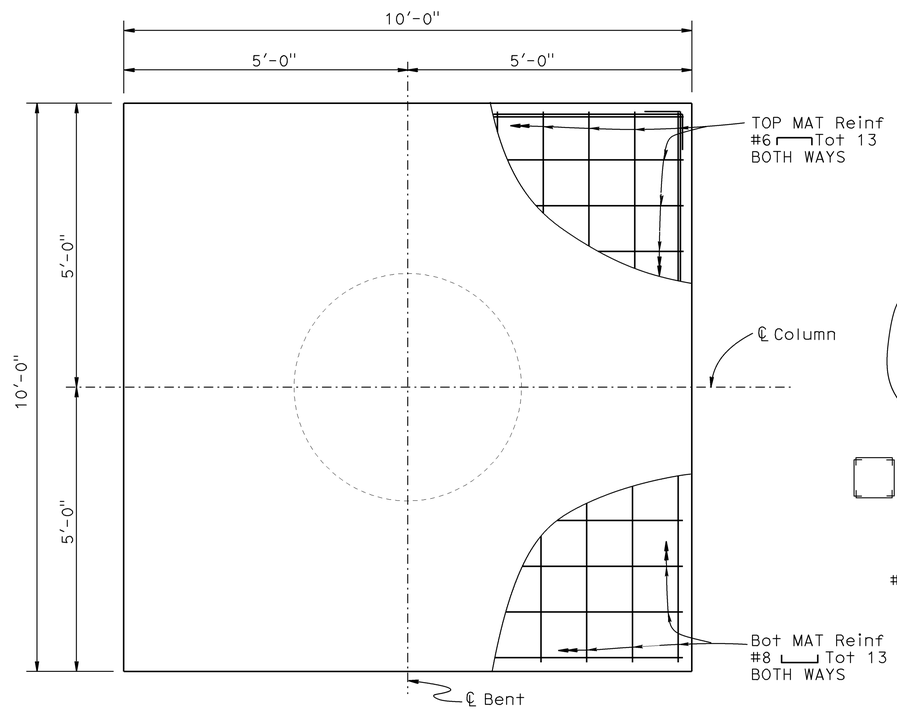

FOOTING PLAN

3/4"=1'-0"

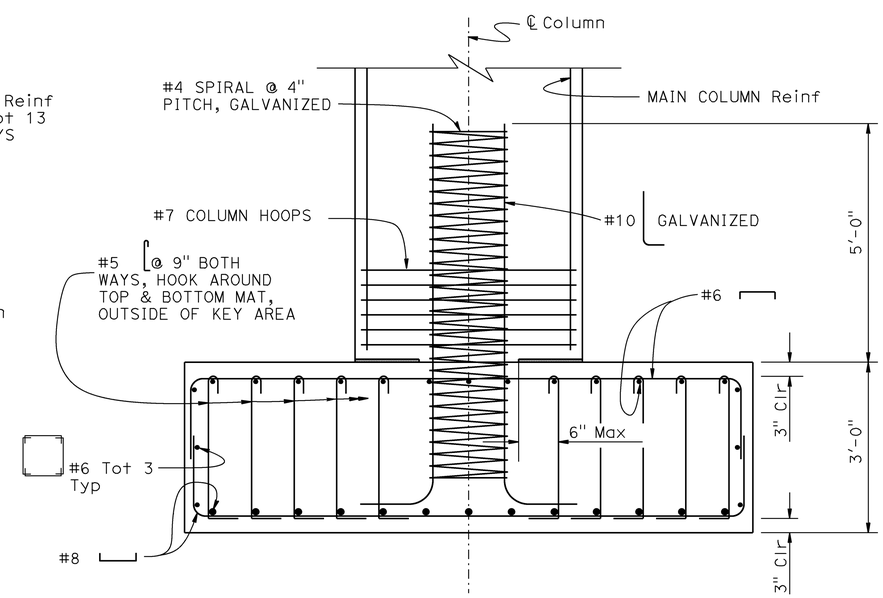

FOOTING TYPICAL SECTION

3/4"=1'-0"

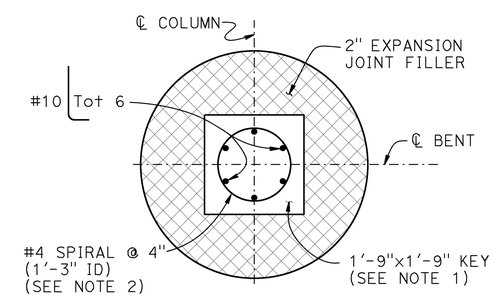

COLUMN-FOOTING KEY DETAIL

3/4"=1'-0"

NOTES:

1. Key area shall be roughened to 1/4" amplitude.
2. Spiral may be discontinuous at top of footing reinforcement.

NOTE:
THE CONTRACTOR MUST VERIFY ALL CONTROLLING FIELD DIMENSIONS BEFORE ORDERING OR FABRICATING ANY MATERIAL.

	BY	CHECKED
DESIGN	L. Wu	R. Wang
DETAILS	G. Hallstrom	R. Wang
QUANTITIES	T. Sanderson	H. Vu

STATE OF CALIFORNIA
DEPARTMENT OF TRANSPORTATION

DIVISION OF ENGINEERING SERVICES
STRUCTURE DESIGN
DESIGN BRANCH 10

BRIDGE NO. 54-1308L
POST MILE 172.11

CENDA DITCH BRIDGE LEFT (REPLACE)
BENT DETAILS

STRUCTURES DESIGN DETAIL SHEET (ENGLISH) (REV. 09-01-10)

ORIGINAL SCALE IN INCHES FOR REDUCED PLANS 0 1 2 3

UNIT: 3589
PROJECT NUMBER & PHASE: 0800000472
CONTRACT NO.: 08-0M2804

DISREGARD PRINTS BEARING EARLIER REVISION DATES

REVISION DATES 12-20-13 05-04-14 06-02-14

SHEET 14 OF 24

FILE => 541308lhbdt14.dgn

USERNAME => s130406 DATE PLOTTED => 14-JAN-2015 TIME PLOTTED => 14:24

DIST	COUNTY	ROUTE	POST MILES TOTAL PROJECT	SHEET No.	TOTAL SHEETS
08	SBd	15	171.8/173.8	105	128

REGISTERED CIVIL ENGINEER — DATE: 09-11-14

04-06-15
PLANS APPROVAL DATE

The State of California or its officers or agents shall not be responsible for the accuracy or completeness of scanned copies of this plan sheet.

REGISTERED PROFESSIONAL ENGINEER — LARRY WU — No. 57035 — Exp. 6-30-15 — CIVIL — STATE OF CALIFORNIA

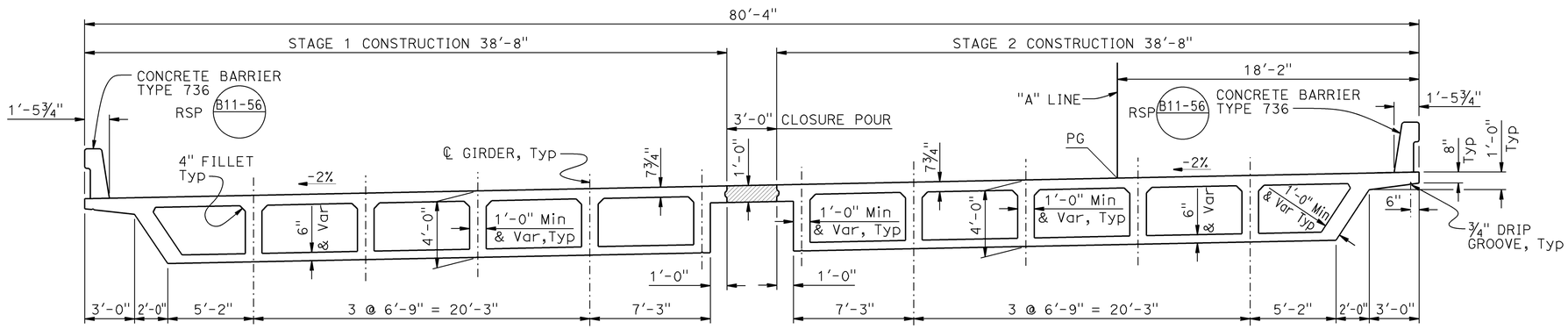

TYPICAL SECTION

¼"=1'-0"

LEGEND:

Indicates concrete closure pour

FALSEWORK RELEASE

Alternative 1:

Falsework shall be released as soon as permitted by the specifications. Closure pour shall not be placed sooner than 60 days after the falsework had been released.

Alternative 2:

Falsework shall not be released less than 28 days after the last concrete has been placed. Closure pour shall not be placed sooner than 14 days after the falsework has been released.

When Falsework Release Alternative 2 is used, camber values are 0.75 times those shown on "Camber Diagram" sheet.

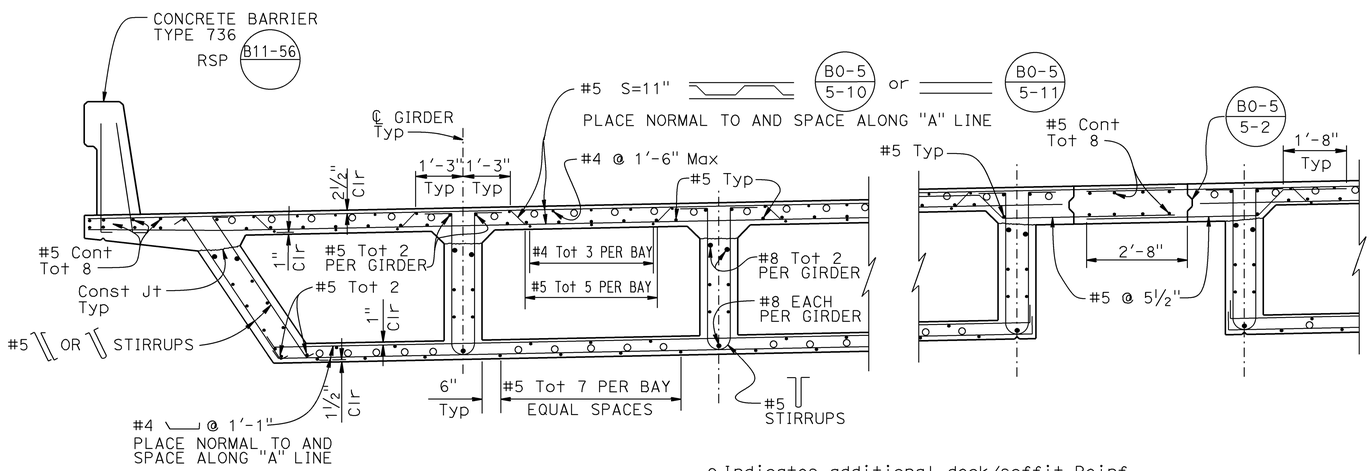

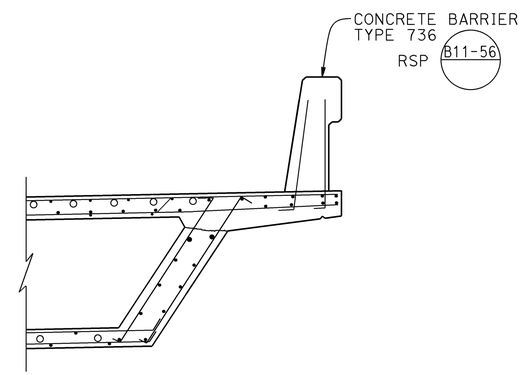

○ Indicates additional deck/soffit Reinf, for details, see "GIRDER REINFORCEMENT" sheet.

PART TYPICAL SECTION

B0-5 B7-1 B8-5 RSP

½"=1'-0"

NOTE:
THE CONTRACTOR MUST VERIFY ALL CONTROLLING FIELD DIMENSIONS BEFORE ORDERING OR FABRICATING ANY MATERIAL.

NOTE:

All Deck Reinf, Barrier Reinf, and Girder Stirrups to be Epoxy coated.

	BY	CHECKED
DESIGN	L. Wu	E. Mercado
DETAILS	G. Hallstrom	E. Mercado
QUANTITIES	T. Sanderson	H. Vu

STATE OF CALIFORNIA
DEPARTMENT OF TRANSPORTATION

DIVISION OF ENGINEERING SERVICES
STRUCTURE DESIGN
DESIGN BRANCH 10

BRIDGE NO. 54-1308L
POST MILE 172.11

CENDA DITCH BRIDGE LEFT (REPLACE)
TYPICAL SECTION

STRUCTURES DESIGN DETAIL SHEET (ENGLISH) (REV. 09-01-10)

ORIGINAL SCALE IN INCHES FOR REDUCED PLANS 0 1 2 3

UNIT: 3589
PROJECT NUMBER & PHASE: 0800000472
CONTRACT NO.: 08-0M2804

DISREGARD PRINTS BEARING EARLIER REVISION DATES

REVISION DATES: 10-02-13 11-12-13 04-24-14 09-18-14

SHEET 15 OF 24

FILE => 541308lkts15.dgn

USERNAME => s130406 DATE PLOTTED => 14-JAN-2015 TIME PLOTTED => 14:24

DIST	COUNTY	ROUTE	POST MILES TOTAL PROJECT	SHEET No.	TOTAL SHEETS
08	SBd	15	171.8/173.8	106	128

REGISTERED CIVIL ENGINEER — DATE 09-11-14

04-06-15
PLANS APPROVAL DATE

REGISTERED PROFESSIONAL ENGINEER — LARRY WU — No. 57035 — Exp. 6-30-15 — CIVIL — STATE OF CALIFORNIA

The State of California or its officers or agents shall not be responsible for the accuracy or completeness of scanned copies of this plan sheet.

PRESTRESSING NOTES

270 KSI Low Relaxation Strand:

P_{jack} = 4750 kips

Anchor Set = 3/8 in

Total Number of Girders = 6

Distribution of prestress force (Pjack) between girders shall not exceed the ratio of 3:2. Maximum final force variation between girders shall not exceed 725 kips.

Concrete: f'_c = 4000 psi @ 28 days

f'_{ci} = 3500 psi @ time of stressing

Contractor shall submit elongation calculations based on initial stress at

⊠ = 0.824 times jacking stress.

One end stressing shall be performed from Abutment 4.

Design is based on μ = 0.15 and k = 0.0002/ft.

NOTE:
Indicates girder stem width in inches
Ⓐ Indicates girder No.

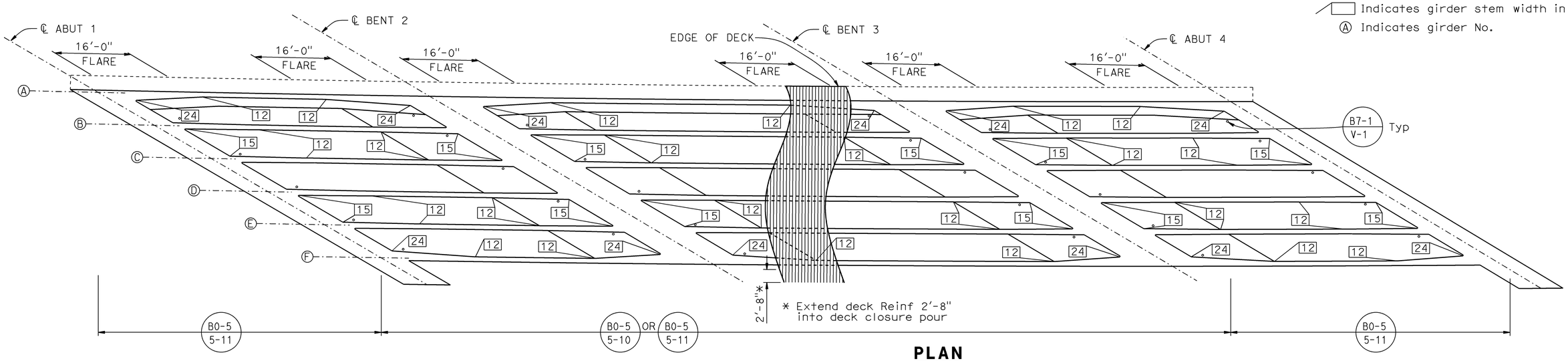

PLAN

3/32"=1'-0"

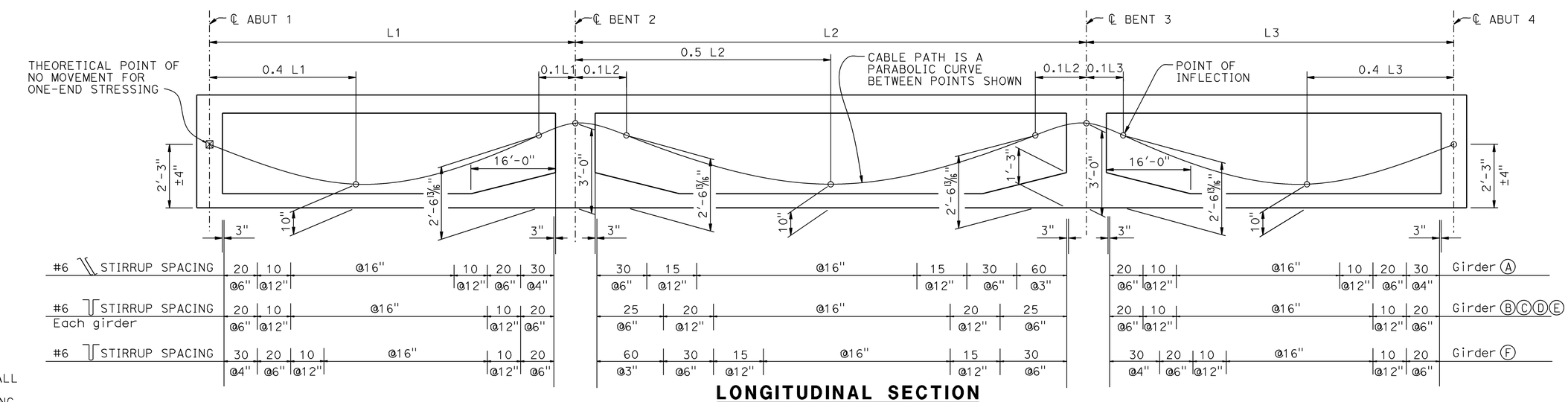

LONGITUDINAL SECTION

No Scale

NOTE:
THE CONTRACTOR MUST VERIFY ALL CONTROLLING FIELD DIMENSIONS BEFORE ORDERING OR FABRICATING ANY MATERIAL.

	BY	CHECKED
DESIGN	L. Wu	E. Mercado
DETAILS	G. Hallstrom	E. Mercado
QUANTITIES	T. Sanderson	H. Vu

STATE OF CALIFORNIA
DEPARTMENT OF TRANSPORTATION

DIVISION OF ENGINEERING SERVICES
STRUCTURE DESIGN
DESIGN BRANCH 10

BRIDGE NO. 54-1308L
POST MILE 172.11

CENDA DITCH BRIDGE LEFT (REPLACE)
GIRDER LAYOUT - STAGE 1

STRUCTURES DESIGN DETAIL SHEET (ENGLISH) (REV. 09-01-10)

ORIGINAL SCALE IN INCHES FOR REDUCED PLANS 0 1 2 3

UNIT: 3589
PROJECT NUMBER & PHASE: 0800000472
CONTRACT NO.: 08-0M2804

DISREGARD PRINTS BEARING EARLIER REVISION DATES

REVISION DATES: 02-24-14 04-24-14 06-02-14

SHEET 16 OF 24

FILE => 541308llg_lo16.dgn

USERNAME => s130406 DATE PLOTTED => 14-JAN-2015 TIME PLOTTED => 14:24

DIST	COUNTY	ROUTE	POST MILES TOTAL PROJECT	SHEET No.	TOTAL SHEETS
08	SBd	15	171.8/173.8	107	128

REGISTERED CIVIL ENGINEER 09-11-14 DATE

04-06-15
PLANS APPROVAL DATE

REGISTERED PROFESSIONAL ENGINEER LARRY WU No. 57035 Exp. 6-30-15 CIVIL STATE OF CALIFORNIA

The State of California or its officers or agents shall not be responsible for the accuracy or completeness of scanned copies of this plan sheet.

PRESTRESSING NOTES

270 KSI Low Relaxation Strand:

P_{jack} = 4750 kips

Anchor Set = 3/8 in

Total Number of Girders = 6

Distribution of prestress force (Pjack) between girders shall not exceed the ratio of 3:2. Maximum final force variation between girders shall not exceed 725 kips.

Concrete: f'_c = 4000 psi @ 28 days

f'_{ci} = 3500 psi @ time of stressing

Contractor shall submit elongation calculations based on initial stress at

⊠ = 0.824 times jacking stress.

One end stressing shall be performed from Abutment 4.

Design is based on μ = 0.15 and k = 0.0002/ft.

NOTE:
Indicates girder stem width in inches
Ⓖ Indicates Girder Number

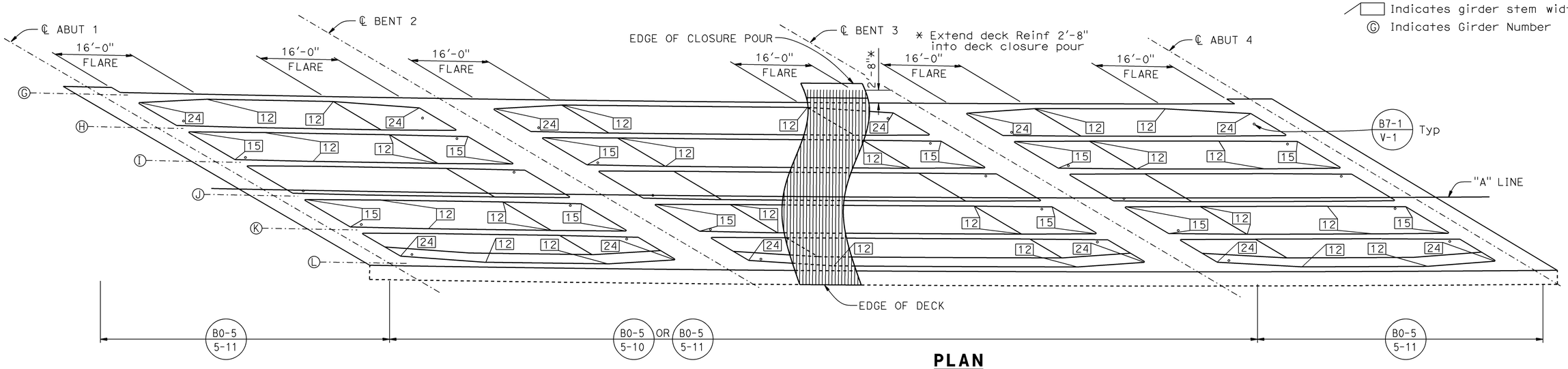

PLAN

3/32"=1'-0"

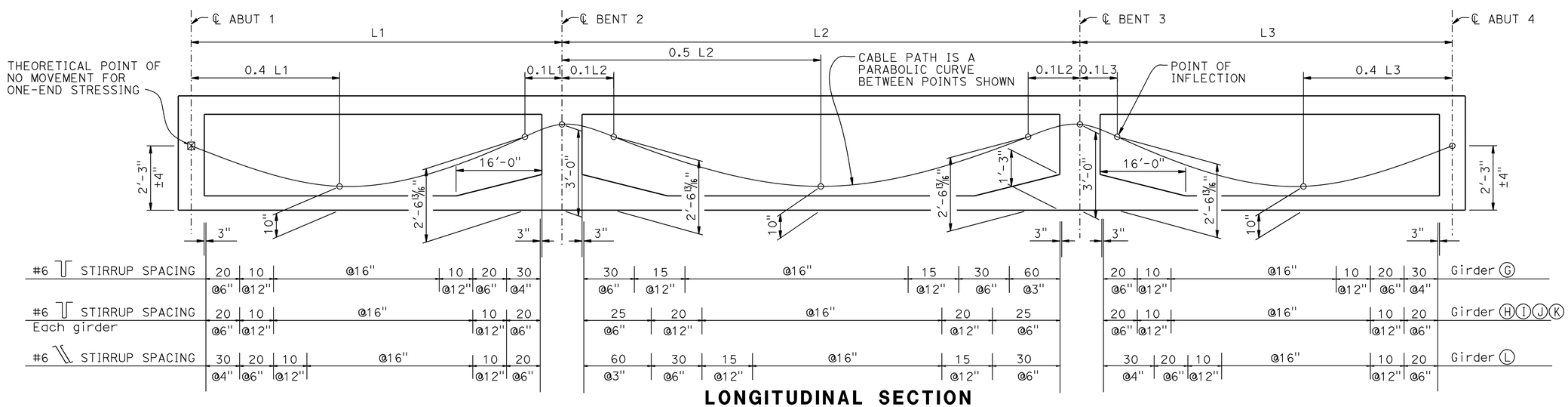

LONGITUDINAL SECTION

No Scale

NOTE:
THE CONTRACTOR MUST VERIFY ALL CONTROLLING FIELD DIMENSIONS BEFORE ORDERING OR FABRICATING ANY MATERIAL.

	BY	CHECKED
DESIGN	L. Wu	E. Mercado
DETAILS	G. Hallstrom	E. Mercado
QUANTITIES	T. Sanderson	H. Vu

STATE OF CALIFORNIA
DEPARTMENT OF TRANSPORTATION

DIVISION OF ENGINEERING SERVICES
STRUCTURE DESIGN
DESIGN BRANCH 10

BRIDGE NO. 54-1308L
POST MILE 172.11

CENDA DITCH BRIDGE LEFT (REPLACE)
GIRDER LAYOUT - STAGE 2

STRUCTURES DESIGN DETAIL SHEET (ENGLISH) (REV. 09-01-10)

ORIGINAL SCALE IN INCHES FOR REDUCED PLANS 0 1 2 3

UNIT: 3589
PROJECT NUMBER & PHASE: 0800000472
CONTRACT NO.: 08-0M2804

DISREGARD PRINTS BEARING EARLIER REVISION DATES

REVISION DATES 02-24-14 04-24-14 06-02-14

SHEET 17 OF 24

USERNAME => s130406 DATE PLOTTED => 14-JAN-2015 TIME PLOTTED => 14:24

FILE => 54130811g_1o17.dgn

DIST	COUNTY	ROUTE	POST MILES TOTAL PROJECT	SHEET No.	TOTAL SHEETS
08	SBd	15	171.8/173.8	108	128

REGISTERED CIVIL ENGINEER — DATE 09-11-14

04-06-15
PLANS APPROVAL DATE

REGISTERED PROFESSIONAL ENGINEER — LARRY WU No. 57035 Exp. 6-30-15 CIVIL — STATE OF CALIFORNIA

The State of California or its officers or agents shall not be responsible for the accuracy or completeness of scanned copies of this plan sheet.

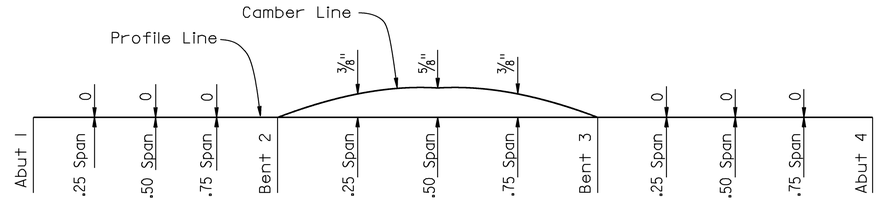

CAMBER DIAGRAM

NO SCALE

NOTE:

1. Camber values shown do not include allowance for falsework settlement.
2. Stage 1 shown, Stage 2 similar.

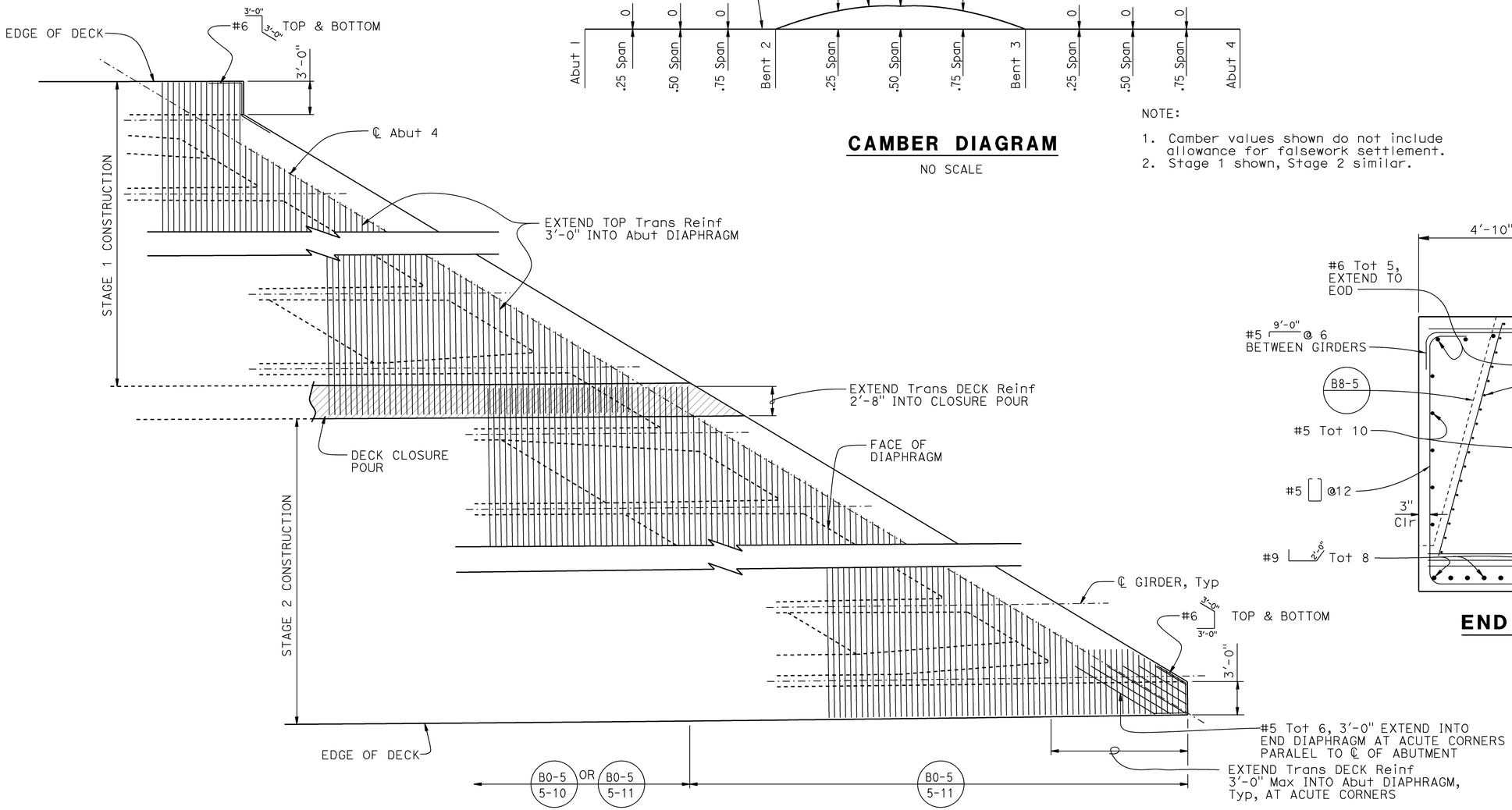

NOTE: Abut 4 shown, Abut 1 similar.

DECK CORNER TRANSVERSE REINFORCEMENT

NO SCALE

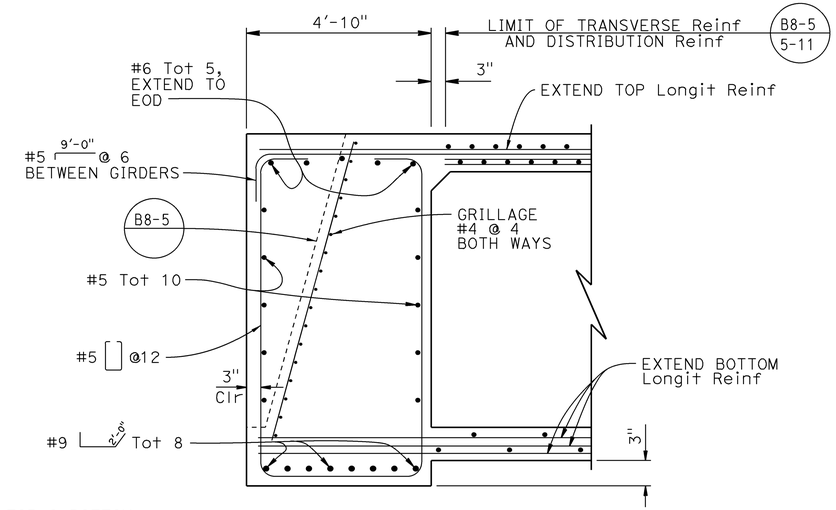

END DIAPHRAGM

NO SCALE

NOTE:
THE CONTRACTOR MUST VERIFY ALL CONTROLLING FIELD DIMENSIONS BEFORE ORDERING OR FABRICATING ANY MATERIAL.

	BY	CHECKED
DESIGN	L. Wu	E. Mercado
DETAILS	G. Hallstrom	E. Mercado
QUANTITIES	T. Sanderson	H. Vu

STATE OF CALIFORNIA
DEPARTMENT OF TRANSPORTATION

DIVISION OF ENGINEERING SERVICES
STRUCTURE DESIGN
DESIGN BRANCH 10

BRIDGE NO. 54-1308L
POST MILE 172.11

CENDA DITCH BRIDGE LEFT (REPLACE)
CAMBER DIAGRAM

STRUCTURES DESIGN DETAIL SHEET (ENGLISH) (REV. 09-01-10)

ORIGINAL SCALE IN INCHES FOR REDUCED PLANS 0 1 2 3

UNIT: 3589
PROJECT NUMBER & PHASE: 0800000472
CONTRACT NO.: 08-0M2804

DISREGARD PRINTS BEARING EARLIER REVISION DATES → 01-14-14 04-25-14 06-02-14

SHEET 18 OF 24

FILE => 541308lmcam18.dgn

USERNAME => s130406 DATE PLOTTED => 14-JAN-2015 TIME PLOTTED => 14:24

DIST	COUNTY	ROUTE	POST MILES TOTAL PROJECT	SHEET No.	TOTAL SHEETS
08	SBd	15	171.8/173.8	109	128

REGISTERED CIVIL ENGINEER 09-11-14 DATE

04-06-15
PLANS APPROVAL DATE

REGISTERED PROFESSIONAL ENGINEER LARRY WU No. 57035 Exp. 6-30-15 CIVIL STATE OF CALIFORNIA

The State of California or its officers or agents shall not be responsible for the accuracy or completeness of scanned copies of this plan sheet.

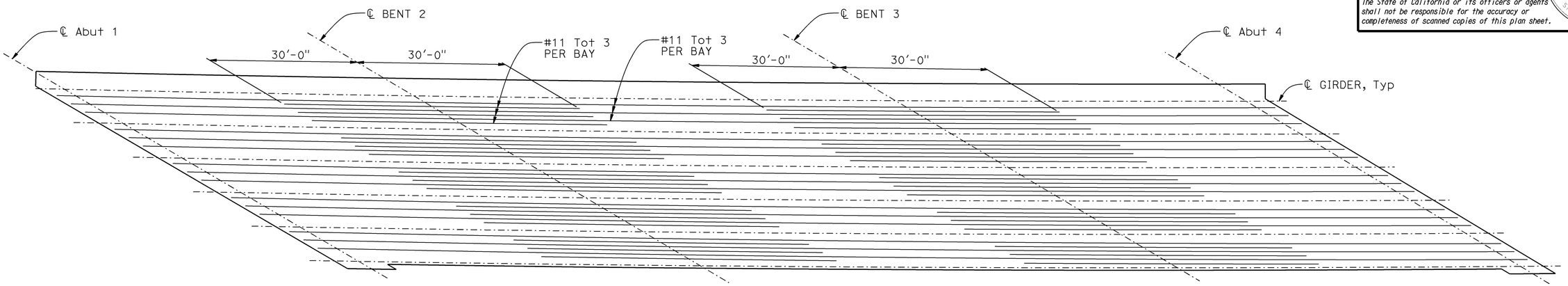

ADDITIONAL TOP LONGITUDINAL REINFORCEMENT

3/32"=1'-0"

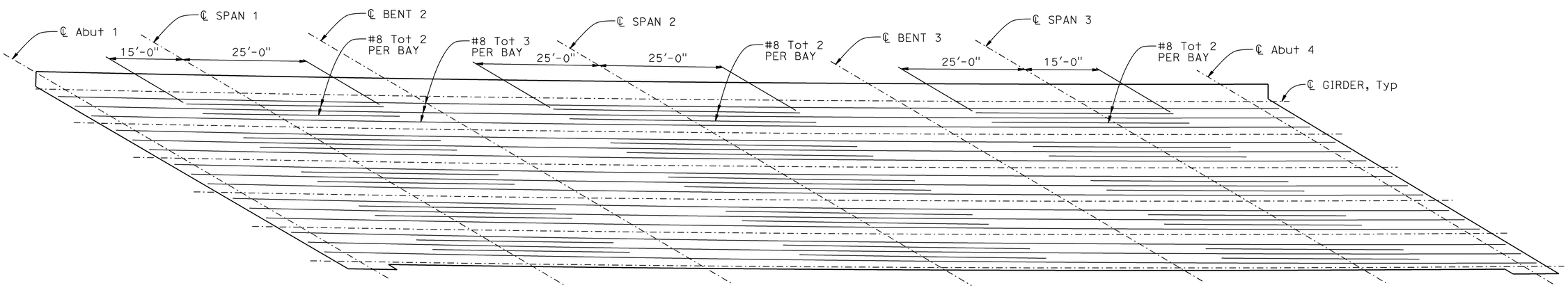

ADDITIONAL BOTTOM LONGITUDINAL REINFORCEMENT

3/32"=1'-0"

NOTES:

1. No lap splices allowed for Top & Bottom Longitudinal Reinf.
2. Stage 1 shown, Stage 2 similar.

NOTE:
THE CONTRACTOR MUST VERIFY ALL CONTROLLING FIELD DIMENSIONS BEFORE ORDERING OR FABRICATING ANY MATERIAL.

	BY	CHECKED
DESIGN	L. Wu	E. Mercado
DETAILS	G. Hallstrom	E. Mercado
QUANTITIES	T. Sanderson	H. Vu

STATE OF CALIFORNIA
DEPARTMENT OF TRANSPORTATION

DIVISION OF ENGINEERING SERVICES
STRUCTURE DESIGN
DESIGN BRANCH 10

BRIDGE NO. 54-1308L
POST MILE 172.11

CENDA DITCH BRIDGE LEFT (REPLACE)
GIRDER REINFORCEMENT

STRUCTURES DESIGN DETAIL SHEET (ENGLISH) (REV. 09-01-10)

ORIGINAL SCALE IN INCHES FOR REDUCED PLANS 0 1 2 3

UNIT: 3589
PROJECT NUMBER & PHASE: 0800000472
CONTRACT NO.: 08-0M2804

DISREGARD PRINTS BEARING EARLIER REVISION DATES

REVISION DATES 01-09-14 04-25-14

SHEET 19 OF 24

FILE => 541308logir_rf19.dgn

USERNAME => s130406 DATE PLOTTED => 14-JAN-2015 TIME PLOTTED => 14:24

DIST	COUNTY	ROUTE	POST MILES TOTAL PROJECT	SHEET No.	TOTAL SHEETS
08	SBd	15	171.8/173.8	110	128

REGISTERED CIVIL ENGINEER — DATE 09-11-14

04-06-15
PLANS APPROVAL DATE

REGISTERED PROFESSIONAL ENGINEER — LARRY WU — No. 57035 — Exp. 3-30-15 — CIVIL — STATE OF CALIFORNIA

The State of California or its officers or agents shall not be responsible for the accuracy or completeness of electronic copies of this plan sheet.

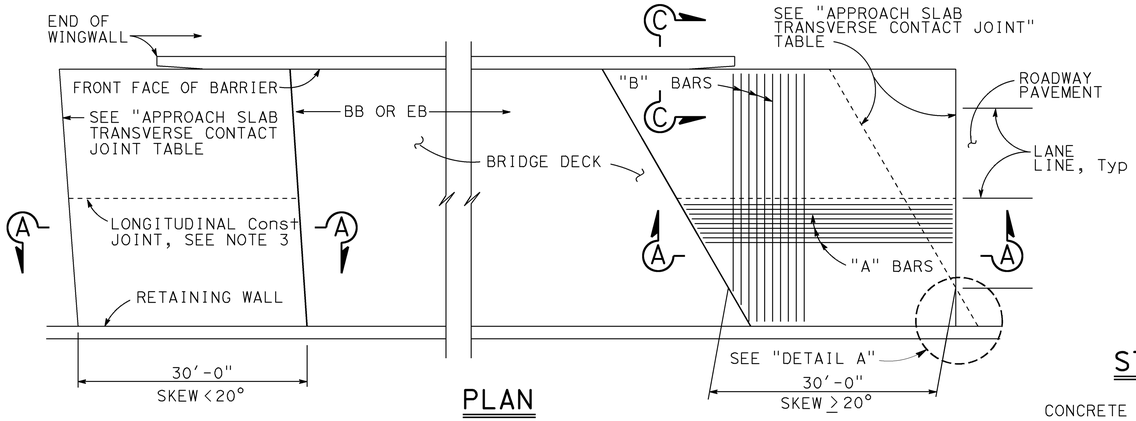

PLAN
1" = 10'

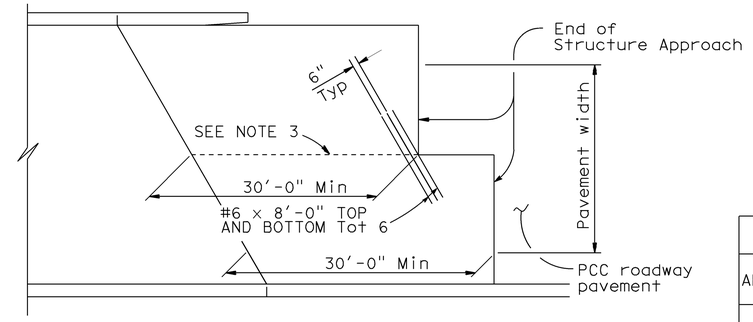

STRUCTURE APPROACH - END STAGGER DETAIL
No Scale

APPROACH SLAB TRANSVERSE CONTACT JOINT		
APPROACH SKEW	WITH AC ROADWAY PAVEMENT	WITH PCC ROADWAY PAVEMENT
< 20°	PARALLEL TO FACE OF PN	PARALLEL TO FACE OF PN
20° - 45°	PARALLEL TO FACE OF PN USE "DETAIL A"	STAGGER LINES 24' TO 36' APART
> 45°	PARALLEL TO FACE OF PN USE "DETAIL A"	STAGGER AT EACH LANE LINE

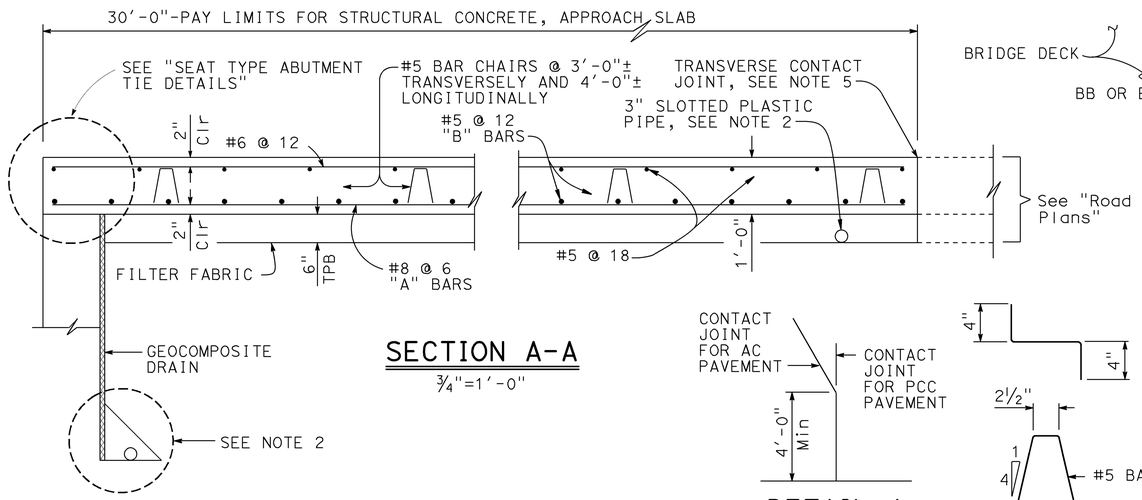

SECTION A-A
¾"=1'-0"

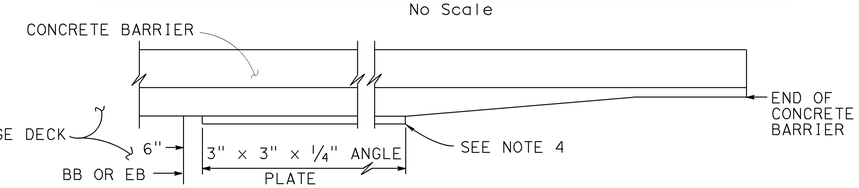

EDGE ANGLE DETAIL
½"=1'-0"

DETAIL A
No Scale

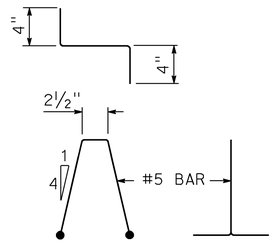

BAR CHAIR DETAIL
1½"=1'-0"

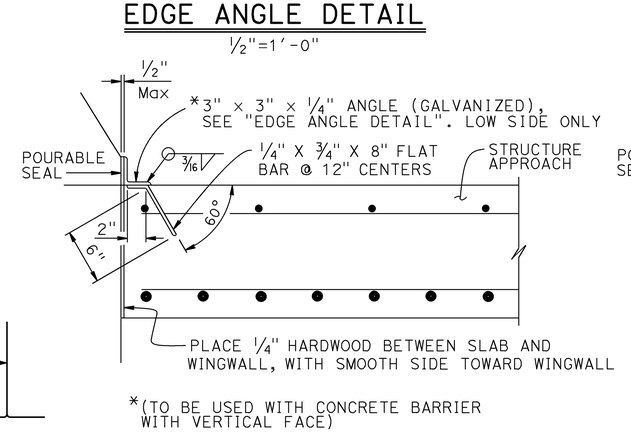

*(TO BE USED WITH CONCRETE BARRIER WITH VERTICAL FACE)

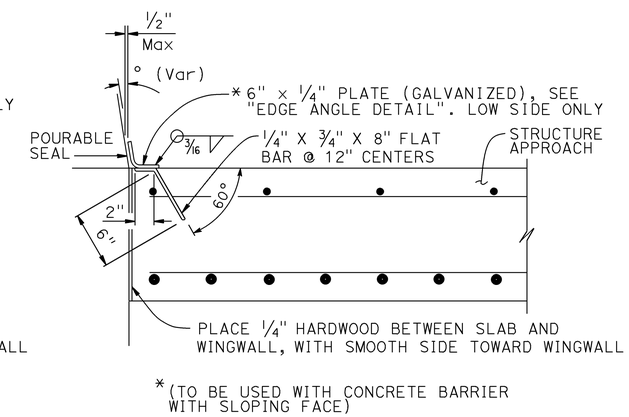

*(TO BE USED WITH CONCRETE BARRIER WITH SLOPING FACE)

DETAIL B
1½" = 1'-0"

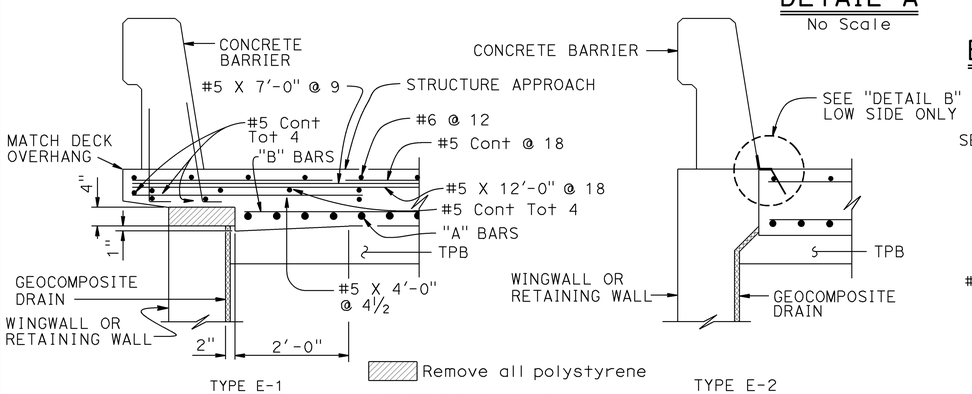

SECTION C-C
¾"=1'-0"

(Type E-1 to be used, unless otherwise shown on plans)

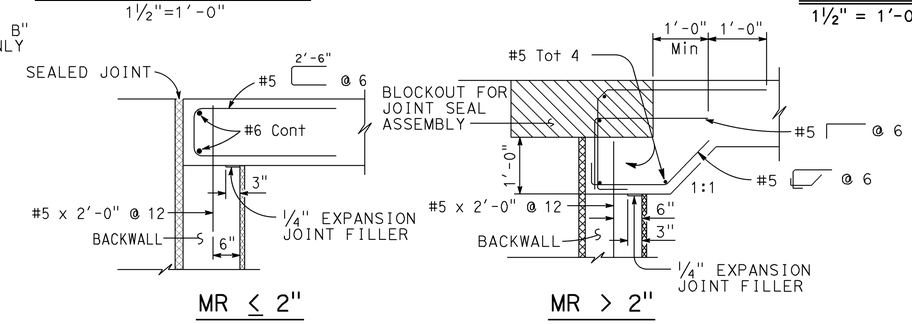

MR ≤ 2" — MR > 2"

SEAT TYPE ABUTMENT TIE DETAILS (SEE NOTE 1)
¾"=1'-0"

NOTES:

1. For details not shown, see Structure Plans. For MR ≤ 2", adjust bar reinforcement to clear a sawcut for sealed joint, when required
2. For drainage details, see "STRUCTURE APPROACH DRAINAGE DETAILS" sheet
3. Longitudinal construction joints, when permitted by the Engineer, shall be located on lane lines
4. End angle or plate at beginning of barrier transition, end of wingwall or end of structure approach as applicable
5. For transverse contact joint with new PCC paving, refer to Standard Plan P10
6. At the Contractor's option, approach slab transverse reinforcement may be placed parallel to paving notch. Spacing of transverse reinforcement is measured along ℄ roadway

STANDARD DRAWING
FILE NO. xs3-120
APPROVAL DATE July 2011

STATE OF CALIFORNIA
DEPARTMENT OF TRANSPORTATION

DIVISION OF ENGINEERING SERVICES

BRIDGE NO. 54-1308L
POST MILE 172.11

CENDA DITCH BRIDGE LEFT (REPLACE)
STRUCTURE APPROACH TYPE N(30S)

DS OSD 2147A (ENGLISH STANDARD DRAWING "XS" BORDER REV. (02-02-11))

ORIGINAL SCALE IN INCHES FOR REDUCED PLANS 0 1 2 3

UNIT: 3589
PROJECT NUMBER & PHASE: 0800000472
CONTRACT NO.: 08-0M2804

DISREGARD PRINTS BEARING EARLIER REVISION DATES

REVISION DATES 4-22-14

SHEET 20 OF 24

FILE => 541308issa20.dgn

USERNAME => s130406 DATE PLOTTED => 14-JAN-2015 TIME PLOTTED => 14:24

DIST	COUNTY	ROUTE	POST MILES TOTAL PROJECT	SHEET No.	TOTAL SHEETS
08	SBd	15	171.8/173.8	111	128

REGISTERED CIVIL ENGINEER — DATE 09-11-14

04-06-15
PLANS APPROVAL DATE

REGISTERED PROFESSIONAL ENGINEER — LARRY WU — No. 57035 — Exp. 6-30-15 — CIVIL — STATE OF CALIFORNIA

The State of California or its officers or agents shall not be responsible for the accuracy or completeness of electronic copies of this plan sheet.

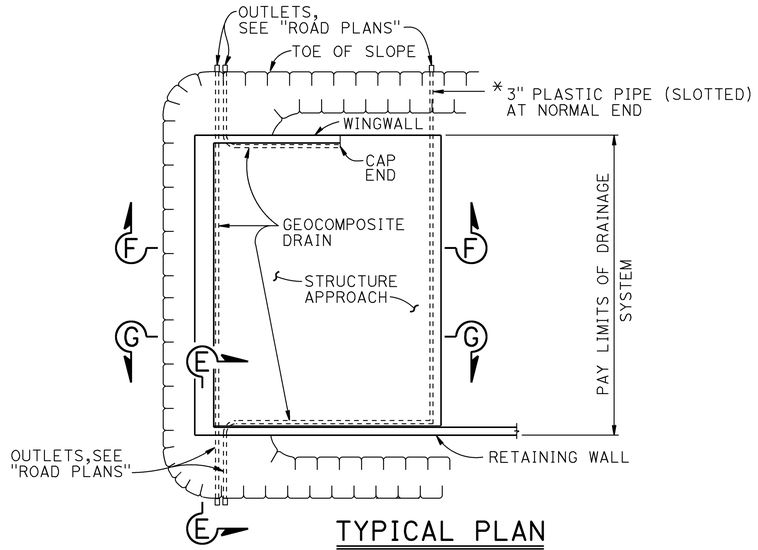

TYPICAL PLAN
1" = 10'

* FOR PIPE LAYOUT AT STAGGERED END, SEE "DETAIL B"

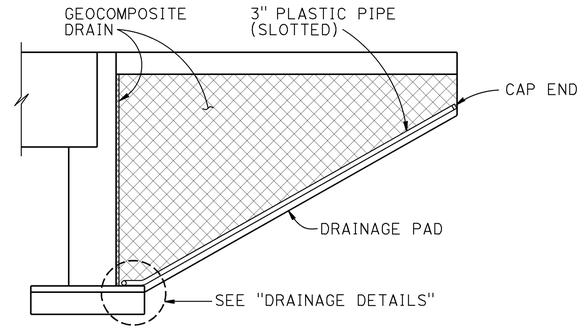

CANTILEVER WINGWALL

SECTION F-F
1/4" = 1'-0"

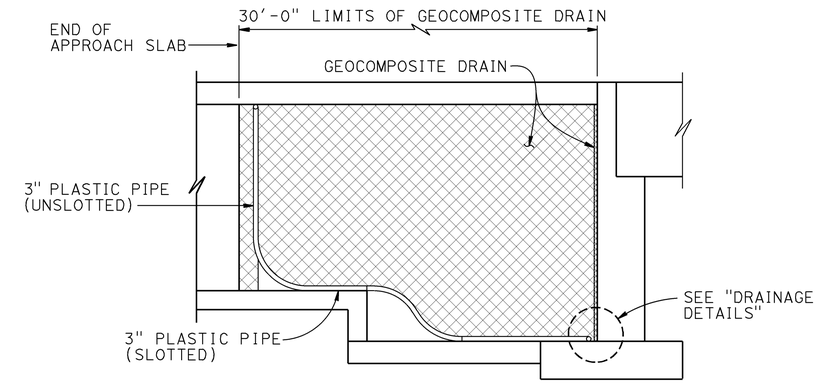

RETAINING WALL WINGWALL DRAINAGE DETAILS

SECTION G-G
1/4" = 1'-0"

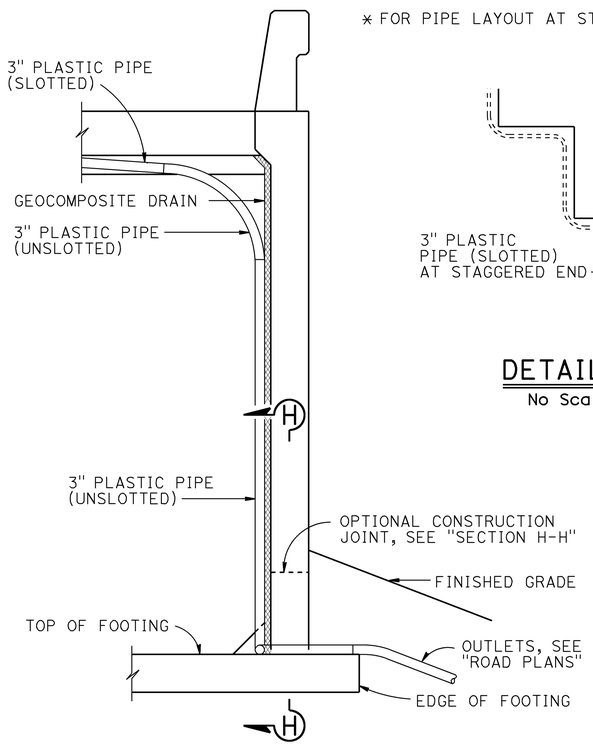

SECTION E-E
1/2" = 1'-0"

NOTE: Bends and junctions in 3" plastic pipe are 30" radius Min

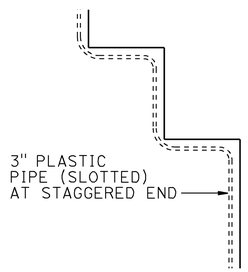

DETAIL B
No Scale

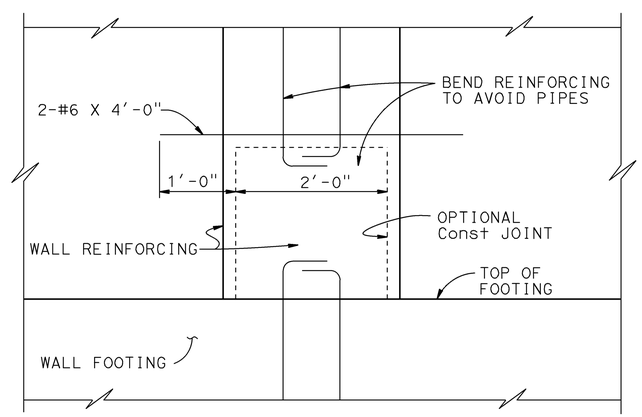

SECTION H-H
1" = 1'-0"

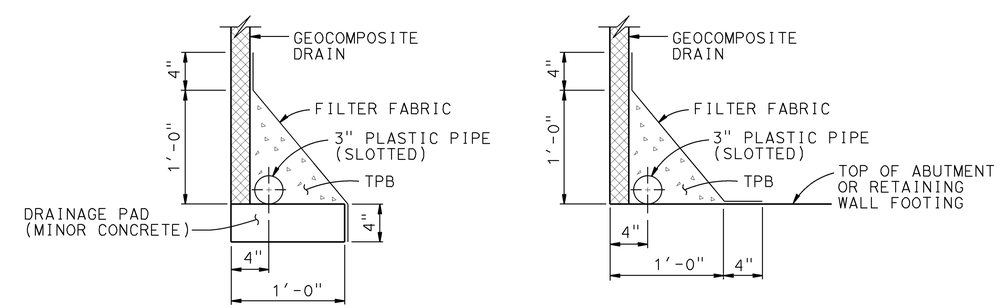

WITHOUT FOOTING

WITH FOOTING

DRAINAGE DETAILS
1 1/2" = 1'-0"

STANDARD DRAWING
FILE NO. xs3-110
APPROVAL DATE July 2011

STATE OF CALIFORNIA
DEPARTMENT OF TRANSPORTATION

DIVISION OF ENGINEERING SERVICES

BRIDGE NO. 54-1308L
POST MILE 172.11

CENDA DITCH BRIDGE LEFT (REPLACE)
STRUCTURE APPROACH DRAINAGE DETAILS

DS OSD 2147A (ENGLISH STANDARD DRAWING "XS" BORDER REV. (02-02-11)

ORIGINAL SCALE IN INCHES FOR REDUCED PLANS 0 1 2 3

UNIT: 3589
PROJECT NUMBER & PHASE: 0800000472
CONTRACT NO.: 08-0M2804

DISREGARD PRINTS BEARING EARLIER REVISION DATES

REVISION DATES: 4-22-14

SHEET 21 OF 24

FILE => 5413081ssadd21.dgn

USERNAME => s130406 DATE PLOTTED => 14-JAN-2015 TIME PLOTTED => 14:24

DIST	COUNTY	ROUTE	POST MILES TOTAL PROJECT	SHEET No	TOTAL SHEETS
08	SBd	15	171.8/173.8	112	128

GEOTECHNICAL PROFESSIONAL — DATE 5-29-14

REGISTERED PROFESSIONAL ENGINEER — C.R. STROOP — No. 2298 — Exp. 3-31-16 — GEOTECHNICAL — STATE OF CALIFORNIA

04-06-15
PLANS APPROVAL DATE

The State of California or its officers or agents shall not be responsible for the accuracy or completeness of scanned copies of this plan sheet.

URS CORPORATION
2020 EAST FIRST STREET, SUITE 400
SANTA ANA, CA 92705

This LOTB sheet was prepared in accordance with the Caltrans Soil & Rock Logging, Classification, & Presentation Manual (2010 Edition).

See 2010 Standard Plans A10F and A10G for Soil Legend, and A10H for Rock Legend.

BENCH MARK

Datum: NAD83 (1991.35)
Zone: California Zone 5
Vertical Datum: NGVD29
N 2366065.65700
E 7301048.56100
Elev 4495.301
Set 8" Wire Nail

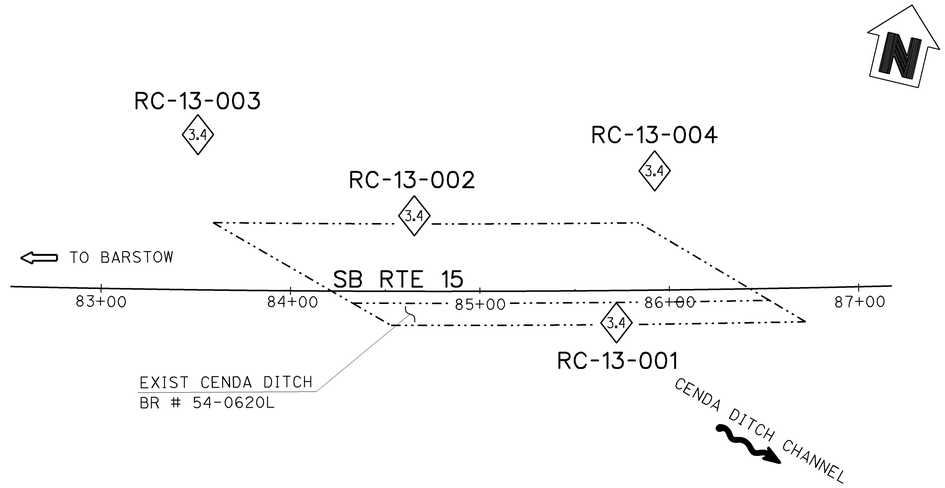

PLAN

1" = 40'

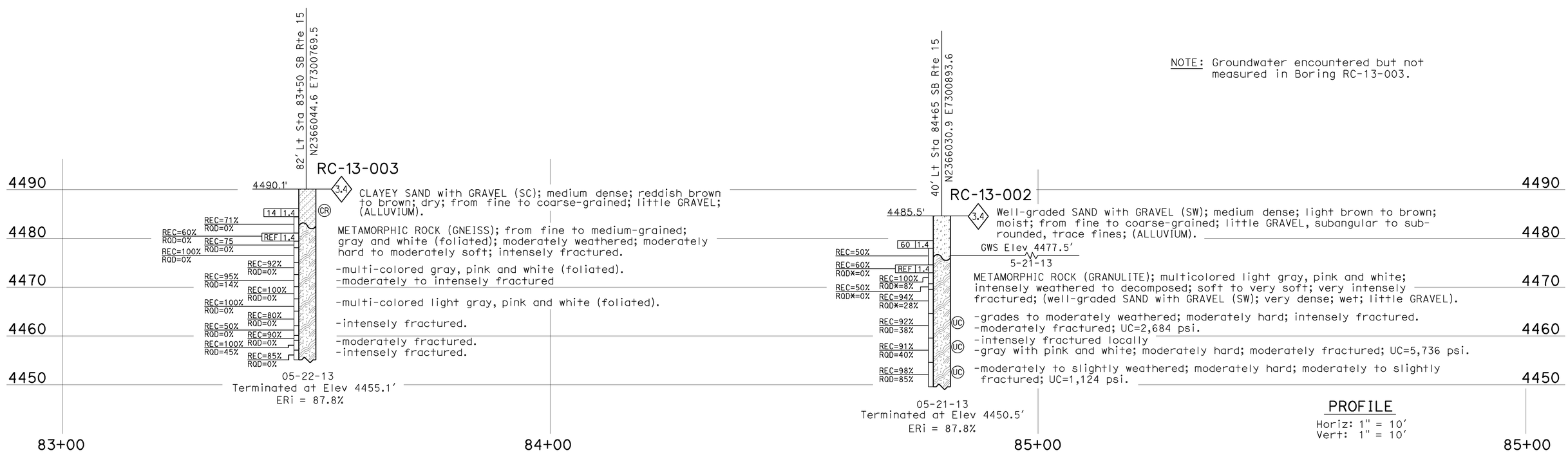

NOTE: Groundwater encountered but not measured in Boring RC-13-003.

PROFILE

Horiz: 1" = 10'
Vert: 1" = 10'

E. NEUPERT — DESIGN OVERSIGHT	DRAWN BY	C. MORRELL, URS I. G-REMMEN, CALTRANS	D. RECTOR, URS — FIELD INVESTIGATION BY:	PREPARED FOR THE STATE OF CALIFORNIA DEPARTMENT OF TRANSPORTATION	C.R. STROOP, URS — PROJECT ENGINEER
05/29/2014 — SIGN OFF DATE	CHECKED BY	E. NEUPERT	DATE: 05/20/13 to 05/23/13		

BRIDGE NO. 54-1308L
POST MILES 172.11

CENDA DITCH BRIDGE LEFT (REPLACE)

LOG OF TEST BORINGS 1 OF 3

GS GEOTECHNICAL LOG OF TEST BORINGS SHEET (ENGLISH) (REV. 03/14/12)

ORIGINAL SCALE IN INCHES FOR REDUCED PLANS 0 1 2 3

UNIT: URS
PROJECT NUMBER & PHASE: 08000004721 CONTRACT NO.: 08-0M2804

DISREGARD PRINTS BEARING EARLIER REVISION DATES → 05-23-14

REVISION DATES | SHEET 22 | OF 24

FILE => 541308lzltb22.dgn

USERNAME => s130406 DATE PLOTTED => 14-JAN-2015 TIME PLOTTED => 14:24

DIST	COUNTY	ROUTE	POST MILES TOTAL PROJECT	SHEET No	TOTAL SHEETS
08	SBd	15	171.8/173.8	113	128

GEOTECHNICAL PROFESSIONAL — DATE 5-29-14

REGISTERED PROFESSIONAL ENGINEER — C.R. STROOP — No. 2298 — Exp. 3-31-16 — GEOTECHNICAL — STATE OF CALIFORNIA

04-06-15
PLANS APPROVAL DATE

The State of California or its officers or agents shall not be responsible for the accuracy or completeness of scanned copies of this plan sheet.

URS CORPORATION
2020 EAST FIRST STREET, SUITE 400
SANTA ANA, CA 92705

This LOTB sheet was prepared in accordance with the Caltrans Soil & Rock Logging, Classification, & Presentation Manual (2010 Edition).

See 2010 Standard Plans A10F and A10G for Soil Legend, and A10H for Rock Legend.

FOR PLAN VIEW, SEE
"LOG OF TEST BORINGS 1 OF 3"

NOTE: Groundwater encountered but not measured in Boring RC-13-003.

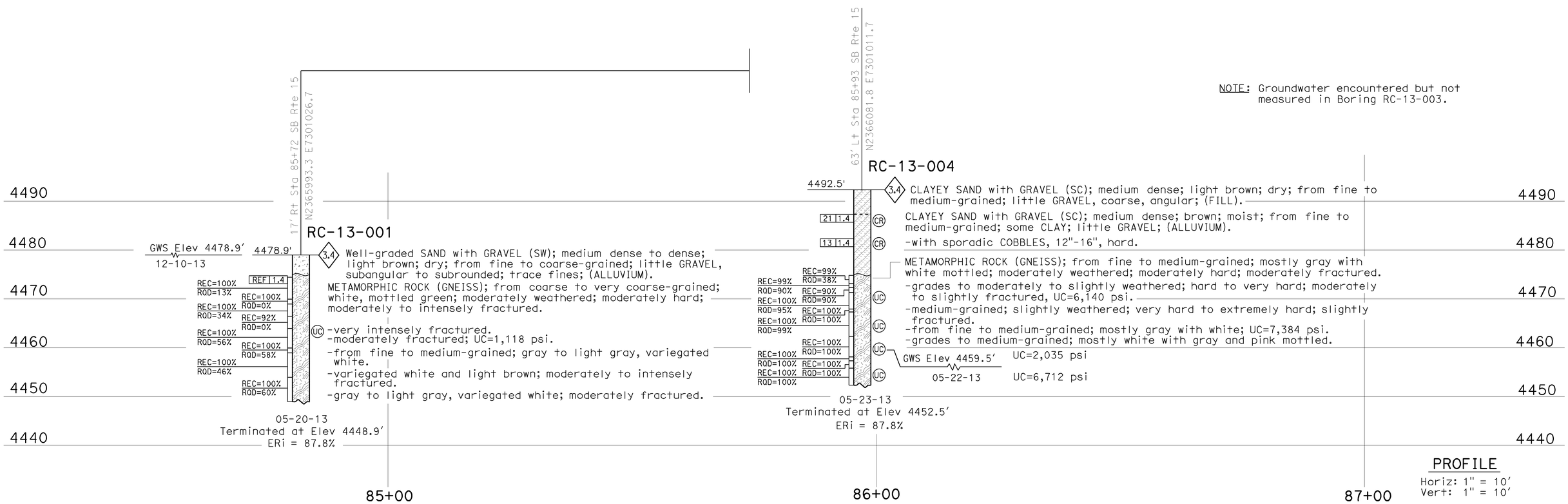

E. NEUPERT — DESIGN OVERSIGHT	DRAWN BY	C. MORRELL, URS I. G-REMMEN, CALTRANS	D. RECTOR, URS — FIELD INVESTIGATION BY:	PREPARED FOR THE STATE OF CALIFORNIA DEPARTMENT OF TRANSPORTATION	C.R. STROOP, URS — PROJECT ENGINEER
05/29/2014 — SIGN OFF DATE	CHECKED BY	E. NEUPERT	DATE: 05/20/13 to 05/23/13		

BRIDGE NO. 54-1308L — POST MILES 172.11

CENDA DITCH BRIDGE LEFT (REPLACE)
LOG OF TEST BORINGS 2 OF 3

GS GEOTECHNICAL LOG OF TEST BORINGS SHEET (ENGLISH) (REV. 03/14/12)

ORIGINAL SCALE IN INCHES FOR REDUCED PLANS 0 1 2 3

UNIT: URS
PROJECT NUMBER & PHASE: 08000004721 CONTRACT NO.: 08-0M2804

DISREGARD PRINTS BEARING EARLIER REVISION DATES → 05-23-14

REVISION DATES — SHEET 23 OF 24

FILE => 5413081zltb23.dgn

USERNAME => s130406 DATE PLOTTED => 14-JAN-2015 TIME PLOTTED => 14:24

FED. ROAD DIV. NO.	STATE	PROJ. NO.	FISCAL YEAR	SHEET NO.	TOTAL SHEETS
7	CAL.			165	205

1-015-3(9)163

VIII	SBd	15

DIST.	COUNTY	ROUTE	SECTION	SHEET NO.	TOTAL SHEETS
VIII	SBd	31		5	5

BRIDGE ENGINEER — CIVIL ENGINEER—LICENSE 5088

DATE APPROVED 04-06-15

BENCH MARK T-B-59

2"×2" Rwd. Hub & Spkd. nail 1½" deep 200 Lt ℄ Imp. 65+00.

ELEV. 4495.16

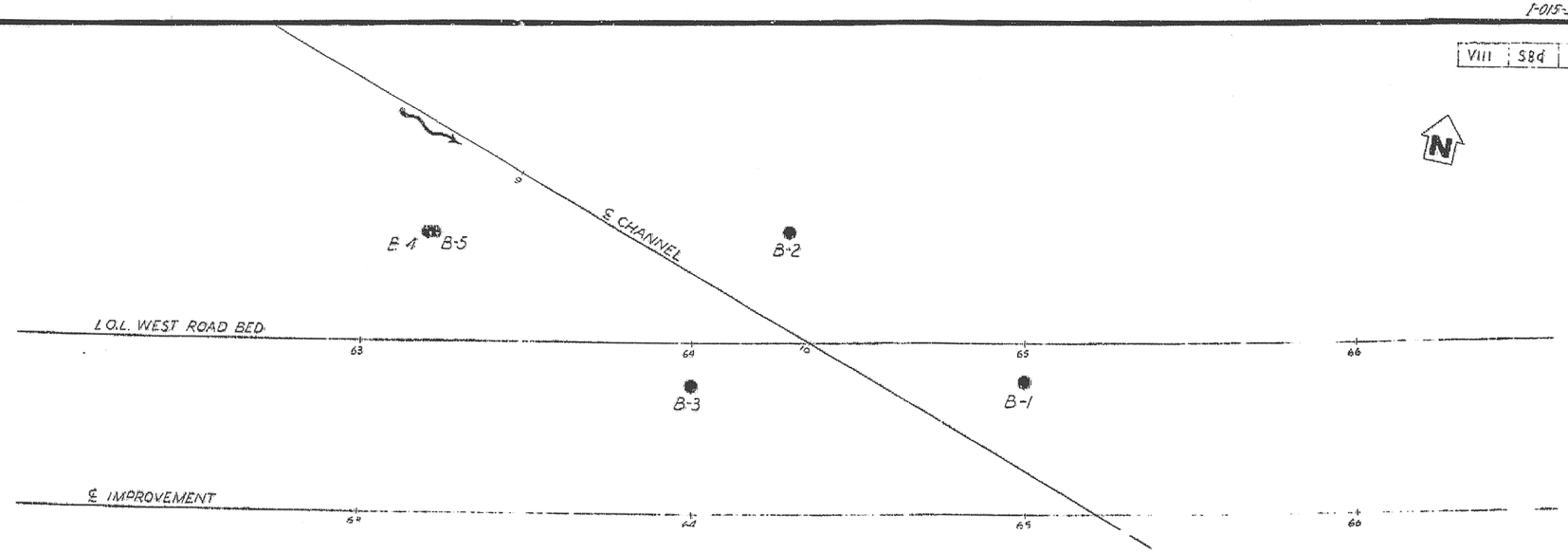

AS BUILT PLANS
Contract No. 62-8V13C22
Date Completed
Document No. 8000008S1

PREPARED FOR THE STATE OF CALIFORNIA DEPARTMENT OF TRANSPORTATION

As-Built Log of Test Borings sheet is considered an informational document only. As such, the State of California registration seal with signature, license number and registration certificate expiration date confirm that this is a true and accurate copy of the original document. It does not attest to the accuracy or validity of the information contained in the original document. This drawing is available and presented only for the convenience of any bidder, contractor or other interested party.

DIST.	COUNTY	ROUTE	POST MILE-TOTAL PROJECT	Sheet No.	Total Sheets
08	SBd	15	171.8/173.8	114	128

GEOTECHNICAL PROFESSIONAL - URS CORPORATION — DATE 5/27/14

REGISTERED PROFESSIONAL ENGINEER — C.R. STROOP — No. 2298 — Exp. 3-31-16 — GEOTECHNICAL — STATE OF CALIFORNIA

CENDA DITCH BRIDGE LEFT (REPLACE)

LOG OF TEST BORINGS 3 OF 3

UNIT: 3643	CONTRACT No.	BRIDGE No.
PROJ. No. & PHASE: 08000004721	08-0M2804	54-1308L

AS-BUILT VERT DATUM: NGVD29 CONVERSION: N/A — Sheet 24 of 24

NOTE: A COPY OF THIS LOG OF TEST BORINGS IS AVAILABLE AT OFFICE OF STRUCTURE MAINTENANCE AND INVESTIGATIONS, SACRAMENTO, CALIFORNIA

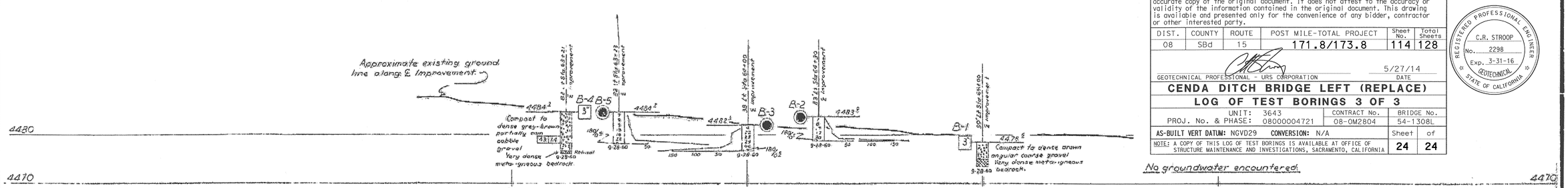

No groundwater encountered.

FIELD STUDY	1: E.D. McKee	9-28-60
DRAWN	1: K. Jackson	10-18-60
CHECKED	1: [illegible]	10-24-60

Approval Recommended by [illegible] Engineering Geologist

CLASSIFICATION OF MATERIAL BASED ON STANDARD GRADE SIZE LIMITS

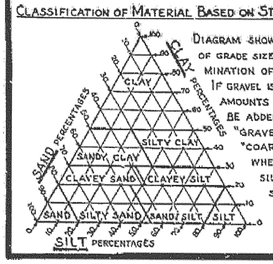

DIAGRAM SHOWING THE BASIS FOR ESTIMATES OF GRADE SIZE DISTRIBUTION USED IN DETERMINATION OF CLASS NAMES.

IF GRAVEL IS PRESENT IN APPRECIABLE AMOUNTS THE TERM "GRAVELLY" MAY BE ADDED TO THE CLASS NAME, VIZ. "GRAVELLY SAND". THE TERMS "COARSE", "MEDIUM" AND "FINE" WHEN USED TO DESCRIBE SAND, SILT AND GRAVEL REFER TO STANDARD GRADE SIZE LIMITS.

LEGEND OF EARTH MATERIALS

- GRAVEL
- SAND
- SILT
- CLAY
- SANDY CLAY OR CLAYEY SAND
- SANDY SILT OR SILTY SAND
- SILTY CLAY OR CLAYEY SILT
- PEAT AND/OR ORGANIC MATTER
- FILL MATERIAL
- IGNEOUS ROCK
- SEDIMENTARY ROCK
- METAMORPHIC ROCK

LEGEND OF BORING OPERATIONS

- PLAN OF ANY BORING
- PENETROMETER
- 2¼" CONE PENETROMETER
- SAMPLER BORING (DRY)
- ROTARY BORING (WET)
- AUGER BORING (DRY)
- JET BORING
- CORE BORING
- TEST PIT

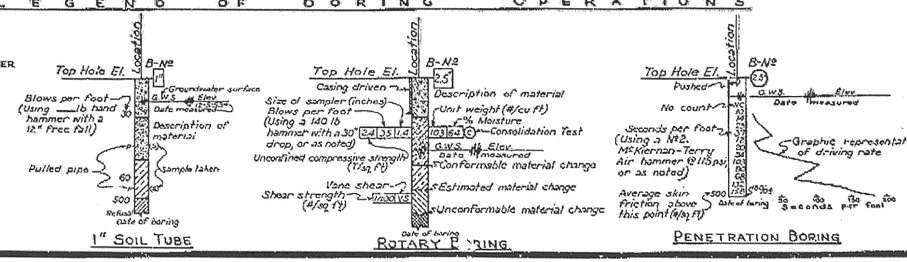

NOTES

The contractor's attention is directed to Section 2, Article (c) of the Standard Specifications and to the Special Provisions accompanying this set of plans.

Classification of earth material as shown on this sheet is based upon field inspection and is not to be construed to imply mechanical analysis.

STATE OF CALIFORNIA
DEPARTMENT OF PUBLIC WORKS
DIVISION OF HIGHWAYS

CENDA DITCH BRIDGE

LOG OF TEST BORINGS

SCALE — BRIDGE 54-620 — FILE — DRAWING C 54620 5

BRIDGE DEPARTMENT

165

870

DIST	COUNTY	ROUTE	POST MILES TOTAL PROJECT	SHEET No.	TOTAL SHEETS
08	SBd	15	171.8/173.8	115	128

REGISTERED CIVIL ENGINEER — DATE: 09-11-14

04-06-15
PLANS APPROVAL DATE

REGISTERED PROFESSIONAL ENGINEER — LARRY WU — No. 57035 — Exp. 6-30-15 — CIVIL — STATE OF CALIFORNIA

The State of California or its officers or agents shall not be responsible for the accuracy or completeness of scanned copies of this plan sheet.

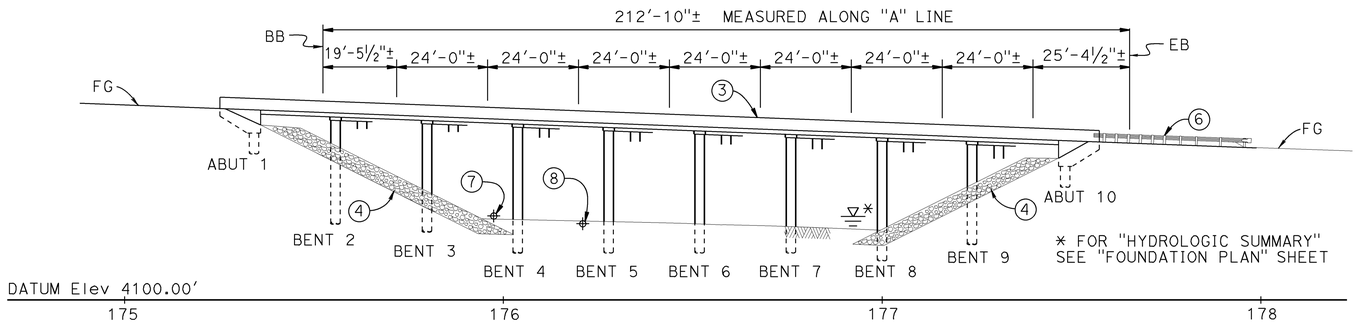

ELEVATION

1" = 20'-0"

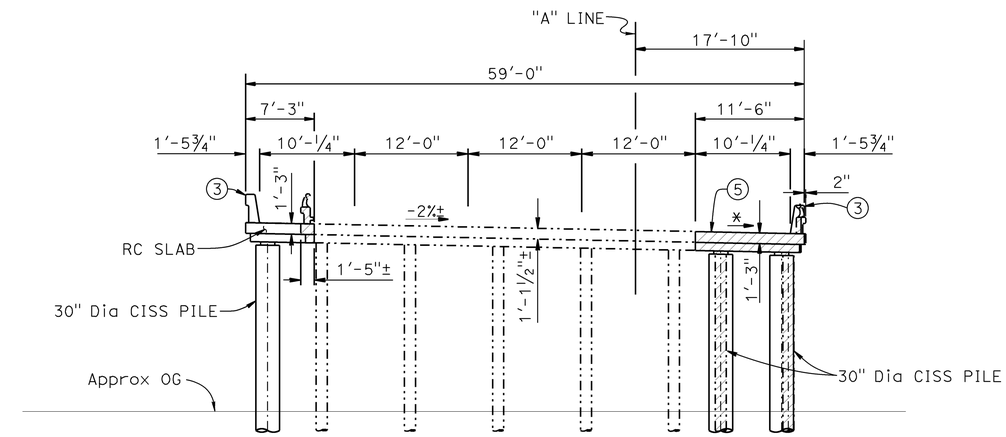

TYPICAL SECTION

⅛" = 1'-0"

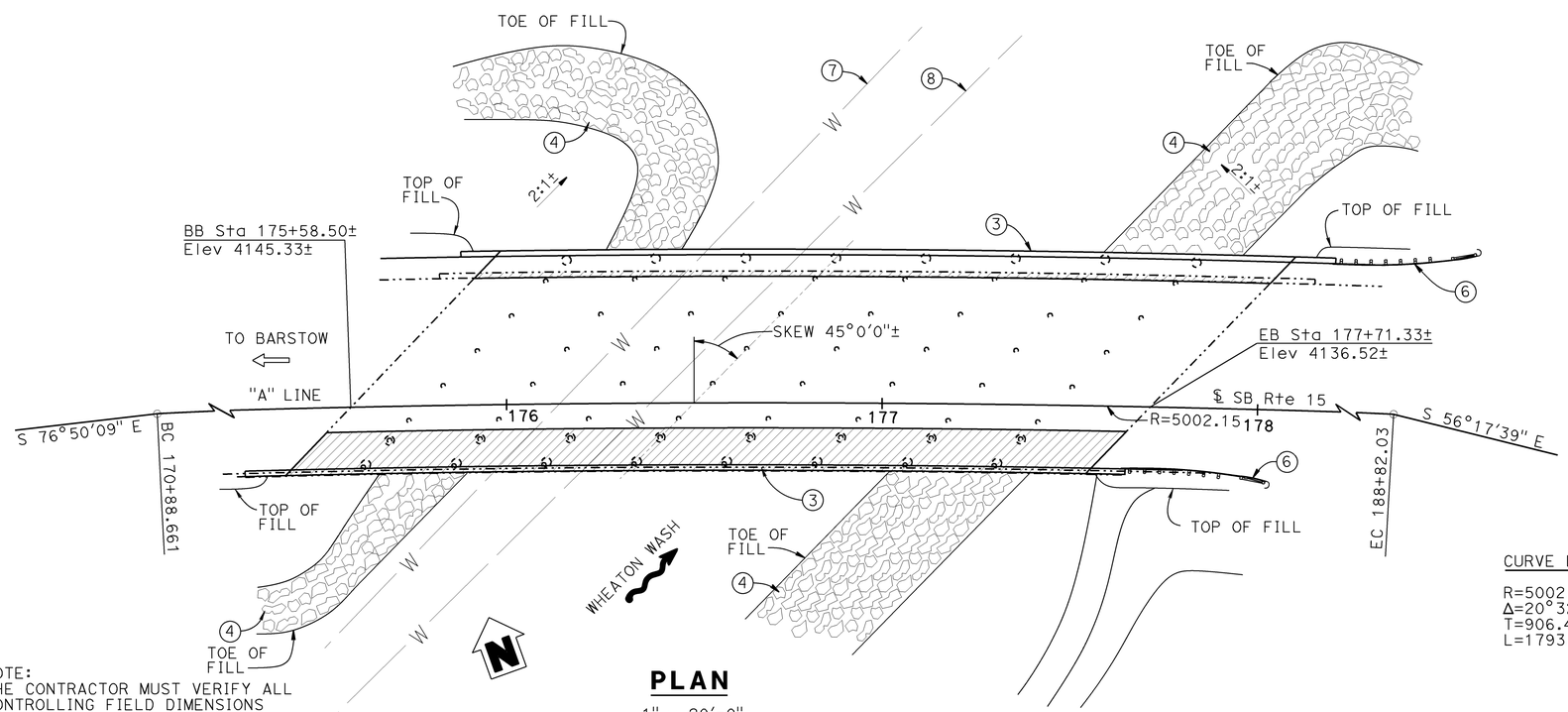

PLAN

1" = 20'-0"

CURVE DATA

R=5002.15
Δ=20°32'30"
T=906.415'
L=1793.369

LEGEND:

- Indicates new construction
- Indicates existing structure
- Indicates direction of traffic flow
- Indicates direction of water flow
- Indicates bridge removal (portion)

NOTES:

1. Paint "BR. NO. 54-0621L" and year constructed
2. Paint "WHEATON WASH BRIDGE"
3. Concrete Barrier Type 736
4. Rock Slope Protection, see "Roadway Plans"
5. For Stage Construction & Demolition, see "STAGE CONSTRUCTION" sheet.
6. MGS, see "Roadway Plans"
7. 8" Water Pipeline (inactive)
8. 10" Water Pipeline (inactive)

For "GENERAL NOTES", "INDEX TO PLANS", "STANDARD PLANS", "QUANTITIES", and "PILE DATA TABLE", see "INDEX TO PLANS" Sheet.

NOTE:
THE CONTRACTOR MUST VERIFY ALL CONTROLLING FIELD DIMENSIONS BEFORE ORDERING OR FABRICATING ANY MATERIAL.

DANIEL T. ADAMS
DESIGN ENGINEER

	BY	CHECKED
DESIGN	L. Wu	J. Szabo/F. Chen
DETAILS	G. Hallstrom	J. Szabo/F. Chen
QUANTITIES	W. Hou	F. Chen

LOAD & RESISTANCE FACTOR DESIGN — LIVE LOADING: HL93 W/"LOW-BOY"; PERMIT DESIGN VEHICLE

	BY	CHECKED
LAYOUT	L. Wu	J. Szabo/F. Chen
SPECIFICATIONS	K. Ellingson	PLANS AND SPECS COMPARED K. Ellingson

ORIGINAL SCALE IN INCHES FOR REDUCED PLANS 0 1 2 3

STATE OF CALIFORNIA
DEPARTMENT OF TRANSPORTATION

DIVISION OF ENGINEERING SERVICES
STRUCTURE DESIGN
DESIGN BRANCH 10

BRIDGE NO. 54-0621L
POST MILE 173.84

WHEATON WASH BRIDGE LEFT (WIDEN)

GENERAL PLAN

UNIT: 3589
PROJECT NUMBER & PHASE: 0800000472
CONTRACT NO.: 08-0M2801

DISREGARD PRINTS BEARING EARLIER REVISION DATES

REVISION DATES: 10-16-13 07-10-14 04-30-14 05-28-14 — SHEET 1 OF 14

USERNAME => s130406 DATE PLOTTED => 14-JAN-2015 TIME PLOTTED => 14:24

FILE => 540621lagp01.dgn

DIST	COUNTY	ROUTE	POST MILES TOTAL PROJECT	SHEET No.	TOTAL SHEETS
08	SBd	15	171.8/173.8	116	128

REGISTERED CIVIL ENGINEER — DATE: 09-11-14

04-06-15
PLANS APPROVAL DATE

REGISTERED PROFESSIONAL ENGINEER — LARRY WU — No. 57035 — Exp. 6-30-15 — CIVIL — STATE OF CALIFORNIA

The State of California or its officers or agents shall not be responsible for the accuracy or completeness of scanned copies of this plan sheet.

PILE DATA TABLE

Location	Pile Type	Nominal Resistance (kips) Compression	Nominal Resistance (kips) Tension	Design Tip Elevation (ft)	Specified Tip Elevation (ft)	Nominal Driving Resistance (kips)
Abut 1 Left	CISS Pile 30 x 0.75	180	0	4080.0 (a)	4080.0	180
Abut 1 Right	CISS Pile 30 x 0.75	140	0	4082.0 (a)	4082.0	140
Bent 2 Left	CISS Pile 30 x 0.75	360	0	4078.0 (a-I) 4081.0 (a-II)	4078.0	360
Bent 2 Right	CISS Pile 30 x 0.75	280	0	4080.0 (a-I) 4083.0 (a-II)	4080.0	280
Bent 3 Left	CISS Pile 30 x 0.75	360	0	4074.0 (a-I) 4077.0 (a-II)	4074.0	360
Bent 3 Right	CISS Pile 30 x 0.75	280	0	4078.0 (a-I) 4081.0 (a-II)	4078.0	280
Bent 4 Left	CISS Pile 30 x 0.75	360	0	4072.0 (a-I) 4075.0 (a-II)	4072.0	360
Bent 4 Right	CISS Pile 30 x 0.75	280	0	4077.0 (a-I) 4080.0 (a-II)	4077.0	280
Bent 5 Left	CISS Pile 30 x 0.75	360	0	4070.0 (a-I) 4073.0 (a-II)	4070.0	360
Bent 5 Right	CISS Pile 30 x 0.75	280	0	4075.0 (a-I) 4078.0 (a-II)	4075.0	280
Bent 6 Left	CISS Pile 30 x 0.75	360	0	4072.0 (a-I) 4075.0 (a-II)	4072.0	360
Bent 6 Right	CISS Pile 30 x 0.75	280	0	4073.0 (a-I) 4076.0 (a-II)	4073.0	280
Bent 7 Left	CISS Pile 30 x 0.75	360	0	4074.0 (a-I) 4077.0 (a-II)	4074.0	360
Bent 7 Right	CISS Pile 30 x 0.75	280	0	4075.0 (a-I) 4078.0 (a-II)	4075.0	280
Bent 8 Left	CISS Pile 30 x 0.75	360	0	4076.0 (a-I) 4079.0 (a-II)	4076.0	360
Bent 8 Right	CISS Pile 30 x 0.75	280	0	4077.0 (a-I) 4080.0 (a-II)	4077.0	280
Bent 9 Left	CISS Pile 30 x 0.75	400	0	4077.0 (a-I) 4080.0 (a-II)	4077.0	400
Bent 9 Right	CISS Pile 30 x 0.75	320	0	4078.0 (a-I) 4081.0 (a-II)	4078.0	320
Abut 10 Left	CISS Pile 30 x 0.75	200	0	4078.0 (a)	4078.0	200
Abut 10 Right	CISS Pile 30 x 0.75	160	0	4080.0 (a)	4080.0	160

Notes: All design tip elevations are controlled by (a) Compression (Service I Limit), (a-I) Compression (Strength Limit), (a-II) Compression (Extreme Event). *Design tips are predominantly end-bearing in metamorphic bedrock.

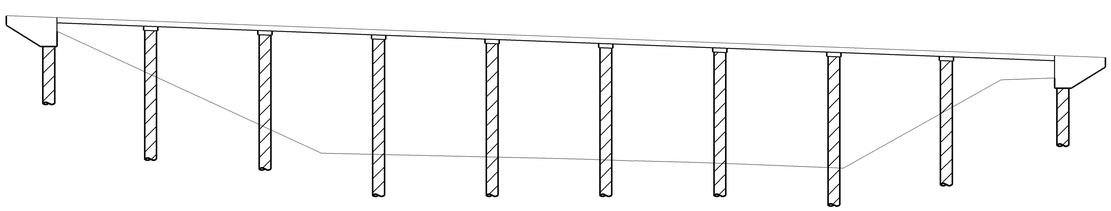

Structural Concrete, Bridge
CISS Pile

CONCRETE STRENGTH AND TYPE LIMITS

No Scale

NOTE:
THE CONTRACTOR MUST VERIFY ALL CONTROLLING FIELD DIMENSIONS BEFORE ORDERING OR FABRICATING ANY MATERIAL.

STANDARD PLANS DATED 2010

	PLAN NO.	TITLE
	A10A	ABBREVIATIONS (SHEET 1 OF 2)
RSP	A10B	ABBREVIATIONS (SHEET 2 OF 2)
	A10C	LINES AND SYMBOLS (SHEET 1 OF 3)
	A10D	LINES AND SYMBOLS (SHEET 2 OF 3)
	A10E	LINES AND SYMBOLS (SHEET 3 OF 3)
	A10F	LEGEND - SOIL (SHEET 1 OF 2)
	A10G	LEGEND - SOIL (SHEET 2 OF 2)
	A62C	LIMITS OF PAYMENT FOR EXCAVATION AND BACKFILL BRIDGE
	BO-1	BRIDGE DETAILS
	BO-3	BRIDGE DETAILS
RSP	B11-56	CONCRETE BARRIER TYPE 736
	T3A	TEMPORARY RAILING (TYPE K)

STANDARD PLAN SHEET NO.
DETAIL NO.

INDEX TO PLANS

SHEET NO.	TITLE
1	GENERAL PLAN
2	INDEX TO PLANS
3	STAGE CONSTRUCTION
4	FOUNDATION PLAN
5	ABUTMENT LAYOUT
6	ABUTMENT DETAILS NO. 1
7	ABUTMENT DETAILS NO. 2
8	BENT LAYOUT
9	BENT DETAILS
10	TYPICAL SECTION
11	GEOCOMPOSITE DRAIN DETAILS
12	LOG OF TEST BORINGS 1 OF 3
13	LOG OF TEST BORINGS 2 OF 3
14	LOG OF TEST BORINGS 3 OF 3

GENERAL NOTES
LOAD AND RESISTANCE FACTOR DESIGN

DESIGN: AASHTO LRFD BRIDGE DESIGN SPECIFICATIONS, 4th Edition with California Amendments, preface dated November 2011

SEISMIC DESIGN: Caltrans Seismic Design Criteria (SDC) Version 1.7, April 2013

DEAD LOADING: Includes 35 psf for future wearing surfaces.

LIVE LOADING: HL93 and permit design load

SEISMIC LOADING: Soil Profile: Vs30 = 1017 ft/s, Moment Magnitude: Mmax = 7.7 Peak Ground Acceleration: 0.22 g

REINFORCED CONCRETE: f_y = 60 ksi
f'_c = 4,000 psi @ 28 Days
n = 9

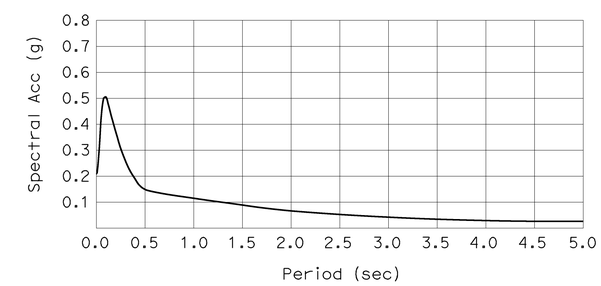

ACCELERATION RESPONSE SPECTRUM

QUANTITIES

RAPID SETTING CONCRETE (PATCH)	216	CF
REMOVE ASPHALT CONCRETE SURFACING	8,570	SQFT
REMOVE UNSOUND CONCRETE	216	CF
PREPARE CONCRETE BRIDGE DECK SURFACE	11,930	SQFT
FURNISH POLYESTER CONCRETE OVERLAY	2,565	CF
PLACE POLYESTER CONCRETE OVERLAY	11,930	SQFT
BRIDGE REMOVAL (PORTION)	LUMP	SUM
STRUCTURE EXCAVATION (BRIDGE)	95	CY
STRUCTURE BACKFILL (BRIDGE)	45	CY
FURNISH 30" CAST-IN-STEEL SHELL CONCRETE PILING	1,835	LF
DRIVE 30" CAST-IN-STEEL SHELL CONCRETE PILE	30	EA
STRUCTURAL CONCRETE, BRIDGE	243	CY
DRILL AND BOND DOWEL	375	LF
BAR REINFORCING STEEL (BRIDGE)	143,200	LB
BAR REINFORCING STEEL (EPOXY COATED)(BRIDGE)	83,500	LB
HEADED BAR REINFORCEMENT	192	EA
CLEAN AND PAINT STEEL SHELLS	LUMP	SUM
CONCRETE BARRIER (TYPE 736)	484	LF

	BY	CHECKED
DESIGN	L. Wu	J. Szabo/F. Chen
DETAILS	G. Hallstrom	J. Szabo/F. Chen
QUANTITIES	W. Hou	F. Chen

STATE OF CALIFORNIA
DEPARTMENT OF TRANSPORTATION

DIVISION OF ENGINEERING SERVICES
STRUCTURE DESIGN
DESIGN BRANCH 10

BRIDGE NO. 54-0621L
POST MILE 173.84

WHEATON WASH BRIDGE LEFT (WIDEN)
INDEX TO PLANS

STRUCTURES DESIGN DETAIL SHEET (ENGLISH) (REV. 09-01-10)

ORIGINAL SCALE IN INCHES FOR REDUCED PLANS 0 1 2 3

UNIT: 3589
PROJECT NUMBER & PHASE: 0800000472
CONTRACT NO.: 08-0M2801

DISREGARD PRINTS BEARING EARLIER REVISION DATES

REVISION DATES: 1-09-14 07-10-14 4-28-14 5-28-14

SHEET 2 OF 14

FILE => 540621laitp02.dgn

USERNAME => s130406 DATE PLOTTED => 14-JAN-2015 TIME PLOTTED => 14:24

DIST	COUNTY	ROUTE	POST MILES TOTAL PROJECT	SHEET No.	TOTAL SHEETS
08	SBd	15	171.8/173.8	117	128

REGISTERED CIVIL ENGINEER 09-11-14 DATE

04-06-15
PLANS APPROVAL DATE

REGISTERED PROFESSIONAL ENGINEER LARRY WU No. 57035 Exp. 6-30-15 CIVIL STATE OF CALIFORNIA

The State of California or its officers or agents shall not be responsible for the accuracy or completeness of scanned copies of this plan sheet.

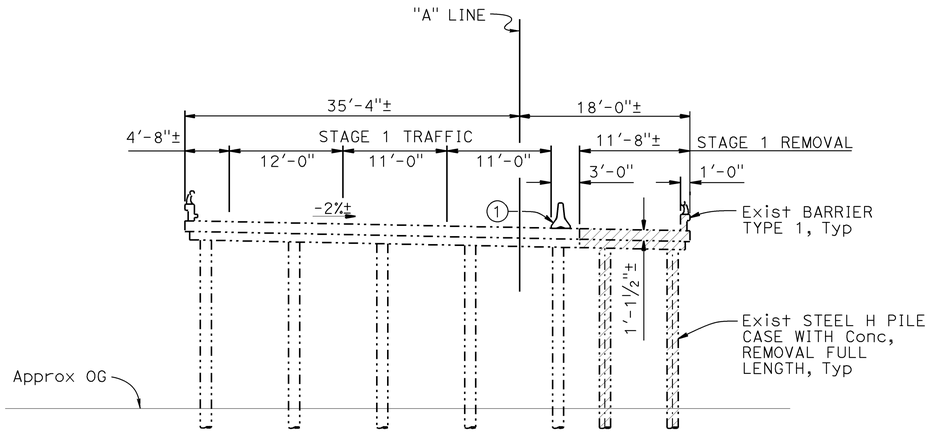

STAGE 1 REMOVAL

⅛" = 1'-0"

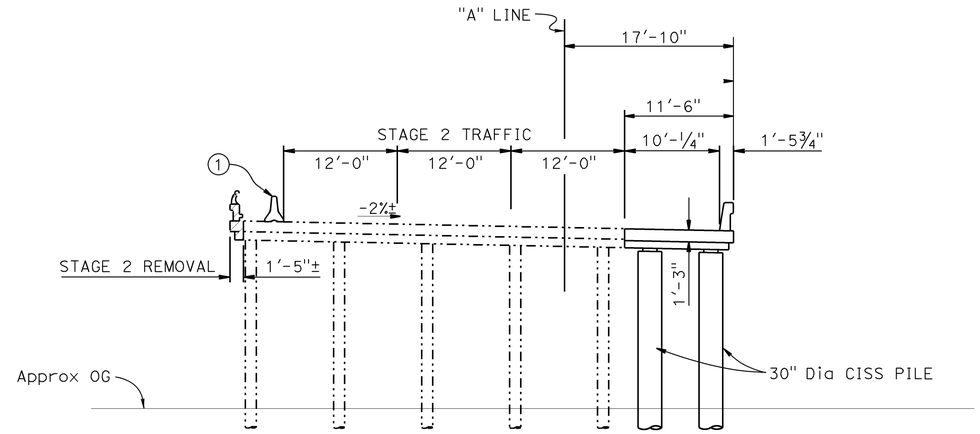

STAGE 2 REMOVAL

⅛" = 1'-0"

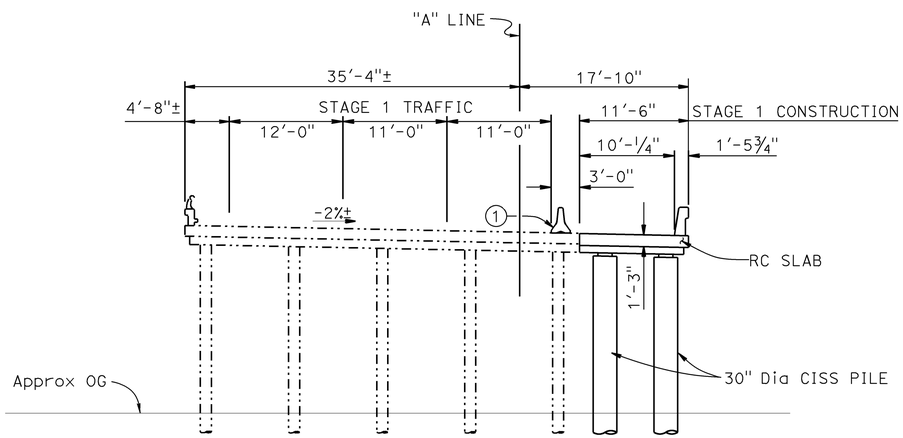

STAGE 1 CONSTRUCTION

⅛" = 1'-0"

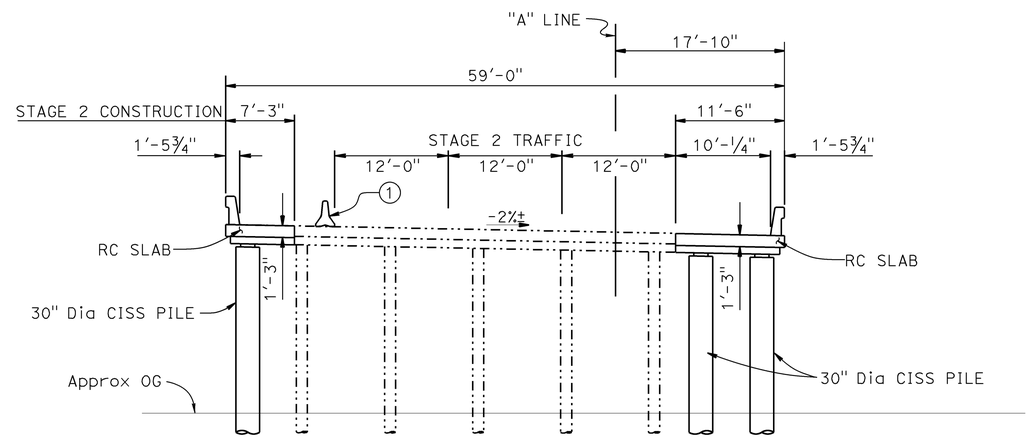

STAGE 2 CONSTRUCTION

⅛" = 1'-0"

NOTES:

1. Temporary Railing Type "K" (to be pinned), see "Roadway Plans"

LEGEND:

—— Indicates new construction
—·—· Indicates existing structure
▨ Indicates bridge removal (portion)

NOTE:
THE CONTRACTOR MUST VERIFY ALL CONTROLLING FIELD DIMENSIONS BEFORE ORDERING OR FABRICATING ANY MATERIAL.

	BY	CHECKED
DESIGN	L. Wu	J. Szabo/F. Chen
DETAILS	G. Hallstrom	J. Szabo/F. Chen
QUANTITIES	W. Hou	F. Chen

STATE OF CALIFORNIA
DEPARTMENT OF TRANSPORTATION

DIVISION OF ENGINEERING SERVICES
STRUCTURE DESIGN
DESIGN BRANCH 10

BRIDGE NO. 54-0621L
POST MILE 173.84

WHEATON WASH BRIDGE LEFT (WIDEN)
STAGE CONSTRUCTION

STRUCTURES DESIGN DETAIL SHEET (ENGLISH) (REV. 09-01-10)

ORIGINAL SCALE IN INCHES FOR REDUCED PLANS 0 1 2 3

UNIT: 3589
PROJECT NUMBER & PHASE: 0800000472
CONTRACT NO.: 08-0M2801

DISREGARD PRINTS BEARING EARLIER REVISION DATES

REVISION DATES 10-26-13 04-30-14 05-28-14 07-10-14

SHEET 3 OF 14

FILE => 540621lbstageconst03.dgn

USERNAME => s130406 DATE PLOTTED => 14-JAN-2015 TIME PLOTTED => 14:24

DIST	COUNTY	ROUTE	POST MILES TOTAL PROJECT	SHEET No.	TOTAL SHEETS
8	SBd	15	171.8/173.8	118	128

REGISTERED CIVIL ENGINEER — DATE 09-11-14

04-06-15
PLANS APPROVAL DATE

REGISTERED PROFESSIONAL ENGINEER — LARRY WU — No. 57035 — Exp. 6-30-15 — CIVIL — STATE OF CALIFORNIA

The State of California or its officers or agents shall not be responsible for the accuracy or completeness of electronic copies of this plan sheet.

Bridge Location

1. 33.783 Lt. ℄ SB Rte 15, Sta 175+92.843, Elev 4144.627
2. 16.957 Rt. ℄ SB Rte 15, Sta 175+42.431, Elev 4145.600
3. 33.840 Lt. ℄ SB Rte 15, Sta 178+01.330, Elev 4135.825
4. 17.148 Rt. ℄ SB Rte 15, Sta 177+54.091, Elev 4136.836

No.	R	Δ	T	L
5	5002.150	20°32′30"	906.415	1793.369

HYDROLOGIC SUMMARY

DRAINAGE AREA: 11.5 SQUARE MILES

	DESIGN FLOOD	BASE FLOOD
FREQUENCY (YEARS)	50	100
DISCHARGE (CUBIC FEET PER SECOND)	5350	6380
WATER SURFACE ELEV. AT BRIDGE (FEET)	4132.0	4133.5

FLOOD PLAIN DATA ARE BASED UPON INFORMATION AVAILABLE WHEN THE PLANS WERE PREPARED AND ARE SHOWN TO MEET FEDERAL REQUIREMENTS. THE ACCURACY OF SAID INFORMATION IS NOT WARRANTED BY THE STATE AND INTERESTED OR AFFECTED PARTIES SHOULD MAKE THEIR OWN INVESTIGATIONS.

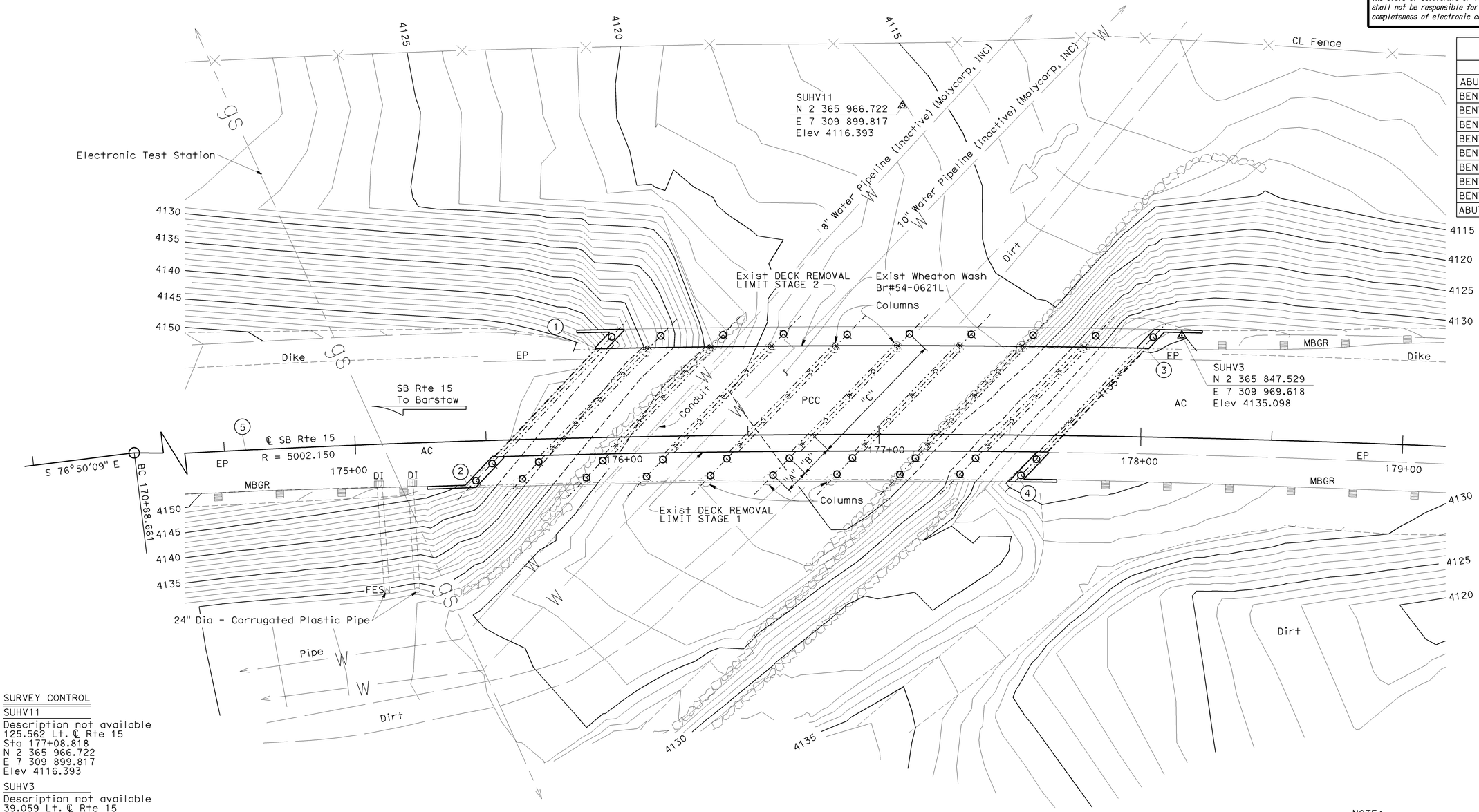

CISS PILE LAYOUT

	A	B	C
ABUT 1	9′-0"	12′-6"	54′-0"
BENT 2	9′-0"	12′-6"	54′-6"
BENT 3	9′-0"	12′-6"	54′-0"
BENT 4	9′-0"	12′-6"	54′-0"
BENT 5	9′-0"	12′-6"	53′-6"
BENT 6	9′-0"	12′-6"	53′-6"
BENT 7	8′-6"	12′-6"	53′-0"
BENT 8	8′-6"	12′-6"	52′-6"
BENT 9	8′-6"	12′-6"	53′-0"
ABUT 10	8′-6"	12′-6"	52′-0"

SURVEY CONTROL

SUHV11
Description not available
125.562 Lt. ℄ Rte 15
Sta 177+08.818
N 2 365 966.722
E 7 309 899.817
Elev 4116.393

SUHV3
Description not available
39.059 Lt. ℄ Rte 15
Sta 178+14.767
N 2 365 847.529
E 7 309 969.618
Elev 4135.098

NOTE:
THE CONTRACTOR MUST VERIFY ALL CONTROLLING FIELD DIMENSIONS BEFORE ORDERING OR FABRICATING ANY MATERIAL.

NOTE:
Underground utilities as shown are approximate. See District Utility Plans for details.

PRELIMINARY INVESTIGATION SECTION

SCALE 1"=20′	VERT.DATUM NGVD1929	PHOTOGRAMMETRY AS OF: X		
	HORZ.DATUM NAD1983	SURVEYED	BY D8	CHECKED BY X
ALIGNMENT TIES Dist. Traverse Sheet		DRAFTED	BY C. Pham	CHECKED BY E. Vigjar

DESIGN	BY L. Wu	CHECKED J. Szabo/F. Chen
DETAILS	BY G. Hallstrom	CHECKED J. Szabo/F. Chen
QUANTITIES	BY W. Hou	CHECKED F. Chen

STATE OF CALIFORNIA
DEPARTMENT OF TRANSPORTATION

DIVISION OF ENGINEERING SERVICES
STRUCTURE DESIGN
DESIGN BRANCH 10

BRIDGE NO. 54-0621L
POST MILE 173.84

WHEATON WASH BRIDGE LEFT (WIDEN)
FOUNDATION PLAN

STRUCTURES FOUNDATION PLAN SHEET (ENGLISH) (REV. 09-01-10)

ORIGINAL SCALE IN INCHES FOR REDUCED PLANS 0 1 2 3

UNIT: 3647
PROJECT NUMBER & PHASE: 0800000472
CONTRACT NO.: 08-0M2801

DISREGARD PRINTS BEARING EARLIER REVISION DATES

REVISION DATES 12/31/12 02/06/14 03/04/14 04/30/14

SHEET 4 OF 14

FILE => 5406211efdp104.dgn

USERNAME => s130406 DATE PLOTTED => 14-JAN-2015 TIME PLOTTED => 14:24

DIST	COUNTY	ROUTE	POST MILES TOTAL PROJECT	SHEET No.	TOTAL SHEETS
08	SBd	15	171.8/173.8	119	128

REGISTERED CIVIL ENGINEER — DATE 09-11-14

04-06-15
PLANS APPROVAL DATE

REGISTERED PROFESSIONAL ENGINEER — LARRY WU — No. 57035 — Exp. 6-30-15 — CIVIL — STATE OF CALIFORNIA

The State of California or its officers or agents shall not be responsible for the accuracy or completeness of scanned copies of this plan sheet.

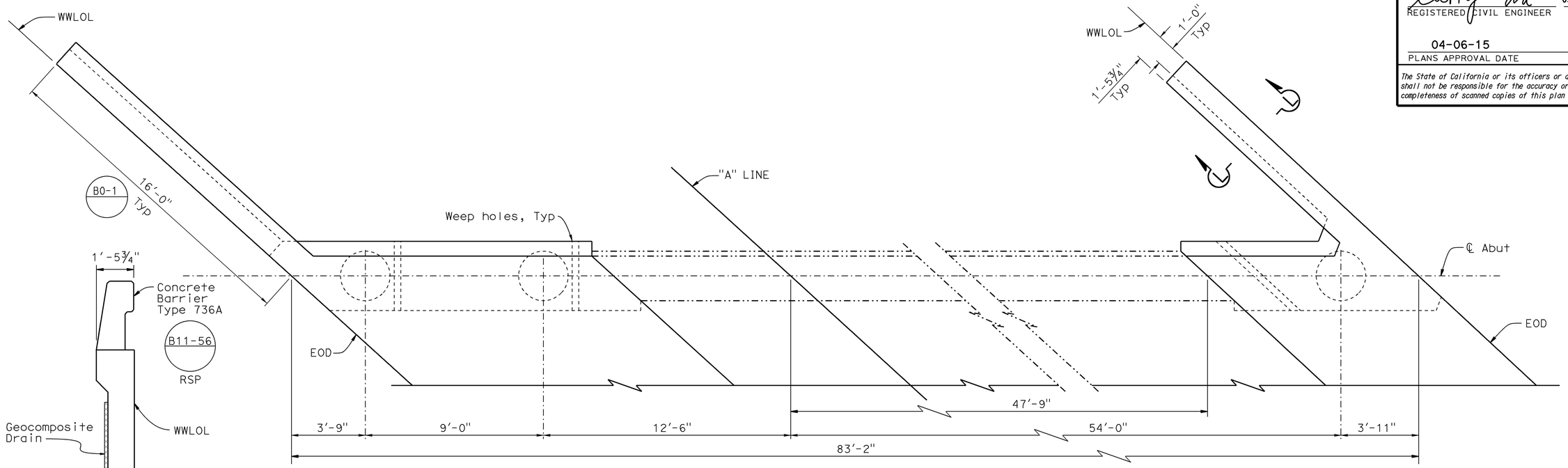

PLAN
NO SCALE

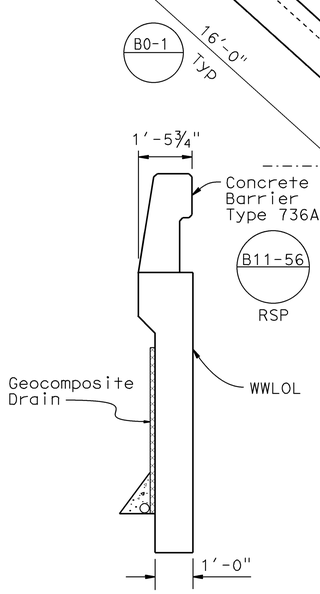

SECTION L-L
½" = 1'-0"

NOTES:

1. For "SECTION A-A", "SECTION B-B", and "SECTION C-C", see "ABUTMENT DETAILS NO. 1" sheet.
2. Abutment 1 details shown, Abutment 10 similar.

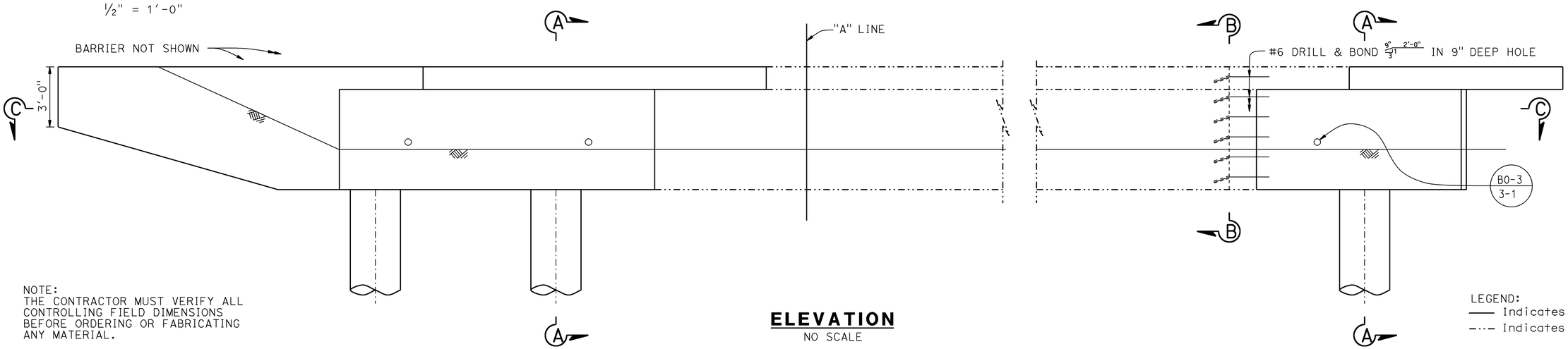

ELEVATION
NO SCALE

NOTE:
THE CONTRACTOR MUST VERIFY ALL CONTROLLING FIELD DIMENSIONS BEFORE ORDERING OR FABRICATING ANY MATERIAL.

LEGEND:
—— Indicates new construction
—·—· Indicates existing structure

	BY	CHECKED
DESIGN	L. Wu	J. Szabo/F. Chen
DETAILS	G. Hallstrom	J. Szabo/F. Chen
QUANTITIES	W. Hou	F. Chen

STATE OF CALIFORNIA
DEPARTMENT OF TRANSPORTATION

DIVISION OF ENGINEERING SERVICES
STRUCTURE DESIGN
DESIGN BRANCH 10

BRIDGE NO. 54-0621L
POST MILE 173.84

WHEATON WASH BRIDGE LEFT (WIDEN)
ABUTMENT LAYOUT

STRUCTURES DESIGN DETAIL SHEET (ENGLISH) (REV. 09-01-10)

ORIGINAL SCALE IN INCHES FOR REDUCED PLANS 0 1 2 3

UNIT: 3589
PROJECT NUMBER & PHASE: 0800000472
CONTRACT NO.: 08-0M2801

DISREGARD PRINTS BEARING EARLIER REVISION DATES

REVISION DATES: 02-06-14 04-30-14 05-28-14

SHEET 5 OF 14

FILE => 5406211fa_lo05.dgn

USERNAME => s130406 DATE PLOTTED => 14-JAN-2015 TIME PLOTTED => 14:24

DIST	COUNTY	ROUTE	POST MILES TOTAL PROJECT	SHEET No.	TOTAL SHEETS
08	SBd	15	171.8/173.8	120	128

REGISTERED CIVIL ENGINEER — DATE: 09-11-14

04-06-15
PLANS APPROVAL DATE

REGISTERED PROFESSIONAL ENGINEER — LARRY WU No. 57035 Exp. 6-30-15 CIVIL — STATE OF CALIFORNIA

The State of California or its officers or agents shall not be responsible for the accuracy or completeness of scanned copies of this plan sheet.

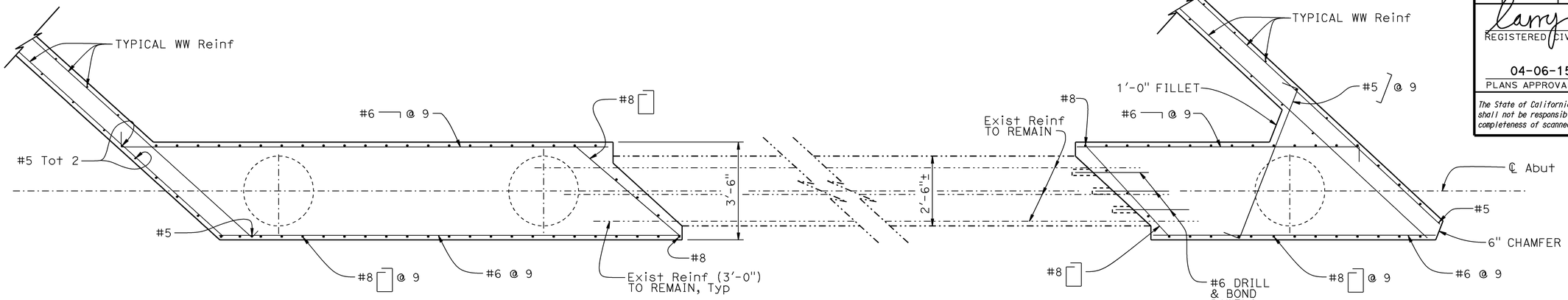

SECTION C-C
½"=1'-0"

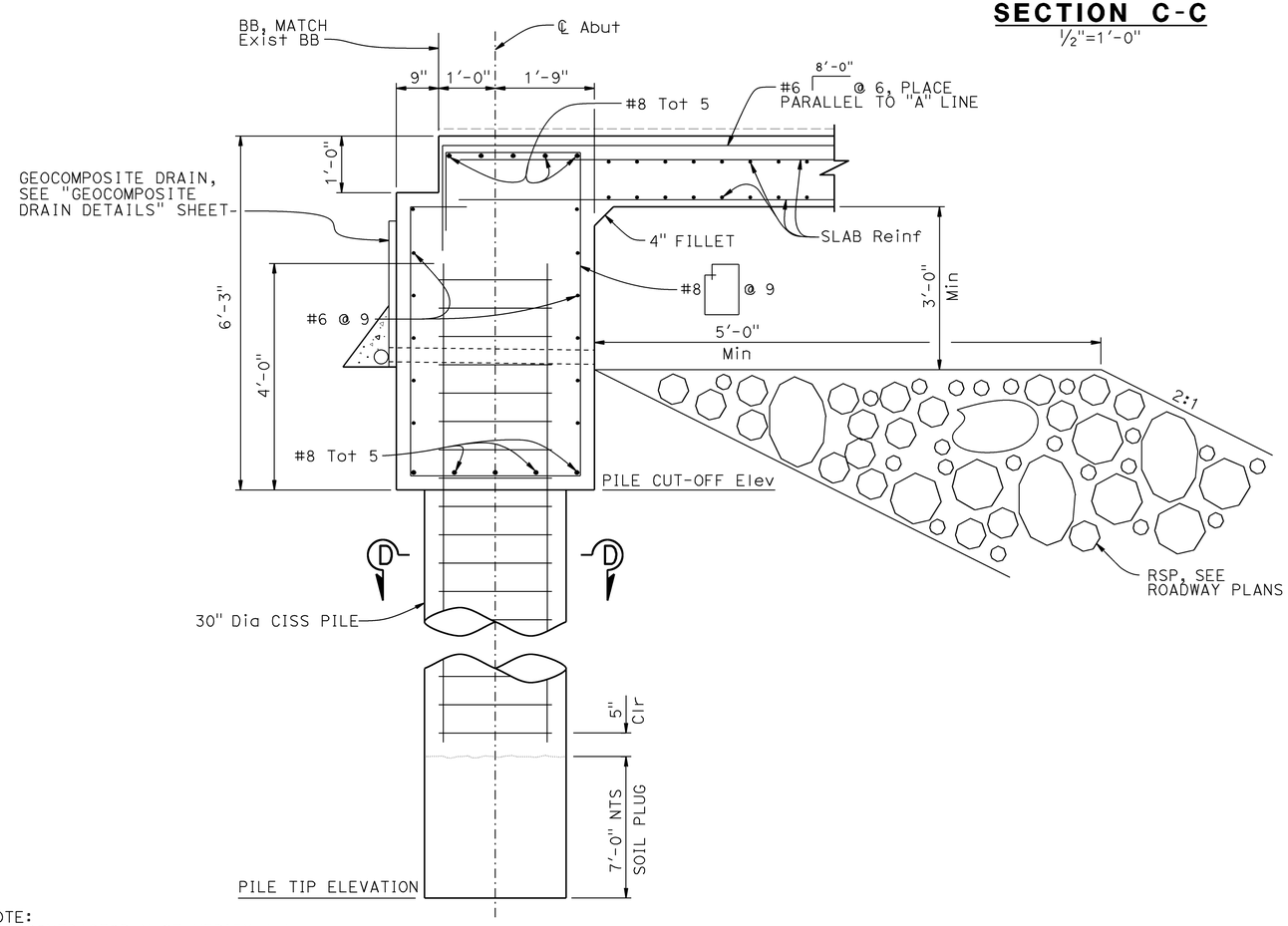

SECTION A-A
¾"=1'-0"

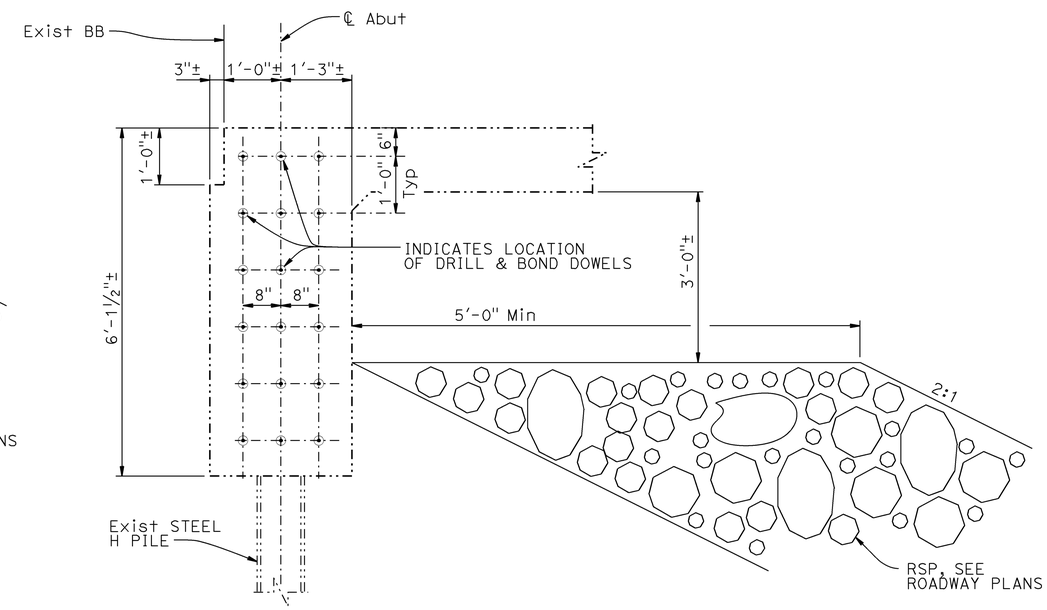

SECTION B-B
¾"=1'-0"

LEGEND:
—— Indicates new construction
-·-·- Indicates existing structure

NOTES:

1. For location of "SECTION A-A", "SECTION B-B", and "SECTION C-C", see "ABUTMENT LAYOUT" sheet.
2. For "SECTION D-D", see "ABUTMENT DETAILS NO. 2" sheet.
3. Any reinforcement extended into deck slab must be epoxy coated.
4. Abutment 1 details shown, Abutment 10 similar.

NOTE:
THE CONTRACTOR MUST VERIFY ALL CONTROLLING FIELD DIMENSIONS BEFORE ORDERING OR FABRICATING ANY MATERIAL.

	BY	CHECKED
DESIGN	L. Wu	J. Szabo/F. Chen
DETAILS	G. Hallstrom	J. Szabo/F. Chen
QUANTITIES	W. Hou	F. Chen

STATE OF CALIFORNIA
DEPARTMENT OF TRANSPORTATION

DIVISION OF ENGINEERING SERVICES
STRUCTURE DESIGN
DESIGN BRANCH 10

BRIDGE NO. 54-0621L
POST MILE 173.84

WHEATON WASH BRIDGE LEFT (WIDEN)
ABUTMENT DETAILS NO. 1

STRUCTURES DESIGN DETAIL SHEET (ENGLISH) (REV. 09-01-10)

ORIGINAL SCALE IN INCHES FOR REDUCED PLANS 0 1 2 3

UNIT: 3589
PROJECT NUMBER & PHASE: 0800000472
CONTRACT NO.: 08-0M2801

DISREGARD PRINTS BEARING EARLIER REVISION DATES

REVISION DATES: 02-25-14 04-30-14 05-28-14 07-10-14

SHEET 6 OF 14

FILE => 540621lfadt06.dgn

USERNAME => s130406 DATE PLOTTED => 14-JAN-2015 TIME PLOTTED => 14:24

DIST	COUNTY	ROUTE	POST MILES TOTAL PROJECT	SHEET No.	TOTAL SHEETS
08	SBd	15	171.8/173.8	121	128

REGISTERED CIVIL ENGINEER — DATE: 09-11-14

04-06-15
PLANS APPROVAL DATE

REGISTERED PROFESSIONAL ENGINEER — LARRY WU — No. 57035 — Exp. 6-30-15 — CIVIL — STATE OF CALIFORNIA

The State of California or its officers or agents shall not be responsible for the accuracy or completeness of scanned copies of this plan sheet.

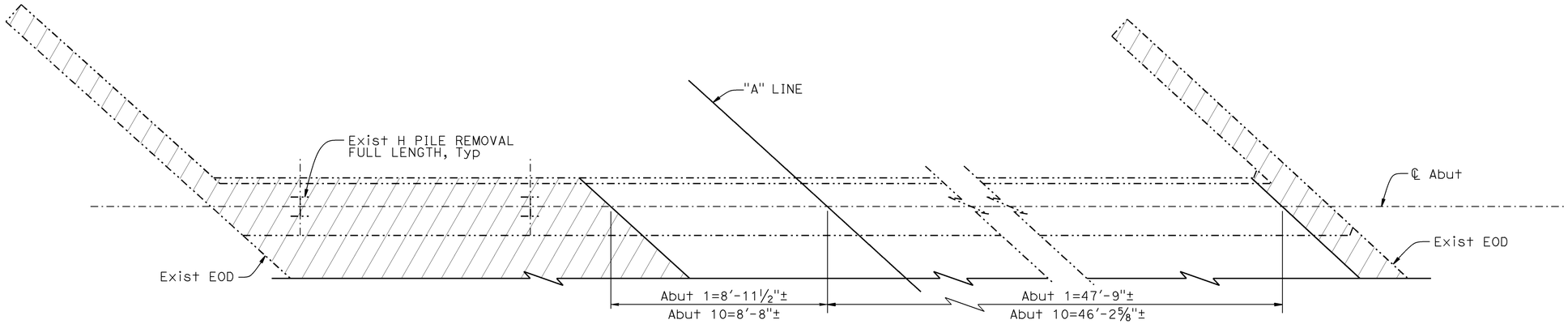

PLAN CONCRETE REMOVAL

NO SCALE

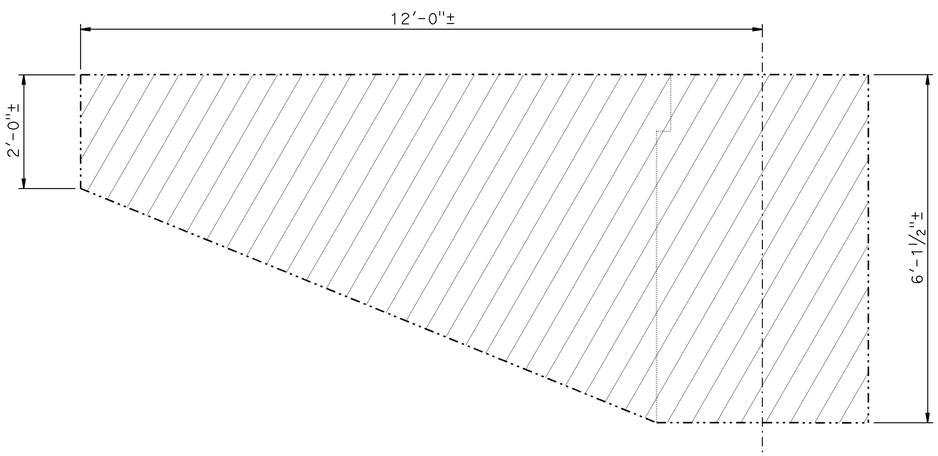

NOTE: Right Wing Wall shown, Left Wing Wall similar.

WING WALL CONCRETE REMOVAL

¾"=1'-0"

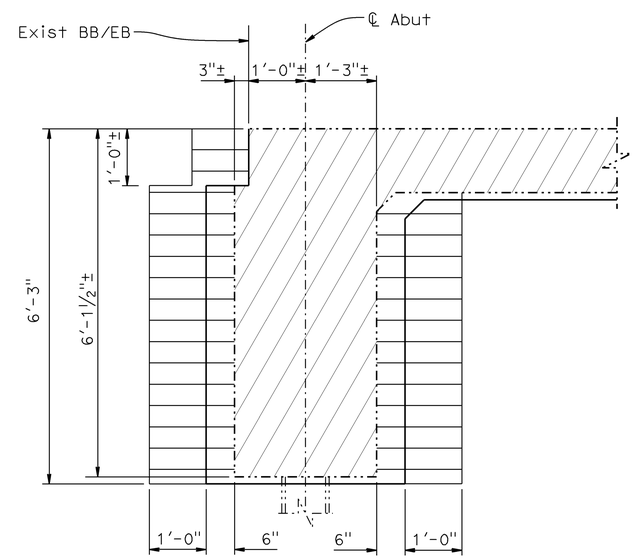

STRUCTURE EXCAVATION (BRIDGE) LIMITS

¾"=1'-0"

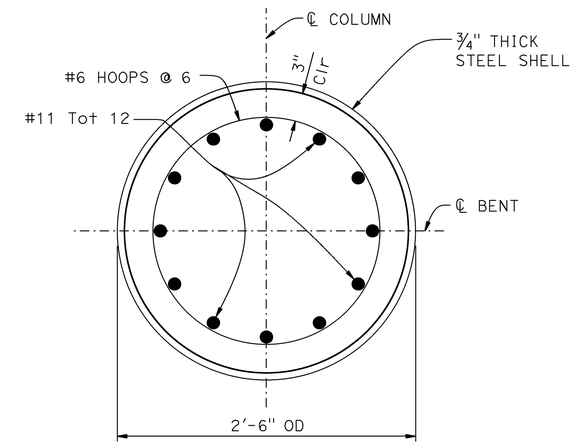

SECTION D-D

1½"=1'-0"

LEGEND:
- Indicates new construction
- Indicates existing structure
- Indicates bridge removal (portion)
- Indicates structure excavation-bridge

NOTES:

1. For location of "SECTION D-D", see "ABUTMENT DETAILS NO. 1" sheet.
2. Abutment 1 details shown, Abutment 10 similar.

NOTE:
THE CONTRACTOR MUST VERIFY ALL CONTROLLING FIELD DIMENSIONS BEFORE ORDERING OR FABRICATING ANY MATERIAL.

	BY	CHECKED
DESIGN	L. Wu	J. Szabo/F. Chen
DETAILS	G. Hallstrom	J. Szabo/F. Chen
QUANTITIES	W. Hou	F. Chen

STATE OF CALIFORNIA
DEPARTMENT OF TRANSPORTATION

DIVISION OF ENGINEERING SERVICES
STRUCTURE DESIGN
DESIGN BRANCH 10

BRIDGE NO. 54-0621L
POST MILE 173.84

WHEATON WASH BRIDGE LEFT (WIDEN)
ABUTMENT DETAILS NO. 2

STRUCTURES DESIGN DETAIL SHEET (ENGLISH) (REV. 09-01-10)

ORIGINAL SCALE IN INCHES FOR REDUCED PLANS 0 1 2 3

UNIT: 3589
PROJECT NUMBER & PHASE: 0800000472
CONTRACT NO.: 08-0M2801

DISREGARD PRINTS BEARING EARLIER REVISION DATES

REVISION DATES: 02-06-14 07-10-14 04-30-14 05-28-14

SHEET 7 OF 14

FILE => 5406211fadt07.dgn

USERNAME => s130406 DATE PLOTTED => 14-JAN-2015 TIME PLOTTED => 14:24

DIST	COUNTY	ROUTE	POST MILES TOTAL PROJECT	SHEET No.	TOTAL SHEETS
08	SBd	15	171.8/173.8	122	128

REGISTERED CIVIL ENGINEER — DATE: 09-11-14

04-06-15
PLANS APPROVAL DATE

REGISTERED PROFESSIONAL ENGINEER — LARRY WU — No. 57035 — Exp. 6-30-15 — CIVIL — STATE OF CALIFORNIA

The State of California or its officers or agents shall not be responsible for the accuracy or completeness of scanned copies of this plan sheet.

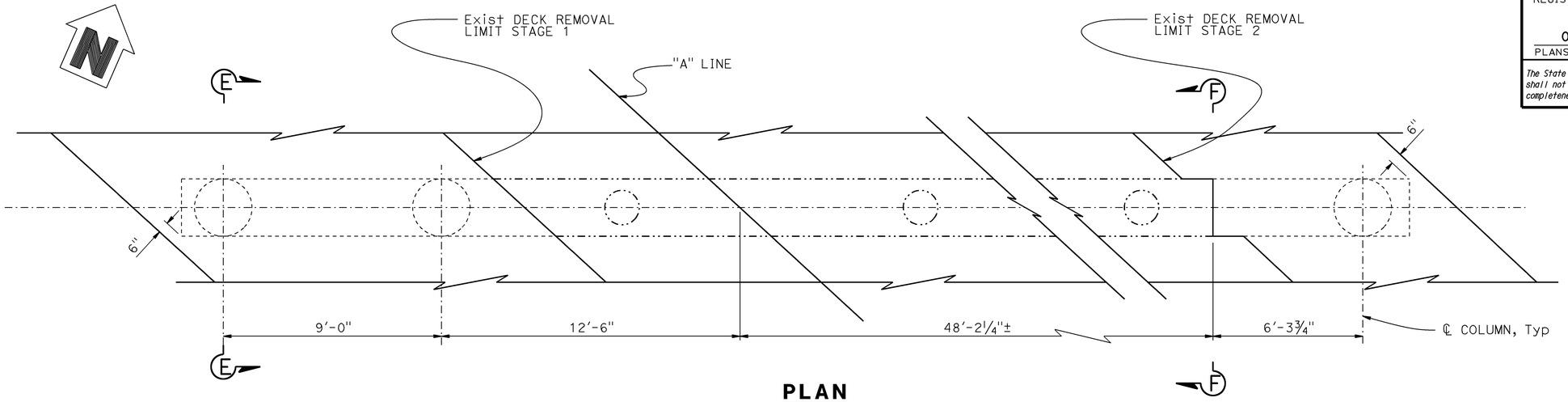

PLAN

NO SCALE

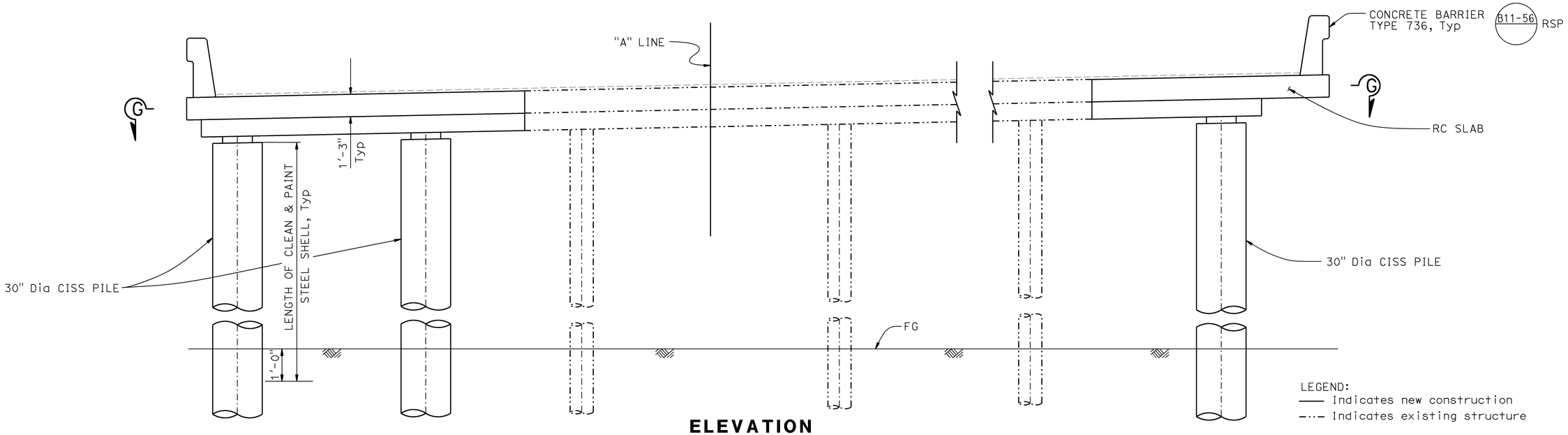

ELEVATION

NO SCALE

LEGEND:
—— Indicates new construction
–·–· Indicates existing structure

NOTES:

1. For "SECTION E-E", "SECTION F-F", and "SECTION G-G", see "BENT DETAILS" sheet.
2. Bent 2 details shown, other Bents similar.

NOTE:
THE CONTRACTOR MUST VERIFY ALL CONTROLLING FIELD DIMENSIONS BEFORE ORDERING OR FABRICATING ANY MATERIAL.

	BY	CHECKED
DESIGN	L. Wu	J. Szabo/F. Chen
DETAILS	G. Hallstrom	J. Szabo/F. Chen
QUANTITIES	W. Hou	F. Chen

STATE OF CALIFORNIA
DEPARTMENT OF TRANSPORTATION

DIVISION OF ENGINEERING SERVICES
STRUCTURE DESIGN
DESIGN BRANCH 10

BRIDGE NO. 54-0621L
POST MILE 173.84

WHEATON WASH BRIDGE LEFT (WIDEN)
BENT LAYOUT

STRUCTURES DESIGN DETAIL SHEET (ENGLISH) (REV. 09-01-10)

ORIGINAL SCALE IN INCHES FOR REDUCED PLANS 0 1 2 3

UNIT: 3589
PROJECT NUMBER & PHASE: 0800000472
CONTRACT NO.: 08-0M2801

DISREGARD PRINTS BEARING EARLIER REVISION DATES

REVISION DATES: 02-06-14 04-30-14 05-28-14 07-10-14

SHEET 8 OF 14

FILE => 540621lnb_lo08.dgn

USERNAME => s130406 DATE PLOTTED => 14-JAN-2015 TIME PLOTTED => 14:24

DIST	COUNTY	ROUTE	POST MILES TOTAL PROJECT	SHEET No.	TOTAL SHEETS
08	SBd	15	171.8/173.8	123	128

REGISTERED CIVIL ENGINEER 09-11-14 DATE

04-06-15
PLANS APPROVAL DATE

REGISTERED PROFESSIONAL ENGINEER LARRY WU No. 57035 Exp. 6-30-15 CIVIL STATE OF CALIFORNIA

The State of California or its officers or agents shall not be responsible for the accuracy or completeness of scanned copies of this plan sheet.

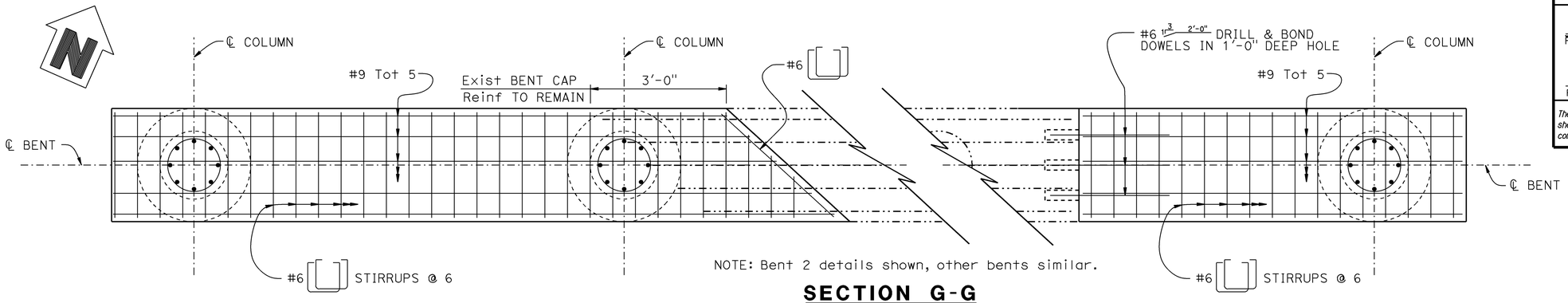

NOTE: Bent 2 details shown, other bents similar.

SECTION G-G
3/4"=1'-0"

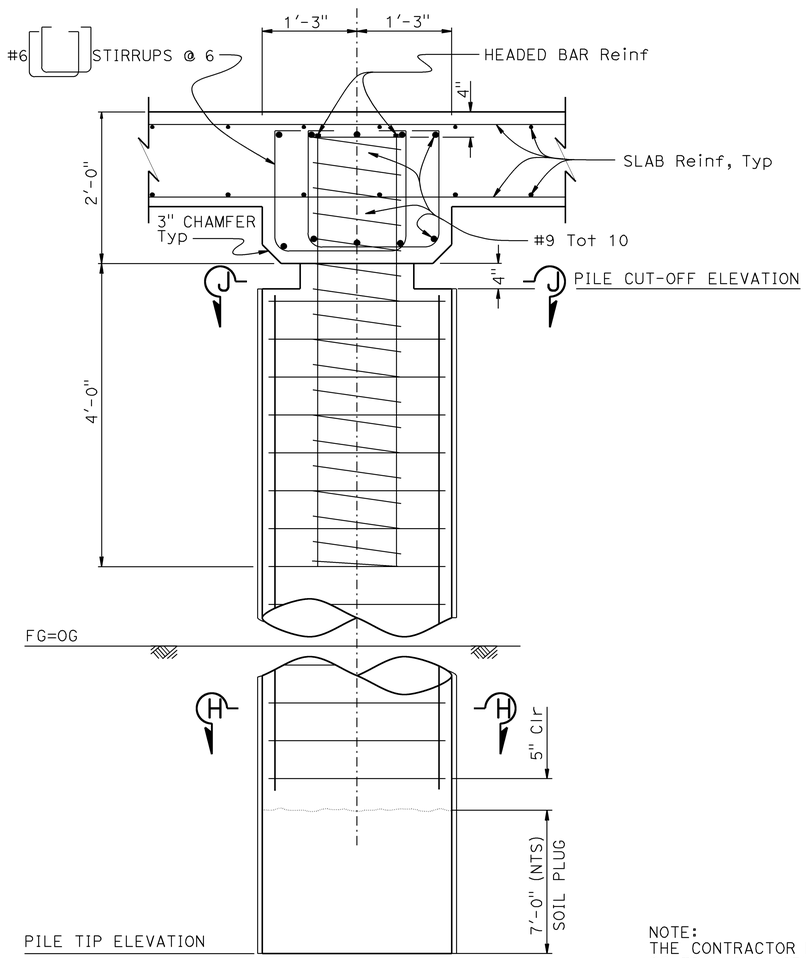

SECTION E-E
1"=1'-0"

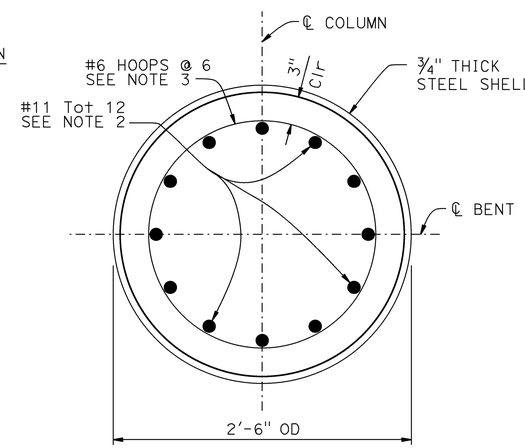

SECTION H-H
1 1/2"=1'-0"

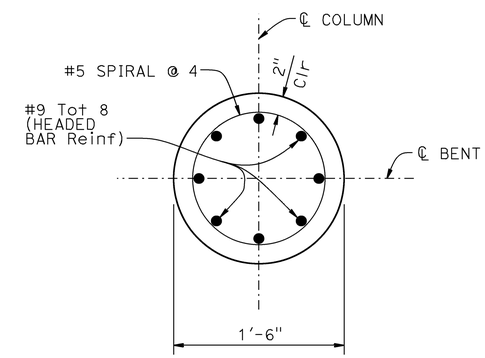

SECTION J-J
1 1/2"=1'-0"

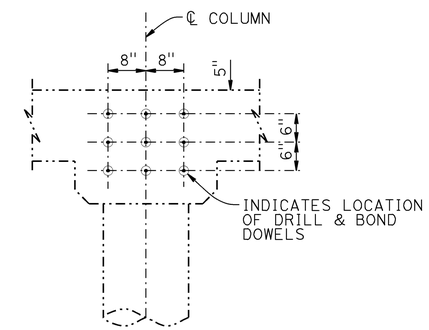

SECTION F-F
3/4"=1'-0"

NOTE:
THE CONTRACTOR MUST VERIFY ALL CONTROLLING FIELD DIMENSIONS BEFORE ORDERING OR FABRICATING ANY MATERIAL.

LEGEND:
—— Indicates new construction
—·—· Indicates existing structure

NOTES:

1. For location of"SECTION E-E", "SECTION F-F", and "SECTION G-G", see "BENT LAYOUT" sheet.
2. No splices allowed in CISS Pile main Reinf.
3. All Hoops are "Ultimate" butt spliced continuous.
4. Any reinforcement extended into deck slab must be epoxy coated.

	BY	CHECKED
DESIGN	L. Wu	J. Szabo/F. Chen
DETAILS	G. Hallstrom	J. Szabo/F. Chen
QUANTITIES	W. Hou	F. Chen

STATE OF CALIFORNIA
DEPARTMENT OF TRANSPORTATION

DIVISION OF ENGINEERING SERVICES
STRUCTURE DESIGN
DESIGN BRANCH 10

BRIDGE NO. 54-0621L
POST MILE 173.84

WHEATON WASH BRIDGE LEFT (WIDEN)
BENT DETAILS

STRUCTURES DESIGN DETAIL SHEET (ENGLISH) (REV. 09-01-10)

ORIGINAL SCALE IN INCHES FOR REDUCED PLANS 0 1 2 3

UNIT: 3589
PROJECT NUMBER & PHASE: 0800000472
CONTRACT NO.: 08-0M2801

DISREGARD PRINTS BEARING EARLIER REVISION DATES

REVISION DATES 02-25-14 04-30-14 05-29-14 07-10-14

SHEET 9 OF 14

FILE => 540621lnbdt09.dgn

USERNAME => s130406 DATE PLOTTED => 14-JAN-2015 TIME PLOTTED => 14:24

DIST	COUNTY	ROUTE	POST MILES TOTAL PROJECT	SHEET No.	TOTAL SHEETS
08	SBd	15	171.8/173.8	124	128

REGISTERED CIVIL ENGINEER — DATE 09-11-14

04-06-15
PLANS APPROVAL DATE

REGISTERED PROFESSIONAL ENGINEER — LARRY WU No. 57035 Exp. 6-30-15 CIVIL — STATE OF CALIFORNIA

The State of California or its officers or agents shall not be responsible for the accuracy or completeness of scanned copies of this plan sheet.

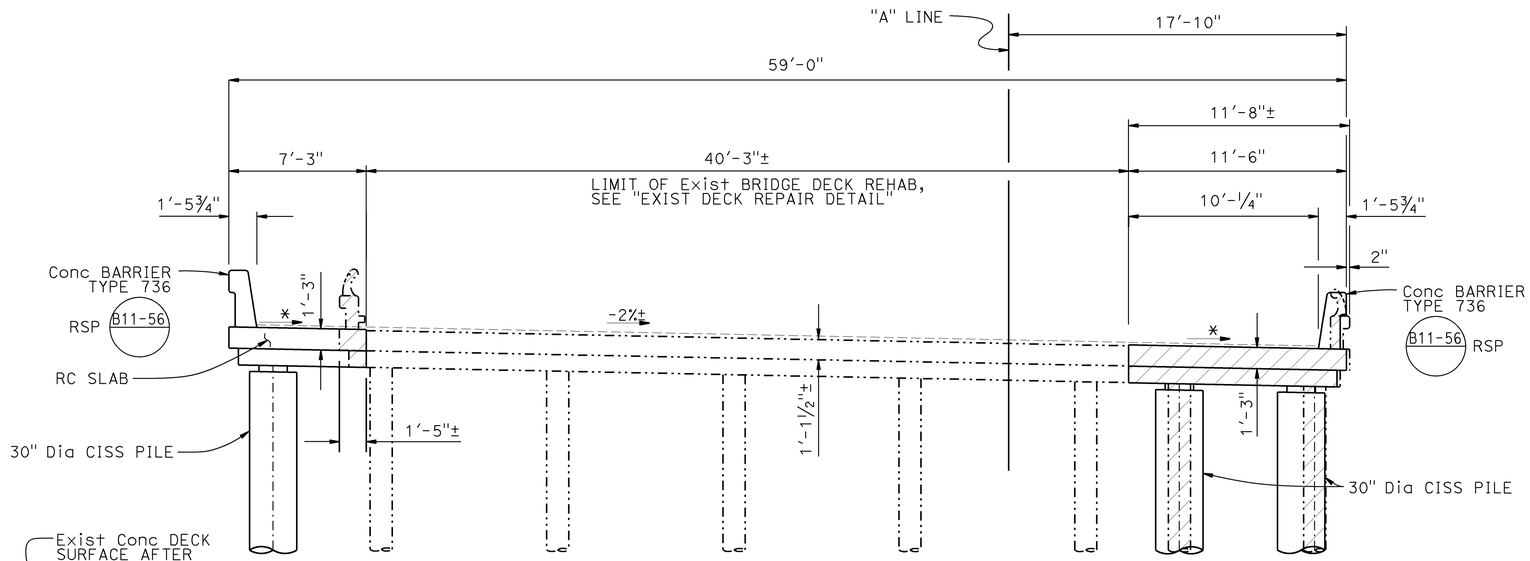

TYPICAL SECTION

¼" = 1'-0"

* MATCH EXISTING CROSS SLOPE

DECK REPAIR TABLE	
Remove unsound concrete and place Rapid Setting concrete (Patch)	
Approx Area Damaged (%)	Approx Depth (in)
10	3

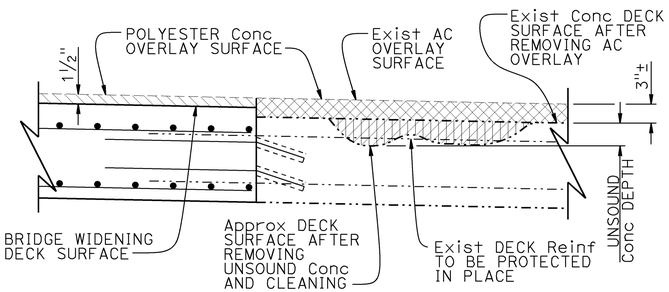

Indicates AC overlay & unsound concrete removal

Indicates prepare concrete bridge deck surface and place polyester concrete overlay

Indicates rapid setting concrete patch

EXIST DECK REPAIR DETAIL

1" = 1'-0"

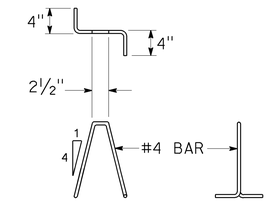

BAR CHAIR DETAIL

NO SCALE

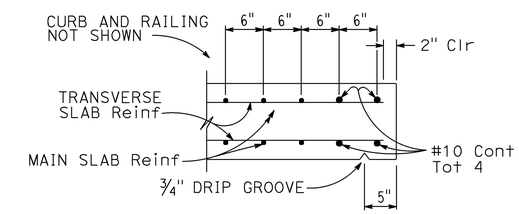

EDGE OF SLAB DETAILS

NO SCALE

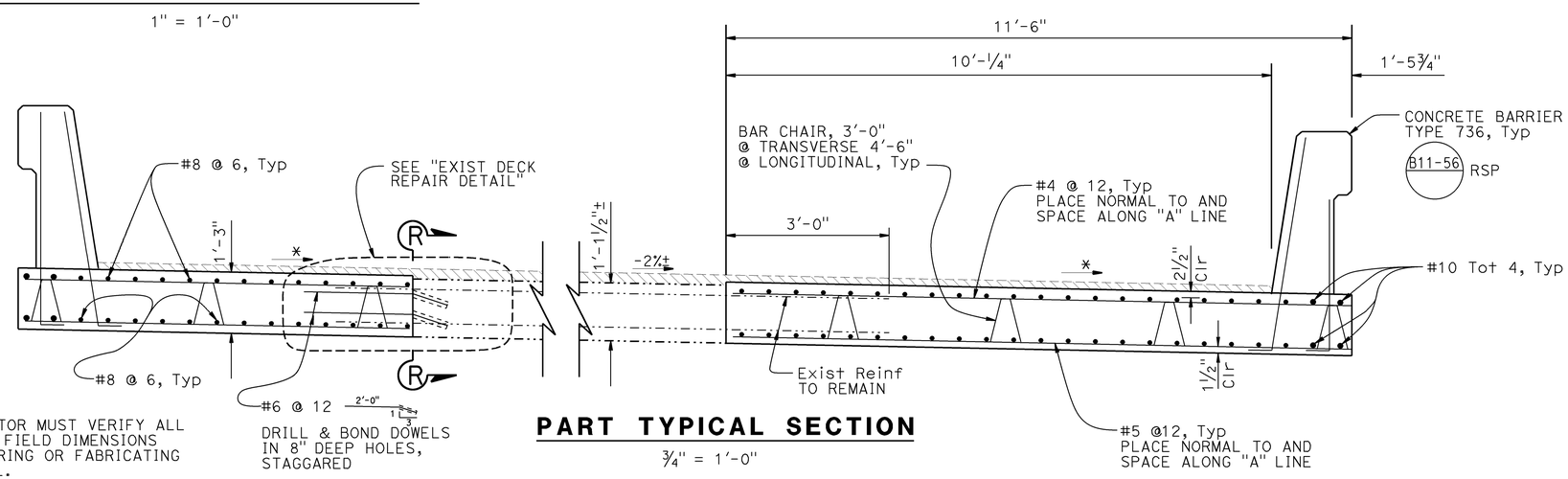

NOTE:
THE CONTRACTOR MUST VERIFY ALL CONTROLLING FIELD DIMENSIONS BEFORE ORDERING OR FABRICATING ANY MATERIAL.

PART TYPICAL SECTION

¾" = 1'-0"

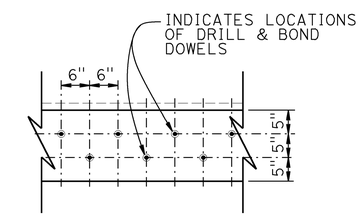

SECTION R-R

¾" = 1'-0"

LEGEND:
- Indicates new construction
- Indicates existing structure
- Indicates bridge removal (portion)

NOTES:
1. No lap splices allowed in slab Reinf.
2. All Reinf to be epoxy coated.

	BY	CHECKED
DESIGN	L. Wu	J. Szabo/F. Chen
DETAILS	G. Hallstrom	J. Szabo/F. Chen
QUANTITIES	W. Hou	F. Chen

STATE OF CALIFORNIA
DEPARTMENT OF TRANSPORTATION

DIVISION OF ENGINEERING SERVICES
STRUCTURE DESIGN
DESIGN BRANCH 10

BRIDGE NO. 54-0621L
POST MILE 173.84

WHEATON WASH BRIDGE LEFT (WIDEN)
TYPICAL SECTION

STRUCTURES DESIGN DETAIL SHEET (ENGLISH) (REV. 09-01-10)

ORIGINAL SCALE IN INCHES FOR REDUCED PLANS 0 1 2 3

UNIT: 3589
PROJECT NUMBER & PHASE: 0800000472
CONTRACT NO.: 08-0M2801

DISREGARD PRINTS BEARING EARLIER REVISION DATES

REVISION DATES 1-16-14 07-18-14 10-01-14 05-29-14

SHEET 10 OF 14

FILE => 540621lkts10.dgn

USERNAME => s130406 DATE PLOTTED => 14-JAN-2015 TIME PLOTTED => 14:24

DIST	COUNTY	ROUTE	POST MILES TOTAL PROJECT	SHEET No.	TOTAL SHEETS
08	SBd	15	171.8/173.8	125	128

REGISTERED CIVIL ENGINEER — DATE 09-11-14

04-06-15
PLANS APPROVAL DATE

REGISTERED PROFESSIONAL ENGINEER — LARRY WU No. 57035 Exp. 6-30-15 CIVIL — STATE OF CALIFORNIA

The State of California or its officers or agents shall not be responsible for the accuracy or completeness of scanned copies of this plan sheet.

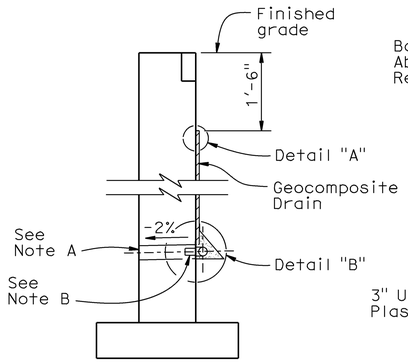

WALL

SECTION

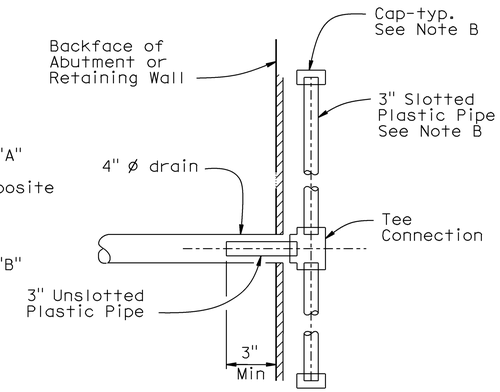

SECTION A-A

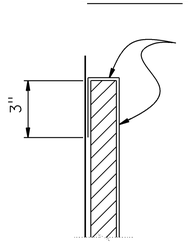

DETAIL "A"

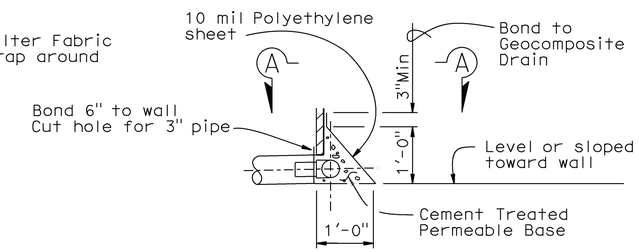

DETAIL "B"

WEEP HOLE AND GEOCOMPOSITE DRAIN

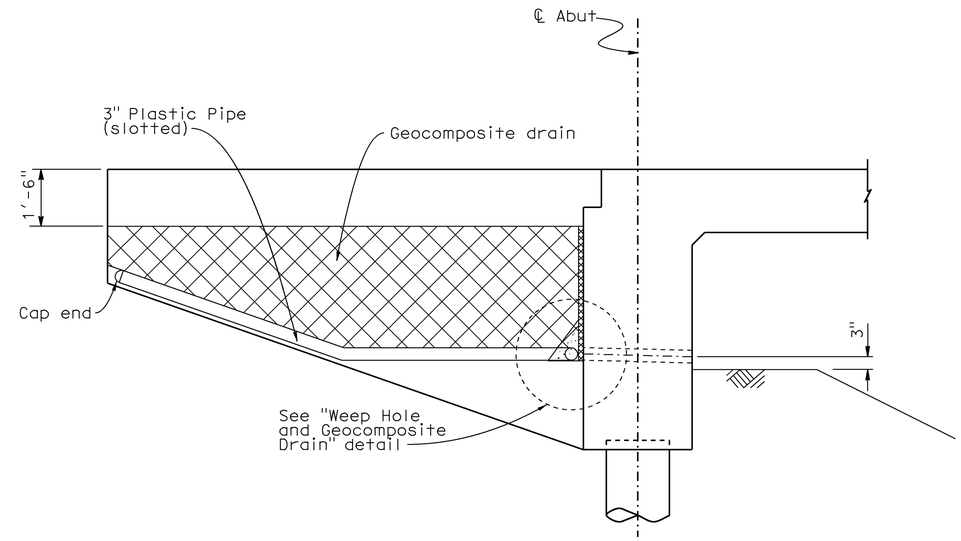

WINGWALL ELEVATION

NO SCALE

Notes:

A. 4" ø drains at intermediate sag points and at 25' max center to center (9' c-c for Type 3 and 9'-3" c-c for Type 4 retaining walls).
For walls adjacent to sidewalks or curbs, provide 4" cast iron or asbestos cement pipe under the sidewalk to discharge through curb face.
Exposed wall drains shall be located 3"± above finished grade.

B. Geocomposite drain, cement treated permeable base, and 3"ø slotted plastic pipe continuous behind retaining wall or abutment. Cap ends of pipe. Provide "Tee" connection at each 4" ø drain.

C. Connect the low end of plastic pipe to the main outlet pipe as applicable.

	BY	CHECKED
DESIGN	L. Wu	J. Szabo/F. Chen
DETAILS	G. Hallstrom	J. Szabo/F. Chen
QUANTITIES	W. Hou	F. Chen

STATE OF CALIFORNIA
DEPARTMENT OF TRANSPORTATION

DIVISION OF ENGINEERING SERVICES
STRUCTURE DESIGN
DESIGN BRANCH 10

BRIDGE NO. 54-0621L
POST MILE 173.84

WHEATON WASH BRIDGE LEFT (WIDEN)
GEOCOMPOSITE DRAIN DETAILS

STRUCTURES DESIGN DETAIL SHEET (ENGLISH) (REV. 09-01-10)

ORIGINAL SCALE IN INCHES FOR REDUCED PLANS 0 1 2 3

UNIT: 3589
PROJECT NUMBER & PHASE: 0800000472
CONTRACT NO.: 08-0M2801

DISREGARD PRINTS BEARING EARLIER REVISION DATES 04-30-14

REVISION DATES | SHEET 11 | OF 14

FILE => 540621lsadt11.dgn

USERNAME => s130406 DATE PLOTTED => 14-JAN-2015 TIME PLOTTED => 14:24

DIST	COUNTY	ROUTE	POST MILES TOTAL PROJECT	SHEET No	TOTAL SHEETS
08	SBd	15	171.8/173.8	126	128

GEOTECHNICAL PROFESSIONAL — DATE 5-29-14

04-06-15
PLANS APPROVAL DATE

The State of California or its officers or agents shall not be responsible for the accuracy or completeness of scanned copies of this plan sheet.

REGISTERED PROFESSIONAL ENGINEER — C.R. STROOP — No. 2298 — Exp. 3-31-16 — GEOTECHNICAL — STATE OF CALIFORNIA

URS CORPORATION
2020 EAST FIRST STREET, SUITE 400
SANTA ANA, CA 92705

This LOTB sheet was prepared in accordance with the Caltrans Soil & Rock Logging, Classification, & Presentation Manual (2010 Edition).

See 2010 Standard Plans A10F and A10G for Soil Legend, and A10H for Rock Legend.

BENCH MARK

Datum: NAD83 (1991.35)
Zone: California Zone 5
Vertical Datum: NGVD29
N 2365847.52900
E 7309969.61800
Elev 4135.098
Set 1" IP and CT Plug

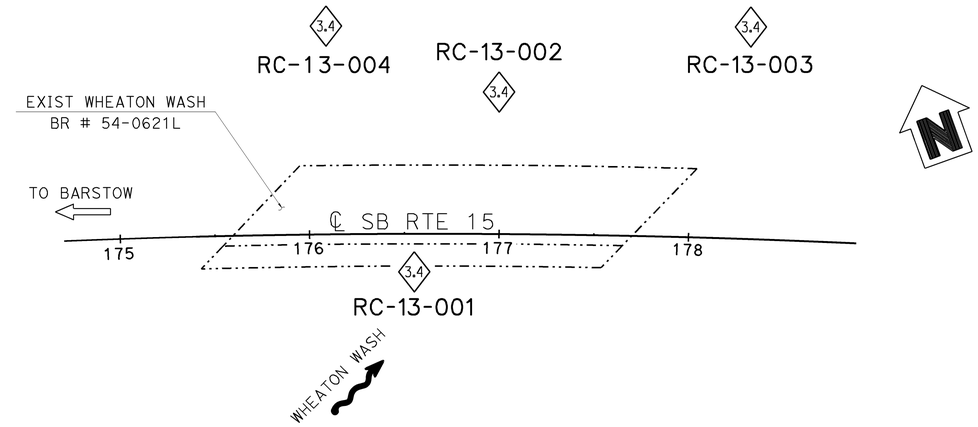

PLAN

1" = 40'

NOTE: Groundwater encountered but not measured in Borings RC-13-001, RC-13-003, and RC-13-004.

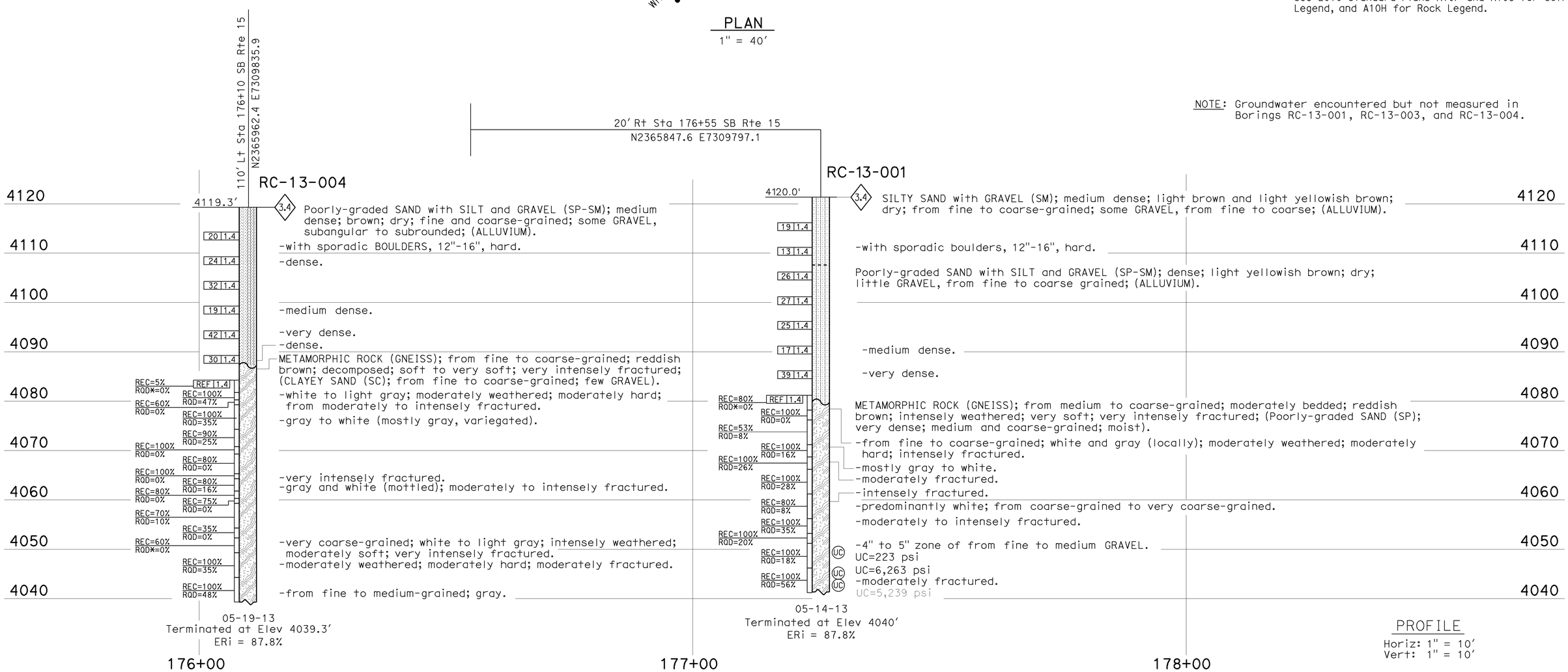

PROFILE

Horiz: 1" = 10'
Vert: 1" = 10'

E. NEUPERT DESIGN OVERSIGHT 05/29/2014 SIGN OFF DATE	DRAWN BY CHECKED BY	C. MORRELL, URS I. G-REMMEN, CALTRANS E. NEUPERT	D. RECTOR, URS FIELD INVESTIGATION BY: DATE: 05/14/13 to 05/19/13	PREPARED FOR THE STATE OF CALIFORNIA DEPARTMENT OF TRANSPORTATION	C.R. STROOP, URS PROJECT ENGINEER	BRIDGE NO. 54-0621L POST MILES 173.84	WHEATON WASH BRIDGE LEFT (WIDEN) LOG OF TEST BORINGS 1 OF 3

GS GEOTECHNICAL LOG OF TEST BORINGS SHEET (ENGLISH) (REV. 03/14/12)

ORIGINAL SCALE IN INCHES FOR REDUCED PLANS 0 1 2 3

UNIT: URS
PROJECT NUMBER & PHASE: 08000004721 CONTRACT NO.: 08-0M2804

DISREGARD PRINTS BEARING EARLIER REVISION DATES → 05-29-14 05-28-14

SHEET 12 OF 14

FILE => 540621lzltb12.dgn

USERNAME => s130406 DATE PLOTTED => 14-JAN-2015 TIME PLOTTED => 14:24

DIST	COUNTY	ROUTE	POST MILES TOTAL PROJECT	SHEET No	TOTAL SHEETS
08	SBd	15	171.8/173.8	127	128

GEOTECHNICAL PROFESSIONAL — DATE 5-29-14

REGISTERED PROFESSIONAL ENGINEER — C.R. STROOP — No. 2298 — Exp. 3-31-16 — GEOTECHNICAL — STATE OF CALIFORNIA

04-06-15
PLANS APPROVAL DATE

The State of California or its officers or agents shall not be responsible for the accuracy or completeness of scanned copies of this plan sheet.

URS CORPORATION
2020 EAST FIRST STREET, SUITE 400
SANTA ANA, CA 92705

This LOTB sheet was prepared in accordance with the Caltrans Soil & Rock Logging, Classification, & Presentation Manual (2010 Edition).

See 2010 Standard Plans A10F and A10G for Soil Legend, and A10H for Rock Legend.

FOR PLAN VIEW, SEE
"LOG OF TEST BORINGS 1 OF 3"

NOTE: Groundwater encountered but not measured in Borings RC-13-001, RC-13-003, and RC-13-004.

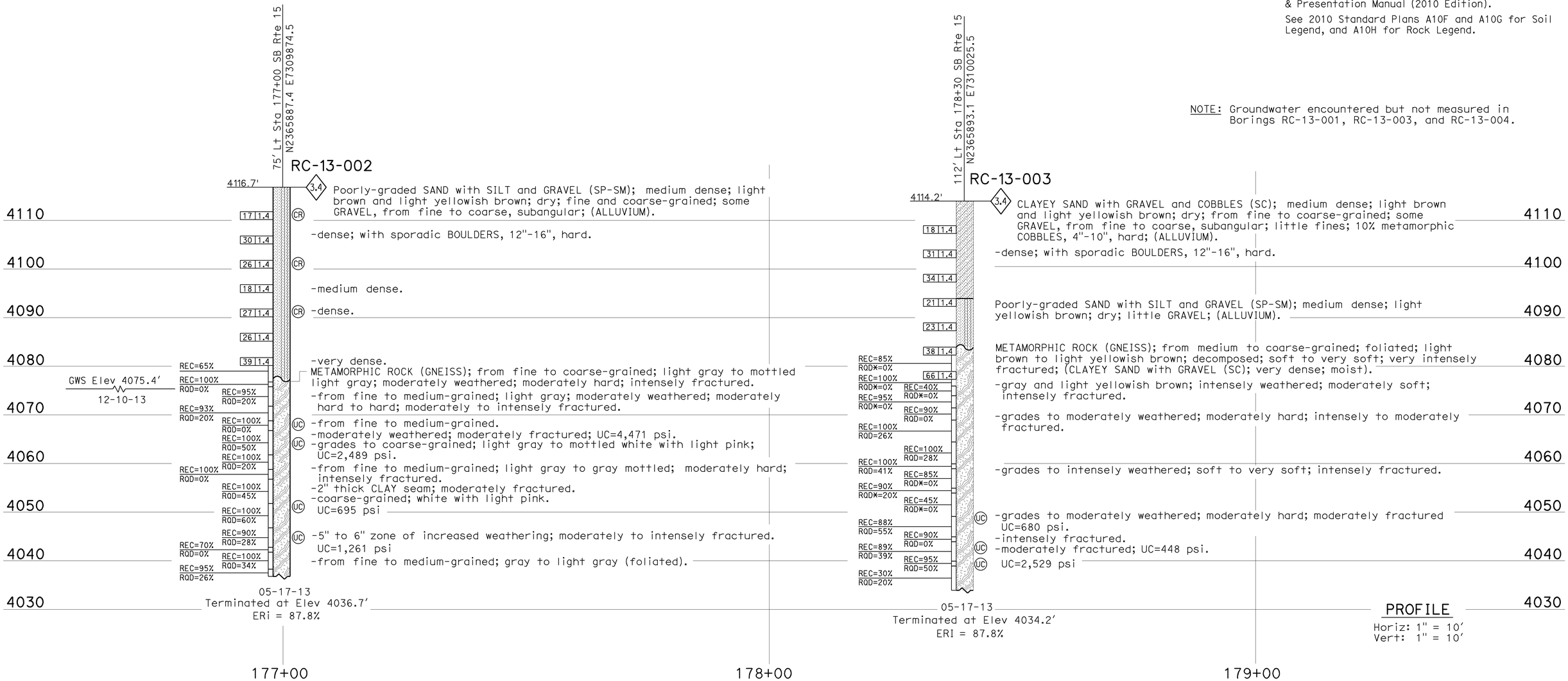

E. NEUPERT — DESIGN OVERSIGHT	DRAWN BY	C. MORRELL, URS I. G-REMMEN, CALTRANS	D. RECTOR, URS — FIELD INVESTIGATION BY:	PREPARED FOR THE STATE OF CALIFORNIA DEPARTMENT OF TRANSPORTATION	C.R. STROOP, URS — PROJECT ENGINEER
05/29/2014 — SIGN OFF DATE	CHECKED BY	E. NEUPERT	DATE: 05/14/13 to 05/19/13		

BRIDGE NO. 54-0621L — POST MILES 173.84

WHEATON WASH BRIDGE LEFT (WIDEN)
LOG OF TEST BORINGS 2 OF 3

GS GEOTECHNICAL LOG OF TEST BORINGS SHEET (ENGLISH) (REV. 03/14/12)

ORIGINAL SCALE IN INCHES FOR REDUCED PLANS 0 1 2 3

UNIT: URS
PROJECT NUMBER & PHASE: 08000004721 CONTRACT NO.: 08-0M2804

DISREGARD PRINTS BEARING EARLIER REVISION DATES → REVISION DATES 05-23-14 05-28-14 — SHEET 13 OF 14

FILE => 540621lzltb13.dgn

USERNAME => s130406 DATE PLOTTED => 14-JAN-2015 TIME PLOTTED => 14:24

FED. ROAD DIV. NO.	STATE	PROJ. NO.	FISCAL YEAR	SHEET NO.	TOTAL SHEETS
7	CAL.			170	205

I-018-36)163

VIII SBd 15

DIST.	COUNTY	ROUTE	SECTION	SHEET NO.	TOTAL SHEETS
8	SBd	15		5	5

Bridge Engineer — Civil Engineer—License 5365

DATE APPROVED 04-06-15
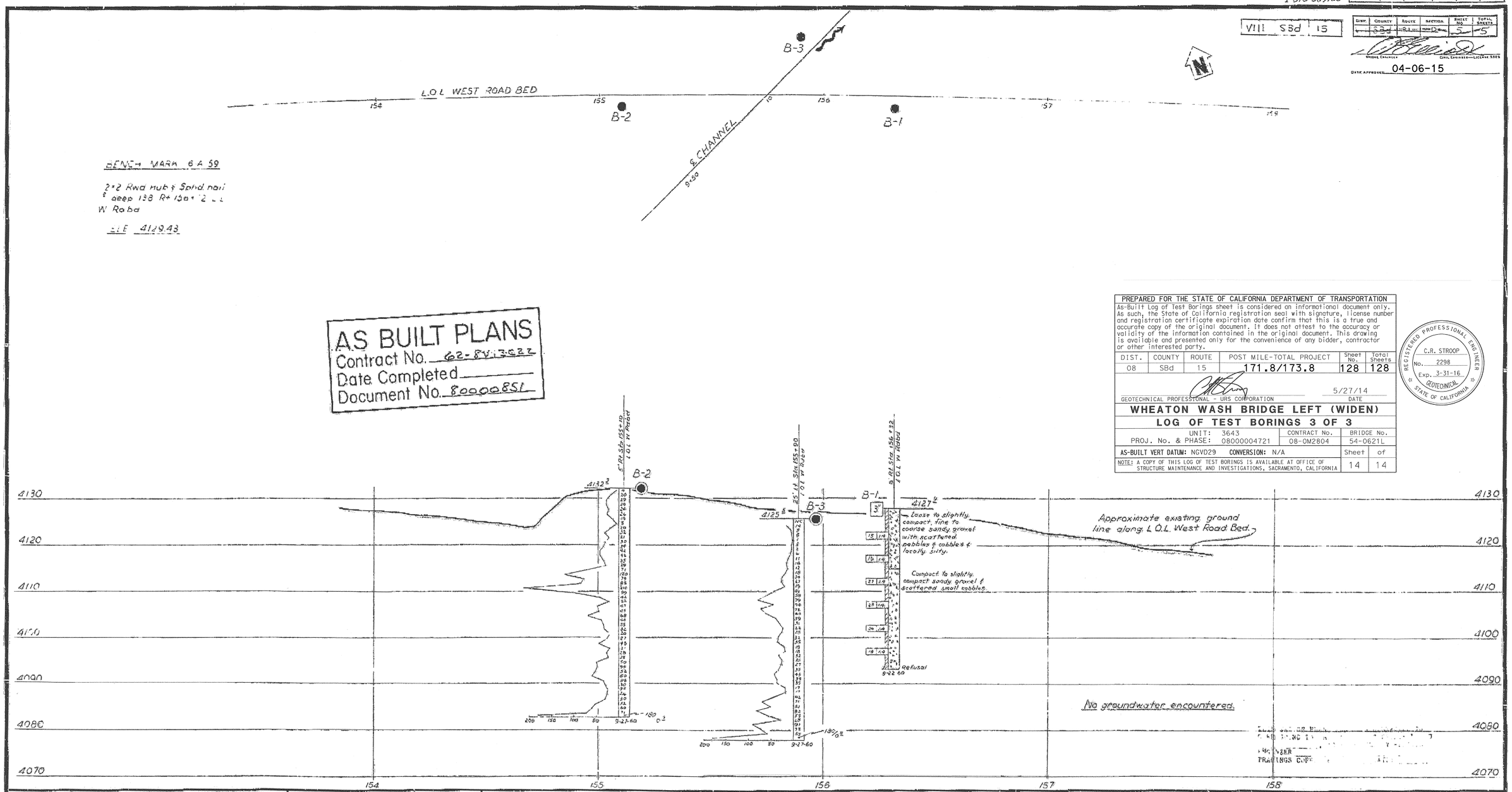
BRIDGE DEPARTMENT