ACHSIMG-210-1(813)E

Dist	COUNTY	ROUTE	POST MILES TOTAL PROJECT	SHEET No.	TOTAL SHEETS
08	SBd	210	9.9/12.5	1	36

STATE OF CALIFORNIA
DEPARTMENT OF TRANSPORTATION

PROJECT PLANS FOR CONSTRUCTION ON
STATE HIGHWAY
IN SAN BERNARDINO COUNTY
IN RANCHO CUCAMONGA AND FONTANA
FROM ETIWANDA AVENUE UNDERCROSSING
TO SAN SEVAINE ROAD UNDERCROSSING

TO BE SUPPLEMENTED BY STANDARD PLANS DATED MAY 2006

INDEX OF PLANS

SHEET No.	DESCRIPTION
1	TITLE AND LOCATION MAP
2	TYPICAL CROSS SECTIONS
3-6	LAYOUTS
7-10	CONSTRUCTION DETAILS
11-14	UTILITY PLANS
15	CONSTRUCTION AREA SIGNS
16-20	TRAFFIC HANDLING PLANS
21	SUMMARY OF QUANTITIES
22-25	ELECTRICAL PLANS
26-36	REVISED AND NEW STANDARD PLANS

THE STANDARD PLANS LIST APPLICABLE TO THIS CONTRACT IS INCLUDED IN THE NOTICE TO BIDDERS AND SPECIAL PROVISIONS BOOK.

LOCATION MAP

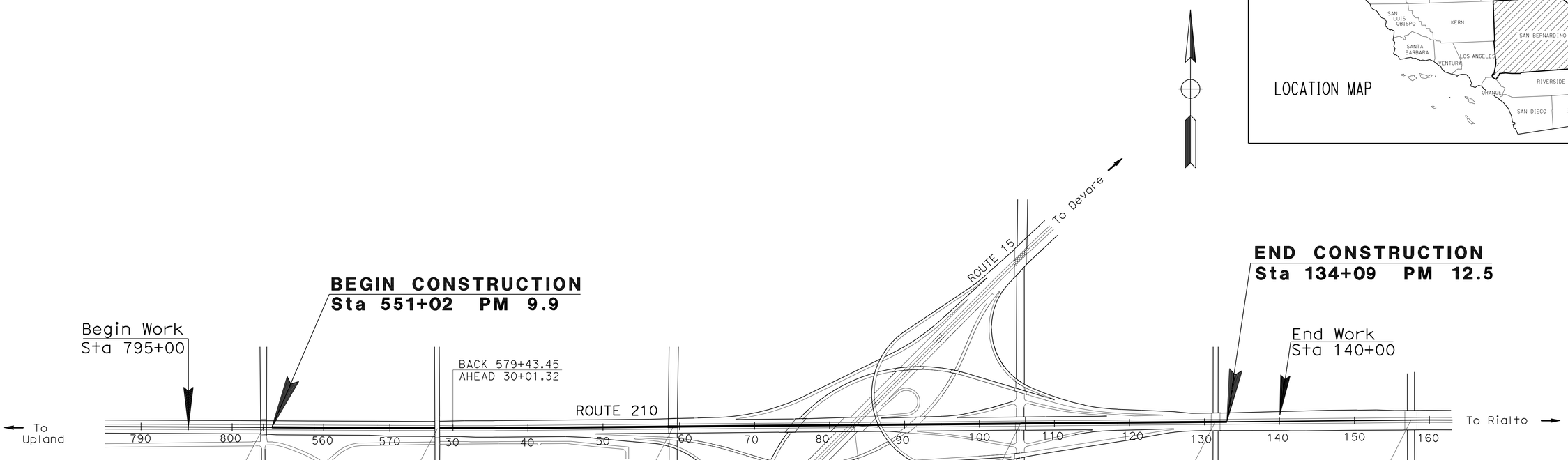

PROJECT MANAGER: NADER NAGUIB

DESIGN ENGINEER: ANH V. PHAN

3-7-12
PROJECT ENGINEER DATE
REGISTERED CIVIL ENGINEER

April 2, 2012
PLANS APPROVAL DATE

REGISTERED PROFESSIONAL ENGINEER
ANH V. PHAN
No. 62294
Exp. 9-30-13
CIVIL
STATE OF CALIFORNIA

THE STATE OF CALIFORNIA OR ITS OFFICERS OR AGENTS SHALL NOT BE RESPONSIBLE FOR THE ACCURACY OR COMPLETENESS OF SCANNED COPIES OF THIS PLAN SHEET.

THE CONTRACTOR SHALL POSSESS THE CLASS (OR CLASSES) OF LICENSE AS SPECIFIED IN THE "NOTICE TO BIDDERS."

NO SCALE

CONTRACT No.	08-0N4104
PROJECT ID	0800000529

LAST REVISION 03-07-12
DATE PLOTTED => 15-AUG-2012
TIME PLOTTED => 06:06

Dist	COUNTY	ROUTE	POST MILES TOTAL PROJECT	SHEET No.	TOTAL SHEETS
08	SBd	210	9.9/12.5	2	36

REGISTERED CIVIL ENGINEER 3-7-12 DATE

4-2-12
PLANS APPROVAL DATE

REGISTERED PROFESSIONAL ENGINEER ANH V. PHAN No. 62294 Exp. 9-30-13 CIVIL STATE OF CALIFORNIA

THE STATE OF CALIFORNIA OR ITS OFFICERS OR AGENTS SHALL NOT BE RESPONSIBLE FOR THE ACCURACY OR COMPLETENESS OF SCANNED COPIES OF THIS PLAN SHEET.

NOTES:

1. DIMENSIONS OF STRUCTURAL SECTIONS ARE SUBJECT TO TOLERANCES SPECIFIED IN THE STANDARD SPECIFICATIONS.
2. SUPERELEVATION AS SHOWN OR AS DIRECTED BY THE ENGINEER.
3. FOR CONCRETE BARRIER TYPE 60, 60 MOD, 60A MOD, 60F, AND 60S MOD AND LOCATIONS, SEE LAYOUT AND QUANTITY SHEETS.
4. FOR CONCRETE BARRIER TYPE 60, 60 MOD, 60A MOD, 60F, AND 60S MOD DETAILS, SEE 2006 STD PLANS RSP A76A, A76B, RSP A76C, A76G AND CONSTRUCTION DETAIL SHEETS.

DESIGN DESIGNATION:

ADT (2013) = 132,600 D = 64%
ADT (2033) = 156,000 T = 11%
DHV = 10,060 V = 65 MPH
ESAL = 61,444,576 TI_{20} = 14.5

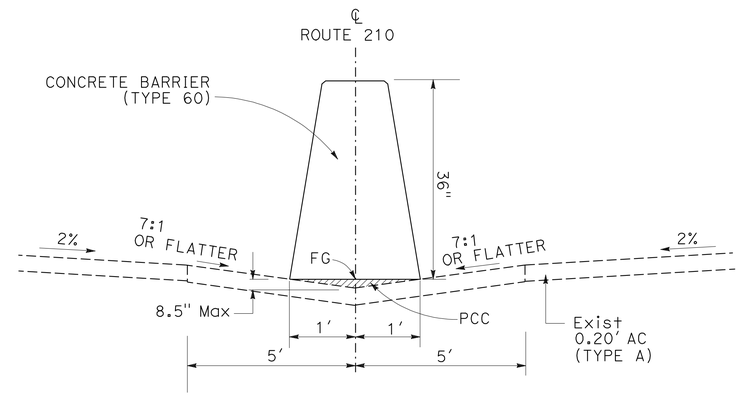

DETAIL A

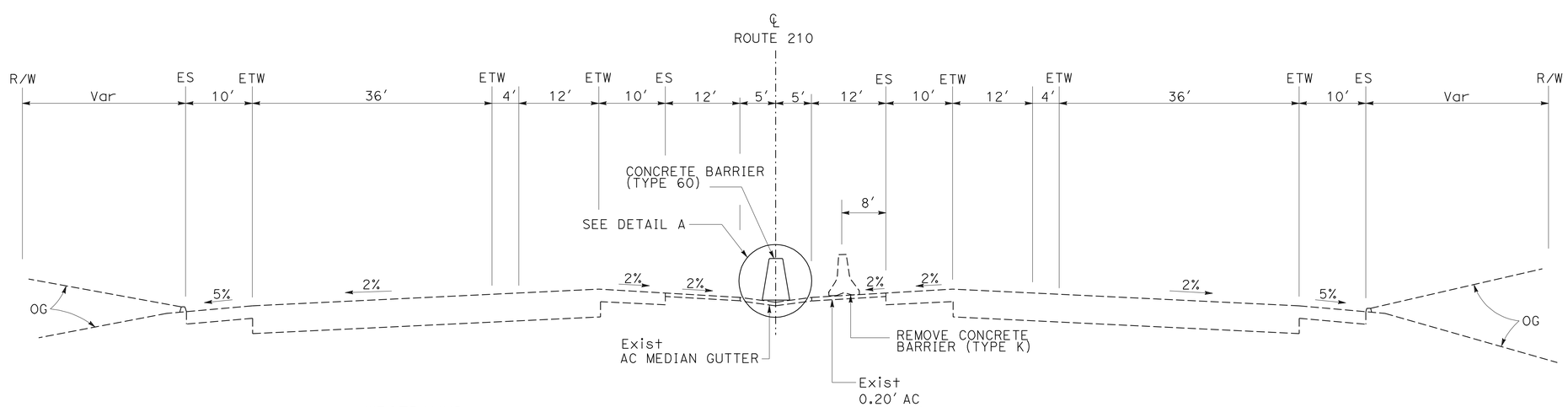

ROUTE 210
STA 30+01 TO STA 134+09
STA 551+02 TO STA 579+43

TYPICAL CROSS SECTIONS
NO SCALE

X-1

STATE OF CALIFORNIA - DEPARTMENT OF TRANSPORTATION
Caltrans
DESIGN

FUNCTIONAL SUPERVISOR: RENEE SASSE
CALCULATED-DESIGNED BY: MARC CHAVOUSHI
CHECKED BY: ANH V. PHAN
REVISED BY
DATE REVISED

LAST REVISION 03-07-12
DATE PLOTTED => 06-APR-2012
TIME PLOTTED => 10:37

Dist	COUNTY	ROUTE	POST MILES TOTAL PROJECT	SHEET No.	TOTAL SHEETS
08	SBd	210	9.9/12.5	3	36

REGISTERED CIVIL ENGINEER 3-7-12 DATE

4-2-12
PLANS APPROVAL DATE

REGISTERED PROFESSIONAL ENGINEER ANH V. PHAN No. 62294 Exp. 9-30-13 CIVIL STATE OF CALIFORNIA

THE STATE OF CALIFORNIA OR ITS OFFICERS OR AGENTS SHALL NOT BE RESPONSIBLE FOR THE ACCURACY OR COMPLETENESS OF SCANNED COPIES OF THIS PLAN SHEET.

NOTES:

1. FOR COMPLETE RIGHT OF WAY AND ACCURATE ACCESS DATA, SEE RIGHT OF WAY RECORD MAPS AT DISTRICT OFFICE.
2. SEE CONSTRUCTION DETAIL SHEETS FOR DETAILS AT BRIDGE COLUMNS, SIGN PEDESTALS, AND DRAINAGE INLETS.

LEGEND:

♦——♦	CONCRETE BARRIER
○——○	TEMPORARY RAILING (TYPE K)
MBGR	METAL BEAM GUARD RAILING
CB	CONCRETE BARRIER
SPI	STEEL PIPE INLET

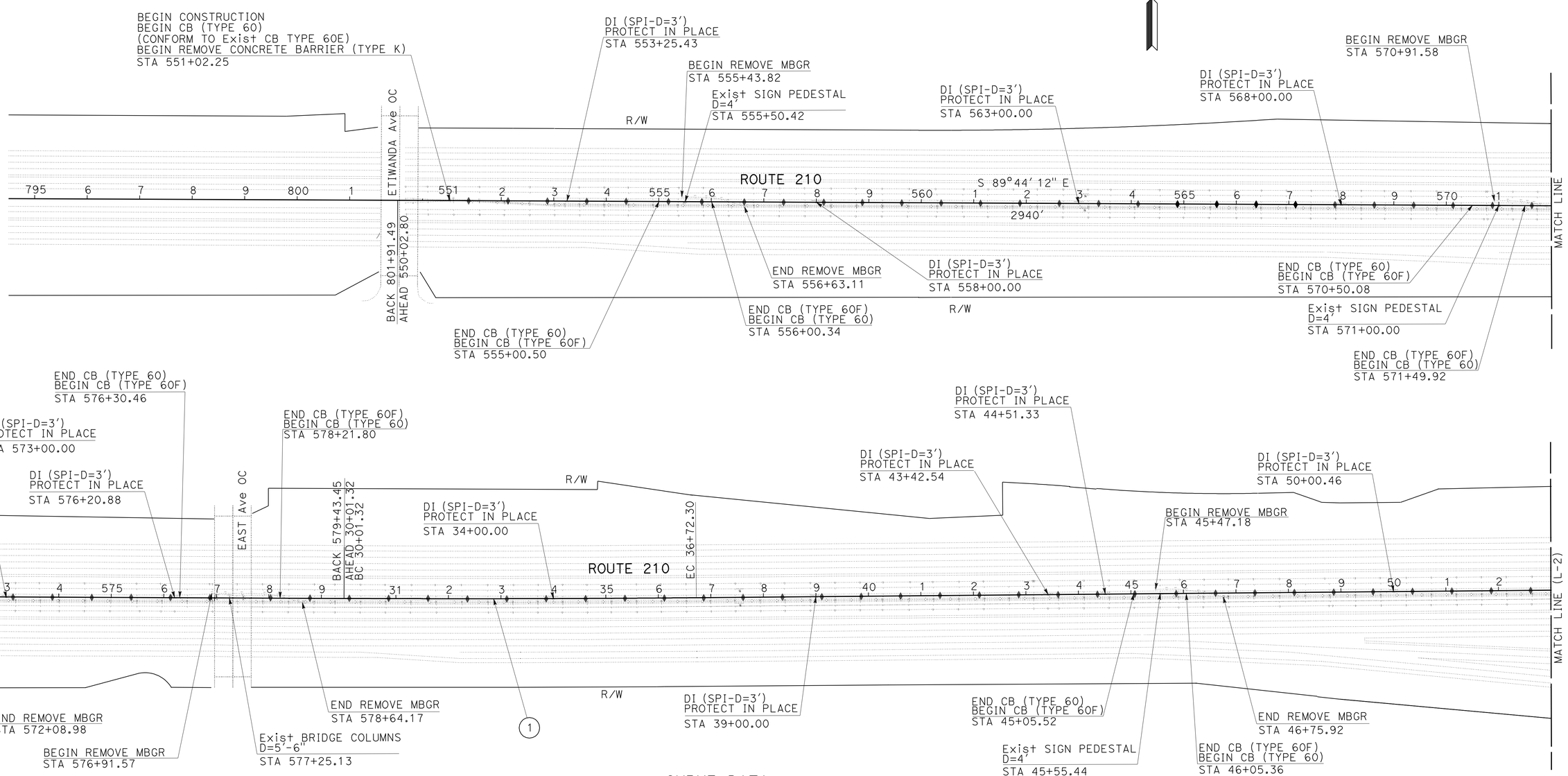

CURVE DATA

No.	R	Δ	T	L
1	50000'	0°46'08"	335.49'	670.98'

LAYOUT

SCALE: 1" = 100'

L-1

REVISED BY	DATE REVISED

CALCULATED-DESIGNED BY: MARC CHAVOUSHI
CHECKED BY: ANH V. PHAN
FUNCTIONAL SUPERVISOR: RENEE SASSE

STATE OF CALIFORNIA - DEPARTMENT OF TRANSPORTATION
Caltrans
DESIGN

LAST REVISION 03-07-12
DATE PLOTTED => 06-APR-2012
TIME PLOTTED => 10:37

Dist	COUNTY	ROUTE	POST MILES TOTAL PROJECT	SHEET No.	TOTAL SHEETS
08	SBd	210	9.9/12.5	4	36

REGISTERED CIVIL ENGINEER 3-7-12 DATE

4-2-12
PLANS APPROVAL DATE

REGISTERED PROFESSIONAL ENGINEER ANH V. PHAN No. 62294 Exp. 9-30-13 CIVIL STATE OF CALIFORNIA

THE STATE OF CALIFORNIA OR ITS OFFICERS OR AGENTS SHALL NOT BE RESPONSIBLE FOR THE ACCURACY OR COMPLETENESS OF SCANNED COPIES OF THIS PLAN SHEET.

NOTE:

FOR ACCURATE RIGHT OF WAY DATA, CONTACT RIGHT OF WAY ENGINEERING AT THE DISTRICT OFFICE.

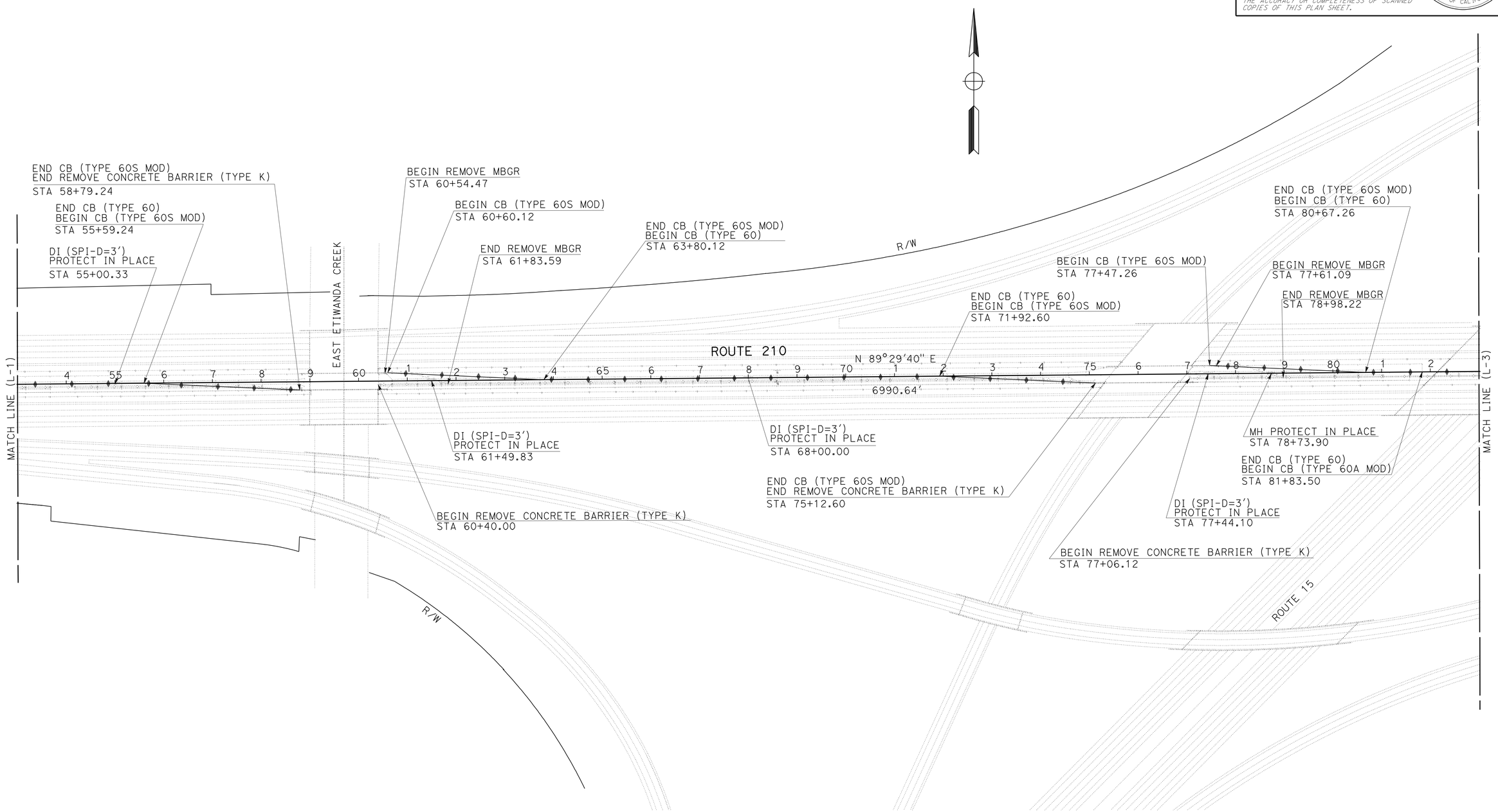

LAYOUT

SCALE: 1" = 100'

L-2

STATE OF CALIFORNIA - DEPARTMENT OF TRANSPORTATION

Caltrans

DESIGN

FUNCTIONAL SUPERVISOR: RENEE SASSE

CALCULATED-DESIGNED BY: MARC CHAVOUSHI

CHECKED BY: ANH V. PHAN

REVISED BY

DATE REVISED

LAST REVISION 03-07-12

DATE PLOTTED => 06-APR-2012

TIME PLOTTED => 10:37

Dist	COUNTY	ROUTE	POST MILES TOTAL PROJECT	SHEET No.	TOTAL SHEETS
08	SBd	210	9.9/12.5	5	36

REGISTERED CIVIL ENGINEER 3-7-12 DATE

4-2-12
PLANS APPROVAL DATE

REGISTERED PROFESSIONAL ENGINEER ANH V. PHAN No. 62294 Exp. 9-30-13 CIVIL STATE OF CALIFORNIA

THE STATE OF CALIFORNIA OR ITS OFFICERS OR AGENTS SHALL NOT BE RESPONSIBLE FOR THE ACCURACY OR COMPLETENESS OF SCANNED COPIES OF THIS PLAN SHEET.

NOTE:

FOR ACCURATE RIGHT OF WAY DATA, CONTACT RIGHT OF WAY ENGINEERING AT THE DISTRICT OFFICE.

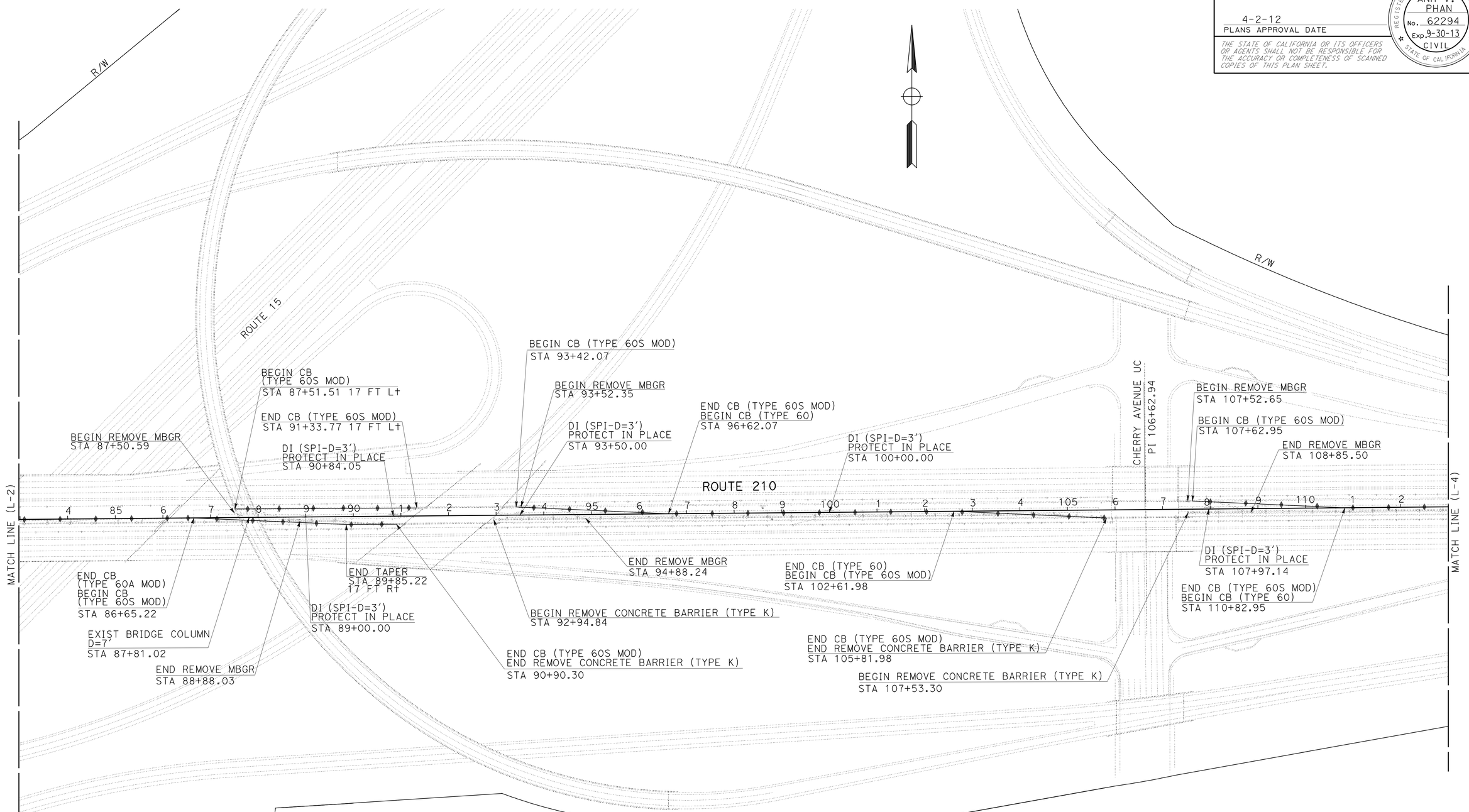

LAYOUT
SCALE: 1" = 100'
L-3

STATE OF CALIFORNIA - DEPARTMENT OF TRANSPORTATION
Caltrans
DESIGN

FUNCTIONAL SUPERVISOR: RENEE SASSE
CALCULATED-DESIGNED BY: MARC CHAVOUSHI
CHECKED BY: ANH V. PHAN
REVISED BY
DATE REVISED

LAST REVISION 03-07-12
DATE PLOTTED => 06-APR-2012
TIME PLOTTED => 10:37

Dist	COUNTY	ROUTE	POST MILES TOTAL PROJECT	SHEET No.	TOTAL SHEETS
08	SBd	210	9.9/12.5	6	36

REGISTERED CIVIL ENGINEER 3-7-12 DATE

4-2-12
PLANS APPROVAL DATE

REGISTERED PROFESSIONAL ENGINEER ANH V. PHAN No. 62294 Exp. 9-30-13 CIVIL STATE OF CALIFORNIA

THE STATE OF CALIFORNIA OR ITS OFFICERS OR AGENTS SHALL NOT BE RESPONSIBLE FOR THE ACCURACY OR COMPLETENESS OF SCANNED COPIES OF THIS PLAN SHEET.

NOTE:

FOR ACCURATE RIGHT OF WAY DATA, CONTACT RIGHT OF WAY ENGINEERING AT THE DISTRICT OFFICE.

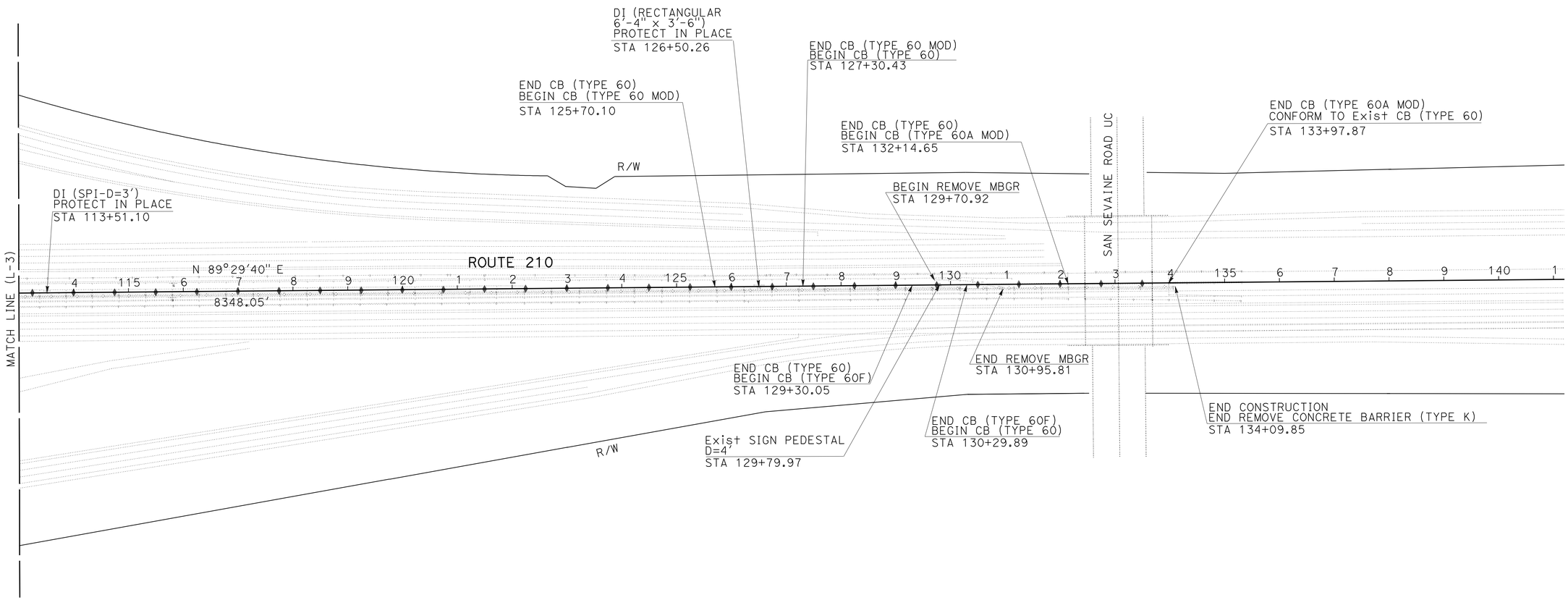

LAYOUT

SCALE: 1" = 100'

L-4

STATE OF CALIFORNIA - DEPARTMENT OF TRANSPORTATION

DESIGN

FUNCTIONAL SUPERVISOR: RENEE SASSE

CALCULATED-DESIGNED BY: MARC CHAVOUSHI

CHECKED BY: ANH V. PHAN

REVISED BY

DATE REVISED

LAST REVISION 03-07-12 | DATE PLOTTED => 06-APR-2012 | TIME PLOTTED => 10:37

Dist	COUNTY	ROUTE	POST MILES TOTAL PROJECT	SHEET No.	TOTAL SHEETS
08	SBd	210	9.9/12.5	7	36

REGISTERED CIVIL ENGINEER 3-7-12 DATE

4-2-12
PLANS APPROVAL DATE

REGISTERED PROFESSIONAL ENGINEER ANH V. PHAN No. 62294 Exp. 9-30-13 CIVIL STATE OF CALIFORNIA

THE STATE OF CALIFORNIA OR ITS OFFICERS OR AGENTS SHALL NOT BE RESPONSIBLE FOR THE ACCURACY OR COMPLETENESS OF SCANNED COPIES OF THIS PLAN SHEET.

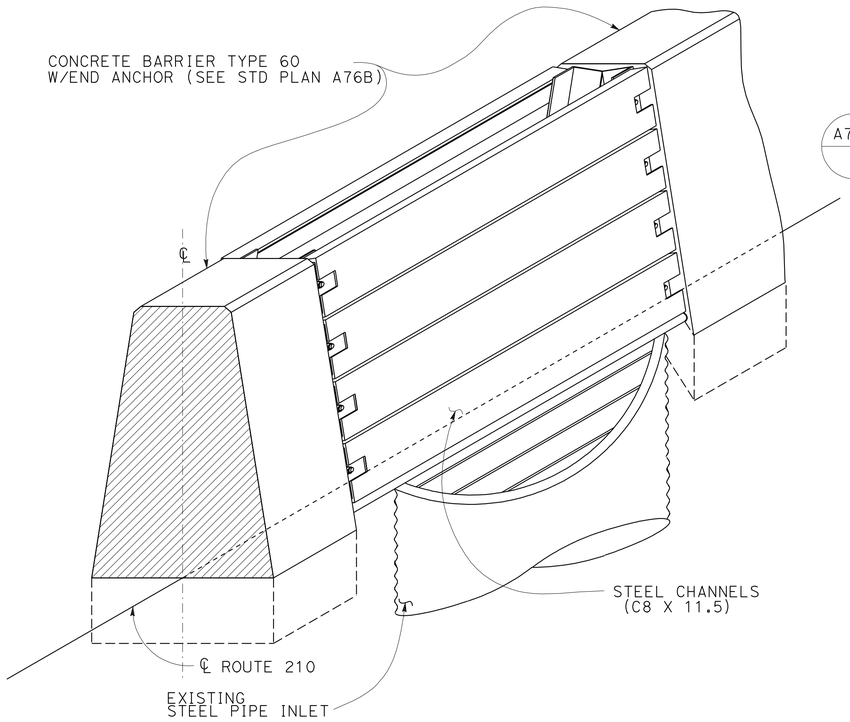

PICTORIAL VIEW

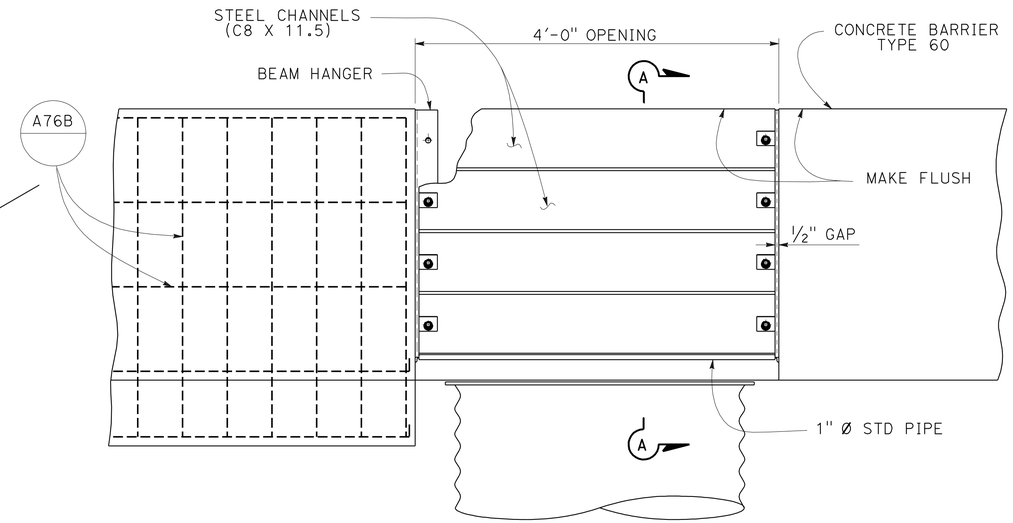

ELEVATION

NOTES:

1. ALL BEAMS, HANGERS, AND CONNECTIONS ARE TO CONFORM TO AISC STANDARD SHAPES AND SIZES.
2. ALL PARTS SHALL BE GALVANIZED AFTER FABRICATION.
3. STRICT ADHERANCE TO QUALITY DURING CONSTRUCTION IS REQUIRED TO ASSURE THAT FLUSH FIT REQUIREMENTS ARE MET.
4. FOR DETAILS NOT SHOWN SEE STANDARD PLAN A76A.

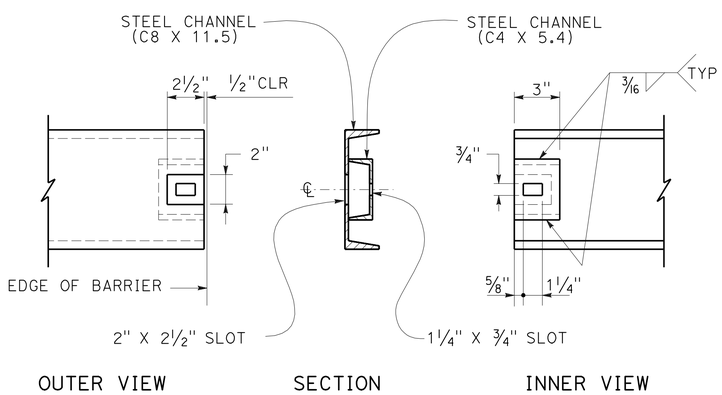

SLOT DETAIL

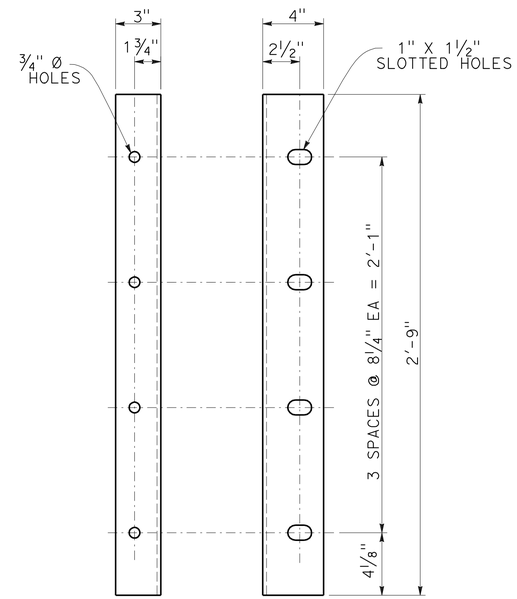

BEAM HANGER ANGLES
(L4 X 3 X 1/4)

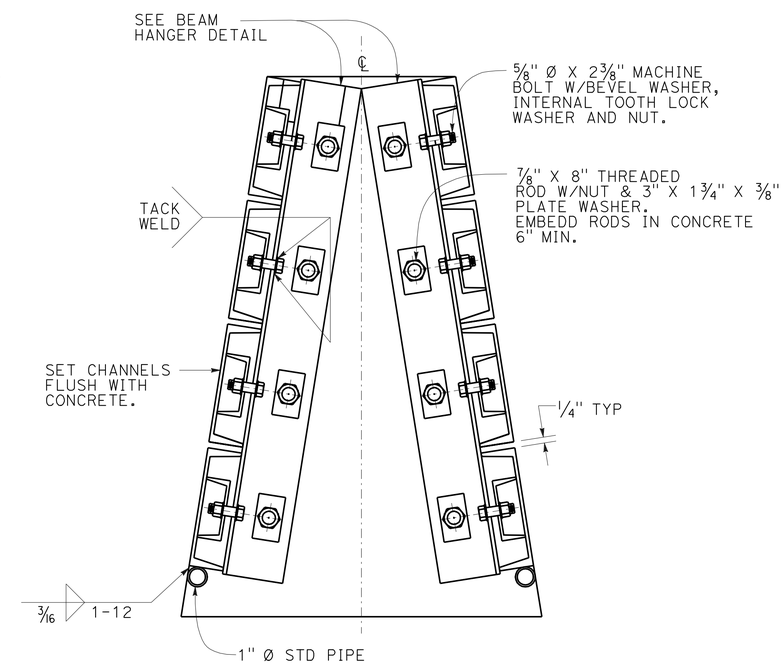

SECTION A-A

STEEL CHANNEL CLOSURE DETAIL AT CONCRETE BARRIER TYPE 60

CONSTRUCTION DETAILS
NO SCALE
C-1

STATE OF CALIFORNIA - DEPARTMENT OF TRANSPORTATION
Caltrans
DESIGN
FUNCTIONAL SUPERVISOR: RENEE SASSE
CALCULATED-DESIGNED BY: MARC CHAVOUSHI
CHECKED BY: ANH V. PHAN
REVISED BY
DATE REVISED

LAST REVISION 03-07-12 | DATE PLOTTED => 06-APR-2012 | TIME PLOTTED => 10:37

Dist	COUNTY	ROUTE	POST MILES TOTAL PROJECT	SHEET No.	TOTAL SHEETS
08	SBd	210	9.9/12.5	8	36

REGISTERED CIVIL ENGINEER 3-7-12 DATE

4-2-12
PLANS APPROVAL DATE

REGISTERED PROFESSIONAL ENGINEER ANH V. PHAN No. 62294 Exp. 9-30-13 CIVIL STATE OF CALIFORNIA

THE STATE OF CALIFORNIA OR ITS OFFICERS OR AGENTS SHALL NOT BE RESPONSIBLE FOR THE ACCURACY OR COMPLETENESS OF SCANNED COPIES OF THIS PLAN SHEET.

NOTE:
FOR CONCRETE BARRIER TYPE 60 OR 60S DETAILS, SEE JULY 2006 STD PLANS A76A, A76B, A76H, AND A76G.

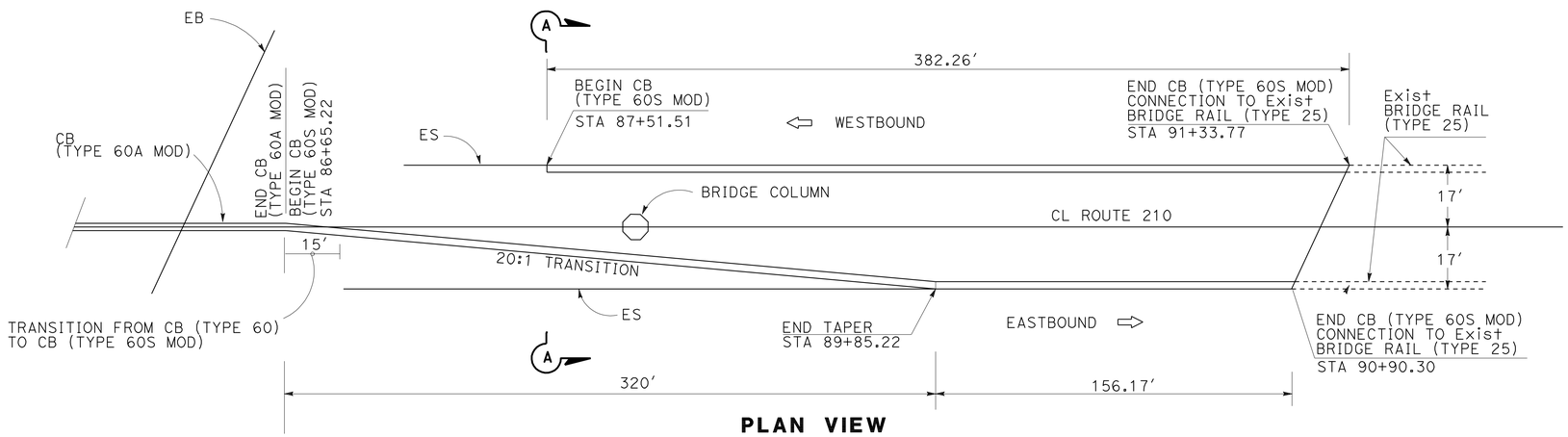

PLAN VIEW

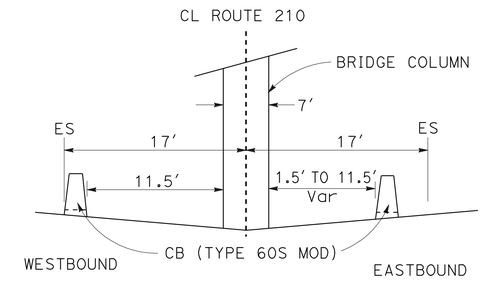

SECTION A-A

CONCRETE BARRIER TYPE 60S (MOD) AT ROUTE 15/210 SEPARATION AND CONNECTION TO EXISTING BRIDGE RAILING TYPE 25

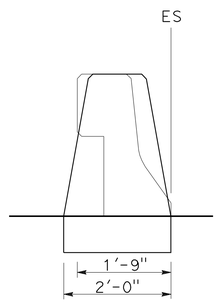

SECTION B-B

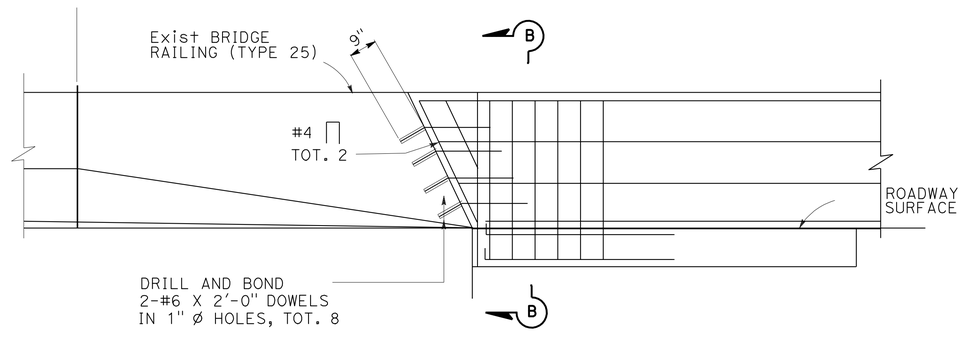

ELEVATION

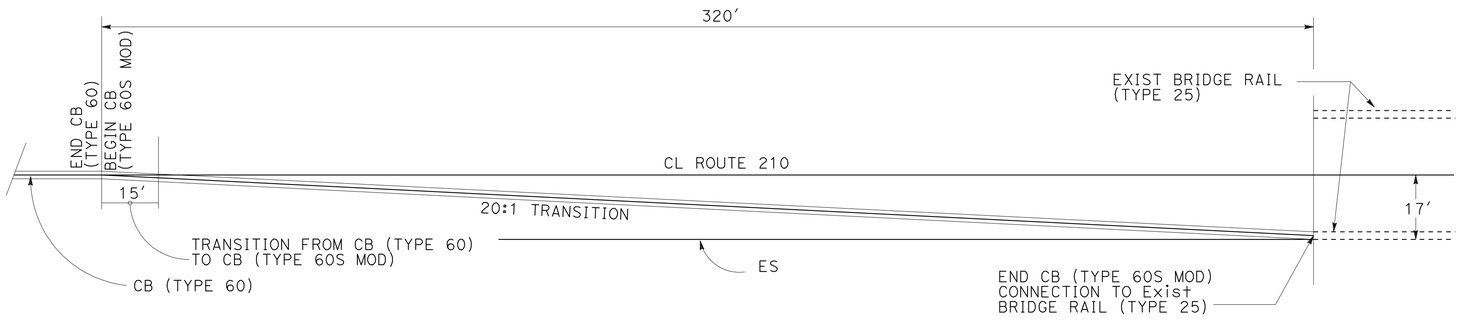

PLAN VIEW

CONCRETE BARRIER TYPE 60S (MOD) TO EXISTING BRIDGE RAILING TYPE 25

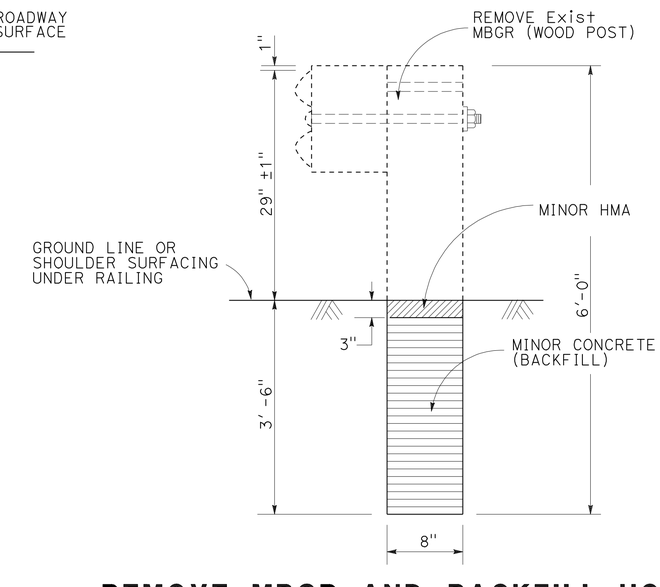

REMOVE MBGR AND BACKFILL HOLE

CONSTRUCTION DETAILS
NO SCALE

C-2

STATE OF CALIFORNIA - DEPARTMENT OF TRANSPORTATION
Caltrans® DESIGN
FUNCTIONAL SUPERVISOR: RENEE SASSE
CALCULATED-DESIGNED BY: MARC CHAVOUSHI
CHECKED BY: ANH V. PHAN
REVISED BY
DATE REVISED

LAST REVISION 03-07-12
DATE PLOTTED => 06-APR-2012
TIME PLOTTED => 10:37

Dist	COUNTY	ROUTE	POST MILES TOTAL PROJECT	SHEET No.	TOTAL SHEETS
08	SBd	210	9.9/12.5	9	36

REGISTERED CIVIL ENGINEER 3-7-12 DATE

4-2-12
PLANS APPROVAL DATE

REGISTERED PROFESSIONAL ENGINEER ANH V. PHAN No. 62294 Exp. 9-30-13 CIVIL STATE OF CALIFORNIA

THE STATE OF CALIFORNIA OR ITS OFFICERS OR AGENTS SHALL NOT BE RESPONSIBLE FOR THE ACCURACY OR COMPLETENESS OF SCANNED COPIES OF THIS PLAN SHEET.

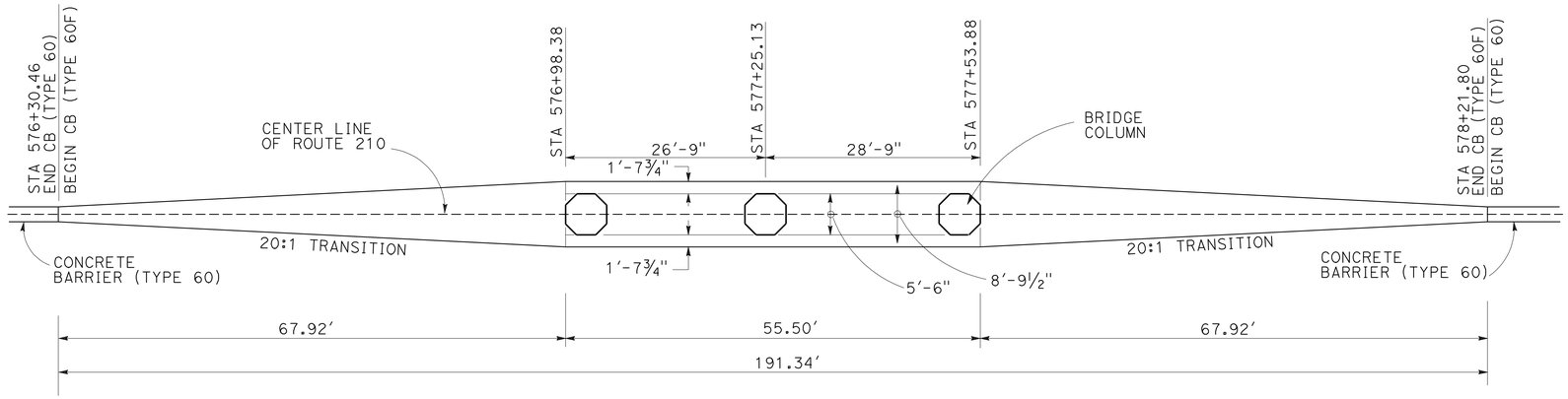

CONCRETE BARRIER TYPE 60F AT BRIDGE COLUMNS OF EAST AVENUE OC

STA 576+30.46 TO STA 578+21.80

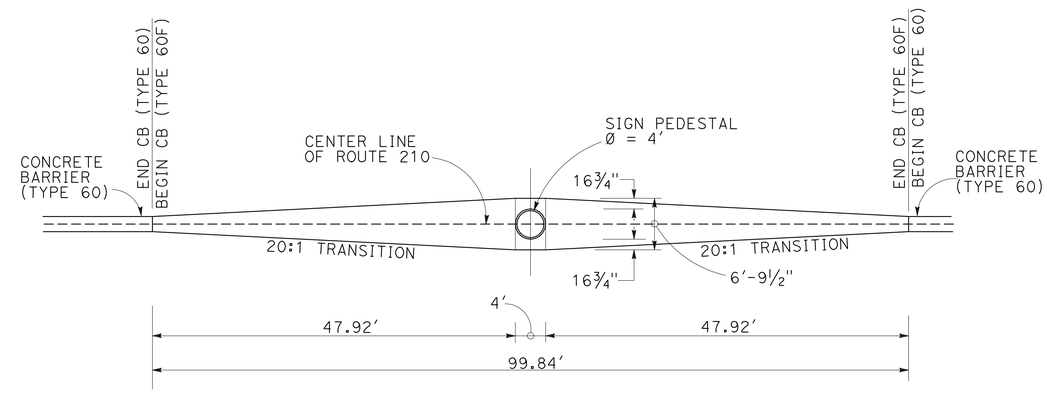

CONCRETE BARRIER TYPE 60F AT SIGN PEDESTAL

STA 129+30.05 TO STA 130+29.89
STA 45+05.52 TO STA 46+05.36
STA 570+50.08 TO STA 571+49.92
STA 555+00.50 TO STA 556+00.34

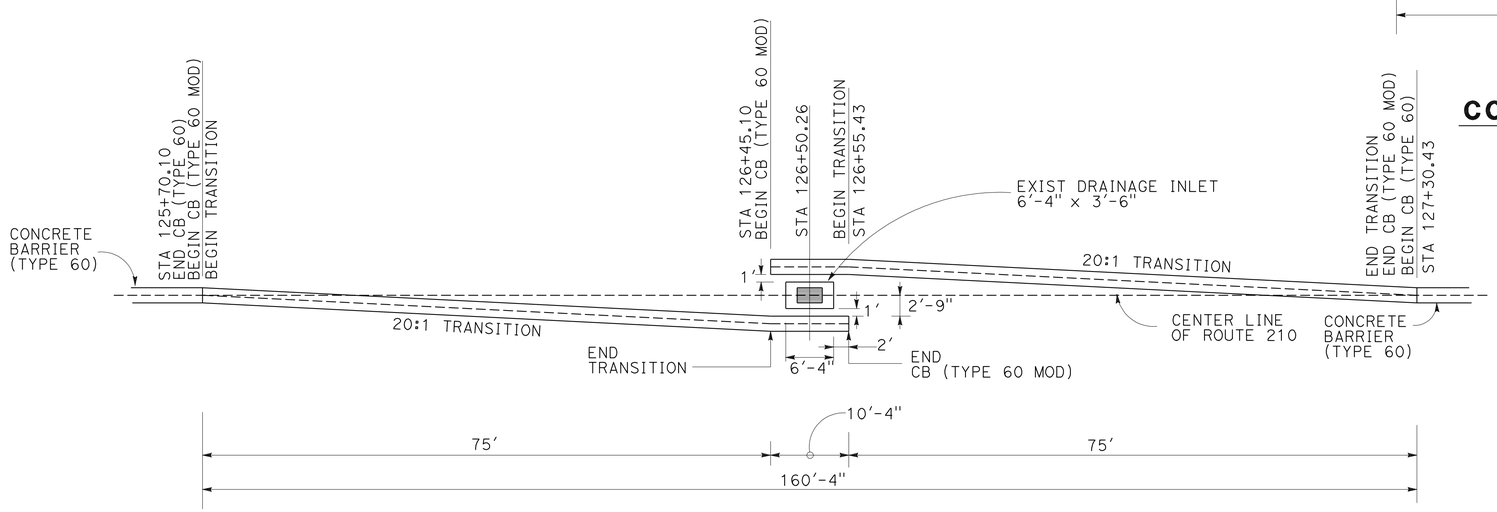

CONCRETE BARRIER TYPE 60 MOD AT DRAINAGE INLET (RECTANGULAR)

STA 125+70.10 TO STA 127+30.43

CONSTRUCTION DETAILS

NO SCALE

C-3

STATE OF CALIFORNIA - DEPARTMENT OF TRANSPORTATION
Caltrans
DESIGN

FUNCTIONAL SUPERVISOR: RENEE SASSE
CALCULATED-DESIGNED BY: MARC CHAVOUSHI
CHECKED BY: ANH V. PHAN
REVISED BY
DATE REVISED

LAST REVISION 03-07-12
DATE PLOTTED => 06-APR-2012
TIME PLOTTED => 10:38

Dist	COUNTY	ROUTE	POST MILES TOTAL PROJECT	SHEET No.	TOTAL SHEETS
08	SBd	210	9.9/12.5	10	36

REGISTERED CIVIL ENGINEER 3-7-12 DATE

4-2-12
PLANS APPROVAL DATE

REGISTERED PROFESSIONAL ENGINEER ANH V. PHAN No. 62294 Exp. 9-30-13 CIVIL STATE OF CALIFORNIA

THE STATE OF CALIFORNIA OR ITS OFFICERS OR AGENTS SHALL NOT BE RESPONSIBLE FOR THE ACCURACY OR COMPLETENESS OF SCANNED COPIES OF THIS PLAN SHEET.

NOTES:

1. FOR CONCRETE BARRIER TYPE 60, 60A, OR 60S DETAILS NOT SHOWN, SEE MAY 2006 STD PLANS A76A, A76B, A76H, AND A76G.
2. SEE LAYOUT SHEETS FOR CONCRETE BARRIER TYPE 60A MOD OR 60S MOD LOCATIONS.
3. TRANSVERSE EXPANSION JOINTS IN CONCRETE BARRIER SHALL MATCH ALL DECK JOINTS.
4. MINOR ADJUSTMENTS MAY BE MADE IN DOWEL SPACING TO CLEAR MAIN REINFORCEMENT.

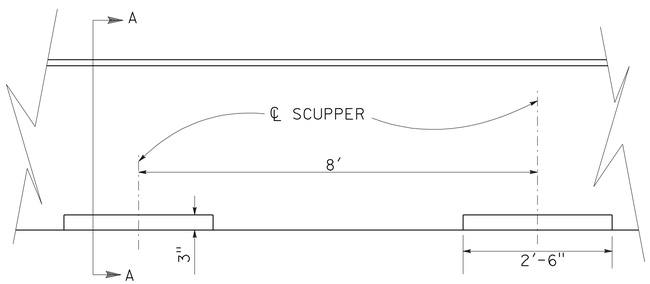

SCUPPER DETAIL

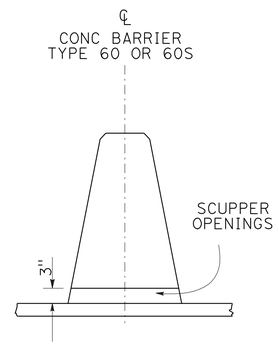

SECTION A-A

CONCRETE BARRIER TYPE 60 MOD AND 60S MOD

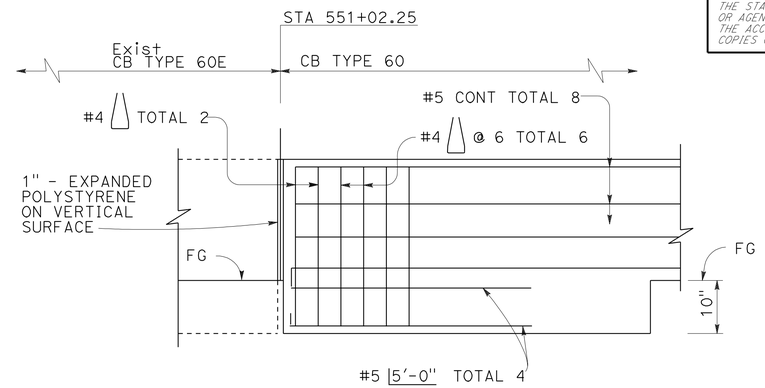

CONCRETE BARRIER TYPE 60
CONNECTION TO EXIST CONCRETE BARRIER TYPE 60E

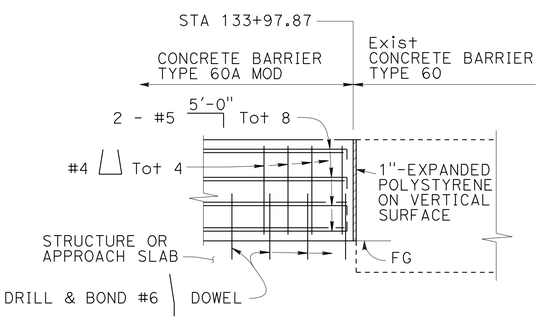

CONCRETE BARRIER TYPE 60A MOD
CONNECTION TO EXIST CONCRETE BARRIER TYPE 60

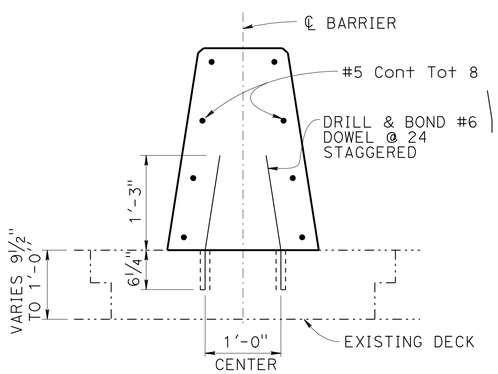

TYPE 60A MOD

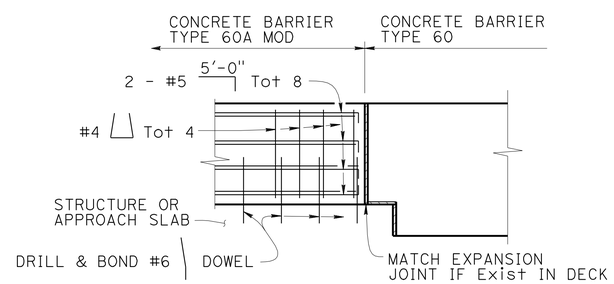

ELEVATION

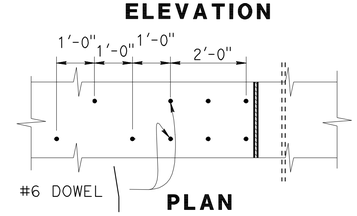

PLAN

CONNECTION TO STRUCTURE

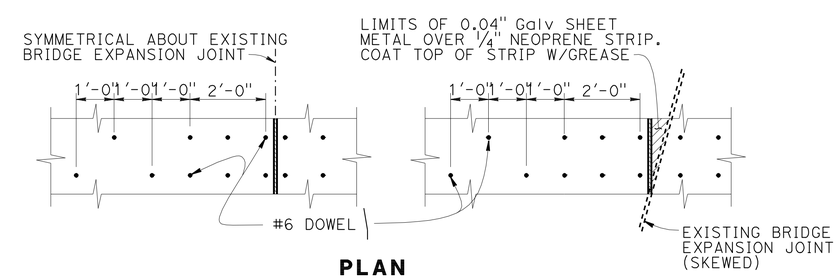

PLAN

DOWEL SPACING AT EXPANSION JOINT

CONCRETE BARRIER TYPE 60A MOD ON BRIDGE DECK
AT 15/210 SEPARATION AND SAN SEVAINE RD UC

CONSTRUCTION DETAILS
NO SCALE

C-4

STATE OF CALIFORNIA - DEPARTMENT OF TRANSPORTATION
Caltrans®
DESIGN
FUNCTIONAL SUPERVISOR: RENEE SASSE
CALCULATED-DESIGNED BY: MARC CHAVOUSHI
CHECKED BY: ANH V. PHAN
REVISED BY
DATE REVISED

LAST REVISION 03-07-12 | DATE PLOTTED => 06-APR-2012 | TIME PLOTTED => 10:38

Dist	COUNTY	ROUTE	POST MILES TOTAL PROJECT	SHEET No.	TOTAL SHEETS
08	SBd	210	9.9/12.5	11	36

REGISTERED CIVIL ENGINEER 3-7-12 DATE

4-2-12
PLANS APPROVAL DATE

REGISTERED PROFESSIONAL ENGINEER ANH V. PHAN No. 62294 Exp. 9-30-13 CIVIL STATE OF CALIFORNIA

THE STATE OF CALIFORNIA OR ITS OFFICERS OR AGENTS SHALL NOT BE RESPONSIBLE FOR THE ACCURACY OR COMPLETENESS OF SCANNED COPIES OF THIS PLAN SHEET.

NOTES:

1. LOCATIONS OF UTILITY FACILITIES SHOWN ON THESE PLANS ARE APPROXIMATE AND SHALL BE VERIFIED BY THE CONTRACTOR PRIOR TO CONSTRUCTION.
2. UTILITY OWNERSHIP:
   AT&T DISTRIBUTION, COUNTY VALLEY WATER DISTRICT, CITY OF FONTANA, FONTANA WATER COMPANY, MCI, MWD, SCG, SGVMWD, TIME WARNER CABLE, CHARTER COMM, CITY OF RANCHO CUCAMONGA, SCE, VERIZON

LEGEND:

Exist WATER	—w— —w—
Exist NATURAL GAS	—g— —g—
Exist ELECTRICAL	—e— —e—
Exist FIBER OPTIC	—fo— —fo—
Exist TELEPHONE	—t— —t—
Exist TELEVISION	—tv— —tv—

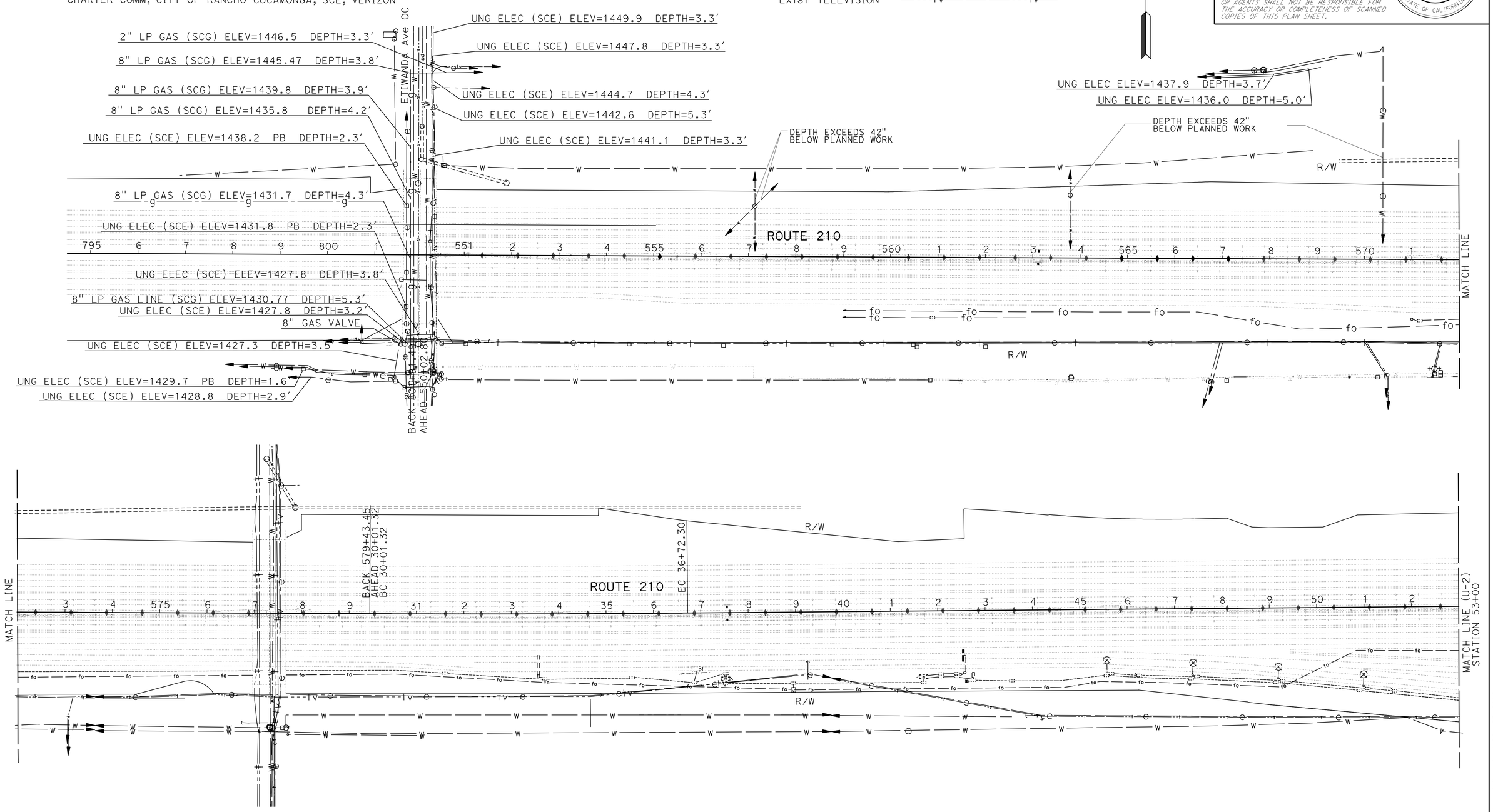

NOTE:

FOR ACCURATE RIGHT OF WAY DATA, CONTACT RIGHT OF WAY ENGINEERING AT THE DISTRICT OFFICE.

APPROVED FOR UTILITY INFORMATION ONLY

UTILITY PLAN

SCALE: 1" = 100'

U-1

STATE OF CALIFORNIA - DEPARTMENT OF TRANSPORTATION

Caltrans

DESIGN

FUNCTIONAL SUPERVISOR: RENEE SASSE

CALCULATED-DESIGNED BY: MARC CHAVOUSHI

CHECKED BY: ANH V. PHAN

REVISED BY

DATE REVISED

LAST REVISION 03-07-12

DATE PLOTTED => 06-APR-2012

TIME PLOTTED => 10:38

BORDER LAST REVISED 7/2/2010

USERNAME => s123631

DGN FILE => 80n410ka001.dgn

RELATIVE BORDER SCALE IS IN INCHES 0 1 2 3

UNIT 2229

PROJECT NUMBER & PHASE 08000005291

Dist	COUNTY	ROUTE	POST MILES TOTAL PROJECT	SHEET No.	TOTAL SHEETS
08	SBd	210	9.9/12.5	12	36

REGISTERED CIVIL ENGINEER 3-7-12 DATE

4-2-12
PLANS APPROVAL DATE

REGISTERED PROFESSIONAL ENGINEER
ANH V. PHAN
No. 62294
Exp. 9-30-13
CIVIL
STATE OF CALIFORNIA

THE STATE OF CALIFORNIA OR ITS OFFICERS OR AGENTS SHALL NOT BE RESPONSIBLE FOR THE ACCURACY OR COMPLETENESS OF SCANNED COPIES OF THIS PLAN SHEET.

NOTE:

FOR ACCURATE RIGHT OF WAY DATA, CONTACT RIGHT OF WAY ENGINEERING AT THE DISTRICT OFFICE.

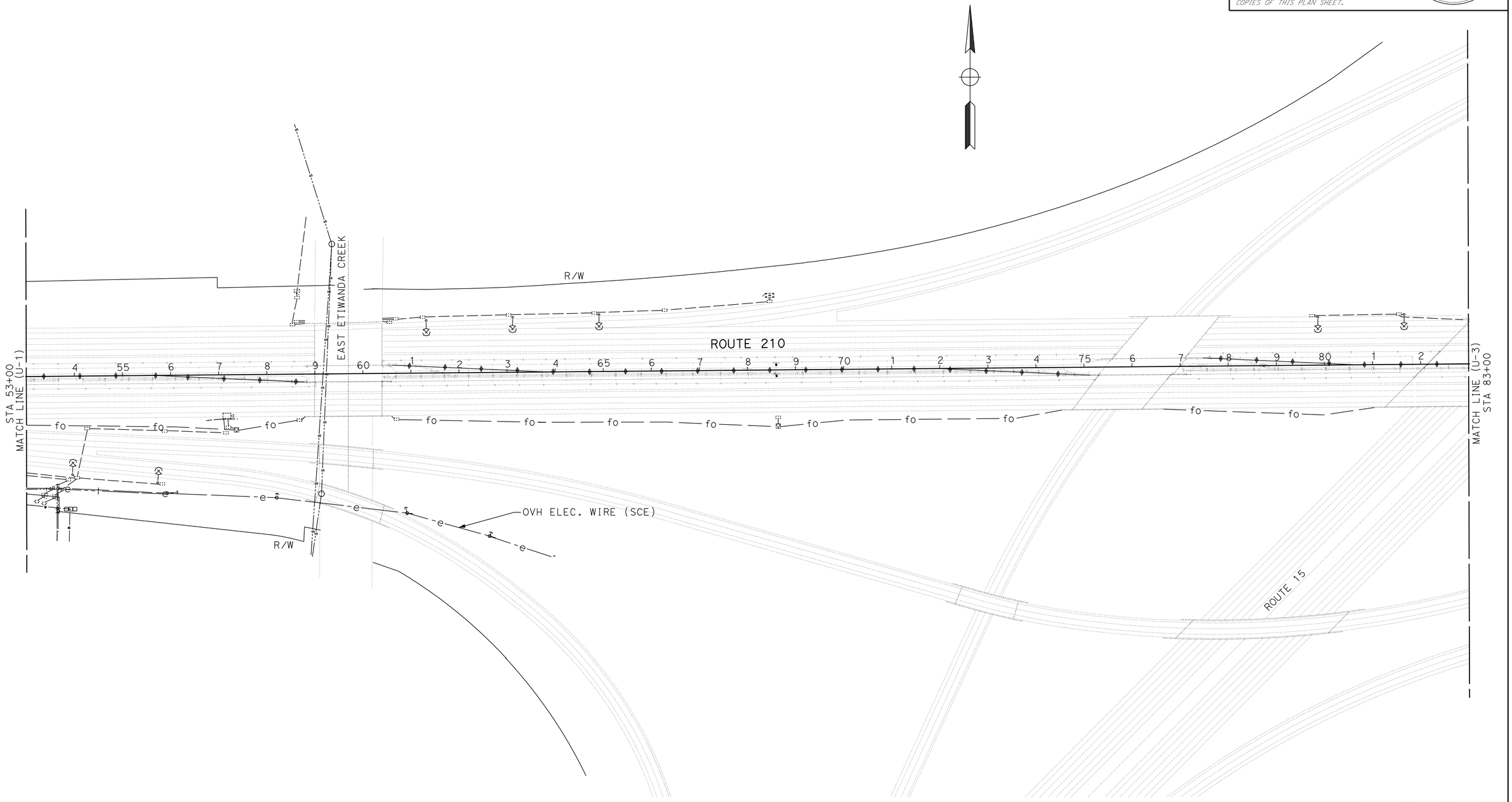

UTILITY PLAN

SCALE: 1" = 100'

U-2

APPROVED FOR UTILITY INFORMATION ONLY

STATE OF CALIFORNIA - DEPARTMENT OF TRANSPORTATION

Caltrans

DESIGN

FUNCTIONAL SUPERVISOR: RENEE SASSE

CALCULATED-DESIGNED BY: MARC CHAVOUSHI

CHECKED BY: ANH V. PHAN

REVISED BY

DATE REVISED

LAST REVISION 03-07-12

DATE PLOTTED => 06-APR-2012

TIME PLOTTED => 10:38

BORDER LAST REVISED 7/2/2010

USERNAME => s123631

DGN FILE => 80n410ka002.dgn

RELATIVE BORDER SCALE IS IN INCHES 0 1 2 3

UNIT 2229

PROJECT NUMBER & PHASE 08000005291

Dist	COUNTY	ROUTE	POST MILES TOTAL PROJECT	SHEET No.	TOTAL SHEETS
08	SBd	210	9.9/12.5	13	36

REGISTERED CIVIL ENGINEER 3-7-12 DATE

4-2-12
PLANS APPROVAL DATE

REGISTERED PROFESSIONAL ENGINEER
ANH V. PHAN
No. 62294
Exp. 9-30-13
CIVIL
STATE OF CALIFORNIA

THE STATE OF CALIFORNIA OR ITS OFFICERS OR AGENTS SHALL NOT BE RESPONSIBLE FOR THE ACCURACY OR COMPLETENESS OF SCANNED COPIES OF THIS PLAN SHEET.

NOTE:

FOR ACCURATE RIGHT OF WAY DATA, CONTACT RIGHT OF WAY ENGINEERING AT THE DISTRICT OFFICE.

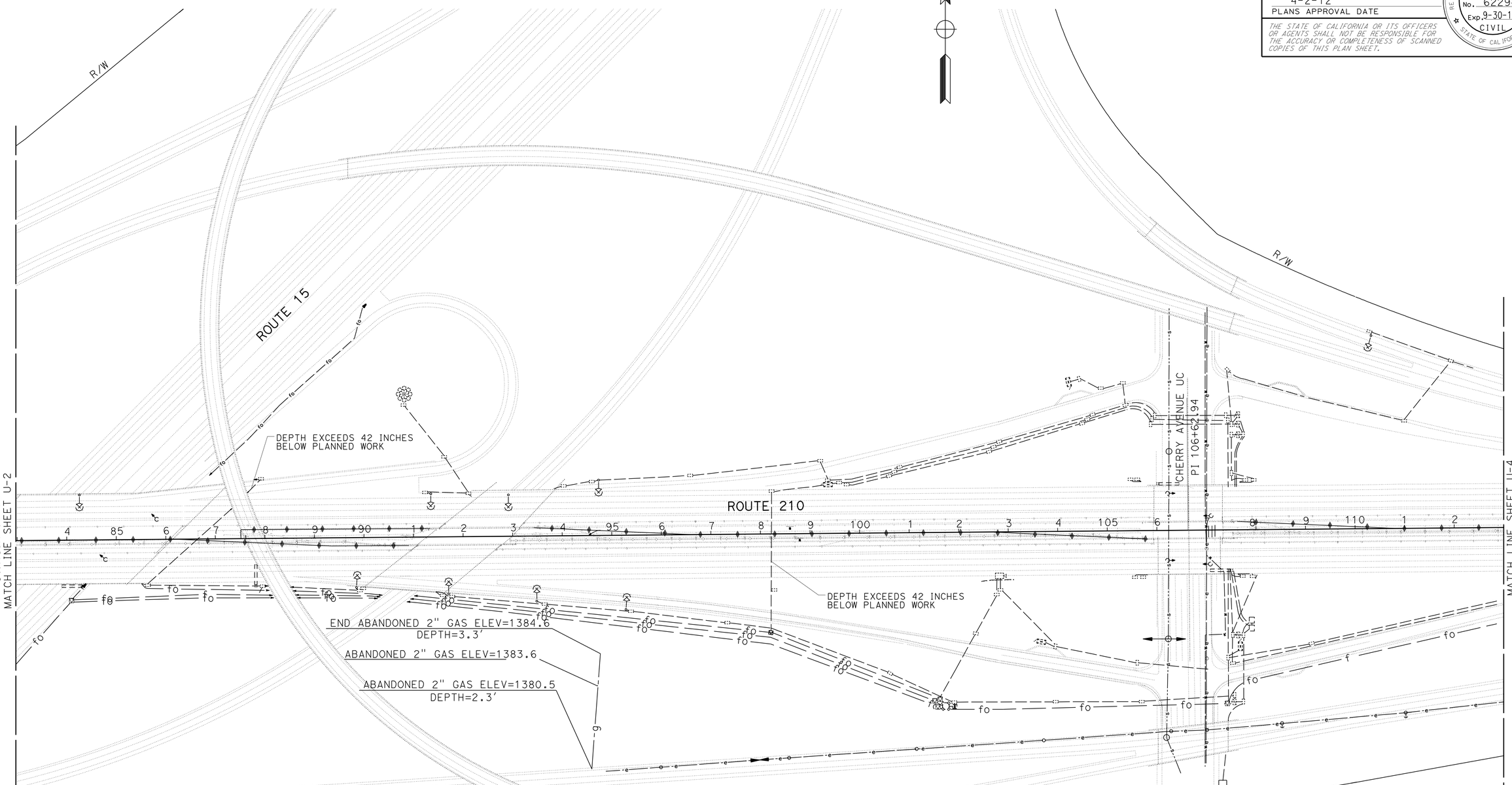

APPROVED FOR UTILITY INFORMATION ONLY

UTILITY PLAN

SCALE: 1" = 100'

U-3

STATE OF CALIFORNIA - DEPARTMENT OF TRANSPORTATION

Caltrans

DESIGN

FUNCTIONAL SUPERVISOR: RENEE SASSE

CALCULATED-DESIGNED BY: MARC CHAVOUSHI

CHECKED BY: ANH V. PHAN

REVISED BY

DATE REVISED

LAST REVISION 03-07-12

DATE PLOTTED => 06-APR-2012

TIME PLOTTED => 10:38

Dist	COUNTY	ROUTE	POST MILES TOTAL PROJECT	SHEET No.	TOTAL SHEETS
08	SBd	210	9.9/12.5	14	36

REGISTERED CIVIL ENGINEER 3-7-12 DATE

4-2-12
PLANS APPROVAL DATE

REGISTERED PROFESSIONAL ENGINEER ANH V. PHAN No. 62294 Exp. 9-30-13 CIVIL STATE OF CALIFORNIA

THE STATE OF CALIFORNIA OR ITS OFFICERS OR AGENTS SHALL NOT BE RESPONSIBLE FOR THE ACCURACY OR COMPLETENESS OF SCANNED COPIES OF THIS PLAN SHEET.

NOTE:

FOR ACCURATE RIGHT OF WAY DATA, CONTACT
RIGHT OF WAY ENGINEERING AT THE DISTRICT OFFICE.

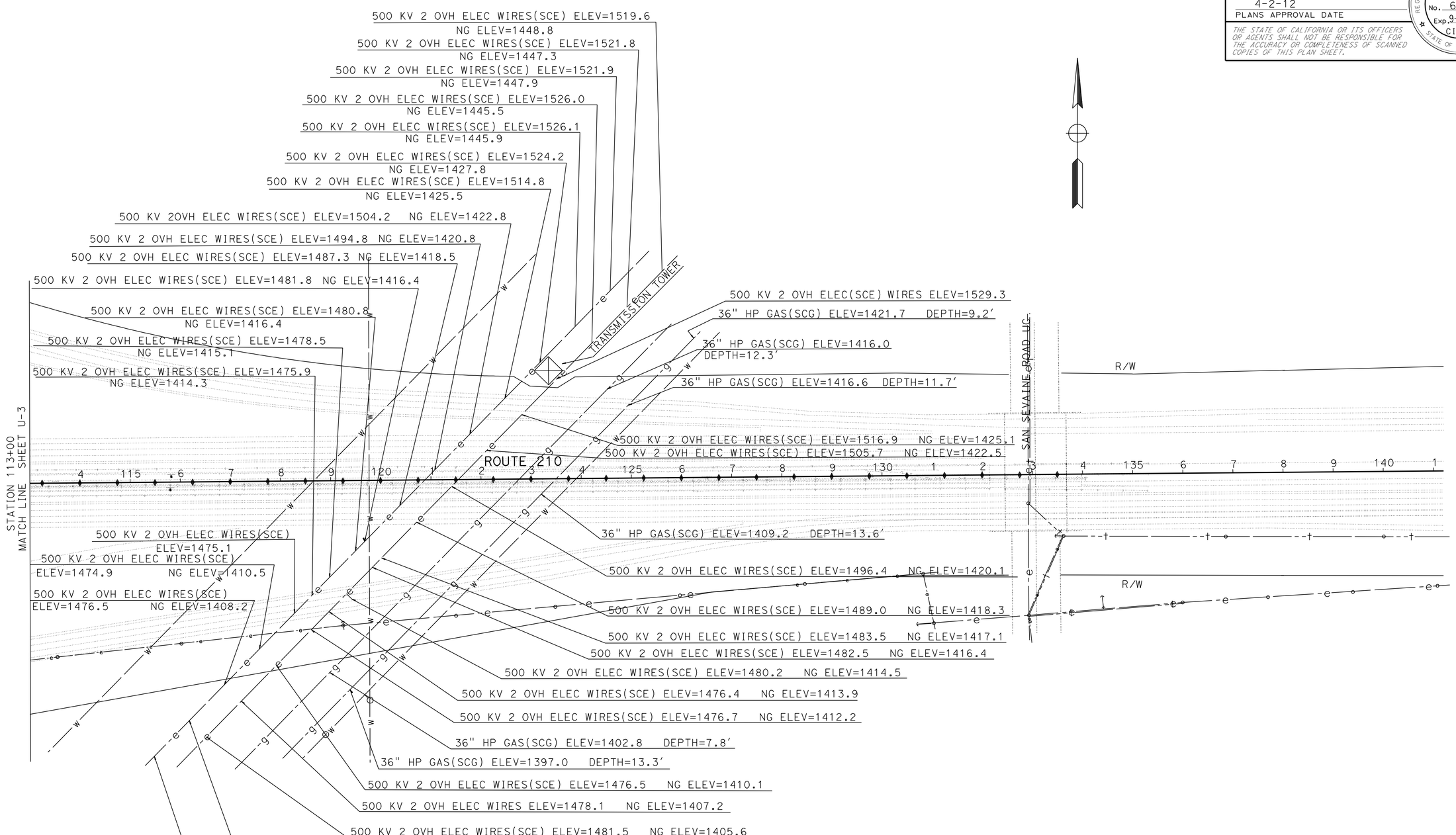

UTILITY PLAN

SCALE: 1" = 100'

U-4

APPROVED FOR UTILITY INFORMATION ONLY

STATE OF CALIFORNIA - DEPARTMENT OF TRANSPORTATION
Caltrans
DESIGN

FUNCTIONAL SUPERVISOR: RENEE SASSE
CALCULATED-DESIGNED BY: MARC CHAVOUSHI
CHECKED BY: ANH V. PHAN
REVISED BY
DATE REVISED

LAST REVISION 03-07-12
DATE PLOTTED => 06-APR-2012
TIME PLOTTED => 10:38

Dist	COUNTY	ROUTE	POST MILES TOTAL PROJECT	SHEET No.	TOTAL SHEETS
08	SBd	210	9.9/12.5	15	36

Thanh Trinh 3-7-12
REGISTERED CIVIL ENGINEER DATE

4-2-12
PLANS APPROVAL DATE

REGISTERED PROFESSIONAL ENGINEER T. TRINH No. C41189 Exp. 3-31-13 CIVIL STATE OF CALIFORNIA

THE STATE OF CALIFORNIA OR ITS OFFICERS OR AGENTS SHALL NOT BE RESPONSIBLE FOR THE ACCURACY OR COMPLETENESS OF SCANNED COPIES OF THIS PLAN SHEET.

LEGEND:

- WORK AREA
- CONSTRUCTION AREA SIGN (ONE POST)
- CONSTRUCTION AREA SIGN (TWO POST)
- (X) CONSTRUCTION AREA SIGN NUMBER

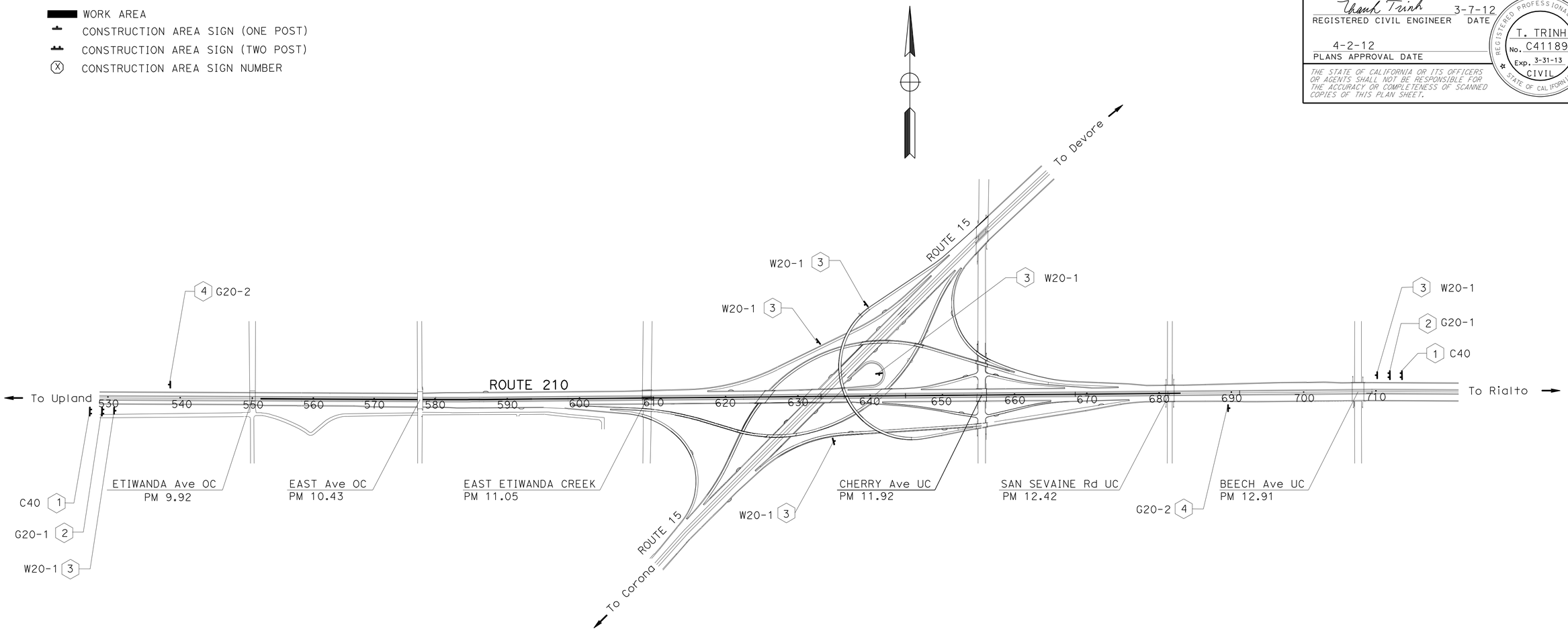

CONSTRUCTION AREA SIGNS

SHEET No.	SIGN No.	SIGN CODE FEDERAL	SIGN CODE CALIFORNIA	PANEL SIZE	No. OF POST AND SIZE	No. OF SIGN EA	SIGN MESSAGE
CS-1	1		C40	108" x 42"	2-6"X6"	2	DOUBLE FINE
	2	G20-1		36" x 18"	1-4"X4"	2	ROAD WORK NEXT 3 MILES
	3	W20-1		48" x 48"	1-6"X6"	6	ROAD WORK AHEAD
	4	G20-2		36" x 18"	1-4"X4"	2	END ROAD WORK
TH-1 & TH-5	5	W21-5		48" x 48"	1-6"X6"	2	SHOULDER WORK
	6	W21-5bL		48" x 48"	1-6"X6"	2	LEFT SHOULDER CLOSED 1000 FT
	7	W7-3a	C30A	48" x 48" / 24" x 18"	1-6"X6"	2	SHOULDER CLOSED / NEXT 3 MILES
	8		C11(MODIFIED 1)	90" x 48"	2-6"X6"	2	CONSTRUCTION EQUIPMENT ACCESS AHEAD
	9		C11(MODIFIED 2)	90" x 48"	2-6"X6"	2	CONSTRUCTION EQUIPMENT ACCESS

PORTABLE CHANGEABLE MESSAGE SIGN

EA
2

APPROVED FOR CONSTRUCTION AREA SIGN WORK ONLY

CONSTRUCTION AREA SIGNS
NO SCALE

CS-1

REVISED BY | DATE REVISED
KEVIN NGUYEN | THANH TRINH
CALCULATED-DESIGNED BY | CHECKED BY
FUNCTIONAL SUPERVISOR
BILL WASSER

STATE OF CALIFORNIA - DEPARTMENT OF TRANSPORTATION
Caltrans® TRAFFIC DESIGN

LAST REVISION 03-00-00
DATE PLOTTED => 06-APR-2012
TIME PLOTTED => 10:38

Dist	COUNTY	ROUTE	POST MILES TOTAL PROJECT	SHEET No.	TOTAL SHEETS
08	SBd	210	9.9/12.5	16	36

Thanh Trinh 3-7-12
REGISTERED CIVIL ENGINEER DATE

4-2-12
PLANS APPROVAL DATE

REGISTERED PROFESSIONAL ENGINEER
THANH TRINH
No. C41189
Exp. 3-31-13
CIVIL
STATE OF CALIFORNIA

THE STATE OF CALIFORNIA OR ITS OFFICERS OR AGENTS SHALL NOT BE RESPONSIBLE FOR THE ACCURACY OR COMPLETENESS OF SCANNED COPIES OF THIS PLAN SHEET.

NOTE:

FOR ACCURATE RIGHT OF WAY DATA, CONTACT RIGHT OF WAY ENGINEERING AT THE DISTRICT OFFICE.

LEGEND:

— TEMPORARY RAILING (TYPE K)

(X) CONSTRUCTION AREA SIGN NUMBER

CONSTRUCTION AREA SIGN (ONE POST)

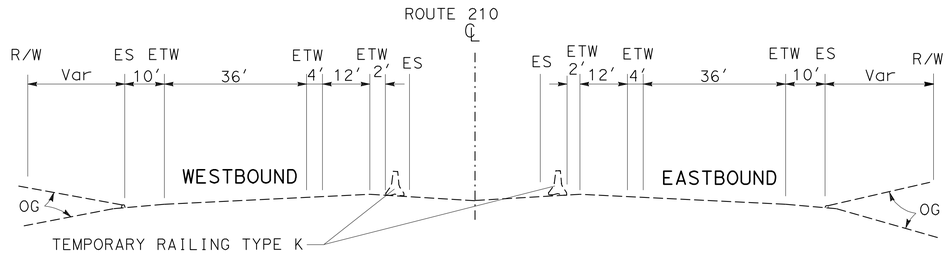

TYPICAL TEMPORARY RAILING TYPE K INSTALLATION

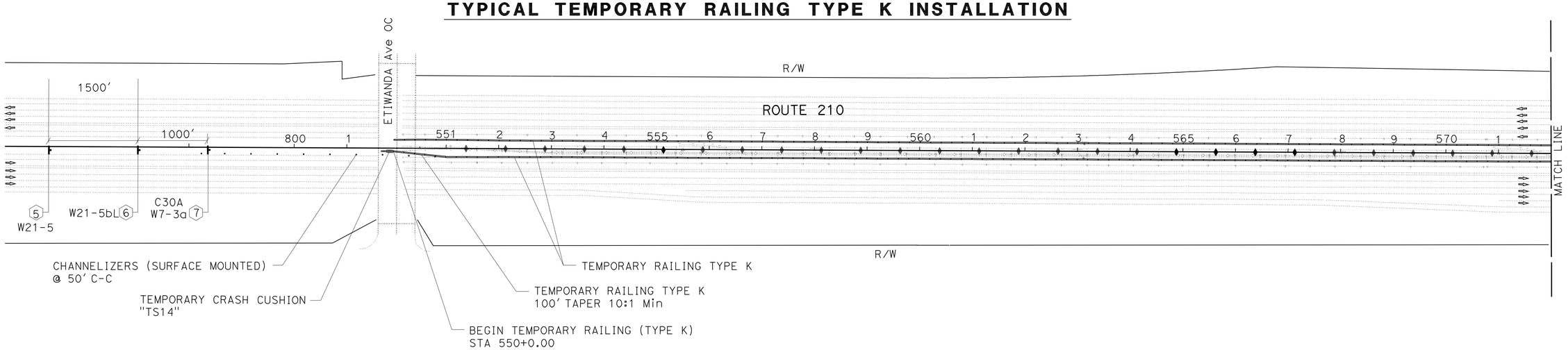

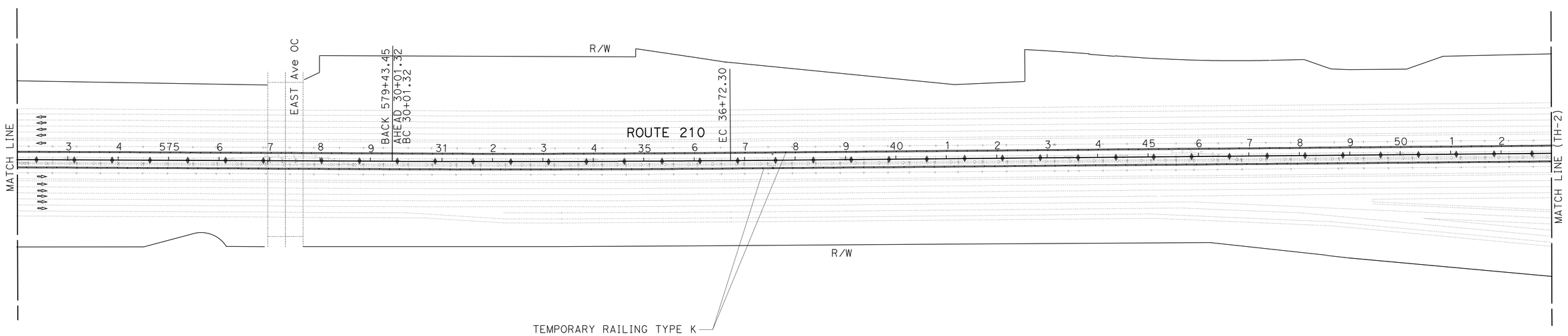

TRAFFIC HANDLING PLAN

SCALE: 1" = 100'

TH-1

APPROVED FOR TRAFFIC HANDLING WORK ONLY

STATE OF CALIFORNIA - DEPARTMENT OF TRANSPORTATION
Caltrans® **TRAFFIC DESIGN**

FUNCTIONAL SUPERVISOR: BILL WASSER
CALCULATED-DESIGNED BY: KEVIN NGUYEN
CHECKED BY: THANH TRINH
REVISED BY
DATE REVISED

LAST REVISION 03-07-12
DATE PLOTTED => 06-APR-2012
TIME PLOTTED => 10:38

Dist	COUNTY	ROUTE	POST MILES TOTAL PROJECT	SHEET No.	TOTAL SHEETS
08	SBd	210	9.9/12.5	17	36

Thanh Trinh 3-7-12
REGISTERED CIVIL ENGINEER DATE

4-2-12
PLANS APPROVAL DATE

REGISTERED PROFESSIONAL ENGINEER
THANH TRINH
No. C41189
Exp. 3-31-13
CIVIL
STATE OF CALIFORNIA

THE STATE OF CALIFORNIA OR ITS OFFICERS OR AGENTS SHALL NOT BE RESPONSIBLE FOR THE ACCURACY OR COMPLETENESS OF SCANNED COPIES OF THIS PLAN SHEET.

NOTE:

FOR ACCURATE RIGHT OF WAY DATA, CONTACT RIGHT OF WAY ENGINEERING AT THE DISTRICT OFFICE.

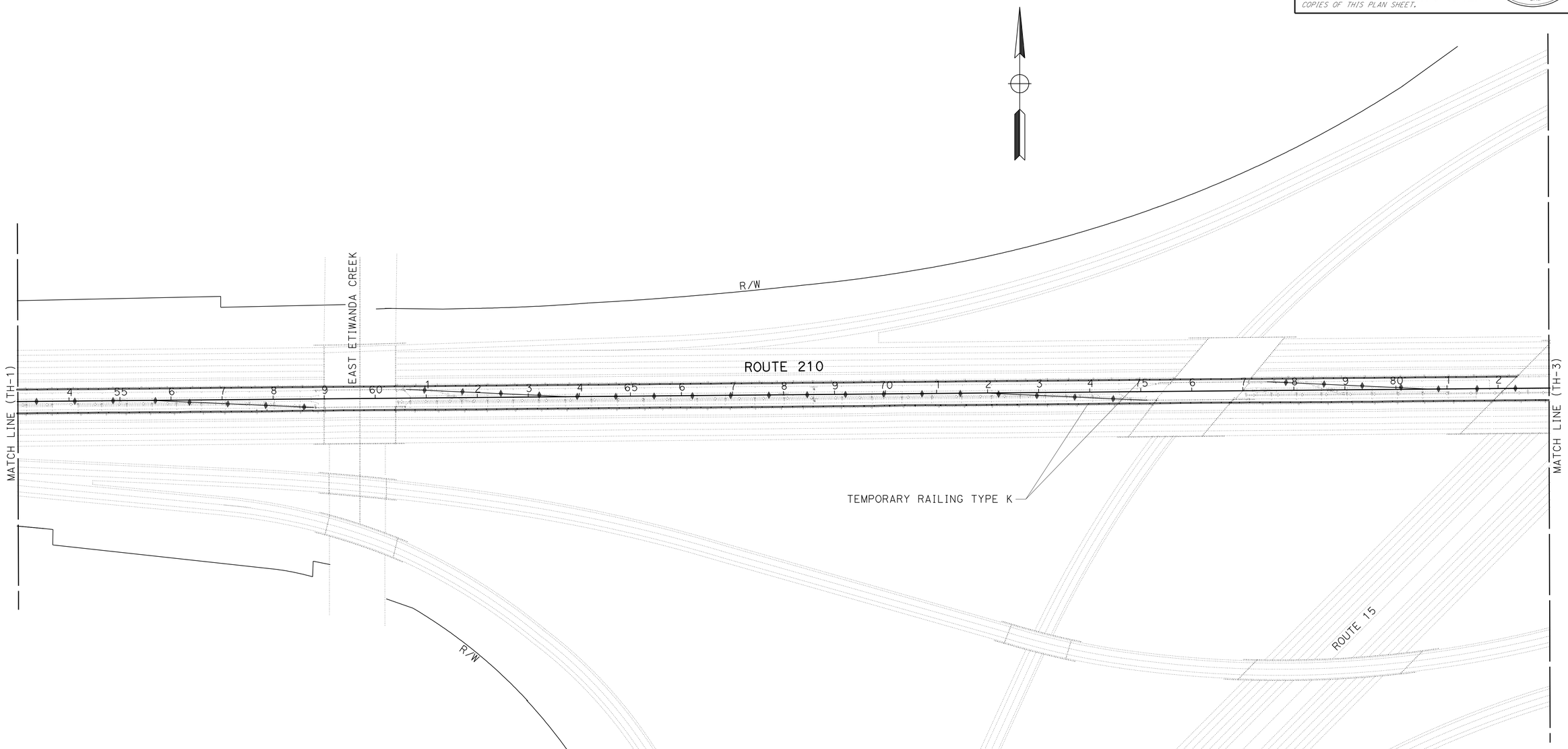

TRAFFIC HANDLING PLAN

SCALE: 1" = 100'

TH-2

APPROVED FOR TRAFFIC HANDLING WORK ONLY

REVISED BY | DATE REVISED

KEVIN NGUYEN | THANH TRINH

CALCULATED-DESIGNED BY | CHECKED BY

FUNCTIONAL SUPERVISOR: BILL WASSER

STATE OF CALIFORNIA - DEPARTMENT OF TRANSPORTATION

Caltrans® TRAFFIC DESIGN

LAST REVISION 03-07-12 | DATE PLOTTED => 06-APR-2012 | TIME PLOTTED => 10:39

Dist	COUNTY	ROUTE	POST MILES TOTAL PROJECT	SHEET No.	TOTAL SHEETS
08	SBd	210	9.9/12.5	18	36

Thanh Trinh 3-7-12
REGISTERED CIVIL ENGINEER DATE

4-2-12
PLANS APPROVAL DATE

REGISTERED PROFESSIONAL ENGINEER
THANH TRINH
No. C41189
Exp. 3-31-13
CIVIL
STATE OF CALIFORNIA

THE STATE OF CALIFORNIA OR ITS OFFICERS OR AGENTS SHALL NOT BE RESPONSIBLE FOR THE ACCURACY OR COMPLETENESS OF SCANNED COPIES OF THIS PLAN SHEET.

NOTE:

FOR ACCURATE RIGHT OF WAY DATA, CONTACT RIGHT OF WAY ENGINEERING AT THE DISTRICT OFFICE.

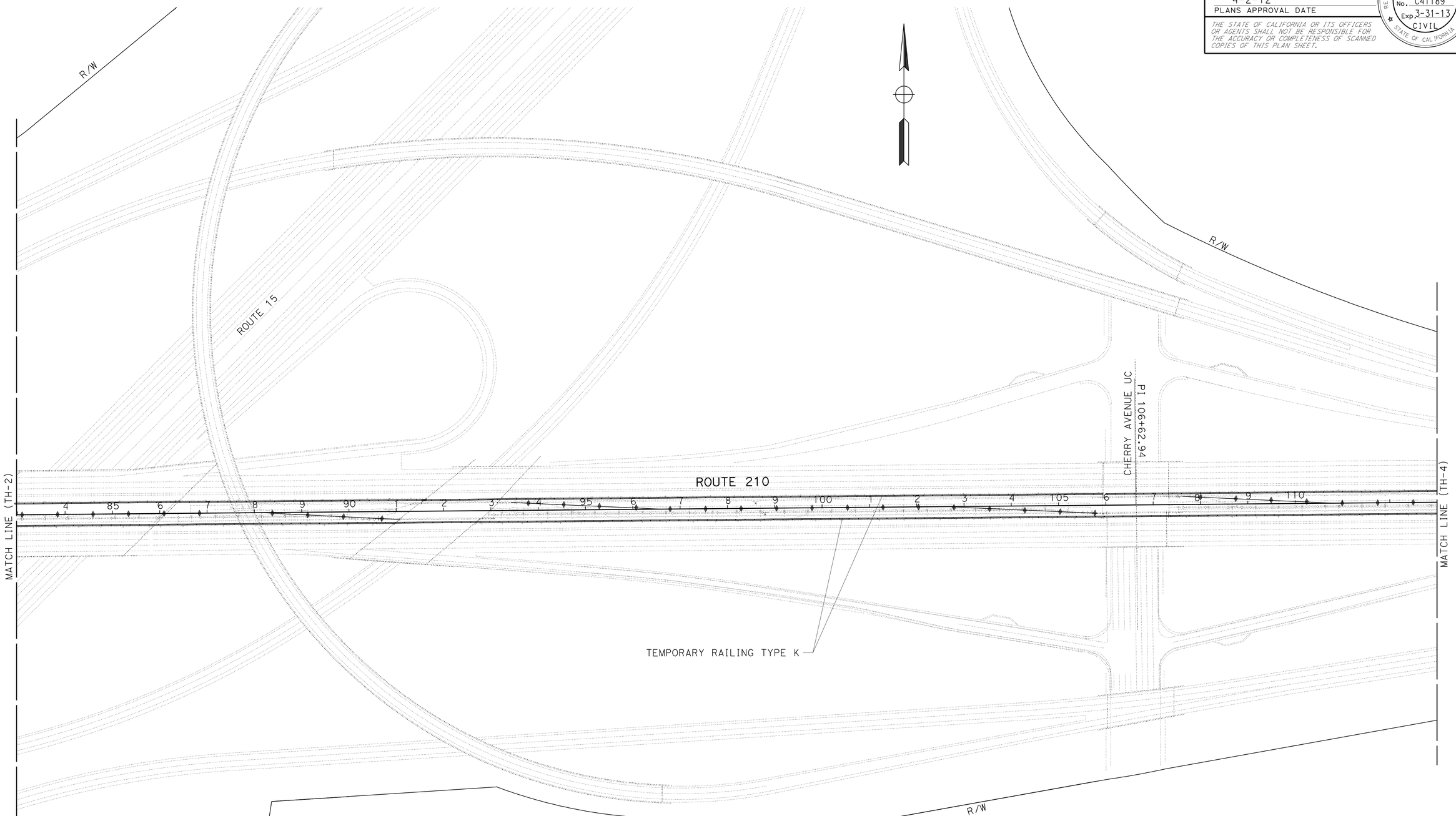

APPROVED FOR TRAFFIC HANDLING WORK ONLY

TRAFFIC HANDLING PLAN

SCALE: 1" = 100'

TH-3

REVISED BY	DATE REVISED

CALCULATED-DESIGNED BY	KEVIN NGUYEN
CHECKED BY	THANH TRINH

FUNCTIONAL SUPERVISOR: BILL WASSER

STATE OF CALIFORNIA - DEPARTMENT OF TRANSPORTATION

Caltrans

TRAFFIC DESIGN

LAST REVISION 03-07-12 | DATE PLOTTED => 06-APR-2012 | TIME PLOTTED => 10:39

Dist	COUNTY	ROUTE	POST MILES TOTAL PROJECT	SHEET No.	TOTAL SHEETS
08	SBd	210	9.9/12.5	19	36

Thanh Trinh 3-7-12
REGISTERED CIVIL ENGINEER DATE

4-2-12
PLANS APPROVAL DATE

REGISTERED PROFESSIONAL ENGINEER
THANH TRINH
No. C41189
Exp. 3-31-13
CIVIL
STATE OF CALIFORNIA

THE STATE OF CALIFORNIA OR ITS OFFICERS OR AGENTS SHALL NOT BE RESPONSIBLE FOR THE ACCURACY OR COMPLETENESS OF SCANNED COPIES OF THIS PLAN SHEET.

NOTE:

FOR ACCURATE RIGHT OF WAY DATA, CONTACT
RIGHT OF WAY ENGINEERING AT THE DISTRICT OFFICE.

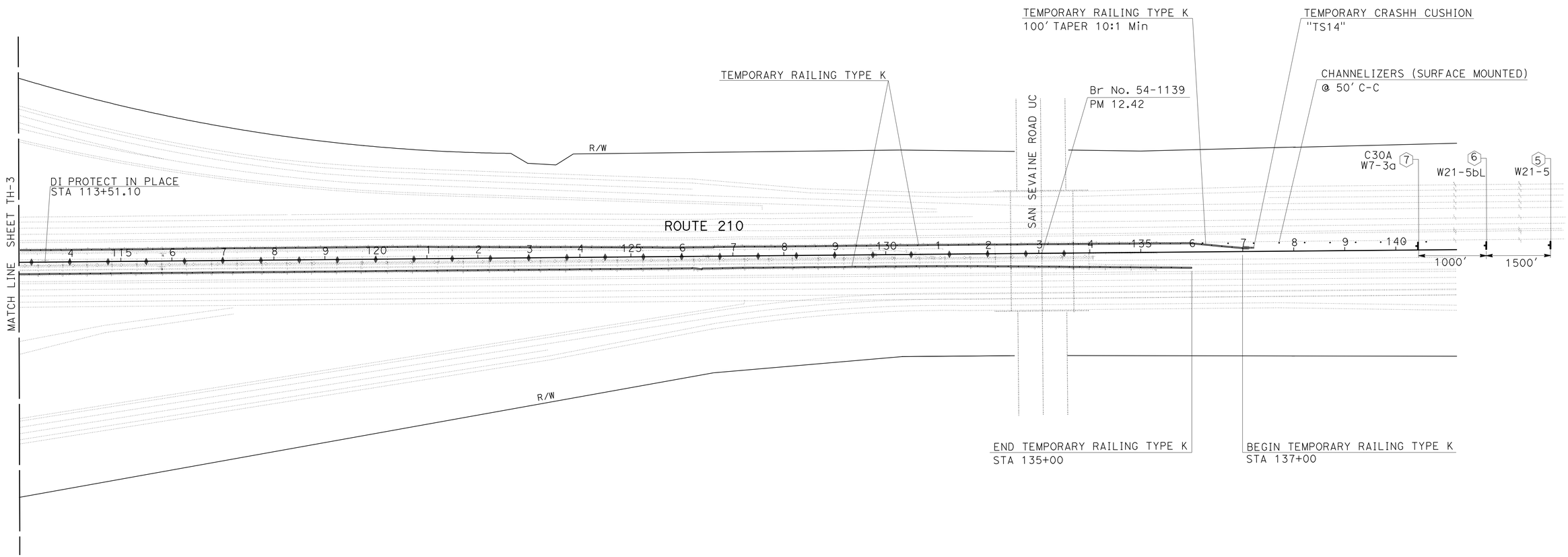

TRAFFIC HANDLING PLAN

SCALE: 1" = 100'

TH-4

APPROVED FOR TRAFFIC HANDLING WORK ONLY

STATE OF CALIFORNIA - DEPARTMENT OF TRANSPORTATION
Caltrans® **TRAFFIC DESIGN**

FUNCTIONAL SUPERVISOR: BILL WASSER
CALCULATED-DESIGNED BY: KEVIN NGUYEN
CHECKED BY: THANH TRINH
REVISED BY
DATE REVISED

LAST REVISION DATE PLOTTED => 06-APR-2012
03-07-12 TIME PLOTTED => 10:39

Dist	COUNTY	ROUTE	POST MILES TOTAL PROJECT	SHEET No.	TOTAL SHEETS
08	SBd	210	9.9/12.5	20	36

Thanh Trinh 3-7-12
REGISTERED CIVIL ENGINEER DATE

4-2-12
PLANS APPROVAL DATE

REGISTERED PROFESSIONAL ENGINEER
THANH TRINH
No. C41189
Exp. 3-31-13
CIVIL
STATE OF CALIFORNIA

THE STATE OF CALIFORNIA OR ITS OFFICERS OR AGENTS SHALL NOT BE RESPONSIBLE FOR THE ACCURACY OR COMPLETENESS OF SCANNED COPIES OF THIS PLAN SHEET.

NOTES:

1. THE CONTRACTOR WILL DETERMINE MEDIAN CONSTRUCTION EQUIPMENT ACCESS LOCATIONS AND GET APPROVAL.
2. EACH DIRECTION OF TRAFFIC HAS AT LEAST ONE CONSTRUCTION EQUIPMENT ACCESS

LEGEND:

TEMPORARY RAILING TYPE K

DIRECTION OF TRAFFIC

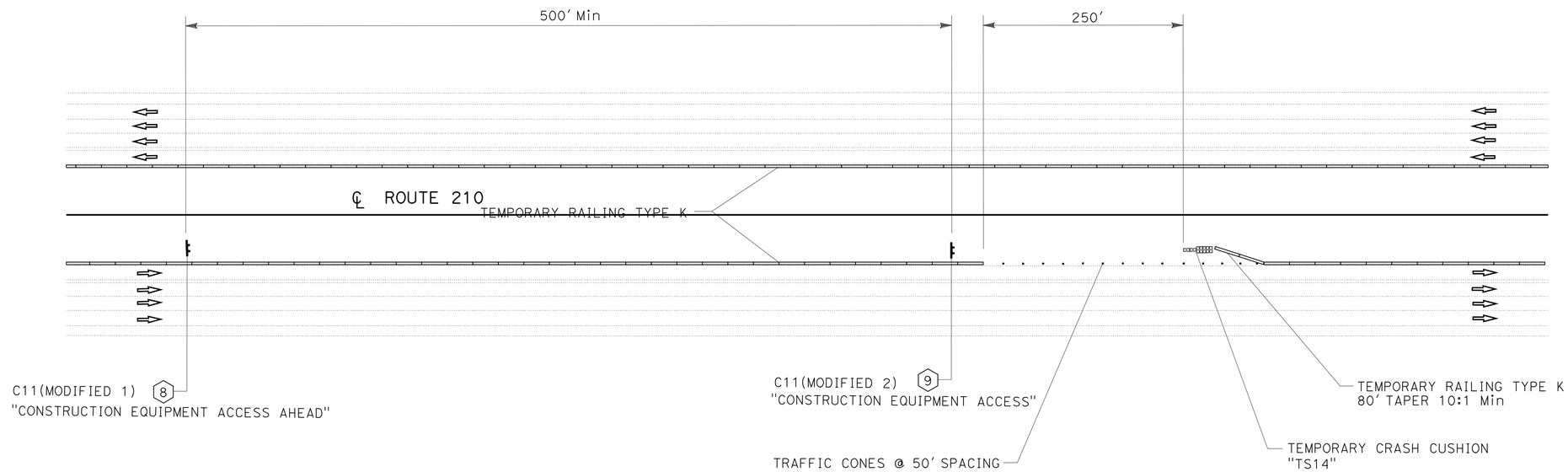

CONSTRUCTION EQUIPMENT ACCESS

(TYPICAL)

TEMPORARY TRAFFIC HANDLING QUANTITIES

	TEMPORARY RAILING (TYPE K)	CHANELIZER (SURFACE MOUNTED)	TEMPORARY CRASH CUSHION MODULE
	LF	EA	EA
	27180	20	56
TOTAL	27180	20	56

*INCLUDES TEMPORARY CRASH CUSHION MODULES AT CONSTRUCTION EQUIPMENT ACCESS LOCATIONS

TRAFFIC HANDLING PLAN AND QUANTITIES

NO SCALE

TH-5

APPROVED FOR TRAFFIC HANDLING WORK ONLY

REVISED BY | DATE REVISED
KEVIN NGUYEN | THANH TRINH
CALCULATED-DESIGNED BY | CHECKED BY
FUNCTIONAL SUPERVISOR: BILL WASSER
STATE OF CALIFORNIA - DEPARTMENT OF TRANSPORTATION
Caltrans TRAFFIC DESIGN

LAST REVISION 03-07-12 | DATE PLOTTED => 06-APR-2012 | TIME PLOTTED => 10:39

Dist	COUNTY	ROUTE	POST MILES TOTAL PROJECT	SHEET No.	TOTAL SHEETS
08	SBd	210	9.9/12.5	21	36

REGISTERED CIVIL ENGINEER 3-7-12 DATE

4-2-12
PLANS APPROVAL DATE

REGISTERED PROFESSIONAL ENGINEER ANH V. PHAN No. 62294 Exp. 9-30-13 CIVIL STATE OF CALIFORNIA

THE STATE OF CALIFORNIA OR ITS OFFICERS OR AGENTS SHALL NOT BE RESPONSIBLE FOR THE ACCURACY OR COMPLETENESS OF SCANNED COPIES OF THIS PLAN SHEET.

CONCRETE BARRIER

STATION	LOCATION	TYPE 60	60 MOD	60A MOD	60F	60S MOD	NOTE
		LF					
551+02.25 - 555+00.50	℄	398.25					
555+00.50 - 556+00.34	℄				99.84		AT SIGN PEDESTAL
556+00.34 - 570+50.08	℄	1,449.74					
570+50.08 - 571+49.92	℄				99.84		AT SIGN PEDESTAL
571+49.92 - 576+30.46	℄	480.54					
576+30.46 - 578+21.80	℄				191.34		AT COLUMNS OF EAST AVE OC
578+21.80 - 45+05.52	℄	1,625.85					
45+05.52 - 46+05.36	℄				99.84		AT SIGN PEDESTAL
46+05.36 - 55+59.24	℄	953.88					
55+59.24 - 58+79.24	CENTERLINE TO B.RAIL					320.00	TO EAST ETIWANDA BRIDGE RAIL (TYPE 25)
60+60.12 - 63+80.12	B.RAIL TO CENTERLINE					320.00	FROM EAST ETIWANDA BRIDGE RAIL (TYPE 25)
63+80.12 - 71+92.60	℄	812.48					
71+92.60 - 75+12.60	CENTERLINE TO B.RAIL					320.00	TO W/S CONNECTOR BRIDGE RAIL (TYPE 25)
77+47.26 - 80+67.26	B.RAIL TO CENTERLINE					320.00	FROM W/S CONNECTOR BRIDGE RAIL (TYPE 25)
80+67.26 - 81+83.50	℄	116.24					
81+83.50 - 86+65.22	℄			481.72			AT 15/210 SEPARATION
86+65.22 - 89+85.22	℄ TO INSIDE ES					320.00	EASTBOUND-EDGE OF INSIDE SHOULDER
89+85.22 - 90+90.30 R+	ALONG ES					105.08	TO E/N CONNECTOR BRIDGE RAIL (TYPE 25)
87+51.51 - 91+33.77 L+	ALONG ES					382.26	TO E/N CONNECTOR BRIDGE RAIL (TYPE 25)
93+42.07 - 96+62.07	B.RAIL TO CENTERLINE					320.00	FROM E/N CONNECTOR BRIDGE RAIL (TYPE 25)
96+62.07 - 102+61.98	℄	599.91					
102+61.98 - 105+81.98	CENTERLINE TO B.RAIL					320.00	TO CHERRY AVE UC BRIDGE RAIL (TYPE 25)
107+62.95 - 110+82.95	B.RAIL TO CENTERLINE					320.00	FROM CHERRY AVE UC BRIDGE RAIL (TYPE 25)
110+82.95 - 125+70.10	℄	1,487.15					
125+70.10 - 127+30.43	℄		170.67				AT RECTANGULAR DI
127+30.43 - 129+30.05	℄	199.62					
129+30.05 - 130+29.89	℄				99.84		AT SIGN PEDESTAL
130+29.89 - 132+14.65	℄	184.76					
132+14.65 - 133+97.87	℄			183.22			AT SAN SEVAINE ROAD UC
TOTAL		8,308.42	170.67	664.94	590.70	3,047.34	

ROADSIDE SIGN QUANTITIES

LOCATION	RESET ROADSIDE SIGN (ONE POST) (EA)	REMARKS
PM 9.9/12.5	5	EXISTING SIGNS MOUNTED ON EXISTING TEMPORARY RAILING (TYPE K) ON THE MEDIAN BEING RESET TO NEW MEDIAN BARRIER

TEMPORARY CONSTRUCTION BMPs

TEMPORARY CONSTRUCTION SITE BMPs	UNITS	QUANTITIES
TEMPORARY DRAINAGE INLET PROTECTION	EA	22

REMOVE CONCRETE BARRIER (TYPE K)

STATION	REMOVE CONCRETE BARRIER (TYPE K)	NOTE
	LF	
551+02.25 - 58+79.24	5,719.12	FROM ETIWANDA AVE OC TO EAST ETIWANDA CREEK
60+40.00 - 75+12.60	1,472.60	FROM EAST ETIWANDA CREEK TO W/S CONNECTOR
77+06.12 - 91+07.87	1,401.75	FROM W/S CONNECTOR TO E/N CONNECTOR
92+94.84 - 105+81.98	1,287.14	FROM E/N CONNECTOR TO CHERRY AVE UC
107+53.30 - 134+09.85	2,656.55	FROM CHERRY AVE UC TO SAN SEVAINE RD UC
TOTAL	12,537.16	

REMOVE METAL BEAM GUARD RAILING

STATION	REMOVE METAL BEAM GUARD RAILING	MINOR CONCRETE (BACKFILL)	MINOR HMA	NOTE
	LF	CY	TON	
555+43.82 - 556+63.11	119.29	0.9	0.2	AT SIGN PEDESTAL
570+91.58 - 572+08.98	117.40	0.9	0.2	AT SIGN PEDESTAL
576+91.57 - 578+64.17	172.60	0.9	0.2	AT COLUMNS OF EAST AVE OC
45+47.18 - 46+75.92	128.74	0.9	0.2	AT SIGN PEDESTAL
60+54.47 - 61+83.59	129.12	0.9	0.2	AT EAST ETIWANDA CREEK
77+61.09 - 78+98.22	137.13	0.9	0.2	AT W/S CONNECTOR
87+50.59 - 88+88.03	137.44	0.9	0.2	AT COLUMN OF S/E CONNECTOR
93+52.35 - 94+88.24	135.89	0.9	0.2	AT E/N CONNECTOR
107+52.65 - 108+85.50	132.85	0.9	0.2	AT CHERRY AVE UC
129+70.92 - 130+95.81	124.89	0.9	0.2	AT SIGN PEDESTAL
TOTAL	1,335.35	9.0	2.0	

SUMMARY OF QUANTITIES
Q-1

STATE OF CALIFORNIA - DEPARTMENT OF TRANSPORTATION
Caltrans DESIGN
FUNCTIONAL SUPERVISOR RENEE SASSE
CALCULATED-DESIGNED BY MARC CHAVOUSHI
CHECKED BY ANH V. PHAN
REVISED BY
DATE REVISED

LAST REVISION 03-07-12
DATE PLOTTED => 06-APR-2012
TIME PLOTTED => 10:39

Dist	COUNTY	ROUTE	POST MILES TOTAL PROJECT	SHEET No.	TOTAL SHEETS
08	SBd	210	9.9/12.5	22	36

REGISTERED ELECTRICAL ENGINEER 3-7-12 DATE

4-2-12
PLANS APPROVAL DATE

REGISTERED PROFESSIONAL ENGINEER JAIME ESTRADA No. E 18351 Exp 6-30-12 ELECTRICAL STATE OF CALIFORNIA

THE STATE OF CALIFORNIA OR ITS OFFICERS OR AGENTS SHALL NOT BE RESPONSIBLE FOR THE ACCURACY OR COMPLETENESS OF SCANNED COPIES OF THIS PLAN SHEET.

NOTE:

FOR ACCURATE RIGHT OF WAY DATA, CONTACT RIGHT OF WAY ENGINEERING AT THE DISTRICT OFFICE.

LEGEND:

fo - EXISTING 4" FIBER OPTIC CONDUIT

IDS - INCIDENT DETECTION SYSTEM

RMS - RAMP MANAGEMENT SYSTEM

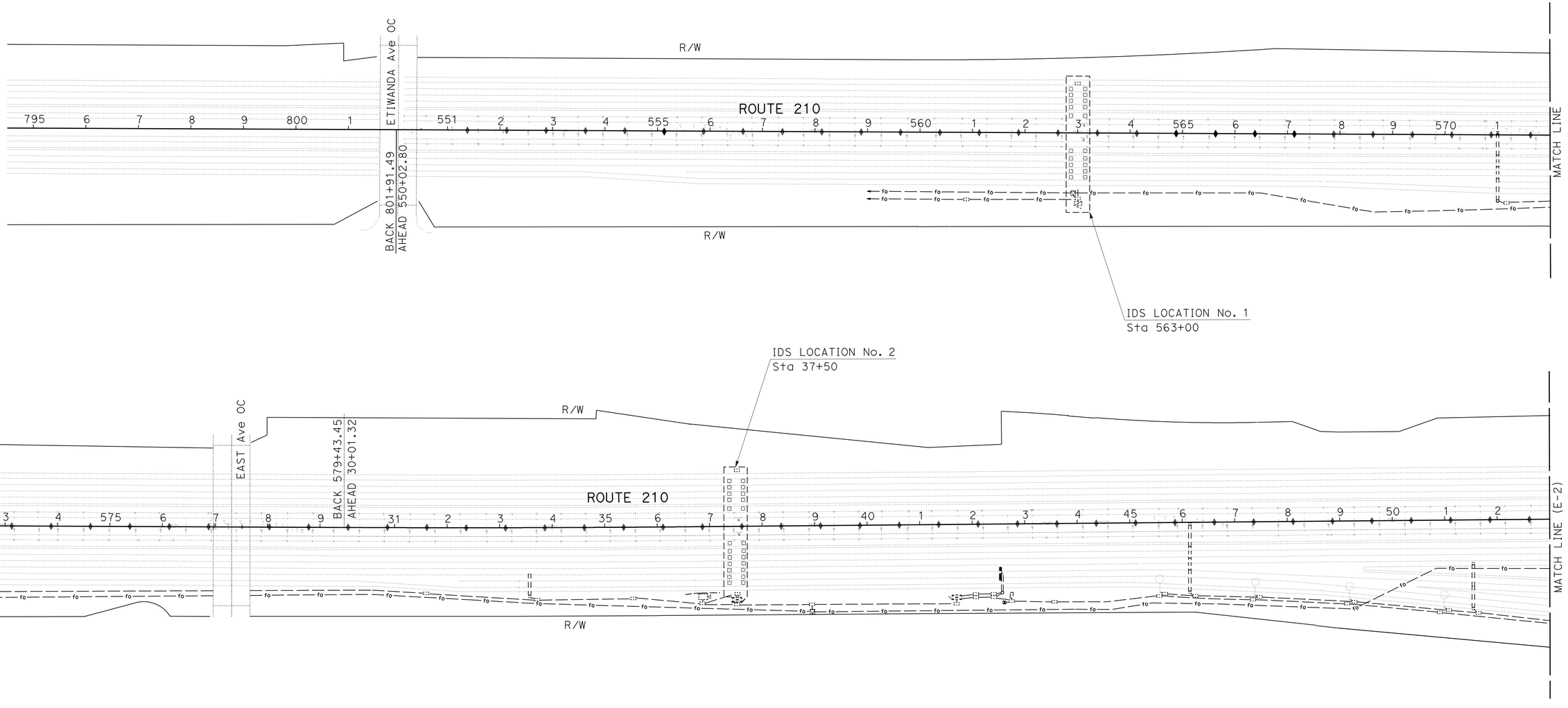

MAINTAINING EXISTING TRAFFIC MANAGEMENT SYSTEM ELEMENTS DURING CONSTRUCTION

NO SCALE

E-1

APPROVED FOR ELECTRICAL WORK ONLY

STATE OF CALIFORNIA - DEPARTMENT OF TRANSPORTATION

Caltrans® **ELECTRICAL DESIGN B**

FUNCTIONAL SUPERVISOR: FERDINAND DE LA CRUZ

CALCULATED-DESIGNED BY: JAIME ESTRADA

CHECKED BY: FERDINAND DE LA CRUZ

REVISED BY: JE

DATE REVISED: 01/18/12

LAST REVISION: 03-07-12

DATE PLOTTED => 06-APR-2012
TIME PLOTTED => 10:39

Dist	COUNTY	ROUTE	POST MILES TOTAL PROJECT	SHEET No.	TOTAL SHEETS
08	SBd	210	9.9/12.5	23	36

REGISTERED ELECTRICAL ENGINEER 3-7-12 DATE

4-2-12
PLANS APPROVAL DATE

REGISTERED PROFESSIONAL ENGINEER JAIME ESTRADA No. E 18351 Exp 6-30-12 ELECTRICAL STATE OF CALIFORNIA

THE STATE OF CALIFORNIA OR ITS OFFICERS OR AGENTS SHALL NOT BE RESPONSIBLE FOR THE ACCURACY OR COMPLETENESS OF SCANNED COPIES OF THIS PLAN SHEET.

NOTE:

FOR ACCURATE RIGHT OF WAY DATA, CONTACT RIGHT OF WAY ENGINEERING AT THE DISTRICT OFFICE.

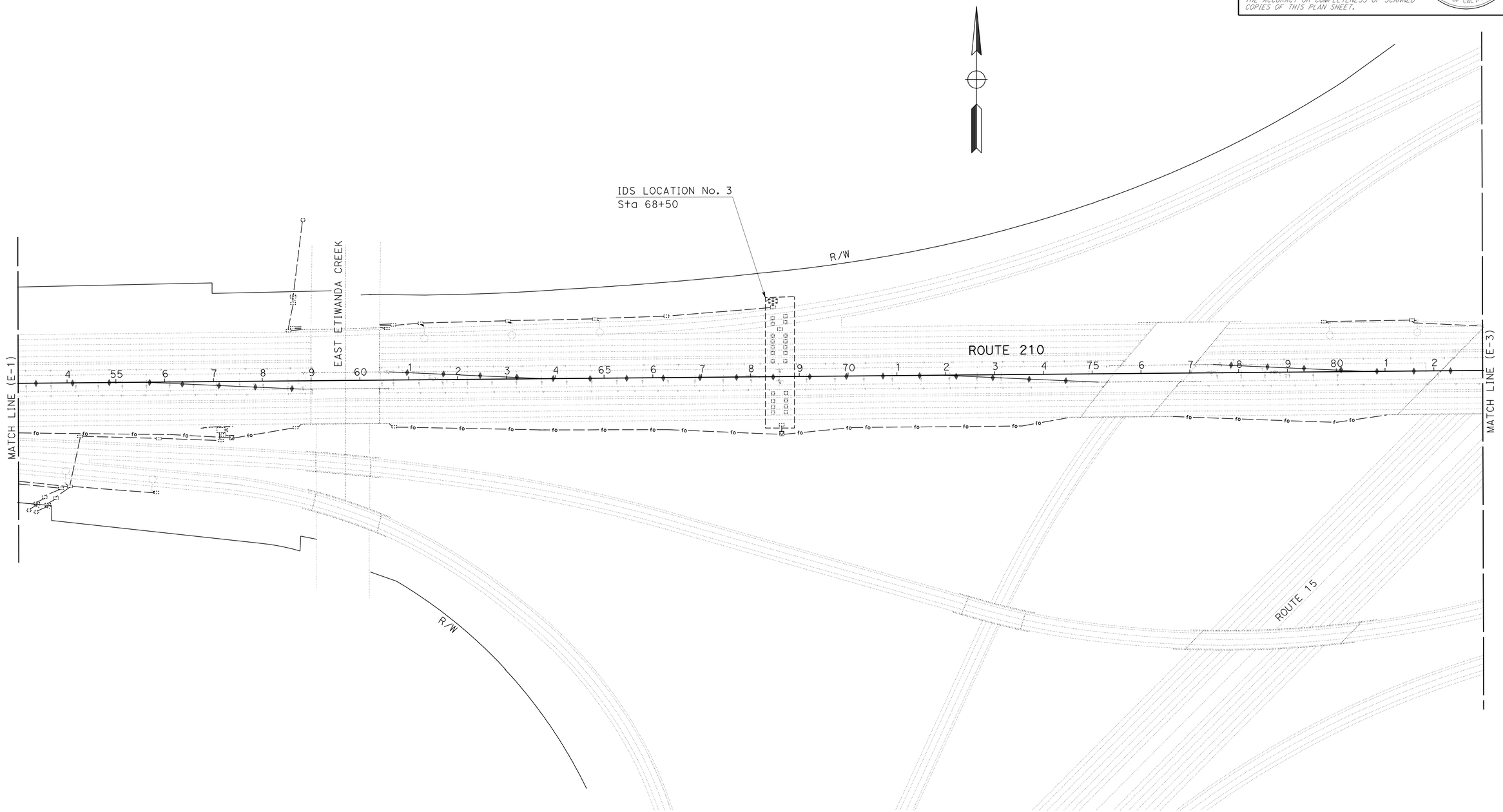

MAINTAINING EXISTING TRAFFIC MANAGEMENT SYSTEM ELEMENTS DURING CONSTRUCTION

NO SCALE

E-2

APPROVED FOR ELECTRICAL WORK ONLY

STATE OF CALIFORNIA - DEPARTMENT OF TRANSPORTATION
Caltrans ELECTRICAL DESIGN B

FUNCTIONAL SUPERVISOR: FERDINAND DE LA CRUZ

CALCULATED-DESIGNED BY: JAIME ESTRADA
CHECKED BY: FERDINAND DE LA CRUZ

REVISED BY: JE
DATE REVISED: 01/18/12

LAST REVISION 03-07-12
DATE PLOTTED => 06-APR-2012
TIME PLOTTED => 10:39

Dist	COUNTY	ROUTE	POST MILES TOTAL PROJECT	SHEET No.	TOTAL SHEETS
08	SBd	210	9.9/12.5	24	36

REGISTERED ELECTRICAL ENGINEER 3-7-12 DATE

4-2-12
PLANS APPROVAL DATE

REGISTERED PROFESSIONAL ENGINEER JAIME ESTRADA No. E 18351 Exp 6-30-12 ELECTRICAL STATE OF CALIFORNIA

THE STATE OF CALIFORNIA OR ITS OFFICERS OR AGENTS SHALL NOT BE RESPONSIBLE FOR THE ACCURACY OR COMPLETENESS OF SCANNED COPIES OF THIS PLAN SHEET.

NOTE:

FOR ACCURATE RIGHT OF WAY DATA, CONTACT RIGHT OF WAY ENGINEERING AT THE DISTRICT OFFICE.

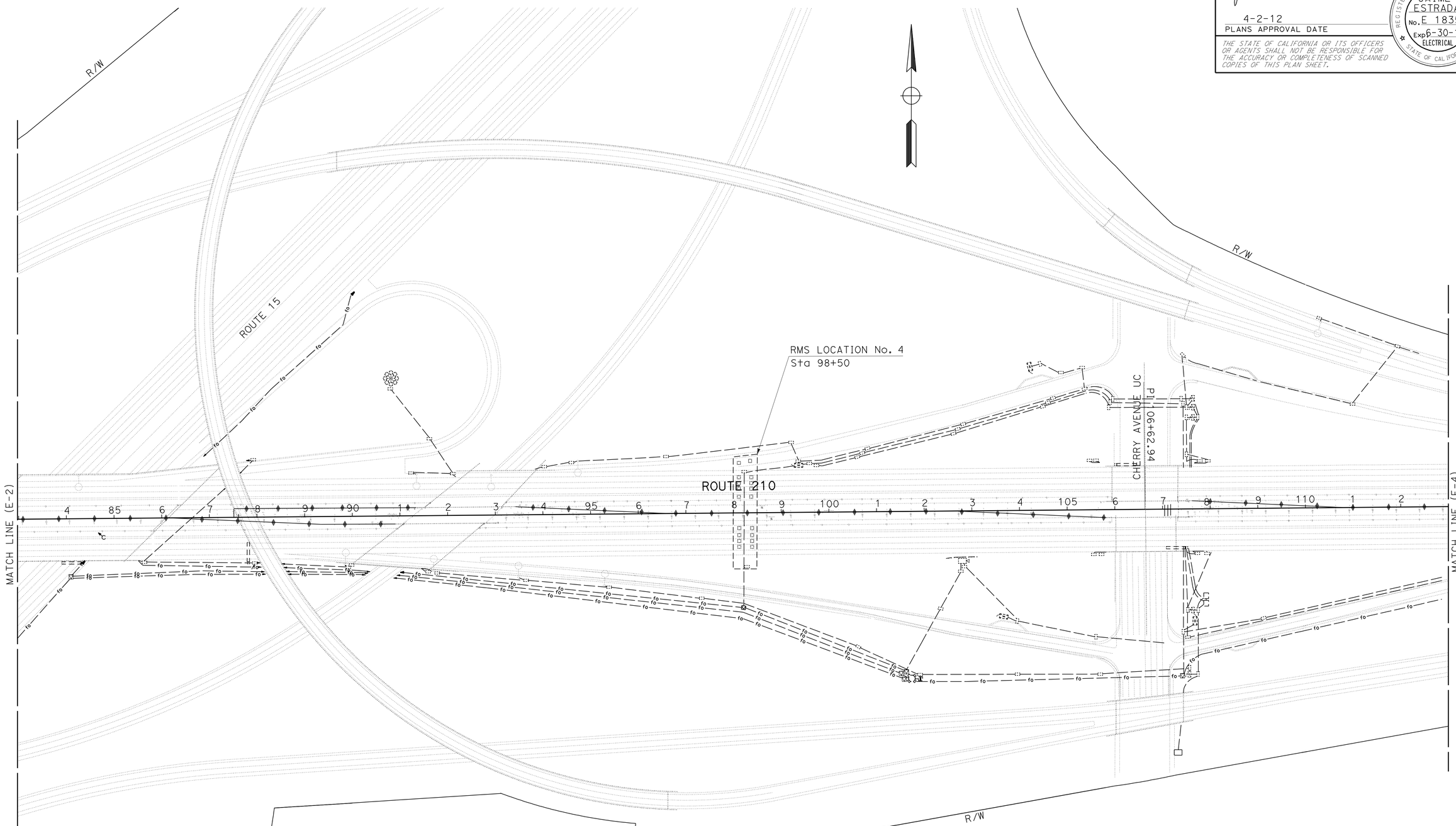

MAINTAINING EXISTING TRAFFIC MANAGEMENT SYSTEM ELEMENTS DURING CONSTRUCTION

NO SCALE

E-3

APPROVED FOR ELECTRICAL WORK ONLY

STATE OF CALIFORNIA - DEPARTMENT OF TRANSPORTATION

Caltrans® ELECTRICAL DESIGN B

FUNCTIONAL SUPERVISOR: FERDINAND DE LA CRUZ

CALCULATED-DESIGNED BY: JAIME ESTRADA

CHECKED BY: FERDINAND DE LA CRUZ

REVISED BY: JE

DATE REVISED: 01/18/12

LAST REVISION: 03-07-12

DATE PLOTTED => 06-APR-2012

TIME PLOTTED => 10:40

BORDER LAST REVISED 7/2/2010

USERNAME => s123631

DGN FILE => 80n410ua003.dgn

RELATIVE BORDER SCALE IS IN INCHES 0 1 2 3

UNIT 2292

PROJECT NUMBER & PHASE 08000005291

Dist	COUNTY	ROUTE	POST MILES TOTAL PROJECT	SHEET No.	TOTAL SHEETS
08	SBd	210	9.9/12.5	25	36

REGISTERED ELECTRICAL ENGINEER 3-7-12 DATE

4-2-12
PLANS APPROVAL DATE

REGISTERED PROFESSIONAL ENGINEER JAIME ESTRADA No. E 18351 Exp 6-30-12 ELECTRICAL STATE OF CALIFORNIA

THE STATE OF CALIFORNIA OR ITS OFFICERS OR AGENTS SHALL NOT BE RESPONSIBLE FOR THE ACCURACY OR COMPLETENESS OF SCANNED COPIES OF THIS PLAN SHEET.

NOTE:

FOR ACCURATE RIGHT OF WAY DATA, CONTACT RIGHT OF WAY ENGINEERING AT THE DISTRICT OFFICE.

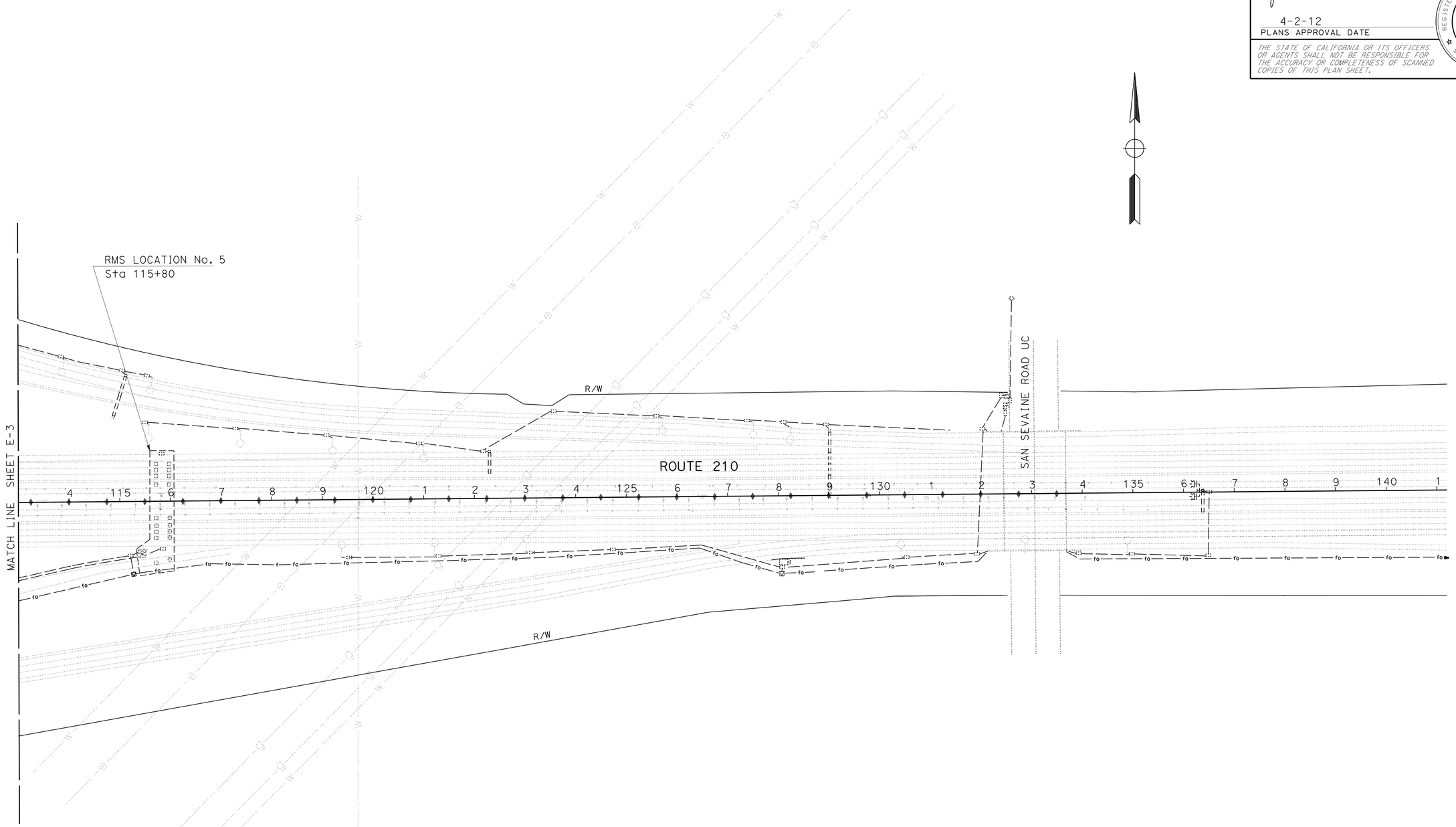

MAINTAINING EXISTING TRAFFIC MANAGEMENT SYSTEM ELEMENTS DURING CONSTRUCTION

NO SCALE

E-4

APPROVED FOR ELECTRICAL WORK ONLY

STATE OF CALIFORNIA - DEPARTMENT OF TRANSPORTATION
Caltrans® **ELECTRICAL DESIGN B**

FUNCTIONAL SUPERVISOR: FERDINAND DE LA CRUZ
CALCULATED-DESIGNED BY: JAIME ESTRADA
CHECKED BY: FERDINAND DE LA CRUZ
REVISED BY: JE
DATE REVISED: 01/18/12

LAST REVISION 03-07-12
DATE PLOTTED => 06-APR-2012
TIME PLOTTED => 10:40

BORDER LAST REVISED 7/2/2010
USERNAME => s123631
DGN FILE => 80n410ua004.dgn
RELATIVE BORDER SCALE IS IN INCHES 0 1 2 3
UNIT 2292
PROJECT NUMBER & PHASE 08000005291

DIST	COUNTY	ROUTE	POST MILES TOTAL PROJECT	SHEET NO.	TOTAL SHEETS
08	SBd	210	9.9/12.5	26	36

Randell D. Hiatt
REGISTERED CIVIL ENGINEER

June 6, 2008
PLANS APPROVAL DATE

REGISTERED PROFESSIONAL ENGINEER
Randell D. Hiatt
No. C50200
Exp. 6-30-09
CIVIL
STATE OF CALIFORNIA

The State of California or its officers or agents shall not be responsible for the accuracy or completeness of electronic copies of this plan sheet.

To accompany plans dated 4-2-12

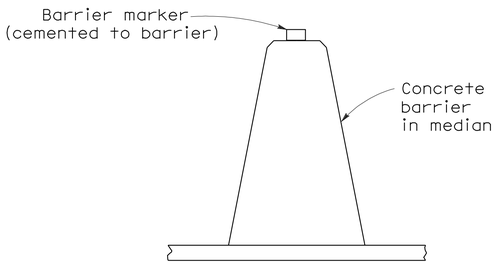

CONCRETE BARRIER TYPE 60 DELINEATION

See Notes 7 and 8

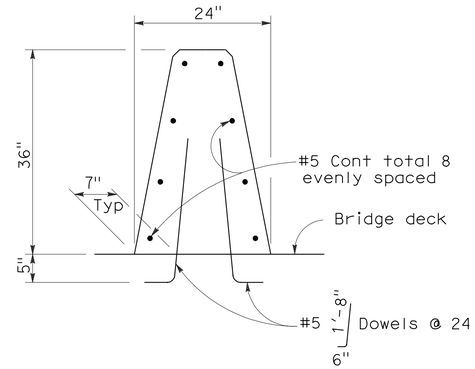

CONCRETE BARRIER TYPE 60A

Details similar to Type 60 except as noted.

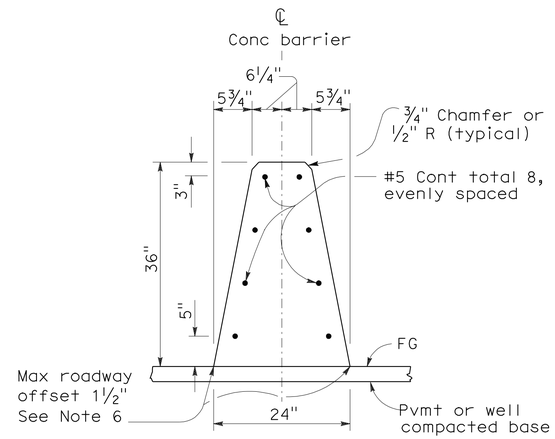

CONCRETE BARRIER TYPE 60

NOTES:

1. See Standard Plan A76B for details of Concrete Barrier Type 60 end anchors, connection to structures and transitions to Concrete Barrier Type 50 and Concrete Barrier Type 60S.
2. See Standard Plan A76C for Concrete Barrier Type 60 transitions at bridge column and sign pedestals.
3. Where glare screen is required on Concrete Barrier Type 60, use Concrete Barrier Type 60G.
4. Where the concrete barrier is added to the face of existing concrete structure, match existing weep holes.
5. Expansion joints in concrete barrier shall be located at all deck, pavement and principal wall joints. Expansion joint filler material shall be the same size as joint or ½" minimum.
6. Where roadway offset is greater than 1½", see Concrete Barrier Type 60C.
7. Barrier delineation to be used when required by the Special Provisions.
8. Spacing of barrier markers to match spacing of raised pavement markers on the adjacent median edgeline pavement delineation.
9. Reinforcing stirrup not required for roadway offsets less than 1'-0".
10. For roadway surfaces offset greater than 1½" to 3", no rebars required. For roadway surfaces offset greater than 3" to 8" use two #4 rebars at 3" above the lower roadway surface. For roadway surfaces offset greater than 8" to 12", use two #4 rebars at 3" above the lower roadway surface and two #4 rebars at 8" above the lower roadway surface. For roadway surfaces offset greater than 12" to 36", use two #4 rebars at 3" above the lower roadway surface and two #4 rebars at every 8" increment vertical spacing above the first two #4 rebars.

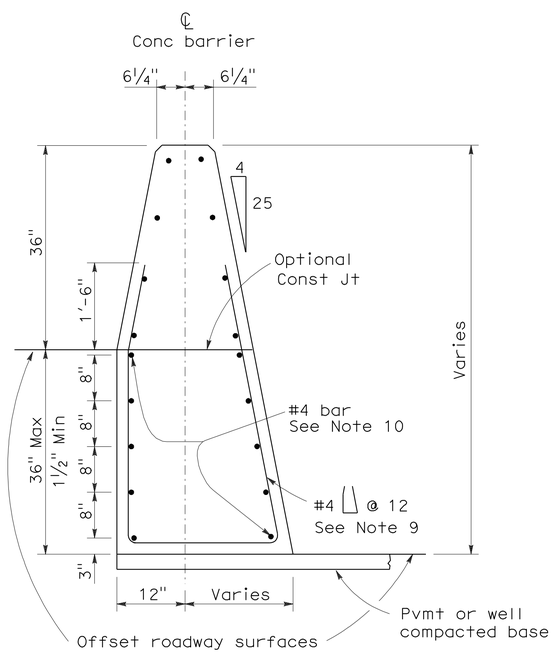

CONCRETE BARRIER TYPE 60C

Details similar to Type 60 except as noted.
Concrete barrier end anchor when necessary.
36" roadway surfaces offset shown.

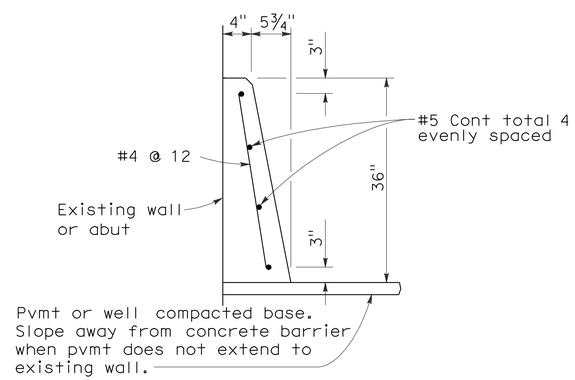

CONCRETE BARRIER TYPE 60D

STATE OF CALIFORNIA
DEPARTMENT OF TRANSPORTATION

CONCRETE BARRIER TYPE 60

NO SCALE

RSP A76A DATED JUNE 6, 2008 SUPERSEDES STANDARD PLAN A76A
DATED MAY 1, 2006 - PAGE 29 OF THE STANDARD PLANS BOOK DATED MAY 2006.

REVISED STANDARD PLAN RSP A76A

2006 REVISED STANDARD PLAN RSP A76A

5-21-08

Dist	COUNTY	ROUTE	POST MILES TOTAL PROJECT	SHEET No.	TOTAL SHEETS
08	SBd	210	9.9/12.5	27	36

Randell D. Hiatt
REGISTERED CIVIL ENGINEER

May 20, 2011
PLANS APPROVAL DATE

REGISTERED PROFESSIONAL ENGINEER
Randell D. Hiatt
No. C50200
Exp. 6-30-11
CIVIL
STATE OF CALIFORNIA

The State of California or its officers or agents shall not be responsible for the accuracy or completeness of electronic copies of this plan sheet.

To accompany plans dated 4-2-12

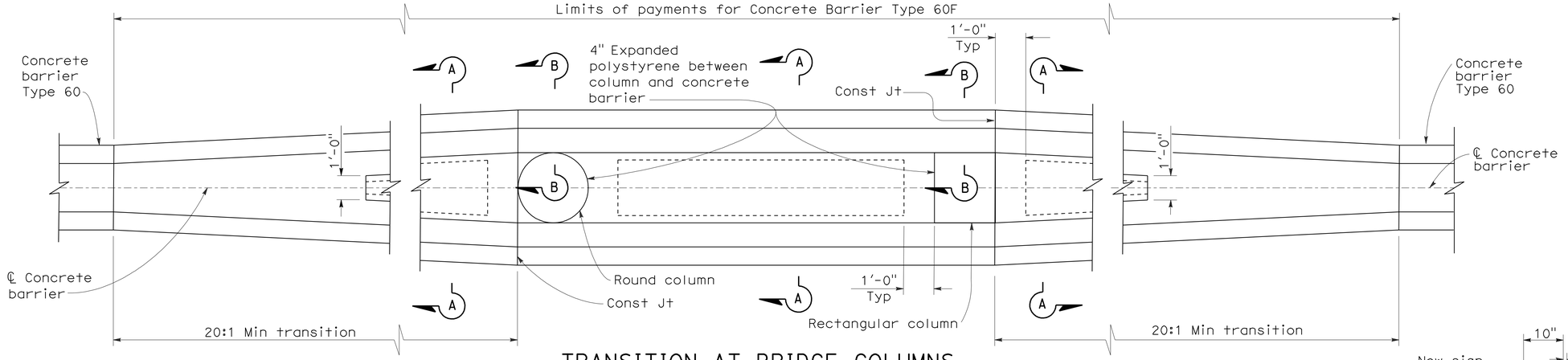

TRANSITION AT BRIDGE COLUMNS

CONCRETE BARRIER TYPE 60F
SEE NOTE 7

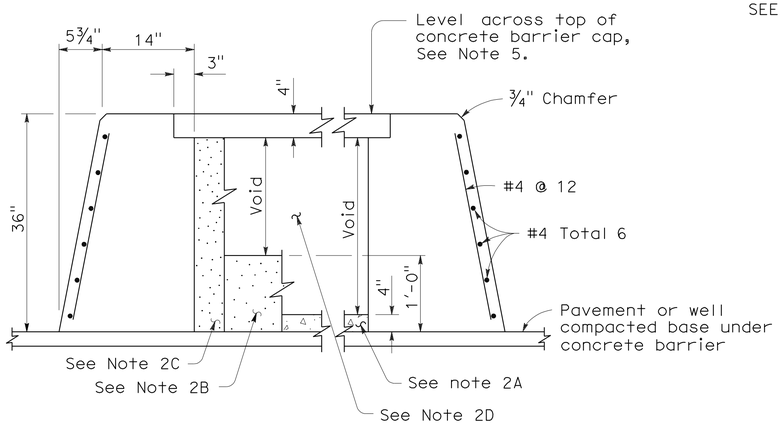

SECTION A-A

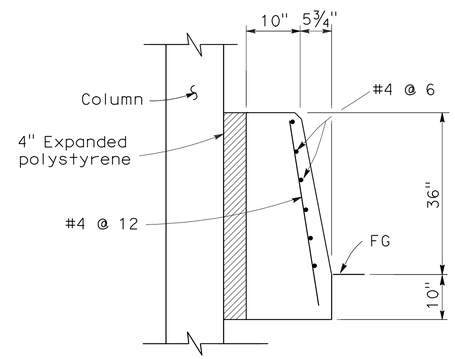

SECTION B-B

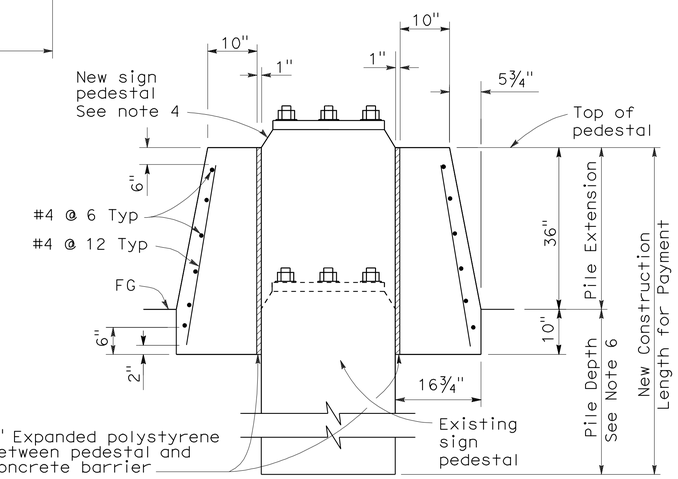

SECTION C-C

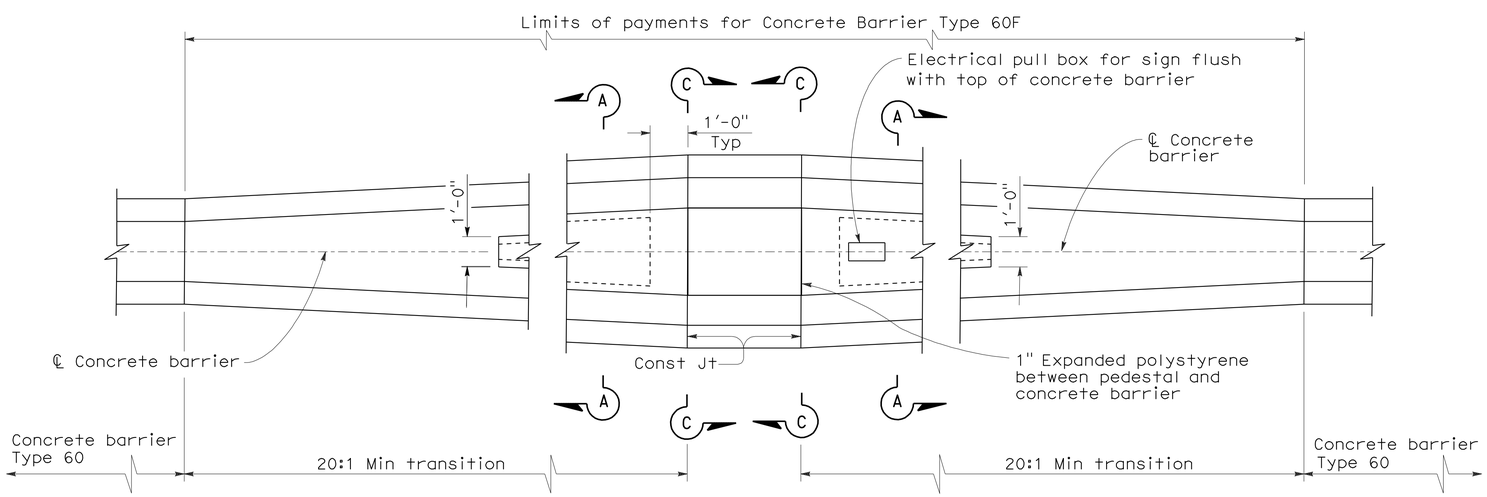

TRANSITION AT SIGN PEDESTAL

CONCRETE BARRIER TYPE 60F
SEE NOTE 7

NOTES:

1. See Revised Standard Plan RSP A76A for Concrete Barrier Type 60.
2. Contractor options for fill between concrete barrier walls:
   A. Place 4" PCC at base between concrete barrier walls.
   B. Place 1'-0" of granular material at base between walls.
   C. Place granular material from base to bottom of 4" cap.
   D. Monolithic concrete with foam blockouts is not permitted.
3. Reinforcing steel shall extend continuous through construction joints.
4. See "Overhead Sign" plans for sign pedestal elevations on new construction.
5. Adjust height of concrete barrier wall on low side of offset or superelevated roadways to provide level grade across top of concrete barrier cap.
6. See Overhead Signs Standard Plan Pile Foundation Tables.
7. All locations with limited shoulder width available for barrier, see Revised Standard Plan RSP A76F for use of Concrete Barrier Type 60GE.

STATE OF CALIFORNIA
DEPARTMENT OF TRANSPORTATION

CONCRETE BARRIER TYPE 60F

NO SCALE

RSP A76C DATED MAY 20, 2011 SUPERSEDES STANDARD PLAN A76C
DATED MAY 1, 2006 - PAGE 31 OF THE STANDARD PLANS BOOK DATED MAY 2006.

REVISED STANDARD PLAN RSP A76C

2006 REVISED STANDARD PLAN RSP A76C

4-6-11

DIST	COUNTY	ROUTE	POST MILES TOTAL PROJECT	SHEET NO.	TOTAL SHEETS
08	SBd	210	9.9/12.5	28	36

Randell D. Hiatt
REGISTERED CIVIL ENGINEER

June 6, 2008
PLANS APPROVAL DATE

REGISTERED PROFESSIONAL ENGINEER
Randell D. Hiatt
No. C50200
Exp. 6-30-09
CIVIL
STATE OF CALIFORNIA

The State of California or its officers or agents shall not be responsible for the accuracy or completeness of electronic copies of this plan sheet.

To accompany plans dated 4-2-12

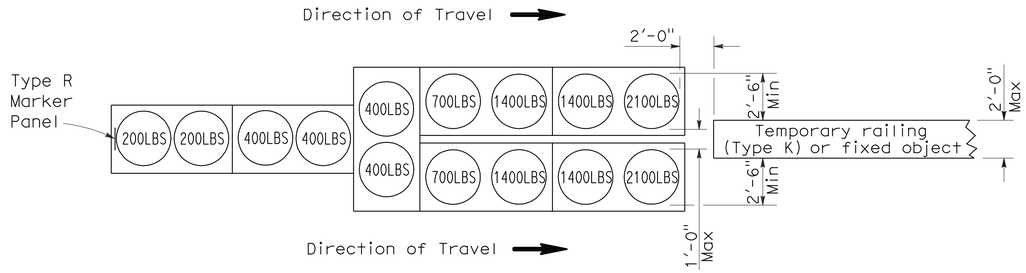

ARRAY 'TU14'

Approach speed 45 mph or more

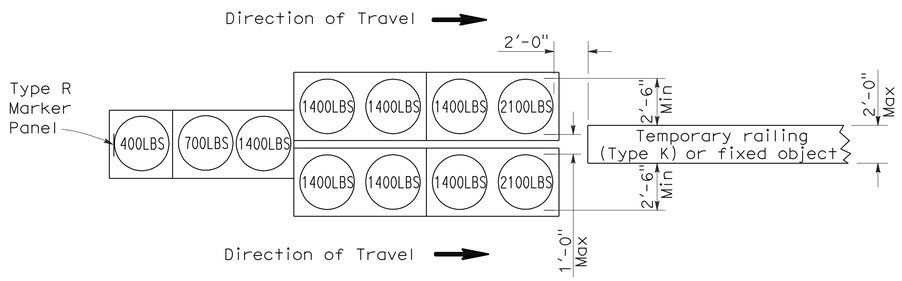

ARRAY 'TU11'

Approach speed less than 45 mph

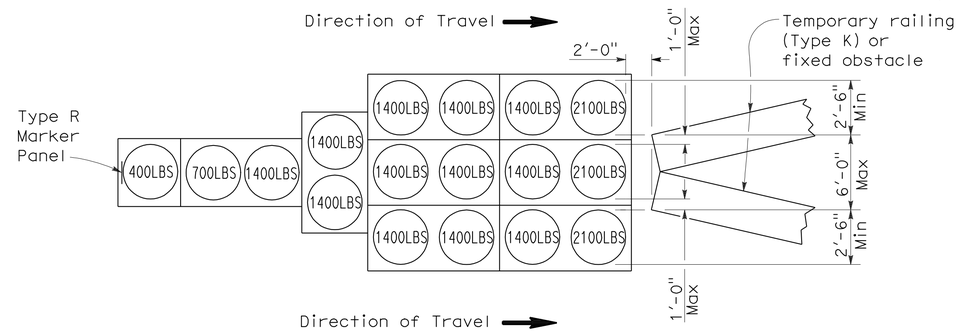

ARRAY 'TU17'

Approach speed less than 45 mph

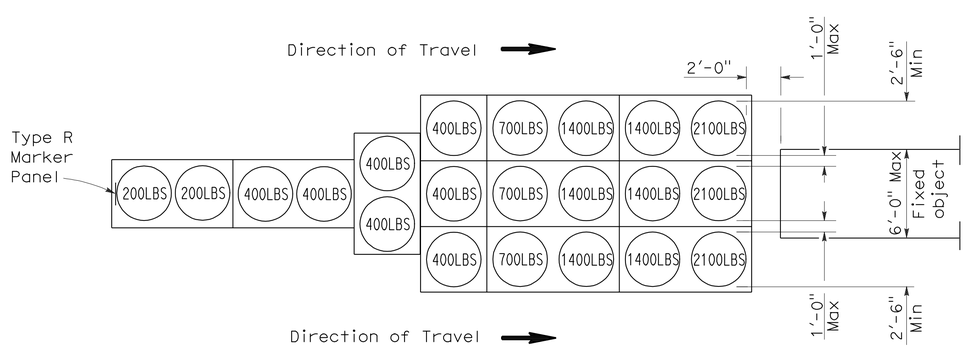

ARRAY 'TU21'

Approach speed 45 mph or more

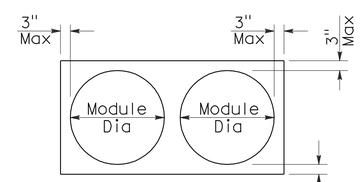

PLAN

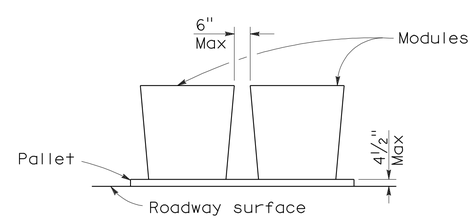

ELEVATION

CRASH CUSHION PALLET DETAIL

See Note 7

NOTES:

1. (XXX) Indicates sand filled module location and weight of sand in pounds for each module. Module spacing is based on the greater diameter of the module.
2. All sand weights are nominal.
3. Temporary crash cushion arrays shall not encroach on the traveled way.
4. Place the top of Type R marker panel 1" below the module lid.
5. Refer to Standard Plan A73B for marker details.
6. Approach speeds indicated conform to NCHRP 350 Report criteria.
7. Use of pallets is optional.

STATE OF CALIFORNIA
DEPARTMENT OF TRANSPORTATION

TEMPORARY CRASH CUSHION, SAND FILLED (UNIDIRECTIONAL)

NO SCALE

RSP T1A DATED JUNE 6, 2008 SUPERSEDES STANDARD PLAN T1A
DATED MAY 1, 2006 - PAGE 211 OF THE STANDARD PLANS BOOK DATED MAY 2006.

REVISED STANDARD PLAN RSP T1A

2006 REVISED STANDARD PLAN RSP T1A

DIST	COUNTY	ROUTE	POST MILES TOTAL PROJECT	SHEET NO.	TOTAL SHEETS
08	SBd	210	9.9/12.5	29	36

Randell D. Hiatt
REGISTERED CIVIL ENGINEER

June 6, 2008
PLANS APPROVAL DATE

REGISTERED PROFESSIONAL ENGINEER
Randell D. Hiatt
No. C50200
Exp. 6-30-09
CIVIL
STATE OF CALIFORNIA

The State of California or its officers or agents shall not be responsible for the accuracy or completeness of electronic copies of this plan sheet.

To accompany plans dated 4-2-12

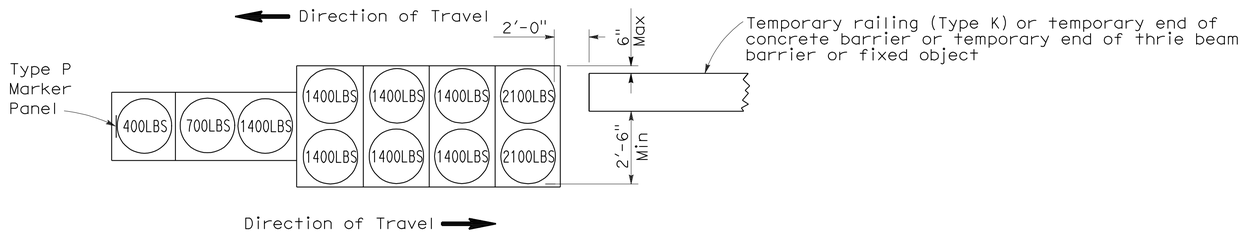

ARRAY 'TB11'

Approach speed less than 45 mph

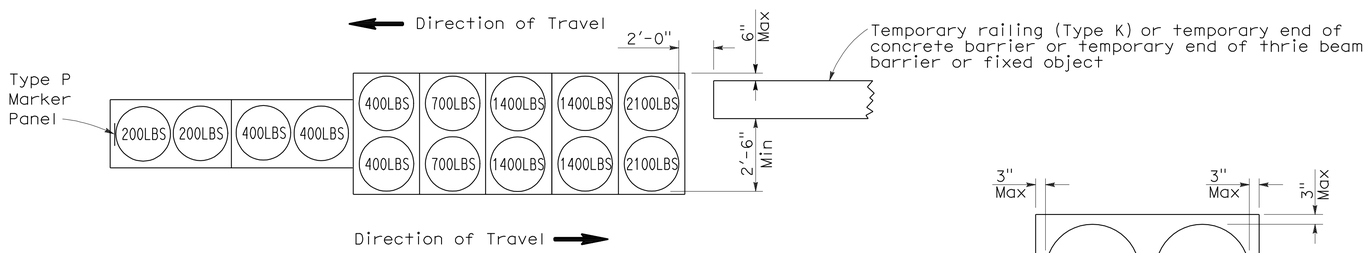

ARRAY 'TB14'

Approach speed 45 mph or more

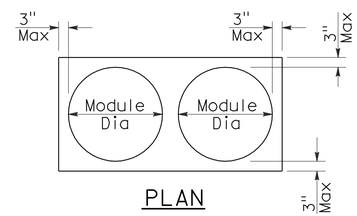

PLAN

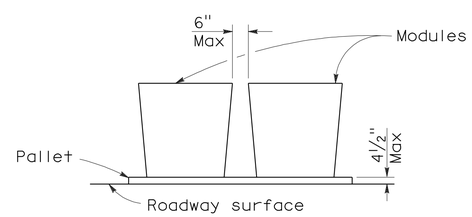

ELEVATION

CRASH CUSHION PALLET DETAIL

See Note 7

NOTES:

1. (XXX) Indicates sand filled module location and weight of sand in pounds for each module. Module spacing is based on the greater diameter of the module.
2. All sand weights are nominal.
3. Temporary crash cushion arrays shall not encroach on the traveled way.
4. Place the Type P marker panel so that the bottom of the panel rests upon the pallet.
5. Refer to Standard Plan A73B for marker details.
6. Approach speeds indicated conform to NCHRP 350 Report criteria.
7. Use of pallets is optional.

STATE OF CALIFORNIA
DEPARTMENT OF TRANSPORTATION

TEMPORARY CRASH CUSHION, SAND FILLED (BIDIRECTIONAL)

NO SCALE

RSP T1B DATED JUNE 6, 2008 SUPERSEDES STANDARD PLAN T1B
DATED MAY 1, 2006 - PAGE 212 OF THE STANDARD PLANS BOOK DATED MAY 2006.

REVISED STANDARD PLAN RSP T1B

2006 REVISED STANDARD PLAN RSP T1B

5-15-08

DIST	COUNTY	ROUTE	POST MILES TOTAL PROJECT	SHEET NO.	TOTAL SHEETS
08	SBd	210	9.9/12.5	30	36

Randell D. Hiatt
REGISTERED CIVIL ENGINEER

June 6, 2008
PLANS APPROVAL DATE

REGISTERED PROFESSIONAL ENGINEER
Randell D. Hiatt
No. C50200
Exp. 6-30-09
CIVIL
STATE OF CALIFORNIA

The State of California or its officers or agents shall not be responsible for the accuracy or completeness of electronic copies of this plan sheet.

To accompany plans dated 4-2-12

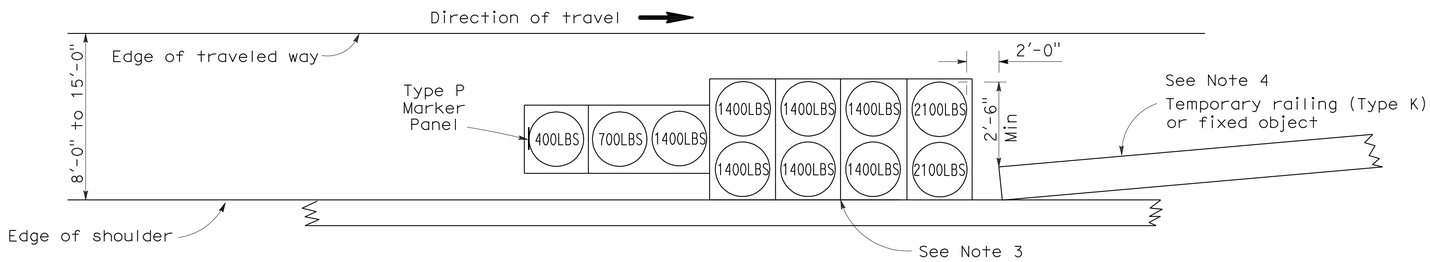

ARRAY 'TS11'

Approach speed less than 45 mph
See Note 9

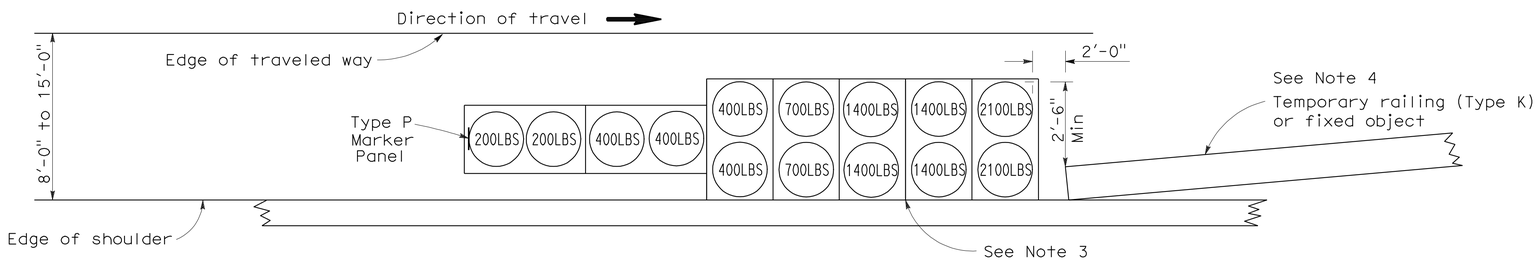

ARRAY 'TS14'

Approach speed 45 mph or more
See Note 9

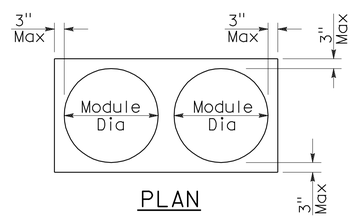

PLAN

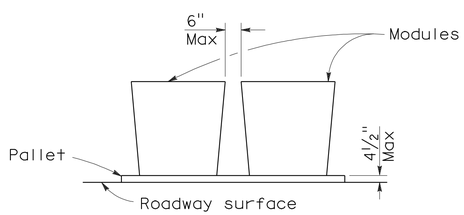

ELEVATION

CRASH CUSHION PALLET DETAIL

See Note 11

NOTES:

1. (XXX) Indicates sand filled module location and weight of sand in pounds for each module. Module spacing is based on the greater diameter of the module.
2. All sand weights are nominal.
3. The temporary crash cushion arrays shown on this plan shall be used only in locations where there will be traffic on one side of the temporary crash cushion array.
4. If the fixed object or approach end of the temporary railing is less than 15'-0" from the edge of traveled way, a temporary crash cushion is required in a construction or work zone.
5. Temporary crash cushion arrays shall not encroach on the traveled way.
6. Arrays for median shoulders shall conform to details shown on this plan for outside shoulders.
7. Place the Type P marker panel so that the bottom of the panel rests upon the pallet and faces traffic.
8. Refer to Standard Plan A73B for marker details.
9. For shoulder widths less than 8'-0", appropriate approved crash cushion protection, other than sand filled modules, shall be provided at fixed objects and at approach ends of temporary railing. The specific type of crash cushion shall be as shown on the project plans or as specified in the Special Provisions, or if not shown on the project plans or specified in the Special Provisions, shall be as approved by the Engineer.
10. Approach speeds indicated conform to NCHRP 350 Report criteria.
11. Use of pallets is optional.

STATE OF CALIFORNIA
DEPARTMENT OF TRANSPORTATION

TEMPORARY CRASH CUSHION, SAND FILLED (SHOULDER INSTALLATIONS)

NO SCALE

RSP T2 DATED JUNE 6, 2008 SUPERSEDES STANDARD PLAN T2
DATED MAY 1, 2006 - PAGE 213 OF THE STANDARD PLANS BOOK DATED MAY 2006.

REVISED STANDARD PLAN RSP T2

2006 REVISED STANDARD PLAN RSP T2

5-15-08

Dist	COUNTY	ROUTE	POST MILES TOTAL PROJECT	SHEET No.	TOTAL SHEETS
08	SBd	210	9.9/12.5	31	36

Randell D. Hiatt
REGISTERED CIVIL ENGINEER

May 20, 2011
PLANS APPROVAL DATE

REGISTERED PROFESSIONAL ENGINEER
Randell D. Hiatt
No. C50200
Exp. 6-30-11
CIVIL
STATE OF CALIFORNIA

The State of California or its officers or agents shall not be responsible for the accuracy or completeness of electronic copies of this plan sheet.

To accompany plans dated 4-2-12

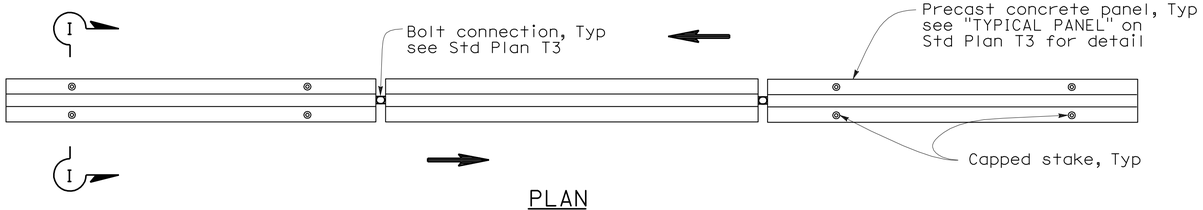

PLAN

RAILING STAKING CONFIGURATION FOR TWO-WAY TRAFFIC

See Note 1

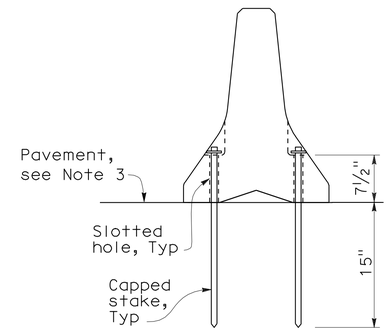

SECTION I-I

NOTES:

1. Where Type K Temporary Railing is placed as a temporary or long term barrier in two-way traffic on highways with less than 24" from the edge of traveled way, use four capped stakes per every other panel with end panels staked.
2. Where Type K Temporary Railing is placed 3" to 24" from the edge of an excavation on highways, use two capped stakes per panel along the traffic side.
3. Staked Type K Temporary Railing must be supported by at least 4" thick concrete, hot mix asphalt or existing asphalt concrete pavement.
4. The minimum yield strength for the washer must be 60,000 psi.
5. Direction of adjacent traffic indicated by ⟹.

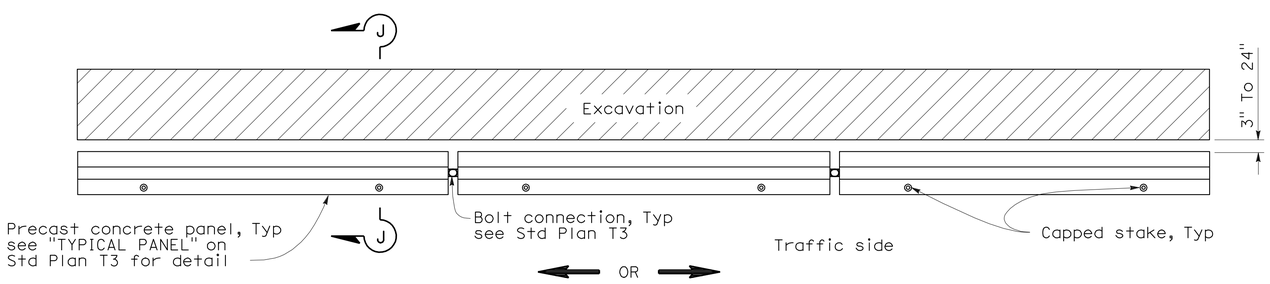

PLAN

RAILING STAKING CONFIGURATION ADJACENT TO AN EXCAVATION

See Note 2

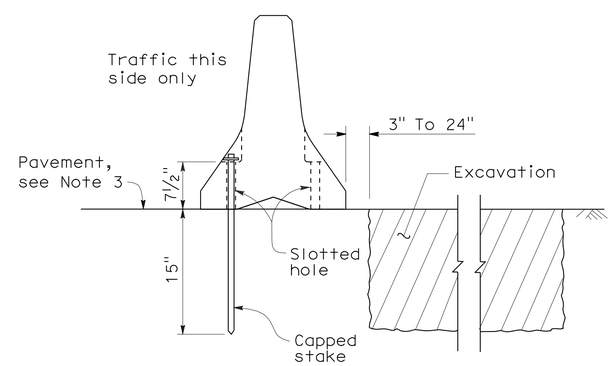

SECTION J-J

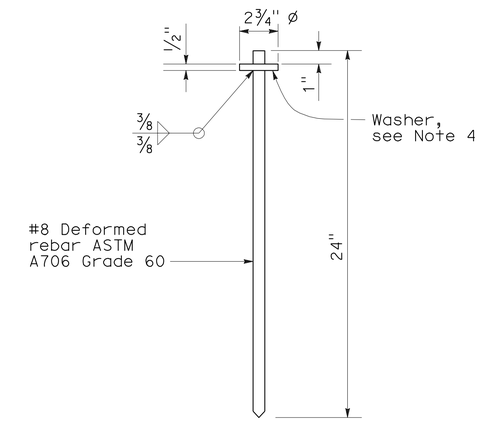

CAPPED STAKE DETAIL

STATE OF CALIFORNIA
DEPARTMENT OF TRANSPORTATION

TEMPORARY RAILING (TYPE K)

NO SCALE

NSP T3A DATED MAY 20, 2011 SUPPLEMENTS
THE STANDARD PLANS BOOK DATED MAY 2006.

NEW STANDARD PLAN NSP T3A

2006 NEW STANDARD PLAN NSP T3A

DIST	COUNTY	ROUTE	POST MILES TOTAL PROJECT	SHEET NO.	TOTAL SHEETS
08	SBd	210	9.9/12.5	32	36

REGISTERED CIVIL ENGINEER

November 17, 2006
PLANS APPROVAL DATE

REGISTERED PROFESSIONAL ENGINEER
Greg W. Edwards
No. C36386
Exp. 6-30-08
CIVIL
STATE OF CALIFORNIA

The State of California or its officers or agents shall not be responsible for the accuracy or completeness of electronic copies of this plan sheet.

To accompany plans dated 4-2-12

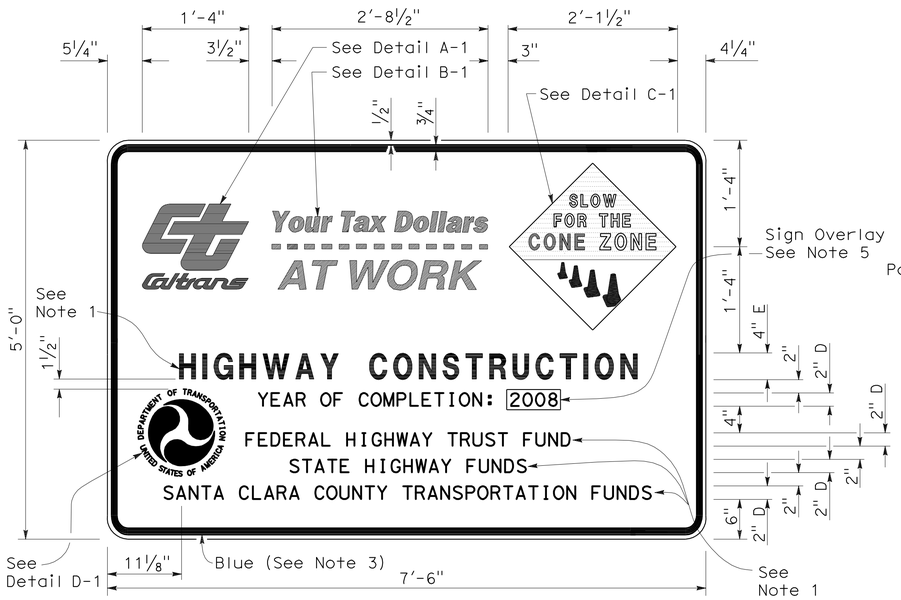

TYPE 1

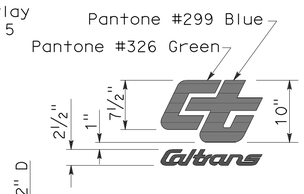

DETAIL A-1

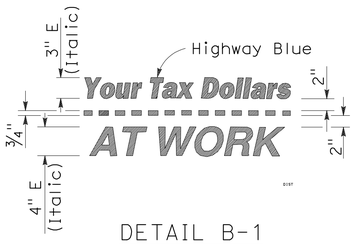

DETAIL B-1
(See Note 3)

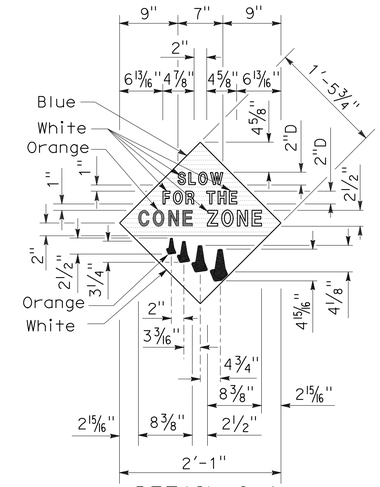

DETAIL C-1
(See Note 4)

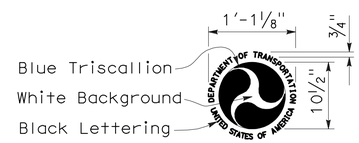

DETAIL D-1
(See Note 6)

NOTES:

1. The sign messages shown for type of project and fund types are examples only. See the Special Provisions for the applicable type of project and fund type messages to be used.
2. Except as otherwise shown, the legend of sign shall be black on a white background (non-reflective).
3. The border of the signs and details "B-1" and "B-2" shall be blue (non-reflective).
4. The diamond in details "C-1" and "C-2" shall be blue for the background of message, " SLOW FOR THE CONE ZONE", and white background for the orange cones. The color and type of font for the "SLOW FOR THE CONE ZONE" message shall be: "SLOW" white D; "FOR THE" white D; "CONE" orange Arial font; "ZONE" white Arial font.
5. Year of completion of project construction shown on the overlay is an example only. See the Special Provisions.
6. Use when the Project involves Federal Highway Trust Fund.

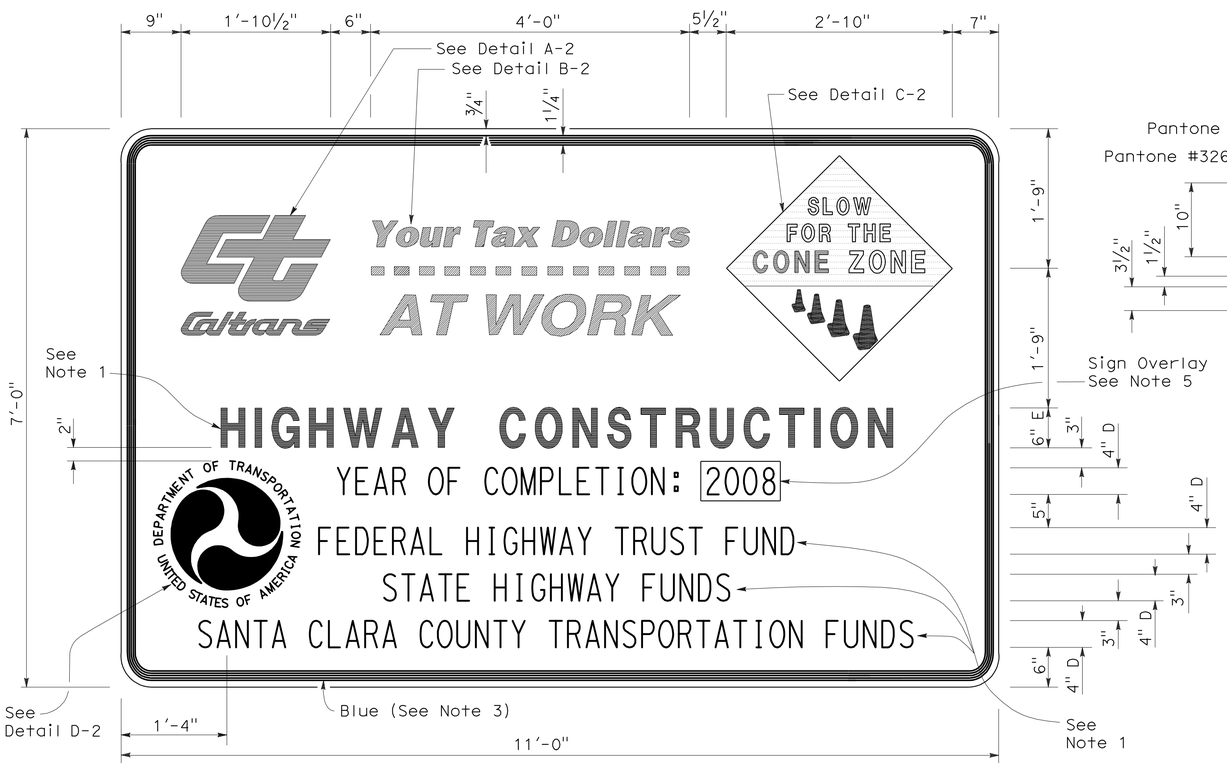

TYPE 2

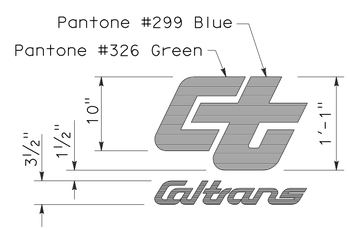

DETAIL A-2

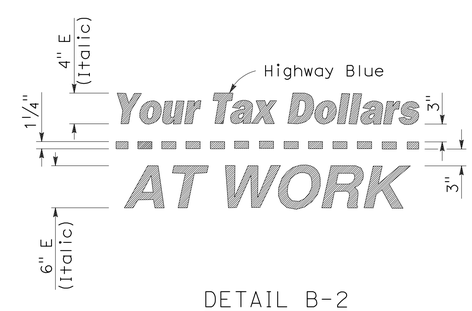

DETAIL B-2
(See Note 3)

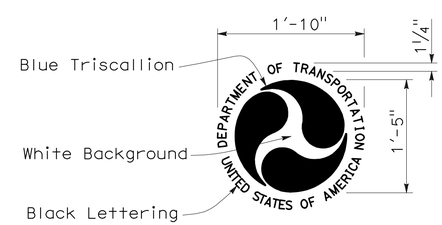

DETAIL D-2
(See Note 6)

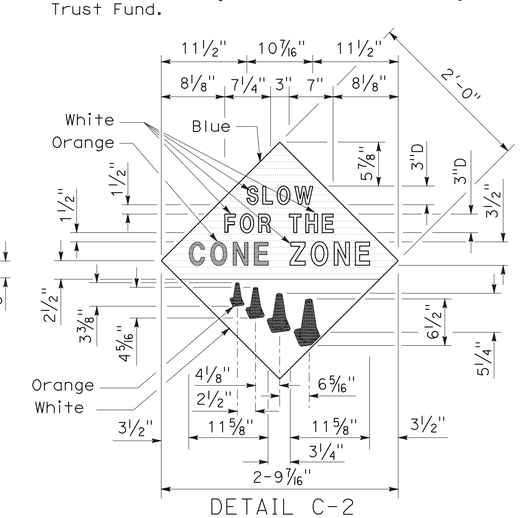

DETAIL C-2
(See Note 4)

STATE OF CALIFORNIA
DEPARTMENT OF TRANSPORTATION

CONSTRUCTION PROJECT FUNDING IDENTIFICATION SIGNS

NO SCALE

RSP T7 DATED NOVEMBER 17, 2006 SUPERSEDES STANDARD PLAN T7
DATED MAY 1, 2006 - PAGE 217 OF THE STANDARD PLANS BOOK DATED MAY 2006.

REVISED STANDARD PLAN RSP T7

2006 REVISED STANDARD PLAN RSP T7

9-7-06

DIST	COUNTY	ROUTE	POST MILES TOTAL PROJECT	SHEET NO.	TOTAL SHEETS
08	SBd	210	9.9/12.5	33	36

Robert B Schott
LICENSED LANDSCAPE ARCHITECT

August 15, 2008
PLANS Approval DATE

LICENSED LANDSCAPE ARCHITECT
Robert B. Schott 3695
Robert B Schott
Signature
11-04-08
Renewal Date
08-11-08
Date
STATE OF CALIFORNIA

The State of California or its officers or agents shall not be responsible for the accuracy or completeness of electronic copies of this plan sheet.

To accompany plans dated 4-2-12

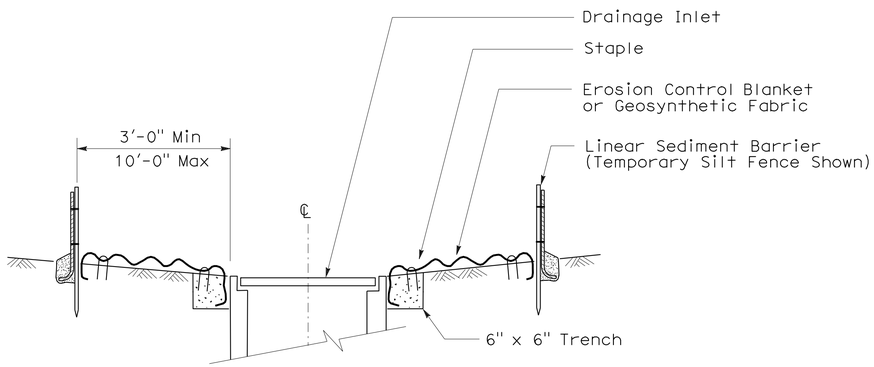

SECTION A-A

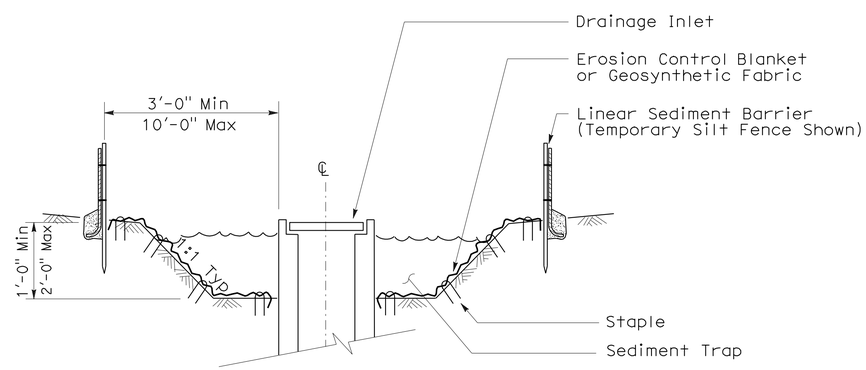

SECTION B-B

NOTES:

1. See Standard Plan T51 for Temporary Silt Fence.
2. Dimensions may vary to fit field conditions.

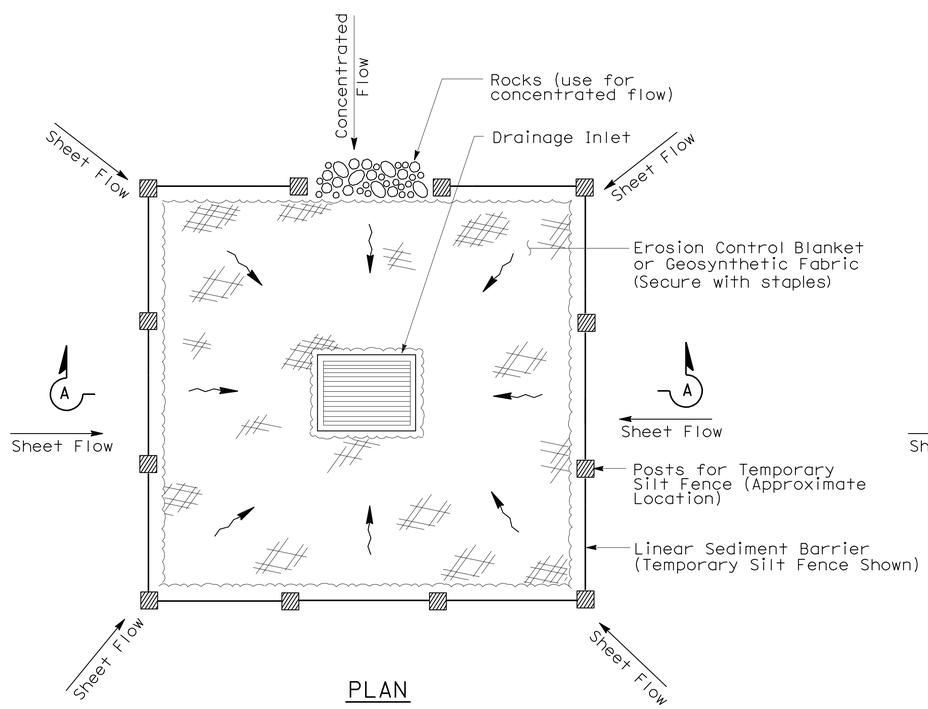

PLAN

TEMPORARY DRAINAGE INLET PROTECTION (TYPE 1)

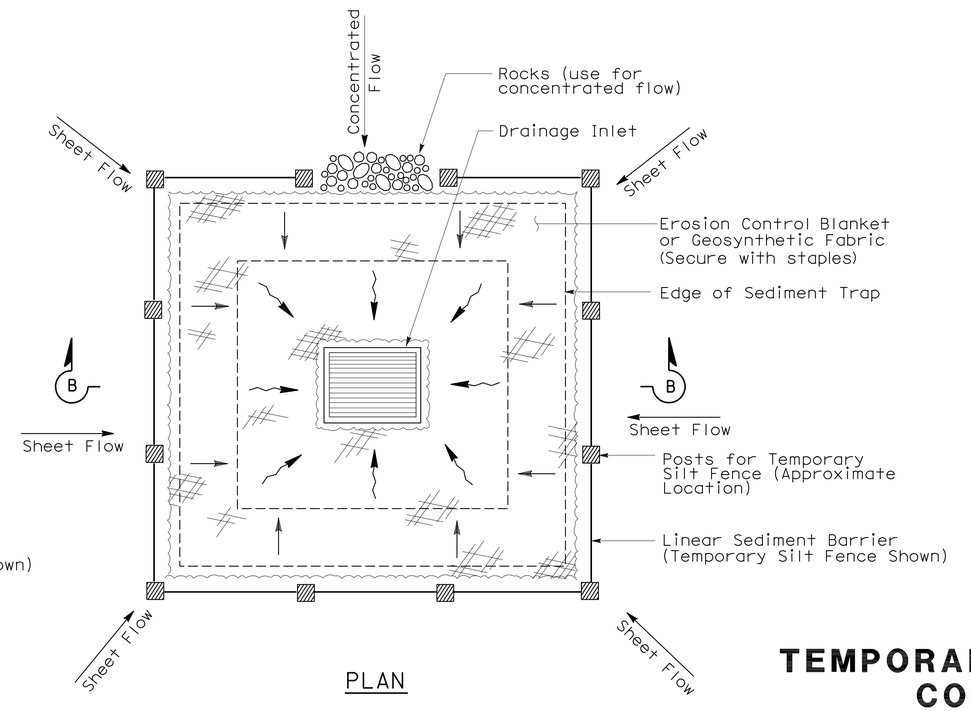

PLAN

TEMPORARY DRAINAGE INLET PROTECTION (TYPE 2) (EXCAVATED SEDIMENT TRAP)

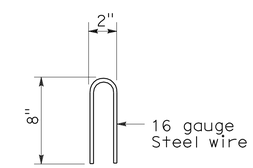

STAPLE DETAIL

STATE OF CALIFORNIA
DEPARTMENT OF TRANSPORTATION

TEMPORARY WATER POLLUTION CONTROL DETAILS (TEMPORARY DRAINAGE INLET PROTECTION)

NO SCALE

NSP T61 DATED AUGUST 15, 2008 SUPPLEMENTS
THE STANDARD PLANS BOOK DATED MAY 2006.

NEW STANDARD PLAN NSP T61

2006 NEW STANDARD PLAN NSP T61

7-11-08

DIST	COUNTY	ROUTE	POST MILES TOTAL PROJECT	SHEET NO.	TOTAL SHEETS
08	SBd	210	9.9/12.5	34	36

Robert B Schott
LICENSED LANDSCAPE ARCHITECT

August 15, 2008
PLANS APPROVAL DATE

LICENSED LANDSCAPE ARCHITECT Robert B. Schott 3695 Signature 11-04-08 Renewal Date 08-11-08 Date STATE OF CALIFORNIA

The State of California or its officers or agents shall not be responsible for the accuracy or completeness of electronic copies of this plan sheet.

To accompany plans dated 4-2-12

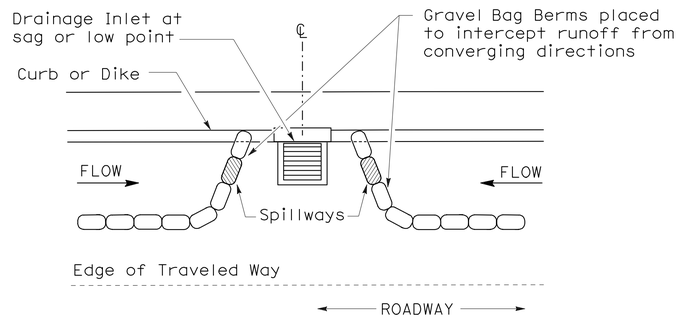

PLAN

CONFIGURATION FOR SAG POINT INLET (GRAVEL BAG BERM)

GRAVEL BAG BERM (TYPE 3A) SPACING TABLE

SLOPE OF ROADWAY (PERCENT)	1 to 3.9	4 to 5.9	6 to 7.9	8 to 10	10+
INTERVAL BETWEEN BERM	100′	75′	50′	25′	12′

For slope of less than 1%, install barriers only if erosion/sediment is prevalent

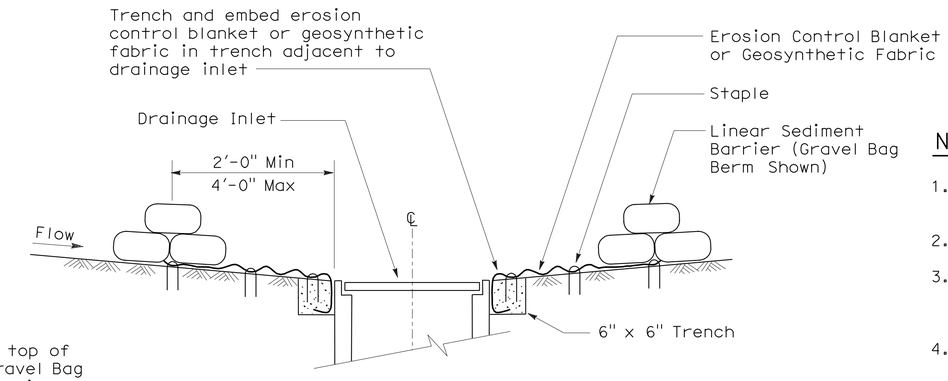

SECTION A-A

NOTES:

1. Place safety cones adjacent to drainage inlet protection.
2. Dimensions may vary to fit field conditions.
3. Install a minimum of 3 gravel bag berms upstream of each drainage inlet to be protected.
4. Position erosion control blanket or geosynthetic fabric at edge of concrete apron and secure in trench.
5. Erosion control blanket or geosynthetic fabric is not required if the area adjacent to the drainage inlet is vegetated or paved.

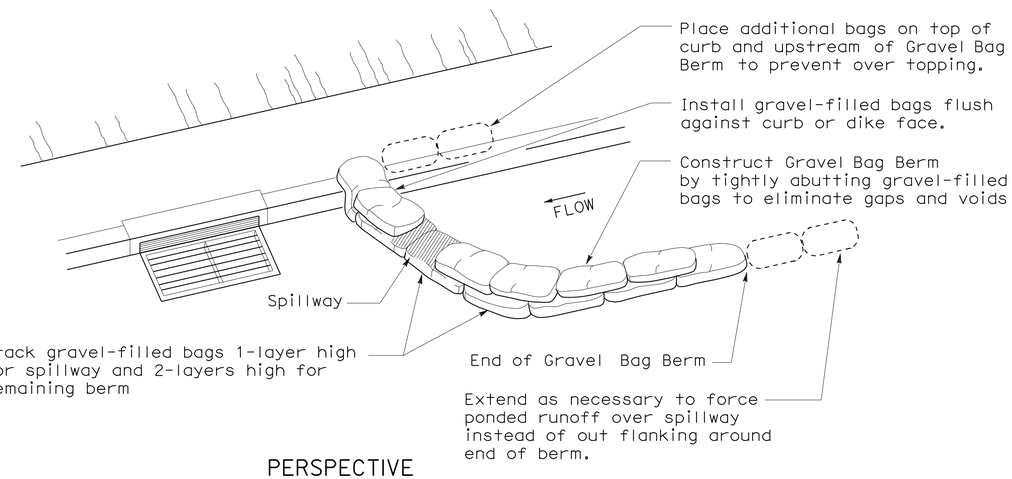

PERSPECTIVE

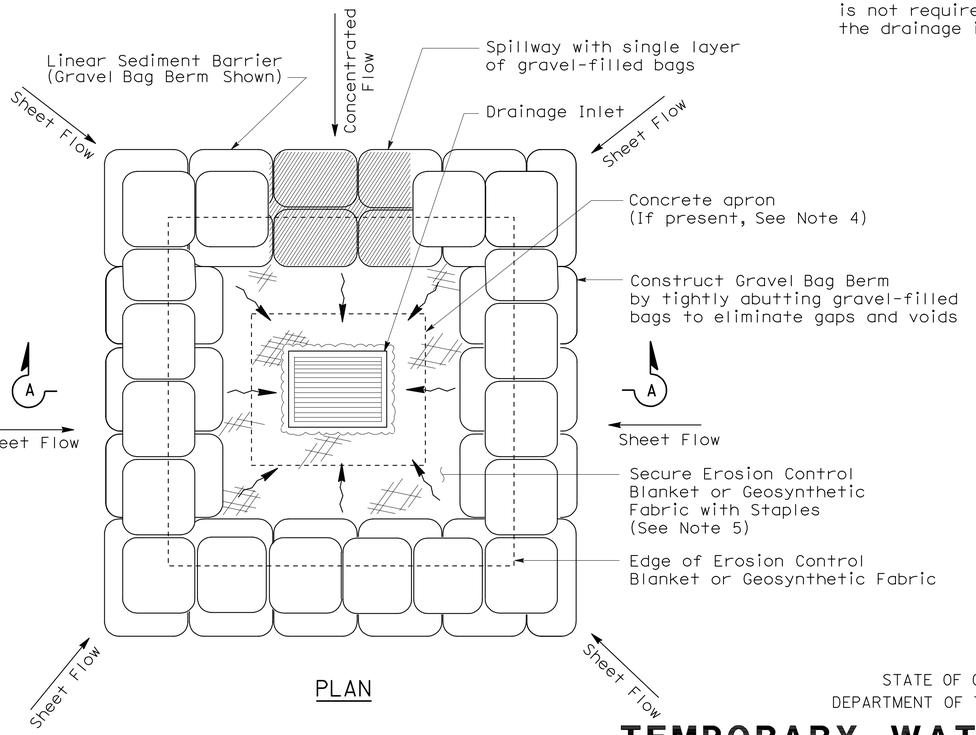

PLAN

TEMPORARY DRAINAGE INLET PROTECTION (TYPE 3B)

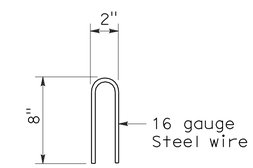

STAPLE DETAIL

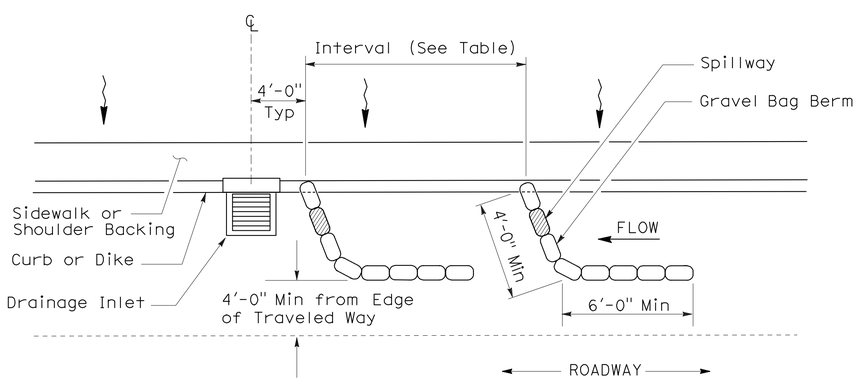

PLAN

TEMPORARY DRAINAGE INLET PROTECTION (TYPE 3A) (GRAVEL BAG BERM)

STATE OF CALIFORNIA
DEPARTMENT OF TRANSPORTATION

TEMPORARY WATER POLLUTION CONTROL DETAILS (TEMPORARY DRAINAGE INLET PROTECTION)

NO SCALE

NSP T62 DATED AUGUST 15, 2008 SUPPLEMENTS
THE STANDARD PLANS BOOK DATED MAY 2006.

NEW STANDARD PLAN NSP T62

2006 NEW STANDARD PLAN NSP T62

7-11-08

DIST	COUNTY	ROUTE	POST MILES TOTAL PROJECT	SHEET NO.	TOTAL SHEETS
08	SBd	210	9.9/12.5	35	36

Robert B Schott
LICENSED LANDSCAPE ARCHITECT

August 15, 2008
PLANS APPROVAL DATE

LICENSED LANDSCAPE ARCHITECT Robert B. Schott 3895 Signature 11-04-08 Renewal Date 08-11-08 Date STATE OF CALIFORNIA

The State of California or its officers or agents shall not be responsible for the accuracy or completeness of electronic copies of this plan sheet.

To accompany plans dated 4-2-12

FLEXIBLE SEDIMENT BARRIER SPACING TABLE

SLOPE OF ROADWAY (PERCENT)	0 to 0.9	1 to 1.9	2 to 2.9	3 to 4	5+
INTERVAL BETWEEN BARRIERS	50′	35′	30′	25′	20′
ANGLE FROM FACE OF CURB	70°	70°	70°	45°	45°
SUGGESTED BARRIER LENGTH	6′	6′	6′	6′	6′

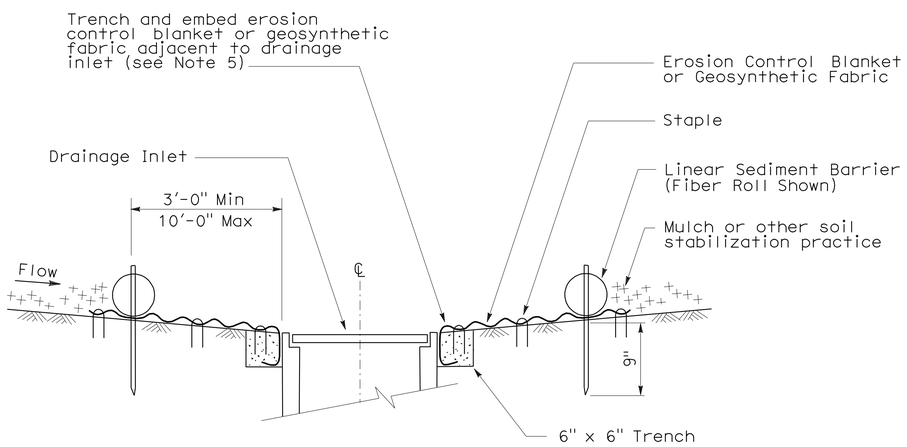

SECTION A-A

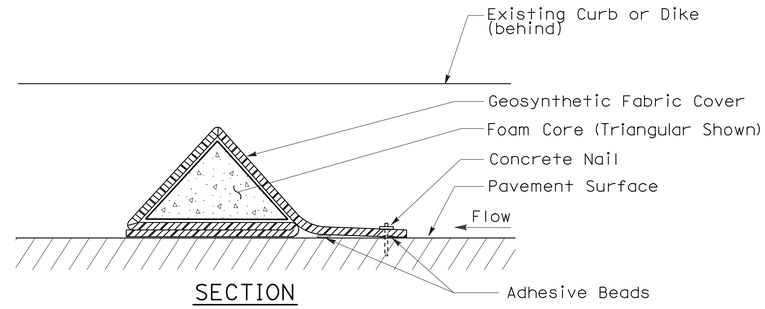

SECTION

FLEXIBLE SEDIMENT BARRIER DETAIL (FOAM BARRIER SHOWN)

NOTES:

1. See Standard Plan T51 for Temporary Silt Fence.
2. Dimensions may vary to fit field conditions.
3. Install a minimum of 3 flexible sediment barriers upstream of each drainage inlet to be protected.
4. Position erosion control blanket or geosynthetic fabric at edge of concrete apron and secure in trench.
5. Erosion control blanket or geosynthetic fabric is not required if the area adjacent to the drainage inlet is vegetated.

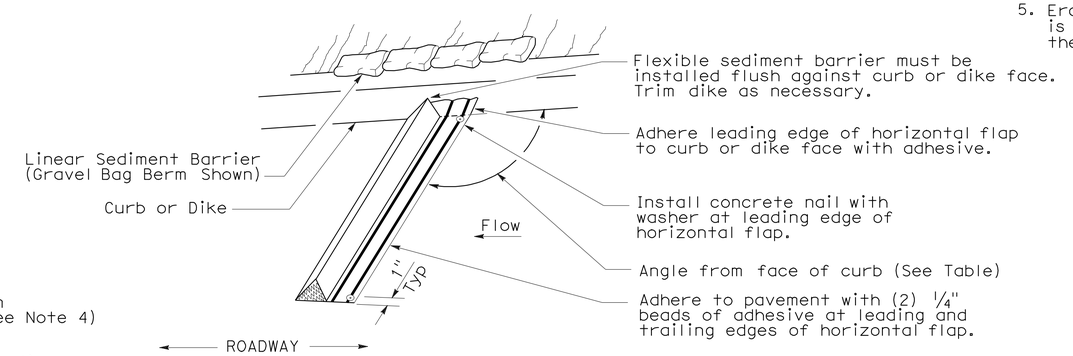

PERSPECTIVE

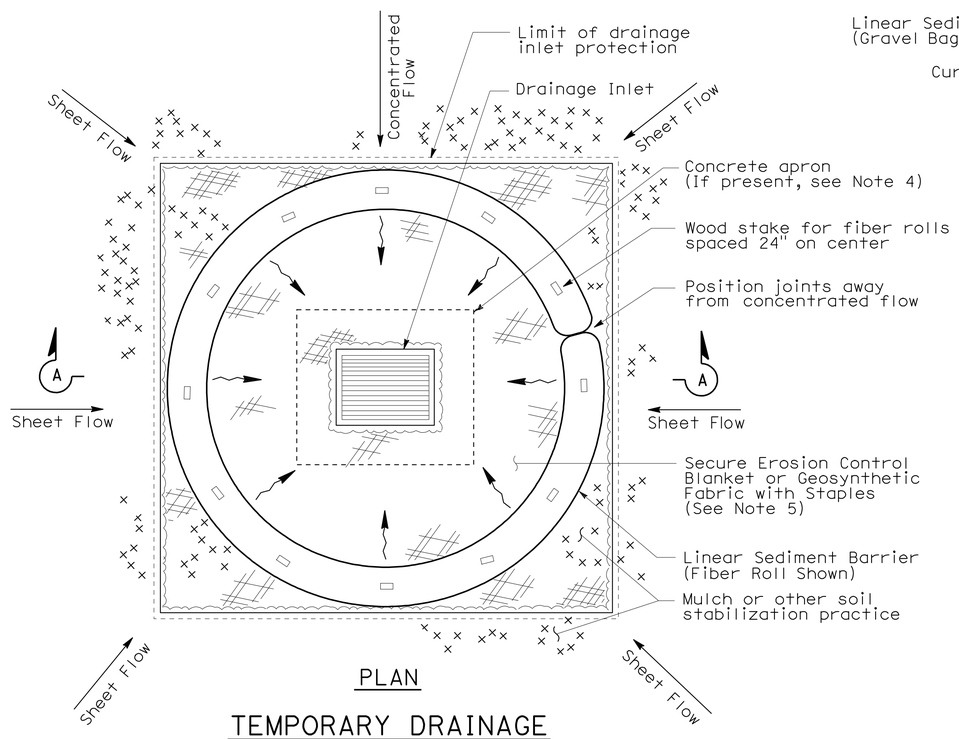

PLAN

TEMPORARY DRAINAGE INLET PROTECTION (TYPE 4A)

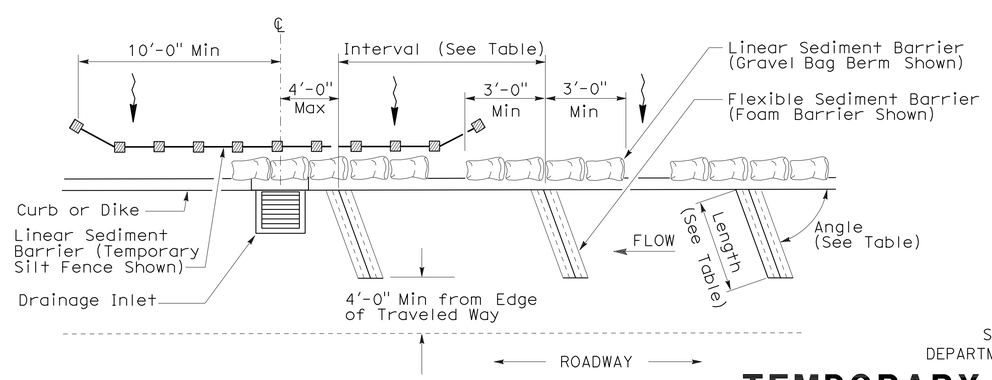

PLAN

TEMPORARY DRAINAGE INLET PROTECTION (TYPE 4B) FLEXIBLE SEDIMENT BARRIER

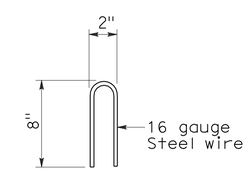

STAPLE DETAIL

STATE OF CALIFORNIA
DEPARTMENT OF TRANSPORTATION

TEMPORARY WATER POLLUTION CONTROL DETAILS (TEMPORARY DRAINAGE INLET PROTECTION)

NO SCALE

NSP T63 DATED AUGUST 15, 2008 SUPPLEMENTS THE STANDARD PLANS BOOK DATED MAY 2006.

NEW STANDARD PLAN NSP T63

2006 NEW STANDARD PLAN NSP T63

7-11-08

DIST	COUNTY	ROUTE	POST MILES TOTAL PROJECT	SHEET NO.	TOTAL SHEETS
08	SBd	210	9.9/12.5	36	36

Robert B Schott
LICENSED LANDSCAPE ARCHITECT

August 15, 2008
PLANS APPROVAL DATE

LICENSED LANDSCAPE ARCHITECT
Robert B. Schott 3695
Signature
11-04-08
Renewal Date
08-11-08
Date
STATE OF CALIFORNIA

The State of California or its officers or agents shall not be responsible for the accuracy or completeness of electronic copies of this plan sheet.

To accompany plans dated 4-2-12

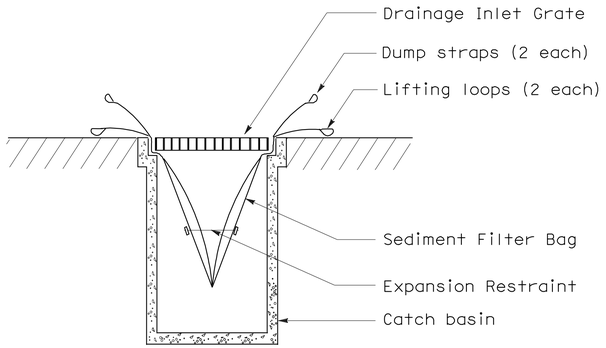

SECTION B-B

SEDIMENT FILTER BAG DETAIL

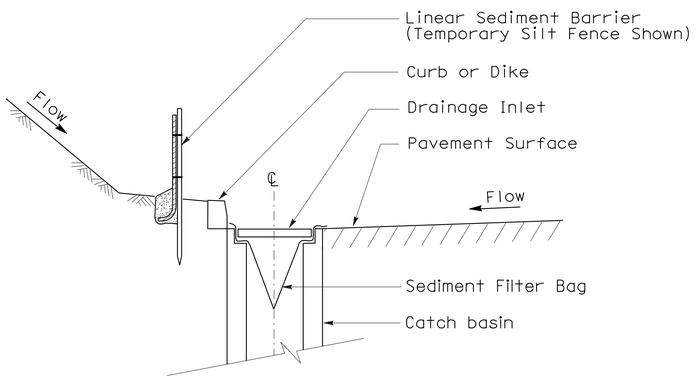

SECTION A-A

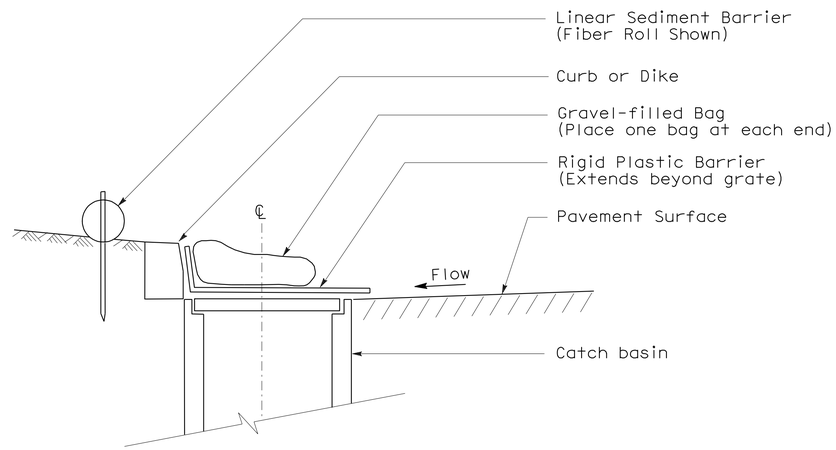

SECTION

TEMPORARY DRAINAGE INLET PROTECTION (TYPE 6A) (CATCH BASIN WITH GRATE)

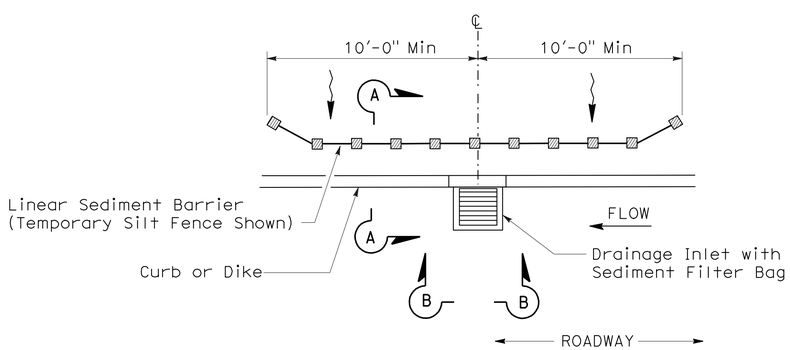

PLAN

TEMPORARY DRAINAGE INLET PROTECTION (TYPE 5) (SEDIMENT FILTER BAG)

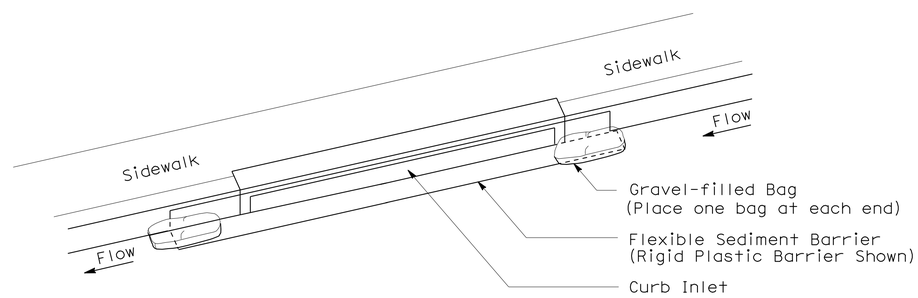

PERSPECTIVE

TEMPORARY DRAINAGE INLET PROTECTION (TYPE 6B) (CURB INLET WITHOUT GRATE)

NOTES:

1. See Standard Plan T51 for Temporary Silt Fence.
2. Dimensions may vary to fit field conditions.

STATE OF CALIFORNIA
DEPARTMENT OF TRANSPORTATION

TEMPORARY WATER POLLUTION CONTROL DETAILS (TEMPORARY DRAINAGE INLET PROTECTION)

NO SCALE

NSP T64 DATED AUGUST 15, 2008 SUPPLEMENTS
THE STANDARD PLANS BOOK DATED MAY 2006.

NEW STANDARD PLAN NSP T64

2006 NEW STANDARD PLAN NSP T64

7-11-08