Dist	COUNTY	ROUTE	POST MILES TOTAL PROJECT	SHEET No.	TOTAL SHEETS
08	Riv	15	9.5/30.4	1	27

STATE OF CALIFORNIA

DEPARTMENT OF TRANSPORTATION

PROJECT PLANS FOR CONSTRUCTION ON

STATE HIGHWAY

IN RIVERSIDE COUNTY
IN AND NEAR MURRIETA
ON ROUTE 15 AT VARIOUS LOCATIONS
FROM 0.3 MILE NORTH OF ROUTE 15/215 SEPARATION
TO 10.5 MILES SOUTH OF ROUTE 15/91 SEPARATION

TO BE SUPPLEMENTED BY STANDARD PLANS DATED MAY 2006

INDEX OF PLANS

SHEET No.	DESCRIPTION
1	TITLE AND LOCATION MAP
2	CONSTRUCTION DETAILS
3	CONSTRUCTION AREA SIGNS
4	DETOUR PLANS
5-6	PAVEMENT DELINEATION DETAILS AND QUANTITIES
7	SUMMARY OF QUANTITIES
8-15	REVISED AND NEW STANDARD PLANS

STRUCTURE PLANS

16-27	ROUTE 15 STRUCTURE PLANS AND DETAILS

THE STANDARD PLANS LIST APPLICABLE TO THIS CONTRACT IS INCLUDED IN THE NOTICE TO BIDDERS AND SPECIAL PROVISIONS BOOK.

LOCATION MAP

LOC	POST MILE	NAME OF BRIDGE	BRIDGE NUMBER
1	9.47	MURIETTA HOT SPRING ROAD OC	56 0700
2	9.84	YODER WASH	56 0703L
3	9.83	YODER WASH	56 0703R
4	10.59	CALIFORNIA OAKS ROAD UC	56 0720L
5	10.59	CALIFORNIA OAKS ROAD UC	56 0720R
6	11.98	NUTMEG STREET OC	56 0798
7	16.30	BUNDY CANYON ROAD UC	56 0717R
8	16.89	LEMON STREET UC	56 0718L
9	16.89	LEMON STREET UC	56 0718R
10	19.16	RAILROAD CANYON ROAD UC	56 0714L
11	19.16	RAILROAD CANYON ROAD UC	56 0714R
12	19.37	SAN JACINTO RIVER	56 0728R
13	20.95	MAIN STREET UC	56 0382L
14	20.95	MAIN STREET UC	56 0382R
15	22.26	ROUTE 15/74 SEPARATION	56 0723R
16	23.85	NICHOLS ROAD OC	56 0725
17	26.69	LAKE STREET UC	56 0682L
18	26.69	LAKE STREET UC	56 0682R
19	27.80	TEMESCAL CANYON ROAD UC	56 0681R
20	28.87	HORSETHIEF CANYON ROAD UC	56 0679L
21	28.87	HORSETHIEF CANYON ROAD UC	56 0679R
22	29.13	HORSETHIEF CANYON WASH	56 0678L
23	29.13	HORSETHIEF CANYON WASH	56 0678R
24	30.40	INDIAN TRUCK TRAIL UC	56 0676R

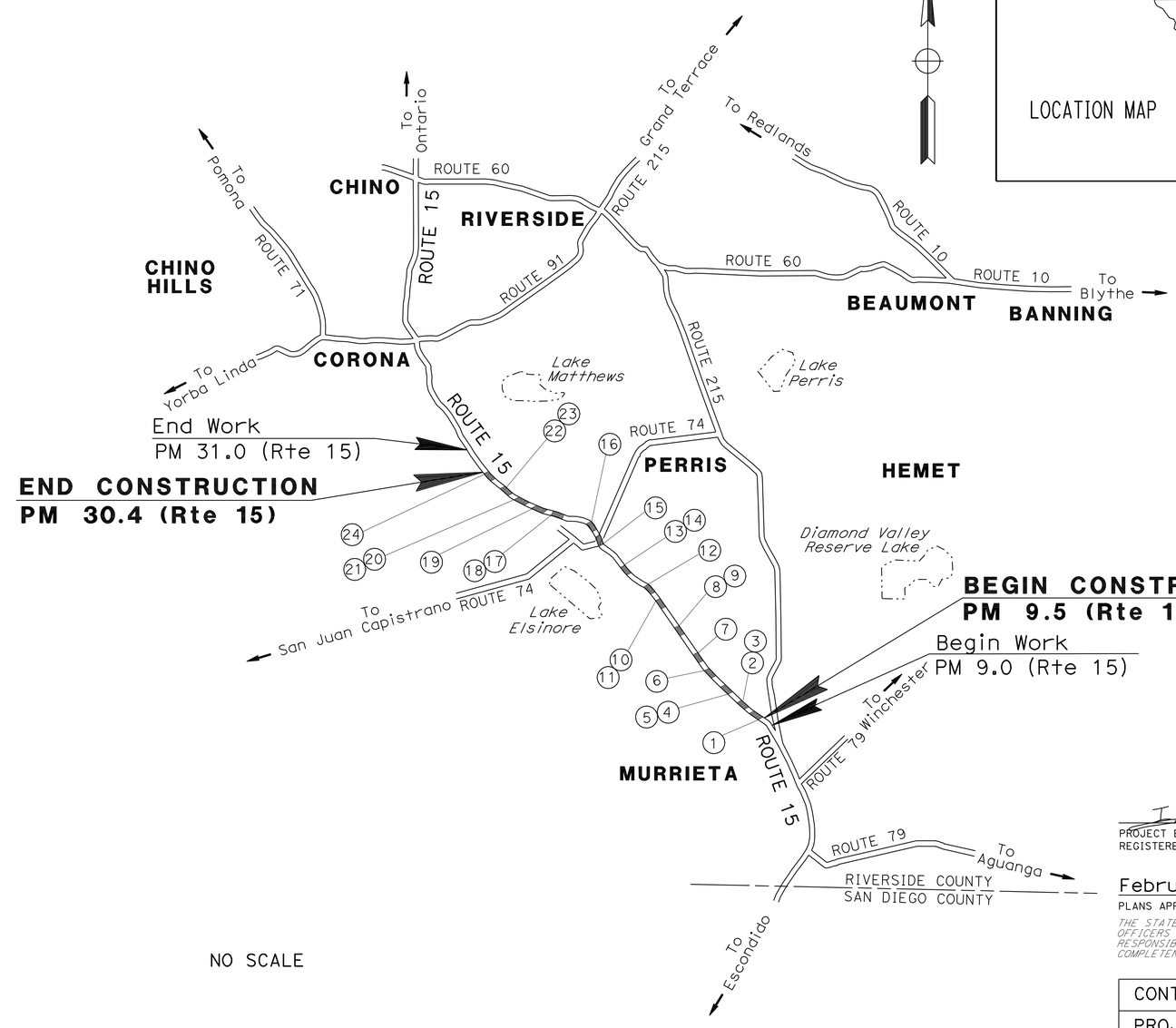

NO SCALE

PROJECT MANAGER CATALINO PINING

DESIGN ENGINEER IYAD NAMY

PROJECT ENGINEER REGISTERED CIVIL ENGINEER — DATE 1-25-12

February 27, 2012
PLANS APPROVAL DATE

REGISTERED PROFESSIONAL ENGINEER IYAD NAMY No. C 74762 Exp. 12/31/13 CIVIL STATE OF CALIFORNIA

THE STATE OF CALIFORNIA OR ITS OFFICERS OR AGENTS SHALL NOT BE RESPONSIBLE FOR THE ACCURACY OR COMPLETENESS OF SCANNED COPIES OF THIS PLAN SHEET.

THE CONTRACTOR SHALL POSSESS THE CLASS (OR CLASSES) OF LICENSE AS SPECIFIED IN THE "NOTICE TO BIDDERS."

CONTRACT No.	08-0Q2104
PROJECT ID	0800020297

LAST REVISION 01-25-12 — DATE PLOTTED => 01-MAR-2012 TIME PLOTTED => 13:44

Dist	COUNTY	ROUTE	POST MILES TOTAL PROJECT	SHEET No.	TOTAL SHEETS
08	Riv	15	9.5/30.4	2	27

REGISTERED CIVIL ENGINEER 1-25-12 DATE

2-27-12
PLANS APPROVAL DATE

REGISTERED PROFESSIONAL ENGINEER IYAD NAMY No. C 74762 Exp. 12/31/13 CIVIL STATE OF CALIFORNIA

THE STATE OF CALIFORNIA OR ITS OFFICERS OR AGENTS SHALL NOT BE RESPONSIBLE FOR THE ACCURACY OR COMPLETENESS OF SCANNED COPIES OF THIS PLAN SHEET.

NOTE:

EXACT LOCATION OF CHAIN LINK GATES TO BE DETERMINED BY THE ENGINEER.

LEGEND:

IMPORTED BORROW AND CONCRETE SLOPE PROTECTION AREA

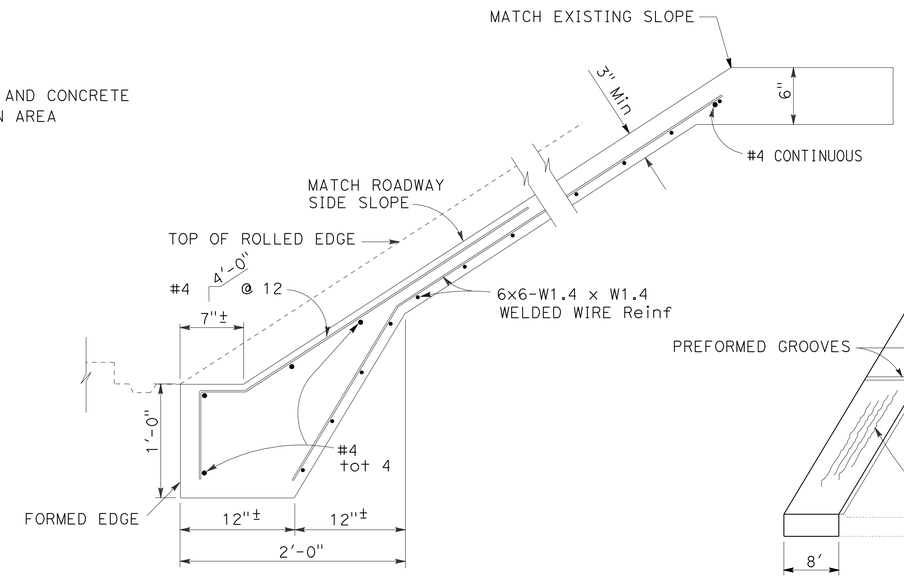

TYPICAL SECTION OF SLOPE PAVING
RAILROAD CANYON ROAD UC
Br No. 56-0714R PM 19.16

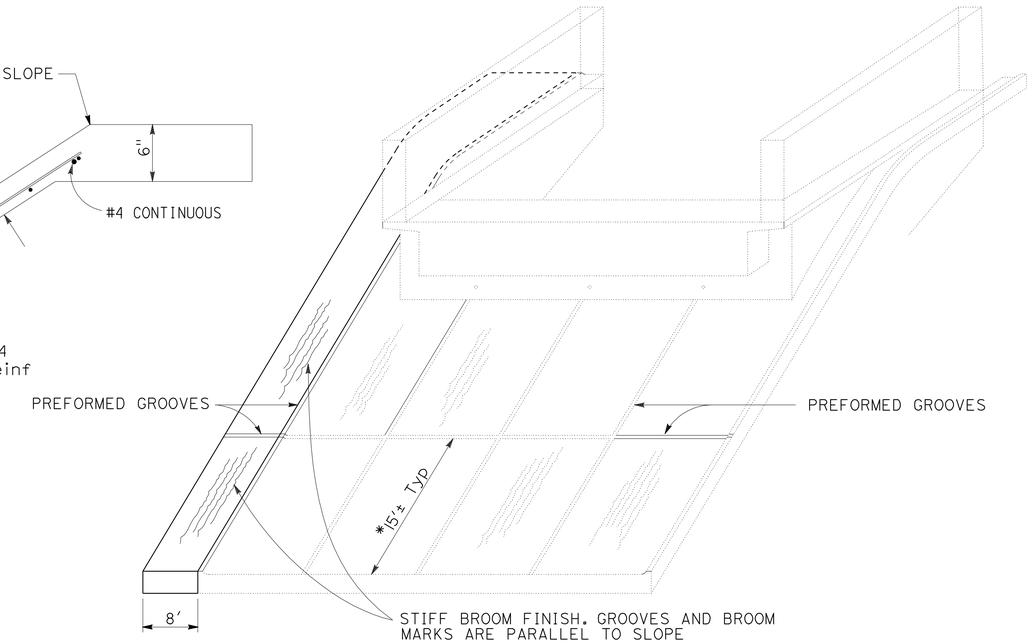

PICTORIAL VIEW OF SLOPE PAVING
RAILROAD CANYON ROAD UC
Br No. 56-0714R PM 19.16

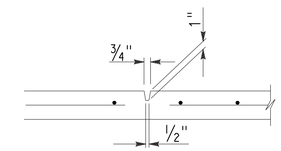

PREFORMED GROOVE DETAIL

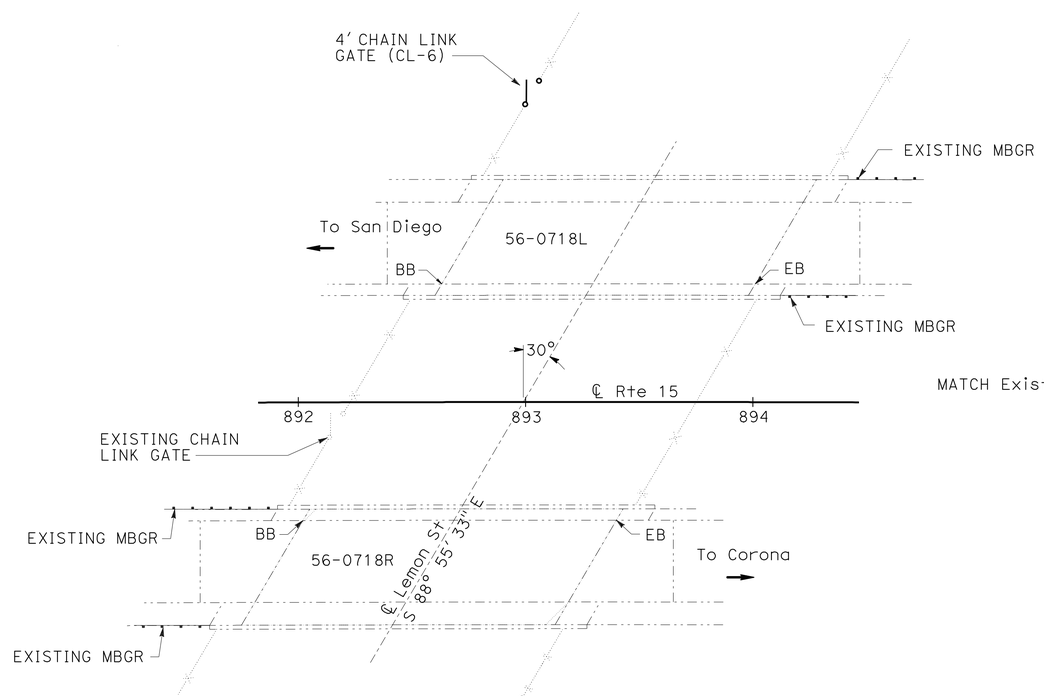

LOCATION NUMBERS 8 & 9
LEMON STREET UC
Br No. 56-0718L/R PM 16.89

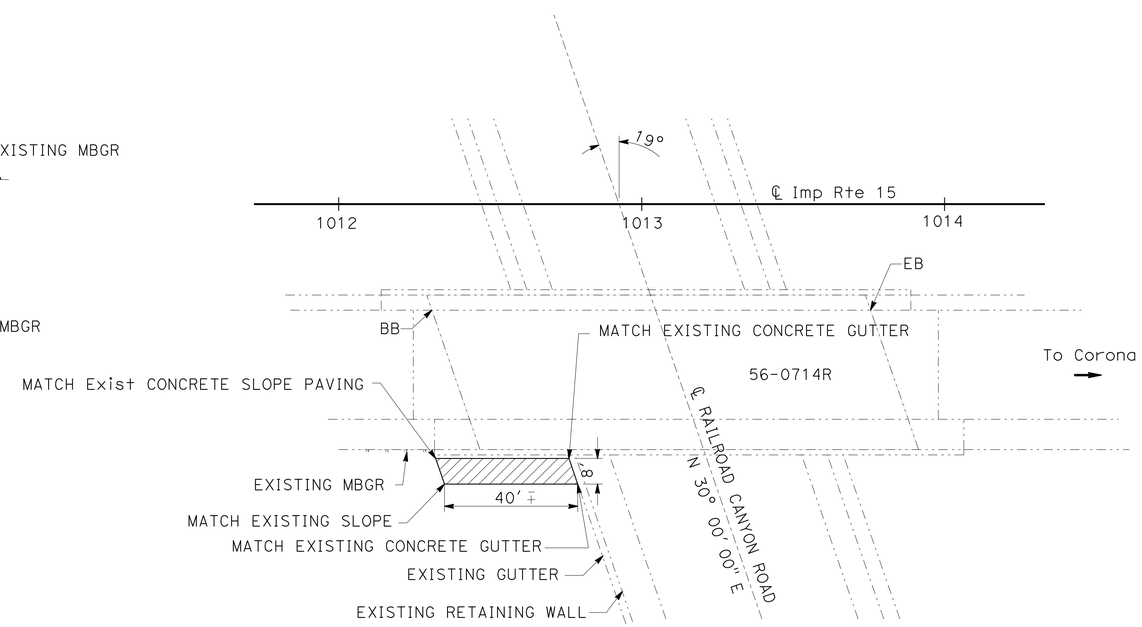

LOCATION NUMBER 11
RAILROAD CANYON ROAD UC
Br No. 56-0714R PM 19.16

CONSTRUCTION DETAILS
NO SCALE

C-1

STATE OF CALIFORNIA - DEPARTMENT OF TRANSPORTATION
Caltrans® MAINTENANCE DESIGN

FUNCTIONAL SUPERVISOR: KUANG CHEN
CALCULATED-DESIGNED BY: PHILLIP PHAN
CHECKED BY: IYAD NAMY
REVISED BY
DATE REVISED

LAST REVISION 01-25-12
DATE PLOTTED => 27-FEB-2012
TIME PLOTTED => 15:54

Dist	COUNTY	ROUTE	POST MILES TOTAL PROJECT	SHEET No.	TOTAL SHEETS
08	Riv	15	9.5/30.4	3	27

REGISTERED CIVIL ENGINEER 1-25-12 DATE

2-27-12
PLANS APPROVAL DATE

REGISTERED PROFESSIONAL ENGINEER TRAN HOANG No. 54996 Exp. 6/30/12 CIVIL STATE OF CALIFORNIA

THE STATE OF CALIFORNIA OR ITS OFFICERS OR AGENTS SHALL NOT BE RESPONSIBLE FOR THE ACCURACY OR COMPLETENESS OF SCANNED COPIES OF THIS PLAN SHEET.

NOTES:

1. LOCATIONS OF CONSTRUCTION AREA SIGNS ARE APPROXIMATE. EXACT LOCATIONS WILL BE DETERMINED BY THE ENGINEER.
2. REFER TO STANDARD PLANS T10, T11, T12, T13 AND T14 FOR TRAFFIC CONTROL REQUIREMENT.

LEGEND:

- CONSTRUCTION AREA
- CONSTRUCTION AREA SIGN (TWO POST)
- (XX) CONSTRUCTION LOCATION NUMBER

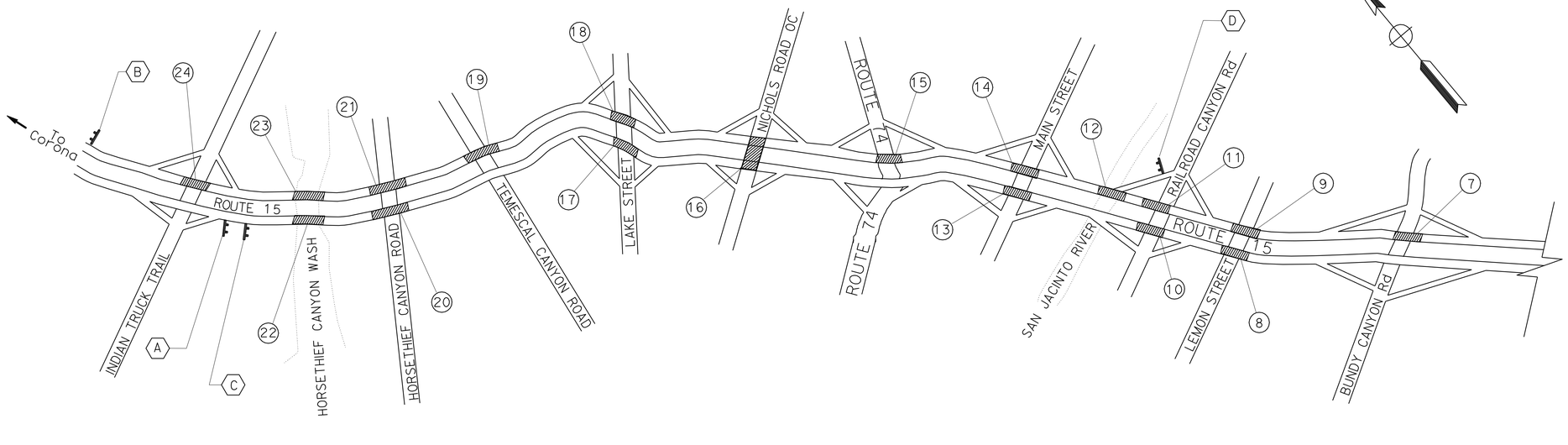

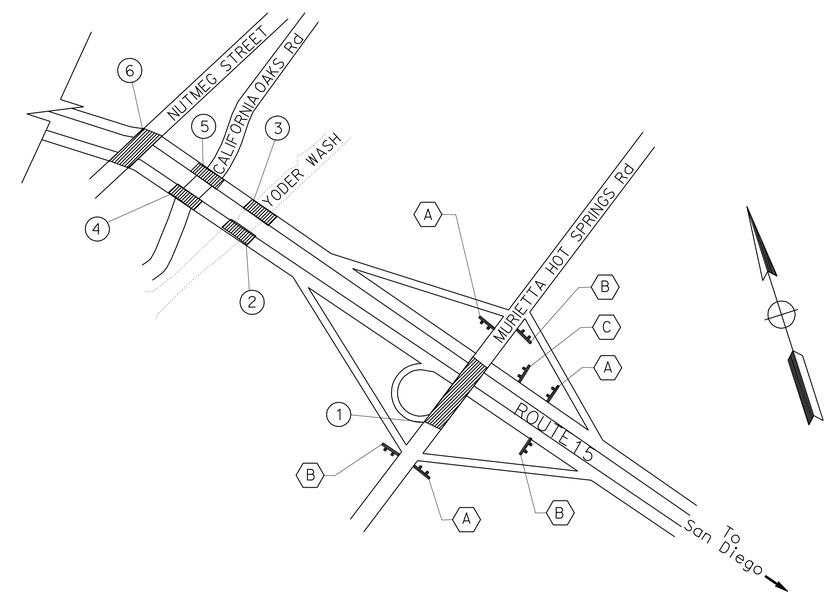

STATIONARY MOUNTED CONSTRUCTION AREA SIGNS

SIGN LETTER (X)	SIGN CODE FEDERAL	SIGN CODE CALIFORNIA	PANEL SIZE	SIGN MESSAGE	NUMBER OF POSTS AND SIZE	No. OF SIGNS
(A)	W20-1	C11(CA)	90" x 48"	ROAD WORK AHEAD	2 - 6" x 6"	4
(B)	G20-2	C14(CA)	48" x 24"	END ROAD WORK	2 - 4" x 4"	4
(C)		C40(CA)	72" x 36"	TRAFFIC FINES DOUBLED IN CONSTRUCTION ZONE	2 - 4" x 6"	2
(D)		SC6-4(CA)	60" x 48"	RAMP CLOSED DATE AND TIME	2 - 4" x 6"	1

APPROVED FOR CONSTRUCTION AREA SIGN WORK ONLY

CONSTRUCTION AREA SIGNS
CS-1

STATE OF CALIFORNIA - DEPARTMENT OF TRANSPORTATION
Caltrans® TRAFFIC DESIGN

FUNCTIONAL SUPERVISOR: BILL WASSER
CALCULATED-DESIGNED BY: DARYUSH NAMI
CHECKED BY: TRAN HOANG
REVISED BY
DATE REVISED

LAST REVISION 01-25-12
DATE PLOTTED => 05-MAR-2012
TIME PLOTTED => 05:35

Dist	COUNTY	ROUTE	POST MILES TOTAL PROJECT	SHEET No.	TOTAL SHEETS
08	Riv	15	9.5/30.4	4	27

REGISTERED CIVIL ENGINEER — DATE 1-25-12

2-27-12
PLANS APPROVAL DATE

REGISTERED PROFESSIONAL ENGINEER — TRAN HOANG No. 54996 Exp. 6/30/12 CIVIL — STATE OF CALIFORNIA

THE STATE OF CALIFORNIA OR ITS OFFICERS OR AGENTS SHALL NOT BE RESPONSIBLE FOR THE ACCURACY OR COMPLETENESS OF SCANNED COPIES OF THIS PLAN SHEET.

NOTES:

1. LOCATIONS OF THE CONSTRUCTION AREA SIGNS AND PCMS ARE APPROXIMATE. THE EXACT LOCATIONS WILL BE DETERMINED BY THE ENGINEER.
2. REFER TO STANDARD PLAN (T10) FOR TRAFFIC CONTROL OF LANE AND SHOULDER CLOSURES, AND REFER TO STANDARD PLAN T14 FOR TRAFFIC CONTROL OF RAMP AND CONNECTOR CLOSURES.
3. DISPLAY MESSAGES ON PCMS FOR DETOUR TRAFFIC TO USE BUNDY CANYON RD EXIT RAMP FOR TURN AROUND.

LEGEND:

- PORTABLE CHANGEABLE MESSAGE SIGN(PCMS)
- ONE POST CONSTRUCTION AREA SIGN
- DIRECTION OF DETOURED TRAFFIC
- (X) CONSTRUCTION AREA SIGN CODE
- CONSTRUCTION AREA
- CLOSED RAMP AREA

PORTABLE CHANGEABLE MESSAGE SIGNS (PCMS)

(EA)
2

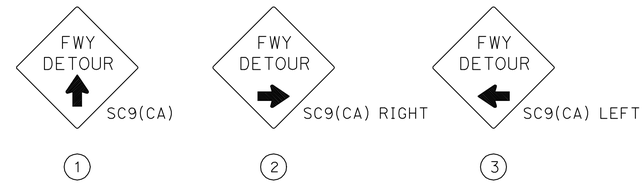

STATIONARY MOUNTED CONSTRUCTION AREA SIGNS

SIGN No. (X)	SIGN CODE		PANEL SIZE	SIGN MESSAGE	NUMBER OF POSTS AND SIZE	NUMBER OF SIGNS
	FEDERAL	CALIFORNIA				
1		SC9(CA)	48" X 48"	FWY DETOUR ARROW	1 - 6" x 6"	1
2		SC9(CA) RIGHT	48" X 48"	FWY DETOUR ARROW(RIGHT)	1 - 6" x 6"	2
3		SC9(CA) LEFT	48" X 48"	FWY DETOUR ARROW(LEFT)	1 - 6" x 6"	2

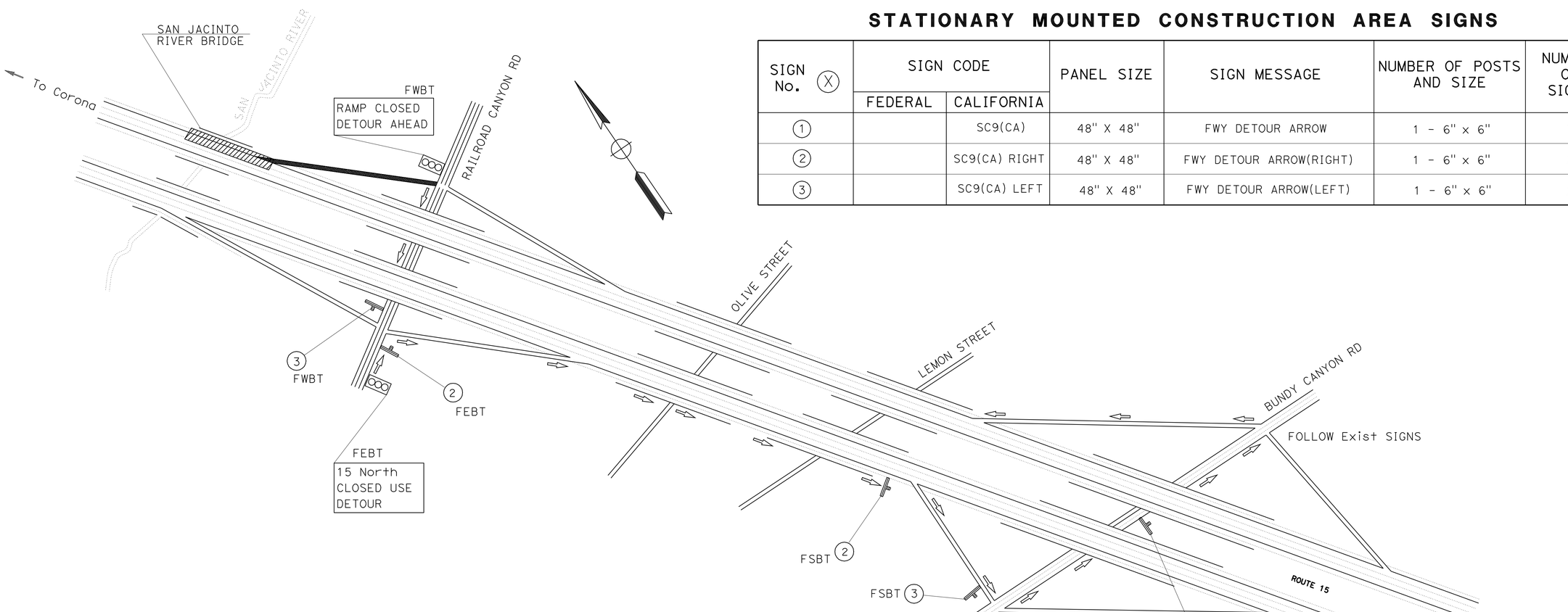

DETOUR PLAN
DURING CLOSURE OF NB RTE 15 ENTRANCE RAMP AT RAILROAD CANYON RD

APPROVED FOR DETOUR CONSTRUCTION WORK ONLY

DETOUR PLAN
NO SCALE **DE-1**

STATE OF CALIFORNIA - DEPARTMENT OF TRANSPORTATION
Caltrans® **TRAFFIC DESIGN**
FUNCTIONAL SUPERVISOR: BILL WASSER
CALCULATED-DESIGNED BY: DARYUSH NAMI
CHECKED BY: TRAN HOANG
REVISED BY / DATE REVISED

LAST REVISION 01-25-12 | DATE PLOTTED => 27-FEB-2012 | TIME PLOTTED => 15:50

Dist	COUNTY	ROUTE	POST MILES TOTAL PROJECT	SHEET No.	TOTAL SHEETS
08	Riv	15	9.5/30.4	5	27

REGISTERED CIVIL ENGINEER 1-25-12 DATE

2-27-12
PLANS APPROVAL DATE

REGISTERED PROFESSIONAL ENGINEER TRAN HOANG No. 54996 Exp. 6/30/12 CIVIL STATE OF CALIFORNIA

THE STATE OF CALIFORNIA OR ITS OFFICERS OR AGENTS SHALL NOT BE RESPONSIBLE FOR THE ACCURACY OR COMPLETENESS OF SCANNED COPIES OF THIS PLAN SHEET.

LEGEND

- ○ TYPE A WHITE NON-REFLECTIVE MARKER
- ◨ TYPE G ONE-WAY CLEAR RETROREFLECTIVE MARKER
- → DIRECTION OF TRAVEL
- STRIPING TERMINATION

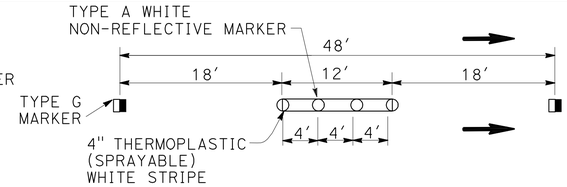

DETAIL 13M

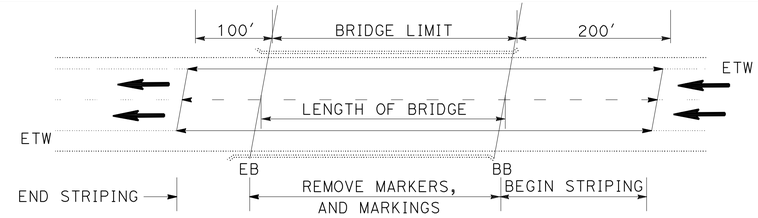

TYPICAL PAVEMENT DELINEATION WORK

NOTES:

1. REMOVE MARKERS AND MARKINGS ON THE BRIDGE DECK PRIOR TO WORK.
2. BEGIN STRIPING 200' FROM THE BB, AND END AT 100' AFTER EB.

PAVEMENT DELINEATION QUANTITIES

LOCATION No.	PM	DIR	NUMBER AND NAME OF BRIDGE	DETAIL No. OR PAVEMENT MARKING	REMOVE YELLOW THERMOPLASTIC TRAFFIC STRIPE (HAZARDOUS WASTE)	REMOVE THERMOPLASTIC TRAFFIC STRIPE	REMOVE THERMO-PLASTIC PAVEMENT MARKING	REMOVE PAVEMENT MARKER	8" THERMO-PLASTIC TRAFFIC STRIPE	THERMO-PLASTIC PAVEMENT MARKING	THERMOPLASTIC TRAFFIC STRIPE (SPRAYABLE)		PAVEMENT MARKER			
													NON-REFLECTIVE	RETROREFLECTIVE		
											4" YELLOW	4" WHITE	TYPE A	TYPE D	TYPE G	TYPE H
					LF	LF	SQFT	EA	LF	SQFT	LF	LF	EA	EA	EA	EA
1	9.47	EB	56 0700 MURIETTA HOT SPRINGS ROAD OC	12		532		10				532			10	
		WB	56 0700 MURIETTA HOT SPRINGS ROAD OC	12		682		10				682			10	
		EB/WB	56 0700 MURIETTA HOT SPRINGS ROAD OC	29	2728			34			1364			34		
		EB/WB	56 0700 MURIETTA HOT SPRINGS ROAD OC	27B		882						882				
		EB	56 0700 MURIETTA HOT SPRINGS ROAD OC	4" WHITE STRIPE		150						150				
		EB	56 0700 MURIETTA HOT SPRINGS ROAD OC	38		525		18	525						18	
		EB	56 0700 MURIETTA HOT SPRINGS ROAD OC	LIMIT LINE						36						
		EB	56 0700 MURIETTA HOT SPRINGS ROAD OC	TYPE IV ARROW			144			45						
2	9.84	SB	56 0703L YODER WASH	13M		769		38				769	32		6	
		SB	56 0703L YODER WASH	27B		385						385				
		SB	56 0703L YODER WASH	25	384			3			384					3
3	9.83	NB	56 0703R YODER WASH	13M		746		38				746	32		6	
		NB	56 0703R YODER WASH	27B		373						373				
		NB	56 0703R YODER WASH	25	373			3			373					3
4	10.59	SB	56 0720L CALIFORNIA OAKS ROAD UC	13M		864		32				864	24		8	
		SB	56 0720L CALIFORNIA OAKS ROAD UC	27B		432						432				
		SB	56 0720L CALIFORNIA OAKS ROAD UC	25	432			4			432					4
5	10.59	NB	56 0720R CALIFORNIA OAKS ROAD UC	13M		864		32				864	24		8	
		NB	56 0720R CALIFORNIA OAKS ROAD UC	27B		432						432				
		NB	56 0720R CALIFORNIA OAKS ROAD UC	25	432			4			432					4
6	11.98	EB/WB	56 0798 NUTMEG STREET OC	12		1096		14				1096			14	
		EB/WB	56 0798 NUTMEG STREET OC	27B		1096						1096				
		EB/WB	56 0798 NUTMEG STREET OC	29	2180			24			1095					24
7	16.30	NB	56 0717R BUNDY CANYON ROAD UC	13M		990		52				990	40		12	
		NB	56 0717R BUNDY CANYON ROAD UC	27B		495						495				
		NB	56 0717R BUNDY CANYON ROAD UC	25	495			6			495					6
8	16.89	SB	56 0718L LEMON STREET UC	13M		854		32				854	24		8	
		SB	56 0718L LEMON STREET UC	27B		427						427				
		SB	56 0718L LEMON STREET UC	25	427			4			427					4
9	16.89	NB	56 0718R LEMON STREET UC	13M		880		32				880	24		8	
		NB	56 0718R LEMON STREET UC	27B		441						441				
		NB	56 0718R LEMON STREET UC	25	440			4			440					4
10	19.16	SB	56 0714L RAILROAD CANYON ROAD UC	13M		895		46				895	36		10	
		SB	56 0714L RAILROAD CANYON ROAD UC	27B		448						448				
		SB	56 0714L RAILROAD CANYON ROAD UC	25	447			5			447					5
11	19.16	NB	56 0714R RAILROAD CANYON ROAD UC	13M		880		46				880	36		10	
		NB	56 0714R RAILROAD CANYON ROAD UC	27B		448						448				
		NB	56 0714R RAILROAD CANYON ROAD UC	25	447			5			447					5
12	19.37	NB	56 0728R SAN JACINTO RIVER	8		100						100				
		NB	56 0728R SAN JACINTO RIVER	13M		1432		92				1432	72		20	
		NB	56 0728R SAN JACINTO RIVER	27B		716						716				
		NB	56 0728R SAN JACINTO RIVER	25	716			10			716					10
SUB TOTAL					9501	18834	144	598	525	81	7052	18309	344	34	148	72

PAVEMENT DELINEATION QUANTITIES
PDQ-1

STATE OF CALIFORNIA - DEPARTMENT OF TRANSPORTATION
Caltrans® TRAFFIC DESIGN

FUNCTIONAL SUPERVISOR: BILL WASSER
CALCULATED-DESIGNED BY: DARYUSH NAMI
CHECKED BY: TRAN HOANG
REVISED BY
DATE REVISED

LAST REVISION 01-25-12
DATE PLOTTED => 27-FEB-2012
TIME PLOTTED => 15:50

Dist	COUNTY	ROUTE	POST MILES TOTAL PROJECT	SHEET No.	TOTAL SHEETS
08	Riv	15	9.5/30.4	6	27

REGISTERED CIVIL ENGINEER 1-25-12 DATE

2-27-12
PLANS APPROVAL DATE

REGISTERED PROFESSIONAL ENGINEER TRAN HOANG No. 54996 Exp. 6/30/12 CIVIL STATE OF CALIFORNIA

THE STATE OF CALIFORNIA OR ITS OFFICERS OR AGENTS SHALL NOT BE RESPONSIBLE FOR THE ACCURACY OR COMPLETENESS OF SCANNED COPIES OF THIS PLAN SHEET.

PAVEMENT DELINEATION QUANTITIES

LOCATION No.	PM	DIR	NUMBER AND NAME OF BRIDGE	DETAIL No. OR PAVEMENT MARKING	REMOVE YELLOW THERMOPLASTIC TRAFFIC STRIPE (HAZARDOUS WASTE)	REMOVE THERMOPLASTIC TRAFFIC STRIPE	REMOVE THERMOPLASTIC PAVEMENT MARKING	REMOVE PAVEMENT MARKER	8" THERMO-PLASTIC TRAFFIC STRIPE	THERMO-PLASTIC PAVEMENT MARKING	THERMOPLASTIC TRAFFIC STRIPE (SPRAYABLE)		PAVEMENT MARKER			
													NON-REFLECTIVE	RETROREFLECTIVE		
											4" YELLOW	4" WHITE	TYPE A	TYPE D	TYPE G	TYPE H
					LF	LF	SQFT	EA	LF	SQFT	LF	LF	EA	EA	EA	EA
13	20.95	SB	56 0382L MAIN STREET UC	13M		898		46				898	36		10	
		SB	56 0382L MAIN STREET UC	27B		449						449				
		SB	56 0382L MAIN STREET UC	25	449			5			449					5
14	20.95	NB	56 0382R MAIN STREET UC	13M		848		32				848	24		8	
		NB	56 0382R MAIN STREET UC	27B		424						424				
		NB	56 0382R MAIN STREET UC	25	424			4			424					4
15	22.26	NB	56 0723R ROUTE 15/74 SEPARATION	13M		880		32				880	24		8	
		NB	56 0723R ROUTE 15/74 SEPARATION	27B		440						440				
		NB	56 0723R ROUTE 15/74 SEPARATION	25	440			4			440					4
16	23.85	EB/WB	56 0725 NICHOLS ROAD OC	22	1100			28			550					28
		EB	56 0725 NICHOLS ROAD OC	27B		605						605				
		WB	56 0725 NICHOLS ROAD OC	27B		605						605				
		EB/WB	56 0725 NICHOLS ROAD OC	38		230		6	230						6	
		EB/WB	56 0725 NICHOLS ROAD OC	38		230		6	230						6	
		EB/WB	56 0725 NICHOLS ROAD OC	TYPE IV ARROW			96			30						
17	26.69	SB	56 0682L LAKE STREET UC	13M		838		32				838	24		8	
		SB	56 0682L LAKE STREET UC	27B		419						419				
		SB	56 0682L LAKE STREET UC	25	419			4			419					4
18	26.69	NB	56 0682R LAKE STREET UC	13M		838		32				838	24		8	
		NB	56 0682R LAKE STREET UC	27B		419						419				
		NB	56 0682R LAKE STREET UC	25	419			4			419					4
19	27.80	NB	56 0681R TEMESCAL CANYON ROAD UC	13M		1340		74				1340	56		18	
		NB	56 0681R TEMESCAL CANYON ROAD UC	27B		670						670				
		NB	56 0681R TEMESCAL CANYON ROAD UC	25	670			9			670					9
20	28.87	SB	56 0679L HORSETHIEF CANYON ROAD UC	13M		816		32				816	24		8	
		SB	56 0679L HORSETHIEF CANYON ROAD UC	27B		408						408				
		SB	56 0679L HORSETHIEF CANYON ROAD UC	25	408			4			408					4
21	28.87	NB	56 0679R HORSETHIEF CANYON ROAD UC	13M		838		32				838	24		8	
		NB	56 0679R HORSETHIEF CANYON ROAD UC	27B		419						419				
		NB	56 0679R HORSETHIEF CANYON ROAD UC	25	419			4			419					4
22	29.13	SB	56 0678L HORSETHIEF CANYON WASH	13M		856		32				856	24		8	
		SB	56 0678L HORSETHIEF CANYON WASH	27B		428						428				
		SB	56 0678L HORSETHIEF CANYON WASH	25	428			4			428					4
23	29.13	NB	56 0678R HORSETHIEF CANYON WASH	13M		872		32				872	24		8	
		NB	56 0678R HORSETHIEF CANYON WASH	27B		436						436				
		NB	56 0678R HORSETHIEF CANYON WASH	25	436			4			436					4
24	30.40	NB	56 0676R INDIAN TRUCK TRAIL UC	13M		878		32				878	24		8	
		NB	56 0676R INDIAN TRUCK TRAIL UC	27B		439						439				
		NB	56 0676R INDIAN TRUCK TRAIL UC	25	439			4			439					4
SUB TOTAL SHEET PDQ-2					6051	16523	96	498	460	30	5501	16063	308		112	78
SUB TOTAL SHEET PDQ-1					9501	18834	144	598	525	81	7052	18309	344	34	148	72
TOTAL					15552	35357	240	1096	985	111	46925		652	444		

REVISED BY | DATE REVISED

DARYUSH NAMI | TRAN HOANG

CALCULATED-DESIGNED BY | CHECKED BY

FUNCTIONAL SUPERVISOR: BILL WASSER

STATE OF CALIFORNIA - DEPARTMENT OF TRANSPORTATION
Caltrans® TRAFFIC DESIGN

PAVEMENT DELINEATION QUANTITIES
PDQ-2

LAST REVISION 01-25-12 | DATE PLOTTED => 27-FEB-2012 | TIME PLOTTED => 15:50

Dist	COUNTY	ROUTE	POST MILES TOTAL PROJECT	SHEET No.	TOTAL SHEETS
08	Riv	15	9.5/30.4	7	27

REGISTERED CIVIL ENGINEER 1-25-12 DATE

2-27-12
PLANS APPROVAL DATE

REGISTERED PROFESSIONAL ENGINEER IYAD NAMY No. C 74762 Exp. 12/31/13 CIVIL STATE OF CALIFORNIA

THE STATE OF CALIFORNIA OR ITS OFFICERS OR AGENTS SHALL NOT BE RESPONSIBLE FOR THE ACCURACY OR COMPLETENESS OF SCANNED COPIES OF THIS PLAN SHEET.

SUMMARY OF QUANTITIES

BRIDGE NAME	BRIDGE #	POST MILE	IMPORTED BORROW	SLOPE PAVING (CONCRETE)	4' CHAIN LINK GATE (TYPE CL-6)
			CY	CY	EA
RAILROAD CANYON ROAD UC	56 0714R	19.16	60	5	-
LEMON STREET UC	56 0718R/L	16.89	-	-	2
TOTAL			60	5	2

SUMMARY OF QUANTITIES

Q-1

STATE OF CALIFORNIA - DEPARTMENT OF TRANSPORTATION
Caltrans MAINTENANCE DESIGN

FUNCTIONAL SUPERVISOR: KUANG CHEN
CALCULATED-DESIGNED BY: PHILLIP PHAN
CHECKED BY: IYAD NAMY
REVISED BY
DATE REVISED

LAST REVISION 01-25-12
DATE PLOTTED => 27-FEB-2012
TIME PLOTTED => 15:50

DIST	COUNTY	ROUTE	POST MILES TOTAL PROJECT	SHEET NO.	TOTAL SHEETS
08	Riv	15	9.5/30.4	8	27

REGISTERED CIVIL ENGINEER

June 5, 2009
PLANS APPROVAL DATE

REGISTERED PROFESSIONAL ENGINEER Glenn DeCou No. C34547 Exp. 9-30-09 CIVIL STATE OF CALIFORNIA

The State of California or its officers or agents shall not be responsible for the accuracy or completeness of electronic copies of this plan sheet.

To accompany plans dated 2-27-12

NOTES:

1. H is 2'-6" for fabric less than 5'-0" high. H is 3'-0" for fabric 5'-0" and over.
2. T is not less than 3 times maximum cross section of post with minimum of 8".
3. Arms with barbed wire to be used where shown on plans.
4. See Revised Standard Plan RSP A85 for Chain Link Fencing dimensions.
5. Reinforcing must comply with ASTM A 706.
6. See Detail A on New Standard Plan NSP A86B for connection at headwall.

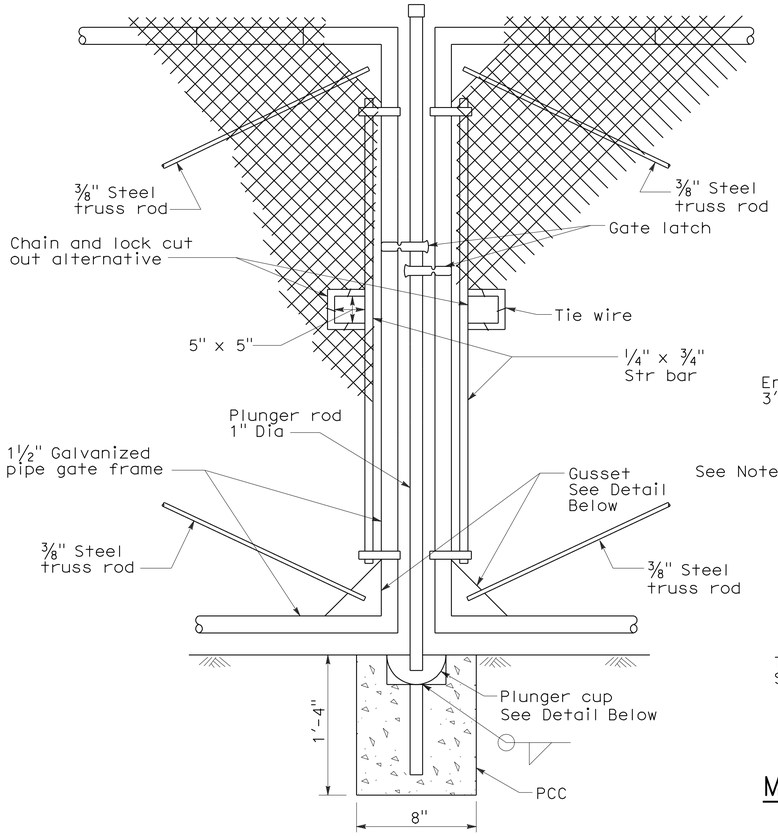

TYPICAL DOUBLE GATE REMOVABLE CENTER POST

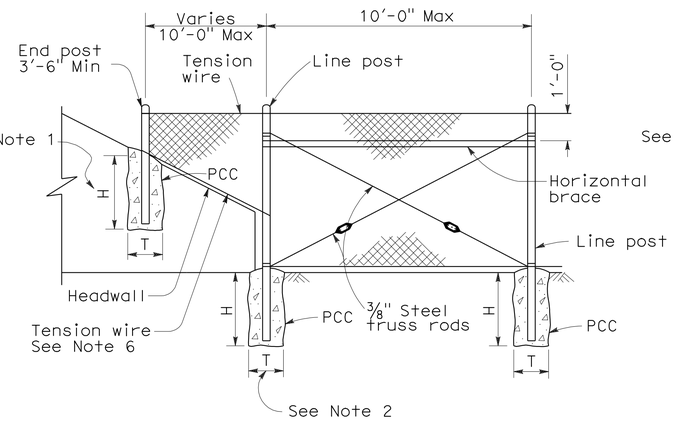

METHOD OF TYING FENCE TO HEADWALL

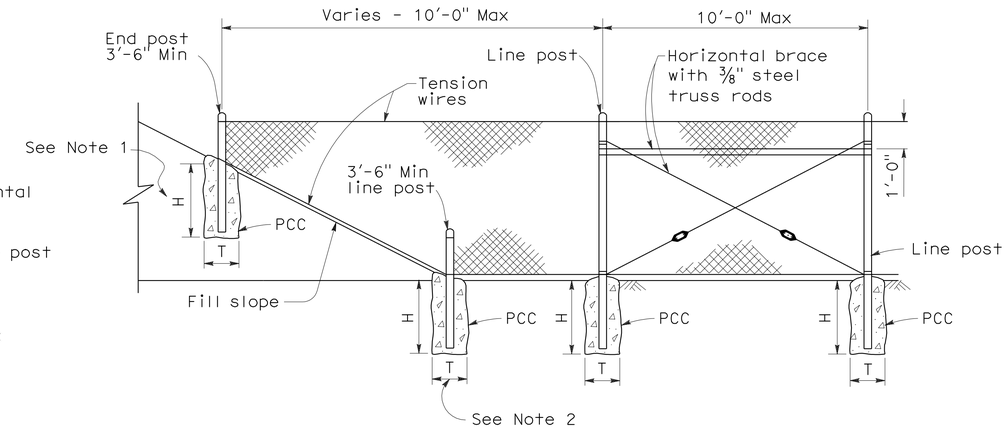

METHOD OF ERECTING FENCE FOR FILL SLOPE

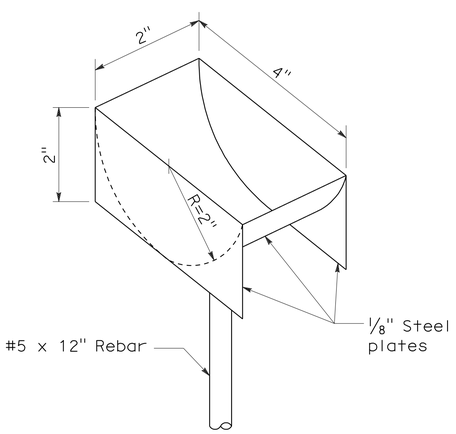

PLUNGER CUP DETAIL

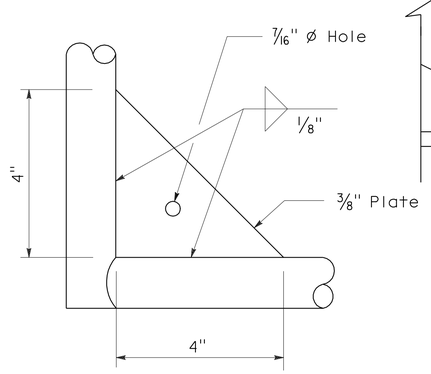

GUSSET DETAIL

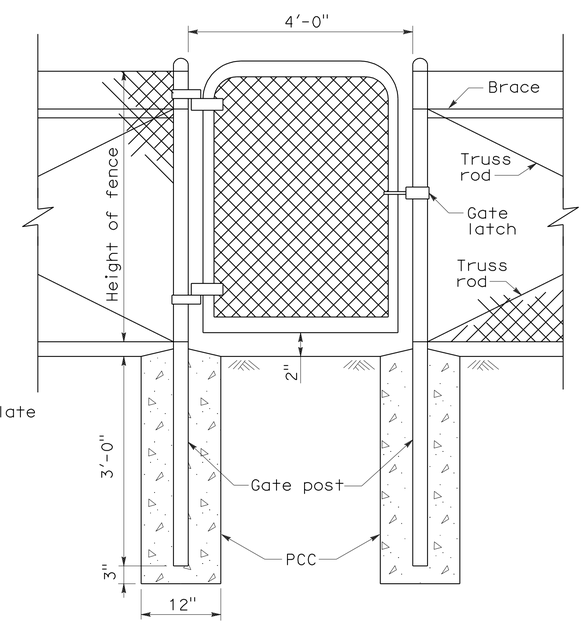

WALK GATE

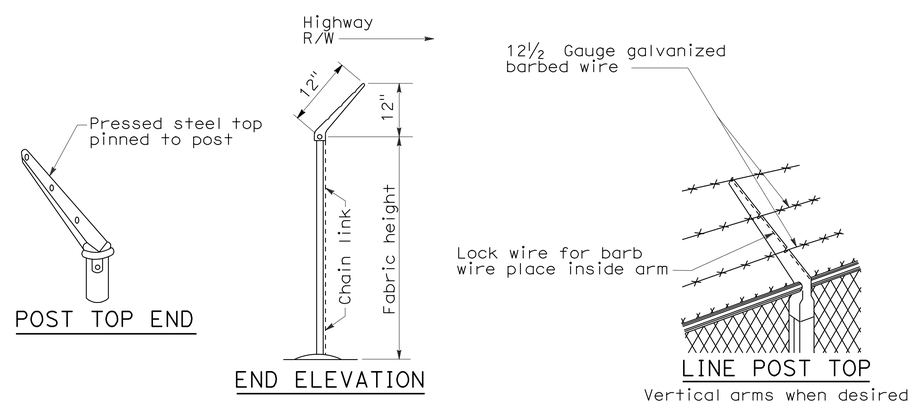

POST TOP END

END ELEVATION

LINE POST TOP
Vertical arms when desired

BARBED WIRE POST TOP
See Note 3

STATE OF CALIFORNIA
DEPARTMENT OF TRANSPORTATION

CHAIN LINK FENCE DETAILS

NO SCALE

NSP A85A DATED JUNE 5, 2009 SUPPLEMENTS THE STANDARD PLANS BOOK DATED MAY 2006.

NEW STANDARD PLAN NSP A85A

2006 NEW STANDARD PLAN NSP A85A

5-7-09

DIST	COUNTY	ROUTE	POST MILES TOTAL PROJECT	SHEET NO.	TOTAL SHEETS
08	Riv	15	9.5/30.4	9	27

Randell D. Hiatt
REGISTERED CIVIL ENGINEER

June 6, 2008
PLANS APPROVAL DATE

REGISTERED PROFESSIONAL ENGINEER
Randell D. Hiatt
No. C50200
Exp. 6-30-09
CIVIL
STATE OF CALIFORNIA

The State of California or its officers or agents shall not be responsible for the accuracy or completeness of electronic copies of this plan sheet.

To accompany plans dated 2-27-12

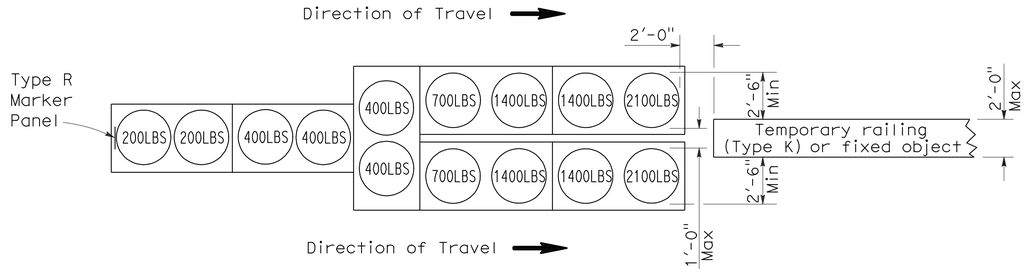

ARRAY `TU14'

Approach speed 45 mph or more

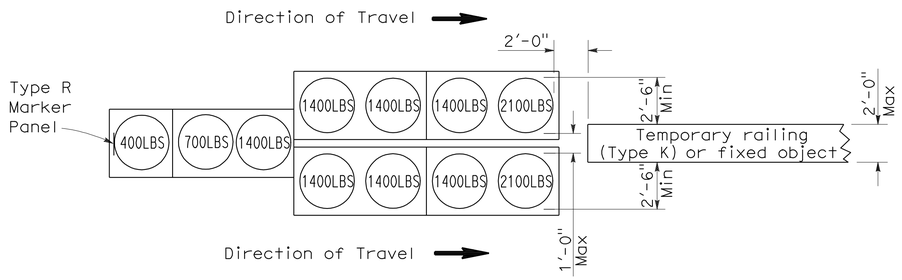

ARRAY `TU11'

Approach speed less than 45 mph

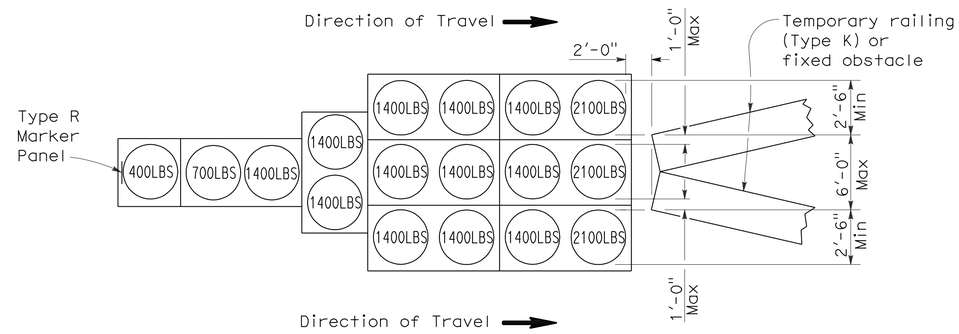

ARRAY `TU17'

Approach speed less than 45 mph

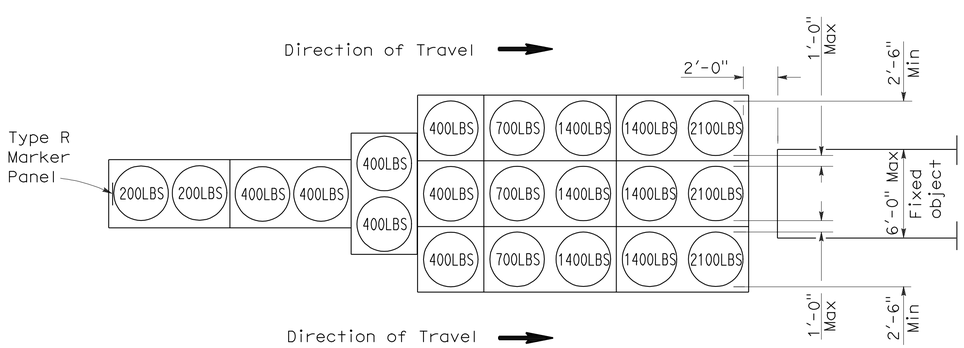

ARRAY `TU21'

Approach speed 45 mph or more

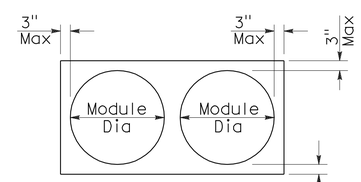

PLAN

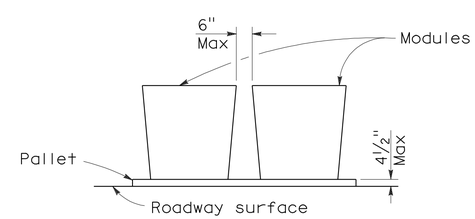

ELEVATION

CRASH CUSHION PALLET DETAIL

See Note 7

NOTES:

1. (XXX) Indicates sand filled module location and weight of sand in pounds for each module. Module spacing is based on the greater diameter of the module.
2. All sand weights are nominal.
3. Temporary crash cushion arrays shall not encroach on the traveled way.
4. Place the top of Type R marker panel 1" below the module lid.
5. Refer to Standard Plan A73B for marker details.
6. Approach speeds indicated conform to NCHRP 350 Report criteria.
7. Use of pallets is optional.

STATE OF CALIFORNIA
DEPARTMENT OF TRANSPORTATION

TEMPORARY CRASH CUSHION, SAND FILLED (UNIDIRECTIONAL)

NO SCALE

RSP T1A DATED JUNE 6, 2008 SUPERSEDES STANDARD PLAN T1A
DATED MAY 1, 2006 - PAGE 211 OF THE STANDARD PLANS BOOK DATED MAY 2006.

REVISED STANDARD PLAN RSP T1A

2006 REVISED STANDARD PLAN RSP T1A

5-15-08

DIST	COUNTY	ROUTE	POST MILES TOTAL PROJECT	SHEET NO.	TOTAL SHEETS
08	Riv	15	9.5/30.4	10	27

Randell D. Hiatt
REGISTERED CIVIL ENGINEER

June 6, 2008
PLANS APPROVAL DATE

REGISTERED PROFESSIONAL ENGINEER
Randell D. Hiatt
No. C50200
Exp. 6-30-09
CIVIL
STATE OF CALIFORNIA

The State of California or its officers or agents shall not be responsible for the accuracy or completeness of electronic copies of this plan sheet.

To accompany plans dated 2-27-12

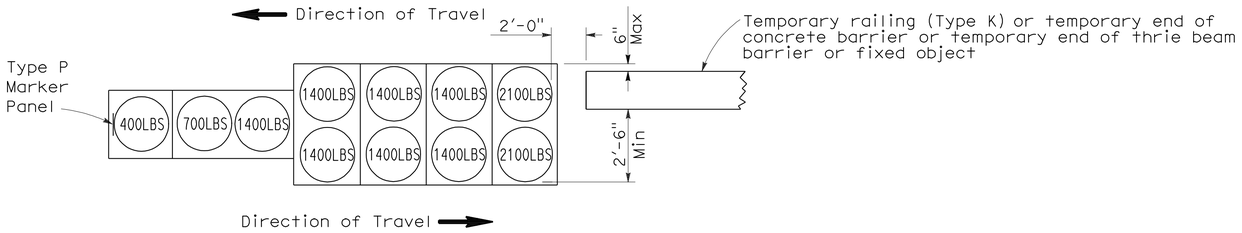

ARRAY 'TB11'

Approach speed less than 45 mph

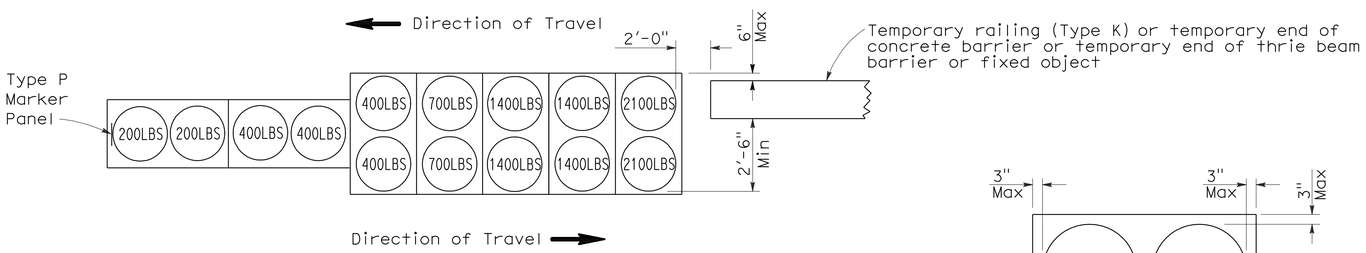

ARRAY 'TB14'

Approach speed 45 mph or more

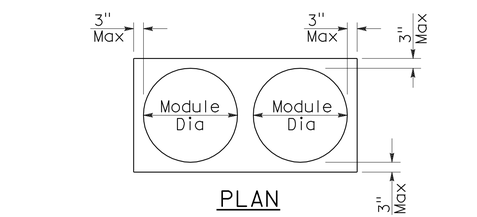

PLAN

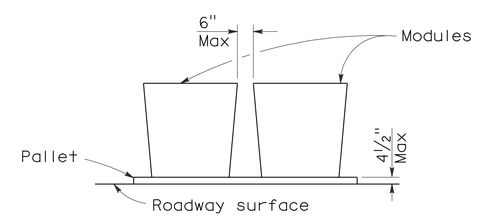

ELEVATION

CRASH CUSHION PALLET DETAIL

See Note 7

NOTES:

1. (XXX) Indicates sand filled module location and weight of sand in pounds for each module. Module spacing is based on the greater diameter of the module.
2. All sand weights are nominal.
3. Temporary crash cushion arrays shall not encroach on the traveled way.
4. Place the Type P marker panel so that the bottom of the panel rests upon the pallet.
5. Refer to Standard Plan A73B for marker details.
6. Approach speeds indicated conform to NCHRP 350 Report criteria.
7. Use of pallets is optional.

STATE OF CALIFORNIA
DEPARTMENT OF TRANSPORTATION

TEMPORARY CRASH CUSHION, SAND FILLED (BIDIRECTIONAL)

NO SCALE

RSP T1B DATED JUNE 6, 2008 SUPERSEDES STANDARD PLAN T1B
DATED MAY 1, 2006 - PAGE 212 OF THE STANDARD PLANS BOOK DATED MAY 2006.

REVISED STANDARD PLAN RSP T1B

2006 REVISED STANDARD PLAN RSP T1B

DIST	COUNTY	ROUTE	POST MILES TOTAL PROJECT	SHEET NO.	TOTAL SHEETS
08	Riv	15	9.5/30.4	11	27

Randell D. Hiatt
REGISTERED CIVIL ENGINEER

June 6, 2008
PLANS APPROVAL DATE

REGISTERED PROFESSIONAL ENGINEER
Randell D. Hiatt
No. C50200
Exp. 6-30-09
CIVIL
STATE OF CALIFORNIA

The State of California or its officers or agents shall not be responsible for the accuracy or completeness of electronic copies of this plan sheet.

To accompany plans dated 2-27-12

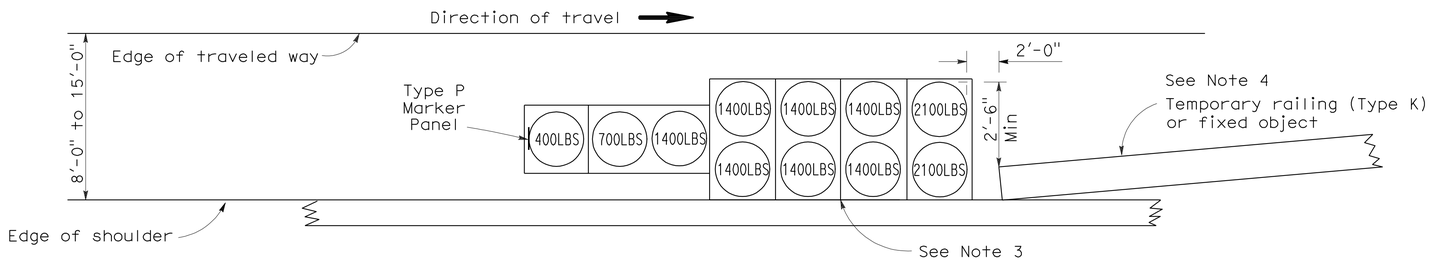

ARRAY 'TS11'

Approach speed less than 45 mph
See Note 9

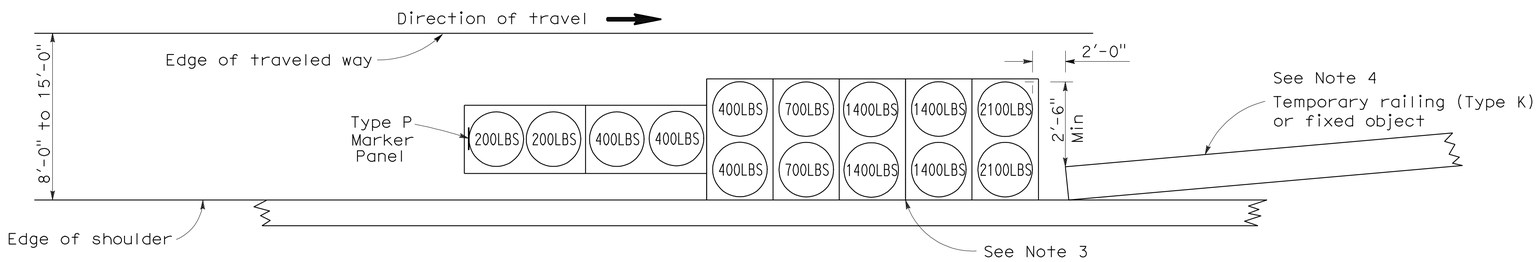

ARRAY 'TS14'

Approach speed 45 mph or more
See Note 9

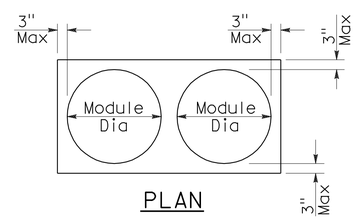

PLAN

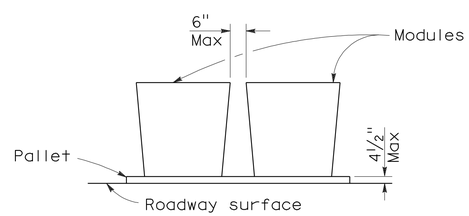

ELEVATION

CRASH CUSHION PALLET DETAIL

See Note 11

NOTES:

1. (XXX) Indicates sand filled module location and weight of sand in pounds for each module. Module spacing is based on the greater diameter of the module.
2. All sand weights are nominal.
3. The temporary crash cushion arrays shown on this plan shall be used only in locations where there will be traffic on one side of the temporary crash cushion array.
4. If the fixed object or approach end of the temporary railing is less than 15'-0" from the edge of traveled way, a temporary crash cushion is required in a construction or work zone.
5. Temporary crash cushion arrays shall not encroach on the traveled way.
6. Arrays for median shoulders shall conform to details shown on this plan for outside shoulders.
7. Place the Type P marker panel so that the bottom of the panel rests upon the pallet and faces traffic.
8. Refer to Standard Plan A73B for marker details.
9. For shoulder widths less than 8'-0", appropriate approved crash cushion protection, other than sand filled modules, shall be provided at fixed objects and at approach ends of temporary railing. The specific type of crash cushion shall be as shown on the project plans or as specified in the Special Provisions, or if not shown on the project plans or specified in the Special Provisions, shall be as approved by the Engineer.
10. Approach speeds indicated conform to NCHRP 350 Report criteria.
11. Use of pallets is optional.

STATE OF CALIFORNIA
DEPARTMENT OF TRANSPORTATION

TEMPORARY CRASH CUSHION, SAND FILLED (SHOULDER INSTALLATIONS)

NO SCALE

RSP T2 DATED JUNE 6, 2008 SUPERSEDES STANDARD PLAN T2
DATED MAY 1, 2006 - PAGE 213 OF THE STANDARD PLANS BOOK DATED MAY 2006.

REVISED STANDARD PLAN RSP T2

2006 REVISED STANDARD PLAN RSP T2

5-15-08

Dist	COUNTY	ROUTE	POST MILES TOTAL PROJECT	SHEET No.	TOTAL SHEETS
08	Riv	15	9.5/30.4	12	27

Randell D. Hiatt
REGISTERED CIVIL ENGINEER

May 20, 2011
PLANS APPROVAL DATE

REGISTERED PROFESSIONAL ENGINEER
Randell D. Hiatt
No. C50200
Exp. 6-30-11
CIVIL
STATE OF CALIFORNIA

The State of California or its officers or agents shall not be responsible for the accuracy or completeness of electronic copies of this plan sheet.

To accompany plans dated 2-27-12

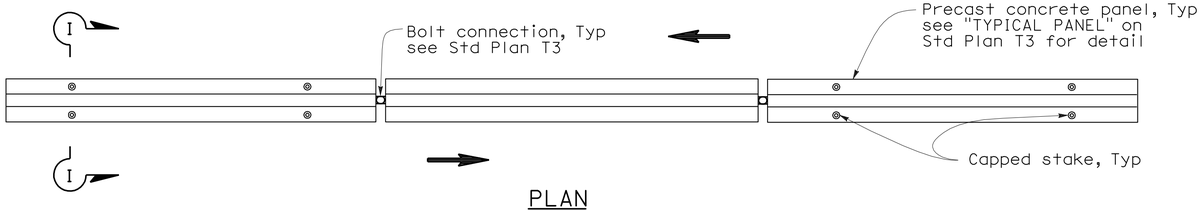

PLAN

RAILING STAKING CONFIGURATION FOR TWO-WAY TRAFFIC

See Note 1

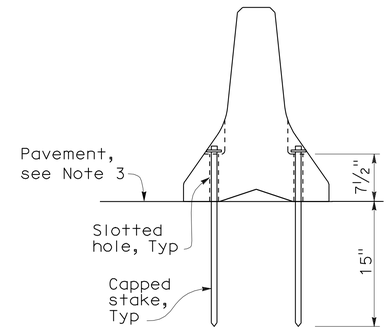

SECTION I-I

NOTES:

1. Where Type K Temporary Railing is placed as a temporary or long term barrier in two-way traffic on highways with less than 24" from the edge of traveled way, use four capped stakes per every other panel with end panels staked.
2. Where Type K Temporary Railing is placed 3" to 24" from the edge of an excavation on highways, use two capped stakes per panel along the traffic side.
3. Staked Type K Temporary Railing must be supported by at least 4" thick concrete, hot mix asphalt or existing asphalt concrete pavement.
4. The minimum yield strength for the washer must be 60,000 psi.
5. Direction of adjacent traffic indicated by ⟹.

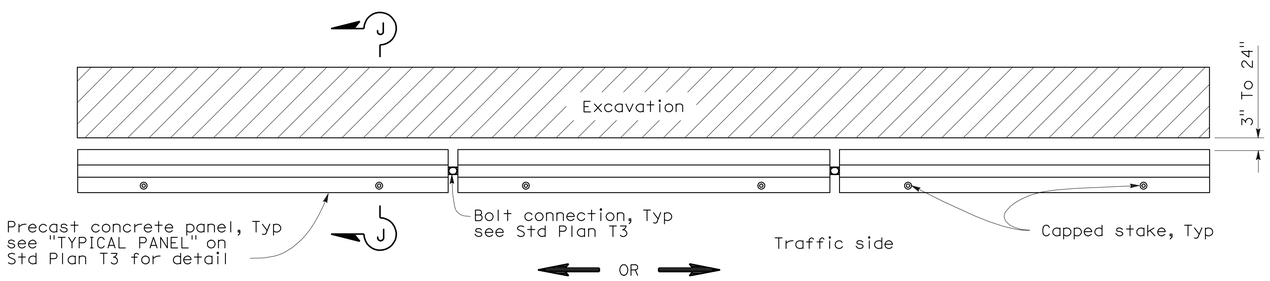

PLAN

RAILING STAKING CONFIGURATION ADJACENT TO AN EXCAVATION

See Note 2

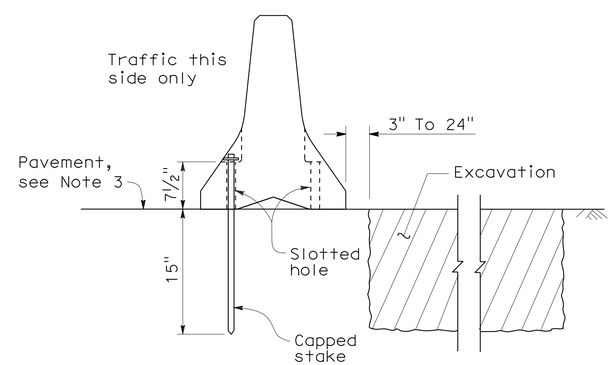

SECTION J-J

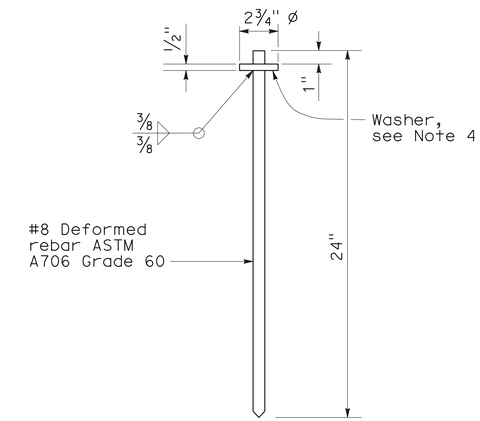

CAPPED STAKE DETAIL

STATE OF CALIFORNIA
DEPARTMENT OF TRANSPORTATION

TEMPORARY RAILING (TYPE K)

NO SCALE

NSP T3A DATED MAY 20, 2011 SUPPLEMENTS
THE STANDARD PLANS BOOK DATED MAY 2006.

NEW STANDARD PLAN NSP T3A

2006 NEW STANDARD PLAN NSP T3A

DIST	COUNTY	ROUTE	POST MILES TOTAL PROJECT	SHEET NO.	TOTAL SHEETS
08	Riv	15	9.5/30.4	13	27

Robert B. Schott
LICENSED LANDSCAPE ARCHITECT

April 3, 2009
PLANS APPROVAL DATE

LICENSED LANDSCAPE ARCHITECT
Robert B. Schott 3035
Signature
11-30-10
Renewal Date
2-25-09
Date
STATE OF CALIFORNIA

The State of California or its officers or agents shall not be responsible for the accuracy or completeness of electronic copies of this plan sheet.

To accompany plans dated 2-27-12

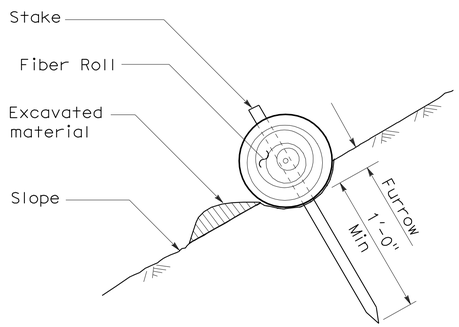

SECTION

TEMPORARY FIBER ROLL (TYPE 1)

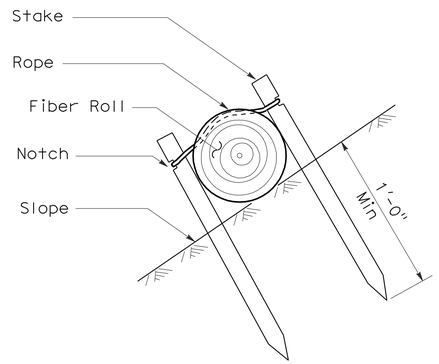

SECTION

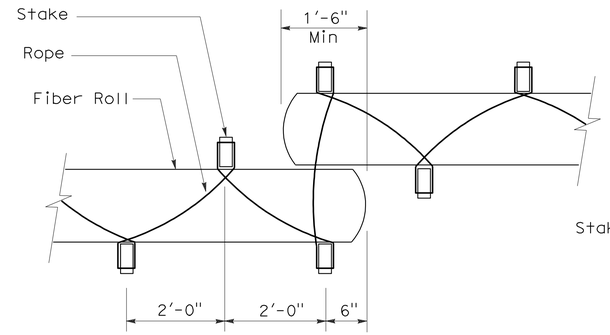

PLAN

TEMPORARY FIBER ROLL (TYPE 2)

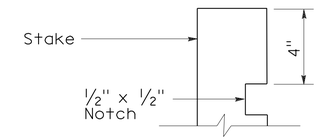

ELEVATION

STAKE NOTCH DETAIL

NOTES:

1. Temporary fiber roll spacing varies depending upon slope inclination.
2. Installations shown in the perspectives are for slope inclination of 10:1 and steeper.

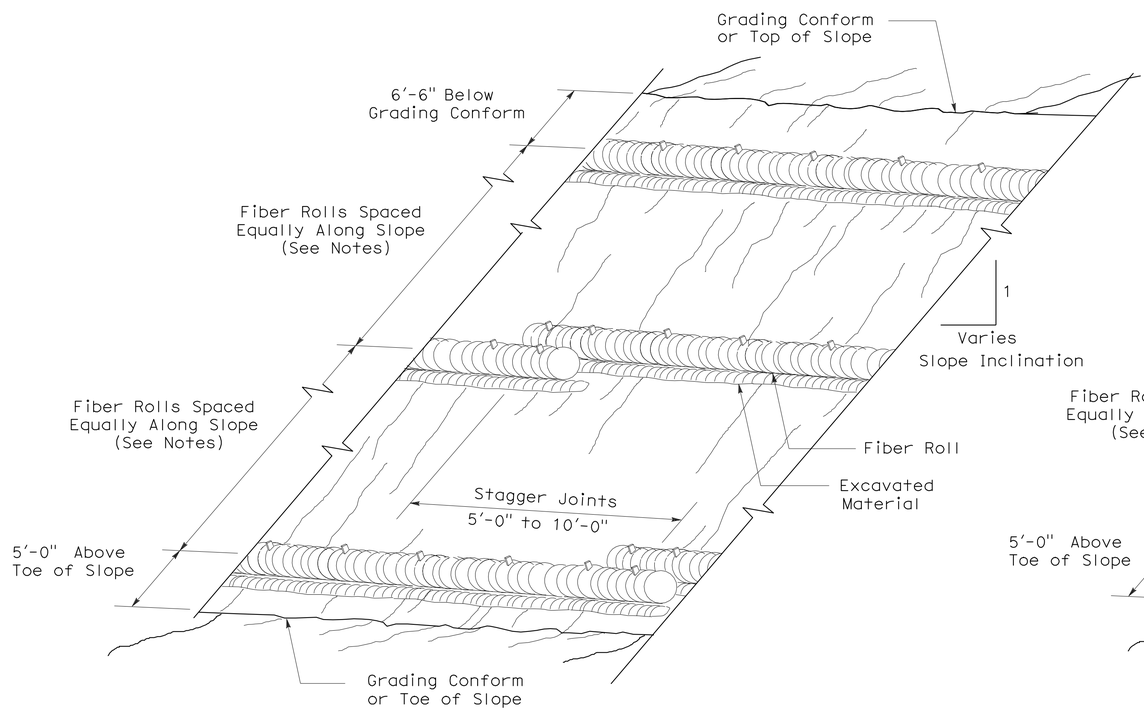

PERSPECTIVE

TEMPORARY FIBER ROLL (TYPE 1)

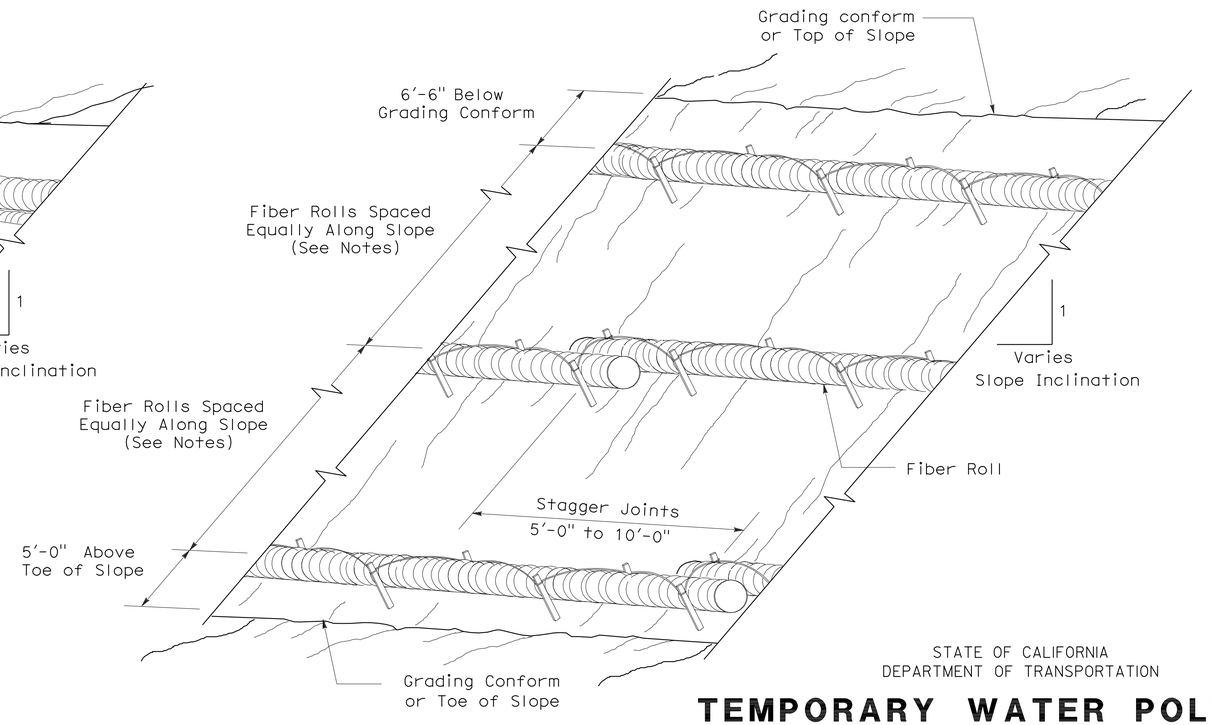

PERSPECTIVE

TEMPORARY FIBER ROLL (TYPE 2)

STATE OF CALIFORNIA
DEPARTMENT OF TRANSPORTATION

TEMPORARY WATER POLLUTION CONTROL DETAILS (TEMPORARY FIBER ROLL)

NO SCALE

RSP T56 DATED APRIL 3, 2009 SUPERSEDES STANDARD PLAN T56
DATED MAY 1, 2006 - PAGE 232 OF THE STANDARD PLANS BOOK DATED MAY 2006.

REVISED STANDARD PLAN RSP T56

2006 REVISED STANDARD PLAN RSP T56

2-23-09

DIST	COUNTY	ROUTE	POST MILES TOTAL PROJECT	SHEET NO.	TOTAL SHEETS
08	Riv	15	9.5/30.4	14	27

LICENSED LANDSCAPE ARCHITECT

August 15, 2008
PLANS APPROVAL DATE

The State of California or its officers or agents shall not be responsible for the accuracy or completeness of electronic copies of this plan sheet.

LICENSED LANDSCAPE ARCHITECT — Robert B. Schott — Signature — 11-04-08 Renewal Date — 08-11-08 Date — STATE OF CALIFORNIA

To accompany plans dated 2-27-12

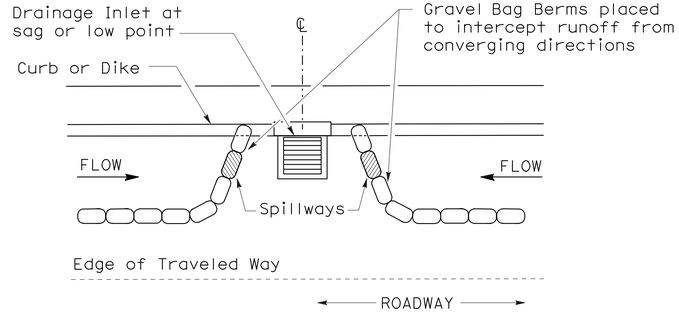

PLAN

CONFIGURATION FOR SAG POINT INLET (GRAVEL BAG BERM)

GRAVEL BAG BERM (TYPE 3A) SPACING TABLE

SLOPE OF ROADWAY (PERCENT)	1 to 3.9	4 to 5.9	6 to 7.9	8 to 10	10+
INTERVAL BETWEEN BERM	100′	75′	50′	25′	12′

For slope of less than 1%, install barriers only if erosion/sediment is prevalent

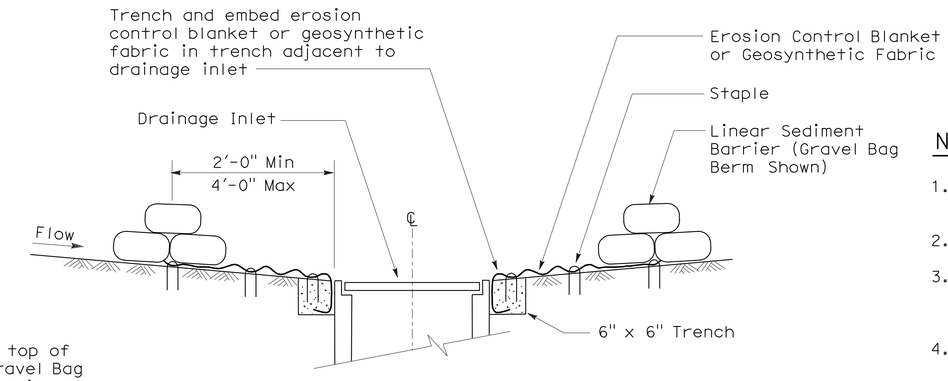

SECTION A-A

NOTES:

1. Place safety cones adjacent to drainage inlet protection.
2. Dimensions may vary to fit field conditions.
3. Install a minimum of 3 gravel bag berms upstream of each drainage inlet to be protected.
4. Position erosion control blanket or geosynthetic fabric at edge of concrete apron and secure in trench.
5. Erosion control blanket or geosynthetic fabric is not required if the area adjacent to the drainage inlet is vegetated or paved.

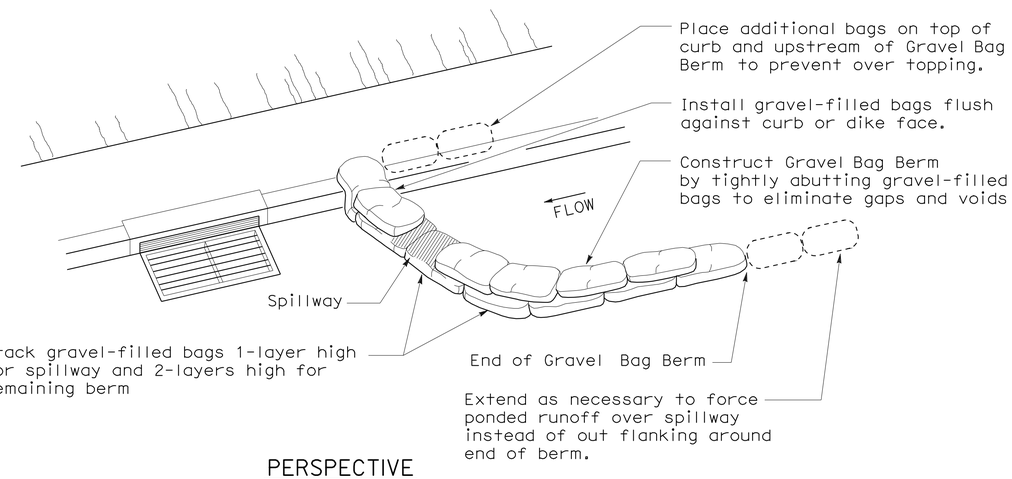

PERSPECTIVE

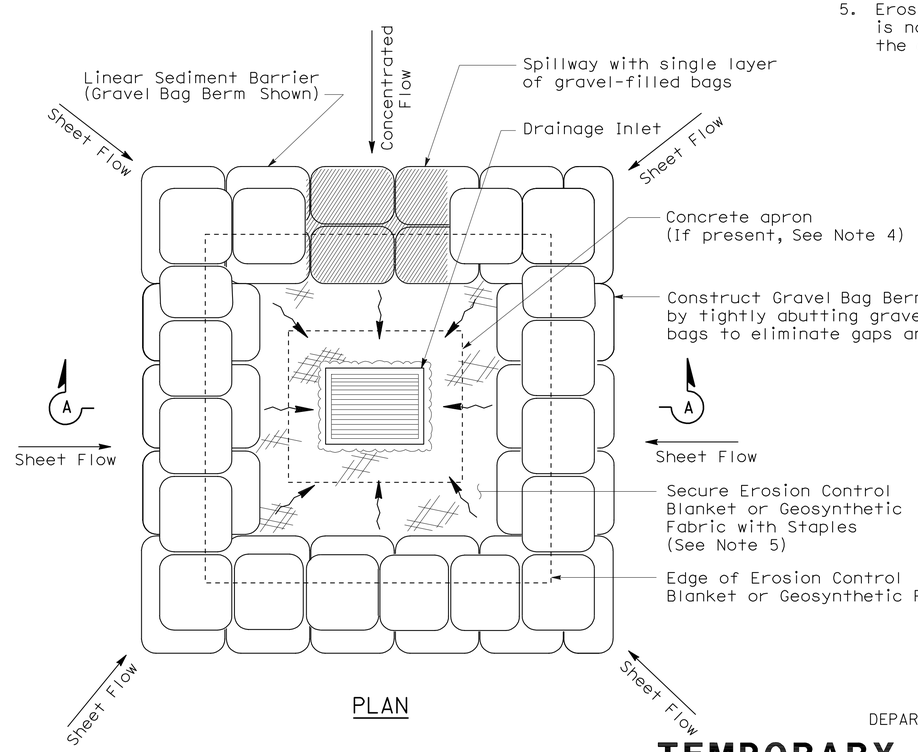

PLAN

TEMPORARY DRAINAGE INLET PROTECTION (TYPE 3B)

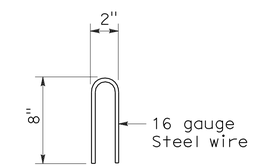

STAPLE DETAIL

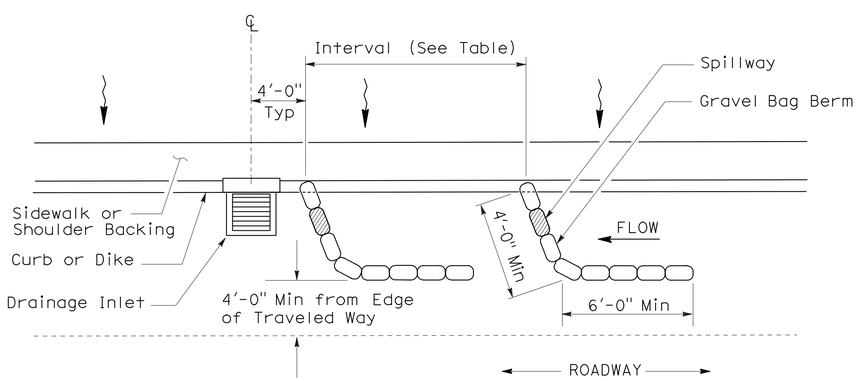

PLAN

TEMPORARY DRAINAGE INLET PROTECTION (TYPE 3A) (GRAVEL BAG BERM)

STATE OF CALIFORNIA
DEPARTMENT OF TRANSPORTATION

TEMPORARY WATER POLLUTION CONTROL DETAILS (TEMPORARY DRAINAGE INLET PROTECTION)

NO SCALE

NSP T62 DATED AUGUST 15, 2008 SUPPLEMENTS THE STANDARD PLANS BOOK DATED MAY 2006.

NEW STANDARD PLAN NSP T62

2006 NEW STANDARD PLAN NSP T62

7-11-08

DIST	COUNTY	ROUTE	POST MILES TOTAL PROJECT	SHEET NO.	TOTAL SHEETS
08	Riv	15	9.5/30.4	15	27

REGISTERED CIVIL ENGINEER

October 5, 2007
PLANS APPROVAL DATE

REGISTERED PROFESSIONAL ENGINEER Efthymios Delis No. C51434 Exp. 6-30-08 CIVIL STATE OF CALIFORNIA

The State of California or its officers or agents shall not be responsible for the accuracy or completeness of electronic copies of this plan sheet.

To accompany plans dated 2-27-12

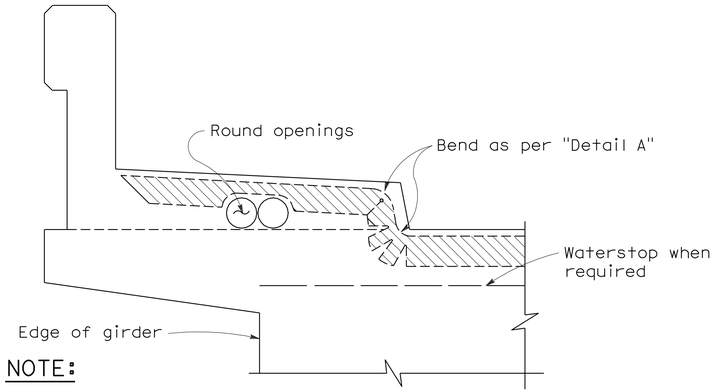

NOTE:

Type "B" seal shown. Type "A" seals to comform to the general path of seal shown, cuts for bending not required. Bend Type "A" seals 3" up into curb or barrier rail on only the low end of the seal.

CONCRETE BARRIER AND SIDEWALK

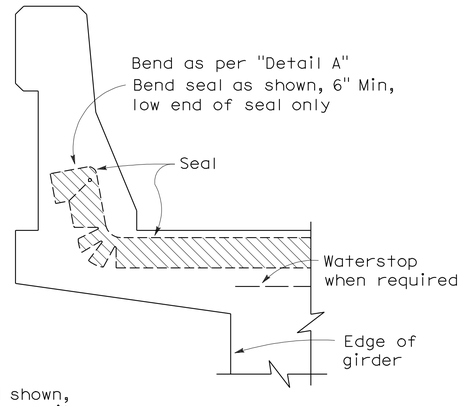

CONCRETE BARRIER

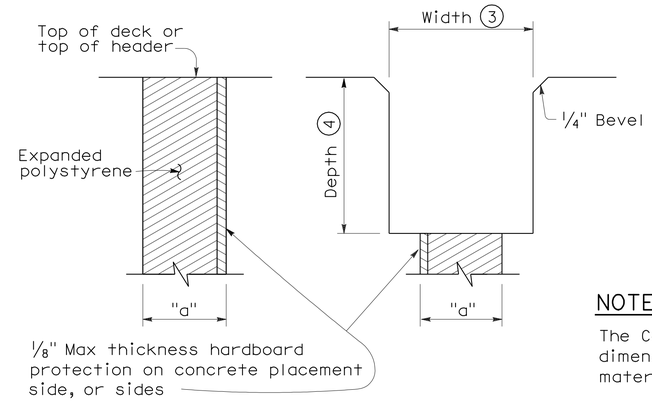

FORMING DETAIL SAWCUT DETAIL

NOTE:

The Contractor shall verify all controlling field dimensions before ordering or fabricatiing any material.

JOINT SEALS DETAILS

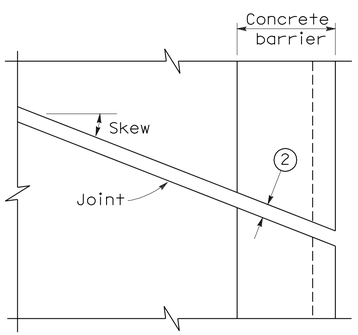

PLAN OF JOINT (SKEW ≤ 20°)

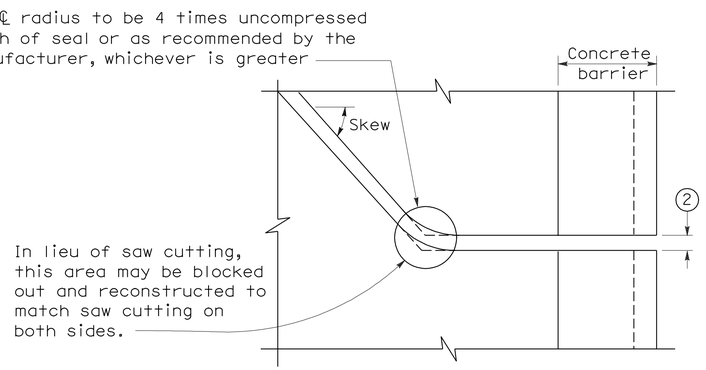

PLAN OF JOINT (SKEW > 20°)

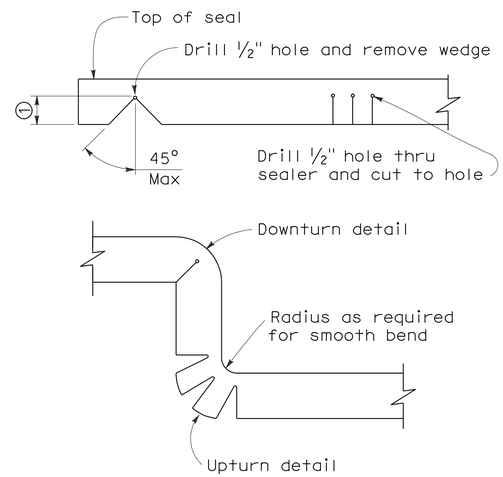

DETAIL A

NOTES:

1. Make smooth cuts from the bottom of seal to 1½" clear of top leaving at least one complete cell between the top of the cut and top of the seal. When necessary cut back of seal to clear conduit and round openings.
2. Opening in barrier to match width of sawn deck joint.
3. Sawcut groove widths shall be as ordered by the Engineer.
4. Depth of sawcut: Type A - Depth to be 2" minimum.
   Type B - Depth to be equal to or greater than the depth of seal measured along the contact surface, when compressed to minimum width position (W_2) plus dimensions shown.
5. MR (movement rating) as shown on other plan sheets.
6. Other depths must be approved by the Engineer.

DIMENSIONS "a" OF JOINT REQUIRED

Movement Rating (MR) (5)	Bridge Type	"a" Dimension Deck Concrete Placed		
		Winter	Fall-Spring	Summer
2"	All except CIP/PS	1½"	1¼"	¾"
	CIP/PS	1¼"	1"	½"
1½"	All except CIP/PS	1¼"	1"	½"
	CIP/PS	1"	¾"	½"
1"	All except CIP/PS	1"	¾"	½"
	CIP/PS	¾"	½"	½"
½"	All except CIP/PS	¾"	¾"	½"
	CIP/PS	½"	½"	½"

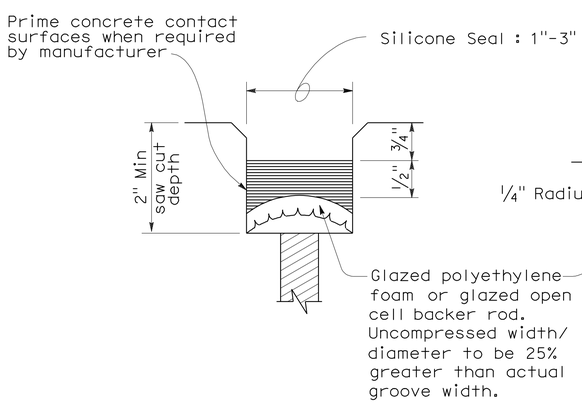

TYPE A SEAL

Movement rating : Silicone = 1" Max

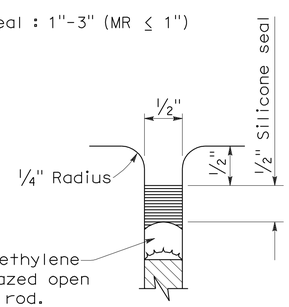

TYPE AL SEAL

Longitudinal joints only

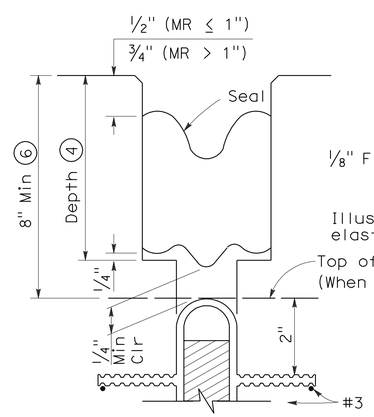

TYPE B JOINT SEAL
IN MINIMUM WIDTH POSITION (W_2)

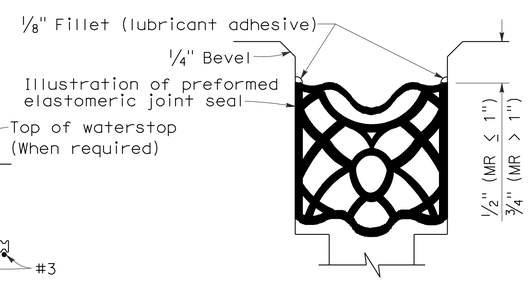

TYPE B SEAL

Movement Rating ≤ 2"

STATE OF CALIFORNIA
DEPARTMENT OF TRANSPORTATION

JOINT SEALS (MAXIMUM MOVEMENT RATING = 2")

NO SCALE

RSP B6-21 DATED OCTOBER 5, 2007 SUPERSEDES STANDARD PLAN B6-21 DATED MAY 1, 2006 - PAGE 258 OF THE STANDARD PLANS BOOK DATED MAY 2006.

REVISED STANDARD PLAN RSP B6-21

2006 REVISED STANDARD PLAN RSP B6-21

5-8-07

DIST	COUNTY	ROUTE	POST MILES TOTAL PROJECT	SHEET No.	TOTAL SHEETS
08	Riv	15	9.5/30.4	16	27

Edward Li 11-21-11
REGISTERED CIVIL ENGINEER DATE

2-27-12
PLANS APPROVAL DATE

REGISTERED PROFESSIONAL ENGINEER EDWARD GUOJUN LI No. C56706 Exp. 06/30/11 CIVIL STATE OF CALIFORNIA

The State of California or its officers or agents shall not be responsible for the accuracy or completeness of electronic copies of this plan sheet.

INDEX TO PLANS

SHEET NO.	TITLE
1	GENERAL PLAN NO. 1
2	GENERAL PLAN NO. 2
3	GENERAL PLAN NO. 3
4	GENERAL PLAN NO. 4
5	GENERAL PLAN NO. 5
6	GENERAL PLAN NO. 6
7	GENERAL PLAN NO. 7
8	GENERAL PLAN NO. 8
9	GENERAL PLAN NO. 9
10	MISCELLANEOUS DETAILS NO. 1
11	MISCELLANEOUS DETAILS NO. 2
12	STRUCTURE APPROACH TYPE R(30D)

STANDARD PLANS DATED MAY 2006

SHEET NO.	TITLE
A10A	ACRONYMS AND ABBREVIATIONS (SHEET 1 OF 2)
A10B	ACRONYMS AND ABBREVIATIONS (SHEET 2 OF 2)
A10C	SYMBOLS (SHEET 1 OF 2)
A10D	SYMBOLS (SHEET 2 OF 2)
RSP B6-21	JOINT SEALS (MAXIMUM MOVEMENT RATING = 2")

STANDARD PLAN SHEET NO.

DETAIL NO.

LEGEND:

Indicates existing.

Indicates direction of traffic.

Indicates limits of prepare concrete bridge deck surface and treat bridge deck with high molecular weight methacrylate.

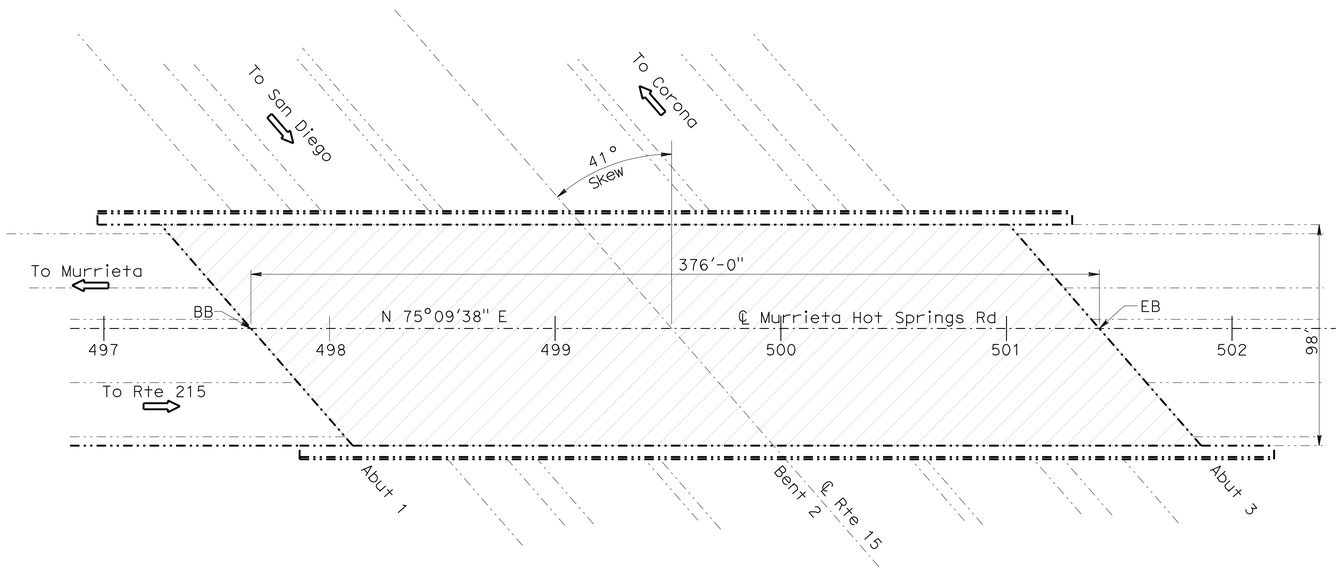

MURRIETA HOT SPRINGS ROAD OC

Br No. 56-0700, Rte 15, PM 9.47
Scale 1"=30'

MURRIETA HOT SPRINGS ROAD OC #56-0700

QUANTITIES

PREPARE CONCRETE BRIDGE DECK SURFACE	36,848 SQFT
TREAT BRIDGE DECK	36,848 SQFT
FURNISH BRIDGE DECK TREATMENT MATERIAL	461 GAL
PUBLIC SAFETY PLAN	LUMP SUM

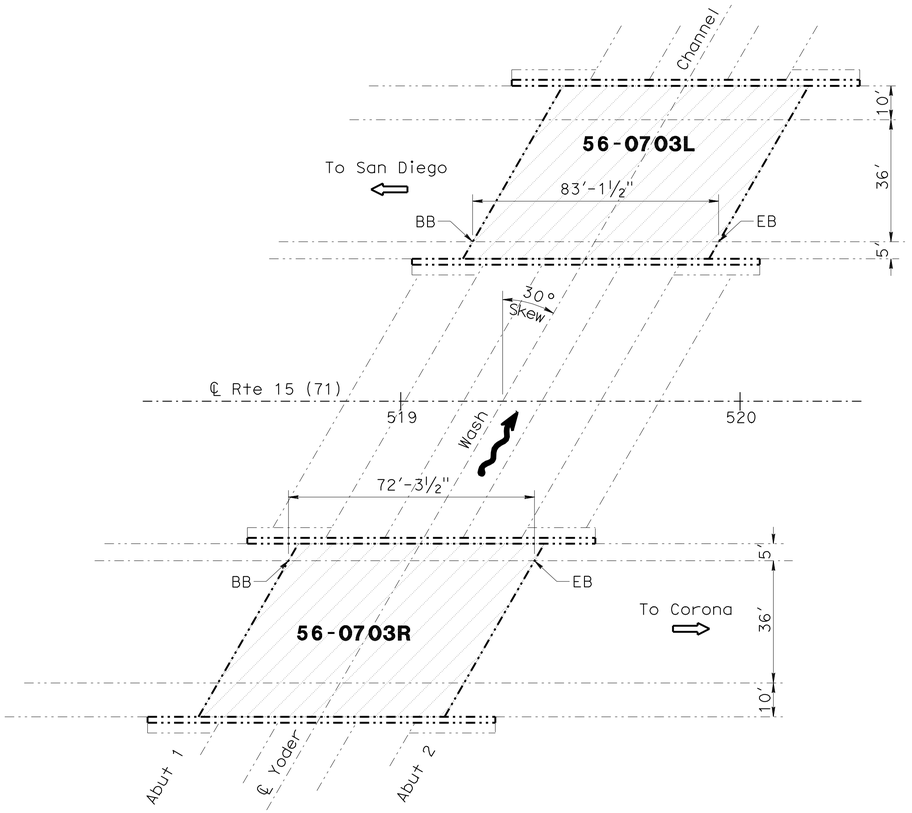

YODER WASH BRIDGE

Br No. 56-0703L/R, Rte 15, PM 9.84
No Scale

YODER WASH BRIDGE #56-0703L/R

QUANTITIES

PREPARE CONCRETE BRIDGE DECK SURFACE	7,918 SQFT
TREAT BRIDGE DECK	7,918 SQFT
FURNISH BRIDGE DECK TREATMENT MATERIAL	99 GAL
PUBLIC SAFETY PLAN	LUMP SUM

NOTE:
THE CONTRACTOR SHALL VERIFY ALL CONTROLLING FIELD DIMENSIONS BEFORE ORDERING OR FABRICATING ANY MATERIAL. EXISTING UTILITIES FACILITIES HAVE NOT BEEN PLOTTED ON THESE PLANS.

TONY D. BRAKE
DESIGN ENGINEER

	BY	CHECKED
DESIGN	Edward Li	Gerald Joo
DETAILS	Clayton Tom	Edward Li
QUANTITIES	Edward Li	Gerald Joo

LOAD FACTOR DESIGN	LIVE LOADING: HS20-44 AND ALTERNATIVE AND PERMIT DESIGN LOAD	
LAYOUT	BY Clayton Tom	CHECKED Edward Li
SPECIFICATIONS	BY Theresa Nedwick	PLANS AND SPECS COMPARED Theresa Nedwick

STATE OF CALIFORNIA
DEPARTMENT OF TRANSPORTATION

DIVISION OF MAINTENANCE
STRUCTURE MAINTENANCE DESIGN

BRIDGE NO. Various
POST MILE Varies

ROUTE 15 BRIDGES
GENERAL PLAN NO. 1

STRUCTURES MAINTENANCE GENERAL PLAN SHEET (ENGLISH) (REV. 09-01-10)

ORIGINAL SCALE IN INCHES FOR REDUCED PLANS 0 1 2 3

UNIT: 3489
PROJECT NUMBER & PHASE: 0800020297 1 CONTRACT NO.: 08-002101

DISREGARD PRINTS BEARING EARLIER REVISION DATES

REVISION DATES: 07-16-11 08-31-11 10-28-11 11-21-11

SHEET 01 OF 12

FILE => 08-0q2101-a-gp01.dgn

USERNAME => s128843 DATE PLOTTED => 27-FEB-2012 TIME PLOTTED => 15:55

DIST	COUNTY	ROUTE	POST MILES TOTAL PROJECT	SHEET No.	TOTAL SHEETS
08	Riv	15	9.5/30.4	17	27

Edward Li 11-21-11
REGISTERED CIVIL ENGINEER DATE

2-27-12
PLANS APPROVAL DATE

REGISTERED PROFESSIONAL ENGINEER EDWARD GUOJUN LI No. C56706 Exp. 06/30/11 CIVIL STATE OF CALIFORNIA

The State of California or its officers or agents shall not be responsible for the accuracy or completeness of electronic copies of this plan sheet.

NOTE:

1. For clean expansion joint and joint seal details, see "MISCELLANEOUS DETAILS NO. 1" sheet.

LEGEND:

Indicates existing.

Indicates direction of traffic.

Indicates limits of prepare concrete bridge deck surface and treat bridge deck with high molecular weight methacrylate.

Indicates location of existing joint seal removal and replacement of new joint seal.

Indicates limits of remove existing approach and place new structure approach type R (30S). For details see STRUCTURE APPROACH TYPE R (30S) sheet.

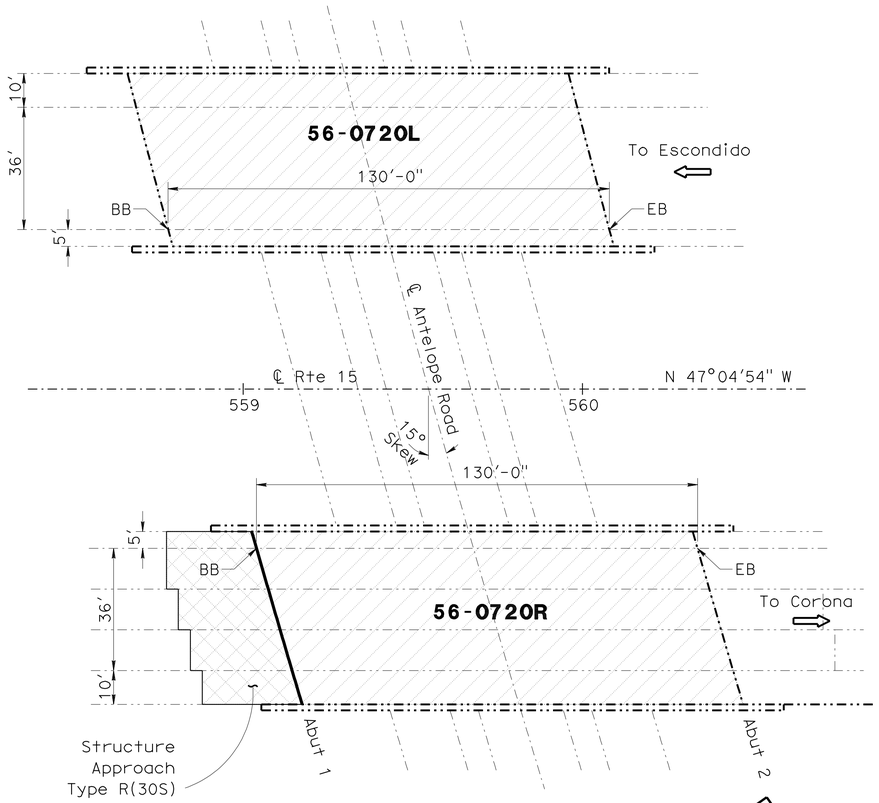

CALIFORNIA OAKS ROAD UC

Br No. 56-0720L/R, Rte 15, PM 10.59
Scale 1"=20'

CALIFORNIA OAKS ROAD UC #56-0720L/R

QUANTITIES

PREPARE CONCRETE BRIDGE DECK SURFACE	13,260	SQFT
AGGREGATE BASE (APPROACH SLAB)	6	CY
STRUCTURAL CONCRETE, APPROACH SLAB (TYPE R)	60	CY
JOINT SEAL (MR 1½")	53	LF
TREAT BRIDGE DECK	13,260	SQFT
FURNISH BRIDGE DECK TREATMENT MATERIAL	166	GAL
PUBLIC SAFETY PLAN	LUMP	SUM

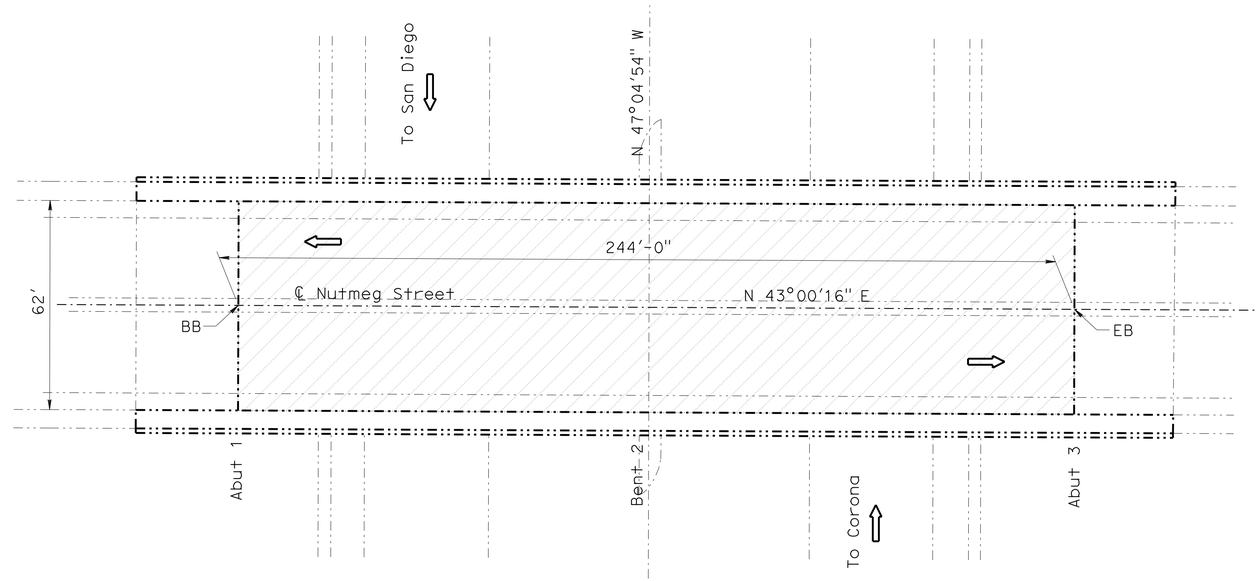

NUTMEG STREET OC

Br No. 56-0798, Rte 15, PM 11.98
Scale 1"=20'

NUTMEG STREET OC #56-0798

QUANTITIES

PREPARE CONCRETE BRIDGE DECK SURFACE	15,128	SQFT
TREAT BRIDGE DECK	15,128	SQFT
FURNISH BRIDGE DECK TREATMENT MATERIAL	189	GAL
PUBLIC SAFETY PLAN	LUMP	SUM

NOTE:
THE CONTRACTOR SHALL VERIFY ALL CONTROLLING FIELD DIMENSIONS BEFORE ORDERING OR FABRICATING ANY MATERIAL. EXISTING UTILITIES FACILITIES HAVE NOT BEEN PLOTTED ON THESE PLANS

TONY D. BRAKE
DESIGN ENGINEER

	BY	CHECKED
DESIGN	Edward Li	Gerald Joo
DETAILS	Clayton Tom	Edward Li
QUANTITIES	Edward Li	Gerald Joo

LOAD FACTOR DESIGN	LIVE LOADING: HS20-44 AND ALTERNATIVE AND PERMIT DESIGN LOAD	
LAYOUT	BY Clayton Tom	CHECKED Edward Li
SPECIFICATIONS	BY Theresa Nedwick	PLANS AND SPECS COMPARED Theresa Nedwick

STATE OF CALIFORNIA
DEPARTMENT OF TRANSPORTATION

DIVISION OF MAINTENANCE
STRUCTURE MAINTENANCE DESIGN

BRIDGE NO. Various
POST MILE Varies

ROUTE 15 BRIDGES
GENERAL PLAN NO. 2

STRUCTURES MAINTENANCE GENERAL PLAN SHEET (ENGLISH) (REV. 09-01-10)

ORIGINAL SCALE IN INCHES FOR REDUCED PLANS 0 1 2 3

UNIT: 3489
PROJECT NUMBER & PHASE: 0800020297 1 CONTRACT NO.: 08-002101

DISREGARD PRINTS BEARING EARLIER REVISION DATES

REVISION DATES: 07-18-11 08-24-11 10-18-11 11-21-11

SHEET 02 OF 12

FILE => 08-0q2101-a-gp02.dgn

USERNAME => s128843 DATE PLOTTED => 27-FEB-2012 TIME PLOTTED => 16:01

DIST	COUNTY	ROUTE	POST MILES TOTAL PROJECT	SHEET No.	TOTAL SHEETS
08	Riv	15	9.5/30.4	18	27

Edward Li 11-21-11
REGISTERED CIVIL ENGINEER DATE

2-27-12
PLANS APPROVAL DATE

REGISTERED PROFESSIONAL ENGINEER EDWARD GUOJUN LI No. C56706 Exp. 06/30/11 CIVIL STATE OF CALIFORNIA

The State of California or its officers or agents shall not be responsible for the accuracy or completeness of electronic copies of this plan sheet.

LEGEND:

Indicates existing.

Indicates direction of traffic.

Indicates limits of prepare concrete bridge deck surface and treat bridge deck with high molecular weight methacrylate.

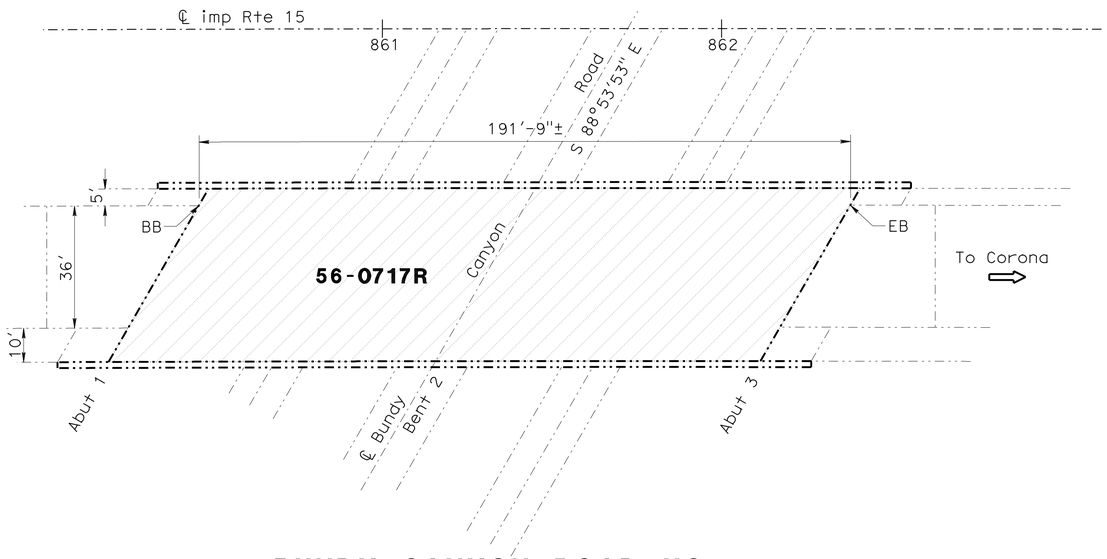

BUNDY CANYON ROAD UC

Br No. 56-0717R, Rte 15, PM 16.3
Scale 1"=20'

BUNDY CANYON ROAD UC #56-0717R

QUANTITIES

PREPARE CONCRETE BRIDGE DECK SURFACE	9,780 SQFT
TREAT BRIDGE DECK	9,780 SQFT
FURNISH BRIDGE DECK TREATMENT MATERIAL	122 GAL

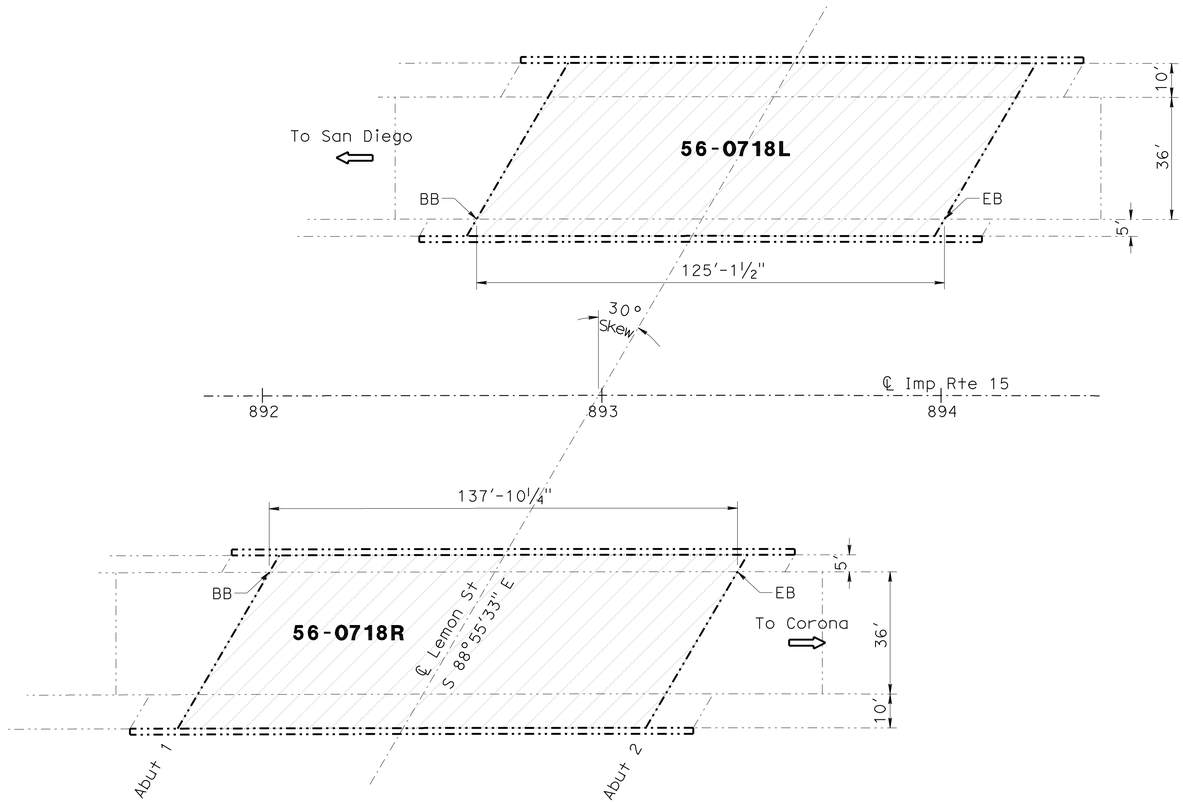

LEMON STREET UC

Br No. 56-0718L/R, Rte 15, PM 16.89
Scale 1"=20'

LEMON STREET UC #56-0718L/R

QUANTITIES

PREPARE CONCRETE BRIDGE DECK SURFACE	13,413 SQFT
TREAT BRIDGE DECK	13,413 SQFT
FURNISH BRIDGE DECK TREATMENT MATERIAL	168 GAL
PUBLIC SAFETY PLAN	LUMP SUM

NOTE:
THE CONTRACTOR SHALL VERIFY ALL CONTROLLING FIELD DIMENSIONS BEFORE ORDERING OR FABRICATING ANY MATERIAL. EXISTING UTILITIES FACILITIES HAVE NOT BEEN PLOTTED ON THESE PLANS

TONY D. BRAKE
DESIGN ENGINEER

	BY	CHECKED			
DESIGN	Edward Li	Gerald Joo	LOAD FACTOR DESIGN	LIVE LOADING: HS20-44 AND ALTERNATIVE AND PERMIT DESIGN LOAD	
DETAILS	Clayton Tom	Edward Li	LAYOUT	Clayton Tom	Edward Li
QUANTITIES	Edward Li	Gerald Joo	SPECIFICATIONS	Theresa Nedwick	PLANS AND SPECS COMPARED Theresa Nedwick

STATE OF CALIFORNIA
DEPARTMENT OF TRANSPORTATION

DIVISION OF MAINTENANCE
STRUCTURE MAINTENANCE DESIGN

BRIDGE NO. Various
POST MILE Various

ROUTE 15 BRIDGES
GENERAL PLAN NO. 3

STRUCTURES MAINTENANCE GENERAL PLAN SHEET (ENGLISH) (REV. 09-01-10)

ORIGINAL SCALE IN INCHES FOR REDUCED PLANS 0 1 2 3

UNIT: 3489
PROJECT NUMBER & PHASE: 0800020297 1 CONTRACT NO.: 08-002101

DISREGARD PRINTS BEARING EARLIER REVISION DATES

REVISION DATES 07-18-11 08-11-11 10-12-11 11-21-11

SHEET 03 OF 12

FILE => 08-0q2101-a-gp03.dgn

USERNAME => s128843 DATE PLOTTED => 27-FEB-2012 TIME PLOTTED => 16:01

DIST	COUNTY	ROUTE	POST MILES TOTAL PROJECT	SHEET No.	TOTAL SHEETS
08	Riv	15	9.5/30.4	19	27

Edward Li 11-21-11
REGISTERED CIVIL ENGINEER DATE

2-27-12
PLANS APPROVAL DATE

REGISTERED PROFESSIONAL ENGINEER EDWARD GUOJUN LI No. C56706 Exp. 06/30/11 CIVIL STATE OF CALIFORNIA

The State of California or its officers or agents shall not be responsible for the accuracy or completeness of electronic copies of this plan sheet.

LEGEND:

Indicates existing.

Indicates direction of traffic.

Indicates limits of prepare concrete bridge deck surface and treat bridge deck with high molecular weight methacrylate.

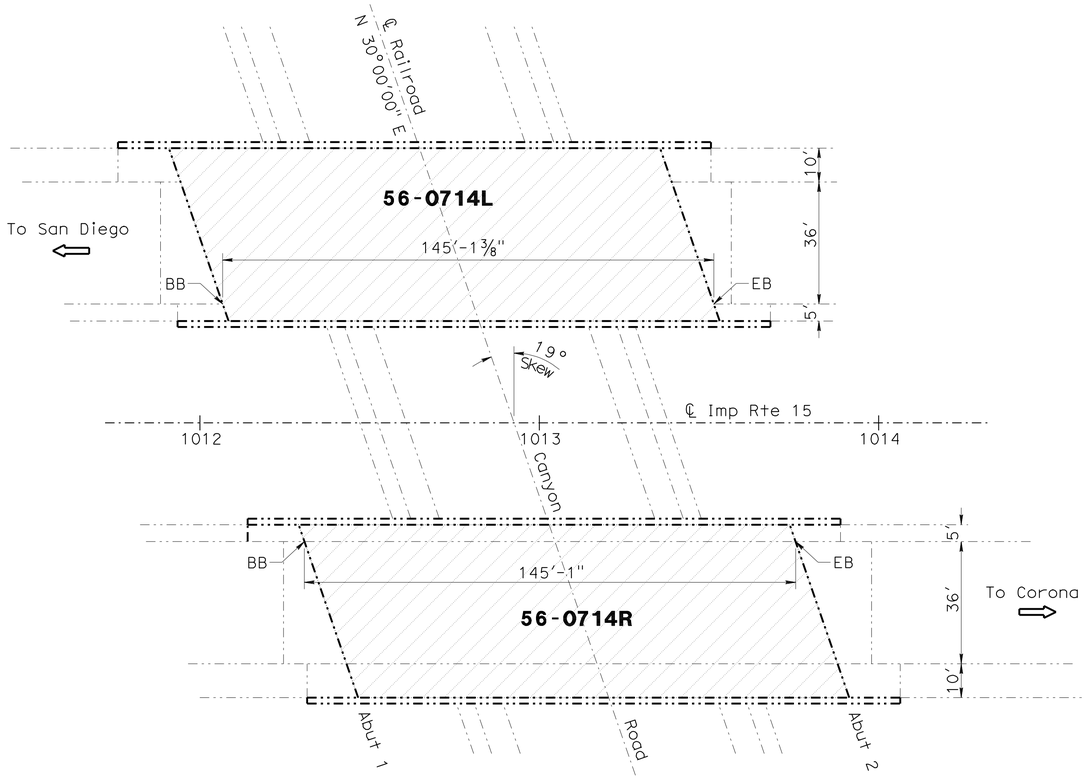

RAILROAD CANYON ROAD UC

Br No. 56-0714L/R, Rte 15, PM 19.16
No Scale

RAILROAD CANYON ROAD UC #56-0714L/R

QUANTITIES

PREPARE CONCRETE BRIDGE DECK SURFACE	14,810 SQFT
TREAT BRIDGE DECK	14,810 SQFT
FURNISH BRIDGE DECK TREATMENT MATERIAL	186 GAL
PUBLIC SAFETY PLAN	LUMP SUM

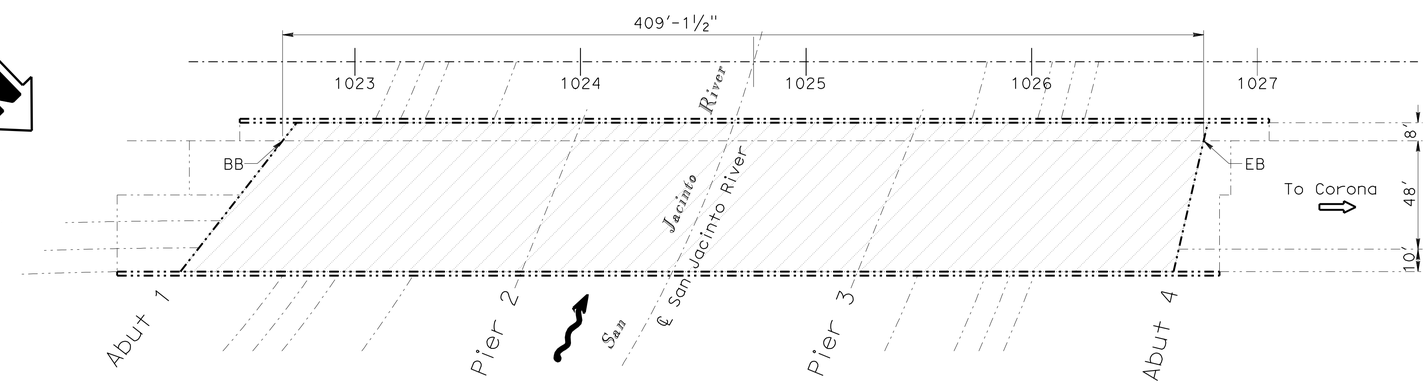

SAN JACINTO RIVER BRIDGE

Br No. 56-0728R, Rte 2, PM 19.37
Scale 1"=30'

SAN JACINTO RIVER BRIDGE #56-0728R

QUANTITIES

PREPARE CONCRETE BRIDGE DECK SURFACE	27,854 SQFT
TREAT BRIDGE DECK	27,854 SQFT
FURNISH BRIDGE DECK TREATMENT MATERIAL	348 GAL
PUBLIC SAFETY PLAN	LUMP SUM

NOTE:
THE CONTRACTOR SHALL VERIFY ALL CONTROLLING FIELD DIMENSIONS BEFORE ORDERING OR FABRICATING ANY MATERIAL. EXISTING UTILITIES FACILITIES HAVE NOT BEEN PLOTTED ON THESE PLANS.

TONY D. BRAKE
DESIGN ENGINEER

	BY	CHECKED
DESIGN	Edward Li	Gerald Joo
DETAILS	Clayton Tom	Edward Li
QUANTITIES	Edward Li	Gerald Joo

LOAD FACTOR DESIGN	LIVE LOADING: HS20-44 AND ALTERNATIVE AND PERMIT DESIGN LOAD		
LAYOUT	BY Clayton Tom	CHECKED Edward Li	
SPECIFICATIONS	BY Theresa Nedwick	PLANS AND SPECS COMPARED Theresa Nedwick	

STATE OF CALIFORNIA
DEPARTMENT OF TRANSPORTATION

DIVISION OF MAINTENANCE
STRUCTURE MAINTENANCE DESIGN

BRIDGE NO. Various
POST MILE Various

ROUTE 15 BRIDGES
GENERAL PLAN NO. 4

STRUCTURES MAINTENANCE GENERAL PLAN SHEET (ENGLISH) (REV. 09-01-10)

ORIGINAL SCALE IN INCHES FOR REDUCED PLANS 0 1 2 3

UNIT: 3489
PROJECT NUMBER & PHASE: 0800020297 1 CONTRACT NO.: 08-002101

DISREGARD PRINTS BEARING EARLIER REVISION DATES

REVISION DATES 07-18-11 08-11-11 10-28-11 11-21-11

SHEET 04 OF 12

FILE => 08-0q2101-a-gp04.dgn

USERNAME => s124496 DATE PLOTTED => 27-FEB-2012 TIME PLOTTED => 15:52

DIST	COUNTY	ROUTE	POST MILES TOTAL PROJECT	SHEET No.	TOTAL SHEETS
08	Riv	15	9.5/30.4	20	27

Edward Li 11-21-11
REGISTERED CIVIL ENGINEER DATE

2-27-12
PLANS APPROVAL DATE

REGISTERED PROFESSIONAL ENGINEER EDWARD GUOJUN LI No. C56706 Exp. 06/30/11 CIVIL STATE OF CALIFORNIA

The State of California or its officers or agents shall not be responsible for the accuracy or completeness of electronic copies of this plan sheet.

LEGEND:

Indicates existing.

Indicates direction of traffic.

Indicates limits of prepare concrete bridge deck surface and treat bridge deck with high molecular weight methacrylate.

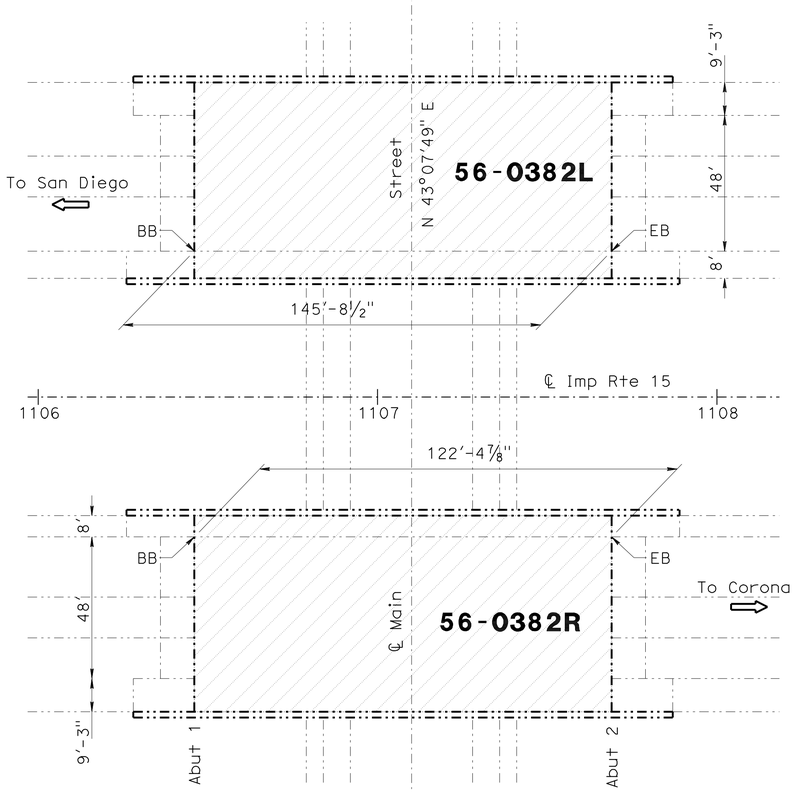

MAIN STREET UC

Br No. 56-0382L/R, Rte 15, PM 20.95
No Scale

MAIN STREET UC #56-0382L/R

QUANTITIES

PREPARE CONCRETE BRIDGE DECK SURFACE	17,492 SQFT
TREAT BRIDGE DECK	17,492 SQFT
FURNISH BRIDGE DECK TREATMENT MATERIAL	219 GAL
PUBLIC SAFETY PLAN	LUMP SUM

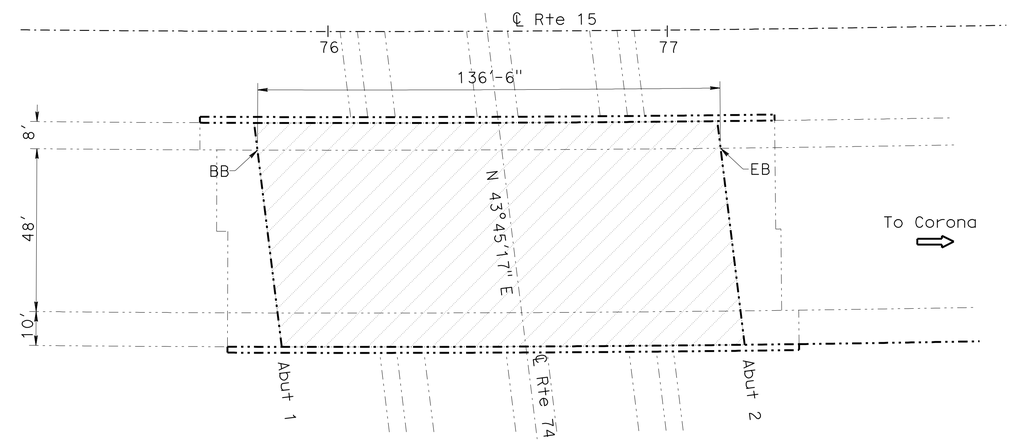

ROUTE 15/74 SEPARATION

Br No. 56-0723R, Rte 15, PM 22.26
Scale 1"=20'

ROUTE 15/74 SEPARATION #56-0723R

QUANTITIES

PREPARE CONCRETE BRIDGE DECK SURFACE	9,009 SQFT
TREAT BRIDGE DECK	9,009 SQFT
FURNISH BRIDGE DECK TREATMENT MATERIAL	113 GAL
PUBLIC SAFETY PLAN	LUMP SUM

NOTE:
THE CONTRACTOR SHALL VERIFY ALL CONTROLLING FIELD DIMENSIONS BEFORE ORDERING OR FABRICATING ANY MATERIAL. EXISTING UTILITIES FACILITIES HAVE NOT BEEN PLOTTED ON THESE PLANS.

TONY D. BRAKE
DESIGN ENGINEER

	BY	CHECKED
DESIGN	Edward Li	Gerald Joo
DETAILS	Clayton Tom	Edward Li
QUANTITIES	Edward Li	Gerald Joo

LOAD FACTOR DESIGN	LIVE LOADING: HS20-44 AND ALTERNATIVE AND PERMIT DESIGN LOAD		
LAYOUT	BY Clayton Tom	CHECKED Edward Li	
SPECIFICATIONS	BY Theresa Nedwick	PLANS AND SPECS COMPARED Theresa Nedwick	

STATE OF CALIFORNIA
DEPARTMENT OF TRANSPORTATION

DIVISION OF MAINTENANCE
STRUCTURE MAINTENANCE DESIGN

BRIDGE NO. Various
POST MILE Varies

ROUTE 15 BRIDGES
GENERAL PLAN NO. 5

STRUCTURES MAINTENANCE GENERAL PLAN SHEET (ENGLISH) (REV. 09-01-10)

ORIGINAL SCALE IN INCHES FOR REDUCED PLANS 0 1 2 3

UNIT: 3489
PROJECT NUMBER & PHASE: 0800020297 1 CONTRACT NO.: 08-002101

DISREGARD PRINTS BEARING EARLIER REVISION DATES

REVISION DATES 07-18-11 08-31-11 10-12-11 11-21-11

SHEET 05 OF 12

FILE => 08-0q2101-a-gp05.dgn

USERNAME => s124496 DATE PLOTTED => 27-FEB-2012 TIME PLOTTED => 15:52

DIST	COUNTY	ROUTE	POST MILES TOTAL PROJECT	SHEET No.	TOTAL SHEETS
08	Riv	15	9.5/30.4	21	27

Edward Li 11-21-11
REGISTERED CIVIL ENGINEER DATE

2-27-12
PLANS APPROVAL DATE

REGISTERED PROFESSIONAL ENGINEER EDWARD GUOJUN LI No. C56706 Exp. 06/30/11 CIVIL STATE OF CALIFORNIA

The State of California or its officers or agents shall not be responsible for the accuracy or completeness of electronic copies of this plan sheet.

LEGEND:

Indicates existing.

Indicates direction of traffic.

Indicates limits of prepare concrete bridge deck surface and treat bridge deck with high molecular weight methacrylate.

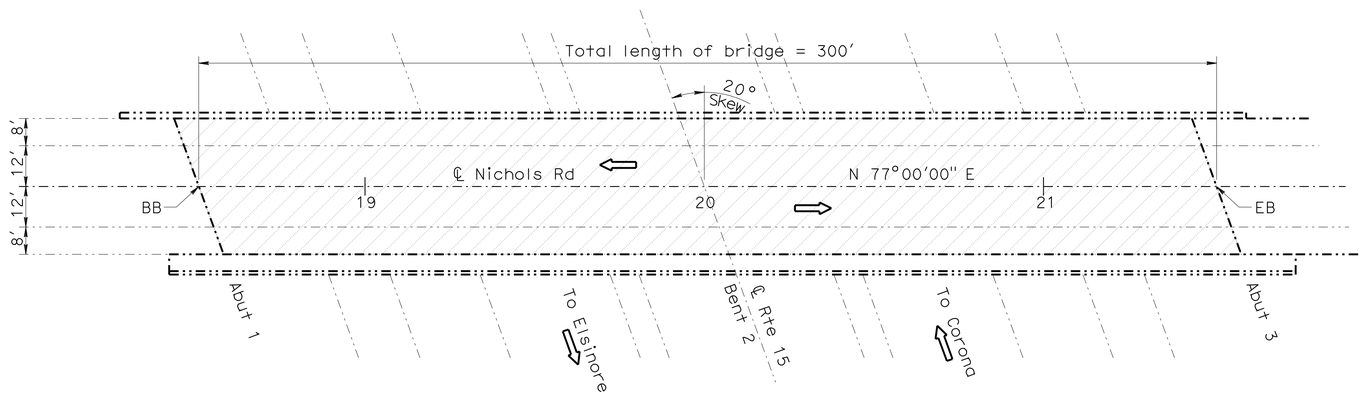

NICHOLS ROAD OC

Br No. 56-0725, Rte 15, PM 23.85
No Scale
NICHOLS ROAD OC #56-0725

QUANTITIES

PREPARE CONCRETE BRIDGE DECK SURFACE	12,000 SQFT
TREAT BRIDGE DECK	12,000 SQFT
FURNISH BRIDGE DECK TREATMENT MATERIAL	150 GAL
PUBLIC SAFETY PLAN	LUMP SUM

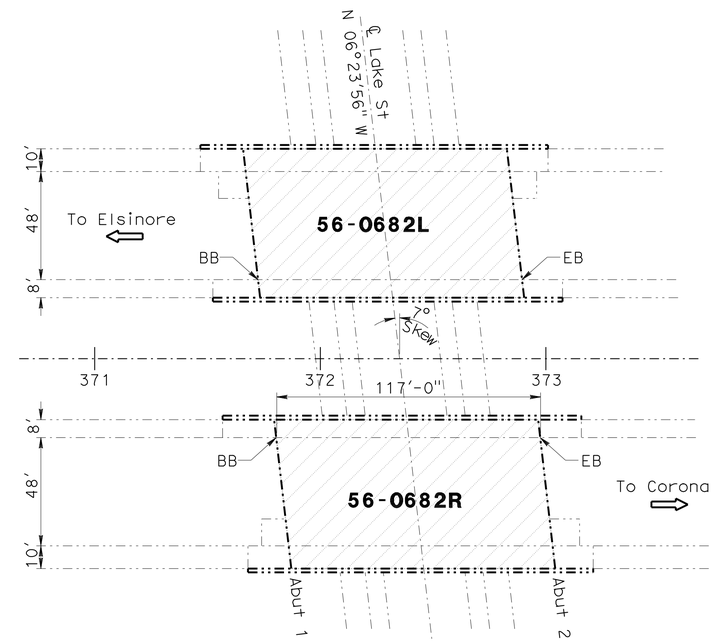

LAKE STREET UC

Br No. 56-0682L/R, Rte 15, PM 26.69
Scale 1"=30'
LAKE STREET UC #56-0682L/R

QUANTITIES

PREPARE CONCRETE BRIDGE DECK SURFACE	15,444 SQFT
TREAT BRIDGE DECK	15,444 SQFT
FURNISH BRIDGE DECK TREATMENT MATERIAL	194 GAL

NOTE:
THE CONTRACTOR SHALL VERIFY ALL CONTROLLING FIELD DIMENSIONS BEFORE ORDERING OR FABRICATING ANY MATERIAL. EXISTING UTILITIES FACILITIES HAVE NOT BEEN PLOTTED ON THESE PLANS.

TONY D. BRAKE
DESIGN ENGINEER

	BY	CHECKED			
DESIGN	Edward Li	Gerald Joo	LOAD FACTOR DESIGN	LIVE LOADING: HS20-44 AND ALTERNATIVE AND PERMIT DESIGN LOAD	
DETAILS	Clayton Tom	Edward Li	LAYOUT	Clayton Tom	Edward Li
QUANTITIES	Edward Li	Gerald Joo	SPECIFICATIONS	Theresa Nedwick	Theresa Nedwick (PLANS AND SPECS COMPARED)

STATE OF CALIFORNIA
DEPARTMENT OF TRANSPORTATION

DIVISION OF MAINTENANCE
STRUCTURE MAINTENANCE DESIGN

BRIDGE NO. Various
POST MILE Varies

ROUTE 15 BRIDGES
GENERAL PLAN NO. 6

STRUCTURES MAINTENANCE GENERAL PLAN SHEET (ENGLISH) (REV. 09-01-10)

ORIGINAL SCALE IN INCHES FOR REDUCED PLANS 0 1 2 3

UNIT: 3489
PROJECT NUMBER & PHASE: 0800020297 1 CONTRACT NO.: 08-0Q2101

DISREGARD PRINTS BEARING EARLIER REVISION DATES

REVISION DATES: 07-18-11 08-31-11 10-12-11 11-21-11

SHEET 06 OF 12

USERNAME => s124436 DATE PLOTTED => 27-FEB-2012 TIME PLOTTED => 15:52
FILE => 08-0q2101-a-gp06.dgn

DIST	COUNTY	ROUTE	POST MILES TOTAL PROJECT	SHEET No.	TOTAL SHEETS
08	Riv	15	9.5/30.4	22	27

Edward Li 11-21-11
REGISTERED CIVIL ENGINEER DATE

2-27-12
PLANS APPROVAL DATE

REGISTERED PROFESSIONAL ENGINEER EDWARD GUOJUN LI No. C56706 Exp. 06/30/11 CIVIL STATE OF CALIFORNIA

The State of California or its officers or agents shall not be responsible for the accuracy or completeness of electronic copies of this plan sheet.

LEGEND:

Indicates existing.

Indicates direction of traffic.

Indicates limits of prepare concrete bridge deck surface and treat bridge deck with high molecular weight methacrylate.

Indicates location of existing joint seal removal and replacement of new joint seal.

Indicates limits of remove existing approach and place new structure approach type R (30S). For details see STRUCTURE APPROACH TYPE R (30S) sheet.

NOTE:

1. For clean expansion joint and joint seal details, see "MISCELLANEOUS DETAILS NO. 1" sheet.

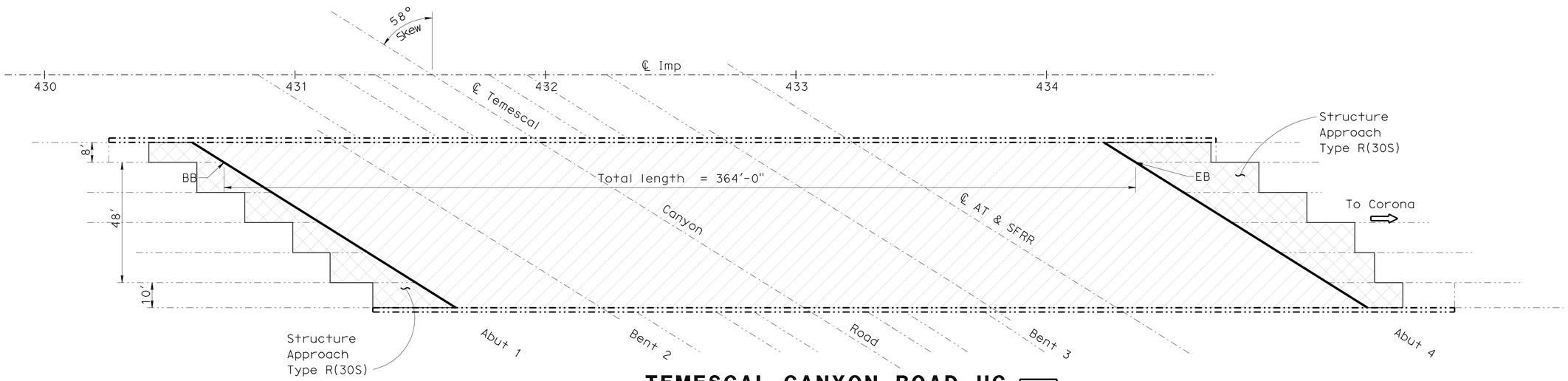

TEMESCAL CANYON ROAD UC

Br No. 56-0681R, Rte 15, PM 27.78
Scale 1"=20'

TEMESCAL CANYON ROAD UC #56-0681R

QUANTITIES

PREPARE CONCRETE BRIDGE DECK SURFACE	24,024	SQFT
AGGREGATE BASE (APPROACH SLAB)	19	CY
STRUCTURAL CONCRETE, APPROACH SLAB (TYPE R)	191	CY
JOINT SEAL (MR 1½")	250	LF
TREAT BRIDGE DECK	24,024	SQFT
FURNISH BRIDGE DECK TREATMENT MATERIAL	300	GAL

NOTE:
THE CONTRACTOR SHALL VERIFY ALL CONTROLLING FIELD DIMENSIONS BEFORE ORDERING OR FABRICATING ANY MATERIAL. EXISTING UTILITIES FACILITIES HAVE NOT BEEN PLOTTED ON THESE PLANS

TONY D. BRAKE
DESIGN ENGINEER

	BY	CHECKED
DESIGN	Edward Li	Gerald Joo
DETAILS	Clayton Tom	Edward Li
QUANTITIES	Edward Li	Gerald Joo

LOAD FACTOR DESIGN — LIVE LOADING: HS20-44 AND ALTERNATIVE AND PERMIT DESIGN LOAD

	BY	CHECKED
LAYOUT	Clayton Tom	Edward Li
SPECIFICATIONS	Theresa Nedwick	PLANS AND SPECS COMPARED Theresa Nedwick

STATE OF CALIFORNIA
DEPARTMENT OF TRANSPORTATION

DIVISION OF MAINTENANCE
STRUCTURE MAINTENANCE DESIGN

BRIDGE NO. Various
POST MILE Varies

ROUTE 15 BRIDGES
GENERAL PLAN NO. 7

STRUCTURES MAINTENANCE GENERAL PLAN SHEET (ENGLISH) (REV. 09-01-10)

ORIGINAL SCALE IN INCHES FOR REDUCED PLANS 0 1 2 3

UNIT: 3489
PROJECT NUMBER & PHASE: 0800020297 1 CONTRACT NO.: 08-002101

DISREGARD PRINTS BEARING EARLIER REVISION DATES → 07-15-11 08-11-11 10-12-11 11-21-11

SHEET 07 OF 12

FILE => 08-0q2101-a-gp07.dgn

USERNAME => s124936 DATE PLOTTED => 27-FEB-2012 TIME PLOTTED => 15:52

DIST	COUNTY	ROUTE	POST MILES TOTAL PROJECT	SHEET No.	TOTAL SHEETS
08	Riv	15	9.5/30.4	23	27

Edward Li 11-21-11
REGISTERED CIVIL ENGINEER DATE

2-27-12
PLANS APPROVAL DATE

REGISTERED PROFESSIONAL ENGINEER EDWARD GUOJUN LI No. C56706 Exp. 06/30/11 CIVIL STATE OF CALIFORNIA

The State of California or its officers or agents shall not be responsible for the accuracy or completeness of electronic copies of this plan sheet.

LEGEND:

Indicates existing.

Indicates direction of traffic.

Indicates limits of prepare concrete bridge deck surface and treat bridge deck with high molecular weight methacrylate.

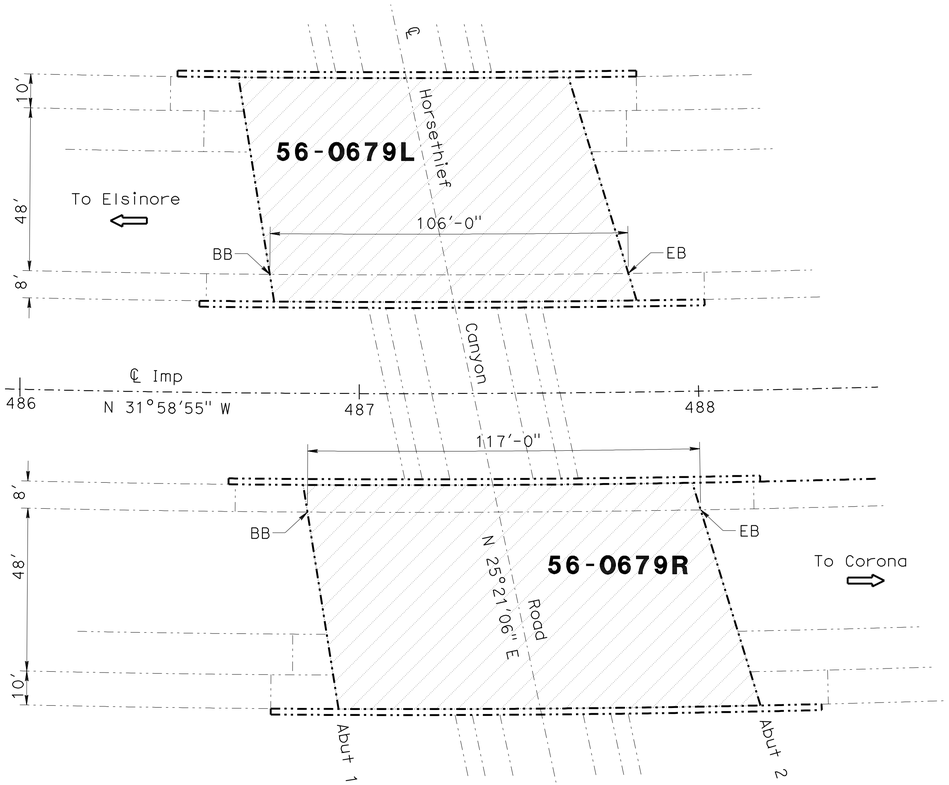

HORSETHIEF CANYON ROAD UC

Br No. 56-0679L/R, Rte 15, PM 28.87
Scale 1"=20'

HORSETHIEF CANYON ROAD UC #56-0679L/R

QUANTITIES

PREPARE CONCRETE BRIDGE DECK SURFACE	14,718 SQFT
TREAT BRIDGE DECK	14,718 SQFT
FURNISH BRIDGE DECK TREATMENT MATERIAL	185 GAL
PUBLIC SAFETY PLAN	LUMP SUM

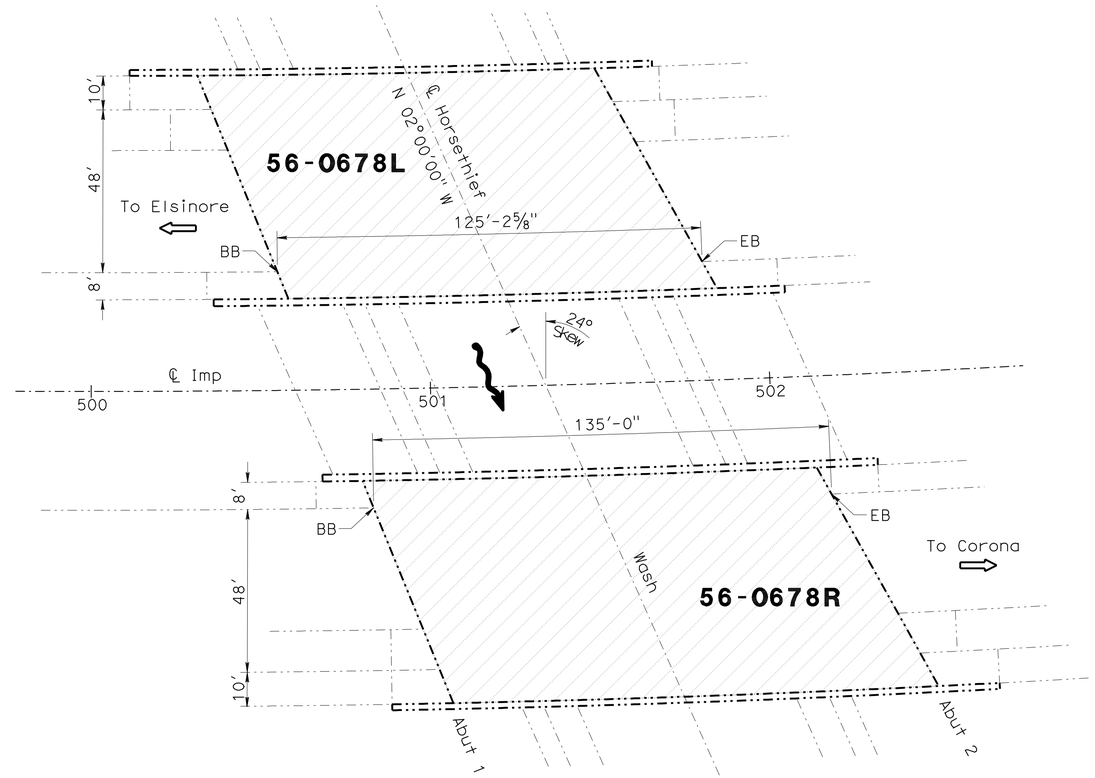

HORSETHIEF CANYON WASH BRIDGE

Br No. 56-0678L/R, Rte 15, PM 29.3
Scale 1"=20'

HORSETHIEF CANYON WASH BRIDGE #56-0678L/R

QUANTITIES

PREPARE CONCRETE BRIDGE DECK SURFACE	17,177 SQFT
TREAT BRIDGE DECK	17,177 SQFT
FURNISH BRIDGE DECK TREATMENT MATERIAL	215 GAL
PUBLIC SAFETY PLAN	LUMP SUM

NOTE:
THE CONTRACTOR SHALL VERIFY ALL CONTROLLING FIELD DIMENSIONS BEFORE ORDERING OR FABRICATING ANY MATERIAL. EXISTING UTILITIES FACILITIES HAVE NOT BEEN PLOTTED ON THESE PLANS

TONY D. BRAKE
DESIGN ENGINEER

	BY	CHECKED
DESIGN	Edward Li	Gerald Joo
DETAILS	Clayton Tom	Edward Li
QUANTITIES	Edward Li	Gerald Joo

LOAD FACTOR DESIGN	LIVE LOADING: HS20-44 AND ALTERNATIVE AND PERMIT DESIGN LOAD	
LAYOUT	BY Clayton Tom	CHECKED Edward Li
SPECIFICATIONS	BY Theresa Nedwick	PLANS AND SPECS COMPARED Theresa Nedwick

STATE OF CALIFORNIA
DEPARTMENT OF TRANSPORTATION

DIVISION OF MAINTENANCE
STRUCTURE MAINTENANCE DESIGN

BRIDGE NO. Various
POST MILE Varies

ROUTE 15 BRIDGES
GENERAL PLAN NO. 8

STRUCTURES MAINTENANCE GENERAL PLAN SHEET (ENGLISH) (REV. 09-01-10)

ORIGINAL SCALE IN INCHES FOR REDUCED PLANS 0 1 2 3

UNIT: 3489
PROJECT NUMBER & PHASE: 0800020297 1 CONTRACT NO.: 08-002101

DISREGARD PRINTS BEARING EARLIER REVISION DATES

REVISION DATES: 07-15-11 08-11-11 10-12-11 11-21-11

SHEET 08 OF 12

FILE => 08-0q2101-a-gp08.dgn

USERNAME => s124496 DATE PLOTTED => 27-FEB-2012 TIME PLOTTED => 15:52

DIST	COUNTY	ROUTE	POST MILES TOTAL PROJECT	SHEET No.	TOTAL SHEETS
08	RIV	15	9.5/30.4	24	27

Edward Li 11-21-11
REGISTERED CIVIL ENGINEER DATE

2-27-12
PLANS APPROVAL DATE

REGISTERED PROFESSIONAL ENGINEER EDWARD GUOJUN LI No. C56706 Exp. 06/30/11 CIVIL STATE OF CALIFORNIA

The State of California or its officers or agents shall not be responsible for the accuracy or completeness of electronic copies of this plan sheet.

LEGEND:

Indicates existing.

Indicates direction of traffic.

Indicates limits of prepare concrete bridge deck surface and treat bridge deck with high molecular weight methacrylate.

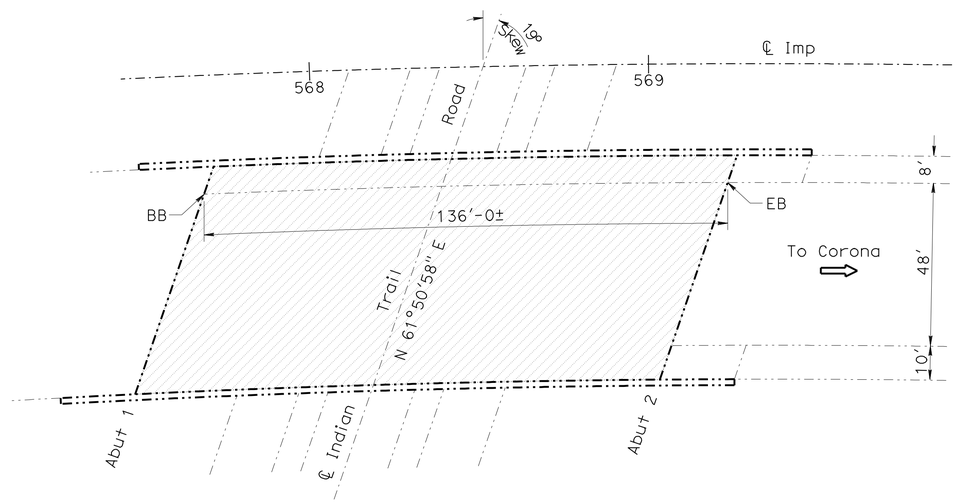

INDIAN TRUCK TRAIL UC

Br No. 56-0676R, Rte 15, PM 30.4
No Scale

INDIAN TRUCK TRAIL UC #56-0676R

QUANTITIES

PREPARE CONCRETE BRIDGE DECK SURFACE	8,976 SQFT
TREAT BRIDGE DECK	8,976 SQFT
FURNISH BRIDGE DECK TREATMENT MATERIAL	112 GAL

NOTE:
THE CONTRACTOR SHALL VERIFY ALL CONTROLLING FIELD DIMENSIONS BEFORE ORDERING OR FABRICATING ANY MATERIAL. EXISTING UTILITIES FACILITIES HAVE NOT BEEN PLOTTED ON THESE PLANS.

TONY D. BRAKE
DESIGN ENGINEER

	BY	CHECKED
DESIGN	Edward Li	Gerald Joo
DETAILS	Clayton Tom	Edward Li
QUANTITIES	Edward Li	Gerald Joo

		BY	CHECKED
LOAD FACTOR DESIGN	LIVE LOADING: HS20-44 AND ALTERNATIVE AND PERMIT DESIGN LOAD		
LAYOUT		Clayton Tom	Edward Li
SPECIFICATIONS		Theresa Nedwick	PLANS AND SPECS COMPARED Theresa Nedwick

STATE OF CALIFORNIA
DEPARTMENT OF TRANSPORTATION

DIVISION OF MAINTENANCE
STRUCTURE MAINTENANCE DESIGN

BRIDGE NO. Various
POST MILE Varies

ROUTE 15 BRIDGES
GENERAL PLAN NO. 9

STRUCTURES MAINTENANCE GENERAL PLAN SHEET (ENGLISH) (REV. 09-01-10)

ORIGINAL SCALE IN INCHES FOR REDUCED PLANS 0 1 2 3

UNIT: 3489
PROJECT NUMBER & PHASE: 0800020297 1 CONTRACT NO.: 08-002101

DISREGARD PRINTS BEARING EARLIER REVISION DATES

REVISION DATES: 07-18-11 08-11-11 10-18-11 11-21-11

SHEET 09 OF 12

FILE => 08-0q2101-a-gp09.dgn

USERNAME => s124196 DATE PLOTTED => 27-FEB-2012 TIME PLOTTED => 15:52

DIST	COUNTY	ROUTE	POST MILES TOTAL PROJECT	SHEET No.	TOTAL SHEETS
08	Riv	15	9.5/30.4	25	27

Edward Li 11-21-11
REGISTERED CIVIL ENGINEER DATE

2-27-12
PLANS APPROVAL DATE

REGISTERED PROFESSIONAL ENGINEER EDWARD GUOJUN LI No. C56706 Exp. 06/30/11 CIVIL STATE OF CALIFORNIA

The State of California or its officers or agents shall not be responsible for the accuracy or completeness of electronic copies of this plan sheet.

JOINT SEAL TABLE

BRIDGE NAME	BRIDGE NUMBER	LOCATION	MINIMUM "MR" (INCHES)	APPROX LENGTH (FT)	EXISTING WATERSTOP	APPROX DEPTH TO CLEAN EXP JOINT (INCHES)
California Oaks Rd UC (Rt)	56-0720R	Abut 1, BW	1½	53	NO	-
Temescal Canyon Rd UC (Rt)	56-0681R	Abut 1, BW	1½	125	NO	-
		Abut 4, BW	1½	125	NO	-

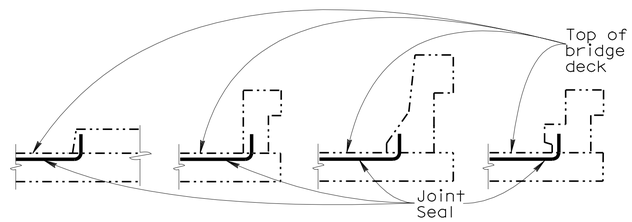

BARRIER RAIL

JOINT SEAL AT LOW SIDE OF DECK

Note: Details shown for illustration purposes only.

For use only where deck joint matches the sidewalk, curb or barrier rail joint.

NOTES:

The following notes apply to JOINT SEAL TYPE A:

Install Joint Seal (MR = ½") or Silicone Joint Seal 3" up into curb or barrier rail on the low side of the deck where deck joint aligns with curb or barrier rail joint.

For details not shown see RSP B6-21 sheet.

The following notes apply to JOINT SEAL TYPE B:

1) Seal must satisfy both minimum Movement Rating (MR) and minimum W1 requirements.

2) Minimum W1 is the calculated maximum width of the joint based on field measurements. After the joints have been cleaned, minimum W1 is to be recalculated by the Engineer.

3) W1 shall be the smaller of the values determined as follows:
   A) 0.85 times the manufacturer's designed minimum uncompressed width of the seal.
   B) The width of the seal on the third successive test cycle of the pressure deflection test, when compressed to an average pressure of 3.0 PSI.

4) Bend Type B joint seal 6 inches up into curb or rail on the low side of the deck where deck joint matches curb or rail joint.

For details not shown see RSP B6-21 sheet.

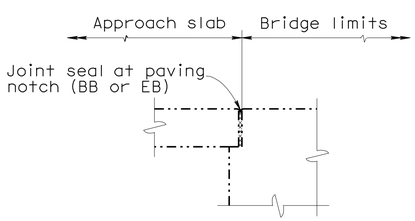

DIAPHRAGM ABUTMENT

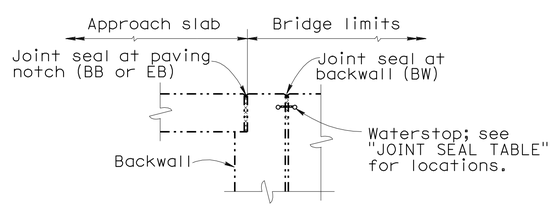

ABUTMENT WITH BACKWALL AND PAVING NOTCH

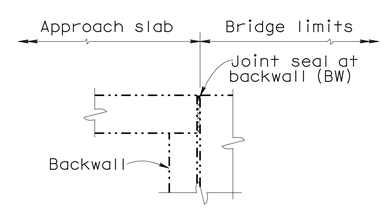

ABUTMENT WITH BACKWALL

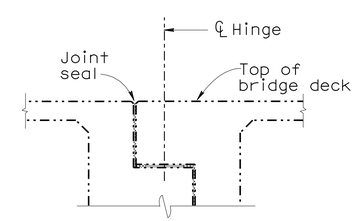

HINGE

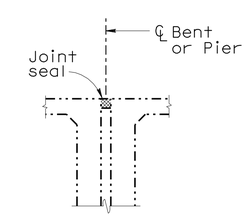

BENT OR PIER

JOINT SEAL LOCATION

NO SCALE

NOTE:
THE CONTRACTOR SHALL VERIFY ALL CONTROLLING FIELD DIMENSIONS BEFORE ORDERING OR FABRICATING ANY MATERIAL.

	BY	CHECKED
DESIGN	Edward Li	Gerald Joo
DETAILS	Clayton Tom	Edward Li
QUANTITIES	Edward Li	Gerald Joo

STATE OF CALIFORNIA
DEPARTMENT OF TRANSPORTATION

DIVISION OF MAINTENANCE
STRUCTURE MAINTENANCE DESIGN

BRIDGE NO. Various
POST MILE Varies

ROUTES 15 BRIDGES
MISCELLANEOUS DETAILS NO. 1

STRUCTURES MAINTENANCE DETAIL SHEET (ENGLISH) (REV. 09-01-10)

ORIGINAL SCALE IN INCHES FOR REDUCED PLANS 0 1 2 3

UNIT: 3489
PROJECT NUMBER & PHASE: 0800020111 1 CONTRACT NO.: 08-002101

DISREGARD PRINTS BEARING EARLIER REVISION DATES

REVISION DATES: 07-18-11 08-11-11 10-12-11 11-121-11

SHEET 10 OF 12

FILE => 08-0q2101-u-miscdt01.dgn

USERNAME => s124496 DATE PLOTTED => 27-FEB-2012 TIME PLOTTED => 15:52

DIST	COUNTY	ROUTE	POST MILES TOTAL PROJECT	SHEET No.	TOTAL SHEETS
08	Riv	15	9.5/30.4	26	27

Edward Li 11-21-11
REGISTERED CIVIL ENGINEER DATE

2-27-12
PLANS APPROVAL DATE

REGISTERED PROFESSIONAL ENGINEER EDWARD GUOJUN LI No. C56706 Exp. 06/30/11 CIVIL STATE OF CALIFORNIA

The State of California or its officers or agents shall not be responsible for the accuracy or completeness of electronic copies of this plan sheet.

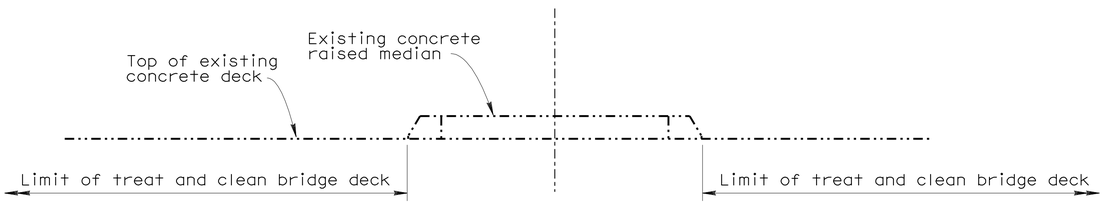

RAISED MEDIAN

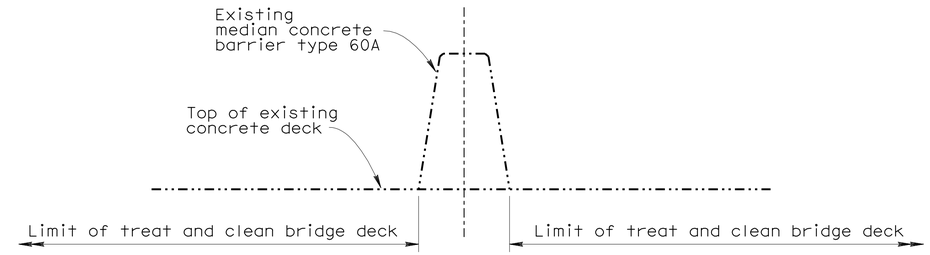

MEDIAN BARRIER

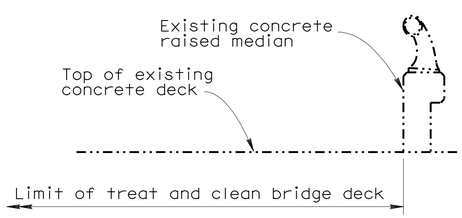

SIDEWALK BARRIER TYPE 1

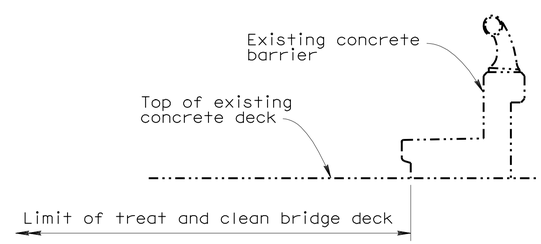

SIDEWALK BARRIER TYPE 2

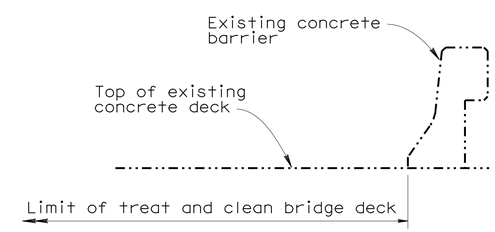

EOD BARRIER

TYPICAL LIMITS OF DECK WORK

NO SCALE

NOTE:
THE CONTRACTOR SHALL VERIFY ALL CONTROLLING FIELD DIMENSIONS BEFORE ORDERING OR FABRICATING ANY MATERIAL.

	BY	CHECKED
DESIGN	Edward Li	Gerald Joo
DETAILS	Clayton Tom	Edward Li
QUANTITIES	Edward Li	Gerald Joo

STATE OF CALIFORNIA
DEPARTMENT OF TRANSPORTATION

DIVISION OF MAINTENANCE
STRUCTURE MAINTENANCE DESIGN

BRIDGE NO. Various
POST MILE Varies

ROUTES 15 BRIDGES
MISCELLANEOUS DETAILS NO. 2

STRUCTURES MAINTENANCE DETAIL SHEET (ENGLISH) (REV. 09-01-10)

ORIGINAL SCALE IN INCHES FOR REDUCED PLANS 0 1 2 3

UNIT: 3489
PROJECT NUMBER & PHASE: 0800020111 1 CONTRACT NO.: 08-002101

DISREGARD PRINTS BEARING EARLIER REVISION DATES

REVISION DATES 07-18-11 08-18-11 10-18-11 11-21-11

SHEET 11 OF 12

FILE => 08-0q2101-u-miscdt02.dgn

USERNAME => s124496 DATE PLOTTED => 27-FEB-2012 TIME PLOTTED => 15:53

DIST	COUNTY	ROUTE	POST MILES TOTAL PROJECT	SHEET No.	TOTAL SHEETS
08	Riv	15	9.5/30.4	27	27

REGISTERED CIVIL ENGINEER 11-21-11 DATE

2-27-12
PLANS APPROVAL DATE

The State of California or its officers or agents shall not be responsible for the accuracy or completeness of electronic copies of this plan sheet.

REGISTERED PROFESSIONAL ENGINEER EDWARD GUOJUN LI No. C56706 Exp. 06/30/11 CIVIL STATE OF CALIFORNIA

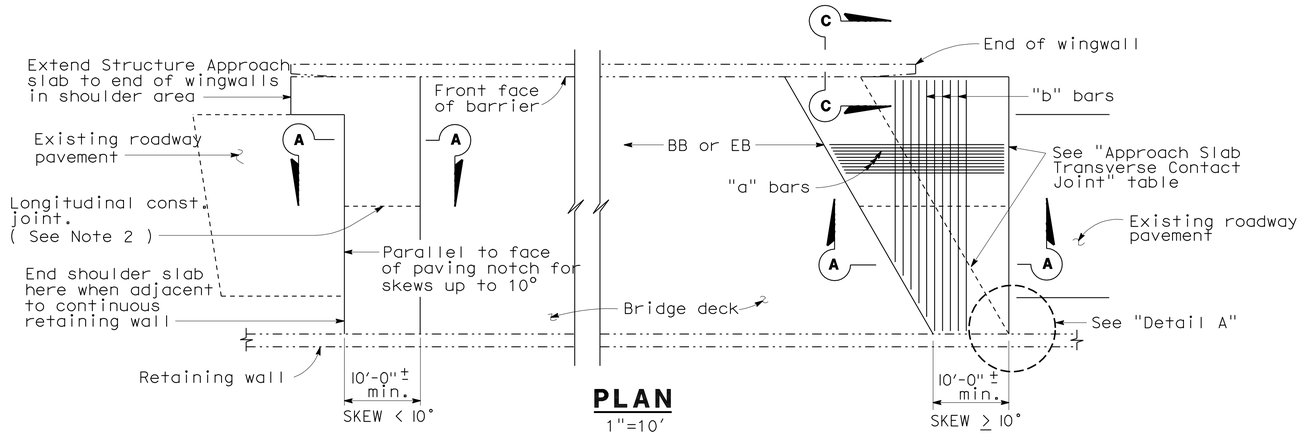

PLAN
1"=10'

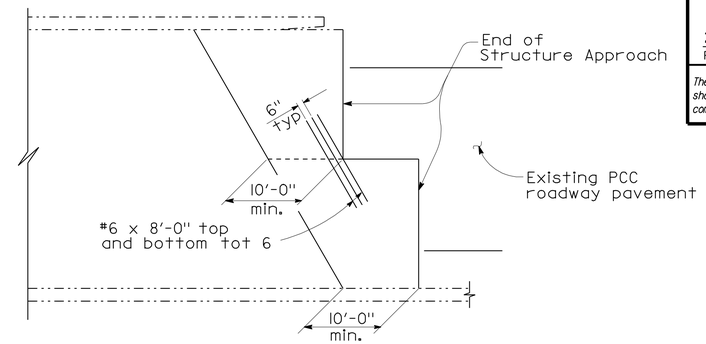

STRUCTURE APPROACH - END STAGGER DETAIL
No Scale

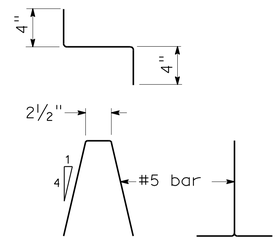

BAR CHAIR DETAIL
1½" = 1'-0"

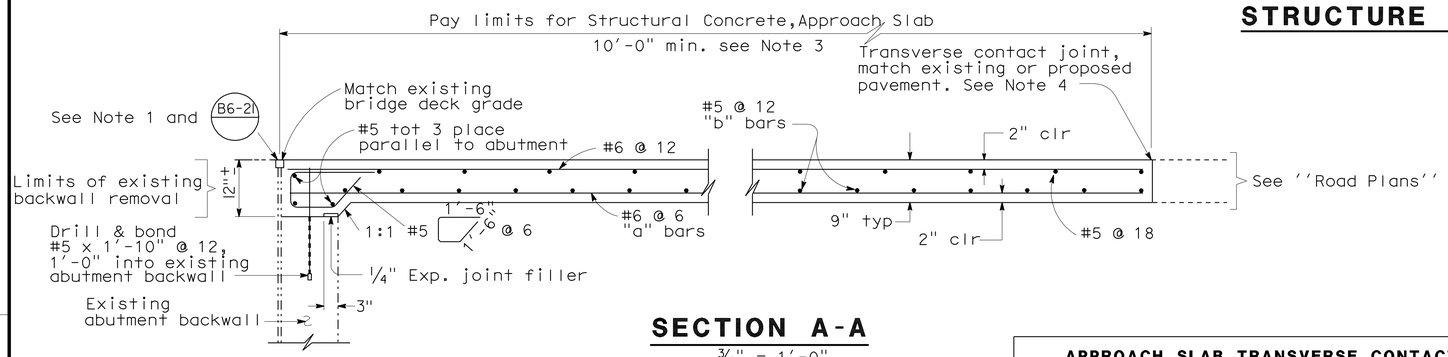

SECTION A-A
¾" = 1'-0"

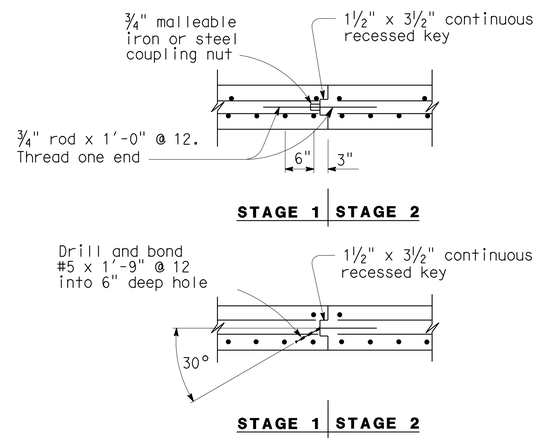

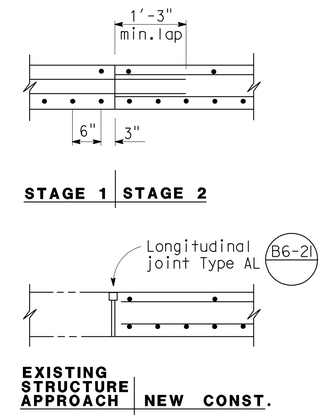

LONGITUDINAL CONSTRUCTION JOINT ALTERNATIVES
¾" = 1'-0"

NOTES:

1. Sealed joint, for M.R. see Structure Plans. Adjust bar reinforcement to clear a sawcut for sealed joint, when required.
2. Longitudinal construction joints, when permitted by the Engineer, shall be located on lane lines.
3. Transverse contact joint shall be a minimum of 5' from an existing or constructed weakened plane joint.
4. For transverse contact joint with new PCC paving, refer to Standard Plan P10.

APPROACH SLAB TRANSVERSE CONTACT JOINT		
APPROACH SKEW	WITH AC ROADWAY PAVEMENT	WITH PCC ROADWAY PAVEMENT
< 10°	Parallel to face of paving notch	Parallel to face of paving notch
10°- 45°	Parallel to face of P N use (Detail A)	Stagger lines 24' to 36' apart
> 45°	Parallel to face of P N use (Detail A)	Stagger at each lane line

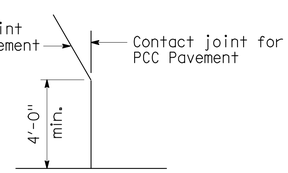

DETAIL A
No Scale

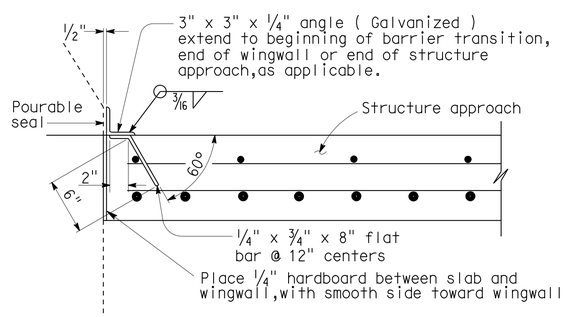

DETAIL B
1½" = 1'-0"

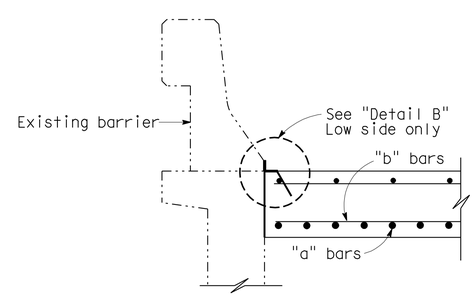

SECTION C-C
¾" = 1'-0"

NOTE:
THE CONTRACTOR SHALL VERIFY ALL CONTROLLING FIELD DIMENSIONS BEFORE ORDERING OR FABRICATING ANY MATERIAL. EXISTING UTILITY FACILITIES HAVE NOT BEEN PLOTTED ON THESE PLANS.

STANDARD DRAWING				
RELEASE DATE 3/14/05	DESIGN BY M.TRAFFALIS	CHECKED E.THORKILDSEN	RELEASED BY	
FILE NO. xs3-160e	DETAILS BY R.YEE	CHECKED E.THORKILDSEN		
	SUBMITTED BY M.HA	DRAWING DATE 8/92	OFFICE CHIEF	

STRUCTURES MAINTENANCE DETAIL SHEET (ENGLISH) (REV. 09-01-10)

STATE OF CALIFORNIA
DEPARTMENT OF TRANSPORTATION

DIVISION OF ENGINEERING SERVICES

BRIDGE NO. Various
POST MILE Varies

ROUTE 15 BRIDGES
STRUCTURE APPROACH TYPE R(30S)

ORIGINAL SCALE IN INCHES FOR REDUCED PLANS 0 1 2 3

UNIT: 3489
PROJECT NUMBER & PHASE: 0800020297 1 CONTRACT NO.: X

DISREGARD PRINTS BEARING EARLIER REVISION DATES

REVISION DATES 07-18-11 08-11-11 10-12-11 11-21-11

SHEET 12 OF 12

FILE => 08-0q2101-x-sa01.dgn

USERNAME => s124496 DATE PLOTTED => 27-FEB-2012 TIME PLOTTED => 15:53