Dist	COUNTY	ROUTE	POST MILES TOTAL PROJECT	SHEET No.	TOTAL SHEETS
08	SBd, Riv	60	R0.0/R4.6, R3.0/R6.9	1	100

STATE OF CALIFORNIA

DEPARTMENT OF TRANSPORTATION

ACNHPP060(146)E

PROJECT PLANS FOR CONSTRUCTION ON

STATE HIGHWAY

IN SAN BERNARDINO AND RIVERSIDE COUNTIES FROM LOS ANGELES COUNTY LINE TO ROUTE 60/83 JUNCTION AND FROM COUNTRY VILLAGE ROAD OVERCROSSING TO 0.6 MILE WEST OF VALLEY WAY UNDERCROSSING

TO BE SUPPLEMENTED BY STANDARD PLANS DATED 2010

INDEX OF PLANS

SHEET No.	DESCRIPTION
1	TITLE AND LOCATION MAP
2-3	TYPICAL CROSS SECTIONS
4-21	CONSTRUCTION DETAILS
22-23	CONSTRUCTION AREA SIGNS
24-28	MOTORIST INFORMATION PLAN
29	TRAFFIC HANDLING PLAN
30-31	PAVEMENT DELINEATION QUANTITIES
32-38	SUMMARY OF QUANTITIES
39-51	ELECTRICAL PLANS
52-100	REVISED STANDARD PLANS

THE STANDARD PLANS LIST APPLICABLE TO THIS CONTRACT IS INCLUDED IN THE NOTICE TO BIDDERS AND SPECIAL PROVISIONS BOOK

LOCATION MAP

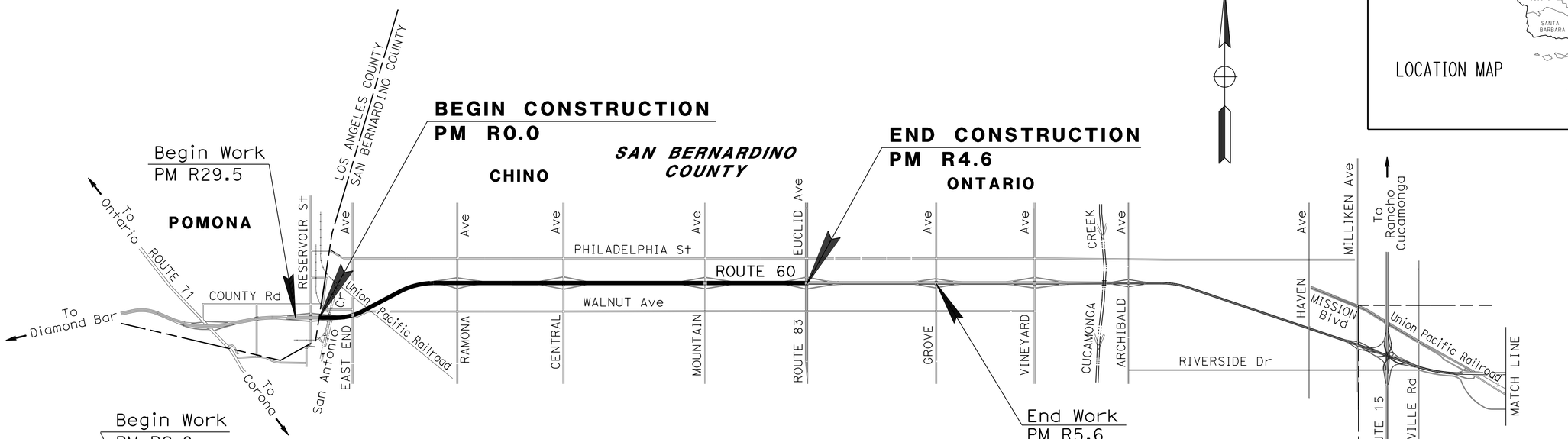

NO SCALE

THE CONTRACTOR SHALL POSSESS THE CLASS (OR CLASSES) OF LICENSE AS SPECIFIED IN THE "NOTICE TO BIDDERS."

PROJECT MANAGER: MELECIO CHALCO

DESIGN ENGINEER: YONGBEE LIAU

PROJECT ENGINEER REGISTERED CIVIL ENGINEER — DATE: 8-25-14

August 25, 2014
PLANS APPROVAL DATE

REGISTERED PROFESSIONAL ENGINEER — MICHAEL P. RISTIC — No. C69439 — Exp. 6-30-16 — CIVIL — STATE OF CALIFORNIA

THE STATE OF CALIFORNIA OR ITS OFFICERS OR AGENTS SHALL NOT BE RESPONSIBLE FOR THE ACCURACY OR COMPLETENESS OF SCANNED COPIES OF THIS PLAN SHEET.

CONTRACT No.	08-0Q7514
PROJECT ID	0812000105

LAST REVISION 08-25-14 — DATE PLOTTED => 22-AUG-2014 — TIME PLOTTED => 13:26

Dist	COUNTY	ROUTE	POST MILES TOTAL PROJECT	SHEET No.	TOTAL SHEETS
08	SBd, Riv	60	R0.0/R4.6, R3.0/R6.9	2	100

REGISTERED CIVIL ENGINEER 8-25-14 DATE

8-25-14
PLANS APPROVAL DATE

REGISTERED PROFESSIONAL ENGINEER HAO VAN HO No. C64720 Exp. 6-30-15 CIVIL STATE OF CALIFORNIA

THE STATE OF CALIFORNIA OR ITS OFFICERS OR AGENTS SHALL NOT BE RESPONSIBLE FOR THE ACCURACY OR COMPLETENESS OF SCANNED COPIES OF THIS PLAN SHEET.

NOTES:

1. DIMENSIONS OF THE STRUCTURAL SECTIONS ARE SUBJECT TO TOLERANCES SPECIFIED IN THE STANDARD SPECIFICATIONS.
2. SUPERELEVATIONS AS SHOWN OR AS DIRECTED BY THE ENGINEER.
3. EXACT LOCATIONS FOR THE RANDOM PCC SLAB REPLACEMENTS TO BE DETERMINED BY THE ENGINEER.
4. SEE SHEET Q-1 FOR LOCATIONS AND CONSTRUCTION DETAILS OF THE PCC SLAB REPLACEMENT.
5. NO SURFACING, COLD PLANING, OR SLURRY SEAL SHALL BE ALLOWED ON APPROACH SLABS AND ON BRIDGE DECK STRUCTURES.
6. EXISTING UTILITY FACILITIES HAVE NOT BEEN PLOTTED ON THESE PLANS.
7. EXISTING STRUCTURAL SECTIONS NOT SHOWN.
8. CENTERLINE, LANE WIDTH AND SHOULDER WIDTH SHOWN ARE APPROXIMATE.
9. INDIVIDUAL SLAB REPLACEMENT WITH RAPID STRENGTH CONCRETE (RSC) WILL USE TYPE I SLAB LAYOUT PER RSP-P8.
10. DO NOT REPLACE MORE THAN 6 CONSECUTIVE SLABS AT ONE LOCATION.
11. FOR LOCATIONS OF DIKES SEE SUMMARY OF QUANTITIES SHEETS.

DESIGN DESIGNATION

SBd-60-PM R0.0/R4.6

2015	ADT = 232,300	DHV = 16,090
2025	ADT = 252,000	DHV = 17,120
	V = 65MPH	T = 12%

Riv-60-PM R3.0/R6.9

2015	ADT = 134,300	DHV = 9,600
2025	ADT = 149,300	DHV = 10,900
	V = 65MPH	T = 13%

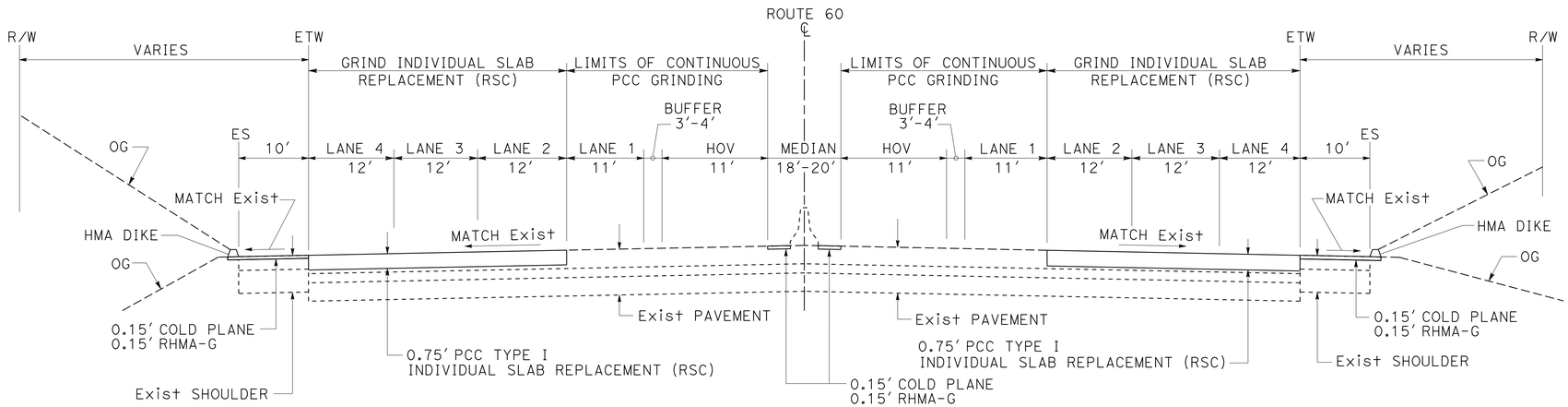

ROUTE 60
SBd-PM R0.0/R4.6

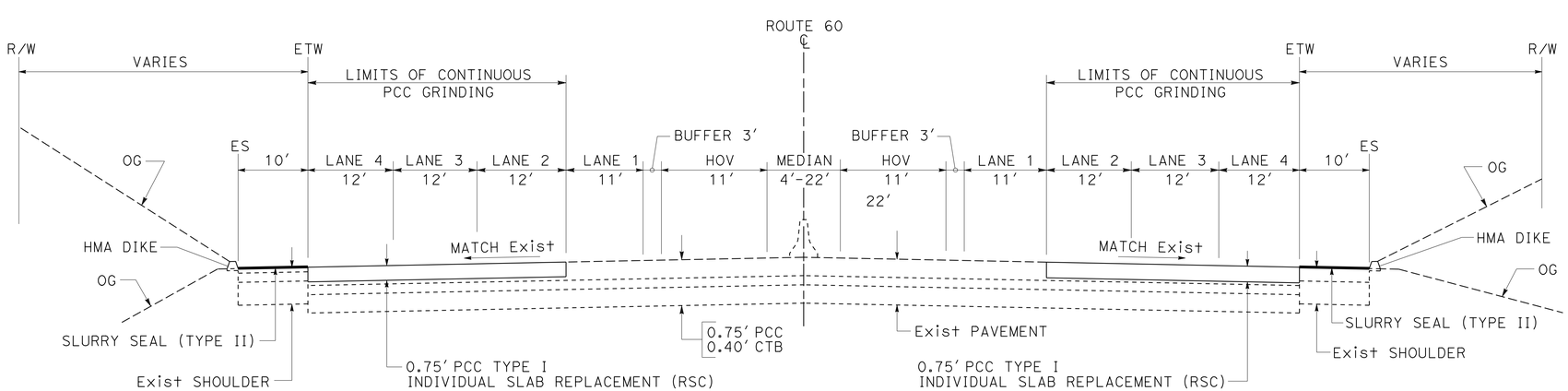

ROUTE 60
Riv-PM R3.0/R6.9

TYPICAL CROSS SECTIONS

NO SCALE

X-1

STATE OF CALIFORNIA - DEPARTMENT OF TRANSPORTATION
Caltrans® MAINTENANCE DESIGN

FUNCTIONAL SUPERVISOR: MICHAEL P. RISTIC
CALCULATED-DESIGNED BY: HAO VAN HO
CHECKED BY: MICHAEL P. RISTIC
REVISED BY
DATE REVISED

LAST REVISION DATE PLOTTED => 22-AUG-2014
08-25-14 TIME PLOTTED => 13:26

Dist	COUNTY	ROUTE	POST MILES TOTAL PROJECT	SHEET No.	TOTAL SHEETS
08	SBd, Riv	60	R0.0/R4.6, R3.0/R6.9	3	100

REGISTERED CIVIL ENGINEER 8-25-14 DATE

8-25-14
PLANS APPROVAL DATE

REGISTERED PROFESSIONAL ENGINEER YONGBEE LIAU No. C75571 Exp. 6-30-16 CIVIL STATE OF CALIFORNIA

THE STATE OF CALIFORNIA OR ITS OFFICERS OR AGENTS SHALL NOT BE RESPONSIBLE FOR THE ACCURACY OR COMPLETENESS OF SCANNED COPIES OF THIS PLAN SHEET.

LEGEND:

Rdwy EXCAVATION (TYPE Z-2)(ADL)

EMBANKMENT

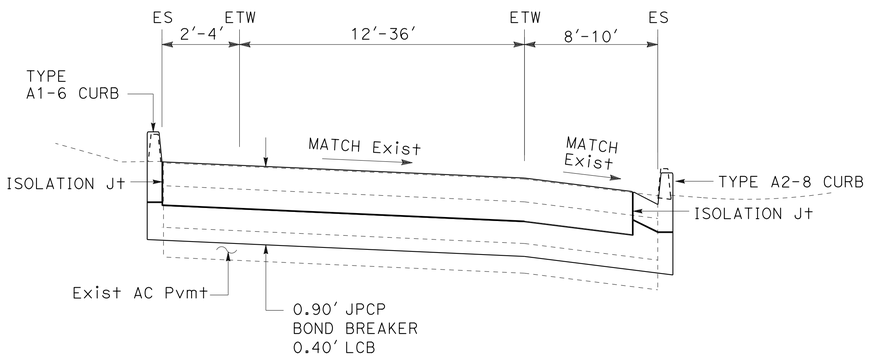

ROUTE 60 EB EXIT RAMP TERMINUS

MOUNTAIN AVENUE
(SEE SHEET C-3 FOR DETAILS)

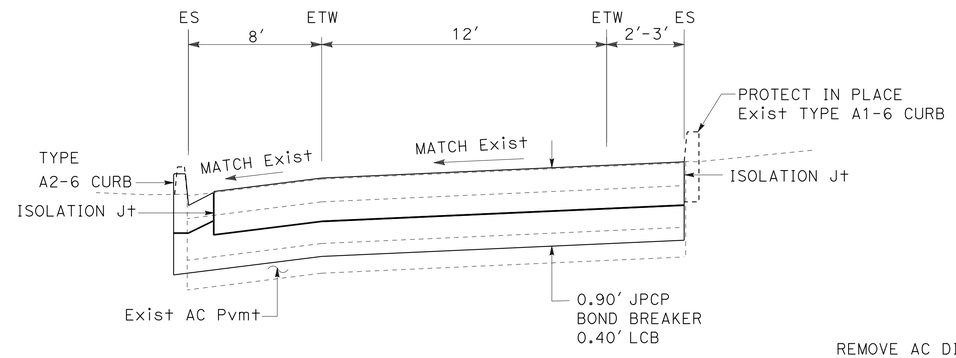

ROUTE 60 WB EXIT RAMP TERMINUS

MOUNTAIN AVENUE
(SEE CONSTRUCTION DETAILS SHEET C-4)

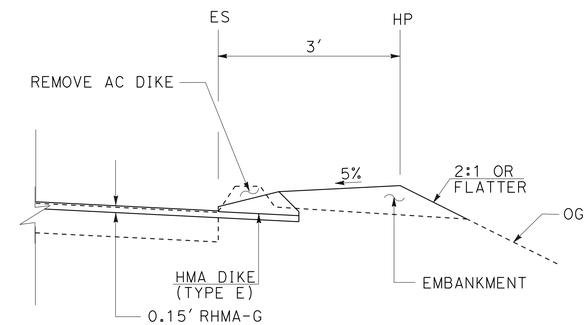

EMBANKMENT BEHIND NEW TYPE E HMA DIKE

SAN BERNARDINO COUNTY

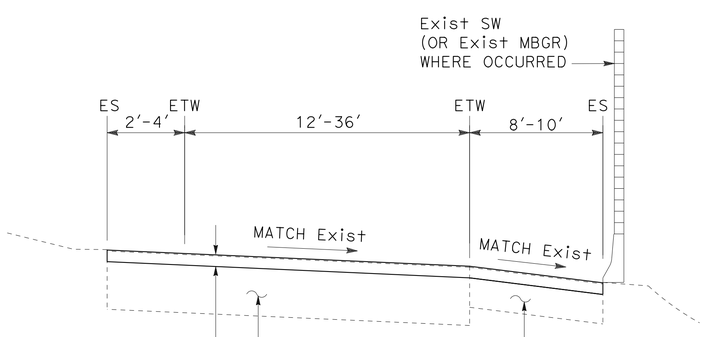

ROUTE 60 EB ENTRANCE/EXIT RAMP

(SEE SHEET C-3 FOR COLDPLANE/OVERLAY LIMITS)
MOUNTAIN AVENUE
EUCLID AVENUE (EXIT RAMP ONLY)
COUNTRY VILLAGE ROAD (ENTRANCE RAMP ONLY)
PYRITE STREET

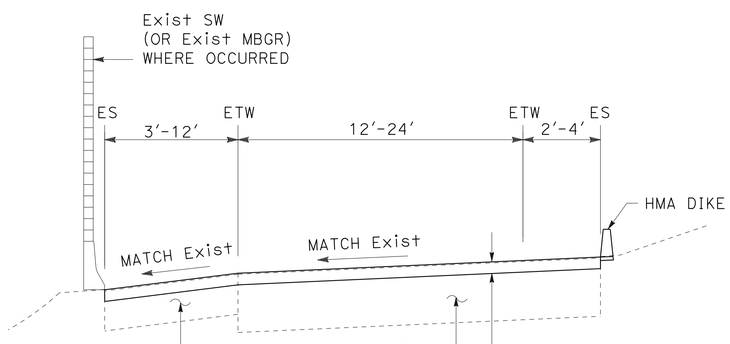

ROUTE 60 WB ENTRANCE/EXIT RAMP

(SEE SHEET C-3 FOR COLDPLANE/OVERLAY LIMITS)
MOUNTAIN AVENUE
EUCLID AVENUE (ENTRANCE RAMP ONLY)
COUNTRY VILLAGE ROAD (EXIT RAMP ONLY)
PYRITE STREET

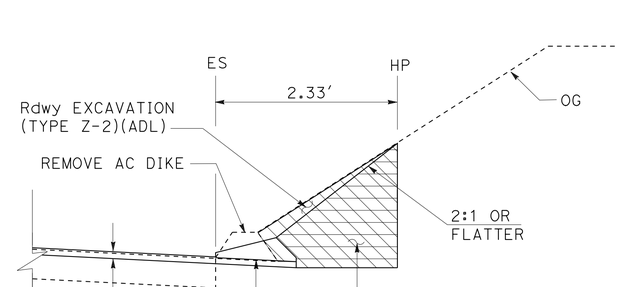

EXCAVATION/EMBANKMENT BEHIND NEW TYPE E HMA DIKE

SAN BERNARDINO COUNTY

TYPICAL CROSS SECTIONS

NO SCALE

X-2

REVISED BY	DATE REVISED
YONGBEE LIAU	MICHAEL P. RISTIC
CALCULATED-DESIGNED BY	CHECKED BY
FUNCTIONAL SUPERVISOR	MICHAEL P. RISTIC

STATE OF CALIFORNIA - DEPARTMENT OF TRANSPORTATION
Caltrans® MAINTENANCE DESIGN

LAST REVISION 08-25-14 | DATE PLOTTED => 22-AUG-2014 | TIME PLOTTED => 13:26

Dist	COUNTY	ROUTE	POST MILES TOTAL PROJECT	SHEET No.	TOTAL SHEETS
08	SBd, Riv	60	R0.0/R4.6, R3.0/R6.9	4	100

REGISTERED CIVIL ENGINEER 8-25-14 DATE

8-25-14
PLANS APPROVAL DATE

REGISTERED PROFESSIONAL ENGINEER HAO VAN HO No. C64720 Exp. 6-30-15 CIVIL STATE OF CALIFORNIA

THE STATE OF CALIFORNIA OR ITS OFFICERS OR AGENTS SHALL NOT BE RESPONSIBLE FOR THE ACCURACY OR COMPLETENESS OF SCANNED COPIES OF THIS PLAN SHEET.

NOTES:

1. FOR LOCATIONS, DIMENSIONS OF SLABS AND SLAB QUANTITIES, SEE SUMMARY ON SHEET Q-1.
2. FOR LOCATIONS, DIMENSIONS, AND QUANTITIES OF SHOULDER SLURRY SEAL OR COLD PLANE AND OVERLAY SEE SUMMARY ON QUANTITIES SHEETS.

LEGEND:

- REPLACE PCC SLAB
- LIMIT OF SLURRY SEAL (TYPE II)
- LIMIT OF COLD PLANE AND OVERLAY

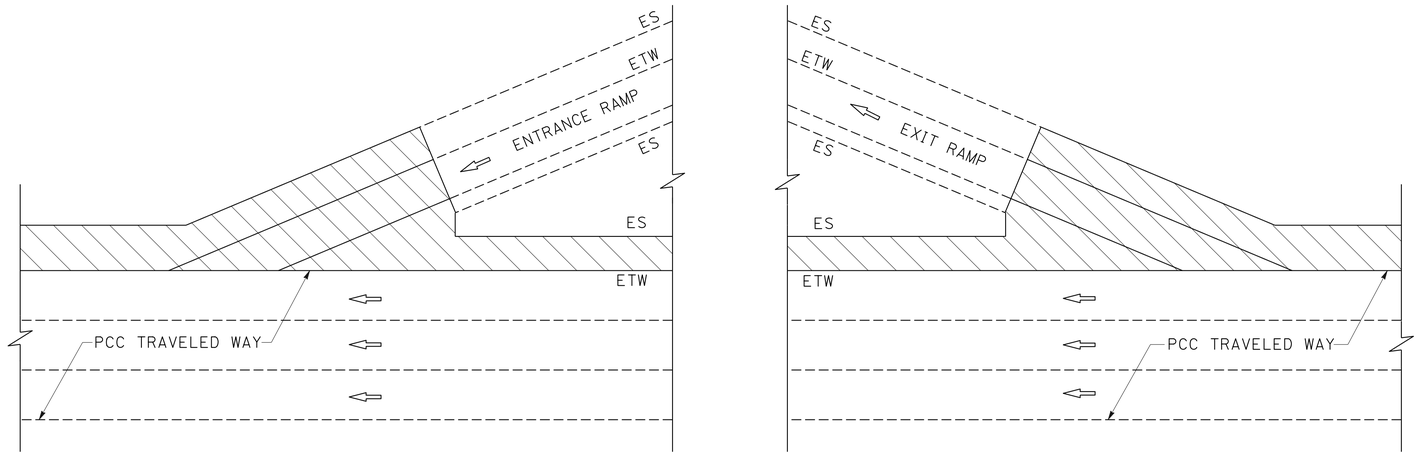

LIMITS OF COLD PLANE AND OVERLAY AT GORE AREA

SAN BERNARDINO COUNTY
RESERVOIR St (EB ENTRANCE & WB EXIT RAMPS)
RAMONA Ave (ALL RAMPS)
CENTRAL Ave (ALL RAMPS)

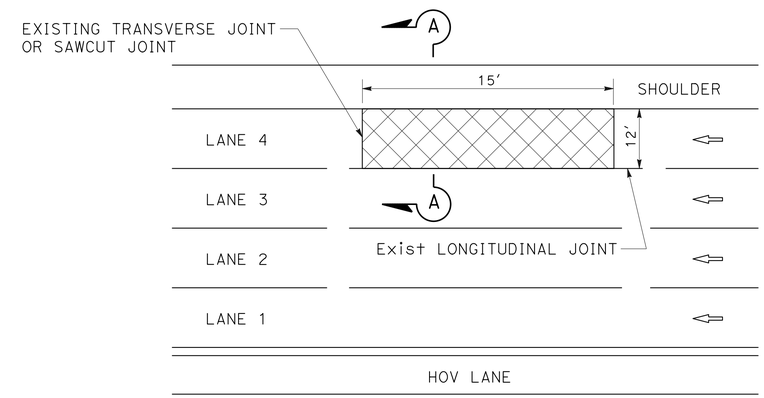

REPLACING CONCRETE PAVEMENT SLAB TYPICAL PLAN

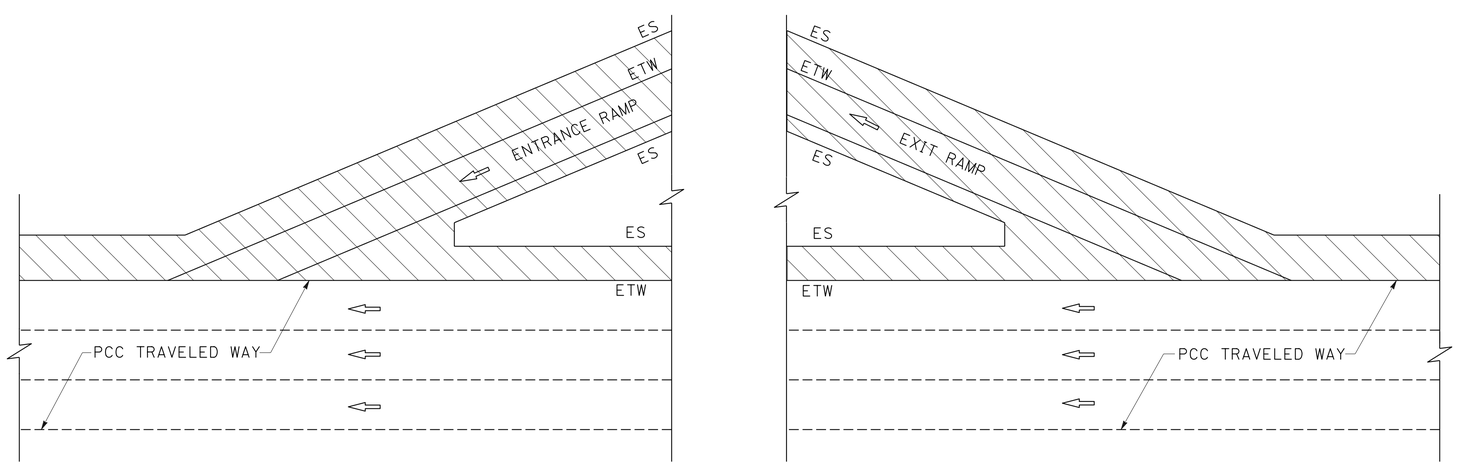

LIMITS OF COLD PLANE AND OVERLAY AT GORE AREA

SAN BERNARDINO COUNTY
MOUNTAIN Ave (ALL RAMPS)
EUCLID Ave (EB EXIT & WB ENTRANCE RAMPS)

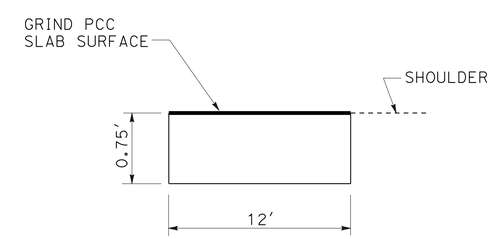

SECTION A-A

CONSTRUCTION DETAILS

NO SCALE

C-1

STATE OF CALIFORNIA - DEPARTMENT OF TRANSPORTATION
Caltrans® MAINTENANCE DESIGN

FUNCTIONAL SUPERVISOR: MICHAEL P. RISTIC
CALCULATED-DESIGNED BY: HAO VAN HO
CHECKED BY: MICHAEL P. RISTIC
REVISED BY
DATE REVISED

LAST REVISION 08-25-14
DATE PLOTTED => 22-AUG-2014
TIME PLOTTED => 13:26

Dist	COUNTY	ROUTE	POST MILES TOTAL PROJECT	SHEET No.	TOTAL SHEETS
08	SBd, Riv	60	R0.0/R4.6, R3.0/R6.9	5	100

REGISTERED CIVIL ENGINEER 8-25-14 DATE

8-25-14
PLANS APPROVAL DATE

REGISTERED PROFESSIONAL ENGINEER HAO VAN HO No. C64720 Exp. 6-30-15 CIVIL STATE OF CALIFORNIA

THE STATE OF CALIFORNIA OR ITS OFFICERS OR AGENTS SHALL NOT BE RESPONSIBLE FOR THE ACCURACY OR COMPLETENESS OF SCANNED COPIES OF THIS PLAN SHEET.

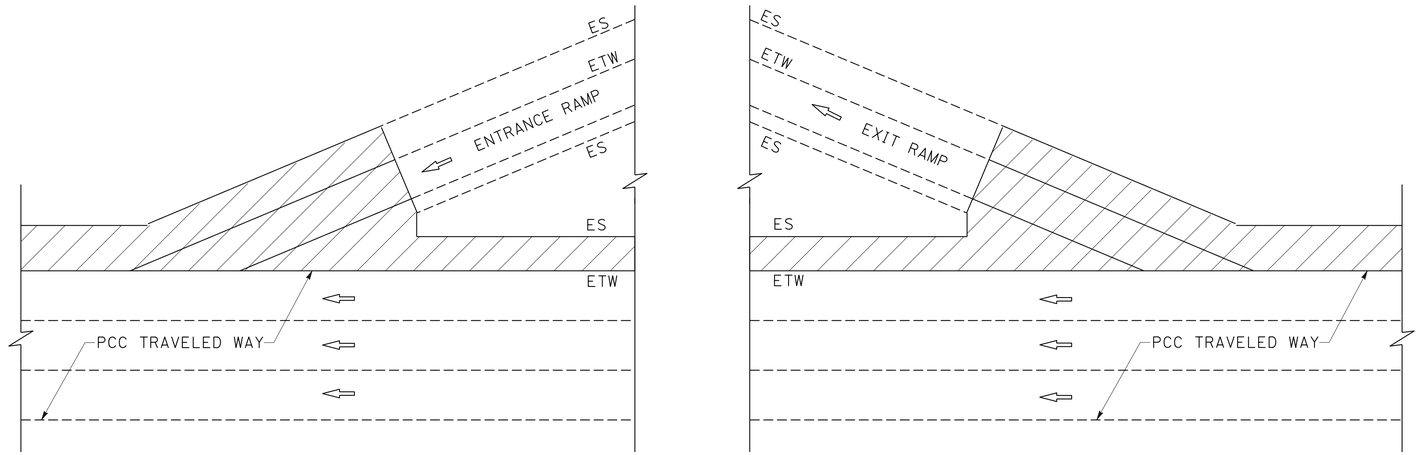

LIMITS OF SLURRY SEAL AT GORE AREA

RIVERSIDE COUNTY
PEDLEY Rd (ALL RAMPS)
VALLEY WAY (EB ENTRANCE & EXIT RAMPS)

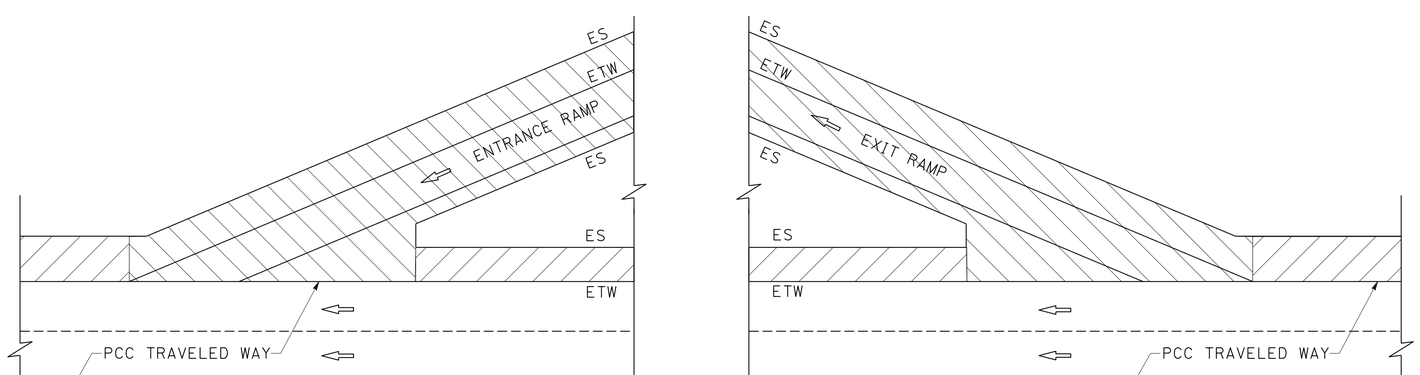

LIMITS OF SLURRY SEAL, COLD PLANE AND OVERLAY AT GORE AREA

RIVERSIDE COUNTY
COUNTRY VILLAGE Rd (EB ENTRANCE & WB EXIT RAMPS)
PYRITE St (ALL RAMPS)

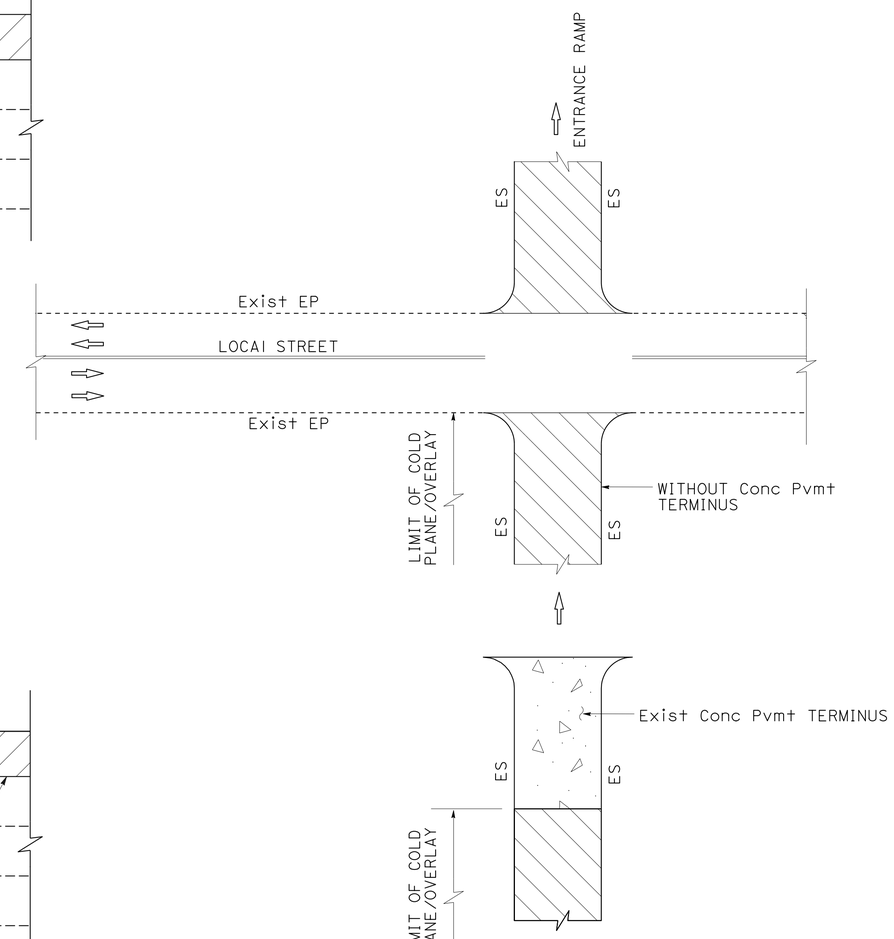

COLD PLANE/OVERLAY LIMITS OF WORK

EXIT AND ENTRANCE RAMPS AT LOCAL STREETS

CONSTRUCTION DETAILS

NO SCALE

C-2

STATE OF CALIFORNIA - DEPARTMENT OF TRANSPORTATION
Caltrans MAINTENANCE DESIGN

FUNCTIONAL SUPERVISOR: MICHAEL P. RISTIC
CALCULATED-DESIGNED BY: HAO VAN HO
CHECKED BY: MICHAEL P. RISTIC
REVISED BY
DATE REVISED

LAST REVISION 08-25-14
DATE PLOTTED => 22-AUG-2014
TIME PLOTTED => 13:26

Dist	COUNTY	ROUTE	POST MILES TOTAL PROJECT	SHEET No.	TOTAL SHEETS
08	SBd, Riv	60	R0.0/R4.6, R3.0/R6.9	6	100

REGISTERED CIVIL ENGINEER 8-25-14 DATE

8-25-14
PLANS APPROVAL DATE

REGISTERED PROFESSIONAL ENGINEER YONGBEE LIAU No. C75571 Exp. 6-30-16 CIVIL STATE OF CALIFORNIA

THE STATE OF CALIFORNIA OR ITS OFFICERS OR AGENTS SHALL NOT BE RESPONSIBLE FOR THE ACCURACY OR COMPLETENESS OF SCANNED COPIES OF THIS PLAN SHEET.

NOTES:

1. DOWELS AND TIE BARS SPACING PER STANDARD PLANS P10 AND P18.
2. LONGITUDINAL WEAKENED PLANE JOINTS SHALL EXTEND TO AND TERMINATE AT THE TRANSVERSE JOINT WHERE NO SLAB WIDTH LESS THAN 2′ OR GREATER THAN 15′ RESULTS.
3. MATCH AND JOIN EXISTING GRADE ALONG EXISTING LOCAL STREET.
4. FOR DETAILS NOT SHOWN, SEE STD. PLANS P10, P12, P17, P18, P20, AND P30.
5. EXISTING UTILITY FACILITIES HAVE NOT BEEN PLOTTED ON THESE PLANS. CONTRACTOR TO FIELD VERIFY.
6. RAMP WIDTH DIMENSIONS SHOWN ARE APPROXIMATE. CONTRACTOR TO VERIFY AND MATCH EXISTING ELEVATIONS AND DIMENSIONS.
7. PROVIDE ISOLATION JOINT BETWEEN EXISTING CROSS GUTTER AND NEW CONCRETE PAVEMENT PER STD PLAN P45.
8. JOINTED PLAIN CONCRETE PAVEMENT TO MATCH EXISTING ELEVATIONS.

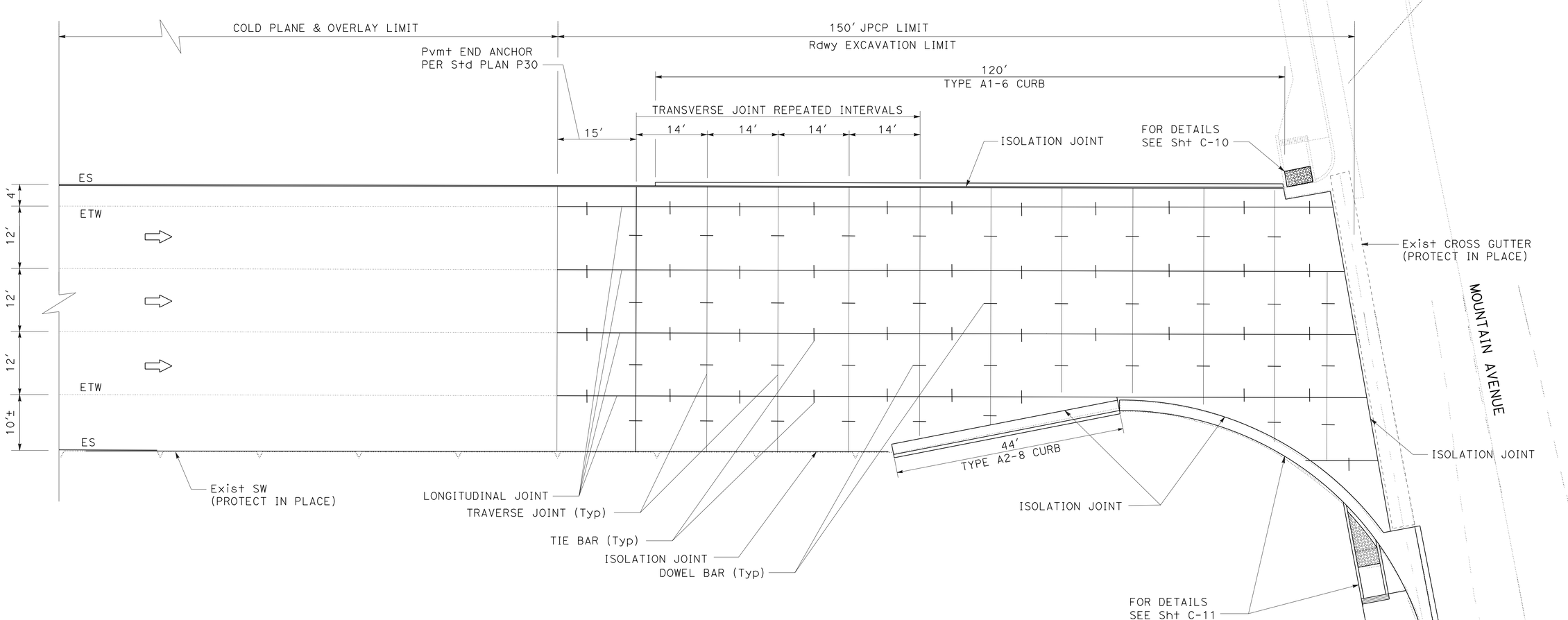

EXIT RAMP TERMINUS JPCP PAVING

EB EXIT RAMP TO MOUNTAIN AVENUE

CONSTRUCTION DETAILS

NO SCALE

C-3

STATE OF CALIFORNIA - DEPARTMENT OF TRANSPORTATION
Caltrans® MAINTENANCE DESIGN

FUNCTIONAL SUPERVISOR: MICHAEL P. RISTIC
CALCULATED-DESIGNED BY: YONGBEE LIAU
CHECKED BY: MICHAEL P. RISTIC
REVISED BY
DATE REVISED

LAST REVISION 08-25-14
DATE PLOTTED => 22-AUG-2014
TIME PLOTTED => 13:26

Dist	COUNTY	ROUTE	POST MILES TOTAL PROJECT	SHEET No.	TOTAL SHEETS
08	SBd, Riv	60	R0.0/R4.6, R3.0/R6.9	7	100

REGISTERED CIVIL ENGINEER 8-25-14 DATE

8-25-14
PLANS APPROVAL DATE

REGISTERED PROFESSIONAL ENGINEER YONGBEE LIAU No. C75571 Exp. 6-30-16 CIVIL STATE OF CALIFORNIA

THE STATE OF CALIFORNIA OR ITS OFFICERS OR AGENTS SHALL NOT BE RESPONSIBLE FOR THE ACCURACY OR COMPLETENESS OF SCANNED COPIES OF THIS PLAN SHEET.

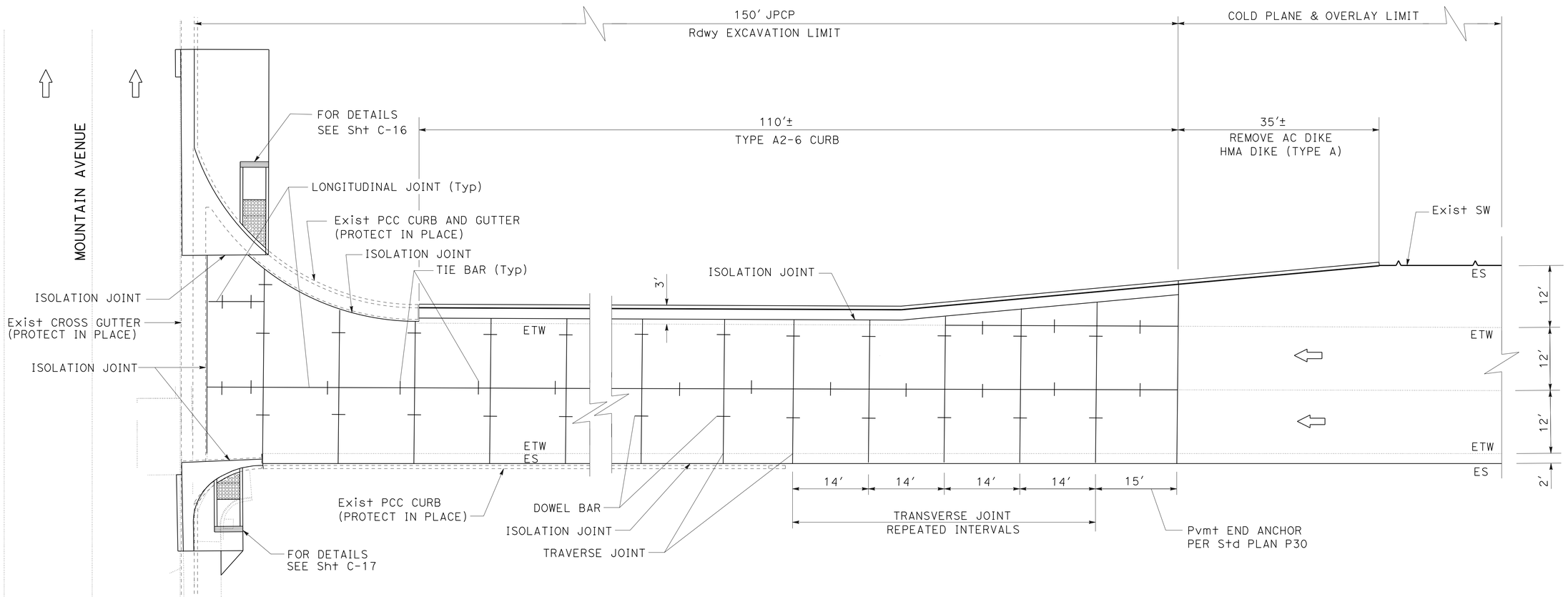

EXIT RAMP TERMINUS JPCP PAVING

WB EXIT TO MOUNTAIN AVENUE

CONSTRUCTION DETAILS

NO SCALE

C-4

STATE OF CALIFORNIA - DEPARTMENT OF TRANSPORTATION
Caltrans MAINTENANCE DESIGN

FUNCTIONAL SUPERVISOR: MICHAEL P. RISTIC
CALCULATED-DESIGNED BY: YONGBEE LIAU
CHECKED BY: MICHAEL P. RISTIC
REVISED BY
DATE REVISED

LAST REVISION 08-25-14
DATE PLOTTED => 22-AUG-2014
TIME PLOTTED => 13:26

Dist	COUNTY	ROUTE	POST MILES TOTAL PROJECT	SHEET No.	TOTAL SHEETS
08	SBd, Riv	60	R0.0/R4.6, R3.0/R6.9	8	100

REGISTERED CIVIL ENGINEER 8-25-14 DATE

8-25-14
PLANS APPROVAL DATE

REGISTERED PROFESSIONAL ENGINEER YONGBEE LIAU No. C75571 Exp. 6-30-16 CIVIL STATE OF CALIFORNIA

THE STATE OF CALIFORNIA OR ITS OFFICERS OR AGENTS SHALL NOT BE RESPONSIBLE FOR THE ACCURACY OR COMPLETENESS OF SCANNED COPIES OF THIS PLAN SHEET.

NOTES:

1. CONTRACTOR TO VERIFY DIMENSIONS OF EXISTING SOUND WALL ON CONCRETE BARRIER BEFORE FABRICATING TRANSITION.
2. EXISTING UTILITIES HAVE NOT BEEN PLOTTED ON THESE PLANS.
3. PROTECT-IN-PLACE EXISTING DRAINAGE INLET

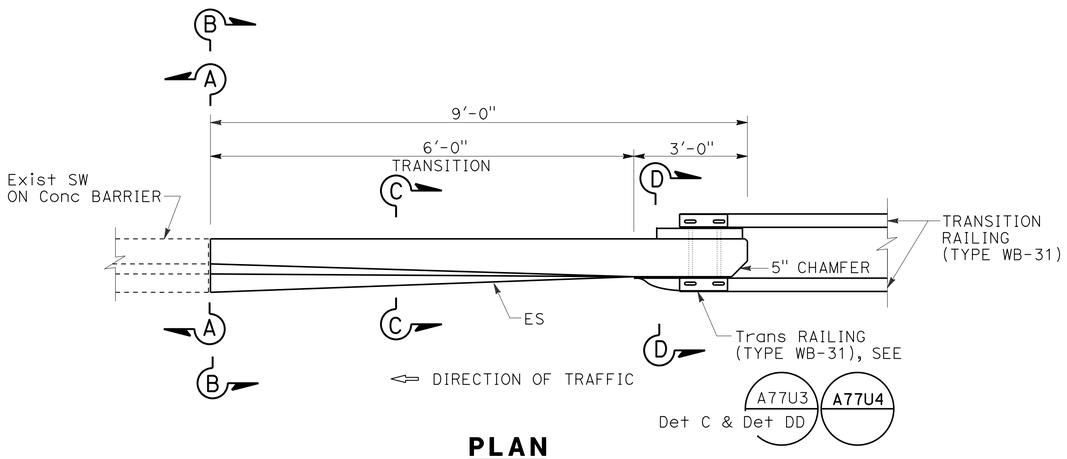

PLAN

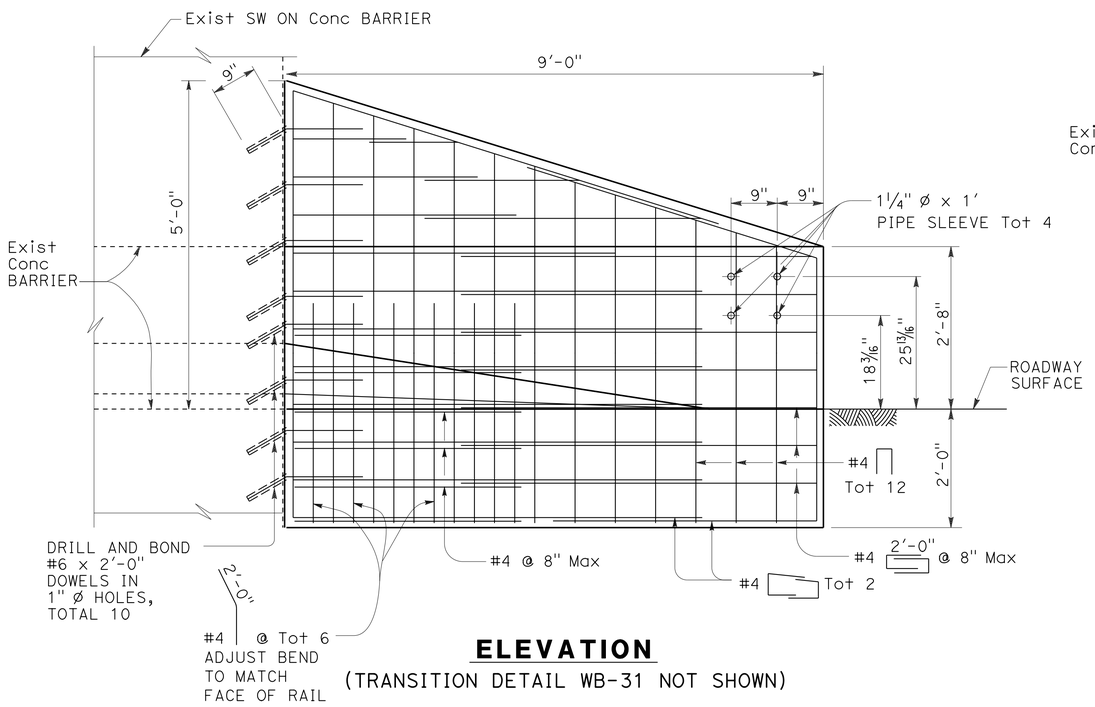

ELEVATION

(TRANSITION DETAIL WB-31 NOT SHOWN)

ANCHOR BLOCK FOR TRANSITION RAILING
(TYPE WB-31) CONNECTION
AT SOUND WALL APPROACH

DETAIL SW1

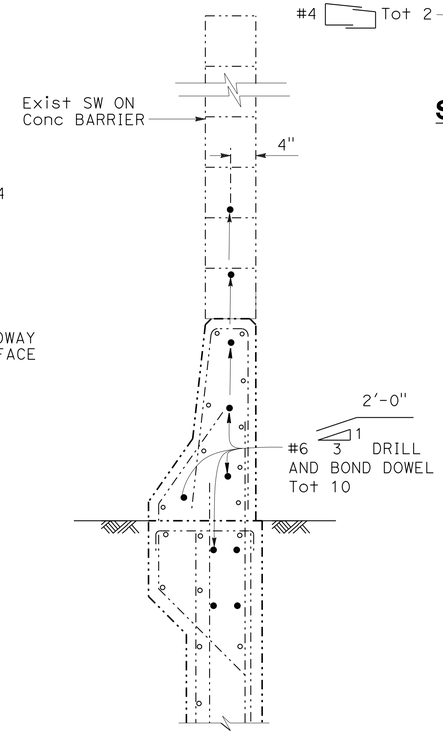

SECTION A-A

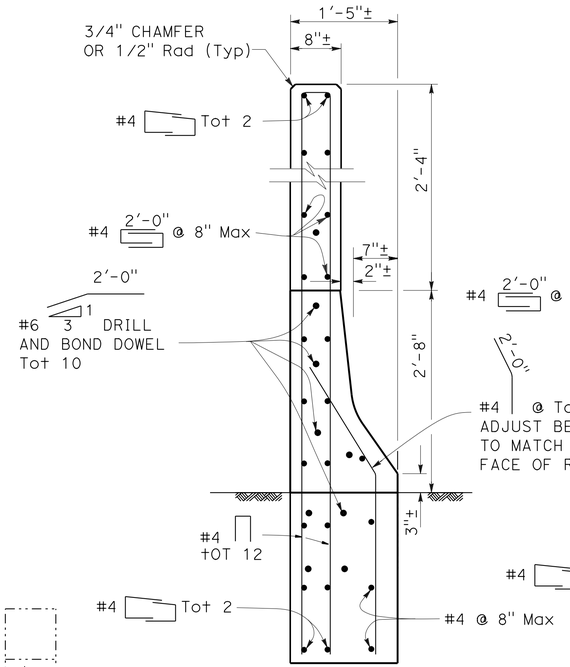

SECTION B-B

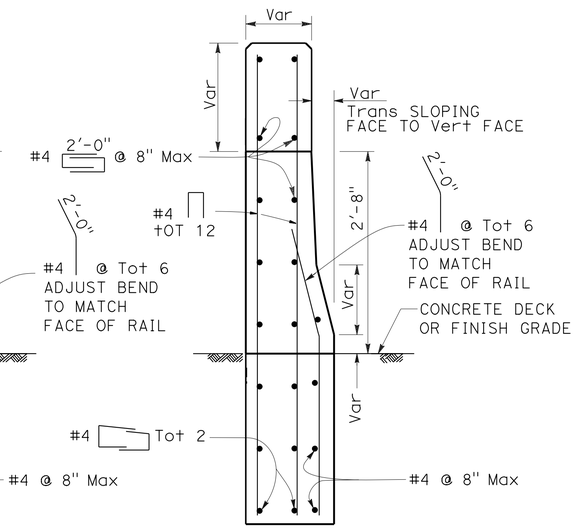

SECTION C-C

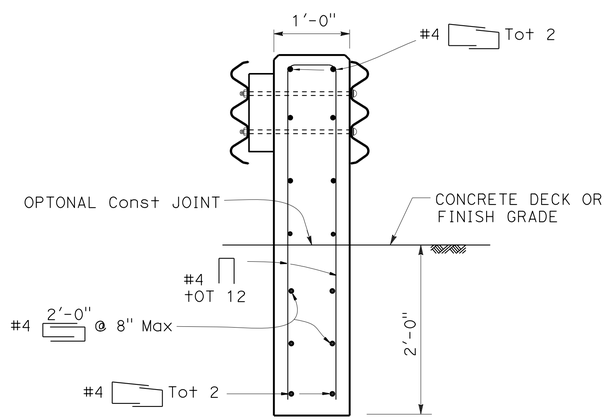

SECTION D-D

CONSTRUCTION DETAILS

NO SCALE

C-5

STATE OF CALIFORNIA - DEPARTMENT OF TRANSPORTATION
Caltrans® MAINTENANCE DESIGN

FUNCTIONAL SUPERVISOR: MICHAEL P. RISTIC
CALCULATED-DESIGNED BY: YONGBEE LIAU
CHECKED BY: MICHAEL P. RISTIC
REVISED BY / DATE REVISED

LAST REVISION 08-25-14 | DATE PLOTTED => 22-AUG-2014 | TIME PLOTTED => 13:26

Dist	COUNTY	ROUTE	POST MILES TOTAL PROJECT	SHEET No.	TOTAL SHEETS
08	SBd, Riv	60	R0.0/R4.6, R3.0/R6.9	9	100

REGISTERED CIVIL ENGINEER 8-25-14 DATE

8-25-14
PLANS APPROVAL DATE

REGISTERED PROFESSIONAL ENGINEER YONGBEE LIAU No. C75571 Exp. 6-30-16 CIVIL STATE OF CALIFORNIA

THE STATE OF CALIFORNIA OR ITS OFFICERS OR AGENTS SHALL NOT BE RESPONSIBLE FOR THE ACCURACY OR COMPLETENESS OF SCANNED COPIES OF THIS PLAN SHEET.

NOTES:

1. EXISTING REINFORCEMENT TO REMAIN.
2. WINGWALL REINFORCEMENT TO REMAIN.

LEGEND:

- INDICATES EXISTING STRUCTURE
- INDICATES NEW STRUCTURE
- INDICATES EXISTING REINFORCEMENT

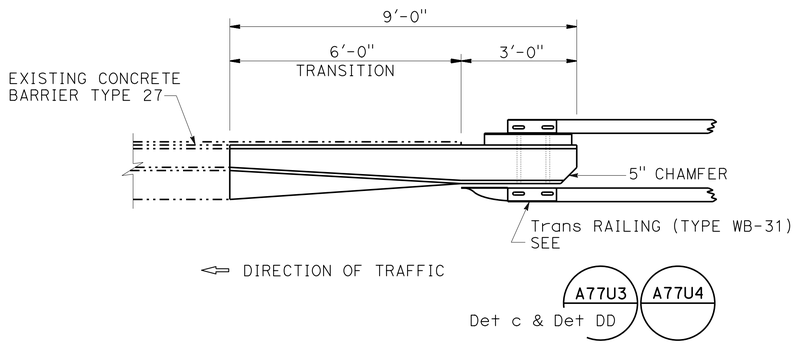

PLAN

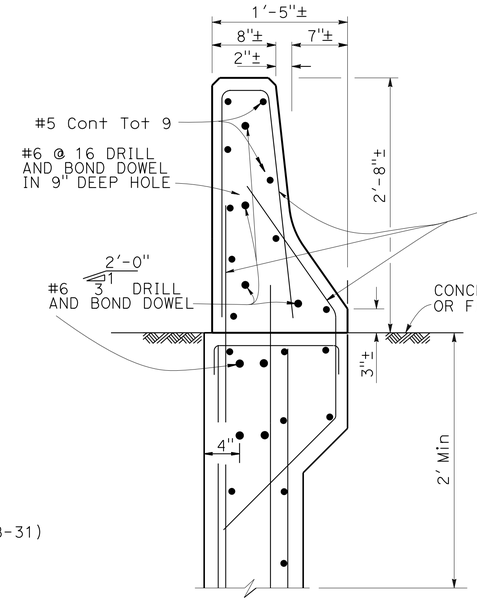

SECTION B-B

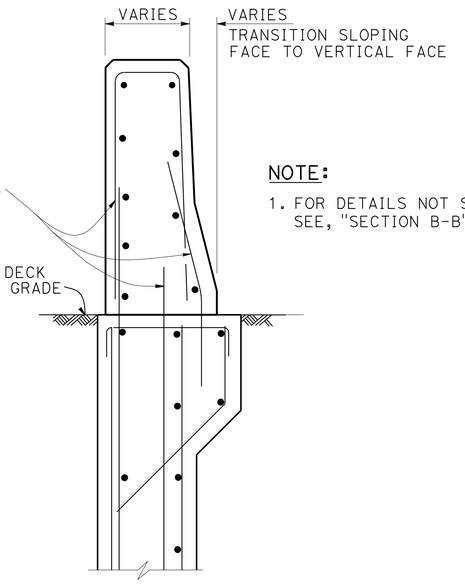

SECTION C-C

NOTE:

1. FOR DETAILS NOT SHOWN SEE, "SECTION B-B"

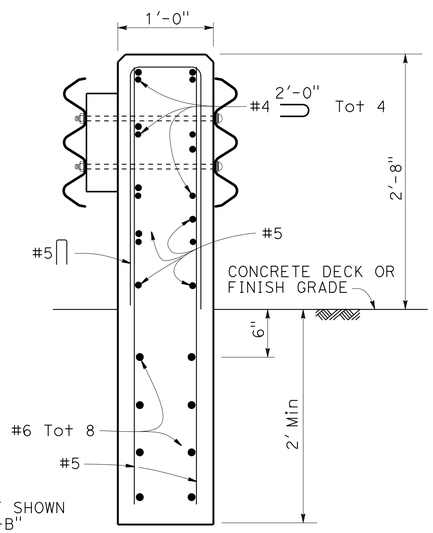

NOTE:

1. FOR DETAILS NOT SHOWN SEE, "SECTION B-B" AND "SECTION C-C"

SECTION D-D

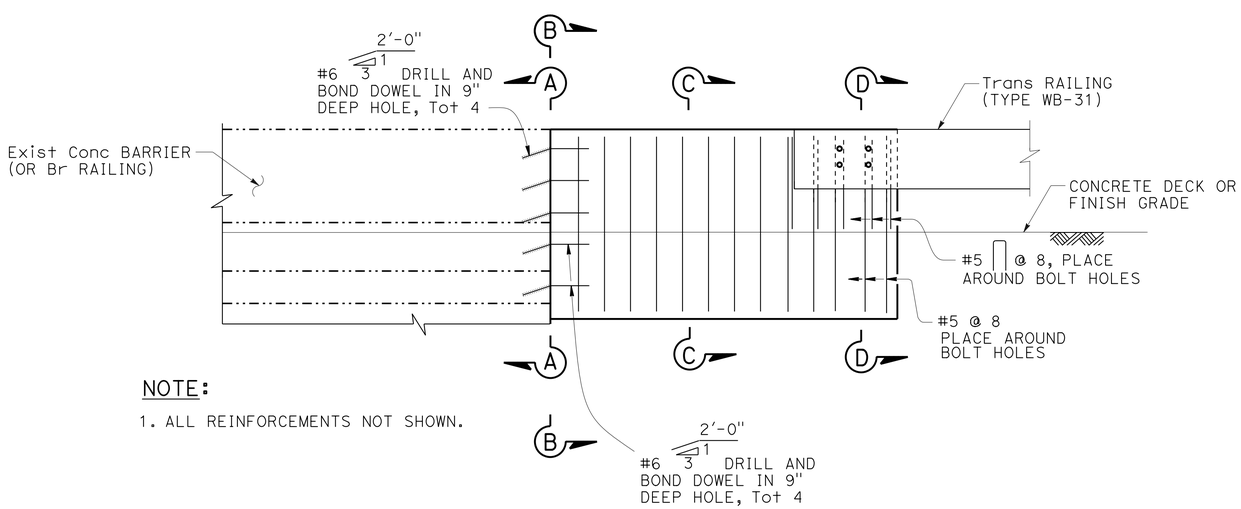

NOTE:

1. ALL REINFORCEMENTS NOT SHOWN.

ELEVATION

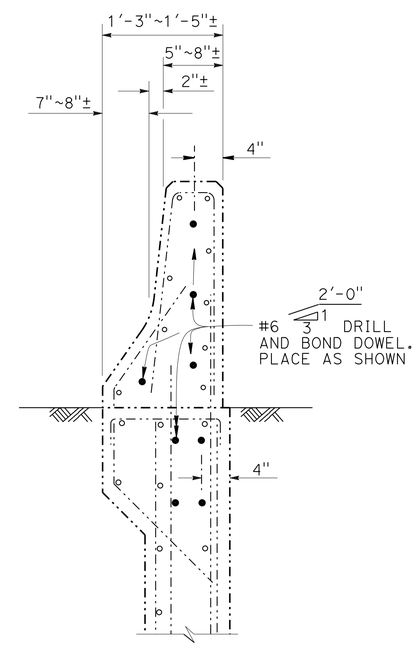

SECTION A-A

TRANSITION RAILING (TYPE WB-31) CONNECTION

DETAIL TR1

CONSTRUCTION DETAILS

NO SCALE

C-6

STATE OF CALIFORNIA - DEPARTMENT OF TRANSPORTATION
Caltrans MAINTENANCE DESIGN

FUNCTIONAL SUPERVISOR: MICHAEL P. RISTIC
CALCULATED-DESIGNED BY: YONGBEE LIAU
CHECKED BY: MICHAEL P. RISTIC
REVISED BY
DATE REVISED

LAST REVISION 08-25-14
DATE PLOTTED => 22-AUG-2014
TIME PLOTTED => 13:26

Dist	COUNTY	ROUTE	POST MILES TOTAL PROJECT	SHEET No.	TOTAL SHEETS
08	SBd, Riv	60	R0.0/R4.6, R3.0/R6.9	10	100

REGISTERED CIVIL ENGINEER 8-25-14 DATE

8-25-14
PLANS APPROVAL DATE

REGISTERED PROFESSIONAL ENGINEER YONGBEE LIAU No. C75571 Exp. 6-30-16 CIVIL STATE OF CALIFORNIA

THE STATE OF CALIFORNIA OR ITS OFFICERS OR AGENTS SHALL NOT BE RESPONSIBLE FOR THE ACCURACY OR COMPLETENESS OF SCANNED COPIES OF THIS PLAN SHEET.

NOTE:

1. HMA DIKE AND PCC CURB TRANSITIONS SHALL BE AS SHOWN OR AS DIRECTED BY THE ENGINEER.

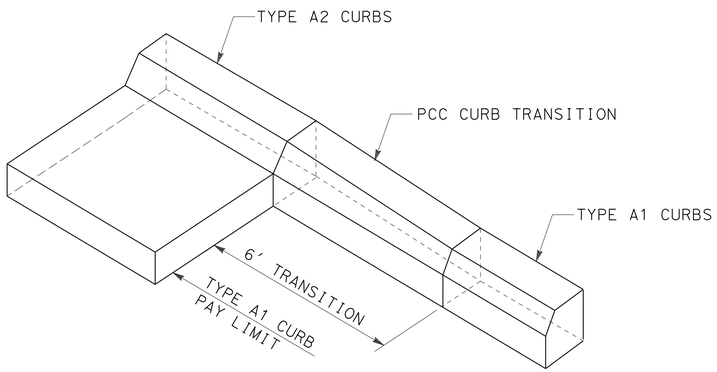

FROM TYPE A2 CURB TO TYPE A1 CURB

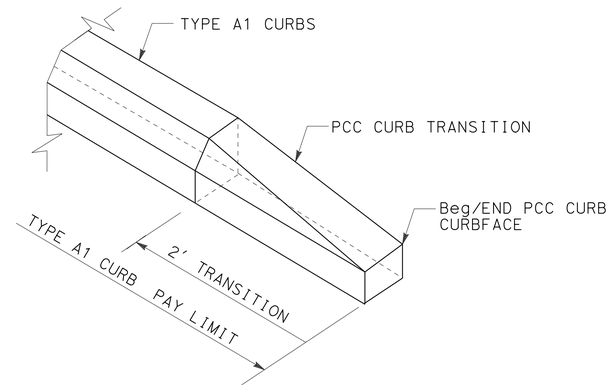

PCC CURB TRANSITION DETAIL

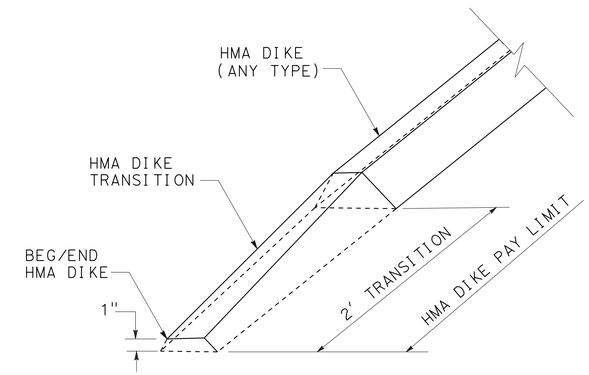

HMA DIKE TRANSITION DETAIL

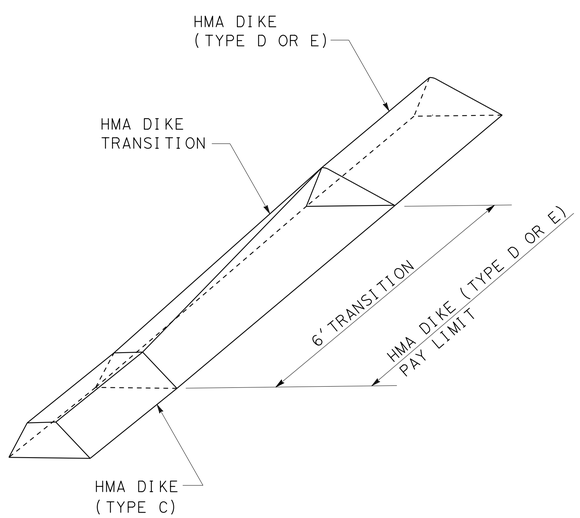

FROM TYPE 'C' TO TYPE 'D" OR 'E'

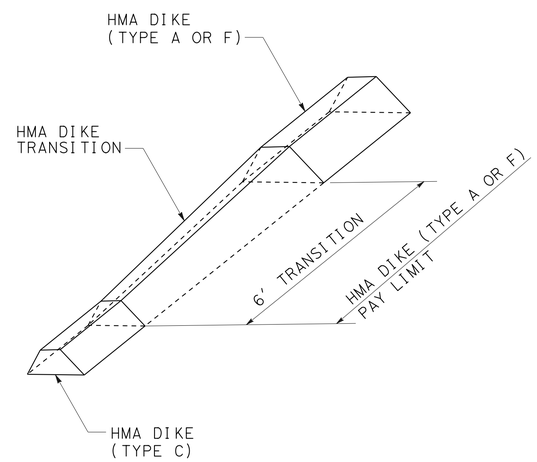

FROM TYPE 'C' TO TYPE 'A' OR 'F'

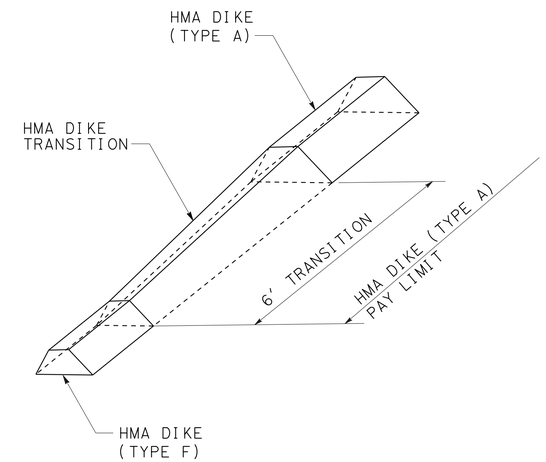

FROM TYPE 'F' TO TYPE 'A'

DETAILS OF HMA DIKE AND PCC CURB TRANSITIONS

CONSTRUCTION DETAILS

NO SCALE

C-7

STATE OF CALIFORNIA - DEPARTMENT OF TRANSPORTATION
Caltrans® MAINTENANCE DESIGN

FUNCTIONAL SUPERVISOR: MICHAEL P. RISTIC
CALCULATED-DESIGNED BY: YONGBEE LIAU
CHECKED BY: MICHAEL P. RISTIC
REVISED BY / DATE REVISED

LAST REVISION 08-25-14
DATE PLOTTED => 22-AUG-2014
TIME PLOTTED => 13:26

Dist	COUNTY	ROUTE	POST MILES TOTAL PROJECT	SHEET No.	TOTAL SHEETS
08	SBd, Riv	60	R0.0/R4.6, R3.0/R6.9	11	100

REGISTERED CIVIL ENGINEER 8-25-14 DATE

8-25-14
PLANS APPROVAL DATE

REGISTERED PROFESSIONAL ENGINEER HAO VAN HO No. C64720 Exp. 6-30-15 CIVIL STATE OF CALIFORNIA

THE STATE OF CALIFORNIA OR ITS OFFICERS OR AGENTS SHALL NOT BE RESPONSIBLE FOR THE ACCURACY OR COMPLETENESS OF SCANNED COPIES OF THIS PLAN SHEET.

NOTES:

1. SIDEWALK WIDTH IS MEASURED FROM THE BACK OF CURB.
2. THE CURB RAMP SHALL BE OUTLINE, AS SHOWN, WITH A 1'-0" WIDE BORDER WITH A 1/4" GROOVES APPROXIMATELY 3/4" ON CENTER. SEE GROVING DETAIL
3. TRANSITION FROM RAMPS AND LANDING TO WALKS, GUTTERS OR STREETS SHALL BE FLUSH (NO LIP) AND FREE OF ABRUPT CHANGES.
4. SIDEWALK AND RAMP THICKNESS, "T", SHALL BE 3 1/2" MINIMUM
5. CURB RAMP SHALL HAVE A DETECTABLE WARNING SURFACE THAT EXTENDED THE FULL WIDTH AND 3'-0" DEPTH OF THE RAMP
6. THE EDGE OF THE DETECTABLE WARNING SURFACE NEAREST THE STREET SHALL BE BETWEEN 6" AND 8" FROM THE GUTTER FLOWLINE.
7. GUTTER PAN SLOPE SHALL NOT EXCEED 1" OF DEPTH FOR EACH 2'-0" OF WIDTH.
8. GUTTER CROSS SLOPE SHALL NOT EXCEED 2%.

CURVE DATA

No. (#)	R	Δ	T	L
1	60'	79°40'54"	50.06'	83.44'
2	60'	81°26'04"	51.64'	85.28'
3	5'	92°29'05"	5.22'	8.07'

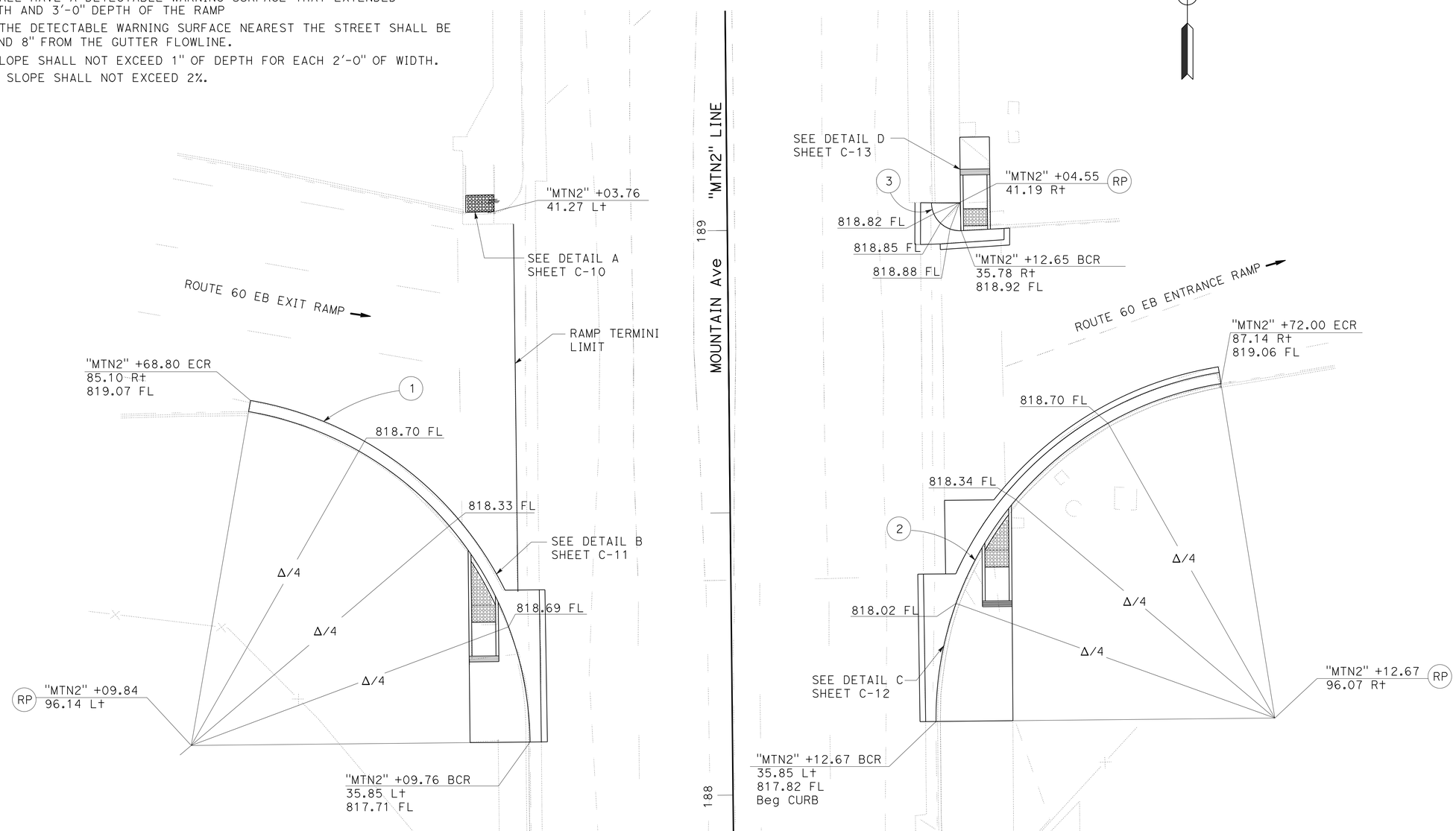

CURB RAMP IMPROVEMENTS AT ROUTE 60 EB AND MOUNTAIN Ave

CONSTRUCTION DETAILS

SCALE: 1" = 10'

C-8

STATE OF CALIFORNIA - DEPARTMENT OF TRANSPORTATION
Caltrans® MAINTENANCE DESIGN

FUNCTIONAL SUPERVISOR: MICHAEL P. RISTIC

CALCULATED-DESIGNED BY: HAO VAN HO
CHECKED BY: MICHAEL P. RISTIC

REVISED BY
DATE REVISED

LAST REVISION 08-25-14
DATE PLOTTED => 22-AUG-2014
TIME PLOTTED => 13:26

Dist	COUNTY	ROUTE	POST MILES TOTAL PROJECT	SHEET No.	TOTAL SHEETS
08	SBd, Riv	60	R0.0/R4.6, R3.0/R6.9	12	100

REGISTERED CIVIL ENGINEER 8-25-14 DATE

8-25-14
PLANS APPROVAL DATE

REGISTERED PROFESSIONAL ENGINEER HAO VAN HO No. C64720 Exp. 6-30-15 CIVIL STATE OF CALIFORNIA

THE STATE OF CALIFORNIA OR ITS OFFICERS OR AGENTS SHALL NOT BE RESPONSIBLE FOR THE ACCURACY OR COMPLETENESS OF SCANNED COPIES OF THIS PLAN SHEET.

CURVE DATA

No. ⊕	R	Δ	T	L
4	60′	81°09′54″	51.39′	85.00′
5	10′	87°59′14″	9.17′	14.59′
6	60′	78°44′46″	49.24′	82.46′

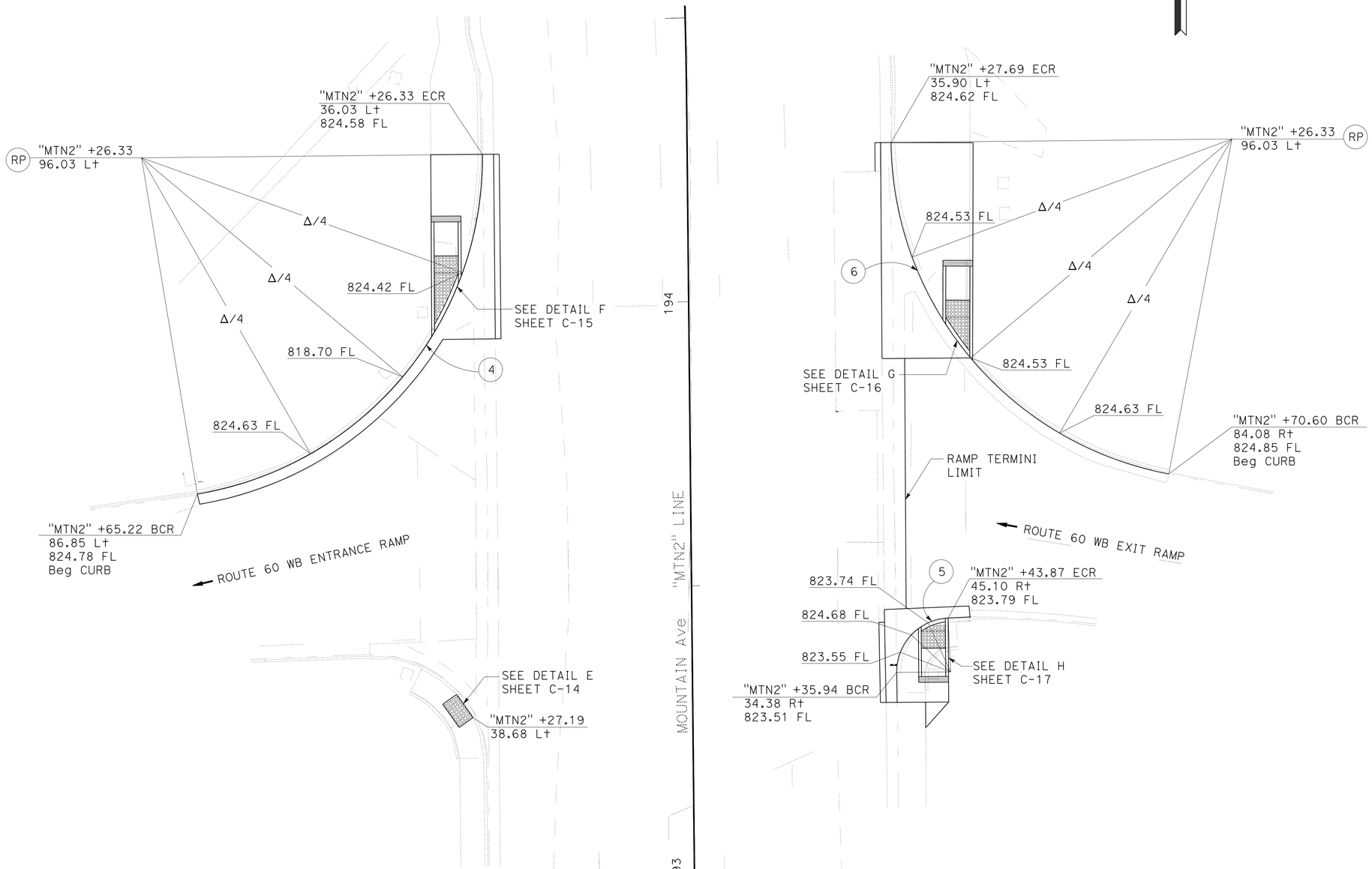

CURB RAMP IMPROVEMENTS AT ROUTE 60 WB AND MOUNTAIN Ave

CONSTRUCTION DETAILS

SCALE: 1" = 10′

C-9

STATE OF CALIFORNIA - DEPARTMENT OF TRANSPORTATION
Caltrans® MAINTENANCE DESIGN

FUNCTIONAL SUPERVISOR: MICHAEL P. RISTIC

CALCULATED-DESIGNED BY: HAO VAN HO
CHECKED BY: MICHAEL P. RISTIC
REVISED BY
DATE REVISED

LAST REVISION 08-25-14
DATE PLOTTED => 22-AUG-2014
TIME PLOTTED => 13:26

Dist	COUNTY	ROUTE	POST MILES TOTAL PROJECT	SHEET No.	TOTAL SHEETS
08	SBd, Riv	60	R0.0/R4.6, R3.0/R6.9	13	100

Vanhao 8-25-14
REGISTERED CIVIL ENGINEER DATE

8-25-14
PLANS APPROVAL DATE

REGISTERED PROFESSIONAL ENGINEER
HAO VAN HO
No. C64720
Exp. 6-30-15
CIVIL
STATE OF CALIFORNIA

THE STATE OF CALIFORNIA OR ITS OFFICERS OR AGENTS SHALL NOT BE RESPONSIBLE FOR THE ACCURACY OR COMPLETENESS OF SCANNED COPIES OF THIS PLAN SHEET.

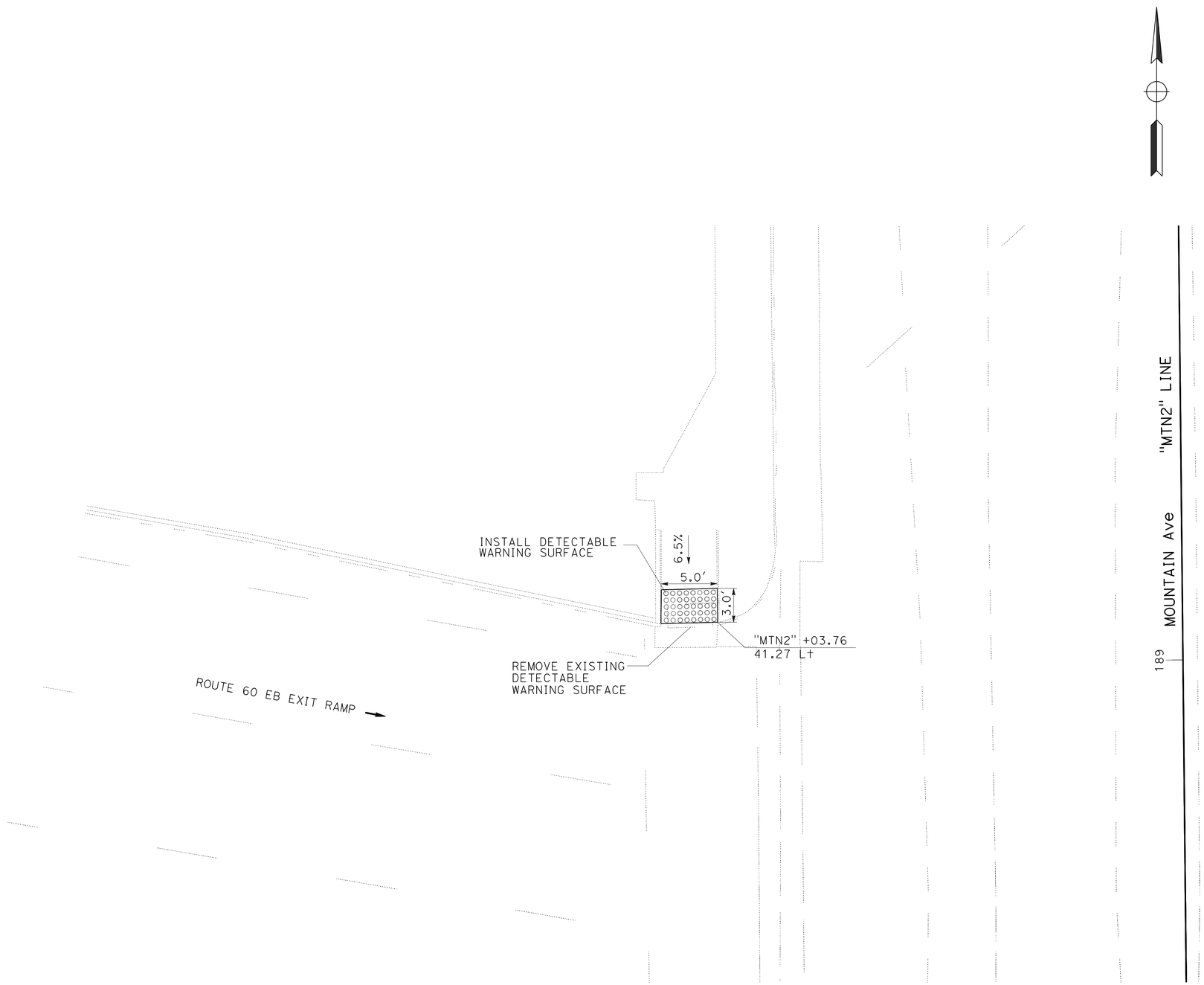

DETAIL A

CONSTRUCTION DETAILS

NO SCALE

C-10

STATE OF CALIFORNIA - DEPARTMENT OF TRANSPORTATION
Caltrans MAINTENANCE DESIGN

FUNCTIONAL SUPERVISOR: MICHAEL P. RISTIC
CALCULATED-DESIGNED BY: HAO VAN HO
CHECKED BY: MICHAEL P. RISTIC
REVISED BY
DATE REVISED

LAST REVISION 08-25-14
DATE PLOTTED => 22-AUG-2014
TIME PLOTTED => 13:26

Dist	COUNTY	ROUTE	POST MILES TOTAL PROJECT	SHEET No.	TOTAL SHEETS
08	SBd, Riv	60	R0.0/R4.6, R3.0/R6.9	14	100

REGISTERED CIVIL ENGINEER 8-25-14 DATE

8-25-14
PLANS APPROVAL DATE

REGISTERED PROFESSIONAL ENGINEER HAO VAN HO No. C64720 Exp. 6-30-15 CIVIL STATE OF CALIFORNIA

THE STATE OF CALIFORNIA OR ITS OFFICERS OR AGENTS SHALL NOT BE RESPONSIBLE FOR THE ACCURACY OR COMPLETENESS OF SCANNED COPIES OF THIS PLAN SHEET.

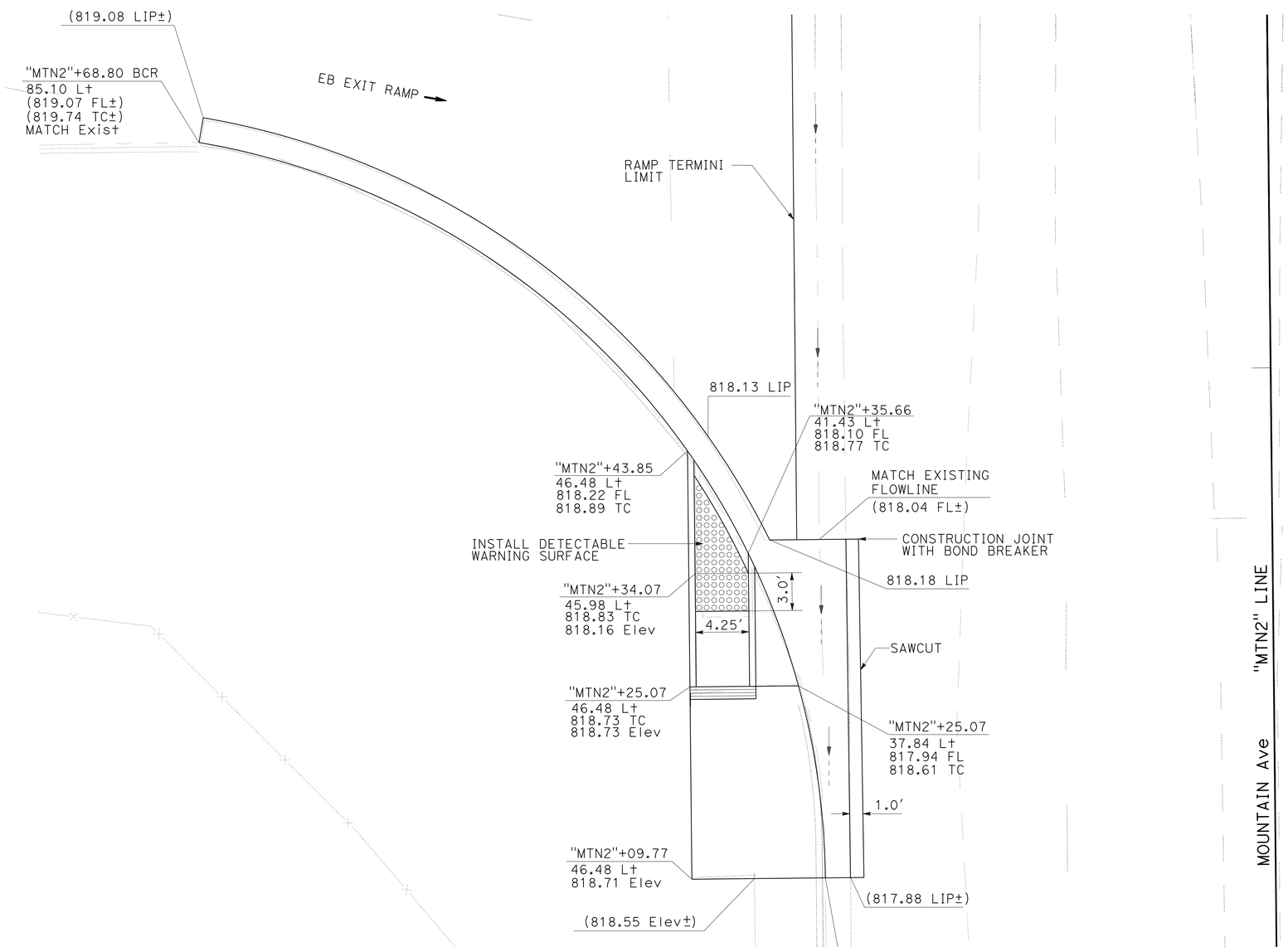

DETAIL B

CONSTRUCTION DETAILS

NO SCALE

C-11

REVISED BY | DATE REVISED

HAO VAN HO | MICHAEL P. RISTIC

CALCULATED-DESIGNED BY | CHECKED BY

FUNCTIONAL SUPERVISOR: MICHAEL P. RISTIC

STATE OF CALIFORNIA - DEPARTMENT OF TRANSPORTATION
Caltrans MAINTENANCE DESIGN

LAST REVISION 08-25-14 | DATE PLOTTED => 22-AUG-2014 | TIME PLOTTED => 13:26

Dist	COUNTY	ROUTE	POST MILES TOTAL PROJECT	SHEET No.	TOTAL SHEETS
08	SBd, Riv	60	R0.0/R4.6, R3.0/R6.9	15	100

REGISTERED CIVIL ENGINEER 8-25-14 DATE

8-25-14
PLANS APPROVAL DATE

REGISTERED PROFESSIONAL ENGINEER HAO VAN HO No. C64720 Exp. 6-30-15 CIVIL STATE OF CALIFORNIA

THE STATE OF CALIFORNIA OR ITS OFFICERS OR AGENTS SHALL NOT BE RESPONSIBLE FOR THE ACCURACY OR COMPLETENESS OF SCANNED COPIES OF THIS PLAN SHEET.

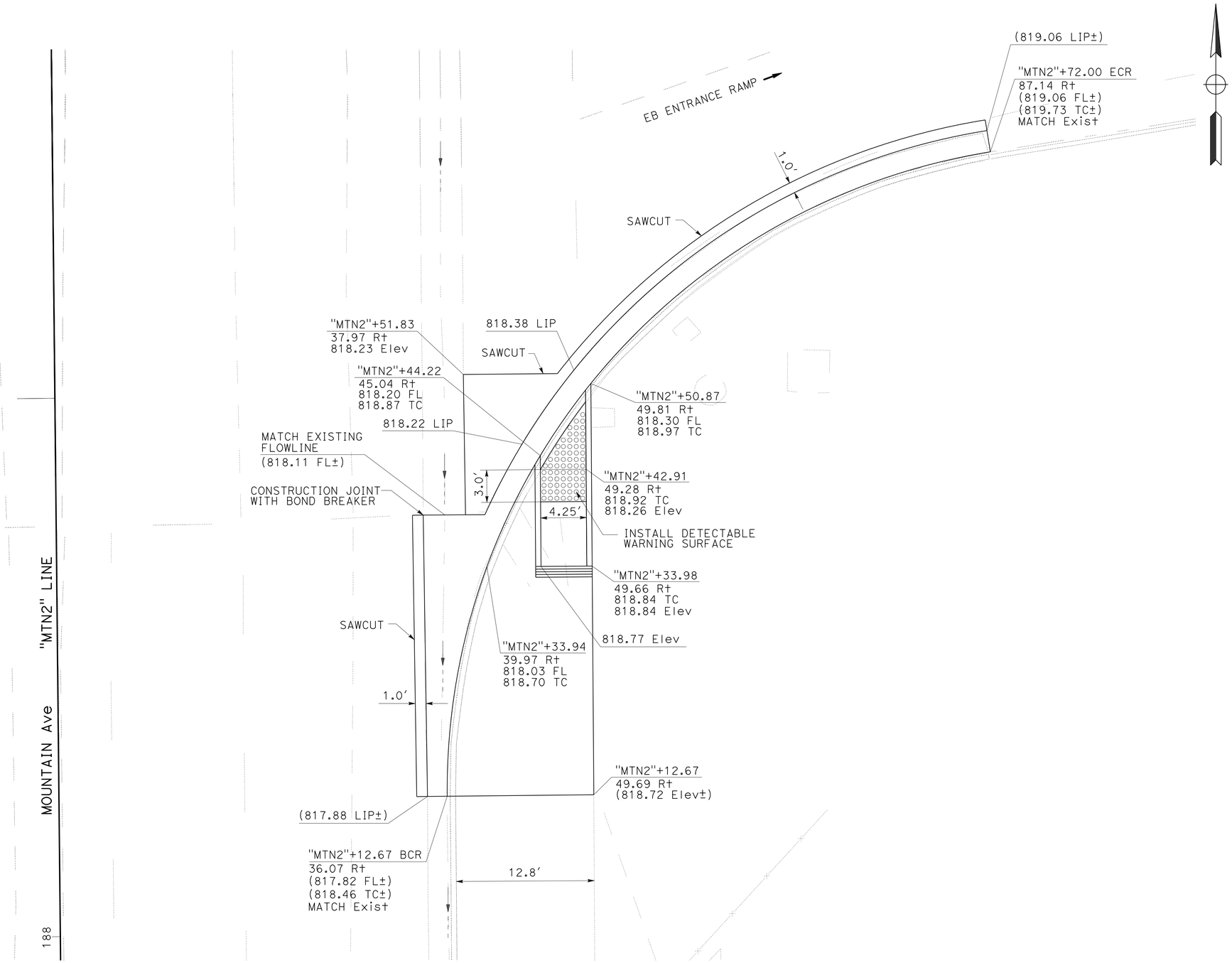

DETAIL C

CONSTRUCTION DETAILS

NO SCALE

C-12

STATE OF CALIFORNIA - DEPARTMENT OF TRANSPORTATION
Caltrans MAINTENANCE DESIGN

FUNCTIONAL SUPERVISOR: MICHAEL P. RISTIC

CALCULATED-DESIGNED BY: HAO VAN HO
CHECKED BY: MICHAEL P. RISTIC

REVISED BY | DATE REVISED

LAST REVISION 08-25-14 | DATE PLOTTED => 22-AUG-2014 | TIME PLOTTED => 13:26

Dist	COUNTY	ROUTE	POST MILES TOTAL PROJECT	SHEET No.	TOTAL SHEETS
08	SBd, Riv	60	R0.0/R4.6, R3.0/R6.9	16	100

REGISTERED CIVIL ENGINEER 8-25-14 DATE

8-25-14
PLANS APPROVAL DATE

REGISTERED PROFESSIONAL ENGINEER HAO VAN HO No. C64720 Exp. 6-30-15 CIVIL STATE OF CALIFORNIA

THE STATE OF CALIFORNIA OR ITS OFFICERS OR AGENTS SHALL NOT BE RESPONSIBLE FOR THE ACCURACY OR COMPLETENESS OF SCANNED COPIES OF THIS PLAN SHEET.

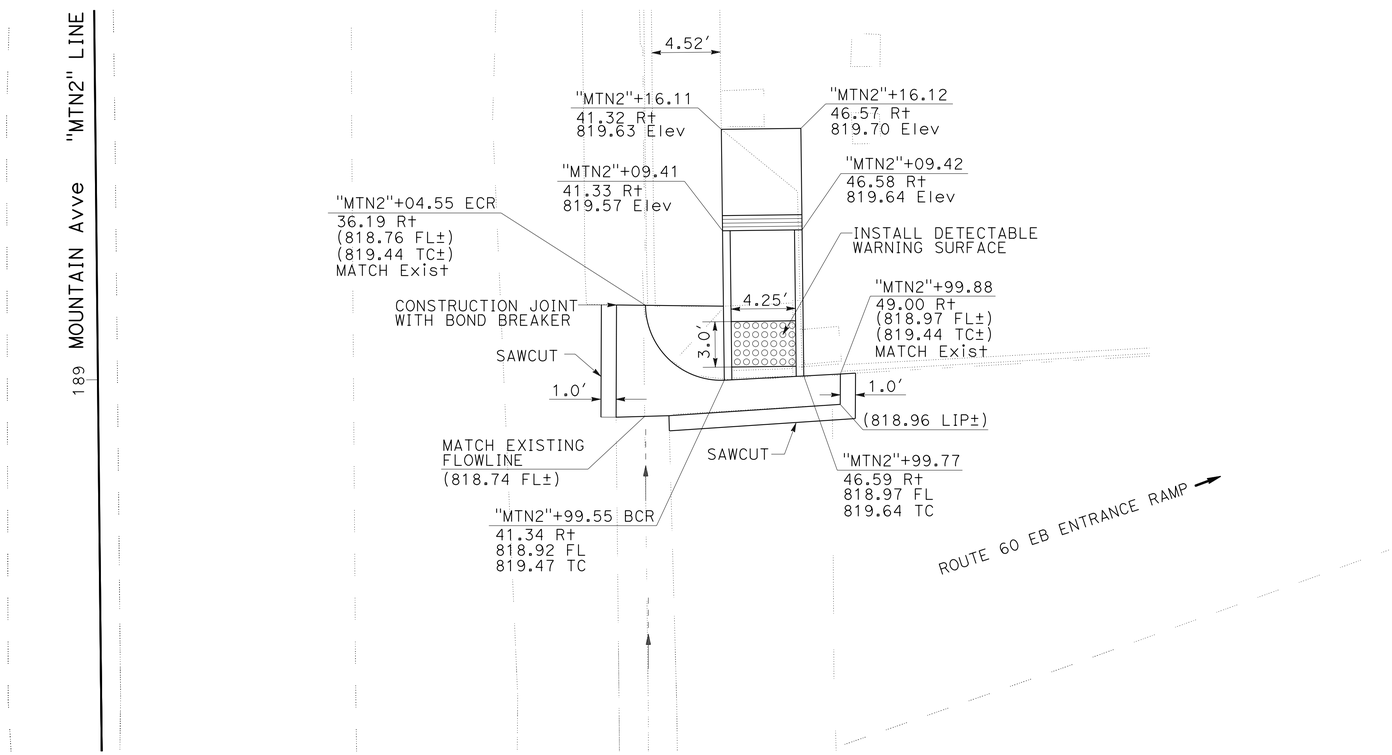

DETAIL D

CONSTRUCTION DETAILS

NO SCALE

C-13

STATE OF CALIFORNIA - DEPARTMENT OF TRANSPORTATION
Caltrans® MAINTENANCE DESIGN

FUNCTIONAL SUPERVISOR: MICHAEL P. RISTIC

CALCULATED-DESIGNED BY: HAO VAN HO
CHECKED BY: MICHAEL P. RISTIC

REVISED BY
DATE REVISED

LAST REVISION 08-25-14
DATE PLOTTED => 22-AUG-2014
TIME PLOTTED => 13:26

Dist	COUNTY	ROUTE	POST MILES TOTAL PROJECT	SHEET No.	TOTAL SHEETS
08	SBd, Riv	60	R0.0/R4.6, R3.0/R6.9	17	100

REGISTERED CIVIL ENGINEER 8-25-14 DATE

8-25-14
PLANS APPROVAL DATE

REGISTERED PROFESSIONAL ENGINEER
HAO VAN HO
No. C64720
Exp. 6-30-15
CIVIL
STATE OF CALIFORNIA

THE STATE OF CALIFORNIA OR ITS OFFICERS OR AGENTS SHALL NOT BE RESPONSIBLE FOR THE ACCURACY OR COMPLETENESS OF SCANNED COPIES OF THIS PLAN SHEET.

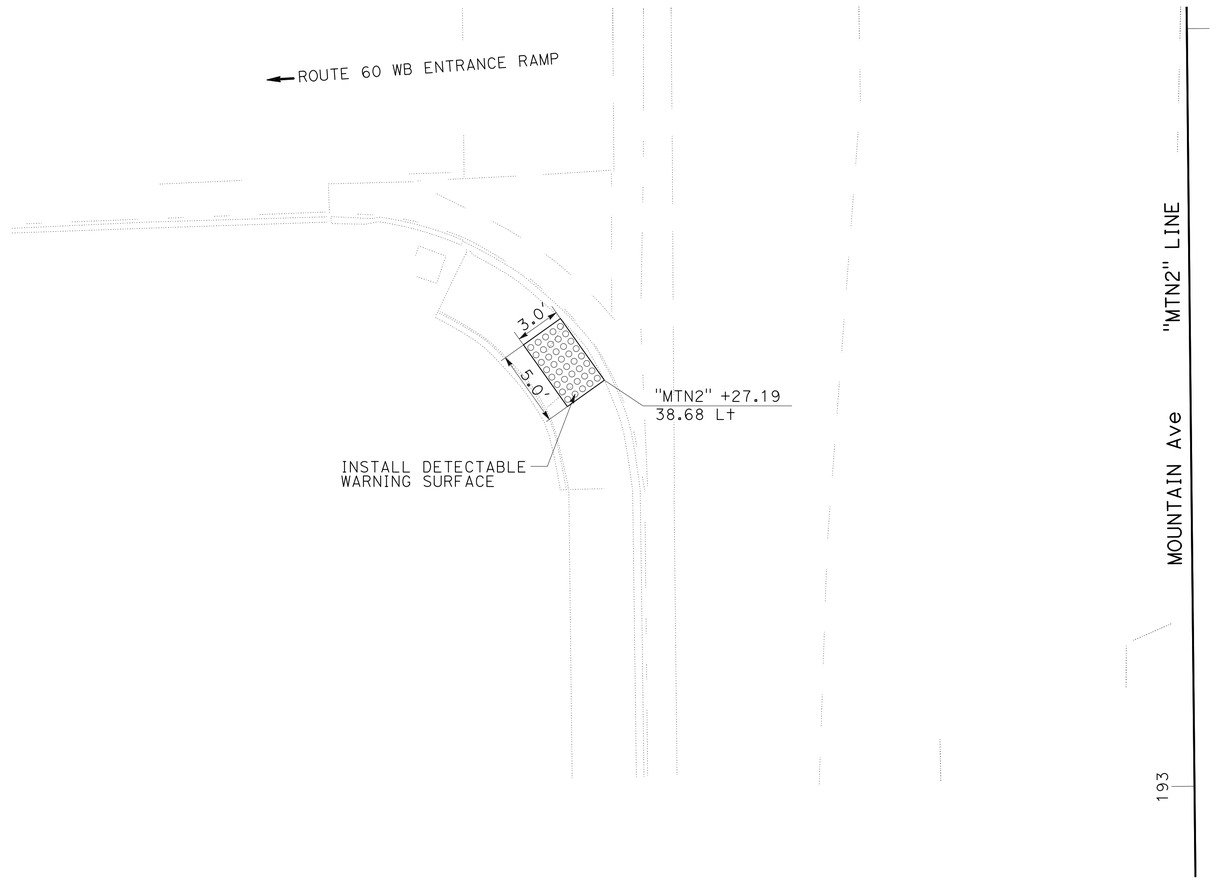

DETAIL E

CONSTRUCTION DETAILS

NO SCALE

C-14

STATE OF CALIFORNIA - DEPARTMENT OF TRANSPORTATION
Caltrans MAINTENANCE DESIGN

FUNCTIONAL SUPERVISOR: MICHAEL P. RISTIC

CALCULATED-DESIGNED BY: HAO VAN HO
CHECKED BY: MICHAEL P. RISTIC

REVISED BY
DATE REVISED

LAST REVISION 08-25-14
DATE PLOTTED => 22-AUG-2014
TIME PLOTTED => 13:26

Dist	COUNTY	ROUTE	POST MILES TOTAL PROJECT	SHEET No.	TOTAL SHEETS
08	SBd, Riv	60	R0.0/R4.6, R3.0/R6.9	18	100

REGISTERED CIVIL ENGINEER 8-25-14 DATE

8-25-14
PLANS APPROVAL DATE

REGISTERED PROFESSIONAL ENGINEER HAO VAN HO No. C64720 Exp. 6-30-15 CIVIL STATE OF CALIFORNIA

THE STATE OF CALIFORNIA OR ITS OFFICERS OR AGENTS SHALL NOT BE RESPONSIBLE FOR THE ACCURACY OR COMPLETENESS OF SCANNED COPIES OF THIS PLAN SHEET.

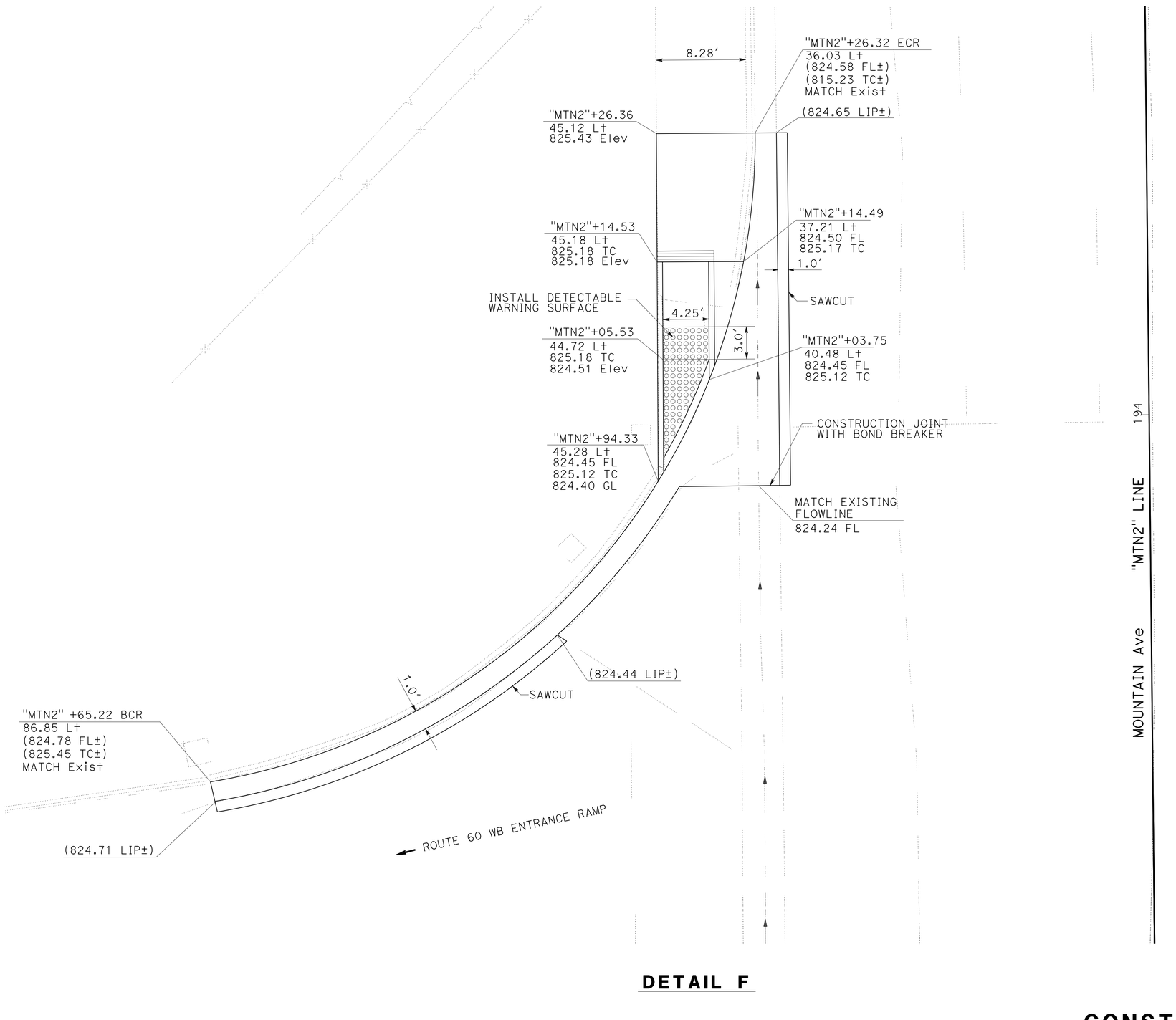

DETAIL F

CONSTRUCTION DETAILS

NO SCALE

C-15

STATE OF CALIFORNIA - DEPARTMENT OF TRANSPORTATION
Caltrans® MAINTENANCE DESIGN

FUNCTIONAL SUPERVISOR: MICHAEL P. RISTIC

CALCULATED-DESIGNED BY: HAO VAN HO
CHECKED BY: MICHAEL P. RISTIC

REVISED BY
DATE REVISED

LAST REVISION 08-25-14
DATE PLOTTED => 22-AUG-2014
TIME PLOTTED => 13:26

Dist	COUNTY	ROUTE	POST MILES TOTAL PROJECT	SHEET No.	TOTAL SHEETS
08	SBd, Riv	60	R0.0/R4.6, R3.0/R6.9	19	100

REGISTERED CIVIL ENGINEER 8-25-14 DATE

8-25-14
PLANS APPROVAL DATE

REGISTERED PROFESSIONAL ENGINEER HAO VAN HO No. C64720 Exp. 6-30-15 CIVIL STATE OF CALIFORNIA

THE STATE OF CALIFORNIA OR ITS OFFICERS OR AGENTS SHALL NOT BE RESPONSIBLE FOR THE ACCURACY OR COMPLETENESS OF SCANNED COPIES OF THIS PLAN SHEET.

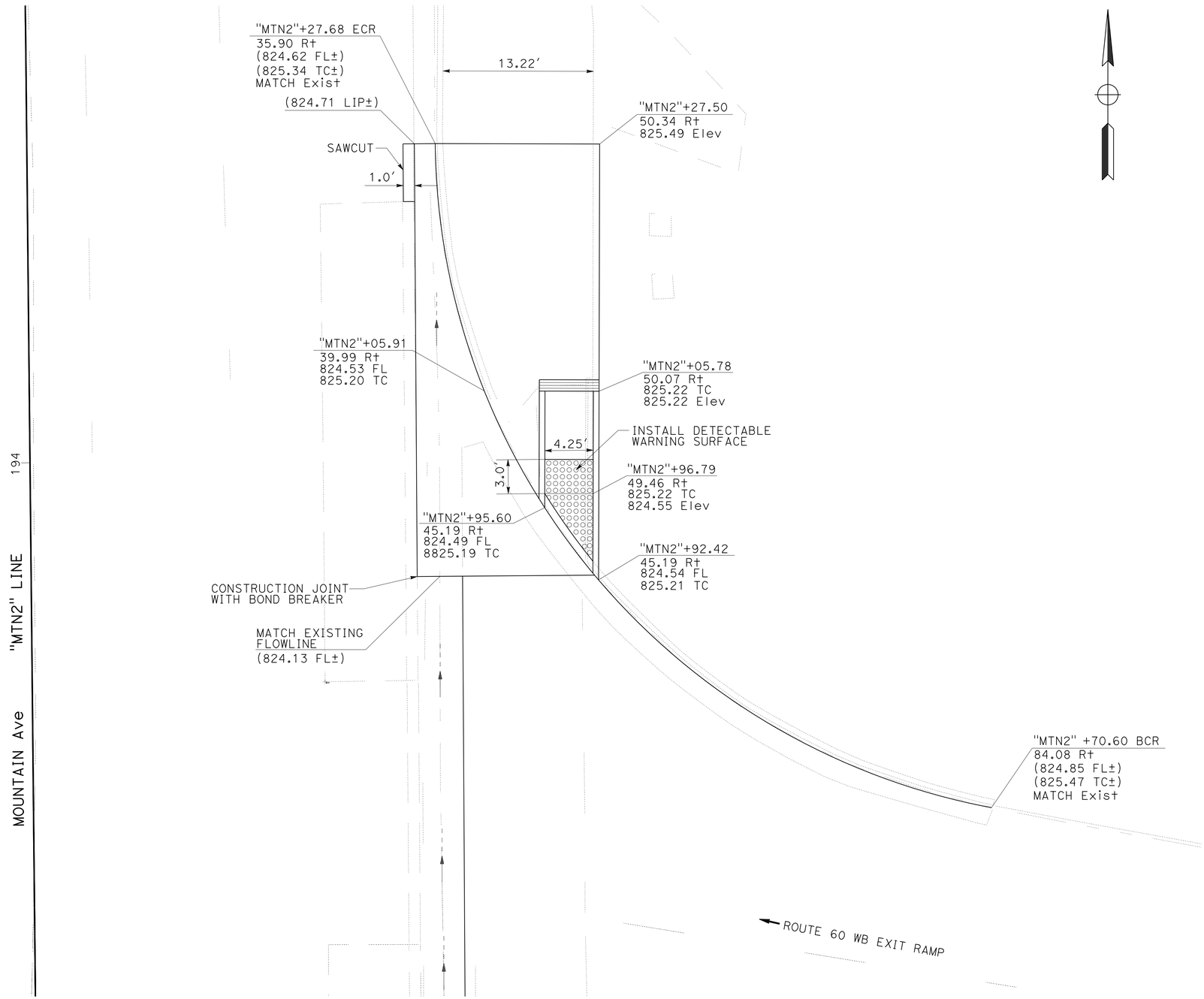

DETAIL G

CONSTRUCTION DETAILS

NO SCALE

C-16

STATE OF CALIFORNIA - DEPARTMENT OF TRANSPORTATION
Caltrans MAINTENANCE DESIGN

FUNCTIONAL SUPERVISOR: MICHAEL P. RISTIC

CALCULATED-DESIGNED BY: HAO VAN HO
CHECKED BY: MICHAEL P. RISTIC

REVISED BY | DATE REVISED

LAST REVISION 08-25-14 | DATE PLOTTED => 22-AUG-2014 | TIME PLOTTED => 13:26

Dist	COUNTY	ROUTE	POST MILES TOTAL PROJECT	SHEET No.	TOTAL SHEETS
08	SBd, Riv	60	R0.0/R4.6, R3.0/R6.9	20	100

REGISTERED CIVIL ENGINEER 8-25-14 DATE

8-25-14
PLANS APPROVAL DATE

REGISTERED PROFESSIONAL ENGINEER HAO VAN HO No. C64720 Exp. 6-30-15 CIVIL STATE OF CALIFORNIA

THE STATE OF CALIFORNIA OR ITS OFFICERS OR AGENTS SHALL NOT BE RESPONSIBLE FOR THE ACCURACY OR COMPLETENESS OF SCANNED COPIES OF THIS PLAN SHEET.

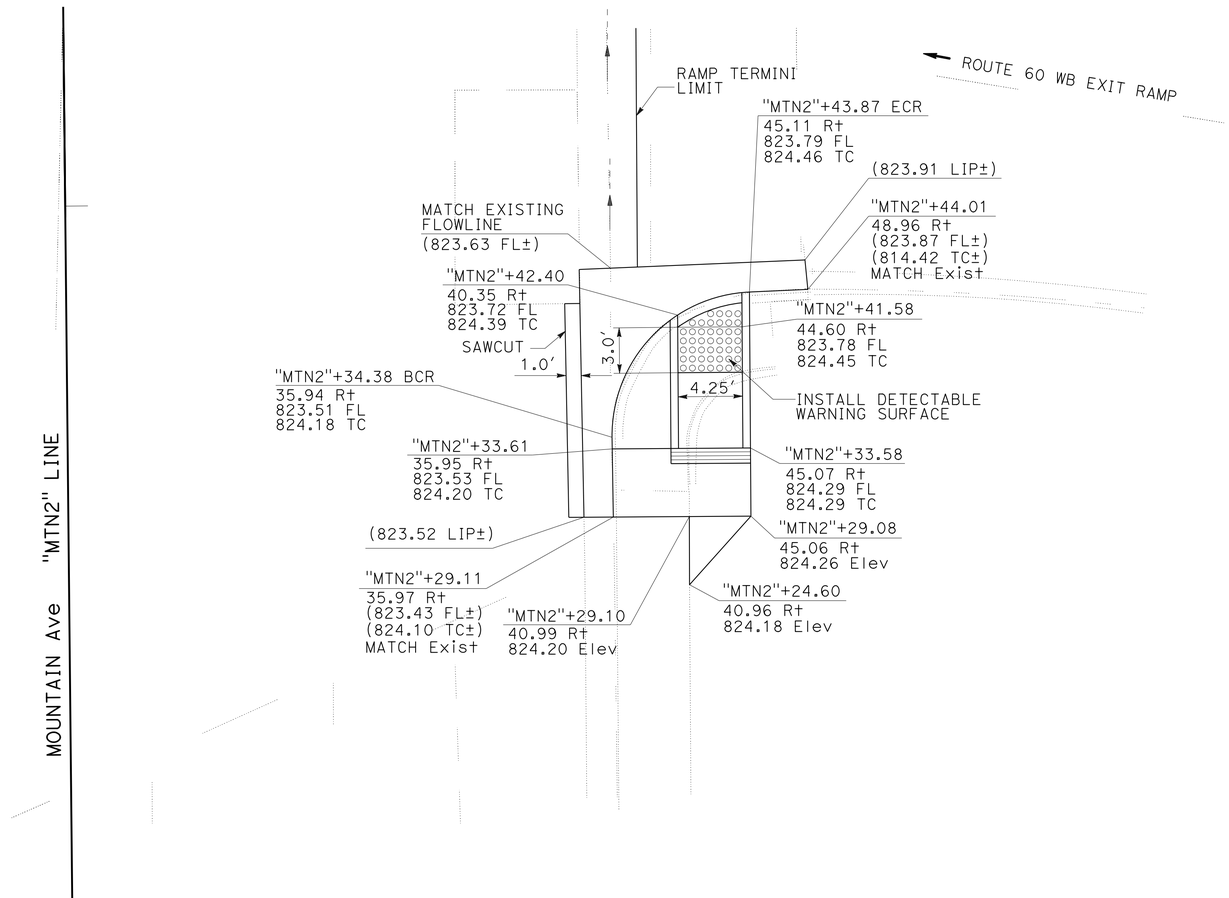

DETAIL H

CONSTRUCTION DETAILS

NO SCALE

C-17

STATE OF CALIFORNIA - DEPARTMENT OF TRANSPORTATION
Caltrans MAINTENANCE DESIGN

FUNCTIONAL SUPERVISOR: MICHAEL P. RISTIC
CALCULATED-DESIGNED BY: HAO VAN HO
CHECKED BY: MICHAEL P. RISTIC
REVISED BY
DATE REVISED

LAST REVISION 08-25-14 | DATE PLOTTED => 22-AUG-2014 | TIME PLOTTED => 13:26

Dist	COUNTY	ROUTE	POST MILES TOTAL PROJECT	SHEET No.	TOTAL SHEETS
08	SBd, Riv	60	R0.0/R4.6, R3.0/R6.9	21	100

REGISTERED CIVIL ENGINEER 8-25-14 DATE

8-25-14
PLANS APPROVAL DATE

REGISTERED PROFESSIONAL ENGINEER YONGBEE LIAU No. C75571 Exp. 6-30-16 CIVIL STATE OF CALIFORNIA

THE STATE OF CALIFORNIA OR ITS OFFICERS OR AGENTS SHALL NOT BE RESPONSIBLE FOR THE ACCURACY OR COMPLETENESS OF SCANNED COPIES OF THIS PLAN SHEET.

NOTE:

1. USE 15'-7½" LENGTH RAIL.

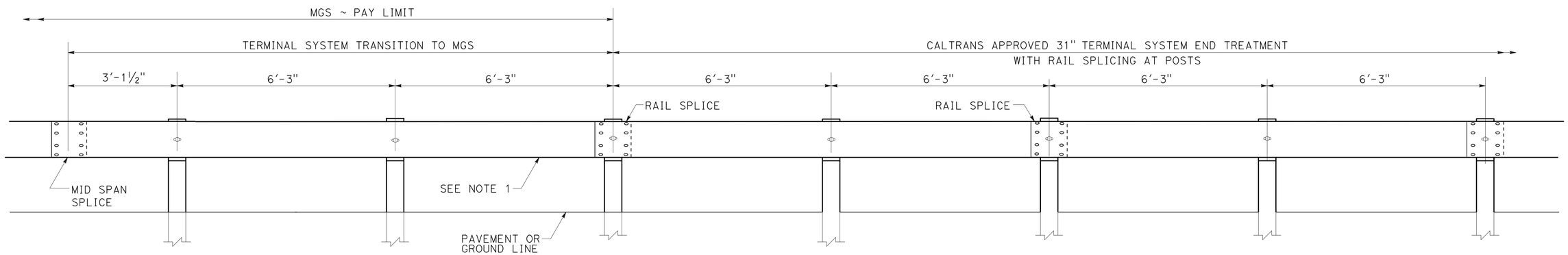

TRANSITION DETAIL FOR 31" TERMINAL SYSTEM END TREATMENT WITH RAIL SPLICING AT POSTS TO MIDWEST GUARDRAIL SYSTEM

CONSTRUCTION DETAILS
NO SCALE

C-18

REVISED BY | DATE REVISED
YONGBEE LIAU | MICHAEL P. RISTIC
CALCULATED-DESIGNED BY | CHECKED BY
FUNCTIONAL SUPERVISOR: MICHAEL P. RISTIC
STATE OF CALIFORNIA - DEPARTMENT OF TRANSPORTATION
Caltrans® MAINTENANCE DESIGN

LAST REVISION 08-25-14 | DATE PLOTTED => 22-AUG-2014 TIME PLOTTED => 13:26

Dist	COUNTY	ROUTE	POST MILES TOTAL PROJECT	SHEET No.	TOTAL SHEETS
08	SBd, Riv	60	R0.0/R4.6, R3.0/R6.9	22	100

W E Wasser 8-25-14
REGISTERED CIVIL ENGINEER DATE

8-25-14
PLANS APPROVAL DATE

REGISTERED PROFESSIONAL ENGINEER W. E. WASSER No. C37378 Exp. 6-30-16 CIVIL STATE OF CALIFORNIA

THE STATE OF CALIFORNIA OR ITS OFFICERS OR AGENTS SHALL NOT BE RESPONSIBLE FOR THE ACCURACY OR COMPLETENESS OF SCANNED COPIES OF THIS PLAN SHEET.

NOTES:

1. CONSTRUCTION AREA SIGN LOCATIONS SHOWN ARE APPROXIMATE. EXACT LOCATIONS TO BE DETERMINED BY THE ENGINEER.
2. EXACT PORTABLE CHANGE MESSAGE SIGN (PCMS) LOCATIONS TO BE DETERMINED BY THE ENGINEER; EXEPT LOCATIONS SHOWN IN PLAN SHEETS MI-4 & MI-5
3. FOR ADDITIONAL CONSTRUCTION AREA SIGNS, SEE SHEET MI-1, MI-2, MI-3, MI-4, & MI-5.

LEGEND:

WORK AREA

(X) CONSTRUCTION AREA SIGN NUMBER

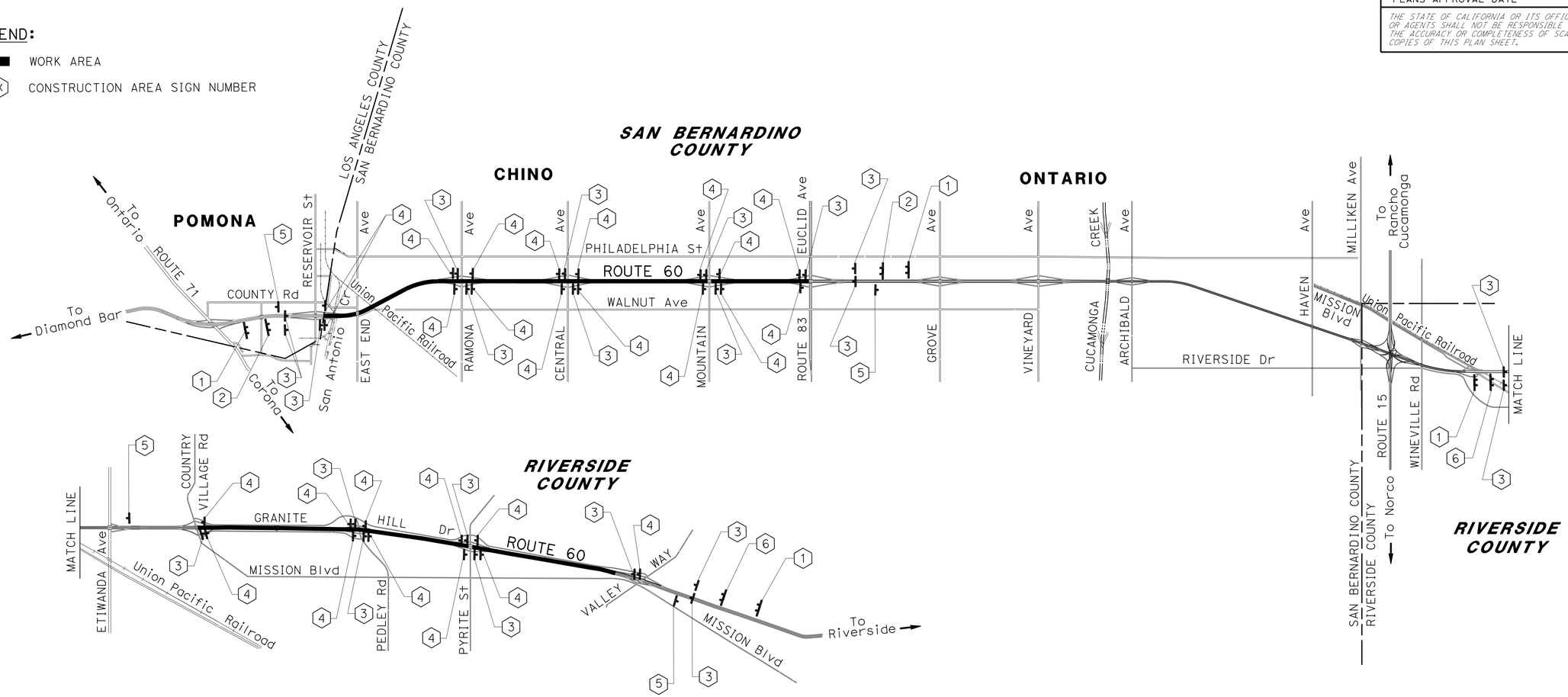

STATIONARY MOUNTED CONSTRUCTION AREA SIGNS

SIGN No. (X)	SIGN CODE		PANEL SIZE	SIGN MESSAGE	NUMBER OF POSTS AND SIZE	NUMBER OF SIGNS
	FEDERAL	CALIFORNIA				
1		C40	108" X 42"	TRAFFIC FINES DOUBLE IN WORK AREA	2 - 6" X 6"	4
2	G20-1		36" X 18"	ROAD WORK NEXT 5 MILES	1 - 4" X 4"	2
3	W20-1		48" X 48"	ROAD WORK AHEAD	1 - 6" X 6"	22
4		SC6-3	48" X 48"	RAMP CLOSED DATE, TIME	1 - 6" X 6"	27
5	G20-2		36" X 18"	END ROAD WORK	1 - 4" X 4"	4
6	G20-1		36" X 18"	ROAD WORK NEXT 4 MILES	1 - 4" X 4"	2

PORTABLE CHANGEABLE MESSAGE SIGNS (PCMS)

(EA)
38 *

* INCLUDES QUANTITIES IN PLAN SHEETS MI-4 & MI-5

CONSTRUCTION AREA SIGNS

NO SCALE

CS-1

APPROVED FOR CONSTRUCTION AREA SIGN WORK ONLY

STATE OF CALIFORNIA - DEPARTMENT OF TRANSPORTATION
Caltrans TRAFFIC DESIGN

FUNCTIONAL SUPERVISOR: W. E. WASSER
CALCULATED-DESIGNED BY: KEVIN NGUYEN
CHECKED BY: W. E. WASSER
REVISED BY
DATE REVISED

LAST REVISION 08-25-14
DATE PLOTTED => 22-AUG-2014
TIME PLOTTED => 13:26

Dist	COUNTY	ROUTE	POST MILES TOTAL PROJECT	SHEET No.	TOTAL SHEETS
08	SBd, Riv	60	R0.0/R4.6, R3.0/R6.9	23	100

W E Wasser 8-25-14
REGISTERED CIVIL ENGINEER DATE

8-25-14
PLANS APPROVAL DATE

REGISTERED PROFESSIONAL ENGINEER W. E. WASSER No. C37378 Exp. 6-30-16 CIVIL STATE OF CALIFORNIA

THE STATE OF CALIFORNIA OR ITS OFFICERS OR AGENTS SHALL NOT BE RESPONSIBLE FOR THE ACCURACY OR COMPLETENESS OF SCANNED COPIES OF THIS PLAN SHEET.

CONSTRUCTION AREA SIGNS

SHEET	SIGN No. (X)	SIGN CODE FEDERAL	SIGN CODE CALIFORNIA	PANEL SIZE	SIGN MESSAGE	NUMBER OF POSTS AND SIZE	NUMBER OF SIGNS
MI-1, MI-2 & MI-3	7	W20-2		36" X 18"	DETOUR AHEAD	1 - 4" X 4"	28
	8		SC3	48" X 18"	DETOUR STRAIGHT	1 - 4" X 4"	30
	9	M4-10(L)		48" X 18"	DETOUR LEFT	1 - 4" X 4"	66
	10	M4-10(R)		48" X 18"	DETOUR RIGHT	1 - 4" X 4"	26
	11	M4-8A		24" X 18"	END DETOUR	1 - 4" X 4"	30
	12		G28-1	25" X 28"	RTE 60	1 - 4" X 6"	7
		M3-2		24" X 12"	EAST		
		M4-10(R)		48" X 18"	DETOUR RIGHT		
	13		G28-1	25" X 28"	RTE 60	1 - 4" X 6"	7
		M3-4		24" X 12"	WEST		
		M4-10(R)		48" X 18"	DETOUR RIGHT		
	14		CSpec1	132" X 54"	MOUNTAIN AVE EXIT CLOSED USE EUCLID AVE OR CENTRAL AVE DETOUR	2 - 6" X 8"	1
	15		CSpec2	132" X 54"	MOUNTAIN AVE EXIT CLOSED USE CENTRAL AVE OR EUCLID AVE DETOUR	2 - 6" X 8"	1
	16	D3		48" X 12"	MOUNTAIN AVE	1 - 4" X 6"	6
		M4-10(R)		48" X 18"	DETOUR RIGHT		
	17	D3		48" X 12"	MOUNTAIN AVE	1 - 4" X 6"	6
		M4-10(L)		48" X 18"	DETOUR LEFT		
MI-4& MI-5	18		CSpec3	48" X 48"	HOV LANE 1 PERSON OK	1 - 6" X 6"	8
	19		CSpec4	48" X 48"	HOV LANE 1 PERSON ENDS	1 - 6" X 6"	4

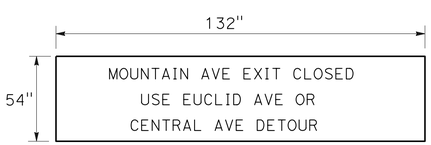

LETTER SIZE: 8" B
BLACK ON ORANGE

CSpec1 SIGN PANEL DETAIL

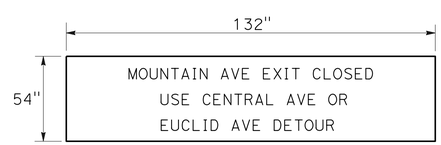

LETTER SIZE: 8" B
BLACK ON ORANGE

CSpec2 SIGN PANEL DETAIL

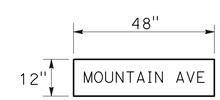

LETTER SIZE: 6" B
BLACK ON ORANGE

D3 SIGN PANEL DETAIL

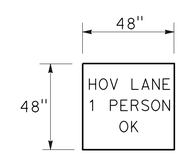

LETTER SIZE: 8" B
BLACK ON ORANGE

CSpec3 SIGN PANEL DETAIL

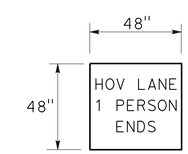

LETTER SIZE: 8" B
BLACK ON ORANGE

CSpec4 SIGN PANEL DETAIL

APPROVED FOR CONSTRUCTION AREA SIGN WORK ONLY

CONSTRUCTION AREA SIGNS
NO SCALE

CS-2

STATE OF CALIFORNIA - DEPARTMENT OF TRANSPORTATION
Caltrans® TRAFFIC DESIGN

FUNCTIONAL SUPERVISOR: W. E. WASSER
CALCULATED-DESIGNED BY: KEVIN NGUYEN
CHECKED BY: W. E. WASSER
REVISED BY
DATE REVISED

LAST REVISION 08-25-14 | DATE PLOTTED => 22-AUG-2014 | TIME PLOTTED => 13:26

Dist	COUNTY	ROUTE	POST MILES TOTAL PROJECT	SHEET No.	TOTAL SHEETS
08	SBd, Riv	60	R0.0/R4.6, R3.0/R6.9	24	100

W E Wasser 8-25-14
REGISTERED CIVIL ENGINEER DATE

8-25-14
PLANS APPROVAL DATE

REGISTERED PROFESSIONAL ENGINEER W. E. WASSER No. C37378 Exp. 6-30-16 CIVIL STATE OF CALIFORNIA

THE STATE OF CALIFORNIA OR ITS OFFICERS OR AGENTS SHALL NOT BE RESPONSIBLE FOR THE ACCURACY OR COMPLETENESS OF SCANNED COPIES OF THIS PLAN SHEET.

LEGEND:

RAMP CLOSED

DETOUR DIRECTION

CONSTRUCTION AREA SIGN NUMBER

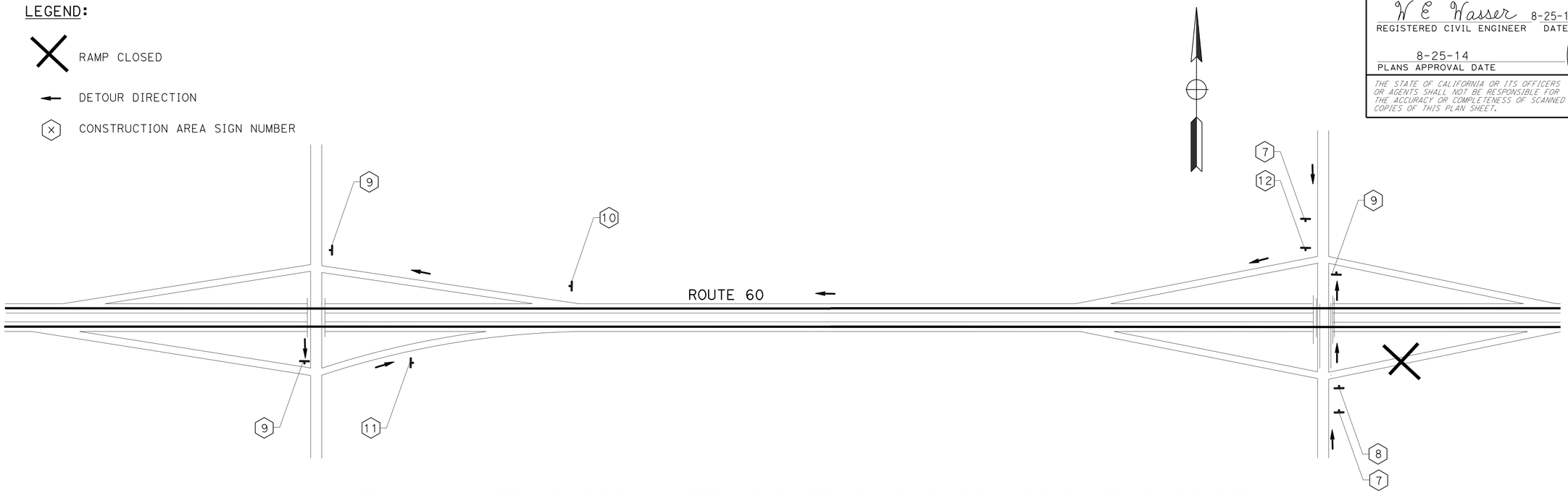

TYPICAL DETOUR FOR ROUTE 60 EASTBOUND ENTRANCE RAMP CLOSURE

(APPLICABLE TO CLOSURES AT RESERVOIR St, RAMONA Ave, CENTRAL Ave, MOUNTAIN Ave, EUCLID Ave, PEDLEY Rd & PYRITE St)

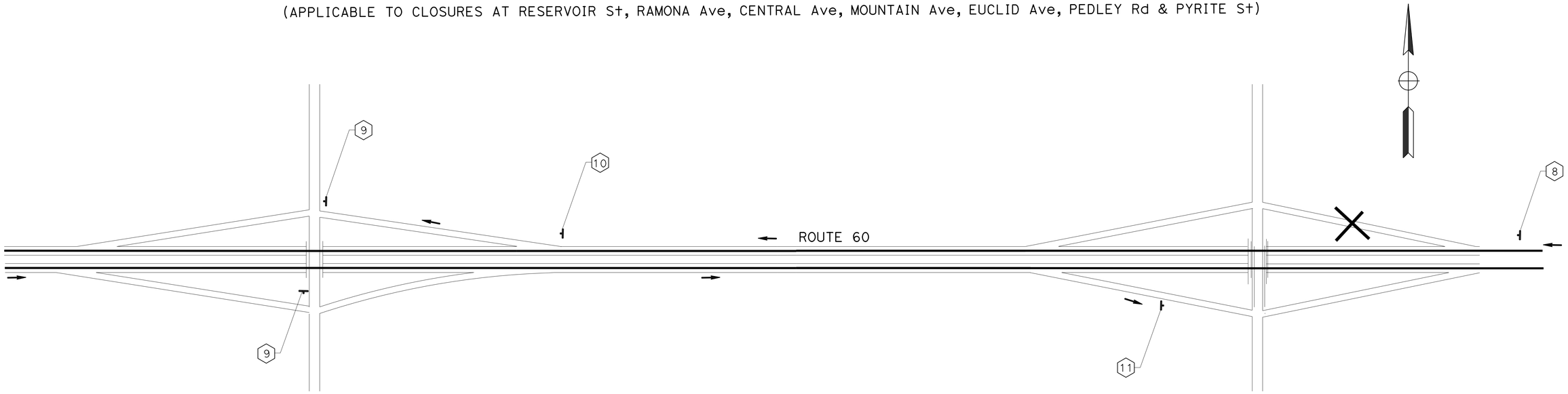

TYPICAL DETOUR FOR ROUTE 60 WESTBOUND EXIT RAMP CLOSURE

(APPLICABLE TO CLOSURES AT RESERVOIR St, RAMONA Ave, CENTRAL Ave, EUCLID Ave, PEDLEY Rd & PYRITE St)

MOTORIST INFORMATION PLAN

NO SCALE

MI-1

APPROVED FOR MOTORIST INFORMATION WORK ONLY

STATE OF CALIFORNIA - DEPARTMENT OF TRANSPORTATION
Caltrans® TRAFFIC DESIGN

FUNCTIONAL SUPERVISOR: W. E. WASSER
CALCULATED-DESIGNED BY: KEVIN NGUYEN
CHECKED BY: W. E. WASSER
REVISED BY
DATE REVISED

LAST REVISION 08-25-14 | DATE PLOTTED => 22-AUG-2014 | TIME PLOTTED => 13:26

Dist	COUNTY	ROUTE	POST MILES TOTAL PROJECT	SHEET No.	TOTAL SHEETS
08	SBd, Riv	60	R0.0/R4.6, R3.0/R6.9	25	100

W E Wasser 8-25-14
REGISTERED CIVIL ENGINEER DATE

8-25-14
PLANS APPROVAL DATE

REGISTERED PROFESSIONAL ENGINEER
W. E. WASSER
No. C37378
Exp. 6-30-16
CIVIL
STATE OF CALIFORNIA

THE STATE OF CALIFORNIA OR ITS OFFICERS OR AGENTS SHALL NOT BE RESPONSIBLE FOR THE ACCURACY OR COMPLETENESS OF SCANNED COPIES OF THIS PLAN SHEET.

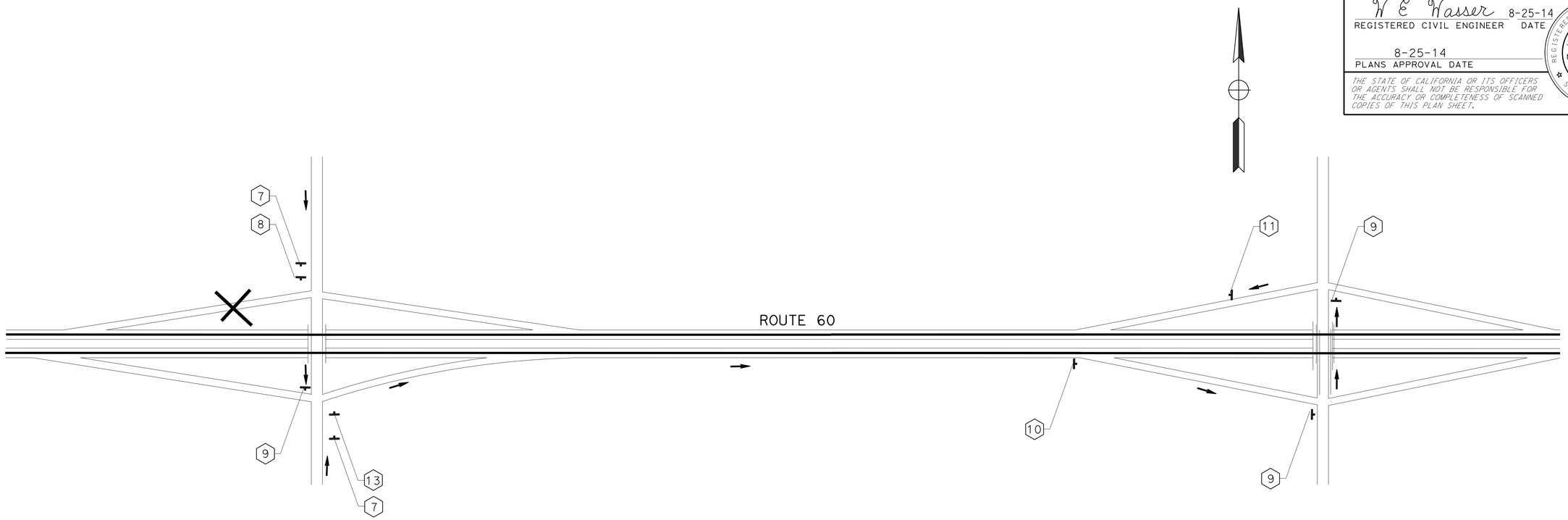

TYPICAL DETOUR FOR ROUTE 60 WESTBOUND ENTRANCE RAMP CLOSURE

(APPLICABLE TO CLOSURES AT RAMONA Ave, CENTRAL Ave, MOUNTAIN Ave, EUCLID Ave, PEDLEY Rd, PYRITE St & VALLEY WAY)

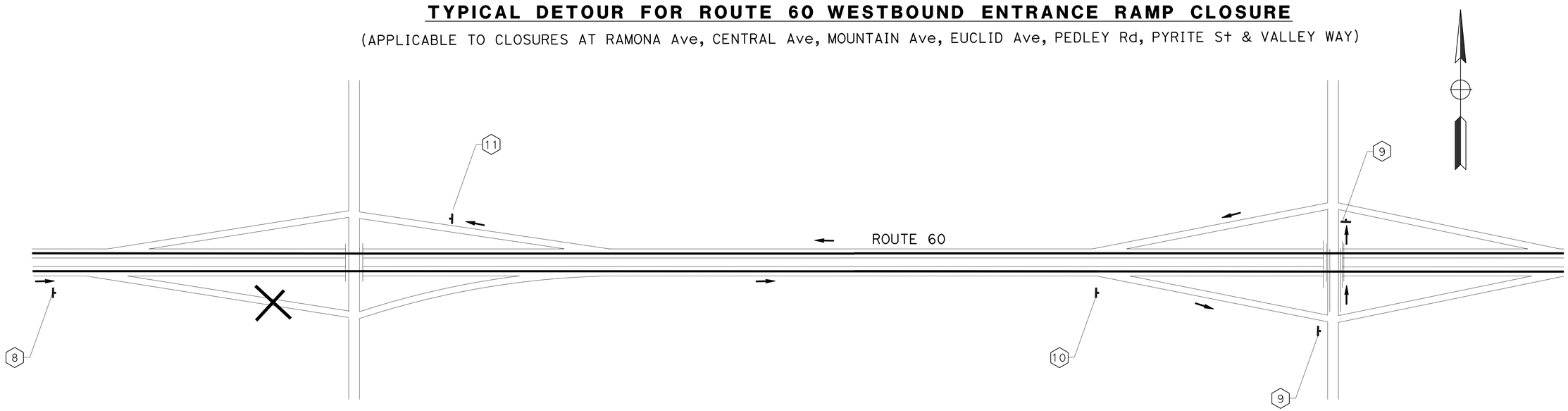

TYPICAL DETOUR FOR ROUTE 60 EASTBOUND EXIT RAMP CLOSURE

(APPLICABLE TO CLOSURES AT RAMONA Ave, CENTRAL Ave, EUCLID Ave, EUCLID Ave, PEDLEY Rd, PYRITE St & VALLEY WAY)

MOTORIST INFORMATION PLAN

NO SCALE

MI-2

APPROVED FOR MOTORIST INFORMATION WORK ONLY

STATE OF CALIFORNIA - DEPARTMENT OF TRANSPORTATION
Caltrans® TRAFFIC DESIGN

FUNCTIONAL SUPERVISOR: W. E. WASSER
CALCULATED-DESIGNED BY: KEVIN NGUYEN
CHECKED BY: W. E. WASSER
REVISED BY
DATE REVISED

LAST REVISION 08-25-14
DATE PLOTTED => 22-AUG-2014
TIME PLOTTED => 13:26

Dist	COUNTY	ROUTE	POST MILES TOTAL PROJECT	SHEET No.	TOTAL SHEETS
08	SBd, Riv	60	R0.0/R4.6, R3.0/R6.9	26	100

W E Wasser 8-25-14
REGISTERED CIVIL ENGINEER DATE

8-25-14
PLANS APPROVAL DATE

REGISTERED PROFESSIONAL ENGINEER
W. E. WASSER
No. C37378
Exp. 6-30-16
CIVIL
STATE OF CALIFORNIA

THE STATE OF CALIFORNIA OR ITS OFFICERS OR AGENTS SHALL NOT BE RESPONSIBLE FOR THE ACCURACY OR COMPLETENESS OF SCANNED COPIES OF THIS PLAN SHEET.

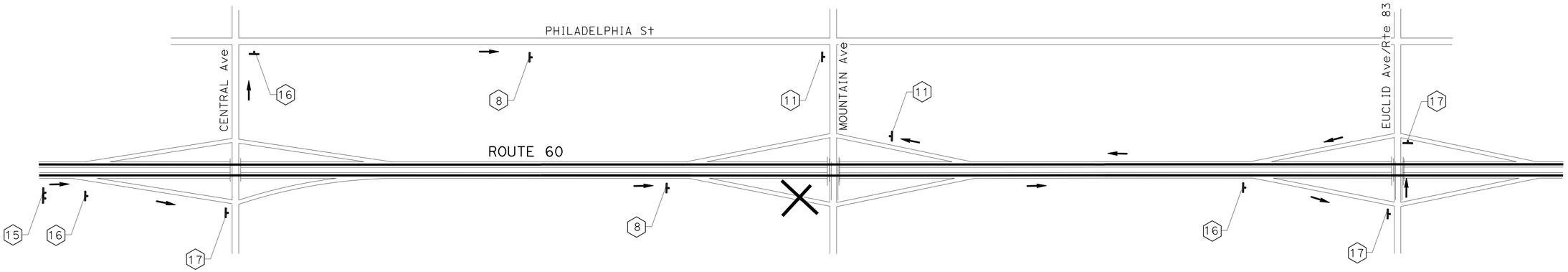

DETOUR FOR ROUTE 60 EASTBOUND MOUNTAIN Ave EXIT RAMP CLOSURE

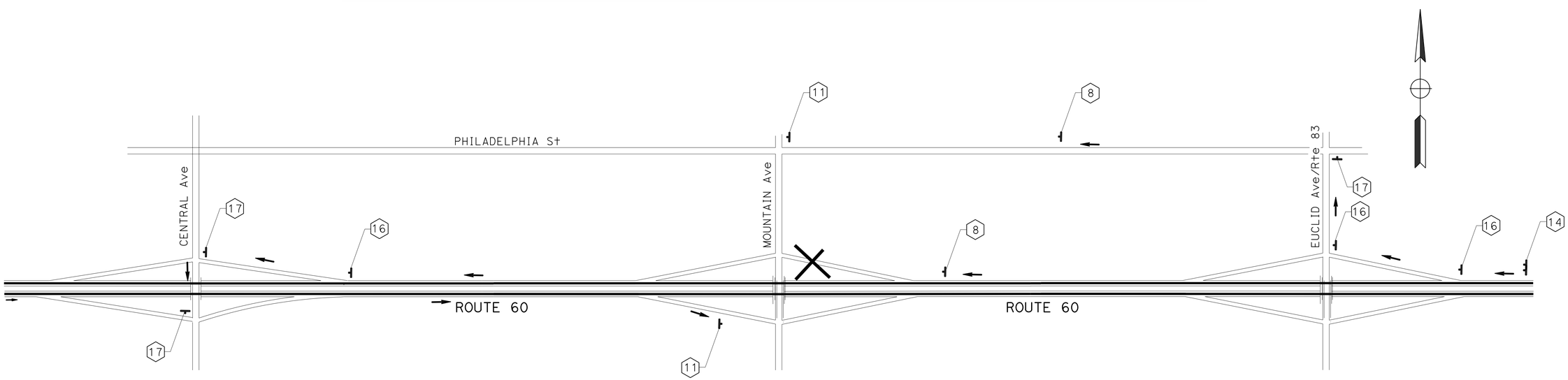

DETOUR FOR ROUTE 60 WESTBOUND MOUNTAIN Ave EXIT RAMP CLOSURE

MOTORIST INFORMATION PLAN

NO SCALE

MI-3

APPROVED FOR MOTORIST INFORMATION WORK ONLY

STATE OF CALIFORNIA - DEPARTMENT OF TRANSPORTATION
Caltrans® TRAFFIC DESIGN

FUNCTIONAL SUPERVISOR: W. E. WASSER
CALCULATED-DESIGNED BY: KEVIN NGUYEN
CHECKED BY: W. E. WASSER
REVISED BY
DATE REVISED

LAST REVISION 08-25-14
DATE PLOTTED => 22-AUG-2014
TIME PLOTTED => 13:26

Dist	COUNTY	ROUTE	POST MILES TOTAL PROJECT	SHEET No.	TOTAL SHEETS
08	SBd, Riv	60	R0.0/R4.6, R3.0/R6.9	27	100

W E Wasser 8-25-14
REGISTERED CIVIL ENGINEER DATE

8-25-14
PLANS APPROVAL DATE

REGISTERED PROFESSIONAL ENGINEER W. E. WASSER No. C37378 Exp. 6-30-16 CIVIL STATE OF CALIFORNIA

THE STATE OF CALIFORNIA OR ITS OFFICERS OR AGENTS SHALL NOT BE RESPONSIBLE FOR THE ACCURACY OR COMPLETENESS OF SCANNED COPIES OF THIS PLAN SHEET.

LEGEND:

- PORTABLE CHANGEABLE MESSAGE SIGN (PCMS)
- X PORTABLE CHANGEABLE MESSAGE SIGN No.
- X CONSTRUCTION AREA SIGN No.

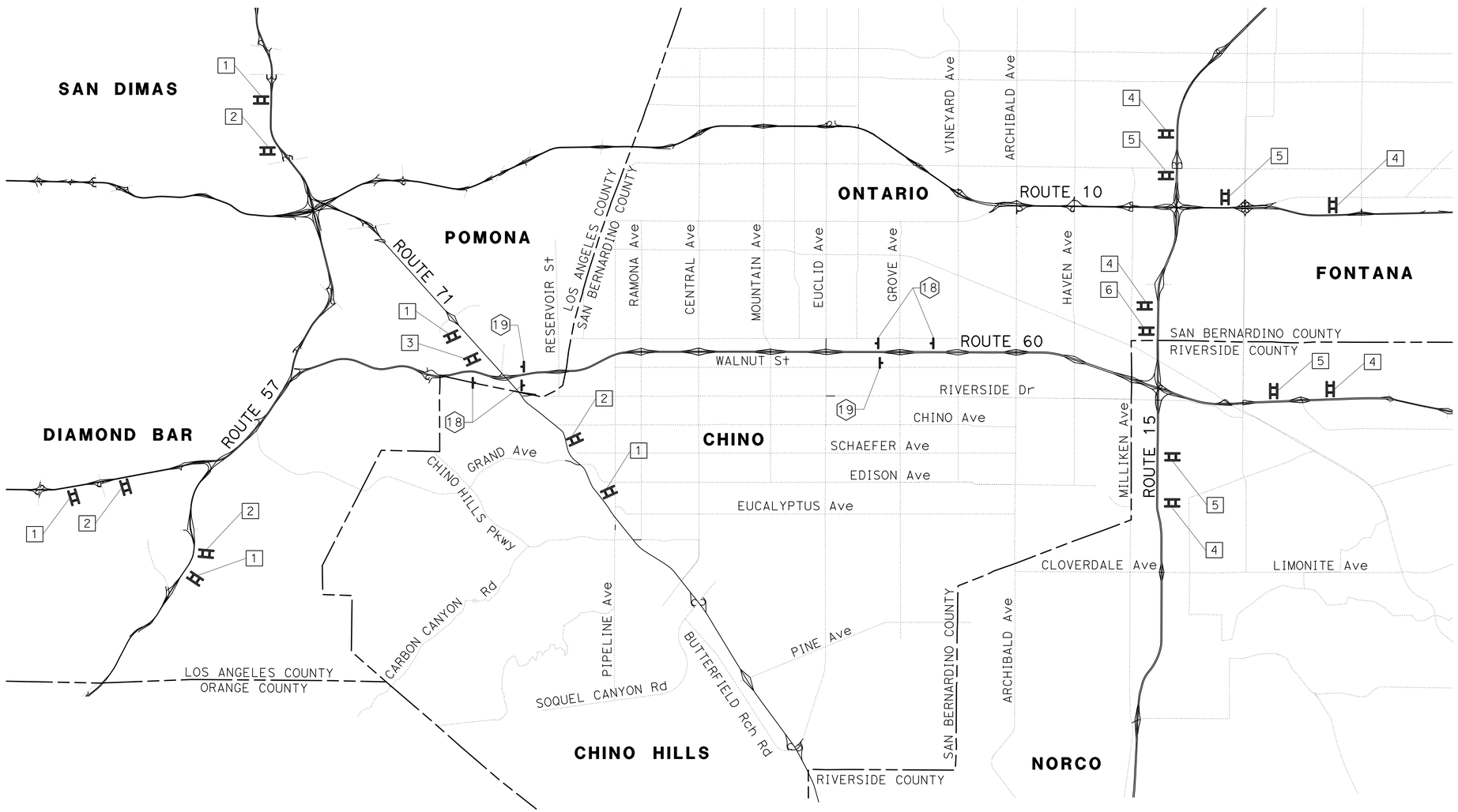

PCMS MESSAGES:

1. FWY 60 EAST CLOSED FROM RESERVOIR St TO EUCLID Ave EXPECT DELAY
2. FWY 60 EAST CLOSED FROM RESERVOIR St TO EUCLID Ave USE FWY 10 EAST
3. FWY 60 EAST CLOSED FROM RESERVOIR St TO EUCLID Ave USE ALT ROUTE
4. FWY 60 WEST CLOSED FROM EUCLID Ave TO RESERVOIR St EXPECT DELAY
5. FWY 60 WEST CLOSED FROM EUCLID Ave TO RESERVOIR St USE FWY 10 WEST
6. FWY 60 WEST CLOSED FROM EUCLID Ave TO RESERVOIR St USE ALT ROUTE

REGIONAL TRAFFIC DETOUR FOR SAN BERNARDINO ROUTE 60 CLOSURE

MOTORIST INFORMATION PLAN

NO SCALE

MI-4

APPROVED FOR MOTORIST INFORMATION WORK ONLY

STATE OF CALIFORNIA - DEPARTMENT OF TRANSPORTATION
Caltrans TRAFFIC DESIGN

FUNCTIONAL SUPERVISOR: W. E. WASSER
CALCULATED-DESIGNED BY: KEVIN NGUYEN
CHECKED BY: W. E. WASSER
REVISED BY
DATE REVISED

LAST REVISION 08-25-14
DATE PLOTTED => 22-AUG-2014
TIME PLOTTED => 13:26

Dist	COUNTY	ROUTE	POST MILES TOTAL PROJECT	SHEET No.	TOTAL SHEETS
08	SBd, Riv	60	R0.0/R4.6, R3.0/R6.9	28	100

W E Wasser 8-25-14
REGISTERED CIVIL ENGINEER DATE

8-25-14
PLANS APPROVAL DATE

REGISTERED PROFESSIONAL ENGINEER W. E. WASSER No. C37378 Exp. 6-30-16 CIVIL STATE OF CALIFORNIA

THE STATE OF CALIFORNIA OR ITS OFFICERS OR AGENTS SHALL NOT BE RESPONSIBLE FOR THE ACCURACY OR COMPLETENESS OF SCANNED COPIES OF THIS PLAN SHEET.

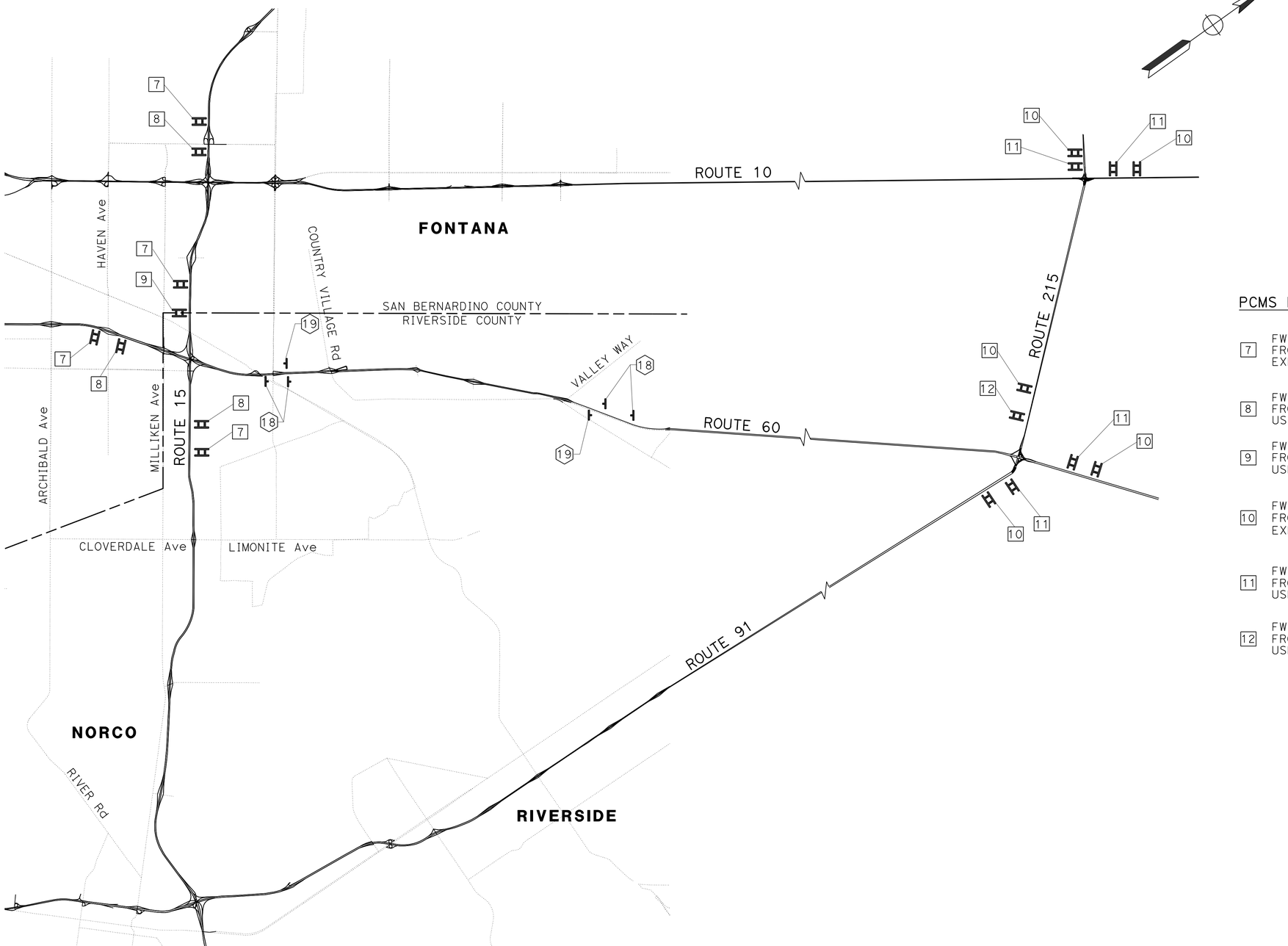

PCMS MESSAGES:

7 FWY 60 EAST CLOSED
FROM COUNTRY VILLAGE Rd TO VALLEY WAY
EXPECT DELAY

8 FWY 60 EAST CLOSED
FROM COUNTRY VILLAGE Rd TO VALLEY WAY
USE FWY 10 EAST

9 FWY 60 EAST CLOSED
FROM COUNTRY VILLAGE Rd TO VALLEY WAY
USE ALT ROUTE

10 FWY 60 WEST CLOSED
FROM VALLEY WAY TO COUNTRY VILLAGE Rd
EXPECT DELAY

11 FWY 60 WEST CLOSED
FROM VALLEY WAY TO COUNTRY VILLAGE Rd
USE FWY 10 WEST

12 FWY 60 WEST CLOSED
FROM VALLEY WAY TO COUNTRY VILLAGE Rd
USE ALT ROUTE

REGIONAL TRAFFIC DETOUR FOR RIVERSIDE ROUTE 60 CLOSURE

MOTORIST INFORMATION PLAN

NO SCALE

MI-5

APPROVED FOR MOTORIST INFORMATION WORK ONLY

STATE OF CALIFORNIA - DEPARTMENT OF TRANSPORTATION
Caltrans TRAFFIC DESIGN

FUNCTIONAL SUPERVISOR: W. E. WASSER
CALCULATED-DESIGNED BY: KEVIN NGUYEN
CHECKED BY: W. E. WASSER
REVISED BY
DATE REVISED

LAST REVISION 08-25-14
DATE PLOTTED => 22-AUG-2014
TIME PLOTTED => 13:26

Dist	COUNTY	ROUTE	POST MILES TOTAL PROJECT	SHEET No.	TOTAL SHEETS
08	SBd, Riv	60	R0.0/R4.6, R3.0/R6.9	29	100

W E Wasser 8-25-14
REGISTERED CIVIL ENGINEER DATE

8-25-14
PLANS APPROVAL DATE

REGISTERED PROFESSIONAL ENGINEER W. E. WASSER No. C37378 Exp. 6-30-16 CIVIL STATE OF CALIFORNIA

THE STATE OF CALIFORNIA OR ITS OFFICERS OR AGENTS SHALL NOT BE RESPONSIBLE FOR THE ACCURACY OR COMPLETENESS OF SCANNED COPIES OF THIS PLAN SHEET.

LEGEND:

▭ TYPE III BARRICADE

NOTES:

1. REFER TO STANDARD PLAN T11 FOR LANE CLOSURE ON MOUNTAIN Ave TO WORK ON ADA RAMPS OR CURBS.
2. FOR SIDEWALKS ON MOUNTAIN Ave, ALWAYS KEEP ONE SIDE OPEN FOR PEDESTRIANS WHEN ADA RAMP/CURB CONSTRUCTIONS OCCUR.

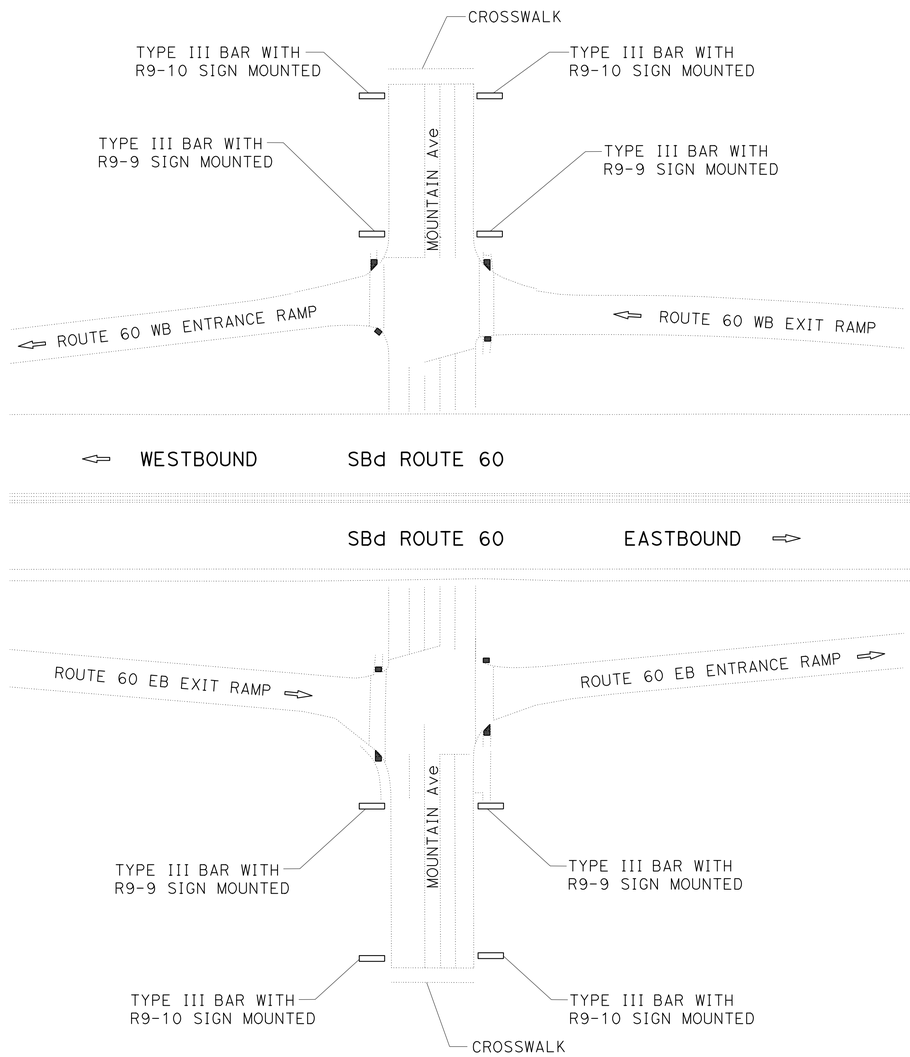

MOUNTAIN Ave LOCATION
SBd ROUTE 60

TYPE III BARRICADE

EA
8

APPROVED FOR TRAFFIC HANDLING WORK ONLY

TRAFFIC HANDLING PLAN
NO SCALE
TH-1

STATE OF CALIFORNIA - DEPARTMENT OF TRANSPORTATION
Caltrans® **TRAFFIC DESIGN**

FUNCTIONAL SUPERVISOR: W. E. WASSER
CALCULATED-DESIGNED BY: KEVIN NGUYEN
CHECKED BY: W. E. WASSER
REVISED BY
DATE REVISED

LAST REVISION 08-25-14
DATE PLOTTED => 22-AUG-2014
TIME PLOTTED => 13:26

Dist	COUNTY	ROUTE	POST MILES TOTAL PROJECT	SHEET No.	TOTAL SHEETS
08	SBd, Riv	60	R0.0/R4.6, R3.0/R6.9	30	100

W E Wasser 8-25-14
REGISTERED CIVIL ENGINEER DATE

8-25-14
PLANS APPROVAL DATE

REGISTERED PROFESSIONAL ENGINEER W. E. WASSER No. C37378 Exp. 6-30-16 CIVIL STATE OF CALIFORNIA

THE STATE OF CALIFORNIA OR ITS OFFICERS OR AGENTS SHALL NOT BE RESPONSIBLE FOR THE ACCURACY OR COMPLETENESS OF SCANNED COPIES OF THIS PLAN SHEET.

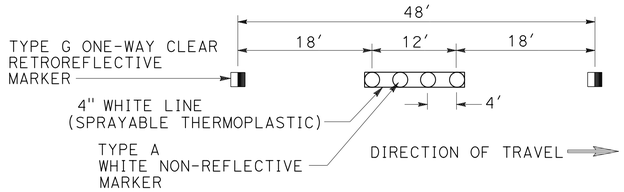

DETAIL 13M

INSTALL TYPE A NON-REFLECTIVE MARKER WITH STRIPING DETAIL 13M
INSTALL TYPE A MARKER BEFORE STRIPING TO GET THE PROPER BONDING

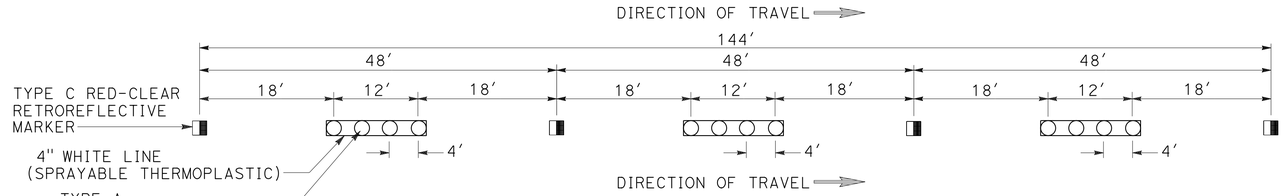

DETAIL 14M

INSTALL TYPE A NON-REFLECTIVE MARKER WITH STRIPING DETAIL 14M
INSTALL TYPE A MARKER BEFORE STRIPING TO GET THE PROPER BONDING

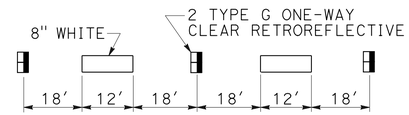

DETAIL M10

AT EXISTING HOV INGRESS/EGRESS

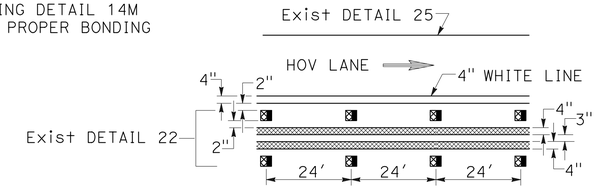

EXISTING HOV STRIPING
IN RIVERSIDE COUNTY FROM PM R3.0 TO PM R6.9

PAVEMENT DELINEATION QUANTITIES

LOCATION	DIRECTION	DETAIL No./ MARKING DETAIL	REMOVE YELLOW THERMOPLASTIC TRAFFIC STRIPE (HAZARDOUS WASTE)	REMOVE THERMOPLASTIC TRAFFIC STRIPE	REMOVE PAVEMENT MARKERS	PAVEMENT MARKER (NON-REFLECTIVE)	PAVEMENT MARKER (RETROREFLECTIVE)			THERMOPLASTIC TRAFFIC STRIPE (SPRAYABLE)			PAVEMENT MARKING	REMARKS
						TYPE A	TYPE C	TYPE G	TYPE H	4" YELLOW	4" WHITE	8" WHITE		
			LF	LF	EA	EA	EA			LF			SQFT	
SBd COUNTY ROUTE 60 PM R0.0 TO PM R4.6	EB	13M				534		134			6400			MAINLINE
		27B									22200			
		8									300			ENTRANCE & EXIT RAMPS AT MOUNTAIN Ave
		9						10			440			
		25A							85	2015				
		27B									3700			
		38						44				1020		
		"SIGNAL"											32	
		"AHEAD"											31	
		TYPE I 24'-0" ARROW											31	
		TYPE II (L) ARROW											90	
		TYPE III (L) ARROW											84	
		TYPE III (R) ARROW											84	
		CROSSWALK/LIMIT LINE											250	
		9						17			750			EXIT RAMP AT EUCLID Ave
		25A							39	900				
		27B									1470			
		38						30				685		
		"SIGNAL"											64	
		"AHEAD"											62	
		TYPE III (L) ARROW											84	
		TYPE III (B) ARROW											146	
		TYPE V ARROW											66	
		CROSSWALK/LIMIT LINE											82	
SBd COUNTY ROUTE 60 PM R0.0 TO PM R4.6	WB	13M				668		168			800			MAINLINE
		27B									22500			
		8									300			ENTRANCE & EXIT RAMPS AT MOUNTAIN Ave
		9						7			300			
		25A							84	2000				
		27B									2530			
		38						26				605		
		"SIGNAL"											32	
		"AHEAD"											31	
		TYPE I 24'-0" ARROW											31	
		TYPE III (L) ARROW											84	
		TYPE III (R) ARROW											84	
		TYPE V ARROW											33	
		CROSSWALK/LIMIT LINE											215	
		8									300			ENTRANCE RAMP AT EUCLID Ave
		25A							40	925				
		27B									1970			
		38						12				270		
		TYPE I 24'-0" ARROW											31	
		CROSSWALK/LIMIT LINE											52	
SUBTOTAL						1202		448	248	5840	63960	2580	1699	
SHEET TOTAL						1202		696			72380		1699	

PAVEMENT DELINEATION QUANTITIES

PDQ-1

STATE OF CALIFORNIA - DEPARTMENT OF TRANSPORTATION
Caltrans TRAFFIC DESIGN

FUNCTIONAL SUPERVISOR: W. E. WASSER
CALCULATED-DESIGNED BY: KEVIN NGUYEN
CHECKED BY: W. E. WASSER
REVISED BY
DATE REVISED

LAST REVISION 08-25-14
DATE PLOTTED => 22-AUG-2014
TIME PLOTTED => 13:26

Dist	COUNTY	ROUTE	POST MILES TOTAL PROJECT	SHEET No.	TOTAL SHEETS
08	SBd, Riv	60	R0.0/R4.6, R3.0/R6.9	31	100

W E Wasser 8-25-14
REGISTERED CIVIL ENGINEER DATE

8-25-14
PLANS APPROVAL DATE

REGISTERED PROFESSIONAL ENGINEER W. E. WASSER No. C37378 Exp. 6-30-16 CIVIL STATE OF CALIFORNIA

THE STATE OF CALIFORNIA OR ITS OFFICERS OR AGENTS SHALL NOT BE RESPONSIBLE FOR THE ACCURACY OR COMPLETENESS OF SCANNED COPIES OF THIS PLAN SHEET.

NOTES:

1. REPLACE IN-KIND EXISTING GUARDRAIL DELINATORS (MOUNTED ON WOODPOST) WITH DELINEATORS (CLASS 1) TYPE F.
2. RESET OBJECT MARKERS,TYPE L(CA), AT EXISTING MBGR.
3. PROTECT IN-PLACE ALL ROADSIDE SIGNS OR BRIDGE INVENTORY MARKERS AT REPLACED MBGR.
4. RESTRIPE ALL STRIPINGS ON MAINLINE ROUTE 60 IN RIVERSIDE COUNTY FROM PM R3.0 TO PM R6.9.

DELINEATOR (CLASS 1)	RESET OBJECT MARKER
TYPE F	TYPE L(CA)
EA	EA
52	10

PAVEMENT DELINEATION QUANTITIES

LOCATION	DIRECTION	DETAIL No./ MARKING DETAIL	REMOVE YELLOW THERMOPLASTIC TRAFFIC STRIPE (HAZARDOUS WASTE)	REMOVE THERMOPLASTIC TRAFFIC STRIPE	REMOVE PAVEMENT MARKERS	PAVEMENT MARKER (NON-REFLECTIVE)	PAVEMENT MARKER (RETROREFLECTIVE)			THERMOPLASTIC TRAFFIC STRIPE (SPRAYABLE)			PAVEMENT MARKING	REMARKS
						TYPE A	TYPE C	TYPE G	TYPE H	4" YELLOW	4" WHITE	8" WHITE		
			LF	LF	EA	EA	EA			LF			SQFT	
Riv COUNTY ROUTE 60 PM R3.0 TO PM R6.9	EB	13M		14472	6031	4824		1207			57888			MAIN LINE
		14M		972	406	324	82				3888			
		22	38580		1610				1610	19290				
		25	20592		430				430	20592				
		27B		19600							19600			
		37		568			8	152				2370		
		38B		900	40			40			19600	450		
		M-10		650	56			56				1300		
		4in WHITE		19290										
		8									300			ENTRANCE & EXIT RAMPS AT COUNTRY VILLAGE Rd
		9						3			105			
		25A							66	1570				
		27B									3005			
		38						41				965		
		TYPE I 24'-0" ARROW											31	
		TYPE II (R) ARROW											90	
		TYPE III (L) ARROW											168	
		CROSSWALK/LIMIT LINE											170	
		8									300			ENTRANCE & EXIT RAMPS AT PYRITE St
		25A							94	2230				
		27B									3745			
		38						42				980		
		"STOP"											44	
		"AHEAD"											31	
		TYPE I 24'-0" ARROW											31	
		TYPE V ARROW											132	
Riv COUNTY ROUTE 60 PM R3.0 TO PM R6.9	WB	13M		14472	6031	4824		1207			57888			MAIN LINE
		14M		972	406	324	82				3888			
		22	38580		1610				1610	19290				
		25	20592		430				430	20592				
		27B		19600							19600			
		M-10		650	56			56				1300		
		4in WHITE		19290										
		8									300			ENTRANCE & EXIT RAMPS AT COUNTRY VILLAGE Rd
		9						5			170			
		25A							69	1625				
		27B									3500			
		38						49				1140		
		TYPE I 24'-0" ARROW											31	
		TYPE II (L) ARROW											90	
		TYPE III (R) ARROW											84	
		"SIGNAL"											32	
		"AHEAD"											31	
		CROSSWALK/LIMIT LINE											160	
		8									300			ENTRANCE & EXIT RAMPS AT PYRITE St
		25A							87	2065				
		27B									3565			
		38						40				925		
		TYPE I 24'-0" ARROW											31	
		TYPE V ARROW											132	
		"STOP"											66	
		"AHEAD"											31	
		CROSSWALK/LIMIT LINE											45	
SUBTOTAL			118344	111436	17106	10296	172	2898	4396	87254	197642	9430	1430	
SHEET TOTAL			118344	111436	17106	10296		7466			294326		1430	
GRAND TOTAL			118344	111436	17106	11498		8162			366706		3129	

PAVEMENT DELINEATION QUANTITIES

PDQ-2

STATE OF CALIFORNIA - DEPARTMENT OF TRANSPORTATION
Caltrans TRAFFIC DESIGN

FUNCTIONAL SUPERVISOR: W. E. WASSER
CALCULATED-DESIGNED BY: KEVIN NGUYEN
CHECKED BY: W. E. WASSER
REVISED BY
DATE REVISED

LAST REVISION 08-25-14
DATE PLOTTED => 22-AUG-2014
TIME PLOTTED => 13:26

Dist	COUNTY	ROUTE	POST MILES TOTAL PROJECT	SHEET No.	TOTAL SHEETS
08	SBd, Riv	60	R0.0/R4.6, R3.0/R6.9	32	100

REGISTERED CIVIL ENGINEER 8-25-14 DATE

8-25-14
PLANS APPROVAL DATE

REGISTERED PROFESSIONAL ENGINEER HAO VAN HO No. C64720 Exp. 6-30-15 CIVIL STATE OF CALIFORNIA

THE STATE OF CALIFORNIA OR ITS OFFICERS OR AGENTS SHALL NOT BE RESPONSIBLE FOR THE ACCURACY OR COMPLETENESS OF SCANNED COPIES OF THIS PLAN SHEET.

NOTES:

1. POSTMILES ARE APPROXIMATE FOR EACH PCC PAVEMENT SLAB LOCATION.
2. EACH PCC PAVEMENT SLAB TO BE REPLACED SHALL BE DETERMINED BY THE ENGINEER.
3. QUANTITIES ARE BASED ON AVERAGE SLAB LENGTH OF 15.0′, WIDTH OF 12.0′, AND DEPTH OF 0.75′.
4. GRIND EXISTING CONCRETE PAVEMENT ON LANE 4 & HOV LANE WITHIN THE PROJECT LIMITS IN SAN BERNARDINO COUNTY PORTION.
5. GRIND THE INDIVIDUAL SLAB REPLACEMENT (RAPID STRENGTH CONCRETE) ON LANE 2, 3 & 4 WITHIN THE PROJECT LIMITS IN SAN BERNARDINO COUNTY PORTION.
6. GRIND EXISTING CONCRETE PAVEMENT AND THE INDIVIDUAL SLAB REPLACEMENT (RAPID STRENGTH CONCRETE) ON LANE 2,3 & 4 WITHIN THE PROJECT LIMITS IN RIVERSIDE COUNTY PORTION.

INDIVIDUAL SLAB REPLACEMENT WITH RAPID STRENGTH CONCRETE LOCATIONS AND QUANTITIES

ROUTE AND DIRECTION	LOCATION		NUMBER OF PCC SLAB					INDIVIDUAL SLAB REPLACEMENT (RSC)	DRILL AND BOND (DOWEL BAR)
	Beg PM	END PM	LANE 1	LANE 2	LANE 3	LANE 4	TOTAL	(CY)	(EA)
SBd-60 WESTBOUND	0.00	0.86		6	8	16	30	150	168
	0.86	1.17			7	13	20	100	80
	1.17	1.37		6	9	20	35	175	160
	1.37	1.59		11	15	28	52	260	248
	1.59	1.87	2	4	7	17	30	150	160
	1.87	2.17		5	11	29	45	225	216
	2.57	2.87			5	11	16	80	80
	2.87	3.42	2	3	5	14	24	120	128
	3.60	3.82		7	12		19	95	104
	3.82	4.10			2		8	40	32
	4.10	4.39			6	14	20	100	112
	4.39	4.58		2	2		4	20	32
	4.58	4.81		8	10	24	42	210	232
SBd-60 EASTBOUND	0.00	0.06		7	6	10	23	115	128
	0.06	0.40			3	7	10	50	48
	0.40	0.86			7	12	19	95	88
	0.86	1.15		7	11	22	40	200	192
	1.50	1.87			2	11	13	65	64
	2.17	2.55		4	7	18	29	145	136
	2.55	2.87			9	19	28	140	144
	2.87	3.40			14	26	40	200	184
	3.40	3.80			7	16	23	115	128
	3.80	4.10			3	9	12	60	56
	4.40	4.79			17	42	59	295	312
Riv-60 WESTBOUND	3.00	3.75		7	10	22	39	195	184
	3.75	4.00		2	4	7	13	65	72
	4.00	5.00		18	25	141	184	920	712
	5.00	5.57		7	13	34	54	270	280
	5.57	6.00		8	11	21	40	200	208
	6.00	6.31		4	6	14	24	120	144
	6.31	6.47		2	3	7	12	60	64
	6.47	6.93		6	9	22	37	185	192
Riv-60 EASTBOUND	3.00	3.75		10	14	40	64	320	304
	3.75	4.00		2	5	16	23	115	128
	6.10	6.30		55	55	55	165 *	825	632
							TOTAL	6480	6520 **

* REPLACE ALL THE CONCRETE SLABS UNDER THE AC OVERLAY AREA WEST OF CAMINO REAL UNDERCROSSING.
** FOR ADDITION QUANTITIES OF DRILL AND BOND (DOWEL BAR), SEE SHEET Q-7.

GRIND CONCRETE PAVEMENT QUANTITIES

COUNTY	DIRECTION	GRIND EXISTING CONCRETE PAVEMENT
		(SQYD)
SBd	WESTBOUND	75,200
	EASTBOUND	75,800
Riv	WESTBOUND	73,900
	EASTBOUND	76,500
TOTAL		301,400

SURVEY MONUMENT

COUNTY	DIRECTION	(TYPE D)
		EA
SBd	WESTBOUND	16
TOTAL		16

SUMMARY OF QUANTITIES

Q-1

STATE OF CALIFORNIA - DEPARTMENT OF TRANSPORTATION
Caltrans MAINTENANCE DESIGN
FUNCTIONAL SUPERVISOR MICHAEL P. RISTIC
CALCULATED-DESIGNED BY HAO VAN HO
CHECKED BY MICHAEL P. RISTIC
REVISED BY
DATE REVISED

LAST REVISION 08-25-14 DATE PLOTTED => 22-AUG-2014 TIME PLOTTED => 13:26

Dist	COUNTY	ROUTE	POST MILES TOTAL PROJECT	SHEET No.	TOTAL SHEETS
08	SBd, Riv	60	R0.0/R4.6, R3.0/R6.9	33	100

REGISTERED CIVIL ENGINEER 8-25-14 DATE

8-25-14
PLANS APPROVAL DATE

REGISTERED PROFESSIONAL ENGINEER YONGBEE LIAU No. C75571 Exp. 6-30-16 CIVIL STATE OF CALIFORNIA

THE STATE OF CALIFORNIA OR ITS OFFICERS OR AGENTS SHALL NOT BE RESPONSIBLE FOR THE ACCURACY OR COMPLETENESS OF SCANNED COPIES OF THIS PLAN SHEET.

RAMP TERMINI CONCRETE PAVEMENT QUANTITIES

RAMP LOCATION	ROADWAY EXCAVATION	LEAN Conc BASE	JOINTED PLAIN Conc Pvmt	JOINT SEAL (PREFORMED COMPRESSION)	BASE BOND BREAKER	ISOLATION JOINT SEAL (ASPHALT RUBBER)
	CY	CY	CY	LF	SQYD	LF
MOUNTAIN Ave EB EXIT RAMP	349.0	107.4	241.6	1100	805	165
MOUNTAIN Ave WB EXIT RAMP	233.3	71.8	161.5	515	538	175
SUBTOTAL	582.3 *	179.2	403.1	1615	1343	340

* QUANTITY IS TRANSFERED TO CURB RAMP QUANTITIES.

PAVEMENT OVERLAY QUANTITIES

LOCATION	PM	PM	RHMA-G	COLD PLANE	SLURRY SEAL (TYPE II)	TACK COAT
	FROM	TO	(TON)	(SQYD)	(TON)	(TON)
Rte 60 SAN BERNARDINO COUNTY						
EB INSIDE Shld	0.0	4.6	2541	24288		6.7
EB OUTSIDE Shld	0.0	4.6	2823	26987		7.4
WB INSIDE Shld	0.0	4.6	2541	24288		6.7
WB OUTSIDE Shld	0.0	4.6	2823	26987		7.4
EB MOUNTAIN AVENUE EXIT RAMP			420	4019		1.1
EB MOUNTAIN AVENUE ENTRANCE RAMP			410	3914		1.1
WB MOUNTAIN AVENUE EXIT RAMP			452	4317		1.2
WB MOUNTAIN AVENUE ENTRANCE RAMP			436	4164		1.1
EB EUCLID AVENUE EXIT RAMP			557	5322		1.5
WB EUCLID AVENUE ENTRANCE RAMP			436	4169		1.1
Rte 60 RIVERSIDE COUNTY						
EB OUTSIDE Shld	3.0	6.9			206	
WB OUTSIDE Shld	3.0	6.9			206	
EB COUNTRY VILLAGE Rd ENTRANCE RAMP			328	3136		0.9
WB COUNTRY VILLAGE Rd EXIT RAMP			396	3786		1.0
EB PYRITE St EXIT RAMP			406	3881		1.1
EB PYRITE St ENTRANCE RAMP			406	3885		1.1
WB PYRITE St EXIT RAMP			382	3653		1.0
WB PYRITE St ENTRANCE RAMP			444	4246		1.2
TOTAL			15801	151042	412	41.6

TREATED WOOD WASTE

LB
47,000

CURB RAMP QUANTITIES

DETAIL	DESCRIPTION	(N) CURB RAMP CASE	ROAD EXCAVATION	REMOVE CONCRETE SIDEWALK	REMOVE CONCRETE CURB AND GUTTER	MINOR CONCRETE (MISCELANEOUS CONSTRUCTION)	DETECTABLE WARNING SURFACE
			(CY)	(SQYD)	(LF)	(CY)	(SQYD)
A	DETECTABLE WARNING SURFACE	F	-	-	-	-	15
B	CURB, CURB RAMP, AND SIDEWALK	F	1.2	31.0	105.0	10.0	30
C	CURB, CURB RAMP, AND SIDEWALK	F	3.0	44.0	97.0	18.5	27
D	CURB, CURB RAMP, AND SIDEWALK	F	1.0	12.0	24.0	5.0	15
E	DETECTABLE WARNING SURFACE	F	-	-	-	-	15
F	CURB, CURB RAMP, AND SIDEWALK	F	3.0	24.0	112.0	13	36
G	CURB, CURB RAMP, AND SIDEWALK	F	0.4	44.0	104.0	18	30
H	CURB, CURB RAMP, AND SIDEWALK	F	0.8	15.0	28.0	5.5	22
	CURB AND GUTTER FROM SHEETS C-3 & C-4	-	-	-	-	13.6	-
*	ROADWAY EXCAVATION TRANSFERED FROM RAMP TERMINI CONCRETE PAVEMENT QUANTITIES	-	582.3	-	-	-	-
TOTAL			591.7	170.0	470.0	83.6	190

(N) - NOT A SEPARATE PAY ITEM, FOR INFORMATION ONLY.

SUMMARY OF QUANTITIES

Q-2

STATE OF CALIFORNIA - DEPARTMENT OF TRANSPORTATION
Caltrans® MAINTENANCE DESIGN

FUNCTIONAL SUPERVISOR: MICHAEL P. RISTIC
CALCULATED-DESIGNED BY: YONGBEE LIAU
CHECKED BY: MICHAEL P. RISTIC
REVISED BY
DATE REVISED

LAST REVISION 08-25-14
DATE PLOTTED => 22-AUG-2014
TIME PLOTTED => 13:26

Dist	COUNTY	ROUTE	POST MILES TOTAL PROJECT	SHEET No.	TOTAL SHEETS
08	SBd, Riv	60	R0.0/R4.6, R3.0/R6.9	34	100

REGISTERED CIVIL ENGINEER 8-25-14 DATE

8-25-14
PLANS APPROVAL DATE

REGISTERED PROFESSIONAL ENGINEER YONGBEE LIAU No. C75571 Exp. 6-30-16 CIVIL STATE OF CALIFORNIA

THE STATE OF CALIFORNIA OR ITS OFFICERS OR AGENTS SHALL NOT BE RESPONSIBLE FOR THE ACCURACY OR COMPLETENESS OF SCANNED COPIES OF THIS PLAN SHEET.

METAL BEAM GUARD RAILING AND AC DIKE QUANTITIES

LOCATION	POST MILE		MGS LAYOUT TYPE (N)	REMOVE GUARDRAIL	MGS (STEEL POST)	Trans RAILING (TYPE WB-31)	Trans Railing Conn Det (N)	DRILL AND BOND (DOWEL)	REMOVE Conc	MINOR Conc (MINOR Str)	BURIED POST END ANCHOR (N)	END ANCHOR Assy (TYPE SFT)	VEGETATION CONTROL (MINOR Conc)	END CAP (TYPE A)	Alt FLARED TERMINAL SYSTEM	Alt IN-LINE TERMINAL SYSTEM	REMOVE AC DIKE	PLACE HMA DIKE TYPE A	PLACE HMA DIKE TYPE C	PLACE HMA DIKE TYPE D	PLACE HMA DIKE TYPE E	PLACE HMA DIKE TYPE F	PLACE AC (Misc AREA)	ROADWAY EXCAVATION (TYPE Z-2) (AERIALLY DEPOSITED LEAD)	EMBANKMENT	HMA (TYPE A)
	FROM	TO	--	LF	LF	EA	--	EA	CY	CY	EA	EA	SQYD	EA	EA	EA	LF	LF	LF	LF	LF	LF	SQYD	CY	CY	TON
SAN BERNARDINO COUNTY	**Rte 60 EB Rt**																									
	0.0	0.031															164				164					4.45
	COUNTY LINE	(JOIN Exist CURB & GUTTER)																								
							(Exist Br																			
SAN ANTONIO Cr OH	(DEPARTURE)						RAILING)							1												
	0.100	0.287	12D	987.5	962.5	1	Exist						255.7									988				13.64
EAST END Ave UC		(APPROACH)					(APPROACH)																			
EAST END Ave UC	(DEPARTURE)						(Exist Br																			
	0.326	0.411	12D	450.0	425.0	1	RAILING)						116.5	1			450					450				6.21
CHINO SPUR OH		(APPROACH)					Exist																			
							(APPROACH)																			
CHINO SPUR OH	(DEPARTURE)						(Exist Br							1												
	0.450	0.477	12D	145.0	117.5	1	RAILING)						37.5				145					145				2.00
Beg Sound Wall		(SW APPROACH)					SW1	10	0.65	2.11																
							(APPROACH)																			
End Sound Wall	(SW DEPARTURE)																									
	0.692	0.850															834				834			42.0	18.9	22.69
PIPELINE Ave OC		(EDGE OF Conc SLOPE PAVING)																								
PIPELINE Ave OC	(EDGE OF Conc SLOPE PAVING)																									
	0.861	1.152															1,537				1,537			77.4	34.7	41.80
RAMONA EXIT RAMP GORE		EXIT RAMP @ NOSE																								
W OF RAMONA Ave OC																										
	1.275	1.489															1,130				1,130			56.9	25.5	30.74
RAMONA ENTRANCE RAMP GORE		(ML @ NOSE)																								
RAMONA ENTRANCE RAMP GORE																										
	1.489	1.859															1,954				1,954			98.5	44.2	53.14
MONTE VISTA Ave OC		(EDGE OF Conc SLOPE PAVING)																								
MONTE VISTA Ave OC	(EDGE OF Conc SLOPE PAVING)																									
	1.872	2.172															1,584				1,584			79.8	35.8	43.09
		EXIT RAMP @ NOSE																								
	2.262	2.357															502				502			25.3	11.3	13.64
CENTRAL Ave OC		(EDGE OF Conc SLOPE PAVING)																								
CENTRAL Ave OC	(EDGE OF Conc SLOPE PAVING)																									
	2.374	2.449															396				396			20.0	8.9	10.77
	(ENTRANCE RAMP @ NOSE)																									
	2.541	2.860															1,684				1,684			84.9	38.1	45.82
BENSON Ave OC		(EDGE OF Conc SLOPE PAVING)																								
		SHEET SUBTOTAL		1582.5	1505.0	3		10	0.65	2.11			409.7	3			10380				9785	1583		484.8	217.4	277.99

(N) - NOT A SEPARATE PAY ITEM, FOR INFORMATION ONLY.

SUMMARY OF QUANTITIES

Q-3

REVISED BY | DATE REVISED
YONGBEE LIAU | MICHAEL P. RISTIC
CALCULATED-DESIGNED BY | CHECKED BY
FUNCTIONAL SUPERVISOR: MICHAEL P. RISTIC
STATE OF CALIFORNIA - DEPARTMENT OF TRANSPORTATION
Caltrans® MAINTENANCE DESIGN

LAST REVISION 08-25-14 | DATE PLOTTED => 22-AUG-2014 | TIME PLOTTED => 13:26

Dist	COUNTY	ROUTE	POST MILES TOTAL PROJECT	SHEET No.	TOTAL SHEETS
08	SBd, Riv	60	R0.0/R4.6, R3.0/R6.9	35	100

REGISTERED CIVIL ENGINEER 8-25-14 DATE

8-25-14
PLANS APPROVAL DATE

REGISTERED PROFESSIONAL ENGINEER YONGBEE LIAU No. C75571 Exp. 6-30-16 CIVIL STATE OF CALIFORNIA

THE STATE OF CALIFORNIA OR ITS OFFICERS OR AGENTS SHALL NOT BE RESPONSIBLE FOR THE ACCURACY OR COMPLETENESS OF SCANNED COPIES OF THIS PLAN SHEET.

METAL BEAM GUARD RAILING AND AC DIKE QUANTITIES

LOCATION	POST MILE FROM	POST MILE TO	(N) MGS LAYOUT TYPE	REMOVE GUARDRAIL	MGS (STEEL POST)	Trans RAILING (TYPE WB-31)	(N) Trans Railing Conn Det	DRILL AND BOND (DOWEL)	REMOVE Conc	MINOR Conc (MINOR Str)	(N) BURIED POST END ANCHOR	END ANCHOR Assy (TYPE SFT)	VEGETATION CONTROL (MINOR Conc)	END CAP (TYPE A)	Alt FLARED TERMINAL SYSTEM	Alt IN-LINE TERMINAL SYSTEM	REMOVE AC DIKE	PLACE HMA DIKE TYPE A	PLACE HMA DIKE TYPE C	PLACE HMA DIKE TYPE D	PLACE HMA DIKE TYPE E	PLACE HMA DIKE TYPE F	PLACE AC (Misc AREA)	ROADWAY EXCAVATION (TYPE Z-2) (AERIALLY DEPOSITED LEAD)	EMBANKMENT	HMA (TYPE A)
			--	LF	LF	EA	--	EA	CY	CY	EA	EA	SQYD	EA	EA	EA	LF	LF	LF	LF	LF	LF	SQYD	CY	CY	TON
BENSON Ave OC	(EDGE OF Conc SLOPE PAVING)																									
	2.872	3.242	12B	62.5		1	SW1	10	0.65	2.11			16.2		1		1,954		62.5		1,891	25		95.3	42.7	52.28
		(SW APPROACH)																								
MOUNTAIN Ave EXIT RAMP GORE	(ML @ NOSE)																									
	3.404	3.598	12B	62.5		1	(Exist)						16.2		1		1,024		62.5	937		25	5.0			59.15
MOUNTAIN Ave UC		(APPROACH)																								
MOUNTAIN Ave UC	(DEPARTURE)																									
	3.635	3.802	16A	87.5	37.5							1	38.9			1	797			797						48.85
MOUNTAIN Ave ENTRANCE RAMP GORE		(ML @ NOSE)	(@MVP)																							
MOUNTAIN Ave ENTRANCE RAMP GORE	(ML @ NOSE)																									
	4.390	4.554	12B	62.5		1	(Exist)						16.2		1		866		62.5	778		25				48.57
EUCLID Ave UC		(APPROACH)																								
SAN BERNARDINO COUNTY	**Rte 60 WB Rt**																									
	COUNTY LINE																									
	0.000	0.049															259				259					7.04
RESERVOIR St EXIT RAMP GORE		(ML @ NOSE)																								
	(SW APPROACH)																									
	0.647	0.856	12A	75		1	SW1	10	0.65	2.11			25.0			1	1,104		75		1,004	25		50.6	22.7	28.24
PIPELINE Ave OC		(EDGE OF Conc SLOPE PAVING)																								
PIPELINE Ave OC	(EDGE OF Conc SLOPE PAVING)																									
	0.865	1.194															1,737				1,737			87.5	39.3	47.25
		(ENTRANCE RAMP @ NOSE)																								
	1.284	1.358															391				391			19.7	8.8	10.63
RAMONA Ave OC		(EDGE OF Conc SLOPE PAVING)																								
RAMONA Ave OC	(EDGE OF Conc SLOPE PAVING)																									
	1.371	1.462															481				481			24.2	10.9	13.07
RAMONA Ave EXIT RAMP GORE	(EXIT RAMP @ NOSE)																									
	1.582	1.859															1,463				1,463			73.7	33.1	39.79
MONTE VISTA Ave OC		(EDGE OF Conc SLOPE PAVING)																								
MONTE VISTA Ave OC	(EDGE OF Conc SLOPE PAVING)																									
	1.871	2.162															1,537				1,537			77.4	34.7	41.80
CENTRAL Ave ENTRANCE RAMP GORE		(ENTRANCE RAMP @ NOSE)																								
		SHEET SUBTOTAL		350.0	37.5	4		20	1.3	4.22		1	112.5		3	2	11613		262.5	2512	8763	100	5.0	428.4	192.2	396.67

(N) - NOT A SEPARATE PAY ITEM, FOR INFORMATION ONLY.

SUMMARY OF QUANTITIES

Q-4

REVISED BY | DATE REVISED

YONGBEE LIAU | MICHAEL P. RISTIC

CALCULATED-DESIGNED BY | CHECKED BY

FUNCTIONAL SUPERVISOR: MICHAEL P. RISTIC

STATE OF CALIFORNIA - DEPARTMENT OF TRANSPORTATION
Caltrans® MAINTENANCE DESIGN

LAST REVISION 08-25-14 | DATE PLOTTED => 22-AUG-2014 TIME PLOTTED => 13:26

Dist	COUNTY	ROUTE	POST MILES TOTAL PROJECT	SHEET No.	TOTAL SHEETS
08	SBd, Riv	60	R0.0/R4.6, R3.0/R6.9	36	100

REGISTERED CIVIL ENGINEER 8-25-14 DATE

8-25-14
PLANS APPROVAL DATE

REGISTERED PROFESSIONAL ENGINEER YONGBEE LIAU No. C75571 Exp. 6-30-16 CIVIL STATE OF CALIFORNIA

THE STATE OF CALIFORNIA OR ITS OFFICERS OR AGENTS SHALL NOT BE RESPONSIBLE FOR THE ACCURACY OR COMPLETENESS OF SCANNED COPIES OF THIS PLAN SHEET.

METAL BEAM GUARD RAILING AND AC DIKE QUANTITIES

LOCATION	POST MILE FROM	POST MILE TO	(N) MGS LAYOUT TYPE	REMOVE GUARDRAIL	MGS (STEEL POST)	Trans RAILING (TYPE WB-31)	(N) Trans Railing Conn Det	DRILL AND BOND (DOWEL)	REMOVE Conc	MINOR Conc (MINOR Str)	(N) BURIED POST END ANCHOR	END ANCHOR Assy (TYPE SFT)	VEGETATION CONTROL (MINOR Conc)	END CAP (TYPE A)	Alt FLARED TERMINAL SYSTEM	Alt IN-LINE TERMINAL SYSTEM	REMOVE AC DIKE	PLACE HMA DIKE TYPE A	PLACE HMA DIKE TYPE C	PLACE HMA DIKE TYPE D	PLACE HMA DIKE TYPE E	PLACE HMA DIKE TYPE F	PLACE AC (Misc AREA)	ROADWAY EXCAVATION (TYPE Z-2) (AERIALLY DEPOSITED LEAD)	EMBANKMENT	HMA (TYPE A)
			--	LF	LF	EA	--	EA	CY	CY	EA	EA	SQYD	EA	EA	EA	LF	LF	LF	LF	LF	LF	SQYD	CY	CY	TON
CENTRAL Ave ENTRANCE RAMP GORE	(ML @ NOSE)																									
	2.162	2.205															227				227					6.17
	2.205	2.357															803				803			40.5	18.1	21.83
CENTRAL Ave OC		(EDGE OF Conc SLOPE PAVING)																								
CENTRAL Ave OC	(EDGE OF Conc SLOPE PAVING)																									
	2.373	2.448															396				396			20.0	8.9	10.77
CENTRAL Ave EXIT RAMP GORE	(EXIT RAMP @ NOSE)																									
	2.568	2.691															649				649			32.7	14.7	17.67
(cctv CABINET/POLE)																										
(cctv CABINET/POLE)																										
	2.691	2.859	16C	87.5	87.5						1	1	29.2				887				887			44.7	20.0	24.13
BENSON Ave OC		(EDGE OF Conc SLOPE PAVING)	(PM 2.691)																							
			(CCTV)																							
BENSON Ave OC	(EDGE OF Conc SLOPE PAVING)																									
	2.871	3.290	16C	87.5	87.5						1	1	29.2				2,212				2,212			111.5	50.0	60.18
		(End CUT SLOPE)	(PM 3.004)																							
			(CCTV)																							
MOUNTAIN Ave ENTRANCE RAMP GORE	(ML @ NOSE)																									
	3.424	3.535															586			586						35.93
		(Beg SOUND WALL)																								
	(SW APPROACH)																									
	3.782	3.818	(Exist MGS IN GORE AREA TO REMAIN)																							
MOUNTAIN Ave EXIT RAMP GORE		(ML @ NOSE)																								
SAN BERNARDINO COUNTY	**Rte 60 WB Rt**																									
EUCLID Ave ENTRANCE RAMP GORE	(ML @ NOSE)																									
	4.391	4.552															850				850					23.12
EUCLID Ave UC		(DEPARTURE)																								
RESERVOIR St Rte 60 EB ENTRANCE RAMP																										
Rt	COUNTY LINE	SAN ANTONIO Cr OH	12A	287.5	212.5	1	TR1	8	0.65	0.80			74.4			1	313		75			238				3.88
		(APPROACH)																								
	0.000	0.050																								
RAMONA Ave Rte 60 EB ENTRANCE RAMP																										
Rt	1.387	1.401	16B	75	37.5							1	29.2		1											
MOUNTAIN Ave Rte 60 EB ENTRANCE RAMP																										
Rt	3.633	3.674	12B	62.5		1	SW1	10		2.11			20.8		1		217		62.5		129	25			4.3	4.35
	(ECR)	(SW APPROACH)																								
		SHEET SUBTOTAL		600.0	425.0	2		18	0.65	2.91		3	182.8		2	1	7140		137.5	586	6153	263		249.4	116.0	208.03

(N) - NOT A SEPARATE PAY ITEM, FOR INFORMATION ONLY.

SUMMARY OF QUANTITIES

Q-5

STATE OF CALIFORNIA - DEPARTMENT OF TRANSPORTATION
Caltrans® MAINTENANCE DESIGN

FUNCTIONAL SUPERVISOR: MICHAEL P. RISTIC
CALCULATED-DESIGNED BY: YONGBEE LIAU
CHECKED BY: MICHAEL P. RISTIC
REVISED BY / DATE REVISED

LAST REVISION 08-25-14
DATE PLOTTED => 22-AUG-2014
TIME PLOTTED => 13:26

Dist	COUNTY	ROUTE	POST MILES TOTAL PROJECT	SHEET No.	TOTAL SHEETS
08	SBd, Riv	60	R0.0/R4.6, R3.0/R6.9	37	100

REGISTERED CIVIL ENGINEER 8-25-14 DATE

8-25-14
PLANS APPROVAL DATE

REGISTERED PROFESSIONAL ENGINEER YONGBEE LIAU No. C75571 Exp. 6-30-16 CIVIL STATE OF CALIFORNIA

THE STATE OF CALIFORNIA OR ITS OFFICERS OR AGENTS SHALL NOT BE RESPONSIBLE FOR THE ACCURACY OR COMPLETENESS OF SCANNED COPIES OF THIS PLAN SHEET.

METAL BEAM GUARD RAILING AND AC DIKE QUANTITIES

LOCATION	POST MILE		(N) MGS LAYOUT TYPE	REMOVE GUARDRAIL	MGS (STEEL POST)	Trans RAILING (TYPE WB-31)	(N) Trans Railing Conn Det	DRILL AND BOND (DOWEL)	REMOVE Conc	MINOR Conc (MINOR Str)	(N) BURIED POST END ANCHOR	END ANCHOR Assy (TYPE SFT)	VEGETATION CONTROL (MINOR Conc)	END CAP (TYPE A)	Alt FLARED TERMINAL SYSTEM	Alt IN-LINE TERMINAL SYSTEM	REMOVE AC DIKE	PLACE HMA DIKE					PLACE AC (Misc AREA)	ROADWAY EXCAVATION (TYPE Z-2) (AERIALLY DEPOSITED LEAD)	EMBANKMENT	HMA (TYPE A)
																		TYPE A	TYPE C	TYPE D	TYPE E	TYPE F				
	FROM	TO	--	LF	LF	EA	--	EA	CY	CY	EA	EA	SQYD	EA	EA	EA	LF	LF	LF	LF	LF	LF	SQYD	CY	CY	TON
MOUNTAIN Ave Rte 60 WB EXIT RAMP																										
Lt	3.626	3.645																Note per C-sheet use PCC curb								
Rt	3.632	3.659															35	35								0.99
	(BCR)	(SW DEPARTURE)																								
MOUNTAIN Ave Rte 60 WB ENTRANCE RAMP																										
Lt	3.588	3.606															95				95				3.2	2.58
	(BCR)																									
Rt	3.497	3.599	12B	62.5		1	SW1	10		2.11			20.8		1		539		62.5		451	25			15.2	13.11
	(ECR)	(SW APPROACH)																								
EUCLID Ave Rte 60 WB ENTRANCE RAMP																										
	(SW APPROACH)																									
	4.445	4.459	12A	75		1	SW1	10		2.11			19.4			1	100		75			25				0.94
RIVERSIDE COUNTY	**Rte 60 EB Rt**																									
	4.845	4.857	12B	62.5		1	SW1	10		2.11			34.7		1											
		(SW APPROACH)																								
	5.223	5.235	12B	62.5		1	SW1	10		2.11			69.4		1											
		(SW APPROACH)																								
	5.436	5.574	12B	62.5		1	(Exist)						16.2		1		88		63			25				0.85
(VALLEY WAY EXIT 48	(EXIT 48)																									
(OH SIGN)	6.006	6.020	16B	75.0	37.5							1	41.7		1											
	6.105	6.119	12A	75.0		1	SW1	10		2.11			83.3			1										
		(SW APPROACH)																								
RIVERSIDE COUNTY	**Rte 60 WB Rt**																									
W OF	(SW APPROACH)																									
PEDLEY Rd ENTRANCE RAMP	4.273	4.285	12B	62.5		1	SW1	10		2.11			55.6		1											
PYRITE St ENTRANCE RAMP GORE	(End GORE Misc PAVING)																									
	5.456	5.571															607				607					16.52
PYRITE St UC		(DEPARTURE)																								
		SHEET TOTAL		537.5	37.5	7		60		12.66		1	341.1		6	2	1464	35	200.5		1153	75			18.4	34.99

(N) - NOT A SEPARATE PAY ITEM, FOR INFORMATION ONLY.

SUMMARY OF QUANTITIES

Q-6

REVISED BY | DATE REVISED

YONGBEE LIAU | MICHAEL P. RISTIC

CALCULATED-DESIGNED BY | CHECKED BY

FUNCTIONAL SUPERVISOR: MICHAEL P. RISTIC

STATE OF CALIFORNIA - DEPARTMENT OF TRANSPORTATION

Caltrans® MAINTENANCE DESIGN

LAST REVISION 08-25-14 | DATE PLOTTED => 22-AUG-2014 | TIME PLOTTED => 13:26

Dist	COUNTY	ROUTE	POST MILES TOTAL PROJECT	SHEET No.	TOTAL SHEETS
08	SBd, Riv	60	R0.0/R4.6, R3.0/R6.9	38	100

REGISTERED CIVIL ENGINEER 8-25-14 DATE

8-25-14
PLANS APPROVAL DATE

REGISTERED PROFESSIONAL ENGINEER YONGBEE LIAU No. C75571 Exp. 6-30-16 CIVIL STATE OF CALIFORNIA

THE STATE OF CALIFORNIA OR ITS OFFICERS OR AGENTS SHALL NOT BE RESPONSIBLE FOR THE ACCURACY OR COMPLETENESS OF SCANNED COPIES OF THIS PLAN SHEET.

METAL BEAM GUARD RAILING AND AC DIKE QUANTITIES

LOCATION	POST MILE		(N) MGS LAYOUT TYPE	REMOVE GUARDRAIL	MGS (STEEL POST)	Trans RAILING (TYPE WB-31)	(N) Trans Railing Conn Det	DRILL AND BOND (DOWEL)	REMOVE Conc	MINOR Conc (MINOR Str)	(N) BURIED POST END ANCHOR	END ANCHOR Assy(TYPE SFT)	VEGETATION CONTROL (MINOR Conc)	END CAP (TYPE A)	Alt FLARED TERMINAL SYSTEM	Alt IN-LINE TERMINAL SYSTEM	REMOVE AC DIKE	PLACE HMA DIKE					PLACE AC (Misc AREA)	ROADWAY EXCAVATION (TYPE Z-2) (AERIALLY DEPOSITED LEAD)	EMBANKMENT	HMA (TYPE A)
																		TYPE A	TYPE C	TYPE D	TYPE E	TYPE F				
	FROM	TO	--	LF	LF	EA	--	EA	CY	CY	EA	EA	SQYD	EA	EA	EA	LF	LF	LF	LF	LF	LF	SQYD	CY	CY	TON
PYRITE St UC	(APPROACH)																									
	5.612	5.629	12B	62.5		1	(Exist)						27.8		1											
E OF																										
PYRITE St UC	5.629	5.755															665				665					18.10
		(Beg GORE Misc PAVING)																								
	(Beg GORE Misc PAVING)																									
	5.755	5.803															253	253								7.16
PYRITE St EXIT RAMP GORE		(ML @ NOSE)																								
PYRITE St EXIT RAMP GORE	(EXIT RAMP @ NOSE)																									
	5.803	5.814															58				58					1.58
W OF	(ELECT CABINET)																									
PYRITE St EXIT RAMP	6.119	6.133	16B	75.0	37.5							1	83.3		1											
E OF	(SW APPROACH)																									
CAMINO REAL UC	6.354	6.366	12B	62.5		1	SW1	10		2.11			20.8		1		88		63			25				0.85
		SHEET TOTAL		200.0	37.5	2		10		2.11		1	131.9		3		1064	253	63.0		723	25				27.69
		GRAND TOTAL		3270.0	2042.5	18		118	2.6	24.01		6	1178.0	3	14	5	31661	288	663.5	3098	26577	2046	5	1162.6	544.0	955.38

(N) - NOT A SEPARATE PAY ITEM, FOR INFORMATION ONLY.

SUMMARY OF QUANTITIES

Q-7

REVISED BY | DATE REVISED

YONGBEE LIAU | MICHAEL P. RISTIC

CALCULATED-DESIGNED BY | CHECKED BY

FUNCTIONAL SUPERVISOR: MICHAEL P. RISTIC

STATE OF CALIFORNIA - DEPARTMENT OF TRANSPORTATION

Caltrans® MAINTENANCE DESIGN

LAST REVISION 08-25-14 | DATE PLOTTED => 22-AUG-2014 | TIME PLOTTED => 13:26

Dist	COUNTY	ROUTE	POST MILES TOTAL PROJECT	SHEET No.	TOTAL SHEETS
08	SBd, Riv	60	R0.0/R4.6, R3.0/R6.9	39	100

REGISTERED ELECTRICAL ENGINEER 8-25-14 DATE

8-25-14
PLANS APPROVAL DATE

REGISTERED PROFESSIONAL ENGINEER FERDINAND DE LA CRUZ No. E 17215 Exp. 6-30-16 ELECTRICAL STATE OF CALIFORNIA

THE STATE OF CALIFORNIA OR ITS OFFICERS OR AGENTS SHALL NOT BE RESPONSIBLE FOR THE ACCURACY OR COMPLETENESS OF SCANNED COPIES OF THIS PLAN SHEET.

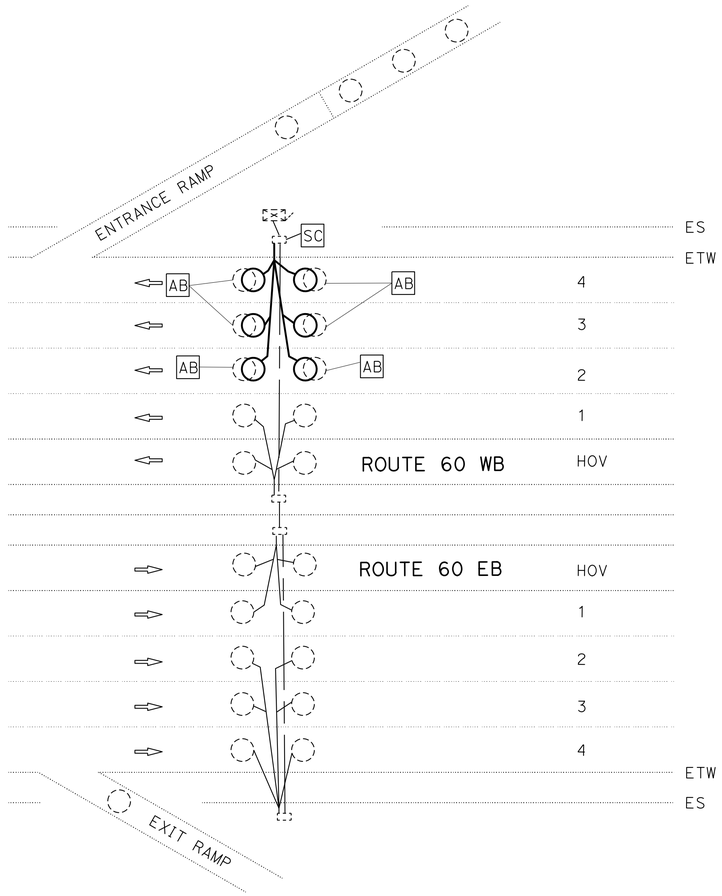

LOCATIONS 1-3

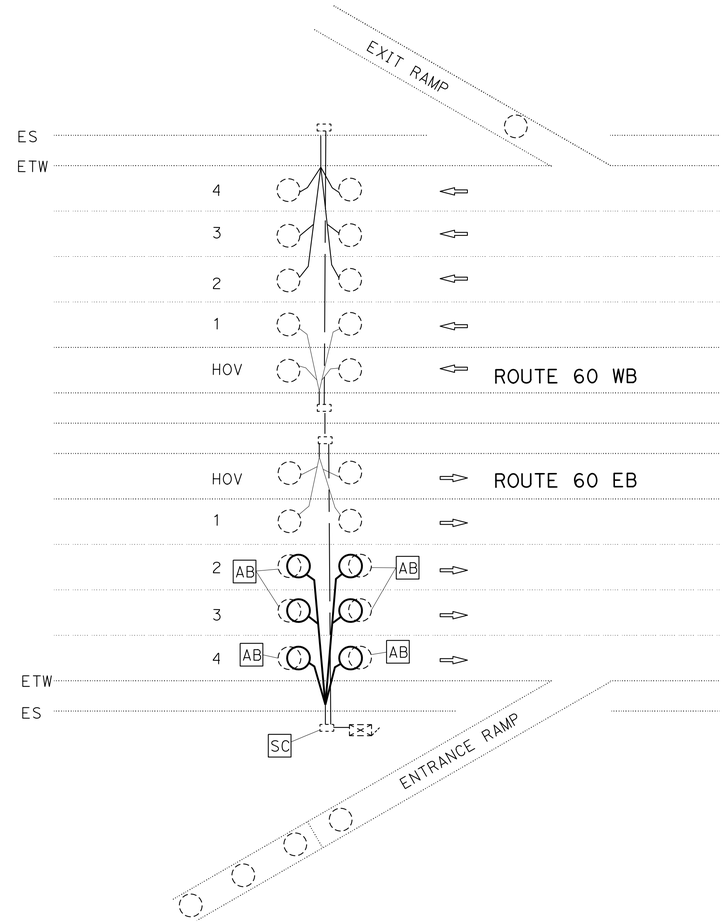

LOCATION 4

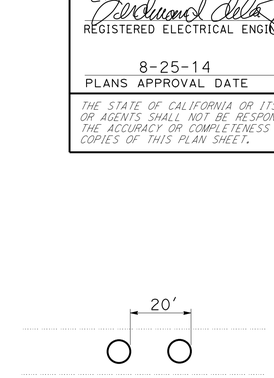

TYPICAL MAIN LINE LOOP DETECTOR SPACING

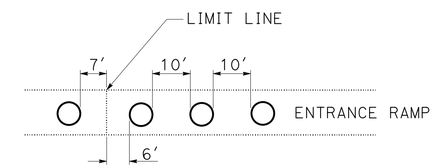

TYPICAL ENTRANCE RAMP LOOP DETECTOR SPACING FOR RAMP LOOPS

SAN BERNARDINO COUNTY ROUTE 60 WB

Loc	DESCRIPTION	PM	LOOP DETECTOR LOCATION	SYSTEM	LANE NUMBER	NOTE	LOOP TOTAL
1	Rte 60 AT RAMONA Ave	1.17	WESTBOUND	RAMP METERING	2, 3, 4	FOR COMPLETE CIRCUIT SEE RESIDENT ENGINEER FILE FOR AS-BUILT 450001 E-6.	6
2	Rte 60 AT CENTRAL Ave	2.17	WESTBOUND	RAMP METERING	2, 3, 4	FOR COMPLETE CIRCUIT SEE RESIDENT ENGINEER FILE FOR AS-BUILT 450001 E-10.	6
3	Rte 60 AT MOUNTAIN Ave	3.42	WESTBOUND	RAMP METERING	2, 3, 4	FOR COMPLETE CIRCUIT SEE RESIDENT ENGINEER FILE FOR AS-BUILT 450001 E-15.	6
						TOTAL	18

SAN BERNARDINO COUNTY ROUTE 60 EB

Loc	DESCRIPTION	PM	LOOP DETECTOR LOCATION	SYSTEM	LANE NUMBER	NOTE	LOOP TOTAL
4	Rte 60 AT CENTRAL Ave	2.55	EASTBOUND	RAMP METERING	2, 3, 4	FOR COMPLETE CIRCUIT SEE RESIDENT ENGINEER FILE FOR AS-BUILT 450001 E-12A.	6
						TOTAL	6

(RAMP METERING SYSTEM)

INDUCTIVE LOOP DETECTOR

NO SCALE

E-1

APPROVED FOR ELECTRICAL WORK ONLY

REVISED BY | DATE REVISED
LUIS PENALOZA | FERDINAND DE LA CRUZ
CALCULATED-DESIGNED BY | CHECKED BY
FUNCTIONAL SUPERVISOR | FERDINAND DE LA CRUZ

STATE OF CALIFORNIA - DEPARTMENT OF TRANSPORTATION
Caltrans® ELECTRICAL DESIGN B

LAST REVISION 08-25-14 | DATE PLOTTED => 22-AUG-2014 | TIME PLOTTED => 13:27

Dist	COUNTY	ROUTE	POST MILES TOTAL PROJECT	SHEET No.	TOTAL SHEETS
08	SBd, Riv	60	R0.0/R4.6, R3.0/R6.9	40	100

REGISTERED ELECTRICAL ENGINEER 8-25-14 DATE

8-25-14
PLANS APPROVAL DATE

REGISTERED PROFESSIONAL ENGINEER FERDINAND DE LA CRUZ No. E 17215 Exp. 6-30-16 ELECTRICAL STATE OF CALIFORNIA

THE STATE OF CALIFORNIA OR ITS OFFICERS OR AGENTS SHALL NOT BE RESPONSIBLE FOR THE ACCURACY OR COMPLETENESS OF SCANNED COPIES OF THIS PLAN SHEET.

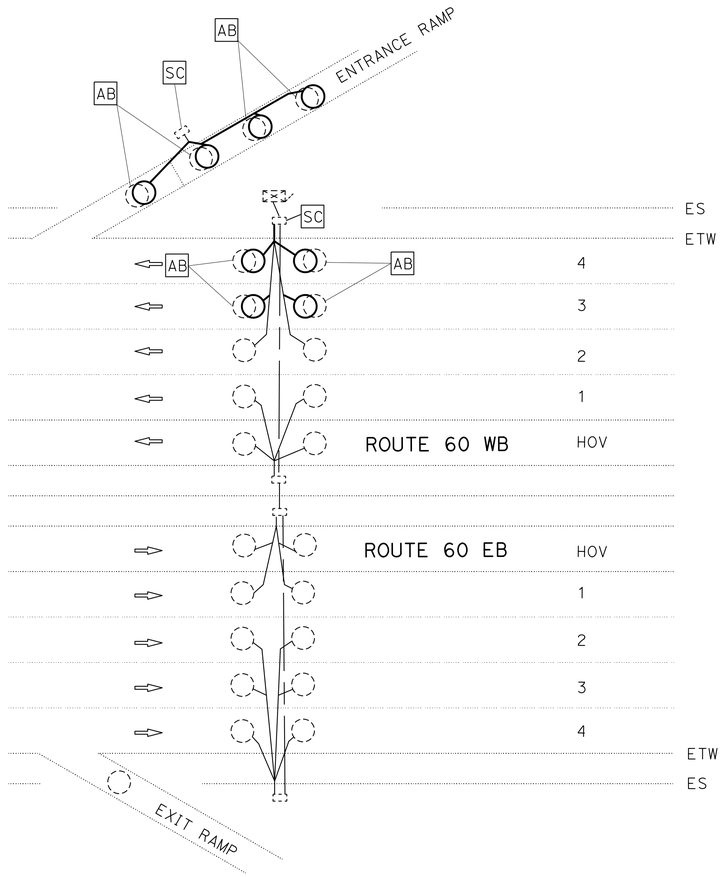

LOCATION 5

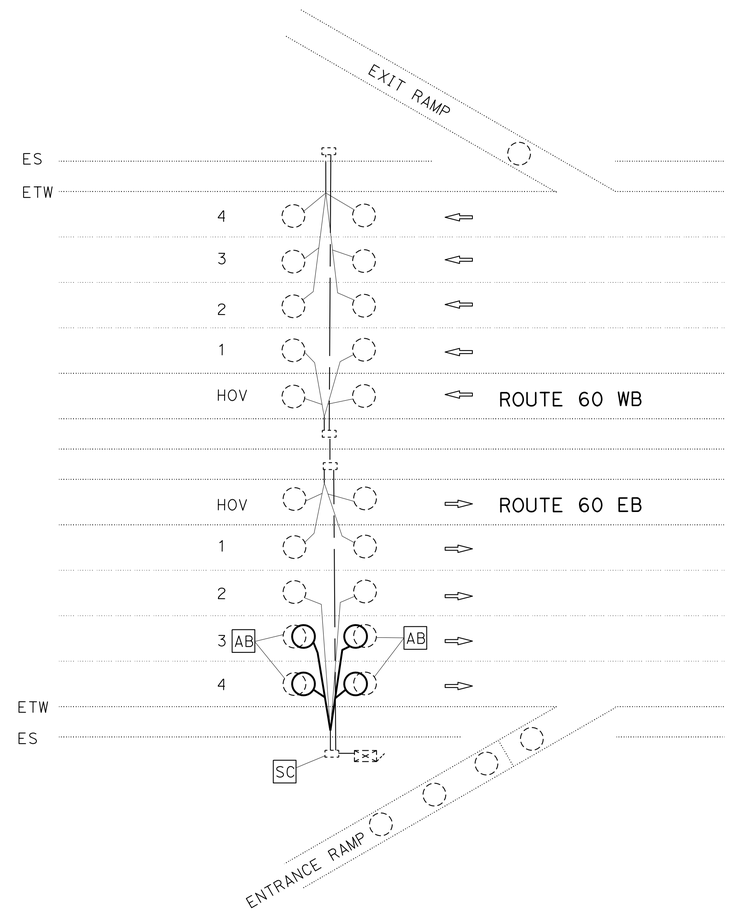

LOCATION 6

SAN BERNARDINO COUNTY ROUTE 60 WB

Loc	DESCRIPTION	PM	LOOP DETECTOR LOCATION	SYSTEM	LANE NUMBER	NOTE	LOOP TOTAL
5	Rte 60 AT EUCLID Ave	4.39	WESTBOUND	RAMP METERING	3, 4	FOR COMPLETE CIRCUIT SEE RESIDENT ENGINEER FILE FOR AS-BUILT 450001 E-19.	8
						TOTAL	8

SAN BERNARDINO COUNTY ROUTE 60 EB

Loc	DESCRIPTION	PM	LOOP DETECTOR LOCATION	SYSTEM	LANE NUMBER	NOTE	LOOP TOTAL
6	Rte 60 AT RAMONA Ave	1.49	EASTBOUND	RAMP METERING	3, 4	FOR COMPLETE CIRCUIT SEE RESIDENT ENGINEER FILE FOR AS-BUILT 450001 E-8.	4
						TOTAL	4

(RAMP METERING SYSTEM)

INDUCTIVE LOOP DETECTOR

NO SCALE

E-2

APPROVED FOR ELECTRICAL WORK ONLY

STATE OF CALIFORNIA - DEPARTMENT OF TRANSPORTATION
Caltrans® ELECTRICAL DESIGN B

FUNCTIONAL SUPERVISOR: FERDINAND DE LA CRUZ
CALCULATED-DESIGNED BY: LUIS PENALOZA
CHECKED BY: FERDINAND DE LA CRUZ
REVISED BY
DATE REVISED

LAST REVISION 08-25-14
DATE PLOTTED => 22-AUG-2014
TIME PLOTTED => 13:27

Dist	COUNTY	ROUTE	POST MILES TOTAL PROJECT	SHEET No.	TOTAL SHEETS
08	SBd, Riv	60	R0.0/R4.6, R3.0/R6.9	41	100

REGISTERED ELECTRICAL ENGINEER 8-25-14 DATE

8-25-14
PLANS APPROVAL DATE

REGISTERED PROFESSIONAL ENGINEER FERDINAND DE LA CRUZ No. E 17215 Exp. 6-30-16 ELECTRICAL STATE OF CALIFORNIA

THE STATE OF CALIFORNIA OR ITS OFFICERS OR AGENTS SHALL NOT BE RESPONSIBLE FOR THE ACCURACY OR COMPLETENESS OF SCANNED COPIES OF THIS PLAN SHEET.

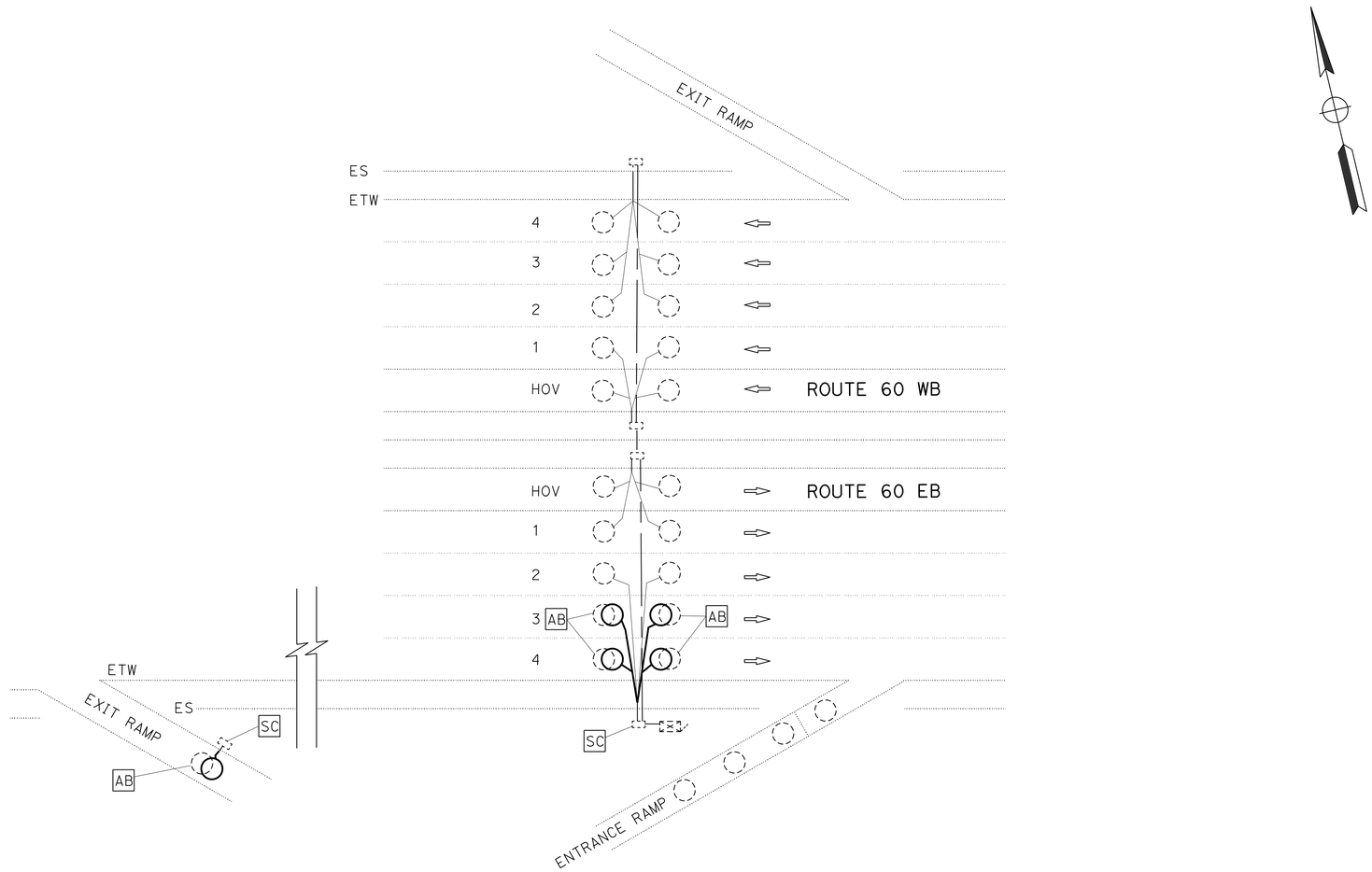

LOCATION 7

SAN BERNARDINO COUNTY ROUTE 60 EB

Loc	DESCRIPTION	PM	LOOP DETECTOR REPLACEMENT	SYSTEM	LANE NUMBER	NOTE	LOOP TOTAL
7	Rte 60 AT MOUNTAIN Ave	3.8	EASTBOUND	RAMP METERING	3, 4	FOR COMPLETE CIRCUIT SEE RESIDENT ENGINEER FILE FOR AS-BUILT 450001 E-17.	5
						TOTAL	5

(RAMP METERING SYSTEM)

INDUCTIVE LOOP DETECTOR

NO SCALE

E-3

APPROVED FOR ELECTRICAL WORK ONLY

STATE OF CALIFORNIA - DEPARTMENT OF TRANSPORTATION
Caltrans® ELECTRICAL DESIGN B

FUNCTIONAL SUPERVISOR: FERDINAND DE LA CRUZ
CALCULATED-DESIGNED BY: LUIS PENALOZA
CHECKED BY: FERDINAND DE LA CRUZ
REVISED BY
DATE REVISED

LAST REVISION 08-25-14 | DATE PLOTTED => 22-AUG-2014 | TIME PLOTTED => 13:27

Dist	COUNTY	ROUTE	POST MILES TOTAL PROJECT	SHEET No.	TOTAL SHEETS
08	SBd, Riv	60	R0.0/R4.6, R3.0/R6.9	42	100

REGISTERED ELECTRICAL ENGINEER 8-25-14 DATE

8-25-14
PLANS APPROVAL DATE

REGISTERED PROFESSIONAL ENGINEER FERDINAND DE LA CRUZ No. E 17215 Exp. 6-30-16 ELECTRICAL STATE OF CALIFORNIA

THE STATE OF CALIFORNIA OR ITS OFFICERS OR AGENTS SHALL NOT BE RESPONSIBLE FOR THE ACCURACY OR COMPLETENESS OF SCANNED COPIES OF THIS PLAN SHEET.

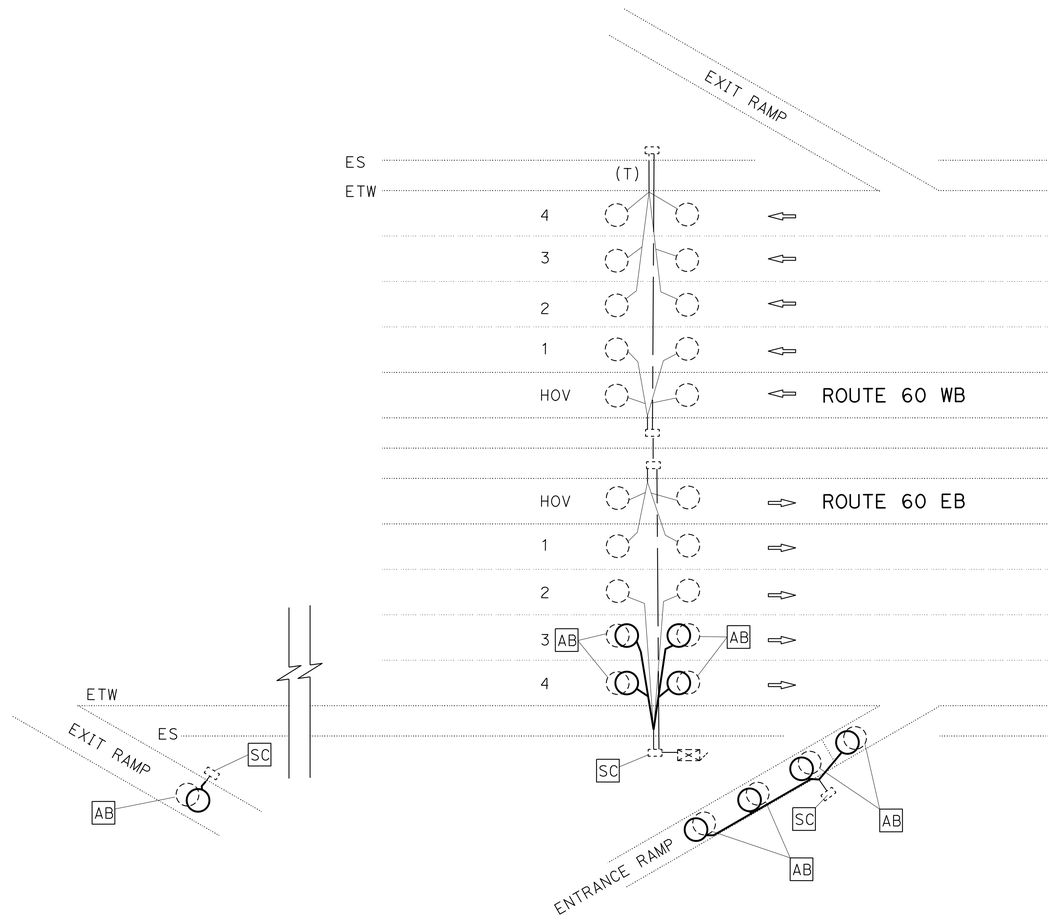

LOCATION 8

SAN BERNARDINO COUNTY ROUTE 60 EB

Loc	DESCRIPTION	PM	LOOP DETECTOR REPLACEMENT	SYSTEM	LANE NUMBER	NOTE	LOOP TOTAL
8	Rte 60 AT EUCLID Ave	4.79	EASTBOUND	RAMP METERING	3, 4	FOR COMPLETE CIRCUIT SEE RESIDENT ENGINEER FILE FOR AS-BUILT 450001 E-21.	9
						TOTAL	9

(RAMP METERING SYSTEM)

INDUCTIVE LOOP DETECTOR

NO SCALE

E-4

APPROVED FOR ELECTRICAL WORK ONLY

STATE OF CALIFORNIA - DEPARTMENT OF TRANSPORTATION
Caltrans® ELECTRICAL DESIGN B

FUNCTIONAL SUPERVISOR: FERDINAND DE LA CRUZ
CALCULATED-DESIGNED BY: LUIS PENALOZA
CHECKED BY: FERDINAND DE LA CRUZ
REVISED BY
DATE REVISED

LAST REVISION 08-25-14
DATE PLOTTED => 22-AUG-2014
TIME PLOTTED => 13:27

Dist	COUNTY	ROUTE	POST MILES TOTAL PROJECT	SHEET No.	TOTAL SHEETS
08	SBd, Riv	60	R0.0/R4.6, R3.0/R6.9	43	100

REGISTERED ELECTRICAL ENGINEER 8-25-14 DATE

8-25-14
PLANS APPROVAL DATE

REGISTERED PROFESSIONAL ENGINEER FERDINAND DE LA CRUZ No. E 17215 Exp. 6-30-16 ELECTRICAL STATE OF CALIFORNIA

THE STATE OF CALIFORNIA OR ITS OFFICERS OR AGENTS SHALL NOT BE RESPONSIBLE FOR THE ACCURACY OR COMPLETENESS OF SCANNED COPIES OF THIS PLAN SHEET.

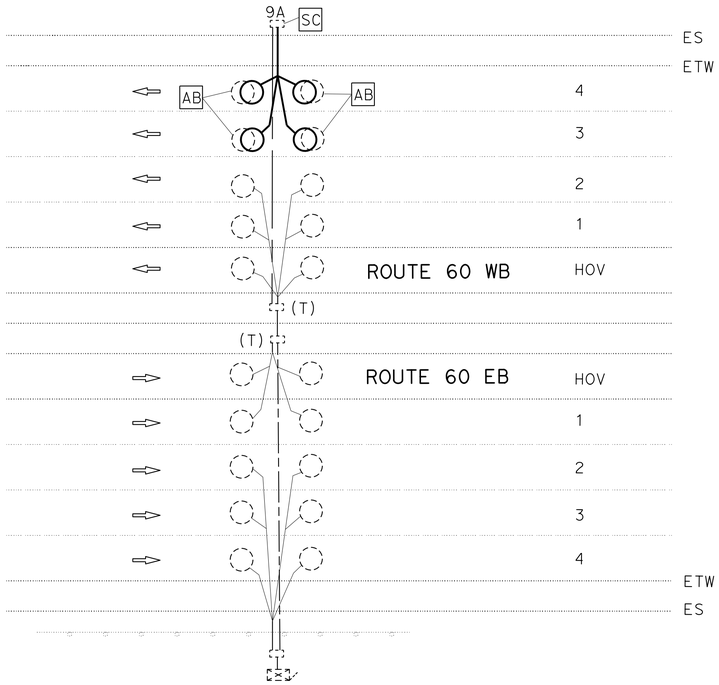

LOCATION 1

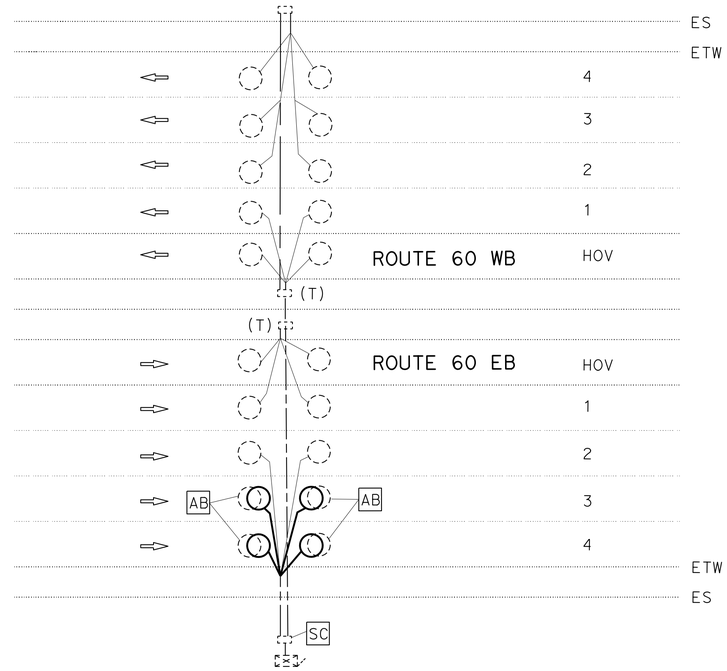

LOCATION 2

SAN BERNARDINO COUNTY ROUTE 60 WB

Loc	DESCRIPTION	PM	LOOP DETECTOR REPLACEMENT	SYSTEM	LANE NUMBER	NOTE	LOOP TOTAL
1	BENSON AVENUE	2.79	WESTBOUND	TMS	3, 4	FOR COMPLETE CIRCUIT SEE RESIDENT ENGINEER FILE FOR AS-BUILT 450001 E-13.	4
						TOTAL	4

SAN BERNARDINO COUNTY ROUTE 60 EB

Loc	DESCRIPTION	PM	LOOPS REPLACED	SYSTEM	LANE NUMBER	NOTE	LOOP TOTAL
2	EAST END Ave	.33	EASTBOUND	TMS	3, 4	FOR COMPLETE CIRCUIT SEE RESIDENT ENGINEER FILE FOR AS-BUILT 450001 E-4.	4
						TOTAL	4

(TRAFFIC MANAGEMENT SYSTEM)

INDUCTIVE LOOP DETECTOR

NO SCALE

E-5

APPROVED FOR ELECTRICAL WORK ONLY

REVISED BY | DATE REVISED

LUIS PENALOZA | FERDINAND DE LA CRUZ

CALCULATED-DESIGNED BY | CHECKED BY

FUNCTIONAL SUPERVISOR: FERDINAND DE LA CRUZ

STATE OF CALIFORNIA - DEPARTMENT OF TRANSPORTATION

Caltrans ELECTRICAL DESIGN B

LAST REVISION 08-25-14 | DATE PLOTTED => 22-AUG-2014 | TIME PLOTTED => 13:27

Dist	COUNTY	ROUTE	POST MILES TOTAL PROJECT	SHEET No.	TOTAL SHEETS
08	SBd, Riv	60	R0.0/R4.6, R3.0/R6.9	44	100

REGISTERED ELECTRICAL ENGINEER 8-25-14 DATE

8-25-14
PLANS APPROVAL DATE

REGISTERED PROFESSIONAL ENGINEER FERDINAND DE LA CRUZ No. E 17215 Exp. 6-30-16 ELECTRICAL STATE OF CALIFORNIA

THE STATE OF CALIFORNIA OR ITS OFFICERS OR AGENTS SHALL NOT BE RESPONSIBLE FOR THE ACCURACY OR COMPLETENESS OF SCANNED COPIES OF THIS PLAN SHEET.

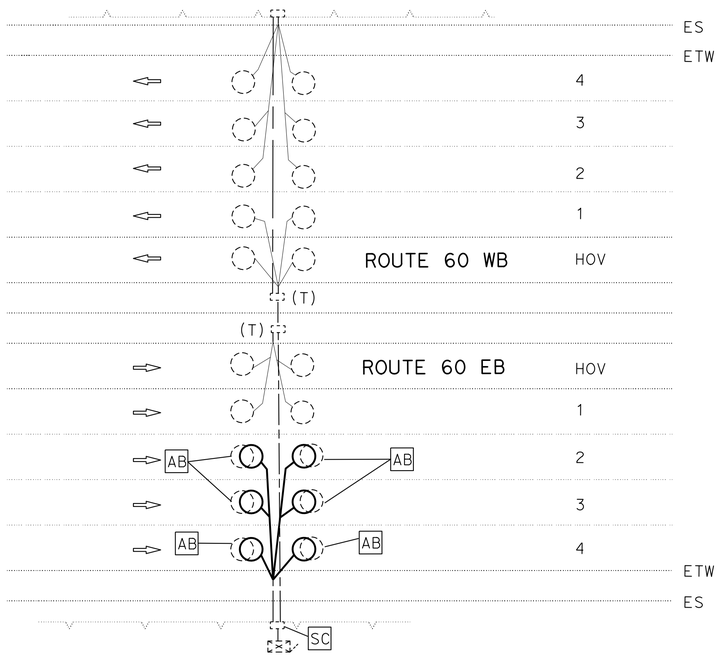

LOCATION 3

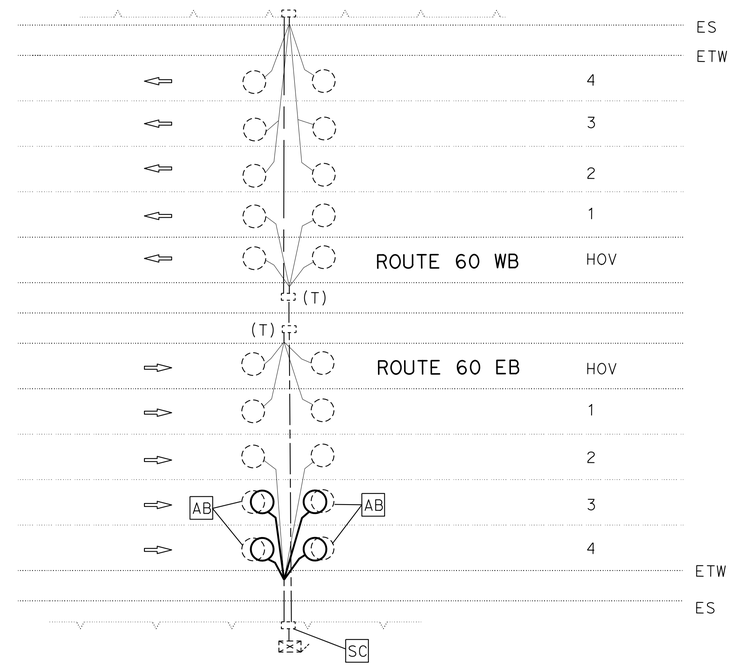

LOCATION 4

SAN BERNARDINO COUNTY ROUTE 60 EB

Loc	DESCRIPTION	PM	LOOP DETECTOR REPLACEMENT	SYSTEM	LANE NUMBER	NOTE	LOOP TOTAL
3	PIPELINE Ave	1.08	EASTBOUND	DETECTION	2, 3, 4	FOR COMPLETE CIRCUIT SEE RESIDENT ENGINEER FILE FOR AS-BUILT 450001 E-5A.	6
4	SANTO ANTONIO	3.99	EASTBOUND	DETECTION	3, 4	FOR COMPLETE CIRCUIT SEE RESIDENT ENGINEER FILE FOR AS-BUILT 450001 E-3.	4
						TOTAL	10

(TRAFFIC MANAGEMENT SYSTEM)

INDUCTIVE LOOP DETECTOR

NO SCALE

E-6

APPROVED FOR ELECTRICAL WORK ONLY

STATE OF CALIFORNIA - DEPARTMENT OF TRANSPORTATION
Caltrans ELECTRICAL DESIGN B

FUNCTIONAL SUPERVISOR: FERDINAND DE LA CRUZ
CALCULATED-DESIGNED BY: LUIS PENALOZA
CHECKED BY: FERDINAND DE LA CRUZ
REVISED BY
DATE REVISED

LAST REVISION 08-25-14 | DATE PLOTTED => 22-AUG-2014 | TIME PLOTTED => 13:27

Dist	COUNTY	ROUTE	POST MILES TOTAL PROJECT	SHEET No.	TOTAL SHEETS
08	SBd, Riv	60	R0.0/R4.6, R3.0/R6.9	45	100

REGISTERED ELECTRICAL ENGINEER 8-25-14 DATE

8-25-14
PLANS APPROVAL DATE

REGISTERED PROFESSIONAL ENGINEER FERDINAND DE LA CRUZ No. E 17215 Exp. 6-30-16 ELECTRICAL STATE OF CALIFORNIA

THE STATE OF CALIFORNIA OR ITS OFFICERS OR AGENTS SHALL NOT BE RESPONSIBLE FOR THE ACCURACY OR COMPLETENESS OF SCANNED COPIES OF THIS PLAN SHEET.

VEHICLE SENSOR NODE EQUIPMENT

- EXISTING VEHICLE SENSOR NODE
- NEW VEHICLE SENSOR NODE

EXISTING WIRELESS VEHICLE DETECTION STATION POLE WITH ACCESS POINT, SOLAR PANELS AND CABINET. SEE E-12.

ABBREVIATIONS: (THIS SHEET ONLY)

WVDS WIRELESS VEHICLE DETECTION SYSTEM
VSN VEHICLE SENSOR NODE

LEGEND: (SHEET E-7 & E-8)

1 RC SENSYS VSN PER MANUFACTURER'S INSTRUCTIONS.
2 AFTER ROADWAY REHABILITATION, INSTALL THE VEHICLE SENSOR NODE WITH CLAM SHELL HOUSING. SEE SHEETS E-11 & E-12 FOR INSTALLATION DETAILS.

NOTES: (THIS SHEET ONLY)

1. THE POSTMILE LOCATIONS ARE APPROXIMATE. PRIOR TO CONSTRUCTION, THE CONTRACTOR MUST VERIFY ALL LOCATIONS OF EXISTING VEHICLE SENSOR NODES.

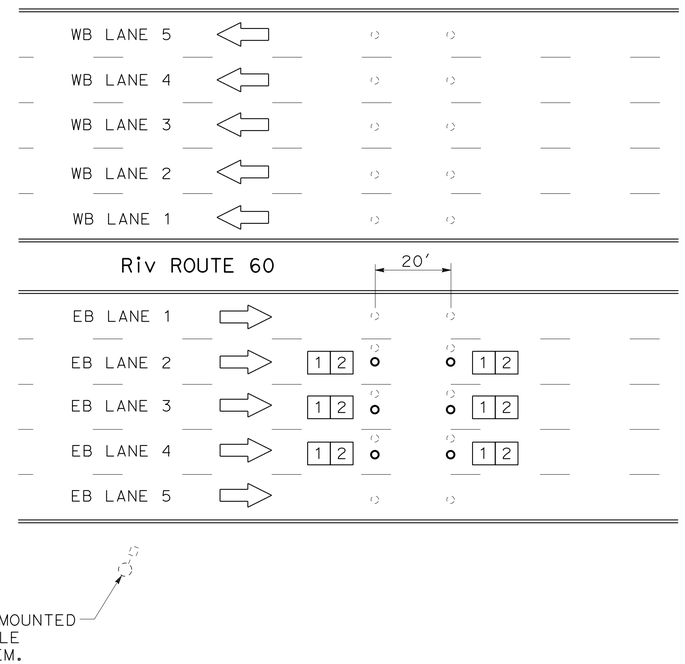

LOCATION 1

RIVERSIDE COUNTY ROUTE 60 VEHICLE SENSOR NODE QUANTITIES

Loc	DESCRIPTION	PM	VEHICLE SENSOR NODE LOCATION	SYSTEM	LANE NUMBER	NOTE	NODE TOTAL
1	COUNTRY VILLAGE ROAD	3.1	EASTBOUND	VDS	2, 3, 4	WVDS POLE LOCATION EASTBOUND SIDE	6
						TOTAL	6

(WIRELESS VEHICLE)

VEHICLE SENSOR NODES REPLACEMENT

NO SCALE

E-7

APPROVED FOR ELECTRICAL WORK ONLY

STATE OF CALIFORNIA - DEPARTMENT OF TRANSPORTATION
Caltrans® ELECTRICAL DESIGN B

FUNCTIONAL SUPERVISOR: FERDINAND DE LA CRUZ
CALCULATED-DESIGNED BY: LUIS PENALOZA
CHECKED BY: FERDINAND DE LA CRUZ
REVISED BY
DATE REVISED

LAST REVISION 08-25-14
DATE PLOTTED => 22-AUG-2014
TIME PLOTTED => 13:27

Dist	COUNTY	ROUTE	POST MILES TOTAL PROJECT	SHEET No.	TOTAL SHEETS
08	SBd, Riv	60	R0.0/R4.6, R3.0/R6.9	46	100

REGISTERED ELECTRICAL ENGINEER 8-25-14 DATE

8-25-14
PLANS APPROVAL DATE

REGISTERED PROFESSIONAL ENGINEER FERDINAND DE LA CRUZ No. E 17215 Exp. 6-30-16 ELECTRICAL STATE OF CALIFORNIA

THE STATE OF CALIFORNIA OR ITS OFFICERS OR AGENTS SHALL NOT BE RESPONSIBLE FOR THE ACCURACY OR COMPLETENESS OF SCANNED COPIES OF THIS PLAN SHEET.

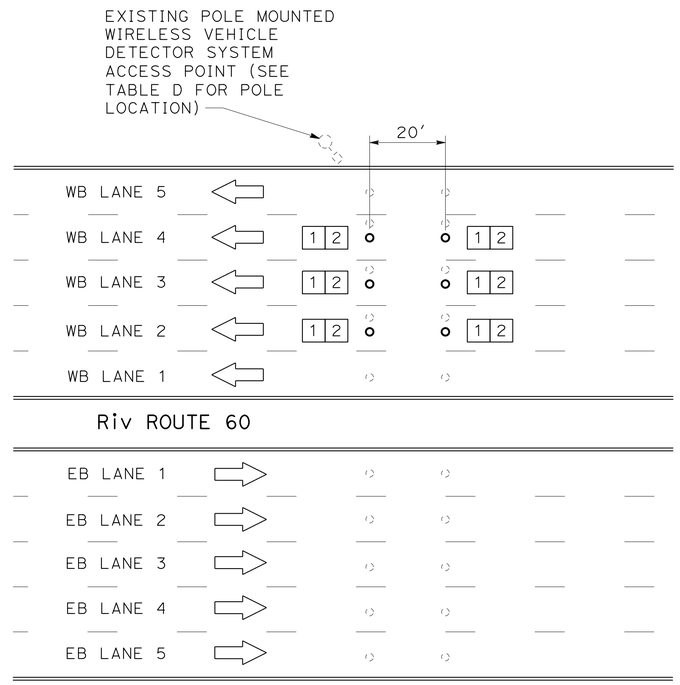

LOCATION 2, 3 AND 4

RIVERSIDE COUNTY ROUTE 60 VEHICLE SENSOR NODE QUANTITIES

Loc	DESCRIPTION	PM	VEHICLE SENSOR NODE LOCATION	SYSTEM	LANE NUMBER	NOTE	LOOP TOTAL
2	.1 MILE WEST OF PEDLEY STREET	4.4	WESTBOUND	VDS	2, 3, 4	WVDS POLE LOCATION WESTBOUND SIDE	6
3	PYRITE STREET	5.5	WESTBOUND	VDS	2, 3, 4	WVDS POLE LOCATION WESTBOUND SIDE	6
4	CAMINO REAL	6.3	WESTBOUND	VDS	2, 3, 4	WVDS POLE LOCATION WESTBOUND SIDE	6
						TOTAL	18

VEHICLE SENSOR NODES REPLACEMENT

NO SCALE

E-8

APPROVED FOR ELECTRICAL WORK ONLY

STATE OF CALIFORNIA - DEPARTMENT OF TRANSPORTATION
Caltrans® ELECTRICAL DESIGN B

FUNCTIONAL SUPERVISOR: FERDINAND DE LA CRUZ
CALCULATED-DESIGNED BY: LUIS PENALOZA
CHECKED BY: FERDINAND DE LA CRUZ
REVISED BY
DATE REVISED

LAST REVISION 08-25-14 | DATE PLOTTED => 22-AUG-2014 | TIME PLOTTED => 13:27

Dist	COUNTY	ROUTE	POST MILES TOTAL PROJECT	SHEET No.	TOTAL SHEETS
08	SBd, Riv	60	R0.0/R4.6, R3.0/R6.9	47	100

REGISTERED ELECTRICAL ENGINEER 8-25-14 DATE

8-25-14
PLANS APPROVAL DATE

REGISTERED PROFESSIONAL ENGINEER FERDINAND DE LA CRUZ No. E 17215 Exp. 6-30-16 ELECTRICAL STATE OF CALIFORNIA

THE STATE OF CALIFORNIA OR ITS OFFICERS OR AGENTS SHALL NOT BE RESPONSIBLE FOR THE ACCURACY OR COMPLETENESS OF SCANNED COPIES OF THIS PLAN SHEET.

LEGEND:

1 EXISTING 120/240 V TYPE III CF SERVICE EQUIPMENT
METER A: 100 A, 240 V, 2P, CB (MAIN BREAKER TC-1)
50 A, 120 V, 1P, CB (SIGNAL)
METER B: 100 A, 240 V, 2P, CB (MAIN BREAKER LS-3)
20 A, 240 V, 2P, CB (LIGHTING)
15 A, 120 V, 1P, CB (LIGHTING CONTROL)

2 EXISTING MODEL 332 CONTROLLER ASSEMBLY

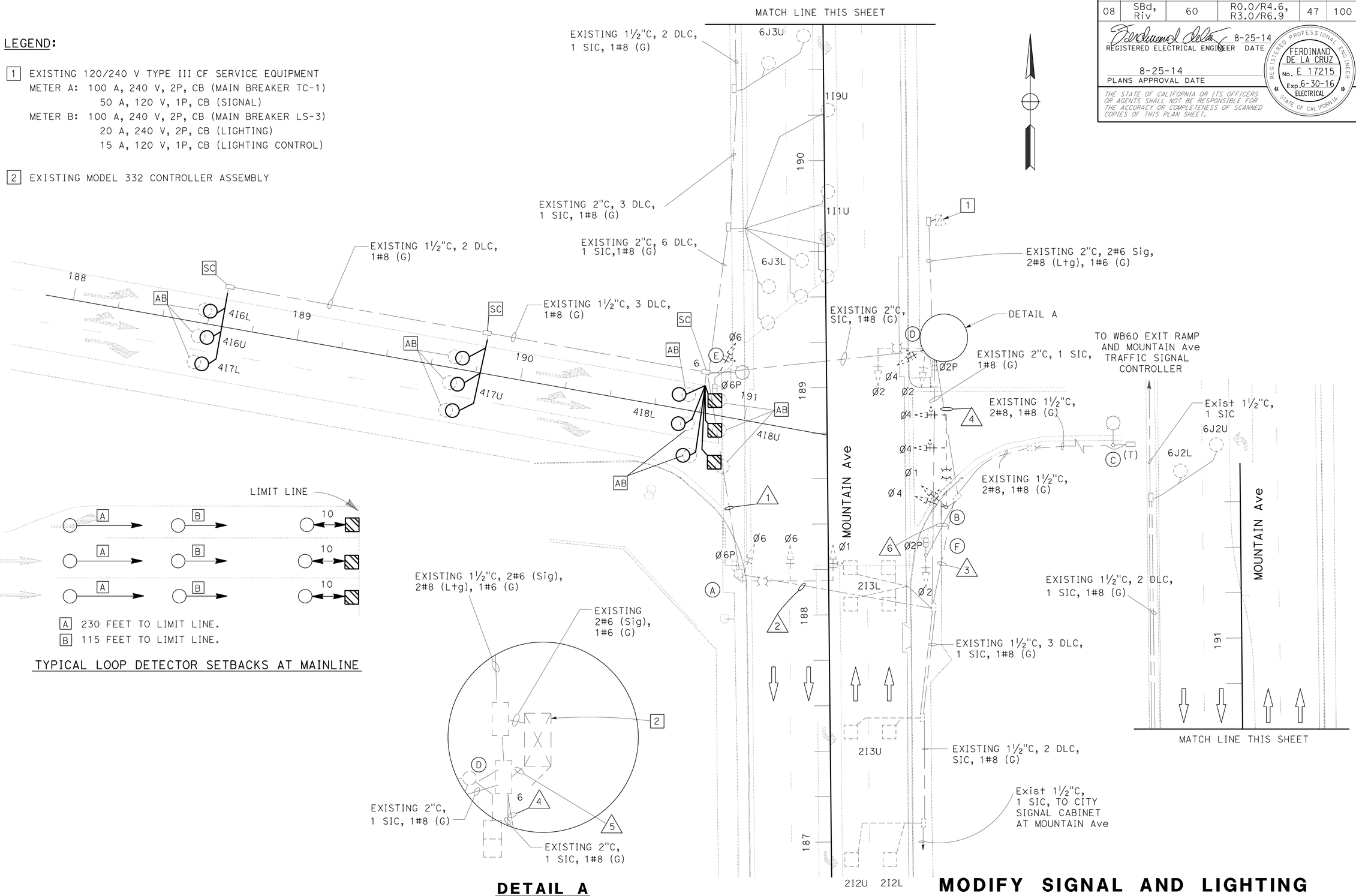

MODIFY SIGNAL AND LIGHTING (LOCATION 1)

NO SCALE

E-9

APPROVED FOR ELECTRICAL WORK ONLY

STATE OF CALIFORNIA - DEPARTMENT OF TRANSPORTATION
Caltrans® ELECTRICAL DESIGN B

FUNCTIONAL SUPERVISOR: FERDINAND DE LA CRUZ
CALCULATED-DESIGNED BY: LUIS PENALOZA
CHECKED BY: FERDINAND DE LA CRUZ
REVISED BY
DATE REVISED

LAST REVISION 08-25-14 | DATE PLOTTED => 22-AUG-2014 | TIME PLOTTED => 13:27

Dist	COUNTY	ROUTE	POST MILES TOTAL PROJECT	SHEET No.	TOTAL SHEETS
08	SBd Riv	60	R0.0/R4.6 R3.0/R6.9	48	100

REGISTERED ELECTRICAL ENGINEER 8-25-14 DATE

8-25-14
PLANS APPROVAL DATE

REGISTERED PROFESSIONAL ENGINEER FERDINAND DE LA CRUZ No. E 17215 Exp. 6-30-16 ELECTRICAL STATE OF CALIFORNIA

THE STATE OF CALIFORNIA OR ITS OFFICERS OR AGENTS SHALL NOT BE RESPONSIBLE FOR THE ACCURACY OR COMPLETENESS OF SCANNED COPIES OF THIS PLAN SHEET.

NOTE:

1. COMPLETE CIRCUIT NOT SHOWN. REFER TO AS-BUILT 08-229004 FOR REMAINDER OF CIRCUIT.

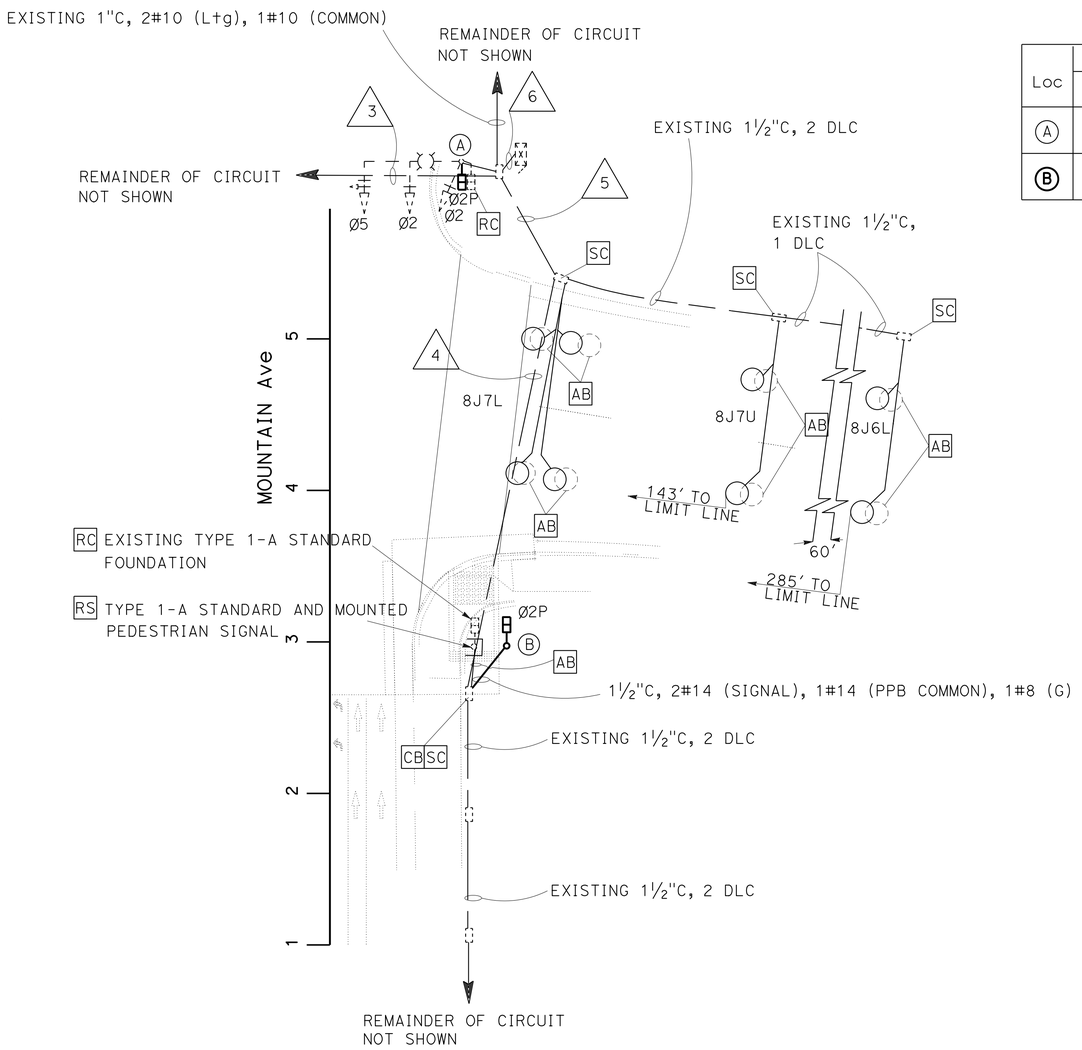

POLE AND EQUIPMENT SCHEDULE

Loc	STANDARD TYPE	STANDARD SMA	STANDARD LMA	VEH SIG MTG MAST ARM	VEH SIG MTG POLE	PED SIGNAL MTG	PPB Ø	PPB ARROW	HPS LUMINAIRE	SPECIAL REQUIREMENTS
A	24-3-80	30'-0"	15'-0"	2-MAS	SV-I-T	SP-I-T	2	→	310 W	
B	I-A					TP-I-T	2	←		

CONDUIT AND CONDUCTOR SCHEDULE

AWG	CIRCUIT	1	2	3	4	5	6
#14	Ø2 / Ø2, Ø2P				3	3	3 / 6
#14	Ø5		3	3			6
#14	Ø6 / Ø6, Ø6P	3 / 3	3 / 4	3 / 4			3 / 4
#14	Ø8 / Ø8, Ø8P	3 /	3 / 3	3 / 3			3 / 6
#14	PPB COMMON	1	1	1	1	1	1
#14	INTERCONNECT	7	7	7			7
#14	SPARES	3	3	3	3	3	3
TOTAL #14 CONDUCTORS		20	27	27	7	7	42
#12	INTERCONNECT			2			2
TOTAL #12 CONDUCTORS				2			2
#10	LIGHTING	2	2	2			
#10	SIGNAL COMMON	1	1	1	1	1	1
TOTAL #10 CONDUCTORS		3	3	3	1	1	1
DLC	Ø2				2	2	2
	Ø5	1	1	1			1
	Ø6			2			2
	Ø8					3	3
TOTAL DLC		1	1	3		3	3
CONDUIT SIZE		2"	2"	2½"	1½"	2½"	2-2½"

NOTE:

1. ALL CONDUIT RUNS SHOWN ARE EXISTING EXCEPT AS SHOWN.

(ROUTE 60 WB EXIT RAMP AT MOUNTAIN AVENUE)

MODIFY SIGNAL AND LIGHTING
(LOCATION 2)
NO SCALE

E-10

APPROVED FOR ELECTRICAL WORK ONLY

STATE OF CALIFORNIA - DEPARTMENT OF TRANSPORTATION
Caltrans® ELECTRICAL DESIGN B

FUNCTIONAL SUPERVISOR: FERDINAND DE LA CRUZ
CALCULATED-DESIGNED BY: LUIS PENALOZA
CHECKED BY: FERDINAND DE LA CRUZ
REVISED BY
DATE REVISED

LAST REVISION 08-25-14
DATE PLOTTED => 22-AUG-2014
TIME PLOTTED => 13:27

Dist	COUNTY	ROUTE	POST MILES TOTAL PROJECT	SHEET No.	TOTAL SHEETS
08	SBd, Riv	60	R0.0/R4.6, R3.0/R6.9	49	100

Ferdinand de la Cruz 8-25-14
REGISTERED ELECTRICAL ENGINEER DATE

8-25-14
PLANS APPROVAL DATE

REGISTERED PROFESSIONAL ENGINEER
FERDINAND DE LA CRUZ
No. E 17215
Exp. 6-30-16
ELECTRICAL
STATE OF CALIFORNIA

THE STATE OF CALIFORNIA OR ITS OFFICERS OR AGENTS SHALL NOT BE RESPONSIBLE FOR THE ACCURACY OR COMPLETENESS OF SCANNED COPIES OF THIS PLAN SHEET.

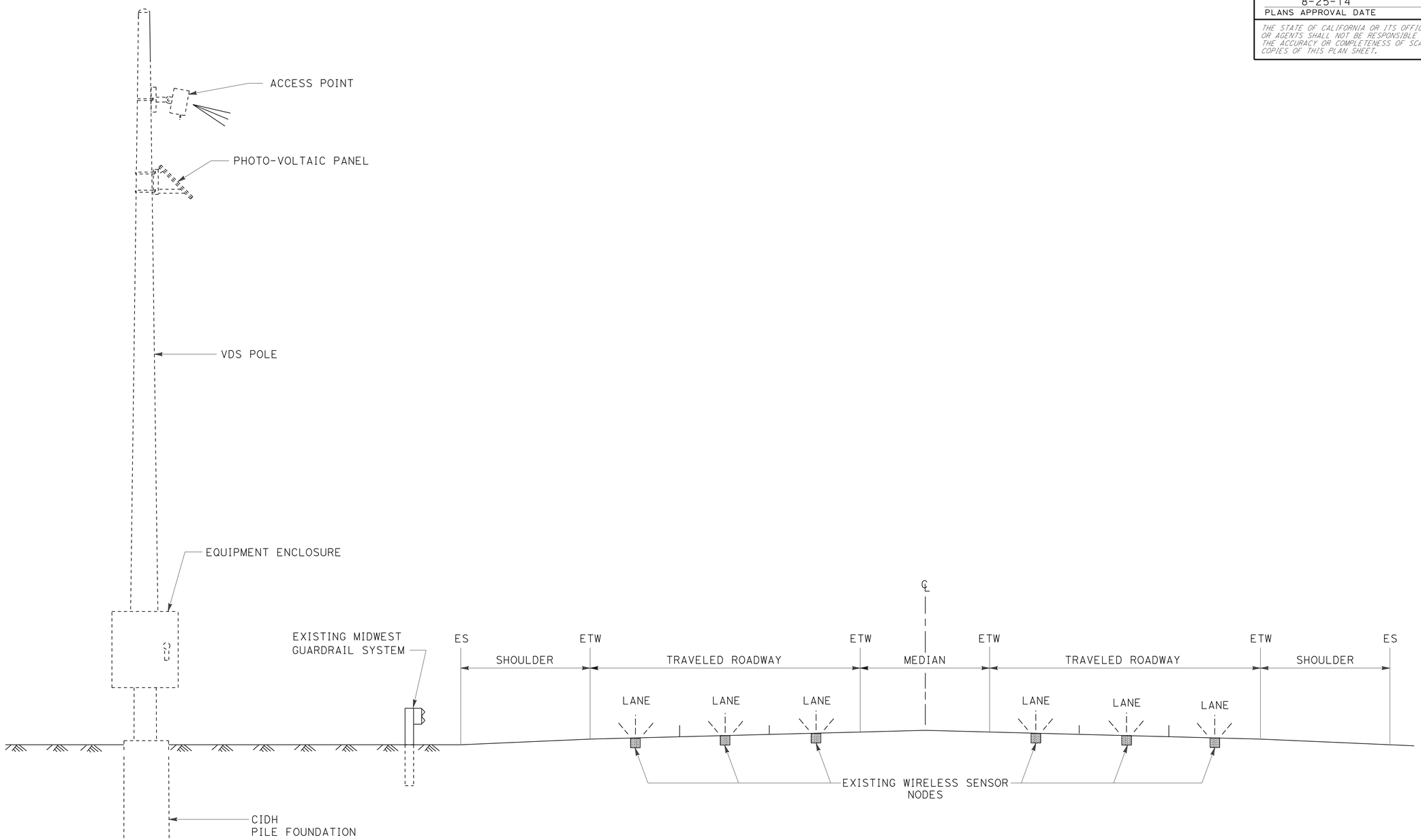

WIRELESS VEHICLE DETECTION STATION-TYPICAL LAYOUT

APPROVED FOR ELECTRICAL WORK ONLY

ELECTRICAL DETAILS
NO SCALE

E-11

STATE OF CALIFORNIA - DEPARTMENT OF TRANSPORTATION
Caltrans® ELECTRICAL DESIGN B

FUNCTIONAL SUPERVISOR: FERDINAND DE LA CRUZ
CALCULATED-DESIGNED BY: LUIS PENALOZA
CHECKED BY: FERDINAND DE LA CRUZ
REVISED BY
DATE REVISED

LAST REVISION 08-25-14
DATE PLOTTED => 22-AUG-2014
TIME PLOTTED => 13:27

Dist	COUNTY	ROUTE	POST MILES TOTAL PROJECT	SHEET No.	TOTAL SHEETS
08	SBd, Riv	60	R0.0/R4.6, R3.0/R6.9	50	100

REGISTERED ELECTRICAL ENGINEER 8-25-14 DATE

8-25-14
PLANS APPROVAL DATE

REGISTERED PROFESSIONAL ENGINEER
FERDINAND DE LA CRUZ
No. E 17215
Exp. 6-30-16
ELECTRICAL
STATE OF CALIFORNIA

THE STATE OF CALIFORNIA OR ITS OFFICERS OR AGENTS SHALL NOT BE RESPONSIBLE FOR THE ACCURACY OR COMPLETENESS OF SCANNED COPIES OF THIS PLAN SHEET.

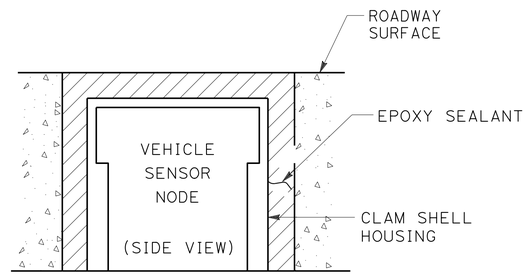

DETAIL B

VEHICLE SENSOR NODE
INSTALLED IN ROADWAY

VEHICLE SENSOR NODE INSTALLATION PROCEDURE

1. PRIOR TO INSTALLATION, IDENTIFY SENSOR'S ID, LANE NUMBER AND LOCATION IN LANE.
2. INSTALL VEHICLE SENSOR NODE AS PER MANUFACTURER'S RECOMMENDATION.
3. RECORD THE DISTANCES BETWEEN EACH SENSOR PAIR.

(VEHICLE SENSOR NODE)

APPROVED FOR ELECTRICAL WORK ONLY

ELECTRICAL DETAILS

NO SCALE

E-12

STATE OF CALIFORNIA - DEPARTMENT OF TRANSPORTATION
Caltrans® ELECTRICAL DESIGN B

FUNCTIONAL SUPERVISOR: FERDINAND DE LA CRUZ
CALCULATED-DESIGNED BY: LUIS PENALOZA
CHECKED BY: FERDINAND DE LA CRUZ
REVISED BY
DATE REVISED

LAST REVISION 08-25-14
DATE PLOTTED => 22-AUG-2014
TIME PLOTTED => 13:27

Dist	COUNTY	ROUTE	POST MILES TOTAL PROJECT	SHEET No.	TOTAL SHEETS
08	SBd, Riv	60	R0.0/R4.6, R3.0/R6.9	51	100

REGISTERED ELECTRICAL ENGINEER 8-25-14 DATE

8-25-14
PLANS APPROVAL DATE

REGISTERED PROFESSIONAL ENGINEER FERDINAND DE LA CRUZ No. E 17215 Exp. 6-30-16 ELECTRICAL STATE OF CALIFORNIA

THE STATE OF CALIFORNIA OR ITS OFFICERS OR AGENTS SHALL NOT BE RESPONSIBLE FOR THE ACCURACY OR COMPLETENESS OF SCANNED COPIES OF THIS PLAN SHEET.

NOTE:

1. THE QUANTITIES ON THIS SHEET ARE APPROXIMATE MEASUREMENTS.

INDUCTIVE LOOP DETECTOR

SHEET No.	TYPE E LOOP (N)
	EA
E-1	24
E-2	12
E-3	5
E-4	9
E-5	8
E-6	10

(N) - NOT A SEPARATE PAY ITEM, FOR INFORMATION ONLY.

MODIFY WIRELESS VEHICLE DETECTION STATION

SHEET No.	TYPE E LOOP (N)
	EA
E-7	6
E-8	18

(N) - NOT A SEPARATE PAY ITEM, FOR INFORMATION ONLY.

MODIFY SIGNAL

SHEET No.	TYPE 1-A (N)	TYPE E LOOP (N)	TP-1-T (N)	1½" CONDUIT PVC SCHEDULE 80 (N)	#14 GAUGE WIRE CABLE (N)	#8 (G) GAUGE WIRE CABLE (N)	TYPE 1 STANDARD FOUNDATION (N)	TYPE 1 STANDARD (N)
	EA	EA	EA	LF	LF	LF	EA	EA
E-9	1	8	1	-	-	-	-	-
E-10	-	-	-	15	150	50	1	1

(N) - NOT A SEPARATE PAY ITEM, FOR INFORMATION ONLY.

ELECTRICAL QUANTITIES

E-13

STATE OF CALIFORNIA - DEPARTMENT OF TRANSPORTATION
Caltrans® ELECTRICAL DESIGN B

FUNCTIONAL SUPERVISOR: FERDINAND DE LA CRUZ
CALCULATED-DESIGNED BY: LUIS PENALOZA
CHECKED BY: FERDINAND DE LA CRUZ
REVISED BY
DATE REVISED

LAST REVISION 08-25-14
DATE PLOTTED => 22-AUG-2014
TIME PLOTTED => 13:27

M

Maint	MAINTENANCE
Max	MAXIMUM
MB	METAL BEAM
MBB	METAL BEAM BARRIER
MBGR	METAL BEAM GUARD RAILING
Med	MEDIAN
MGS	MIDWEST GUARDRAIL SYSTEM
MH	MANHOLE
Min	MINIMUM
Misc	MISCELLANEOUS
Misc I & S	MISCELLANEOUS IRON AND STEEL
Mkr	MARKER
Mod	MODIFIED,
	MODIFY
Mon	MONUMENT
MP	METAL PLATE
MPGR	METAL PLATE GUARD RAILING
MR	MOVEMENT RATING
MSE	MECHANICALLY STABILIZED EMBANKMENT
Mt	MOUNTAIN, MOUNT
Mtl	MATERIAL
MVP	MAINTENANCE VEHICLE PULLOUT

N

N	NORTH
NB	NORTHBOUND
No.	NUMBER (MUST HAVE PERIOD)
Nos.	NUMBERS (MUST HAVE PERIOD)
NPS	NOMINAL PIPE SIZE
NS	NEAR SIDE
NSP	NEW STANDARD PLAN
NTS	NOT TO SCALE

O

Oblr	OBLITERATE
OC	OVERCROSSING
OD	OUTSIDE DIAMETER
OF	OUTSIDE FACE
OG	ORIGINAL GROUND
OGAC	OPEN GRADED ASPHALT CONCRETE
OGFC	OPEN GRADED FRICTION COURSE
OH	OVERHEAD
OHWM	ORDINARY HIGH WATER MARK
O-O	OUT TO OUT
Opp	OPPOSITE
OSD	OVERSIDE DRAIN

P

P	PAGE
PAP	PERFORATED ALUMINUM PIPE
PB	PULL BOX
PC	POINT OF CURVATURE,
	PRECAST
PCC	POINT OF COMPOUND CURVE,
	PORTLAND CEMENT CONCRETE
PCMS	PORTABLE CHANGEABLE MESSAGE SIGN
PCP	PERFORATED CONCRETE PIPE,
	PRESTRESSED CONCRETE PIPE
PCVC	POINT OF COMPOUND VERTICAL CURVE
PEC	PERMIT TO ENTER AND CONSTRUCT
Ped	PEDESTRIAN
Ped OC	PEDESTRIAN OVERCROSSING
Ped UC	PEDESTRIAN UNDERCROSSING
Perm Mtl	PERMEABLE MATERIAL

P continued

PG	PROFILE GRADE
PI	POINT OF INTERSECTION
PJP	PARTIAL JOINT PENETRATION
Pkwy	PARKWAY
ℙ,PL	PLATE
P/L	PROPERTY LINE
PM	POST MILE,
	TIME FROM NOON TO MIDNIGHT
PN	PAVING NOTCH
POC	POINT OF HORIZONTAL CURVE
POT	POINT OF TANGENT
POVC	POINT OF VERTICAL CURVE
PP	PIPE PILE,
	PLASTIC PIPE,
	POWER POLE
PPL	PREFORMED PERMEABLE LINER
PPP	PERFORATED PLASTIC PIPE
PRC	POINT OF REVERSE CURVE
PRF	PAVEMENT REINFORCING FABRIC
PRVC	POINT OF REVERSE VERTICAL CURVE
PS&E	PLANS, SPECIFICATIONS AND ESTIMATES
PS, P/S	PRESTRESSED
PSP	PERFORATED STEEL PIPE
PT	POINT OF TANGENCY
PVC	POLYVINYL CHLORIDE
Pvmt	PAVEMENT

Q

Qty	QUANTITY

R

R	RADIUS
R & D	REMOVE AND DISPOSE
R & S	REMOVE AND SALVAGE
R/C	RATE OF CHANGE
RCA	REINFORCED CONCRETE ARCH
RCB	REINFORCED CONCRETE BOX
RCP	REINFORCED CONCRETE PIPE
RCPA	REINFORCED CONCRETE PIPE ARCH
Rd	ROAD
Reinf	REINFORCED,
	REINFORCEMENT,
	REINFORCING
Rel	RELOCATE
Repl	REPLACEMENT
Ret	RETAINING
Rev	REVISED, REVISION
Rdwy	ROADWAY
RHMA	RUBBERIZED HOT MIX ASPHALT
Riv	RIVER
RM	ROAD-MIXED
RP	RADIUS POINT,
	REFERENCE POINT
RR	RAILROAD
RSP	ROCK SLOPE PROTECTION,
	REVISED STANDARD PLAN
Rt	RIGHT
Rte	ROUTE
RW	REDWOOD,
	RETAINING WALL
R/W	RIGHT OF WAY
Rwy	RAILWAY

S

S	SOUTH,
	SUPPLEMENT
SAE	STRUCTURE APPROACH EMBANKMENT
Salv	SALVAGE
SAPP	STRUCTURAL ALUMINUM PLATE PIPE
SB	SOUTHBOUND
SC	SAND CUSHION
SCSP	SLOTTED CORRUGATED STEEL PIPE
SD	STORM DRAIN
Sec	SECOND,
	SECTION
Sep	SEPARATION
SG	SUBGRADE
Shld	SHOULDER
Sht	SHEET
Sim	SIMILAR
℄	STATION LINE
SM	SELECTED MATERIAL
Spec	SPECIAL,
	SPECIFICATIONS
SPP	SLOTTED PLASTIC PIPE
SS	SLOPE STAKE
SSBM	STRAP AND SADDLE BRACKET METHOD
SSD	STRUCTURAL SECTION DRAIN
SSPA	STRUCTURAL STEEL PLATE ARCH
SSPP	STRUCTURAL STEEL PLATE PIPE
SSPPA	STRUCTURAL STEEL PLATE PIPE ARCH
SSRP	STEEL SPIRAL RIB PIPE
St	STREET
Sta	STATION
STBB	SINGLE THRIE BEAM BARRIER
Std	STANDARD
Str	STRUCTURE
Surf	SURFACING
SW	SIDEWALK,
	SOUND WALL
Swr	SEWER
Sym	SYMMETRICAL
S4S	SURFACE 4 SIDES

T

T	SEMI-TANGENT
Tan	TANGENT
TBB	THRIE BEAM BARRIER
Tbr	TIMBER
TC	TOP OF CURB
TCB	TRAFFIC CONTROL BOX
TCE	TEMPORARY CONSTRUCTION EASEMENT
Tel	TELEPHONE
Temp	TEMPORARY
TG	TOP OF GRADE
Tot	TOTAL
TP	TELEPHONE POLE
TPB	TREATED PERMEABLE BASE
TPM	TREATED PERMEABLE MATERIAL
Trans	TRANSITION

T continued

TS	TRANSVERSE,
	TRAFFIC SIGNAL,
	TUBULAR STEEL
Typ	TYPICAL

U

UC	UNDERCROSSING
UD	UNDERDRAIN
UG	UNDERGROUND
UON	UNLESS OTHERWISE NOTED
UP	UNDERPASS

V

V	VALVE,
	DESIGN SPEED
Var	VARIABLE,
	VARIES
VC	VERTICAL CURVE
VCP	VITRIFIED CLAY PIPE
Vert	VERTICAL
Via	VIADUCT
Vol	VOLUME

W

W	WEST,
	WIDTH
WB	WESTBOUND
WH	WEEP HOLE
WM	WIRE MESH
WS	WATER SURFACE
WSP	WELDED STEEL PIPE
Wt	WEIGHT
WV	WATER VALVE
WW	WINGWALL
WWLOL	WINGWALL LAYOUT LINE

X

X Sec	CROSS SECTION
Xing	CROSSING

Y

Yr	YEAR
Yrs	YEARS

Dist	COUNTY	ROUTE	POST MILES TOTAL PROJECT	SHEET No.	TOTAL SHEETS
08	SBd, Riv	60	R0.0/R4.6, R3.0/R6.9	52	100

Grace M. Tsushima
REGISTERED CIVIL ENGINEER

July 19, 2013
PLANS APPROVAL DATE

REGISTERED PROFESSIONAL ENGINEER
Grace M. Tsushima
No. C49814
Exp. 9-30-14
CIVIL
STATE OF CALIFORNIA

THE STATE OF CALIFORNIA OR ITS OFFICERS OR AGENTS SHALL NOT BE RESPONSIBLE FOR THE ACCURACY OR COMPLETENESS OF SCANNED COPIES OF THIS PLAN SHEET.

TO ACCOMPANY PLANS DATED 8-25-14

UNIT OF MEASUREMENT SYMBOLS:

Some of the symbols used in the project plan quantity tables and in the Bid Item List are:

TABLE A

SYMBOL USED	DEFINITIONS
ACRE	ACRE
CF	CUBIC FOOT
CY	CUBIC YARD
EA	EACH
GAL	GALLON
LB	POUND
LF	LINEAR FOOT
SQFT	SQUARE FOOT
SQYD	SQUARE YARD
STA	100 FEET
TAB	TABLET
TON	2,000 POUNDS

Some of the symbols used in the plans other than in the project plan quantity tables are:

TABLE B

SYMBOL USED	DEFINITIONS
ksi	KIPS PER SQUARE INCH
ksf	KIPS PER SQUARE FOOT
psi	POUNDS PER SQUARE INCH
psf	POUNDS PER SQUARE FOOT
lb/ft^3, pcf	POUNDS PER CUBIC FOOT
tsf	TONS PER SQUARE FOOT
mph, MPH *	MILES PER HOUR
ø	NOMINAL DIAMETER
oz	OUNCE
lb	POUND
kip	1,000 POUNDS
cal	CALORIE
ft	FOOT OR FEET
gal	GALLON

* For use on a sign panel only

STATE OF CALIFORNIA
DEPARTMENT OF TRANSPORTATION

ABBREVIATIONS (SHEET 2 OF 2)

NO SCALE

RSP A10B DATED JULY 19, 2013 SUPERSEDES STANDARD PLAN A10B DATED MAY 20, 2011 - PAGE 2 OF THE STANDARD PLANS BOOK DATED 2010.

REVISED STANDARD PLAN RSP A10B

2010 REVISED STANDARD PLAN RSP A10B

6-7-13

Dist	COUNTY	ROUTE	POST MILES TOTAL PROJECT	SHEET No.	TOTAL SHEETS
08	SBd, Riv	60	R0.0/R4.6, R3.0/R6.9	53	100

REGISTERED CIVIL ENGINEER

July 19, 2013
PLANS APPROVAL DATE

REGISTERED PROFESSIONAL ENGINEER Roberta L. McLaughlin No. C40375 Exp. 3-31-15 CIVIL STATE OF CALIFORNIA

THE STATE OF CALIFORNIA OR ITS OFFICERS OR AGENTS SHALL NOT BE RESPONSIBLE FOR THE ACCURACY OR COMPLETENESS OF SCANNED COPIES OF THIS PLAN SHEET.

TO ACCOMPANY PLANS DATED 8-25-14

EXIT RAMP NEUTRAL AREA (GORE) TREATMENT

DETAIL 36

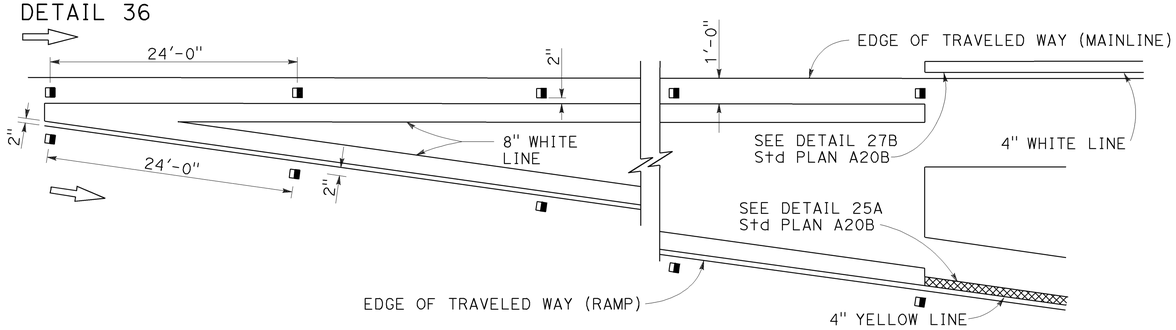

ENTRANCE RAMP NEUTRAL AREA (MERGE) TREATMENT

DETAIL 36A

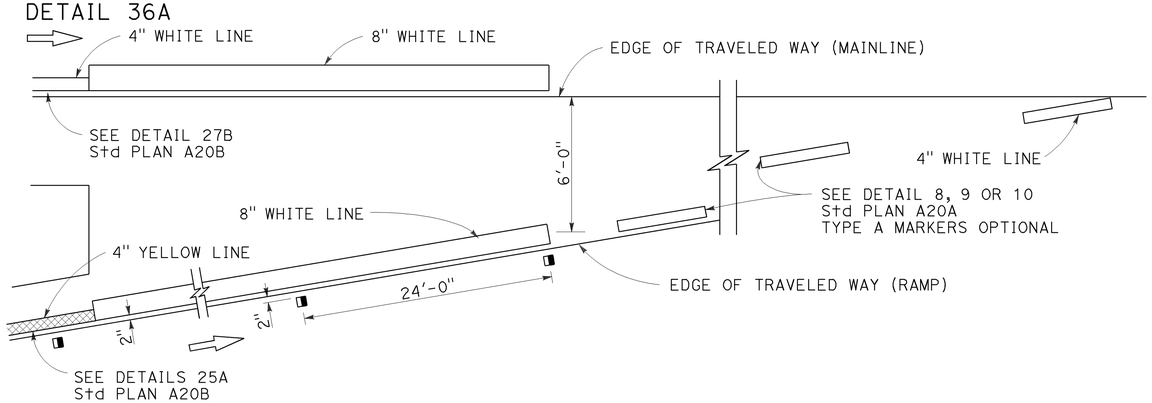

ENTRANCE RAMP NEUTRAL AREA (ACCELERATION LANE) TREATMENT

DETAIL 36B

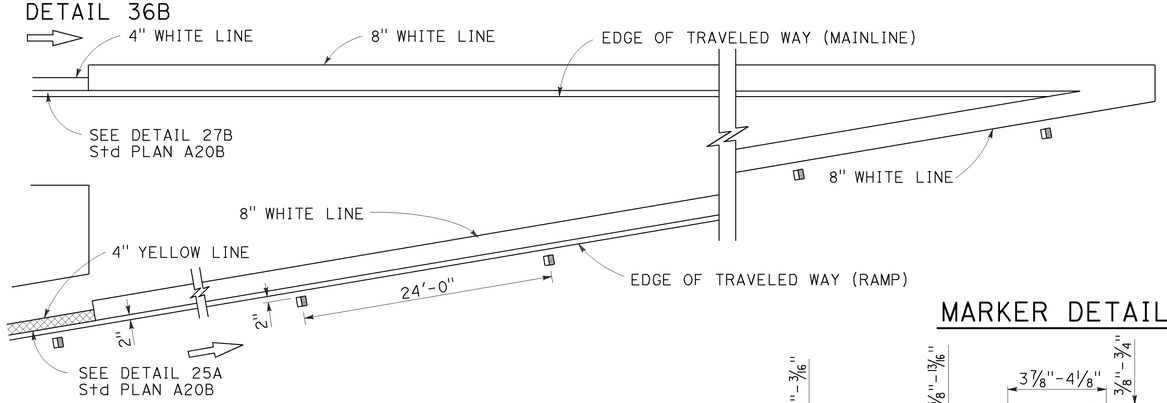

LANE DROP AT EXIT RAMPS

DETAIL 37

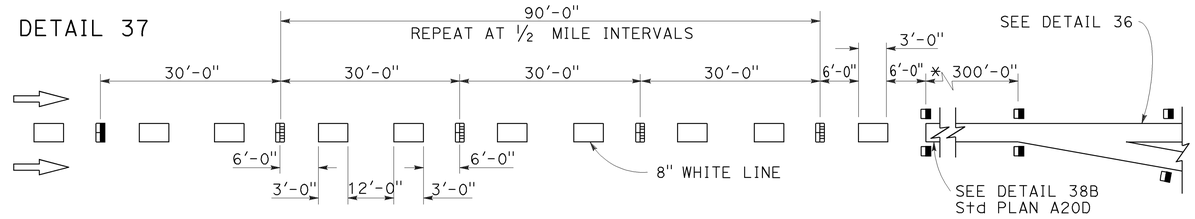

DETAIL 37A

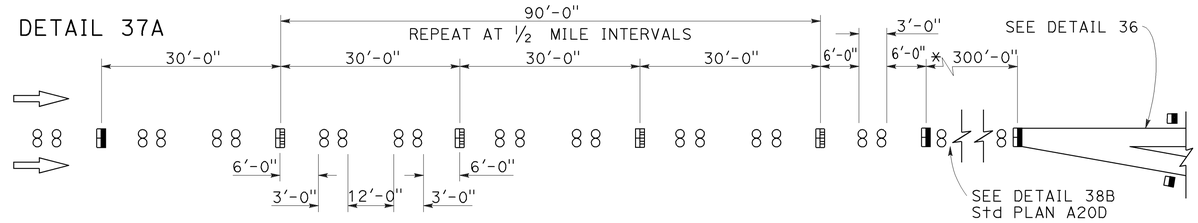

* The solid channelizing line shown may be omitted on short auxiliary lanes where weaving length is critical.

LANE DROP AT INTERSECTIONS

DETAIL 37B

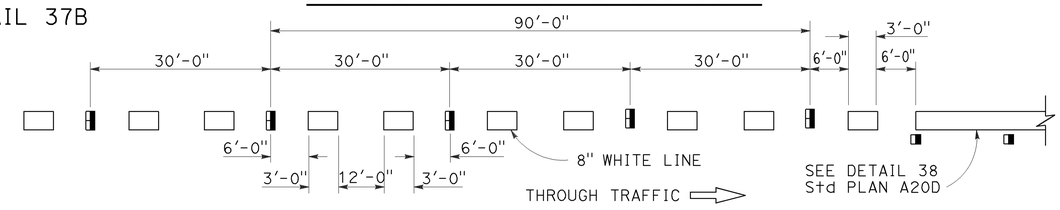

DETAIL 37C

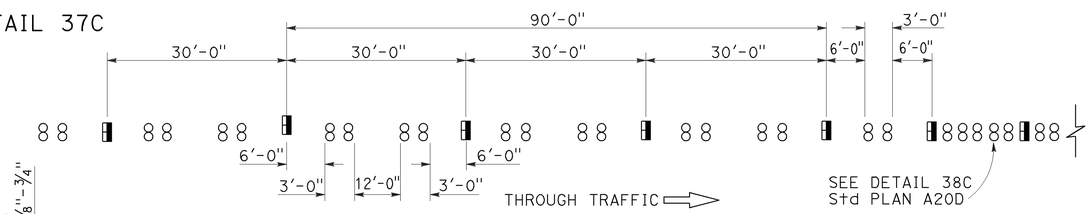

MARKER DETAILS

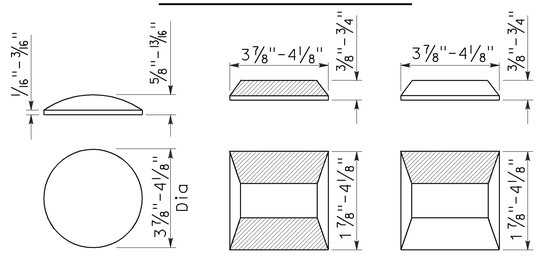

LEGEND:

MARKERS

- ○ TYPE A WHITE NON-REFLECTIVE
- ⊟ TYPE C RED-CLEAR RETROREFLECTIVE
- ◨ TYPE G ONE-WAY CLEAR RETROREFLECTIVE

STATE OF CALIFORNIA
DEPARTMENT OF TRANSPORTATION

PAVEMENT MARKERS AND TRAFFIC LINE TYPICAL DETAILS

NO SCALE

RSP A20C DATED JULY 19, 2013 SUPERSEDES STANDARD PLAN A20C DATED MAY 20, 2011 - PAGE 11 OF THE STANDARD PLANS BOOK DATED 2010.

REVISED STANDARD PLAN RSP A20C

2010 REVISED STANDARD PLAN RSP A20C

4-29-13

Dist	COUNTY	ROUTE	POST MILES TOTAL PROJECT	SHEET No.	TOTAL SHEETS
08	SBd, Riv	60	R0.0/R4.6, R3.0/R6.9	54	100

REGISTERED CIVIL ENGINEER

April 20, 2012
PLANS APPROVAL DATE

REGISTERED PROFESSIONAL ENGINEER
Roberta L. McLaughlin
No. C40375
Exp. 3-31-13
CIVIL
STATE OF CALIFORNIA

THE STATE OF CALIFORNIA OR ITS OFFICERS OR AGENTS SHALL NOT BE RESPONSIBLE FOR THE ACCURACY OR COMPLETENESS OF SCANNED COPIES OF THIS PLAN SHEET.

TO ACCOMPANY PLANS DATED 8-25-14

2010 REVISED STANDARD PLAN RSP A24A

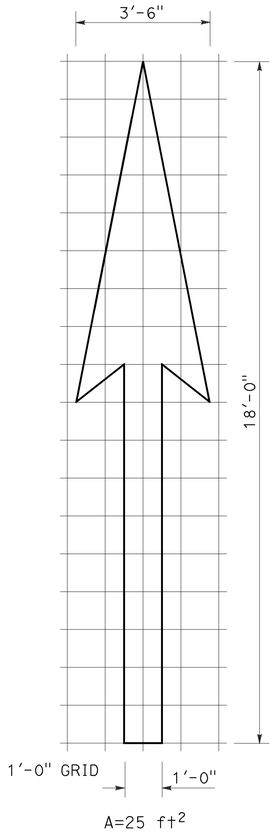

A=25 ft^2

TYPE I 18'-0" ARROW

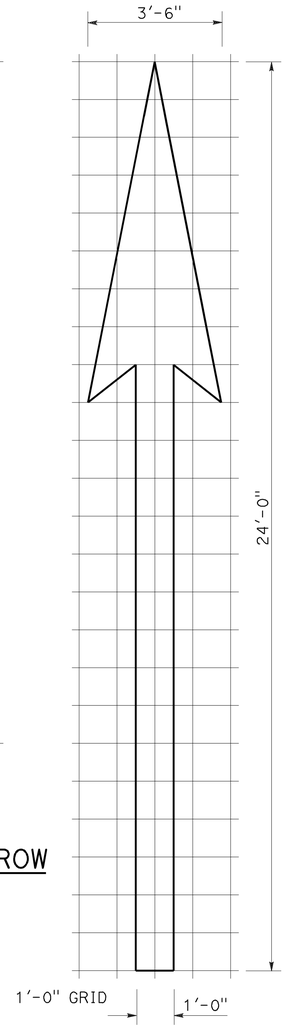

A=31 ft^2

TYPE I 24'-0" ARROW

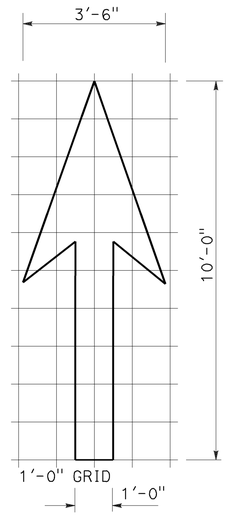

A=14 ft^2

TYPE I 10'-0" ARROW

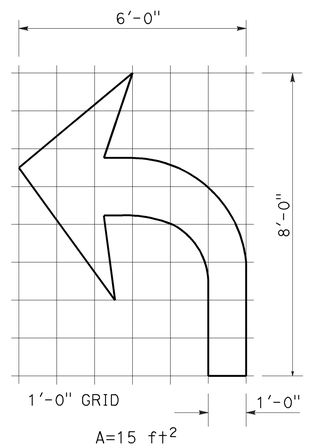

A=15 ft^2

TYPE IV (L) ARROW

(For Type IV (R) arrow, use mirror image)

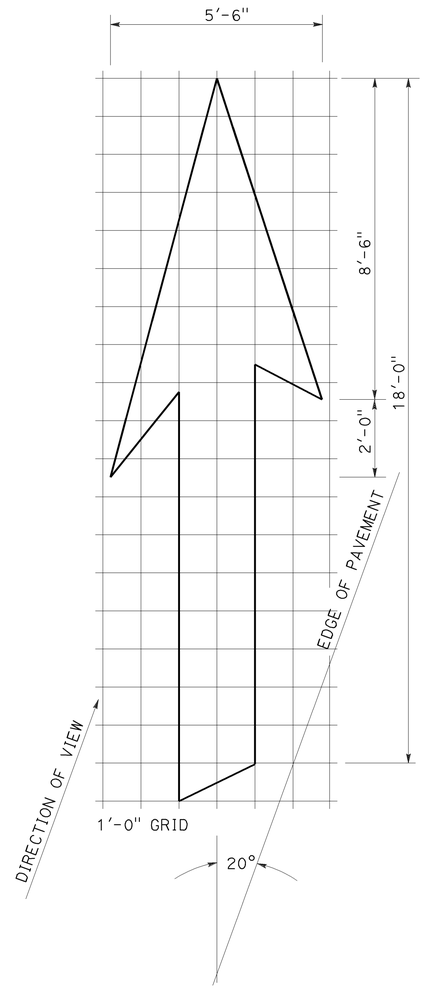

A=42 ft^2

TYPE VI ARROW

Right lane drop arrow
(For left lane, use mirror image)

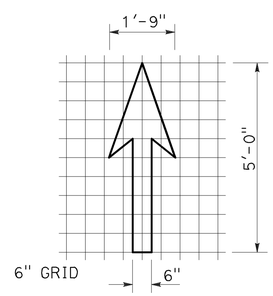

A=3.5 ft^2

BIKE LANE ARROW

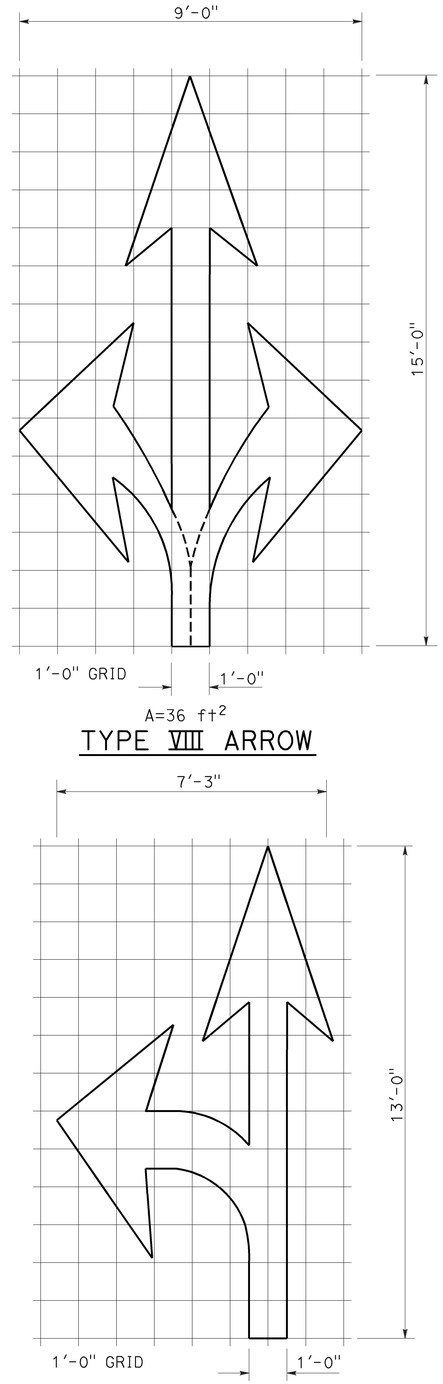

A=36 ft^2

TYPE VIII ARROW

A=27 ft^2

TYPE VII (L) ARROW

(For Type VII (R) arrow, use mirror image)

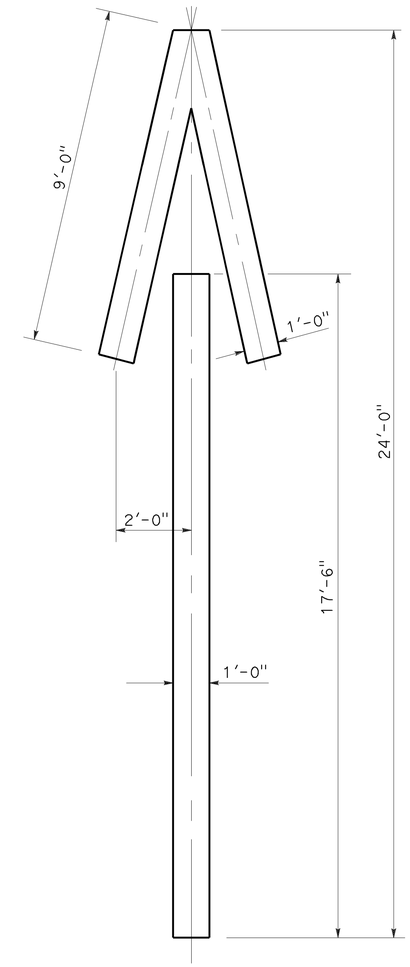

A=33 ft^2

TYPE V ARROW

NOTE:
Minor variations in dimensions may be accepted by the Engineer.

STATE OF CALIFORNIA
DEPARTMENT OF TRANSPORTATION

PAVEMENT MARKINGS ARROWS

NO SCALE

RSP A24A DATED APRIL 20, 2012 SUPERSEDES STANDARD PLAN A24A DATED MAY 20, 2011 - PAGE 13 OF THE STANDARD PLANS BOOK DATED 2010.

REVISED STANDARD PLAN RSP A24A

3-14-12

Dist	COUNTY	ROUTE	POST MILES TOTAL PROJECT	SHEET No.	TOTAL SHEETS
08	SBd, Riv	60	R0.0/R4.6, R3.0/R6.9	55	100

REGISTERED CIVIL ENGINEER

July 20, 2012
PLANS APPROVAL DATE

REGISTERED PROFESSIONAL ENGINEER
Roberta L. McLaughlin
No. C40375
Exp. 3-31-13
CIVIL
STATE OF CALIFORNIA

THE STATE OF CALIFORNIA OR ITS OFFICERS OR AGENTS SHALL NOT BE RESPONSIBLE FOR THE ACCURACY OR COMPLETENESS OF SCANNED COPIES OF THIS PLAN SHEET.

TO ACCOMPANY PLANS DATED 8-25-14

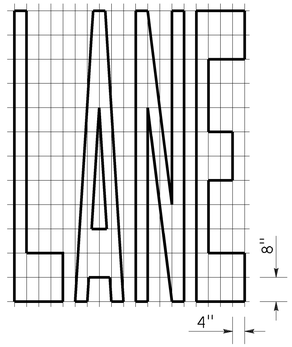

A=24 ft^2

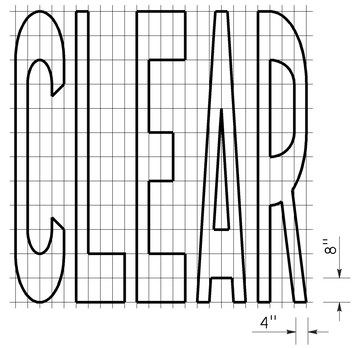

A=27 ft^2

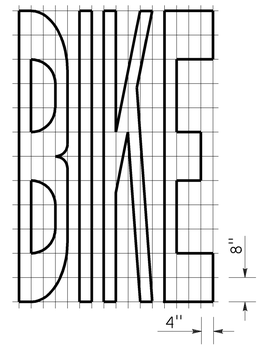

A=21 ft^2

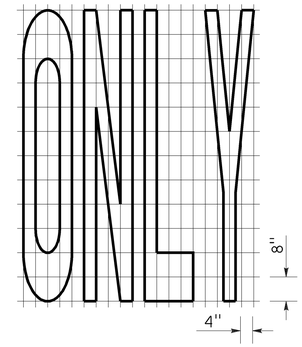

A=22 ft^2

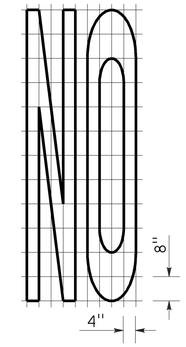

A=14 ft^2

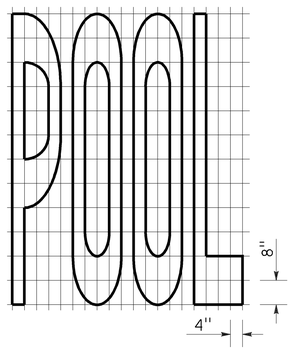

A=23 ft^2

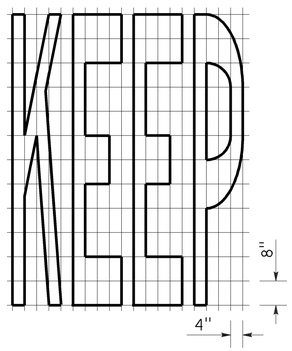

A=24 ft^2

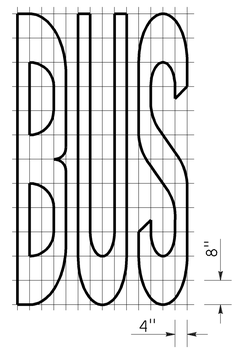

A=20 ft^2

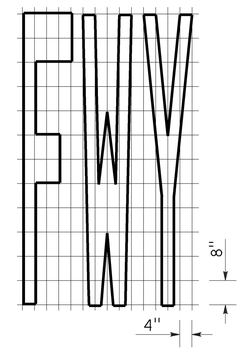

A=16 ft^2

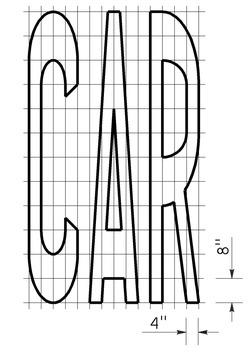

A=17 ft^2

WORD MARKINGS			
ITEM	ft^2	ITEM	ft^2
LANE	24	NO	14
POOL	23	BIKE	21
CAR	17	BUS	20
CLEAR	27	ONLY	22
KEEP	24	FWY	16

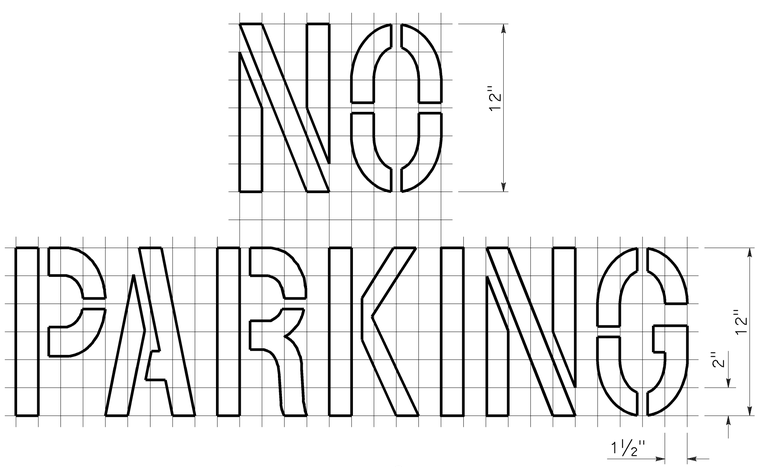

A=2 ft^2
See Notes 6 and 7

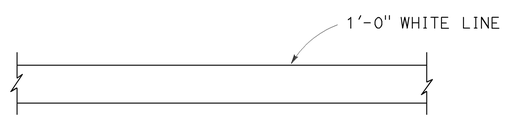

LIMIT LINE (STOP LINE)

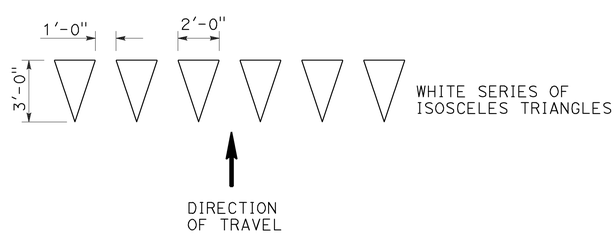

YIELD LINE

NOTES:

1. If a message consists of more than one word, it should read "UP", i.e., the first word should be nearest the driver.
2. The space between words should be at least four times the height of the characters for low speed roads, but not more than ten times the height of the characters. The space may be reduced appropriately where there is limited space because of local conditions.
3. Minor variations in dimensions may be accepted by the Engineer.
4. Portions of a letter, number or symbol may be separated by connecting segments not to exceed 2" in width.
5. The words "NO PARKING" pavement marking is to be used for parking facilities. For typical locations of markings, see Standard Plans A90A and A90B.
6. The words "NO PARKING", shall be painted in white letters no less than 1'-0" high on a contrasting background and located so that it is visible to traffic enforcement officials.

STATE OF CALIFORNIA
DEPARTMENT OF TRANSPORTATION

PAVEMENT MARKINGS WORDS, LIMIT AND YIELD LINES

NO SCALE

RSP A24E DATED JULY 20, 2012 SUPERSEDES STANDARD PLAN A24E
DATED MAY 20, 2011 - PAGE 17 OF THE STANDARD PLANS BOOK DATED 2010.

REVISED STANDARD PLAN RSP A24E

2010 REVISED STANDARD PLAN RSP A24E

6-12-12

Dist	COUNTY	ROUTE	POST MILES TOTAL PROJECT	SHEET No.	TOTAL SHEETS
08	SBd, Riv	60	R0.0/R4.6, R3.0/R6.9	56	100

Roberta L. McLaughlin
REGISTERED CIVIL ENGINEER

July 20, 2012
PLANS APPROVAL DATE

REGISTERED PROFESSIONAL ENGINEER
Roberta L. McLaughlin
No. C40375
Exp. 3-31-13
CIVIL
STATE OF CALIFORNIA

THE STATE OF CALIFORNIA OR ITS OFFICERS OR AGENTS SHALL NOT BE RESPONSIBLE FOR THE ACCURACY OR COMPLETENESS OF SCANNED COPIES OF THIS PLAN SHEET.

TO ACCOMPANY PLANS DATED 8-25-14

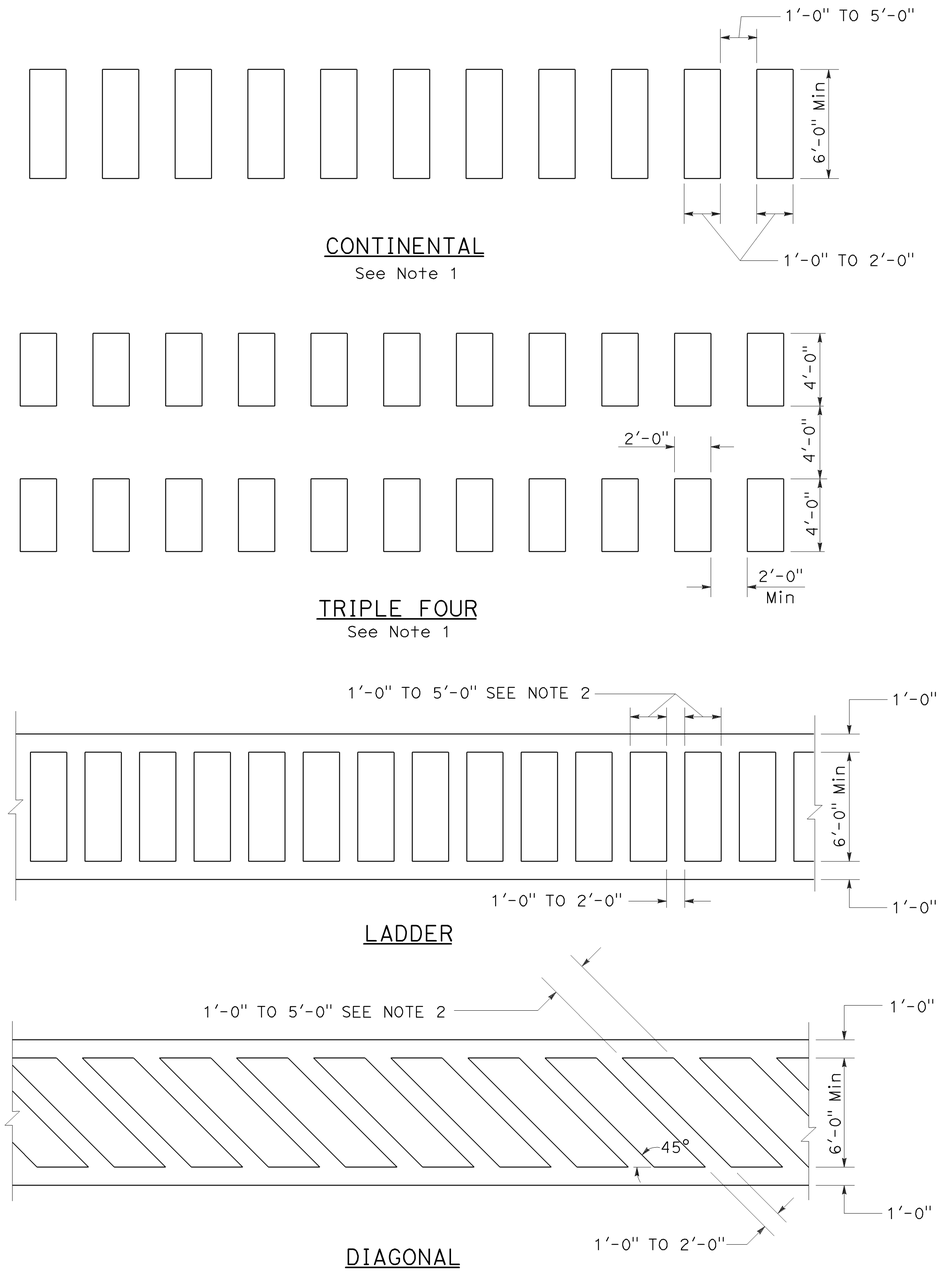

HIGHER VISIBILITY CROSSWALKS

NOTES:

1. Spaces between markings should be placed in wheel tracks of each lane.
2. Spacings not to exceed 2.5 times width of longitudinal line.
3. All crosswalk markings must be white except for those near schools must be yellow.

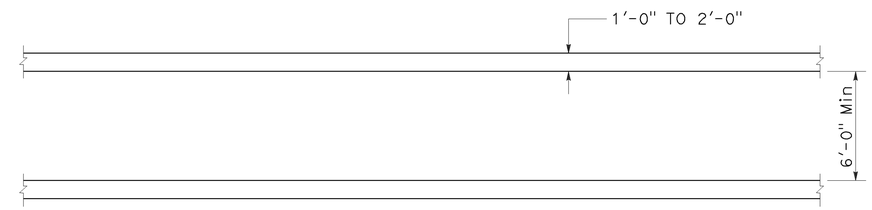

BASIC

STATE OF CALIFORNIA
DEPARTMENT OF TRANSPORTATION

PAVEMENT MARKINGS CROSSWALKS

NO SCALE

RSP A24F DATED JULY 20, 2012 SUPPLEMENTS THE STANDARD PLANS BOOK DATED 2010.

REVISED STANDARD PLAN RSP A24F

2010 REVISED STANDARD PLAN RSP A24F

6-28-12

Dist	COUNTY	ROUTE	POST MILES TOTAL PROJECT	SHEET No.	TOTAL SHEETS
08	SBd, Riv	60	R0.0/R4.6, R3.0/R6.9	57	100

Randell D. Hiatt
REGISTERED CIVIL ENGINEER

July 19, 2013
PLANS APPROVAL DATE

REGISTERED PROFESSIONAL ENGINEER
Randell D. Hiatt
No. C50200
Exp. 6-30-15
CIVIL
STATE OF CALIFORNIA

THE STATE OF CALIFORNIA OR ITS OFFICERS OR AGENTS SHALL NOT BE RESPONSIBLE FOR THE ACCURACY OR COMPLETENESS OF SCANNED COPIES OF THIS PLAN SHEET.

TO ACCOMPANY PLANS DATED 8-25-14

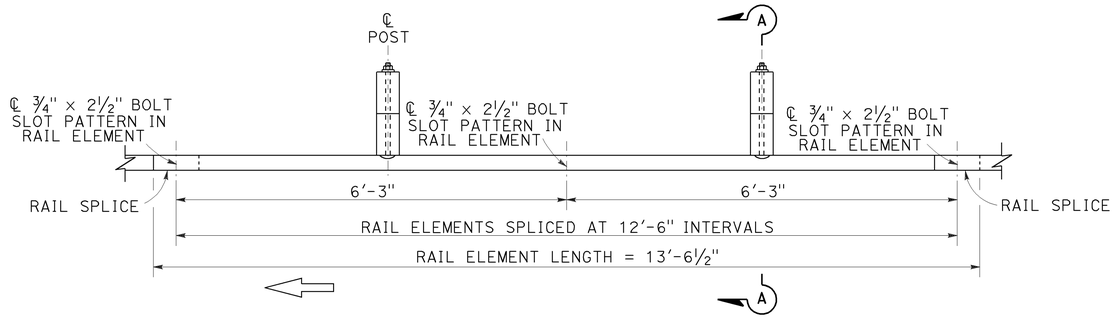

PLAN

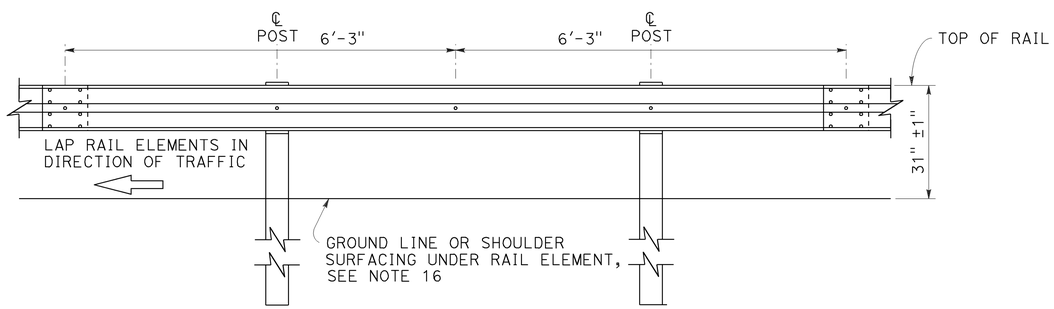

ELEVATION

MIDWEST GUARDRAIL SYSTEM WITH WOOD POST AND BLOCKS

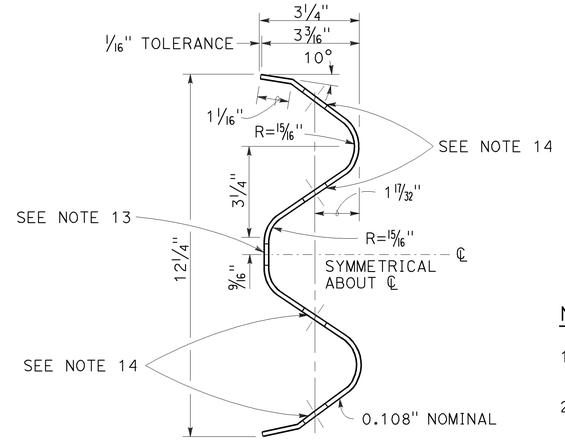

SECTION THRU RAIL ELEMENT

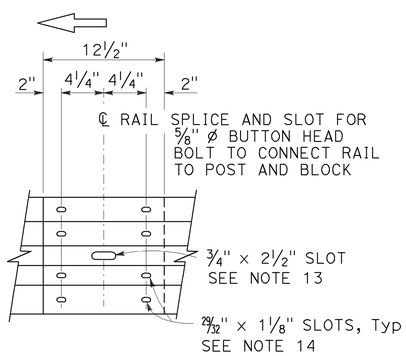

ELEVATION

RAIL ELEMENT SPLICE DETAIL

a) Connect the over lapped end of the rail elements with ⅝" ø × 1⅜" button head oval shoulder splice bolts inserted into the 29⁄32" × 1⅛" slots and bolted together with ⅝" ø recessed hex nuts. Recess of hex nut points toward rail element. A total of 8 bolts and nuts are to be used at each rail splice connection.

b) The ends of the rail elements are to be overlapped in the direction of traffic (see details).

c) Where end cap is to be attached to the end of a rail element, a total of 4 of the above described splice bolts and nuts are to be used.

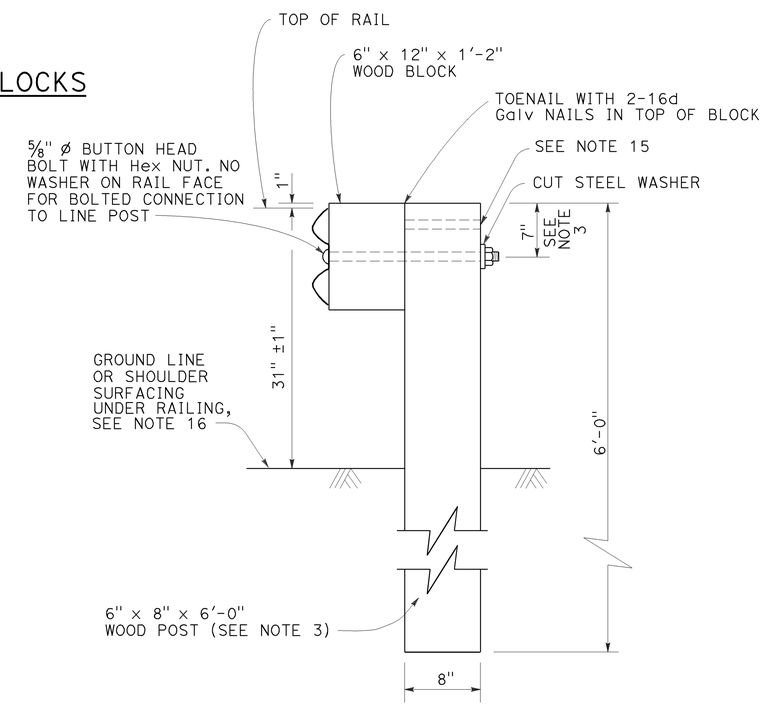

SECTION A-A

TYPICAL WOOD LINE POST INSTALLATION

See Note 4

NOTES:

1. For details of steel post installations, see Revised Standard Plan RSP A77L2.
2. For details of standard hardware used to construct MGS, see Revised Standard Plan RSP A77M1.
3. For details of wood posts and wood blocks used to construct MGS, see Revised Standard Plan RSP A77N1.
4. For additional installation details, see Revised Standard Plan RSP A77N3.
5. MGS post spacing to be 6'-3" center to center, except as otherwise noted.
6. For MGS typical layouts, see the A77P, A77Q and A77R Series of Standard Plans.
7. If railing is connected to terminal system end treatment, use 31" height terminal system end treatment.
8. For MGS end anchor details, see Revised Standard Plans RSP A77S1 and RSP A77T2.
9. For details of MGS transition to bridge railing, see Revised Standard Plan RSP A77U4.
10. For additional details of MSG connection to bridge railing, see Revised Standard Plans RSP A77U1, RSP A77U2 and RSP A77V1.
11. For MGS connection details to abutments and walls, see Revised Standard Plan RSP A77U3.
12. For typical MGS delineation and dike positioning details, see Revised Standard Plan RSP A77N4.
13. Slotted hole for bolted connection of rail element to block and post. See "Section Thru Rail Element".
14. Slotted holes for splice bolts to overlap ends of rail element. See "Section Thru Rail Element".
15. Additional hole in uppermost portion of line post is for potential future adjustments of railing height. See Revised Standard Plan RSP A77N1.
16. Install posts in soil.

STATE OF CALIFORNIA
DEPARTMENT OF TRANSPORTATION

MIDWEST GUARDRAIL SYSTEM STANDARD RAILING SECTION (WOOD POST WITH WOOD BLOCK)

NO SCALE

RSP A77L1 DATED JULY 19, 2013 SUPPLEMENTS STANDARD PLANS BOOK DATED 2010.

REVISED STANDARD PLAN RSP A77L1

2010 REVISED STANDARD PLAN RSP A77L1

Dist	COUNTY	ROUTE	POST MILES TOTAL PROJECT	SHEET No.	TOTAL SHEETS
08	SBd, Riv	60	R0.0/R4.6, R3.0/R6.9	58	100

Randell D. Hiatt
REGISTERED CIVIL ENGINEER

July 19, 2013
PLANS APPROVAL DATE

REGISTERED PROFESSIONAL ENGINEER Randell D. Hiatt No. C50200 Exp. 6-30-15 CIVIL STATE OF CALIFORNIA

THE STATE OF CALIFORNIA OR ITS OFFICERS OR AGENTS SHALL NOT BE RESPONSIBLE FOR THE ACCURACY OR COMPLETENESS OF SCANNED COPIES OF THIS PLAN SHEET.

TO ACCOMPANY PLANS DATED 8-25-14

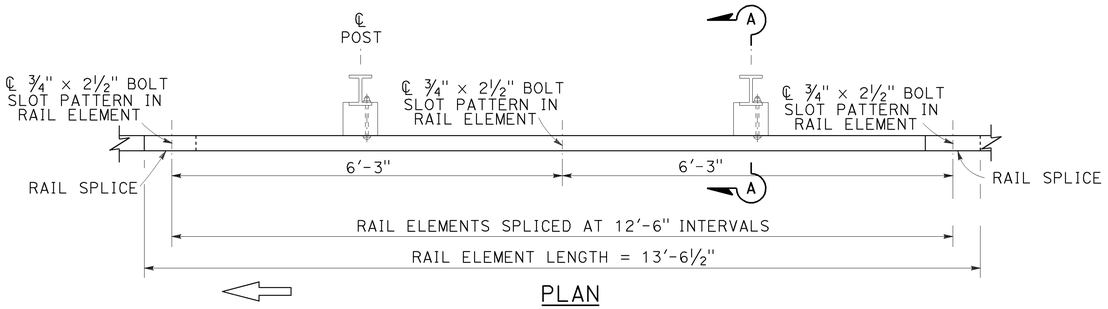

PLAN

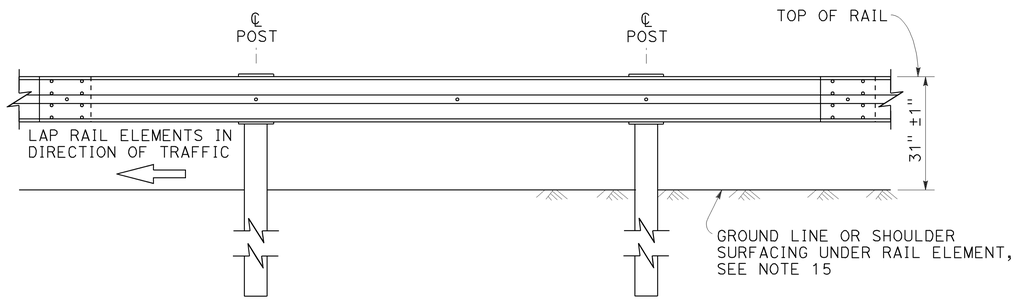

ELEVATION

MIDWEST GUARDRAIL SYSTEM WITH STEEL POSTS AND NOTCHED WOOD OR NOTCHED RECYCLED PLASTIC BLOCKS

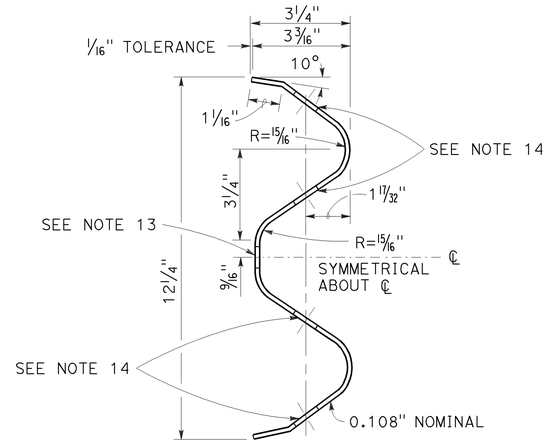

SECTION THRU RAIL ELEMENT

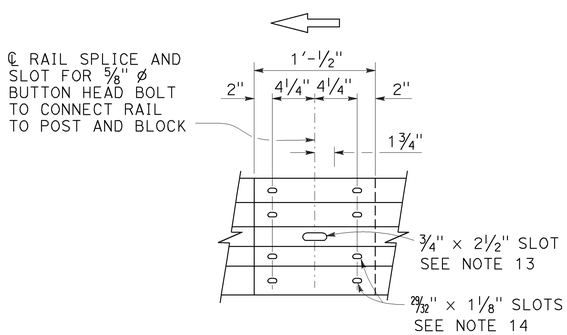

ELEVATION

RAIL ELEMENT SPLICE DETAIL

a) Connect the over lapped end of the rail elements with ⅝" ø × 1⅜" button head oval shoulder splice bolts inserted into the 29⁄32" × 1⅛" slots and bolted together with ⅝" ø recessed hex nuts. Recess of hex nut points toward rail element. A total of 8 bolts and nuts are to be used at each rail splice connection.

b) The ends of the rail elements are to be overlapped in the direction of traffic (see details).

c) Where end cap is to be attached to the end of a rail element, a total of 4 of the above described splice bolts and nuts are to be used.

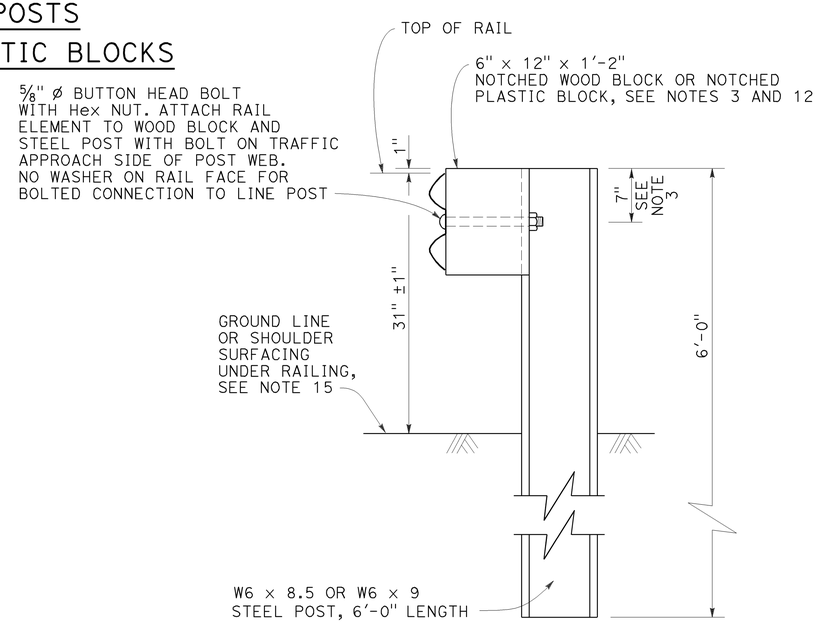

SECTION A-A

TYPICAL STEEL LINE POST INSTALLATION

See Note 4

NOTES:

1. For details of wood post installations, see Revised Standard Plan RSP A77L1.
2. For details of standard hardware used to construct MGS, see Revised Standard Plan RSP A77M1.
3. For details of steel posts and notched wood blocks used to construct MGS, see Revised Standard Plan RSP A77N2.
4. For additional installation details, see Revised Standard Plan RSP A77N3.
5. MGS post spacing to be 6'-3" center to center, except as otherwise noted.
6. For MGS typical layouts, see the A77P, A77Q and A77R Series of Standard Plans.
7. If railing is connected to terminal system end treatment, use 31" height terminal system end treatment.
8. For MGS end anchor details, see Revised Standard Plans RSP A77S1 and RSP A77T2.
9. For details of MGS transition to bridge railing, see Revised Standard Plan RSP A77U4.
10. For additional details of MGS connection to bridge railings, see Revised Standard Plans RSP A77U1, RSP A77U2 and RSP A77V1.
11. For dike positioning and MGS delineation details, see Revised Standard Plan RSP A77N4.
12. Notched face of block faces steel post.
13. Slotted hole for bolted connection of rail element to block and post. See "Section Thru Rail Element".
14. Slotted holes for splice bolts to overlap ends of rail element. See "Section Thru Rail Element".
15. Install posts in soil.

STATE OF CALIFORNIA
DEPARTMENT OF TRANSPORTATION

MIDWEST GUARDRAIL SYSTEM STANDARD RAILING SECTION (STEEL POST WITH NOTCHED WOOD OR NOTCHED RECYCLED PLASTIC BLOCK)

NO SCALE

RSP A77L2 DATED JULY 19, 2013 SUPPLEMENTS THE STANDARD PLANS BOOK DATED 2010.

REVISED STANDARD PLAN RSP A77L2

2010 REVISED STANDARD PLAN RSP A77L2

7-3-13

Dist	COUNTY	ROUTE	POST MILES TOTAL PROJECT	SHEET No.	TOTAL SHEETS
08	SBd, Riv	60	R0.0/R4.6, R3.0/R6.9	59	100

Randell D. Hiatt
REGISTERED CIVIL ENGINEER

July 19, 2013
PLANS APPROVAL DATE

REGISTERED PROFESSIONAL ENGINEER
Randell D. Hiatt
No. C50200
Exp. 6-30-15
CIVIL
STATE OF CALIFORNIA

THE STATE OF CALIFORNIA OR ITS OFFICERS OR AGENTS SHALL NOT BE RESPONSIBLE FOR THE ACCURACY OR COMPLETENESS OF SCANNED COPIES OF THIS PLAN SHEET.

TO ACCOMPANY PLANS DATED 8-25-14

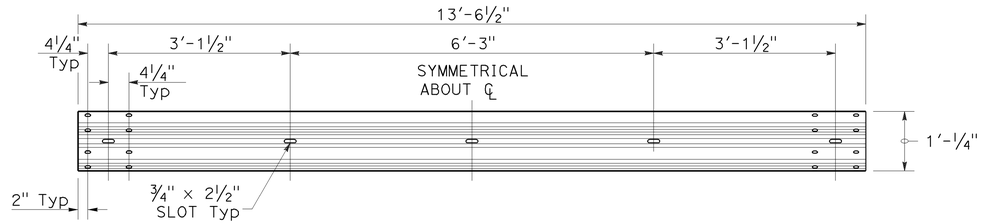

TYPICAL RAIL ELEMENT

NOTE:

1. Slotted holes for splice bolts to overlap ends of rail element.

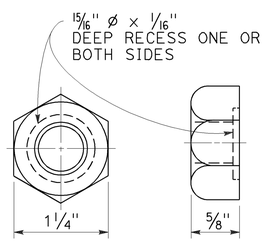

⅝" ø RECESS NUT

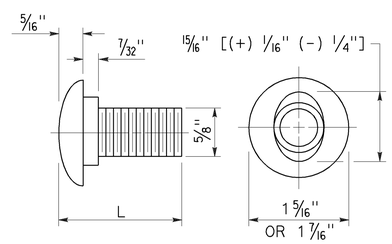

⅝" ø BUTTON HEAD BOLT

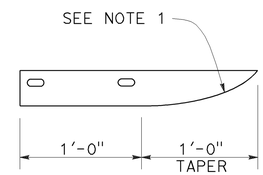

PLAN

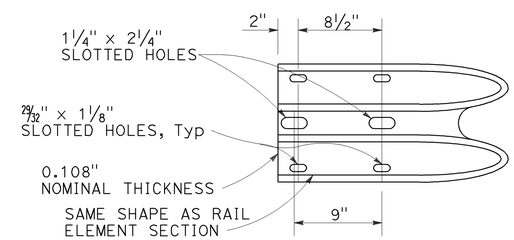

ELEVATION

END CAP
(TYPE A)

BUTTON HEAD BOLT

L	THREAD LENGTH
1⅜"	FULL THREAD LENGTH
2"	FULL THREAD LENGTH
10"	4" Min THREAD LENGTH
18"	4" Min THREAD LENGTH
20"	4" Min THREAD LENGTH
22"	4" Min THREAD LENGTH
26"	4" Min THREAD LENGTH
36"	4" Min THREAD LENGTH
** 2¾"	2" Min THREAD LENGTH
** 19"	4" Min THREAD LENGTH

** For nested rail applications.

STATE OF CALIFORNIA
DEPARTMENT OF TRANSPORTATION

MIDWEST GUARDRAIL SYSTEM STANDARD HARDWARE

NO SCALE

RSP A77M1 DATED JULY 19, 2013 SUPPLEMENTS THE STANDARD PLANS BOOK DATED 2010.

REVISED STANDARD PLAN RSP A77M1

2010 REVISED STANDARD PLAN RSP A77M1

Dist	COUNTY	ROUTE	POST MILES TOTAL PROJECT	SHEET No.	TOTAL SHEETS
08	SBd, Riv	60	R0.0/R4.6, R3.0/R6.9	60	100

Randell D. Hiatt
REGISTERED CIVIL ENGINEER

July 19, 2013
PLANS APPROVAL DATE

REGISTERED PROFESSIONAL ENGINEER
Randell D. Hiatt
No. C50200
Exp. 6-30-15
CIVIL
STATE OF CALIFORNIA

THE STATE OF CALIFORNIA OR ITS OFFICERS OR AGENTS SHALL NOT BE RESPONSIBLE FOR THE ACCURACY OR COMPLETENESS OF SCANNED COPIES OF THIS PLAN SHEET.

TO ACCOMPANY PLANS DATED 8-25-14

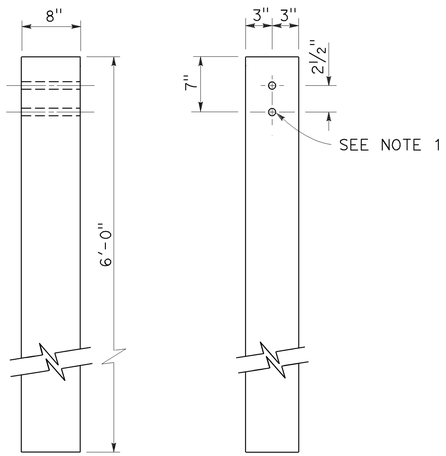

SIDE FRONT

6" x 8" WOOD POST
See Note 3

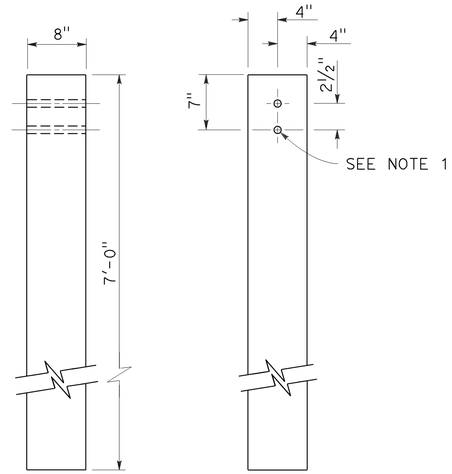

SIDE FRONT

8" x 8" WOOD POST
See Note 4

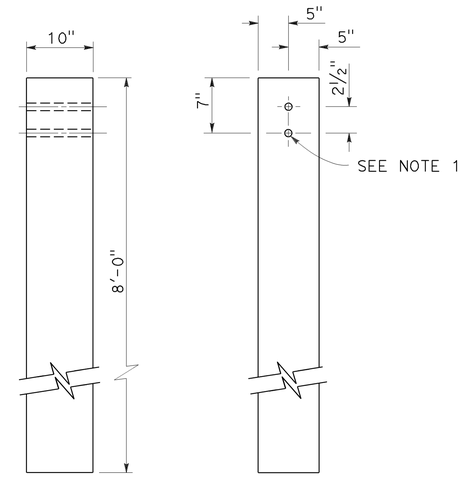

SIDE FRONT

10" x 10" WOOD POST
See Note 5

NOTES:

1. All holes in wood posts and blocks shall be ¾" Dia ± 1/16".
2. Dimensions shown for wood post are nominal.
3. This post and block combination used for standard line post sections of MGS.
4. This post and 8" x 12" block combination used for line post sections of MGS on narrow roadways.
5. This post and 8" x 12" block combination is typically used where strengthened line post sections of MGS are warranted to shield fixed objects.
6. See Revised Standard Plan RSP A77L3 for use of 6" x 8" and 8" x 8" wood blocks.

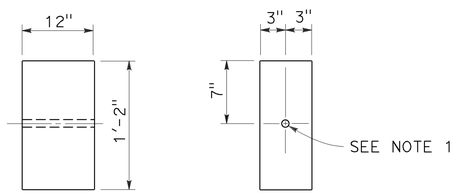

SIDE FRONT

6" x 12" WOOD BLOCK
See Note 3

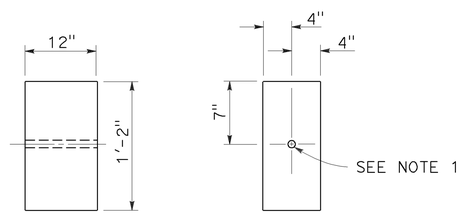

SIDE FRONT

8" x 12" WOOD BLOCK

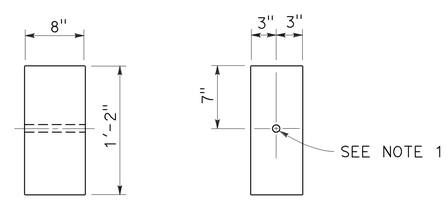

SIDE FRONT

6" x 8" WOOD BLOCK
Only for use with metal beam guard rail see Note 6

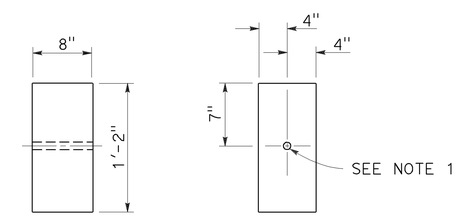

SIDE FRONT

8" x 8" WOOD BLOCK
Only for use with metal beam guard rail see Note 6

STATE OF CALIFORNIA
DEPARTMENT OF TRANSPORTATION

MIDWEST GUARDRAIL SYSTEM WOOD POST AND WOOD BLOCK DETAILS

NO SCALE

RSP A77N1 DATED JULY 19, 2013 SUPPLEMENTS THE STANDARD PLANS BOOK DATED 2010.

REVISED STANDARD PLAN RSP A77N1

2010 REVISED STANDARD PLAN RSP A77N1

7-3-13

Dist	COUNTY	ROUTE	POST MILES TOTAL PROJECT	SHEET No.	TOTAL SHEETS
08	SBd, Riv	60	R0.0/R4.6, R3.0/R6.9	61	100

Randell D. Hiatt
REGISTERED CIVIL ENGINEER

November 15, 2013
PLANS APPROVAL DATE

REGISTERED PROFESSIONAL ENGINEER
Randell D. Hiatt
No. C50200
Exp. 6-30-15
CIVIL
STATE OF CALIFORNIA

THE STATE OF CALIFORNIA OR ITS OFFICERS OR AGENTS SHALL NOT BE RESPONSIBLE FOR THE ACCURACY OR COMPLETENESS OF SCANNED COPIES OF THIS PLAN SHEET.

TO ACCOMPANY PLANS DATED 8-25-14

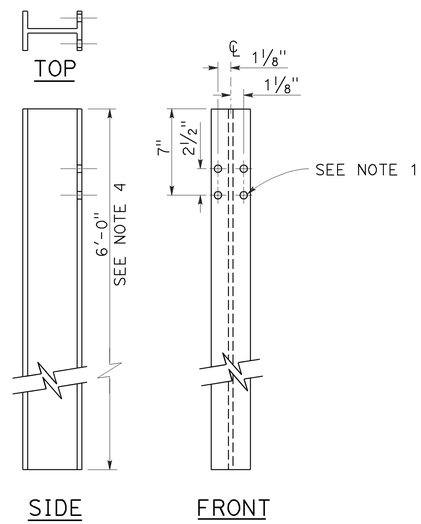

W6 x 9 OR W6 x 8.5
STEEL POST
See Note 4

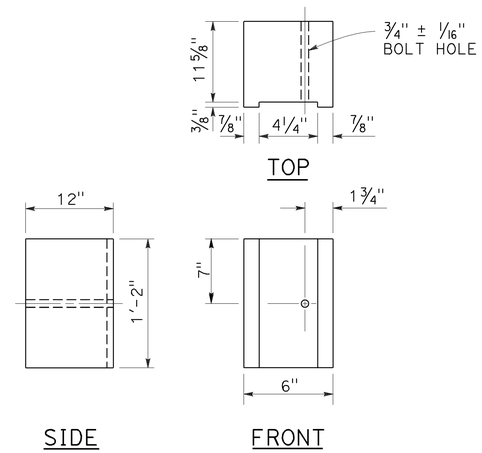

6" x 12"
NOTCHED WOOD BLOCK
See Notes 2 and 3

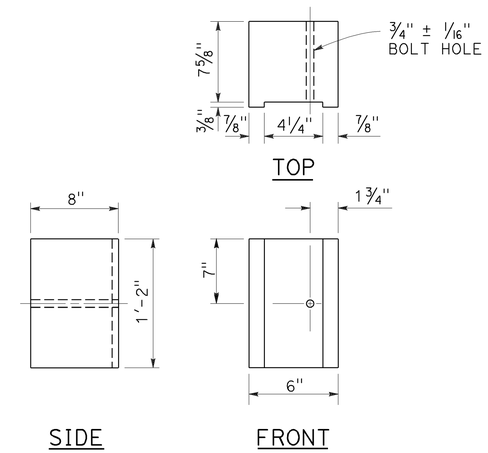

6" x 8"
NOTCHED WOOD BLOCK
Only for use with metal beam guard railing. See Note 5

NOTES:

1. All holes in steel post shall be 13/16" Dia maximum.
2. Dimensions shown for wood block are nominal.
3. Notched face of block faces steel post.
4. 6'-0" length posts to be used for typical roadway installation. See Revised Standard Plan RSP A77N3.
5. See Revised Standard Plan RSP A77L3 for use of 6" x 8" and 8" x 8" notched wood blocks.
6. This post and 8" x 12" block combination to be used for line post sections of MGS on narrow roadways and where strengthened line post sections of MGS are warranted to shield fixed objects.

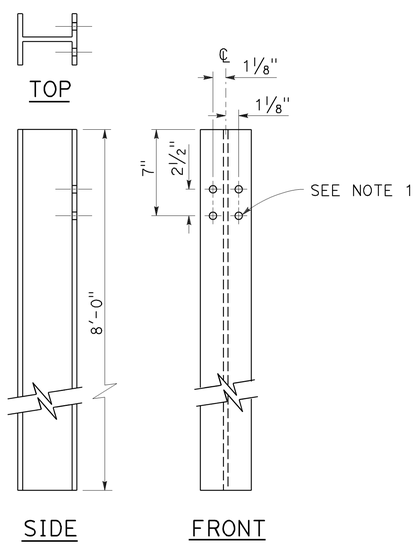

W6 x 15
STEEL POST
See Note 6

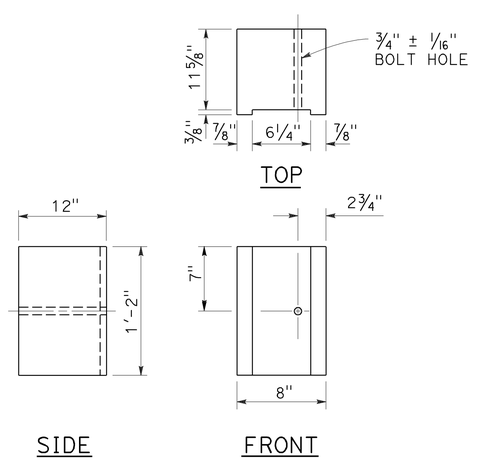

8" x 12"
NOTCHED WOOD BLOCK
See Notes 2 and 3

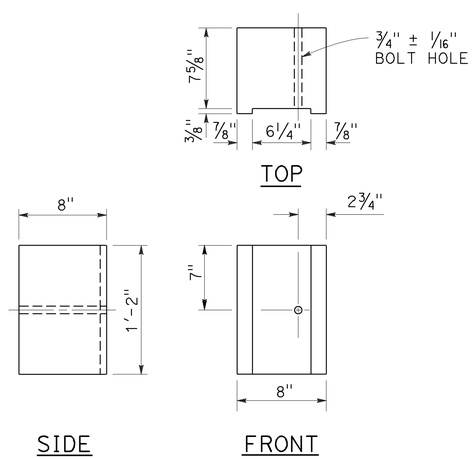

8" x 8"
NOTCHED WOOD BLOCK
Only for use with metal beam guard railing. See Note 5

STATE OF CALIFORNIA
DEPARTMENT OF TRANSPORTATION

MIDWEST GUARDRAIL SYSTEM STEEL POST AND NOTCHED WOOD BLOCK DETAILS

NO SCALE

RSP A77N2 DATED NOVEMBER 15, 2013 SUPERSEDES RSP A77N2
DATED JULY 19, 2013 THAT SUPPLEMENTS THE STANDARD PLANS BOOK DATED 2010.

REVISED STANDARD PLAN RSP A77N2

2010 REVISED STANDARD PLAN RSP A77N2

10-29-13

Dist	COUNTY	ROUTE	POST MILES TOTAL PROJECT	SHEET No.	TOTAL SHEETS
08	SBd, Riv	60	R0.0/R4.6, R3.0/R6.9	62	100

Randell D. Hiatt
REGISTERED CIVIL ENGINEER

November 15, 2013
PLANS APPROVAL DATE

REGISTERED PROFESSIONAL ENGINEER
Randell D. Hiatt
No. C50200
Exp. 6-30-15
CIVIL
STATE OF CALIFORNIA

THE STATE OF CALIFORNIA OR ITS OFFICERS OR AGENTS SHALL NOT BE RESPONSIBLE FOR THE ACCURACY OR COMPLETENESS OF SCANNED COPIES OF THIS PLAN SHEET.

TO ACCOMPANY PLANS DATED 8-25-14

2010 REVISED STANDARD PLAN RSP A77N3

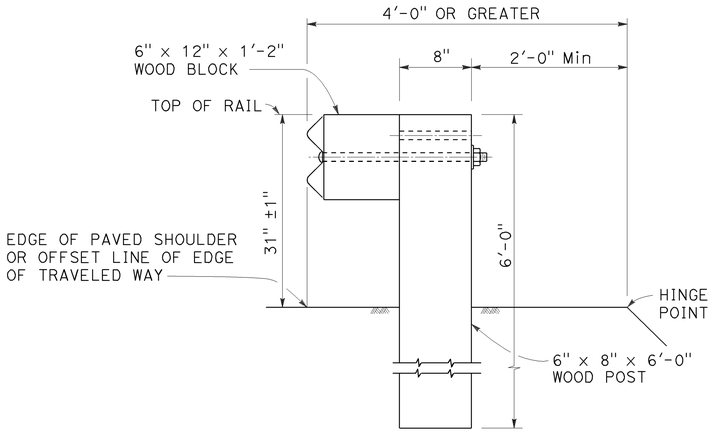

DETAIL A

TYPICAL ROADWAY INSTALLATION

See Note 1

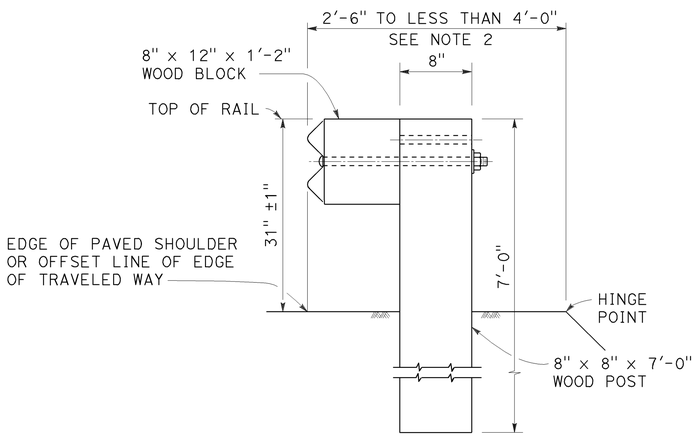

DETAIL B

NARROW ROADWAY INSTALLATION

See Note 1

POST EMBEDMENT

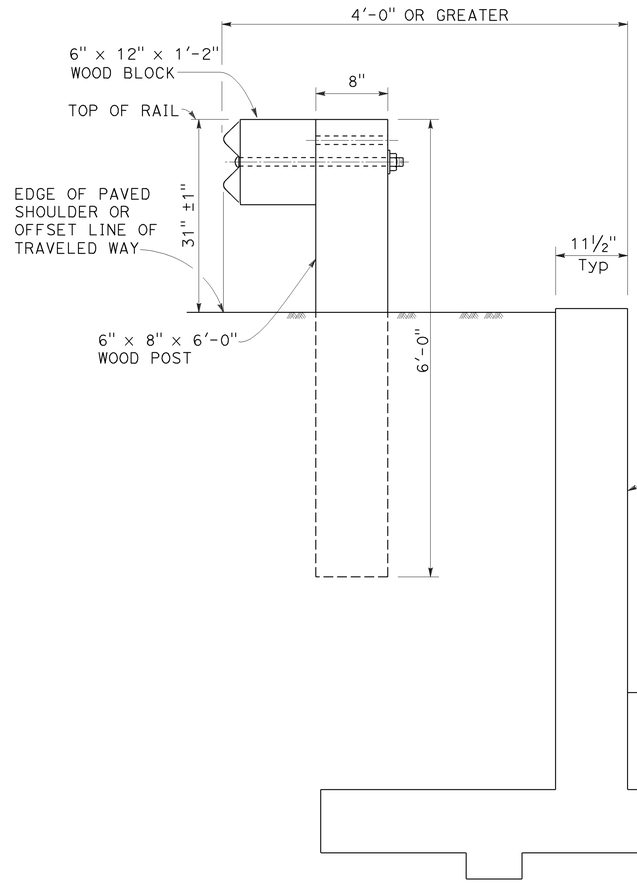

DETAIL C

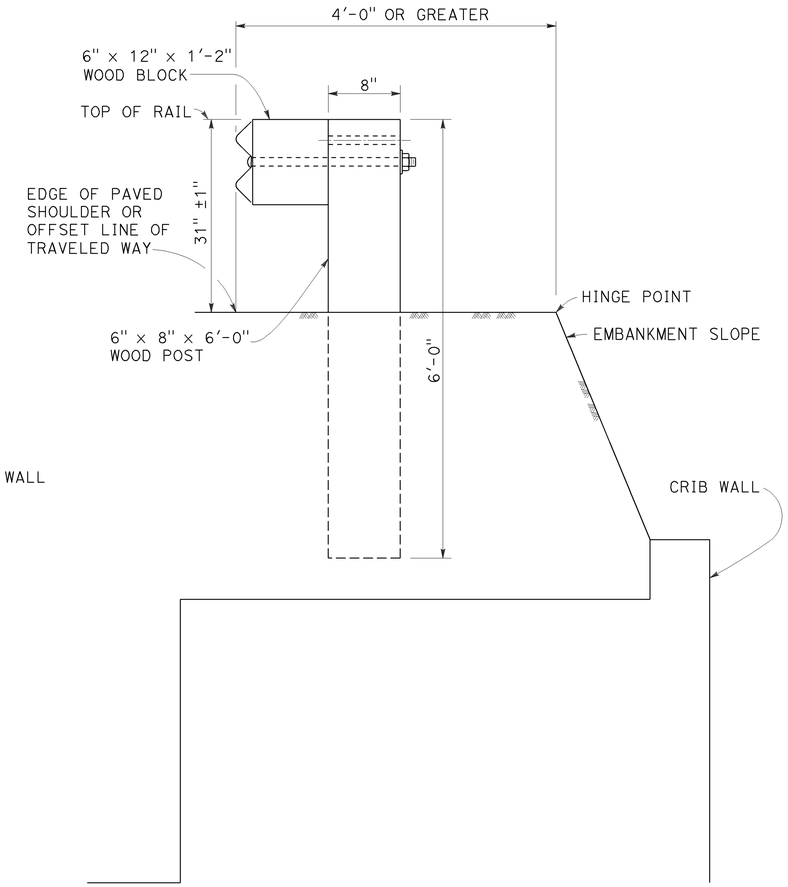

DETAIL D

INSTALLATION AT EARTH RETAINING WALLS

NOTES:

1. These installation details also applicable to steel line post installations. For Detail A, C, and D, where steel line post installations are constructed, W6 x 8.5 or W6 x 9 steel post, 6'-0" in length, with 6" x 12" x 1'-2" notched wood blocks or notched recycled plastic blocks are to be used in place of the size of wood post and wood block shown. For Detail B, where steel line post installations are constructed, W6 x 15 steel post, 8'-0" in length, with 8" x 12" x 1'-2" notched wood blocks or notched recycled plastic blocks are to be used in place of the size of wood post and wood block shown. For additional installation details, see Revised Standard Plan RSP A77L1 and RSP A77L2.
2. Where the distance between the face of the rail and the hinge point is less than 2'-6", see the Project Plans for special details.
3. For dike positioning with MGS installations, see Revised Standard Plan RSP A77N4.

STATE OF CALIFORNIA
DEPARTMENT OF TRANSPORTATION

MIDWEST GUARDRAIL SYSTEM TYPICAL LINE POST EMBEDMENT AND HINGE POINT OFFSET DETAILS

NO SCALE

RSP A77N3 DATED NOVEMBER 15, 2013 SUPERSEDES RSP A77N3
DATED JULY 19, 2013 THAT SUPPLEMENTS THE STANDARD PLANS BOOK DATED 2010.

REVISED STANDARD PLAN RSP A77N3

Dist	COUNTY	ROUTE	POST MILES TOTAL PROJECT	SHEET No.	TOTAL SHEETS
08	SBd, Riv	60	R0.0/R4.6, R3.0/R6.9	63	100

Randell D. Hiatt
REGISTERED CIVIL ENGINEER

July 19, 2013
PLANS APPROVAL DATE

REGISTERED PROFESSIONAL ENGINEER
Randell D. Hiatt
No. C50200
Exp. 6-30-15
CIVIL
STATE OF CALIFORNIA

THE STATE OF CALIFORNIA OR ITS OFFICERS OR AGENTS SHALL NOT BE RESPONSIBLE FOR THE ACCURACY OR COMPLETENESS OF SCANNED COPIES OF THIS PLAN SHEET.

TO ACCOMPANY PLANS DATED 8-25-14

NOTES:

1. When necessary to place dike more than 7" in front of face of MGS, only Type C dike may be used. For dike details, see Revised Standard Plan RSP A87B.
2. For standard railing post embedment, see Revised Standard Plan RSP A77N3.
3. MGS delineation to be used where shown on the Project Plans.
4. When dike or curb is placed under MGS, the maximum height of the dike or curb shall be 6". Mountable dike should not be used. For dike and curb details, see Revised Standard Plans RSP A87A and RSP A87B.
5. For details of typical distance between the face of rail and hinge point, see Revised Standard Plan RSP A77N3.
6. For steel line posts, use 1/4 - 20 self-tapping screws in 0.22" diameter holes or 1/4" bolts in 9/32" diameter holes.

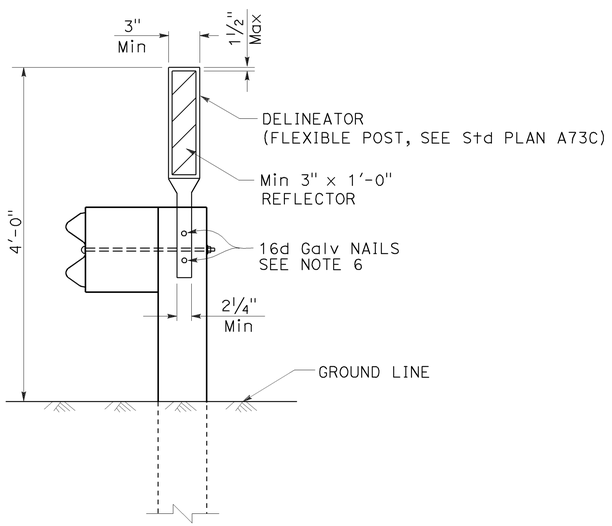

MGS DELINEATION

See Note 3

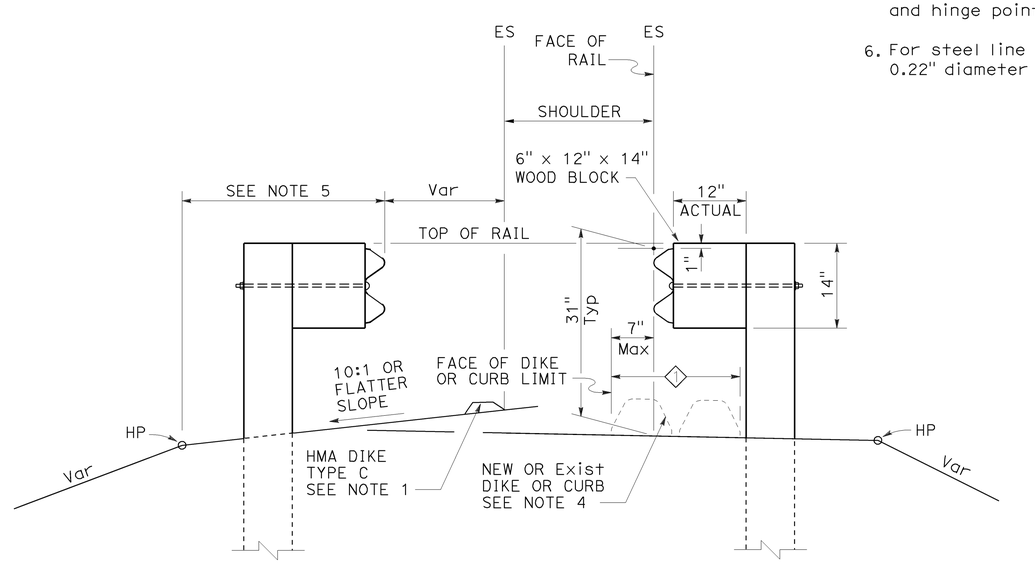

DIKE POSITIONING

See Note 1

1 PERMISSIBLE DIKE OR CURB PLACEMENT AREA

STATE OF CALIFORNIA
DEPARTMENT OF TRANSPORTATION

MIDWEST GUARDRAIL SYSTEM TYPICAL RAILING DELINEATION AND DIKE POSITIONING DETAILS

NO SCALE

RSP A77N4 DATED JULY 19, 2013 SUPPLEMENTS THE STANDARD PLANS BOOK DATED 2010.

REVISED STANDARD PLAN RSP A77N4

2010 REVISED STANDARD PLAN RSP A77N4

7-10-13

Dist	COUNTY	ROUTE	POST MILES TOTAL PROJECT	SHEET No.	TOTAL SHEETS
08	SBd, Riv	60	R0.0/R4.6, R3.0/R6.9	64	100

Randell D. Hiatt
REGISTERED CIVIL ENGINEER

July 19, 2013
PLANS APPROVAL DATE

REGISTERED PROFESSIONAL ENGINEER
Randell D. Hiatt
No. C50200
Exp. 6-30-15
CIVIL
STATE OF CALIFORNIA

THE STATE OF CALIFORNIA OR ITS OFFICERS OR AGENTS SHALL NOT BE RESPONSIBLE FOR THE ACCURACY OR COMPLETENESS OF SCANNED COPIES OF THIS PLAN SHEET.

TO ACCOMPANY PLANS DATED 8-25-14

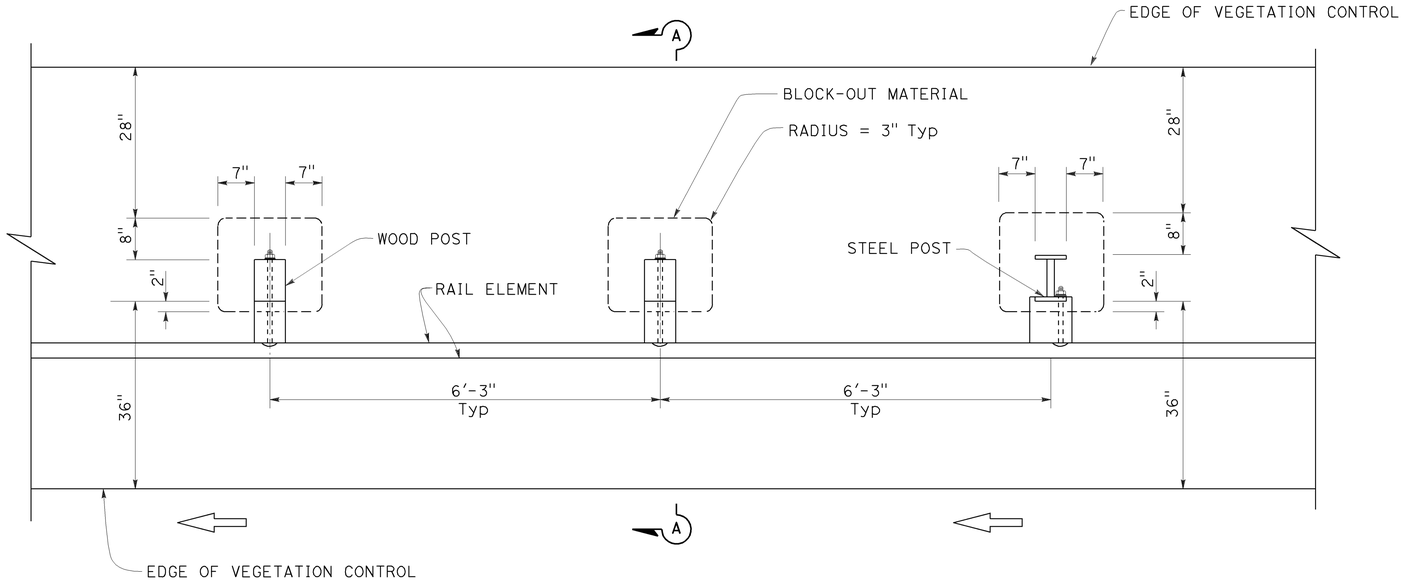

PLAN

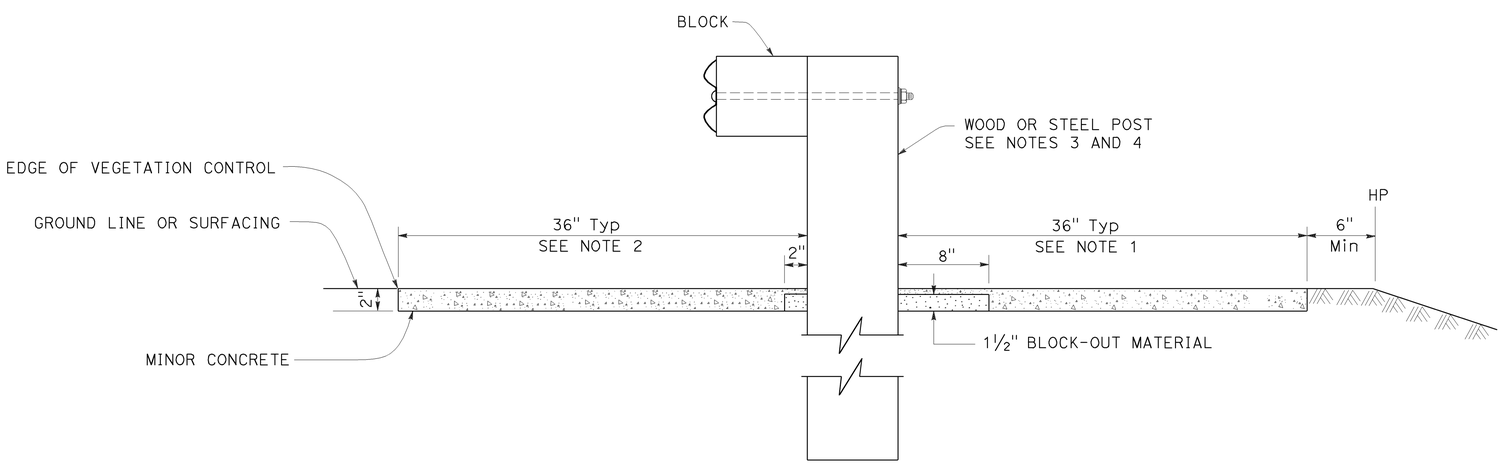

SECTION A-A

NOTES:

1. Where the distance between back of post and hinge point is less than 42", construct vegetation control to 6" from hinge point while maintaining the 8" block-out at back of post. If the 8" block-out at back of post can not be maintained, construct vegetation control flush with the back edge of post.
2. Where dike is constructed under railing, construct vegetation control to back edge of dike. Where paved shoulder is constructed within 36" in front of the post, construct vegetation control to the edge of paved shoulder.
3. For wood post sizes, see Revised Standard Plan RSP A77N1.
4. For steel post sizes, see Revised Standard Plan RSP A77N2.
5. For details not shown, see Revised Standard Plans RSP A77L1 and RSP A77L2.

STATE OF CALIFORNIA
DEPARTMENT OF TRANSPORTATION

MIDWEST GUARDRAIL SYSTEM TYPICAL VEGETATION CONTROL STANDARD RAILING SECTION

NO SCALE

RSP A77N5 DATED JULY 19, 2013 SUPPLEMENTS THE STANDARD PLANS BOOK DATED 2010.

REVISED STANDARD PLAN RSP A77N5

2010 REVISED STANDARD PLAN RSP A77N5

7-3-13

Dist	COUNTY	ROUTE	POST MILES TOTAL PROJECT	SHEET No.	TOTAL SHEETS
08	SBd, Riv	60	R0.0/R4.6, R3.0/R6.9	65	100

Randell D. Hiatt
REGISTERED CIVIL ENGINEER

July 19, 2013
PLANS APPROVAL DATE

REGISTERED PROFESSIONAL ENGINEER
Randell D. Hiatt
No. C50200
Exp. 6-30-15
CIVIL
STATE OF CALIFORNIA

THE STATE OF CALIFORNIA OR ITS OFFICERS OR AGENTS SHALL NOT BE RESPONSIBLE FOR THE ACCURACY OR COMPLETENESS OF SCANNED COPIES OF THIS PLAN SHEET.

TO ACCOMPANY PLANS DATED 8-25-14

NOTES:

1. See Revised Standard Plan RSP A77N5 for additional vegetation control details.
2. Where the distance between back of post and hinge point is less than 42", construct vegetation control to 6" from hinge point while maintaining the 8" block-out at back of post. If the 8" block-out at back of post can not be maintained, construct vegetation control flush with the back edge of post.
3. Where dike is constructed under railing, construct vegetation control to back edge of dike. Where paved shoulder is constructed within 36" in front of the post, construct vegetation control to the edge of paved shoulder.

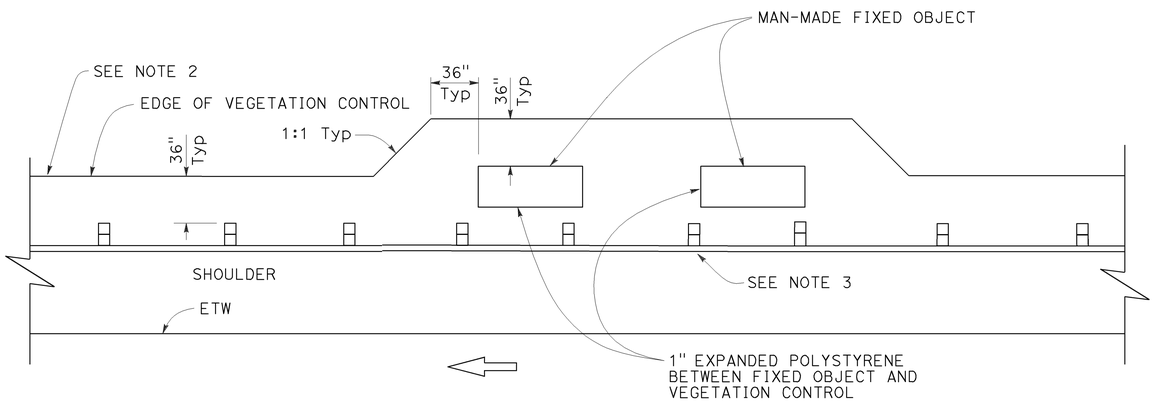

PLAN

Fixed object(s) on shoulder

STATE OF CALIFORNIA
DEPARTMENT OF TRANSPORTATION

MIDWEST GUARDRAIL SYSTEM TYPICAL VEGETATION CONTROL AT FIXED OBJECT

NO SCALE

RSP A77N8 DATED JULY 19, 2013 SUPPLEMENTS THE STANDARD PLANS BOOK DATED 2010.

REVISED STANDARD PLAN RSP A77N8

2010 REVISED STANDARD PLAN RSP A77N8

6-12-13

Dist	COUNTY	ROUTE	POST MILES TOTAL PROJECT	SHEET No.	TOTAL SHEETS
08	SBd, Riv	60	R0.0/R4.6, R3.0/R6.9	66	100

Randell D. Hiatt
REGISTERED CIVIL ENGINEER

July 19, 2013
PLANS APPROVAL DATE

REGISTERED PROFESSIONAL ENGINEER
Randell D. Hiatt
No. C50200
Exp. 6-30-15
CIVIL
STATE OF CALIFORNIA

THE STATE OF CALIFORNIA OR ITS OFFICERS OR AGENTS SHALL NOT BE RESPONSIBLE FOR THE ACCURACY OR COMPLETENESS OF SCANNED COPIES OF THIS PLAN SHEET.

TO ACCOMPANY PLANS DATED 8-25-14

2010 REVISED STANDARD PLAN RSP A77Q1

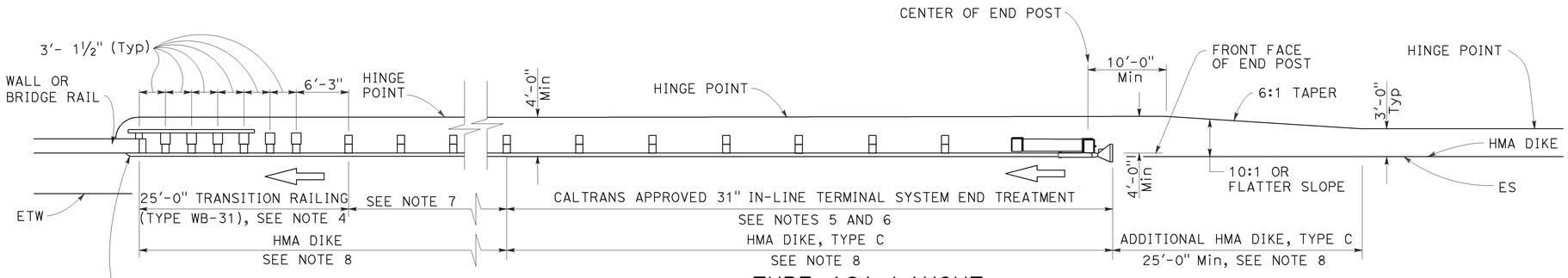

TYPE 12A LAYOUT

(MGS installation at structure approach with
31" In-line end treatment at traffic approach end of railing)
See Notes 9

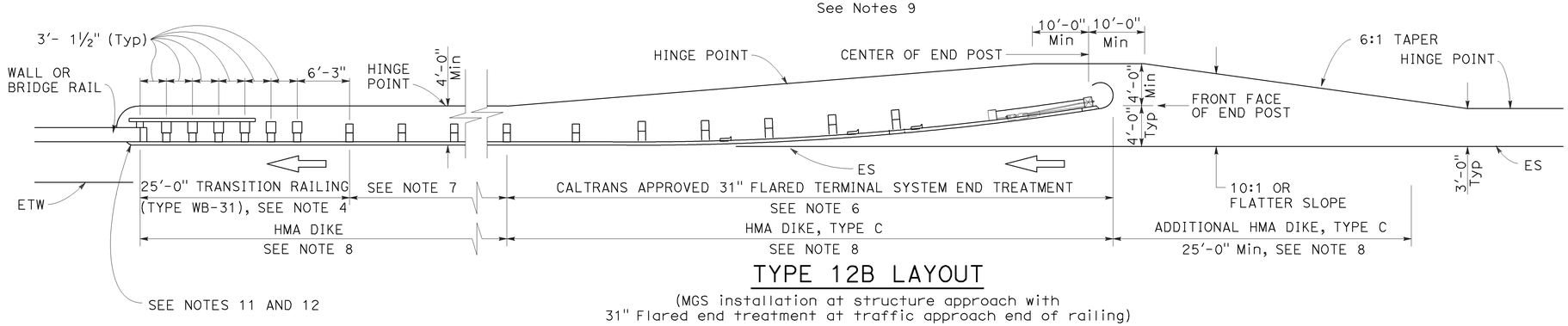

TYPE 12B LAYOUT

(MGS installation at structure approach with
31" Flared end treatment at traffic approach end of railing)
See Notes 9

NOTES:

1. Line post, blocks and hardware to be used are shown on Revised Standard Plans RSP A77L1, RSP A77L2, RSP A77M1, RSP A77N1 and RSP A77N2.
2. MGS post spacing to be 6'-3" center to center, except as otherwise noted.
3. Except as noted, line posts are 6" x 8" x 6'-0" wood with 6" x 12" x 1'-2" wood blocks. W6 x 8.5 or W6 x 9 steel posts, 6'-0" in length, with 6" x 12" x 1'-2" notched wood blocks or plastic blocks may be used for 6" x 8" x 6'-0" wood posts with 6" x 12" x 1'-2" wood blocks where applicable and when specified.
4. For Transition Railing (Type WB-31) details for Types 12A and 12B Layouts, see Revised Standard Plan RSP A77U4.
5. 31" in-line terminal system end treatments are used where site conditions will not accommodate a 31" flared end treatment.
6. The type 31" of terminal system end treatment to be used will be shown on the Project Plans.
7. Dependent on site conditions (embankment height, side slopes, or other fixed objects), it may be advisable to construct additional guard railing (a length equal to multiples of 12'-6" with 6'-3" post spacing) between the transition railing and end treatment. A 12.5 degree angle of departure can be drawn on the Project Plans from the edge of traveled way through the outer most point of the fixed object to determine the additional length of railing needed.
8. Where placement of dike is required with guard railing installations, see Revised Standard Plan RSP A77N4 for dike positioning details.
9. Type 12A or Type 12B Layouts are typically used:
   a. To the right of approaching traffic, at the end of a structure, on two-lane conventional highway where the roadbed width across the structure is less than 40 feet.
   b. To the left of approaching traffic, at the end of a structure, on two-lane conventional highway where the roadbed width across the structure is less than 40 feet.
   c. To the right of approaching traffic at the end of each structure on multilane freeways or expressways with separate adjacent or parallel bridges.
   d. To the right of approaching traffic at the end of the structure on multilane freeways or expressways with decked median on the bridge.
10. See Revised Standard Plan RSP A77Q3 for typical layout used left of approaching traffic at the ends of each structure on multilane freeways or expressways with separate adjacent or parallel bridges.
11. For additional details of typical connections to bridge rail, see Connection Detail AA on Revised Standard Plans RSP A77U1 and RSP A77U2 and Connection Detail FF on Revised Standard Plans RSP A77V1 and RSP A77V2.
12. For additional details of a typical connection to walls or abutments, see Revised Standard Plan RSP A77U3.

STATE OF CALIFORNIA
DEPARTMENT OF TRANSPORTATION

MIDWEST GUARDRAIL SYSTEM TYPICAL LAYOUTS FOR STRUCTURE APPROACH

NO SCALE

RSP A77Q1 DATED JULY 19, 2013 SUPPLEMENTS THE STANDARD PLANS BOOK DATED 2010.

REVISED STANDARD PLAN RSP A77Q1

Dist	COUNTY	ROUTE	POST MILES TOTAL PROJECT	SHEET No.	TOTAL SHEETS
08	SBd, Riv	60	R0.0/R4.6, R3.0/R6.9	67	100

Randell D. Hiatt
REGISTERED CIVIL ENGINEER

July 19, 2013
PLANS APPROVAL DATE

REGISTERED PROFESSIONAL ENGINEER
Randell D. Hiatt
No. C50200
Exp. 6-30-15
CIVIL
STATE OF CALIFORNIA

THE STATE OF CALIFORNIA OR ITS OFFICERS OR AGENTS SHALL NOT BE RESPONSIBLE FOR THE ACCURACY OR COMPLETENESS OF SCANNED COPIES OF THIS PLAN SHEET.

TO ACCOMPANY PLANS DATED 8-25-14

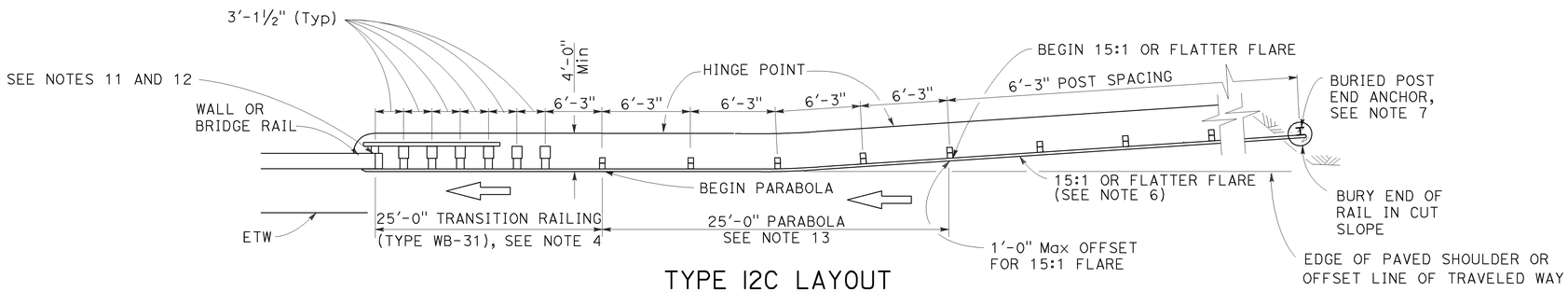

TYPE 12C LAYOUT

(MGS installation at structure approach with a Buried end anchor treatment at traffic approach end of railing)
See Notes 8 and 9

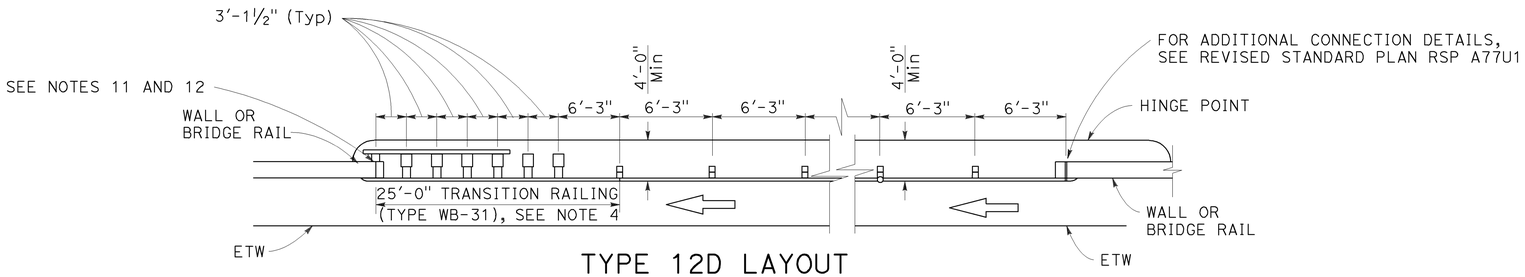

TYPE 12D LAYOUT

(Continuous MGS installation between structures)
See Notes 5 and 9

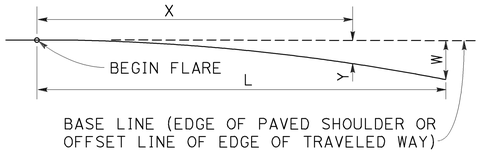

$$Y = \frac{WX^2}{L^2}$$

Y = OFFSET FROM BASE LINE
W = MAXIMUM OFFSET
X = DISTANCE ALONG BASE LINE
L = LENGTH OF FLARE

PARABOLIC FLARE OFFSETS

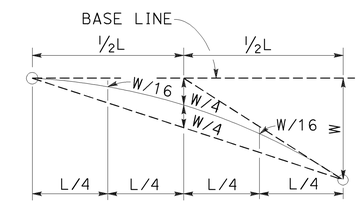

TYPICAL PARABOLIC LAYOUT

NOTES:

1. Line post, blocks and hardware to be used are shown on Revised Standard Plans RSP A77L1, RSP A77L2, RSP A77M1, RSP A77N1 and RSP A77N2.
2. MGS post spacing to be 6'-3" center to center, except as otherwise noted.
3. Except as noted, line posts are 6" x 8" x 6'-0" m wood with 6" x 12" x 1'-2" wood blocks. W6 x 8.5 or W6 x 9 steel posts, 6'-0" in length, with 6" x 12" x 1'-2" notched wood blocks or plastic blocks may be used for 6" x 8" x 6'-0" wood posts with 6" x 12" x 1'-2" wood blocks where applicable and when specified.
4. For Transition Railing (Type WB-31) details for Types 12C and 12D Layouts, see Revised Standard Plan RSP A77U4.
5. Type 12D layout is typically used where continous MGS is recommended between structures.
6. The 15:1 or flatter flare for Type 12C Layout is based on the edge of the paved shoulder or offset line of edge of the traveled way. The length of MGS with the 15:1 or flatter flare is based on site conditions and should be a length equal to multiples of 12'-6".
7. For details of the buried post end anchor used with Type 12C Layout, see Revised Standard Plan RSP A77T2.
8. Where placement of dike is required with MGS installations, see Revised Standard Plan RSP A77N4 for dike positioning details.
9. Type 12C Layout is typically used:
   a. To the right of approaching traffic, at the end of the structure, on two-lane conventional highway where the roadbed width across the structure is less than 40 feet.
   b. To the left of approaching traffic, at each of a structure, on two-lane conventional highway where the roadbed width across the structure is less than 40 feet.
   c. To the right of approaching traffic at the end of each structure on multilane freeways or expressways with separate adjacent or parallel bridges.
   d. To the right of approaching traffic at the end of the structure on multilane freeways or expressways with decked median on the bridge.
10. See Revised Standard Plan RSP A77Q3 for typical layout used left of approaching traffic at the ends of each structure on multilane freeways or expressways with separate adjacent or parallel bridges.
11. For additional details of typical connections to bridge rail, see Connection Detail AA on Revised Standard Plans RSP A77U1 and RSP A77U2 and Connection Detail FF on Revised Standard Plans RSP A77V1 and RSP A77V2.
12. For additional details of a typical connection to walls or abutments, see Revised Standard Plan RSP A77U3.
13. For typical flare offsets for 25'-0" length parabola with maximum offset of 1'-0", see Revised Standard Plan RSP A77P1.

STATE OF CALIFORNIA
DEPARTMENT OF TRANSPORTATION

MIDWEST GUARDRAIL SYSTEM TYPICAL LAYOUTS FOR STRUCTURE APPROACH AND BETWEEN STRUCTURES

NO SCALE

RSP A77Q2 DATED JULY 19, 2013 SUPPLEMENTS THE STANDARD PLANS BOOK DATED 2010.

REVISED STANDARD PLAN RSP A77Q2

2010 REVISED STANDARD PLAN RSP A77Q2

7-8-13

Dist	COUNTY	ROUTE	POST MILES TOTAL PROJECT	SHEET No.	TOTAL SHEETS
08	SBd, Riv	60	R0.0/R4.6, R3.0/R6.9	68	100

Randell D. Hiatt
REGISTERED CIVIL ENGINEER

July 19, 2013
PLANS APPROVAL DATE

REGISTERED PROFESSIONAL ENGINEER Randell D. Hiatt No. C50200 Exp. 6-30-15 CIVIL STATE OF CALIFORNIA

THE STATE OF CALIFORNIA OR ITS OFFICERS OR AGENTS SHALL NOT BE RESPONSIBLE FOR THE ACCURACY OR COMPLETENESS OF SCANNED COPIES OF THIS PLAN SHEET.

TO ACCOMPANY PLANS DATED 8-25-14

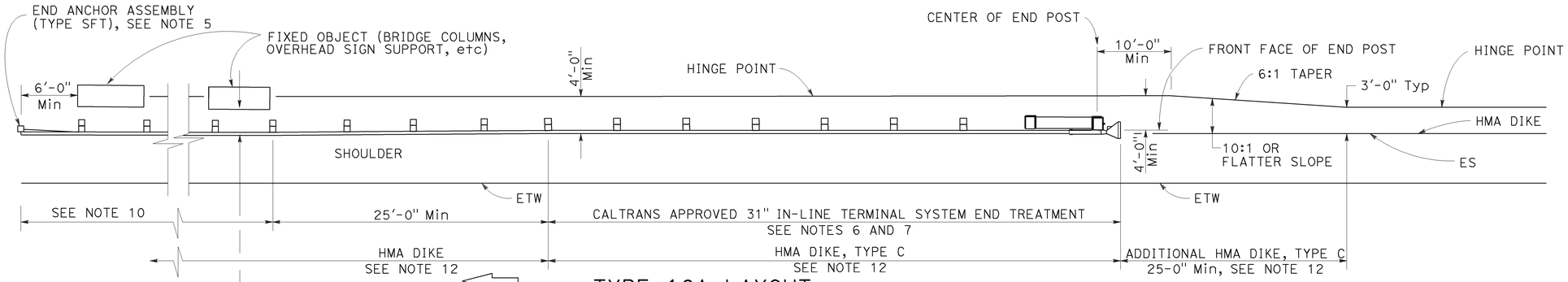

TYPE 16A LAYOUT

(MGS installation at roadside fixed object or objects with 31" in-line end treatment at traffic approach end of railing)
See Notes 11 and 12

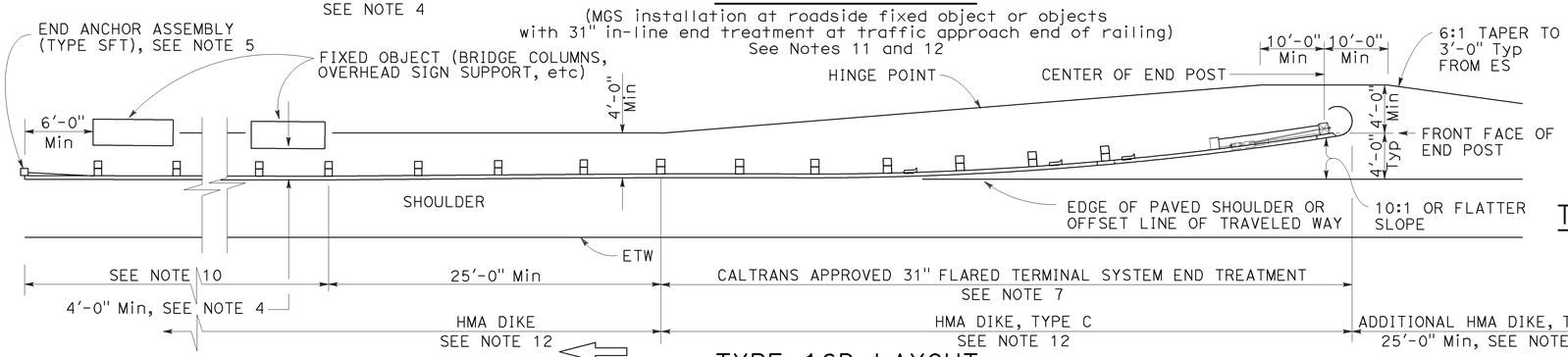

TYPE 16B LAYOUT

(MGS installation at roadside fixed object or objects with 31' flared end treatment at traffic approach end of railing)
See Notes 11 and 12

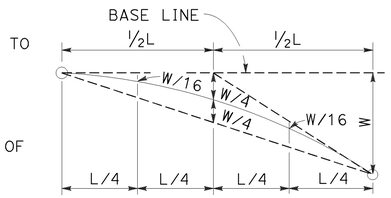

TYPIC AL PARABOLIC LAYOUT

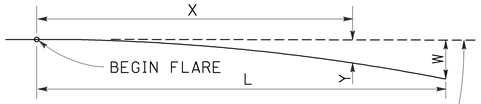

BASE LINE (EDGE OF PAVED SHOULDER OR OFFSET LINE OF EDGE OF TRAVELED WAY)

$$Y = \frac{WX^2}{L^2}$$

Y = OFFSET FROM BASE LINE
W = MAXIMUM OFFSET
X = DISTANCE ALONG BASE LINE
L = LENGTH OF FLARE

PARABOLIC FLARE OFFSETS

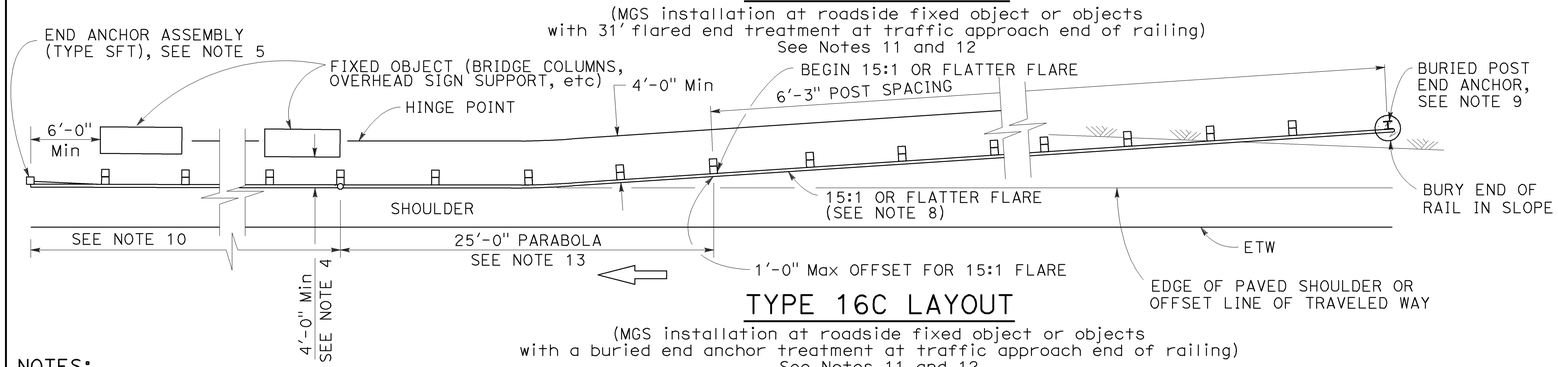

TYPE 16C LAYOUT

(MGS installation at roadside fixed object or objects with a buried end anchor treatment at traffic approach end of railing)
See Notes 11 and 12

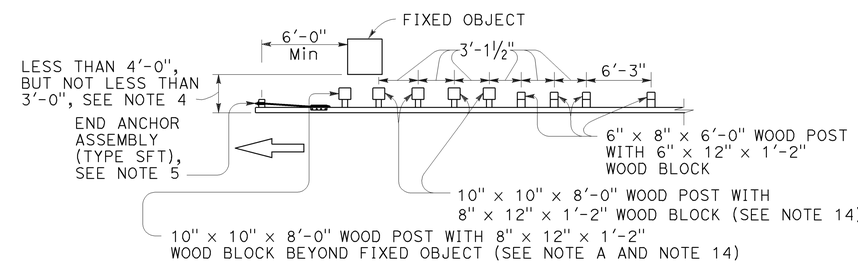

NOTE A: For a series of fixed objects (bridge columns, overhead sign supports, etc.) additional 10" x 10" x 8'-0" wood post with 8" x 12" x 1'-2" wood blocks at 3'-1½" center to center spacing are to be used between fixed objects.

STRENGTHENED MIDWEST GUARDRAIL SYSTEM SECTIONS FOR FIXED OBJECT

Use strengthened MGS sections with Types 16A, 16B or 16C layouts where minimum clearance between the face of the railing and fixed object(s) is less than 4'-0", but not less than 3'-0". See Note 4

NOTES:

1. Line post, blocks and hardware to be used are shown on Revised Standard Plans RSP A77L1, RSP A77L2, RSP A77M1, RSP A77N1 and RSP A77N2.
2. MGS post spacing to be 6'-3" center to center, except as otherwise noted.
3. Except as noted, line posts are 6" x 8" x 6'-0" wood with 6" x 12" x 1'-2" wood blocks. W6 x 8.5 or W6 x 9 steel posts, 6'-0" in length, with 6" x 12" x 1'-2" notched wood blocks or notched recycled plastic blocks may be used for 6" x 8" x 6'-0" wood line posts with 6" x 12" x 1'-2" wood blocks where applicable and when specified.
4. A 4'-0" minimum clearance is required between the face of the railing and the face of a fixed object located directly behind MGS sections with post spacing of 6'-3". Construct MGS as shown in the detail "Strengthened Midwest Guardrail System Sections for Fixed Object" on this plan, where the clearance between the face of the railing and the face of a fixed object is less than 4'-0", but not less than 3'-0". Where the clearance is less than 3'-0", a concrete wall or barrier should be constructed to shield the fixed object(s).
5. For End Anchor Assembly (Type SFT) details, see Revised Standard Plan RSP A77S1.
6. 31" in-line terminal system end treatments are used where site conditions will not accommodate a 31" flared end treatment.
7. The type of 31" terminal system to be used will be shown on the Project Plans.
8. The 15:1 or flatter flare used with Type 16C Layout is based on the edge of the paved shoulder or offset line of edge of the traveled way. The length of MGS within the 15:1 or flatter flare is based on site conditions and should be a length equal to multiples of 12'-6".
9. For details of the Buried Post End Anchor used with Type 16C Layout, see Revised Standard Plan RSP A77T2.
10. As site conditions dictate, construct additional MGS to shield fixed object(s). Additional MGS length equal to multiples of 12'-6". Post spacing at 6'-3" except as specified in Note 4.
11. Layout Types 16A, 16B or 16C are typically used where MGS is recommended to shield roadside fixed object(s) and a crashworthy 31" end treatment is required for only one direction of traffic.
12. Where placement of dike is required with MGS, see Revised Standard Plan RSP A77N4 for dike positioning details.
13. For typical flare offsets for 25'-0" length parabola with maximum offset of 1'-0", see Revised Standard Plan RSP A77P1.
14. W6 x 15 steel post, 8'-0" in length, with 8" x 12" x 1'-2" notched wood block or notched recycled plastic blocks may be used in place of the 10" x 10" x 8'-0" wood post with 8" x 12" x 1'-2" wood block shown in the detail "Strengthened Midwest Guardrail System Sections for Fixed Object".

STATE OF CALIFORNIA
DEPARTMENT OF TRANSPORTATION

MIDWEST GUARDRAIL SYSTEM TYPICAL LAYOUTS FOR ROADSIDE FIXED OBJECTS

NO SCALE

RSP A77R3 DATED JULY 19, 2013 SUPPLEMENTS THE STANDARD PLANS BOOK DATED 2010.

REVISED STANDARD PLAN RSP A77R3

2010 REVISED STANDARD PLAN RSP A77R3

6-20-13

Dist	COUNTY	ROUTE	POST MILES TOTAL PROJECT	SHEET No.	TOTAL SHEETS
08	SBd, Riv	60	R0.0/R4.6, R3.0/R6.9	69	100

Randell D. Hiatt
REGISTERED CIVIL ENGINEER

November 15, 2013
PLANS APPROVAL DATE

REGISTERED PROFESSIONAL ENGINEER
Randell D. Hiatt
No. C50200
Exp. 6-30-15
CIVIL
STATE OF CALIFORNIA

THE STATE OF CALIFORNIA OR ITS OFFICERS OR AGENTS SHALL NOT BE RESPONSIBLE FOR THE ACCURACY OR COMPLETENESS OF SCANNED COPIES OF THIS PLAN SHEET.

TO ACCOMPANY PLANS DATED 8-25-14

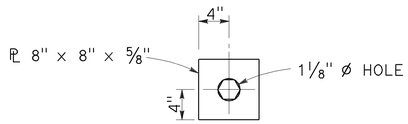

DETAIL "A"
CABLE CONNECTION
END PLATE

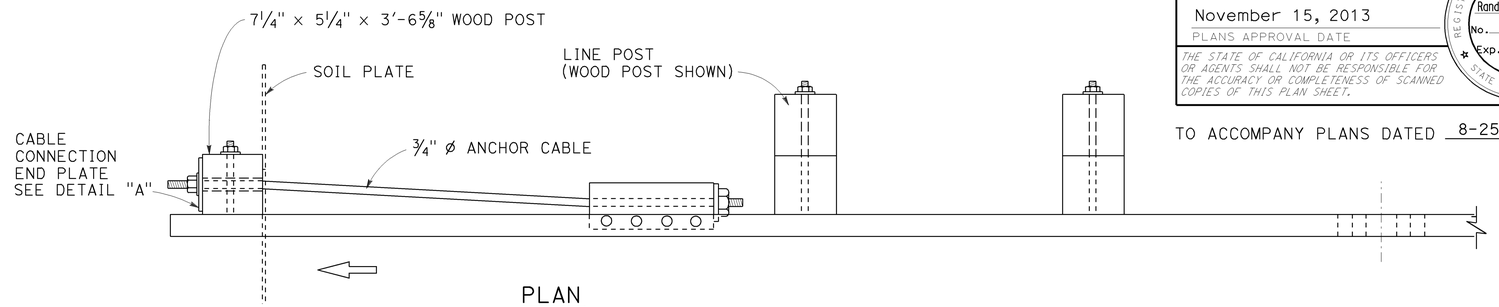

PLAN

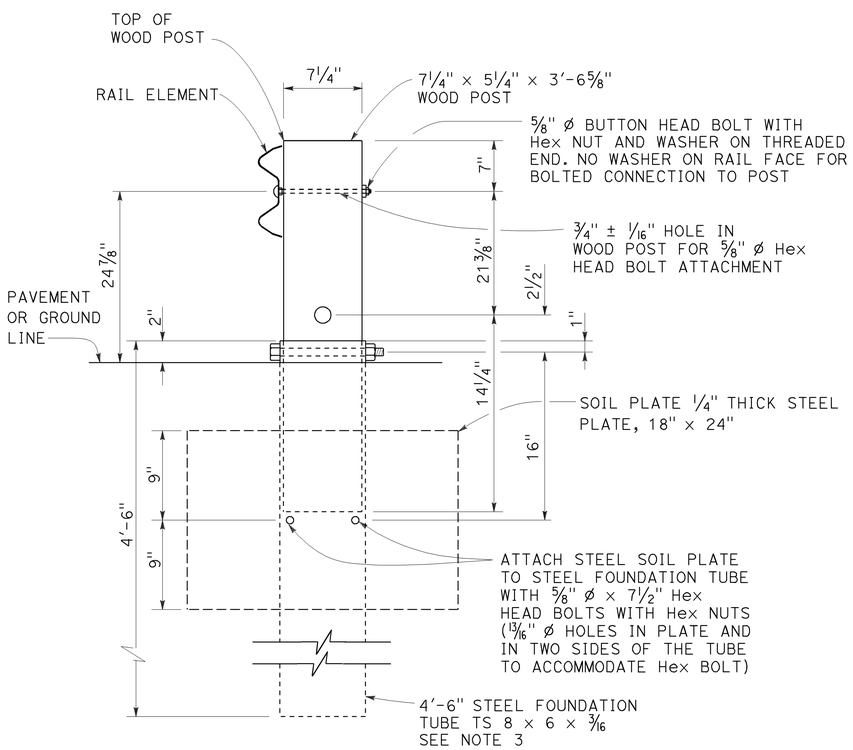

SECTION A-A

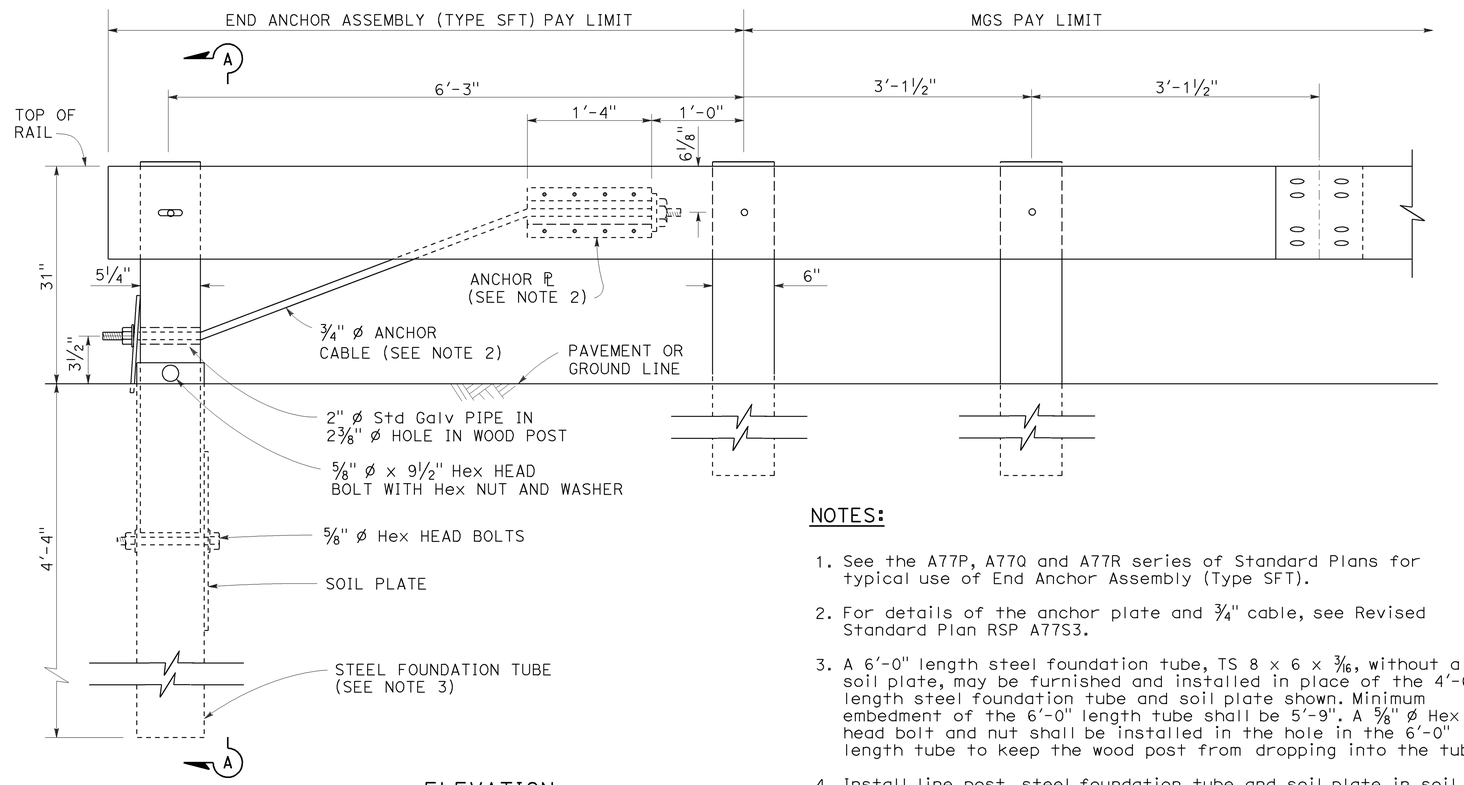

ELEVATION

END ANCHOR
ASSEMBLY (TYPE SFT)
See Note 1

NOTES:

1. See the A77P, A77Q and A77R series of Standard Plans for typical use of End Anchor Assembly (Type SFT).
2. For details of the anchor plate and 3/4" cable, see Revised Standard Plan RSP A77S3.
3. A 6'-0" length steel foundation tube, TS 8 x 6 x 3/16, without a soil plate, may be furnished and installed in place of the 4'-6" length steel foundation tube and soil plate shown. Minimum embedment of the 6'-0" length tube shall be 5'-9". A 5/8" ø Hex head bolt and nut shall be installed in the hole in the 6'-0" length tube to keep the wood post from dropping into the tube.
4. Install line post, steel foundation tube and soil plate in soil.

STATE OF CALIFORNIA
DEPARTMENT OF TRANSPORTATION

MIDWEST GUARDRAIL SYSTEM END ANCHOR ASSEMBLY (TYPE SFT)

NO SCALE

RSP A77S1 DATED NOVEMBER 15, 2013 SUPERSEDES RSP A77S1
DATED JULY 19, 2013 THAT SUPPLEMENTS THE STANDARD PLANS BOOK DATED 2010.

REVISED STANDARD PLAN RSP A77S1

2010 REVISED STANDARD PLAN RSP A77S1

10-4-13

Dist	COUNTY	ROUTE	POST MILES TOTAL PROJECT	SHEET No.	TOTAL SHEETS
08	SBd, Riv	60	R0.0/R4.6, R3.0/R6.9	70	100

Randell D. Hiatt
REGISTERED CIVIL ENGINEER

November 15, 2013
PLANS APPROVAL DATE

REGISTERED PROFESSIONAL ENGINEER
Randell D. Hiatt
No. C50200
Exp. 6-30-15
CIVIL
STATE OF CALIFORNIA

THE STATE OF CALIFORNIA OR ITS OFFICERS OR AGENTS SHALL NOT BE RESPONSIBLE FOR THE ACCURACY OR COMPLETENESS OF SCANNED COPIES OF THIS PLAN SHEET.

TO ACCOMPANY PLANS DATED 8-25-14

2010 REVISED STANDARD PLAN RSP A77S3

NOTE:

See Revised Standard Plans RSP A77S1, RSP A77S2 and RSP A77T1 for typical use of anchor cable and anchor plate.

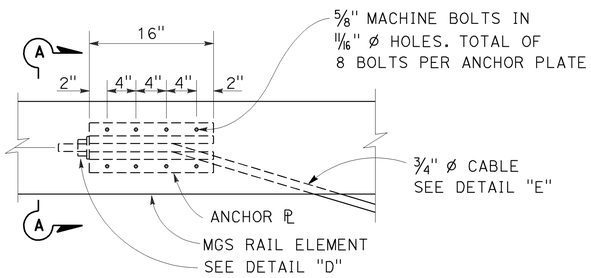

ANCHOR PLATE DETAIL
(MGS shown, TBB similar)

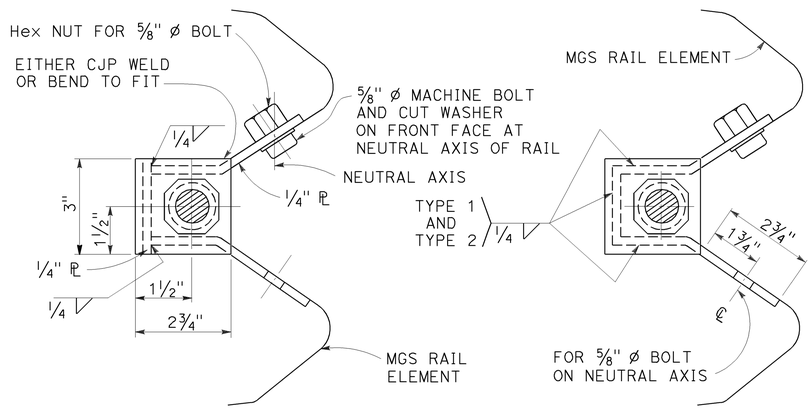

NOTE:
Dimensioning applies to both types.

SECTION A-A
(ALTERNATIVE TYPE 1)

SECTION A-A
(ALTERNATIVE TYPE 2)

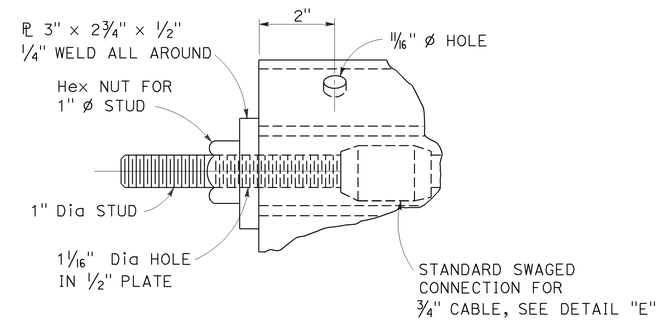

DETAIL "D"

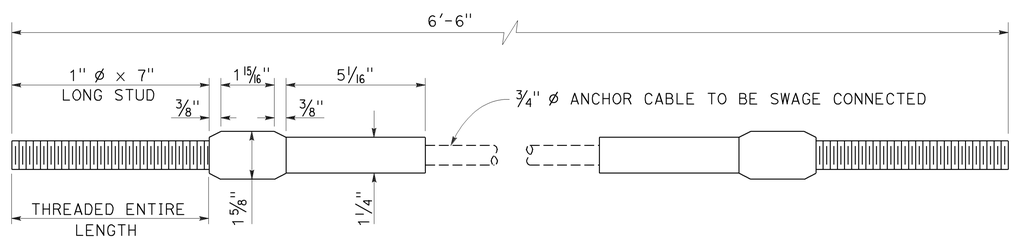

ANCHOR CABLE WITH
SWAGED FITTING AND STUD
DETAIL "E"

STATE OF CALIFORNIA
DEPARTMENT OF TRANSPORTATION

METAL RAILING ANCHOR CABLE AND ANCHOR PLATE DETAILS

NO SCALE

RSP A77S3 DATED NOVEMBER 15, 2013 SUPERSEDES RSP A77S3
DATED JULY 19, 2013 THAT SUPPLEMENTS THE STANDARD PLANS BOOK DATED 2010.

REVISED STANDARD PLAN RSP A77S3

10-4-13

Dist	COUNTY	ROUTE	POST MILES TOTAL PROJECT	SHEET No.	TOTAL SHEETS
08	SBd, Riv	60	R0.0/R4.6, R3.0/R6.9	71	100

Randell D. Hiatt
REGISTERED CIVIL ENGINEER

November 15, 2013
PLANS APPROVAL DATE

REGISTERED PROFESSIONAL ENGINEER
Randell D. Hiatt
No. C50200
Exp. 6-30-15
CIVIL
STATE OF CALIFORNIA

THE STATE OF CALIFORNIA OR ITS OFFICERS OR AGENTS SHALL NOT BE RESPONSIBLE FOR THE ACCURACY OR COMPLETENESS OF SCANNED COPIES OF THIS PLAN SHEET.

TO ACCOMPANY PLANS DATED 8-25-14

2010 REVISED STANDARD PLAN RSP A77T2

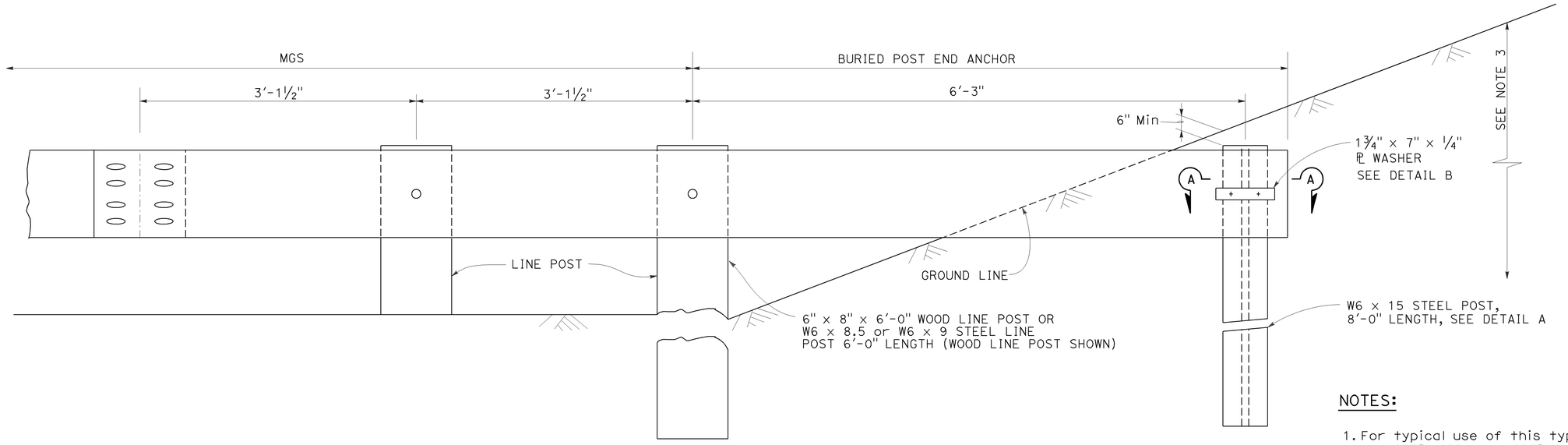

BURIED POST END ANCHOR

See Note 3

NOTES:

1. For typical use of this type of end anchor with MGS see the A77P, A77Q and A77R Series of the Standard Plans.
2. Holes excavation in the slope to construct the buried post end anchor shall be backfilled with selected earth, placed in layers approximately 1'-0" thick. Each layer shall be moistened and thoroughly compacted.
3. The buried post end anchor shall only be constructed at those locations where the slope perpendicular to the roadway is non-traversable.

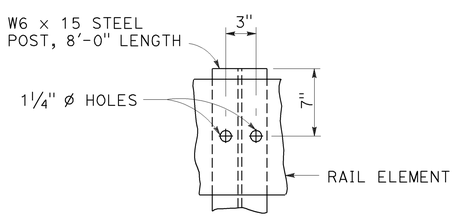

DETAIL A

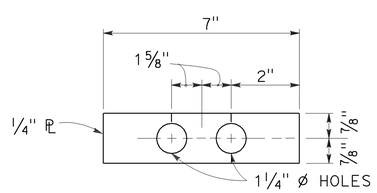

DETAIL B

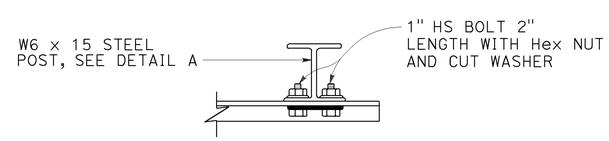

SECTION A-A

STATE OF CALIFORNIA
DEPARTMENT OF TRANSPORTATION

MIDWEST GUARDRAIL SYSTEM BURIED POST END ANCHOR

NO SCALE

RSP A77T2 DATED NOVEMBER 15, 2013 SUPERSEDES RSP A77T2
DATED JULY 19, 2013 THAT SUPPLEMENTS THE STANDARD PLANS BOOK DATED 2010.

REVISED STANDARD PLAN RSP A77T2

10-4-13

Dist	COUNTY	ROUTE	POST MILES TOTAL PROJECT	SHEET No.	TOTAL SHEETS
08	SBd, Riv	60	R0.0/R4.6, R3.0/R6.9	72	100

Randell D. Hiatt
REGISTERED CIVIL ENGINEER

July 19, 2013
PLANS APPROVAL DATE

REGISTERED PROFESSIONAL ENGINEER
Randell D. Hiatt
No. C50200
Exp. 6-30-15
CIVIL
STATE OF CALIFORNIA

THE STATE OF CALIFORNIA OR ITS OFFICERS OR AGENTS SHALL NOT BE RESPONSIBLE FOR THE ACCURACY OR COMPLETENESS OF SCANNED COPIES OF THIS PLAN SHEET.

TO ACCOMPANY PLANS DATED 8-25-14

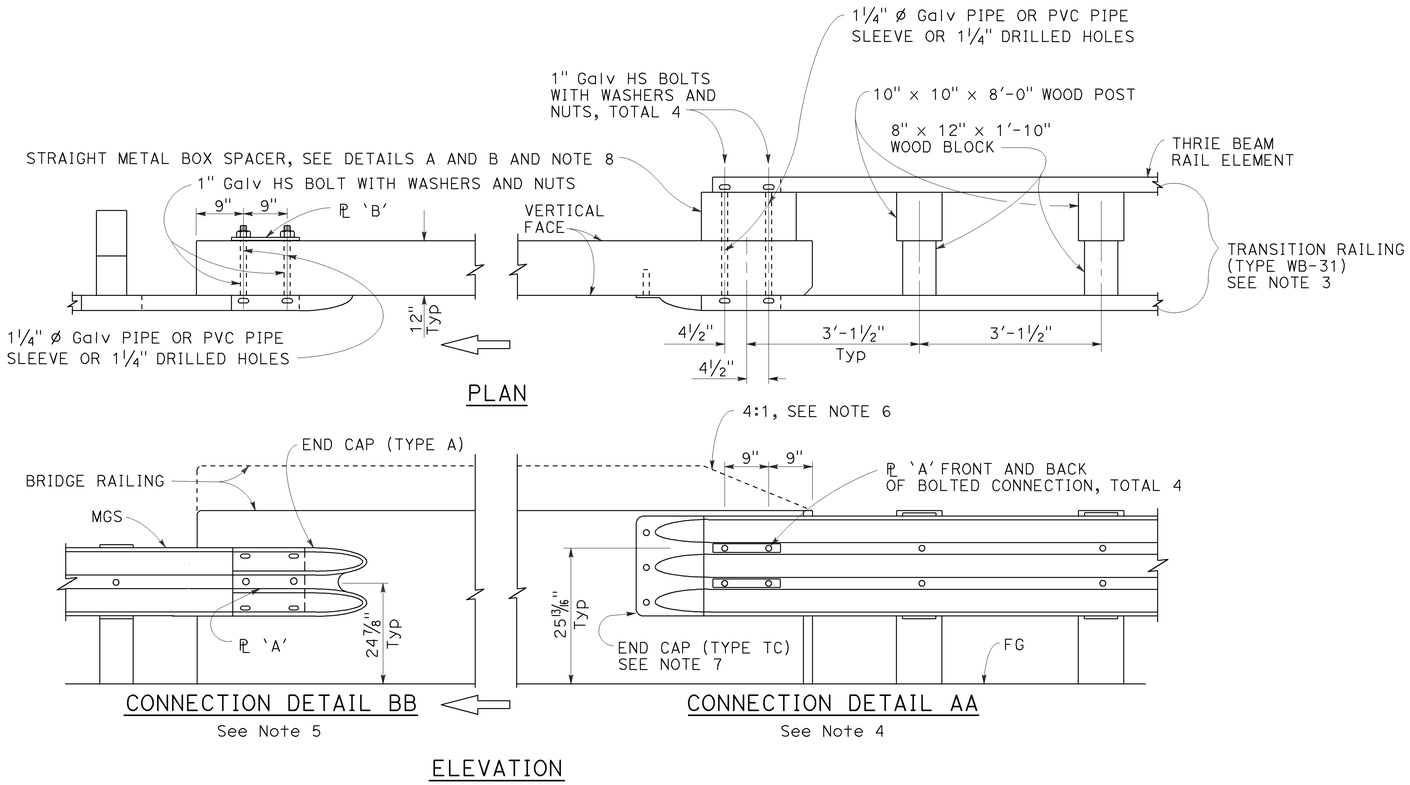

MIDWEST GUARDRAIL SYSTEM CONNECTION TO BRIDGE RAILING WITHOUT SIDEWALK

NOTES:

1. See Revised Standard Plan RSP A77U2 for additional connection details to bridges without sidewalks.
2. Additional details of posts, blocks and hardware are shown on Revised Standard Plans RSP A77M1, RSP A77N1 and RSP A77N2.
3. For additional details of Transition Railing (Type WB-31), see Revised Standard Plan RSP A77U4. Transition Railing (Type WB-31) transitions the 12 gauge MGS railing section to a heavier gage nested thrie beam railing section which is connected to the concrete bridge railing.
4. For typical use of Connection Detail AA, see Layout Types 12A and 12B on Revised Standard Plan RSP A77Q1, Layout Types 12C and 12D on Revised Standard Plan RSP A77Q2, and Layout Type 12E on Revised Standard Plan RSP A77Q3.
5. For typical use of Connection Detail BB, see Layout Type 12D (structure departure railing connection) on Revised Standard Plan RSP A77Q2 and Layout Type 12DD on Revised Standard Plan RSP A77Q5.
6. Where the height of the bridge railing exceeds the height of the thrie beam railing by more than 1" at Connection Detail AA, taper the top of the end of the bridge railing at 4:1 to match the top elevation of the thrie beam rail.
7. For details of End Cap (Type TC), see Revised Standard Plan RSP A77U4.
8. See Revised Standard Plan RSP A77U4 for additional details regarding depth dimension for straight metal box spacer.

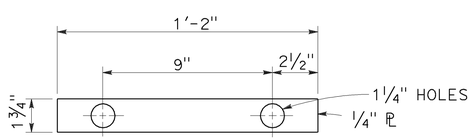

PLATE 'A'

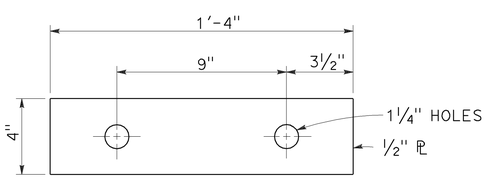

PLATE 'B'
(For backside of connection BB)

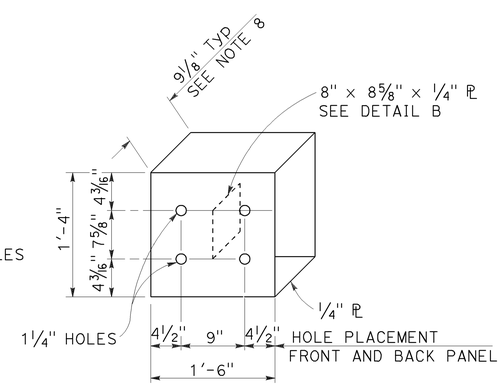

DETAIL A

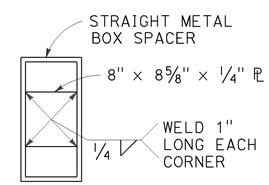

DETAIL B

STRAIGHT METAL BOX SPACER

STATE OF CALIFORNIA
DEPARTMENT OF TRANSPORTATION

MIDWEST GUARDRAIL SYSTEM CONNECTIONS TO BRIDGE RAILINGS WITHOUT SIDEWALKS DETAILS No. 1

NO SCALE

RSP A77U1 DATED JULY 19, 2013 SUPPLEMENTS THE STANDARD PLANS BOOK DATED 2010.

REVISED STANDARD PLAN RSP A77U1

2010 REVISED STANDARD PLAN RSP A77U1

7-8-13

Dist	COUNTY	ROUTE	POST MILES TOTAL PROJECT	SHEET No.	TOTAL SHEETS
08	SBd, Riv	60	R0.0/R4.6, R3.0/R6.9	73	100

Randell D. Hiatt
REGISTERED CIVIL ENGINEER

November 15, 2013
PLANS APPROVAL DATE

REGISTERED PROFESSIONAL ENGINEER
Randell D. Hiatt
No. C50200
Exp. 6-30-15
CIVIL
STATE OF CALIFORNIA

THE STATE OF CALIFORNIA OR ITS OFFICERS OR AGENTS SHALL NOT BE RESPONSIBLE FOR THE ACCURACY OR COMPLETENESS OF SCANNED COPIES OF THIS PLAN SHEET.

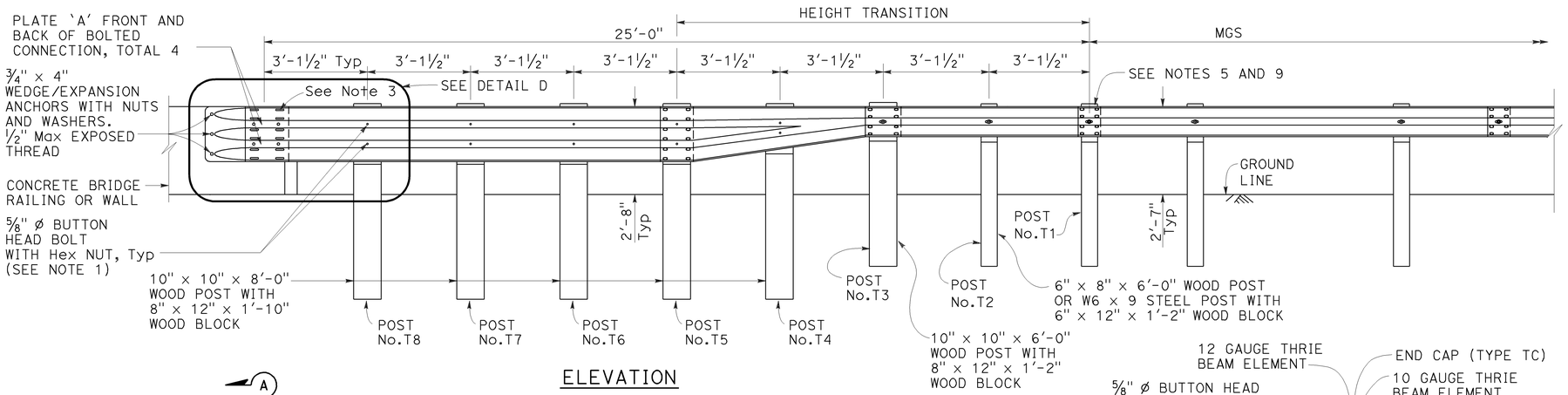

ELEVATION

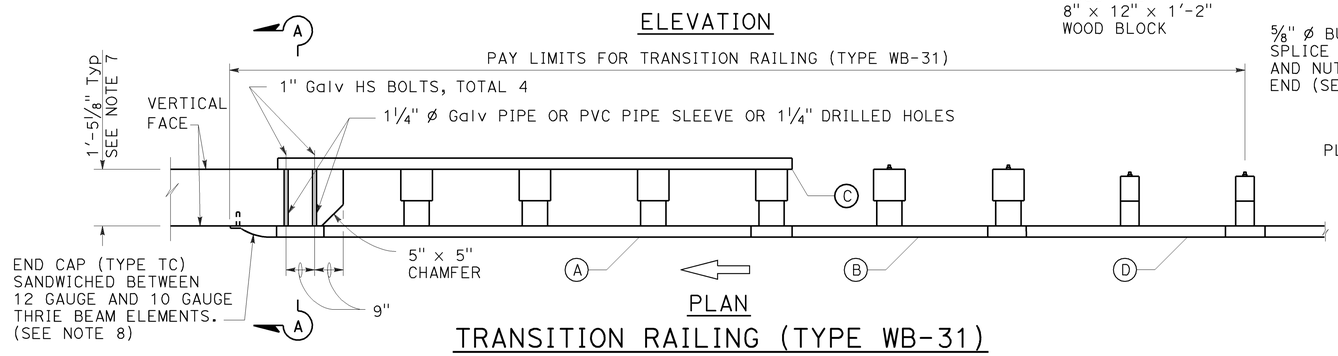

PLAN

TRANSITION RAILING (TYPE WB-31)

(No Blockout Attachment)

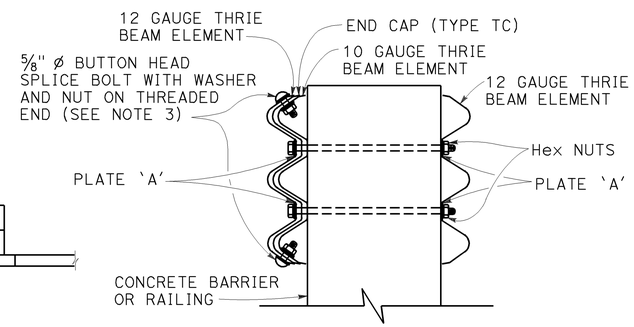

SECTION A-A

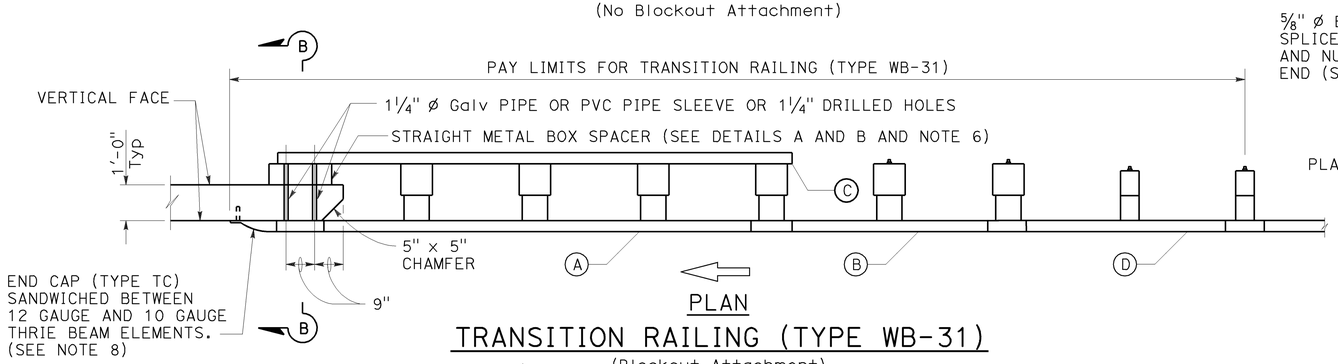

PLAN

TRANSITION RAILING (TYPE WB-31)

(Blockout Attachment)

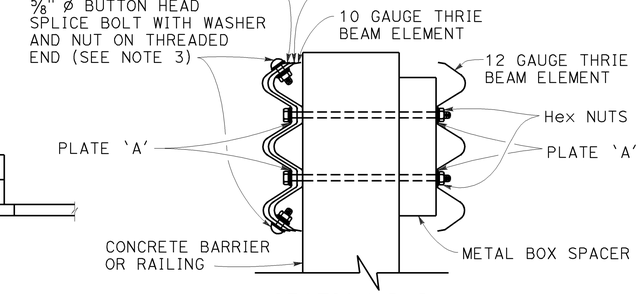

SECTION B-B

NOTES:

TO ACCOMPANY PLANS DATED 8-25-14

1. Use 5/8" ø Button head bolts and hex nuts for connections to posts. No washer on rail face for bolted connections to post.
2. The nested rail elements, end cap, and 'W' beam to thrie beam element may be spliced together prior to bolting the elements to the wood post and concrete barrier or railing.
3. Exterior splice bolt holes for rail element splices at Post No. T5 and the connection to the concrete barrier or railing shall be the standard 29/32" x 1 1/8" slot size. Interior splice bolt holes at these locations may be increased up to 1 1/4" ø. Only the top 4 and the bottom 4 splice bolts with washers and nuts are required for rail splices at Post No. T5 and the connection to the concrete barrier or railing.
4. The top elevation of Posts No. T2 through No. T7 shall not project more than 1" above the top elevation of the rail element.
5. Typically, the railing connected to Transition Railing (Type WB-31) will be either standard railing section of MGS with height transition ratio of 150:1 or a Caltrans approved 31" end treatment attached to Post No. T1.
6. The depth of the metal box spacer varies from the 9 1/8" to 1 1/2" and is dependent on the width of the concrete railing or wall. The combined dimension for the depth of the metal box spacer plus the width of railing or wall is typically 21 1/8". Where the space between the backside of the concrete railing or wall and the rear thrie beam element is less than 1 1/2", metal plates similar to Plate 'A' are to be used as spacers.
7. Where the width of the concrete railing or wall is greater than 17 1/8", wood blocks are to be used to fill the space created between the backside of Posts No. T5 through No. T8 and the rear thrie beam element. These wood blocks shall be 8" in width and 1'-2" in length. The dimension between the front thrie beam element and the rear thrie beam element is to match the width of the concrete railing or wall.
8. End cap may be installed over 12 gauge and 10 gauge thrie beam elements where transition railing is installed on the departure end of bridge railing.
9. Conform standard railing section height to 31" at Post No. T1 using height transition ratio of 150:1.

LEGEND:

(A) NESTED THRIE BEAM ELEMENTS (ONE 12 GAUGE ELEMENT NESTED OVER ONE 10 GAUGE ELEMENT).

(B) ONE ASYMMETRICAL 10 GAUGE "W" BEAM TO THRIE BEAM ELEMENT.

(C) ONE 12 GAUGE THRIE BEAM ELEMENT.

(D) ONE 10 GAUGE "W" BEAM RAIL ELEMENT (7'-3 1/2" LENGTH)

10 GAUGE = 0.138" THICK
12 GAUGE = 0.108" THICK

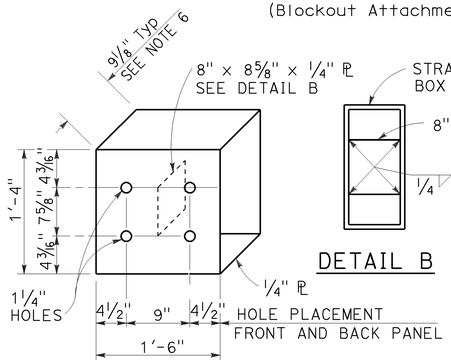

DETAIL A

STRAIGHT METAL BOX SPACER

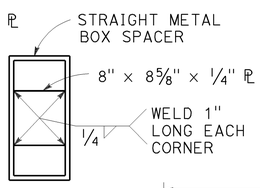

DETAIL B

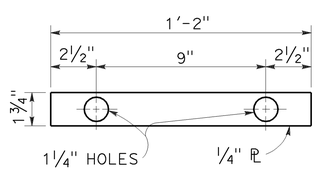

DETAIL C

PLATE 'A'

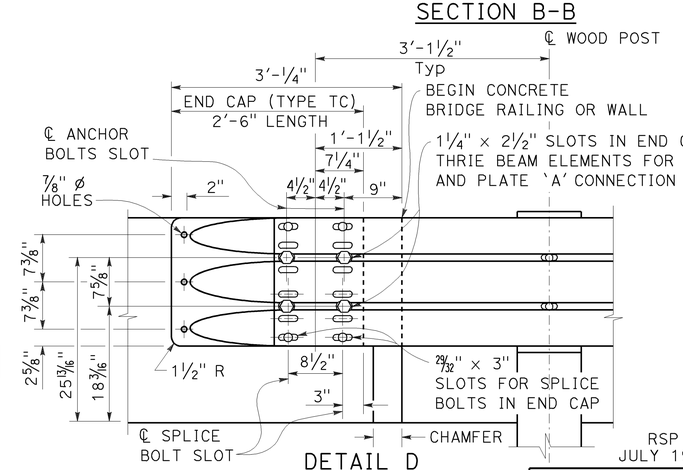

DETAIL D

STATE OF CALIFORNIA
DEPARTMENT OF TRANSPORTATION

MIDWEST GUARDRAIL SYSTEM TRANSITION RAILING (TYPE WB-31)

NO SCALE

RSP A77U4 DATED NOVEMBER 15, 2013 SUPERSEDES RSP A77U4 DATED JULY 19, 2013 THAT SUPPLEMENTS THE STANDARD PLANS BOOK DATED 2010.

REVISED STANDARD PLAN RSP A77U4

2010 REVISED STANDARD PLAN RSP A77U4

10-4-13

Dist	COUNTY	ROUTE	POST MILES TOTAL PROJECT	SHEET No.	TOTAL SHEETS
08	SBd, Riv	60	R0.0/R4.6, R3.0/R6.9	74	100

REGISTERED CIVIL ENGINEER

July 19, 2013
PLANS APPROVAL DATE

REGISTERED PROFESSIONAL ENGINEER Michael Janzen No. 44788 Exp. 03-31-14 CIVIL STATE OF CALIFORNIA

THE STATE OF CALIFORNIA OR ITS OFFICERS OR AGENTS SHALL NOT BE RESPONSIBLE FOR THE ACCURACY OR COMPLETENESS OF SCANNED COPIES OF THIS PLAN SHEET.

TO ACCOMPANY PLANS DATED 8-25-14

2010 REVISED STANDARD PLAN RSP A87A

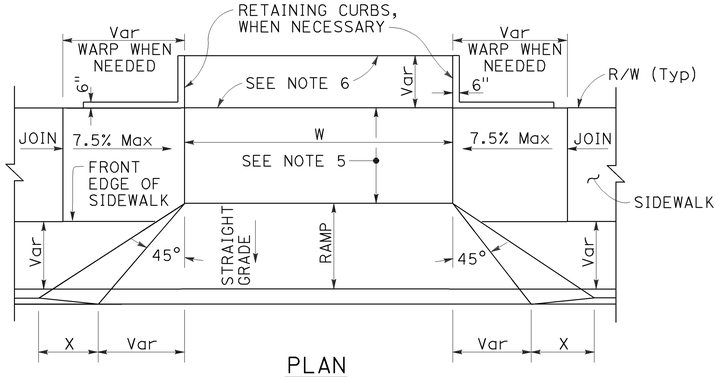

PLAN

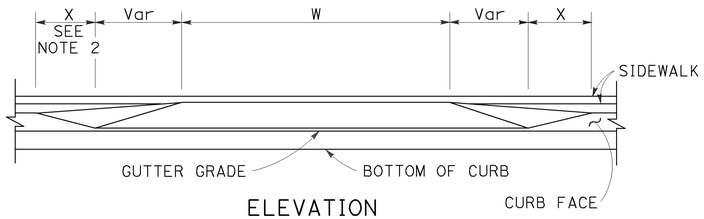

ELEVATION

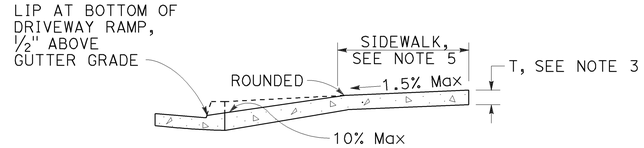

CASE A

Typical driveway, sidewalk not depressed

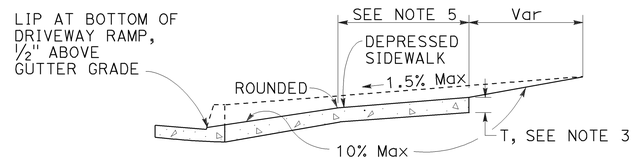

CASE B

Driveway with depressed sidewalk

SECTIONS

DRIVEWAYS

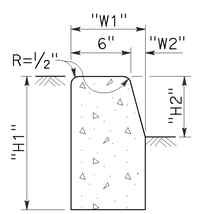

TYPE A1 CURBS

See Table A

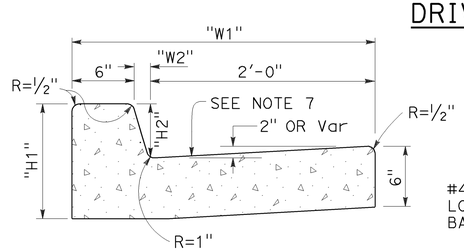

TYPE A2 CURBS

See Table A

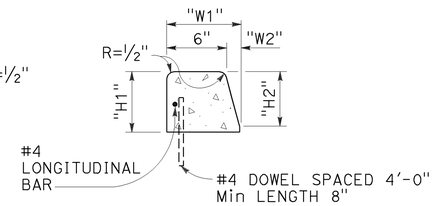

TYPE A3 CURBS

Superimposed on existing pavement
See Table A

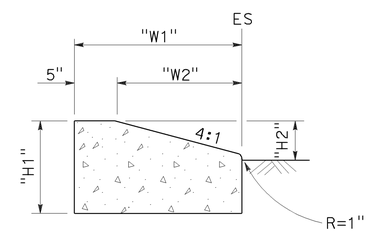

TYPE D CURBS

See Table A

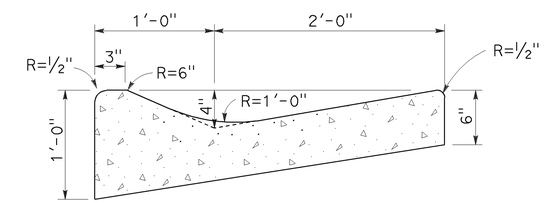

TYPE E CURB

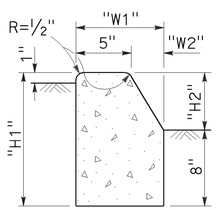

TYPE B1 CURBS

See Table A

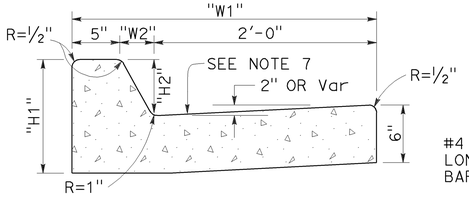

TYPE B2 CURBS

See Table A

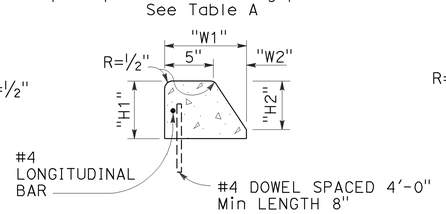

TYPE B3 CURBS

Superimposed on existing pavement
See Table A

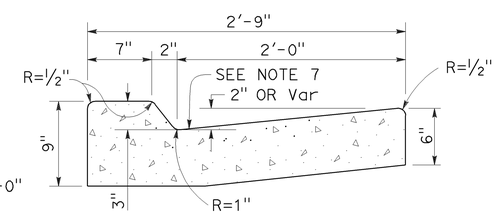

TYPE B4 CURBS

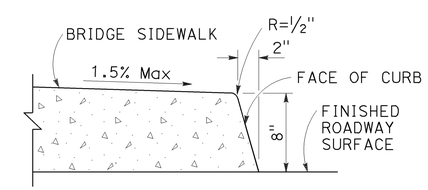

TYPE H CURB

On Bridges

CURBS

TABLE A

CURB TYPE	DIMENSIONS			
	"H1"	"H2"	"W1"	"W2"
A1-6	1'-2"	6"	7½"	1½"
A1-8	1'-4"	8"	8"	2"
A2-6	1'-0"	6"	2'-7½"	1½"
A2-8	1'-2"	8"	2'-8"	2"
A3-6	6"	5"	7¼"	1¼"
A3-8	8"	7"	7¾"	1¾"
B1-4	1'-0"	4"	7½"	2½"
B1-6	1'-2"	6"	9"	4"
B2-4	10"	4"	2'-7½"	2½"
B2-6	1'-0"	6"	2'-9"	4"
B3-4	4"	3"	7"	2"
B3-6	6"	5"	8½"	3½"
D-4	10"	4"	1'-6"	1'-1"
D-6	1'-0"	6"	2'-2"	1'-9"

CURB QUANTITIES

TYPE	CUBIC YARDS PER LINEAR FOOT
A1-6	0.02585
A1-8	0.03084
A2-6	0.05903
A2-8	0.06379
A3-6	0.01036
A3-8	0.01435
B1-4	0.02185
B1-6	0.02930
B2-4	0.05515
B2-6	0.06171
B3-4	0.00641
B3-6	0.01074
B4	0.05709
D-4	0.04083
D-6	0.06804
E	0.06661

NOTES:

1. Case A driveway section typically applies.
2. X=3'-0" except for curb heights over 10" where 4:1 slopes shall be used on curb slope.
3. Sidewalk and ramp thickness "T" at driveway shall be 4" for residental and 6" for commercial.
4. Difference in slope of the driveway ramp and the slope of a line between the gutter and a point on the roadway 5'-0" from gutter line shall not exceed 15%. Reduce driveway ramp slope, not gutter slope, where required.
5. Minimum width of clear passageway for sidewalk shall be 4'-2".
6. Retaining curbs and acquisition of construction easement may be necessary for narrow sidewalks or curb heights in excess of 6".
7. Across the pedestrian route at curb ramp locations, the gutter pan slope shall not exceed 1" of depth for each 2'-0" of width.

STATE OF CALIFORNIA
DEPARTMENT OF TRANSPORTATION

CURBS AND DRIVEWAYS

NO SCALE

RSP A87A DATED JULY 19, 2013 SUPERSEDES STANDARD PLAN A87A
DATED MAY 20, 2011 - PAGE 119 OF THE STANDARD PLANS BOOK DATED 2010.

REVISED STANDARD PLAN RSP A87A

7-8-13

Dist	COUNTY	ROUTE	POST MILES TOTAL PROJECT	SHEET No.	TOTAL SHEETS
08	SBd, Riv	60	R0.0/R4.6, R3.0/R6.9	75	100

REGISTERED CIVIL ENGINEER

July 19, 2013
PLANS APPROVAL DATE

REGISTERED PROFESSIONAL ENGINEER
Michael Janzen
No. 44788
Exp. 03-31-14
CIVIL
STATE OF CALIFORNIA

THE STATE OF CALIFORNIA OR ITS OFFICERS OR AGENTS SHALL NOT BE RESPONSIBLE FOR THE ACCURACY OR COMPLETENESS OF SCANNED COPIES OF THIS PLAN SHEET.

TO ACCOMPANY PLANS DATED 8-25-14

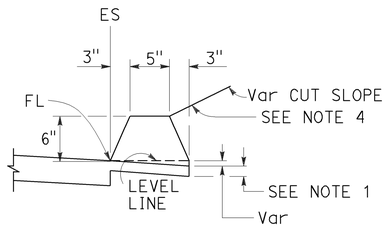

TYPE A
See Note 3

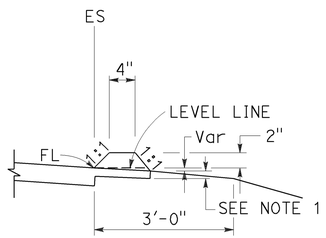

TYPE C

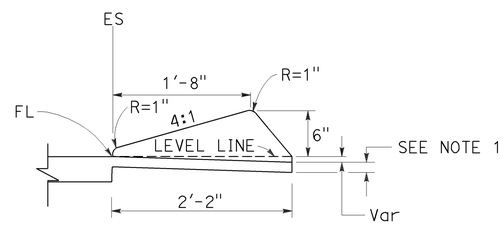

TYPE D

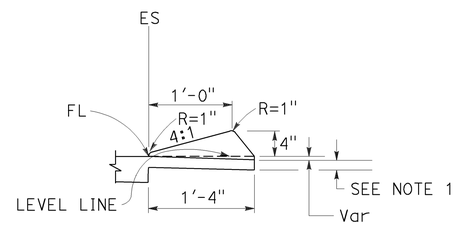

TYPE E

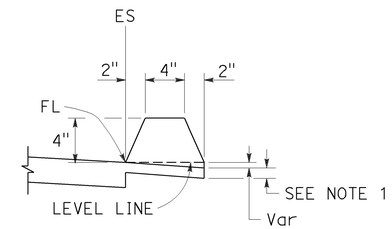

TYPE F
See Note 5

DIKES

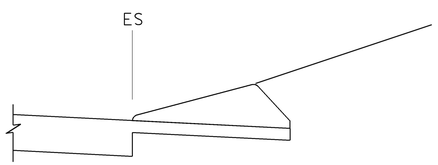

CASE C-1
Cut Slope

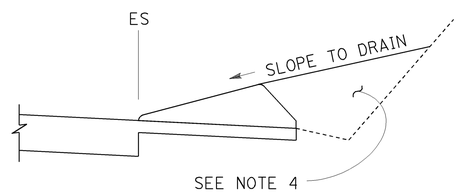

CASE C-2
Cut Slope

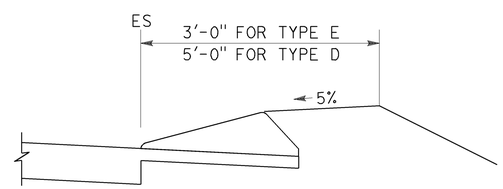

CASE F

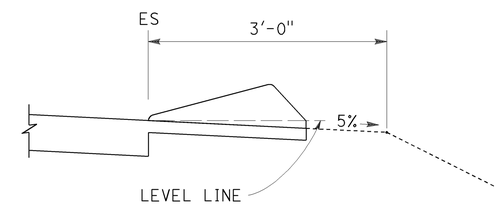

CASE R
See Note 2

TYPE D AND E BACKFILL DETAILS

NOTES:

1. For HMA shoulders only, extend top layer of HMA placed on the shoulder under dike with no joint at the ES. For projects with OGFC shoulders, do not extend OGFC under dike. See project plans for modified dike detail.
2. Case R applies to retrofit only projects where restrictive conditions do not provide enough width for Case F backfill.
3. Type A dike only to be used where restrictive slope conditions do not provide enough width to use Type D or Type E dike.
4. Fill and compact with excavated material to top of dike.
5. Use Type F dike, where dike is required with guard railing installations. See Revised Standard Plan RSP A77N4 for dike positioning details.

DIKE QUANTITIES

TYPE	CUBIC YARDS PER LINEAR FOOT
A	0.0135
C	0.0038
D	0.0293
E	0.0130
F	0.0066

Quantities based on 5% cross slope.

STATE OF CALIFORNIA
DEPARTMENT OF TRANSPORTATION

HOT MIX ASPHALT DIKES

NO SCALE

RSP A87B DATED JULY 19, 2013 SUPERSEDES STANDARD PLAN A87B DATED MAY 20, 2011 - PAGE 120 OF THE STANDARD PLANS BOOK DATED 2010.

REVISED STANDARD PLAN RSP A87B

2010 REVISED STANDARD PLAN RSP A87B

6-27-13

Dist	COUNTY	ROUTE	POST MILES TOTAL PROJECT	SHEET No.	TOTAL SHEETS
08	SBd, Riv	60	R0.0/R4.6, R3.0/R6.9	76	100

REGISTERED CIVIL ENGINEER

March 21, 2014
PLANS APPROVAL DATE

REGISTERED PROFESSIONAL ENGINEER Hector David Cordova No. C41957 Exp. 3-31-14 CIVIL STATE OF CALIFORNIA

THE STATE OF CALIFORNIA OR ITS OFFICERS OR AGENTS SHALL NOT BE RESPONSIBLE FOR THE ACCURACY OR COMPLETENESS OF SCANNED COPIES OF THIS PLAN SHEET.

TO ACCOMPANY PLANS DATED 8-25-14

2010 REVISED STANDARD PLAN RSP A88A

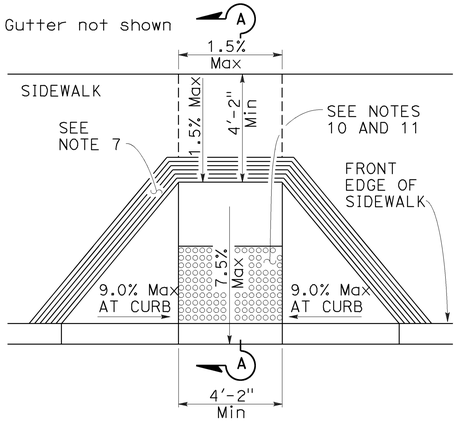

CASE A

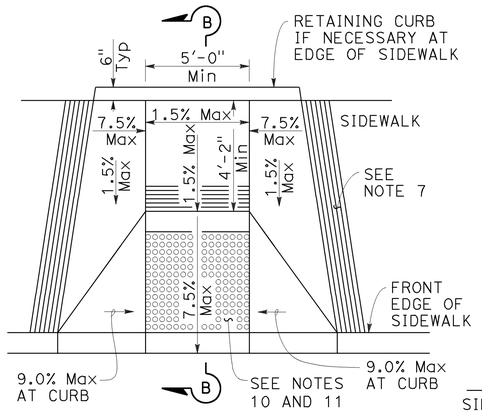

CASE B

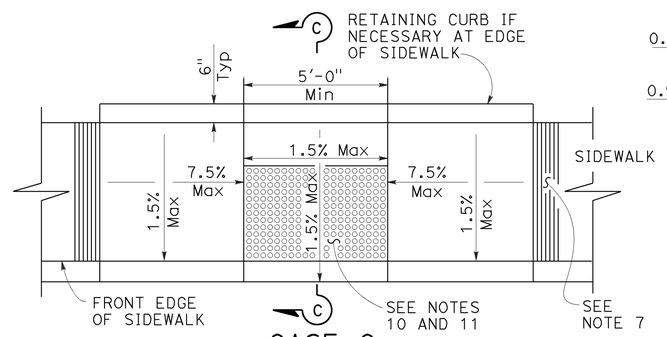

CASE C

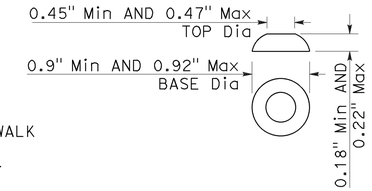

RAISED TRUNCATED DOME

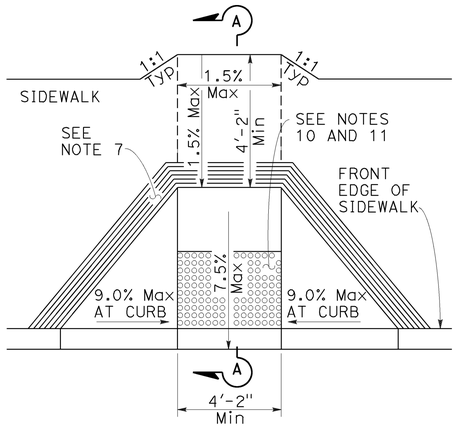

CASE D

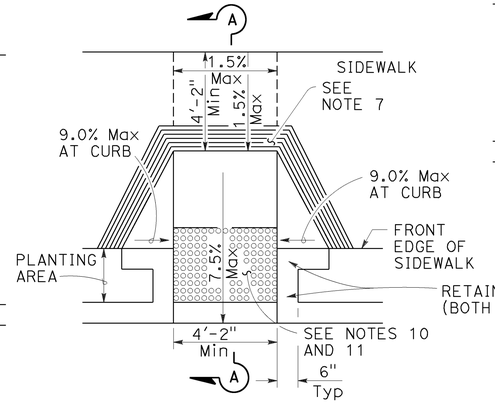

CASE E

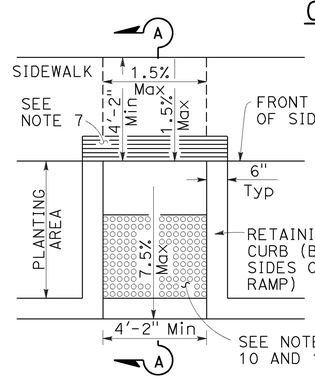

CASE F

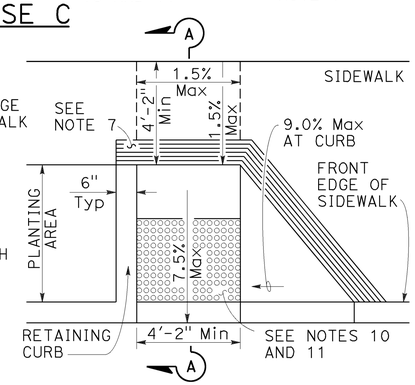

CASE G

See Note 4

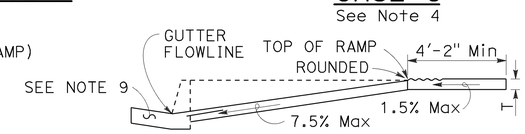

SECTION A-A

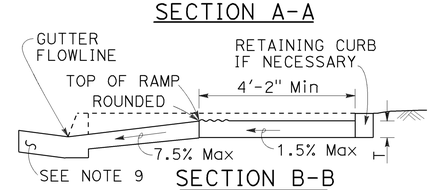

SECTION B-B

Depress entire sidewalk as required

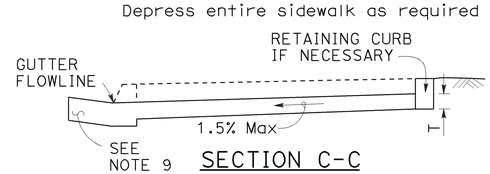

SECTION C-C

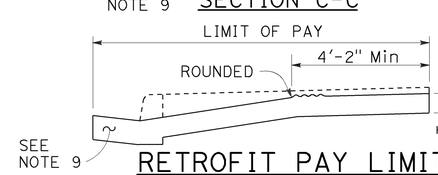

RETROFIT PAY LIMITS

Existing curb and sidewalk

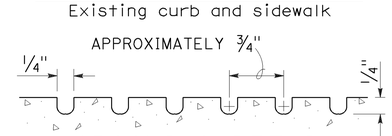

GROOVING DETAIL

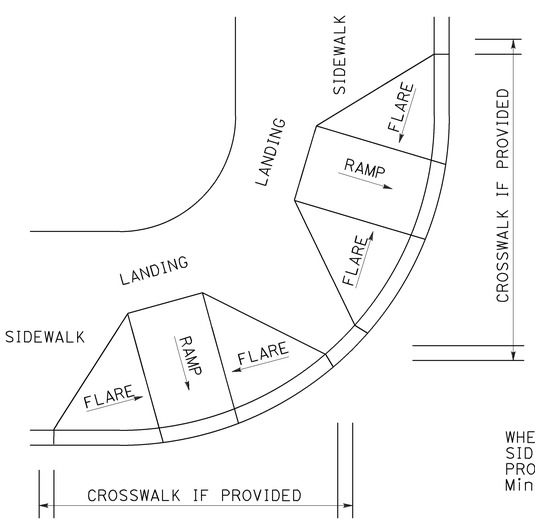

DETAIL A

TYPICAL TWO-RAMP CORNER INSTALLATION

See Note 1

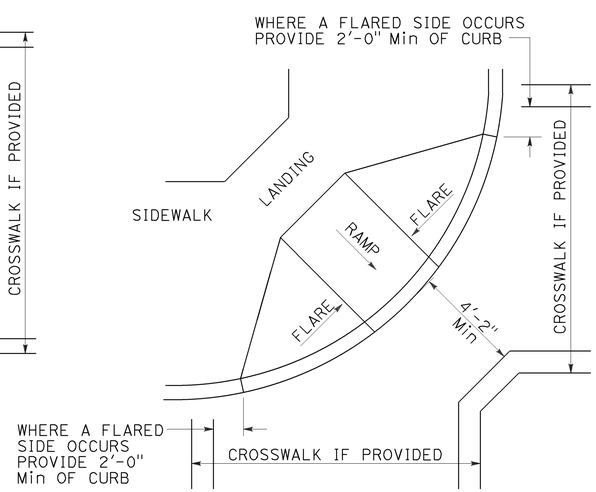

DETAIL B

TYPICAL ONE-RAMP CORNER INSTALLATION

See Notes 1 and 3

NOTES:

1. As site conditions dictate, Case A through Case G curb ramps may be used for corner installations similar to those shown in Detail A and Detail B. The case of curb ramps used in Detail A do not have to be the same. Case A through Case G curb ramps also may be used at mid block locations, as site conditions dictate.
2. If distance from curb to back of sidewalk is too short to accommodate ramp and 4'-2" platform (landing) as shown in Case A, the sidewalk may be depressed longitudinally as in Case B, or C or may be widened as in Case D.
3. When ramp is located in center of curb return, crosswalk configuration must be similar to that shown for Detail B.
4. As site conditions dictate, the retaining curb side and the flared side of the Case G ramp shall be constructed in reversed position.
5. If located on a curve, the sides of the ramp need not be parallel, but the minimum width of the ramp shall be 4'-2".
6. Side slope of ramp flares vary uniformly from a maximum of 9.0% at curb to conform with longitudinal sidewalk slope adjacent to top of the ramp, except in Case C and Case F.
7. The curb ramp shall be outlined, as shown, with a 1'-0" wide border with 1/4" grooves approximately 3/4" on center. See grooving detail.
8. Transitions from ramps and landing to walks, gutters or streets shall be flush (no lip) and free of abrupt changes.
9. Counter slopes of adjoining gutters and road surfaces immediately adjacent to and within 24 inches of the curb ramp shall not be steeper than 1:20 (5.0%). Gutter pan slope shall not exceed 1" of depth for each 2'-0" of width.
10. Curb ramps shall have a detectable warning surface that extends the full width and 3'-0" depth of the ramp. A 4'-0" wide detectable warning surface may be used on a 4'-2" wide curb ramp. Detectable Warning Surfaces shall conform to the requirements in the Standard Specifications.
11. The edge of the detectable warning surface nearest the street shall be between 6" and 8" from the gutter flowline.
12. Sidewalk and ramp thickness, "T", shall be 3 1/2" minimum.
13. Utility pull boxes, manholes, vaults and all other utility facilities within the boundaries of the curb ramp will be relocated or adjusted to grade by the owner prior to, or in conjunction with, curb ramp construction.
14. Detectable warning surface may have to be cut to allow removal of utility covers while maintaining full detectable warning width and depth.

RAISED TRUNCATED DOME PATTERN (IN-LINE)

DETECTABLE WARNING SURFACE

See Note 10

STATE OF CALIFORNIA
DEPARTMENT OF TRANSPORTATION

CURB RAMP DETAILS

NO SCALE

RSP A88A DATED MARCH 21, 2014 SUPERSEDES RSP A88A DATED JULY 19, 2013 AND STANDARD PLAN A88A DATED MAY 20, 2011 - PAGE 121 OF THE STANDARD PLANS BOOK DATED 2010.

REVISED STANDARD PLAN RSP A88A

2-25-14

Dist	COUNTY	ROUTE	POST MILES TOTAL PROJECT	SHEET No.	TOTAL SHEETS
08	SBd, Riv	60	R0.0/R4.6, R3.0/R6.9	77	100

H. David Cordova
REGISTERED CIVIL ENGINEER

March 21, 2014
PLANS APPROVAL DATE

REGISTERED PROFESSIONAL ENGINEER Hector David Cordova No. C41957 Exp. 3-31-14 CIVIL STATE OF CALIFORNIA

THE STATE OF CALIFORNIA OR ITS OFFICERS OR AGENTS SHALL NOT BE RESPONSIBLE FOR THE ACCURACY OR COMPLETENESS OF SCANNED COPIES OF THIS PLAN SHEET.

TO ACCOMPANY PLANS DATED 8-25-14

Gutter not shown

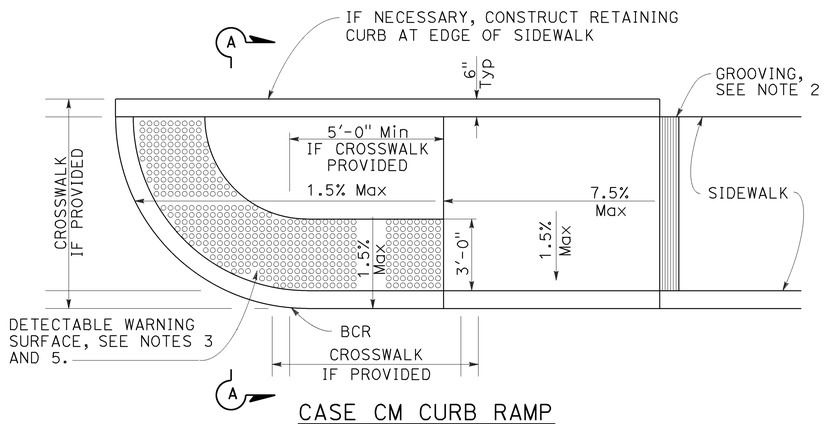

CASE CM CURB RAMP

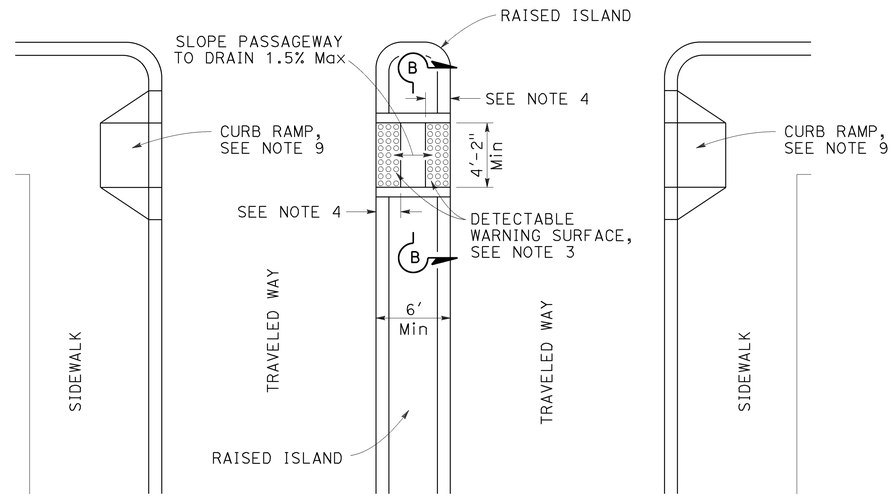

TYPE A PASSAGEWAY

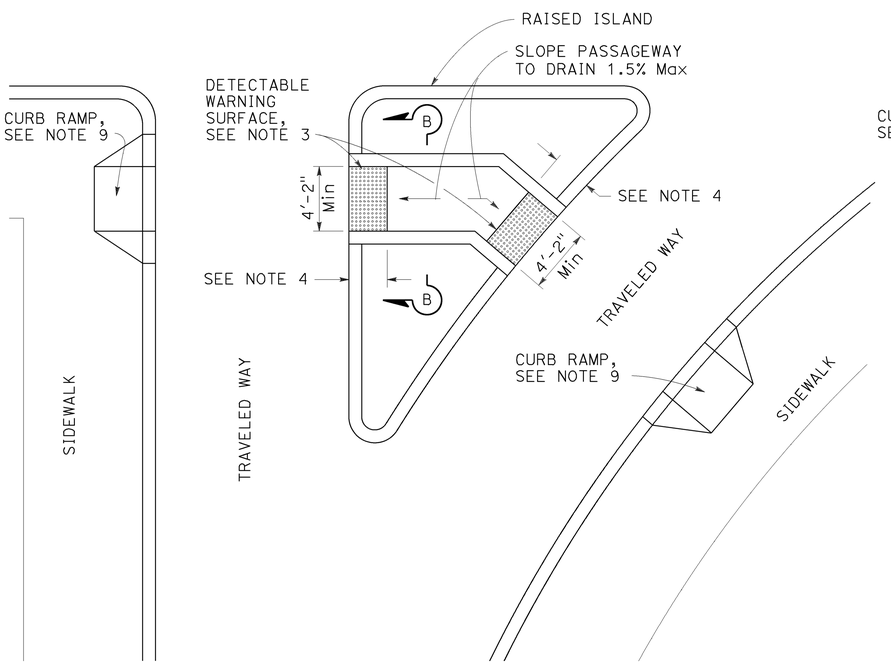

TYPE B PASSAGEWAY

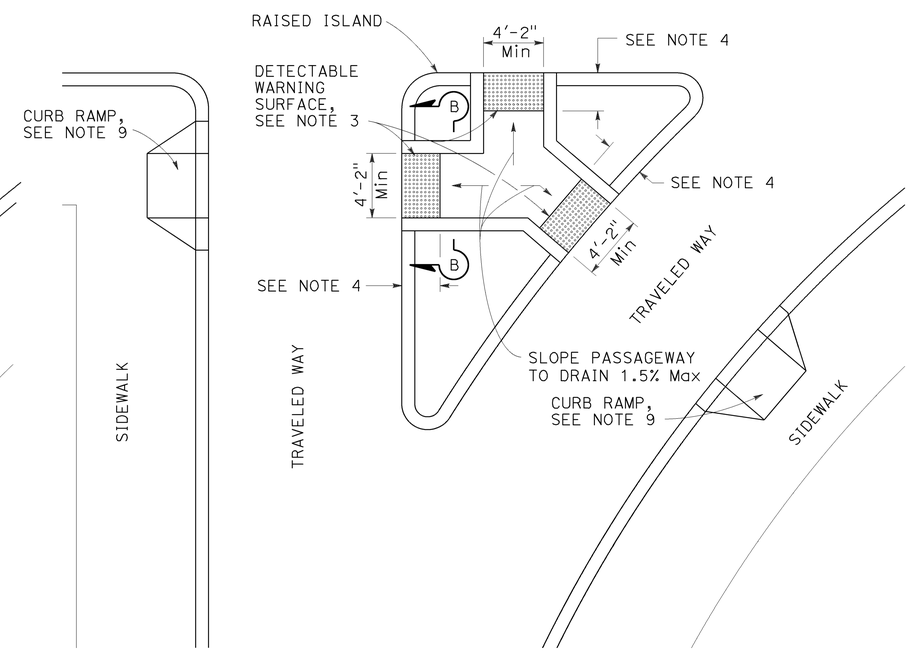

TYPE C PASSAGEWAY

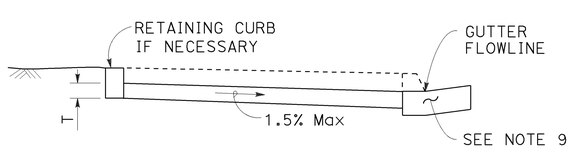

SECTION A-A

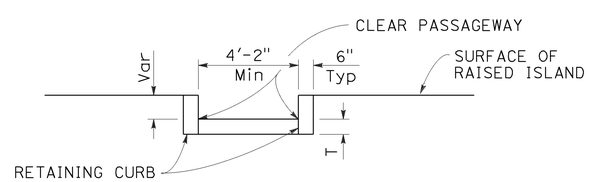

SECTION B-B

NOTES:

1. Sidewalk, ramp and passageway thickness, "T", shall be 3½" minimum.
2. For details of grooving used with Case CM curb ramp, see Revised Standard Plan RSP A88A.
3. For details of detectable warning surfaces, see Revised Standard Plan RSP A88A.
4. Where an island passageway length is greater than or equal to 6'-0", but less than 8'-0", each detectable warning surface shall extend the full width and 2'-0" depth of the passageway length. Where an island passageway length is greater than or equal to 8'-0", each detectable warning surface shall extend the full width and 3'-0" depth of the passageway length. A 4'-0" wide detectable warning surface may be used on a 4'-2" wide island passageway.
5. For Case CM curb ramp, the edge of the detectable warning surface nearest the street shall be between 6" and 8" from the gutter flowline.
6. Transitions from ramps to walks, gutters or streets shall be flush (no lip) and free of abrupt changes.
7. Utility pull boxes, manholes, vaults and all other utility facilities within the boundaries of the curb ramp will be relocated or adjusted to grade by the owner prior to, or in conjunction with, curb ramp construction.
8. Detectable warning surface may have to be cut to allow removal of utility covers while maintaining full detectable warning width and depth.
9. For additional curb ramp details, see Revised Standard Plan RSP A88A.

STATE OF CALIFORNIA
DEPARTMENT OF TRANSPORTATION

CURB RAMP AND ISLAND PASSAGEWAY DETAILS

NO SCALE

RSP A88B DATED MARCH 21, 2014 SUPERSEDES RSP A88B DATED JULY 19, 2013 AND STANDARD PLAN A88B DATED MAY 20, 2011 - PAGE 122 OF THE STANDARD PLANS BOOK DATED 2010.

REVISED STANDARD PLAN RSP A88B

2010 REVISED STANDARD PLAN RSP A88B

2-25-14

Dist	COUNTY	ROUTE	POST MILES TOTAL PROJECT	SHEET No.	TOTAL SHEETS
08	SBd, Riv	60	R0.0/R4.6, R3.0/R6.9	78	100

Theresa Gabriel
REGISTERED ELECTRICAL ENGINEER

July 19, 2013
PLANS APPROVAL DATE

REGISTERED PROFESSIONAL ENGINEER Theresa Aziz Gabriel No. E15129 Exp. 6-30-14 ELECTRICAL STATE OF CALIFORNIA

THE STATE OF CALIFORNIA OR ITS OFFICERS OR AGENTS SHALL NOT BE RESPONSIBLE FOR THE ACCURACY OR COMPLETENESS OF SCANNED COPIES OF THIS PLAN SHEET.

TO ACCOMPANY PLANS DATED 8-25-14

LEGEND:

AB	ABANDON. IF APPLIED TO CONDUIT, REMOVE CONDUCTORS
BC	INSTALL PULL BOX IN EXISTING CONDUIT RUN
BP	PEDESTRIAN BARRICADE, TYPE AS INDICATED ON PLAN
CB	INSTALL CONDUIT INTO EXISTING PULL BOX
CC	CONNECT NEW AND EXISTING CONDUIT. REMOVE EXISTING CONDUCTORS AND INSTALL CONDUCTORS AS INDICATED
CF	CONDUIT TO REMAIN FOR FUTURE USE. REMOVE CONDUCTORS. INSTALL PULL TAPE
DH	DETECTOR HANDHOLE
FA	FOUNDATION TO BE ABANDONED
IS	INSTALL SIGN ON SIGNAL MAST ARM
NS	NO SLIP BASE ON STANDARD
PEC	PHOTOELECTRIC CONTROL
PEU	PHOTOELECTRIC UNIT
RC	EQUIPMENT OR MATERIAL TO BE REMOVED AND BECOME THE PROPERTY OF THE CONTRACTOR
RE	REMOVE ELECTROLIER, FUSES AND BALLAST. TAPE ENDS OF CONDUCTORS
RL	RELOCATE EQUIPMENT
RR	REMOVE AND REUSE EQUIPMENT
RS	REMOVE AND SALVAGE EQUIPMENT
SC	SPLICE NEW TO EXISTING CONDUCTORS
SD	SERVICE DISCONNECT
TSP	TELEPHONE SERVICE POINT

ABBREVIATIONS

APS	ACCESSIBLE PEDESTRIAN SIGNAL
BBS	BATTERY BACKUP SYSTEM
BC	BOLT CIRCLE
BPB	BICYCLE PUSH BUTTON
C	CONDUIT
CB	CIRCUIT BREAKER
CCTV	CLOSED CIRCUIT TELEVISION
Ckt	CIRCUIT
CMS	CHANGEABLE MESSAGE SIGN
Ctid	CALTRANS IDENTIFICATION
Comm	COMMUNICATION
DLC	LOOP DETECTOR LEAD-IN CABLE
EMS	EXTINGUISHABLE MESSAGE SIGN
EVUC	EMERGENCY VEHICLE UNIT CABLE
EVUD	EMERGENCY VEHICLE UNIT DETECTOR
FB	FLASHING BEACON
FBCA	FLASHING BEACON CONTROL ASSEMBLY
FBS	FLASHING BEACON WITH SLIP BASE
FO	FIBER OPTIC
G	EQUIPMENT GROUNDING CONDUCTOR
GB	GROUND BUS
GFCI	GROUND FAULT CIRCUIT INTERRUPTER
HAR	HIGHWAY ADVISORY RADIO
Hex	HEXAGONAL
HPS	HIGH PRESSURE SODIUM
IISNS	INTERNALLY ILLUMINATED STREET NAME SIGN
ISL	INDUCTION SIGN LIGHTING
LED	LIGHT EMITTING DIODE
LMA	LUMINAIRE MAST ARM
LPS	LOW PRESSURE SODIUM
Ltg	LIGHTING
Lum	LUMINAIRE
M	METERED
MAT	MAST ARM MOUNTING TOP ATTACHMENT
MAS	MAST ARM MOUNTING SIDE ATTACHMENT
M/M	MULTIPLE TO MULTIPLE TRANSFORMER
Mtg	MOUNTING
MV	MERCURY VAPOR LIGHTING FIXTURE
MVDS	MICROWAVE VEHICLE DETECTION SYSTEM
N	NEUTRAL (GROUNDED CONDUCTOR)
NB	NEUTRAL BUS
NC	NORMALLY CLOSE
NO	NORMALLY OPEN
P	CIRCUIT BREAKER'S POLE
PB	PULL BOX
PBA	PUSH BUTTON ASSEMBLY
PEC	PHOTOELECTRIC CONTROL
Ped	PEDESTRIAN
PEU	PHOTOELECTRIC UNIT
PT	CONDUIT WITH PULL TAPE
RE	RELOCATED EQUIPMENT
RM	RAMP METERING
RWIS	ROADSIDE WEATHER INFORMATION SYSTEM
SB	SLIP BASE
SIC	SIGNAL INTERCONNECT CABLE
Sig	SIGNAL
SMA	SIGNAL MAST ARM
SNS	STREET NAME SIGN
SP	SERVICE POINT
TDC	TELEPHONE DEMARCATION CABINET
TMS	TRAFFIC MONITORING STATION
TOS	TRAFFIC OPERATIONS SYSTEM
Veh	VEHICLE
VIVDS	VIDEO IMAGE VEHICLE DETECTION SYSTEM
WIM	WEIGH-IN-MOTION
Xfmr	TRANSFORMER

SOFFIT AND WALL MOUNTED LUMINAIRES

PENDANT, 70 W HPS UNLESS OTHERWISE SPECIFIED

FLUSH, 70 W HPS UNLESS OTHERWISE SPECIFIED

WALL SURFACE, 70 W HPS UNLESS OTHERWISE SPECIFIED

EXISTING SOFFIT OR WALL LUMINAIRE TO REMAIN UNMODIFIED

EXISTING SOFFIT OR WALL LUMINAIRE TO BE MODIFIED AS SPECIFIED

NOTE:

Arrow indicates "street side" of luminaire.

COMMONLY USED SYMBOLS FOR UNITED STATES CUSTOMARY UNITS OF MEASUREMENT:

SYMBOL USED	DEFINITIONS
Ω	OHMS
min	MINUTE
s	SECOND
bps	BITS PER SECOND
Bps	BYTES PER SECOND
A	AMPERE
V	VOLT
V(dc)	VOLT (DIRECT CURRENT)
V(ac)	VOLT (ALTERNATING CURRENT)
FC	FOOT - CANDLE
W	WATTS
VA	VOLT-AMPERE
M	MEGA
k	KILO
m	MILLI
μ	MICRO
P	PICO
Hz	HERTZ

MISCELLANEOUS ELECTROLIERS

NEW	EXISTING	
		LUMINAIRE ON WOOD POLE
		NON-STANDARD ELECTROLIER (SEE PROJECT NOTES OR PROJECT PLANS)
		CITY ELECTROLIER
		ELECTROLIER FOUNDATION (FUTURE INSTALLATION)

NOTES:

1. HPS luminaires shall be 310 W HPS when installed on Type 21, 21D, 30, 31 and 32 Standards, unless otherwise specified. HPS luminaires shall be 200 W when installed on other type standards or poles, unless otherwise specified.
2. LED luminaires shall be 235 W when installed on Type 21, 21D, 30, 31 and 32 Standards, unless otherwise specified. LED luminaires shall be 165 W when installed on other type standards or poles, unless otherwise specified.
3. Luminaires shall be the cutoff type, ANSI Type III medium cutoff lighting distribution, unless otherwise specified.

STANDARD ELECTROLIER

NEW	EXISTING	STANDARD TYPE
		15
		15D
		15 STRUCTURE
		15D STRUCTURE
		21
		21D
		21 STRUCTURE
		21D STRUCTURE
		30
		31
		32

STATE OF CALIFORNIA
DEPARTMENT OF TRANSPORTATION

ELECTRICAL SYSTEMS (LEGEND AND ABBREVIATIONS)

NO SCALE

RSP ES-1A DATED JULY 19, 2013 SUPERSEDES STANDARD PLAN ES-1A DATED MAY 20, 2011 - PAGE 425 OF THE STANDARD PLANS BOOK DATED 2010.

REVISED STANDARD PLAN RSP ES-1A

2010 REVISED STANDARD PLAN RSP ES-1A

Dist	COUNTY	ROUTE	POST MILES TOTAL PROJECT	SHEET No.	TOTAL SHEETS
08	SBd, Riv	60	R0.0/R4.6, R3.0/R6.9	79	100

Theresa Gabriel
REGISTERED ELECTRICAL ENGINEER

July 19, 2013
PLANS APPROVAL DATE

REGISTERED PROFESSIONAL ENGINEER Theresa Aziz Gabriel No. E15129 Exp. 6-30-14 ELECTRICAL STATE OF CALIFORNIA

THE STATE OF CALIFORNIA OR ITS OFFICERS OR AGENTS SHALL NOT BE RESPONSIBLE FOR THE ACCURACY OR COMPLETENESS OF SCANNED COPIES OF THIS PLAN SHEET.

TO ACCOMPANY PLANS DATED 8-25-14

CONDUIT

NEW	EXISTING	
		LIGHTING CONDUIT, UNLESS OTHERWISE INDICATED OR NOTED
		TRAFFIC SIGNAL CONDUIT
C	c	COMMUNICATION CONDUIT
T	t	TELEPHONE CONDUIT
F	f	FIRE ALARM CONDUIT
FO	fo	FIBER OPTIC CONDUIT
		CONDUIT TERMINATION
R	r	CONDUIT RISER ATTACHED TO THE STRUCTURE OR SERVICE POLE

SERVICE EQUIPMENT

NEW	EXISTING	
OH	oh	OVERHEAD LINES
U	U	WOOD POLE, "U" INDICATES UTILITY OWNED
		POLE GUY WITH ANCHOR
		UTILITY TRANSFORMER - GROUND MOUNTED
III	III	SERVICE EQUIPMENT ENCLOSURE TYPE. DOOR INDICATES FRONT OF ENCLOSURE
T	t	TELEPHONE DEMARCATION CABINET

POLE-MOUNTED SERVICE DESIGNATION

TYPE H SERVICE, 28'-10" — TYPE OF INSTALLATION AND POLE HEIGHT ABOVE GRADE

FLASHING BEACON

NEW	EXISTING	
R	R	FLASHING BEACON (ONE VEHICLE SIGNAL HEAD WITH BACKPLATE AND VISOR) "R" INDICATES RED INDICATION, "Y" INDICATES YELLOW INDICATION
Y Y	Y Y	FLASHING BEACON WITH TYPE 15-FBS STANDARD AND A SIGN.
R R	R R	FLASHING BEACON WITH TYPES 9, 9A OR 9B SIGN UNLESS OTHERWISE SPECIFIED OR INDICATED

SIGNAL EQUIPMENT

NEW	EXISTING	
C	C	PEDESTRIAN SIGNAL HEAD "C" INDICATES COUNTDOWN PEDESTRIAN HEAD
		PUSH BUTTON ASSEMBLY POST
		PEDESTRIAN BARRICADE
		VEHICLE SIGNAL HEAD (WITH BACKPLATE AND 3-SECTIONS: RED, YELLOW AND GREEN)
		VEHICLE SIGNAL HEAD WITH ANGLE VISOR
PV	PV	MODIFICATIONS OF BASIC SYMBOL: "L" INDICATES ALL NON-ARROW SECTIONS LOUVERED "LG" INDICATES LOUVERED GREEN SECTION ONLY "PV" INDICATES ALL 12" SECTIONS PROGRAMMED VISIBILITY "8" INDICATES ALL 8" SECTIONS (ONLY WHEN SPECIFIED)
		VEHICLE SIGNAL HEAD CONSISTING OF RED, YELLOW AND GREEN LEFT ARROW SECTIONS
		VEHICLE SIGNAL HEAD CONSISTING OF RED AND YELLOW SECTIONS WITH AN UP GREEN ARROW SECTION
		VEHICLE SIGNAL HEAD (5 SECTION) CONSISTING OF RED, YELLOW AND GREEN SECTIONS WITH YELLOW AND GREEN RIGHT ARROW SECTIONS
		TYPE 15TS STANDARD WITH VEHICLE SIGNAL HEAD AND LUMINAIRE
		TYPE 21TS STANDARD WITH VEHICLE SIGNAL HEAD AND LUMINAIRE
		STANDARD WITH LUMINAIRE AND SIGNAL MAST ARMS AND ATTACHED VEHICLE SIGNAL HEADS
		TYPE 1 STANDARD WITH ATTACHED VEHICLE SIGNAL HEADS
		STANDARD WITH A SIGNAL MAST ARM, ATTACHED VEHICLE SIGNAL HEADS AND INTERNALLY ILLUMINATED STREET NAME SIGN
		CONTROLLER ASSEMBLY. DOOR INDICATES FRONT OF CABINET

SIGNAL EQUIPMENT Cont

NEW	EXISTING	
		GUARD POST
		TYPE 1 STANDARD WITH RAMP METERING SIGN
		OPTICAL DETECTOR FOR THE EMERGENCY VEHICLE DETECTION SYSTEM

NOTES:

1. All signal sections shall be 12" unless shown otherwise.
2. Signal heads shall be provided with backplates unless shown otherwise.

ILLUMINATED OVERHEAD SIGN

NEW	EXISTING	
		SINGLE POST, SINGLE ILLUMINATED SIGN, BALANCED BUTTERFLY
		SINGLE POST, DOUBLE ILLUMINATED SIGN, BALANCED BUTTERFLY
		SINGLE POST, SINGLE ILLUMINATED SIGN, FULL CANTILEVER
		DOUBLE POST, SINGLE ILLUMINATED SIGN
		SINGLE ILLUMINATED SIGN MOUNTED ON STRUCTURE
		DOUBLE POST, SINGLE ILLUMINATED SIGN WITH ELECTROLIER

STATE OF CALIFORNIA
DEPARTMENT OF TRANSPORTATION

ELECTRICAL SYSTEMS (LEGEND AND ABBREVIATIONS)

NO SCALE

RSP ES-1B DATED JULY 19, 2013 SUPERSEDES STANDARD PLAN ES-1B DATED MAY 20, 2011 - PAGE 426 OF THE STANDARD PLANS BOOK DATED 2010.

REVISED STANDARD PLAN RSP ES-1B

2010 REVISED STANDARD PLAN RSP ES-1B

7-15-13

Dist	COUNTY	ROUTE	POST MILES TOTAL PROJECT	SHEET No.	TOTAL SHEETS
08	SBd, Riv	60	R0.0/R4.6, R3.0/R6.9	80	100

Theresa Gabriel
REGISTERED ELECTRICAL ENGINEER

July 19, 2013
PLANS APPROVAL DATE

REGISTERED PROFESSIONAL ENGINEER
Theresa Aziz Gabriel
No. E15129
Exp. 6-30-14
ELECTRICAL
STATE OF CALIFORNIA

THE STATE OF CALIFORNIA OR ITS OFFICERS OR AGENTS SHALL NOT BE RESPONSIBLE FOR THE ACCURACY OR COMPLETENESS OF SCANNED COPIES OF THIS PLAN SHEET.

TO ACCOMPANY PLANS DATED 8-25-14

EQUIPMENT IDENTIFICATION

ILLUMINATED SIGN IDENTIFICATION NUMBER:

SIGN No. 12345
10 ISL SCI 1.0

- SIGN NUMBER - PLACE ON POST OR STRUCTURE
- TRANSFORMER RATING (kVA)
- LIGHTING CONTROL TYPE
- NUMBER AND TYPE OF FIXTURES

DO NOT PLACE ON STANDARD OR STRUCTURE

ELECTROLIER OR EQUIPMENT IDENTIFICATION NUMBER:

12345 - 15'-0"

- MAST ARM LENGTH, IF SHOWN. DO NOT PLACE ON STANDARD OR STRUCTURE
- EQUIPMENT NUMBER - PLACE ON STANDARD OR STRUCTURE. EXISTING EQUIPMENT NUMBERS ARE SHOWN IN PARENTHESIS

CONDUIT AND CONDUCTOR IDENTIFICATION:

1½"C, 2#10, 15#14, 2 DLC, 12P#18

- PAIR
- NUMBER AND SIZE OF CONDUCTORS AND CABLES
- SIZE OF CONDUIT IN INCHES

ø1, ø2, ø2P, etc.	TRAFFIC PHASE IDENTIFICATION FOR SIGNAL FACES, DETECTORS AND PHASE DIAGRAMS
1 2 3	LEGEND NUMBERS
A B C	EQUIPMENT, SIGNAL POLES, INSTALLATION OR ITEMS
1 2 3	CONDUIT RUN NUMBERS

SIGNAL AND LIGHTING STANDARD (TYPICAL DESIGNATION):

19A - 3 - 100

- WIND VELOCITY = 100 mph
- CASE 3 ARM LOADING
- STANDARD TYPE
- STANDARD PLAN SHEET NUMBER
- DETAIL, NUMBER, SECTION, TYPE OR ELEVATION

MISCELLANEOUS EQUIPMENT

NEW	EXISTING	
CMS	cms	CHANGEABLE MESSAGE SIGN
		CLOSED CIRCUIT TELEVISION CAMERA
		HIGHWAY ADVISORY RADIO POLE AND ANTENNA
EMS	ems	EXTINGUISHABLE MESSAGE SIGN
M V	m v	DETECTION DEVICE M = MICROWAVE SENSOR V = VIDEO IMAGE SENSOR

WIRING DIAGRAM LEGEND

----	EXTERNAL CONDUCTOR
	CONDUCTOR OR BUS
	TIE POINT
	CONTACTOR COIL
	CONTACTOR, NO CONTACT
	TERMINAL BLOCKS
	CONTACTOR, NC CONTACT
	ENCLOSURE BOND
	GROUNDING ELECTRODE
	CIRCUIT BREAKER
	RECEPTACLE

PULL BOXES

NEW	EXISTING	
		PULL BOX, No. 5 UNLESS OTHERWISE INDICATED OR NOTED
3	9A(21)	PULL BOX, ADDITIONAL DESIGNATIONS OR DESCRIPTIONS

3 No. 3½ PULL BOX
5 No. 5 PULL BOX
6 No. 6 PULL BOX
7 No. 7 (CEILING PULL BOX)
8 No. 8 (PENDANT SOFFIT PULL BOX)
9 No. 9 PULL BOX
9A No. 9A PULL BOX

(C) COMMUNICATIONS PULL BOX
(E) PULL BOX WITH EXTENSION
(S) SPRINKLER CONTROL PULL BOX
(21) ANCHOR BOLTS AND CONDUIT FOR FUTURE INSTALLATION OF TYPE 21 STANDARD
(T) TRAFFIC PULL BOX

VEHICLE DETECTORS

5 J 9 U

- VEHICLE DETECTOR DESIGNATION
- U = UPPER
  L = LOWER
- SLOT NUMBER IN INPUT FILE
- INPUT FILE (I OR J)
- PHASE

NEW	EXISTING	
		TYPE A DETECTOR LOOP. OUTLINE OF SAWCUT SHOWN
		TYPE B DETECTOR LOOP. OUTLINE OF SAWCUT SHOWN
		TYPE C DETECTOR LOOP. OUTLINE OF SAWCUT SHOWN
		TYPE D DETECTOR LOOP. OUTLINE OF SAWCUT SHOWN
		TYPE E DETECTOR LOOP. OUTLINE OF SAWCUT SHOWN
		TYPE Q DETECTOR LOOP. OUTLINE OF SAWCUT SHOWN
		MAGNETIC DETECTOR
DH	dh	DETECTOR HANDHOLE
		MICROWAVE OR VIDEO DETECTION ZONE

STATE OF CALIFORNIA
DEPARTMENT OF TRANSPORTATION

ELECTRICAL SYSTEMS (LEGEND AND ABBREVIATIONS)

NO SCALE

RSP ES-1C DATED JULY 19, 2013 SUPERSEDES STANDARD PLAN ES-1C DATED MAY 20, 2011 - PAGE 427 OF THE STANDARD PLANS BOOK DATED 2010.

REVISED STANDARD PLAN RSP ES-1C

2010 REVISED STANDARD PLAN RSP ES-1C

7-11-13

Dist	COUNTY	ROUTE	POST MILES TOTAL PROJECT	SHEET No.	TOTAL SHEETS
08	SBd, Riv	60	R0.0/R4.6, R3.0/R6.9	81	100

Theresa Gabriel
REGISTERED ELECTRICAL ENGINEER

July 19, 2013
PLANS APPROVAL DATE

REGISTERED PROFESSIONAL ENGINEER Theresa Aziz Gabriel No. E15129 Exp. 6-30-14 ELECTRICAL STATE OF CALIFORNIA

THE STATE OF CALIFORNIA OR ITS OFFICERS OR AGENTS SHALL NOT BE RESPONSIBLE FOR THE ACCURACY OR COMPLETENESS OF SCANNED COPIES OF THIS PLAN SHEET.

TO ACCOMPANY PLANS DATED 8-25-14

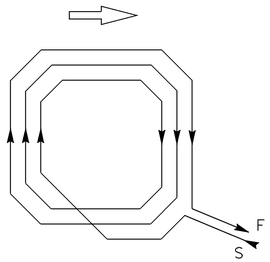

WINDING DETAIL

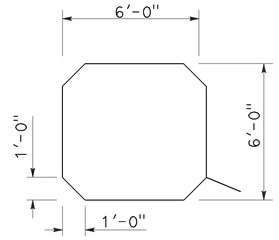

SAWCUT DETAIL

TYPE A LOOP DETECTOR CONFIGURATION

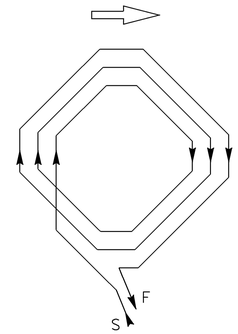

WINDING DETAIL

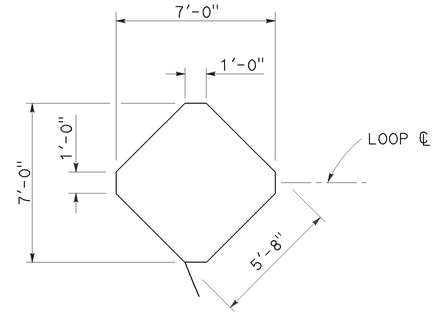

SAWCUT DETAIL

TYPE B LOOP DETECTOR CONFIGURATION

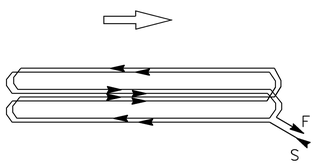

WINDING DETAIL

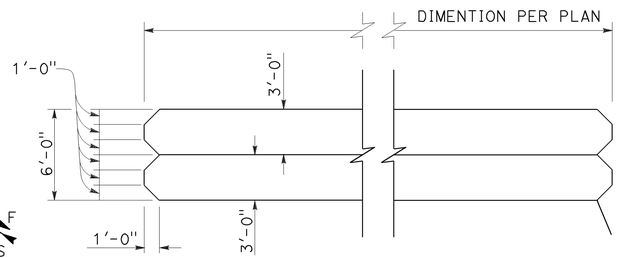

SAWCUT DETAIL

TYPE C LOOP DETECTOR CONFIGURATION

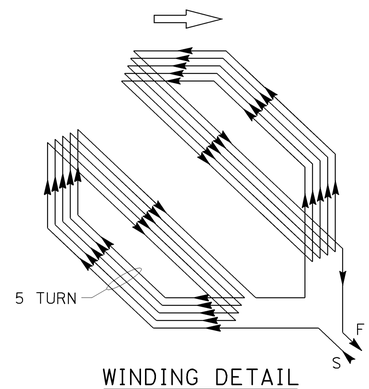

WINDING DETAIL

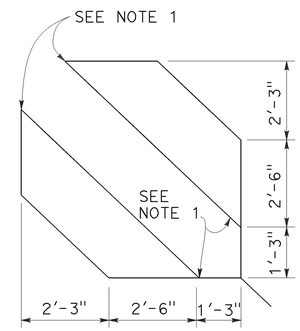

SAWCUT DETAIL

TYPE D LOOP DETECTOR CONFIGURATION

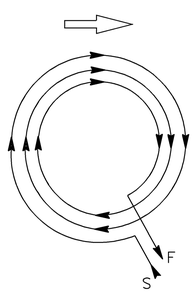

WINDING DETAIL

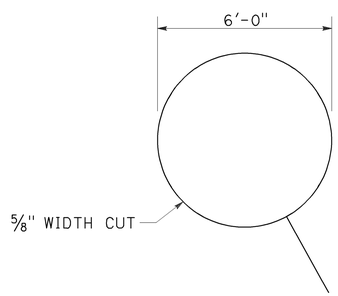

SAWCUT DETAIL

TYPE E LOOP DETECTOR CONFIGURATION

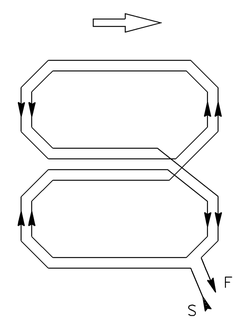

WINDING DETAIL

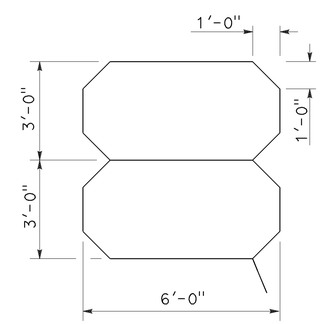

SAWCUT DETAIL

TYPE Q LOOP DETECTOR CONFIGURATION

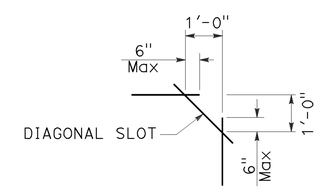

PLAN VIEW OF DIAGONAL SLOT AT CORNERS

NOTES:

1. Round corners of acute angle sawcuts to prevent damage to conductors.
2. Typical distance separating loops from edge to edge is 10' for Type A, B, D and E installation in single lane.

STATE OF CALIFORNIA
DEPARTMENT OF TRANSPORTATION

ELECTRICAL SYSTEMS (DETECTORS)

NO SCALE

RSP ES-5B DATED JULY 19, 2013 SUPERSEDES STANDARD PLAN ES-5B DATED MAY 20, 2011 - PAGE 449 OF THE STANDARD PLANS BOOK DATED 2010.

REVISED STANDARD PLAN RSP ES-5B

2010 REVISED STANDARD PLAN RSP ES-5B

7-9-13

Dist	COUNTY	ROUTE	POST MILES TOTAL PROJECT	SHEET No.	TOTAL SHEETS
08	SBd, Riv	60	R0.0/R4.6, R3.0/R6.9	82	100

Theresa Gabriel
REGISTERED ELECTRICAL ENGINEER

July 19, 2013
PLANS APPROVAL DATE

REGISTERED PROFESSIONAL ENGINEER
Theresa Aziz Gabriel
No. E15129
Exp. 6-30-14
ELECTRICAL
STATE OF CALIFORNIA

THE STATE OF CALIFORNIA OR ITS OFFICERS OR AGENTS SHALL NOT BE RESPONSIBLE FOR THE ACCURACY OR COMPLETENESS OF SCANNED COPIES OF THIS PLAN SHEET.

TO ACCOMPANY PLANS DATED 8-25-14

2010 REVISED STANDARD PLAN RSP ES-5C

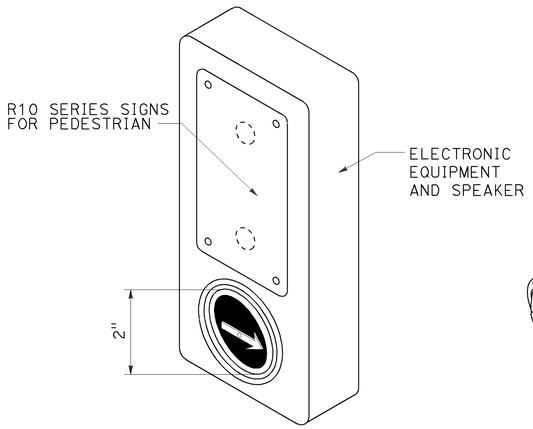

ACCESSIBLE PEDESTRIAN SIGNAL

DETAIL A
(See note 1 to 4)

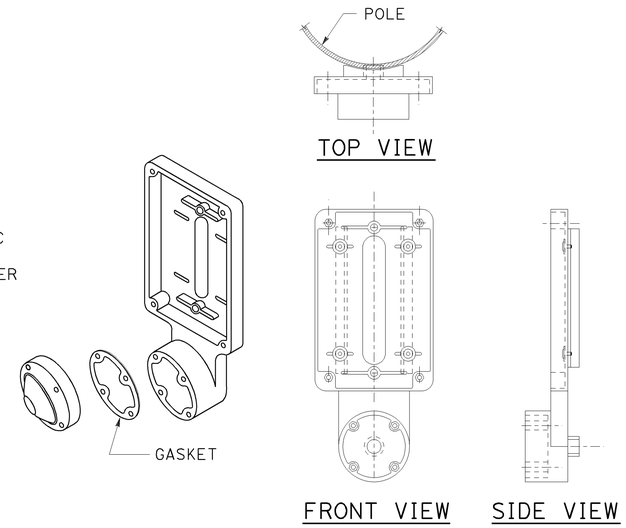

TYPE B PUSH BUTTON ASSEMBLY

DETAIL B
(See note 1 to 4)

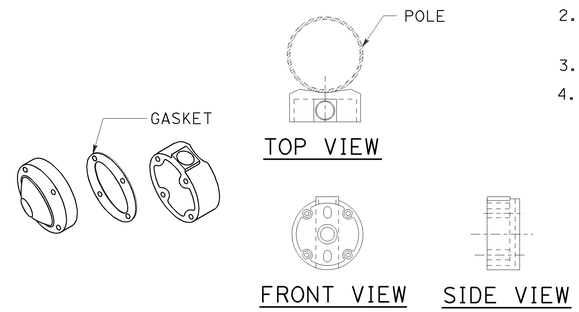

TYPE C PUSH BUTTON ASSEMBLY

DETAIL C
(See note 1 to 4)

NOTES:

1. Back casting shape to fit curvature of pole.
2. Provide cover fitting for top of post, when PBA is mounted on push button assembly post.
3. Install push button on crosswalk side of standard.
4. Use R10 series regulatory signs and plaques for pedestrian and bicycle facilities.

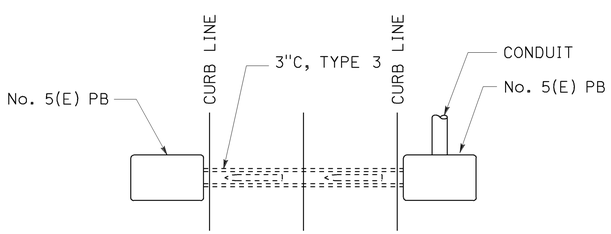

PLAN

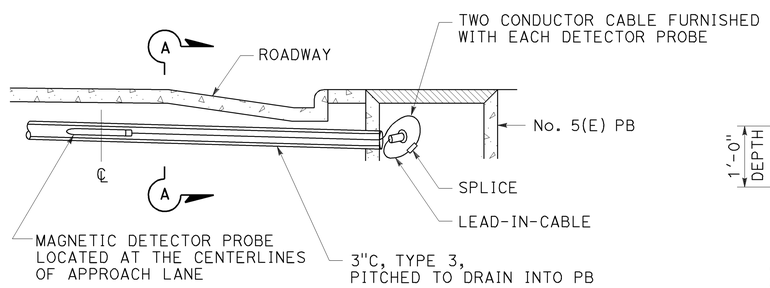

ELEVATION

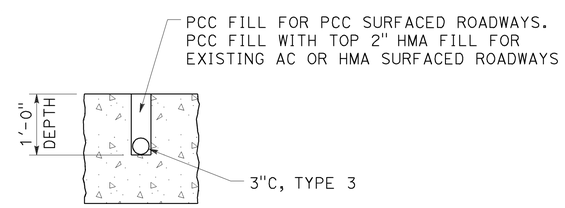

SECTION A-A

MAGNETIC VEHICLE DETECTOR

INSTALLATION DETAILS

DETAIL D

STATE OF CALIFORNIA
DEPARTMENT OF TRANSPORTATION

ELECTRICAL SYSTEMS (ACCESSIBLE PEDESTRIAN SIGNAL, PUSH BUTTON ASSEMBLIES AND MAGNETIC VEHICLE DETECTOR)

NO SCALE

RSP ES-5C DATED JULY 19, 2013 SUPERSEDES STANDARD PLAN ES-5C
DATED MAY 20, 2011 - PAGE 450 OF THE STANDARD PLANS BOOK DATED 2010.

REVISED STANDARD PLAN RSP ES-5C

Dist	COUNTY	ROUTE	POST MILES TOTAL PROJECT	SHEET No.	TOTAL SHEETS
08	SBd, Riv	60	R0.0/R4.6, R3.0/R6.9	83	100

Theresa Gabriel
REGISTERED ELECTRICAL ENGINEER

July 19, 2013
PLANS APPROVAL DATE

REGISTERED PROFESSIONAL ENGINEER Theresa Aziz Gabriel No. E15129 Exp. 6-30-14 ELECTRICAL STATE OF CALIFORNIA

THE STATE OF CALIFORNIA OR ITS OFFICERS OR AGENTS SHALL NOT BE RESPONSIBLE FOR THE ACCURACY OR COMPLETENESS OF SCANNED COPIES OF THIS PLAN SHEET.

TO ACCOMPANY PLANS DATED 8-25-14

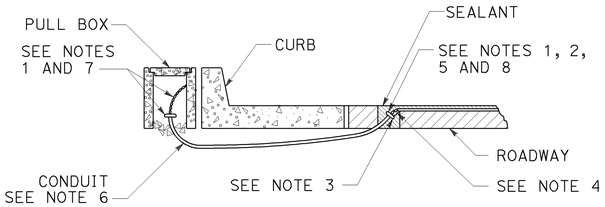

TYPE A
CURB TERMINATION DETAIL

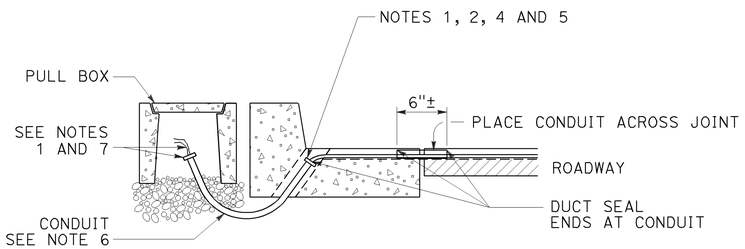

CROSS SECTION

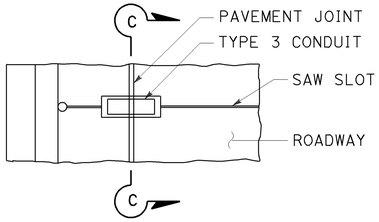

PLAN VIEW

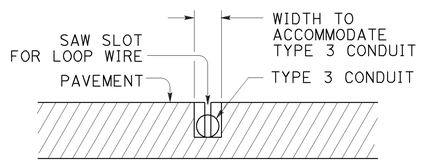

SECTION C-C

TYPE B
CURB TERMINATION DETAIL

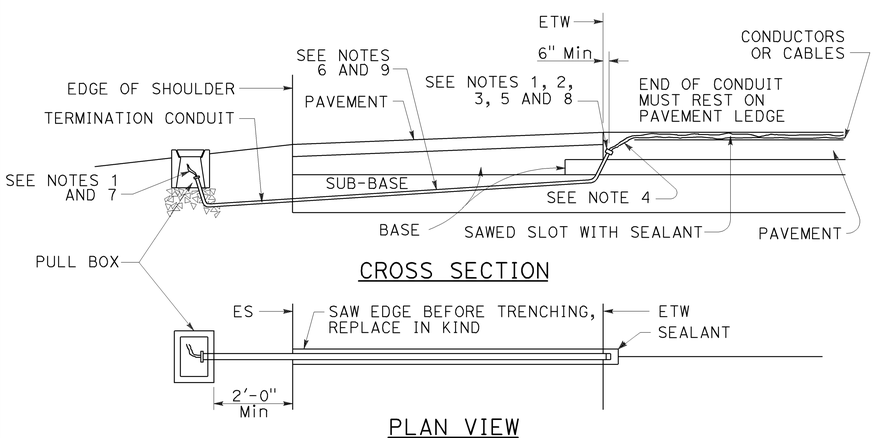

CROSS SECTION

PLAN VIEW

SHOULDER TERMINATION DETAILS

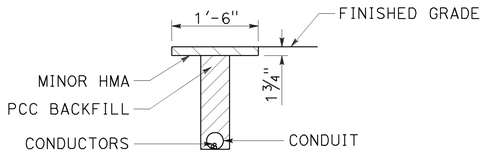

"T" TRENCH
DETAIL T

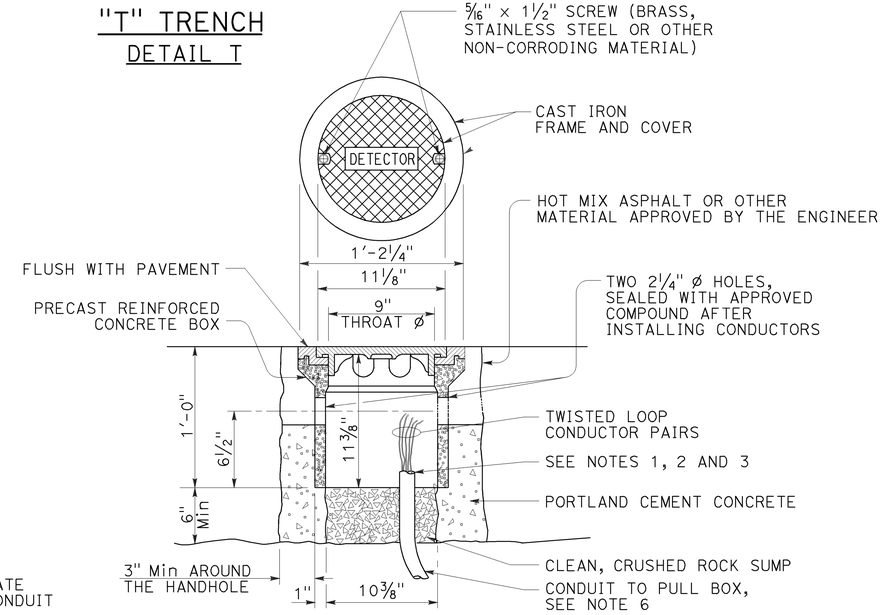

DETECTOR HANDHOLE DETAIL

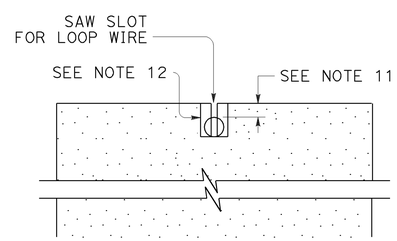

SECTION A-A

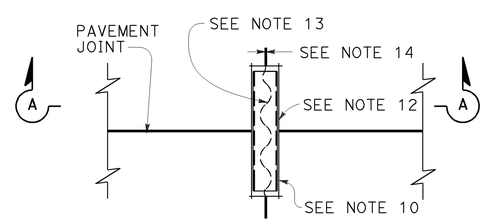

PLAN VIEW

TYPICAL LOOP LEAD-IN DETAIL
AT PAVEMENT JOINT

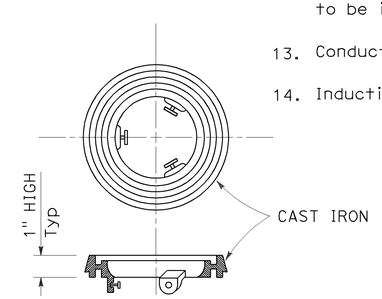

LOCKING GRADE RING

NOTES:

1. Bushing shall be used at end of conduit.
2. Tape detector conductors or cables 3" each side of bushings.
3. Install duct seal compound to each end of termination conduit before installing sealant.
4. Round all sharp edges where detector conductors or cables have to pass.
5. End of conduit shall be 3⅛" below roadway surface.
6.

Conduit size	Loop conductors
1"C minimum	1 to 2 pairs
1½"C minimum	3 to 4 pairs
2"C minimum	5 or more pairs

7. Splice detector conductors or cables to detector lead-in-cable.
8. Location of detector handhole when shown on plans.
9. When the shoulder and traveled way are paved with the same material and there is no joint between them, the conduit shall extend only 2'-0" into the shoulder pavement.
10. ¾"C, Type 3 conduit 6" long minimum, plug both ends with duct compound to keep out sealant.
11. ½" Minimum between top of conduit and pavement surface.
12. Sawcut shall not exceed 1" in width and ⅛" longer than conduit to be installed.
13. Conductors with ½" minimum slack inside conduit.
14. Inductive loop detector saw slot.

STATE OF CALIFORNIA
DEPARTMENT OF TRANSPORTATION

ELECTRICAL SYSTEMS (CURB TERMINATION AND HANDHOLE)

NO SCALE

RSP ES-5D DATED JULY 19, 2013 SUPERSEDES STANDARD PLAN ES-5D DATED MAY 20, 2011 - PAGE 451 OF THE STANDARD PLANS BOOK DATED 2010.

REVISED STANDARD PLAN RSP ES-5D

2010 REVISED STANDARD PLAN RSP ES-5D

7-9-13

DIST	COUNTY	ROUTE	POST MILES TOTAL PROJECT	SHEET NO.	TOTAL SHEETS
08	SBd, Riv	60	R0.0/R4.6, R3.0/R6.9	84	100

Theresa Gabriel
REGISTERED ELECTRICAL ENGINEER

July 19, 2013
PLANS APPROVAL DATE

REGISTERED PROFESSIONAL ENGINEER Theresa Aziz Gabriel No. E15129 Exp. 6-30-14 ELECTRICAL STATE OF CALIFORNIA

THE STATE OF CALIFORNIA OR ITS OFFICERS OR AGENTS SHALL NOT BE RESPONSIBLE FOR THE ACCURACY OR COMPLETENESS OF SCANNED COPIES OF THIS PLAN SHEET.

TO ACCOMPANY PLANS DATED 8-25-14

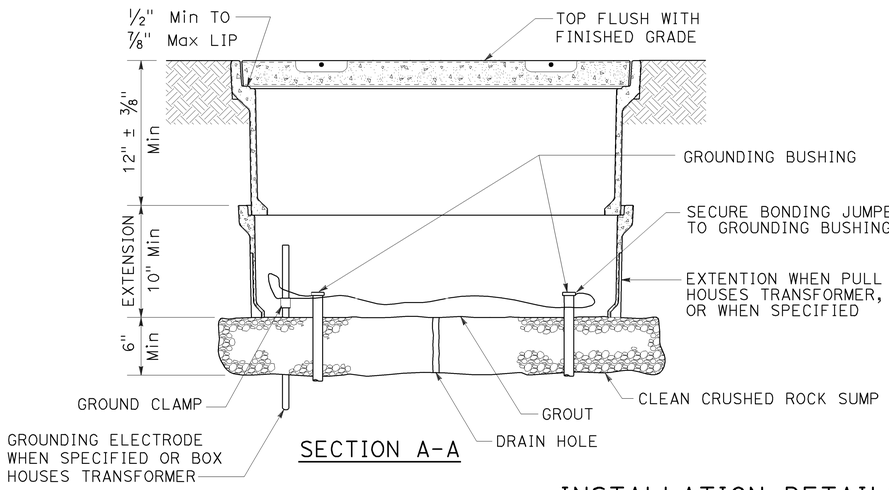

SECTION A-A

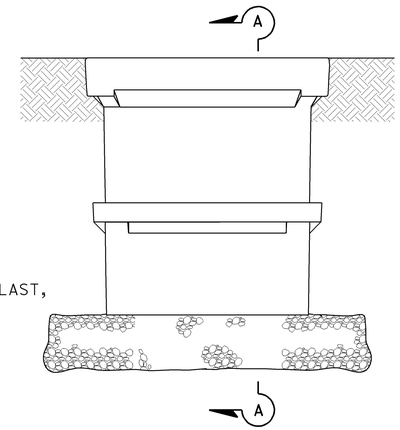

SIDE VIEW

INSTALLATION DETAILS

DETAIL A

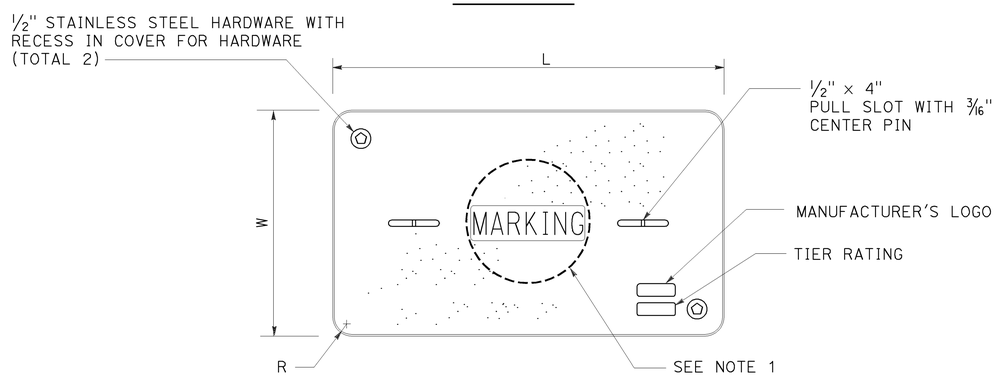

COVER TOP VIEW

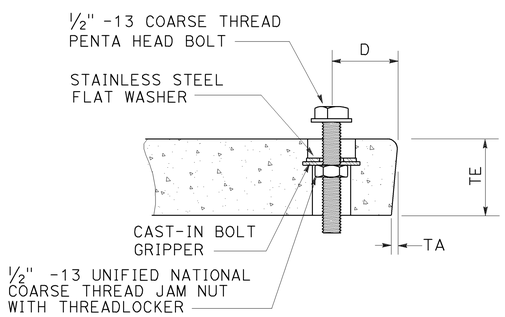

TYPICAL COVER CAPTIVE BOLT

OR SIMILAR

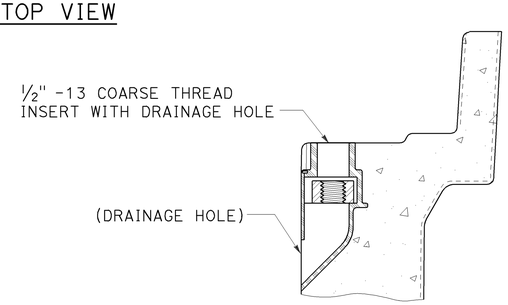

TYPICAL THREADED INSERT

OR SIMILAR

DIMENSION TABLE										
PULL BOX	PULL BOX			COVER						
	MINIMUM DEPTH BOX	MINIMUM DEPTH EXTENSION	MAXIMUM WEIGHT	L	W	R	TE	TA	D	MAXIMUM WEIGHT
No. 3½	12"	N/A	40 lb	1′ - 3⅜"	10⅛"	1⅜"	2"	⅛"	1¾"	30 lb
No. 5	12"	10"	55 lb	1′ - 11¼"	1′ - 1¾"	1⅜"	2"	⅛"	1¾"	60 lb
No. 6	12"	10"	70 lb	2′ - 6½"	1′ - 5½"	1⅜"	2"	⅛"	2"	85 lb

NOTES:

1. Pull box covers shall be marked as follows: "SERVICE" Service circuits between service point and service disconnect; "SPRINKLER-CONTROL" sprinkler control circuits, 50 V or less; "CALTRANS" on all pull boxes, except pull boxes marked "SPRINKLER-CONTROL"; and "TELEPHONE" Telephone service;

   A) No. 3½ pull box.
      1) "SIGNAL" - Traffic signal circuits with or without lighting or sign lighting circuits.
      2) "LIGHTING" - Lighting or sign lighting circuits where voltage is under 600 V.

   B) No. 5, 6, 9 or 9A pull box.
      1) "TRAFFIC SIGNAL" - Traffic signal circuits with or without lighting or sign lighting circuits.
      2) "LIGHTING" - Lighting or sign lighting circuits where voltage is under 600 V.
      3) "LIGHTING-HIGH VOLTAGE" - Lighting or sign lighting circuits where voltage is above 600 V.
      4) "IRRIGATION" - Circuits to irrigation controller 120 V or more.
      5) "RAMP METER" - Ramp meter circuits.
      6) "COUNT STATION" - Count or speed monitor circuits.
      7) "COMMUNICATIONS" - Communication circuits.
      8) "TOS COMMUNICATIONS" - TOS communication line.
      9) "TOS POWER" - TOS power.
      10) "TDC POWER" - Telephone demarcation cabinet power.
      11) "CCTV" - Closed circuit television circuits.
      12) "TMS" - Traffic monitoring station circuits.
      13) "CMS" - Changeable message sign circuits.
      14) "HAR" - Highway advisory radio circuits.
      15) "BOOSTER PUMP" - Booster pump circuit.

2. The nominal dimensions of the opening in which the cover sets shall be the same as the cover dimensions except the length and width dimensions shall be ⅛" greater.

3. Covers and boxes shall be interchangeable with California standard male and female gages. When interchanged with a standard male or female gage, the top surfaces shall be flush within ⅛". Top outside radius of covers and pull boxes shall have a ⅛" radius.

4. Pull box extension may be another pull box as long as the bottom edge of the pull box can fit into the cover opening.

5. All dimensions for the cover for non-traffic pull box are nominal values.

STATE OF CALIFORNIA
DEPARTMENT OF TRANSPORTATION

ELECTRICAL SYSTEMS (NON-TRAFFIC PULL BOX)

NO SCALE

RSP ES-8A DATED JULY 19, 2013 SUPERSEDES RSP ES-8A DATED JANUARY 20, 2012 THAT SUPPLEMENTS THE STANDARD PLANS BOOK DATED 2010.

REVISED STANDARD PLAN RSP ES-8A

2010 REVISED STANDARD PLAN RSP ES-8A

7-15-13

DIST	COUNTY	ROUTE	POST MILES TOTAL PROJECT	SHEET NO.	TOTAL SHEETS
08	SBd, Riv	60	R0.0/R4.6, R3.0/R6.9	85	100

Theresa Gabriel
REGISTERED ELECTRICAL ENGINEER

July 19, 2013
PLANS APPROVAL DATE

REGISTERED PROFESSIONAL ENGINEER Theresa Aziz Gabriel No. E15129 Exp. 6-30-14 ELECTRICAL STATE OF CALIFORNIA

THE STATE OF CALIFORNIA OR ITS OFFICERS OR AGENTS SHALL NOT BE RESPONSIBLE FOR THE ACCURACY OR COMPLETENESS OF SCANNED COPIES OF THIS PLAN SHEET.

TO ACCOMPANY PLANS DATED 8-25-14

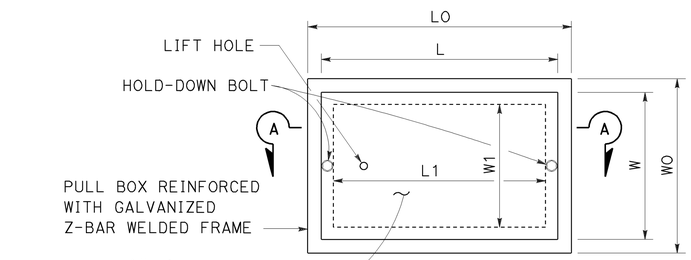

TOP VIEW

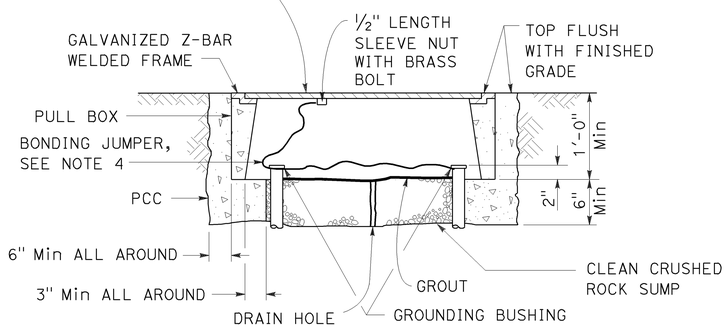

SECTION A-A

No. 3½(T), No. 5(T) AND No. 6(T) TRAFFIC PULL BOX

NOTES:

1. Traffic pull box shall be provided with steel cover and special concrete footing. Steel cover shall have embossed non-skid pattern.
2. Steel reinforcing shall be as regularly used in the standard products of the respective manufacturer.
3. Pull box covers shall be marked as follows: "SERVICE" Service circuits between service point and service disconnect; "SPRINKLER-CONTROL" Sprinkler control circuits, 50 V or less; "CALTRANS" On all pull boxes, except pull boxes marked "SPRINKLER-CONTROL"; and "TELEPHONE" Telephone service.
   A) No. 3½(T) pull box.
      1) "SIGNAL" - Traffic signal circuits with or without lighting or sign lighting circuits.
      2) "LIGHTING" - Lighting or sign lighting circuits where voltage is under 600 V.
   B) No. 5(T) or 6(T) pull box.
      1) "TRAFFIC SIGNAL" - Traffic signal circuits with or without lighting or sign lighting circuits.
      2) "LIGHTING" - Lighting or sign lighting circuits where voltage is under 600 V.
      3) "LIGHTING-HIGH VOLTAGE" - Lighting or sign lighting circuits where voltage is above 600 V.
      4) "IRRIGATION" - Circuits to irrigation controller 120 V or more.
      5) "RAMP METER" - Ramp meter circuits.
      6) "COUNT STATION" - Count or speed monitor circuits.
      7) "COMMUNICATION" - Communication circuits.
      8) "TOS COMMUNICATIONS" - TOS communications line.
      9) "TOS POWER" - TOS power.
      10) "TDC POWER" - Telephone demarcation cabinet power.
      11) "CCTV" - Closed circuit television circuits.
      12) "TMS" - Traffic monitoring station circuits.
      13) "CMS" - Changeable message sign circuits.
      14) "HAR" - Highway advisory radio circuits.
      15) "BOOSTER PUMP" - Booster pump circuit.
4. Bonding jumper for metal covers shall be 3' long, minimum.
5. The nominal dimensions of the opening in which the cover sets shall be the same as the cover dimensions except the length and width dimensions shall be ⅛" greater.
6. Covers and boxes shall be interchangeable with California standard male and female gages. When interchanged with a standard male or female gage, the top surfaces shall be flush within ⅛".

DIMENSION TABLE

PULL BOX	PULL BOX						COVER				
	MINIMUM * THICKNESS	MINIMUM DEPTH BOX AND EXTENSION	WO	LO	L1	W1	L **	W **	R	EDGE THICKNESS	EDGE TAPER
No. 3½(T)	1½"	1'-0"	1'-5"± 1"	1'-8⅞"±	1'-2½"±	10⅝"± 1"	1'-8"±	1'-1¾"±	0"	½"	NONE
No. 5(T)	1¾"	1'-0"	1'-11½"± 1"	2'-5½"±	1'-7"±	1'-1"± 1"	2'-3"±	1'-4"±	0"	½"	NONE
No. 6(T)	2"	1'-0"	2'-6"± 1"	2'-11½"±	1'-11½"±	1'-5"± 1"	2'-9"±	1'-8"±	0"	½"	NONE

* EXCLUDING CONDUIT WEB ** TOP DIMENSION

STATE OF CALIFORNIA
DEPARTMENT OF TRANSPORTATION

ELECTRICAL SYSTEMS (TRAFFIC PULL BOX)

NO SCALE

RSP ES-8B DATED JULY 19, 2013 SUPERSEDES RSP ES-8B DATED JANUARY 20, 2012 THAT SUPPLEMENTS THE STANDARD PLANS BOOK DATED 2010.

REVISED STANDARD PLAN RSP ES-8B

2010 REVISED STANDARD PLAN RSP ES-8B

Dist	COUNTY	ROUTE	POST MILES TOTAL PROJECT	SHEET No.	TOTAL SHEETS
08	SBd, Riv	60	R0.0/R4.6, R3.0/R6.9	86	100

William K. Farnbach
REGISTERED CIVIL ENGINEER

July 19, 2013
PLANS APPROVAL DATE

REGISTERED PROFESSIONAL ENGINEER
William K. Farnbach
No. C49042
Exp. 9-30-14
CIVIL
STATE OF CALIFORNIA

THE STATE OF CALIFORNIA OR ITS OFFICERS OR AGENTS SHALL NOT BE RESPONSIBLE FOR THE ACCURACY OR COMPLETENESS OF SCANNED COPIES OF THIS PLAN SHEET.

TO ACCOMPANY PLANS DATED 8-25-14

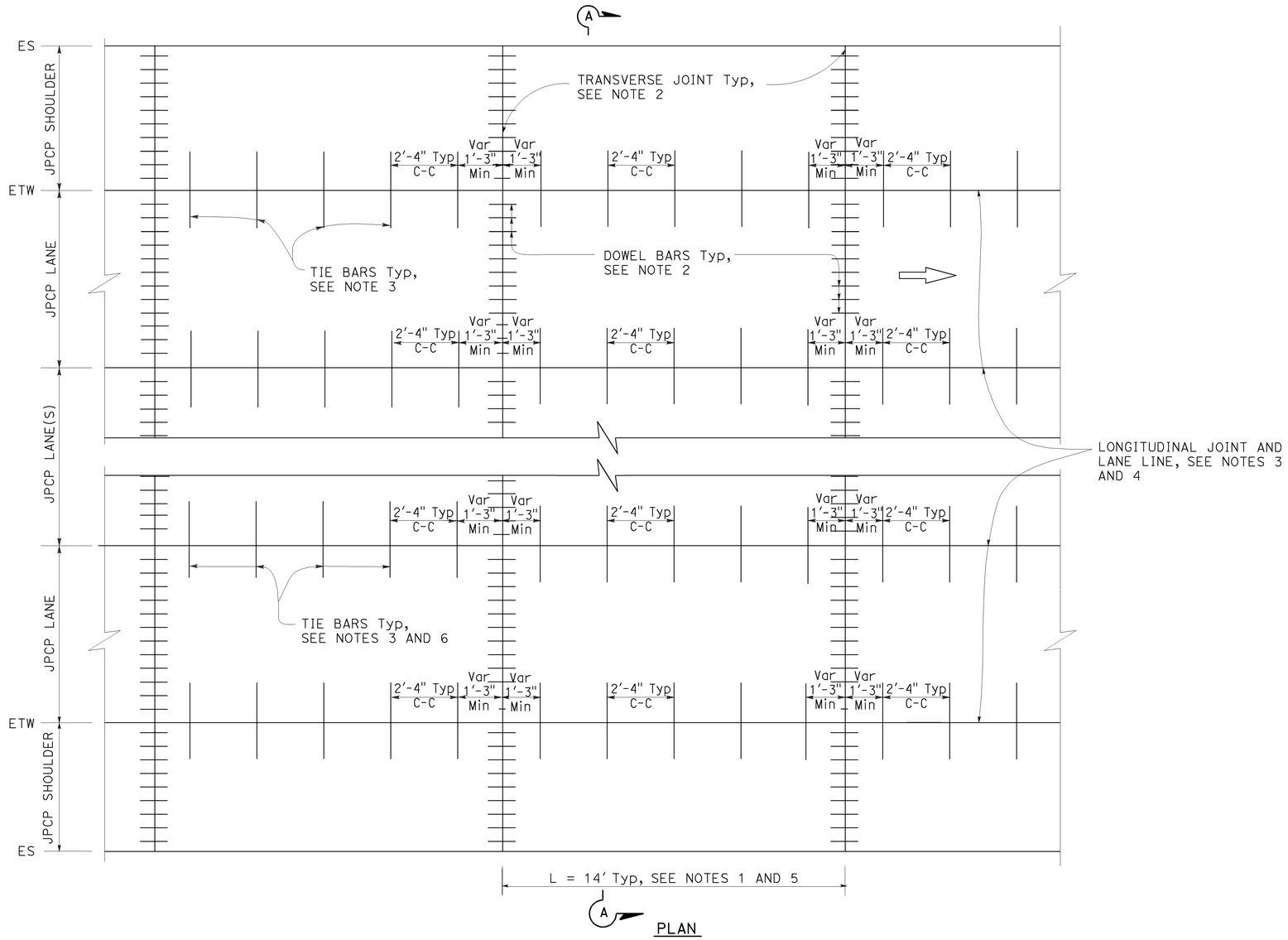

PLAN

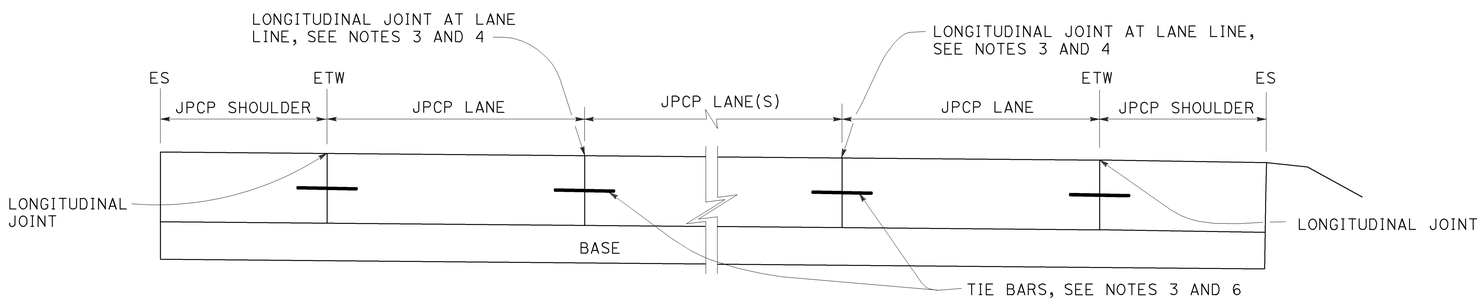

SECTION A-A

NOTES:

1. Transverse joint spacing may be adjusted to no less than 10' and no more than 14' to conform to bridges, change in pavement type, and hardened concrete pavement.
2. For transverse joint and dowel bar details not shown, see Revised Standard Plan RSP P10.
3. For longitudinal joint and tie bar details not shown, see Revised Standard Plan RSP P15.
4. For additional longitudinal joint layout details, see Revised Standard Plan RSP P18.
5. For joint layout at intersections, see Project Plans.
6. For dowel bars at longitudinal joint. see Revised Standard Plan RSP P18.

STATE OF CALIFORNIA
DEPARTMENT OF TRANSPORTATION

JOINTED PLAIN CONCRETE PAVEMENT NEW CONSTRUCTION

NO SCALE

RSP P1 DATED JULY 19, 2013 SUPERSEDES STANDARD PLAN P1
DATED MAY 20, 2011 - PAGE 125 OF THE STANDARD PLANS BOOK DATED 2010.

REVISED STANDARD PLAN RSP P1

2010 REVISED STANDARD PLAN RSP P1

5-31-13

Dist	COUNTY	ROUTE	POST MILES TOTAL PROJECT	SHEET No.	TOTAL SHEETS
08	SBd, Riv	60	R0.0/R4.6, R3.0/R6.9	87	100

William K. Farnbach
REGISTERED CIVIL ENGINEER

July 19, 2013
PLANS APPROVAL DATE

REGISTERED PROFESSIONAL ENGINEER William K. Farnbach No. C49042 Exp. 9-30-14 CIVIL STATE OF CALIFORNIA

THE STATE OF CALIFORNIA OR ITS OFFICERS OR AGENTS SHALL NOT BE RESPONSIBLE FOR THE ACCURACY OR COMPLETENESS OF SCANNED COPIES OF THIS PLAN SHEET.

TO ACCOMPANY PLANS DATED 8-25-14

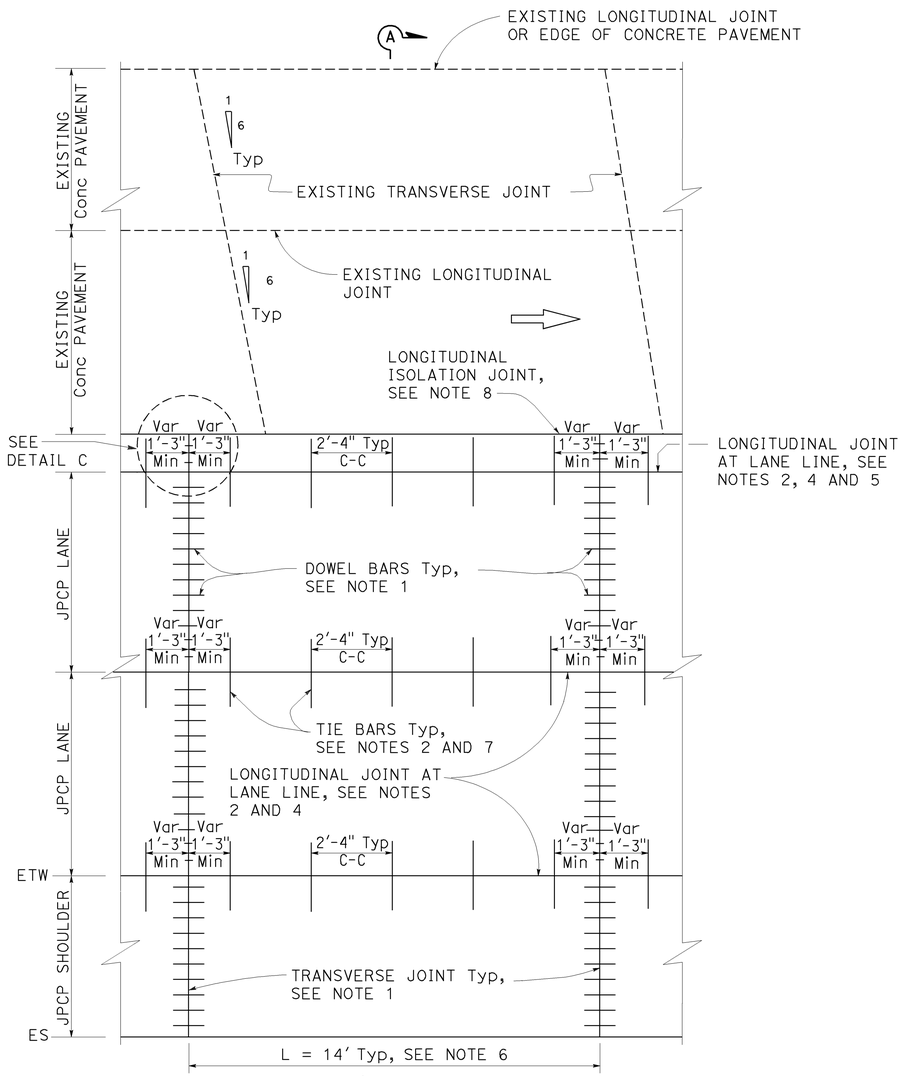

PLAN
ISOLATED
See Note 3

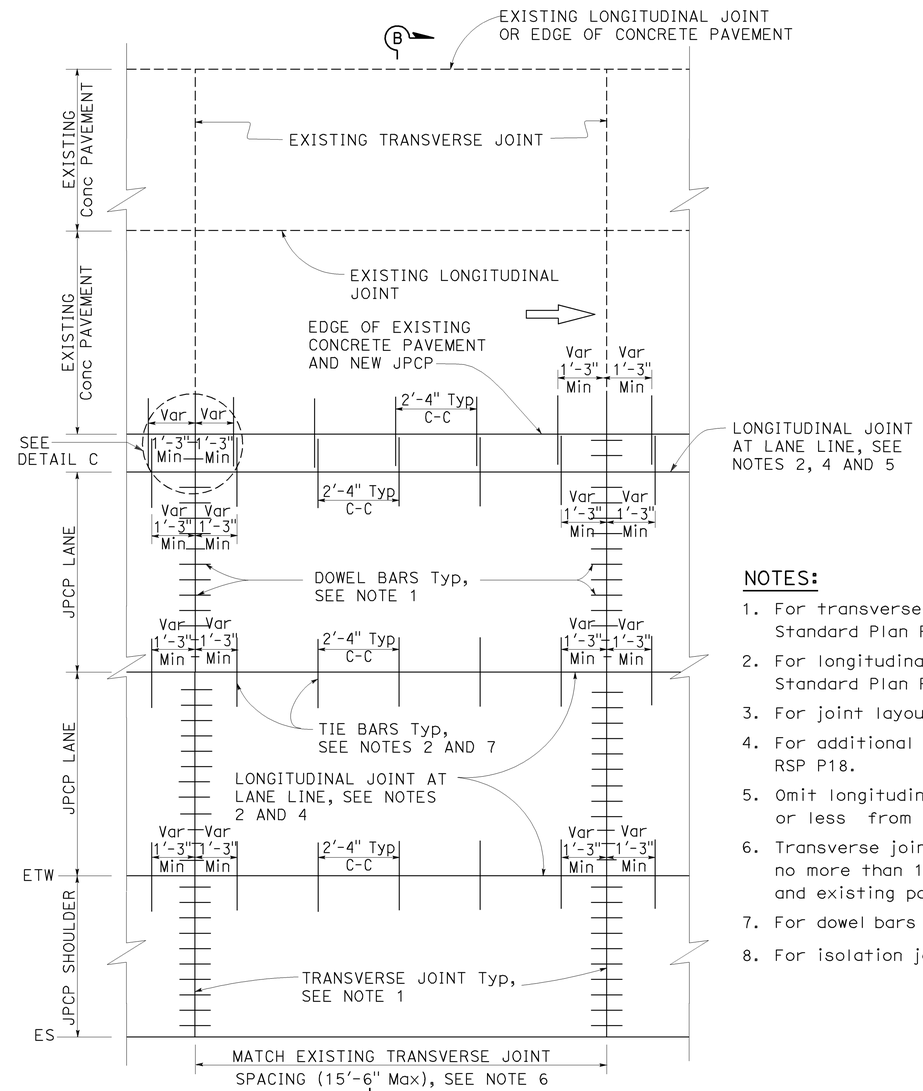

PLAN
TIED
See Note 3

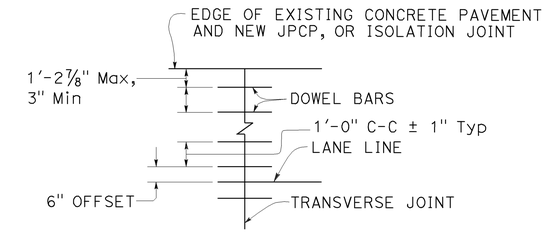

DETAIL C

NOTES:

1. For transverse joint and dowel bar details not shown, see Revised Standard Plan RSP P10.
2. For longitudinal joint and tie bar details not shown, see Revised Standard Plan RSP P15.
3. For joint layout at intersections, see Project Plans.
4. For additional longitudinal joint details, see Revised Standard Plan RSP P18.
5. Omit longitudinal joint when edge of new concrete pavement is 3'-3" or less from JPCP lane line.
6. Transverse joint spacing may be adjusted to no less than 10' and no more than 15'-6" to conform to bridges, change in pavement type and existing pavement.
7. For dowel bars at longitudinal joint. see Revised Standard Plan RSP P18.
8. For isolation joints, see Detail A on Revised Standard Plan RSP P18.

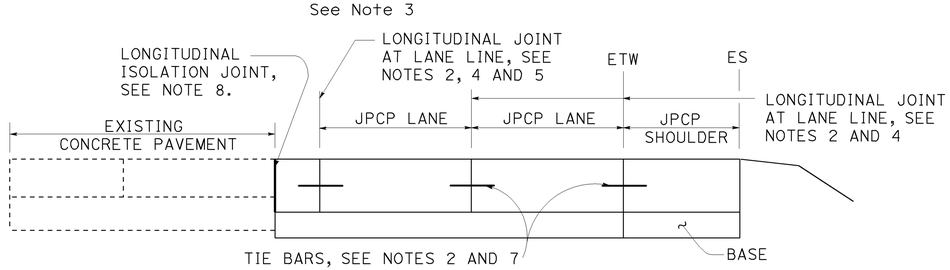

SECTION A-A

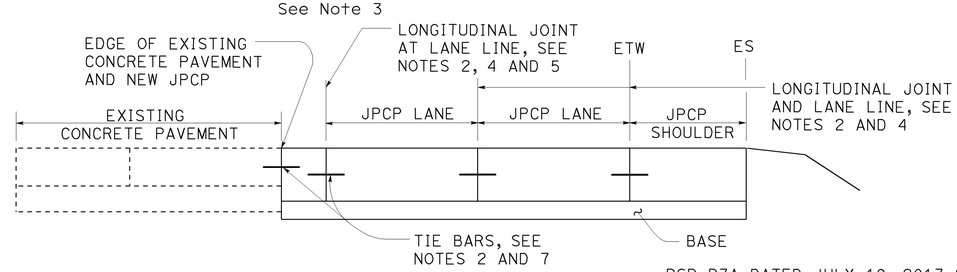

SECTION B-B

STATE OF CALIFORNIA
DEPARTMENT OF TRANSPORTATION

JOINTED PLAIN CONCRETE PAVEMENT LANE & SHOULDER ADDITION OR REPLACEMENT

NO SCALE

RSP P3A DATED JULY 19, 2013 SUPPLEMENTS THE STANDARD PLANS BOOK DATED 2010.

REVISED STANDARD PLAN RSP P3A

2010 REVISED STANDARD PLAN RSP P3A

5-31-13

Dist	COUNTY	ROUTE	POST MILES TOTAL PROJECT	SHEET No.	TOTAL SHEETS
08	SBd, Riv	60	R0.0/R4.6, R3.0/R6.9	88	100

William K. Farnbach
REGISTERED CIVIL ENGINEER

July 19, 2013
PLANS APPROVAL DATE

REGISTERED PROFESSIONAL ENGINEER
William K. Farnbach
No. C49042
Exp. 9-30-14
CIVIL
STATE OF CALIFORNIA

THE STATE OF CALIFORNIA OR ITS OFFICERS OR AGENTS SHALL NOT BE RESPONSIBLE FOR THE ACCURACY OR COMPLETENESS OF SCANNED COPIES OF THIS PLAN SHEET.

TO ACCOMPANY PLANS DATED 8-25-14

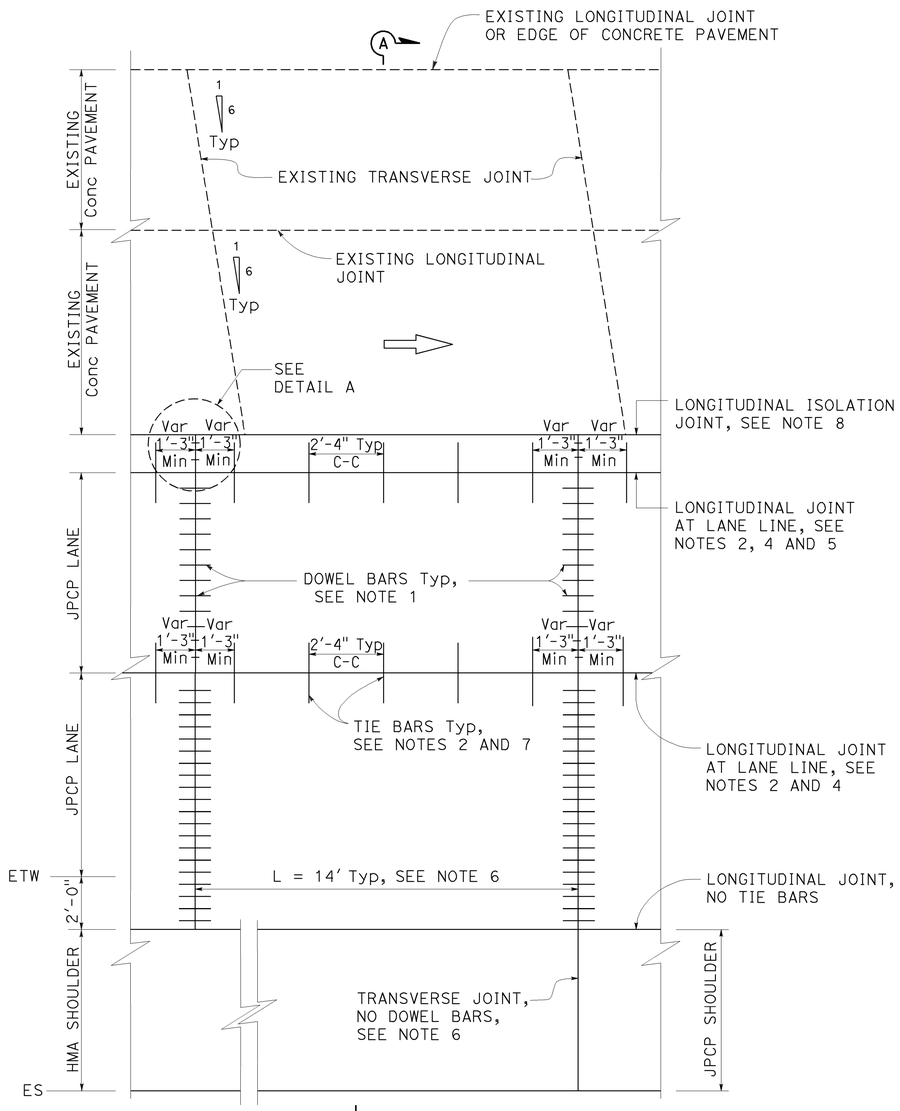

A PLAN
ISOLATED
See Note 3

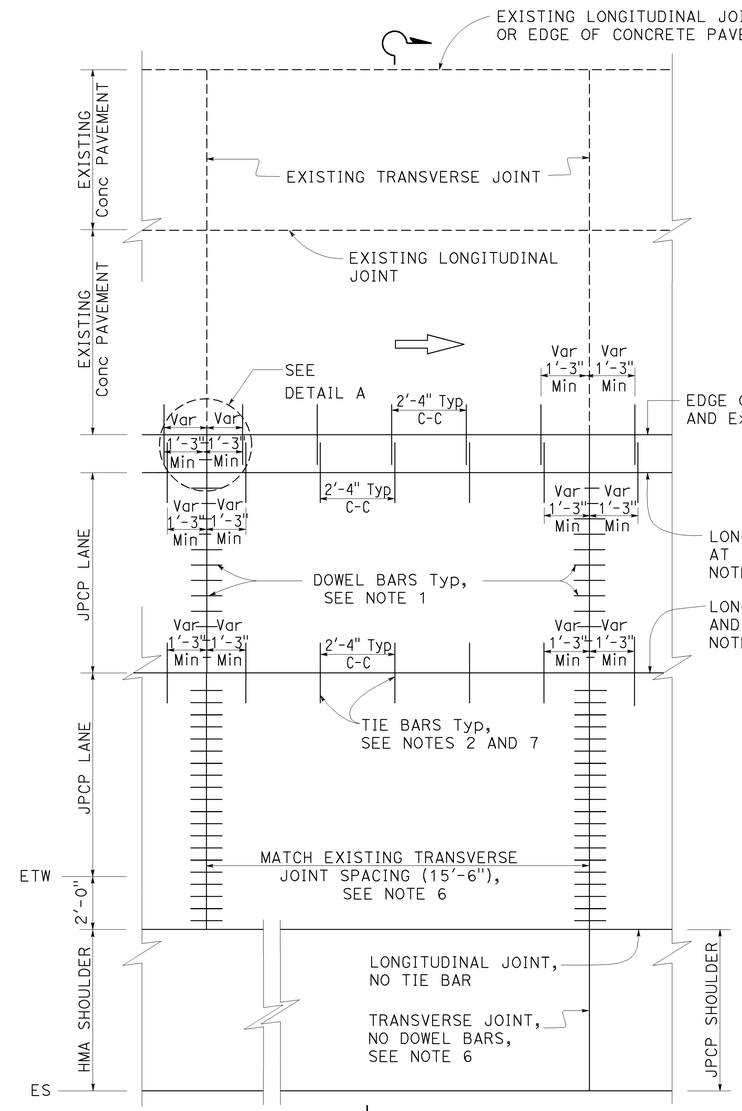

B PLAN
TIED
See Note 3

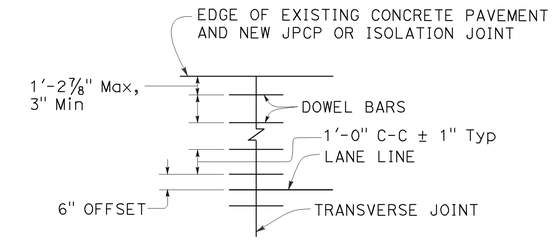

DETAIL A

NOTES:

1. For transverse joint and dowel bar details not shown, see Revised Standard Plan RSP P10.
2. For longitudinal joint and tie bar details not shown, see Revised Standard Plan RSP P15.
3. For joint layout at intersections, see Project Plans.
4. For additional longitudinal joint details, see Revised Standard Plan RSP P18.
5. Omit longitudinal joint when edge of new concrete pavement is 3'-3" or less from JPCP lane line.
6. Transverse joint spacing may be adjusted to no less than 10' and no more than 15'-6" to conform to bridges, change in pavement type and existing pavement.
7. For dowel bars at longitudinal joint. see Revised Standard Plan RSP P18.
8. For isolation joints, see Detail A on Revised Standard Plan RSP P18.

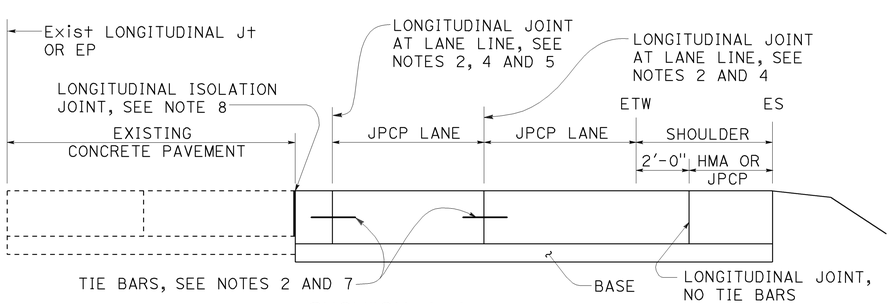

SECTION A-A

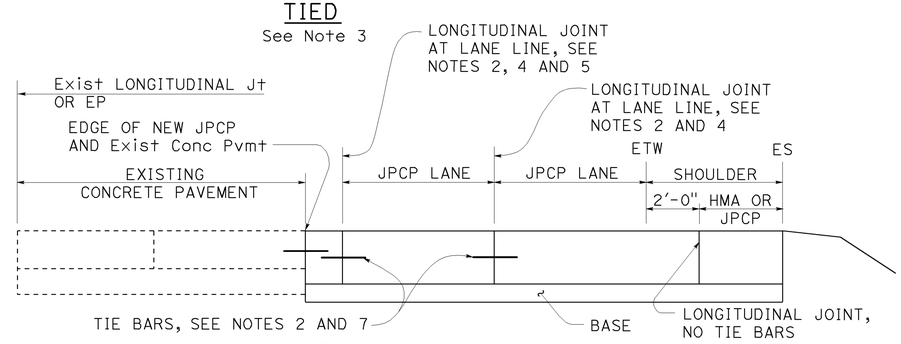

SECTION B-B

STATE OF CALIFORNIA
DEPARTMENT OF TRANSPORTATION

JOINTED PLAIN CONCRETE PAVEMENT (WIDENED LANE) LANE AND SHOULDER ADDITION OR REPLACEMENT

NO SCALE

RSP P3B DATED JULY 19, 2013 SUPPLEMENTS THE STANDARD PLANS BOOK DATED 2010.

REVISED STANDARD PLAN RSP P3B

2010 REVISED STANDARD PLAN RSP P3B

5-31-13

Dist	COUNTY	ROUTE	POST MILES TOTAL PROJECT	SHEET No.	TOTAL SHEETS
08	SBd, Riv	60	R0.0/R4.6, R3.0/R6.9	89	100

William K. Farnbach
REGISTERED CIVIL ENGINEER

July 19, 2013
PLANS APPROVAL DATE

REGISTERED PROFESSIONAL ENGINEER William K. Farnbach No. C49042 Exp. 9-30-14 CIVIL STATE OF CALIFORNIA

THE STATE OF CALIFORNIA OR ITS OFFICERS OR AGENTS SHALL NOT BE RESPONSIBLE FOR THE ACCURACY OR COMPLETENESS OF SCANNED COPIES OF THIS PLAN SHEET.

TO ACCOMPANY PLANS DATED 8-25-14

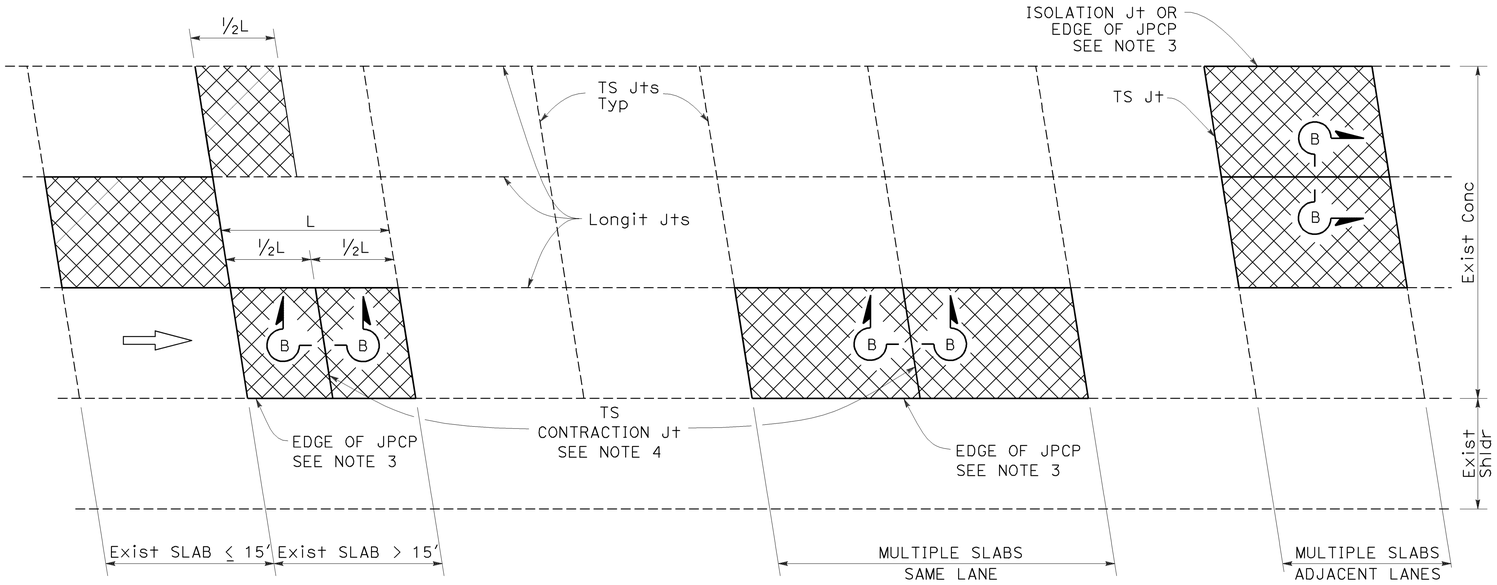

PLAN

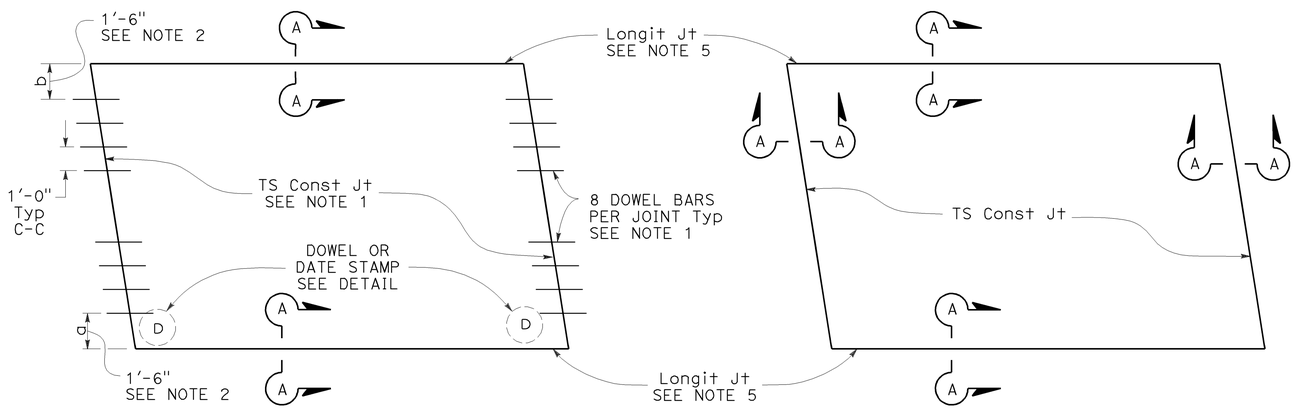

TYPE I
See Design Note 1

TYPE II
See Design Note 2

SLAB LAYOUT

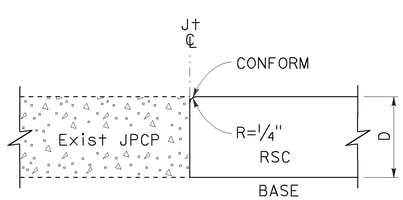

SECTION A-A

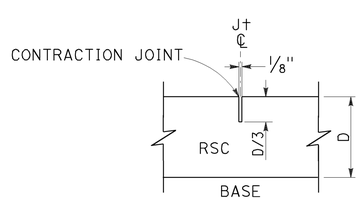

SECTION B-B

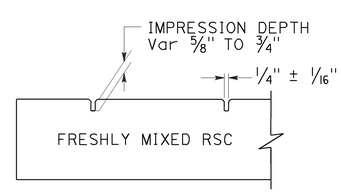

SECTION C-C

LEGEND:

RSC RAPID STRENGTH CONCRETE

INDIVIDUAL SLAB REPLACEMENT WITH RSC

NOTES:

1. For details not shown, see Revised Standard Plan RSP P10.
2. Where the existing outside shoulder is asphalt concrete pavement, "a" = 1'-0" and "b" = 2'-0".
3. Use side forms where edge of RSC pavement is adjacent to asphalt concrete.
4. Transverse contraction joint to match skew of existing joint. Omit dowel bars.
5. Do not place tie bars at longitudinal joints.

DESIGN NOTES:

1. For concrete slab repair with at least 5 years design life.
2. For short term repairs < 5 yrs design life or for slab replacements with cracking and seating.

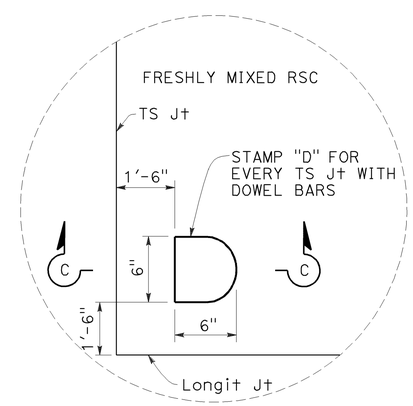

DOWEL STAMP DETAIL

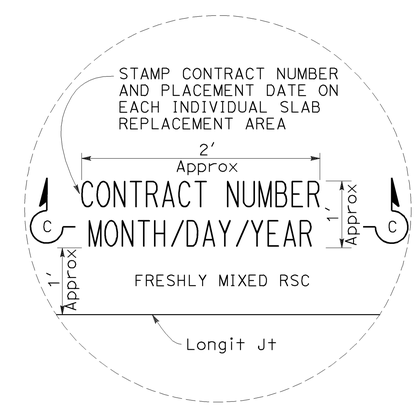

DATE STAMP DETAIL

STATE OF CALIFORNIA
DEPARTMENT OF TRANSPORTATION

INDIVIDUAL SLAB REPLACEMENT WITH RAPID STRENGTH CONCRETE

NO SCALE

RSP P8 DATED JULY 19, 2013 SUPERSEDES RSP P8 DATED APRIL 20, 2012 AND STANDARD PLAN P8 DATED MAY 20, 2011 - PAGE 130 OF THE STANDARD PLANS BOOK DATED 2010.

REVISED STANDARD PLAN RSP P8

2010 REVISED STANDARD PLAN RSP P8

5-31-13

Dist	COUNTY	ROUTE	POST MILES TOTAL PROJECT	SHEET No.	TOTAL SHEETS
08	SBd, Riv	60	R0.0/R4.6, R3.0/R6.9	90	100

William K. Farnbach
REGISTERED CIVIL ENGINEER

July 19, 2013
PLANS APPROVAL DATE

REGISTERED PROFESSIONAL ENGINEER William K. Farnbach No. C49042 Exp. 9-30-14 CIVIL STATE OF CALIFORNIA

THE STATE OF CALIFORNIA OR ITS OFFICERS OR AGENTS SHALL NOT BE RESPONSIBLE FOR THE ACCURACY OR COMPLETENESS OF SCANNED COPIES OF THIS PLAN SHEET.

TO ACCOMPANY PLANS DATED 8-25-14

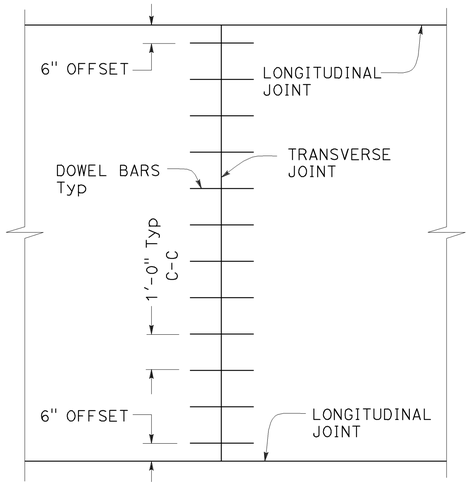

TRANSVERSE JOINT DOWEL BAR LAYOUT

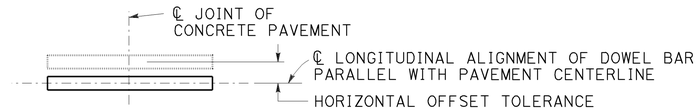

PLAN

HORIZONTAL OFFSET TOLERANCE

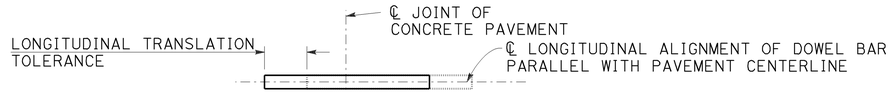

PLAN

LONGITUDINAL TRANSLATION TOLERANCE

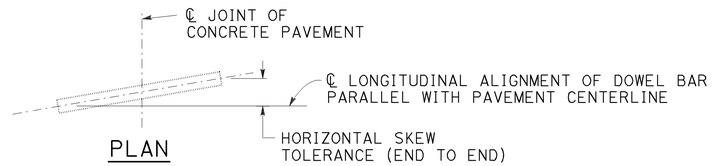

PLAN

HORIZONTAL SKEW TOLERANCE

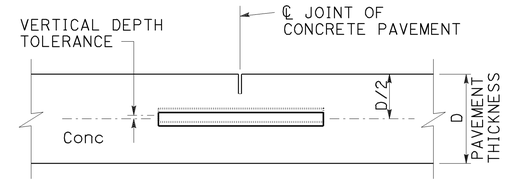

ELEVATION

VERTICAL DEPTH TOLERANCE

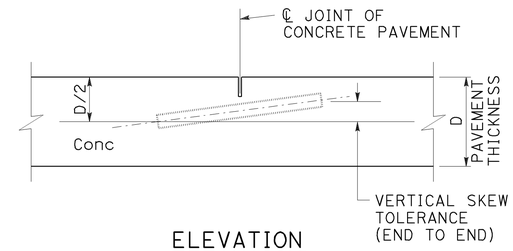

ELEVATION

VERTICAL SKEW TOLERANCE

NOTES:

1. See Revised Standard Plan RSP P1 for typical dowel bar placement and locations.
2. Where fresh concrete pavement is placed against new concrete or existing concrete pavement, rounding the corner of the existing concrete pavement is not required.
3. May also use ¾" Dia dowel bars 2'-4" ± ¼" in length. Center the length of dowel bars at the centerline of longitudinal joint.

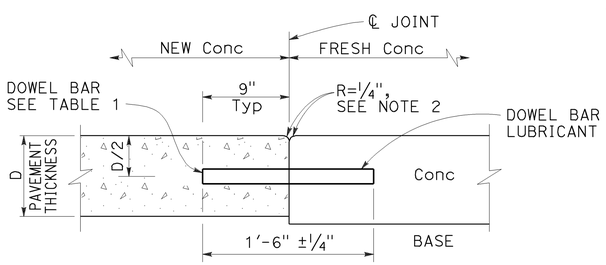

TRANSVERSE CONSTRUCTION JOINT DETAIL

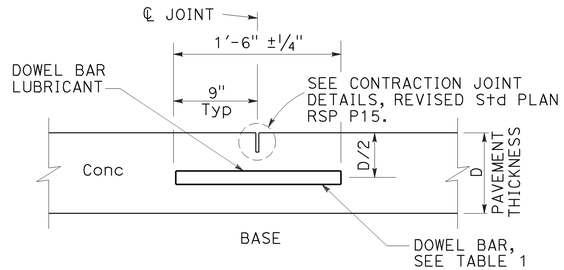

TRANSVERSE CONTRACTION JOINT

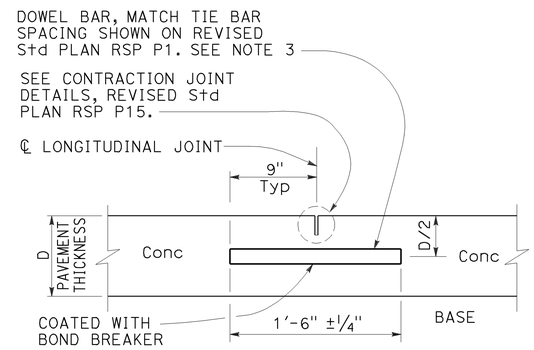

LONGITUDINAL CONTRACTION JOINT WITH DOWEL BARS

See Revised Std Plan RSP P18

TABLE 1

DOWEL BAR DIAMETER TABLE			
PAVEMENT THICKNESS	0.65'	> 0.65' - 0.85'	> 0.85'
MINIMUM DOWEL * BAR DIAMETER	1"	1¼"	1½"

* The drilled hole diameter must be ⅛" to 3/16" larger than the bar diameter.

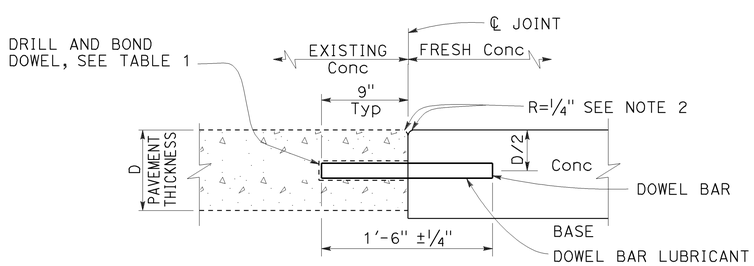

TRANSVERSE CONSTRUCTION JOINT FOR EXISTING CONCRETE PAVEMENT

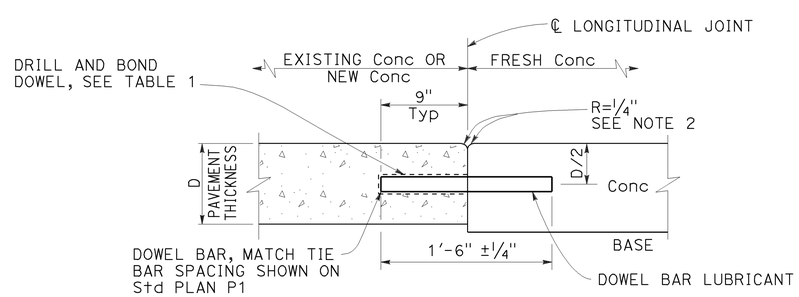

LONGITUDINAL CONSTRUCTION JOINT WITH DOWEL BARS

See Revised Std Plan RSP P18

STATE OF CALIFORNIA
DEPARTMENT OF TRANSPORTATION

CONCRETE PAVEMENT DOWEL BAR DETAILS

NO SCALE

RSP P10 DATED JULY 19, 2013 SUPERSEDES RSP P10 DATED APRIL 20, 2012 AND STANDARD PLAN P10 DATED MAY 20, 2011 - PAGE 131 OF THE STANDARD PLANS BOOK DATED 2010.

REVISED STANDARD PLAN RSP P10

2010 REVISED STANDARD PLAN RSP P10

5-31-13

Dist	COUNTY	ROUTE	POST MILES TOTAL PROJECT	SHEET No.	TOTAL SHEETS
08	SBd, Riv	60	R0.0/R4.6, R3.0/R6.9	91	100

William K. Farnbach
REGISTERED CIVIL ENGINEER

July 19, 2013
PLANS APPROVAL DATE

REGISTERED PROFESSIONAL ENGINEER William K. Farnbach No. C49042 Exp. 9-30-14 CIVIL STATE OF CALIFORNIA

THE STATE OF CALIFORNIA OR ITS OFFICERS OR AGENTS SHALL NOT BE RESPONSIBLE FOR THE ACCURACY OR COMPLETENESS OF SCANNED COPIES OF THIS PLAN SHEET.

TO ACCOMPANY PLANS DATED 8-25-14

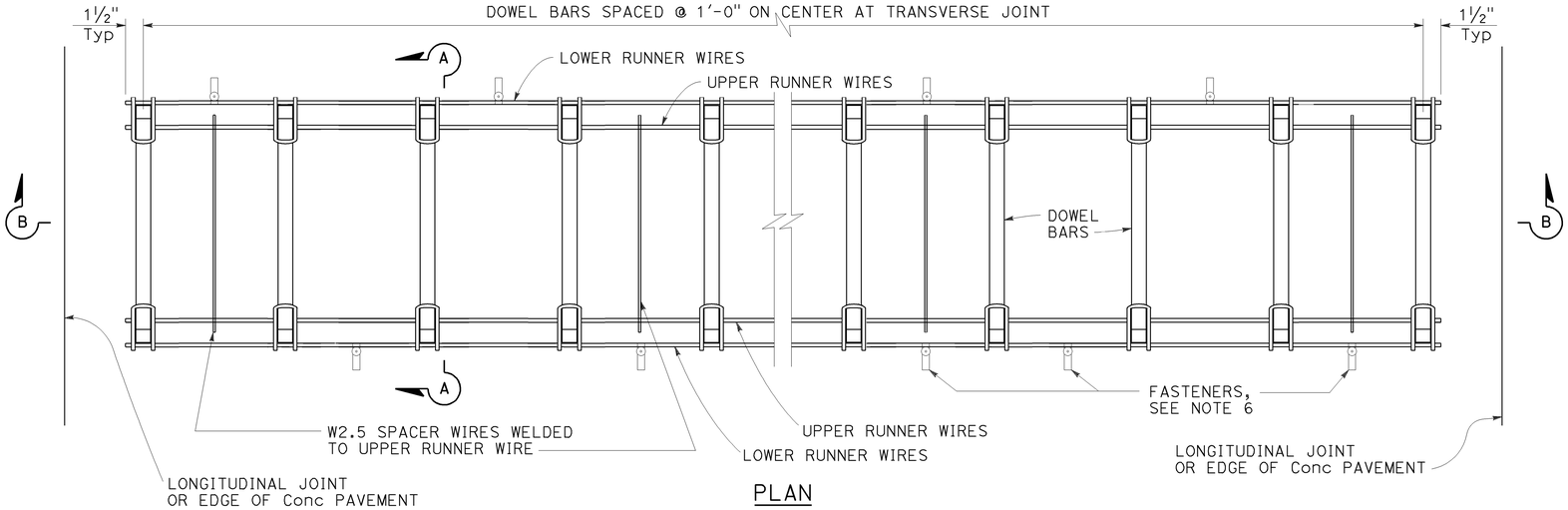

PLAN

DOWEL BAR BASKET (TRANSVERSE JOINT)

See Note 1

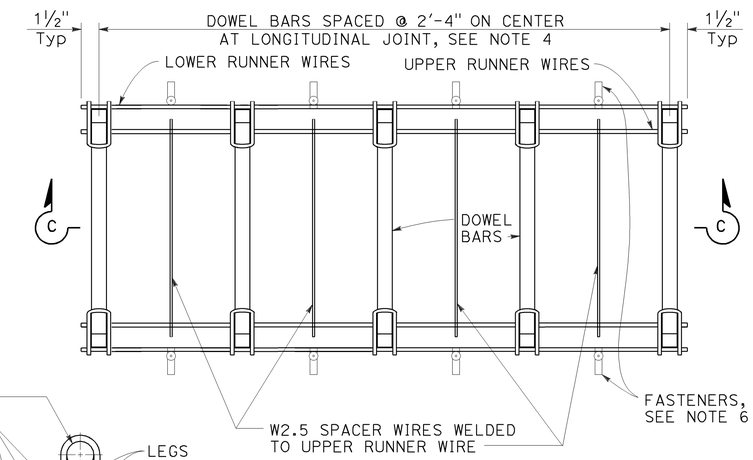

PLAN

DOWEL BAR BASKET (LONGITUDINAL JOINT)

See Note 1

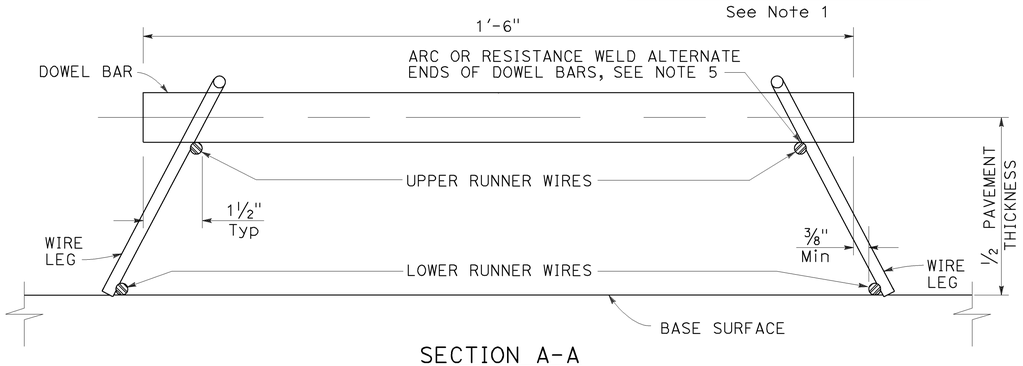

SECTION A-A

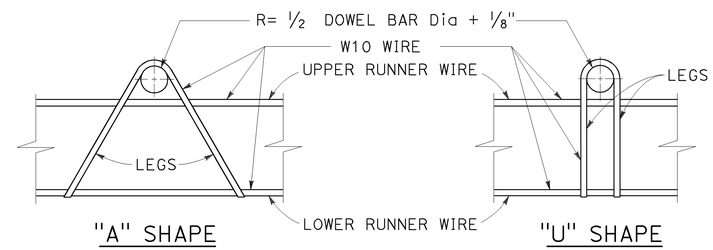

ASSEMBLY FRAME DETAILS

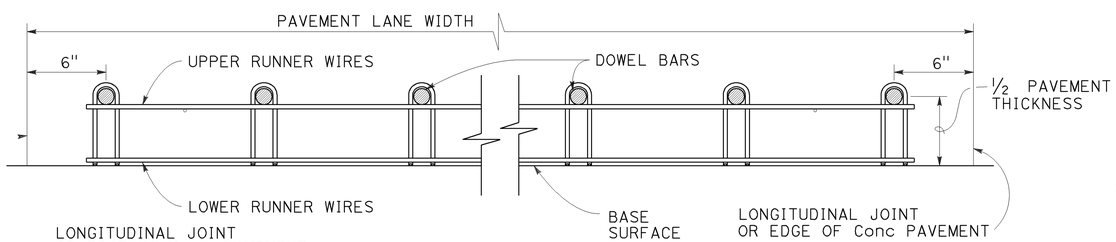

SECTION B-B

See Note 1

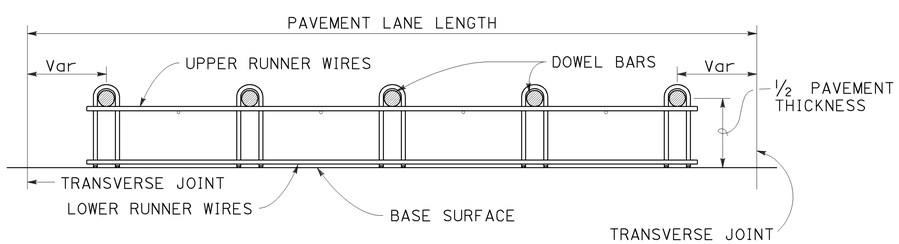

SECTION C-C

See Notes 1 and 4

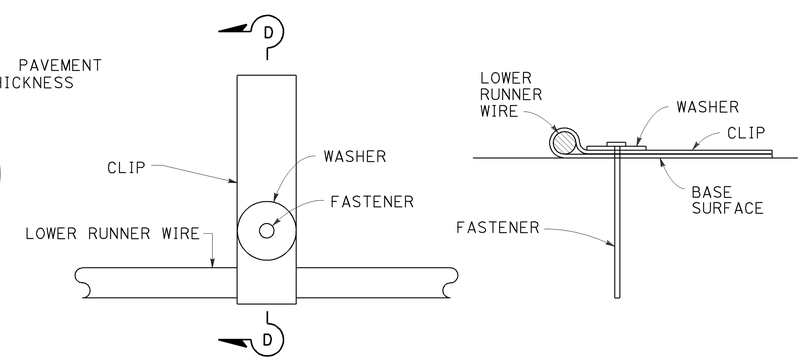

PLAN

SECTION D-D

FASTENER DETAIL

See Note 6

NOTES:

1. "U" frame shape assembly shown. Use either "U" frame shape or "A" frame shape.
2. Wire sizes shown are the minimum required.
3. All wire intersections must be resistance welded.
4. Use tie bar spacing for longitudinal dowel bar locations. See Revised Standard Plans RSP P1, RSP P2, RSP P3A, and RSP P3B for tie bar requirements.
5. Weld may be at the top or bottom of the dowel bar.
6. Use anchor pins where soil or granular base is used. See Revised Standard Plan RSP P17 for Anchor Pin Detail.

STATE OF CALIFORNIA
DEPARTMENT OF TRANSPORTATION

CONCRETE PAVEMENT DOWEL BAR BASKET DETAILS

NO SCALE

RSP P12 DATED JULY 19, 2013 SUPERSEDES STANDARD PLAN P12
DATED MAY 20, 2011 - PAGE 132 OF THE STANDARD PLANS BOOK DATED 2010.

REVISED STANDARD PLAN RSP P12

2010 REVISED STANDARD PLAN RSP P12

5-31-13

Dist	COUNTY	ROUTE	POST MILES TOTAL PROJECT	SHEET No.	TOTAL SHEETS
08	SBd, Riv	60	R0.0/R4.6, R3.0/R6.9	92	100

William K. Farnbach
REGISTERED CIVIL ENGINEER

July 19, 2013
PLANS APPROVAL DATE

REGISTERED PROFESSIONAL ENGINEER William K. Farnbach No. C49042 Exp. 9-30-14 CIVIL STATE OF CALIFORNIA

THE STATE OF CALIFORNIA OR ITS OFFICERS OR AGENTS SHALL NOT BE RESPONSIBLE FOR THE ACCURACY OR COMPLETENESS OF SCANNED COPIES OF THIS PLAN SHEET.

TO ACCOMPANY PLANS DATED 8-25-14

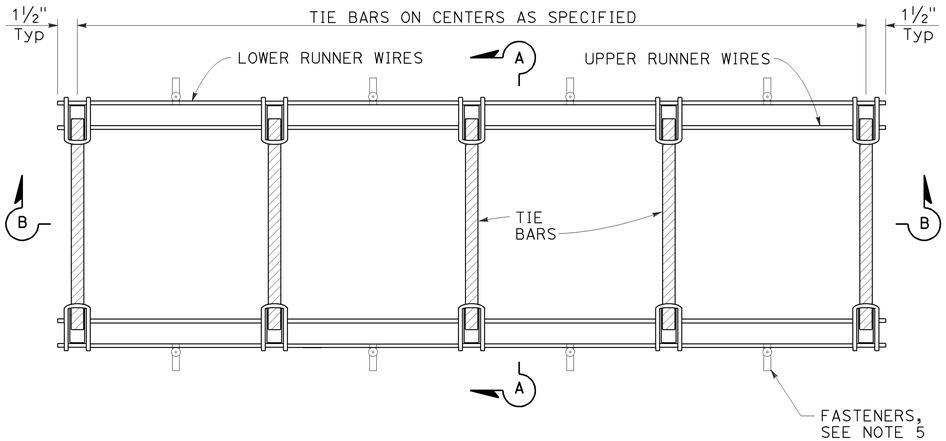

PLAN

TIE BAR BASKET

(Tie bars at longitudinal joint)
See Note 1

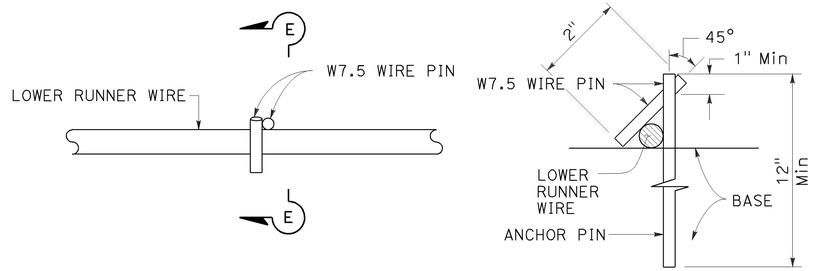

PLAN

SECTION E-E

ANCHOR PIN DETAIL

See Note 5

NOTES:

1. "U" frame shape assembly shown. Use either "U" frame shape or "A" frame shape.
2. Wire sizes shown are the minimum required.
3. All wire intersections must be resistance welded.
4. Weld may be at top or bottom of tie bars.
5. Use anchor pins where soil or granular base is used.

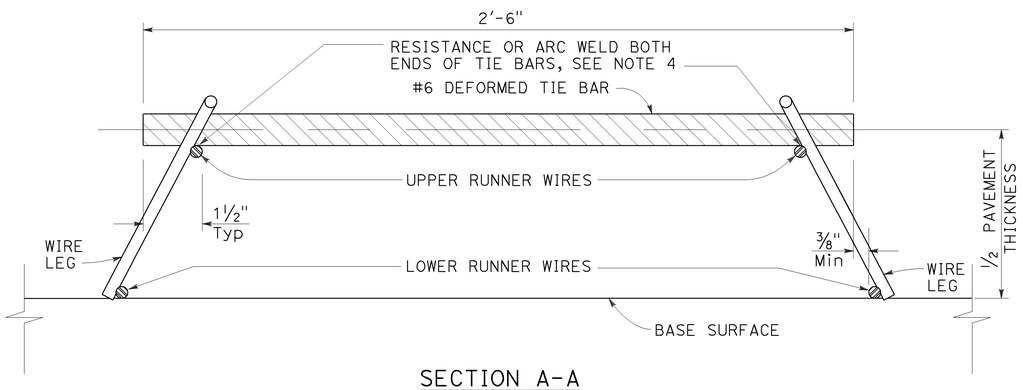

SECTION A-A

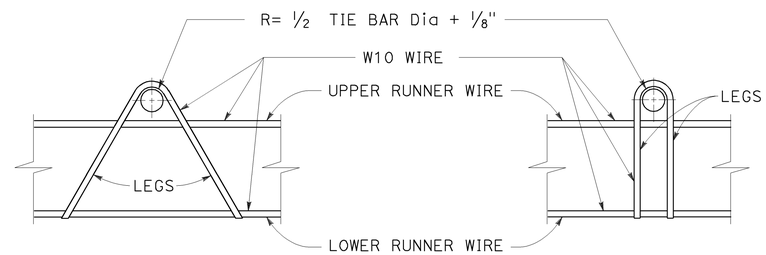

"A" SHAPE

"U" SHAPE

ASSEMBLY FRAME DETAILS

See Note 1

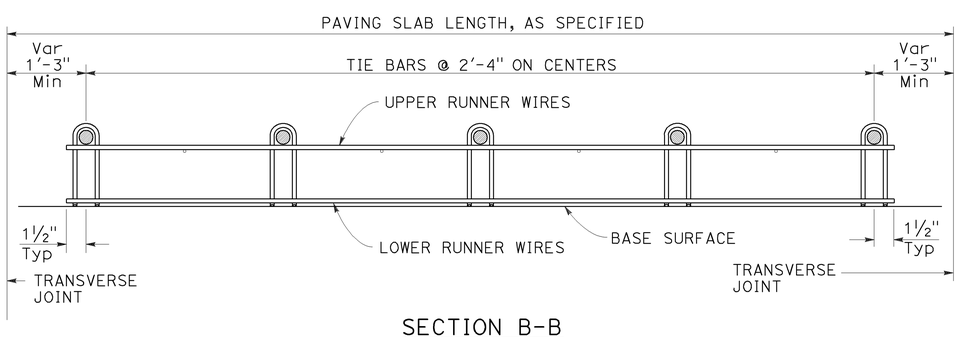

SECTION B-B

See Note 1

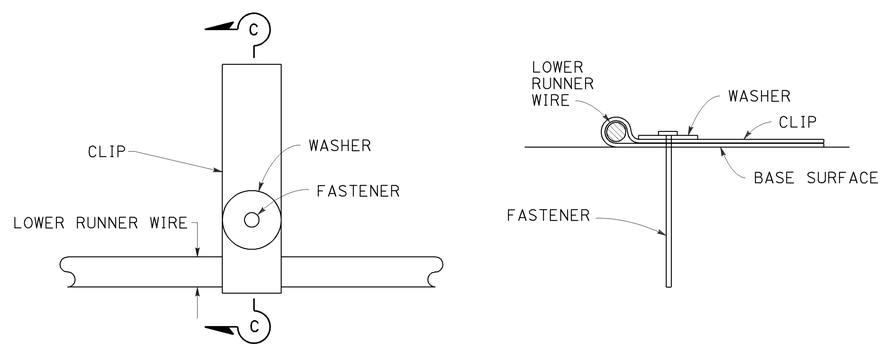

PLAN

SECTION C-C

FASTENER DETAIL

STATE OF CALIFORNIA
DEPARTMENT OF TRANSPORTATION

CONCRETE PAVEMENT TIE BAR BASKET DETAILS

NO SCALE

RSP P17 DATED JULY 19, 2013 SUPERSEDES STANDARD PLAN P17
DATED MAY 20, 2011 - PAGE 134 OF THE STANDARD PLANS BOOK DATED 2010.

REVISED STANDARD PLAN RSP P17

2010 REVISED STANDARD PLAN RSP P17

5-31-13

Dist	COUNTY	ROUTE	POST MILES TOTAL PROJECT	SHEET No.	TOTAL SHEETS
08	SBd, Riv	60	R0.0/R4.6, R3.0/R6.9	93	100

William K. Farnbach
REGISTERED CIVIL ENGINEER

July 19, 2013
PLANS APPROVAL DATE

REGISTERED PROFESSIONAL ENGINEER William K. Farnbach No. C49042 Exp. 9-30-14 CIVIL STATE OF CALIFORNIA

THE STATE OF CALIFORNIA OR ITS OFFICERS OR AGENTS SHALL NOT BE RESPONSIBLE FOR THE ACCURACY OR COMPLETENESS OF SCANNED COPIES OF THIS PLAN SHEET.

TO ACCOMPANY PLANS DATED 8-25-14

2010 REVISED STANDARD PLAN RSP P18

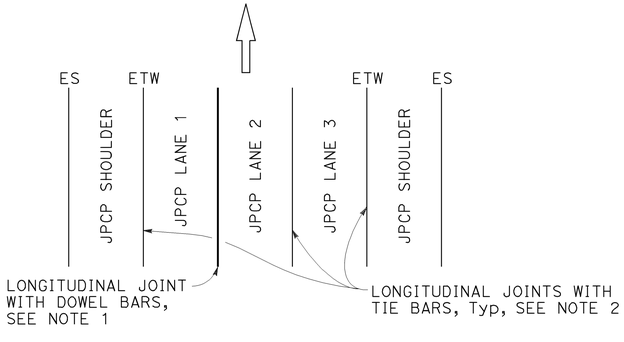

3 LANES WITH CONCRETE SHOULDERS
PLAN

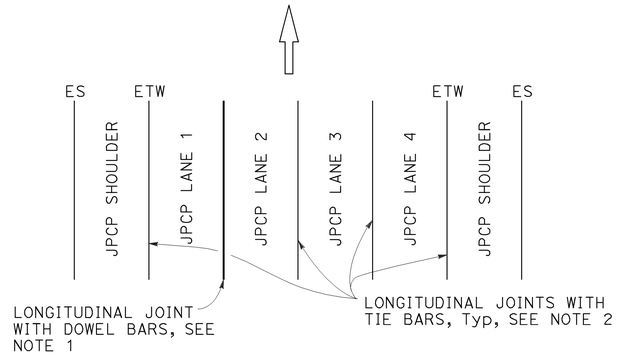

4 LANES WITH CONCRETE SHOULDERS
PLAN

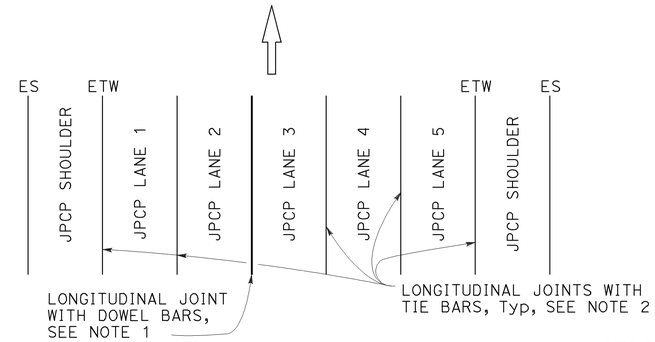

5 LANES WITH CONCRETE SHOULDERS
PLAN

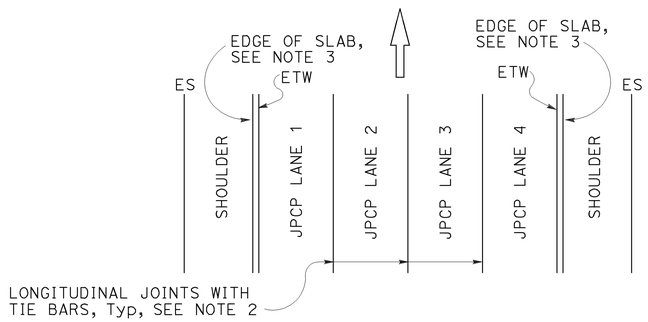

4 LANES OR LESS WITH AC SHOULDERS
PLAN

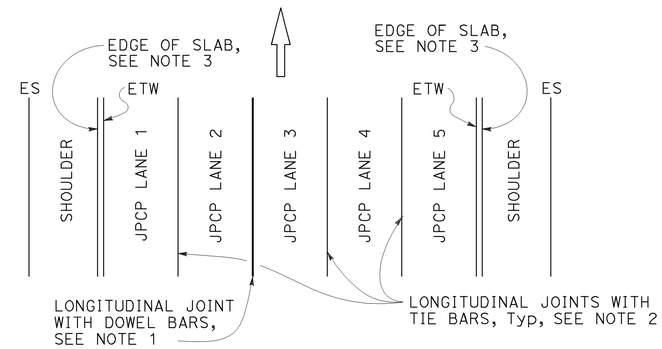

5 LANES WITH AC SHOULDERS
PLAN

NEW CONSTRUCTION

Location of Longitudinal Joints
For JPCP

NOTES:

1. See Revised Standard Plan RSP P10 for longitudinal joint with dowel bars.
2. See Revised Standard Plan RSP P15 for longitudinal joint with tie bars.
3. S= Reservoir depth.
   S= 7/8" ± 1/16" for asphalt rubber seals
   S= 9/16" ± 1/16" for silicone seals
   Preformed compression seals must be 13/16" wide and S= 1 11/16" ± 1/16"

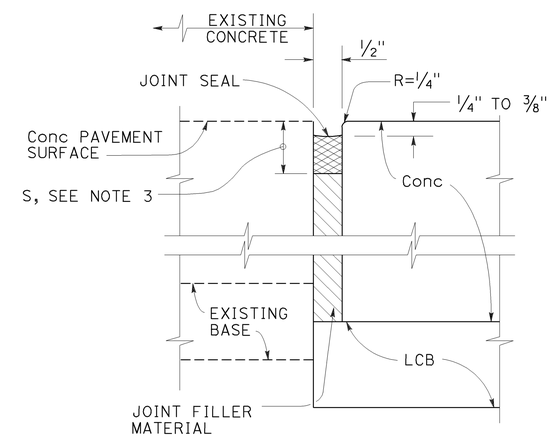

DETAIL "A"

ISOLATION JOINT

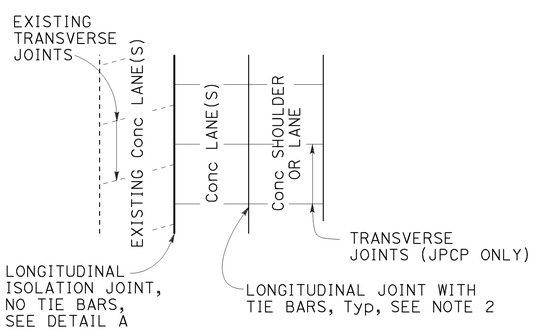

CASE 1
PLAN

Transverse Joints do not align between new and existing.

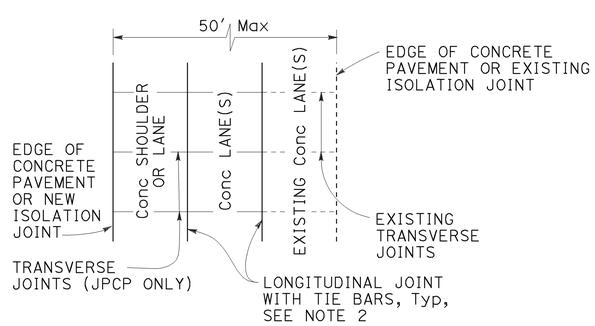

CASE 2
PLAN

Transverse Joints align between new and existing.
(For JPCP only)

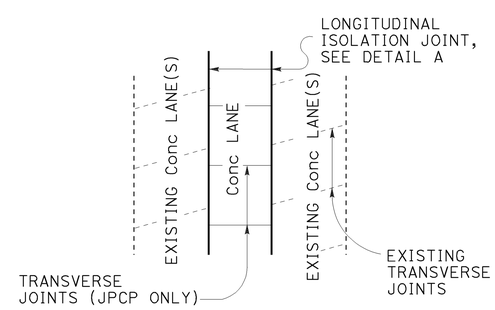

CASE 3 (INTERIOR LANE REPLACEMENT)
PLAN

Transverse Joints do not align between new and existing.

LANE/SHOULDER ADDITION OR RECONSTRUCTION

For JPCP and CRCP

STATE OF CALIFORNIA
DEPARTMENT OF TRANSPORTATION

CONCRETE PAVEMENT LANE SCHEMATICS AND ISOLATION JOINT DETAIL

NO SCALE

RSP P18 DATED JULY 19, 2013 SUPERSEDES RSP P18 DATED APRIL 20, 2012 AND STANDARD PLAN P18 DATED MAY 20, 2011 - PAGE 135 OF THE STANDARD PLANS BOOK DATED 2010.

REVISED STANDARD PLAN RSP P18

5-31-13

Dist	COUNTY	ROUTE	POST MILES TOTAL PROJECT	SHEET No.	TOTAL SHEETS
08	SBd, Riv	60	R0.0/R4.6, R3.0/R6.9	94	100

William K. Farnbach
REGISTERED CIVIL ENGINEER

July 19, 2013
PLANS APPROVAL DATE

REGISTERED PROFESSIONAL ENGINEER William K. Farnbach No. C49042 Exp. 9-30-14 CIVIL STATE OF CALIFORNIA

THE STATE OF CALIFORNIA OR ITS OFFICERS OR AGENTS SHALL NOT BE RESPONSIBLE FOR THE ACCURACY OR COMPLETENESS OF SCANNED COPIES OF THIS PLAN SHEET.

TO ACCOMPANY PLANS DATED 8-25-14

2010 REVISED STANDARD PLAN RSP P20

NOTES:

1. Details do not apply to isolation joints and longitudinal construction joints.
2. Tie bars, dowel bars, and bar reinforcement are not shown.
3. Depths are measured from the final concrete pavement surface elevation after any grinding.

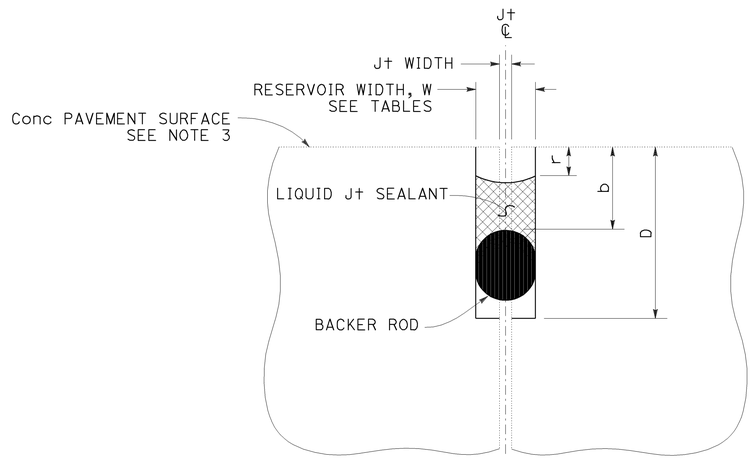

LIQUID JOINT SEALANT

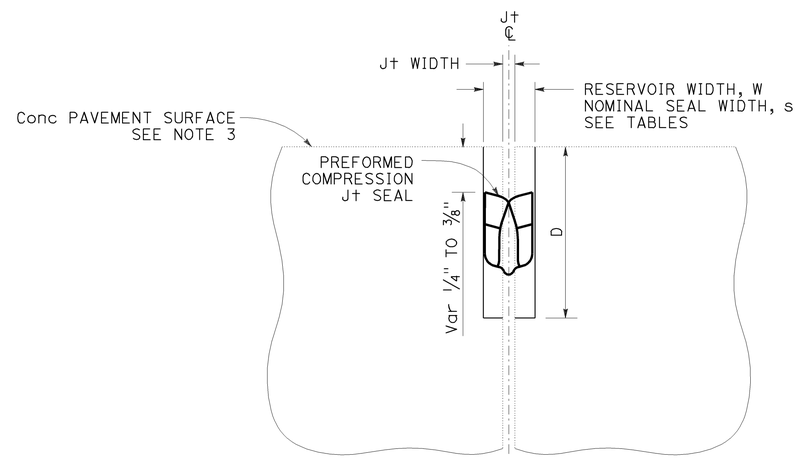

PREFORMED COMPRESSION JOINT SEAL

Const SEASON	Min RESERVOIR WIDTH * W ± 1/16"
WINTER	1/4"
SPRING	3/8"
SUMMER	3/8"
FALL	3/8"

* Minimum reservoir width for replace joint seal = existing joint width + 1/8"

RESERVOIR WIDTH W ±1/16"	LIQUID JOINT SEALANT DIMENSIONS					
	BACKER ROD NOMINAL Dia *	DEPTHS (ASPHALT RUBBER) **		DEPTHS (SILICONE)		
		RESERVOIR D ± 1/4"	BACKER ROD b ± 1/16"	RESERVOIR D ± 1/4"	BACKER ROD b ± 1/16"	RECESS r ± 1/16"
1/4"	3/8"	1 3/4"	7/8"	1 3/8"	1/2"	1/4"
3/8"	1/2"	1 7/8"	7/8"	1 1/2"	1/2"	1/4"
1/2"	3/4"	2"	7/8"	1 3/4"	9/16"	5/16"
5/8"	7/8"	2 1/4"	1"	2"	5/8"	5/16"
3/4"	1"	2 3/4"	1 1/8"	2 1/4"	3/4"	3/8"
7/8"	1 1/4"	3"	1 1/4"	2 1/2"	13/16"	3/8"
1"	1 1/2"	3 1/4"	1 3/8"	2 5/8"	7/8"	3/8"
1 1/8"	1 1/2"	3 1/2"	1 1/2"	2 13/16"	1"	1/2"

* Larger diameter backer rods may be substituted according to manufacturer recommendations if reservoir depth is increased equivalently.

** Asphalt rubber sealant recess depth "r" varies from 1/4" to 3/8"

RESERVOIR WIDTH W ±1/16"	PREFORMED COMPRESSION JOINT SEAL DIMENSIONS	
	NOMINAL SEAL WIDTH s	RESERVOIR DEPTH D ± 1/4"
1/4"	7/16"	1 1/4"
3/8"	11/16"	1 7/16"
1/2"	13/16"	1 11/16"
5/8"	1"	1 7/8"
3/4"	1 1/4"	2 1/8"
7/8"	1 5/8"	2 5/8"
1"	1 5/8"	2 5/8"
1 1/8"	2"	2 7/8"

STATE OF CALIFORNIA
DEPARTMENT OF TRANSPORTATION

JOINT SEALS

NO SCALE

RSP P20 DATED JULY 19, 2013 SUPERSEDES STANDARD PLAN P20
DATED MAY 20, 2011 - PAGE 136 OF THE STANDARD PLANS BOOK DATED 2010.

REVISED STANDARD PLAN RSP P20

6-17-13

Dist	COUNTY	ROUTE	POST MILES TOTAL PROJECT	SHEET No.	TOTAL SHEETS
08	SBd, Riv	60	R0.0/R4.6, R3.0/R6.9	95	100

William K. Farnbach
REGISTERED CIVIL ENGINEER

July 19, 2013
PLANS APPROVAL DATE

REGISTERED PROFESSIONAL ENGINEER William K. Farnbach No. C49042 Exp. 9-30-14 CIVIL STATE OF CALIFORNIA

THE STATE OF CALIFORNIA OR ITS OFFICERS OR AGENTS SHALL NOT BE RESPONSIBLE FOR THE ACCURACY OR COMPLETENESS OF SCANNED COPIES OF THIS PLAN SHEET.

TO ACCOMPANY PLANS DATED 8-25-14

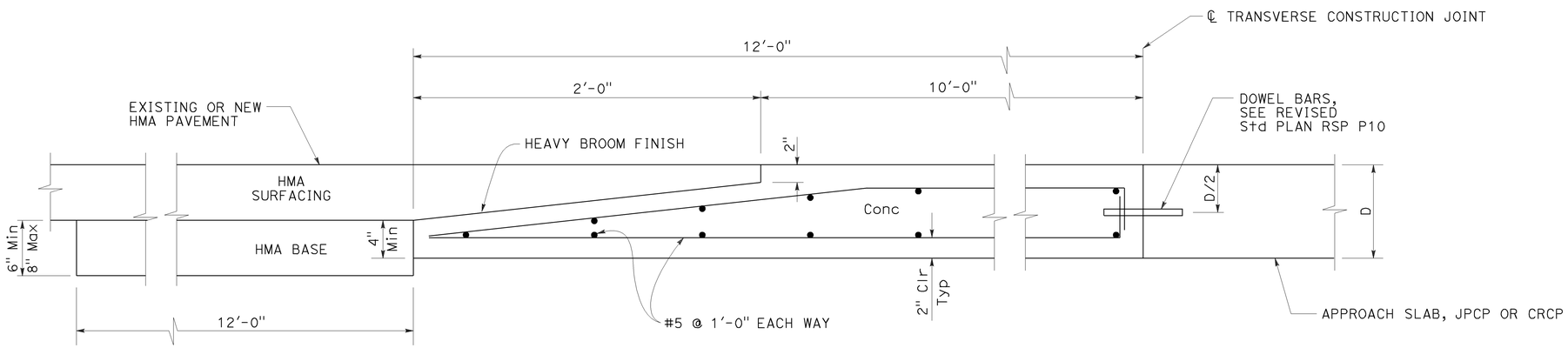

ELEVATION

CONCRETE PAVEMENT TRANSITION PANEL

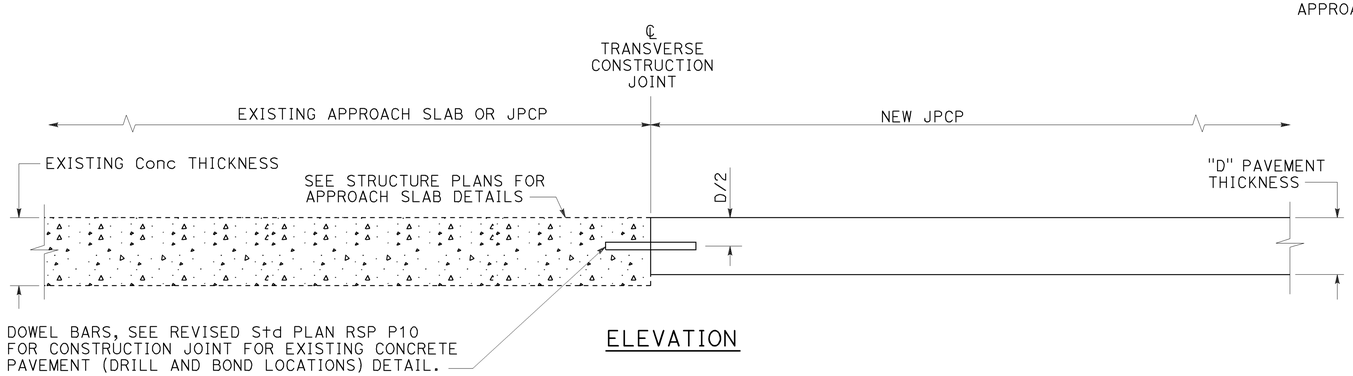

ELEVATION

TERMINAL JOINT TYPE 1

For Exist JPCP or Approach Slab

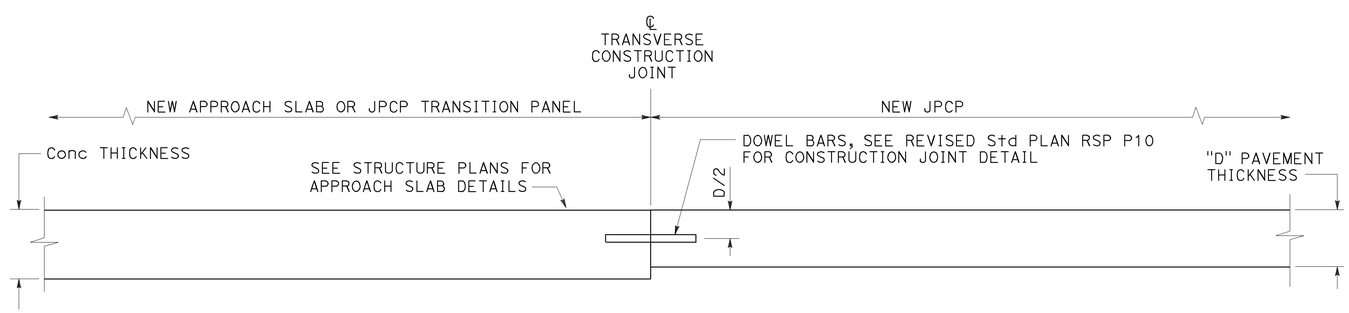

ELEVATION

TERMINAL JOINT TYPE 2

For JPCP Transition Panel or Approach Slab

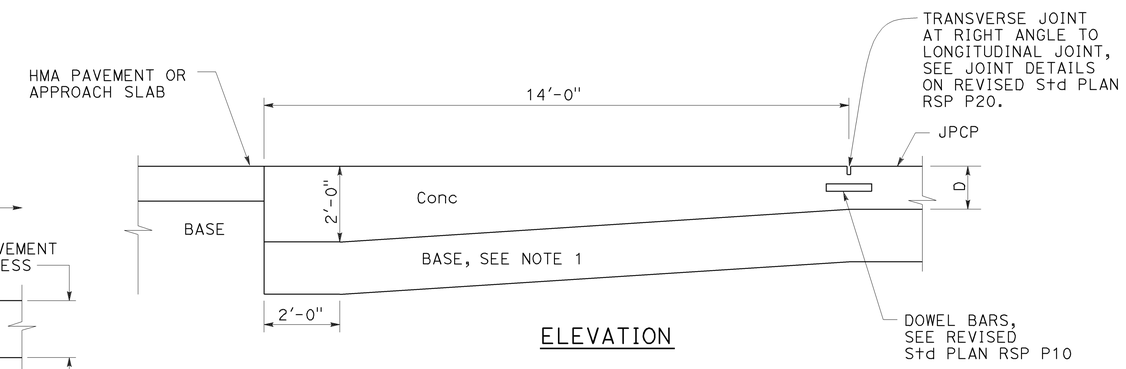

ELEVATION

PAVEMENT END ANCHOR

For HMA Pvmt or Approach Slab

NOTE:

1. Maintain same base thickness as JPCP.

STATE OF CALIFORNIA
DEPARTMENT OF TRANSPORTATION

CONCRETE PAVEMENT-END PANEL PAVEMENT TRANSITIONS

NO SCALE

RSP P30 DATED JULY 19, 2013 SUPERSEDES RSP P30 DATED APRIL 20, 2012 AND STANDARD PLAN P30 DATED MAY 20, 2011 - PAGE 137 OF THE STANDARD PLANS BOOK DATED 2010.

REVISED STANDARD PLAN RSP P30

2010 REVISED STANDARD PLAN RSP P30

3-26-13

TO ACCOMPANY PLANS DATED 8-25-14

Dist	COUNTY	ROUTE	POST MILES TOTAL PROJECT	SHEET No.	TOTAL SHEETS
08	SBd, Riv	60	R0.0/R4.6, R3.0/R6.9	96	100

REGISTERED CIVIL ENGINEER

April 19, 2013
PLANS APPROVAL DATE

REGISTERED PROFESSIONAL ENGINEER Gurinderpal Bhullar No. C48815 Exp. 9-30-14 CIVIL STATE OF CALIFORNIA

THE STATE OF CALIFORNIA OR ITS OFFICERS OR AGENTS SHALL NOT BE RESPONSIBLE FOR THE ACCURACY OR COMPLETENESS OF SCANNED COPIES OF THIS PLAN SHEET.

NOTES:

See Revised Standard Plan RSP T9 for tables.

Use cone spacing X for taper segment, Y for tangent segment or Z for conflict situations, as approriate, per Table 1, unless X, Y, or Z cone spacing is shown on this sheet.

Unless otherwise specified in the special provisions, all temporary warning signs shall have black legend on fluorescent orange background.

California codes are designated by (CA). Otherwise, Federal (MUTCD) codes are shown.

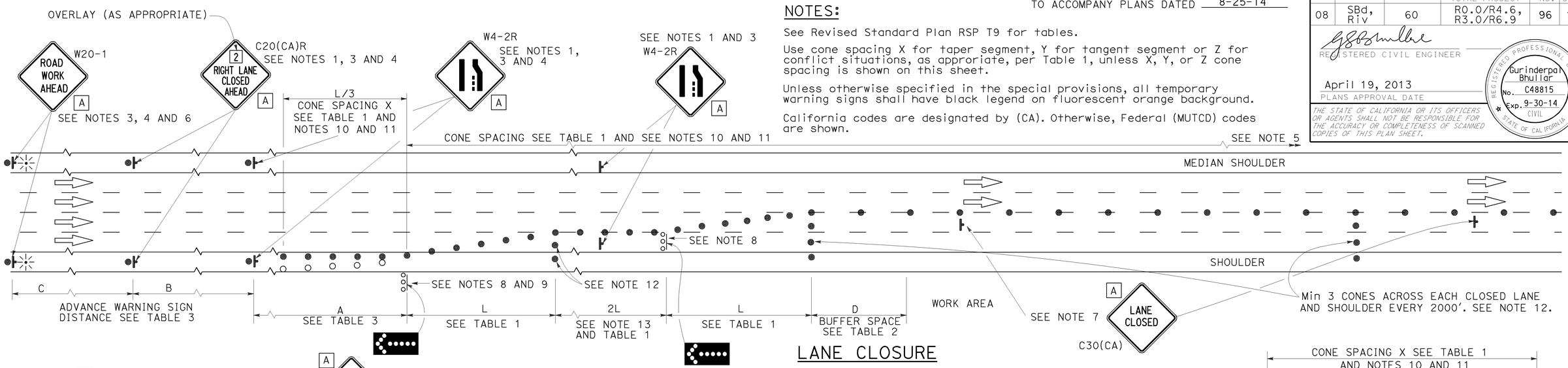

LANE CLOSURE

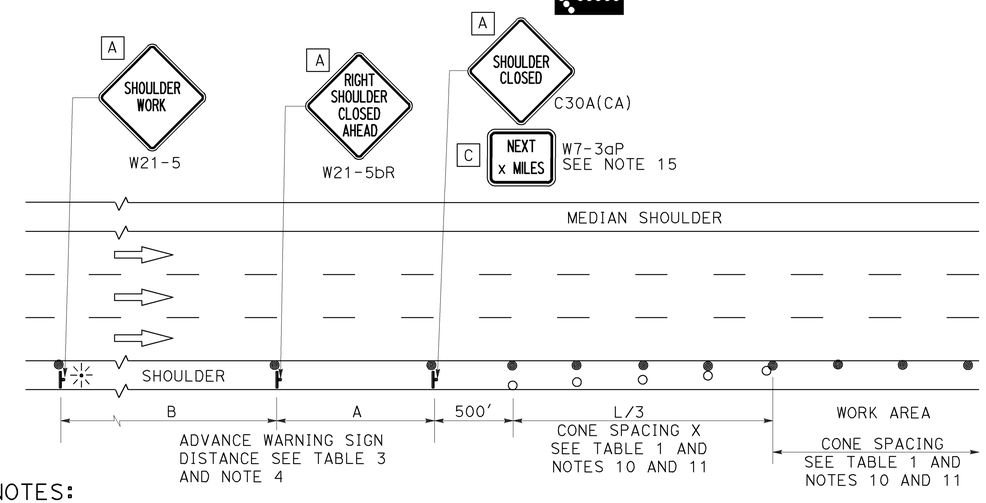

SHOULDER CLOSURE

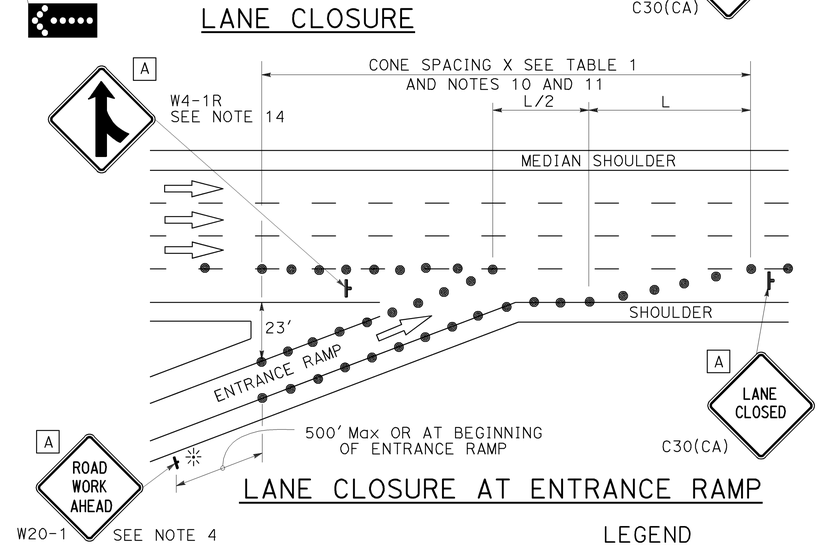

LANE CLOSURE AT ENTRANCE RAMP

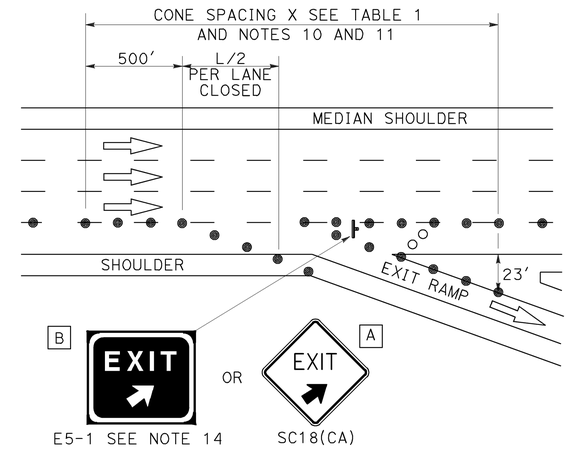

LANE CLOSURE AT EXIT RAMP

NOTES:

1. Median lane closures shall conform to the details as shown except that C20(CA)L and W4-2L signs shall be used.
2. At least one person shall be assigned to provide full time maintenance of traffic control devices for lane closures.
3. Duplicate sign installations are not required:
   a) On opposite shoulder if at least one-half of the available lanes remain open to traffic.
   b) In the median if the width of the median shoulder is less than 8' and the outside lanes are to be closed.
4. Each advance warning sign on each side of the roadway shall be equipped with at least two flags for daytime closure. Each flag shall be at least 16" x 16" in size and shall be orange or fluorescent red-orange in color. Flashing beacons shall be placed at the locations indicated for lane closure during hours of darkness.
5. A G20-2 "END ROAD WORK" sign, with minimum size of 48" x 24" as appropriate, shall be placed at the end of the lane closure unless the end of work area is obvious or ends within a larger project's limits.
6. If the W20-1 sign would follow within 2000' of a stationary W20-1 or G20-1 "ROAD WORK NEXT _____ MILES", use a C20(CA) sign for the first advance warning sign.
7. Place a C30(CA) sign every 2000' throughout length of lane closure.
8. One flashing arrow sign for each lane closed. The flashing arrow signs shall be Type I.
9. A minimum 1500' of sight distance shall be provided where possible for vehicles approaching the first flashing arrow sign. Lane closures shall not begin at top of crest vertical curve or on a horizontal curve.
10. All cones used for lane closures during the hours of darkness shall be fitted with retroreflective bands (or sleeves) as specified in the specifications.
11. Portable delineators, placed at one-half the spacing indicated for traffic cones may be used instead of cones for daytime closures only.
12. Unless otherwise specified in the special provisions, a minimum of 3 cones shall be placed transversely across each closed lane and shoulder at each location where a taper across a traffic lane ends and every 2000' as shown on the "Lane Closure" detail. Two Type II barricades may be used instead of the 3 cones. The transverse alignment of the cones or barricades on the closed shoulder may be shifted from the transverse alignment to provide access to the work.
13. Unless otherwise specified in the special provisions, the 2L tangent shown along lane lines shall be used between the L tapers required for each closed traffic lane.
14. Unless otherwise specified in the special provisions, the E5-1 or SC18(CA) and W4-1 signs shall be used as shown.
15. A W7-3aP "NEXT____ MILES" plaque must be used if theshoulder closure extends beyond the distance that can be perceived by road users.

LEGEND

- TRAFFIC CONE
- TRAFFIC CONE (OPTIONAL TAPER)
- TEMPORARY TRAFFIC CONTROL SIGN
- FLASHING ARROW SIGN (FAS)
- FAS SUPPORT OR TRAILER
- PORTABLE FLASHING BEACON

SIGN PANEL SIZE (Min)

A	48" x 48"
B	72" x 60"
C	36" x 30"

STATE OF CALIFORNIA
DEPARTMENT OF TRANSPORTATION

TRAFFIC CONTROL SYSTEM FOR LANE CLOSURE ON FREEWAYS AND EXPRESSWAYS

NO SCALE

RSP T10 DATED APRIL 19, 2013 SUPERSEDES STANDARD PLAN T10 DATED MAY 20, 2011 - PAGE 237 OF THE STANDARD PLANS BOOK DATED 2010.

REVISED STANDARD PLAN RSP T10

2010 REVISED STANDARD PLAN RSP T10

12-18-12

TO ACCOMPANY PLANS DATED 8-25-14

Dist	COUNTY	ROUTE	POST MILES TOTAL PROJECT	SHEET No.	TOTAL SHEETS
08	SBd, Riv	60	R0.0/R4.6, R3.0/R6.9	97	100

REGISTERED CIVIL ENGINEER

April 19, 2013
PLANS APPROVAL DATE

REGISTERED PROFESSIONAL ENGINEER Gurinderpal Bhullar No. C48815 Exp. 9-30-14 CIVIL STATE OF CALIFORNIA

THE STATE OF CALIFORNIA OR ITS OFFICERS OR AGENTS SHALL NOT BE RESPONSIBLE FOR THE ACCURACY OR COMPLETENESS OF SCANNED COPIES OF THIS PLAN SHEET.

NOTES: See Revised Standard Plan RSP T9 for tables.

Use cone spacing X for taper segment, Y for tangent segment or Z for conflict situations, as approriate, per Table 1, unless X, Y, or Z cone spacing is shown on this sheet.

Unless otherwise specified in the special provisions, all temporary warning signs shall have black legend on fluorescent orange background.

California codes are designated by (CA). Otherwise, Federal (MUTCD) codes are shown.

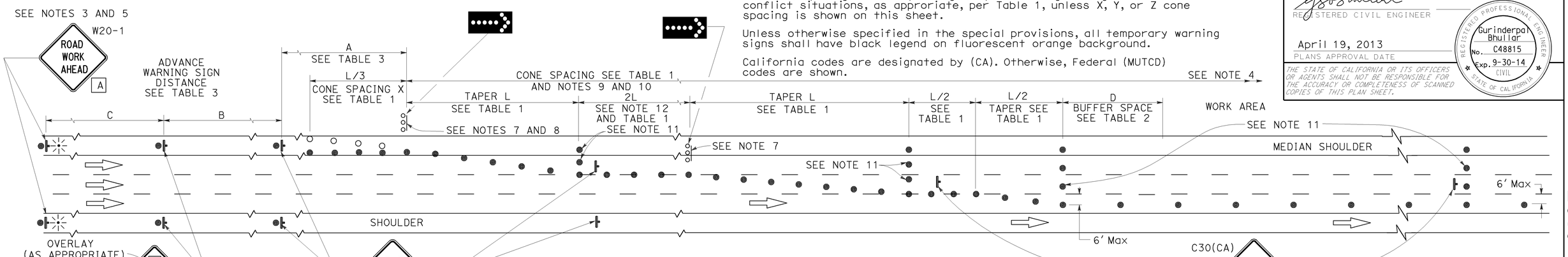

LANE CLOSURE WITH PARTIAL SHOULDER USE

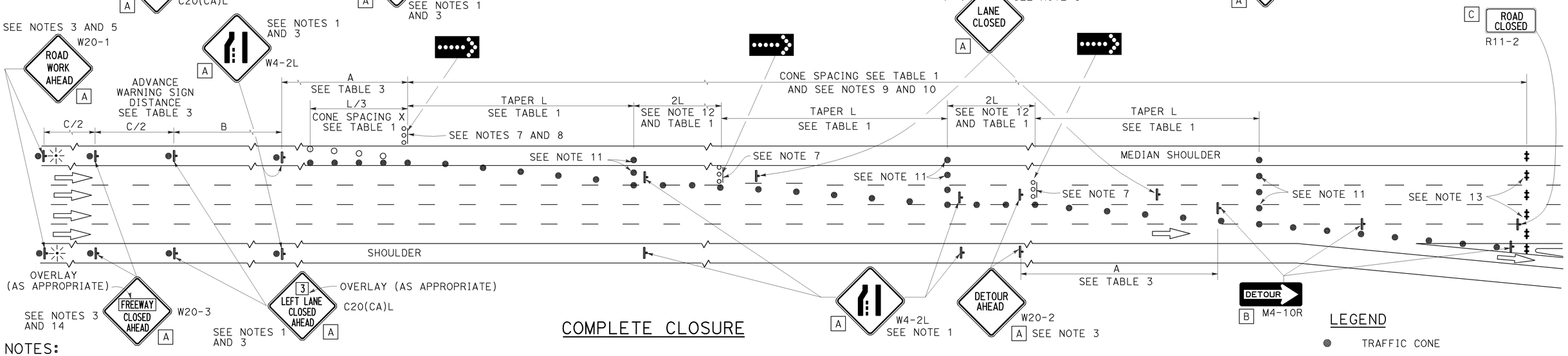

COMPLETE CLOSURE

NOTES:

1. Lane closures on the right side using partial median shoulder as a traffic lane shall conform to the details as shown except that C20(CA)R and W4-2R signs shall be used.
2. At least one person shall be assigned to provide full time maintenance of traffic control devices for lane closures.
3. Each advance warning sign on each side of the roadway shall be equipped with at least two flags for daytime closure. Each flag shall be at least 16" X 16" in size and shall be orange or fluorescent red-orange in color. Flashing beacons shall be placed at the locations indicated for lane closure during hours of darkness.
4. A G20-2 "END ROAD WORK" sign, with minimum size of 48" x 24" as appropriate, shall be placed at the end of the lane closure unless the end of work area is obvious or ends within a larger project's limits.
5. If the W20-1 sign would follow within 2000' of a stationary W20-1 or G20-1 "ROAD WORK NEXT ___ MILES", use a C20(CA) sign for the first advance warning sign.
6. Place a C30(CA) sign every 2000' throughout length of lane closure.
7. One flashing arrow sign for each lane closed. The flashing arrow signs shall be Type I.
8. A minimum 1500' of sight distance shall be provided where possible for vehicles approaching the first flashing arrow sign. Lane closures shall not begin at the top of crest vertical curve or on a horizontal curve.
9. All cones used for lane closures during the hours of darkness shall be fitted with retroreflective bands (or sleeves) as specified in the specifications.
10. Portable delineators, placed at one-half the spacing indicated for traffic cones, may be used instead of cones for daytime closures only.
11. Unless otherwise specified in the special provisions, a minimum of 3 cones shall be placed transversely across each closed lane and shoulder at each location where a taper across a traffic lane ends and every 2000' as shown on the "Lane Closure With Partial Shoulder Use" detail. Two Type II barricades may be used instead of the 3 cones. The transverse alignment of the cones or barricades on the closed shoulder may be shifted from the transverse alignment to provide access to the work.
12. Unless otherwise specified in the special provisions, the 2L tangent shown along lane lines shall be used between the L tapers required for each closed traffic lane.
13. A minimum of Two Type II or III barricades shall be placed across each closed lane and shoulder at the location shown and every 2000' within the complete closure area. Within the complete closure area, the transverse alignment of the barricades on the closed shoulder may be shifted from the transverse alignment to provide access to the work.
14. When specified in the special provisions, a W20-2 "DETOUR AHEAD" sign is to be used in place of the W20-3 "FREEWAY CLOSED AHEAD" sign.

SIGN PANEL SIZE (Min)

A	48" x 48"
B	48" x 18"
C	48" x 30"

LEGEND

- TRAFFIC CONE
- TRAFFIC CONE (OPTIONAL TAPER)
- TEMPORARY TRAFFIC CONTROL SIGN
- FLASHING ARROW SIGN (FAS)
- FAS SUPPORT OR TRAILER
- PORTABLE FLASHING BEACON

STATE OF CALIFORNIA
DEPARTMENT OF TRANSPORTATION

TRAFFIC CONTROL SYSTEM FOR LANE CLOSURES ON FREEWAYS AND EXPRESSWAYS

NO SCALE

RSP T10A DATED APRIL 19, 2013 SUPERSEDES STANDARD PLAN T10A DATED MAY 20, 2011 - PAGE 238 OF THE STANDARD PLANS BOOK DATED 2010.

REVISED STANDARD PLAN RSP T10A

2010 REVISED STANDARD PLAN RSP T10A

12-18-12

Dist	COUNTY	ROUTE	POST MILES TOTAL PROJECT	SHEET No.	TOTAL SHEETS
08	SBd, Riv	60	R0.0/R4.6, R3.0/R6.9	98	100

REGISTERED CIVIL ENGINEER

April 19, 2013
PLANS APPROVAL DATE

REGISTERED PROFESSIONAL ENGINEER Gurinderpal Bhullar No. C48815 Exp. 9-30-14 CIVIL STATE OF CALIFORNIA

THE STATE OF CALIFORNIA OR ITS OFFICERS OR AGENTS SHALL NOT BE RESPONSIBLE FOR THE ACCURACY OR COMPLETENESS OF SCANNED COPIES OF THIS PLAN SHEET.

TO ACCOMPANY PLANS DATED 8-25-14

TYPICAL RAMP CLOSURES

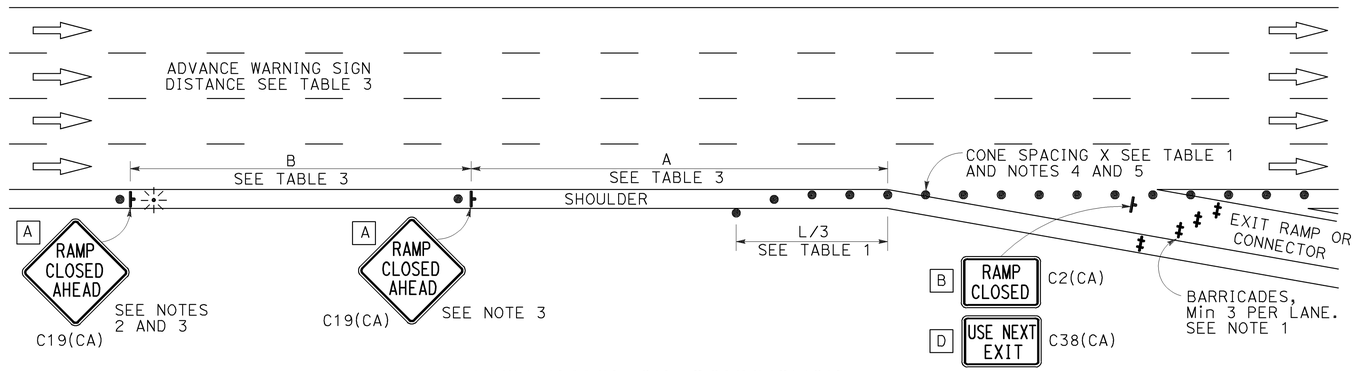

EXIT RAMP OR CONNECTOR

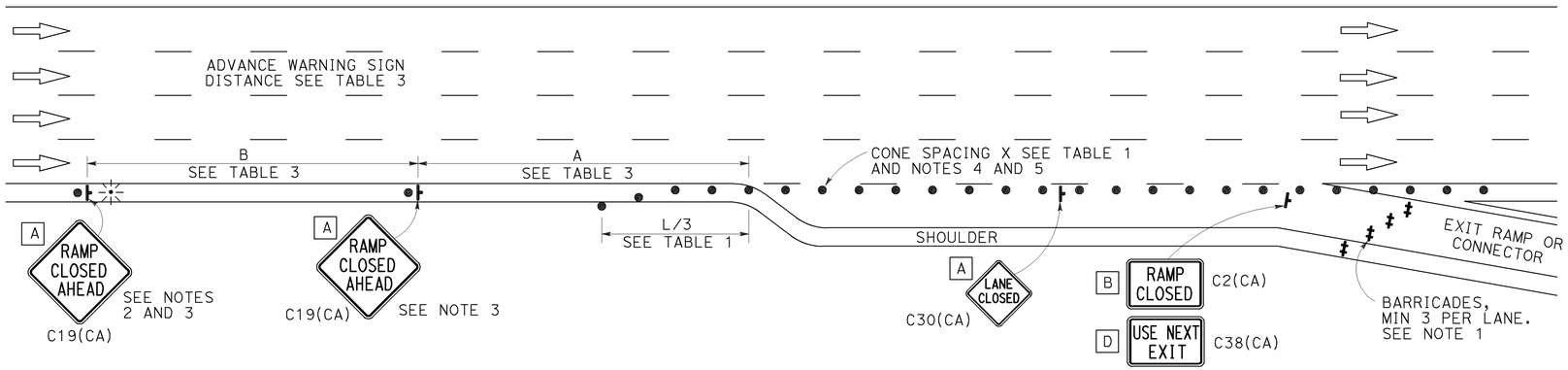

EXIT RAMP OR CONNECTOR WITH ADDITIONAL LANE

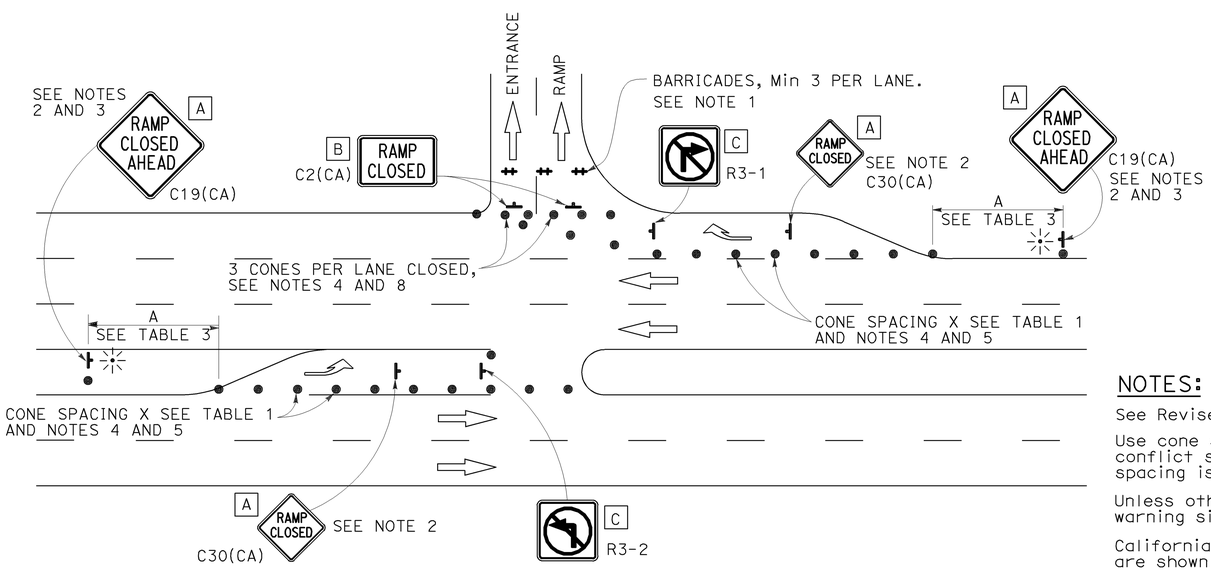

ENTRANCE RAMP WITH TURNING POCKETS

SIGN PANEL SIZE (Min)

- A 48" × 48"
- B 48" × 30"
- C 36" × 36"
- D 48" × 36"

LEGEND

- TRAFFIC CONE
- TEMPORARY TRAFFIC CONTROL SIGN
- BARRICADES
- PORTABLE FLASHING BEACON

NOTES:

1. Barricades shall be Type I, II, or III for closures lasting one week or less and Type III for closures lasting longer than one week.
2. In addition to placing the C19(CA) "RAMP CLOSED AHEAD" and C30(CA) "RAMP CLOSED" signs, black on orange overlay plates with the word "CLOSED" may be mounted, as directed by the Engineer, on all guide signs that refer to the closed ramp. The letter size on the overlay shall be the same as the guide sign.
3. Each advance C19(CA) "RAMP CLOSED AHEAD" sign shall be equipped with at least two flags for daytime closure. Each flag shall be at least 16" × 16" in size and shall be orange or fluorescent red-orange in color. A flashing beacon shall be placed on top of the first C19(CA) sign during hours of darkness.
4. All cones used for ramp closures during the hours of darkness shall be fitted with retroreflective bands (or sleeves) as specified in the specifications.
5. Portable delineators, placed at one-half the spacing indicated for traffic cones, may be used instead of cones for daytime ramp closures only.
6. At least one person shall be assigned to provide full time maintenance of traffic control devices, unless otherwise directed by the Engineer.
7. The existing "EXIT" signs shall be covered during ramp closures.
8. A minimum of 3 cones shall be placed transversely across each closed lane and shoulder.

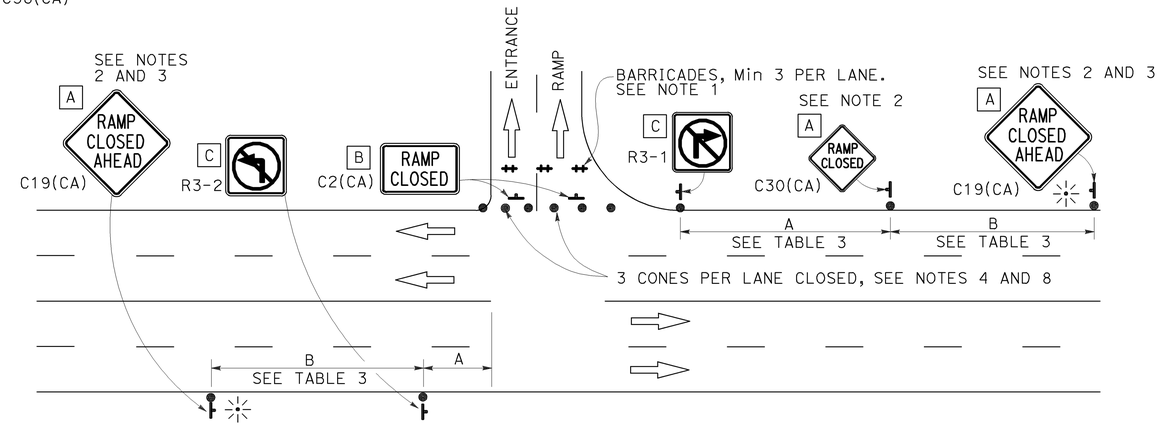

ENTRANCE RAMP WITHOUT TURNING POCKETS

NOTES:

See Revised Standard Plan RSP T9 for tables.

Use cone spacing X for taper segment, Y for tangent segment or Z for conflict situations, as approriate, per Table 1, unless X, Y, or Z cone spacing is shown on this sheet.

Unless otherwise specified in the special provisions, all temporary warning signs shall have black legend on fluorescent orange background.

California codes are designated by (CA). Otherwise, Federal (MUTCD) codes are shown.

STATE OF CALIFORNIA
DEPARTMENT OF TRANSPORTATION

TRAFFIC CONTROL SYSTEM FOR RAMP CLOSURE

NO SCALE

RSP T14 DATED APRIL 19, 2013 SUPERSEDES STANDARD PLAN T14 DATED MAY 20, 2011 - PAGE 242 OF THE STANDARD PLANS BOOK DATED 2010.

REVISED STANDARD PLAN RSP T14

2010 REVISED STANDARD PLAN RSP T14

12-18-12

Dist	COUNTY	ROUTE	POST MILES TOTAL PROJECT	SHEET No.	TOTAL SHEETS
08	SBd, Riv	60	R0.0/R4.6, R3.0/R6.9	99	100

REGISTERED CIVIL ENGINEER

April 19, 2013
PLANS APPROVAL DATE

REGISTERED PROFESSIONAL ENGINEER
Gurinderpal Bhullar
No. C48815
Exp. 9-30-14
CIVIL
STATE OF CALIFORNIA

THE STATE OF CALIFORNIA OR ITS OFFICERS OR AGENTS SHALL NOT BE RESPONSIBLE FOR THE ACCURACY OR COMPLETENESS OF SCANNED COPIES OF THIS PLAN SHEET.

TO ACCOMPANY PLANS DATED 8-25-14

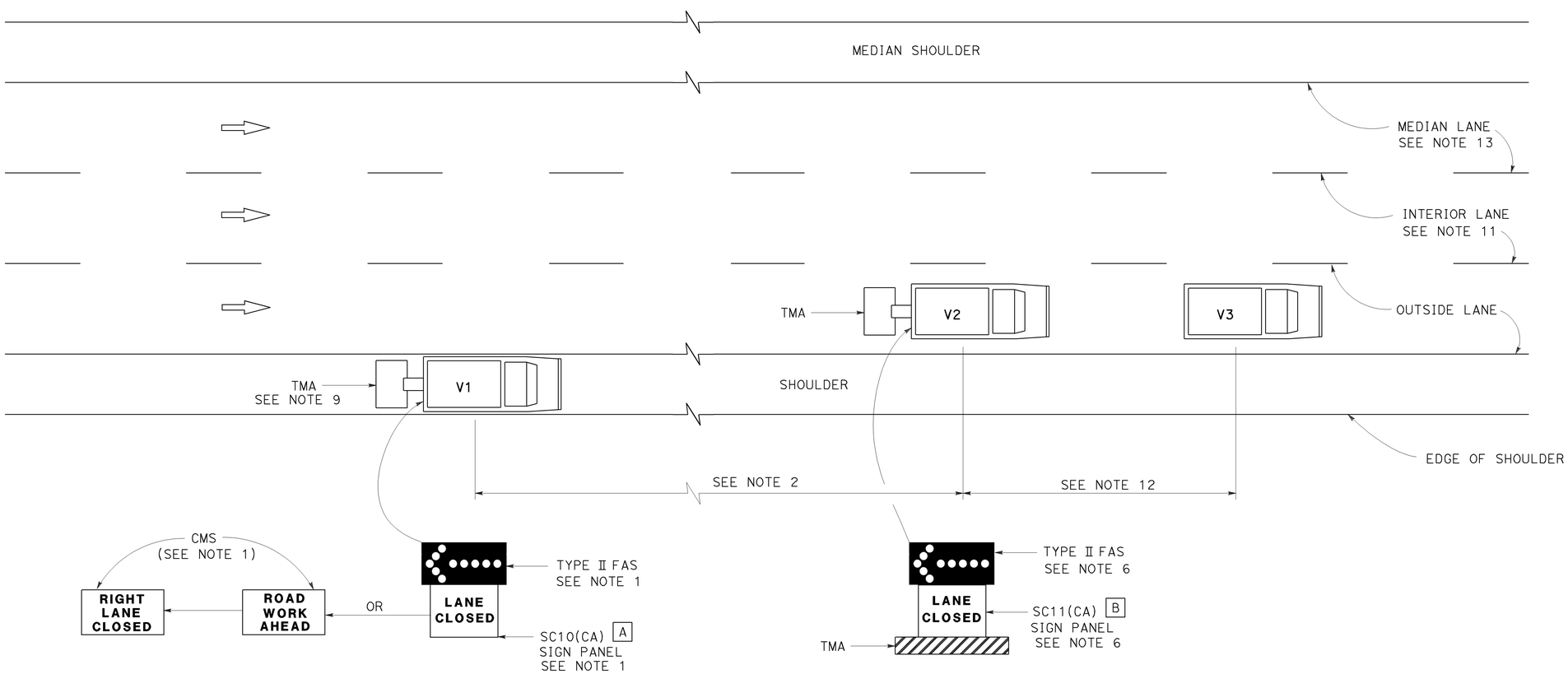

MOVING LANE CLOSURE ON MEDIAN LANE OR OUTSIDE LANE OF MULTILANE HIGHWAYS

SIGN PANEL SIZE (Min)

A 66" x 36"

B 54" x 42"

LEGEND

V1	SIGN VEHICLE
V2	SHADOW VEHICLE
V3	WORK/APPLICATION VEHICLE
	FLASHING ARROW SIGN (FAS)
CMS	CHANGEABLE MESSAGE SIGN
TMA	TRUCK-MOUNTED ATTENUATOR

NOTES:

1. Either a changeable message sign or a SC10(CA) sign panel and a Type II flashing arrow sign shall be mounted on the rear of sign vehicle V1. The changeable message sign shall be sequenced to show the "ROAD WORK AHEAD" message first, followed by the "RIGHT LANE CLOSED" message. For median lane closure, the flashing arrow symbol shall be reversed with the arrowhead on the right and the changeable message sign shall show "LEFT LANE CLOSED".
2. If traffic queues develop, sign vehicle V1 should be positioned upstream from the end of queue. Sign vehicle V1 shall be positioned where highly visible when shoulders are not available.
3. A minimum sight distance of 1500′ should be provided in advance of sign vehicle V1.
4. Sign vehicle V1 should remain at the beginning of horizontal or vertical curves until the other vehicles (V2 and V3) are far enough beyond the curve to resume the minimum sight distance of 1500′.
5. Vehicle-mounted sign panels shall have Type III or above retroreflective sheeting, black on white, or black on fluorescent orange, with 6" minimum series D letters per Caltrans sign specifications.
6. Shadow vehicle V2 shall be equipped with a truck-mounted attenuator. The sign panel shown and a Type II flashing arrow sign shall be mounted on the rear of shadow vehicle V2. For median lane closure the flashing arrow sign symbol shall be displayed with the arrowhead on the right.
7. All vehicles used for lane closures shall be equipped with two-way radios, and the vehicle operators shall maintain communication during the work or application operation.
8. All vehicles shall be equipped with flashing or rotating amber lights.
9. If sign vehicle V1 encroaches into the traffic lane due to insufficient shoulder width, sign vehicle V1 shall be equipped with a truck-mounted attenuator. Sign vehicle V1 shall stay as close to the edge of shoulder as practicable.
10. Where workers would be on foot in the work area, a stationary type lane closure (Revised Standard Plan T10, T11, etc., as applicable) shall be used instead of this plan.
11. For moving lane closure on interior lane of multilane highways, use Revised Standard Plan T16.
12. The spacing between work vehicle(s) and the shadow vehicles, and between each shadow vehicle should be minimized to deter road users from driving in between.
13. When the work/application vehicle V3 occupies the median lane, sign vehicle V1 should drive in the median shoulder and indicate left lane closed ahead.

STATE OF CALIFORNIA
DEPARTMENT OF TRANSPORTATION

TRAFFIC CONTROL SYSTEM FOR MOVING LANE CLOSURE ON MULTILANE HIGHWAYS

NO SCALE

RSP T15 DATED APRIL 19, 2013 SUPERSEDES STANDARD PLAN T15
DATED MAY 20, 2011 - PAGE 243 OF THE STANDARD PLANS BOOK DATED 2010.

REVISED STANDARD PLAN RSP T15

2010 REVISED STANDARD PLAN RSP T15

12-18-12

Dist	COUNTY	ROUTE	POST MILES TOTAL PROJECT	SHEET No.	TOTAL SHEETS
08	SBd, Riv	60	R0.0/R4.6, R3.0/R6.9	100	100

REGISTERED CIVIL ENGINEER

April 19, 2013
PLANS APPROVAL DATE

REGISTERED PROFESSIONAL ENGINEER Gurinderpal Bhullar No. C48815 Exp. 9-30-14 CIVIL STATE OF CALIFORNIA

THE STATE OF CALIFORNIA OR ITS OFFICERS OR AGENTS SHALL NOT BE RESPONSIBLE FOR THE ACCURACY OR COMPLETENESS OF SCANNED COPIES OF THIS PLAN SHEET.

TO ACCOMPANY PLANS DATED 8-25-14

2010 REVISED STANDARD PLAN RSP T16

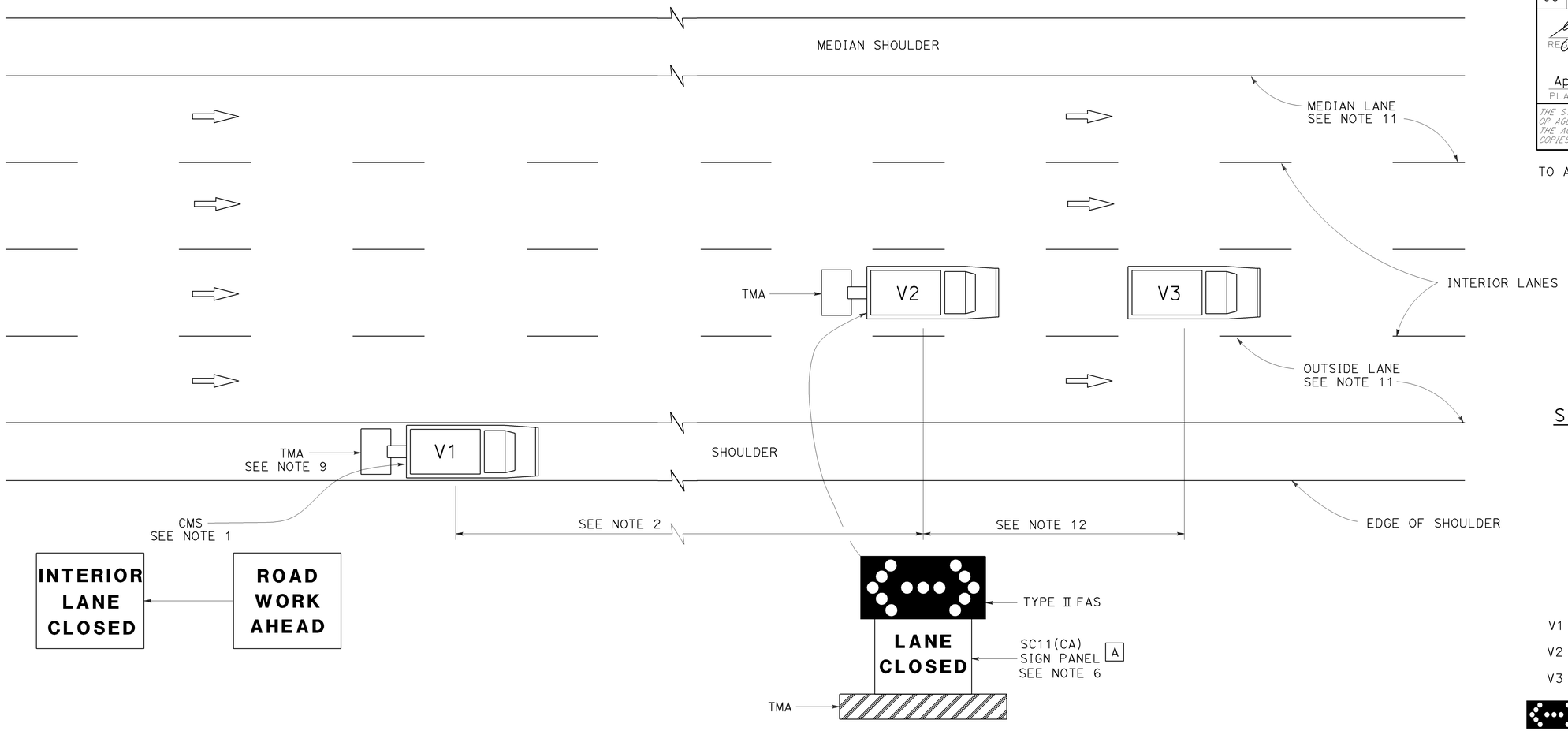

SIGN PANEL SIZE (Min)

A 54" x 42"

LEGEND

V1	SIGN VEHICLE
V2	SHADOW VEHICLE
V3	WORK/APPLICATION VEHICLE
	FLASHING ARROW SIGN (FAS) IN FLASHING DOUBLE ARROW MODE
CMS	CHANGEABLE MESSAGE SIGN
TMA	TRUCK-MOUNTED ATTENUATOR

MOVING LANE CLOSURE ON INTERIOR LANE OF MULTILANE HIGHWAYS

NOTES:

1. A changeable message sign shall be mounted on the rear of sign vehicle V1. The changeable message sign shall be sequenced to show the "ROAD WORK AHEAD" message first, followed by the "INTERIOR LANE CLOSED" message. The message "CENTER LANE CLOSED" may be used in place of the "INTERIOR LANE CLOSED" message.
2. If traffic queues develop, sign vehicle V1 should be positioned upstream from the end of queue. Sign vehicle V1 shall be positioned where highly visible when shoulders are not available.
3. A minimum sight distance of 1500′ should be provided in advance of sign vehicle V1.
4. Sign vehicle V1 should remain at the beginning of horizontal or vertical curves until the other vehicles (V2 and V3) are far enough beyond the curve to resume the minimum sight distance of 1500′.
5. Vehicle-mounted sign panels shall have Type III or above retroreflective sheeting, black on white, or black on fluorescent orange, with 6" minimum series D letters per Caltrans sign specifications.
6. Shadow vehicle V2 shall be equipped with a truck-mounted attenuator. The sign panel shown and a Type II flashing arrow sign shall be mounted on the rear of shadow vehicle V2.
7. All vehicles used for lane closures shall be equipped with two-way radios, and the vehicle operators shall maintain communication during the work or application operation.
8. All vehicles shall be equipped with flashing or rotating amber lights.
9. If sign vehicle V1 encroaches into the traffic lane due to insufficient shoulder width, sign vehicle V1 shall be equipped with a truck-mounted attenuator. Sign vehicle V1 shall stay as close to the edge of shoulder as practicable.
10. Where workers would be on foot in the work area, a stationary type lane closure (Revised Standard Plan T10, T11 etc., as applicable) shall be used instead of this plan.
11. For moving lane closure on median lane or outside lane of multilane highways, use Revised Standard Plan T15.
12. The spacing between work vehicle(s) and the shadow vehicles, and between each shadow vehicle should be minimized to deter road users from driving in between.

STATE OF CALIFORNIA
DEPARTMENT OF TRANSPORTATION

TRAFFIC CONTROL SYSTEM FOR MOVING LANE CLOSURE ON MULTILANE HIGHWAYS

NO SCALE

RSP T16 DATED APRIL 19, 2013 SUPERSEDES STANDARD PLAN T16
DATED MAY 20, 2011 - PAGE 244 OF THE STANDARD PLANS BOOK DATED 2010.

REVISED STANDARD PLAN RSP T16

12-18-12