Dist	COUNTY	ROUTE	POST MILES TOTAL PROJECT	SHEET No.	TOTAL SHEETS
08	Riv	74	35.9	1	23

INDEX OF PLANS

SHEET No.	DESCRIPTION
1	TITLE AND LOCATION MAP
2	LAYOUTS
3	UTILITY PLAN
4	CONSTRUCTION AREA SIGNS
5	PAVEMENT DELINEATION AND SIGN PLAN
6	PAVEMENT DELINEATION AND SIGN QUANTITIES
7-13	ELECTRICAL PLANS
14-17	TRAFFIC CONTROL SYSTEMS
18-23	REVISED STANDARD PLANS

THE STANDARD PLANS LIST APPLICABLE TO THIS CONTRACT IS INCLUDED IN THE NOTICE TO BIDDERS AND SPECIAL PROVISIONS BOOK.

STATE OF CALIFORNIA

DEPARTMENT OF TRANSPORTATION

PROJECT PLANS FOR CONSTRUCTION ON

STATE HIGHWAY

IN RIVERSIDE COUNTY
IN AND NEAR HEMET
AT CALIFORNIA AVENUE

TO BE SUPPLEMENTED BY STANDARD PLANS DATED 2010

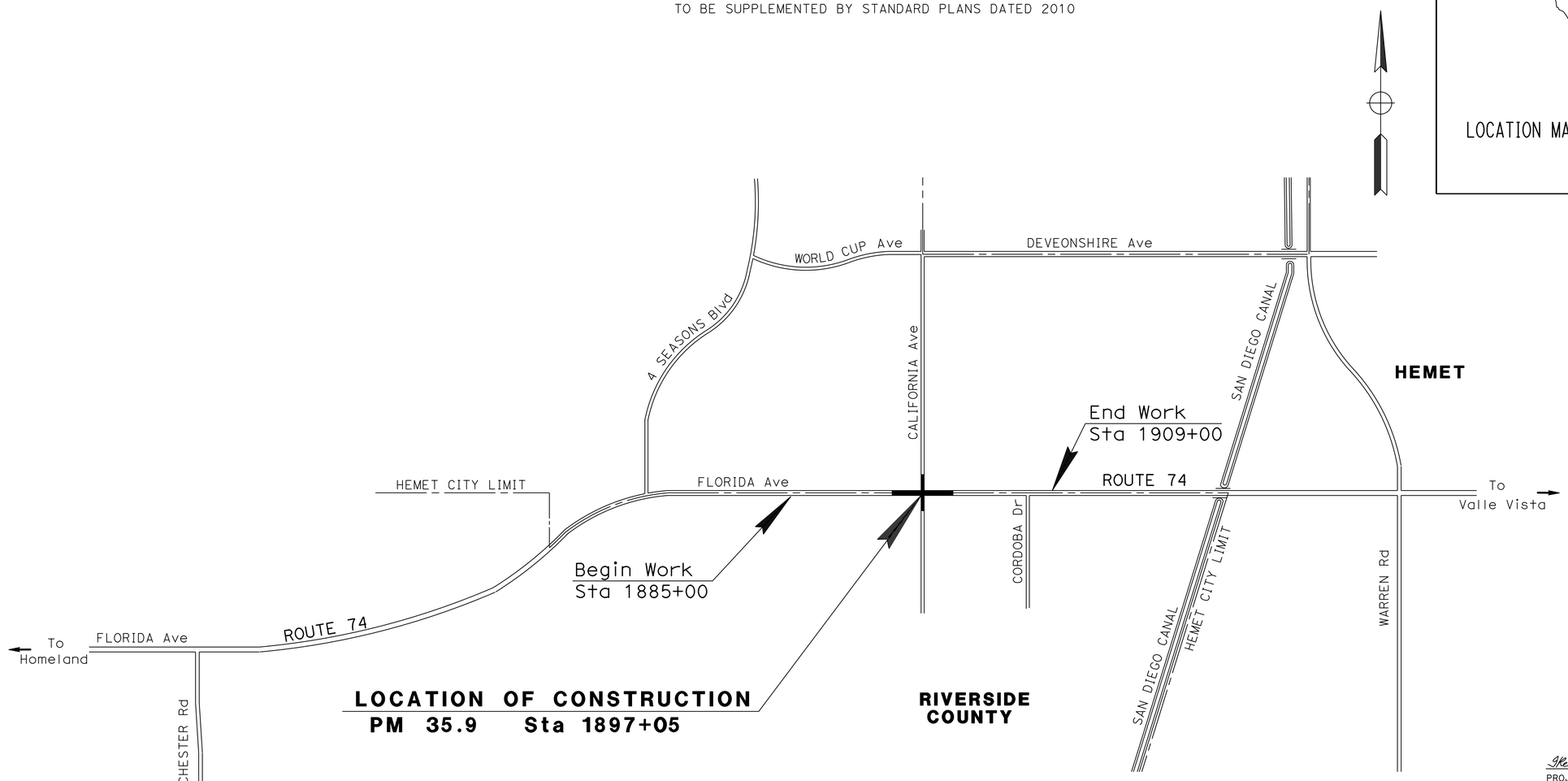

Ike I. Maatubang 2-7-13
PROJECT ENGINEER DATE
REGISTERED CIVIL ENGINEER

March 4, 2013
PLANS APPROVAL DATE

REGISTERED PROFESSIONAL ENGINEER
IKE MAATUBANG
No. 55065
Exp. 6-30-14
CIVIL
STATE OF CALIFORNIA

THE STATE OF CALIFORNIA OR ITS OFFICERS OR AGENTS SHALL NOT BE RESPONSIBLE FOR THE ACCURACY OR COMPLETENESS OF SCANNED COPIES OF THIS PLAN SHEET.

THE CONTRACTOR SHALL POSSESS THE CLASS (OR CLASSES) OF LICENSE AS SPECIFIED IN THE "NOTICE TO BIDDERS."

NO SCALE

CONTRACT No.	08-0R1804
PROJECT ID	0812000030

PROJECT MANAGER MUSTAPHA IAALI
DESIGN ENGINEER MARK PERTILE

LAST REVISION 02-07-13
DATE PLOTTED => 17-APR-2013
TIME PLOTTED => 07:21

Dist	COUNTY	ROUTE	POST MILES TOTAL PROJECT	SHEET No.	TOTAL SHEETS
08	Riv	74	35.9	2	23

Ike I. Maatubang 2-7-13
REGISTERED CIVIL ENGINEER DATE

3-4-13
PLANS APPROVAL DATE

REGISTERED PROFESSIONAL ENGINEER
IKE MAATUBANG
No. 55065
Exp. 6-30-14
CIVIL
STATE OF CALIFORNIA

THE STATE OF CALIFORNIA OR ITS OFFICERS OR AGENTS SHALL NOT BE RESPONSIBLE FOR THE ACCURACY OR COMPLETENESS OF SCANNED COPIES OF THIS PLAN SHEET.

NOTES:

1. SEE Std PLANS A88A TO RECONSTRUCT CURB RAMP.
2. SAWCUT LINE SHALL BE ALONG EXISTING RAMP FLARE JOINTS. CURB RAMP SHALL JOIN EXISTING CURB AND GUTTER.
3. REMOVE EXISTING CURB RAMP ALONG SAWCUT LINES.
4. FOR ACCURATE RIGHT OF WAY DATA, CONTACT RIGHT OF WAY ENGINEERING AT THE DISTRICT OFFICE.

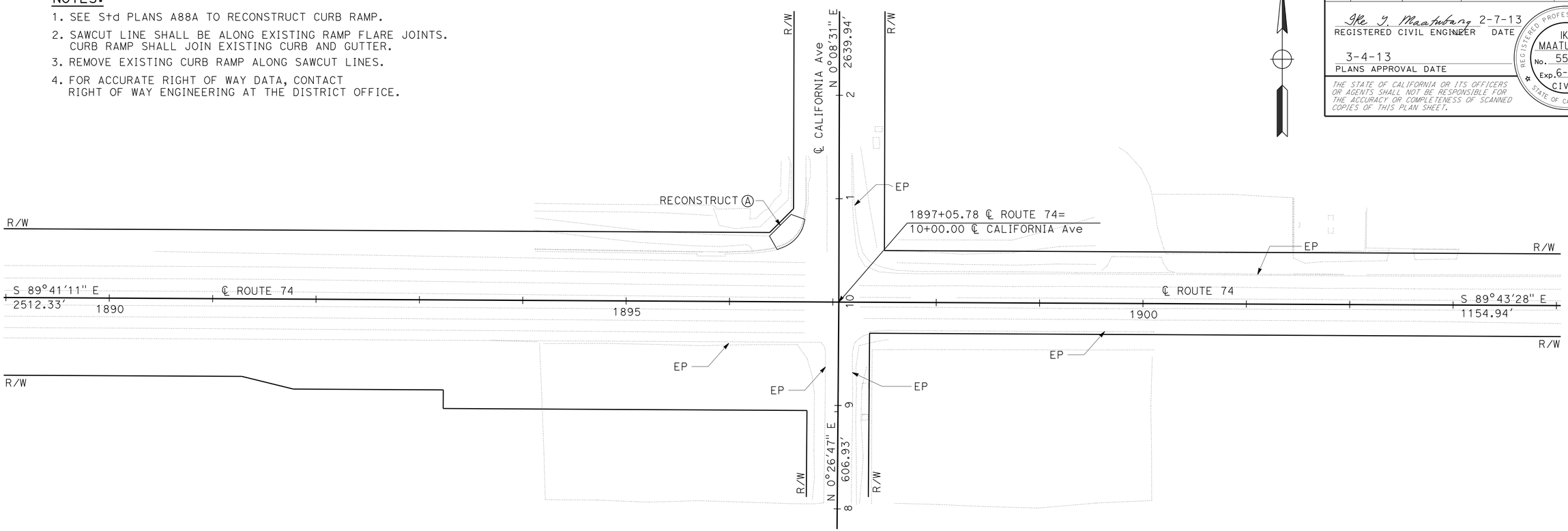

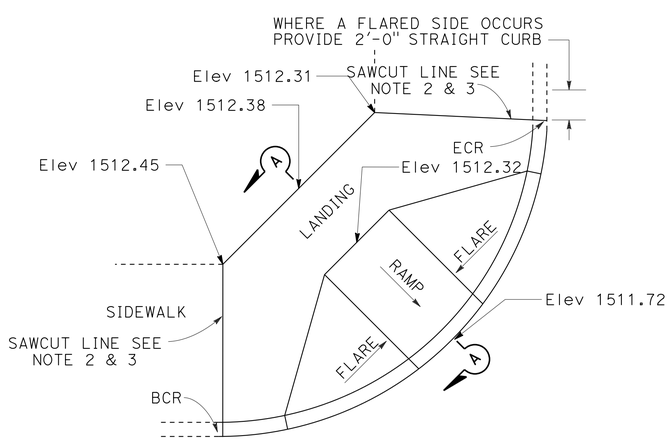

DETAIL A
DETAIL ONE-RAMP CORNER INSTALLATION
NO SCALE

QUANTITIES

ITEM	UNIT	TOTAL
REMOVE CONCRETE	CY	2
MINOR CONCRETE (CURB RAMP)	CY	2

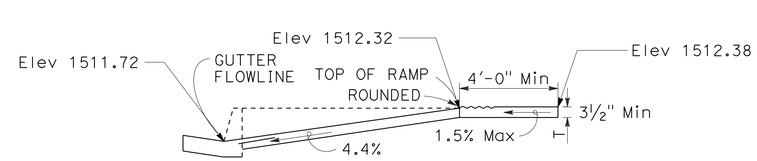

SECTION A-A

LAYOUT
SCALE: 1" = 50'

L-1

REVISED BY	AJB
DATE REVISED	01-23-12
CALCULATED-DESIGNED BY	AARON BRADY
CHECKED BY	IKE MAATUBANG
FUNCTIONAL SUPERVISOR	MARK PERTILE

STATE OF CALIFORNIA - DEPARTMENT OF TRANSPORTATION
Caltrans
DESIGN

LAST REVISION 02-07-13
DATE PLOTTED => 16-APR-2013
TIME PLOTTED => 07:38

Dist	COUNTY	ROUTE	POST MILES TOTAL PROJECT	SHEET No.	TOTAL SHEETS
08	Riv	74	35.9	3	23

Ike I. Maatubang 2-7-13
REGISTERED CIVIL ENGINEER DATE

3-4-13
PLANS APPROVAL DATE

REGISTERED PROFESSIONAL ENGINEER IKE MAATUBANG No. 55065 Exp. 6-30-14 CIVIL STATE OF CALIFORNIA

THE STATE OF CALIFORNIA OR ITS OFFICERS OR AGENTS SHALL NOT BE RESPONSIBLE FOR THE ACCURACY OR COMPLETENESS OF SCANNED COPIES OF THIS PLAN SHEET.

NOTE:

FOR ACCURATE RIGHT OF WAY DATA, CONTACT RIGHT OF WAY ENGINEERING AT THE DISTRICT OFFICE.

LEGEND:

GV Exist GAS VALVE

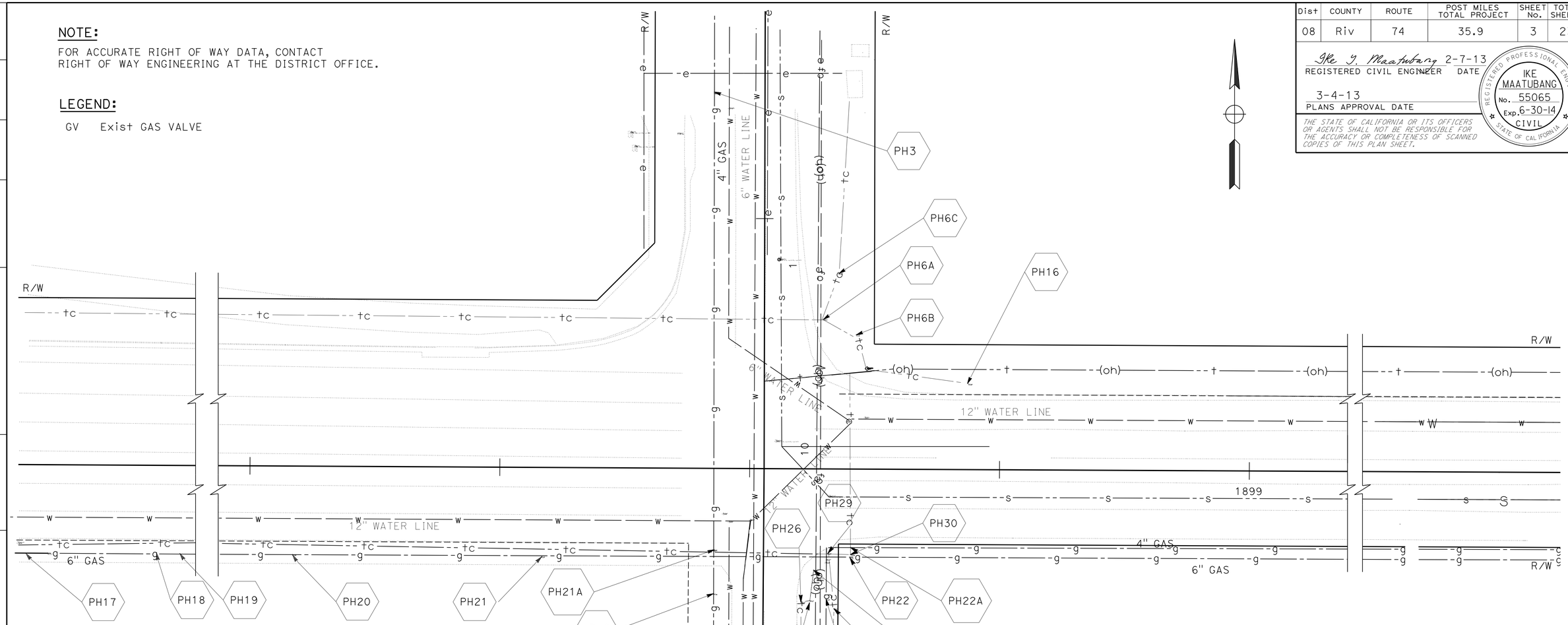

POTHOLE LOCATION TABLE

No.	*EXISTING UTILITIES	NORTHING	EASTING	DEPTH
PH3	4" GAS LINE	2215366.522	6318409.600	-2.914
PH6A	TELEPHONE LINE	2215275.564	6318453.210	-4.018
PH6B	TELEPHONE LINE	2215269.400	6318466.395	-3.223
PH6C	TELEPHONE LINE	2215293.960	6318459.491	-4.165
PH8	GAS LINE 4"	2215165.822	6318409.053	-4.294
PH9	WATER LINE 12"	2215135.649	6318414.136	-5.045
PH10A	RECLAIM WATER LINE	2215145.565	6318425.053	-8.346
PH12	GAS LINE 4"	2215145.736	6318454.367	-3.806
PH13	GAS LINE 4"	2215163.578	6318454.232	-4.74
PH16	TELEPHONE LINE	2215249.733	6318511.215	-3.108
PH17	GAS LINE 6"	2215182.840	6317938.509	-3.927
PH18	GAS LINE 6"	2215182.768	6318036.378	-3.925
PH19	GAS LINE 6"	2215182.017	6318142.730	-4.024
PH20	GAS LINE 6"	2215181.412	6318240.657	-3.576
PH21	GAS LINE 6"	2215180.715	6318340.481	-3.498
PH21A	GAS LINE 4"	2215145.565	6318425.053	-4.847
PH22	GAS LINE 6"	2215180.157	6318463.849	-4.742
PH22A	GAS LINE 4"	2215184.289	6318464.080	-4.439
PH25	TELEPHONE LINE	2215175.234	6318449.267	-2.631
PH26	TELEPHONE LINE	2215162.447	6318444.163	-3.803
PH27	TELEPHONE LINE	2215163.061	6318447.736	-2.066
PH28	TELEPHONE LINE	2215159.839	6318457.417	-5.561
PH29	TELEPHONE LINE	2215181.944	6318454.946	-2.515
PH30	TELEPHONE LINE	2215181.460	6318464.031	-2.966
PH31	FND BURRIED GV	2215077.524	6318454.354	EL=1513.132

* ALL UTILITIES SHALL BE PROTECT IN PLACE.

APPROVED FOR UTILITY INFORMATION ONLY

UTILITIES

SCALE: 1" = 20'

U-1

REVISED BY	DATE REVISED
AJB	01-23-12

CALCULATED-DESIGNED BY: AARON BRADY
CHECKED BY: IKE MAATUBANG
FUNCTIONAL SUPERVISOR: MARK PERTILE

STATE OF CALIFORNIA - DEPARTMENT OF TRANSPORTATION
Caltrans
DESIGN

LAST REVISION 02-07-13
DATE PLOTTED => 16-APR-2013
TIME PLOTTED => 07:38

Dist	COUNTY	ROUTE	POST MILES TOTAL PROJECT	SHEET No.	TOTAL SHEETS
08	Riv	74	35.9	4	23

M.M. Kamgar Haghighi 2-7-13
REGISTERED CIVIL ENGINEER DATE

3-4-13
PLANS APPROVAL DATE

REGISTERED PROFESSIONAL ENGINEER
M.M.Kamgar
No. 58039
Exp. 6-30-14
CIVIL
STATE OF CALIFORNIA

THE STATE OF CALIFORNIA OR ITS OFFICERS OR AGENTS SHALL NOT BE RESPONSIBLE FOR THE ACCURACY OR COMPLETENESS OF SCANNED COPIES OF THIS PLAN SHEET.

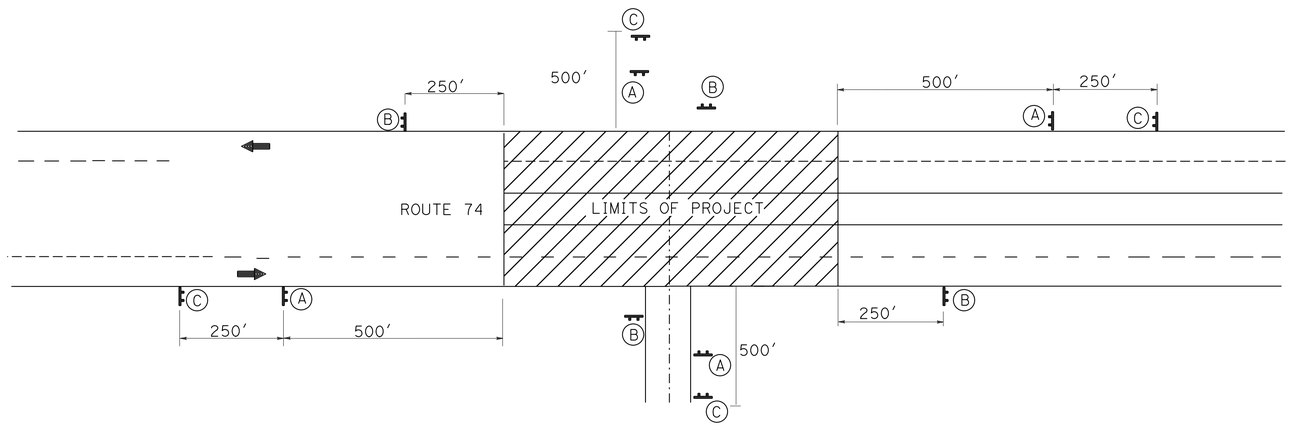

TYPICAL INSTALLATION OF CONSTRUCTION AREA SIGNS

STATIONARY MOUNTED CONSTRUCTION AREA SIGNS

SIGN No. (X)	SIGN CODE		PANEL SIZE	SIGN MESSAGE	NUMBER OF POSTS AND SIZE	NUMBER OF SIGNS
	FEDERAL	CALIFORNIA				
A	W20-1		48" x 48"	ROAD WORK AHEAD	2 - 4" X 6"	4
B	G20-2		48" x 24"	END ROAD WORK	2 - 4" X 6"	4
C		C40	72" x 36"	TRAFFIC FINE DOUBLED IN CONSTRUCTION ZONES	2 - 4" X 6"	4

EXACT LOCATION OF THE SIGNS WILL BE DETERMINED BY THE ENGINEER.

PORTABLE CHANGEABLE MESSAGE SIGN

EA
4

CONSTRUCTION AREA SIGNS

NO SCALE

CS-1

APPROVED FOR CONSTRUCTION AREA SIGN WORK ONLY

REVISED BY | DATE REVISED
MEHDI KAMGAR | BILL WASSER
CALCULATED-DESIGNED BY | CHECKED BY
FUNCTIONAL SUPERVISOR: BILL WASSER
STATE OF CALIFORNIA - DEPARTMENT OF TRANSPORTATION
Caltrans® TRAFFIC DESIGN

LAST REVISION 02-07-13 | DATE PLOTTED => 16-APR-2013 | TIME PLOTTED => 07:38

Dist	COUNTY	ROUTE	POST MILES TOTAL PROJECT	SHEET No.	TOTAL SHEETS
08	Riv	74	35.9	5	23

M.M. Kamgar Haghighi 4-9-13
REGISTERED CIVIL ENGINEER DATE

3-4-13
PLANS APPROVAL DATE

REGISTERED PROFESSIONAL ENGINEER M.M.KAMGAR No. C58039 Exp.6-30-14 CIVIL STATE OF CALIFORNIA

THE STATE OF CALIFORNIA OR ITS OFFICERS OR AGENTS SHALL NOT BE RESPONSIBLE FOR THE ACCURACY OR COMPLETENESS OF SCANNED COPIES OF THIS PLAN SHEET.

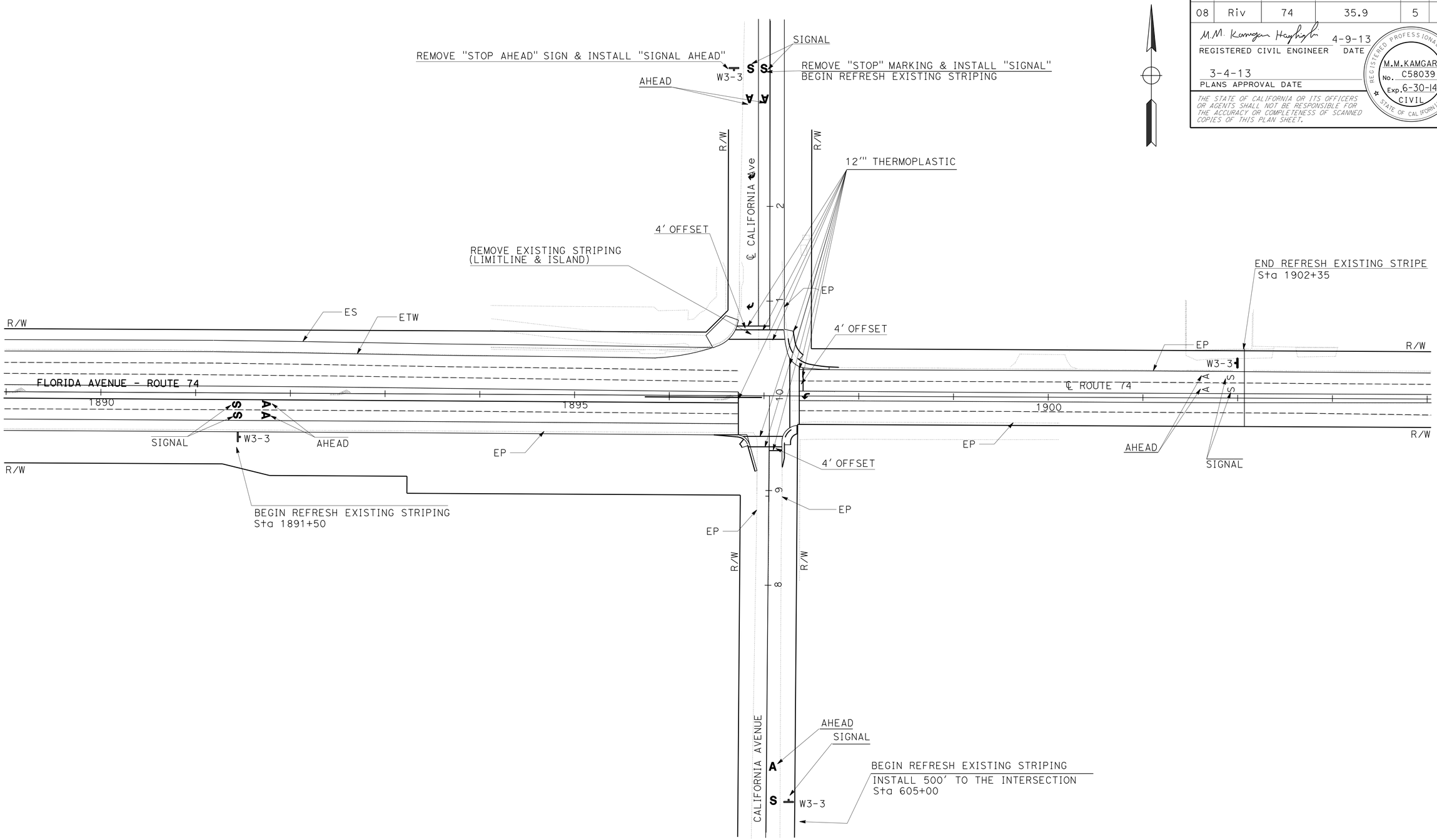

PAVEMENT DELINEATION AND SIGN PLAN

NO SCALE

PD-1

APPROVED FOR PAVEMENT DELINEATION AND SIGN WORK ONLY

STATE OF CALIFORNIA - DEPARTMENT OF TRANSPORTATION
Caltrans® TRAFFIC DESIGN

FUNCTIONAL SUPERVISOR: BILL WASSER
CALCULATED-DESIGNED BY: MEHDI KAMGAR
CHECKED BY: BILL WASSER
REVISED BY
DATE REVISED

LAST REVISION 02-07-13
DATE PLOTTED => 16-APR-2013
TIME PLOTTED => 07:38

Dist	COUNTY	ROUTE	POST MILES TOTAL PROJECT	SHEET No.	TOTAL SHEETS
08	Riv	74	35.9	6	23

M.M. Kamgar Haghighi 4-9-13
REGISTERED CIVIL ENGINEER DATE

3-4-13
PLANS APPROVAL DATE

REGISTERED PROFESSIONAL ENGINEER M. KAMGAR No. C58039 Exp. 6-30-14 CIVIL STATE OF CALIFORNIA

THE STATE OF CALIFORNIA OR ITS OFFICERS OR AGENTS SHALL NOT BE RESPONSIBLE FOR THE ACCURACY OR COMPLETENESS OF SCANNED COPIES OF THIS PLAN SHEET.

NOTES:

1. THE STRIPING & MARKER QUANTITY IS FOR REFRESHING EXISTING STRIPING FOR THE LIMIT SHOWN ON THE PLAN.

PAVEMENT DELINEATION QUANTITIES

DETAIL No.	PAVEMENT MARKERS			THERMOPLASTIC TRAFFIC STRIPE (SPRAYABLE)		THERMOPLASTIC TRAFFIC STRIPE
	REMOVE PAVEMENT MARKER	RETROREFLECTIVE				
		TYPE G	TYPE D	4" WHITE	4" YELLOW	8" WHITE
	EA			FT		FT
12	60	60		2800		
22	132		132		1575	
27B				5000		
32	60		60		900	
38	16	16				345
SUB-TOTAL	268	76	192	7800	2475	345
TOTAL	268	268		10275		345

THERMOPLASTIC PAVEMENT MARKING

DESCRIPTION	SQFT
TYPE IV ARROW	45
TYPE III ARROW	126
12" THERMOPLASTIC LIMIT LINE	458
SIGNAL	224
AHEAD	217
TOTAL	1070

REMOVE THERMOPLASTIC PAVEMENT MARKING

DESCRIPTION	SQFT
STOP	66
12" THERMOPLASTIC	124
TOTAL	190

REMOVE ROADSIDE SIGN

DESCRIPTION	EA
R1-1	2
W3-1	1
TOTAL	3

CONTRACTOR FURNISHED SIGN QUANTITIES

SIGN CODE	SIGN SIZE L X D	SINGLE FACE	DOUBLE FACED	BACKGROUND SHEETING COLOR	RETROREFLECTIVE ASTM TYPE	LEGEND SHEETING COLOR	RETROREFLECTIVE ASTM TYPE	GRAFFITI FILM PREMIUM	FURNISH SINGLE-SHEET UNFRAMED ALUMINIUM 0.08"	FURNISH SINGLE-SHEET UNFRAMED ALUMINIUM 0.063"	(N) INSTALL SIGN MAST ARM HANGER ASSEMBLY	ROADSIDE SIGN ONE POST SIZE	DESCRIPTION/REMARKS
									SQFT	SQFT		(4" x 6")	
W3-3	36" x 36"	4		YELLOW	III	BLACK	VII	X		36		4	SIGNAL AHEAD SYMBOL
R3-4	36" x 36"	4		WHITE	III	BLACK	VII	X		36	X		NO U TURN
SPECIAL 1	72" x 18"		2	GREEN	III	WHITE	VII	X	18		X		CALIFORNIA Ave
SPECIAL 2	72" x 18"		2	GREEN	III	WHITE	VII	X	18		X		STATE HWY 74
TOTAL									36	72		4	

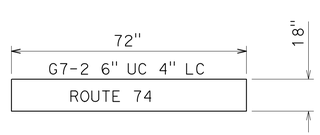

STREET NAME SIGN FOR THE MAST ARM WITH BORDER.
INSTALL ON POLE FACING FNBT AND FSBT ON CALIFORNIA AVENUE

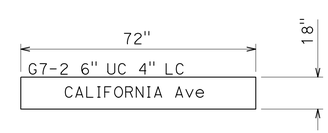

STREET NAME SIGN FOR THE MAST ARM WITH BORDER.
INSTALL ON POLE FACING FEBT AND FWBT ON ROUTE 74

PAVEMENT DELINEATION AND SIGN QUANTITIES

NO SCALE

PDQ-1

STATE OF CALIFORNIA - DEPARTMENT OF TRANSPORTATION
Caltrans® TRAFFIC DESIGN

FUNCTIONAL SUPERVISOR: Bill Wasser
CALCULATED-DESIGNED BY: MEHDI KAMGAR
CHECKED BY: Bill Wasser
REVISED BY
DATE REVISED

LAST REVISION 02-07-13
DATE PLOTTED => 16-APR-2013
TIME PLOTTED => 07:38

Dist	COUNTY	ROUTE	POST MILES TOTAL PROJECT	SHEET No.	TOTAL SHEETS
08	Riv	74	35.9	7	23

REGISTERED ELECTRICAL ENGINEER 2-7-13 DATE

3-4-13
PLANS APPROVAL DATE

REGISTERED PROFESSIONAL ENGINEER JAIME ESTRADA No. E 18351 Exp. 6-30-14 ELECTRICAL STATE OF CALIFORNIA

THE STATE OF CALIFORNIA OR ITS OFFICERS OR AGENTS SHALL NOT BE RESPONSIBLE FOR THE ACCURACY OR COMPLETENESS OF SCANNED COPIES OF THIS PLAN SHEET.

LEGEND: (THIS SHEET ONLY)

1. Exist GENERAL TELEPHONE / POWER POLE, # GT 21155, INSTALL TYPE 'H' RISER, SCHEDULE 80.
2. 3"C, MT. CONDUCTORS TO BE FURNISHED AND INSTALLED BY THE UTILITY COMPANY.
3. INSTALL EMERGENCY PRE-EMPTION CABLES ONLY, WITHOUT THE HARDWARE OR SOFTWARE.
4. INSTALL 120/240 V, TYPE III-CF SERVICE EQUIPMENT ENCLOSURE AS PER ES-2C AND ES-2F.
   METER A: (TC-1) 100 A CB, 240 V, 2P (MAIN BREAKER)
   50 A CB, 120 V, 1P (TRAFFIC SIGNAL)
   CTID: 08-56-074-35.928-M
   ADDRESS: 26020 CALIFORNIA AVENUE, HEMET, CA 92545

   METER B: (LS-3) 100 A CB, 240 V, 2P (MAIN BREAKER)
   30 A CB, 240 V, 2P (INTERSECTION LIGHTING)
   15 A CB, 120 V, 1P (LIGHTING CONTROL)
   TYPE V PEC WITH 50 SECOND TIME DELAY
   CTID: 08-56-074-35.929-M
   ADDRESS: 26020 CALIFORNIA AVENUE, HEMET, CA 92545
5. INSTALL DEPARTMENT-FURNISHED MODEL 2070L CONTROLLER ASSEMBLY AND BATTERY BACK-UP SYSTEM ON A MODIFIED FOUNDATION AS PER E-3.
6. INSTALL CDMA MODEM.

NOTES: (THIS SHEET ONLY)

1. TYPE 1-A FOUNDATIONS SHALL BE THE ANCHOR BOLTS WITH SLEEVE NUTS, AS PER RSP ES-7B.
2. VIDEO DETECTION ZONES WILL BE ESTABLISHED IN THE FIELD BY THE ENGINEER AND THE MANUFACTURER'S REPRESENTATIVE.
3. INSTALL VIVDS CAMERAS AS PER DETAILS ON SHEET ES-7R.
4. EXISTING UTILITY FACILITIES ARE NOT SHOWN ON THESE PLANS.
5. ABBREVIATIONS: (THIS SHEET ONLY)
   CDMA: CODE DIVISION MULTIPLE ACCESS
   SCE: SOUTHERN CALIFORNIA EDISON.

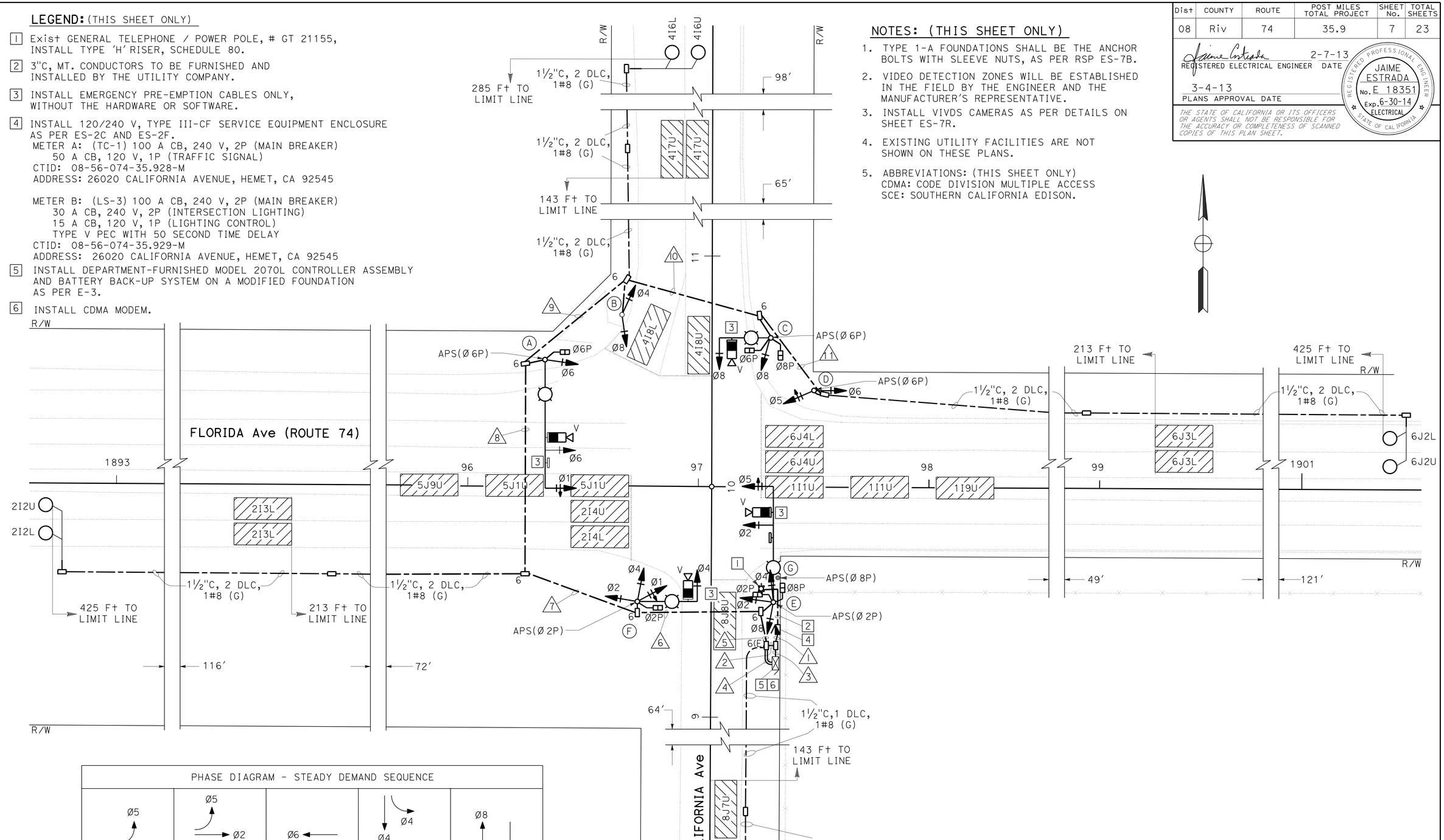

PHASE DIAGRAM - STEADY DEMAND SEQUENCE

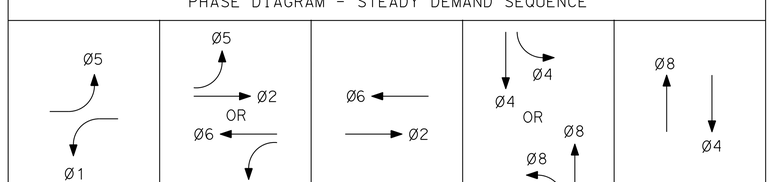

NOTE:

FOR ACCURATE RIGHT OF WAY DATA, CONTACT RIGHT OF WAY ENGINEERING AT THE DISTRICT OFFICE.

APPROVED FOR ELECTRICAL WORK ONLY

SIGNAL AND LIGHTING

SCALE: 1" = 20'

E-1

STATE OF CALIFORNIA - DEPARTMENT OF TRANSPORTATION
Caltrans® ELECTRICAL DESIGN A

FUNCTIONAL SUPERVISOR: DAVID A. GONZALEZ

CALCULATED-DESIGNED BY: B. W. LUTTON
CHECKED BY: JAIME ESTRADA

REVISED BY: JE
DATE REVISED: 01-10-13

LAST REVISION 02-04-13
DATE PLOTTED => 16-APR-2013
TIME PLOTTED => 07:39

Dist	COUNTY	ROUTE	POST MILES TOTAL PROJECT	SHEET No.	TOTAL SHEETS
08	Riv	74	35.9	8	23

REGISTERED ELECTRICAL ENGINEER 2-7-13 DATE

3-4-13
PLANS APPROVAL DATE

REGISTERED PROFESSIONAL ENGINEER JAIME ESTRADA No. E 18351 Exp. 6-30-14 ELECTRICAL STATE OF CALIFORNIA

THE STATE OF CALIFORNIA OR ITS OFFICERS OR AGENTS SHALL NOT BE RESPONSIBLE FOR THE ACCURACY OR COMPLETENESS OF SCANNED COPIES OF THIS PLAN SHEET.

ABBREVIATIONS:

VDC = VIDEO DETECTION CAMERA

GENERAL NOTES: (THIS SHEET ONLY)

1. EXACT LOCATION OF EQUIPMENT WILL BE APPROVED BY THE ENGINEER.
2. STREET NAME SIGNS WILL BE MOUNTED ON THE SMA BY THE STRAP AND SADDLE METHOD.
3. FOR STREET NAME SIGN DETAILS, SEE SHEET PDQ-1.
4. SIGNAL POLE PLACEMENT: THE STANDARD 2.5 FEET SETBACK FROM THE CURB FACE (ES-4C) IS BEING REPLACE BY THE CLEAR RECOVERY ZONE, EXCEPT FOR POLES A & B WHICH HAVE AN ADJACENT CURB.

CONDUIT AND CONDUCTOR SCHEDULE

CABLE, AWG, AND DLC SCHEDULE				CONDUIT RUN NUMBER										
CABLE TYPE	POLE	PHASE		1	2	3	4	5	6	7	8	9	10	11
VEH-PED 12CSC	A	1,6,6P	*				1 1	1 1	1 1	1 1	1			
	B	4,8	6				1 1	1 1	1 1	1 1	1 1	1 1		
	C	8,6P,8P	6				1 1	1 1	1 1	1 1	1 1	1 1	1 1	
	D	5,6	8				1 1	1 1	1 1	1 1	1 1	1 1	1 1	1 1
	E	2,4,5,8,2P,8P	2				2 1	2 1						
	F	1,2,4,2P,8P	2				1 1	1 1	1 1					
	G	8P	8,*											
3CSC		TOTAL					7 6	7 6	5 5	4 4	4 4	3 3	2 2	1 1
AWG		CIRCUIT												
#6		SIGNAL		2	-	2	-	-	-	-	-	-	-	-
#10		LIGHTING		2	2	-	-	2	2	2	2	2	2	-
#8		EQUIPMENT GROUND		2	1	1	2	1	1	1	1	1	1	1
LOOP DETECTOR														
TYPE B DLC		Ø2		-	-	-	2	2	2	2	-	-	-	-
		Ø4		-	-	-	2	2	2	2	2	2	-	-
		Ø6		-	-	-	2	2	2	2	2	2	2	2
		Ø8		-	-	-	2	-	-	-	-	-	-	-
		TOTAL DLC		-	-	-	8	6	6	6	4	4	2	2
CABLE		EMERGENCY VEHICLE					4	4	3	2	2	1		
CABLE		VIDEO CAMERA COAXIAL		-	-	-	4	4	3	2	2	1	1	-
CABLE		VIDEO CAMERA POWER		-	-	-	4	4	3	2	2	1	1	-
CONDUIT SIZE				2"	2"	2"	2-4"	2-4"	2-4"	4"	4"	4"	4"	4"

* - CONDUCTORS TO BE USED FOR FUTURE SIGNALS

POLE AND EQUIPMENT SCHEDULE

STANDARD				VEHICLE SIGNAL MOUNTING		PEDESTRIAN SIGNAL MOUNTING	APS		LED LUMINAIRE (W)	REFLECTIVE SHEETING SIGNS
POLE	TYPE	SIGNAL MAST ARM	LUMINAIRE MAST ARM	MAST ARM	POLE		Ø	ARROW		
A	29A-5-100	55′	15′	2-MAS	SV-1-T	SP-1-T	-		235	CALIFORNIA AVE, R3-4
B	1-A	-	-	-	TV-2-T	-	6	→	-	-
C	19A-2-100	25′	15′	1-MAS	SV-1-T	SP-2-T	6	←	235	Route 74, R3-4
D	1-A	-	-	-	TV-2-T	-	8	→	-	-
E	29A-5-100	50′	15′	2-MAS	SV-3-T	SP-2-T	2	→	235	CALIFORNIA AVE, R3-4
F	19A-2-100	25′	15′	1-MAS	SV-3-T	SP-1-T	2	←	235	Route 74, R3-4
G	APS POST						8	←		

SIGNAL AND LIGHTING
E-2

JE	01-10-13	B. W. LUTTON	JAIME ESTRADA
REVISED BY	DATE REVISED	CALCULATED-DESIGNED BY	CHECKED BY

FUNCTIONAL SUPERVISOR: DAVID A. GONZALEZ

STATE OF CALIFORNIA - DEPARTMENT OF TRANSPORTATION
Caltrans® ELECTRICAL DESIGN A

LAST REVISION 02-07-13 | DATE PLOTTED => 17-APR-2013 | TIME PLOTTED => 07:21

Dist	COUNTY	ROUTE	POST MILES TOTAL PROJECT	SHEET No.	TOTAL SHEETS
08	Riv	74	35.9	9	23

Theresa Gabriel 2-7-13
REGISTERED ELECTRICAL ENGINEER DATE

3-4-13
PLANS APPROVAL DATE

REGISTERED PROFESSIONAL ENGINEER Theresa A. Gabriel No. E15129 Exp. 6-30-14 ELECT STATE OF CALIFORNIA

THE STATE OF CALIFORNIA OR ITS OFFICERS OR AGENTS SHALL NOT BE RESPONSIBLE FOR THE ACCURACY OR COMPLETENESS OF SCANNED COPIES OF THIS PLAN SHEET.

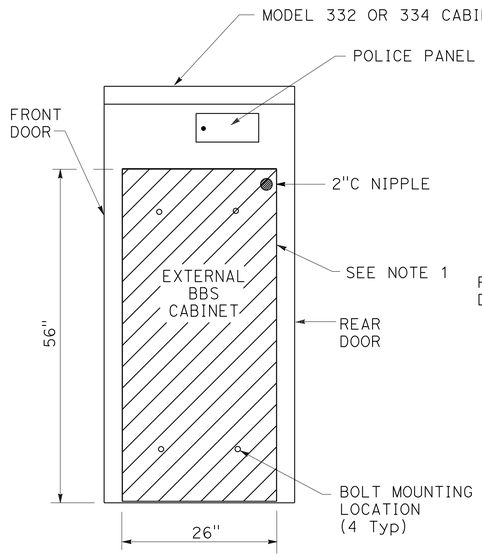

SIDE VIEW

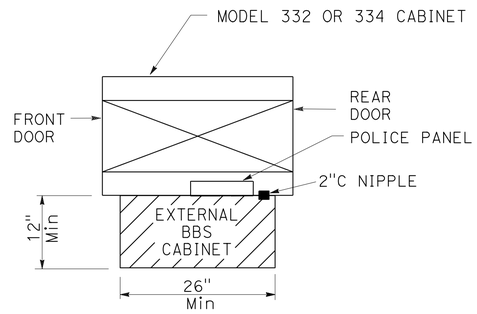

TOP VIEW

EXTERNAL BBS CABINET MOUNTED TO THE MODEL 332 OR 334 CABINET

NOTES: (THIS SHEET ONLY)

1. THE EXTERNAL BBS CABINET SHALL BE MOUNTED TO THE MODEL 332 OR 334 CABINET WITH FOUR 18-8 STAINLESS STEEL HEX HEAD, FULLY-THREADED, 3/8"-16 X 1" BOLTS; TWO WASHERS PER BOLT, DESIGNED FOR 3/8" BOLTS AND ARE 18-8 STAINLESS STEEL, 1" OUTSIDE DIAMETER, ROUND, AND FLAT; AND ONE K-LOCK NUT PER BOLT THAT IS 18-8 STAINLESS STEEL AND A HEX-NUT. THE ENGINEER WILL HAVE TO APPROVE THE BOLT MOUNTING LOCATION PRIOR TO INSTALLATION.
2. THE ANCHOR BOLTS SHALL BE 3/4" Dia X 15" WITH A 2"-90° BEND. THE CABINET MANUFACTURER'S SPECIFICATION SHALL DETERMINE THE LOCATION OF THE ANCHOR BOLTS IN THE FOUNDATION. THE ENGINEER WILL HAVE TO APPROVE THE ANCHOR BOLTS AND ITS LOCATION IN THE FOUNDATION PRIOR TO CONSTRUCTION.
3. THE CONTRACTOR SHALL VERIFY THE DIMENSIONS OF THE BBS CABINET PRIOR TO CONSTRUCTING THE FOUNDATION OF THE MODIFIED PORTION OF THE Std MODEL 332 AND 334 CABINET FOUNDATION. THE ENGINEER WILL HAVE TO APPROVE ANY NECESSARY DEVIATIONS PRIOR TO CONSTRUCTION.
4. ALL DIMENSIONS ARE NOMINAL.

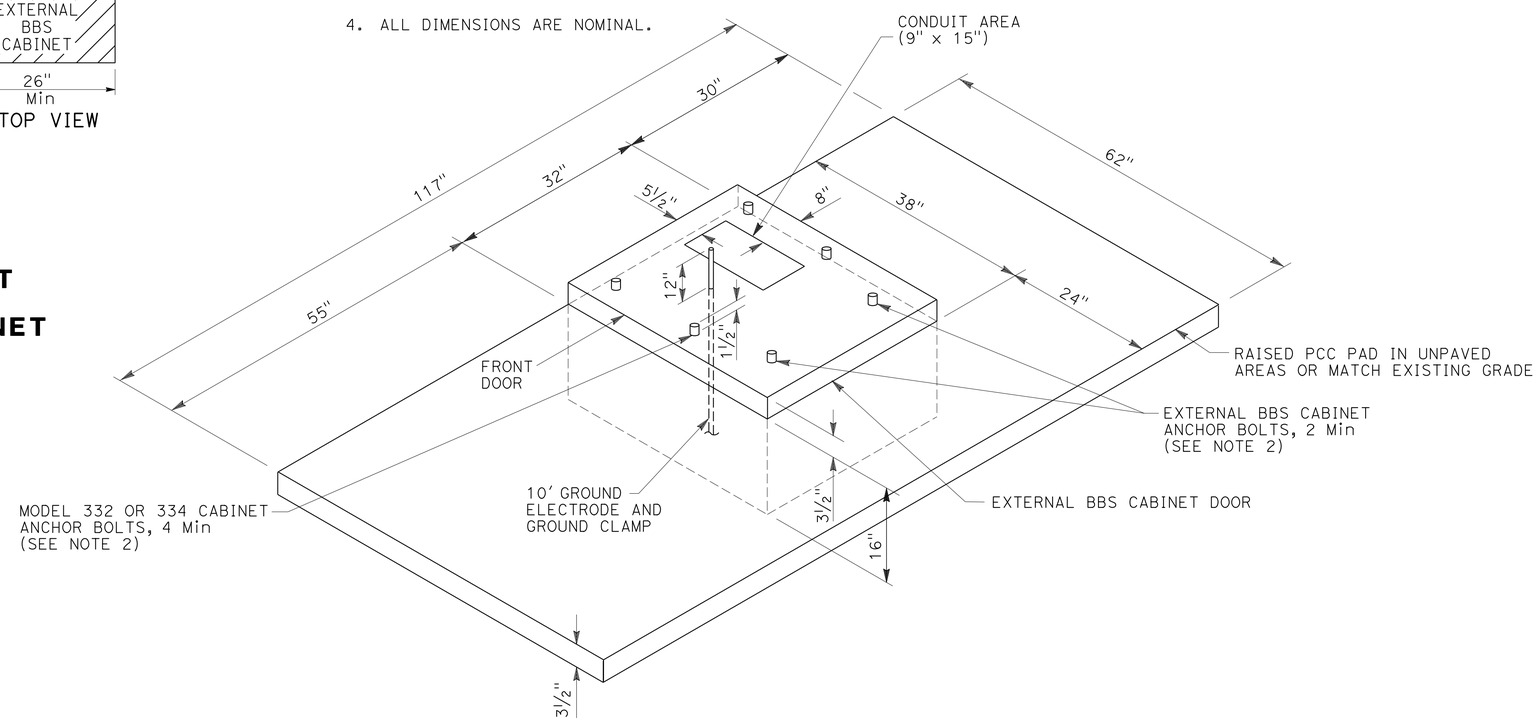

MODIFIED MODEL 332 AND 334 CABINET FOUNDATION DETAIL FOR BATTERY BACKUP SYSTEM (BBS)

(FOR DIMENSIONS AND DETAILS NOT SHOWN AND ADDITIONAL NOTES, SEE SHEET ES-3C OF THE STANDARD PLANS FOR MODEL 332 AND 334 CABINETS)

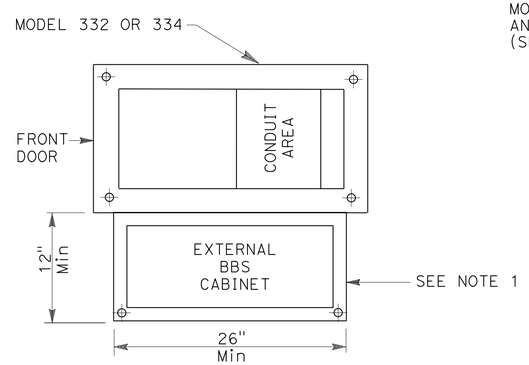

BASE PLAN FOR BBS MOUNTED TO THE MODEL 332 OR 334 CABINET

(FOR DIMENSIONS AND DETAILS NOT SHOWN, SEE SHEET A6-1 TO A6-4, CABINET HOUSING DETAILS OF THE TRANSPORTATION ELECTRICAL EQUIPMENT SPECIFICATION (TEES))

(BBS FOUNDATION DETAILS)

ELECTRICAL DETAILS

NO SCALE

E-3

STATE OF CALIFORNIA - DEPARTMENT OF TRANSPORTATION
Caltrans® ELECTRICAL DESIGN B

FUNCTIONAL SUPERVISOR: DAVID A GONZALEZ
CALCULATED-DESIGNED BY: THERESA A. GABRIEL
CHECKED BY: JAIME ESTRADA
REVISED BY
DATE REVISED

LAST REVISION 02-07-13 | DATE PLOTTED => 16-APR-2013 | TIME PLOTTED => 07:39

Dist	COUNTY	ROUTE	POST MILES TOTAL PROJECT	SHEET No.	TOTAL SHEETS
08	Riv	74	35.9	10	23

Theresa Gabriel 2-7-13
REGISTERED ~~ELECTRICAL~~ ENGINEER DATE

3-4-13
PLANS APPROVAL DATE

REGISTERED PROFESSIONAL ENGINEER Theresa A. Gabriel No. E15129 Exp. 6-30-14 ELECT STATE OF CALIFORNIA

THE STATE OF CALIFORNIA OR ITS OFFICERS OR AGENTS SHALL NOT BE RESPONSIBLE FOR THE ACCURACY OR COMPLETENESS OF SCANNED COPIES OF THIS PLAN SHEET.

LEGEND: (THIS SHEET ONLY)

PTS = POWER TRANSFER SWITCH
UPS = UNINTERRUPTIBLE POWER SUPPLY
UPSC = UNINTERRUPTIBLE POWER SUPPLY CONTROLLER
UPSM = UPS MODE
BP = BYPASS
MBPS = MANUAL BYPASS SWITCH
AC+ = UNGROUNDED CONDUCTOR
AC- = GROUNDED CONDUCTOR
C = COMMON
Grn = GREEN
Blk = BLACK
Wht = WHITE
SF = STATE-FURNISHED
Batt = BATTERY
Temp = TEMPERATURE
TB = TERMINAL BOARD
Cntl = CONTROL
Gnd = GROUND

NOTES: (THIS SHEET ONLY)

1. TYPE B REFERS TO THE BBS EQUIPMENT FROM MANUFACTURER B.
2. CASE-1 REFERS TO THE SITUATION WHEN THE ENTIRE BBS EQUIPMENT INCLUDING THE BATTERIES ARE INSTALLED IN THE BBS CABINET.
3. THE LOCATION OF THE 2"C NIPPLE WILL BE DETERMINED BY THE ENGINEER IN THE FIELD.
4. THE CONTRACTOR SHALL FURNISH AND INSTALL A NEMA-1 ENCLOSURE WITH 30 A, 1P, 120/240 VOLTS RATED CIRCUIT BREAKER MANUFACTURED PER UL STANDARD 489.
5. A TEMPERATURE PROBE SHALL BE ATTACHED TO THE BATTERY BY TAPE OR ATTACHED TO THE NEGATIVE TERMINAL OF THE BATTERY.
6. THE ELECTRICAL POWER FOR THE COOLING FAN FOR THE BBS CABINET SHALL BE TAPPED FROM THE BOTTOM OF THE TB IN THE 332 CABINET.
7. THE CONTRACTOR SHALL PROVIDE A 9-WIRE WIRING HARNESS OR BUNDLED 9 MULTICOLOR CONDUCTORS, #18 AWG WIRES FROM THE RELAY ON THE INVERTER/CHARGER UNIT TO THE CONTROLLER. THE ENDS OF THE CONDUCTORS SHALL BE INSULATED WITH TAPE AND A SIX-FOOT COIL ON EACH END.

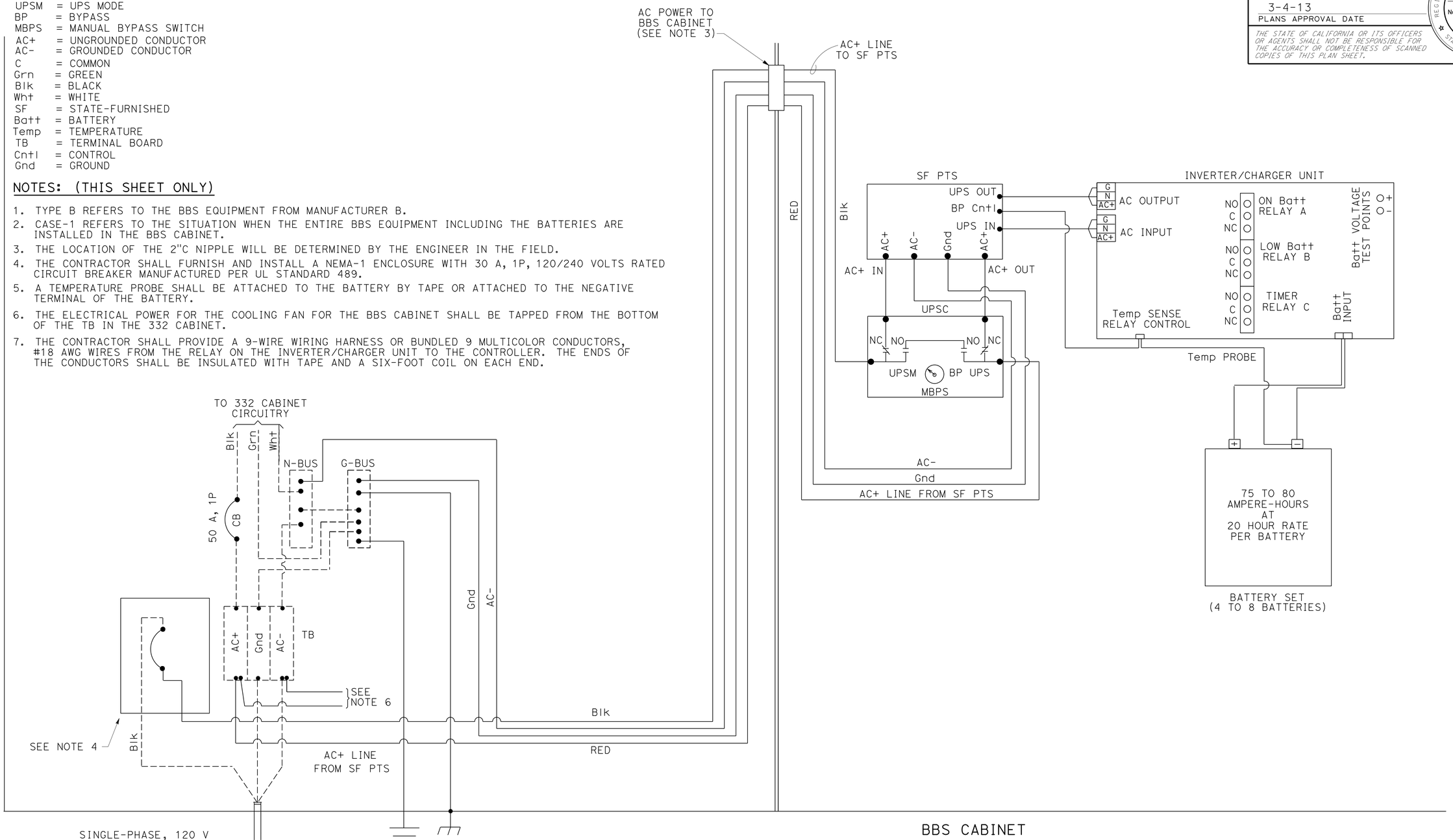

(BBS POWER CONNECTION DIAGRAM, TYPE B, CASE-1)

ELECTRICAL DETAILS
NO SCALE
E-4

STATE OF CALIFORNIA - DEPARTMENT OF TRANSPORTATION
Caltrans® **ELECTRICAL DESIGN B**
FUNCTIONAL SUPERVISOR: DAVID A GONZALEZ
CALCULATED-DESIGNED BY: THERESA A. GABIEL
CHECKED BY: JAIME ESTRADA
REVISED BY
DATE REVISED

LAST REVISION 02-07-13 | DATE PLOTTED => 16-APR-2013 | TIME PLOTTED => 07:39

Dist	COUNTY	ROUTE	POST MILES TOTAL PROJECT	SHEET No.	TOTAL SHEETS
08	Riv	74	35.9	11	23

Theresa Gabriel 2-7-13
REGISTERED ELECTRICAL ENGINEER DATE

3-4-13
PLANS APPROVAL DATE

REGISTERED PROFESSIONAL ENGINEER Theresa A. Gabriel No. E15129 Exp. 6-30-14 ELECT STATE OF CALIFORNIA

THE STATE OF CALIFORNIA OR ITS OFFICERS OR AGENTS SHALL NOT BE RESPONSIBLE FOR THE ACCURACY OR COMPLETENESS OF SCANNED COPIES OF THIS PLAN SHEET.

LEGEND: (THIS SHEET ONLY)

PTS = POWER TRANSFER SWITCH
UPS = UNINTERRUPTIBLE POWER SUPPLY
UPSC = UNINTERRUPTIBLE POWER SUPPLY CONTROLLER
UPSM = UPS MODE
BP = BYPASS
MBPS = MANUAL BYPASS SWITCH
AC+ = UNGROUNDED CONDUCTOR
AC- = GROUNDED CONDUCTOR
C = COMMON
Grn = GREEN
Blk = BLACK
Wht = WHITE
SF = STATE-FURNISHED
TB = TERMINAL BOARD
Cntl = CONTROL
Gnd = GROUND
Temp = TEMPERATURE
Batt = BATTERY

NOTES: (THIS SHEET ONLY)

1. TYPE A REFERS TO THE BBS EQUIPMENT FROM MANUFACTURER A.
2. CASE-1 REFERS TO THE SITUATION WHEN THE ENTIRE BBS EQUIPMENT INCLUDING THE BATTERIES ARE INSTALLED IN THE BBS CABINET.
3. THE LOCATION OF THE 2"C NIPPLE WILL BE DETERMINED BY THE ENGINEER IN THE FIELD.
4. THE CONTRACTOR SHALL FURNISH AND INSTALL A NEMA-1 ENCLOSURE WITH 30 A, 1P, 120/240 VOLTS RATED CIRCUIT BREAKER MANUFACTURED PER UL STANDARD 489.
5. A TEMPERATURE PROBE SHALL BE ATTACHED TO THE BATTERY BY TAPE OR ATTACHED TO THE NEGATIVE TERMINAL OF THE BATTERY.
6. THE ELECTRICAL POWER FOR THE COOLING FAN FOR THE BBS CABINET SHALL BE TAPPED FROM THE BOTTOM OF THE TB IN THE 332 CABINET.
7. THE CONTRACTOR SHALL PROVIDE A 9-WIRE WIRING HARNESS OR BUNDLED 9 MULTICOLOR CONDUCTORS, #18 AWG WIRES FROM THE RELAY ON THE INVERTER/CHARGER UNIT TO THE CONTROLLER. THE ENDS OF THE CONDUCTORS SHALL BE INSULATED WITH TAPE AND A SIX-FOOT COIL ON EACH END.

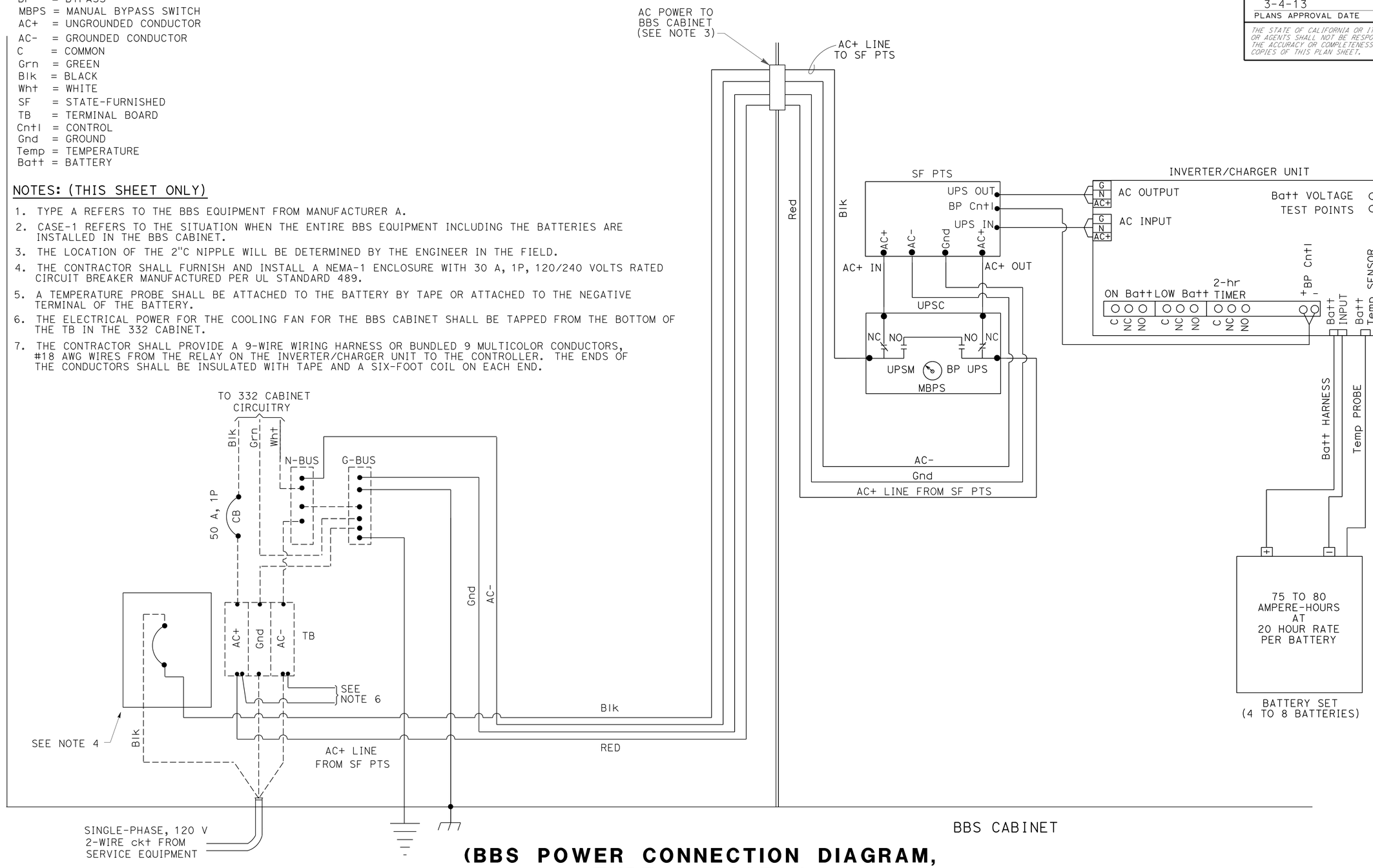

(BBS POWER CONNECTION DIAGRAM, TYPE A, CASE-1)

ELECTRICAL DETAILS

NO SCALE

E-5

STATE OF CALIFORNIA - DEPARTMENT OF TRANSPORTATION
Caltrans® ELECTRICAL DESIGN B

FUNCTIONAL SUPERVISOR: DAVID A GONZALEZ
CALCULATED-DESIGNED BY: THERESA A. GABRIEL
CHECKED BY: JAIME ESTRADA
REVISED BY
DATE REVISED

LAST REVISION 02-07-13
DATE PLOTTED => 16-APR-2013
TIME PLOTTED => 07:39

Dist	COUNTY	ROUTE	POST MILES TOTAL PROJECT	SHEET No.	TOTAL SHEETS
08	Riv	74	35.9	12	23

Theresa Gabriel 2-7-13
REGISTERED ~~ELECTRICAL~~ ENGINEER DATE

3-4-13
PLANS APPROVAL DATE

REGISTERED PROFESSIONAL ENGINEER
Theresa A. Gabriel
No. E15129
Exp. 6-30-14
ELECT
STATE OF CALIFORNIA

THE STATE OF CALIFORNIA OR ITS OFFICERS OR AGENTS SHALL NOT BE RESPONSIBLE FOR THE ACCURACY OR COMPLETENESS OF SCANNED COPIES OF THIS PLAN SHEET.

LEFT RIGHT BOTH

PEDESTRIAN PUSH BUTTON SIGNS (R10-3)

DETAIL A

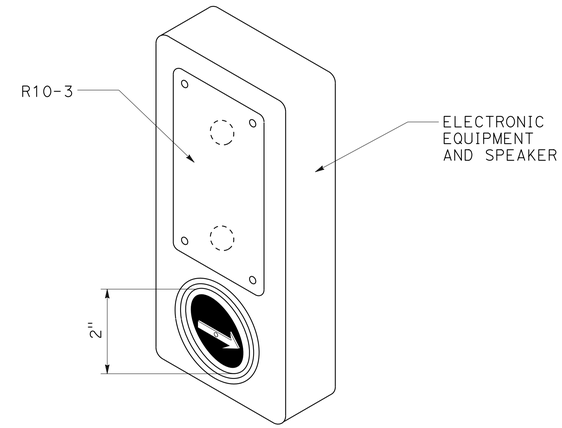

ACCESSIBLE PEDESTRIAN SIGNAL

DETAIL B

PERSON WALKING INTERVAL

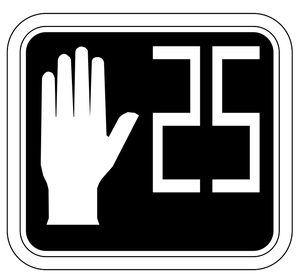

FLASHING UPRAISED HAND INTERVAL

STEADY UPRAISED HAND INTERVAL

PEDESTRIAN SIGNAL FACE

DETAIL C

ELECTRICAL DETAILS

NO SCALE

E-6

STATE OF CALIFORNIA - DEPARTMENT OF TRANSPORTATION
Caltrans® ELECTRICAL DESIGN B

FUNCTIONAL SUPERVISOR: DAVID A GONZALEZ
CALCULATED-DESIGNED BY: THERESA A. GABRIEL
CHECKED BY: JAIME ESTRADA
REVISED BY
DATE REVISED

LAST REVISION 02-07-13
DATE PLOTTED => 16-APR-2013
TIME PLOTTED => 07:39

Dist	COUNTY	ROUTE	POST MILES TOTAL PROJECT	SHEET No.	TOTAL SHEETS
08	Riv	74	35.9	13	23

REGISTERED ELECTRICAL ENGINEER 2-7-13 DATE

3-4-13
PLANS APPROVAL DATE

REGISTERED PROFESSIONAL ENGINEER
JAIME ESTRADA
No. E 18351
Exp. 06/30/2014
ELECTRICAL
STATE OF CALIFORNIA

THE STATE OF CALIFORNIA OR ITS OFFICERS OR AGENTS SHALL NOT BE RESPONSIBLE FOR THE ACCURACY OR COMPLETENESS OF SCANNED COPIES OF THIS PLAN SHEET.

NOTE:

1. THE QUANTITIES ON THIS SHEET ARE NOT A SEPARATE PAY ITEM AND ARE FOR INFORMATION ONLY.

SIGNAL AND LIGHTING

SHEET No.	1½"C TYPE 3	4"C TYPE 3	No. 5 PB	No. 6 PB	No. 6(E) PB	No. 10 CONDUCTOR	No. 8 (G)	No. 6 CONDUCTOR	3CSC CABLE	12CSC CABLE	EVP CABLE	VIVIDS POWER CABLE	VIVIDS VIDEO CABLE	TYPE E LOOPS
	LF	LF	EA	EA	EA	LF	LF	LF	LF	LF	LF	LF	LF	EA
E-1	1500	500	11	7	1	1500	1500	100	1000	800	1000	1000	1000	7

SHEET No.	TYPE III-CF SERVICE ENCLOSURE	SERVICE ENCLOSURE FOUNDATION	MODEL 332 CABINET	MODEL 332 CABINET FOUNDATION	APS POST	1-A POLES	19A-2-100 POLES	29A-5-100 POLES	FOUNDATION 1-A	STANDARD FOUNDATION CASE 2	STANDARD FOUNDATION CASE 5	BATTERY BACK-UP SYSTEM
	EA	EA	EA	EA	EA	EA	EA	EA	EA	EA	EA	EA
E-1	1	1	1	1	1	2	2	2	2	2	2	1

ELECTRICAL QUANTITIES

E-7

STATE OF CALIFORNIA - DEPARTMENT OF TRANSPORTATION
Caltrans ELECTRICAL DESIGN B

FUNCTIONAL SUPERVISOR: DAVID A GONZALEZ
CALCULATED-DESIGNED BY: JAIME ESTRADA
CHECKED BY: DAVID A GONZALEZ
REVISED BY
DATE REVISED

LAST REVISION 02-07-13
DATE PLOTTED => 16-APR-2013
TIME PLOTTED => 07:39

Dist	COUNTY	ROUTE	POST MILES TOTAL PROJECT	SHEET No.	TOTAL SHEETS
08	Riv	74	35.9	14	23

REGISTERED CIVIL ENGINEER 12-7-12 DATE

3-4-13
PLANS APPROVAL DATE

REGISTERED PROFESSIONAL ENGINEER Gurinderpal Bhullar No. C48815 Exp. 9-30-14 CIVIL STATE OF CALIFORNIA

THE STATE OF CALIFORNIA OR ITS OFFICERS OR AGENTS SHALL NOT BE RESPONSIBLE FOR THE ACCURACY OR COMPLETENESS OF SCANNED COPIES OF THIS PLAN SHEET.

LEGEND

- TRAFFIC CONE
- TEMPORARY SIGN
- FLASHING ARROW SIGN (FAS)
- FAS SUPPORT OR TRAILER
- PORTABLE FLASHING BEACON

TABLE 1

APPROACH SPEED	* MINIMUM L	** Max SPACING OF CONES ALONG TAPER
mph	ft	ft
20 and below	80	20
25	125	25
30	180	30
35	245	35
40	320	40
45	540	45
50	600	50
OVER 50	SEE NOTE 11	

* USE L FOR LANE WIDTHS LESS THAN OR EQUAL TO 12'.
** SEE NOTE 10.

TABLE 2

APPROACH SPEED	MINIMUM D	DOWNGRADE MINIMUM D *		
		-3%	-6%	-9%
mph	ft	ft	ft	ft
25 AND BELOW	155	158	165	173
30	200	205	215	227
35	250	257	271	287
40	305	315	333	354
45	360	378	400	427
50	425	446	474	507
OVER 50	SEE NOTE 11			

* USE ON SUSTAINED DOWNGRADE STEEPER THAN -3 PERCENT AND LONGER THAN 1 MILE.

TYPICAL CLOSING OF HALF ROADWAY

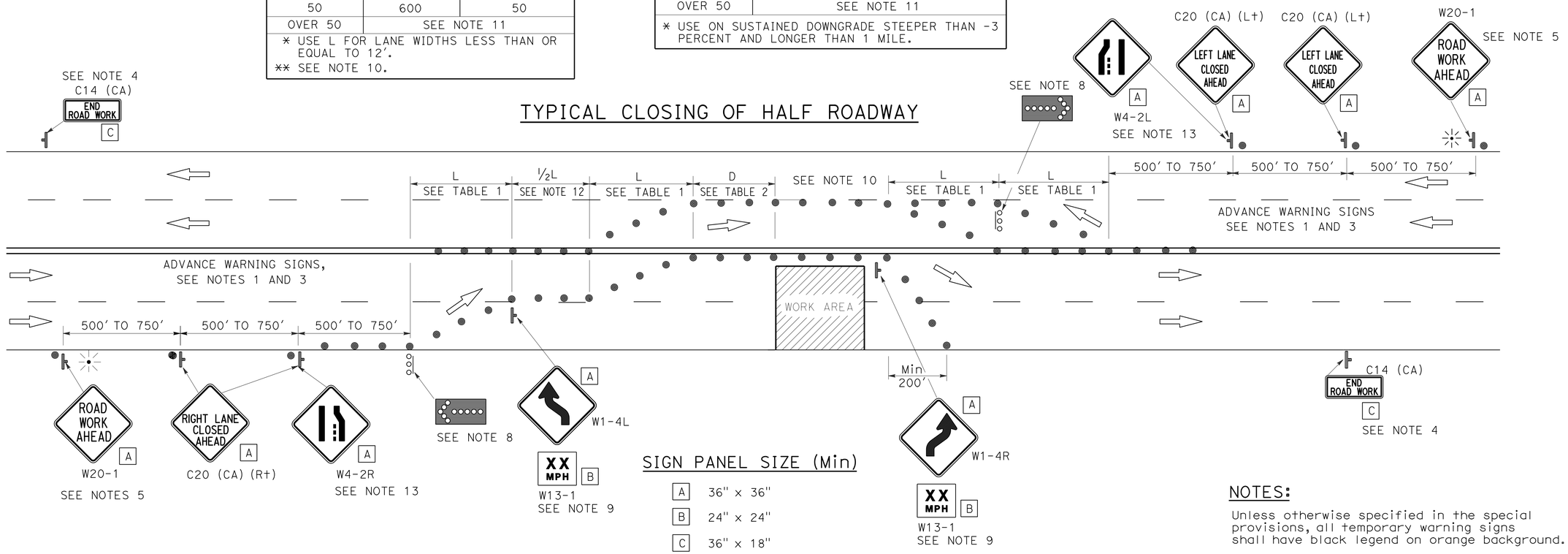

SIGN PANEL SIZE (Min)

- A 36" x 36"
- B 24" x 24"
- C 36" x 18"

NOTES:

Unless otherwise specified in the special provisions, all temporary warning signs shall have black legend on orange background.

California code are designated by (CA). Otherwise, Federal (MUTCD) codes are shown.

NOTES:

1. Where Approach speeds are low, advance warning signs may be placed at 300' spacing and placed closer in urban areas.
2. At least one person shall be assigned to provide full time maintenance of traffic control devices for lane closure unless, otherwise directed by the Engineer.
3. Each advance warning sign in each direction of travel shall be equipped with at least two flags for daytime closure. Each flag shall be at least 16" x 16" in size and shall be orange or fluorescent red-orange in color. Flashing beacons shall be placed at the locations indicated for lane closure during hours of darkness.
4. A C14 (CA) "END ROAD WORK" sign, as appropriate, shall be placed at the end of the lane closure unless the end of work area is obvious, or ends within a larger project's limits.
5. If the W20-1 sign would follow within 2000' of a stationary W20-1 or C11 (CA) "ROAD WORK NEXT _____ MILES", use a C20 (CA) sign for the first advance warning sign.
6. All cones used for lane closures during the hours of darkness shall be fitted with retroreflective bands (or sleeves) as specified in the specifications.
7. Portable delineators, placed at one-half the spacing indicated for traffic cones, may be used instead of cones for daytime closures only.
8. Flashing arrow signs shall be either Type I or Type II.
9. Advisory speed will be determined by the Engineer. The W13-1 Sign will not be required when advisory speed is more than the posted or maximum speed limit.
10. The maximum spacing between cones along a tangent shall be 50' and along a taper shall be approximately as shown in Table 1.
11. For approach speeds over 50 mph, use the "Traffic Control System For Lane Closure On Freeways And Expressways" plan for lane closure details and requirements.
12. Unless otherwise specified in the special provisions, the (½ L) shown between the two (L) lane closure tapers shall be used.
13. When specified in the special provisions, a W4-2 "Lane Ends" symbol sign is to be used in place of the C20 (CA) "RIGHT (LEFT) LANE CLOSED AHEAD" sign.

STATE OF CALIFORNIA
DEPARTMENT OF TRANSPORTATION

TRAFFIC CONTROL SYSTEM FOR LANE CLOSURE ON MULTILANE CONVENTIONAL HIGHWAYS

NO SCALE

TCS-1

STATE OF CALIFORNIA - DEPARTMENT OF TRANSPORTATION
Caltrans

FUNCTIONAL SUPERVISOR | CALCULATED-DESIGNED BY | CHECKED BY | REVISED BY | DATE REVISED

LAST REVISION 00-00-00 | DATE PLOTTED => 16-APR-2013 | TIME PLOTTED => 07:42

Dist	COUNTY	ROUTE	POST MILES TOTAL PROJECT	SHEET No.	TOTAL SHEETS
08	Riv	74	35.9	15	23

REGISTERED CIVIL ENGINEER 12-7-12 DATE

3-4-13
PLANS APPROVAL DATE

REGISTERED PROFESSIONAL ENGINEER Gurinderpal Bhullar No. C48815 Exp. 9-30-14 CIVIL STATE OF CALIFORNIA

THE STATE OF CALIFORNIA OR ITS OFFICERS OR AGENTS SHALL NOT BE RESPONSIBLE FOR THE ACCURACY OR COMPLETENESS OF SCANNED COPIES OF THIS PLAN SHEET.

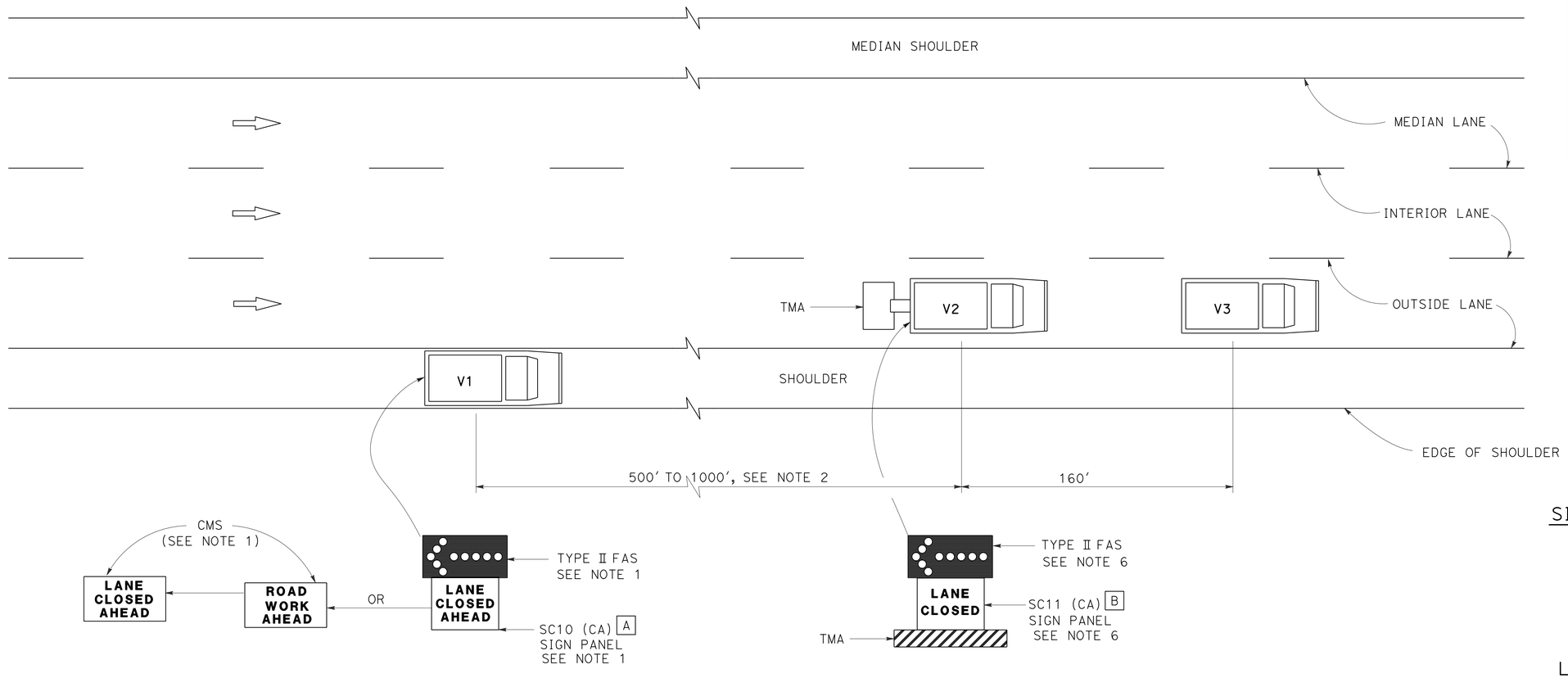

SIGN PANEL SIZE (Min)

A 66" x 36"

B 54" x 42"

LEGEND

V1	SIGN VEHICLE
V2	SHADOW VEHICLE
V3	WORK/APPLICATION VEHICLE
	FLASHING ARROW SIGN (FAS)
CMS	CHANGEABLE MESSAGE SIGN
TMA	TRUCK-MOUNTED ATTENUATOR

MOVING LANE CLOSURE ON MEDIAN LANE OR OUTSIDE LANE OF MULTILANE HIGHWAYS

NOTES:

1. Either a changeable message sign or a SC10 (CA) sign panel and a Type II flashing arrow sign shall be mounted on the rear of sign vehicle V1. A Type II flashing arrow sign shall be mounted on the rear of sign vehicle V1 and used with the SC10 (CA) sign panel. A Type II flashing arrow sign will not be required with the changeable message sign provided the flashing arrow sign symbol is displayed on the changeable message sign board. The changeable message sign shall be sequenced to show the "ROAD WORK AHEAD" message first, followed by the "LANE CLOSED AHEAD" message and then the flashing arrow sign symbol. For median lane closure, the flashing arrow symbol shall be reversed with the arrowhead on the right.

2. If traffic queues develop, sign vehicle V1 should be positioned upstream from the end of queue. Sign vehicle V1 shall be positioned where highly visible when shoulders are not available.

3. A minimum sight distance of 1500' should be provided in advance of sign vehicle V1.

4. Sign vehicle V1 should remain at the beginning of horizontal or vertical curves until the other vehicles (V2 and V3) are far enough beyond the curve to resume the minimum sight distance of 1500'.

5. Vehicle-mounted sign panels shall be Type III, IV, VII, VIII or IX retroreflective sheeting, black on white, black on orange, or black on fluorescent orange, with 6" minimum series D letters per Caltrans sign specifications.

6. Gross Vehicle Weight of shadow vehicle V2 shall be a minimum of 20,000 pounds and shall be equipped with a truck-mounted attenuator. The sign panel shown and a Type II flashing arrow sign shall be mounted on the rear of shadow vehicle V2. For median lane closure the flashing arrow sign symbol shall be displayed with the arrowhead on the right.

7. All vehicles used for lane closures shall be equipped with two-way radios, and the vehicle operators shall maintain communication during the work or application operation.

9. Where sufficient shoulder width is not available, sign vehicle V1 may encroach into the traffic lane staying as close to the edge of shoulder as practicable. Both V1 and V2 shall be equipped with a truck-mounted attenuator. The Gross Vehicle Weight of V1 and V2 shall be at least 20,000 pounds, respectively.

10. When multiple work vehicles are used in close proximity to each other, only one shadow vehicle is required, and spacing between work vehicles shall be minimized in order to deter traffic from entering the closed lane.

STATE OF CALIFORNIA
DEPARTMENT OF TRANSPORTATION

TRAFFIC CONTROL SYSTEM FOR MOVING LANE CLOSURE ON MULTILANE HIGHWAYS (OUTSIDE AND MEDIAN LANES)

NO SCALE

TCS-2

STATE OF CALIFORNIA - DEPARTMENT OF TRANSPORTATION
Caltrans

FUNCTIONAL SUPERVISOR | CALCULATED-DESIGNED BY | CHECKED BY | REVISED BY | DATE REVISED

LAST REVISION 00-00-00 | DATE PLOTTED => 16-APR-2013 | TIME PLOTTED => 07:42

Dist	COUNTY	ROUTE	POST MILES TOTAL PROJECT	SHEET No.	TOTAL SHEETS
08	Riv	74	35.9	16	23

REGISTERED CIVIL ENGINEER 12-7-12 DATE

3-4-13
PLANS APPROVAL DATE

REGISTERED PROFESSIONAL ENGINEER Gurinderpal Bhullar No. C48815 Exp. 9-30-14 CIVIL STATE OF CALIFORNIA

THE STATE OF CALIFORNIA OR ITS OFFICERS OR AGENTS SHALL NOT BE RESPONSIBLE FOR THE ACCURACY OR COMPLETENESS OF SCANNED COPIES OF THIS PLAN SHEET.

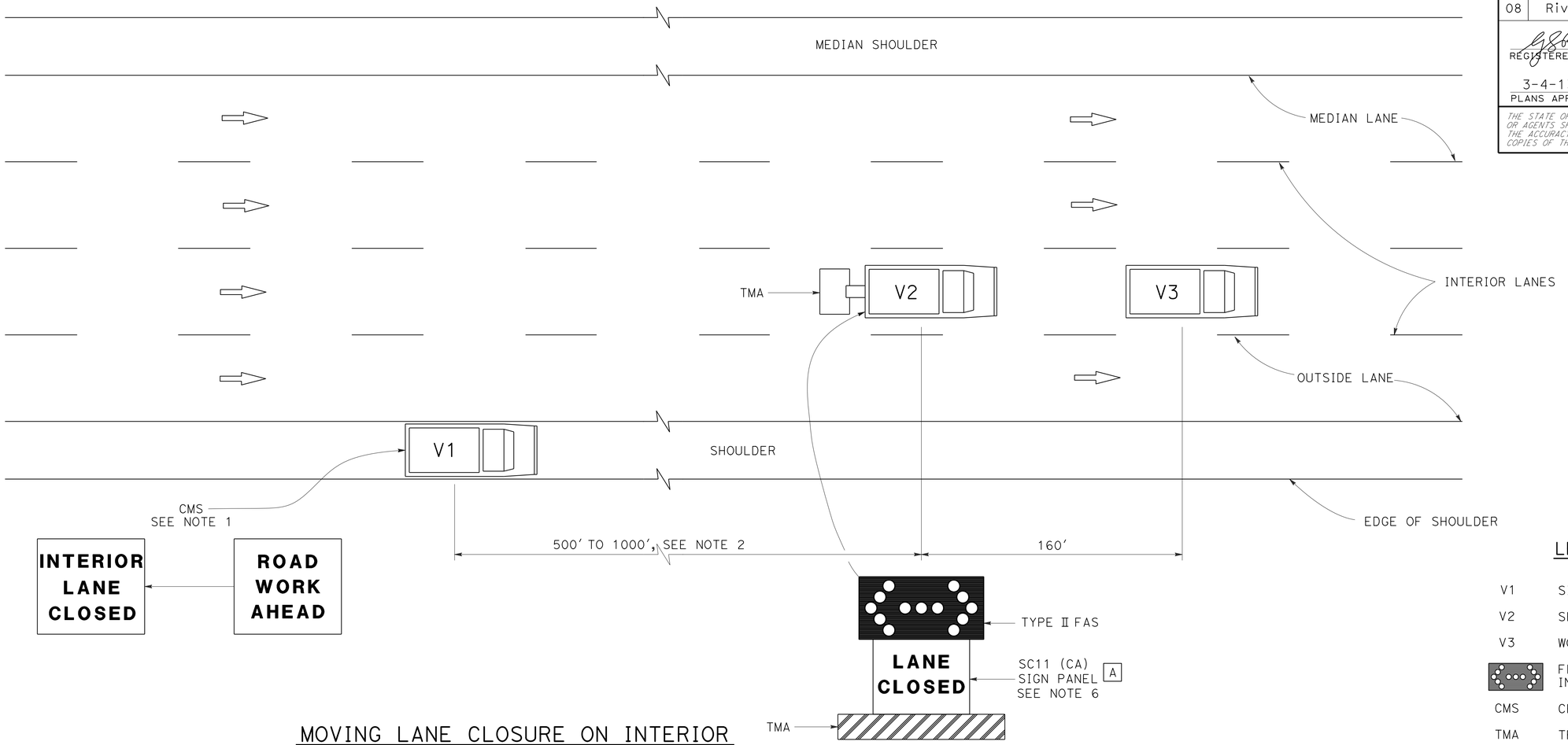

MOVING LANE CLOSURE ON INTERIOR LANE OF MULTILANE HIGHWAYS

LEGEND

V1	SIGN VEHICLE
V2	SHADOW VEHICLE
V3	WORK/APPLICATION VEHICLE
	FLASHING ARROW SIGN (FAS) IN FLASHING DOUBLE ARROW MODE
CMS	CHANGEABLE MESSAGE SIGN
TMA	TRUCK-MOUNTED ATTENUATOR

NOTES:

1. A changeable message sign shall be mounted on the rear of sign vehicle V1. The changeable message sign shall be sequenced to show the "ROAD WORK AHEAD" message first, followed by the "INTERIOR LANE CLOSED" message. The message "CENTER LANE CLOSED" may be used in place of the "INTERIOR LANE CLOSED" message.
2. If traffic queues develop, sign vehicle V1 should be positioned upstream from the end of queue. Sign vehicle V1 shall be positioned where highly visible when shoulders are not available.
3. A minimum sight distance of 1500' should be provided in advance of sign vehicle V1.
4. Sign vehicle V1 should remain at the beginning of horizontal or vertical curves until the other vehicles (V2 and V3) are far enough beyond the curve to resume the minimum sight distance of 1500'.
5. Vehicle-mounted sign panels shall be Type III, IV, VII, VIII, or IX retroreflective sheeting, black on white, black on orange, or black on fluorescent orange, with 6" minimum series D letters per Caltrans sign specifications.
6. Gross Vehicle Weight of shadow vehicle V2 shall be a minimum of 20,000 pounds and shall be equipped with a truck-mounted attenuator. The sign panel shown and a Type II flashing arrow sign shall be mounted on the rear of shadow vehicle V2.
7. All vehicles used for lane closures shall be equipped with two-way radios, and the vehicle operators shall maintain communication during the work or application operation.
8. All vehicles shall be equipped with flashing or rotating amber lights.
9. Where sufficient shoulder width is not available, sign vehicle V1 may encroach into the traffic lane staying as close to the edge of shoulder as practicable. Both V1 and V2 shall be equipped with a truck-mounted attenuator. The Gross Vehicle Weight of V1 and V2 shall be at least 20,000 pounds, respectively.
10. When multiple work vehicles are used in close proximity to each other, only one shadow vehicle is required, and spacing between work vehicles shall be minimized in order to deter traffic from entering the closed lane.

STATE OF CALIFORNIA
DEPARTMENT OF TRANSPORTATION

TRAFFIC CONTROL SYSTEM FOR MOVING LANE CLOSURE ON MULTILANE HIGHWAYS (INTERIOR LANES)

NO SCALE

TCS-3

REVISED BY | DATE REVISED
CALCULATED-DESIGNED BY | CHECKED BY
FUNCTIONAL SUPERVISOR
STATE OF CALIFORNIA - DEPARTMENT OF TRANSPORTATION
Caltrans

LAST REVISION 00-00-00 | DATE PLOTTED => 16-APR-2013 | TIME PLOTTED => 07:42

Dist	COUNTY	ROUTE	POST MILES TOTAL PROJECT	SHEET No.	TOTAL SHEETS
08	Riv	74	35.9	17	23

REGISTERED CIVIL ENGINEER 12-7-12 DATE

3-4-13
PLANS APPROVAL DATE

REGISTERED PROFESSIONAL ENGINEER Gurinderpal Bhullar No. C48815 Exp. 9-30-14 CIVIL STATE OF CALIFORNIA

THE STATE OF CALIFORNIA OR ITS OFFICERS OR AGENTS SHALL NOT BE RESPONSIBLE FOR THE ACCURACY OR COMPLETENESS OF SCANNED COPIES OF THIS PLAN SHEET.

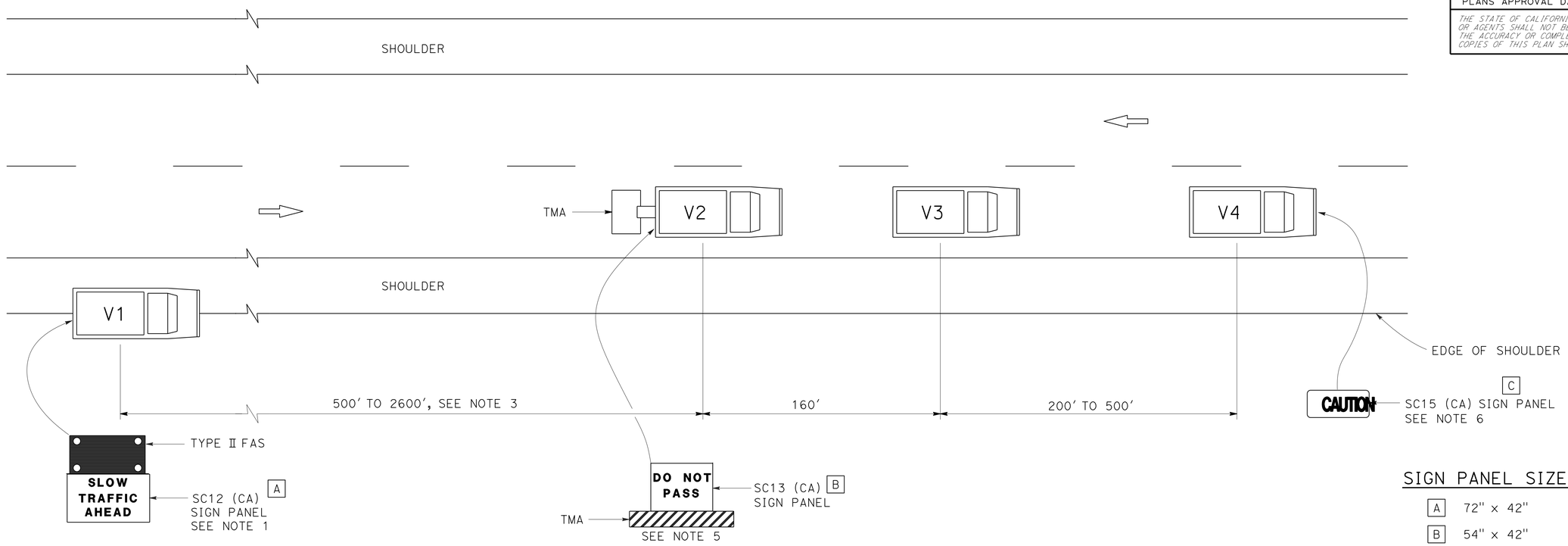

SIGN PANEL SIZE (Min)

A	72" x 42"
B	54" x 42"
C	54" x 24"

LEGEND

V1	SIGN VEHICLE
V2	SHADOW VEHICLE
V3	WORK/APPLICATION VEHICLE
V4	SIGN VEHICLE
TMA	TRUCK-MOUNTED ATTENUATOR
	FLASHING ARROW SIGN (FAS) IN FLASHING CAUTION MODE

NOTES:

1. Either a changeable message sign or a SC12 (CA) "SLOW TRAFFIC AHEAD" sign shall be mounted on the rear of sign vehicle V1. A Type II flashing arrow sign may be used with the SC12 (CA) sign panel.
2. Sign vehicle V1 should be positioned where highly visible when shoulders are not available.
3. If traffic queues develop, sign vehicle V1 should be positioned upstream from the end of queue.
4. Vehicle-mounted sign panels shall be Type III, IV VII, VIII or IX retroreflective sheeting, black on white, black on orange, or black on fluorescent orange, with 6" minimum series D letters per Caltrans sign specifications.
5. Gross Vehicle Weight of shadow vehicle shall be a minimum of 20,000 pounds and shall be equipped with a truck-mounted attenuator. The sign panel shown shall be mounted on the rear of shadow vehicle V2. The message "LANE CLOSED" may be used in place of the "DO NOT PASS" message.
6. The sign panel shown shall be mounted on the front of sign vehicle V4, facing opposing traffic.
7. All vehicles shall be equipped with flashing or rotating amber lights.
8. Sign vehicle V4 will not be required when the work and vehicles V2 and V3 are 2' or more from the centerline of the highway during the work or application operations.
9. All vehicles used for lane closures shall be equipped with two-way radios and the vehicle operators shall maintain communication during the work or application operation.
10. When multiple work vehicles are used in close proximity to each other, only one shadow vehicle is required and spacing between work vehicles shall be minimized in order to deter traffic from entering the closed lane.

STATE OF CALIFORNIA
DEPARTMENT OF TRANSPORTATION

TRAFFIC CONTROL SYSTEM FOR MOVING LANE CLOSURE ON TWO LANE HIGHWAYS

NO SCALE

TCS-4

STATE OF CALIFORNIA - DEPARTMENT OF TRANSPORTATION
Caltrans
FUNCTIONAL SUPERVISOR
CALCULATED-DESIGNED BY
CHECKED BY
REVISED BY
DATE REVISED

LAST REVISION 00-00-00
DATE PLOTTED => 16-APR-2013
TIME PLOTTED => 07:42

Dist	COUNTY	ROUTE	POST MILES TOTAL PROJECT	SHEET No.	TOTAL SHEETS
08	Riv	74	35.9	18	23

REGISTERED CIVIL ENGINEER

April 20, 2012
PLANS APPROVAL DATE

REGISTERED PROFESSIONAL ENGINEER
Roberta L. McLaughlin
No. C40375
Exp. 3-31-13
CIVIL
STATE OF CALIFORNIA

THE STATE OF CALIFORNIA OR ITS OFFICERS OR AGENTS SHALL NOT BE RESPONSIBLE FOR THE ACCURACY OR COMPLETENESS OF SCANNED COPIES OF THIS PLAN SHEET.

TO ACCOMPANY PLANS DATED 3-4-13

2010 REVISED STANDARD PLAN RSP A24A

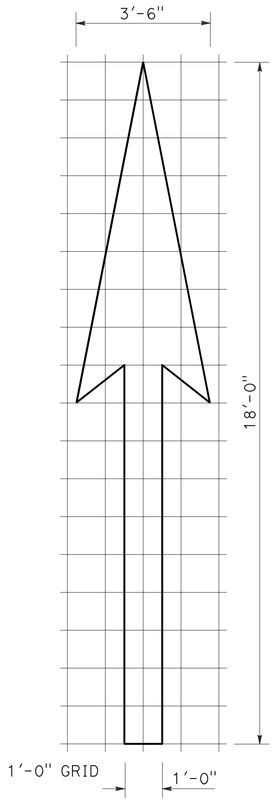

A=25 ft^2

TYPE I 18'-0" ARROW

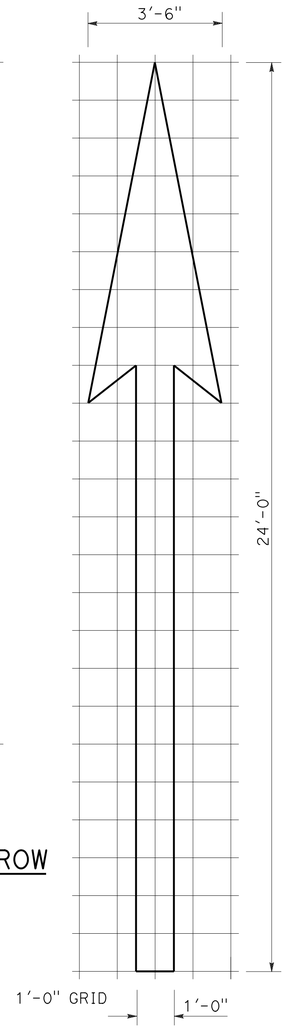

A=31 ft^2

TYPE I 24'-0" ARROW

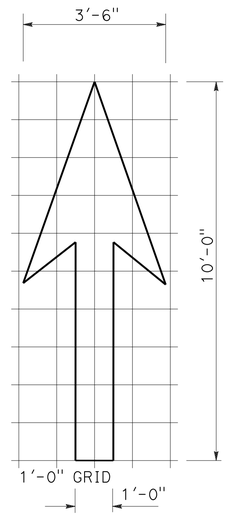

A=14 ft^2

TYPE I 10'-0" ARROW

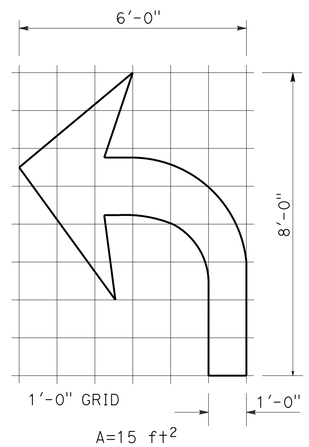

A=15 ft^2

TYPE IV (L) ARROW

(For Type IV (R) arrow, use mirror image)

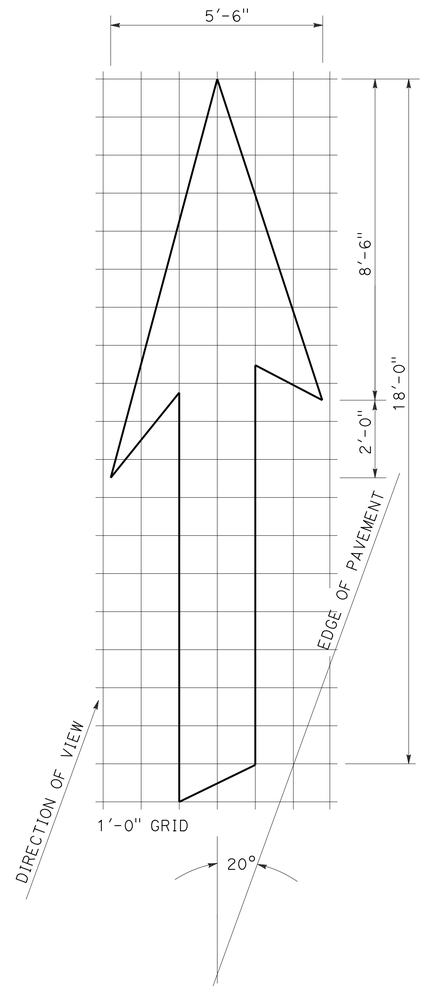

A=42 ft^2

TYPE VI ARROW

Right lane drop arrow
(For left lane, use mirror image)

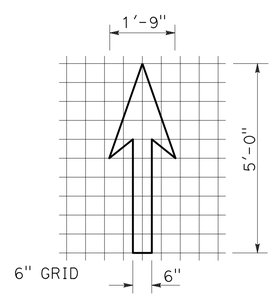

A=3.5 ft^2

BIKE LANE ARROW

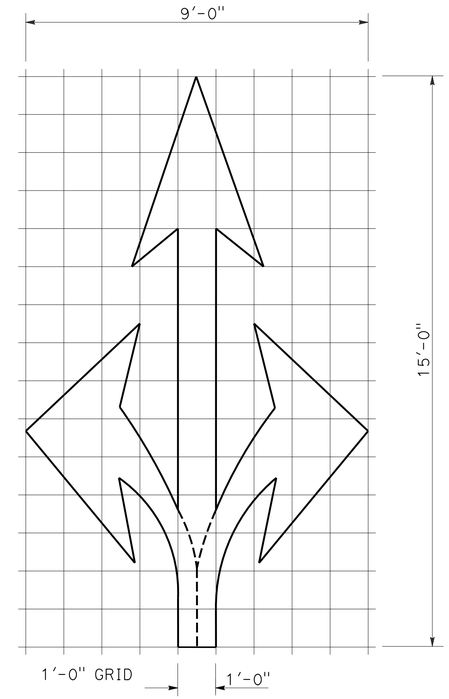

A=36 ft^2

TYPE VIII ARROW

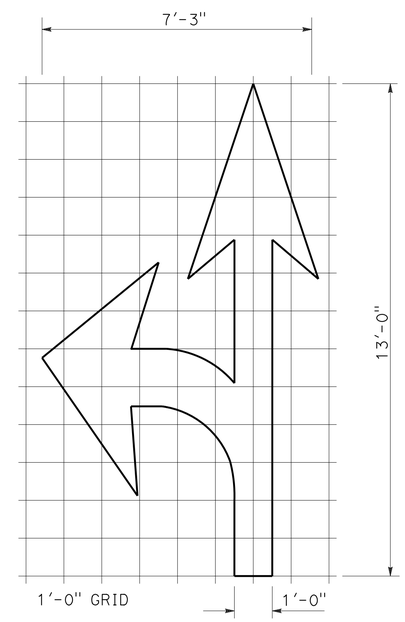

A=27 ft^2

TYPE VII (L) ARROW

(For Type VII (R) arrow, use mirror image)

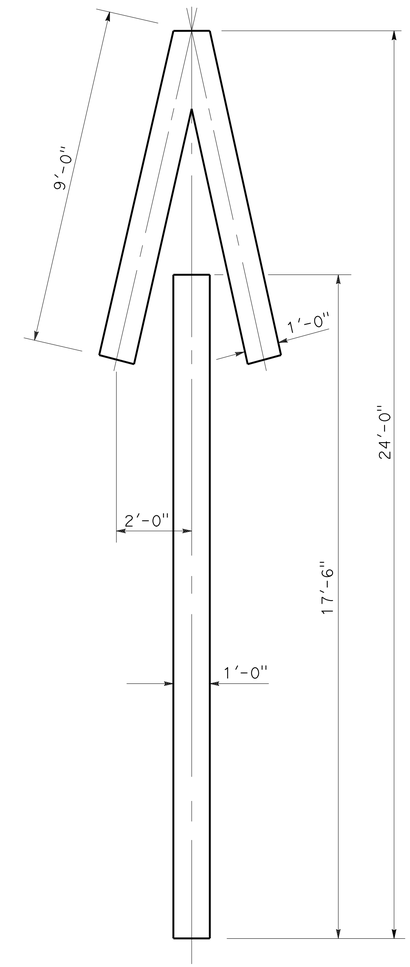

A=33 ft^2

TYPE V ARROW

NOTE:
Minor variations in dimensions may be accepted by the Engineer.

STATE OF CALIFORNIA
DEPARTMENT OF TRANSPORTATION

PAVEMENT MARKINGS ARROWS

NO SCALE

RSP A24A DATED APRIL 20, 2012 SUPERSEDES STANDARD PLAN A24A DATED MAY 20, 2011 - PAGE 13 OF THE STANDARD PLANS BOOK DATED 2010.

REVISED STANDARD PLAN RSP A24A

3-14-12

Dist	COUNTY	ROUTE	POST MILES TOTAL PROJECT	SHEET No.	TOTAL SHEETS
08	Riv	74	35.9	19	23

Roberta L. McLaughlin
REGISTERED CIVIL ENGINEER

October 19, 2012
PLANS APPROVAL DATE

REGISTERED PROFESSIONAL ENGINEER
Roberta L. McLaughlin
No. C40375
Exp. 3-31-13
CIVIL
STATE OF CALIFORNIA

THE STATE OF CALIFORNIA OR ITS OFFICERS OR AGENTS SHALL NOT BE RESPONSIBLE FOR THE ACCURACY OR COMPLETENESS OF SCANNED COPIES OF THIS PLAN SHEET.

NOTE: TO ACCOMPANY PLANS DATED 3-4-13

Minor variations in dimensions may be accepted by the Engineer.

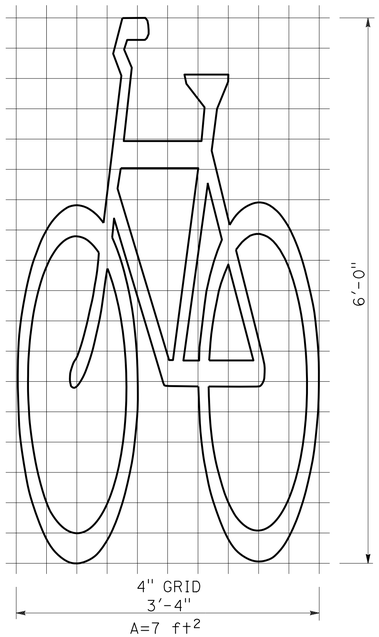

BIKE LANE SYMBOL WITHOUT PERSON

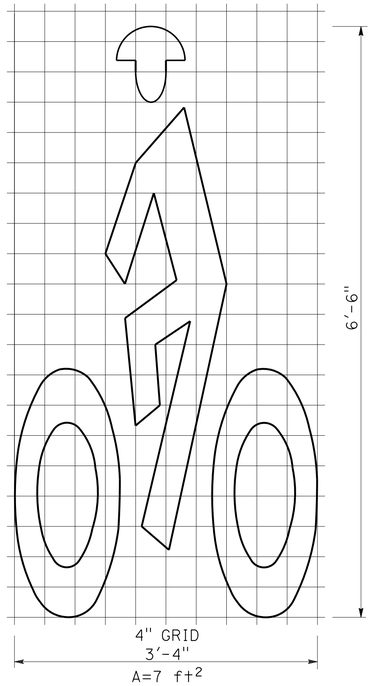

BIKE LANE SYMBOL WITH PERSON

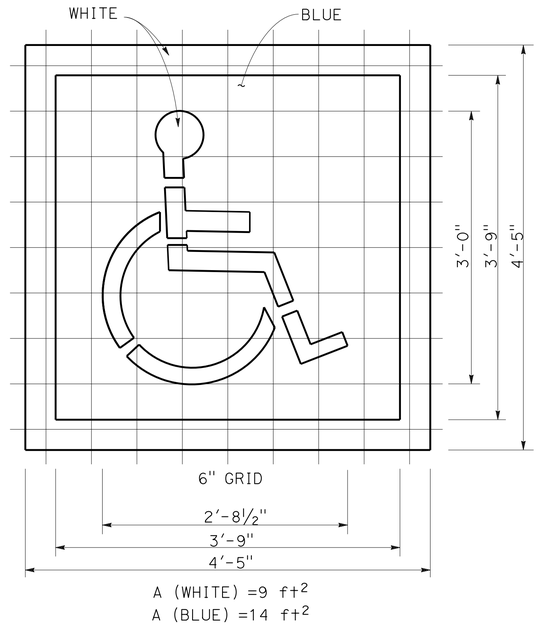

INTERNATIONAL SYMBOL OF ACCESSIBILITY (ISA) MARKING

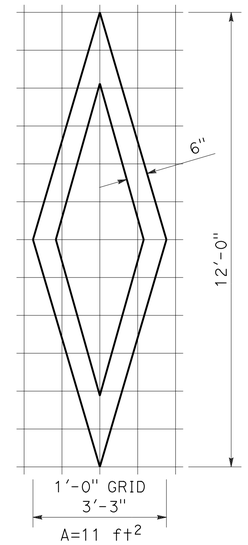

DIAMOND SYMBOL

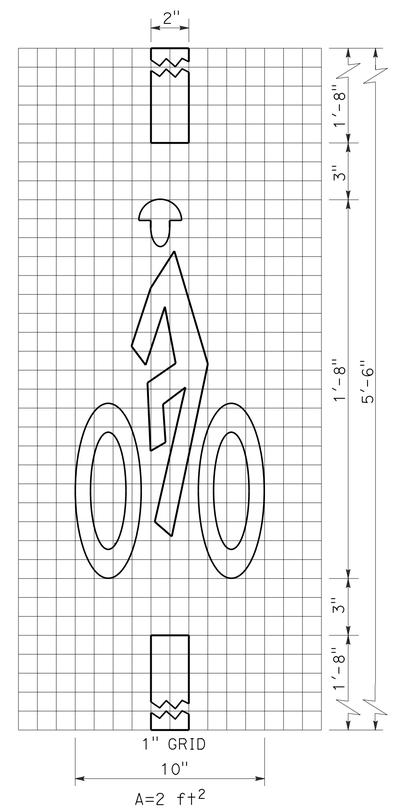

BICYCLE LOOP DETECTOR SYMBOL

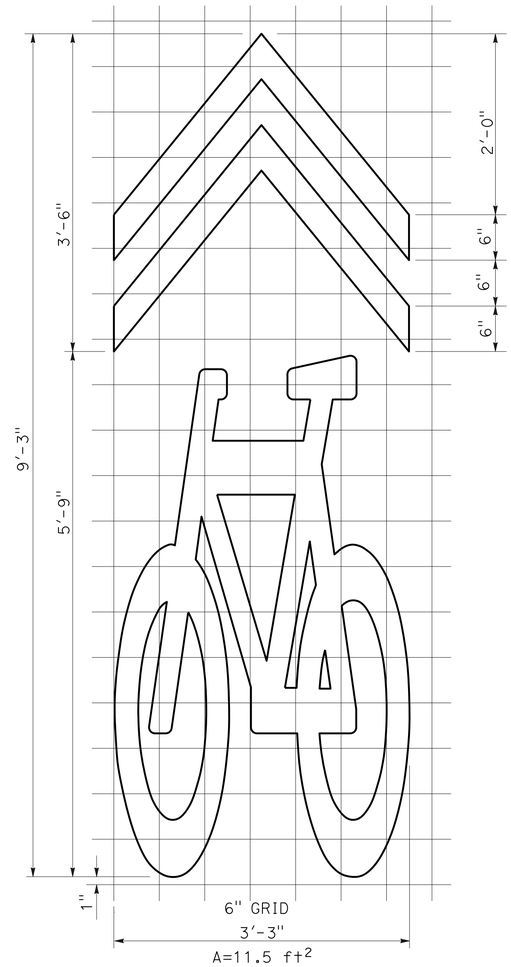

SHARED ROADWAY BICYCLE MARKING

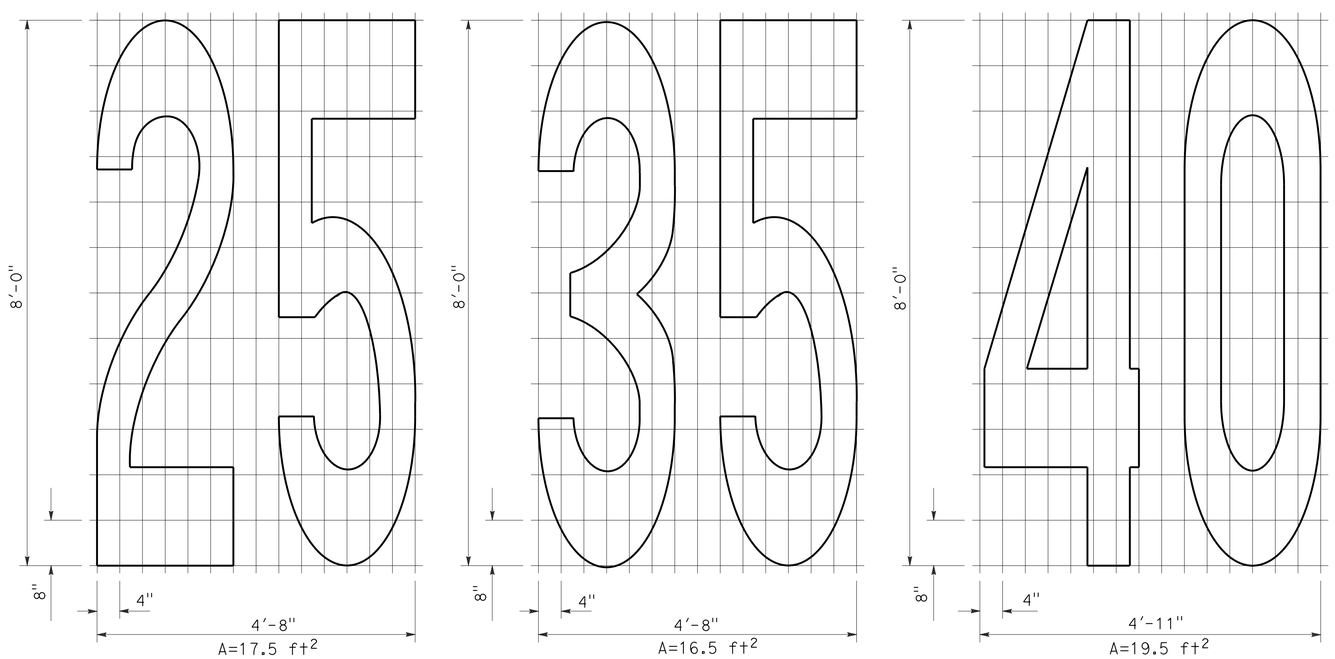

NUMERALS

STATE OF CALIFORNIA
DEPARTMENT OF TRANSPORTATION

PAVEMENT MARKINGS SYMBOLS AND NUMERALS

NO SCALE

RSP A24C DATED OCTOBER 19, 2012 SUPERSEDES STANDARD PLAN A24C DATED MAY 20, 2011 - PAGE 15 OF THE STANDARD PLANS BOOK DATED 2010.

REVISED STANDARD PLAN RSP A24C

2010 REVISED STANDARD PLAN RSP A24C

6-28-12

Dist	COUNTY	ROUTE	POST MILES TOTAL PROJECT	SHEET No.	TOTAL SHEETS
08	Riv	74	35.9	20	23

REGISTERED CIVIL ENGINEER

July 20, 2012
PLANS APPROVAL DATE

REGISTERED PROFESSIONAL ENGINEER
Roberta L. McLaughlin
No. C40375
Exp. 3-31-13
CIVIL
STATE OF CALIFORNIA

THE STATE OF CALIFORNIA OR ITS OFFICERS OR AGENTS SHALL NOT BE RESPONSIBLE FOR THE ACCURACY OR COMPLETENESS OF SCANNED COPIES OF THIS PLAN SHEET.

TO ACCOMPANY PLANS DATED 3-4-13

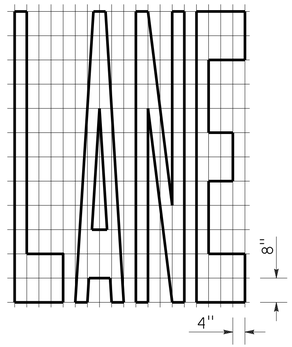

A=24 ft²

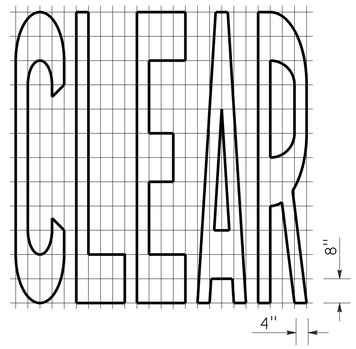

A=27 ft²

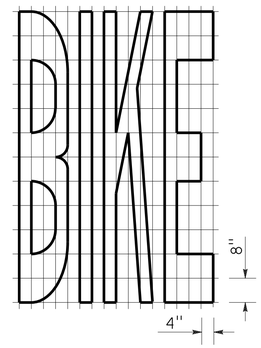

A=21 ft²

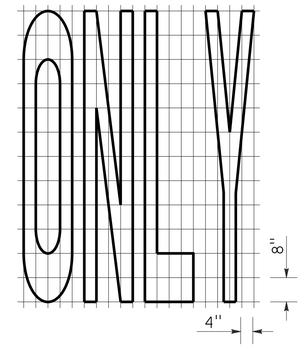

A=22 ft²

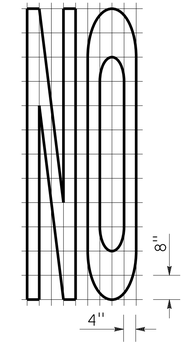

A=14 ft²

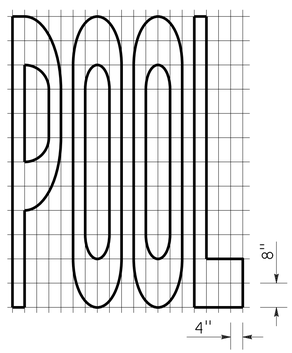

A=23 ft²

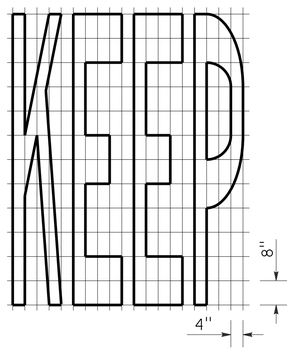

A=24 ft²

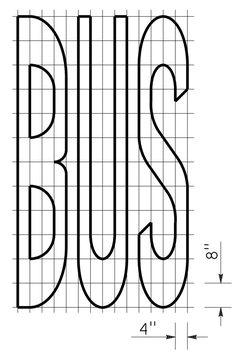

A=20 ft²

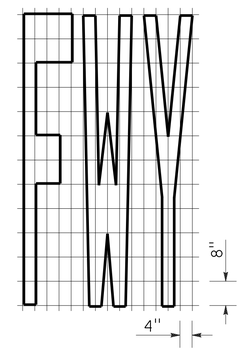

A=16 ft²

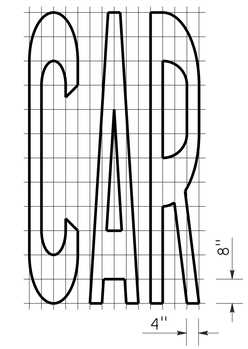

A=17 ft²

WORD MARKINGS			
ITEM	ft²	ITEM	ft²
LANE	24	NO	14
POOL	23	BIKE	21
CAR	17	BUS	20
CLEAR	27	ONLY	22
KEEP	24	FWY	16

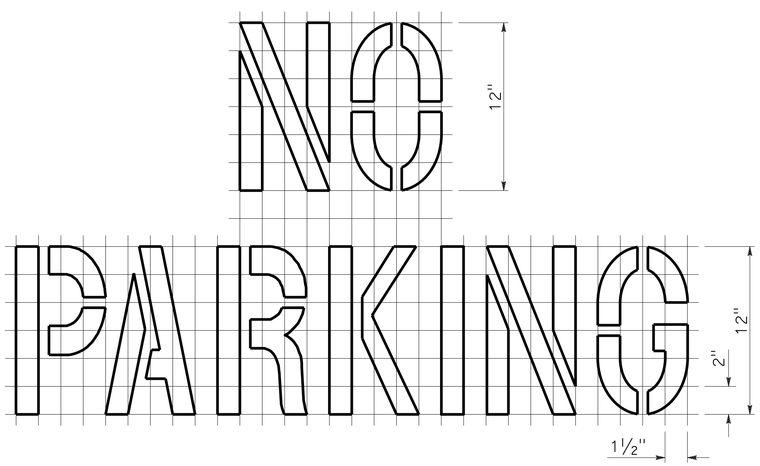

A=2 ft²

See Notes 6 and 7

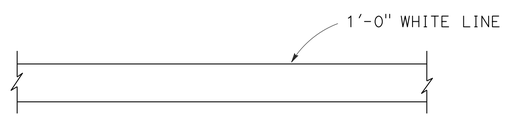

LIMIT LINE (STOP LINE)

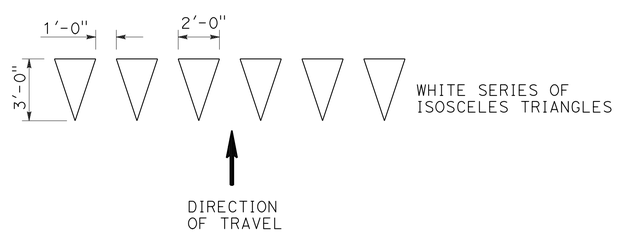

YIELD LINE

NOTES:

1. If a message consists of more than one word, it should read "UP", i.e., the first word should be nearest the driver.
2. The space between words should be at least four times the height of the characters for low speed roads, but not more than ten times the height of the characters. The space may be reduced appropriately where there is limited space because of local conditions.
3. Minor variations in dimensions may be accepted by the Engineer.
4. Portions of a letter, number or symbol may be separated by connecting segments not to exceed 2" in width.
5. The words "NO PARKING" pavement marking is to be used for parking facilities. For typical locations of markings, see Standard Plans A90A and A90B.
6. The words "NO PARKING", shall be painted in white letters no less than 1'-0" high on a contrasting background and located so that it is visible to traffic enforcement officials.

STATE OF CALIFORNIA
DEPARTMENT OF TRANSPORTATION

PAVEMENT MARKINGS WORDS, LIMIT AND YIELD LINES

NO SCALE

RSP A24E DATED JULY 20, 2012 SUPERSEDES STANDARD PLAN A24E
DATED MAY 20, 2011 - PAGE 17 OF THE STANDARD PLANS BOOK DATED 2010.

REVISED STANDARD PLAN RSP A24E

2010 REVISED STANDARD PLAN RSP A24E

6-12-12

Dist	COUNTY	ROUTE	POST MILES TOTAL PROJECT	SHEET No.	TOTAL SHEETS
08	Riv	74	35.9	21	23

REGISTERED CIVIL ENGINEER

July 20, 2012
PLANS APPROVAL DATE

REGISTERED PROFESSIONAL ENGINEER
Roberta L. McLaughlin
No. C40375
Exp. 3-31-13
CIVIL
STATE OF CALIFORNIA

THE STATE OF CALIFORNIA OR ITS OFFICERS OR AGENTS SHALL NOT BE RESPONSIBLE FOR THE ACCURACY OR COMPLETENESS OF SCANNED COPIES OF THIS PLAN SHEET.

TO ACCOMPANY PLANS DATED 3-4-13

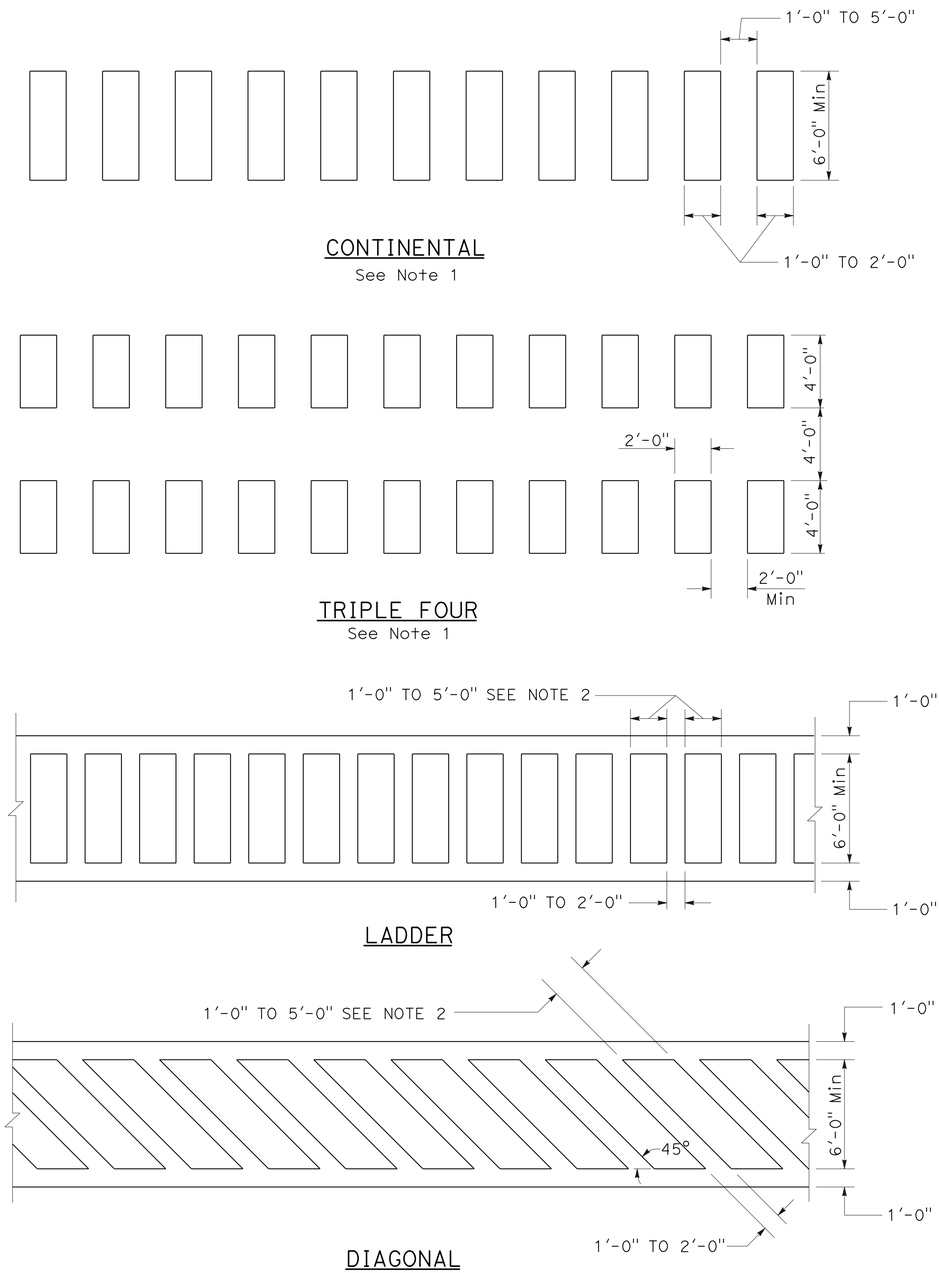

HIGHER VISIBILITY CROSSWALKS

NOTES:

1. Spaces between markings should be placed in wheel tracks of each lane.
2. Spacings not to exceed 2.5 times width of longitudinal line.
3. All crosswalk markings must be white except for those near schools must be yellow.

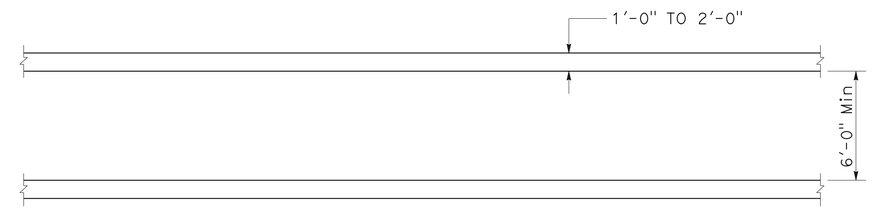

BASIC

STATE OF CALIFORNIA
DEPARTMENT OF TRANSPORTATION

PAVEMENT MARKINGS CROSSWALKS

NO SCALE

RSP A24F DATED JULY 20, 2012 SUPPLEMENTS THE STANDARD PLANS BOOK DATED 2010.

REVISED STANDARD PLAN RSP A24F

2010 REVISED STANDARD PLAN RSP A24F

6-28-12

DIST	COUNTY	ROUTE	POST MILES TOTAL PROJECT	SHEET NO.	TOTAL SHEETS
08	Riv	74	35.9	22	23

Jeffrey G. McRae
REGISTERED ELECTRICAL ENGINEER

January 20, 2012
PLANS APPROVAL DATE

REGISTERED PROFESSIONAL ENGINEER
Jeffery G. McRae
No. E14512
Exp. 6-30-12
ELECTRICAL
STATE OF CALIFORNIA

THE STATE OF CALIFORNIA OR ITS OFFICERS OR AGENTS SHALL NOT BE RESPONSIBLE FOR THE ACCURACY OR COMPLETENESS OF SCANNED COPIES OF THIS PLAN SHEET.

TO ACCOMPANY PLANS DATED 3-4-13

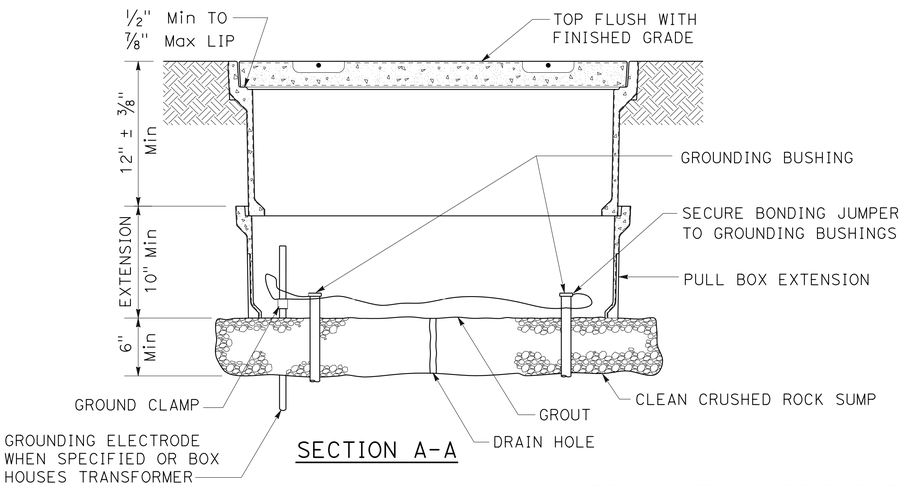

SECTION A-A

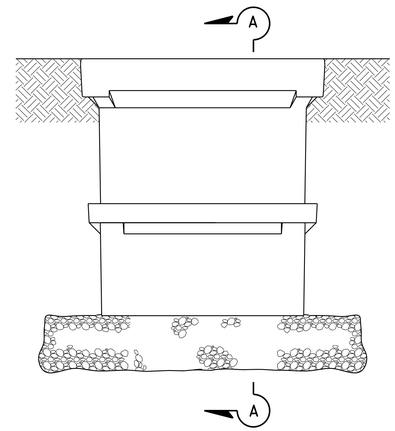

SIDE VIEW

INSTALLATION DETAILS

DETAIL A

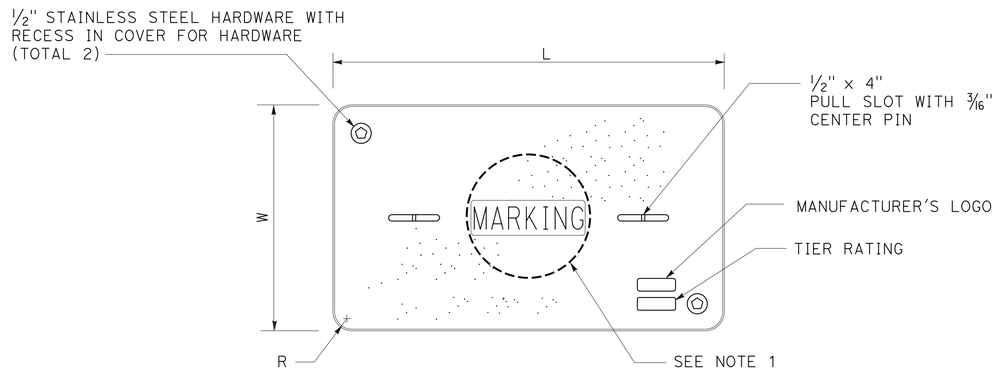

COVER TOP VIEW

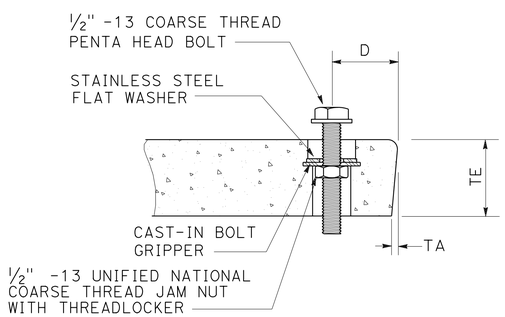

TYPICAL COVER CAPTIVE BOLT

OR SIMILAR

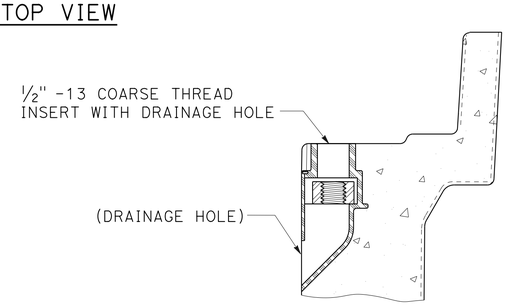

TYPICAL THREADED INSERT

OR SIMILAR

DIMENSION TABLE										
PULL BOX	PULL BOX			COVER						
	MINIMUM DEPTH BOX	MINIMUM DEPTH EXTENSION	MAXIMUM WEIGHT	L	W	R	TE	TA	D	MAXIMUM WEIGHT
No. 3 1/2	12"	N/A	40 lb	1' - 3 3/8"	10 1/8"	1 3/8"	2"	1/8"	1 3/4"	30 lb
No. 5	12"	10"	55 lb	1' - 11 1/4"	1' - 1 3/4"	1 3/8"	2"	1/8"	1 3/4"	60 lb
No. 6	12"	10"	70 lb	2' - 6 1/2"	1' - 5 1/2"	1 3/8"	2"	1/8"	2"	85 lb

NOTES ON PULL BOXES:

1. Pull box covers must be marked as follows: "SERVICE" Service circuits between service point and service disconnect; "SPRINKLER-CONTROL" sprinkler control circuits, 50 V or less; "CALTRANS" on all pull boxes, except pull boxes marked "SPRINKLER-CONTROL"; and "TELEPHONE" Telephone service;

   A) No. 3 1/2 pull box.
      1) "SIGNAL" - Traffic signal circuits with or without street or sign lighting circuits.
      2) "ST LIGHTING" - Street or sign lighting circuits where voltage is under 600 V.

   B) No. 5, 6, 9 or 9A pull box.
      1) "TRAFFIC SIGNAL" - Traffic signal circuits with or without street or sign lighting circuits.
      2) "STREET LIGHTING" - Street or sign lighting circuits where voltage is under 600 V.
      3) "STREET LIGHTING-HIGH VOLTAGE" - Street or sign lighting circuits where voltage is above 600 V.
      4) "IRRIGATION" - Circuits to irrigation controller 120 V or more.
      5) "RAMP METER" - Ramp meter circuits.
      6) "COUNT STATION" - Count or speed monitor circuits.
      7) "COMMUNICATIONS" - Communication circuits.
      8) "TOS COMMUNICATIONS" - TOS communication line.
      9) "TOS POWER" - TOS power.
      10) "TDC POWER" - Telephone demarcation cabinet power.
      11) "CCTV" - Closed circuit television circuits.
      12) "TMS" - Traffic monitoring station circuits.
      13) "CMS" - Changeable message sign circuits.
      14) "HAR" - Highway advisory radio circuits.

2. The nominal dimensions of the opening in which the cover sets must be the same as the cover dimensions (L and W) plus 1/8" or greater.

3. Covers and boxes must be interchangeable with California Standard. When interchanged with a standard, the top surfaces must be flush within 1/8". Top outside radius of covers and pull boxes must have a 1/8" radius.

4. Pull box extension may be another pull box as long as the bottom edge of the pull box can fit into the cover opening.

STATE OF CALIFORNIA
DEPARTMENT OF TRANSPORTATION

ELECTRICAL SYSTEMS (PULL BOX)

NO SCALE

RSP ES-8A DATED JANUARY 20, 2012 SUPPLEMENTS THE STANDARD PLANS BOOK DATED 2010.

REVISED STANDARD PLAN RSP ES-8A

2010 REVISED STANDARD PLAN RSP ES-8A

Dist	COUNTY	ROUTE	POST MILES TOTAL PROJECT	SHEET No.	TOTAL SHEETS
08	Riv	74	35.9	23	23

REGISTERED ELECTRICAL ENGINEER

July 20, 2012
PLANS APPROVAL DATE

REGISTERED PROFESSIONAL ENGINEER
Jeffery G. McRae
No. E14512
Exp. 6-30-14
ELECTRICAL
STATE OF CALIFORNIA

THE STATE OF CALIFORNIA OR ITS OFFICERS OR AGENTS SHALL NOT BE RESPONSIBLE FOR THE ACCURACY OR COMPLETENESS OF SCANNED COPIES OF THIS PLAN SHEET.

TO ACCOMPANY PLANS DATED 3-4-13

ISOFOOTCANDLE CURVE - MINIMUM

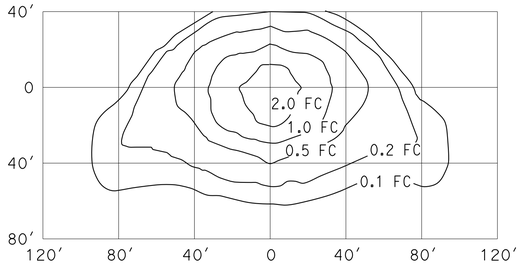

TYPE III MEDIUM CUTOFF

Cutoff Luminaire
34′ Mounting Height
Lamp operated at 22,000 lm
200-W high pressure sodium lamp
ANSI Designation S66

ISOFOOTCANDLE CURVE - MINIMUM

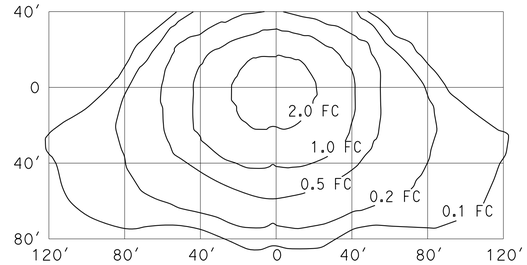

TYPE III MEDIUM CUTOFF

Cutoff Luminaire
40′ Mounting Height
Lamp operated at 37,000 lm
310-W high pressure sodium lamp
ANSI Designation S67

ISOFOOTCANDLE CURVE - MINIMUM

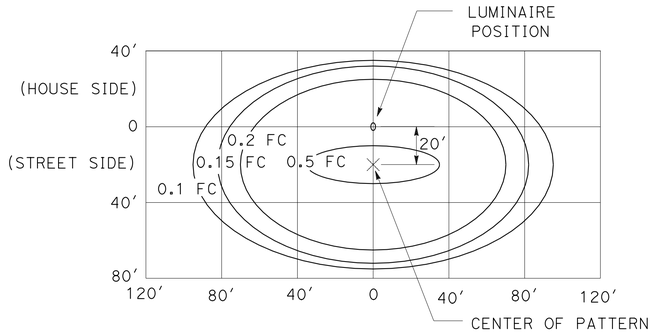

LED LUMINAIRE ROADWAY 1

200-W HPS Equivalent at 34′ Mounting Height

ISOFOOTCANDLE CURVE - MINIMUM

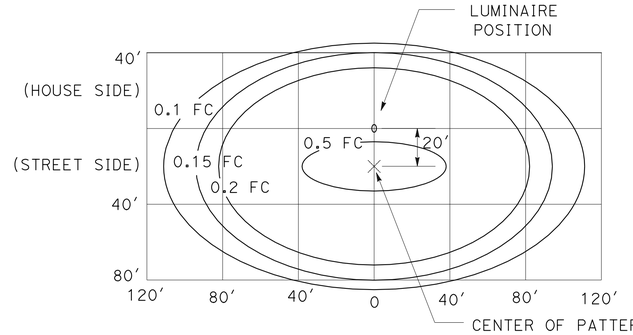

LED LUMINAIRE ROADWAY 2

310-W HPS Equivalent at 40′ Mounting Height

ISOFOOTCANDLE CURVE - MINIMUM

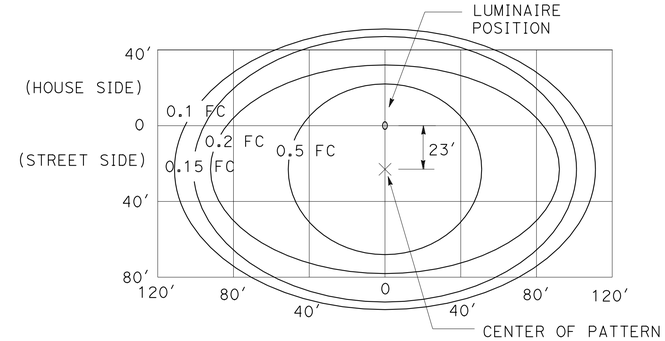

LED LUMINAIRE ROADWAY 4

400-W HPS Equivalent at 40′ Mounting Height

ISOFOOTCANDLE CURVE - MINIMUM

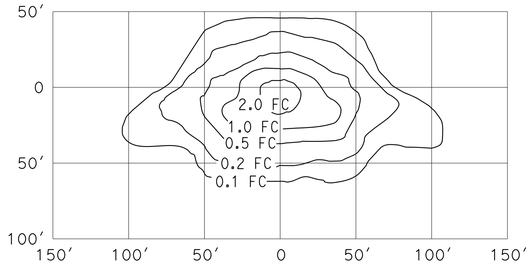

TYPE III MEDIUM CUTOFF

Cutoff Luminaire
30′ Mounting Height
Lamp operated at 16,000 lm
150-W high pressure sodium lamp
ANSI Designation S55

ISOFOOTCANDLE CURVE - MINIMUM

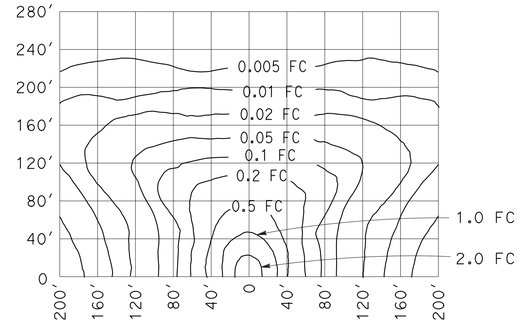

LOW PRESSURE SODIUM LUMINAIRE

40′ Mounting Height
Lamp operated at 33,000 lm
180-W low pressure sodium lamp

STATE OF CALIFORNIA
DEPARTMENT OF TRANSPORTATION

ELECTRICAL SYSTEMS (ISOFOOTCANDLE DIAGRAMS)

NO SCALE

RSP ES-10A DATED JULY 20, 2012 SUPPLEMENTS THE STANDARD PLANS BOOK DATED 2010.

REVISED STANDARD PLAN RSP ES-10A

2010 REVISED STANDARD PLAN RSP ES-10A

2-16-12