Dist	COUNTY	ROUTE	POST MILES TOTAL PROJECT	SHEET No.	TOTAL SHEETS
08	SBd	15	3.8/12.8	201	680

REGISTERED CIVIL ENGINEER 4-14-11 DATE

6-13-11
PLANS APPROVAL DATE

REGISTERED PROFESSIONAL ENGINEER HA VU No. C61359 Exp. 6-30-11 CIVIL STATE OF CALIFORNIA

THE STATE OF CALIFORNIA OR ITS OFFICERS OR AGENTS SHALL NOT BE RESPONSIBLE FOR THE ACCURACY OR COMPLETENESS OF SCANNED COPIES OF THIS PLAN SHEET.

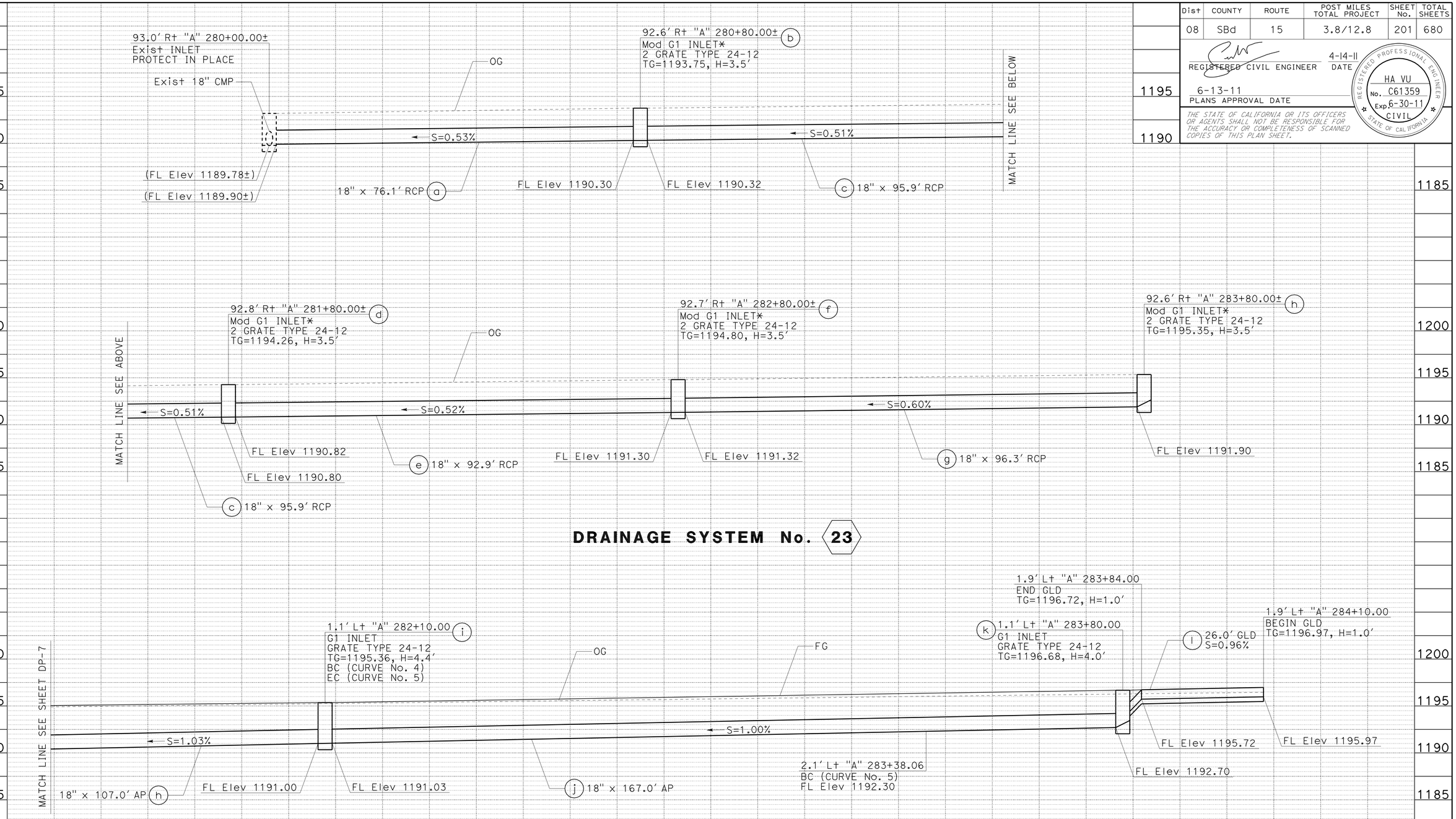

* SEE DRAINAGE DETAIL SHEETS

DRAINAGE PROFILES

SCALE: Horiz 1" = 10'
Vert 1" = 5'

DP-8

STATION		TOTAL
CY	Exc	
	Emb	

REVISED BY / DATE REVISED

HA VU / AHMAD SHAH

CALCULATED-DESIGNED BY / CHECKED BY

FUNCTIONAL SUPERVISOR: GEORGE MORHIG

STATE OF CALIFORNIA - DEPARTMENT OF TRANSPORTATION

Caltrans DESIGN

LAST REVISION 04-14-11 DATE PLOTTED => 17-JUN-2011 TIME PLOTTED => 05:34

Dist	COUNTY	ROUTE	POST MILES TOTAL PROJECT	SHEET No.	TOTAL SHEETS
08	SBd	15	3.8/12.8	202	680

REGISTERED CIVIL ENGINEER 4-14-11 DATE

6-13-11
PLANS APPROVAL DATE

REGISTERED PROFESSIONAL ENGINEER HA VU No. C61359 Exp. 6-30-11 CIVIL STATE OF CALIFORNIA

THE STATE OF CALIFORNIA OR ITS OFFICERS OR AGENTS SHALL NOT BE RESPONSIBLE FOR THE ACCURACY OR COMPLETENESS OF SCANNED COPIES OF THIS PLAN SHEET.

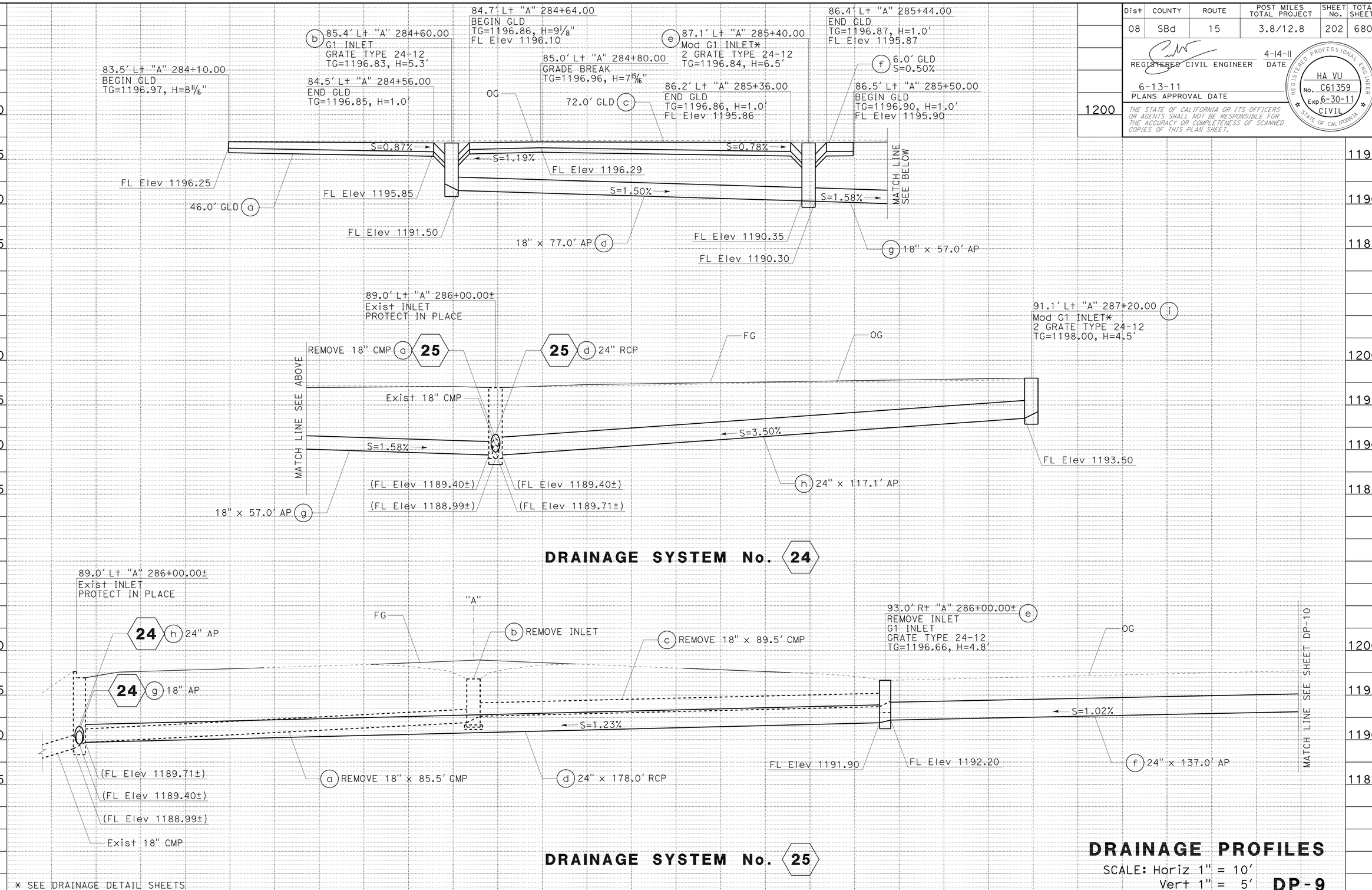

DRAINAGE PROFILES

SCALE: Horiz 1" = 10'
Vert 1" = 5'

DP-9

STATION		TOTAL
CY	Exc	
	Emb	

REVISED BY / DATE REVISED

HA VU / AHMAD SHAH

CALCULATED-DESIGNED BY / CHECKED BY

FUNCTIONAL SUPERVISOR: GEORGE MORHIG

STATE OF CALIFORNIA - DEPARTMENT OF TRANSPORTATION

DESIGN

Caltrans

LAST REVISION 04-14-11

DATE PLOTTED => 17-JUN-2011
TIME PLOTTED => 05:35

Dist	COUNTY	ROUTE	POST MILES TOTAL PROJECT	SHEET No.	TOTAL SHEETS
08	SBd	15	3.8/12.8	203	680

REGISTERED CIVIL ENGINEER 4-14-11 DATE

6-13-11
PLANS APPROVAL DATE

REGISTERED PROFESSIONAL ENGINEER HA VU No. C61359 Exp. 6-30-11 CIVIL STATE OF CALIFORNIA

THE STATE OF CALIFORNIA OR ITS OFFICERS OR AGENTS SHALL NOT BE RESPONSIBLE FOR THE ACCURACY OR COMPLETENESS OF SCANNED COPIES OF THIS PLAN SHEET.

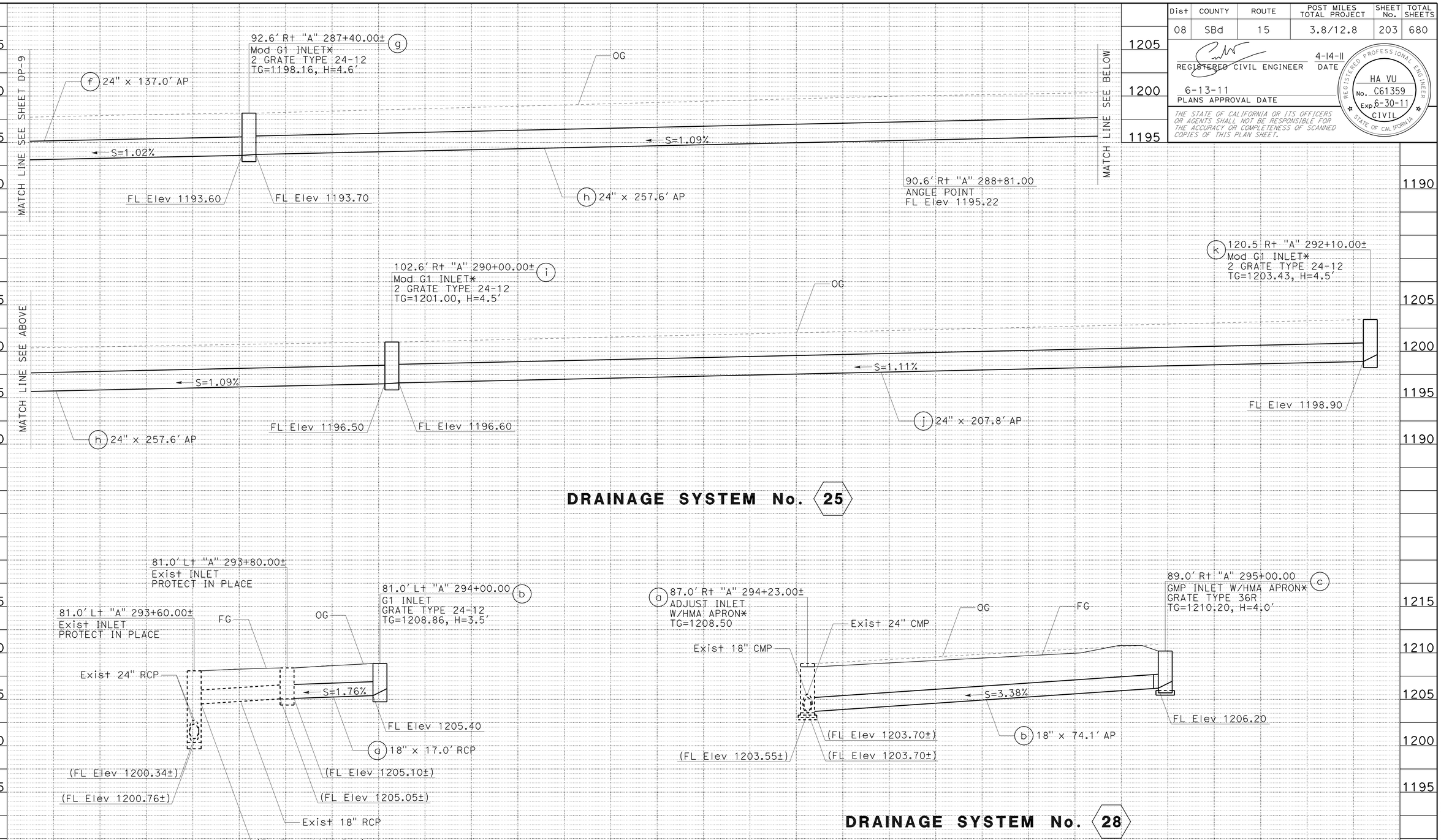

* SEE DRAINAGE DETAIL SHEETS

DRAINAGE PROFILES

SCALE: Horiz 1" = 10'
Vert 1" = 5'

DP-10

STATION		TOTAL
CY	Exc	
	Emb	

STATE OF CALIFORNIA - DEPARTMENT OF TRANSPORTATION
Caltrans® DESIGN

FUNCTIONAL SUPERVISOR: GEORGE MORHIG
CALCULATED-DESIGNED BY: HA VU
CHECKED BY: AHMAD SHAH
REVISED BY
DATE REVISED

LAST REVISION 04-14-11
DATE PLOTTED => 17-JUN-2011
TIME PLOTTED => 05:35

Dist	COUNTY	ROUTE	POST MILES TOTAL PROJECT	SHEET No.	TOTAL SHEETS
08	SBd	15	3.8/12.8	204	680

REGISTERED CIVIL ENGINEER 4-14-11 DATE

6-13-11
PLANS APPROVAL DATE

REGISTERED PROFESSIONAL ENGINEER HA VU No. C61359 Exp. 6-30-11 CIVIL STATE OF CALIFORNIA

THE STATE OF CALIFORNIA OR ITS OFFICERS OR AGENTS SHALL NOT BE RESPONSIBLE FOR THE ACCURACY OR COMPLETENESS OF SCANNED COPIES OF THIS PLAN SHEET.

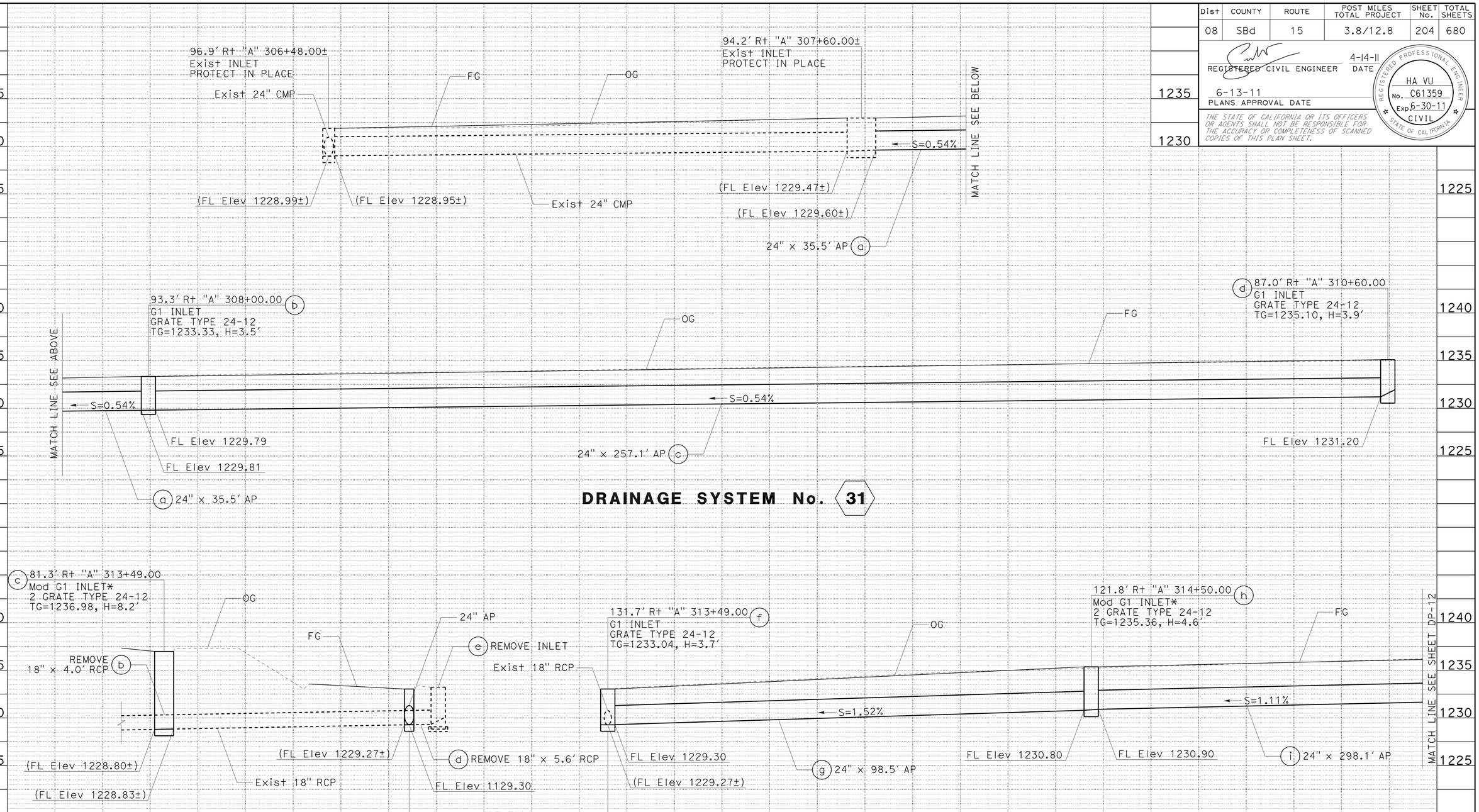

DRAINAGE PROFILES

SCALE: Horiz 1" = 10'
Vert 1" = 5'

DP-11

STATION		TOTAL
CY	Exc	
	Emb	

REVISED BY | DATE REVISED
HA VU | AHMAD SHAH
CALCULATED-DESIGNED BY | CHECKED BY
FUNCTIONAL SUPERVISOR: GEORGE MORHIG

STATE OF CALIFORNIA - DEPARTMENT OF TRANSPORTATION
Caltrans DESIGN

LAST REVISION 04-14-11 | DATE PLOTTED => 17-JUN-2011 | TIME PLOTTED => 05:35

Dist	COUNTY	ROUTE	POST MILES TOTAL PROJECT	SHEET No.	TOTAL SHEETS
08	SBd	15	3.8/12.8	205	680

REGISTERED CIVIL ENGINEER 4-14-11 DATE

6-13-11
PLANS APPROVAL DATE

REGISTERED PROFESSIONAL ENGINEER HA VU No. C61359 Exp. 6-30-11 CIVIL STATE OF CALIFORNIA

THE STATE OF CALIFORNIA OR ITS OFFICERS OR AGENTS SHALL NOT BE RESPONSIBLE FOR THE ACCURACY OR COMPLETENESS OF SCANNED COPIES OF THIS PLAN SHEET.

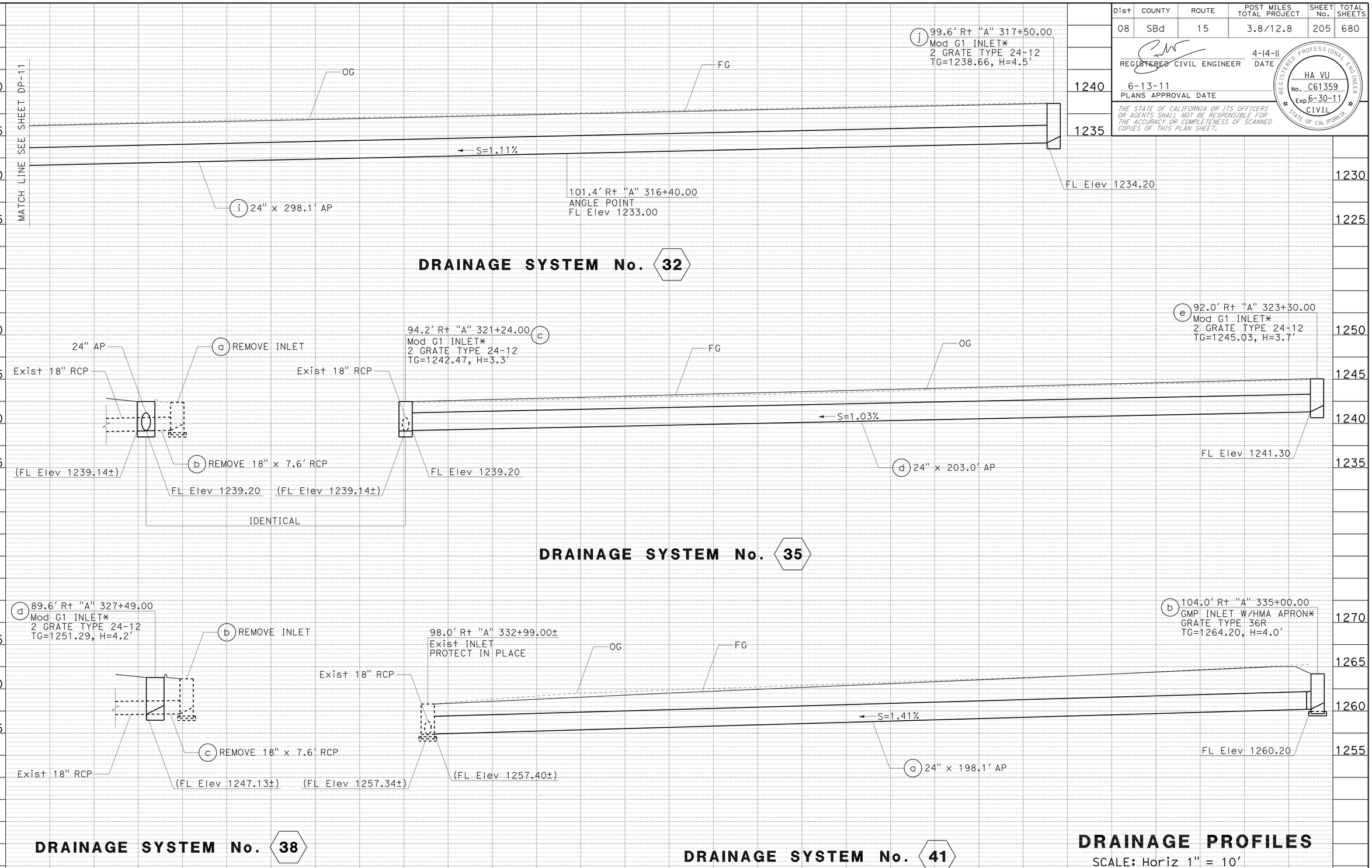

* SEE DRAINAGE DETAIL SHEETS

DRAINAGE PROFILES

SCALE: Horiz 1" = 10'
Vert 1" = 5'

DP-12

STATION		TOTAL
CY	Exc	
	Emb	

REVISED BY | DATE REVISED
HA VU | AHMAD SHAH
CALCULATED-DESIGNED BY | CHECKED BY
FUNCTIONAL SUPERVISOR | GEORGE MORHIG

STATE OF CALIFORNIA - DEPARTMENT OF TRANSPORTATION
Caltrans
DESIGN

LAST REVISION 04-14-11
DATE PLOTTED => 17-JUN-2011
TIME PLOTTED => 05:35

Dist	COUNTY	ROUTE	POST MILES TOTAL PROJECT	SHEET No.	TOTAL SHEETS
08	SBd	15	3.8/12.8	206	680

REGISTERED CIVIL ENGINEER 4-14-11 DATE

6-13-11
PLANS APPROVAL DATE

REGISTERED PROFESSIONAL ENGINEER HA VU No. C61359 Exp. 6-30-11 CIVIL STATE OF CALIFORNIA

THE STATE OF CALIFORNIA OR ITS OFFICERS OR AGENTS SHALL NOT BE RESPONSIBLE FOR THE ACCURACY OR COMPLETENESS OF SCANNED COPIES OF THIS PLAN SHEET.

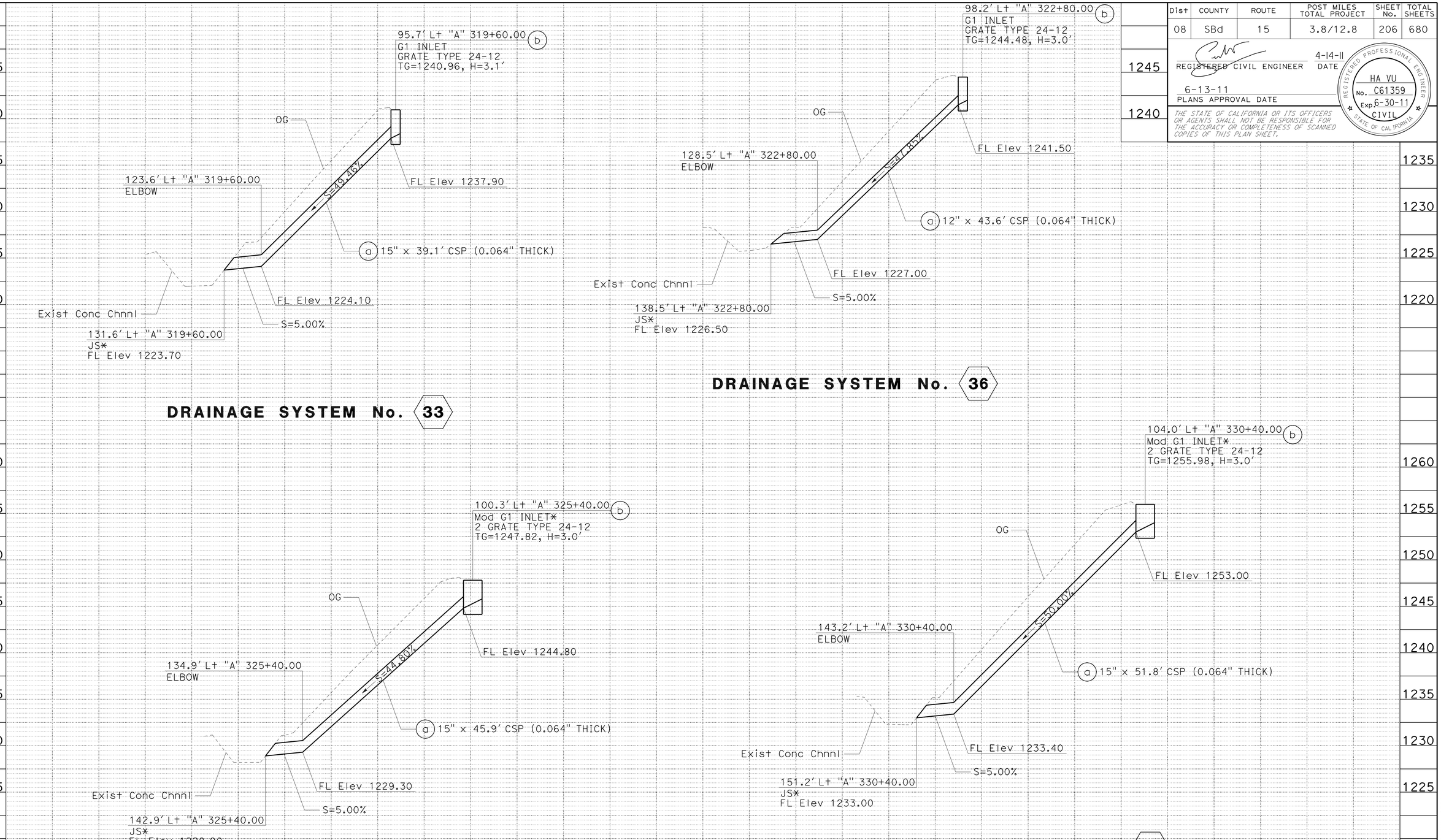

* SEE DRAINAGE DETAIL SHEETS

DRAINAGE PROFILES

SCALE: Horiz 1" = 10'
Vert 1" = 5'

DP-13

STATION		TOTAL
CY	Exc	
	Emb	

REVISED BY | DATE REVISED
HA VU | AHMAD SHAH
CALCULATED-DESIGNED BY | CHECKED BY
FUNCTIONAL SUPERVISOR | GEORGE MORHIG

STATE OF CALIFORNIA - DEPARTMENT OF TRANSPORTATION
Caltrans
DESIGN

LAST REVISION 04-14-11 | DATE PLOTTED => 17-JUN-2011 | TIME PLOTTED => 05:35

Dist	COUNTY	ROUTE	POST MILES TOTAL PROJECT	SHEET No.	TOTAL SHEETS
08	SBd	15	3.8/12.8	207	680

REGISTERED CIVIL ENGINEER 4-14-11 DATE

6-13-11
PLANS APPROVAL DATE

REGISTERED PROFESSIONAL ENGINEER HA VU No. C61359 Exp. 6-30-11 CIVIL STATE OF CALIFORNIA

THE STATE OF CALIFORNIA OR ITS OFFICERS OR AGENTS SHALL NOT BE RESPONSIBLE FOR THE ACCURACY OR COMPLETENESS OF SCANNED COPIES OF THIS PLAN SHEET.

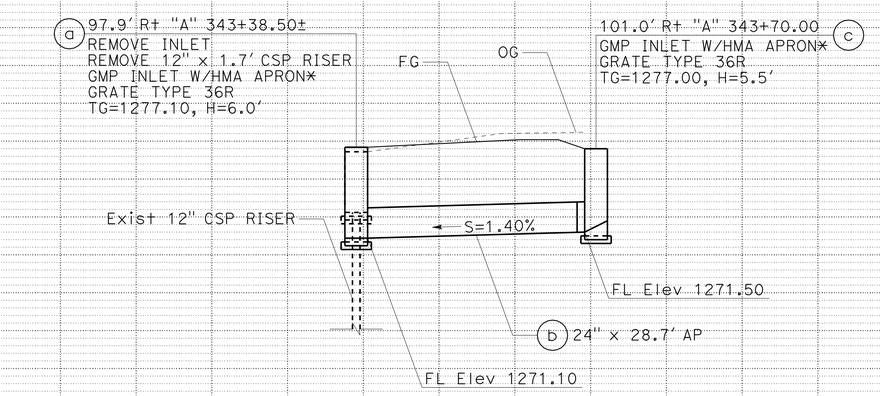

DRAINAGE SYSTEM No. 43

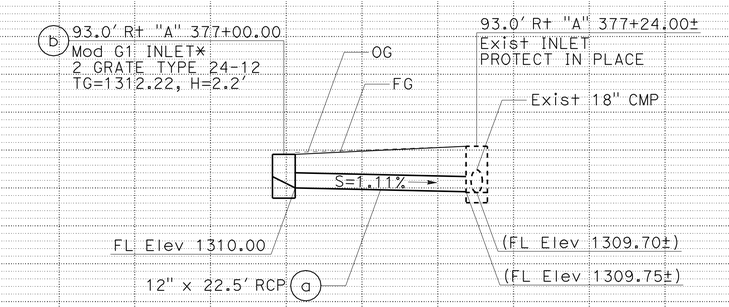

DRAINAGE SYSTEM No. 49

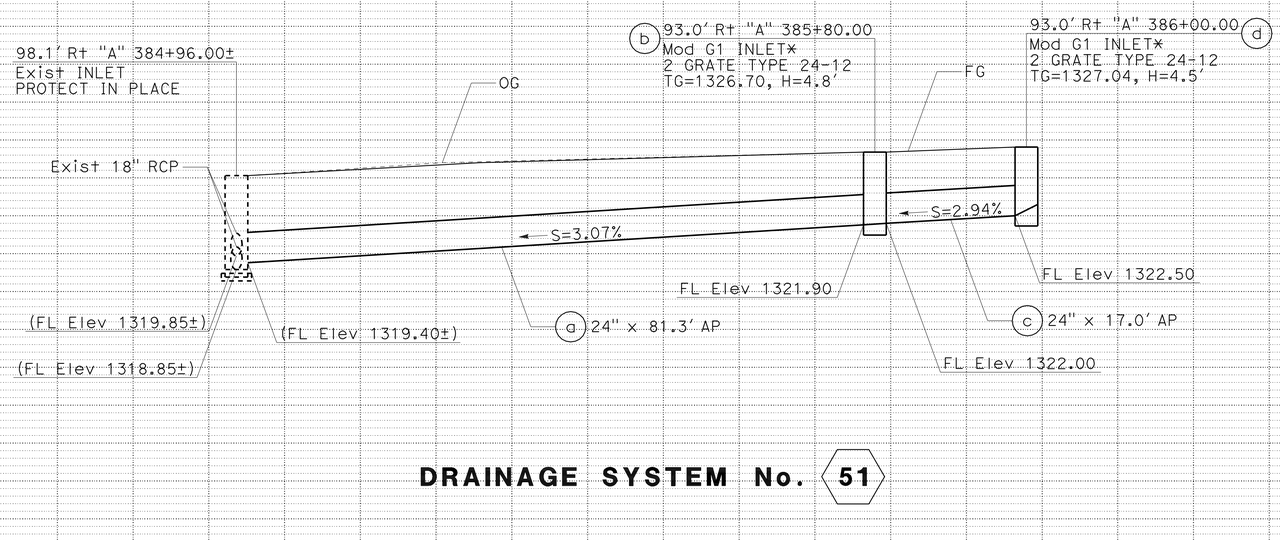

DRAINAGE SYSTEM No. 51

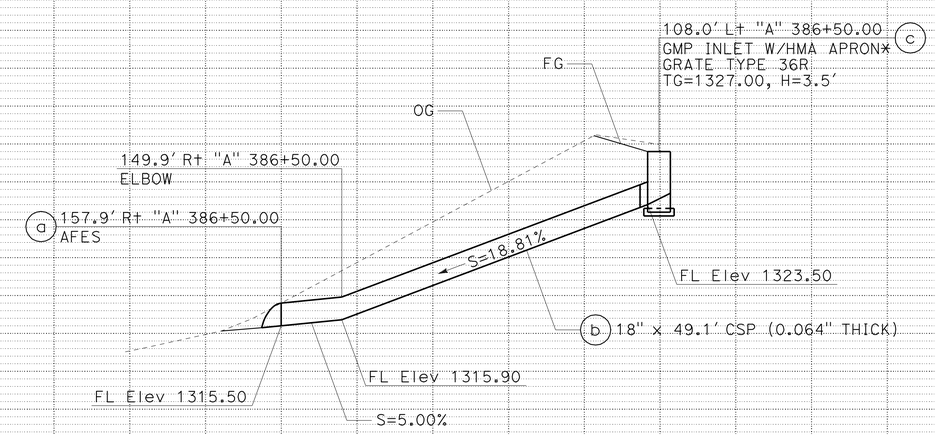

DRAINAGE SYSTEM No. 52

* SEE DRAINAGE DETAIL SHEETS

DRAINAGE PROFILES

SCALE: Horiz 1" = 10'
Vert 1" = 5'

DP-14

STATION		TOTAL
CY	Exc	
	Emb	

STATE OF CALIFORNIA - DEPARTMENT OF TRANSPORTATION
Caltrans DESIGN
FUNCTIONAL SUPERVISOR: GEORGE MORHIG
CALCULATED-DESIGNED BY: HA VU
CHECKED BY: AHMAD SHAH
REVISED BY / DATE REVISED

LAST REVISION 04-14-11
DATE PLOTTED => 17-JUN-2011
TIME PLOTTED => 05:35

Dist	COUNTY	ROUTE	POST MILES TOTAL PROJECT	SHEET No.	TOTAL SHEETS
08	SBd	15	3.8/12.8	208	680

REGISTERED CIVIL ENGINEER 4-14-11 DATE

6-13-11
PLANS APPROVAL DATE

REGISTERED PROFESSIONAL ENGINEER HA VU No. C61359 Exp. 6-30-11 CIVIL STATE OF CALIFORNIA

THE STATE OF CALIFORNIA OR ITS OFFICERS OR AGENTS SHALL NOT BE RESPONSIBLE FOR THE ACCURACY OR COMPLETENESS OF SCANNED COPIES OF THIS PLAN SHEET.

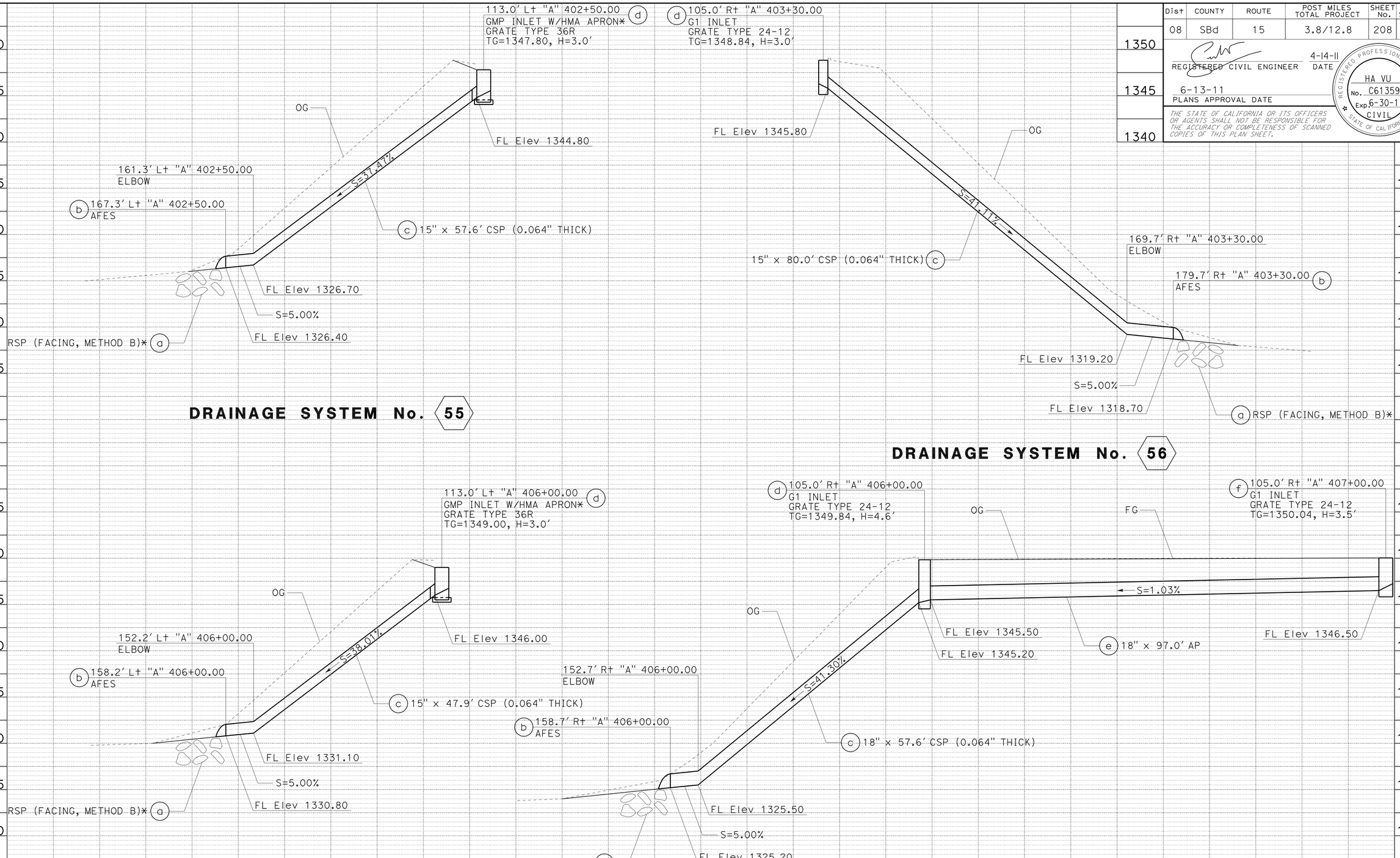

* SEE DRAINAGE DETAIL SHEETS

DRAINAGE PROFILES

SCALE: Horiz 1" = 10'
Vert 1" = 5'

DP-15

STATION		TOTAL
CY	Exc	
	Emb	

STATE OF CALIFORNIA - DEPARTMENT OF TRANSPORTATION
Caltrans DESIGN

FUNCTIONAL SUPERVISOR: GEORGE MORHIG
CALCULATED-DESIGNED BY: HA VU
CHECKED BY: AHMAD SHAH
REVISED BY / DATE REVISED

LAST REVISION 04-14-11
DATE PLOTTED => 17-JUN-2011
TIME PLOTTED => 05:35

Dist	COUNTY	ROUTE	POST MILES TOTAL PROJECT	SHEET No.	TOTAL SHEETS
08	SBd	15	3.8/12.8	209	680

REGISTERED CIVIL ENGINEER 4-14-11 DATE

6-13-11
PLANS APPROVAL DATE

REGISTERED PROFESSIONAL ENGINEER HA VU No. C61359 Exp. 6-30-11 CIVIL STATE OF CALIFORNIA

THE STATE OF CALIFORNIA OR ITS OFFICERS OR AGENTS SHALL NOT BE RESPONSIBLE FOR THE ACCURACY OR COMPLETENESS OF SCANNED COPIES OF THIS PLAN SHEET.

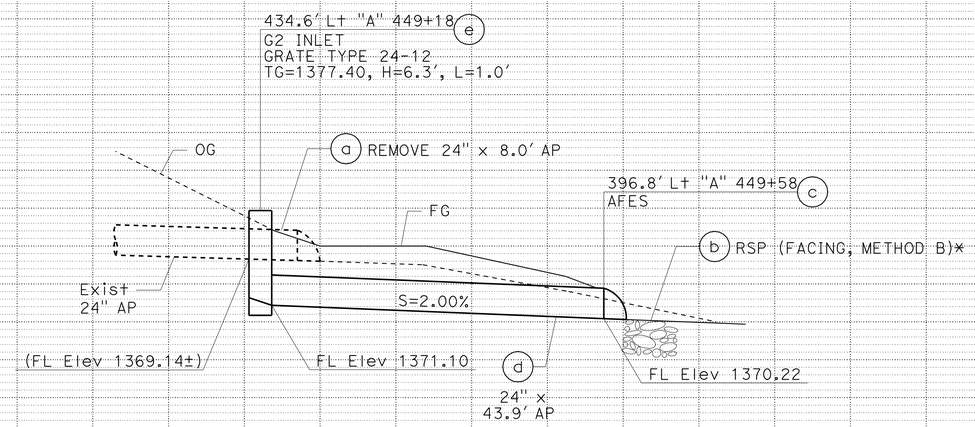

DRAINAGE SYSTEM No. 69

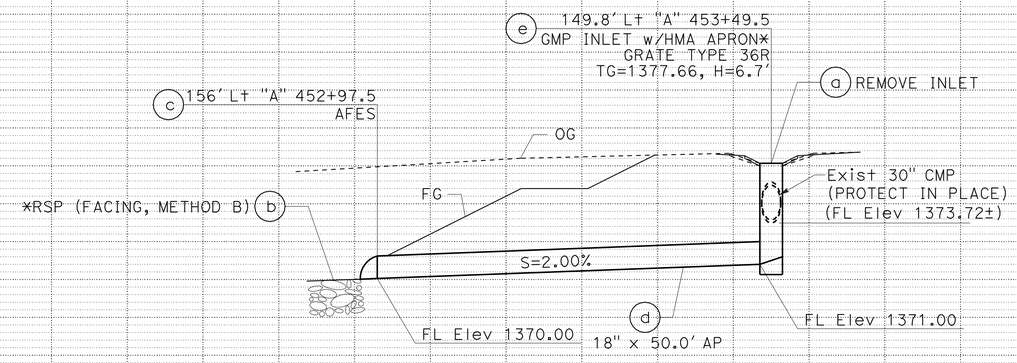

DRAINAGE SYSTEM No. 70

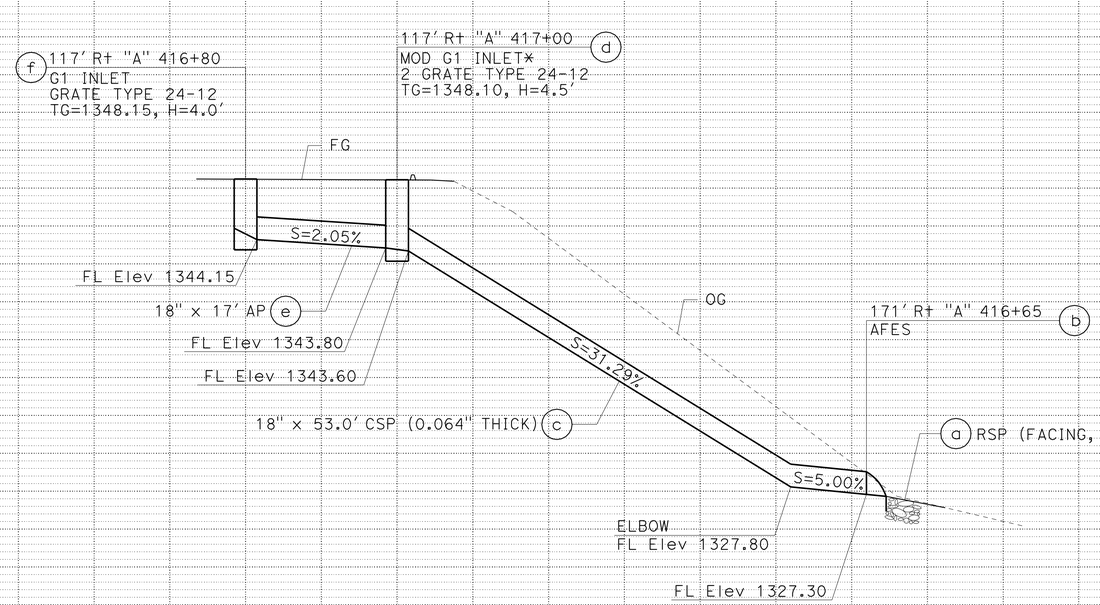

DRAINAGE SYSTEM No. 60

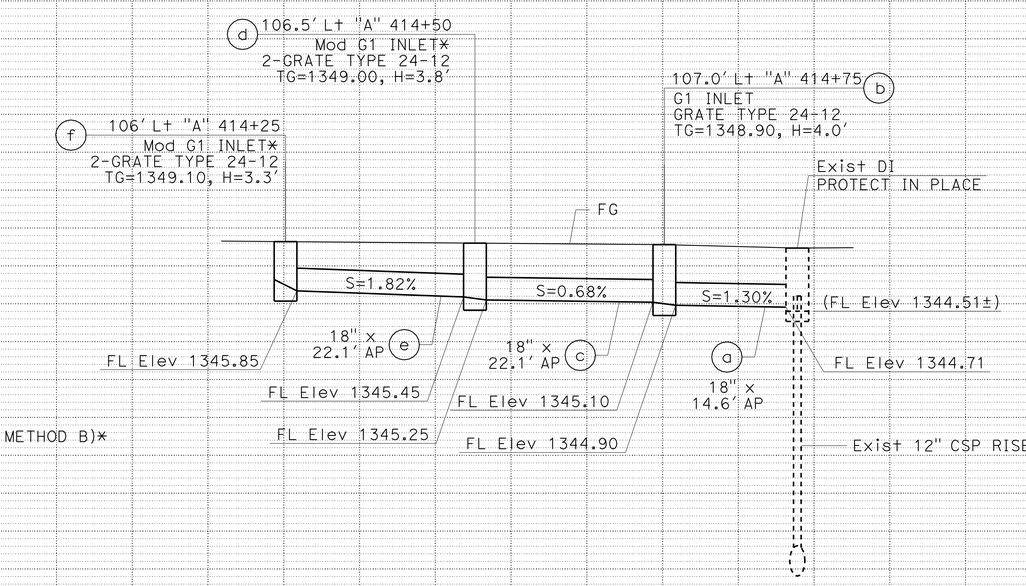

DRAINAGE SYSTEM No. 59

* SEE DRAINAGE DETAIL SHEETS

DRAINAGE PROFILES

SCALE: Horiz 1" = 10'
Vert 1" = 5'

DP-16

STATION		TOTAL
CY	Exc	
	Emb	

STATE OF CALIFORNIA - DEPARTMENT OF TRANSPORTATION
Caltrans DESIGN

FUNCTIONAL SUPERVISOR: GEORGE MORHIG
CALCULATED-DESIGNED BY: ALAN BISI
CHECKED BY: MICHAEL HUYNH
REVISED BY / DATE REVISED

LAST REVISION 04-14-11
DATE PLOTTED => 17-JUN-2011
TIME PLOTTED => 05:35

Dist	COUNTY	ROUTE	POST MILES TOTAL PROJECT	SHEET No.	TOTAL SHEETS
08	SBd	15	3.8/12.8	210	680

REGISTERED CIVIL ENGINEER 4-14-11 DATE

6-13-11
PLANS APPROVAL DATE

REGISTERED PROFESSIONAL ENGINEER HA VU No. C61359 Exp. 6-30-11 CIVIL STATE OF CALIFORNIA

THE STATE OF CALIFORNIA OR ITS OFFICERS OR AGENTS SHALL NOT BE RESPONSIBLE FOR THE ACCURACY OR COMPLETENESS OF SCANNED COPIES OF THIS PLAN SHEET.

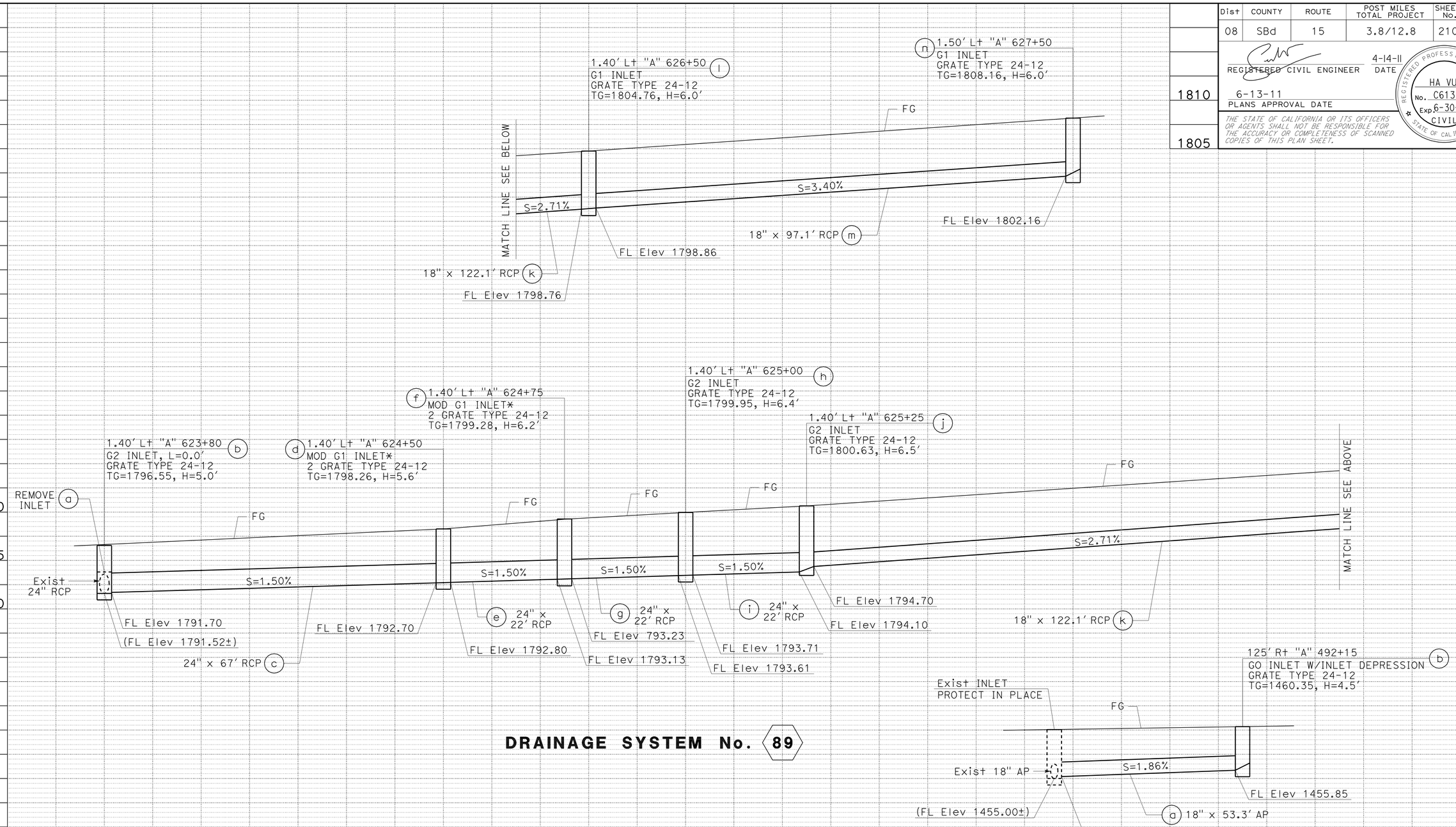

DRAINAGE SYSTEM No. 89

DRAINAGE SYSTEM No. 77

DRAINAGE PROFILES

SCALE: Horiz 1" = 10'
Vert 1" = 5'

DP-17

* SEE DRAINAGE DETAIL SHEETS

STATION		TOTAL
CY	Exc	
	Emb	

REVISED BY | DATE REVISED
MICHAEL HUYNH | ALAN BISI
CALCULATED-DESIGNED BY | CHECKED BY
FUNCTIONAL SUPERVISOR | GEORGE MORHIG

STATE OF CALIFORNIA - DEPARTMENT OF TRANSPORTATION
Caltrans® DESIGN

LAST REVISION 04-14-11 | DATE PLOTTED => 17-JUN-2011 | TIME PLOTTED => 05:35

Dist	COUNTY	ROUTE	POST MILES TOTAL PROJECT	SHEET No.	TOTAL SHEETS
08	SBd	15	3.8/12.8	211	680

REGISTERED CIVIL ENGINEER 4-14-11 DATE

6-13-11
PLANS APPROVAL DATE

REGISTERED PROFESSIONAL ENGINEER HA VU No. C61359 Exp. 6-30-11 CIVIL STATE OF CALIFORNIA

THE STATE OF CALIFORNIA OR ITS OFFICERS OR AGENTS SHALL NOT BE RESPONSIBLE FOR THE ACCURACY OR COMPLETENESS OF SCANNED COPIES OF THIS PLAN SHEET.

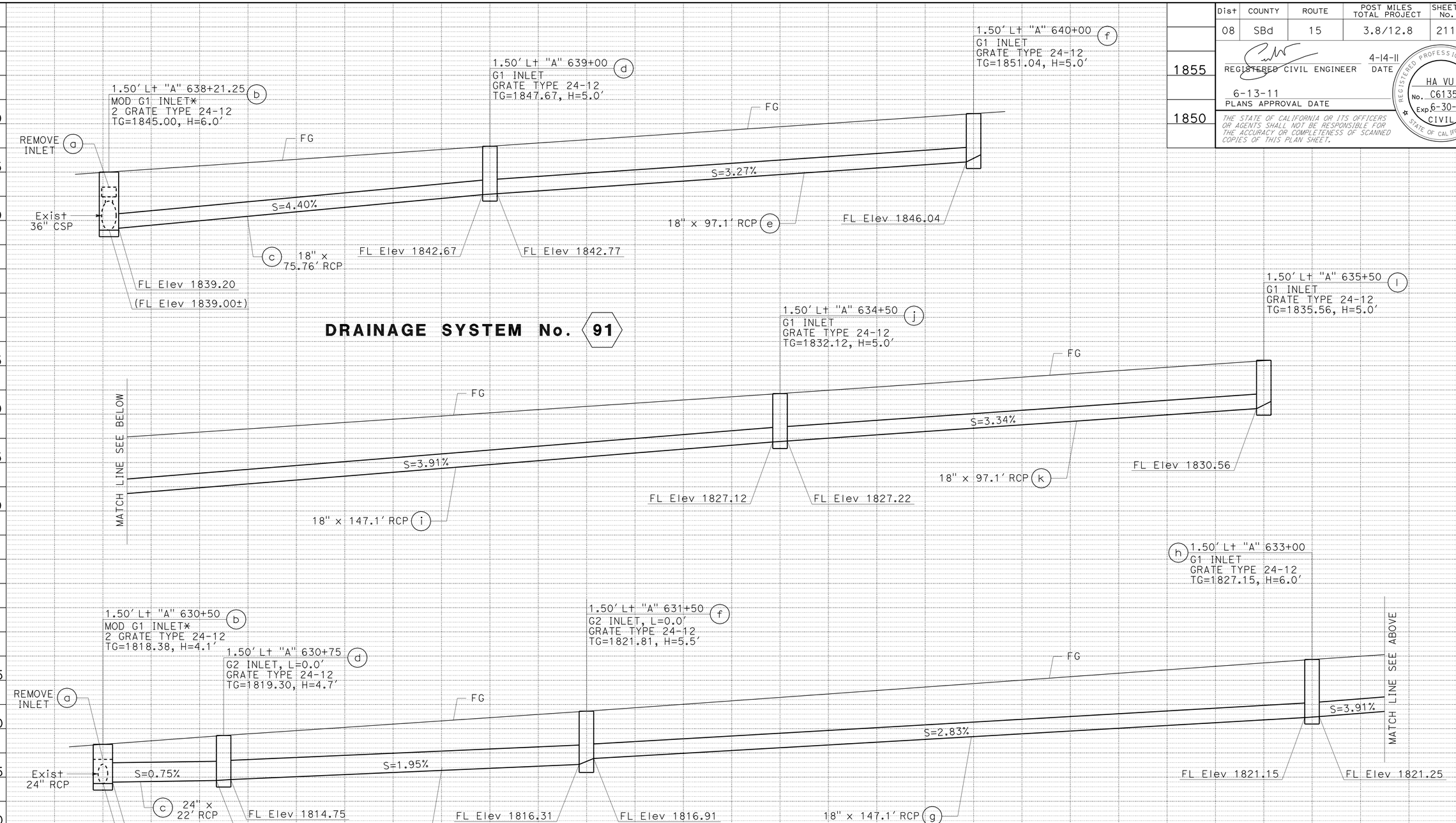

* SEE DRAINAGE DETAIL SHEETS

DRAINAGE PROFILES

SCALE: Horiz 1" = 10'
Vert 1" = 5'

DP-18

STATION		TOTAL
CY	Exc	
	Emb	

STATE OF CALIFORNIA - DEPARTMENT OF TRANSPORTATION
Caltrans® DESIGN

FUNCTIONAL SUPERVISOR: GEORGE MORHIG
CALCULATED-DESIGNED BY: MICHAEL HUYNH
CHECKED BY: ALAN BISI
REVISED BY / DATE REVISED

LAST REVISION 04-14-11
DATE PLOTTED => 17-JUN-2011
TIME PLOTTED => 05:36

Dist	COUNTY	ROUTE	POST MILES TOTAL PROJECT	SHEET No.	TOTAL SHEETS
08	SBd	15	3.8/12.8	212	680

REGISTERED CIVIL ENGINEER 4-14-11 DATE

6-13-11
PLANS APPROVAL DATE

REGISTERED PROFESSIONAL ENGINEER HA VU No. C61359 Exp. 6-30-11 CIVIL STATE OF CALIFORNIA

THE STATE OF CALIFORNIA OR ITS OFFICERS OR AGENTS SHALL NOT BE RESPONSIBLE FOR THE ACCURACY OR COMPLETENESS OF SCANNED COPIES OF THIS PLAN SHEET.

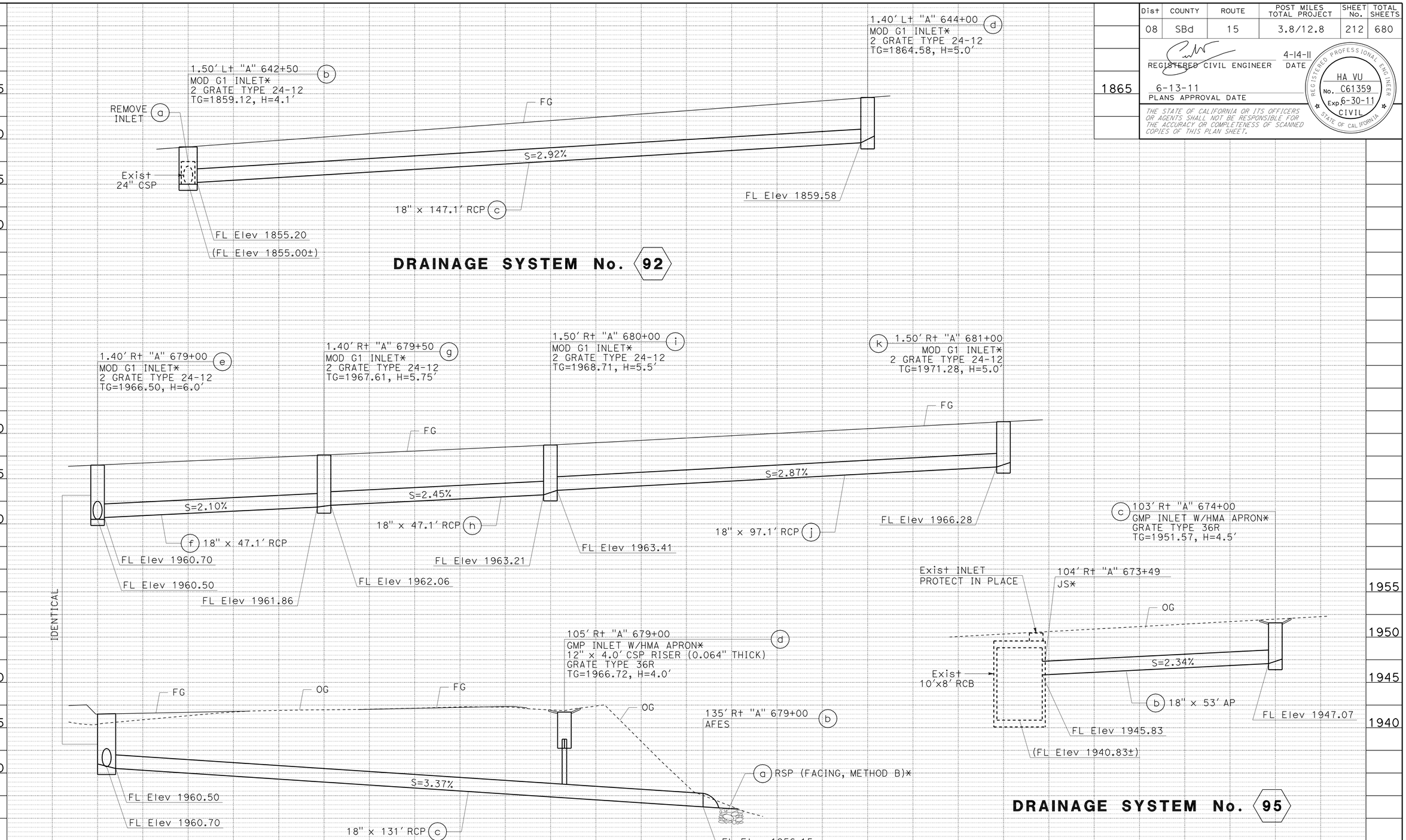

* SEE DRAINAGE DETAIL SHEETS

DRAINAGE PROFILES

SCALE: Horiz 1" = 10'
Vert 1" = 5'

DP-19

STATION		TOTAL
CY	Exc	
	Emb	

STATE OF CALIFORNIA - DEPARTMENT OF TRANSPORTATION
Caltrans® DESIGN

FUNCTIONAL SUPERVISOR: GEORGE MORHIG
CALCULATED-DESIGNED BY: MICHAEL HUYNH
CHECKED BY: ALAN BISI
REVISED BY / DATE REVISED

LAST REVISION 04-14-11
DATE PLOTTED => 17-JUN-2011
TIME PLOTTED => 05:36

Dist	COUNTY	ROUTE	POST MILES TOTAL PROJECT	SHEET No.	TOTAL SHEETS
08	SBd	15	3.8/12.8	213	680

REGISTERED CIVIL ENGINEER 4-14-11 DATE

6-13-11
PLANS APPROVAL DATE

REGISTERED PROFESSIONAL ENGINEER HA VU No. C61359 Exp. 6-30-11 CIVIL STATE OF CALIFORNIA

THE STATE OF CALIFORNIA OR ITS OFFICERS OR AGENTS SHALL NOT BE RESPONSIBLE FOR THE ACCURACY OR COMPLETENESS OF SCANNED COPIES OF THIS PLAN SHEET.

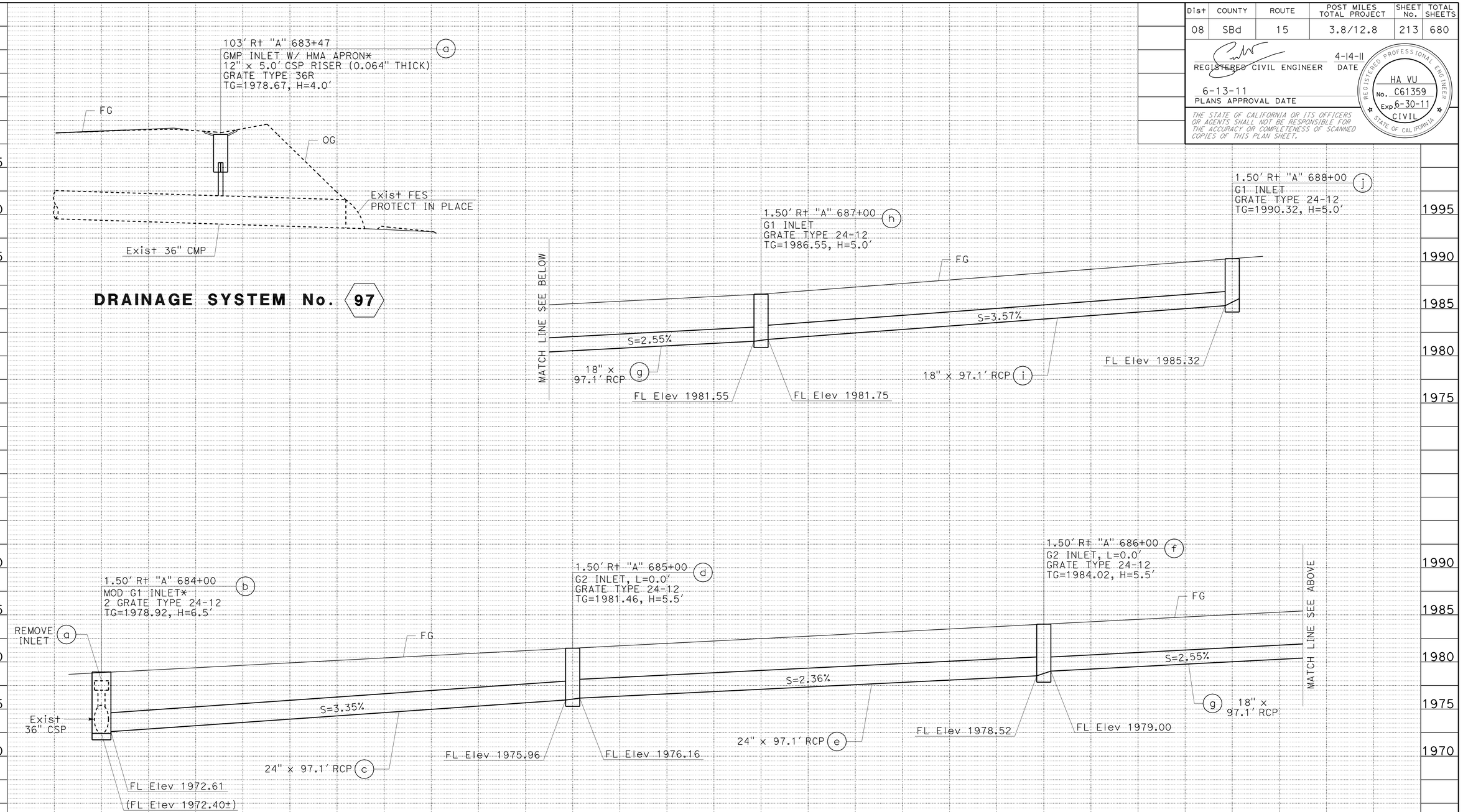

DRAINAGE PROFILES

SCALE: Horiz 1" = 10'
Vert 1" = 5'

DP-20

* SEE DRAINAGE DETAIL SHEETS

STATION		TOTAL
CY	Exc	
	Emb	

REVISED BY | DATE REVISED
MICHAEL HUYNH | ALAN BISI
CALCULATED-DESIGNED BY | CHECKED BY
FUNCTIONAL SUPERVISOR | GEORGE MORHIG

STATE OF CALIFORNIA - DEPARTMENT OF TRANSPORTATION
Caltrans® DESIGN

LAST REVISION 04-14-11 | DATE PLOTTED => 17-JUN-2011 | TIME PLOTTED => 05:36

Dist	COUNTY	ROUTE	POST MILES TOTAL PROJECT	SHEET No.	TOTAL SHEETS
08	SBd	15	3.8/12.8	214	680

REGISTERED CIVIL ENGINEER 4-14-11 DATE

6-13-11
PLANS APPROVAL DATE

REGISTERED PROFESSIONAL ENGINEER HA VU No. C61359 Exp. 6-30-11 CIVIL STATE OF CALIFORNIA

THE STATE OF CALIFORNIA OR ITS OFFICERS OR AGENTS SHALL NOT BE RESPONSIBLE FOR THE ACCURACY OR COMPLETENESS OF SCANNED COPIES OF THIS PLAN SHEET.

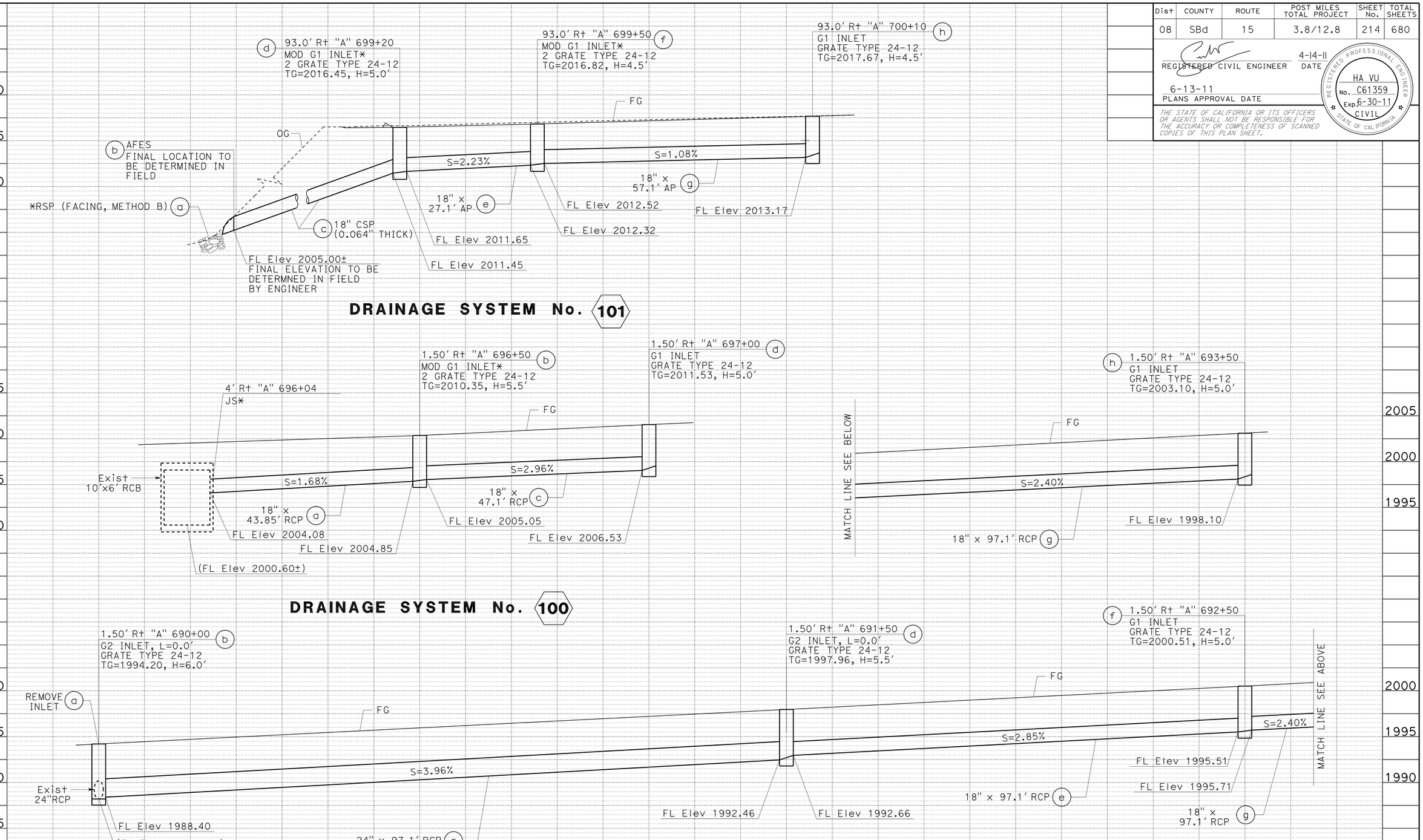

* SEE DRAINAGE DETAIL SHEETS

DRAINAGE PROFILES

SCALE: Horiz 1" = 10'
Vert 1" = 5'

DP-21

STATION		TOTAL
CY	Exc	
	Emb	

REVISED BY | DATE REVISED
MICHAEL HUYNH | ALAN BISI
CALCULATED-DESIGNED BY | CHECKED BY
FUNCTIONAL SUPERVISOR: GEORGE MORHIG

STATE OF CALIFORNIA - DEPARTMENT OF TRANSPORTATION
Caltrans
DESIGN

LAST REVISION 04-14-11 | DATE PLOTTED => 17-JUN-2011 | TIME PLOTTED => 05:36

Dist	COUNTY	ROUTE	POST MILES TOTAL PROJECT	SHEET No.	TOTAL SHEETS
08	SBd	15	3.8/12.8	215	680

REGISTERED CIVIL ENGINEER 4-14-11 DATE

6-13-11
PLANS APPROVAL DATE

REGISTERED PROFESSIONAL ENGINEER HA VU No. C61359 Exp. 6-30-11 CIVIL STATE OF CALIFORNIA

THE STATE OF CALIFORNIA OR ITS OFFICERS OR AGENTS SHALL NOT BE RESPONSIBLE FOR THE ACCURACY OR COMPLETENESS OF SCANNED COPIES OF THIS PLAN SHEET.

NOTES:

1. "H" IS THE DIFFERENCE IN ELEVATION BETWEEN THE OUTLET PIPE FLOW LINE AND THE FLOW LINE OF THE GRATE.
2. FOR "T" WALL THICKNESS, SEE TABLE A BELOW.
3. WALL REINFORCING NOT REQUIRED WHEN "H" IS 8'-0" OR LESS. WALLS EXCEEDING THE LIMIT SHALL BE REINFORCED WITH #4 @ 18"± CENTERS EACH WAY AND PLACED 1½" CLEAR TO INSIDE OF BOX.
4. INLET BOTTOM REINFORCING NOT REQUIRED. SEE STANDARD PLAN D74C FOR ALTERNATIVE REINFORCED BOTTOM.
5. STEPS - NONE REQUIRED WHERE "H" IS LESS THEN 2'-6". WHERE "H" IS 2'-6" OR MORE, INSTALL STEPS WITH LOWEST RUNG 1'-0" ABOVE THE FLOOR AND HIGHEST RUNG NOT MORE THAN 6" BELOW THE TOP OF THE INLET. THE DISTANCE BETWEEN STEPS SHALL NOT EXCEED 1'-0" AND SHALL BE UNIFORM THROUGHOUT THE LENGTH OF THE WALL. PLACE STEPS IN THE WALL WITHOUT AN OPENING. STEP INSERTS MAY BE SUBSTITUTED FOR BAR STEPS. STEP INSERTS SHALL COMPLY WITH STATE INDUSTRIAL SAFETY REQUIREMENTS. SEE STANDARD PLAN D74C FOR STEP DETAILS.
6. PIPE(S) CAN BE PLACED IN ANY WALL.
7. EXCEPT FOR INLETS USED AS JUNCTION BOXES, BASIN FLOOR SHALL HAVE A MINIMUM SLOPE OF 4:1 FROM ALL DIRECTIONS TOWARD OUTLET PIPE AND SHALL HAVE A WOOD TROWEL FINISH.
8. GALVANIZING - SEE STANDARD SPECIFICATIONS OR SPECIAL PROVISIONS.
9. SEE STANDARD PLAN D77A FOR GRATE DETAILS.
10. FULL PENETRATION BUTT WELDS MAY BE SUBSTITUTED FOR THE FILLET WELDS ON ALL ANCHORS.
11. STANDARD SQUARE, HEXAGON, ROUND OR EQUIVALENT HEADED ANCHORS MAY BE SUBSTITUTED FOR THE RIGHT ANGLE HOOKS ON THE ANCHORS SHOWN ON THIS PLAN.
12. CAST-IN-PLACE OR PRECAST ALTERNATIVE IS OPTIONAL WITH CONTRACTOR. SEE STANDARD SPECIFICATIONS.
13. CAST-IN-PLACE INLETS TO BE FORMED AROUND ALL PIPES/STUBS INTERSECTING THE INLET AND CONCRETE POURED IN ONE CONTINUOUS OPERATION. PRECAST INLETS SHALL HAVE MORTARED PIPE CONNECTIONS CONFORMING TO DETAILS FOR TYPE GCP INLETS ON STANDARD PLAN D75B. SEE STANDARD SPECIFICATIONS FOR MORTAR COMPOSITION.

MISCELLANEOUS IRON & STEEL

INLET TYPE	No. OF GRATES	GRATE TYPE	WEIGHT (LB)
Mod G1	2	24-12	634
	2	24-12X*	473

* - DENOTES BICYCLE-PROOF GRATE

TABLE A

H	T
8'-0" OR LESS	6"
8'-1" TO 20'-0"	8"

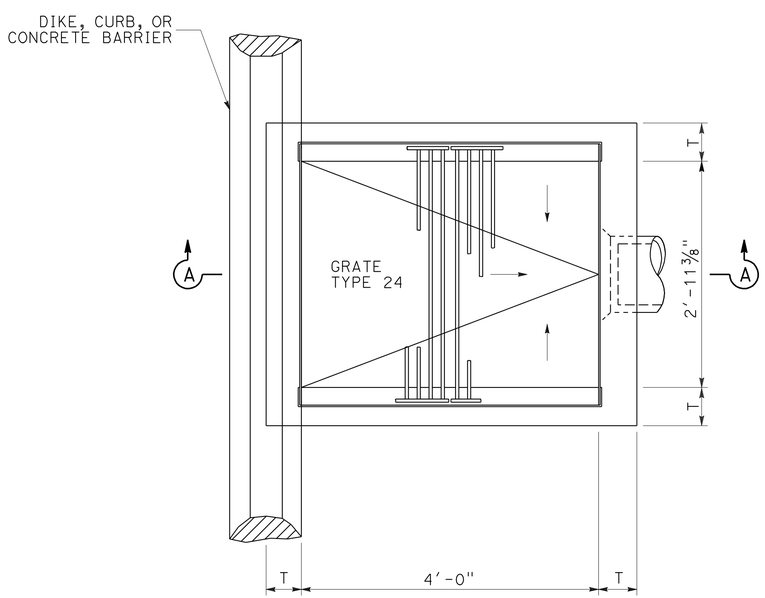

PLAN

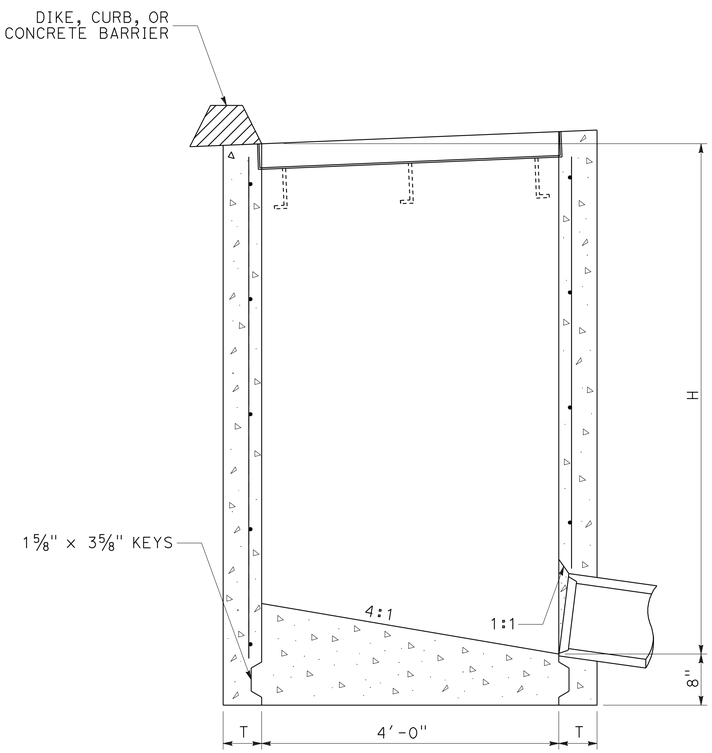

SECTION A-A

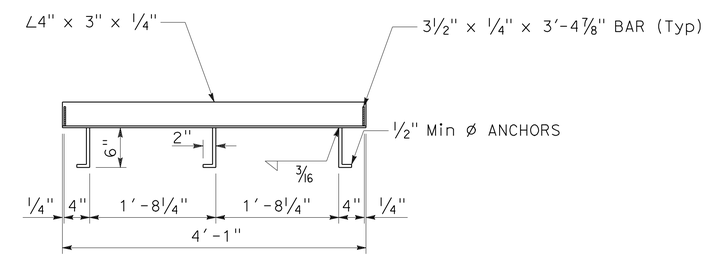

FRAME ANCHOR PLACEMENT

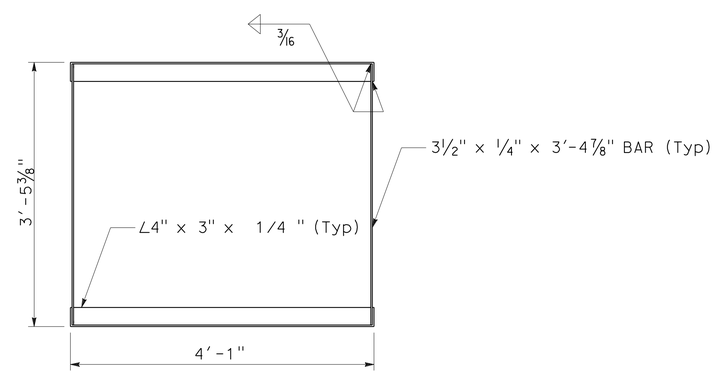

GRATE FRAME

Mod G1 INLET

DRAINAGE DETAILS

NO SCALE

DD-1

STATE OF CALIFORNIA - DEPARTMENT OF TRANSPORTATION
Caltrans DESIGN

FUNCTIONAL SUPERVISOR: GEORGE MORHIG
CALCULATED-DESIGNED BY: HA VU
CHECKED BY: AHMAD SHAH
REVISED BY
DATE REVISED

LAST REVISION 04-14-11
DATE PLOTTED => 17-JUN-2011
TIME PLOTTED => 05:36

Dist	COUNTY	ROUTE	POST MILES TOTAL PROJECT	SHEET No.	TOTAL SHEETS
08	SBd	15	3.8/12.8	216	680

REGISTERED CIVIL ENGINEER 4-14-11 DATE

6-13-11
PLANS APPROVAL DATE

REGISTERED PROFESSIONAL ENGINEER HA VU No. C61359 Exp. 6-30-11 CIVIL STATE OF CALIFORNIA

THE STATE OF CALIFORNIA OR ITS OFFICERS OR AGENTS SHALL NOT BE RESPONSIBLE FOR THE ACCURACY OR COMPLETENESS OF SCANNED COPIES OF THIS PLAN SHEET.

NOTES FOR CONCRETE COLLAR:

1. WHERE PIPES OF DIFFERENT DIAMETERS ARE JOINED WITH A CONCRETE COLLAR, "L" AND "T" SHALL BE THOSE OF THE LARGER PIPE.
2. FOR PIPE SIZE NOT LISTED USE NEXT SIZE LARGER.
3. OMIT REINFORCING FOR PIPES 24" AND LESS IN DIAMETER ON ALL PIPES WHERE ANGLE "A" IS LESS THAN 10°.

D	L	T
12"	12"	4"
18"	12"	5"
24"	12"	6"
30"	18"	7"
36"	18"	9"
42"	18"	9"
48"	18"	10"
54"	18"	10"
60"	21"	11"
66"	21"	11"
72"	24"	12"

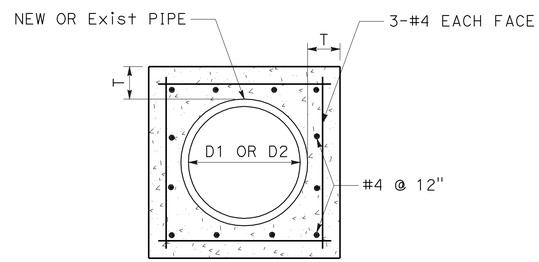

SECTION A-A

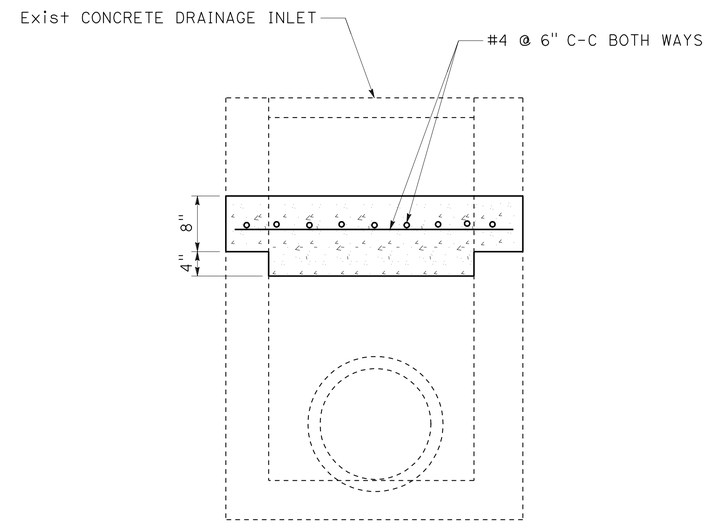

CAP CONCRETE DRAINAGE INLET

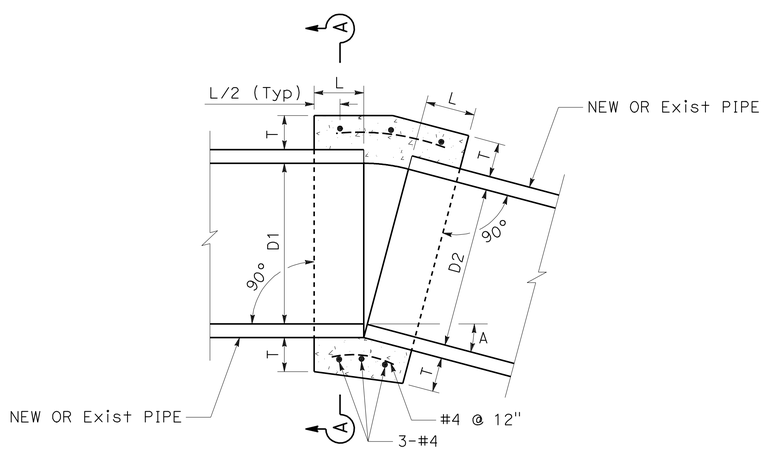

CONCRETE COLLAR

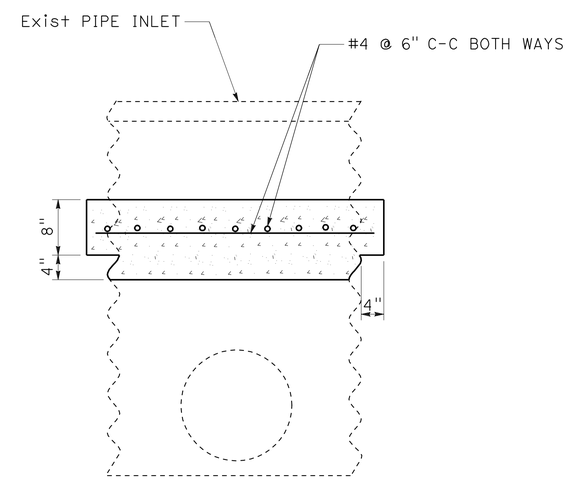

CAP PIPE INLET

DRAINAGE DETAILS
NO SCALE

DD-2

STATE OF CALIFORNIA - DEPARTMENT OF TRANSPORTATION
Caltrans® DESIGN

FUNCTIONAL SUPERVISOR: GEORGE MORHIG
CALCULATED-DESIGNED BY: HA VU
CHECKED BY: AHMAD SHAH
REVISED BY
DATE REVISED

LAST REVISION 04-14-11
DATE PLOTTED => 17-JUN-2011
TIME PLOTTED => 05:36

Dist	COUNTY	ROUTE	POST MILES TOTAL PROJECT	SHEET No.	TOTAL SHEETS
08	SBd	15	3.8/12.8	217	680

REGISTERED CIVIL ENGINEER 4-14-11 DATE

6-13-11
PLANS APPROVAL DATE

REGISTERED PROFESSIONAL ENGINEER HA VU No. C61359 Exp. 6-30-11 CIVIL STATE OF CALIFORNIA

THE STATE OF CALIFORNIA OR ITS OFFICERS OR AGENTS SHALL NOT BE RESPONSIBLE FOR THE ACCURACY OR COMPLETENESS OF SCANNED COPIES OF THIS PLAN SHEET.

NOTES

1. FOR AFES DIMENSIONS, SEE STANDARD PLANS D94A AND D94B.
2. SQUARED-OFF EXCAVATION NOT REQUIRED.

LEGEND

D - DIAMETER OF PIPE
W - GRATEST OUTSIDE WIDTH OF FLARED END SECTION
L - LENGHT OF FLARED END SECTION

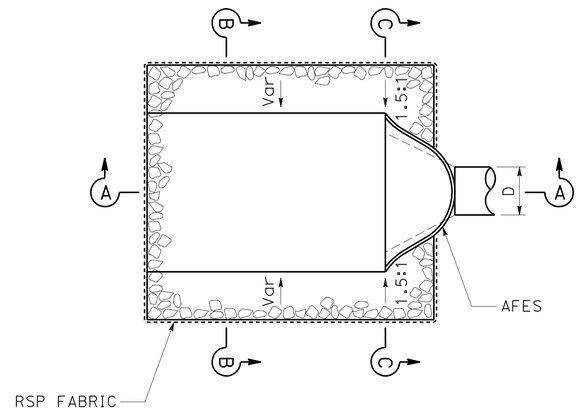

PLAN

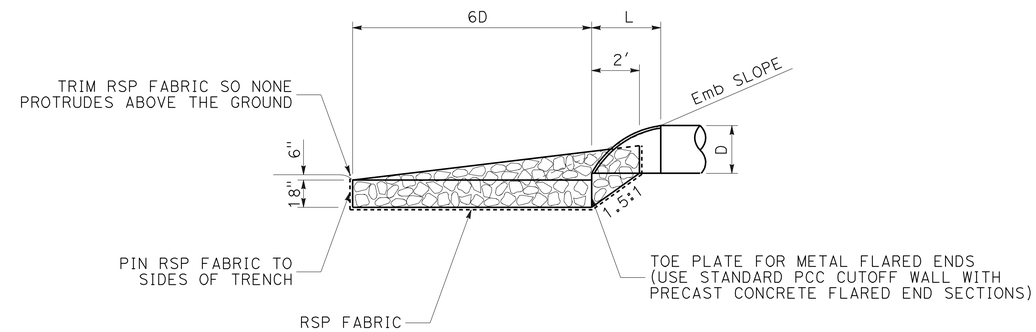

SECTION A-A

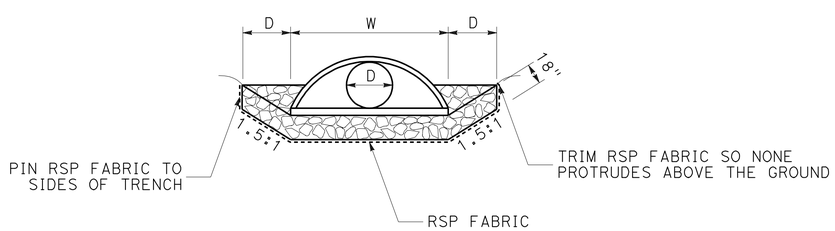

SECTION C-C

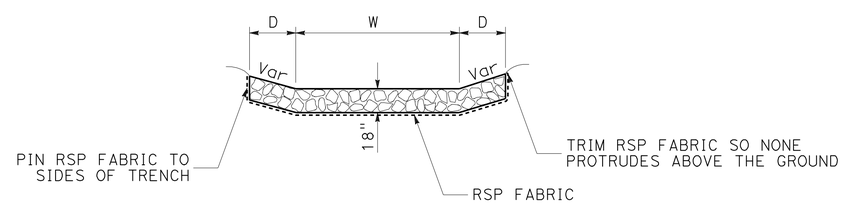

SECTION B-B

ROCK SLOPE PROTECTION FOR FLARED END SECTION

DRAINAGE DETAILS
NO SCALE

DD-3

STATE OF CALIFORNIA - DEPARTMENT OF TRANSPORTATION
Caltrans® DESIGN

FUNCTIONAL SUPERVISOR: GEORGE MORHIG
CALCULATED-DESIGNED BY: HA VU
CHECKED BY: AHMAD SHAH
REVISED BY
DATE REVISED

LAST REVISION 04-14-11
DATE PLOTTED => 17-JUN-2011
TIME PLOTTED => 05:36

Dist	COUNTY	ROUTE	POST MILES TOTAL PROJECT	SHEET No.	TOTAL SHEETS
08	SBd	15	3.8/12.8	218	680

REGISTERED CIVIL ENGINEER 4-14-11 DATE

6-13-11
PLANS APPROVAL DATE

REGISTERED PROFESSIONAL ENGINEER HA VU No. C61359 Exp. 6-30-11 CIVIL STATE OF CALIFORNIA

THE STATE OF CALIFORNIA OR ITS OFFICERS OR AGENTS SHALL NOT BE RESPONSIBLE FOR THE ACCURACY OR COMPLETENESS OF SCANNED COPIES OF THIS PLAN SHEET.

NOTES FOR GRATED LINE DRAIN

1. ATTACH PAVEMENT MARKER TO BARRIER OR DIKE.
2. PROVIDE REMOVABLE GRATE AND TYPE "A" PAVEMENT MARKER EVERY 25′.
3. FOR DETAILS NOT SHOWN, SEE STANDARD PLAN D98C.

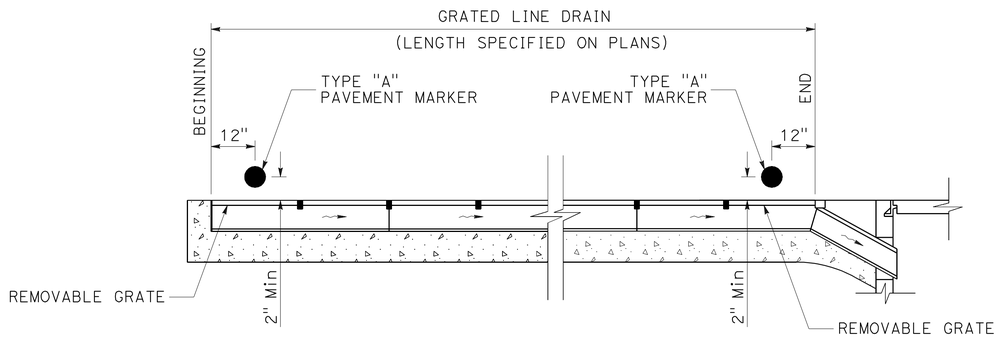

GRATED LINE DRAIN

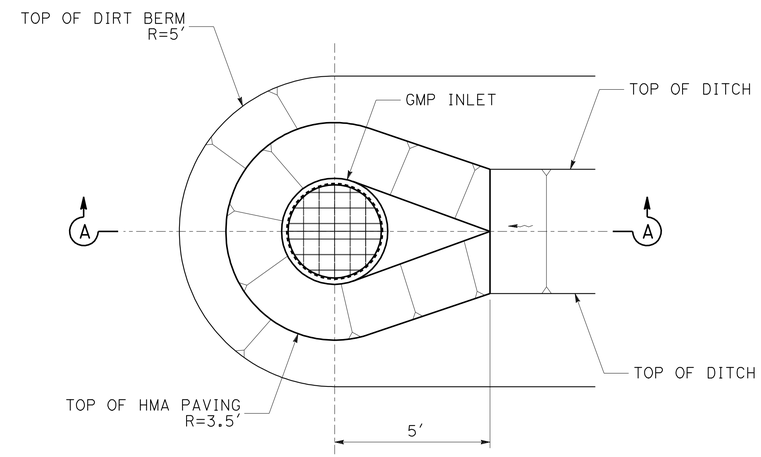

PLAN

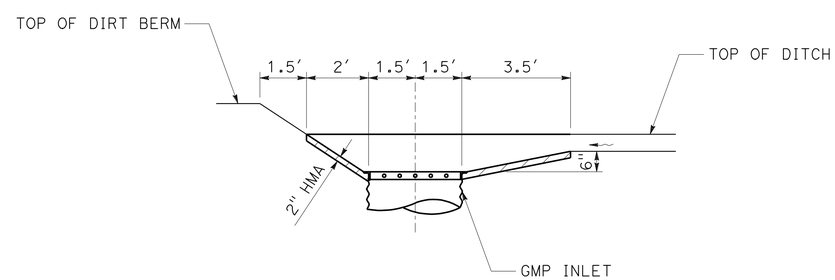

SECTION A-A

HMA INLET APRON

DRAINAGE DETAILS
NO SCALE
DD-4

STATE OF CALIFORNIA - DEPARTMENT OF TRANSPORTATION
Caltrans® **DESIGN**

FUNCTIONAL SUPERVISOR: GEORGE MORHIG
CALCULATED-DESIGNED BY: HA VU
CHECKED BY: AHMAD SHAH
REVISED BY
DATE REVISED

LAST REVISION 04-14-11
DATE PLOTTED => 17-JUN-2011
TIME PLOTTED => 05:36

Dist	COUNTY	ROUTE	POST MILES TOTAL PROJECT	SHEET No.	TOTAL SHEETS
08	SBd	15	3.8/12.8	219	680

REGISTERED CIVIL ENGINEER 4-14-11 DATE

6-13-11
PLANS APPROVAL DATE

REGISTERED PROFESSIONAL ENGINEER
HA VU
No. C61359
Exp. 6-30-11
CIVIL
STATE OF CALIFORNIA

THE STATE OF CALIFORNIA OR ITS OFFICERS OR AGENTS SHALL NOT BE RESPONSIBLE FOR THE ACCURACY OR COMPLETENESS OF SCANNED COPIES OF THIS PLAN SHEET.

NOTES

1. THE MINIMUM OPENING INTO THE EXISTING STORM DRAIN SHALL BE THE OUTSIDE DIAMETER OF THE CONNECTING PIPE PLUS 1". THE CONCRETE BACKFILL SUPPORTING THE CONNECTING PIPE MAY BE OMITTED IF THE PIPE IS LAID ON UNDISTURBED EARTH TO STORM DRAIN WALL.
2. CONNECTOR PIPE SHALL ENTER EXISTING STORM DRAIN RADIALLY.

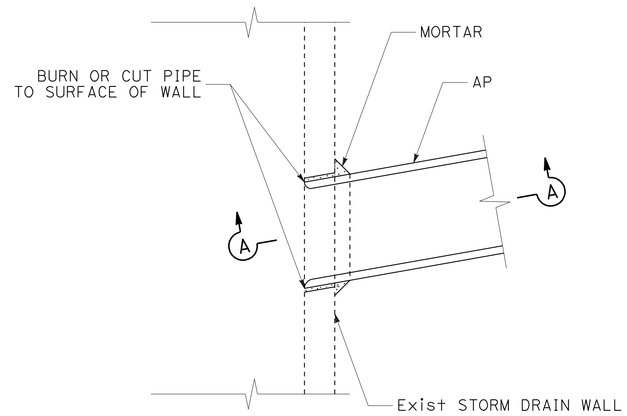

PLAN

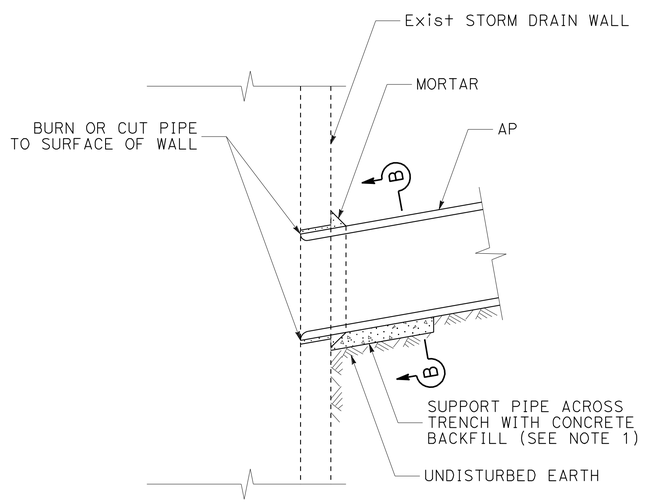

SECTION A-A

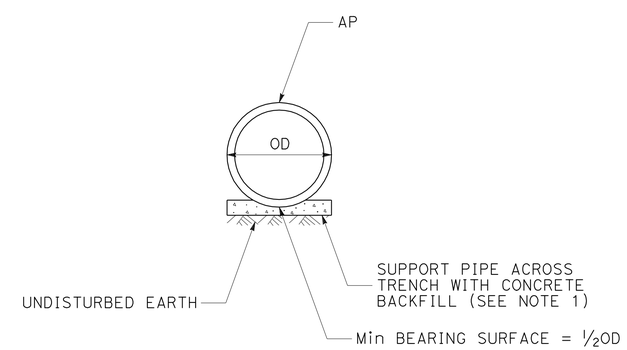

SECTION B-B

JUNCTION STRUCTURE-PIPE TO EXISTING STORM DRAIN

DRAINAGE DETAILS
NO SCALE

DD-5

STATE OF CALIFORNIA - DEPARTMENT OF TRANSPORTATION
Caltrans®
DESIGN

FUNCTIONAL SUPERVISOR: GEORGE MORHIG
CALCULATED-DESIGNED BY: HA VU
CHECKED BY: AHMAD SHAH
REVISED BY
DATE REVISED

LAST REVISION 04-14-11
DATE PLOTTED => 17-JUN-2011
TIME PLOTTED => 05:36

Dist	COUNTY	ROUTE	POST MILES TOTAL PROJECT	SHEET No.	TOTAL SHEETS
08	SBd	15	3.8/12.8	220	680

REGISTERED CIVIL ENGINEER 4-14-11 DATE

6-13-11
PLANS APPROVAL DATE

REGISTERED PROFESSIONAL ENGINEER HA VU No. C61359 Exp. 6-30-11 CIVIL STATE OF CALIFORNIA

THE STATE OF CALIFORNIA OR ITS OFFICERS OR AGENTS SHALL NOT BE RESPONSIBLE FOR THE ACCURACY OR COMPLETENESS OF SCANNED COPIES OF THIS PLAN SHEET.

NOTE

1. CROSS SECTION OF SLOPE DITCH MAY BE SEMICIRCULAR, VEE OR TRAPEZOIDAL.

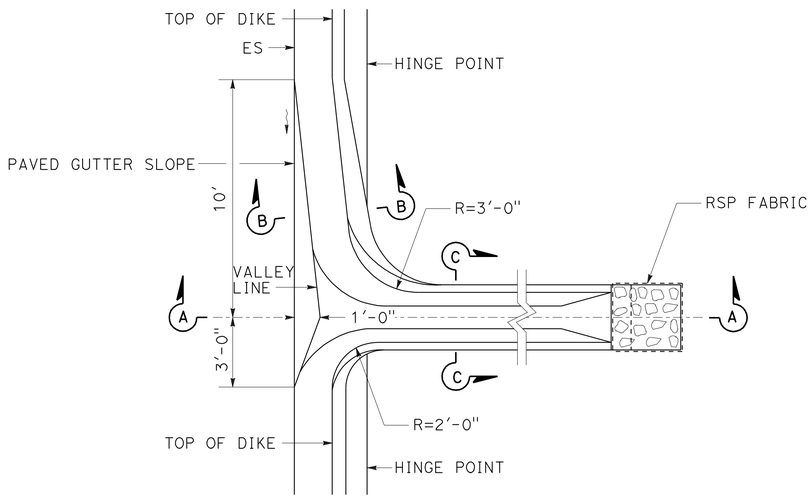

PLAN

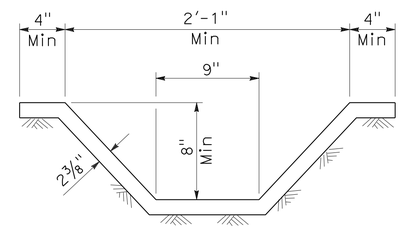

SECTION C-C

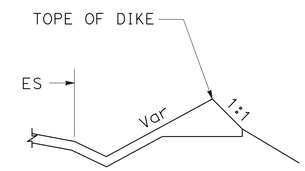

SECTION B-B

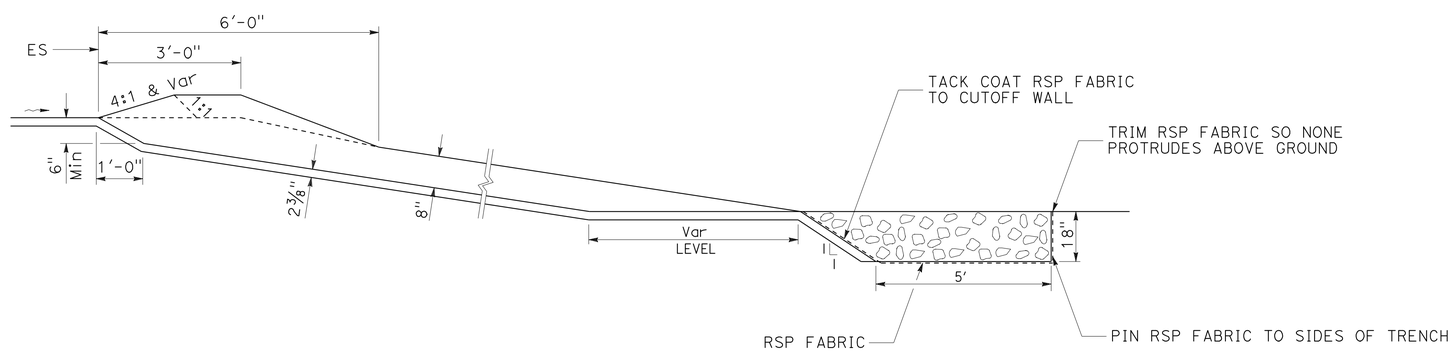

SECTION A-A

HMA OVERSIDE DRAIN

DRAINAGE DETAILS
NO SCALE

DD-6

STATE OF CALIFORNIA - DEPARTMENT OF TRANSPORTATION
Caltrans® DESIGN

FUNCTIONAL SUPERVISOR: GEORGE MORHIG
CALCULATED-DESIGNED BY: HA VU
CHECKED BY: AHMAD SHAH
REVISED BY
DATE REVISED

LAST REVISION 04-14-11
DATE PLOTTED => 17-JUN-2011
TIME PLOTTED => 05:37

Dist	COUNTY	ROUTE	POST MILES TOTAL PROJECT	SHEET No.	TOTAL SHEETS
08	SBd	15	3.8/12.8	221	680

REGISTERED CIVIL ENGINEER 4-14-11 DATE

6-13-11
PLANS APPROVAL DATE

REGISTERED PROFESSIONAL ENGINEER HA VU No. C61359 Exp. 6-30-11 CIVIL STATE OF CALIFORNIA

THE STATE OF CALIFORNIA OR ITS OFFICERS OR AGENTS SHALL NOT BE RESPONSIBLE FOR THE ACCURACY OR COMPLETENESS OF SCANNED COPIES OF THIS PLAN SHEET.

LINE TABLE		
No.	LENGTH	BEARING
1	39.3′	S48°35′46"W
2	15.48′	N60°18′31"W
3	54.99′	N83°53′12"W
4	10.0′	S41°51′46"W
5	152.7′	N83°53′12"W
6	50.07′	S43°54′45"W
7	22.98′	S44°38′47"W
8	81.42′	N41°36′39"E
9	279.78′	N45°22′28"E
10	42.62′	N46°35′36"E
11	16.04′	S44°35′53"W
12	77.8′	S44°53′28"W
L13	3.94′	N47°46′8"E

CURVE DATA				
No.	R	Δ	T	L
1	16.00′	73°48′53"	12.02′	20.61′
2	24.00′	23°34′41"	5.01′	9.88′
3	10.00′	115°22′36"	15.81′	20.14′
4	16.00′	55°53′19"	8.49′	15.61′
5	16.00′	44°13′27"	6.50′	12.35′
6	16.00′	84°20′47"	14.49′	23.55′
7	50.00′	36°34′47"	16.53′	31.92′
8	40.00′	33°35′04"	12.07′	23.45′
9	18.91′	115°35′07"	30.02′	38.15′

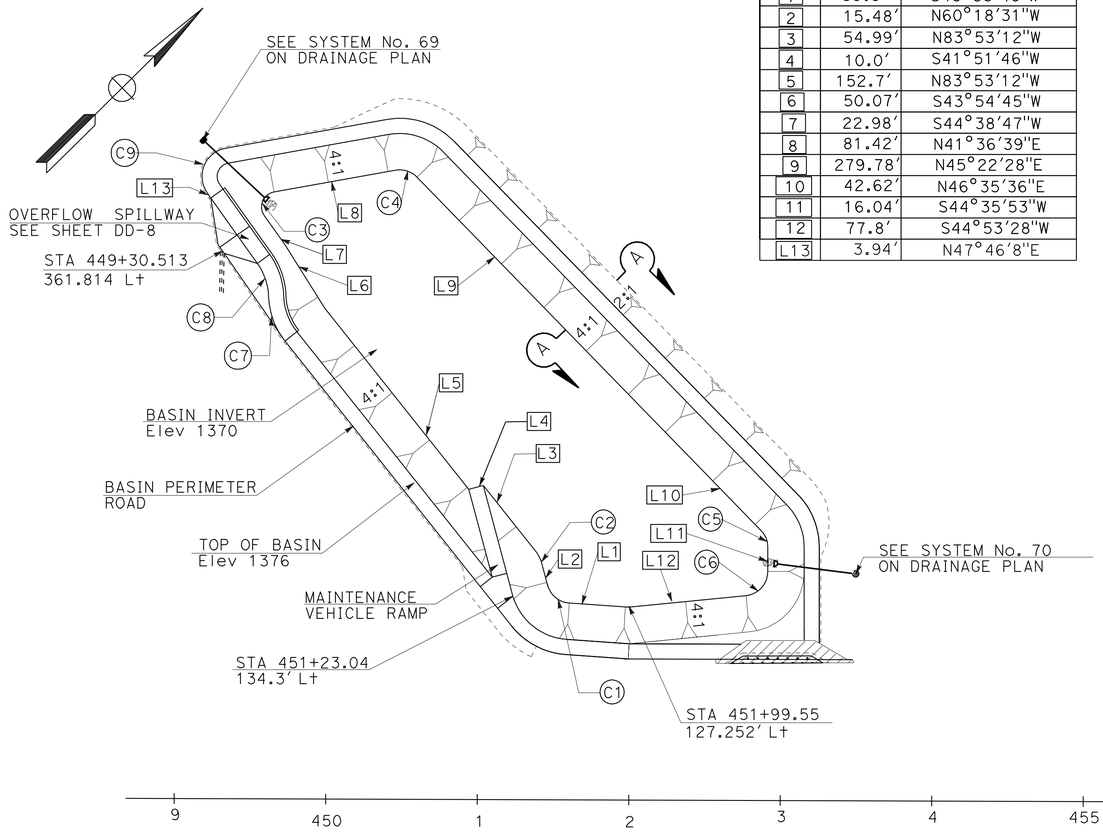

PLAN
SCALE 1" = 50′

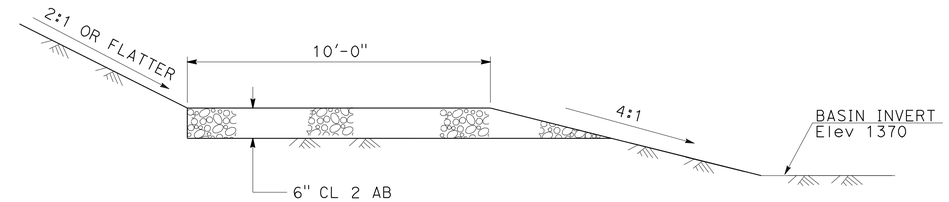

SECTION A-A
NTS
BASIN PERIMETER ROAD

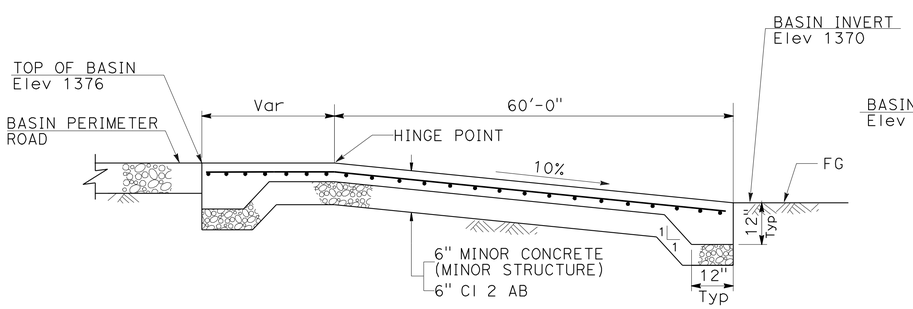

SECTION C-C
NTS

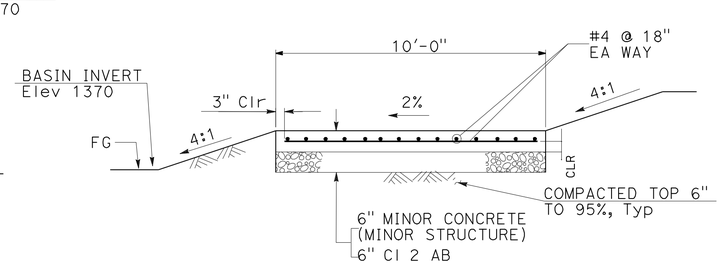

SECTION B-B
NTS

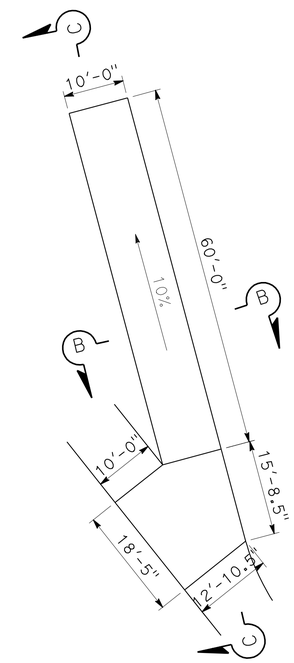

PLAN
NTS
MAINTENANCE VEHICLE RAMP

BASIN No. 1 DETAIL

DRAINAGE DETAILS
NO SCALE

DD-7

STATE OF CALIFORNIA - DEPARTMENT OF TRANSPORTATION
Caltrans® **DESIGN**
FUNCTIONAL SUPERVISOR: GEORGE MORHIG
CALCULATED-DESIGNED BY: PAUL LAMBERT
CHECKED BY
REVISED BY
DATE REVISED
TOUHIDA HAIDER

LAST REVISION 04-14-11
DATE PLOTTED => 17-JUN-2011
TIME PLOTTED => 05:37

Dist	COUNTY	ROUTE	POST MILES TOTAL PROJECT	SHEET No.	TOTAL SHEETS
08	SBd	15	3.8/12.8	222	680

REGISTERED CIVIL ENGINEER 4-14-11 DATE

6-13-11
PLANS APPROVAL DATE

REGISTERED PROFESSIONAL ENGINEER HA VU No. C61359 Exp. 6-30-11 CIVIL STATE OF CALIFORNIA

THE STATE OF CALIFORNIA OR ITS OFFICERS OR AGENTS SHALL NOT BE RESPONSIBLE FOR THE ACCURACY OR COMPLETENESS OF SCANNED COPIES OF THIS PLAN SHEET.

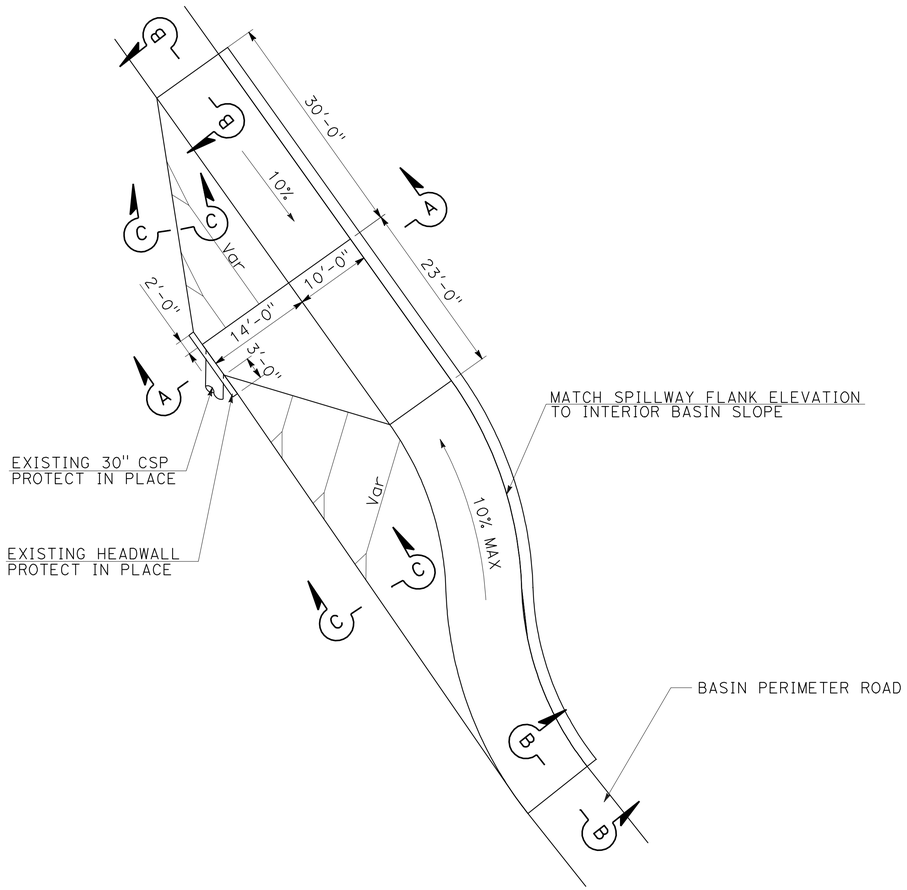

OVERFLOW SPILLWAY

NTS

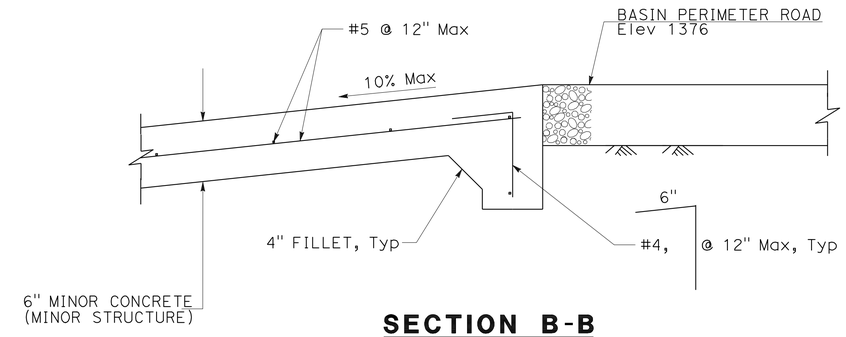

SECTION B-B

NTS

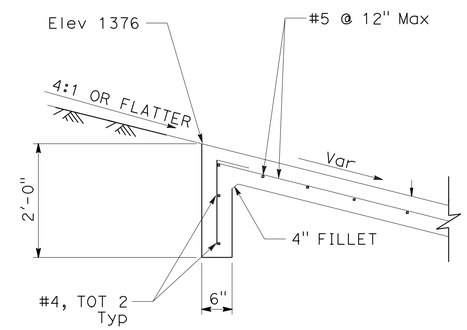

SECTION C-C

NTS

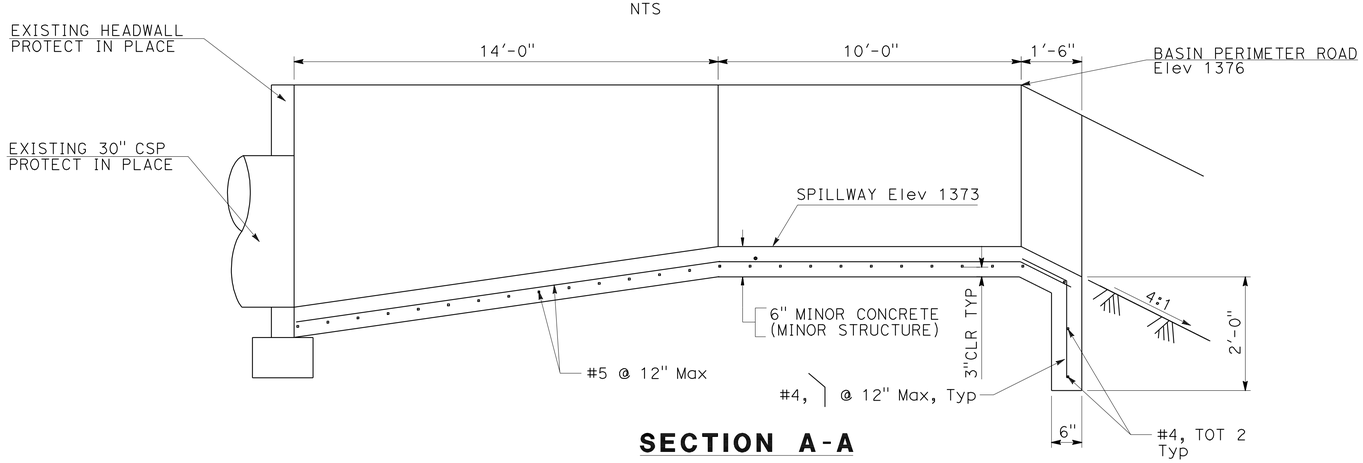

SECTION A-A

NTS

BASIN No. 1 OVERFLOW SPILLWAY

DRAINAGE DETAILS

NO SCALE

DD-8

STATE OF CALIFORNIA - DEPARTMENT OF TRANSPORTATION
Caltrans® DESIGN

FUNCTIONAL SUPERVISOR: GEORGE MORHIG
CALCULATED-DESIGNED BY: TOUHIDA HAIDER
CHECKED BY: PAUL LAMBERT
REVISED BY
DATE REVISED

LAST REVISION 04-14-11
DATE PLOTTED => 17-JUN-2011
TIME PLOTTED => 05:37

Dist	COUNTY	ROUTE	POST MILES TOTAL PROJECT	SHEET No.	TOTAL SHEETS
08	SBd	15	3.8/12.8	223	680

REGISTERED CIVIL ENGINEER 4-14-11 DATE

6-13-11
PLANS APPROVAL DATE

REGISTERED PROFESSIONAL ENGINEER HA VU No. C61359 Exp. 6-30-11 CIVIL STATE OF CALIFORNIA

THE STATE OF CALIFORNIA OR ITS OFFICERS OR AGENTS SHALL NOT BE RESPONSIBLE FOR THE ACCURACY OR COMPLETENESS OF SCANNED COPIES OF THIS PLAN SHEET.

LINE TABLE		
No.	LENGTH	BEARING
1	139.34′	N87°27′54.29"W
2	51.91′	N40°29′8.32"E
3	48.4′	S75°36′36.41"E
4	10.0′	N37°58′5.03"E
5	73.35′	S75°36′36.41"E
6	164.18′	S89°46′48.77"E
7	197.61′	S67°36′26.51"W
8	236.01′	S71°9′6.89"W
9	28.65′	N29°21′23.98"W
10	4.58′	N29°21′23.98"W
11	105.42′	N40°28′19.04"E
12	175.42′	S87°27′54.29"E

CURVE DATA				
No. ⊕	R	Δ	T	L
1	15′	180°0′03"	2275846.90	47.12′
2	8′	130°43′10"	17.44′	18.25′
3	10′	63°54′15"	6.24′	11.15′
4	40′	157°23′17"	200.07′	109.88′
5	10′	79°29′29"	8.32′	13.87′
6	10′	69°49′43"	6.98′	12.19′
7	10′	52°3′47"	4.88′	9.09′

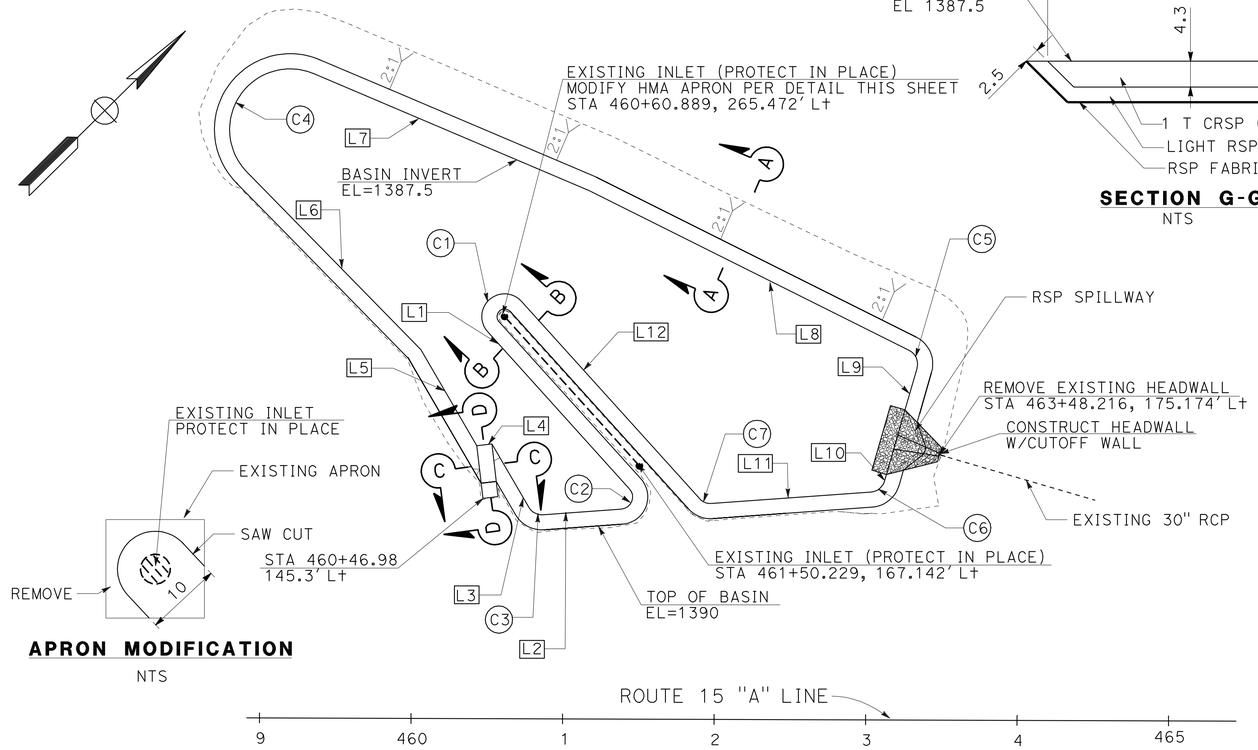

APRON MODIFICATION
NTS

PLAN
SCALE: 1" = 50′

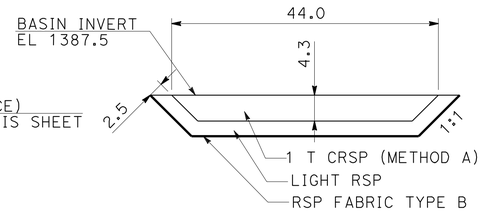

SECTION G-G
NTS

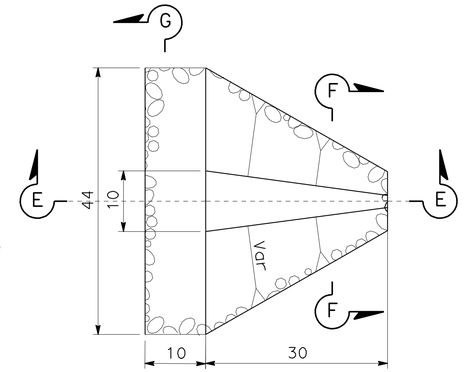

RSP SPILLWAY
NTS

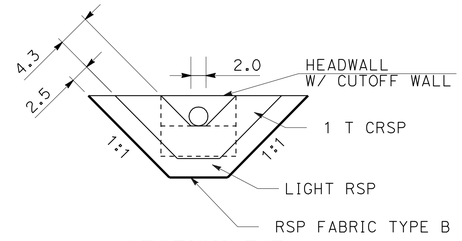

SECTION F-F
NTS

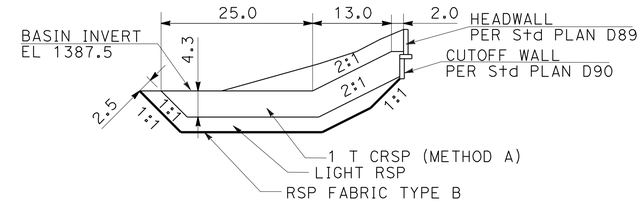

SECTION E-E
NTS

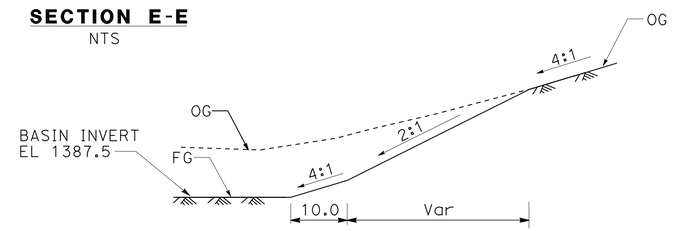

SECTION A-A
NTS

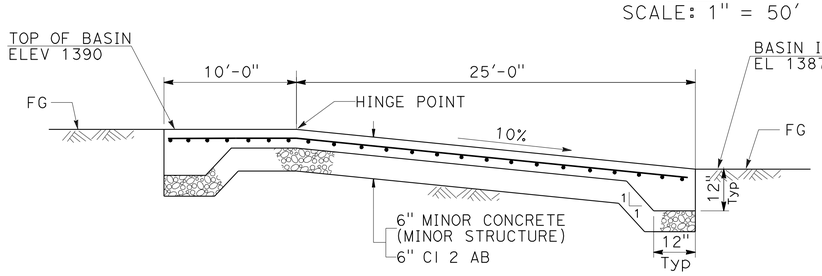

SECTION D-D
NTS

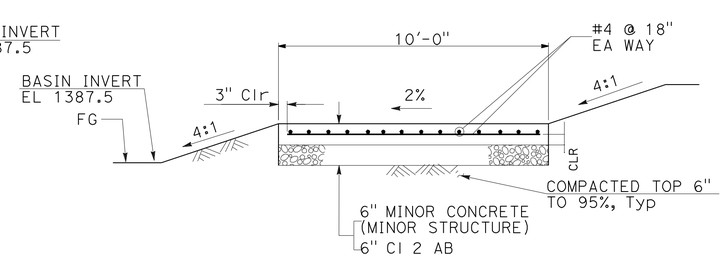

SECTION C-C
NTS

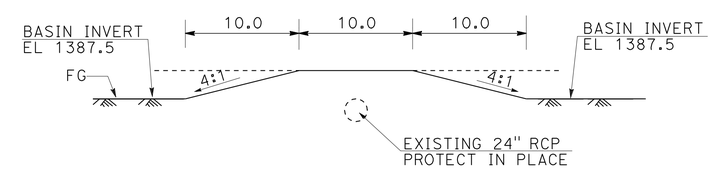

SECTION B-B
NTS

BASIN No. 2 DETAIL

DRAINAGE DETAILS
SCALE AS SHOWN

DD-9

STATE OF CALIFORNIA - DEPARTMENT OF TRANSPORTATION
Caltrans® DESIGN
FUNCTIONAL SUPERVISOR GEORGE MORHIG
CALCULATED-DESIGNED BY TOUHIDA HAIDER
CHECKED BY PAUL LAMBERT
REVISED BY
DATE REVISED

LAST REVISION 04-14-11
DATE PLOTTED => 17-JUN-2011
TIME PLOTTED => 05:37

ALTERNATIVE PIPE CULVERTS
ALLOWABLE PIPE MATERIAL AND PROTECTION

DESIGNATION	PLASTIC PIPE (SMOOTH INTERIOR WALL)	RCP	CSP		
	SIZE	SIZE	SIZE	THICK	BITUMINOUS COAT
12" AP	12"	12"	12"	0.064"	YES
15" AP	15"	15"	15"	0.064"	YES
18" AP	18"	18"	18"	0.064"	YES
24" AP	24"	24"	24"	0.079"	YES
36" AP	36"	36"	36"	0.079"	YES

Dist	COUNTY	ROUTE	POST MILES TOTAL PROJECT	SHEET No.	TOTAL SHEETS
08	SBd	15	3.8/12.8	224	680

REGISTERED CIVIL ENGINEER 4-14-11 DATE

6-13-11
PLANS APPROVAL DATE

REGISTERED PROFESSIONAL ENGINEER HA VU No. C61359 Exp. 6-30-11 CIVIL STATE OF CALIFORNIA

THE STATE OF CALIFORNIA OR ITS OFFICERS OR AGENTS SHALL NOT BE RESPONSIBLE FOR THE ACCURACY OR COMPLETENESS OF SCANNED COPIES OF THIS PLAN SHEET.

ABANDON CULVERT	SAND BACKFILL	REMOVE HEADWALL	REMOVE CULVERT	REMOVE INLET	ABANDON INLET	FRAME & GRATE (N) TYPE 24-12	FRAME & GRATE (N) TYPE 36R	Misc IRON AND STEEL	MINOR Conc (MINOR Str)	MINOR Conc (Misc Const)	MINOR Conc (SLOPE PROTECTION)	CLASS 2 AB	HMA (TYPE A)	PLACE HMA (Misc AREA)	ADJUST INLET	CAP INLET	CONCRETE COLLAR* (N)	GRATED LINE DRAIN	15" ENTRANCE TAPER	AFES 15"	AFES 18"	AFES 24"	RSP FABRIC	RSP (FACING METHOD B)	RSP (LIGHT METHOD B)	Conc RSP (1T, METHOD A)	AP 12"	AP 18"	AP 24"	RCP 12"	RCP 18"	RCP 24"	CSP (0.064" THICK) 12"	CSP (0.064" THICK) 15"	CSP (0.064" THICK) 18"	15" CSP DD (0.079" THICK)	12" CSP RISER (0.064" THICK)	36" CSP INLET (0.079" THICK)	JOINT CLASSIFICATION (N)	MAXIMUM COVER (N)	HEIGHT OF INLET (N)	DESCRIPTION	STATION	DRAINAGE UNIT No.	DRAINAGE SYSTEM No.	DRAINAGE PLAN SHEET No.
LF	CY	EA	LF	EA	EA	EA	EA	LB	CY	CY	CY	CY	TON	SQYD	EA	EA	EA	LF	EA	EA	EA	EA	SQYD	CY	CY	CY	LF	LF	LF	LF	LF	LF	LF	LF	LF	LF	LF	LF		FT	FT					
				1																																					REMOVE INLET	83.1' R+ 231+00.00	a	1	D-1
																	1																										CONCRETE COLLAR*	84.8' R+ 231+00.00	b		
																											3.1												S	3.0		12" AP	84.8' R+ 231+00.00	c		
						1		326	1.39																																	3.6	GO INLET	81.0' R+ 231+00.00	d		
										1.32																																W/INLET DEPRESSION				
				1																																							REMOVE INLET	233+75.00	a	2	D-1
																	1																										CONCRETE COLLAR*	2.5' R+ 233+75.00	b		
																												3.6											S	2.9		18" AP	2.5' R+ 233+75.00	c		
						2		634	1.38																																3.0	Mod G1 INLET*	1.1' L+ 233+55.00	d		
																												17.0											S	2.2		18" AP	1.1' L+ 233+55.00	e		
						2		634	1.59																																3.7	Mod G1 INLET*	1.1' L+ 233+75.00	f		
																												97.1											S	2.3		18" AP	1.1' L+ 233+75.00	g		
						2		634	1.62																																3.8	Mod G1 INLET*	1.1' L+ 234+75.00	h		
																												21.9											S	3.6		18" AP	81.0' R+ 233+75.00	a	3	D-1
						2		634	1.68																																4.0	Mod G1 INLET*	81.0' R+ 234+00.00	b		
				1																																							REMOVE INLET	238+00.00	a	4	D-2
																	1																										CONCRETE COLLAR*	2.5' R+ 238+00.00	b		
																												3.6											S	3.4		18" AP	2.5' R+ 238+00.00	c		
						2		634	1.77																																4.3	Mod G1 INLET*	1.1' L+ 238+00.00	d		
																													217.1										S	2.5		24" AP	1.1' L+ 238+00.00	e		
						2		634	1.83																																4.5	Mod G1 INLET*	1.1' L+ 240+20.00	f		
															1																											ADJUST INLET	81.0' R+ 238+00.00	a	5	D-2
										1.32																																W/INLET DEPRESSION				
				1																																							REMOVE INLET	242+74.00	a	6	D-2
																	1																										CONCRETE COLLAR*	2.5' R+ 242+74.00	b		
																												3.6											S	3.1		18" AP	2.5' R+ 242+74.00	c		
						2		634	1.41																																3.1	Mod G1 INLET*	1.1' L+ 242+45.00	d		
																												26.0											S	2.3		18" AP	1.1' L+ 242+45.00	e		
						2		634	1.62																																3.8	Mod G1 INLET*	1.1' L+ 242+74.00	f		
																													223.1										S	2.6		24" AP	1.1' L+ 242+74.00	g		
						2		634	1.86																																4.6	Mod G1 INLET*	1.1' L+ 245+00.00	h		
				4				6032	16.15	2.64					1											3.1	172.8	440.2														SHEET TOTAL				

NOTES
1. *: SEE DRAINAGE DETAIL SHEETS.
2. **: REQUIRE WATERTIGHTNESS.
3. (N): NOT A SEPARATE PAY ITEM, FOR INFORMATION ONLY.
4. ALL STATION OFFSETS ARE REFERRED TO THE CENTER LINE OF "A" LINE UNLESS OTHERWISE SHOWN.

DRAINAGE QUANTITIES
DQ-1

REVISED BY: HA VU — DATE REVISED:
CALCULATED-DESIGNED BY: AHMAD SHAH — CHECKED BY:
FUNCTIONAL SUPERVISOR: GEORGE MORHIG

STATE OF CALIFORNIA - DEPARTMENT OF TRANSPORTATION
DESIGN
Caltrans

LAST REVISION 04-14-11 | DATE PLOTTED => 17-JUN-2011 | TIME PLOTTED => 05:37

Dist	COUNTY	ROUTE	POST MILES TOTAL PROJECT	SHEET No.	TOTAL SHEETS
08	SBd	15	3.8/12.8	225	680

REGISTERED CIVIL ENGINEER 4-14-11 DATE

6-13-11
PLANS APPROVAL DATE

REGISTERED PROFESSIONAL ENGINEER HA VU No. C61359 Exp. 6-30-11 CIVIL STATE OF CALIFORNIA

THE STATE OF CALIFORNIA OR ITS OFFICERS OR AGENTS SHALL NOT BE RESPONSIBLE FOR THE ACCURACY OR COMPLETENESS OF SCANNED COPIES OF THIS PLAN SHEET.

ABANDON CULVERT (LF)	SAND BACKFILL (CY)	REMOVE HEADWALL (EA)	REMOVE CULVERT (LF)	REMOVE INLET (EA)	ABANDON INLET (EA)	FRAME & GRATE (N) TYPE 24-12 (EA)	FRAME & GRATE (N) TYPE 36R (EA)	Misc IRON AND STEEL (LB)	MINOR Conc (MINOR Str) (CY)	MINOR Conc (Misc Const) (CY)	MINOR Conc (SLOPE PROTECTION) (CY)	CLASS 2 AB (CY)	HMA (TYPE A) (TON)	PLACE HMA (Misc AREA) (SQYD)	ADJUST INLET (EA)	CAP INLET (EA)	CONCRETE COLLAR* (N) (EA)	GRATED LINE DRAIN (LF)	15" ENTRANCE TAPER (EA)	AFES 15" (EA)	AFES 18" (EA)	AFES 24" (EA)	RSP FABRIC (SQYD)	RSP (FACING METHOD B) (CY)	RSP (LIGHT METHOD B) (CY)	Conc RSP (1T, METHOD A) (CY)	AP 12" (LF)	AP 18" (LF)	AP 24" (LF)	RCP 12" (LF)	RCP 18" (LF)	RCP 24" (LF)	CSP (0.064" THICK) 12" (LF)	CSP (0.064" THICK) 15" (LF)	CSP (0.064" THICK) 18" (LF)	15" CSP DD (0.079" THICK) (LF)	12" CSP RISER (0.064" THICK) (LF)	36" CSP INLET (0.079" THICK) (LF)	JOINT CLASSIFICATION (N)	MAXIMUM COVER (N) (FT)	HEIGHT OF INLET (N) (FT)	DESCRIPTION	STATION	DRAINAGE UNIT No.	DRAINAGE SYSTEM No.	DRAINAGE PLAN SHEET No.
																													197.5										S	2.6		24" AP	1.1′ L+ 245+00.00	i	6	D-2
						2		634	1.86																																	4.6	Mod G1 INLET*	1.1′ L+ 247+00.00	j		
																											60.4												S	3.3		18" AP	81.0′ R+ 242+96.00	a	7	D-2
						1		326	1.17																																	4.0	G1 INLET	81.0′ R+ 243+60.00	b		
																							11.7	3.3																			RSP (FACING, METHOD B)*	147.3′ R+ 246+50.00	a	8	D-2
																				1																							AFES	147.3′ R+ 246+50.00	b		
																																		72.8					D	2.9		15" CSP (0.064" THICK)	147.3′ R+ 246+50.00	c		
						1		326	0.95																																	3.0	G1 INLET	81.0′ R+ 246+50.00	d		
				1																																							REMOVE INLET	248+99.00	a	9	D-2,3
																	1																										CONCRETE COLLAR*	2.5′ R+ 248+99.00	b		
																											3.6												S	3.2		18" AP	2.5′ R+ 248+99.00	c		
						2		634	1.68																																	4.0	Mod G1 INLET*	1.1′ L+ 248+99.00	d		
																													198.1										S	2.1		24" AP	1.1′ L+ 248+99.00	e		
						2		634	1.71																																	4.1	Mod G1 INLET*	1.1′ L+ 251+00.00	f		
																													197.1										S	2.4		24" AP	1.1′ L+ 251+00.00	g		
						2		634	1.80																																	4.4	Mod G1 INLET*	1.1′ L+ 253+00.00	h		
																							11.7	3.3																			RSP (FACING, METHOD B)*	143.6′ R+ 252+00.00	a	10	D-3
																				1																							AFES	143.6′ R+ 252+00.00	b		
																																		68.1					D	3.2		15" CSP (0.064" THICK)	143.6′ R+ 252+00.00	c		
						2		634	1.38																																	3.0	Mod G1 INLET*	81.0′ R+ 252+00.00	d		
																							11.7	3.3																			RSP (FACING, METHOD B)*	140.8′ R+ 257+87.00	a	11	D-3
																				1																							AFES	140.8′ R+ 257+87.00	b		
																																		79.8					D	2.6		15" CSP (0.064" THICK)	140.8′ R+ 257+87.00	c		
						2		634	1.38																																	3.0	Mod G1 INLET*	81.0′ R+ 258+35.00	d		
				1																																							REMOVE INLET	254+99.00	a	12	D-3
																	1																										CONCRETE COLLAR*	2.5′ R+ 254+99.00	b		
																											3.6												S	3.4		18" AP	2.5′ R+ 254+99.00	c		
						2		634	1.74																																	4.2	Mod G1 INLET*	1.1′ L+ 254+99.00	d		
																													163.1										S	2.2		24" AP	1.1′ L+ 254+99.00	e		
						2		634	1.74																																	4.2	Mod G1 INLET*	1.1′ L+ 256+65.00	f		
				2				5724	15.41											3			35.1	9.9			67.6		755.8					220.7									SHEET TOTAL			

NOTES

1. *: SEE DRAINAGE DETAIL SHEETS.
2. **: REQUIRE WATERTIGHTNESS.
3. (N): NOT A SEPARATE PAY ITEM, FOR INFORMATION ONLY.
4. ALL STATION OFFSETS ARE REFERRED TO THE CENTER LINE OF "A" LINE UNLESS OTHERWISE SHOWN.

DRAINAGE QUANTITIES
DQ-2

REVISED BY | DATE REVISED
HA VU | AHMAD SHAH
CALCULATED-DESIGNED BY | CHECKED BY
FUNCTIONAL SUPERVISOR | GEORGE MORHIG
STATE OF CALIFORNIA - DEPARTMENT OF TRANSPORTATION
DESIGN
Caltrans

LAST REVISION 04-14-11 | DATE PLOTTED => 17-JUN-2011 | TIME PLOTTED => 05:37

Dist	COUNTY	ROUTE	POST MILES TOTAL PROJECT	SHEET No.	TOTAL SHEETS
08	SBd	15	3.8/12.8	226	680

REGISTERED CIVIL ENGINEER 4-14-11 DATE

6-13-11
PLANS APPROVAL DATE

REGISTERED PROFESSIONAL ENGINEER HA VU No. C61359 Exp. 6-30-11 CIVIL STATE OF CALIFORNIA

THE STATE OF CALIFORNIA OR ITS OFFICERS OR AGENTS SHALL NOT BE RESPONSIBLE FOR THE ACCURACY OR COMPLETENESS OF SCANNED COPIES OF THIS PLAN SHEET.

ABANDON CULVERT (LF)	SAND BACKFILL (CY)	REMOVE HEADWALL (EA)	REMOVE CULVERT (LF)	REMOVE INLET (EA)	ABANDON INLET (EA)	FRAME & GRATE (N) TYPE 24-12 (EA)	FRAME & GRATE (N) TYPE 36R (EA)	Misc IRON AND STEEL (LB)	MINOR Conc (MINOR Str) (CY)	MINOR Conc (Misc Const) (CY)	MINOR Conc (SLOPE PROTECTION) (CY)	CLASS 2 AB (CY)	HMA (TYPE A) (TON)	PLACE HMA (Misc AREA) (SQYD)	ADJUST INLET (EA)	CAP INLET (EA)	CONCRETE COLLAR* (N) (EA)	GRATED LINE DRAIN (LF)	15" ENTRANCE TAPER (EA)	AFES 15" (EA)	AFES 18" (EA)	AFES 24" (EA)	RSP FABRIC (SQYD)	RSP (FACING METHOD B) (CY)	RSP (LIGHT METHOD B) (CY)	Conc RSP (1T, METHOD A) (CY)	AP 12" (LF)	AP 18" (LF)	AP 24" (LF)	RCP 12" (LF)	RCP 18" (LF)	RCP 24" (LF)	CSP (0.064" THICK) 12" (LF)	CSP (0.064" THICK) 15" (LF)	CSP (0.064" THICK) 18" (LF)	15" CSP DD (0.079" THICK) (LF)	12" CSP RISER (0.064" THICK) (LF)	36" CSP INLET (0.079" THICK) (LF)	JOINT CLASSIFICATION (N)	MAXIMUM COVER (N) (FT)	HEIGHT OF INLET (N) (FT)	DESCRIPTION	STATION	DRAINAGE UNIT No. ◯	DRAINAGE SYSTEM No. ⬡	DRAINAGE PLAN SHEET No.
																													162.1										S	2.2		24" AP	1.1′ L+ 256+65.00	g	12	D-3
						2		634	1.74																																	4.2	Mod G1 INLET*	1.1′ L+ 258+30.00	h		
																													162.1										S	2.2		24" AP	1.1′ L+ 258+30.00	i		
						2		634	1.71																																	4.1	Mod G1 INLET*	1.1′ L+ 259+95.00	j		
																											27.7												S	3.6		18" AP	81.0′ R+ 254+99.00	a	13	D-3
						1		326	1.17																																	4.0	G1 INLET	81.0′ R+ 255+30.00	b		
															1																												ADJUST INLET	81.0′ R+ 262+49.00	a	14	D-3
																											27.7												S	1.1		18" AP	81.0′ R+ 262+49.00	b		
						2		634	1.35																																	2.9	Mod G1 INLET*	81.0′ R+ 262+80.00	c		
				1																																						REMOVE INLET	264+64.00	a	15	D-3,4
																	1																									CONCRETE COLLAR*	2.5′ R+ 264+64.00	b		
																											3.6												S	3.6		18" AP	2.5′ R+ 264+64.00	c		
						2		634	1.32																																	2.8	Mod G1 INLET*	1.1′ L+ 263+65.00	d		
																											97.5												S	2.8		18" AP	1.1′ L+ 263+65.00	e		
						2		634	1.77																																	4.3	Mod G1 INLET*	1.1′ L+ 264+64.00	f		
																											123.1												S	2.8		18" AP	1.1′ L+ 264+64.00	g		
						1		326	1.21																																	4.2	G1 INLET	1.1′ L+ 265+90.00	h		
																											117.0												S	2.7		18" AP	1.1′ L+ 265+90.00	i		
						1		326	1.19																																	4.1	G1 INLET	1.1′ L+ 267+10.00	j		
															1																												ADJUST INLET	81.0′ R+ 264+64.00	a	16	D-3
										1.32																															W/INLET DEPRESSION				
																							11.7	3.3																		RSP (FACING, METHOD B)*	134.5′ R+ 267+70.00	a	17	D-4
																				1																						AFES	134.5′ R+ 267+70.00	b		
																																	57.7						D	3.6		15" CSP (0.064" THICK)	134.5′ R+ 267+70.00	c		
						2		634	1.38																																	3.0	Mod G1 INLET*	81.0′ R+ 267+70.00	d		
				1																																						REMOVE INLET	269+89.00	a	18	D-4
			3.6																																							REMOVE 18" CMP	269+89.00	b		
																	1																									CONCRETE COLLAR*	2.4′ R+ 269+89.54	c		
																											3.5												S	5.4		18" AP	2.4′ R+ 269+89.54	d		
						2		634	1.71																																	4.1	Mod G1 INLET*	1.1′ L+ 269+45.00	e		
			3.6	2				5416	14.55	1.32					2					1			11.7	3.3			400.1	324.2					57.7									SHEET TOTAL				

NOTES

1. *: SEE DRAINAGE DETAIL SHEETS.
2. **: REQUIRE WATERTIGHTNESS.
3. (N): NOT A SEPARATE PAY ITEM, FOR INFORMATION ONLY.
4. ALL STATION OFFSETS ARE REFERRED TO THE CENTER LINE OF "A" LINE UNLESS OTHERWISE SHOWN.

DRAINAGE QUANTITIES
DQ-3

REVISED BY | DATE REVISED
HA VU | AHMAD SHAH
CALCULATED-DESIGNED BY | CHECKED BY
FUNCTIONAL SUPERVISOR | GEORGE MORHIG
STATE OF CALIFORNIA - DEPARTMENT OF TRANSPORTATION
DESIGN
Caltrans

LAST REVISION 04-14-11 | DATE PLOTTED => 17-JUN-2011 | TIME PLOTTED => 05:37

Dist	COUNTY	ROUTE	POST MILES TOTAL PROJECT	SHEET No.	TOTAL SHEETS
08	SBd	15	3.8/12.8	227	680

REGISTERED CIVIL ENGINEER 4-14-11 DATE

6-13-11
PLANS APPROVAL DATE

REGISTERED PROFESSIONAL ENGINEER HA VU No. C61359 Exp. 6-30-11 CIVIL STATE OF CALIFORNIA

THE STATE OF CALIFORNIA OR ITS OFFICERS OR AGENTS SHALL NOT BE RESPONSIBLE FOR THE ACCURACY OR COMPLETENESS OF SCANNED COPIES OF THIS PLAN SHEET.

ABANDON CULVERT	SAND BACKFILL	REMOVE HEADWALL	REMOVE CULVERT	REMOVE INLET	ABANDON INLET	FRAME & GRATE (N) TYPE 24-12	FRAME & GRATE (N) TYPE 36R	Misc IRON AND STEEL	MINOR Conc (MINOR Str)	MINOR Conc (Misc Const)	MINOR Conc (SLOPE PROTECTION)	CLASS 2 AB	HMA (TYPE A)	PLACE HMA (Misc AREA)	ADJUST INLET	CAP INLET	CONCRETE COLLAR* (N)	GRATED LINE DRAIN	15" ENTRANCE TAPER	AFES 15"	AFES 18"	AFES 24"	RSP FABRIC	RSP (FACING METHOD B)	RSP (LIGHT METHOD B)	Conc RSP (1T, METHOD A)	AP 12"	AP 18"	AP 24"	RCP 12"	RCP 18"	RCP 24"	CSP (0.064" THICK) 12"	CSP (0.064" THICK) 15"	CSP (0.064" THICK) 18"	15" CSP DD (0.079" THICK)	12" CSP RISER (0.064" THICK)	36" CSP INLET (0.079" THICK)	JOINT CLASSIFICATION (N)	MAXIMUM COVER (N)	HEIGHT OF INLET (N)	DESCRIPTION	STATION	DRAINAGE UNIT No.	DRAINAGE SYSTEM No.	DRAINAGE PLAN SHEET No.
LF	CY	EA	LF	EA	EA	EA	EA	LB	CY	CY	CY	CY	TON	SQYD	EA	EA	EA	LF	EA	EA	EA	EA	SQYD	CY	CY	CY	LF	LF	LF	LF	LF	LF	LF	LF	LF	LF	LF	LF		FT	FT					
																												41.1												S	5.4		18" AP	1.1′ L+ 269+45.00	f	18	D-4
						2		634	2.54																																	6.9	Mod G1 INLET*	1.1′ L+ 269+89.00	g		
																												158.1												S	5.4		18" AP	1.1′ L+ 269+89.00	h		
						2		634	2.03																																	5.2	Mod G1 INLET*	1.1′ L+ 271+50.00	i		
																												97.0												S	3.7		18" AP	1.1′ L+ 271+50.00	j		
						1		326	1.32																																	4.7	G1 INLET	1.1′ L+ 272+50.00	k		
																												97.0												S	3.2		18" AP	1.1′ L+ 272+50.00	l		
						1		326	1.19																																	4.1	G1 INLET	1.1′ L+ 273+50.00	m		
																												118.8												S	1.1		18" AP	81.0′ R+ 270+27.00	a	19	D-4
						2		634	1.26																																	2.6	Mod G1 INLET*	81.0′ R+ 271+50.00	b		
						2		634	1.06																																	1.9	Mod G1 INLET*	92.5′ R+ 273+55.00	a	20	D-4
																											61.3												S**	1.5		12" AP	92.5′ R+ 273+55.00	b		
						2		634	1.23																																	2.5	Mod G1 INLET*	92.7′ R+ 274+20.00	c		
																												76.1												S	1.7		18" AP	92.7′ R+ 274+20.00	d		
																												16.9												S	1.7		18" AP	93.0′ R+ 275+00.00	e		
						2		634	1.44																																	3.2	Mod G1 INLET*	92.6′ R+ 275+20.00	f		
																												76.1												S	1.7		18" AP	92.6′ R+ 275+20.00	g		
						2		634	1.41																																	3.1	Mod G1 INLET*	92.7′ R+ 276+00.00	h		
																												95.9												S	1.6		18" AP	92.7′ R+ 276+00.00	i		
						2		634	1.38																																	3.0	Mod G1 INLET*	92.6′ R+ 277+00.00	j		
																												95.9												S	1.5		18" AP	92.6′ R+ 277+00.00	k		
						2		634	1.38																																	3.0	Mod G1 INLET*	92.7′ R+ 278+00.00	l		
																												95.9												S	1.6		18" AP	92.7′ R+ 278+00.00	m		
						2		634	1.41																																	3.1	Mod G1 INLET*	92.5′ R+ 279+00.00	n		
				1																																							REMOVE INLET	275+00.00	a	21	D-4
			3.6																																								REMOVE 18" CMP	275+00.00	b		
																	1																										CONCRETE COLLAR*	2.5′ R+ 275+00.00	c		
																												3.6												S	5.8		18" AP	2.5′ R+ 275+00.00	d		
						2		634	2.60																																	7.1	Mod G1 INLET*	1.1′ L+ 275+00.00	e		
																												147.1												S	5.6		18" AP	1.1′ L+ 275+00.00	f		
						2		634	2.00																																	5.1	Mod G1 INLET*	1.1′ L+ 276+50.00	g		
																												97.0												S	3.6		18" AP	1.1′ L+ 276+50.00	h		
						1		326	1.30																																	4.6	G1 INLET	1.1′ L+ 277+50.00	i		
			3.6	1				8586	23.55																		61.3	1216.5															SHEET TOTAL				

NOTES

1. *: SEE DRAINAGE DETAIL SHEETS.
2. **: REQUIRE WATERTIGHTNESS.
3. (N): NOT A SEPARATE PAY ITEM, FOR INFORMATION ONLY.
4. ALL STATION OFFSETS ARE REFERRED TO THE CENTER LINE OF "A" LINE UNLESS OTHERWISE SHOWN.

DRAINAGE QUANTITIES
DQ-4

REVISED BY | DATE REVISED
HA VU | AHMAD SHAH
CALCULATED-DESIGNED BY | CHECKED BY
FUNCTIONAL SUPERVISOR | GEORGE MORHIG
STATE OF CALIFORNIA - DEPARTMENT OF TRANSPORTATION
DESIGN
Caltrans

LAST REVISION 04-14-11 | DATE PLOTTED => 17-JUN-2011 | TIME PLOTTED => 05:37

Dist	COUNTY	ROUTE	POST MILES TOTAL PROJECT	SHEET No.	TOTAL SHEETS
08	SBd	15	3.8/12.8	228	680

REGISTERED CIVIL ENGINEER 4-14-11 DATE

6-13-11
PLANS APPROVAL DATE

REGISTERED PROFESSIONAL ENGINEER HA VU No. C61359 Exp. 6-30-11 CIVIL STATE OF CALIFORNIA

THE STATE OF CALIFORNIA OR ITS OFFICERS OR AGENTS SHALL NOT BE RESPONSIBLE FOR THE ACCURACY OR COMPLETENESS OF SCANNED COPIES OF THIS PLAN SHEET.

ABANDON CULVERT	SAND BACKFILL	REMOVE HEADWALL	REMOVE CULVERT	REMOVE INLET	ABANDON INLET	FRAME & GRATE (N) TYPE 24-12	FRAME & GRATE (N) TYPE 36R	Misc IRON AND STEEL	MINOR Conc (MINOR Str)	MINOR Conc (Misc Const)	MINOR Conc (SLOPE PROTECTION)	CLASS 2 AB	HMA (TYPE A)	PLACE HMA (Misc AREA)	ADJUST INLET	CAP INLET	CONCRETE COLLAR* (N)	GRATED LINE DRAIN	15" ENTRANCE TAPER	AFES 15"	AFES 18"	AFES 24"	RSP FABRIC	RSP (FACING METHOD B)	RSP (LIGHT METHOD B)	Conc RSP (1T, METHOD A)	AP 12"	AP 18"	AP 24"	RCP 12"	RCP 18"	RCP 24"	CSP (0.064" THICK) 12"	CSP (0.064" THICK) 15"	CSP (0.064" THICK) 18"	15" CSP DD (0.079" THICK)	12" CSP RISER (0.064" THICK)	36" CSP INLET (0.079" THICK)	JOINT CLASSIFICATION (N)	MAXIMUM COVER (N)	HEIGHT OF INLET (N)	DESCRIPTION	STATION	DRAINAGE UNIT No. ◯	DRAINAGE SYSTEM No. ⬡	DRAINAGE PLAN SHEET No.
LF	CY	EA	LF	EA	EA	EA	EA	LB	CY	CY	CY	CY	TON	SQYD	EA	EA	EA	LF	EA	EA	EA	EA	SQYD	CY	CY	CY	LF	LF	LF	LF	LF	LF	LF	LF	LF	LF	LF	LF		FT	FT					
																												97.0												S	3.1		18" AP	1.1′ L+ 277+50.00	j	21	D-4
						1		326	1.17																																	4.0	G1 INLET	1.1′ L+ 278+50.00	k		
				1																																							REMOVE INLET	280+00.00	a	22	D-5
			3.6																																								REMOVE 18" CMP	280+00.00	b		
																	1																										CONCRETE COLLAR*	2.5′ R+ 280+00.00	c		
																												3.6												S	6.0		18" AP	2.5′ R+ 280+00.00	d		
						2		634	2.66																																	7.3	Mod G1 INLET*	1.1′ L+ 280+00.00	e		
																												97.1												S	5.5		18" AP	1.1′ L+ 280+00.00	f		
						1		326	1.39																																	5.0	G1 INLET	1.1′ L+ 281+00.00	g		
																												107.0												S	3.4		18" AP	1.1′ L+ 281+00.00	h		
						1		326	1.26																																	4.4	G1 INLET	1.1′ L+ 282+10.00	i		
																												167.0												S	2.8		18" AP	1.1′ L+ 282+10.00	j		
						1		326	1.17																																	4.0	G1 INLET	1.1′ L+ 283+80.00	k		
																		26.0																									GLD	1.9′ L+ 283+84.00	l		
																														76.1										S	2.0		18" RCP	93.0′ R+ 280+00.00	a	23	D-5
						2		634	1.53																																	3.5	Mod G1 INLET*	92.6′ R+ 280+80.00	b		
																														95.9										S	2.0		18" RCP	92.6′ R+ 80+80.00	c		
						2		634	1.53																																	3.5	Mod G1 INLET*	92.8′ R+ 281+80.00	d		
																														92.9										S	2.0		18" RCP	92.8′ R+ 281+80.00	e		
						1		326	1.06																																	3.5	G1 INLET	92.7′ R+ 282+80.00	f		
																														96.3										S	2.0		18" RCP	92.7′ R+ 282+80.00	g		
						1		326	1.06																																	3.5	G1 INLET	92.6′ R+ 283+80.00	h		
																		46.0																									GLD	84.5′ L+ 284+56.00	a	24	D-5
						1		326	1.46																																	5.3	G1 INLET	85.4′ L+ 284+60.00	b		
																		72.0																									GLD	84.7′ L+ 284+64.00	c		
																												77.0												S**	5.0		18" AP	85.4′ L+ 284+60.00	d		
						2		634	2.42																																	6.5	Mod G1 INLET*	87.1′ L+ 285+40.00	e		
																		6.0																									GLD	86.4′ L+ 285+44.00	f		
																												57.0												S**	6.0		18" AP	87.1′ L+ 285+40.00	g		
																													117.1											S**	5.5		24" AP	89.0′ L+ 286+00.00	h		
						2		634	1.83																																	4.5	Mod G1 INLET*	91.1′ L+ 287+20.00	i		
			85.5																																								REMOVE 18" CMP	89.0′ L+ 286+00.00	a	25	D-5
			89.1	1				5452	18.54									150.0										605.7	117.1		361.2												SHEET TOTAL				

NOTES

1. *: SEE DRAINAGE DETAIL SHEETS.
2. **: REQUIRE WATERTIGHTNESS.
3. (N): NOT A SEPARATE PAY ITEM, FOR INFORMATION ONLY.
4. ALL STATION OFFSETS ARE REFERRED TO THE CENTER LINE OF "A" LINE UNLESS OTHERWISE SHOWN.

DRAINAGE QUANTITIES
DQ-5

REVISED BY: HA VU
DATE REVISED: AHMAD SHAH
CALCULATED-DESIGNED BY: HA VU
CHECKED BY: AHMAD SHAH
FUNCTIONAL SUPERVISOR: GEORGE MORHIG

STATE OF CALIFORNIA - DEPARTMENT OF TRANSPORTATION
DESIGN
Caltrans

LAST REVISION 04-14-11
DATE PLOTTED => 17-JUN-2011
TIME PLOTTED => 05:38

Dist	COUNTY	ROUTE	POST MILES TOTAL PROJECT	SHEET No.	TOTAL SHEETS
08	SBd	15	3.8/12.8	229	680

REGISTERED CIVIL ENGINEER 4-14-11 DATE

6-13-11
PLANS APPROVAL DATE

REGISTERED PROFESSIONAL ENGINEER HA VU No. C61359 Exp. 6-30-11 CIVIL STATE OF CALIFORNIA

THE STATE OF CALIFORNIA OR ITS OFFICERS OR AGENTS SHALL NOT BE RESPONSIBLE FOR THE ACCURACY OR COMPLETENESS OF SCANNED COPIES OF THIS PLAN SHEET.

ABANDON CULVERT	SAND BACKFILL	REMOVE HEADWALL	REMOVE CULVERT	REMOVE INLET	ABANDON INLET	FRAME & GRATE (N) TYPE 24-12	FRAME & GRATE (N) TYPE 36R	Misc IRON AND STEEL	MINOR Conc (MINOR Str)	MINOR Conc (Misc Const)	MINOR Conc (SLOPE PROTECTION)	CLASS 2 AB	HMA (TYPE A)	PLACE HMA (Misc AREA)	ADJUST INLET	CAP INLET	CONCRETE COLLAR* (N)	GRATED LINE DRAIN	15" ENTRANCE TAPER	AFES 15"	AFES 18"	AFES 24"	RSP FABRIC	RSP (FACING METHOD B)	RSP (LIGHT METHOD B)	Conc RSP (1T, METHOD A)	AP 12"	AP 18"	AP 24"	RCP 12"	RCP 18"	RCP 24"	CSP (0.064" THICK) 12"	CSP (0.064" THICK) 15"	CSP (0.064" THICK) 18"	15" CSP DD (0.079" THICK)	12" CSP RISER (0.064" THICK)	36" CSP INLET (0.079" THICK)	JOINT CLASSIFICATION (N)	MAXIMUM COVER (N)	HEIGHT OF INLET (N)	DESCRIPTION	STATION	DRAINAGE UNIT No. ◯	DRAINAGE SYSTEM No. ⬡	DRAINAGE PLAN SHEET No.
LF	CY	EA	LF	EA	EA	EA	EA	LB	CY	CY	CY	CY	TON	SQYD	EA	EA	EA	LF	EA	EA	EA	EA	SQYD	CY	CY	CY	LF	LF	LF	LF	LF	LF	LF	LF	LF	LF	LF	LF		FT	FT					
				1																																					REMOVE INLET	286+00.00	b	25	D-5
			89.5																																							REMOVE 18" CMP	286+00.00	c		
																															178.0								S**	6.1		24" RCP	89.0′ L+ 286+00.00	d		
				1																																						REMOVE INLET	93.0′ R+ 286+00.00	e		
						1		326	1.35																															4.8	G1 INLET				
																												137.0											S**	2.6		24" AP	93.0′ R+ 286+00.00	f		
						2		634	1.86																															4.6	Mod G1 INLET*	92.6′ R+ 287+40.00	g		
																												257.6											S	2.6		24" AP	92.6′ R+ 287+40.00	h		
						2		634	1.83																															4.5	Mod G1 INLET*	102.6′ R+ 290+00.00	i		
																												207.8											S	2.5		24" AP	102.6′ R+ 290+00.00	j		
						2		634	1.83																															4.5	Mod G1 INLET*	120.5′ R+ 292+10.00	k		
																														17.0									S	2.0		18" RCP	81.0′ L+ 293+80.00	a	26	D-6
						1		326	1.06																															3.5	G1 INLET	81.0′ L+ 294+00.00	b		
																1																										CAP INLET*	293+90.00	a	27	D-6
															1																											ADJUST INLET	87.0′ R+ 294+23.00	a	28	D-6
													0.6	4.5																												W/HMA APRON*				
																						74.1																S	3.3		18" AP	87.0′ R+ 294+23.00	b		
							1	236	0.36				0.6	4.5																							4.5	D		4.0	GMP INLET W/HMA APRON*	89.0′ R+ 295+00.00	c		
																1																										CAP INLET*	300+25.00	a	29	D-6
																1																										CAP INLET*	306+19.00	a	30	D-6
																												35.5											S	1.5		24" AP	94.2′ R+ 307+60.00	a	31	D-7
						1		326	1.06																															3.5	G1 INLET	93.3′ R+ 308+00.00	b		
																												257.1											S	1.9		24" AP	93.3′ R+ 308+00.00	c		
						1		326	1.15																															3.9	G1 INLET	87.0′ R+ 310+60.00	d		
																1																										CAP INLET*	313+49.00	a	32	D-7
			4.0																																							REMOVE 18" RCP	81.3′ R+ 313+49.00	b		
						2		634	2.92																															8.2	Mod G1 INLET*	81.3′ R+ 313+49.00	c		
			5.6																																							REMOVE 18" RCP	131.7′ R+ 313+49.00	d		
				1																																						REMOVE INLET	136.8′ R+ 313+49.00	e		
			99.1	3				4076	13.42				1.2	9.0	1	4						74.1	895.0		17.0	178.0										4.5					SHEET TOTAL				

NOTES

1. *: SEE DRAINAGE DETAIL SHEETS.
2. **: REQUIRE WATERTIGHTNESS.
3. (N): NOT A SEPARATE PAY ITEM, FOR INFORMATION ONLY.
4. ALL STATION OFFSETS ARE REFERRED TO THE CENTER LINE OF "A" LINE UNLESS OTHERWISE SHOWN.

DRAINAGE QUANTITIES
DQ-6

REVISED BY | DATE REVISED
HA VU | AHMAD SHAH
CALCULATED-DESIGNED BY | CHECKED BY
FUNCTIONAL SUPERVISOR | GEORGE MORHIG
STATE OF CALIFORNIA - DEPARTMENT OF TRANSPORTATION
DESIGN
Caltrans

LAST REVISION 04-14-11 | DATE PLOTTED => 17-JUN-2011 | TIME PLOTTED => 05:38

Dist	COUNTY	ROUTE	POST MILES TOTAL PROJECT	SHEET No.	TOTAL SHEETS
08	SBd	15	3.8/12.8	230	680

REGISTERED CIVIL ENGINEER 4-14-11 DATE

6-13-11
PLANS APPROVAL DATE

REGISTERED PROFESSIONAL ENGINEER HA VU No. C61359 Exp. 6-30-11 CIVIL STATE OF CALIFORNIA

THE STATE OF CALIFORNIA OR ITS OFFICERS OR AGENTS SHALL NOT BE RESPONSIBLE FOR THE ACCURACY OR COMPLETENESS OF SCANNED COPIES OF THIS PLAN SHEET.

ABANDON CULVERT	SAND BACKFILL	REMOVE HEADWALL	REMOVE CULVERT	REMOVE INLET	ABANDON INLET	FRAME & GRATE (N) TYPE 24-12	FRAME & GRATE (N) TYPE 36R	Misc IRON AND STEEL	MINOR Conc (MINOR Str)	MINOR Conc (Misc Const)	MINOR Conc (SLOPE PROTECTION)	CLASS 2 AB	HMA (TYPE A)	PLACE HMA (Misc AREA)	ADJUST INLET	CAP INLET	CONCRETE COLLAR* (N)	GRATED LINE DRAIN	15" ENTRANCE TAPER	AFES 15"	AFES 18"	AFES 24"	RSP FABRIC	RSP (FACING METHOD B)	RSP (LIGHT METHOD B)	Conc RSP (1T, METHOD A)	AP 12"	AP 18"	AP 24"	RCP 12"	RCP 18"	RCP 24"	CSP (0.064" THICK) 12"	CSP (0.064" THICK) 15"	CSP (0.064" THICK) 18"	15" CSP DD (0.079" THICK)	12" CSP RISER (0.064" THICK)	36" CSP INLET (0.079" THICK)	JOINT CLASSIFICATION (N)	MAXIMUM COVER (N)	HEIGHT OF INLET (N)	DESCRIPTION	STATION	DRAINAGE UNIT No.	DRAINAGE SYSTEM No.	DRAINAGE PLAN SHEET No.
LF	CY	EA	LF	EA	EA	EA	EA	LB	CY	CY	CY	CY	TON	SQYD	EA	EA	EA	LF	EA	EA	EA	EA	SQYD	CY	CY	CY	LF	LF	LF	LF	LF	LF	LF	LF	LF	LF	LF	LF		FT	FT					
						1		326	1.10																															3.7	G1 INLET	131.7′ R+ 313+49.00	f	32	D-7
																													98.5										S	2.6		24" AP	131.7′ R+ 313+49.00	g		
						2		634	1.86																																4.6	Mod G1 INLET*	121.8′ R+ 314+50.00	h		
																													298.1										S	2.6		24" AP	121.8′ R+ 314+50.00	i		
						2		634	1.83																																4.5	Mod G1 INLET*	99.6′ R+ 317+50.00	j		
																																		39.1					D	3.2		15" CSP (0.064" THICK)	131.6′ L+ 319+60.00	a	33	D-7
						1		326	0.97																															3.1	G1 INLET	95.7′ L+ 319+60.00	b		
																1																										CAP INLET*	321+24.00	a	34	D-7
				1																																						REMOVE INLET	99.3′ R+ 321+24.00	a	35	D-7,8
			7.6																																							REMOVE 18" RCP	99.3′ R+ 321+24.00	b		
						2		634	1.47																															3.3	Mod G1 INLET*	94.2′ R+ 321+24.00	c		
																													203.0										S	1.7		24" AP	94.2′ R+ 321+24.00	d		
						2		634	1.59																															3.7	Mod G1 INLET*	92.0′ R+ 323+30.00	e		
																																	43.6					D	4.0		12" CSP (0.064" THICK)	138.5′ L+ 322+80.00	a	36	D-8
						1		326	0.95																															3.0	G1 INLET	98.2′ L+ 322+80.00	b		
																																		45.9					D	3.8		15" CSP (0.064" THICK)	142.9′ L+ 325+40.00	a	37	D-8
						2		634	1.38																															3.0	Mod G1 INLET*	100.3′ L+ 325+40.00	b		
																1																										CAP INLET*	327+49.00	a	38	D-8
				1																																						REMOVE INLET	94.7′ R+ 327+49.00	b		
			7.6																																							REMOVE 18" RCP	94.7′ R+ 327+49.00	c		
						2		634	1.74																															4.2	Mod G1 INLET*	89.6′ R+ 327+49.00	d		
																																		51.8					D	4.4		15" CSP (0.064" THICK)	151.2′ L+ 330+40.00	a	39	D-8
						2		634	1.38																															3.0	Mod G1 INLET*	104.0′ L+ 330+40.00	b		
																1																										CAP INLET*	332+99.00	a	40	D-8
																													198.1										S	2.8		24" AP	98.0′ R+ 332+99.00	a	41	D-8
							1	236	0.36				0.6	4.5																							4.5	D		4.0	GMP INLET W/HMA APRON*	104.0′ R+ 335+00.00	b		
			15.2	2				5652	14.63				0.6	4.5		3													797.7				43.6	136.8			4.5					SHEET TOTAL				

NOTES

1. *: SEE DRAINAGE DETAIL SHEETS.
2. **: REQUIRE WATERTIGHTNESS.
3. (N): NOT A SEPARATE PAY ITEM, FOR INFORMATION ONLY.
4. ALL STATION OFFSETS ARE REFERRED TO THE CENTER LINE OF "A" LINE UNLESS OTHERWISE SHOWN.

DRAINAGE QUANTITIES
DQ-7

REVISED BY | DATE REVISED

HA VU | AHMAD SHAH

CALCULATED-DESIGNED BY | CHECKED BY

FUNCTIONAL SUPERVISOR | GEORGE MORHIG

STATE OF CALIFORNIA - DEPARTMENT OF TRANSPORTATION

DESIGN

Caltrans

LAST REVISION 04-14-11 | DATE PLOTTED => 17-JUN-2011 | TIME PLOTTED => 05:38

Dist	COUNTY	ROUTE	POST MILES TOTAL PROJECT	SHEET No.	TOTAL SHEETS
08	SBd	15	3.8/12.8	231	680

REGISTERED CIVIL ENGINEER 4-14-11 DATE

6-13-11
PLANS APPROVAL DATE

REGISTERED PROFESSIONAL ENGINEER HA VU No. C61359 Exp. 6-30-11 CIVIL STATE OF CALIFORNIA

THE STATE OF CALIFORNIA OR ITS OFFICERS OR AGENTS SHALL NOT BE RESPONSIBLE FOR THE ACCURACY OR COMPLETENESS OF SCANNED COPIES OF THIS PLAN SHEET.

ABANDON CULVERT	SAND BACKFILL	REMOVE HEADWALL	REMOVE CULVERT	REMOVE INLET	ABANDON INLET	FRAME & GRATE (N) TYPE 24-12	FRAME & GRATE (N) TYPE 36R	Misc IRON AND STEEL	MINOR Conc (MINOR Str)	MINOR Conc (Misc Const)	MINOR Conc (SLOPE PROTECTION)	CLASS 2 AB	HMA (TYPE A)	PLACE HMA (Misc AREA)	ADJUST INLET	CAP INLET	CONCRETE COLLAR* (N)	GRATED LINE DRAIN	15" ENTRANCE TAPER	AFES 15"	AFES 18"	AFES 24"	RSP FABRIC	RSP (FACING METHOD B)	RSP (LIGHT METHOD B)	Conc RSP (1T, METHOD A)	AP 12"	AP 18"	AP 24"	RCP 12"	RCP 18"	RCP 24"	CSP (0.064" THICK) 12"	CSP (0.064" THICK) 15"	CSP (0.064" THICK) 18"	15" CSP DD (0.079" THICK)	12" CSP RISER (0.064" THICK)	36" CSP INLET (0.079" THICK)	JOINT CLASSIFICATION (N)	MAXIMUM COVER (N)	HEIGHT OF INLET (N)	DESCRIPTION	STATION	DRAINAGE UNIT No.	DRAINAGE SYSTEM No.	DRAINAGE PLAN SHEET No.
LF	CY	EA	LF	EA	EA	EA	EA	LB	CY	CY	CY	CY	TON	SQYD	EA	EA	EA	LF	EA	EA	EA	EA	SQYD	CY	CY	CY	LF	LF	LF	LF	LF	LF	LF	LF	LF	LF	LF		FT	FT					
																1																									CAP INLET*	343+59.00	a	42	D-9
				1																																					REMOVE INLET	97.9′ R+ 343+38.50	a	43	D-9
			1.7																																						REMOVE 12" CSP RISER				
							1	236	0.36				0.6	4.5																							6.5	D		6.0	GMP INLET W/HMA APRON*				
																													28.7									S**	4.1		24" AP	97.9′ R+ 343+38.50	b		
							1	236	0.36				0.6	4.5																							6.0	D		5.5	GMP INLET W/HMA APRON*	101.0′ R+ 343+70.00	c		
																1																									CAP INLET*	351+00.00	a	44	D-10
																1																									CAP INLET*	356+49.00	a	45	D-10
																1																									CAP INLET*	361+99.00	a	46	D-10
																1																									CAP INLET*	365+99.00	a	47	D-11
																1																									CAP INLET*	371+99.00	a	48	D-11
																								22.5														S**	1.5		12" RCP	93.0′ R+ 377+24.00	a	49	D-11
						2		634	1.15																															2.2	Mod G1 INLET*	93.0′ R+ 377+00.00	b		
																1																									CAP INLET*	384+80.00	a	50	D-12
																											81.3											S	3.8		24" AP	98.1′ R+ 384+96.00	a	51	D-12
						2		634	1.92																															4.8	Mod G1 INLET*	93.0′ R+ 385+80.00	b		
																											17.0											S	2.7		24" AP	93.0′ R+ 385+80.00	c		
						2		634	1.83																															4.5	Mod G1 INLET*	93.0′ R+ 386+00.00	d		
																				1																					AFES	157.9′ L+ 386+50.00	a	52	D-12
																																	49.1					D	4.4		18" CSP (0.064" THICK)	157.9′ L+ 386+50.00	b		
							1	236	0.36				0.6	4.5																							4.0	D		3.5	GMP INLET W/HMA APRON*	108.0′ L+ 386+50.00	c		
																1																									CAP INLET*	391+00.00	a	53	D-12
																1																									CAP INLET*	400+74.50	a	54	D-13
			1.7	1				2610	5.98				1.8	13.5		9					1						127.0	22.5					49.1			16.5					SHEET TOTAL				

NOTES

1. *: SEE DRAINAGE DETAIL SHEETS.
2. **: REQUIRE WATERTIGHTNESS.
3. (N): NOT A SEPARATE PAY ITEM, FOR INFORMATION ONLY.
4. ALL STATION OFFSETS ARE REFERRED TO THE CENTER LINE OF "A" LINE UNLESS OTHERWISE SHOWN.

DRAINAGE QUANTITIES
DQ-8

REVISED BY | DATE REVISED

HA VU | AHMAD SHAH

CALCULATED-DESIGNED BY | CHECKED BY

FUNCTIONAL SUPERVISOR | GEORGE MORHIG

STATE OF CALIFORNIA - DEPARTMENT OF TRANSPORTATION

DESIGN

Caltrans

LAST REVISION 04-14-11 | DATE PLOTTED => 17-JUN-2011 | TIME PLOTTED => 05:38

Dist	COUNTY	ROUTE	POST MILES TOTAL PROJECT	SHEET No.	TOTAL SHEETS
08	SBd	15	3.8/12.8	232	680

REGISTERED CIVIL ENGINEER 4-14-11 DATE

6-13-11
PLANS APPROVAL DATE

REGISTERED PROFESSIONAL ENGINEER HA VU No. C61359 Exp. 6-30-11 CIVIL STATE OF CALIFORNIA

THE STATE OF CALIFORNIA OR ITS OFFICERS OR AGENTS SHALL NOT BE RESPONSIBLE FOR THE ACCURACY OR COMPLETENESS OF SCANNED COPIES OF THIS PLAN SHEET.

ABANDON CULVERT	SAND BACKFILL	REMOVE HEADWALL	REMOVE CULVERT	REMOVE INLET	ABANDON INLET	FRAME & GRATE (N) TYPE 24-12	FRAME & GRATE (N) TYPE 36R	Misc IRON AND STEEL	MINOR Conc (MINOR Str)	MINOR Conc (Misc Const)	MINOR Conc (SLOPE PROTECTION)	CLASS 2 AB	HMA (TYPE A)	PLACE HMA (Misc AREA)	ADJUST INLET	CAP INLET	CONCRETE COLLAR* (N)	GRATED LINE DRAIN	15" ENTRANCE TAPER	AFES 15"	AFES 18"	AFES 24"	RSP FABRIC	RSP (FACING METHOD B)	RSP (LIGHT METHOD B)	Conc RSP (1T, METHOD A)	AP 12"	AP 18"	AP 24"	RCP 12"	RCP 18"	RCP 24"	CSP (0.064" THICK) 12"	CSP (0.064" THICK) 15"	CSP (0.064" THICK) 18"	15" CSP DD (0.079" THICK)	12" CSP RISER (0.064" THICK)	36" CSP INLET (0.079" THICK)	JOINT CLASSIFICATION (N)	MAXIMUM COVER (N)	HEIGHT OF INLET (N)	DESCRIPTION	STATION	DRAINAGE UNIT No.	DRAINAGE SYSTEM No.	DRAINAGE PLAN SHEET No.
LF	CY	EA	LF	EA	EA	EA	EA	LB	CY	CY	CY	CY	TON	SQYD	EA	EA	EA	LF	EA	EA	EA	EA	SQYD	CY	CY	CY	LF	LF	LF	LF	LF	LF	LF	LF	LF	LF	LF		FT	FT					
																							11.7	3.3																		RSP (FACING, METHOD B)*	167.3′ L+ 402+50.00	a	55	D-13
																				1																							AFES	167.3′ L+ 402+50.00	b		
																																	57.6					D	3.6		15" CSP (0.064" THICK)	167.3′ L+ 402+50.00	c		
							1	236	0.36				0.6	4.5																							3.5	D		3.0	GMP INLET W/HMA APRON*	113.0′ L+ 402+50.00	d		
																							11.7	3.3																		RSP (FACING, METHOD B)*	179.7′ R+ 403+30.00	a	56	D-13
																				1																							AFES	179.7′ R+ 403+30.00	b		
																																	80.0					D	3.6		15" CSP (0.064" THICK)	179.7′ R+ 403+30.00	c		
						1		326	0.95																															3.0	G1 INLET	105.0′ R+ 403+30.00	d		
																							11.7	3.3																		RSP (FACING, METHOD B)*	158.2′ L+ 406+00.00	a	57	D-14
																				1																							AFES	158.2′ L+ 406+00.00	b		
																																	47.9					D	4.6		15" CSP (0.064" THICK)	158.2′ L+ 406+00.00	c		
							1	236	0.36				0.6	4.5																							3.5	D		3.0	GMP INLET W/HMA APRON*	113.0′ L+ 406+00.00	d		
																							15.1	4.5																		RSP (FACING, METHOD B)*	158.7′ R+ 406+00.00	a	58	D-14
																					1																						AFES	158.7′ R+ 406+00.00	b		
																																		57.6				D	5.4		18" CSP (0.064" THICK)	158.7′ R+ 406+00.00	c		
						1		326	1.30																															4.6	G1 INLET	105.0′ R+ 406+00.00	d		
																										97.0												S	3.1		18" AP	105.0′ R+ 406+00.00	e		
						1		326	1.06																															3.5	G1 INLET	105.0′ R+ 407+00.00	f		
																										14.6												S**	2.5		18" AP	107.7′ L+ 414+92.50	a	59	D-14
						1		326	1.17																															4.0	G1 INLET	107.0′ L+ 414+75.00	b		
																										22.1												S**	2.5		18" AP	107.0′ L+ 414+75.00	c		
						2		634	1.62																															3.8	Mod G1 INLET*	106.5′ L+ 414+50.00	d		
																										22.1												S**	2.3		18" AP	106.5′ L+ 414+50.00	e		
						2		634	1.47																															3.3	Mod G1 INLET*	106.0′ L+ 414+25.00	f		
																							15.1	4.5																		RSP (FACING, METHOD B)*	171.0′ R+ 416+65.00	a	60	D-14
																					1																						AFES	171.0′ R+ 416+65.00	b		
																																		53.0				D	4.9		18" CSP (0.064" THICK)	171.0′ R+ 416+65.00	c		
						2		634	1.83																															4.5	Mod G1 INLET*	117.0′ R+ 417+00.00	d		
																										17.0												S	3.0		18" AP	117.0′ R+ 417+00.00	e		
						1		326	1.17																															4.0	G1 INLET	117.0′ R+ 416+80.00	f		
								4004	11.29				1.2	9.0						3	2		65.3	18.9		172.8							185.5	110.6			7.0				SHEET TOTAL				

NOTES

1. *: SEE DRAINAGE DETAIL SHEETS.
2. **: REQUIRE WATERTIGHTNESS.
3. (N): NOT A SEPARATE PAY ITEM, FOR INFORMATION ONLY.
4. ALL STATION OFFSETS ARE REFERRED TO THE CENTER LINE OF "A" LINE UNLESS OTHERWISE SHOWN.

DRAINAGE QUANTITIES
DQ-9

REVISED BY | DATE REVISED
HA VU | AHMAD SHAH
CALCULATED-DESIGNED BY | CHECKED BY
FUNCTIONAL SUPERVISOR | GEORGE MORHIG
STATE OF CALIFORNIA - DEPARTMENT OF TRANSPORTATION
DESIGN
Caltrans

LAST REVISION 04-14-11 | DATE PLOTTED => 17-JUN-2011 | TIME PLOTTED => 05:38

Dist	COUNTY	ROUTE	POST MILES TOTAL PROJECT	SHEET No.	TOTAL SHEETS
08	SBd	15	3.8/12.8	233	680

REGISTERED CIVIL ENGINEER 4-14-11 DATE

6-13-11
PLANS APPROVAL DATE

REGISTERED PROFESSIONAL ENGINEER HA VU No. C61359 Exp. 6-30-11 CIVIL STATE OF CALIFORNIA

THE STATE OF CALIFORNIA OR ITS OFFICERS OR AGENTS SHALL NOT BE RESPONSIBLE FOR THE ACCURACY OR COMPLETENESS OF SCANNED COPIES OF THIS PLAN SHEET.

REVISED BY | DATE REVISED

HA VU | AHMAD SHAH

CALCULATED-DESIGNED BY | CHECKED BY

FUNCTIONAL SUPERVISOR: GEORGE MORHIG

STATE OF CALIFORNIA - DEPARTMENT OF TRANSPORTATION

DESIGN

Caltrans

ABANDON CULVERT (LF)	SAND BACKFILL (CY)	REMOVE HEADWALL (EA)	REMOVE CULVERT (LF)	REMOVE INLET (EA)	ABANDON INLET (EA)	FRAME & GRATE (N) TYPE 24-12 (EA)	FRAME & GRATE (N) TYPE 36R (EA)	Misc IRON AND STEEL (LB)	MINOR Conc (MINOR Str) (CY)	MINOR Conc (Misc Const) (CY)	MINOR Conc (SLOPE PROTECTION) (CY)	CLASS 2 AB (CY)	HMA (TYPE A) (TON)	PLACE HMA (Misc AREA) (SQYD)	ADJUST INLET (EA)	CAP INLET (EA)	CONCRETE COLLAR* (N) (EA)	GRATED LINE DRAIN (LF)	15" ENTRANCE TAPER (EA)	AFES 15" (EA)	AFES 18" (EA)	AFES 24" (EA)	RSP FABRIC (SQYD)	RSP (FACING METHOD B) (CY)	RSP (LIGHT METHOD B) (CY)	Conc RSP (1T, METHOD A) (CY)	AP 12" (LF)	AP 18" (LF)	AP 24" (LF)	RCP 12" (LF)	RCP 18" (LF)	RCP 24" (LF)	CSP (0.064" THICK) 12" (LF)	CSP (0.064" THICK) 15" (LF)	CSP (0.064" THICK) 18" (LF)	15" CSP DD (0.079" THICK) (LF)	12" CSP RISER (0.064" THICK) (LF)	36" CSP INLET (0.079" THICK) (LF)	JOINT CLASSIFICATION (N)	MAXIMUM COVER (N) (FT)	HEIGHT OF INLET (N) (FT)	DESCRIPTION	STATION	DRAINAGE UNIT No.	DRAINAGE SYSTEM No.	DRAINAGE PLAN SHEET No.
																							11.7	3.3																			RSP (FACING, METHOD B)*	165.0' L+ 417+56.00	a	61	D-14
																				1																							AFES	165.0' L+ 417+56.00	b		
																																				48.0			D	1.0		15" CSP DD (0.064" THICK)	165.0' L+ 417+56.00	c		
										1.17																																PCC GUTTER FLARE	112.7' L+ 417+56.00	d		
																			1																								ENTRANCE TAPER				
																1																											CAP INLET*	421+07.21	a	62	D-15
															1																												ADJUST INLET	426+29.00	a	63	D-15
															1																												ADJUST INLET	432+98.00	a	64	D-15
															1																												ADJUST INLET	440+27.00	a	65	D-16
															1																												ADJUST INLET	443+45.00	a	66	D-16
													1.5	5.5																													HMA OVERSIDE DRAIN	93.0' L+ 448+40.00	a	67	D-17
																							4.6	0.9																			RSP (FACING, METHOD B)*				
															1																												ADJUST INLET	449+26.00	a	68	D-17
			8.0																																								REMOVE 24" AP	434.6' L+ 449+18.00	a	69	D-17
																							22.9	7.5																			RSP (FACING, METHOD B)*	396.8' L+ 449+58.00	b		
																						1																					AFES	396.8' L+ 449+58.00	c		
																													43.9										S**	2.9			24" AP	396.8' L+ 449+58.00	d		
						1		326	2.15																																6.3	G2 INLET	434.6' L+ 449+18.00	e		
											47.10																																OVERFLOW SPILLWAY	361.8' L+ 449+30.51	f		
				1																																							REMOVE INLET	149.8' L+ 453+49.50	a	70	D-17
																							15.1	4.5																			RSP (FACING, METHOD B)*	156.0' L+ 452+97.50	b		
																					1																						AFES	156.0' L+ 452+97.50	c		
																											50.0												S**	5.9			18" AP	156.0' L+ 452+97.50	d		
							1	236	0.36				0.6	4.5																								7.2	D		6.7	GMP INLET W/HMA APRON*	149.8' L+ 453+49.50	e		
									13.43			13																															MAINTENANCE VEHICLE RAMP	134.3' L+ 451+23.04	f		
															1																												ADJUST INLET	453+49.00	a	71	D-17
			8.0	1				562	15.94	1.17	47.10	13	2.1	10.0	6	1			1	1	1	1	54.3	16.2			50.0	43.9								48.0		7.2					SHEET TOTAL				

NOTES

1. *: SEE DRAINAGE DETAIL SHEETS.
2. **: REQUIRE WATERTIGHTNESS.
3. (N): NOT A SEPARATE PAY ITEM, FOR INFORMATION ONLY.
4. ALL STATION OFFSETS ARE REFERRED TO THE CENTER LINE OF "A" LINE UNLESS OTHERWISE SHOWN.

DRAINAGE QUANTITIES
DQ-10

LAST REVISION 04-14-11 | DATE PLOTTED => 17-JUN-2011 | TIME PLOTTED => 05:38

Dist	COUNTY	ROUTE	POST MILES TOTAL PROJECT	SHEET No.	TOTAL SHEETS
08	SBd	15	3.8/12.8	234	680

REGISTERED CIVIL ENGINEER 4-14-11 DATE

6-13-11
PLANS APPROVAL DATE

REGISTERED PROFESSIONAL ENGINEER HA VU No. C61359 Exp. 6-30-11 CIVIL STATE OF CALIFORNIA

THE STATE OF CALIFORNIA OR ITS OFFICERS OR AGENTS SHALL NOT BE RESPONSIBLE FOR THE ACCURACY OR COMPLETENESS OF SCANNED COPIES OF THIS PLAN SHEET.

REVISED BY | DATE REVISED
HA VU | AHMAD SHAH
CALCULATED-DESIGNED BY | CHECKED BY
FUNCTIONAL SUPERVISOR | GEORGE MORHIG

ABANDON CULVERT	SAND BACKFILL	REMOVE HEADWALL	REMOVE CULVERT	REMOVE INLET	ABANDON INLET	FRAME & GRATE (N) TYPE 24-12	FRAME & GRATE (N) TYPE 36R	Misc IRON AND STEEL	MINOR Conc (MINOR Str)	MINOR Conc (Misc Const)	MINOR Conc (SLOPE PROTECTION)	CLASS 2 AB	HMA (TYPE A)	PLACE HMA (Misc AREA)	ADJUST INLET	CAP INLET	CONCRETE COLLAR* (N)	GRATED LINE DRAIN	15" ENTRANCE TAPER	AFES 15"	AFES 18"	AFES 24"	RSP FABRIC	RSP (FACING METHOD B)	RSP (LIGHT METHOD B)	Conc RSP (1T, METHOD A)	AP 12"	AP 18"	AP 24"	RCP 12"	RCP 18"	RCP 24"	CSP (0.064" THICK) 12"	CSP (0.064" THICK) 15"	CSP (0.064" THICK) 18"	15" CSP DD (0.079" THICK)	12" CSP RISER (0.064" THICK)	36" CSP INLET (0.079" THICK)	JOINT CLASSIFICATION (N)	MAXIMUM COVER (N)	HEIGHT OF INLET (N)	DESCRIPTION	STATION	DRAINAGE UNIT No.	DRAINAGE SYSTEM No.	DRAINAGE PLAN SHEET No.
LF	CY	EA	LF	EA	EA	EA	EA	LB	CY	CY	CY	CY	TON	SQYD	EA	EA	EA	LF	EA	EA	EA	EA	SQYD	CY	CY	CY	LF	LF	LF	LF	LF	LF	LF	LF	LF	LF	LF	LF	LF		FT	FT					
															1																												ADJUST INLET	455+75.00	a	72	D-17
									5.09			5																															MAINTENANCE VEHICLE RAMP	145.3′ L+ 460+46.98	a	73	D-17
		1																																									REMOVE HW	175.2′ L+ 463+48.22	b		D-18
																							247.7		116.2	199.8																		RSP SPILLWAY	175.2′ L+ 463+48.22	c		
									2.75																																		HW W/ CUTOFF WALL	175.2′ L+ 463+48.22	d		
															1																												ADJUST INLET	462+60.00	a	74	D-18
					1																																						ABANDON INLET	474+24.31	a	75	D-18
118.2	13.8																																										ABANDON 24" AP	474+24.31	b		
					1																																						ABANDON INLET	480+00.00	a	76	D-19
174.1	20.3																																										ABANDON 24" AP	480+00.00	b		
																											53.3												S	3.3			18" AP	125.9′ R+ 491+76.00	a	77	D-20
						1		326	1.61																																4.5	GO INLET	125.0′ R+ 492+15.00	b		
													2.6	4.7																												W/INLET DEPRESSION				
					1																																						ABANDON INLET	494+00.00	a	78	D-20
166.2	10.9																																										ABANDON 18" CMP	494+00.00	b		
					1																																						ABANDON INLET	505+00.00	a	79	D-21
153.1	17.8																																										ABANDON 24" CSP	505+00.00	b		
					1																																						ABANDON INLET	515+00.00	a	80	D-21
172.2	20.0																																										ABANDON 24" CSP	515+00.00	b		
					1																																						ABANDON INLET	523+00.00	a	81	D-22
183.7	21.4																																										ABANDON 24" CSP	523+00.00	b		
																1																											CAP INLET*	532+41.15	a	82	D-23
					1																																						ABANDON INLET	545+31.73	a	83	D-23
140.9	16.4																																										ABANDON 24" RCP	545+31.73	b		
1108.4	120.6	1			7			326	9.45			5	2.6	4.7	2	1							247.7		116.2	199.8	53.3																SHEET TOTAL				

NOTES
1. *: SEE DRAINAGE DETAIL SHEETS.
2. **: REQUIRE WATERTIGHTNESS.
3. (N): NOT A SEPARATE PAY ITEM, FOR INFORMATION ONLY.
4. ALL STATION OFFSETS ARE REFERRED TO THE CENTER LINE OF "A" LINE UNLESS OTHERWISE SHOWN.

DRAINAGE QUANTITIES
DQ-11

STATE OF CALIFORNIA - DEPARTMENT OF TRANSPORTATION
DESIGN
Caltrans

LAST REVISION 04-14-11 | DATE PLOTTED => 17-JUN-2011 | TIME PLOTTED => 05:38

Dist	COUNTY	ROUTE	POST MILES TOTAL PROJECT	SHEET No.	TOTAL SHEETS
08	SBd	15	3.8/12.8	235	680

REGISTERED CIVIL ENGINEER 4-14-11 DATE

6-13-11
PLANS APPROVAL DATE

REGISTERED PROFESSIONAL ENGINEER HA VU No. C61359 Exp. 6-30-11 CIVIL STATE OF CALIFORNIA

THE STATE OF CALIFORNIA OR ITS OFFICERS OR AGENTS SHALL NOT BE RESPONSIBLE FOR THE ACCURACY OR COMPLETENESS OF SCANNED COPIES OF THIS PLAN SHEET.

ABANDON CULVERT (LF)	SAND BACKFILL (CY)	REMOVE HEADWALL (EA)	REMOVE CULVERT (LF)	REMOVE INLET (EA)	ABANDON INLET (EA)	FRAME & GRATE (N) TYPE 24-12 (EA)	FRAME & GRATE (N) TYPE 36R (EA)	Misc IRON AND STEEL (LB)	MINOR Conc (MINOR Str) (CY)	MINOR Conc (Misc Const) (CY)	MINOR Conc (SLOPE PROTECTION) (CY)	CLASS 2 AB (CY)	HMA (TYPE A) (TON)	PLACE HMA (Misc AREA) (SQYD)	ADJUST INLET (EA)	CAP INLET (EA)	CONCRETE COLLAR* (N) (EA)	GRATED LINE DRAIN (LF)	15" ENTRANCE TAPER (EA)	AFES 15" (EA)	AFES 18" (EA)	AFES 24" (EA)	RSP FABRIC (SQYD)	RSP (FACING METHOD B) (CY)	RSP (LIGHT METHOD B) (CY)	Conc RSP (1T, METHOD A) (CY)	AP 12" (LF)	AP 18" (LF)	AP 24" (LF)	RCP 12" (LF)	RCP 18" (LF)	RCP 24" (LF)	CSP (0.064" THICK) 12" (LF)	CSP (0.064" THICK) 15" (LF)	CSP (0.064" THICK) 18" (LF)	15" CSP DD (0.079" THICK) (LF)	12" CSP RISER (0.064" THICK) (LF)	36" CSP INLET (0.079" THICK) (LF)	JOINT CLASSIFICATION (N)	MAXIMUM COVER (N) (FT)	HEIGHT OF INLET (N) (FT)	DESCRIPTION	STATION	DRAINAGE UNIT No.	DRAINAGE SYSTEM No.	DRAINAGE PLAN SHEET No.
					1																																						ABANDON INLET	559+32.28	a	84	D-24
117.5	13.7																																										ABANDON 24" RCP	559+32.28	b		
					1																																						ABANDON INLET	571+31.93	a	85	D-25
117.7	13.7																																										ABANDON 24" RCP	571+31.93	b		
																1																											CAP INLET*	583+73.76	a	86	D-26
					1																																						ABANDON INLET	595+03.95	a	87	D-27
113.9	13.3																																										ABANDON 24" CMP	595+03.95	b		
					1																																						ABANDON INLET	607+00.00	a	88	D-28
123.3	14.3																																										ABANDON 24" CMP	607+00.00	b		
				1																																							REMOVE INLET	623+80.00	a	89	D-29
						1		326	1.82																																5.0	G2 INLET	1.4′ L+ 623+80.00	b		
																													67.0										S	3.6		24" RCP	1.4′ L+ 623+80.00	c		
						2		634	2.15																																5.6	Mod G1 INLET*	1.4′ L+ 624+50.00	d		
																													22.0										S	4.2		24" RCP	1.4′ L+ 624+50.00	e		
						2		634	2.33																																6.2	Mod G1 INLET*	1.4′ L+ 624+75.00	f		
																													22.0										S	4.4		24" RCP	1.4′ L+ 624+75.00	g		
						1		326	2.18																																6.4	G2 INLET	1.4′ L+ 625+00.00	h		
																													22.0										S	4.5		24" RCP	1.4′ L+ 625+00.00	i		
						1		326	2.20																																6.5	G2 INLET	1.4′ L+ 625+25.00	j		
																										122.1													S	4.5		18" RCP	1.4′ L+ 625+25.00	k		
						1		326	1.61																																6.0	G1 INLET	1.4′ L+ 626+50.00	l		
																										97.1													S	4.5		18" RCP	1.4′ L+ 626+50.00	m		
						1		326	1.61																																6.0	G1 INLET	1.5′ L+ 627+50.00	n		
				1																																							REMOVE INLET	630+50.00	a	90	D-30
						2		634	1.71																																4.1	Mod G1 INLET*	1.5′ L+ 630+50.00	b		
																													22.0										S	2.7		24" RCP	1.5′ L+ 630+50.00	c		
						1		326	1.74																																4.7	G2 INLET	1.5′ L+ 630+75.00	d		
																													75.0										S	3.5		24" RCP	1.5′ L+ 630+75.00	e		
						1		326	1.95																																5.5	G2 INLET	1.5′ L+ 631+50.00	f		
																										147.1													S	4.5		18" RCP	1.5′ L+ 631+50.00	g		
472.4	55.0			2	4			418	19.30							1										366.3	230.0																SHEET TOTAL				

NOTES

1. *: SEE DRAINAGE DETAIL SHEETS.
2. **: REQUIRE WATERTIGHTNESS.
3. (N): NOT A SEPARATE PAY ITEM, FOR INFORMATION ONLY.
4. ALL STATION OFFSETS ARE REFERRED TO THE CENTER LINE OF "A" LINE UNLESS OTHERWISE SHOWN.

DRAINAGE QUANTITIES
DQ-12

REVISED BY | DATE REVISED
HA VU | AHMAD SHAH
CALCULATED-DESIGNED BY | CHECKED BY
FUNCTIONAL SUPERVISOR | GEORGE MORHIG
STATE OF CALIFORNIA - DEPARTMENT OF TRANSPORTATION
DESIGN
Caltrans

LAST REVISION 04-14-11 | DATE PLOTTED => 17-JUN-2011 | TIME PLOTTED => 05:38

Dist	COUNTY	ROUTE	POST MILES TOTAL PROJECT	SHEET No.	TOTAL SHEETS
08	SBd	15	3.8/12.8	236	680

REGISTERED CIVIL ENGINEER 4-14-11 DATE

6-13-11
PLANS APPROVAL DATE

REGISTERED PROFESSIONAL ENGINEER HA VU No. C61359 Exp. 6-30-11 CIVIL STATE OF CALIFORNIA

THE STATE OF CALIFORNIA OR ITS OFFICERS OR AGENTS SHALL NOT BE RESPONSIBLE FOR THE ACCURACY OR COMPLETENESS OF SCANNED COPIES OF THIS PLAN SHEET.

ABANDON CULVERT	SAND BACKFILL	REMOVE HEADWALL	REMOVE CULVERT	REMOVE INLET	ABANDON INLET	FRAME & GRATE (N) TYPE 24-12	FRAME & GRATE (N) TYPE 36R	Misc IRON AND STEEL	MINOR Conc (MINOR Str)	MINOR Conc (Misc Const)	MINOR Conc (SLOPE PROTECTION)	CLASS 2 AB	HMA (TYPE A)	PLACE HMA (Misc AREA)	ADJUST INLET	CAP INLET	CONCRETE COLLAR* (N)	GRATED LINE DRAIN	15" ENTRANCE TAPER	AFES 15"	AFES 18"	AFES 24"	RSP FABRIC	RSP (FACING METHOD B)	RSP (LIGHT METHOD B)	Conc RSP (1T, METHOD A)	AP 12"	AP 18"	AP 24"	RCP 12"	RCP 18"	RCP 24"	CSP (0.064" THICK) 12"	CSP (0.064" THICK) 15"	CSP (0.064" THICK) 18"	15" CSP DD (0.079" THICK)	12" CSP RISER (0.064" THICK)	36" CSP INLET (0.079" THICK)	JOINT CLASSIFICATION (N)	MAXIMUM COVER (N)	HEIGHT OF INLET (N)	DESCRIPTION	STATION	DRAINAGE UNIT No.	DRAINAGE SYSTEM No.	DRAINAGE PLAN SHEET No.
LF	CY	EA	LF	EA	EA	EA	EA	LB	CY	CY	CY	CY	TON	SQYD	EA	EA	EA	LF	EA	EA	EA	EA	SQYD	CY	CY	CY	LF	LF	LF	LF	LF	LF	LF	LF	LF	LF	LF	LF		FT	FT					
						1		326	1.61																															6.0	G1 INLET	1.5′ L+ 633+00.00	h	90	D-30
																															147.1								S	4.5		18" RCP	1.5′ L+ 633+00.00	i		
						1		326	1.39																																5.0	G1 INLET	1.5′ L+ 634+50.00	j		
																															97.1								S	3.5		18" RCP	1.5′ L+ 634+50.00	k		
						1		326	1.39																																5.0	G1 INLET	1.5′ L+ 635+50.00	l		
				1																																						REMOVE INLET	638+19.14	a	91	D-30
						2		634	2.27																																6.0	Mod G1 INLET*	1.5′ L+ 638+21.25	b		
																															75.8								S	4.5		18" RCP	1.5′ L+ 638+21.25	c		
						1		326	1.39																																5.0	G1 INLET	1.5′ L+ 639+00.00	d		
																															97.1								S	3.5		18" RCP	1.5′ L+ 639+00.00	e		
						1		326	1.39																																5.0	G1 INLET	1.5′ L+ 640+00.00	f		
				1																																						REMOVE INLET	642+50.00	a	92	D-30
						2		634	1.71																																4.1	Mod G1 INLET*	1.5′ L+ 642+50.00	b		
																															147.1								S	3.5		18" RCP	1.5′ L+ 642+50.00	c		D-31
						2		634	1.98																																5.0	Mod G1 INLET*	1.4′ L+ 644+00.00	d		
																1																										CAP INLET*	651+00.00	a	93	D-31
																1																										CAP INLET*	663+73.79	a	94	D-32
																1																										CAP INLET*	673+86.00	a	95	D-33
																										53.0													S	3.4		18" AP	104.0′ R+ 673+49.00	b		
							1	236	0.36				0.6	4.5																								5.0	D		4.5	GMP INLET W/HMA APRON*	103.0′ R+ 674+00.00	c		
																							15.1	4.5																		RSP (FACING, METHOD B)*	135.0′ R+ 679+00.00	a	96	D-33
																					1																					AFES	135.0′ R+ 679+00.00	b		
																															131.0								S	9.1		18" RCP	135.0′ R+ 679+00.00	c		
							1	236	0.36				0.6	4.5																								4.5	D		4.0	GMP INLET W/HMA APRON*	105.0′ R+ 679+00.00	d		
																																					4.0		D			12" CSP RISER (0.064" THICK)				
						2		634	2.27																																6.0	Mod G1 INLET*	1.4′ R+ 679+00.00	e		
																															47.1								S	4.5		18" RCP	1.4′ R+ 679+00.00	f		
						2		634	2.21																																5.8	Mod G1 INLET*	1.4′ R+ 679+50.00	g		
																															47.1								S	4.3		18" RCP	1.4′ R+ 679+50.00	h		
						2		634	2.27																																5.5	Mod G1 INLET*	1.5′ R+ 680+00.00	i		
				2				5906	20.45				1.2	9.0		3					1		15.1	4.5		53.0					789.4						4.0	9.5				SHEET TOTAL				

NOTES

1. *: SEE DRAINAGE DETAIL SHEETS.
2. **: REQUIRE WATERTIGHTNESS.
3. (N): NOT A SEPARATE PAY ITEM, FOR INFORMATION ONLY.
4. ALL STATION OFFSETS ARE REFERRED TO THE CENTER LINE OF "A" LINE UNLESS OTHERWISE SHOWN.

DRAINAGE QUANTITIES
DQ-13

REVISED BY | DATE REVISED
HA VU | AHMAD SHAH
CALCULATED-DESIGNED BY | CHECKED BY
FUNCTIONAL SUPERVISOR | GEORGE MORHIG
STATE OF CALIFORNIA - DEPARTMENT OF TRANSPORTATION
DESIGN
Caltrans

LAST REVISION 04-14-11 | DATE PLOTTED => 17-JUN-2011 | TIME PLOTTED => 05:38

Dist	COUNTY	ROUTE	POST MILES TOTAL PROJECT	SHEET No.	TOTAL SHEETS
08	SBd	15	3.8/12.8	237	680

REGISTERED CIVIL ENGINEER 4-14-11 DATE

6-13-11
PLANS APPROVAL DATE

REGISTERED PROFESSIONAL ENGINEER HA VU No. C61359 Exp. 6-30-11 CIVIL STATE OF CALIFORNIA

THE STATE OF CALIFORNIA OR ITS OFFICERS OR AGENTS SHALL NOT BE RESPONSIBLE FOR THE ACCURACY OR COMPLETENESS OF SCANNED COPIES OF THIS PLAN SHEET.

REVISED BY | DATE REVISED
HA VU | AHMAD SHAH
CALCULATED-DESIGNED BY | CHECKED BY
FUNCTIONAL SUPERVISOR | GEORGE MORHIG
STATE OF CALIFORNIA - DEPARTMENT OF TRANSPORTATION
DESIGN
Caltrans

ABANDON CULVERT (LF)	SAND BACKFILL (CY)	REMOVE HEADWALL (EA)	REMOVE CULVERT (LF)	REMOVE INLET (EA)	ABANDON INLET (EA)	FRAME & GRATE (N) TYPE 24-12 (EA)	FRAME & GRATE (N) TYPE 36R (EA)	Misc IRON AND STEEL (LB)	MINOR Conc (MINOR Str) (CY)	MINOR Conc (Misc Const) (CY)	MINOR Conc (SLOPE PROTECTION) (CY)	CLASS 2 AB (CY)	HMA (TYPE A) (TON)	PLACE HMA (Misc AREA) (SQYD)	ADJUST INLET (EA)	CAP INLET (EA)	CONCRETE COLLAR* (N) (EA)	GRATED LINE DRAIN (LF)	15" ENTRANCE TAPER (EA)	AFES 15" (EA)	AFES 18" (EA)	AFES 24" (EA)	RSP FABRIC (SQYD)	RSP (FACING METHOD B) (CY)	RSP (LIGHT METHOD B) (CY)	Conc RSP (1T, METHOD A) (CY)	AP 12" (LF)	AP 18" (LF)	AP 24" (LF)	RCP 12" (LF)	RCP 18" (LF)	RCP 24" (LF)	CSP (0.064" THICK) 12" (LF)	CSP (0.064" THICK) 15" (LF)	CSP (0.064" THICK) 18" (LF)	15" CSP DD (0.079" THICK) (LF)	12" CSP RISER (0.064" THICK) (LF)	36" CSP INLET (0.079" THICK) (LF)	JOINT CLASSIFICATION (N)	MAXIMUM COVER (N) (FT)	HEIGHT OF INLET (N) (FT)	DESCRIPTION	STATION	DRAINAGE UNIT No. ◯	DRAINAGE SYSTEM No. ⬡	DRAINAGE PLAN SHEET No.
																															97.1									S	4.0		18" RCP	1.5' R+ 680+00.00	j	96	D-33
						2		634	1.98																																	5.0	Mod G1 INLET*	1.5' R+ 681+00.00	k		
							1	236	0.36				0.6	4.5																								4.5	D		4.0	GMP INLET W/HMA APRON*	103.0' R+ 683+47.00	a	97	D-33
																																				5.0		D			12" CSP RISER (0.064" THICK)				
				1																																							REMOVE INLET	684+00.00	a	98	D-33
						1		326	2.20																																	6.5	G2 INLET	1.5' R+ 684+00.00	b		
																																97.1							S	4.5		24" RCP	1.5' R+ 684+00.00	c		
						1		326	1.95																																	5.5	G2 INLET	1.5' R+ 685+00.00	d		
																																97.1							S	3.5		24" RCP	1.5' R+ 685+00.00	e		
						1		326	1.95																																	5.5	G2 INLET	1.5' R+ 686+00.00	f		D-34
																															97.1							S	3.5		18" RCP	1.5' R+ 686+00.00	g		
						1		326	1.39																																	5.0	G1 INLET	1.5' R+ 687+00.00	h		
																															97.1							S	3.5		18" RCP	1.5' R+ 687+00.00	i		
						1		326	1.39																																	5.0	G1 INLET	1.5' R+ 688+00.00	j		
				1																																							REMOVE INLET	690+00.00	a	99	D-34
						1		326	2.08																																	6.0	G2 INLET	1.5' R+ 690+00.00	b		
																																97.1							S	4.0		24" RCP	1.5' R+ 690+00.00	c		
						1		326	1.95																																	5.5	G2 INLET	1.5' R+ 691+50.00	d		
																															97.1							S	3.5		18" RCP	1.5' R+ 691+50.00	e		
						1		326	1.39																																	5.0	G1 INLET	1.5' R+ 692+50.00	f		
																															97.1							S	3.5		18" RCP	1.5' R+ 692+50.00	g		
						1		326	1.39																																	5.0	G1 INLET	1.5' R+ 693+50.00	h		
																															43.9							S	4.0		18" RCP	4.0' R+ 696+04.00	a	100	D-34
						2		634	2.12																																	5.5	Mod G1 INLET*	1.5' R+ 696+50.00	b		
																															47.1							S	4.0		18" RCP	1.5' R+ 696+50.00	c		
						1		326	1.39																																	5.0	G1 INLET	1.5' R+ 697+00.00	d		
																							15.1	4.5																			RSP (FACING, METHOD B)*	153.0' R+ 699+20.00	a	101	D-34
																				1																							AFES	153.0' R+ 699+20.00	b		
																														60.0								D	6.5		18" CSP (0.064" THICK)	153.0' R+ 699+20.00	c		
						2		634	1.98																																	5.0	Mod G1 INLET*	93.0' R+ 699+20.00	d		
																											27.1													S	3.5		18" AP	93.0' R+ 699+20.00	e		
				2				5398	23.52				0.6	4.5						1			15.1	4.5			27.1				576.5	291.3			60.0		5.0	4.5				SHEET TOTAL				

NOTES
1. *: SEE DRAINAGE DETAIL SHEETS.
2. **: REQUIRE WATERTIGHTNESS.
3. (N): NOT A SEPARATE PAY ITEM, FOR INFORMATION ONLY.
4. ALL STATION OFFSETS ARE REFERRED TO THE CENTER LINE OF "A" LINE UNLESS OTHERWISE SHOWN.

DRAINAGE QUANTITIES
DQ-14

LAST REVISION 04-14-11 | DATE PLOTTED => 17-JUN-2011 | TIME PLOTTED => 05:38

***: FOR TOTAL QUANTITY OF MINOR CONCRETE (MINOR STRUCTURE), SEE SHEET Q-18.
****: FOR TOTAL QUANTITY OF CLASS 2 AB, SEE SHEET Q-11.
*****: FOR TOTAL QUANTITY OF HMA (TYPE A), SEE SHEET Q-20.

Dist	COUNTY	ROUTE	POST MILES TOTAL PROJECT	SHEET No.	TOTAL SHEETS
08	SBd	15	3.8/12.8	238	680

REGISTERED CIVIL ENGINEER 5-24-11 DATE

6-13-11
PLANS APPROVAL DATE

REGISTERED PROFESSIONAL ENGINEER HA VU No. C61359 Exp. 6-30-11 CIVIL STATE OF CALIFORNIA

THE STATE OF CALIFORNIA OR ITS OFFICERS OR AGENTS SHALL NOT BE RESPONSIBLE FOR THE ACCURACY OR COMPLETENESS OF SCANNED COPIES OF THIS PLAN SHEET.

ABANDON CULVERT (LF)	SAND BACKFILL (CY)	REMOVE HEADWALL (EA)	REMOVE CULVERT (LF)	REMOVE INLET (EA)	ABANDON INLET (EA)	FRAME & GRATE (N) TYPE 24-12 (EA)	FRAME & GRATE (N) TYPE 36R (EA)	Misc IRON AND STEEL (LB)	MINOR Conc (MINOR Str) (CY)	MINOR Conc (Misc Const) (CY)	MINOR Conc (SLOPE PROTECTION) (CY)	CLASS 2 AB (CY)	HMA (TYPE A) (TON)	PLACE HMA (Misc AREA) (SQYD)	ADJUST INLET (EA)	CAP INLET (EA)	CONCRETE COLLAR* (N) (EA)	GRATED LINE DRAIN (LF)	15" ENTRANCE TAPER (EA)	AFES 15" (EA)	AFES 18" (EA)	AFES 24" (EA)	RSP (METHOD B) FABRIC (SQYD)	RSP (METHOD B) FACING (CY)	RSP (METHOD B) LIGHT (CY)	Conc RSP (1T, METHOD A) (CY)	AP 12" (LF)	AP 18" (LF)	AP 24" (LF)	RCP 12" (LF)	RCP 18" (LF)	RCP 24" (LF)	CSP (0.064" THICK) 12" (LF)	CSP (0.064" THICK) 15" (LF)	CSP (0.064" THICK) 18" (LF)	15" CSP DD (0.079" THICK) (LF)	12" CSP RISER (0.064" THICK) (LF)	36" CSP INLET (0.079" THICK) (LF)	JOINT CLASSIFICATION (N)	MAXIMUM COVER (N) (FT)	HEIGHT OF INLET (N) (FT)	DESCRIPTION	STATION	DRAINAGE UNIT No. ◯	DRAINAGE SYSTEM No. ⬡	DRAINAGE PLAN SHEET No.
						2		634	1.83																																4.5	Mod G1 INLET*	93.0′ R+ 699+50.00	f	101	D-35
																											57.1												S	3.0		18" AP	93.0′ R+ 699+50.00	g		
						1		326	1.28																																4.5	G1 INLET	93.0′ R+ 700+10.00	h		
																							11.7	3.3																			RSP (FACING, METHOD B)*	156.4′ L+ 700+00.00	a	102	D-35
																				1																							AFES	156.4′ L+ 700+00.00	b		
																																			60.6			D	1.0		15" CSP DD (0.064" THICK)	156.4′ L+ 700+00.00	c		
										1.17																															PCC GUTTER PLARE	93.0′ L+ 700+00.00	d		
																			1																							ENTRANCE TAPER				
																							11.7	3.3																			RSP (FACING, METHOD B)*	129.0′ R+ 701+11.00	a	103	D-35
																				1																							AFES	129.0′ R+ 701+11.00	b		
																																			80.0			D	1.0		15" CSP DD (0.064" THICK)	129.0′ R+ 701+11.00	c		
										1.17																															PCC GUTTER PLARE	93.0′ R+ 701+11.00	d		
																			1																							ENTRANCE TAPER				
								960	3.11	2.34									2	2			23.4	6.6			57.1								140.6							SHEET TOTAL			
1580.8	175.6	1	220.3	23	11			64888	225.29	7.47	47.10	18	11.3	64.2	12	22		150.0	3	10	6	1	467.7	63.9	116.2	199.8	64.4	2950.1	3500.9	22.5	2110.4	699.3	43.6	600.7	219.7	188.6	9.0	53.7				GRAND TOTAL			

*** ****

NOTES
1. *: SEE DRAINAGE DETAIL SHEETS.
2. **: REQUIRE WATERTIGHTNESS.
3. (N): NOT A SEPARATE PAY ITEM, FOR INFORMATION ONLY.
4. ALL STATION OFFSETS ARE REFERRED TO THE CENTER LINE OF "A" LINE UNLESS OTHERWISE SHOWN.

DRAINAGE QUANTITIES

DQ-15

REVISED BY | DATE REVISED
HA VU | AHMAD SHAH
CALCULATED-DESIGNED BY | CHECKED BY
FUNCTIONAL SUPERVISOR | GEORGE MORHIG
STATE OF CALIFORNIA - DEPARTMENT OF TRANSPORTATION
DESIGN
Caltrans

LAST REVISION 05-24-11 | DATE PLOTTED => 17-JUN-2011 | TIME PLOTTED => 05:39

Dist	COUNTY	ROUTE	POST MILES TOTAL PROJECT	SHEET No.	TOTAL SHEETS
08	SBd	15	3.8/12.8	239	680

REGISTERED CIVIL ENGINEER 5-24-11 DATE

6-13-11
PLANS APPROVAL DATE

REGISTERED PROFESSIONAL ENGINEER AHMAD SHAH No. C55259 Exp. 9-30-12 CIVIL STATE OF CALIFORNIA

THE STATE OF CALIFORNIA OR ITS OFFICERS OR AGENTS SHALL NOT BE RESPONSIBLE FOR THE ACCURACY OR COMPLETENESS OF SCANNED COPIES OF THIS PLAN SHEET.

NOTE:

FOR ACCURATE RIGHT OF WAY AND ACCESS DATA,
CONTACT RIGHT OF WAY ENGINEERING AT THE DISTRICT OFFICE.

LEGEND:

- ——-e-(oh) OVERHEAD ELECTRICAL LINE
- ——-e—— UNDERGROUND ELECTRICAL LINE
- ——--t-(oh) OVERHEAD TELEPHONE LINE
- ——--t—— UNDERGROUND TELEPHONE LINE
- ----gs—— FUEL OIL PIPE LINE
- ——-g—— NATURAL GAS LINE
- ——--s—— SANITARY SEWER LINE
- -——w—— WATER LINE
- ——fo——· FIBER OPTIC LINE
- ——---tv——- TV CABLE LINE

ABBREVIATIONS:

COF DENOTES CITY OF FONTANA
GTE DENOTES GENERAL TELEPHOEN OF CALIFORNIA
MWD DENOTES METROPOLITAN WATER DISTRICT
SCE DENOTES SOUTHERN CALIFORNIA EDISON
SCG DENOTES SOUTHERN CALIFORNIA GAS COMPANY
SGVMD DENOTES SAN GABRIEL VALLEY WATER DISTRICT
WILTEL DENOTES WILLIAMS TELECOMMUNICATIONS COMPANY
WSBCWD DENOTES WEST SAN BERNARDINO COUNTY WATER DISTRICT
CVMD DENOTES CUCAMONGA VALLEY METROPOLITAN DISTRICT
IEUA DENOTES INLAND EMPIRE UTILITIES AGENCY

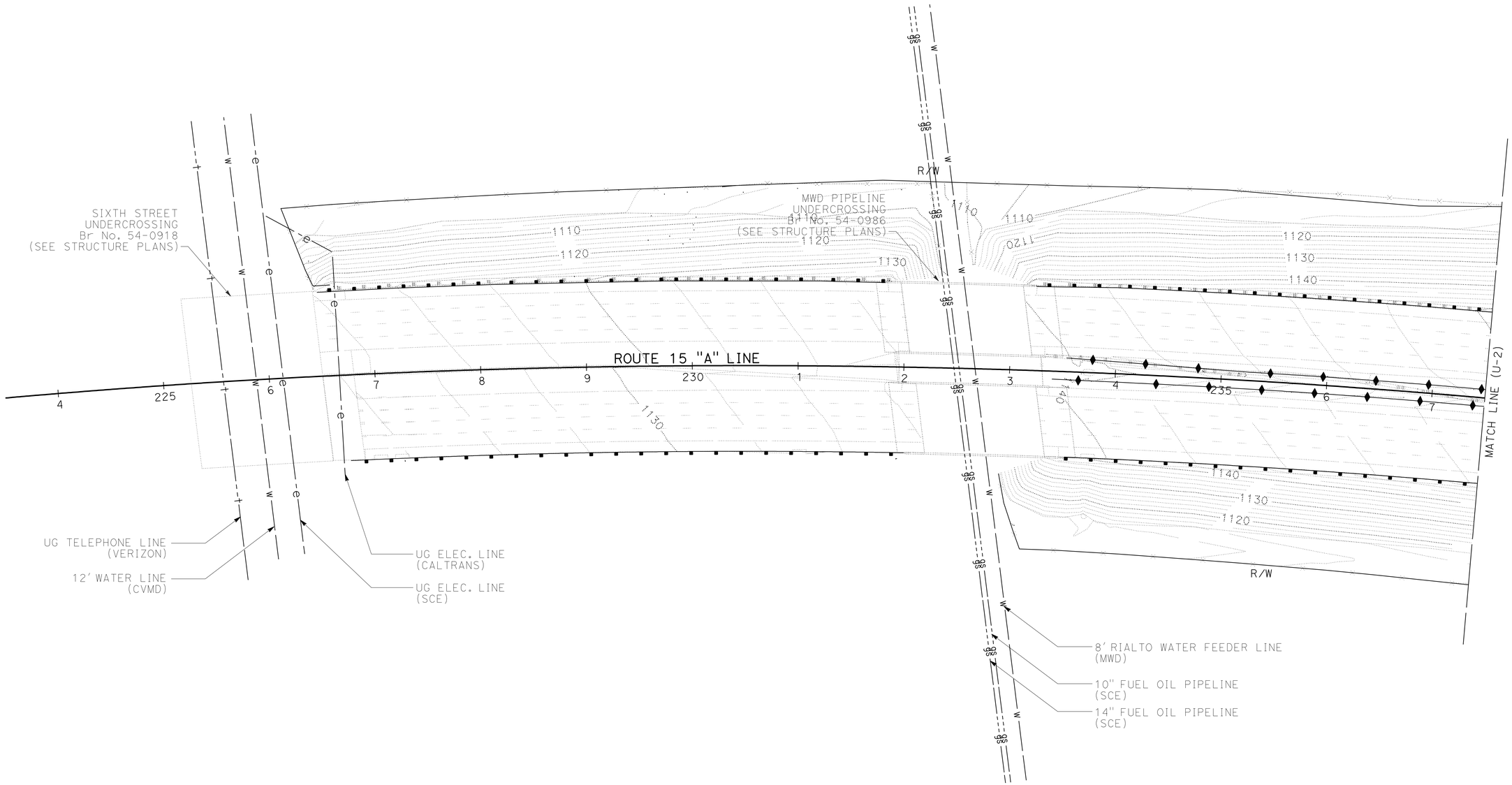

UTILITY PLAN

SCALE 1" = 50'

U-1

THIS PLAN FOR UTILITY INFORMATION ONLY

STATE OF CALIFORNIA - DEPARTMENT OF TRANSPORTATION
Caltrans DESIGN

FUNCTIONAL SUPERVISOR: GEORGE MORHIG
CALCULATED-DESIGNED BY: WILLIAM ONKUMPOL
CHECKED BY: AHMAD SHAH
REVISED BY / DATE REVISED

LAST REVISION 05-24-11 | DATE PLOTTED => 17-JUN-2011 | TIME PLOTTED => 05:39

Dist	COUNTY	ROUTE	POST MILES TOTAL PROJECT	SHEET No.	TOTAL SHEETS
08	SBd	15	3.8/12.8	240	680

REGISTERED CIVIL ENGINEER 5-24-11 DATE

6-13-11
PLANS APPROVAL DATE

REGISTERED PROFESSIONAL ENGINEER
AHMAD SHAH
No. C55259
Exp. 9-30-12
CIVIL
STATE OF CALIFORNIA

THE STATE OF CALIFORNIA OR ITS OFFICERS OR AGENTS SHALL NOT BE RESPONSIBLE FOR THE ACCURACY OR COMPLETENESS OF SCANNED COPIES OF THIS PLAN SHEET.

NOTE:

FOR ACCURATE RIGHT OF WAY AND ACCESS DATA, CONTACT RIGHT OF WAY ENGINEERING AT THE DISTRICT OFFICE.

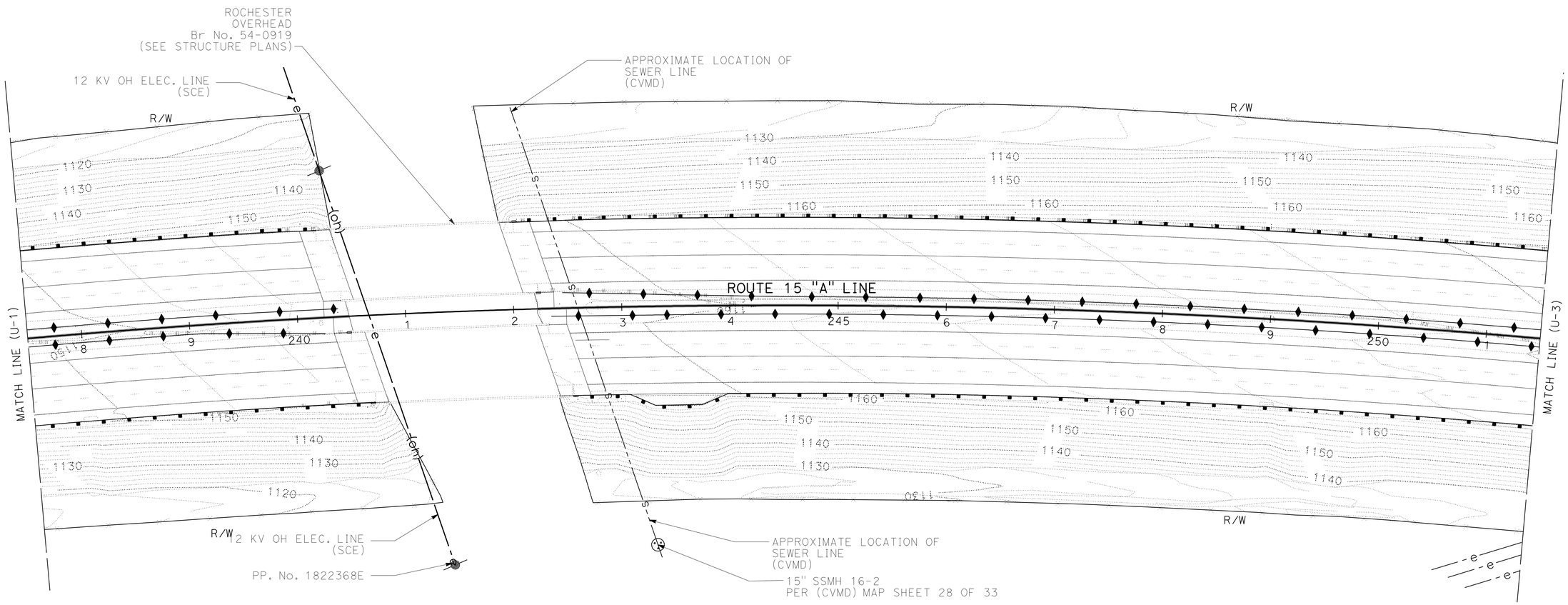

UTILITY PLAN

SCALE 1" = 50'

U-2

THIS PLAN FOR UTILITY INFORMATION ONLY

STATE OF CALIFORNIA - DEPARTMENT OF TRANSPORTATION

DESIGN

FUNCTIONAL SUPERVISOR: GEORGE MORHIG

CALCULATED-DESIGNED BY: WILLIAM ONKUMPOL

CHECKED BY: AHMAD SHAH

REVISED BY / DATE REVISED

LAST REVISION 05-24-11 | DATE PLOTTED => 17-JUN-2011 | TIME PLOTTED => 05:39

Dist	COUNTY	ROUTE	POST MILES TOTAL PROJECT	SHEET No.	TOTAL SHEETS
08	SBd	15	3.8/12.8	241	680

REGISTERED CIVIL ENGINEER 5-24-11 DATE

6-13-11
PLANS APPROVAL DATE

REGISTERED PROFESSIONAL ENGINEER
AHMAD SHAH
No. C55259
Exp. 9-30-12
CIVIL
STATE OF CALIFORNIA

THE STATE OF CALIFORNIA OR ITS OFFICERS OR AGENTS SHALL NOT BE RESPONSIBLE FOR THE ACCURACY OR COMPLETENESS OF SCANNED COPIES OF THIS PLAN SHEET.

NOTE:

FOR ACCURATE RIGHT OF WAY AND ACCESS DATA,
CONTACT RIGHT OF WAY ENGINEERING AT THE DISTRICT OFFICE.

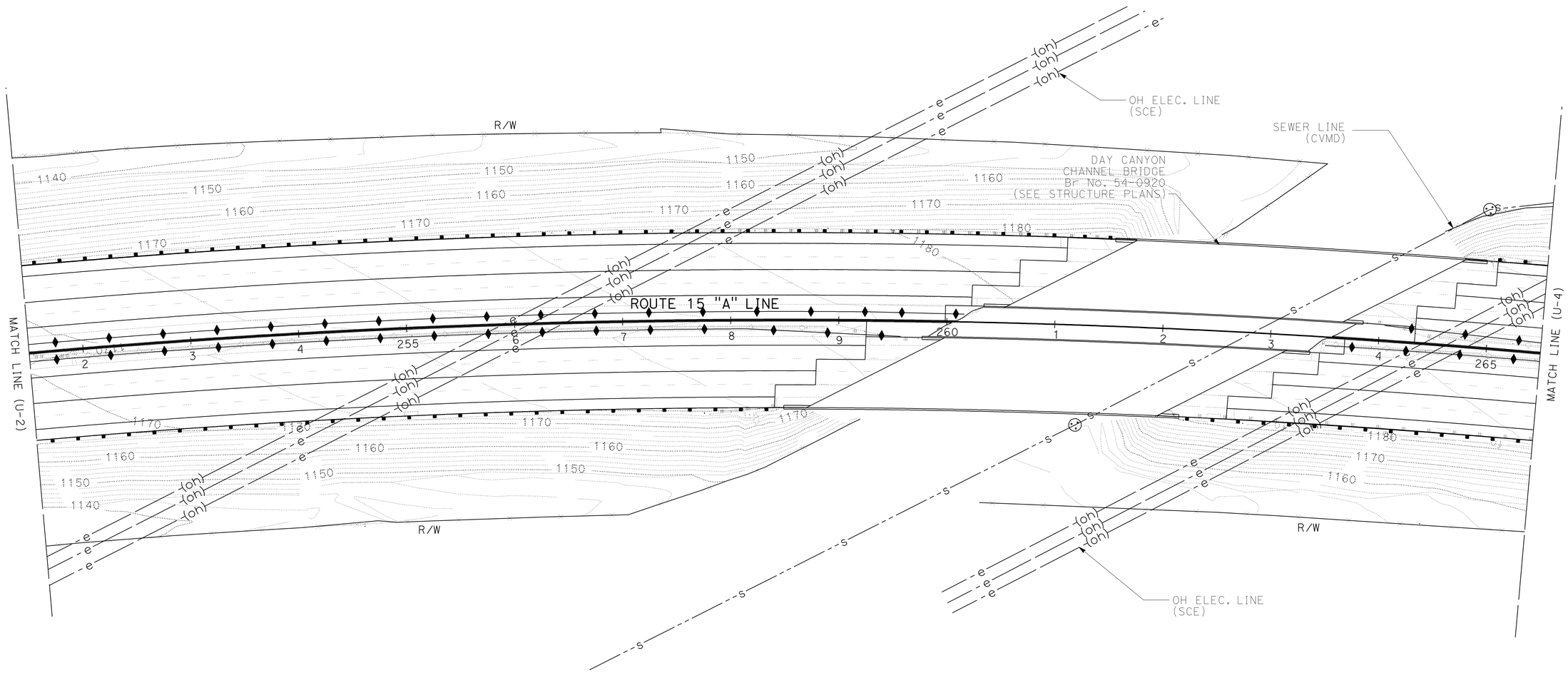

UTILITY PLAN

SCALE 1" = 50'

U-3

THIS PLAN FOR UTILITY INFORMATION ONLY

STATE OF CALIFORNIA - DEPARTMENT OF TRANSPORTATION
Caltrans
DESIGN

FUNCTIONAL SUPERVISOR: GEORGE MORHIG
CALCULATED-DESIGNED BY: WILLIAM ONKUMPOL
CHECKED BY: AHMAD SHAH
REVISED BY
DATE REVISED

LAST REVISION 05-24-11
DATE PLOTTED => 17-JUN-2011
TIME PLOTTED => 05:39

Dist	COUNTY	ROUTE	POST MILES TOTAL PROJECT	SHEET No.	TOTAL SHEETS
08	SBd	15	3.8/12.8	242	680

REGISTERED CIVIL ENGINEER 5-24-11 DATE

6-13-11
PLANS APPROVAL DATE

REGISTERED PROFESSIONAL ENGINEER
AHMAD SHAH
No. C55259
Exp. 9-30-12
CIVIL
STATE OF CALIFORNIA

THE STATE OF CALIFORNIA OR ITS OFFICERS OR AGENTS SHALL NOT BE RESPONSIBLE FOR THE ACCURACY OR COMPLETENESS OF SCANNED COPIES OF THIS PLAN SHEET.

NOTE:

FOR ACCURATE RIGHT OF WAY AND ACCESS DATA,
CONTACT RIGHT OF WAY ENGINEERING AT THE DISTRICT OFFICE.

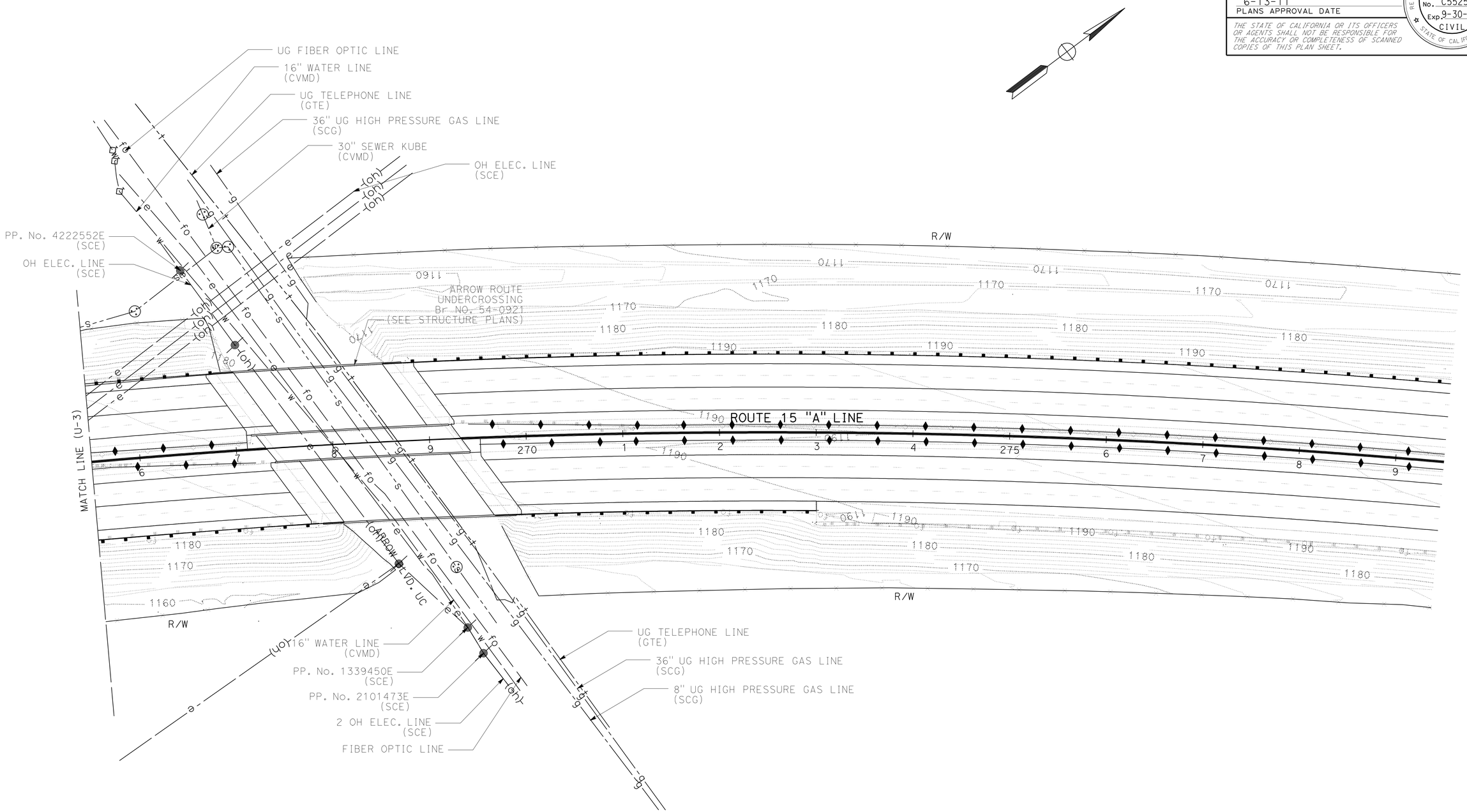

UTILITY PLAN

SCALE 1" = 50'

U-4

THIS PLAN FOR UTILITY INFORMATION ONLY

STATE OF CALIFORNIA - DEPARTMENT OF TRANSPORTATION
Caltrans® **DESIGN**

FUNCTIONAL SUPERVISOR: GEORGE MORHIG
CALCULATED-DESIGNED BY: WILLIAM ONKUMPOL
CHECKED BY: AHMAD SHAH
REVISED BY
DATE REVISED

LAST REVISION 05-24-11
DATE PLOTTED => 17-JUN-2011
TIME PLOTTED => 05:39

Dist	COUNTY	ROUTE	POST MILES TOTAL PROJECT	SHEET No.	TOTAL SHEETS
08	SBd	15	3.8/12.8	243	680

REGISTERED CIVIL ENGINEER 5-24-11 DATE

6-13-11
PLANS APPROVAL DATE

REGISTERED PROFESSIONAL ENGINEER
AHMAD SHAH
No. C55259
Exp. 9-30-12
CIVIL
STATE OF CALIFORNIA

THE STATE OF CALIFORNIA OR ITS OFFICERS OR AGENTS SHALL NOT BE RESPONSIBLE FOR THE ACCURACY OR COMPLETENESS OF SCANNED COPIES OF THIS PLAN SHEET.

NOTE:

FOR ACCURATE RIGHT OF WAY AND ACCESS DATA,
CONTACT RIGHT OF WAY ENGINEERING AT THE DISTRICT OFFICE.

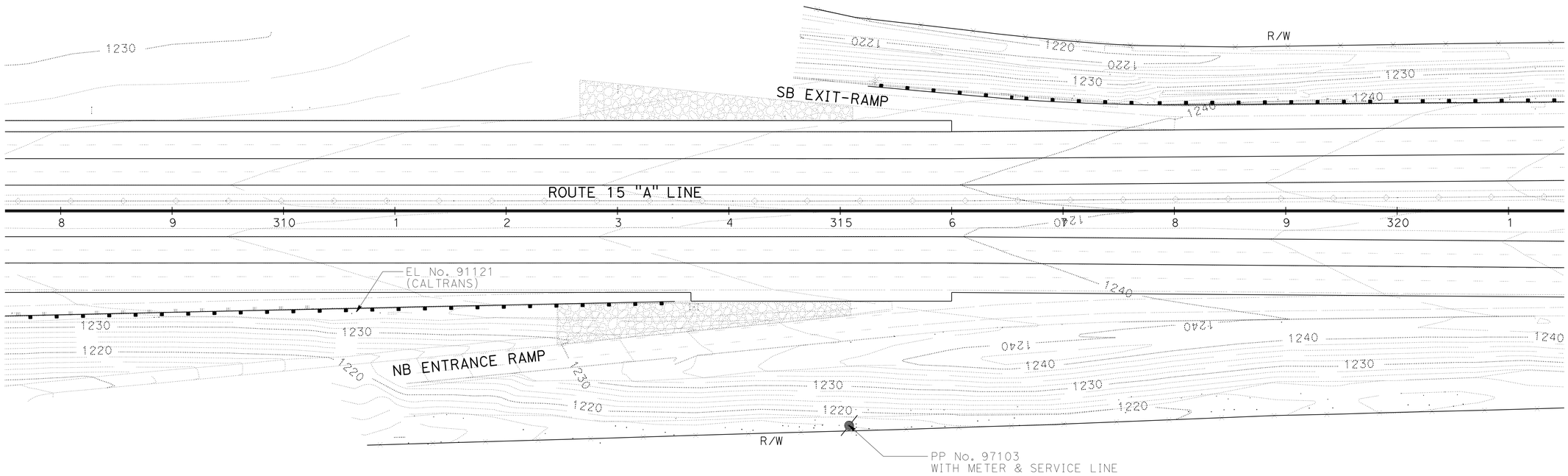

UTILITY PLAN

SCALE 1" = 50'

U-5

THIS PLAN FOR UTILITY INFORMATION ONLY

STATE OF CALIFORNIA - DEPARTMENT OF TRANSPORTATION
Caltrans
DESIGN

FUNCTIONAL SUPERVISOR: GEORGE MORHIG

CALCULATED-DESIGNED BY: WILLIAM ONKUMPOL
CHECKED BY: AHMAD SHAH

REVISED BY
DATE REVISED

LAST REVISION 05-24-11
DATE PLOTTED => 17-JUN-2011
TIME PLOTTED => 05:39

Dist	COUNTY	ROUTE	POST MILES TOTAL PROJECT	SHEET No.	TOTAL SHEETS
08	SBd	15	3.8/12.8	244	680

REGISTERED CIVIL ENGINEER 5-24-11 DATE

6-13-11
PLANS APPROVAL DATE

REGISTERED PROFESSIONAL ENGINEER
AHMAD SHAH
No. C55259
Exp. 9-30-12
CIVIL
STATE OF CALIFORNIA

THE STATE OF CALIFORNIA OR ITS OFFICERS OR AGENTS SHALL NOT BE RESPONSIBLE FOR THE ACCURACY OR COMPLETENESS OF SCANNED COPIES OF THIS PLAN SHEET.

NOTE:

FOR ACCURATE RIGHT OF WAY AND ACCESS DATA,
CONTACT RIGHT OF WAY ENGINEERING AT THE DISTRICT OFFICE.

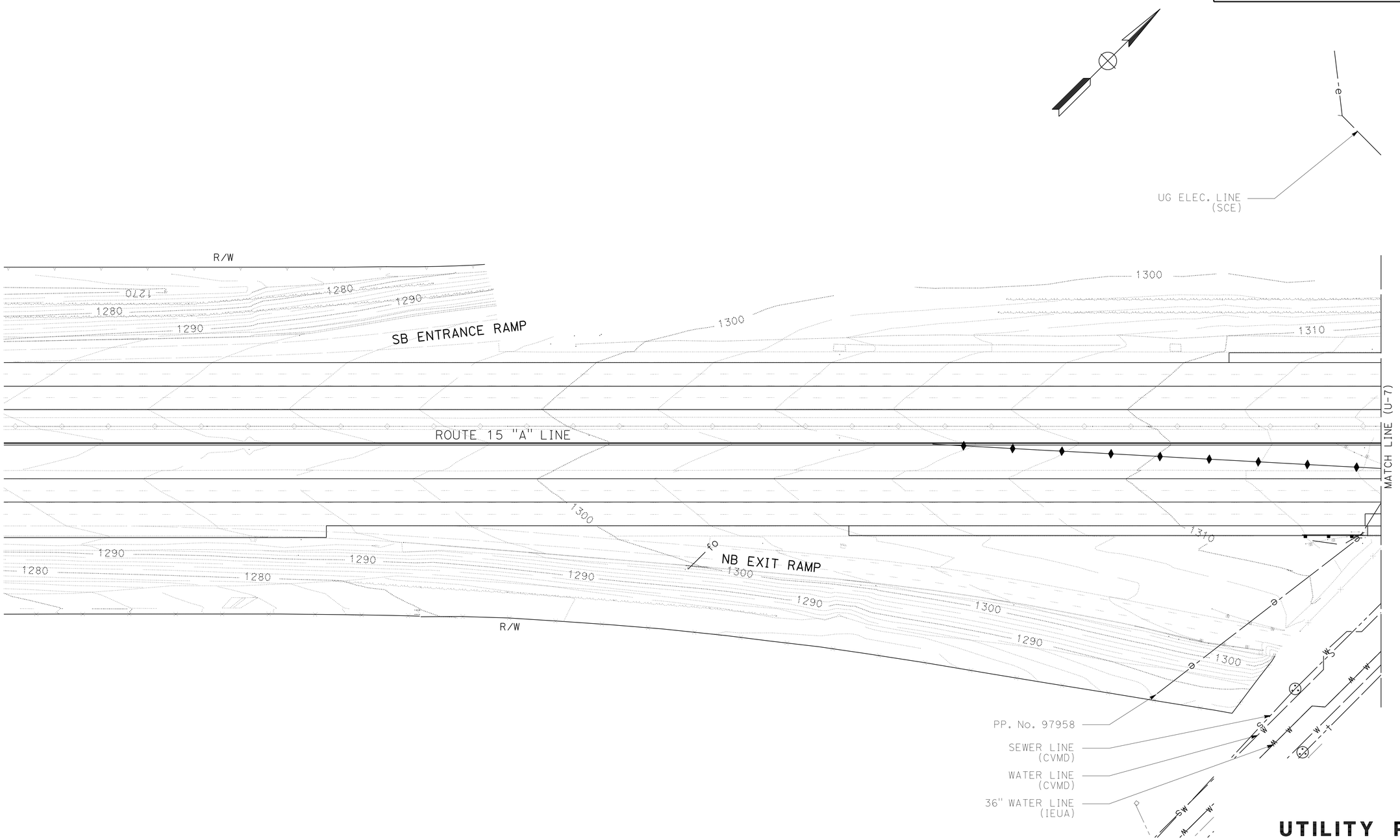

UTILITY PLAN

SCALE 1" = 50'

U-6

THIS PLAN FOR UTILITY INFORMATION ONLY

STATE OF CALIFORNIA - DEPARTMENT OF TRANSPORTATION
Caltrans
DESIGN

FUNCTIONAL SUPERVISOR: GEORGE MORHIG
CALCULATED-DESIGNED BY: WILLIAM ONKUMPOL
CHECKED BY: AHMAD SHAH
REVISED BY
DATE REVISED

LAST REVISION 05-24-11
DATE PLOTTED => 17-JUN-2011
TIME PLOTTED => 09:39

Dist	COUNTY	ROUTE	POST MILES TOTAL PROJECT	SHEET No.	TOTAL SHEETS
08	SBd	15	3.8/12.8	245	680

REGISTERED CIVIL ENGINEER 5-24-11 DATE

6-13-11
PLANS APPROVAL DATE

REGISTERED PROFESSIONAL ENGINEER AHMAD SHAH No. C55259 Exp. 9-30-12 CIVIL STATE OF CALIFORNIA

THE STATE OF CALIFORNIA OR ITS OFFICERS OR AGENTS SHALL NOT BE RESPONSIBLE FOR THE ACCURACY OR COMPLETENESS OF SCANNED COPIES OF THIS PLAN SHEET.

NOTE:

FOR ACCURATE RIGHT OF WAY AND ACCESS DATA,
CONTACT RIGHT OF WAY ENGINEERING AT THE DISTRICT OFFICE.

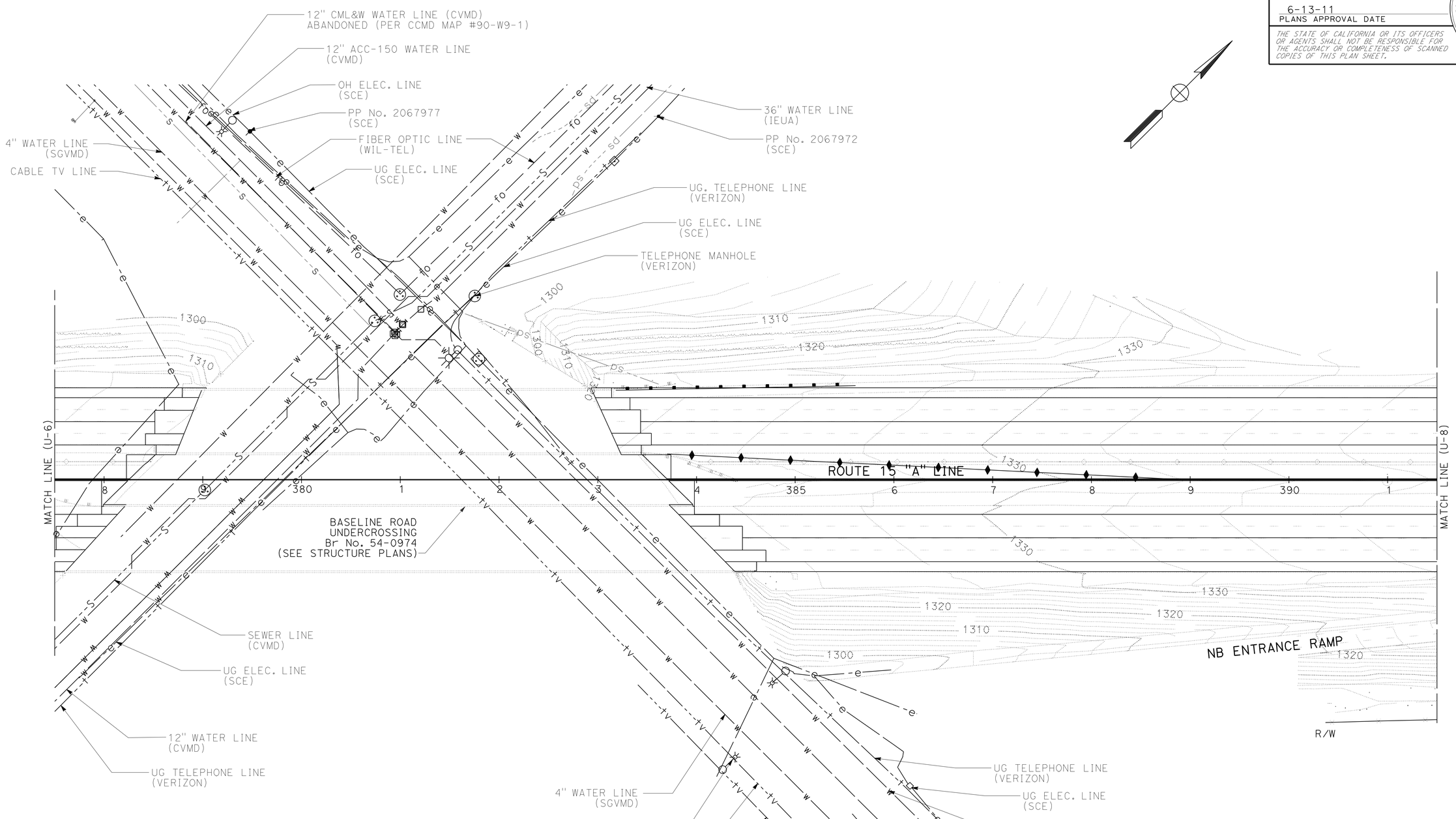

UTILITY PLAN

SCALE 1" = 50'

U-7

THIS PLAN FOR UTILITY INFORMATION ONLY

STATE OF CALIFORNIA - DEPARTMENT OF TRANSPORTATION
Caltrans
DESIGN

FUNCTIONAL SUPERVISOR: GEORGE MORHIG
CALCULATED-DESIGNED BY: WILLIAM ONKUMPOL
CHECKED BY: AHMAD SHAH
REVISED BY / DATE REVISED

LAST REVISION 05-24-11
DATE PLOTTED => 17-JUN-2011
TIME PLOTTED => 05:39

Dist	COUNTY	ROUTE	POST MILES TOTAL PROJECT	SHEET No.	TOTAL SHEETS
08	SBd	15	3.8/12.8	246	680

REGISTERED CIVIL ENGINEER 5-24-11 DATE

6-13-11
PLANS APPROVAL DATE

REGISTERED PROFESSIONAL ENGINEER
AHMAD SHAH
No. C55259
Exp. 9-30-12
CIVIL
STATE OF CALIFORNIA

THE STATE OF CALIFORNIA OR ITS OFFICERS OR AGENTS SHALL NOT BE RESPONSIBLE FOR THE ACCURACY OR COMPLETENESS OF SCANNED COPIES OF THIS PLAN SHEET.

NOTE:

FOR ACCURATE RIGHT OF WAY AND ACCESS DATA,
CONTACT RIGHT OF WAY ENGINEERING AT THE DISTRICT OFFICE.

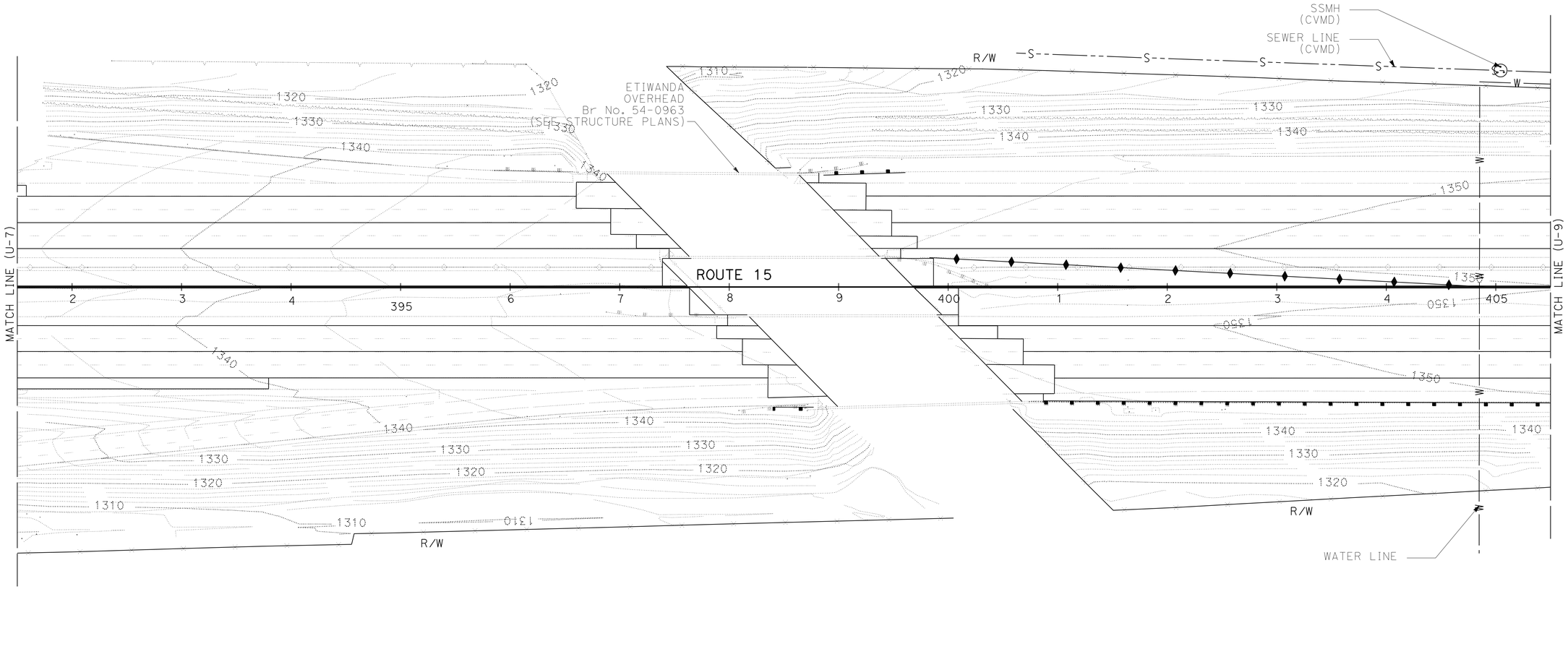

UTILITY PLAN

SCALE 1" = 50'

U-8

THIS PLAN FOR UTILITY INFORMATION ONLY

STATE OF CALIFORNIA - DEPARTMENT OF TRANSPORTATION
Caltrans
DESIGN

FUNCTIONAL SUPERVISOR: GEORGE MORHIG
CALCULATED-DESIGNED BY: WILLIAM ONKUMPOL
CHECKED BY: AHMAD SHAH
REVISED BY
DATE REVISED

LAST REVISION 05-24-11
DATE PLOTTED => 17-JUN-2011
TIME PLOTTED => 05:39

Dist	COUNTY	ROUTE	POST MILES TOTAL PROJECT	SHEET No.	TOTAL SHEETS
08	SBd	15	3.8/12.8	247	680

REGISTERED CIVIL ENGINEER 5-24-11 DATE

6-13-11
PLANS APPROVAL DATE

REGISTERED PROFESSIONAL ENGINEER
AHMAD SHAH
No. C55259
Exp. 9-30-12
CIVIL
STATE OF CALIFORNIA

THE STATE OF CALIFORNIA OR ITS OFFICERS OR AGENTS SHALL NOT BE RESPONSIBLE FOR THE ACCURACY OR COMPLETENESS OF SCANNED COPIES OF THIS PLAN SHEET.

NOTE:

FOR ACCURATE RIGHT OF WAY AND ACCESS DATA,
CONTACT RIGHT OF WAY ENGINEERING AT THE DISTRICT OFFICE.

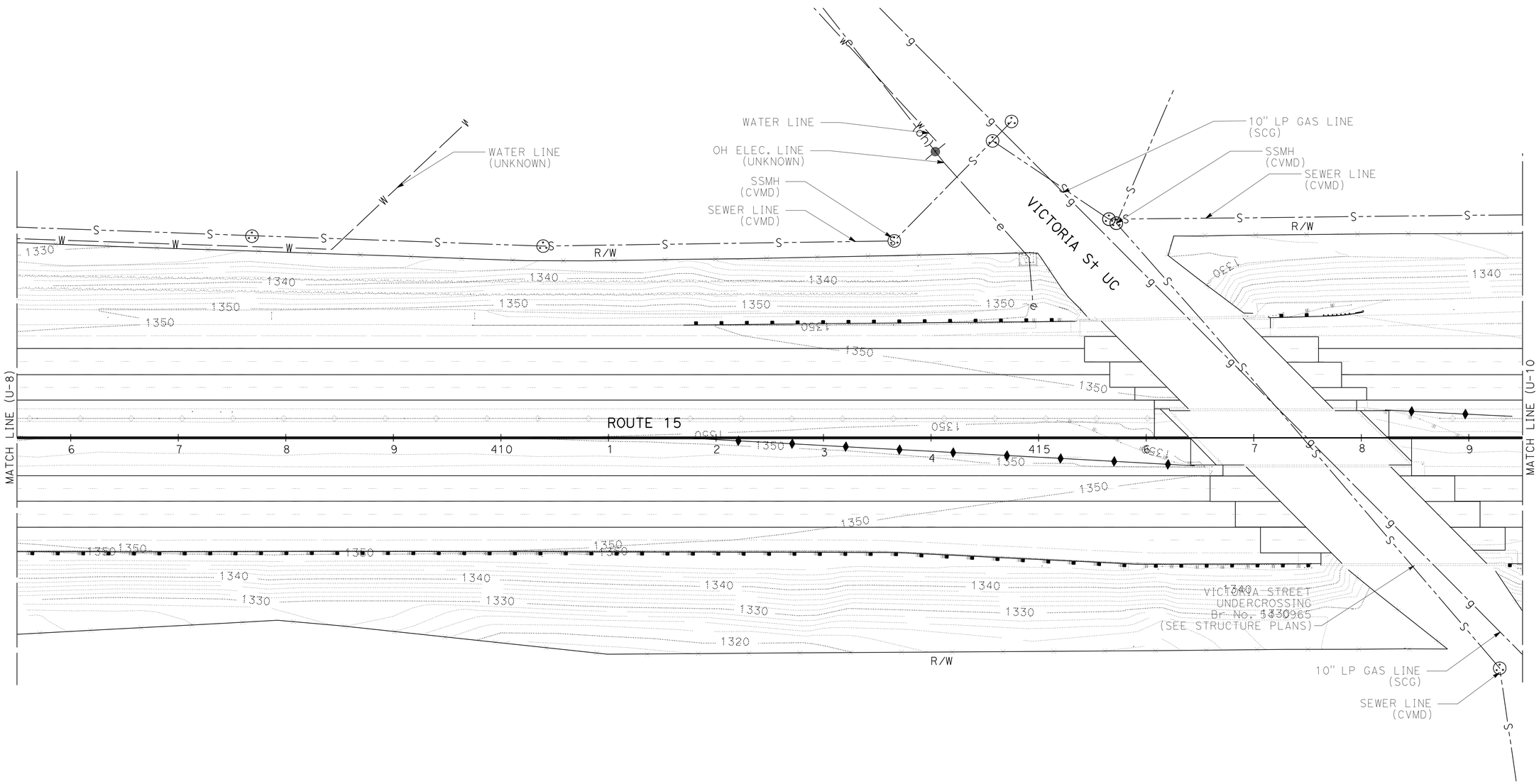

UTILITY PLAN

SCALE 1" = 50'

U-9

THIS PLAN FOR UTILITY INFORMATION ONLY

STATE OF CALIFORNIA - DEPARTMENT OF TRANSPORTATION
Caltrans
DESIGN

FUNCTIONAL SUPERVISOR: GEORGE MORHIG
CALCULATED-DESIGNED BY: WILLIAM ONKUMPOL
CHECKED BY: AHMAD SHAH
REVISED BY
DATE REVISED

LAST REVISION 05-24-11
DATE PLOTTED => 17-JUN-2011
TIME PLOTTED => 05:39

Dist	COUNTY	ROUTE	POST MILES TOTAL PROJECT	SHEET No.	TOTAL SHEETS
08	SBd	15	3.8/12.8	248	680

REGISTERED CIVIL ENGINEER 5-24-11 DATE

6-13-11
PLANS APPROVAL DATE

REGISTERED PROFESSIONAL ENGINEER
AHMAD SHAH
No. C55259
Exp. 9-30-12
CIVIL
STATE OF CALIFORNIA

THE STATE OF CALIFORNIA OR ITS OFFICERS OR AGENTS SHALL NOT BE RESPONSIBLE FOR THE ACCURACY OR COMPLETENESS OF SCANNED COPIES OF THIS PLAN SHEET.

NOTE:

FOR ACCURATE RIGHT OF WAY AND ACCESS DATA,
CONTACT RIGHT OF WAY ENGINEERING AT THE DISTRICT OFFICE.

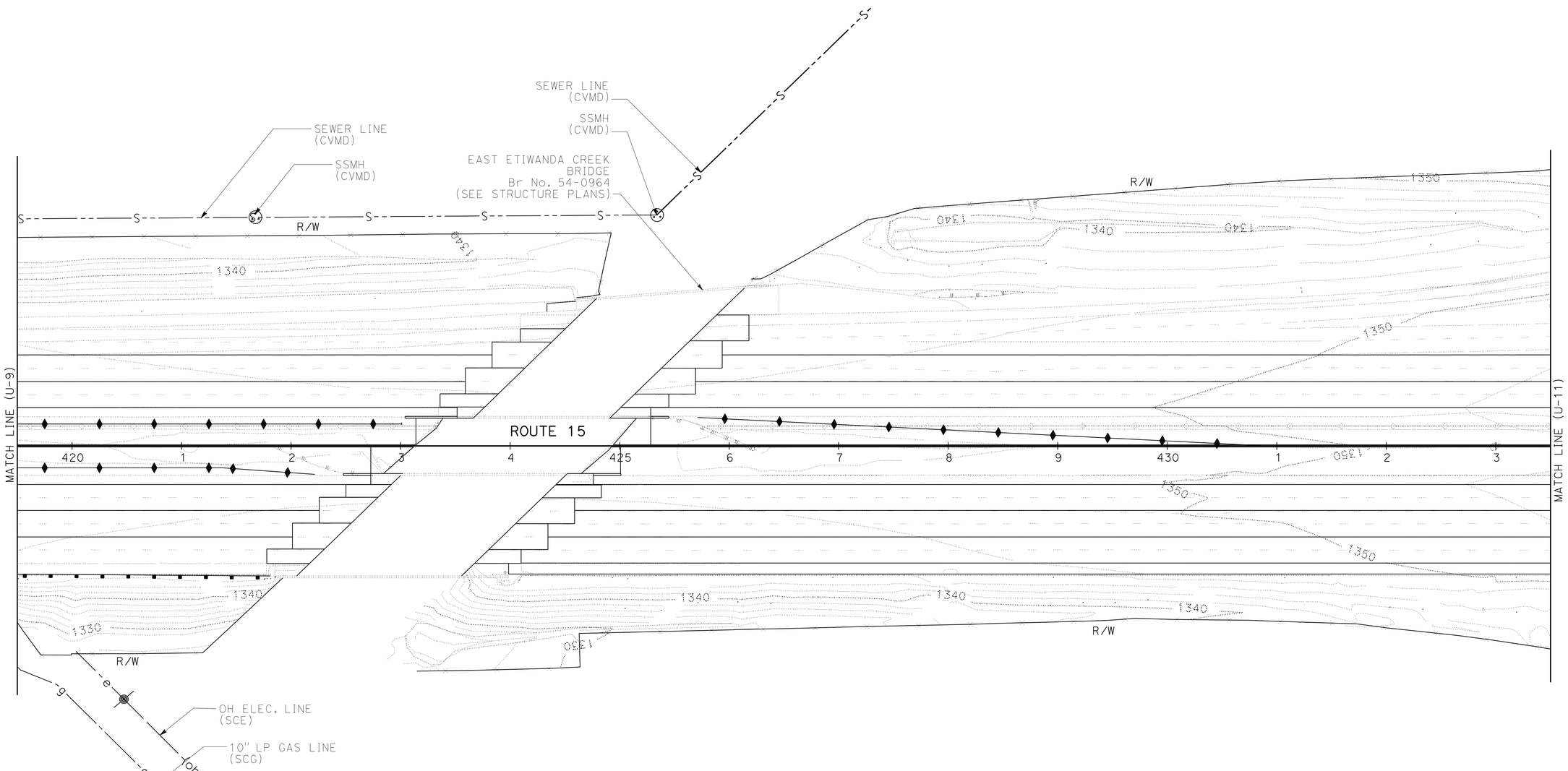

THIS PLAN FOR UTILITY INFORMATION ONLY

UTILITY PLAN

SCALE 1" = 50'

U-10

STATE OF CALIFORNIA - DEPARTMENT OF TRANSPORTATION
Caltrans
DESIGN

FUNCTIONAL SUPERVISOR: GEORGE MORHIG
CALCULATED-DESIGNED BY: WILLIAM ONKUMPOL
CHECKED BY: AHMAD SHAH
REVISED BY
DATE REVISED

LAST REVISION 05-24-11
DATE PLOTTED => 17-JUN-2011
TIME PLOTTED => 05:40

Dist	COUNTY	ROUTE	POST MILES TOTAL PROJECT	SHEET No.	TOTAL SHEETS
08	SBd	15	3.8/12.8	249	680

REGISTERED CIVIL ENGINEER 5-24-11 DATE

6-13-11
PLANS APPROVAL DATE

REGISTERED PROFESSIONAL ENGINEER
AHMAD SHAH
No. C55259
Exp. 9-30-12
CIVIL
STATE OF CALIFORNIA

THE STATE OF CALIFORNIA OR ITS OFFICERS OR AGENTS SHALL NOT BE RESPONSIBLE FOR THE ACCURACY OR COMPLETENESS OF SCANNED COPIES OF THIS PLAN SHEET.

NOTE:

FOR ACCURATE RIGHT OF WAY AND ACCESS DATA,
CONTACT RIGHT OF WAY ENGINEERING AT THE DISTRICT OFFICE.

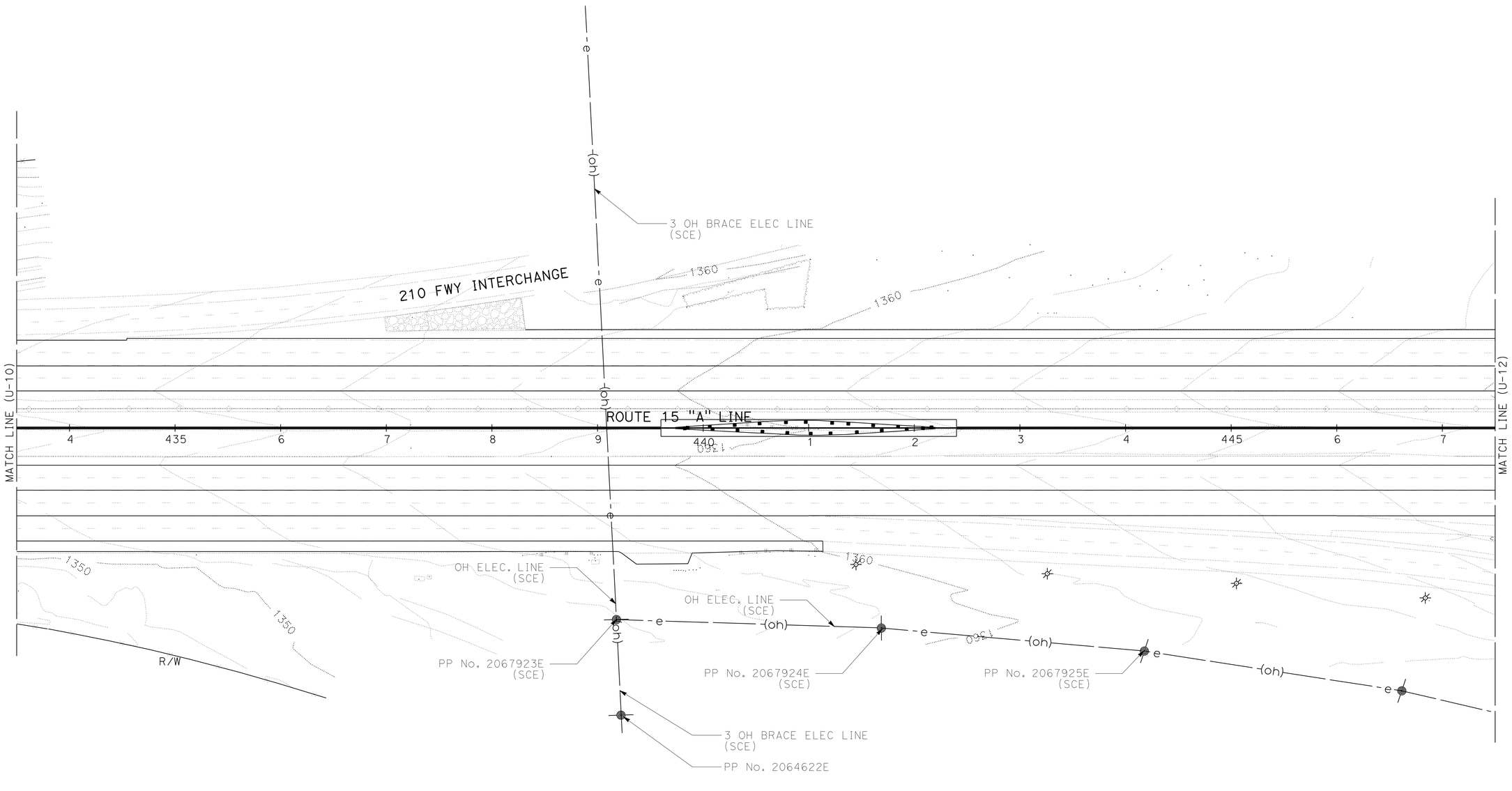

UTILITY PLAN

SCALE 1" = 50'

U-11

THIS PLAN FOR UTILITY INFORMATION ONLY

STATE OF CALIFORNIA - DEPARTMENT OF TRANSPORTATION
Caltrans
DESIGN

FUNCTIONAL SUPERVISOR: GEORGE MORHIG

CALCULATED-DESIGNED BY: WILLIAM ONKUMPOL
CHECKED BY: AHMAD SHAH

REVISED BY
DATE REVISED

LAST REVISION 05-24-11
DATE PLOTTED => 17-JUN-2011
TIME PLOTTED => 05:40

Dist	COUNTY	ROUTE	POST MILES TOTAL PROJECT	SHEET No.	TOTAL SHEETS
08	SBd	15	3.8/12.8	250	680

REGISTERED CIVIL ENGINEER 5-24-11 DATE

6-13-11
PLANS APPROVAL DATE

REGISTERED PROFESSIONAL ENGINEER
AHMAD SHAH
No. C55259
Exp. 9-30-12
CIVIL
STATE OF CALIFORNIA

THE STATE OF CALIFORNIA OR ITS OFFICERS OR AGENTS SHALL NOT BE RESPONSIBLE FOR THE ACCURACY OR COMPLETENESS OF SCANNED COPIES OF THIS PLAN SHEET.

NOTE:

FOR ACCURATE RIGHT OF WAY AND ACCESS DATA,
CONTACT RIGHT OF WAY ENGINEERING AT THE DISTRICT OFFICE.

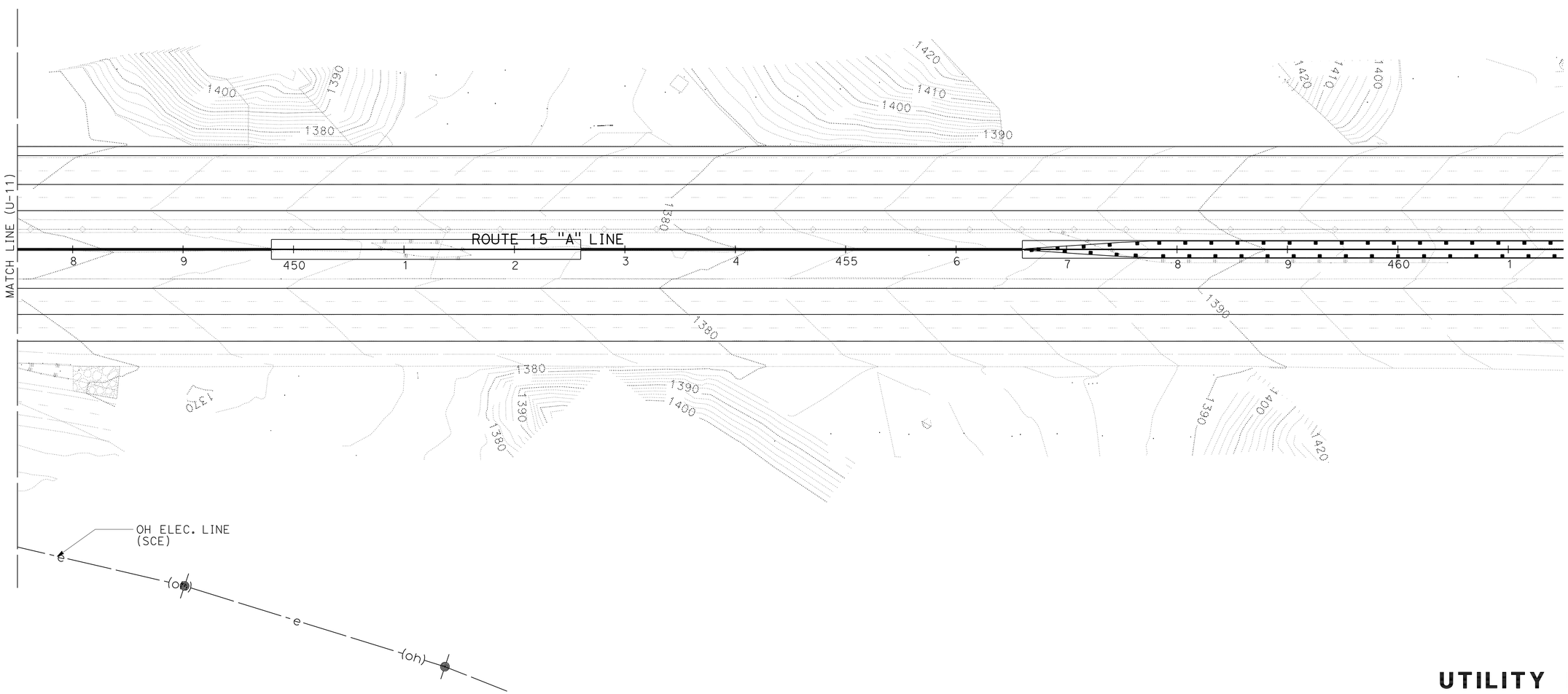

UTILITY PLAN

SCALE 1" = 50'

U-12

THIS PLAN FOR UTILITY INFORMATION ONLY

STATE OF CALIFORNIA - DEPARTMENT OF TRANSPORTATION
DESIGN
Caltrans

FUNCTIONAL SUPERVISOR: GEORGE MORHIG
CALCULATED-DESIGNED BY: WILLIAM ONKUMPOL
CHECKED BY: AHMAD SHAH
REVISED BY
DATE REVISED

LAST REVISION 05-24-11
DATE PLOTTED => 17-JUN-2011
TIME PLOTTED => 05:40

Dist	COUNTY	ROUTE	POST MILES TOTAL PROJECT	SHEET No.	TOTAL SHEETS
08	SBd	15	3.8/12.8	251	680

REGISTERED CIVIL ENGINEER 5-24-11 DATE

6-13-11
PLANS APPROVAL DATE

REGISTERED PROFESSIONAL ENGINEER
AHMAD SHAH
No. C55259
Exp. 9-30-12
CIVIL
STATE OF CALIFORNIA

THE STATE OF CALIFORNIA OR ITS OFFICERS OR AGENTS SHALL NOT BE RESPONSIBLE FOR THE ACCURACY OR COMPLETENESS OF SCANNED COPIES OF THIS PLAN SHEET.

NOTE:

FOR ACCURATE RIGHT OF WAY AND ACCESS DATA,
CONTACT RIGHT OF WAY ENGINEERING AT THE DISTRICT OFFICE.

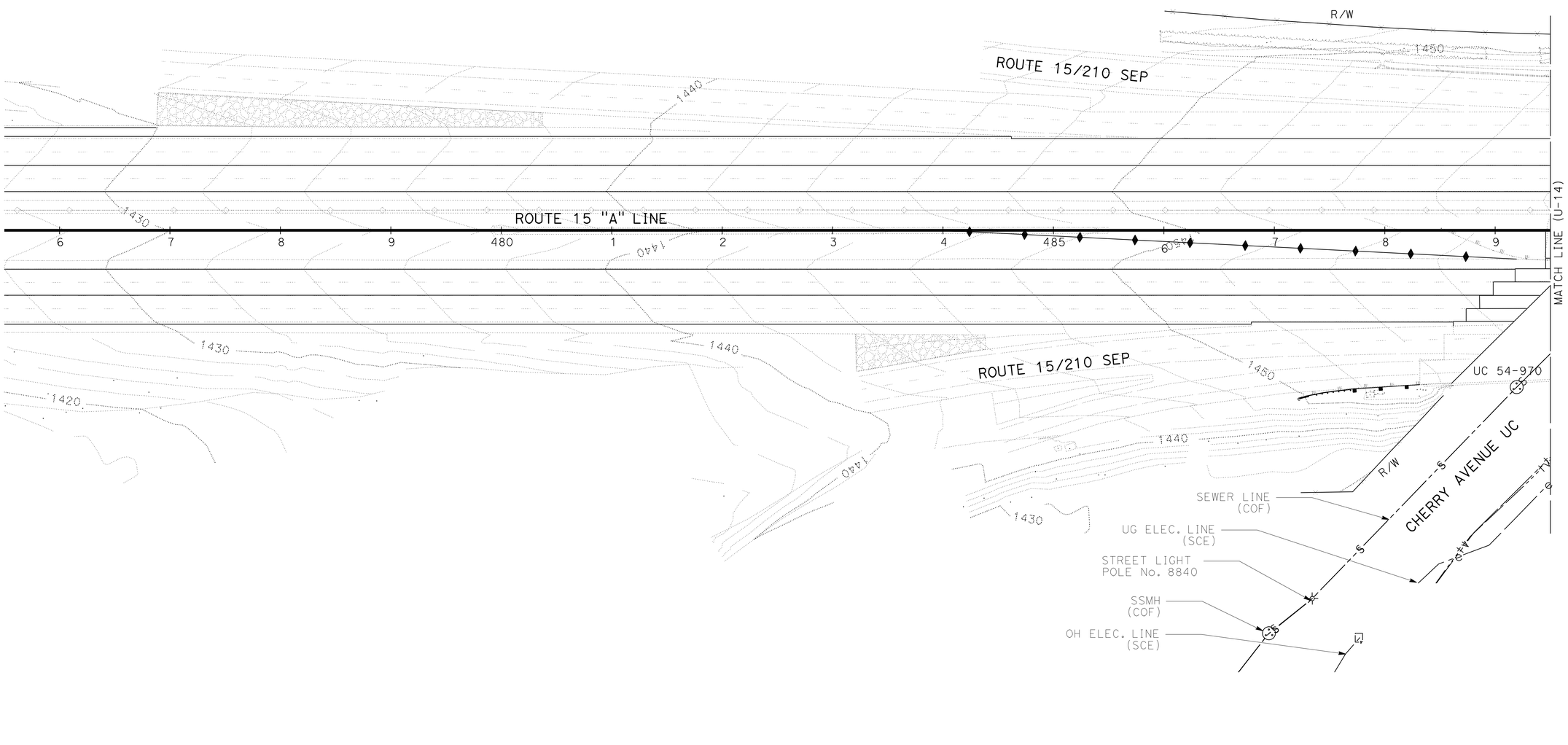

UTILITY PLAN

SCALE 1" = 50'

U-13

THIS PLAN FOR UTILITY INFORMATION ONLY

STATE OF CALIFORNIA - DEPARTMENT OF TRANSPORTATION
Caltrans
DESIGN

FUNCTIONAL SUPERVISOR: GEORGE MORHIG
CALCULATED-DESIGNED BY: WILLIAM ONKUMPOL
CHECKED BY: AHMAD SHAH
REVISED BY
DATE REVISED

LAST REVISION 05-24-11
DATE PLOTTED => 17-JUN-2011
TIME PLOTTED => 05:40

Dist	COUNTY	ROUTE	POST MILES TOTAL PROJECT	SHEET No.	TOTAL SHEETS
08	SBd	15	3.8/12.8	252	680

REGISTERED CIVIL ENGINEER 5-24-11 DATE

6-13-11
PLANS APPROVAL DATE

REGISTERED PROFESSIONAL ENGINEER AHMAD SHAH No. C55259 Exp. 9-30-12 CIVIL STATE OF CALIFORNIA

THE STATE OF CALIFORNIA OR ITS OFFICERS OR AGENTS SHALL NOT BE RESPONSIBLE FOR THE ACCURACY OR COMPLETENESS OF SCANNED COPIES OF THIS PLAN SHEET.

NOTE:

FOR ACCURATE RIGHT OF WAY AND ACCESS DATA,
CONTACT RIGHT OF WAY ENGINEERING AT THE DISTRICT OFFICE.

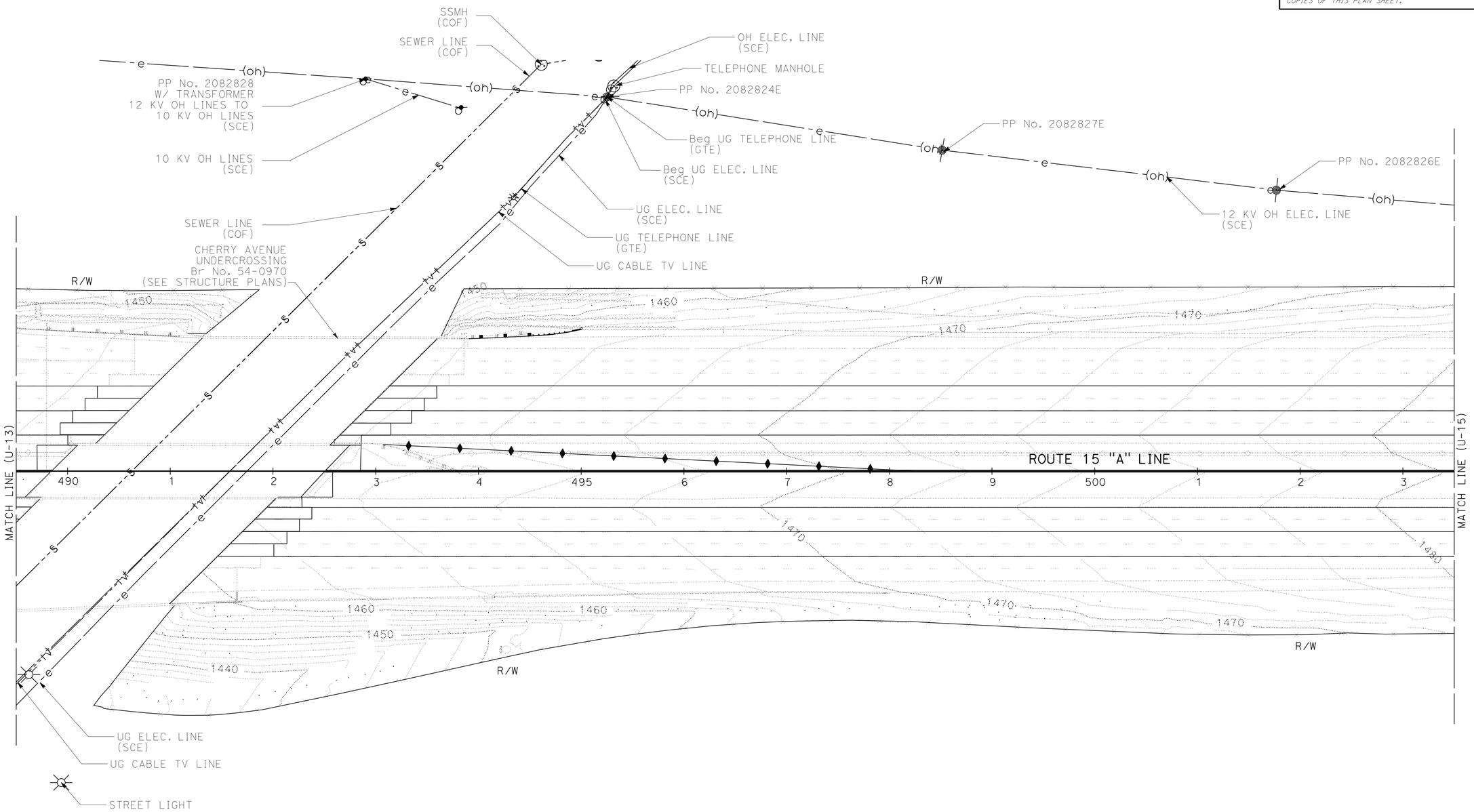

UTILITY PLAN

SCALE 1" = 50'

U-14

THIS PLAN FOR UTILITY INFORMATION ONLY

STATE OF CALIFORNIA - DEPARTMENT OF TRANSPORTATION
Caltrans
DESIGN

FUNCTIONAL SUPERVISOR: GEORGE MORHIG
CALCULATED-DESIGNED BY: WILLIAM ONKUMPOL
CHECKED BY: AHMAD SHAH
REVISED BY
DATE REVISED

LAST REVISION 05-24-11
DATE PLOTTED => 17-JUN-2011
TIME PLOTTED => 05:40

Dist	COUNTY	ROUTE	POST MILES TOTAL PROJECT	SHEET No.	TOTAL SHEETS
08	SBd	15	3.8/12.8	253	680

REGISTERED CIVIL ENGINEER 5-24-11 DATE

6-13-11
PLANS APPROVAL DATE

REGISTERED PROFESSIONAL ENGINEER
AHMAD SHAH
No. C55259
Exp. 9-30-12
CIVIL
STATE OF CALIFORNIA

THE STATE OF CALIFORNIA OR ITS OFFICERS OR AGENTS SHALL NOT BE RESPONSIBLE FOR THE ACCURACY OR COMPLETENESS OF SCANNED COPIES OF THIS PLAN SHEET.

NOTE:

FOR ACCURATE RIGHT OF WAY AND ACCESS DATA,
CONTACT RIGHT OF WAY ENGINEERING AT THE DISTRICT OFFICE.

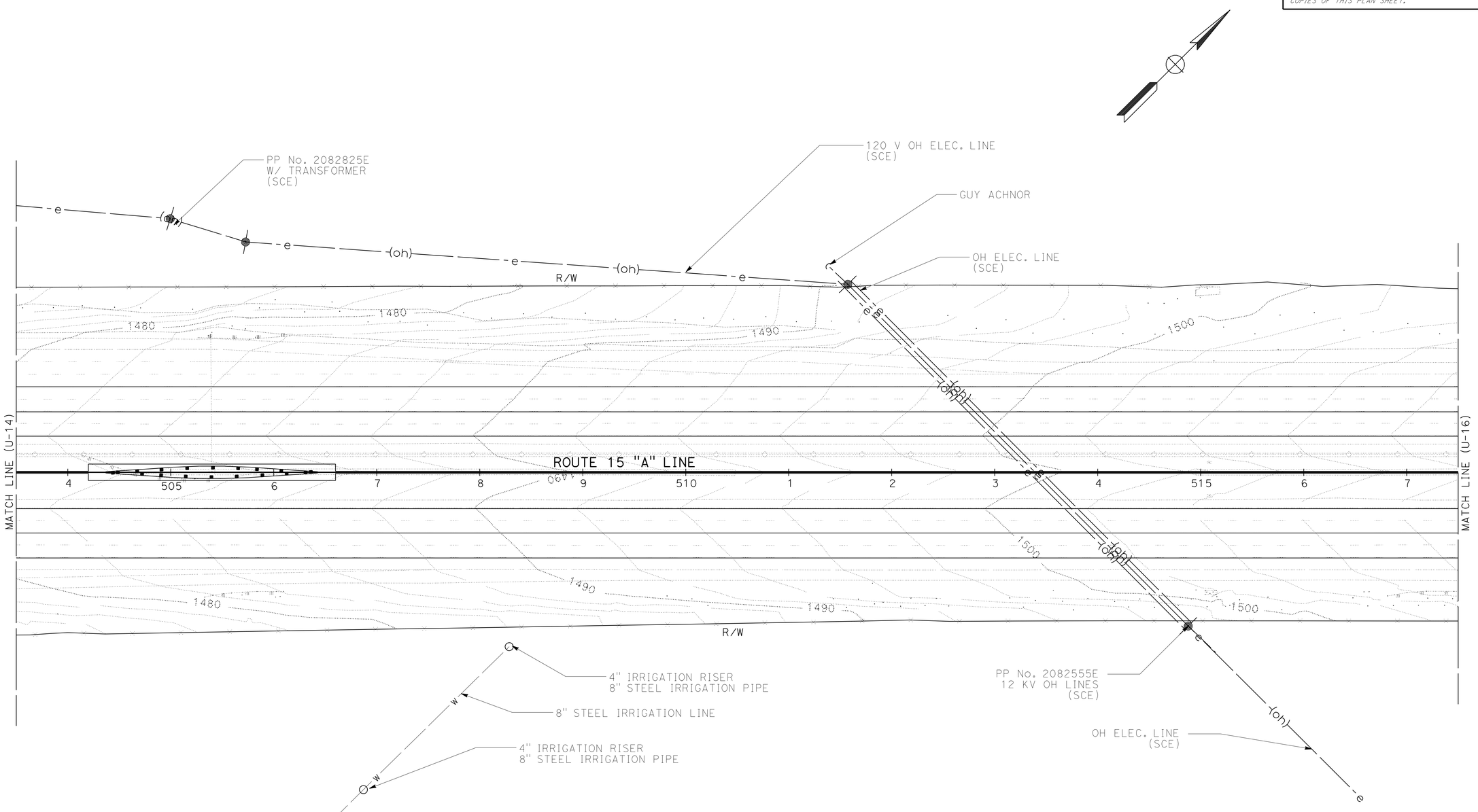

UTILITY PLAN

SCALE 1" = 50'

U-15

THIS PLAN FOR UTILITY INFORMATION ONLY

STATE OF CALIFORNIA - DEPARTMENT OF TRANSPORTATION
Caltrans® **DESIGN**

FUNCTIONAL SUPERVISOR: GEORGE MORHIG

CALCULATED-DESIGNED BY: WILLIAM ONKUMPOL
CHECKED BY: AHMAD SHAH

REVISED BY
DATE REVISED

LAST REVISION 05-24-11
DATE PLOTTED => 17-JUN-2011
TIME PLOTTED => 05:40

Dist	COUNTY	ROUTE	POST MILES TOTAL PROJECT	SHEET No.	TOTAL SHEETS
08	SBd	15	3.8/12.8	254	680

REGISTERED CIVIL ENGINEER 5-24-11 DATE

6-13-11
PLANS APPROVAL DATE

REGISTERED PROFESSIONAL ENGINEER AHMAD SHAH No. C55259 Exp. 9-30-12 CIVIL STATE OF CALIFORNIA

THE STATE OF CALIFORNIA OR ITS OFFICERS OR AGENTS SHALL NOT BE RESPONSIBLE FOR THE ACCURACY OR COMPLETENESS OF SCANNED COPIES OF THIS PLAN SHEET.

NOTE:

FOR ACCURATE RIGHT OF WAY AND ACCESS DATA,
CONTACT RIGHT OF WAY ENGINEERING AT THE DISTRICT OFFICE.

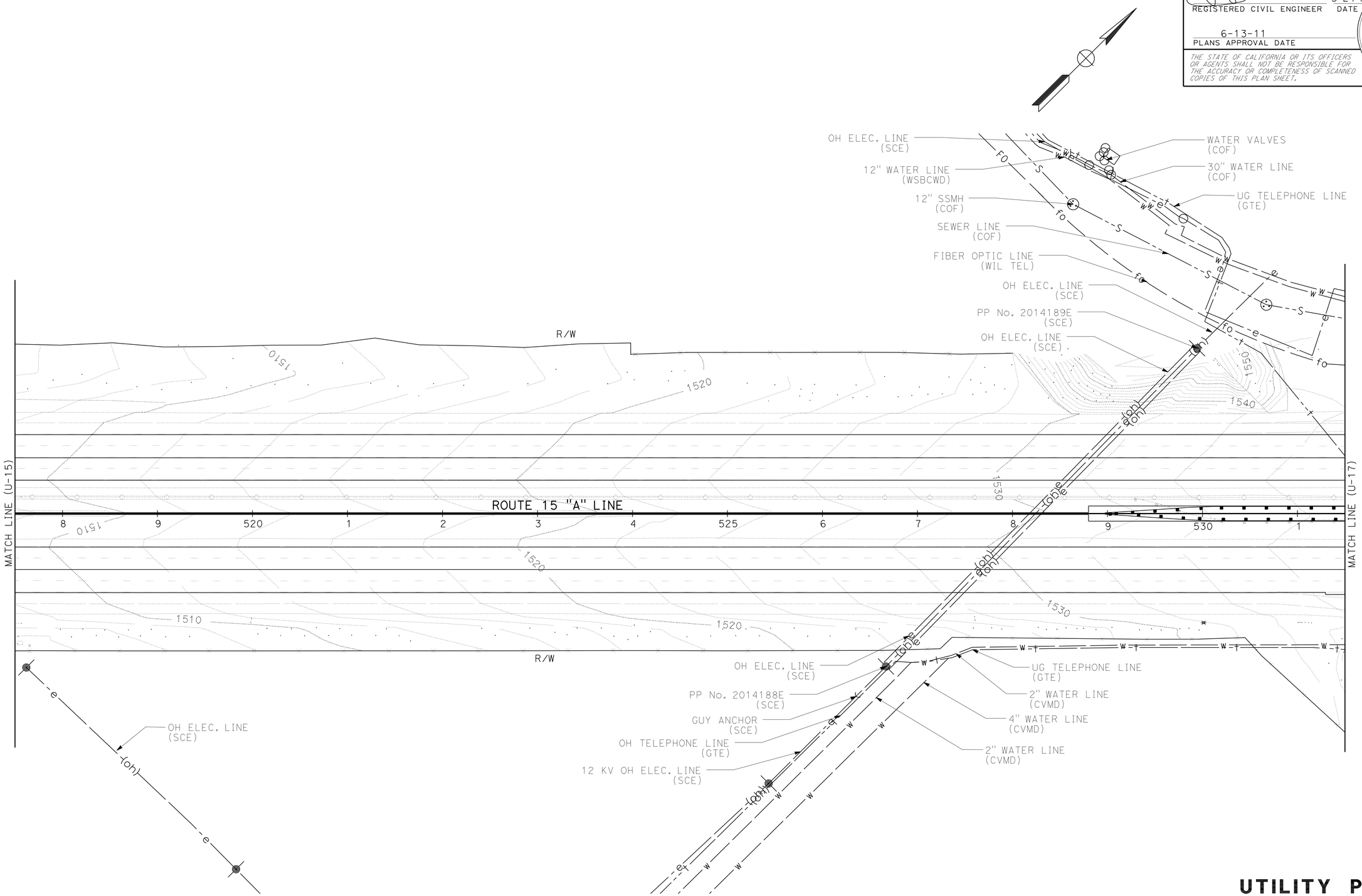

UTILITY PLAN

SCALE 1" = 50'

U-16

THIS PLAN FOR UTILITY INFORMATION ONLY

STATE OF CALIFORNIA - DEPARTMENT OF TRANSPORTATION

Caltrans

DESIGN

FUNCTIONAL SUPERVISOR: GEORGE MORHIG

CALCULATED-DESIGNED BY: WILLIAM ONKUMPOL

CHECKED BY: AHMAD SHAH

REVISED BY

DATE REVISED

LAST REVISION 05-24-11

DATE PLOTTED => 17-JUN-2011
TIME PLOTTED => 09:40

Dist	COUNTY	ROUTE	POST MILES TOTAL PROJECT	SHEET No.	TOTAL SHEETS
08	SBd	15	3.8/12.8	255	680

REGISTERED CIVIL ENGINEER 5-24-11 DATE

6-13-11
PLANS APPROVAL DATE

REGISTERED PROFESSIONAL ENGINEER AHMAD SHAH No. C55259 Exp. 9-30-12 CIVIL STATE OF CALIFORNIA

THE STATE OF CALIFORNIA OR ITS OFFICERS OR AGENTS SHALL NOT BE RESPONSIBLE FOR THE ACCURACY OR COMPLETENESS OF SCANNED COPIES OF THIS PLAN SHEET.

NOTE:

FOR ACCURATE RIGHT OF WAY AND ACCESS DATA,
CONTACT RIGHT OF WAY ENGINEERING AT THE DISTRICT OFFICE.

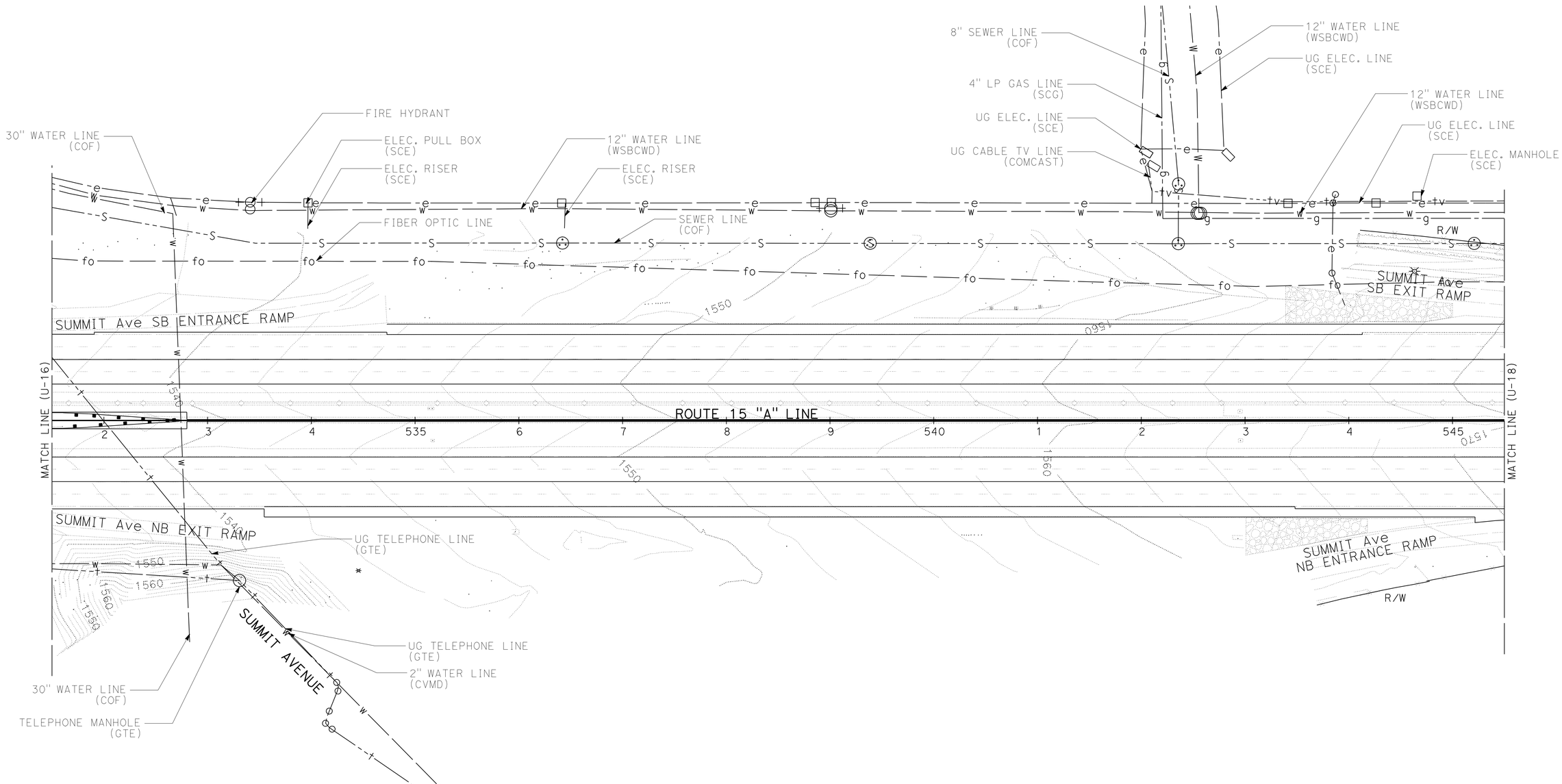

UTILITY PLAN

SCALE 1" = 50'

U-17

THIS PLAN FOR UTILITY INFORMATION ONLY

STATE OF CALIFORNIA - DEPARTMENT OF TRANSPORTATION
Caltrans
DESIGN

FUNCTIONAL SUPERVISOR: GEORGE MORHIG
CALCULATED-DESIGNED BY: WILLIAM ONKUMPOL
CHECKED BY: AHMAD SHAH
REVISED BY
DATE REVISED

LAST REVISION 05-24-11
DATE PLOTTED => 17-JUN-2011
TIME PLOTTED => 05:40

Dist	COUNTY	ROUTE	POST MILES TOTAL PROJECT	SHEET No.	TOTAL SHEETS
08	SBd	15	3.8/12.8	256	680

REGISTERED CIVIL ENGINEER 5-24-11 DATE

6-13-11
PLANS APPROVAL DATE

REGISTERED PROFESSIONAL ENGINEER
AHMAD SHAH
No. C55259
Exp. 9-30-12
CIVIL
STATE OF CALIFORNIA

THE STATE OF CALIFORNIA OR ITS OFFICERS OR AGENTS SHALL NOT BE RESPONSIBLE FOR THE ACCURACY OR COMPLETENESS OF SCANNED COPIES OF THIS PLAN SHEET.

NOTE:

FOR ACCURATE RIGHT OF WAY AND ACCESS DATA,
CONTACT RIGHT OF WAY ENGINEERING AT THE DISTRICT OFFICE.

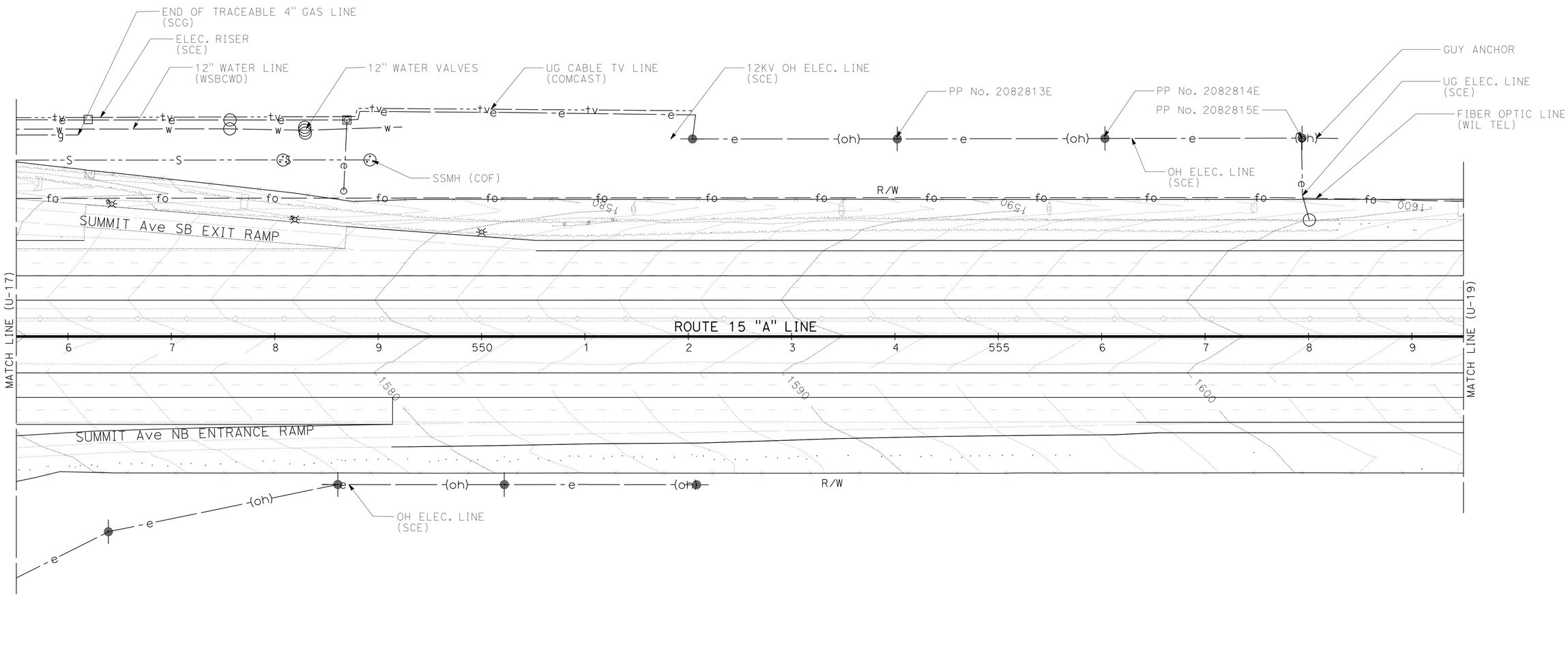

UTILITY PLAN

SCALE 1" = 50'

U-18

THIS PLAN FOR UTILITY INFORMATION ONLY

STATE OF CALIFORNIA - DEPARTMENT OF TRANSPORTATION
Caltrans® DESIGN

FUNCTIONAL SUPERVISOR: GEORGE MORHIG
CALCULATED-DESIGNED BY: WILLIAM ONKUMPOL
CHECKED BY: AHMAD SHAH
REVISED BY
DATE REVISED

LAST REVISION 05-24-11
DATE PLOTTED => 17-JUN-2011
TIME PLOTTED => 05:40

Dist	COUNTY	ROUTE	POST MILES TOTAL PROJECT	SHEET No.	TOTAL SHEETS
08	SBd	15	3.8/12.8	257	680

REGISTERED CIVIL ENGINEER 5-24-11 DATE

6-13-11
PLANS APPROVAL DATE

REGISTERED PROFESSIONAL ENGINEER
AHMAD SHAH
No. C55259
Exp. 9-30-12
CIVIL
STATE OF CALIFORNIA

THE STATE OF CALIFORNIA OR ITS OFFICERS OR AGENTS SHALL NOT BE RESPONSIBLE FOR THE ACCURACY OR COMPLETENESS OF SCANNED COPIES OF THIS PLAN SHEET.

NOTE:

FOR ACCURATE RIGHT OF WAY AND ACCESS DATA,
CONTACT RIGHT OF WAY ENGINEERING AT THE DISTRICT OFFICE.

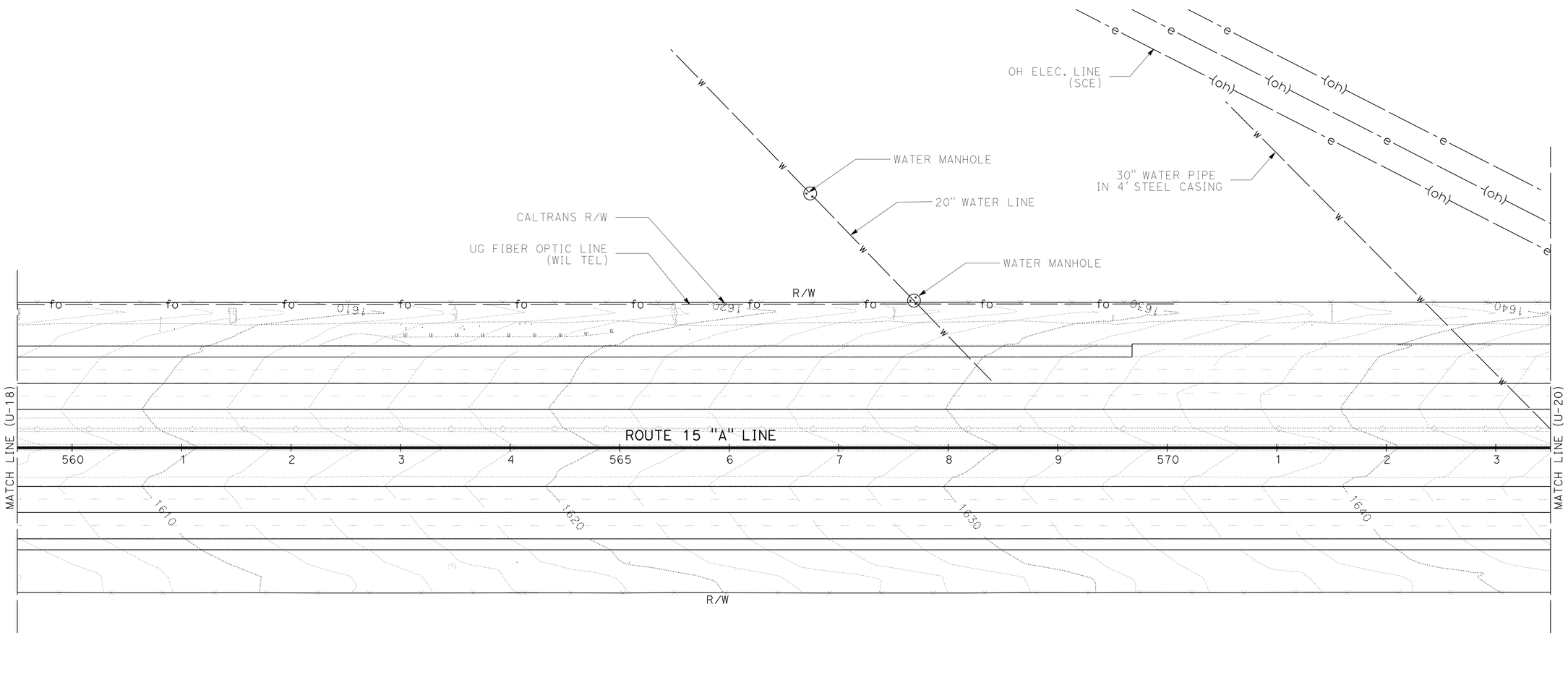

UTILITY PLAN

SCALE 1" = 50'

U-19

THIS PLAN FOR UTILITY INFORMATION ONLY

STATE OF CALIFORNIA - DEPARTMENT OF TRANSPORTATION
Caltrans
DESIGN

FUNCTIONAL SUPERVISOR: GEORGE MORHIG
CALCULATED-DESIGNED BY: WILLIAM ONKUMPOL
CHECKED BY: AHMAD SHAH
REVISED BY
DATE REVISED

LAST REVISION 05-24-11
DATE PLOTTED => 17-JUN-2011
TIME PLOTTED => 05:40

Dist	COUNTY	ROUTE	POST MILES TOTAL PROJECT	SHEET No.	TOTAL SHEETS
08	SBd	15	3.8/12.8	258	680

REGISTERED CIVIL ENGINEER 5-24-11 DATE

6-13-11
PLANS APPROVAL DATE

REGISTERED PROFESSIONAL ENGINEER
AHMAD SHAH
No. C55259
Exp. 9-30-12
CIVIL
STATE OF CALIFORNIA

THE STATE OF CALIFORNIA OR ITS OFFICERS OR AGENTS SHALL NOT BE RESPONSIBLE FOR THE ACCURACY OR COMPLETENESS OF SCANNED COPIES OF THIS PLAN SHEET.

NOTE:

FOR ACCURATE RIGHT OF WAY AND ACCESS DATA,
CONTACT RIGHT OF WAY ENGINEERING AT THE DISTRICT OFFICE.

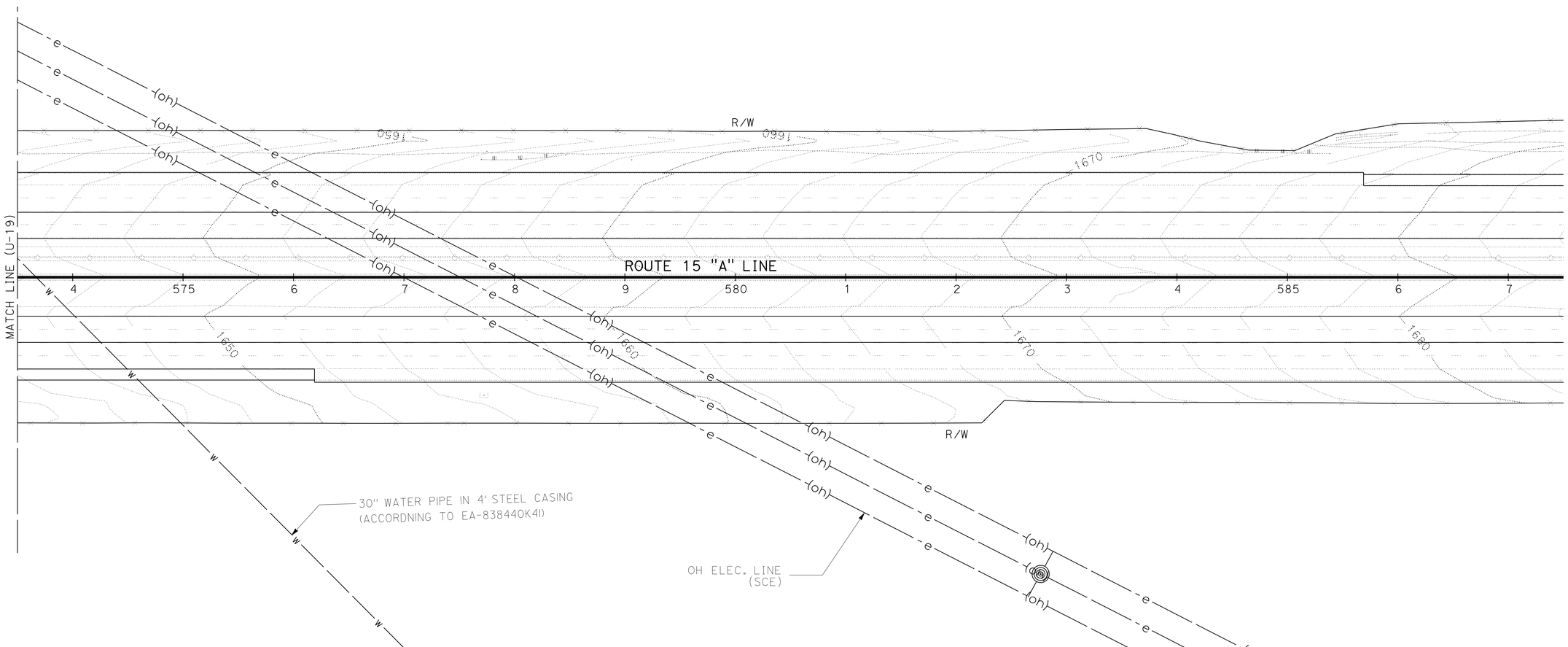

UTILITY PLAN

SCALE 1" = 50'

U-20

THIS PLAN FOR UTILITY INFORMATION ONLY

REVISED BY	
DATE REVISED	
WILLIAM ONKUMPOL	
AHMAD SHAH	
CALCULATED-DESIGNED BY	
CHECKED BY	
FUNCTIONAL SUPERVISOR	
GEORGE MORHIG	

STATE OF CALIFORNIA - DEPARTMENT OF TRANSPORTATION

Caltrans

DESIGN

LAST REVISION 05-24-11

DATE PLOTTED => 17-JUN-2011
TIME PLOTTED => 05:40

Dist	COUNTY	ROUTE	POST MILES TOTAL PROJECT	SHEET No.	TOTAL SHEETS
08	SBd	15	3.8/12.8	259	680

REGISTERED CIVIL ENGINEER 5-24-11 DATE

6-13-11
PLANS APPROVAL DATE

REGISTERED PROFESSIONAL ENGINEER
AHMAD SHAH
No. C55259
Exp. 9-30-12
CIVIL
STATE OF CALIFORNIA

THE STATE OF CALIFORNIA OR ITS OFFICERS OR AGENTS SHALL NOT BE RESPONSIBLE FOR THE ACCURACY OR COMPLETENESS OF SCANNED COPIES OF THIS PLAN SHEET.

NOTE:

FOR ACCURATE RIGHT OF WAY AND ACCESS DATA,
CONTACT RIGHT OF WAY ENGINEERING AT THE DISTRICT OFFICE.

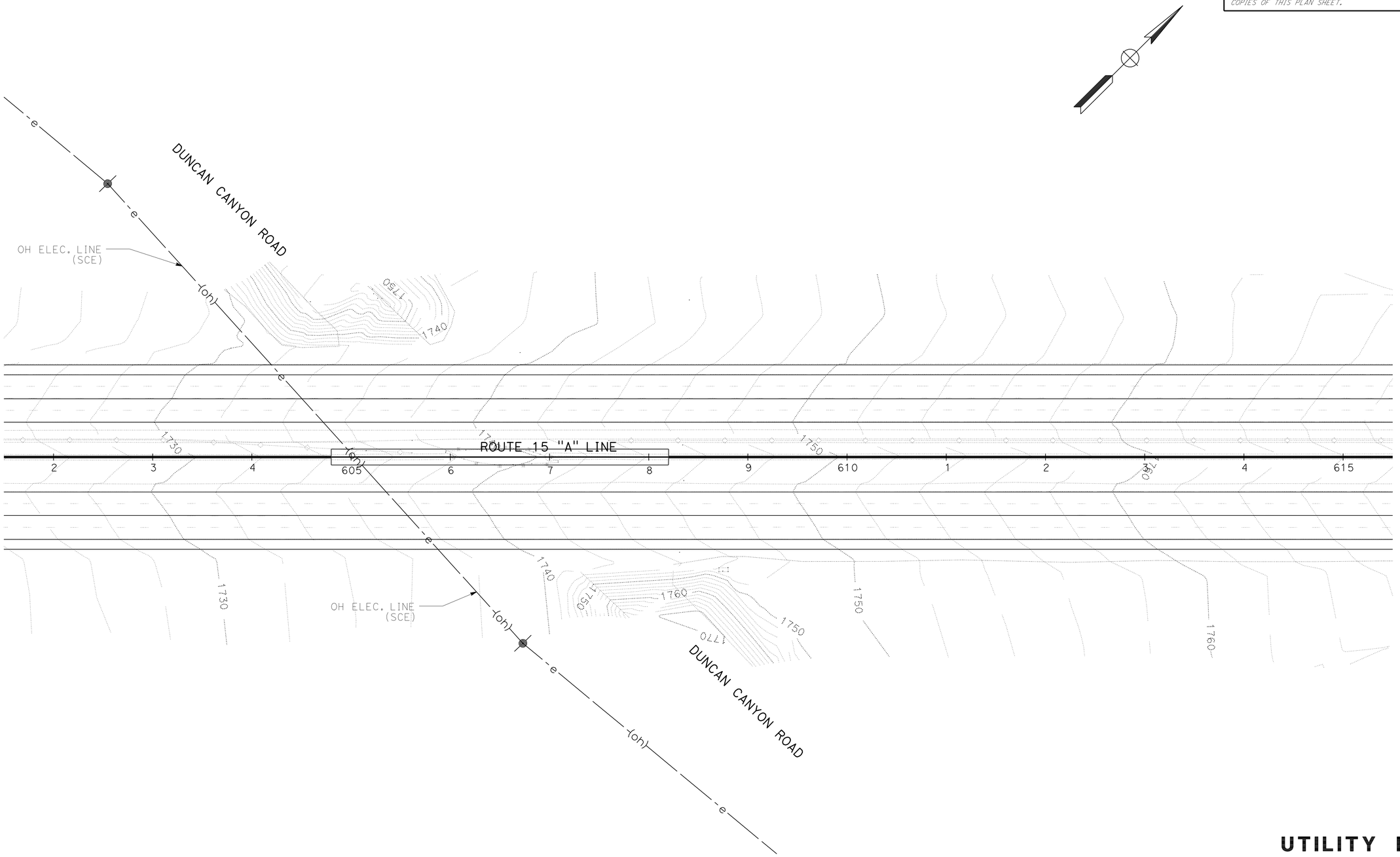

THIS PLAN FOR UTILITY INFORMATION ONLY

UTILITY PLAN

SCALE 1" = 50'

U-21

STATE OF CALIFORNIA - DEPARTMENT OF TRANSPORTATION
Caltrans
DESIGN

FUNCTIONAL SUPERVISOR: GEORGE MORHIG
CALCULATED-DESIGNED BY: WILLIAM ONKUMPOL
CHECKED BY: AHMAD SHAH
REVISED BY
DATE REVISED

LAST REVISION 05-24-11
DATE PLOTTED => 17-JUN-2011
TIME PLOTTED => 09:40

Dist	COUNTY	ROUTE	POST MILES TOTAL PROJECT	SHEET No.	TOTAL SHEETS
08	SBd	15	3.8/12.8	260	680

REGISTERED CIVIL ENGINEER 5-24-11 DATE

6-13-11
PLANS APPROVAL DATE

REGISTERED PROFESSIONAL ENGINEER
AHMAD SHAH
No. C55259
Exp. 9-30-12
CIVIL
STATE OF CALIFORNIA

THE STATE OF CALIFORNIA OR ITS OFFICERS OR AGENTS SHALL NOT BE RESPONSIBLE FOR THE ACCURACY OR COMPLETENESS OF SCANNED COPIES OF THIS PLAN SHEET.

NOTE:

FOR ACCURATE RIGHT OF WAY AND ACCESS DATA,
CONTACT RIGHT OF WAY ENGINEERING AT THE DISTRICT OFFICE.

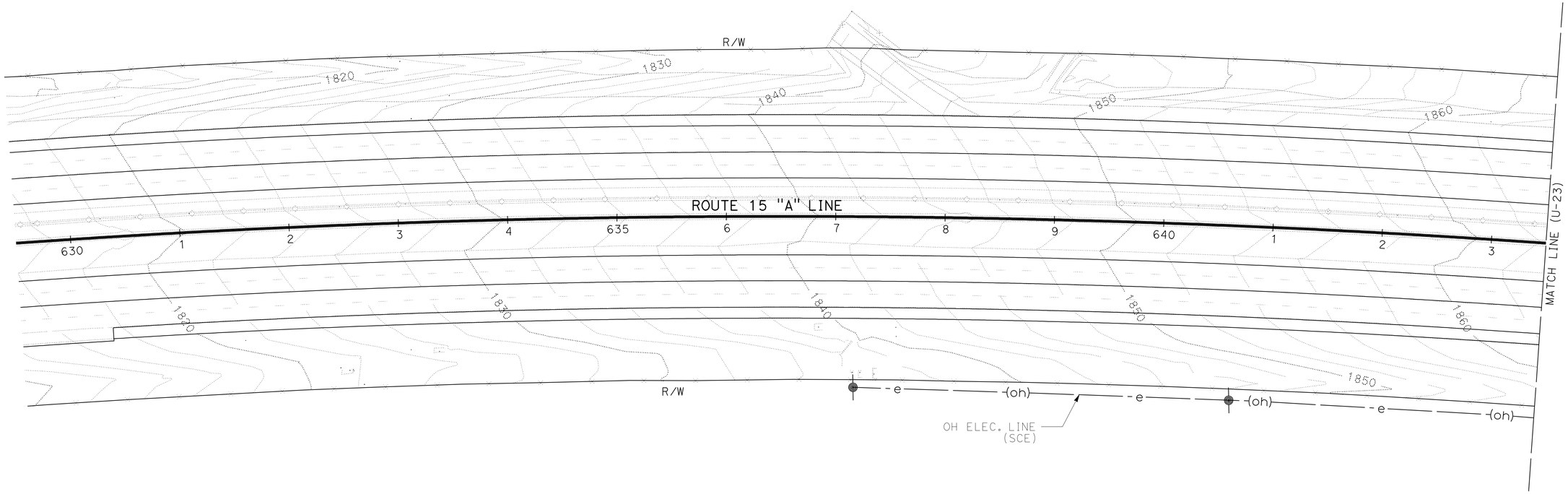

UTILITY PLAN

SCALE 1" = 50'

U-22

THIS PLAN FOR UTILITY INFORMATION ONLY

STATE OF CALIFORNIA - DEPARTMENT OF TRANSPORTATION
Caltrans
DESIGN

FUNCTIONAL SUPERVISOR: GEORGE MORHIG
CALCULATED-DESIGNED BY: WILLIAM ONKUMPOL
CHECKED BY: AHMAD SHAH
REVISED BY
DATE REVISED

LAST REVISION 05-24-11
DATE PLOTTED => 17-JUN-2011
TIME PLOTTED => 05:41

Dist	COUNTY	ROUTE	POST MILES TOTAL PROJECT	SHEET No.	TOTAL SHEETS
08	SBd	15	3.8/12.8	261	680

REGISTERED CIVIL ENGINEER 5-24-11 DATE

6-13-11
PLANS APPROVAL DATE

REGISTERED PROFESSIONAL ENGINEER
AHMAD SHAH
No. C55259
Exp. 9-30-12
CIVIL
STATE OF CALIFORNIA

THE STATE OF CALIFORNIA OR ITS OFFICERS OR AGENTS SHALL NOT BE RESPONSIBLE FOR THE ACCURACY OR COMPLETENESS OF SCANNED COPIES OF THIS PLAN SHEET.

NOTE:

FOR ACCURATE RIGHT OF WAY AND ACCESS DATA,
CONTACT RIGHT OF WAY ENGINEERING AT THE DISTRICT OFFICE.

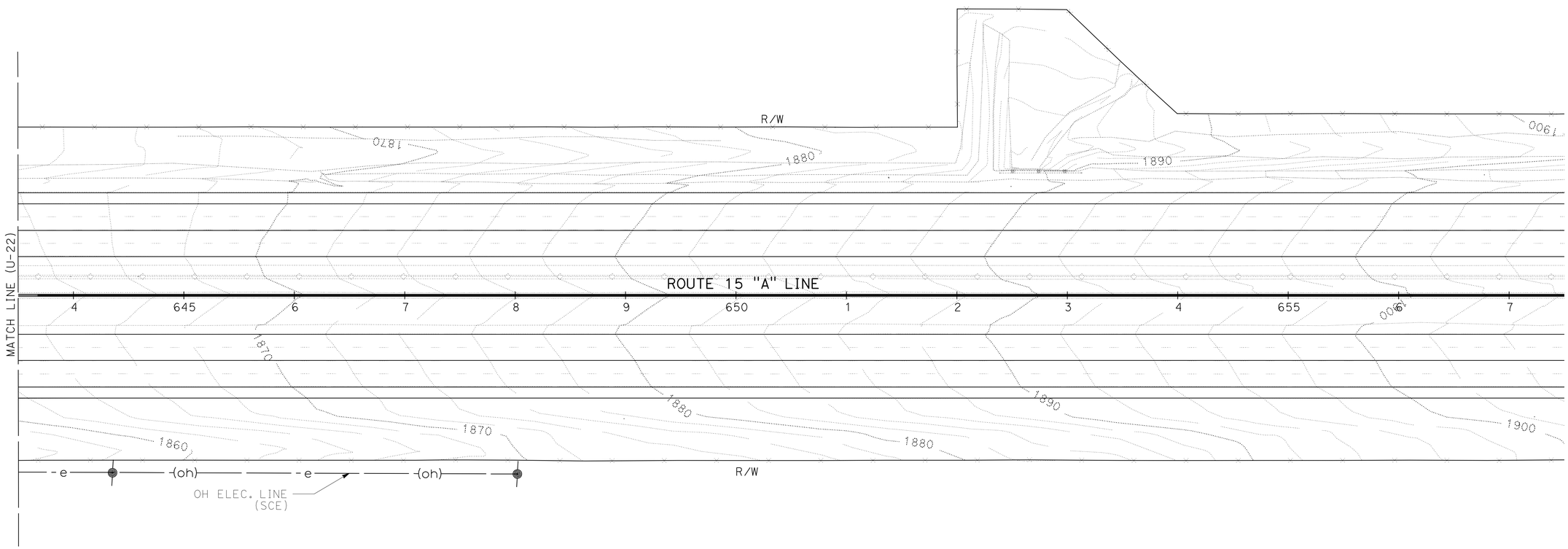

UTILITY PLAN

SCALE 1" = 50'

U-23

THIS PLAN FOR UTILITY INFORMATION ONLY

STATE OF CALIFORNIA - DEPARTMENT OF TRANSPORTATION
Caltrans
DESIGN

FUNCTIONAL SUPERVISOR: GEORGE MORHIG
CALCULATED-DESIGNED BY: WILLIAM ONKUMPOL
CHECKED BY: AHMAD SHAH
REVISED BY
DATE REVISED

LAST REVISION 05-24-11
DATE PLOTTED => 17-JUN-2011
TIME PLOTTED => 09:41

Dist	COUNTY	ROUTE	POST MILES TOTAL PROJECT	SHEET No.	TOTAL SHEETS
08	SBd	15	3.8/12.8	262	680

REGISTERED CIVIL ENGINEER 5-24-11 DATE

6-13-11
PLANS APPROVAL DATE

REGISTERED PROFESSIONAL ENGINEER
AHMAD SHAH
No. C55259
Exp. 9-30-12
CIVIL
STATE OF CALIFORNIA

THE STATE OF CALIFORNIA OR ITS OFFICERS OR AGENTS SHALL NOT BE RESPONSIBLE FOR THE ACCURACY OR COMPLETENESS OF SCANNED COPIES OF THIS PLAN SHEET.

NOTE:

FOR ACCURATE RIGHT OF WAY AND ACCESS DATA,
CONTACT RIGHT OF WAY ENGINEERING AT THE DISTRICT OFFICE.

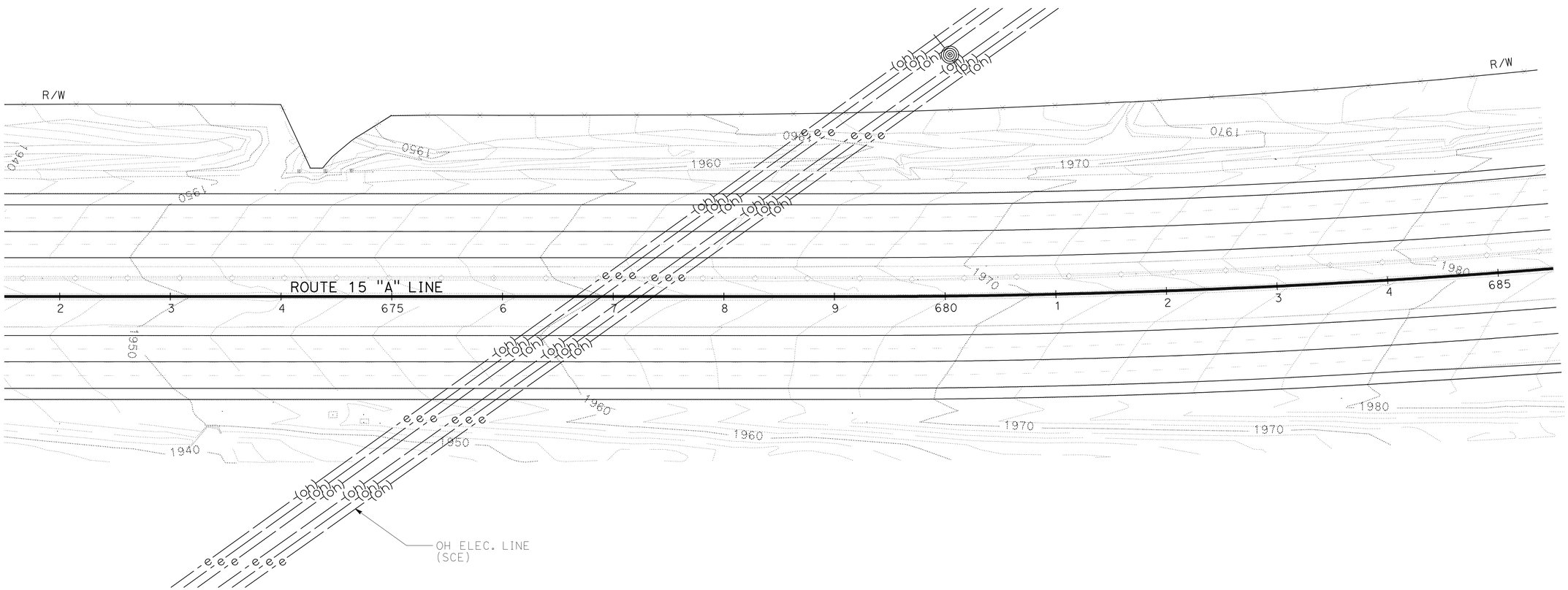

UTILITY PLAN

SCALE: 1" = 50'

U-24

THIS PLAN FOR UTILITY INFORMATION ONLY

REVISED BY	
DATE REVISED	
CALCULATED-DESIGNED BY	WILLIAM ONKUMPOL
CHECKED BY	AHMAD SHAH
FUNCTIONAL SUPERVISOR	GEORGE MORHIG

STATE OF CALIFORNIA - DEPARTMENT OF TRANSPORTATION
Caltrans
DESIGN

LAST REVISION 05-24-11
DATE PLOTTED => 17-JUN-2011
TIME PLOTTED => 05:41

Dist	COUNTY	ROUTE	POST MILES TOTAL PROJECT	SHEET No.	TOTAL SHEETS
08	SBd	15	3.8/12.8	263	680

Thanh Trinh 4-14-11
REGISTERED CIVIL ENGINEER DATE

6-13-11
PLANS APPROVAL DATE

REGISTERED PROFESSIONAL ENGINEER THANH TRINH No. C41189 Exp. 3-31-13 CIVIL STATE OF CALIFORNIA

THE STATE OF CALIFORNIA OR ITS OFFICERS OR AGENTS SHALL NOT BE RESPONSIBLE FOR THE ACCURACY OR COMPLETENESS OF SCANNED COPIES OF THIS PLAN SHEET.

LEGEND:

- WORK AREA
- CONSTRUCTION AREA SIGN (ONE POST)
- CONSTRUCTION AREA SIGN (TWO POST)
- (X) CONSTRUCTION AREA SIGN NUMBER

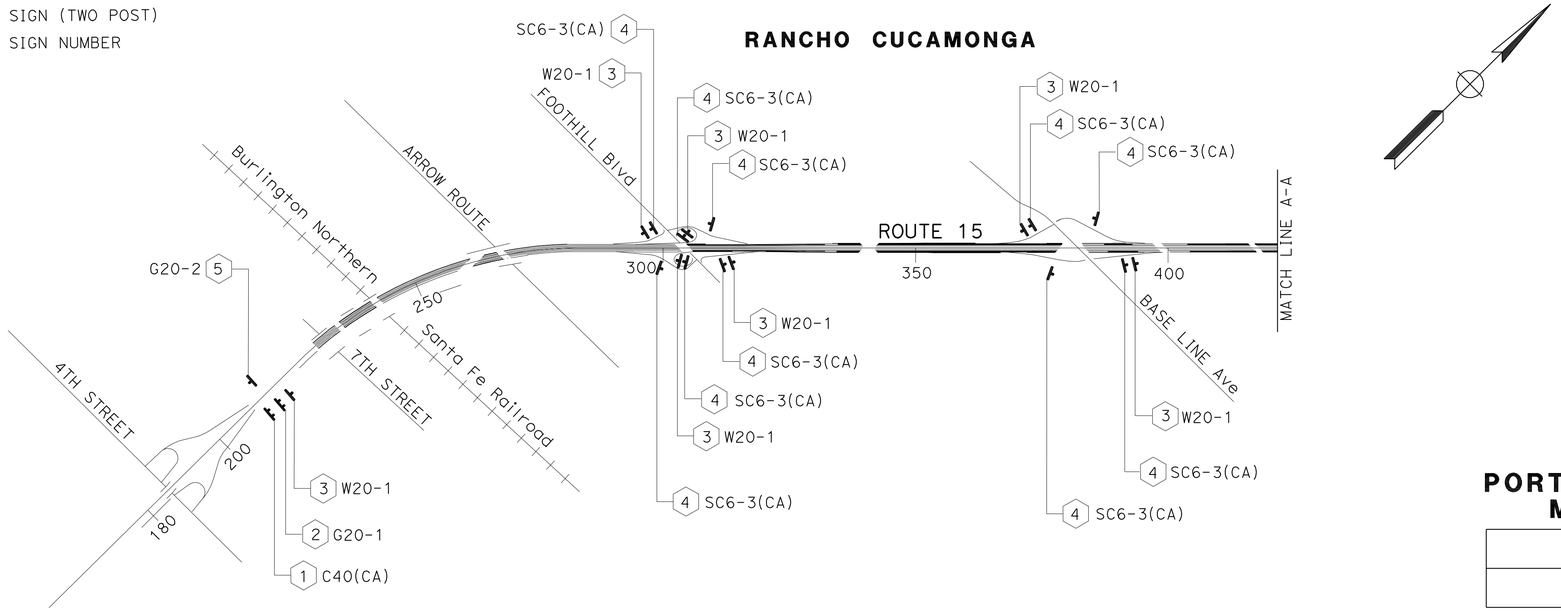

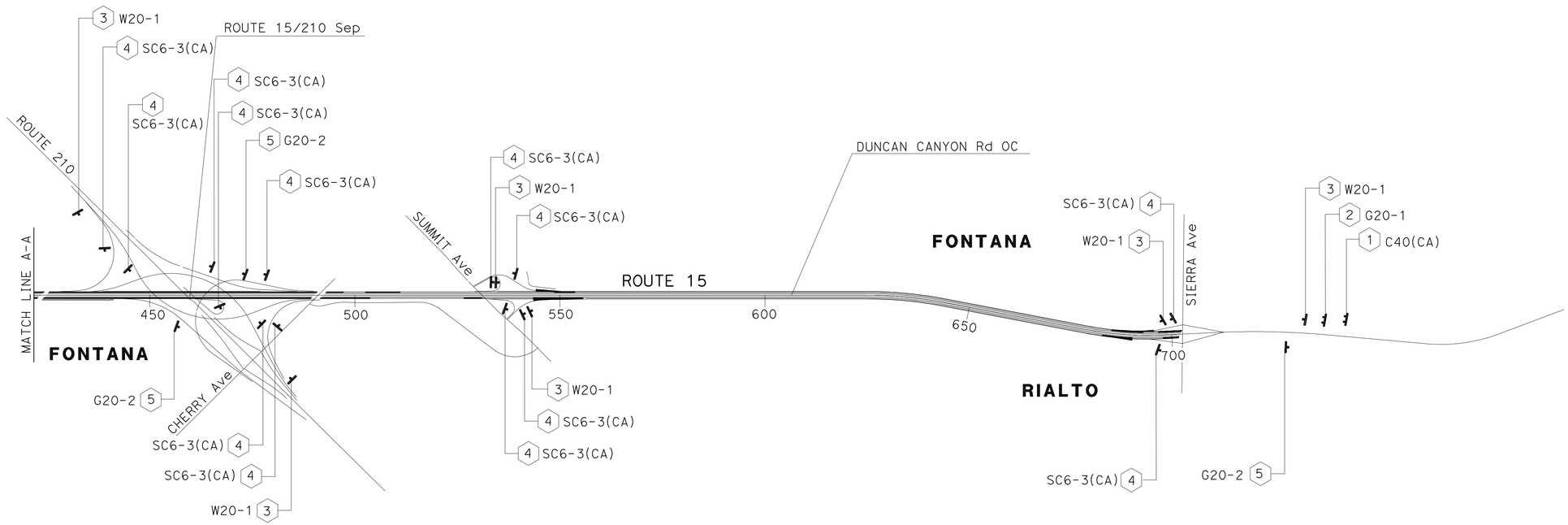

PORTABLE CHANGEABLE MESSAGE SIGNS

EA
8

NOTES:

1. CONSTRUCTION AREA SIGN LOCATIONS SHOWN ARE APPROXIMATE. EXACT LOCATIONS TO BE DETERMINED BY THE ENGINEER.
2. USE STANDARD PLAN T10 FOR TRAFFIC CONTROL SYSTEM ON MAINLINE, AND STANDARD PLAN T14 FOR TRAFFIC CONTROL SYSTEM AT RAMPS.
3. EXACT SIGN AND PORTABLE CHANGE MESSAGE SIGN (PCMS) LOCATIONS TO BE DETERMINED BY the ENGINEER.

THIS PLAN ACCURATE FOR CONSTRUCTION AREA SIGN WORK ONLY.

CONSTRUCTION AREA SIGNS

NO SCALE

CS-1

REVISED BY | DATE REVISED
KEVIN NGUYEN | THANH TRINH
CALCULATED-DESIGNED BY | CHECKED BY
FUNCTIONAL SUPERVISOR
BILL WASSER

STATE OF CALIFORNIA - DEPARTMENT OF TRANSPORTATION
Caltrans TRAFFIC DESIGN A

LAST REVISION 04-14-11 | DATE PLOTTED => 17-JUN-2011 | TIME PLOTTED => 05:41

Dist	COUNTY	ROUTE	POST MILES TOTAL PROJECT	SHEET No.	TOTAL SHEETS
08	SBd	15	3.8/12.8	264	680

Thanh Trinh 4-14-11
REGISTERED CIVIL ENGINEER DATE

6-13-11
PLANS APPROVAL DATE

REGISTERED PROFESSIONAL ENGINEER
THANH TRINH
No. C41189
Exp. 3-31-13
CIVIL
STATE OF CALIFORNIA

THE STATE OF CALIFORNIA OR ITS OFFICERS OR AGENTS SHALL NOT BE RESPONSIBLE FOR THE ACCURACY OR COMPLETENESS OF SCANNED COPIES OF THIS PLAN SHEET.

STATIONARY MOUNTED CONSTRUCTION AREA SIGNS

SHEET	SIGN No.	SIGN CODE	PANEL SIZE	No. OF POSTS AND SIZE	No. OF SIGNS EA	SIGN MESSAGE
SHEET CS-1	1	C40(CA)	108" x 42"	2 - 6" x 6"	2	DOUBLE FINE
	2	G20-1	36" x 18"	1 - 4" x 4"	2	ROAD WORK NEXT 9 MILES
	3	W20-1	48" x 48"	1 - 6" x 6"	13	ROAD WORK AHEAD
	4	SC6-3(CA)	48" x 48"	1 - 6" x 6"	23	RAMP CLOSED DATE, TIME
	5	G20-2	36" x 18"	1 - 4" x 4"	4	END ROAD WORK
SHEET DE-1 TO DE-13	6	W20-2	36" x 36"	1 - 4" x 6"	14	DETOUR AHEAD
	7	SC3(CA)	48" x 18"	1 - 4" x 4"	18	DETOUR STRAIGHT
	8	M4-10(L)	48" x 18"	1 - 4" x 4"	23	DETOUR LEFT
	9	M4-8A	24" x 18"	1 - 4" x 4"	16	END DETOUR
	10	M4-10(R)	48" x 18"	1 - 4" x 4"	21	DETOUR RIGHT
	11	M1-1(15)	24" x 24"	1 - 4" x 6"	3	ROUTE 15
		M3-1	24" x 12"			NORTH
		M4-10(L)	48" x 18"			DETOUR LEFT
	12	M1-1(15)	24" x 24"	1 - 4" x 6"	8	ROUTE 15
		M3-1	24" x 12"			NORTH
		M4-10(R)	48" x 18"			DETOUR RIGHT
	13	M1-1(15)	24" x 24"	1 - 4" x 6"	1	ROUTE 15
		M3-1	24" x 12"			NORTH
		SC3(CA)	48" x 18"			DETOUR STRAIGHT
	14	M1-1(15)	24" x 24"	1 - 4" x 6"	11	ROUTE 15
		M3-3	24" x 12"			SOUTH
		M4-10(R)	48" x 18"			DETOUR RIGHT
	15	M1-1(15)	24" x 24"	1 - 4" x 6"	3	ROUTE 15
		M3-3	24" x 12"			SOUTH
		M4-10(L)	48" x 18"			DETOUR LEFT
	16	M1-1(15)	24" x 24"	1 - 4" x 6"	1	ROUTE 15
		M3-3	24" x 12"			SOUTH
		SC3(CA)	48" x 18"			DETOUR STRAIGHT
	17	CS1	96" x 84"	2 - 6" x 8"	2	N. CONNECTOR CLOSED
	18	CS2	96" x 84"	2 - 6" x 8"	2	S. CONNECTOR CLOSED

CONSTRUCTION AREA SIGNS
CS-2

REVISED BY | DATE REVISED
KEVIN NGUYEN | THANH TRINH
CALCULATED-DESIGNED BY | CHECKED BY
FUNCTIONAL SUPERVISOR
BILL WASSER

STATE OF CALIFORNIA - DEPARTMENT OF TRANSPORTATION
Caltrans TRAFFIC DESIGN A

LAST REVISION 04-14-11 | DATE PLOTTED => 17-JUN-2011 TIME PLOTTED => 05:41

Dist	COUNTY	ROUTE	POST MILES TOTAL PROJECT	SHEET No.	TOTAL SHEETS
08	SBd	15	3.8/12.8	265	680

Thanh Trinh 5-24-11
REGISTERED CIVIL ENGINEER DATE

6-13-11
PLANS APPROVAL DATE

REGISTERED PROFESSIONAL ENGINEER
THANH TRINH
No. C41189
Exp. 3-31-13
CIVIL
STATE OF CALIFORNIA

THE STATE OF CALIFORNIA OR ITS OFFICERS OR AGENTS SHALL NOT BE RESPONSIBLE FOR THE ACCURACY OR COMPLETENESS OF SCANNED COPIES OF THIS PLAN SHEET.

CONSTRUCTION AREA SIGNS

SHEET	SIGN No.	SIGN CODE	PANEL SIZE	No. OF POST AND SIZE	No. OF SIGN EA	SIGN MESSAGE
SHEET TH-1 TO TH-35 & TH-37 TO TH-121	19	W21-5bL	48" x 48"	1 - 6" x 6"	4	LEFT SHOULDER CLOSED 1000 FT
	20	C30A(CA)	48" x 48"	1 - 6" x 6"	2	SHOULDER CLOSED
		W7-3a	24" x 18"			NEXT 9 MILES
	21	C30A(CA)	48" x 48"	1 - 6" x 6"	41	SHOULDER CLOSED
	22	C30A(CA)	48" x 48"	1 - 6" x 6"	2	SHOULDER CLOSED
		W7-3a	24" x 18"			NEXT 1 MILE
	23	G85-SPECIAL1	84" x 66"	2 - 6" x 6"	6	ROUTE 66 FOOTHILL Blvd ⇗
	24	G84(CA)	54" x 48"	1 - 6" x 6"	13	EXIT ⇗
	25	W4-1	48" x 48"	1 - 6" x 6"	9	MERGE SYMBOL (RIGHT)
	26	G85-SPECIAL2	102" x 42"	2 - 6" x 6"	5	BASE LINE AVE ⇗
	27	R18A(CA)	66" x 48"	2 - 4" x 6"	1	RIGHT LANE MUST EXIT
	28	G85-SPECIAL3	102" x 48"	2 - 6" x 6"	4	ROUTE 210 EAST REDLANDS ⇗
	29	W74(L)(CA)	60" x 60"	2 - 6" x 6"	1	THRU TRAFFIC MERGE LEFT
	30	G85-SPECIAL4	120" x 48"	2 - 6" x 6"	3	ROUTE 210 WEST PASADENA ⇗
	31	G85-SPECIAL5	96" x 66"	2 - 6" x 8"	1	ROUTE 210 EAST REDLANDS 2 RIGHT LANES
	32	G85-SPECIAL6	102" x 66"	2 - 6" x 8"	2	ROUTE 210 REDLANDS PASADENA ⇗
	33	G85-SPECIAL7	84" x 42"	2 - 4" x 6"	3	SUMMIT Ave ⇗
	34	G85-SPECIAL8	78" x 42"	2 - 4" x 6"	1	SIERRA Ave ⇗
	35	G85-SPECIAL9	96" x 72"	2 - 6" x 8"	1	ROUTE 210 EAST REDLANDS ⇗ ONLY ⇗
	36	G85-SPECIAL10	78" x 48"	2 - 4" x 6"	2	ROUTE 210 RIGHT LANE
	37	W4-3R	48" x 48"	1 - 6" x 6"	2	ADDED LANE SYMBOL (RIGHT)
	38	W9-2L	48" x 48"	1 - 6" x 6"	2	LANE END MERGE LEFT
	39	W4-2R	48" x 48"	1 - 6" x 6"	2	LANE ENDS SYMBOL
	40	G85-SPECIAL11	120" x 48"	2 - 6" x 6"	1	ROUTE 210 EAST REDLANDS ⇗
	41	G85-SPECIAL12	96" x 72"	2 - 6" x 8"	1	ROUTE 210 EAST REDLANDS RIGHT LANE
	42	G85-SPECIAL13	120" x 48"	2 - 6" x 6"	1	ROUTE 210 EAST REDLANDS ⇗ ⇗ ONLY

REVISED BY | DATE REVISED
KEVIN NGUYEN | THANH TRINH
CALCULATED-DESIGNED BY | CHECKED BY
FUNCTIONAL SUPERVISOR
BILL WASSER

STATE OF CALIFORNIA - DEPARTMENT OF TRANSPORTATION
Caltrans TRAFFIC DESIGN A

CONSTRUCTION AREA SIGNS

CS-3

LAST REVISION 05-24-11 | DATE PLOTTED => 17-JUN-2011 | TIME PLOTTED => 05:41

Dist	COUNTY	ROUTE	POST MILES TOTAL PROJECT	SHEET No.	TOTAL SHEETS
08	SBd	15	3.8/12.8	266	680

REGISTERED CIVIL ENGINEER 4-14-11 DATE

6-13-11
PLANS APPROVAL DATE

REGISTERED PROFESSIONAL ENGINEER
AHMAD SHAH
No. C55259
Exp. 9-30-12
CIVIL
STATE OF CALIFORNIA

THE STATE OF CALIFORNIA OR ITS OFFICERS OR AGENTS SHALL NOT BE RESPONSIBLE FOR THE ACCURACY OR COMPLETENESS OF SCANNED COPIES OF THIS PLAN SHEET.

LEGEND:

- STAGE CONSTRUCTION 1
- STAGE CONSTRUCTION 3
- WORK COMPLETED IN PREVIOUS STAGES
- STAGE CONSTRUCTION 3 (HMA SHOULDER)
- STAGE CONSTRUCTION 3A (RAPID STRENGTH CONCRETE) UP TO 48 HOURS WORK WINDOW AS PER LANE REQUIREMENTS CHART
- STAGE CONSTRUCTION 3B (RAPID STRENGTH CONCRETE) UP TO 24 HOURS WORK WINDOW AS PER LANE REQUIREMENTS CHART
- PCB - PORTABLE CONCRETE BARRIER (TYPE 60K) AND CONCRETE BARRIER (TYPE 60C)

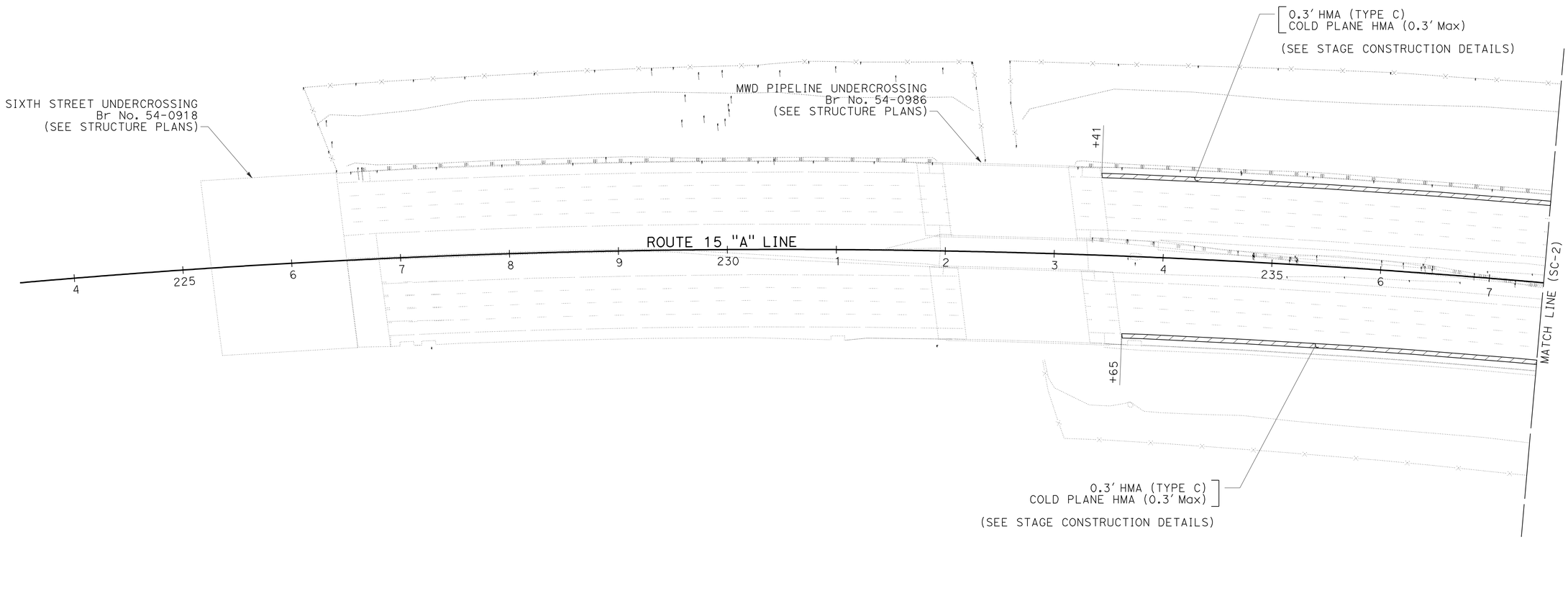

STAGE CONSTRUCTION STAGE 1

SCALE: 1" = 50'

SC-1

THIS PLAN ACCURATE FOR STAGE CONSTRUCTION WORK ONLY

REVISED BY	DATE REVISED

CALCULATED-DESIGNED BY	CHECKED BY
TOM NGUYEN	AHMAD SHAH

FUNCTIONAL SUPERVISOR: GEORGE MORHIG

STATE OF CALIFORNIA - DEPARTMENT OF TRANSPORTATION
Caltrans
DESIGN

LAST REVISION 04-14-11 | DATE PLOTTED => 17-JUN-2011 | TIME PLOTTED => 05:41

Dist	COUNTY	ROUTE	POST MILES TOTAL PROJECT	SHEET No.	TOTAL SHEETS
08	SBd	15	3.8/12.8	267	680

REGISTERED CIVIL ENGINEER 4-14-11 DATE

6-13-11
PLANS APPROVAL DATE

REGISTERED PROFESSIONAL ENGINEER
AHMAD SHAH
No. C55259
Exp. 9-30-12
CIVIL
STATE OF CALIFORNIA

THE STATE OF CALIFORNIA OR ITS OFFICERS OR AGENTS SHALL NOT BE RESPONSIBLE FOR THE ACCURACY OR COMPLETENESS OF SCANNED COPIES OF THIS PLAN SHEET.

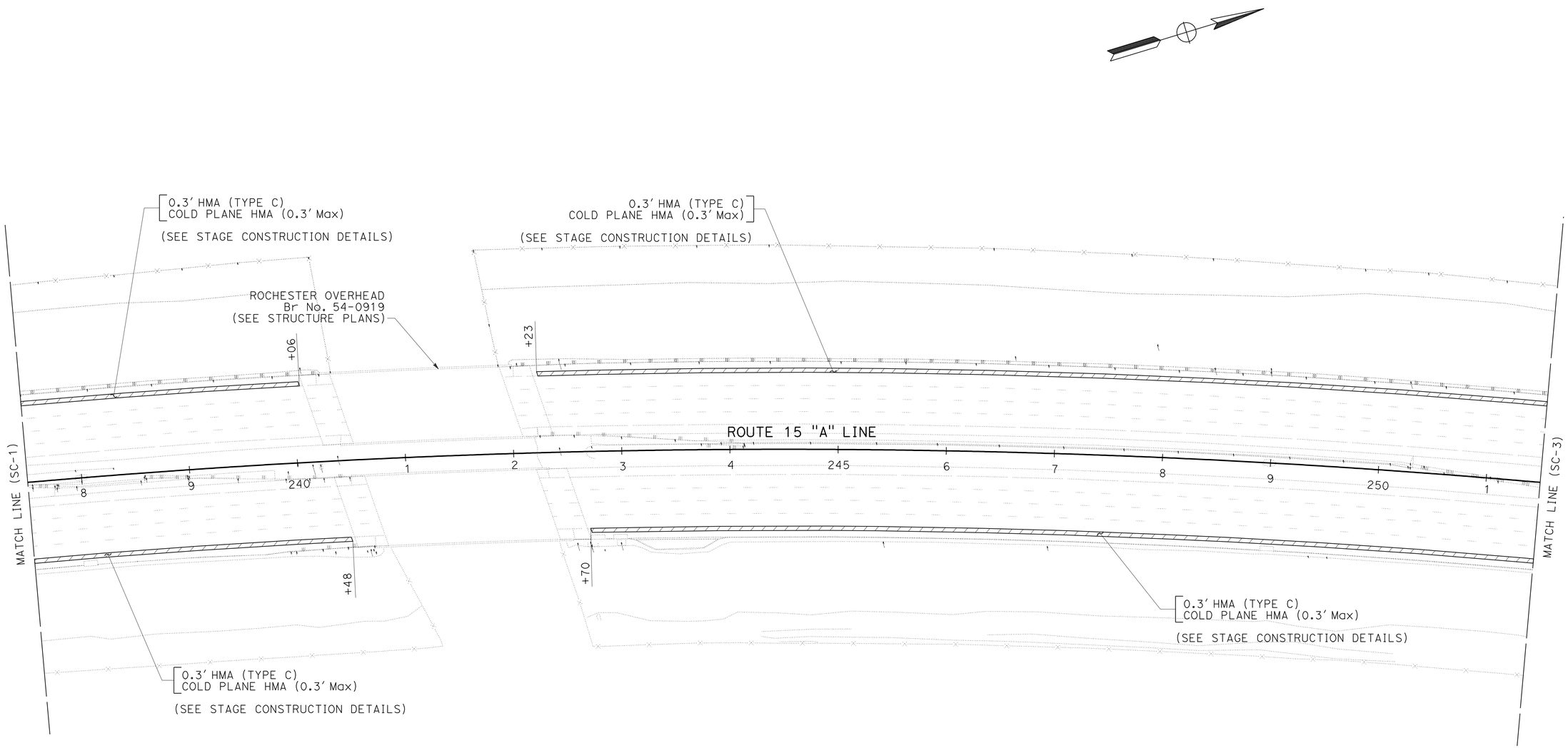

STAGE CONSTRUCTION
STAGE 1
SCALE: 1" = 50'

SC-2

THIS PLAN ACCURATE FOR STAGE CONSTRUCTION WORK ONLY

REVISED BY	DATE REVISED

CALCULATED-DESIGNED BY	TOM NGUYEN
CHECKED BY	AHMAD SHAH
FUNCTIONAL SUPERVISOR	GEORGE MORHIG

STATE OF CALIFORNIA - DEPARTMENT OF TRANSPORTATION
Caltrans
DESIGN

LAST REVISION 04-14-11 | DATE PLOTTED => 17-JUN-2011 | TIME PLOTTED => 05:41

Dist	COUNTY	ROUTE	POST MILES TOTAL PROJECT	SHEET No.	TOTAL SHEETS
08	SBd	15	3.8/12.8	268	680

REGISTERED CIVIL ENGINEER 4-14-11 DATE

6-13-11
PLANS APPROVAL DATE

REGISTERED PROFESSIONAL ENGINEER
AHMAD SHAH
No. C55259
Exp. 9-30-12
CIVIL
STATE OF CALIFORNIA

THE STATE OF CALIFORNIA OR ITS OFFICERS OR AGENTS SHALL NOT BE RESPONSIBLE FOR THE ACCURACY OR COMPLETENESS OF SCANNED COPIES OF THIS PLAN SHEET.

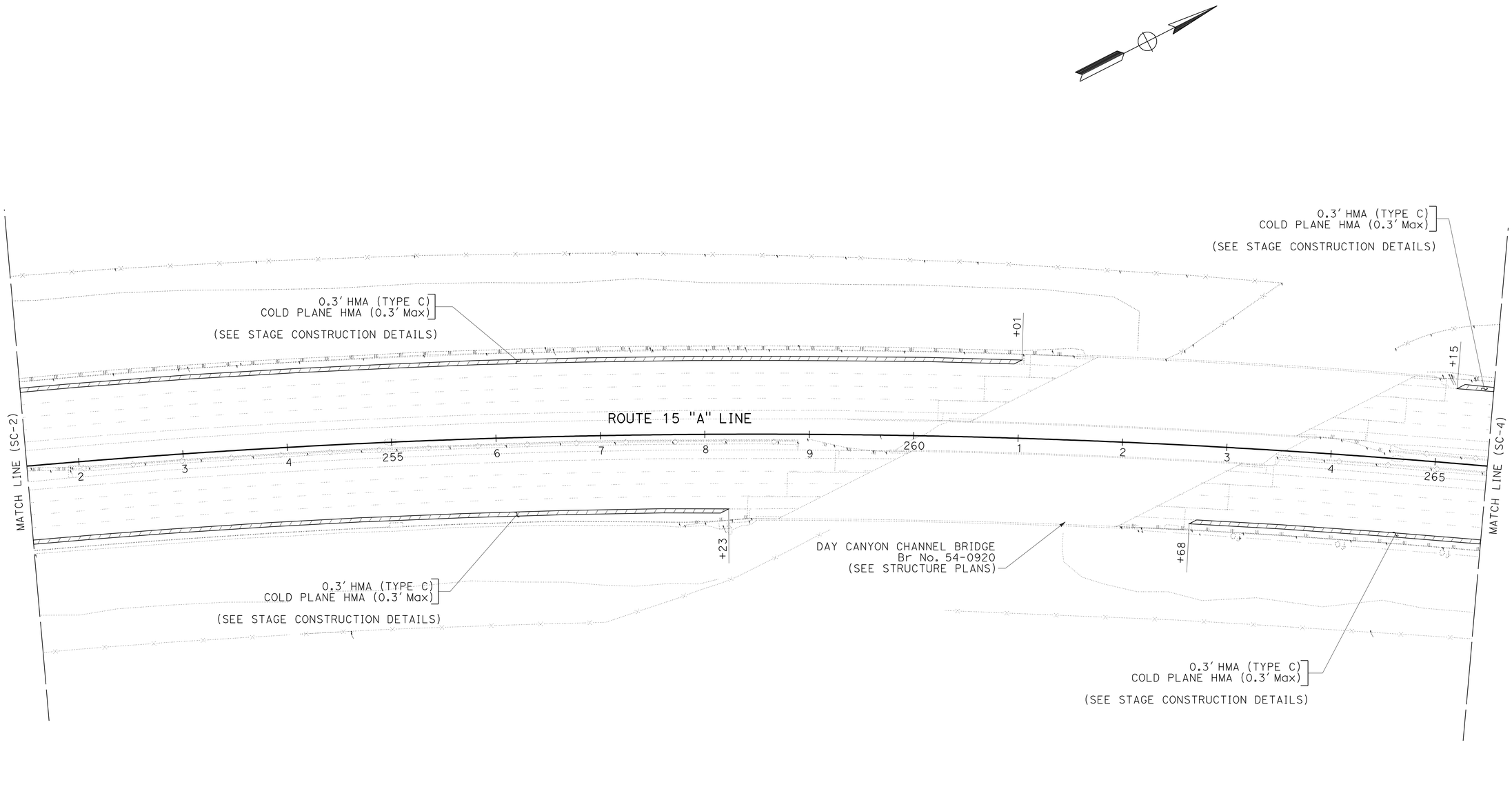

STAGE CONSTRUCTION STAGE 1

SCALE: 1" = 50'

SC-3

THIS PLAN ACCURATE FOR STAGE CONSTRUCTION WORK ONLY.

STATE OF CALIFORNIA - DEPARTMENT OF TRANSPORTATION
Caltrans®
DESIGN

FUNCTIONAL SUPERVISOR: GEORGE MORHIG
CALCULATED-DESIGNED BY: TOM NGUYEN
CHECKED BY: AHMAD SHAH
REVISED BY
DATE REVISED

LAST REVISION 04-14-11
DATE PLOTTED => 17-JUN-2011
TIME PLOTTED => 05:41

Dist	COUNTY	ROUTE	POST MILES TOTAL PROJECT	SHEET No.	TOTAL SHEETS
08	SBd	15	3.8/12.8	269	680

REGISTERED CIVIL ENGINEER 4-14-11 DATE

6-13-11
PLANS APPROVAL DATE

REGISTERED PROFESSIONAL ENGINEER
AHMAD SHAH
No. C55259
Exp. 9-30-12
CIVIL
STATE OF CALIFORNIA

THE STATE OF CALIFORNIA OR ITS OFFICERS OR AGENTS SHALL NOT BE RESPONSIBLE FOR THE ACCURACY OR COMPLETENESS OF SCANNED COPIES OF THIS PLAN SHEET.

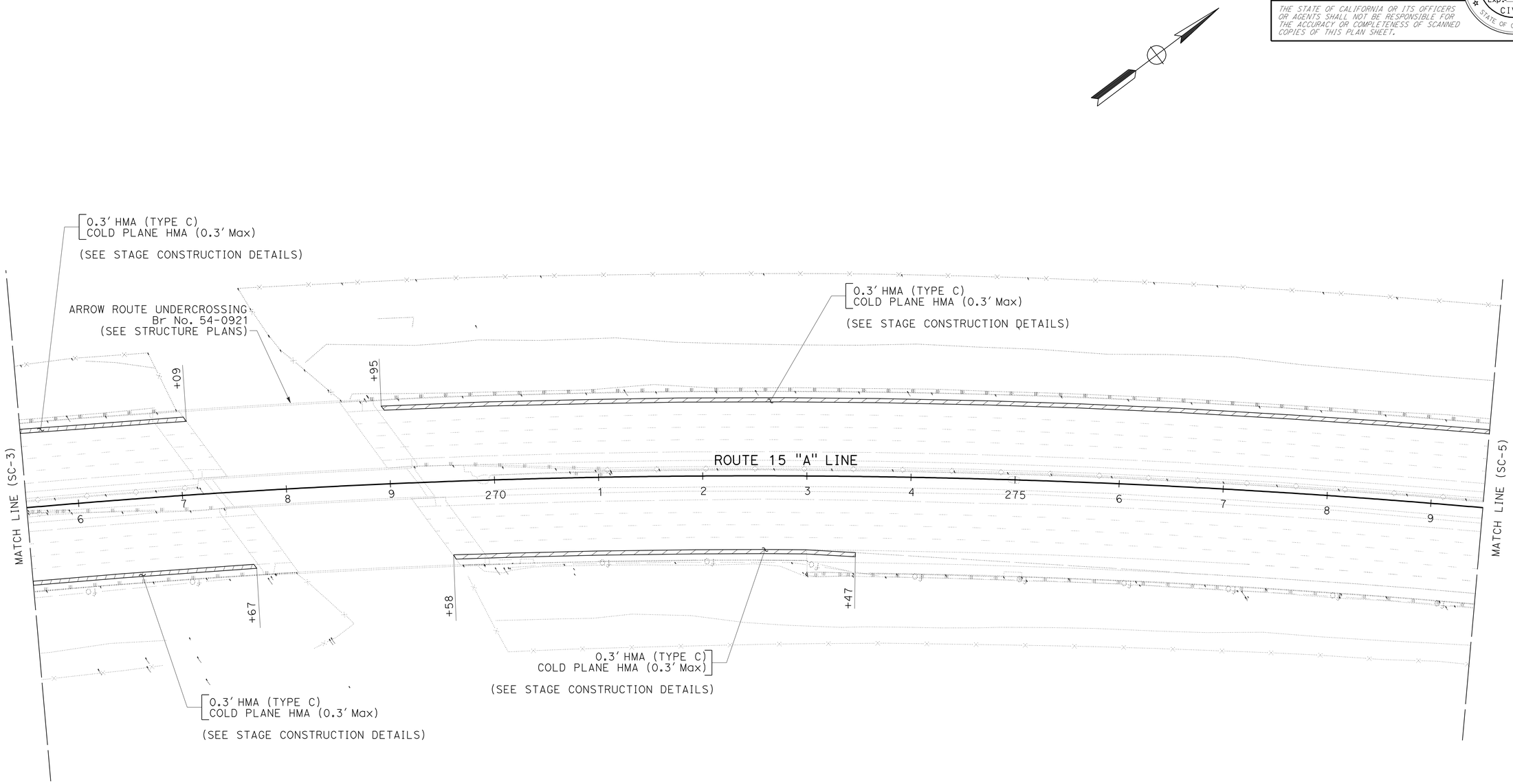

STAGE CONSTRUCTION
STAGE 1

SCALE: 1" = 50'

SC-4

THIS PLAN ACCURATE FOR STAGE CONSTRUCTION WORK ONLY.

STATE OF CALIFORNIA - DEPARTMENT OF TRANSPORTATION
Caltrans
DESIGN

FUNCTIONAL SUPERVISOR: GEORGE MORHIG
CALCULATED-DESIGNED BY: TOM NGUYEN
CHECKED BY: AHMAD SHAH
REVISED BY
DATE REVISED

LAST REVISION 04-14-11
DATE PLOTTED => 17-JUN-2011
TIME PLOTTED => 05:41

Dist	COUNTY	ROUTE	POST MILES TOTAL PROJECT	SHEET No.	TOTAL SHEETS
08	SBd	15	3.8/12.8	270	680

REGISTERED CIVIL ENGINEER 4-14-11 DATE

6-13-11
PLANS APPROVAL DATE

REGISTERED PROFESSIONAL ENGINEER
AHMAD SHAH
No. C55259
Exp. 9-30-12
CIVIL
STATE OF CALIFORNIA

THE STATE OF CALIFORNIA OR ITS OFFICERS OR AGENTS SHALL NOT BE RESPONSIBLE FOR THE ACCURACY OR COMPLETENESS OF SCANNED COPIES OF THIS PLAN SHEET.

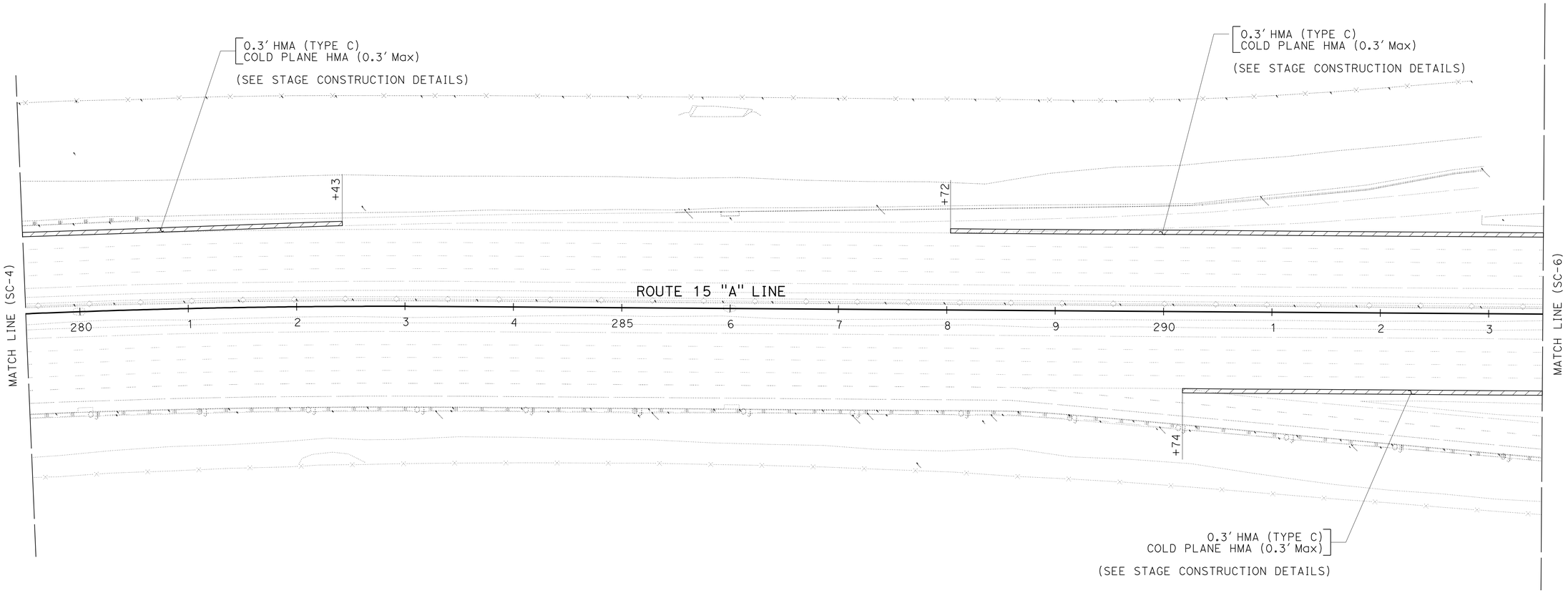

STAGE CONSTRUCTION
STAGE 1
SCALE: 1" = 50'

SC-5

THIS PLAN ACCURATE FOR STAGE CONSTRUCTION WORK ONLY.

STATE OF CALIFORNIA - DEPARTMENT OF TRANSPORTATION
Caltrans
DESIGN

FUNCTIONAL SUPERVISOR: GEORGE MORHIG
CALCULATED-DESIGNED BY: TOM NGUYEN
CHECKED BY: AHMAD SHAH
REVISED BY
DATE REVISED

LAST REVISION 04-14-11
DATE PLOTTED => 17-JUN-2011
TIME PLOTTED => 95:41

Dist	COUNTY	ROUTE	POST MILES TOTAL PROJECT	SHEET No.	TOTAL SHEETS
08	SBd	15	3.8/12.8	271	680

REGISTERED CIVIL ENGINEER 4-14-11 DATE

6-13-11
PLANS APPROVAL DATE

REGISTERED PROFESSIONAL ENGINEER
AHMAD SHAH
No. C55259
Exp. 9-30-12
CIVIL
STATE OF CALIFORNIA

THE STATE OF CALIFORNIA OR ITS OFFICERS OR AGENTS SHALL NOT BE RESPONSIBLE FOR THE ACCURACY OR COMPLETENESS OF SCANNED COPIES OF THIS PLAN SHEET.

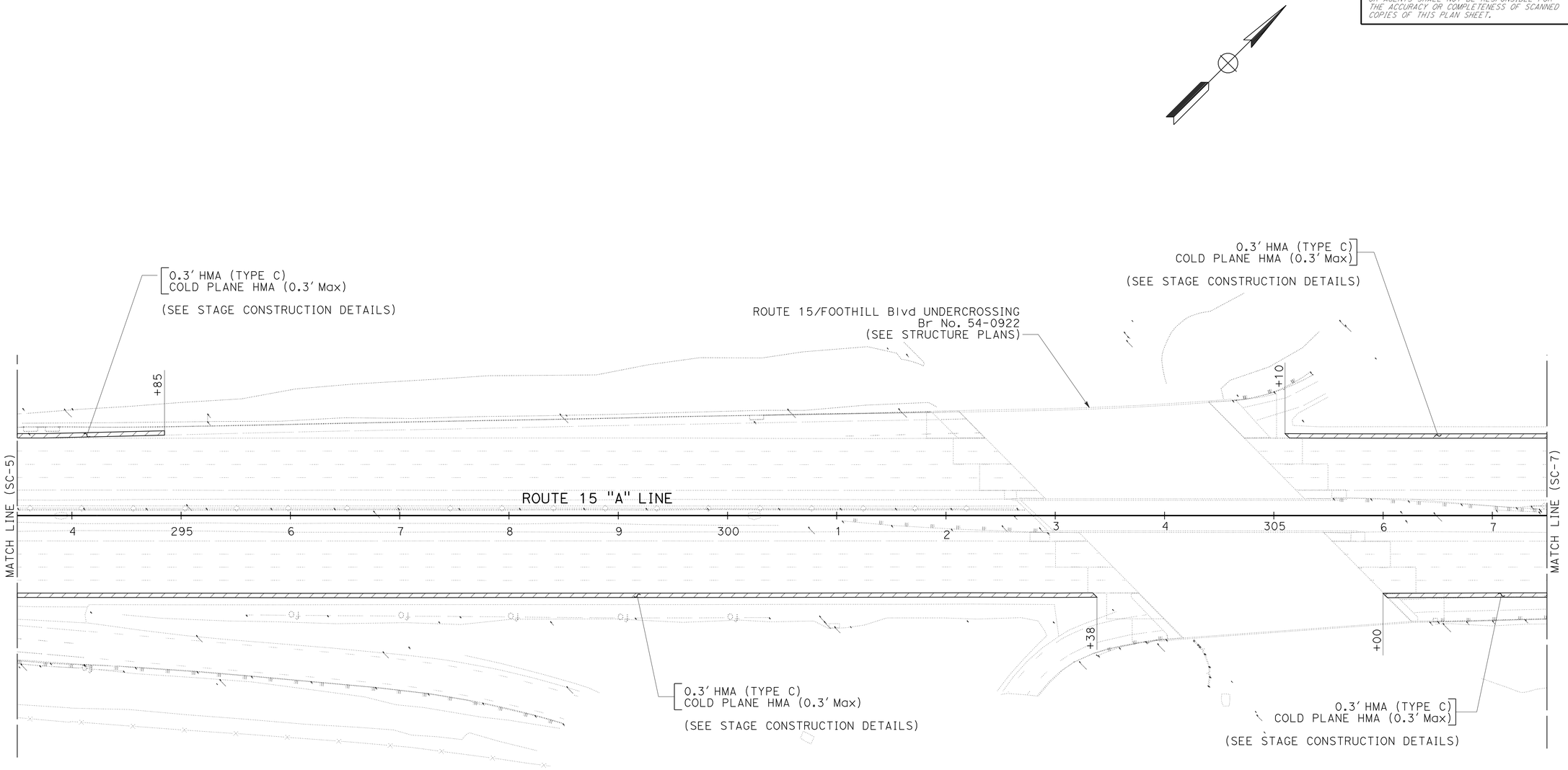

STAGE CONSTRUCTION
STAGE 1

SCALE: 1" = 50'

SC-6

THIS PLAN ACCURATE FOR STAGE CONSTRUCTION WORK ONLY.

REVISED BY	DATE REVISED

CALCULATED-DESIGNED BY: TOM NGUYEN
CHECKED BY: AHMAD SHAH
FUNCTIONAL SUPERVISOR: GEORGE MORHIG

STATE OF CALIFORNIA - DEPARTMENT OF TRANSPORTATION
Caltrans
DESIGN

LAST REVISION 04-14-11
DATE PLOTTED => 17-JUN-2011
TIME PLOTTED => 95:41

Dist	COUNTY	ROUTE	POST MILES TOTAL PROJECT	SHEET No.	TOTAL SHEETS
08	SBd	15	3.8/12.8	272	680

REGISTERED CIVIL ENGINEER 4-14-11 DATE

6-13-11
PLANS APPROVAL DATE

REGISTERED PROFESSIONAL ENGINEER
AHMAD SHAH
No. C55259
Exp. 9-30-12
CIVIL
STATE OF CALIFORNIA

THE STATE OF CALIFORNIA OR ITS OFFICERS OR AGENTS SHALL NOT BE RESPONSIBLE FOR THE ACCURACY OR COMPLETENESS OF SCANNED COPIES OF THIS PLAN SHEET.

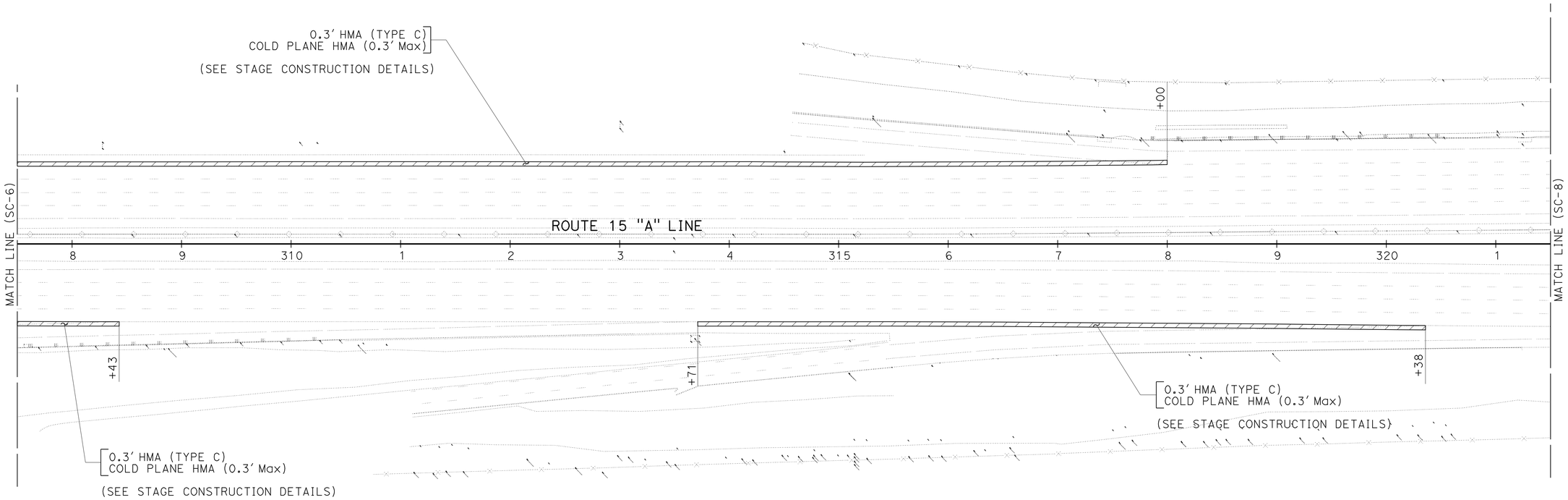

STAGE CONSTRUCTION
STAGE 1

SCALE: 1" = 50'

SC-7

THIS PLAN ACCURATE FOR STAGE CONSTRUCTION WORK ONLY.

CALCULATED-DESIGNED BY	TOM NGUYEN
CHECKED BY	AHMAD SHAH
REVISED BY	
DATE REVISED	
FUNCTIONAL SUPERVISOR	GEORGE MORHIG

STATE OF CALIFORNIA - DEPARTMENT OF TRANSPORTATION
Caltrans®
DESIGN

LAST REVISION 04-14-11
DATE PLOTTED => 17-JUN-2011
TIME PLOTTED => 95:42

Dist	COUNTY	ROUTE	POST MILES TOTAL PROJECT	SHEET No.	TOTAL SHEETS
08	SBd	15	3.8/12.8	273	680

REGISTERED CIVIL ENGINEER 4-14-11 DATE

6-13-11
PLANS APPROVAL DATE

REGISTERED PROFESSIONAL ENGINEER
AHMAD SHAH
No. C55259
Exp. 9-30-12
CIVIL
STATE OF CALIFORNIA

THE STATE OF CALIFORNIA OR ITS OFFICERS OR AGENTS SHALL NOT BE RESPONSIBLE FOR THE ACCURACY OR COMPLETENESS OF SCANNED COPIES OF THIS PLAN SHEET.

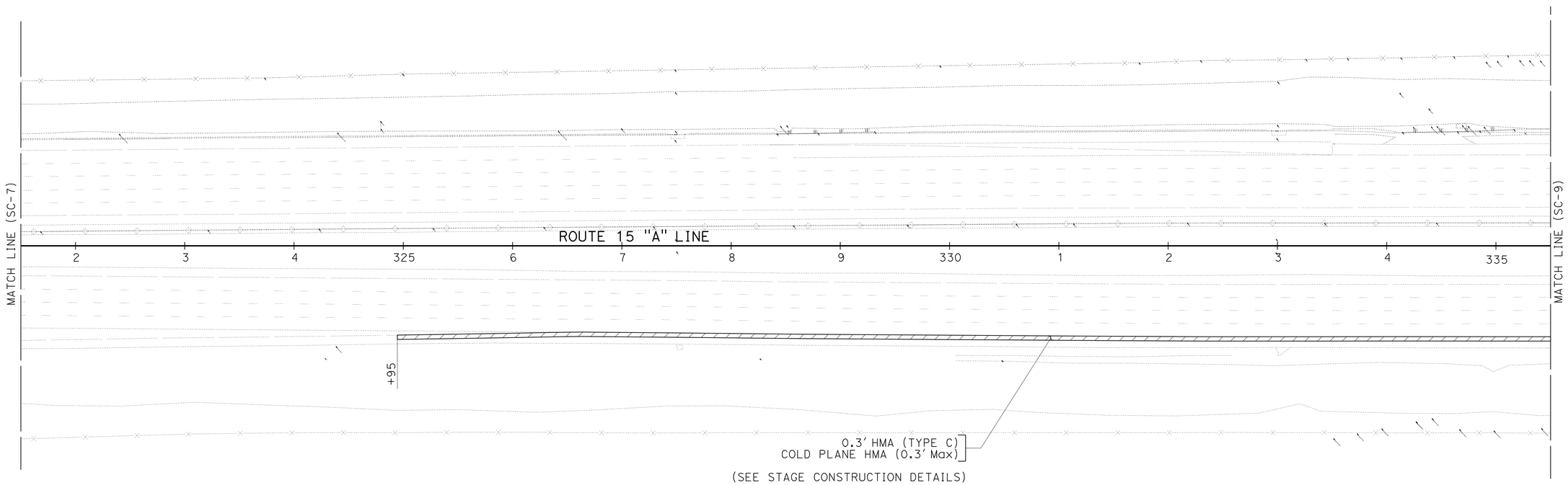

STAGE CONSTRUCTION
STAGE 1
SCALE: 1" = 50'

SC-8

THIS PLAN ACCURATE FOR STAGE CONSTRUCTION WORK ONLY.

STATE OF CALIFORNIA - DEPARTMENT OF TRANSPORTATION
Caltrans® DESIGN

FUNCTIONAL SUPERVISOR: GEORGE MORHIG
CALCULATED-DESIGNED BY: TOM NGUYEN
CHECKED BY: AHMAD SHAH
REVISED BY
DATE REVISED

LAST REVISION 04-14-11
DATE PLOTTED => 17-JUN-2011
TIME PLOTTED => 05:42

Dist	COUNTY	ROUTE	POST MILES TOTAL PROJECT	SHEET No.	TOTAL SHEETS
08	SBd	15	3.8/12.8	274	680

REGISTERED CIVIL ENGINEER 4-14-11 DATE

6-13-11
PLANS APPROVAL DATE

REGISTERED PROFESSIONAL ENGINEER
AHMAD SHAH
No. C55259
Exp. 9-30-12
CIVIL
STATE OF CALIFORNIA

THE STATE OF CALIFORNIA OR ITS OFFICERS OR AGENTS SHALL NOT BE RESPONSIBLE FOR THE ACCURACY OR COMPLETENESS OF SCANNED COPIES OF THIS PLAN SHEET.

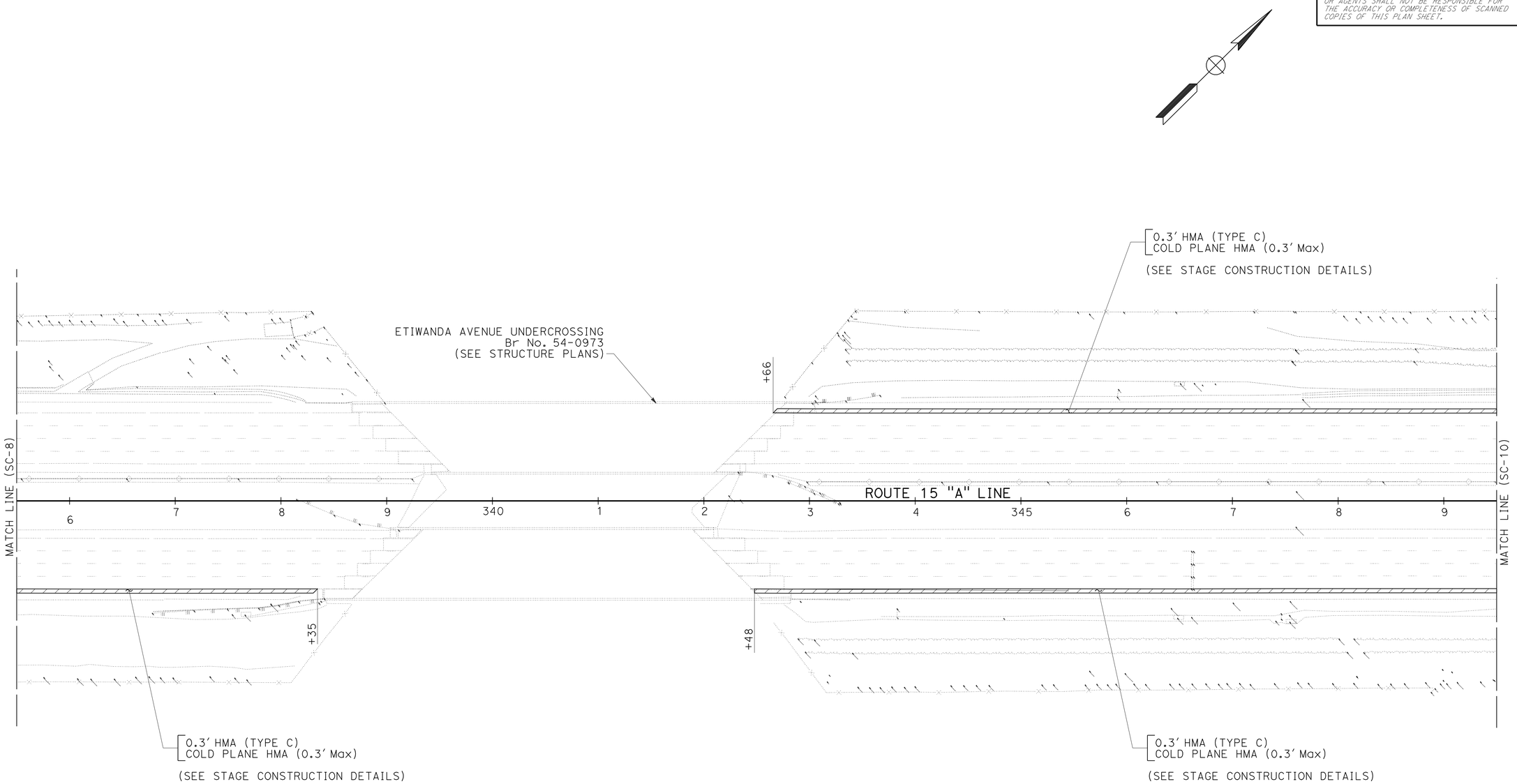

STAGE CONSTRUCTION
STAGE 1

SCALE: 1" = 50'

SC-9

THIS PLAN ACCURATE FOR STAGE CONSTRUCTION WORK ONLY.

STATE OF CALIFORNIA - DEPARTMENT OF TRANSPORTATION
Caltrans
DESIGN

FUNCTIONAL SUPERVISOR: GEORGE MORHIG
CALCULATED-DESIGNED BY: TOM NGUYEN
CHECKED BY: AHMAD SHAH
REVISED BY
DATE REVISED

LAST REVISION 04-14-11
DATE PLOTTED => 17-JUN-2011
TIME PLOTTED => 05:42

Dist	COUNTY	ROUTE	POST MILES TOTAL PROJECT	SHEET No.	TOTAL SHEETS
08	SBd	15	3.8/12.8	275	680

REGISTERED CIVIL ENGINEER 4-14-11 DATE

6-13-11
PLANS APPROVAL DATE

REGISTERED PROFESSIONAL ENGINEER
AHMAD SHAH
No. C55259
Exp. 9-30-12
CIVIL
STATE OF CALIFORNIA

THE STATE OF CALIFORNIA OR ITS OFFICERS OR AGENTS SHALL NOT BE RESPONSIBLE FOR THE ACCURACY OR COMPLETENESS OF SCANNED COPIES OF THIS PLAN SHEET.

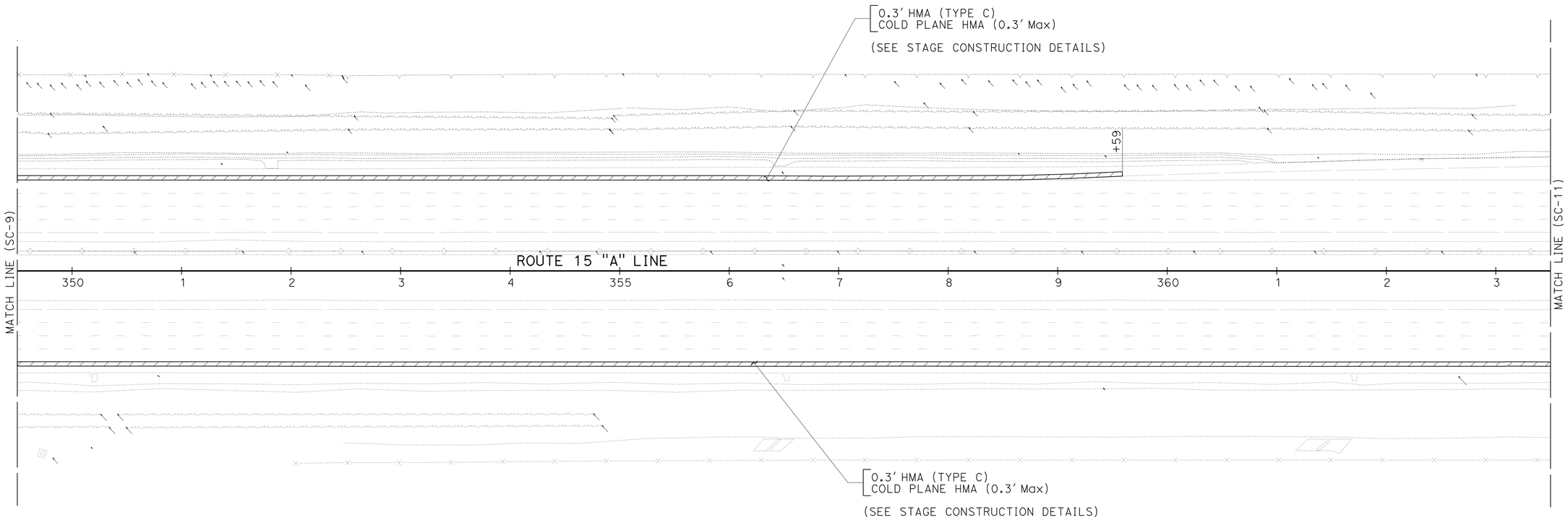

STAGE CONSTRUCTION STAGE 1

SCALE: 1" = 50'

SC-10

THIS PLAN ACCURATE FOR STAGE CONSTRUCTION WORK ONLY.

STATE OF CALIFORNIA - DEPARTMENT OF TRANSPORTATION
Caltrans® DESIGN

FUNCTIONAL SUPERVISOR: GEORGE MORHIG
CALCULATED-DESIGNED BY: TOM NGUYEN
CHECKED BY: AHMAD SHAH
REVISED BY
DATE REVISED

LAST REVISION 04-14-11
DATE PLOTTED => 17-JUN-2011
TIME PLOTTED => 05:42

Dist	COUNTY	ROUTE	POST MILES TOTAL PROJECT	SHEET No.	TOTAL SHEETS
08	SBd	15	3.8/12.8	276	680

REGISTERED CIVIL ENGINEER 4-14-11 DATE

6-13-11
PLANS APPROVAL DATE

REGISTERED PROFESSIONAL ENGINEER
AHMAD SHAH
No. C55259
Exp. 9-30-12
CIVIL
STATE OF CALIFORNIA

THE STATE OF CALIFORNIA OR ITS OFFICERS OR AGENTS SHALL NOT BE RESPONSIBLE FOR THE ACCURACY OR COMPLETENESS OF SCANNED COPIES OF THIS PLAN SHEET.

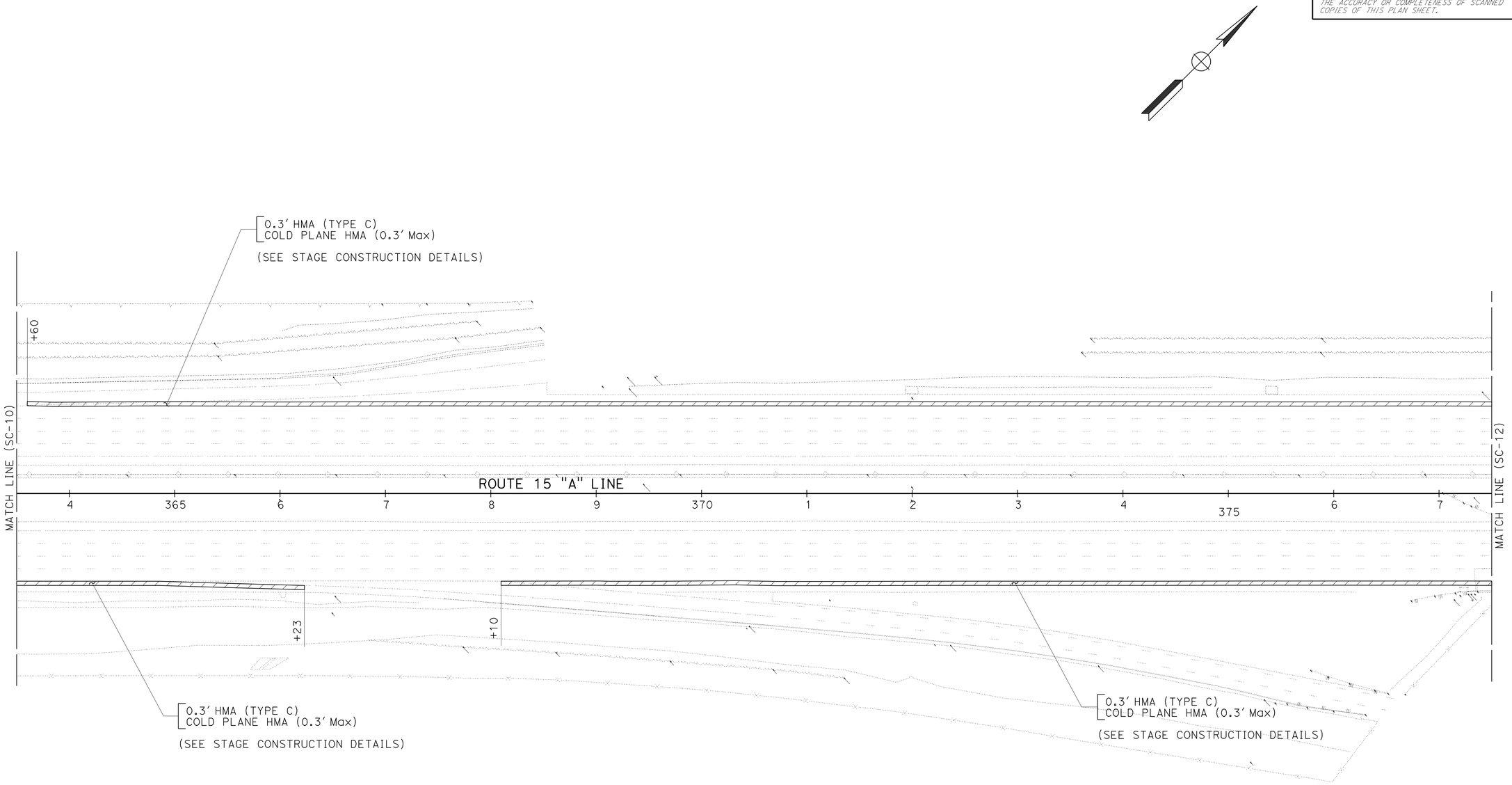

STAGE CONSTRUCTION
STAGE 1
SCALE: 1" = 50'

SC-11

THIS PLAN ACCURATE FOR STAGE CONSTRUCTION WORK ONLY.

REVISED BY	DATE REVISED

CALCULATED-DESIGNED BY	TOM NGUYEN
CHECKED BY	AHMAD SHAH

FUNCTIONAL SUPERVISOR: GEORGE MORHIG

STATE OF CALIFORNIA - DEPARTMENT OF TRANSPORTATION

Caltrans® **DESIGN**

LAST REVISION 04-14-11 | DATE PLOTTED => 17-JUN-2011 | TIME PLOTTED => 09:42

Dist	COUNTY	ROUTE	POST MILES TOTAL PROJECT	SHEET No.	TOTAL SHEETS
08	SBd	15	3.8/12.8	277	680

REGISTERED CIVIL ENGINEER 4-14-11 DATE

6-13-11
PLANS APPROVAL DATE

REGISTERED PROFESSIONAL ENGINEER
AHMAD SHAH
No. C55259
Exp. 9-30-12
CIVIL
STATE OF CALIFORNIA

THE STATE OF CALIFORNIA OR ITS OFFICERS OR AGENTS SHALL NOT BE RESPONSIBLE FOR THE ACCURACY OR COMPLETENESS OF SCANNED COPIES OF THIS PLAN SHEET.

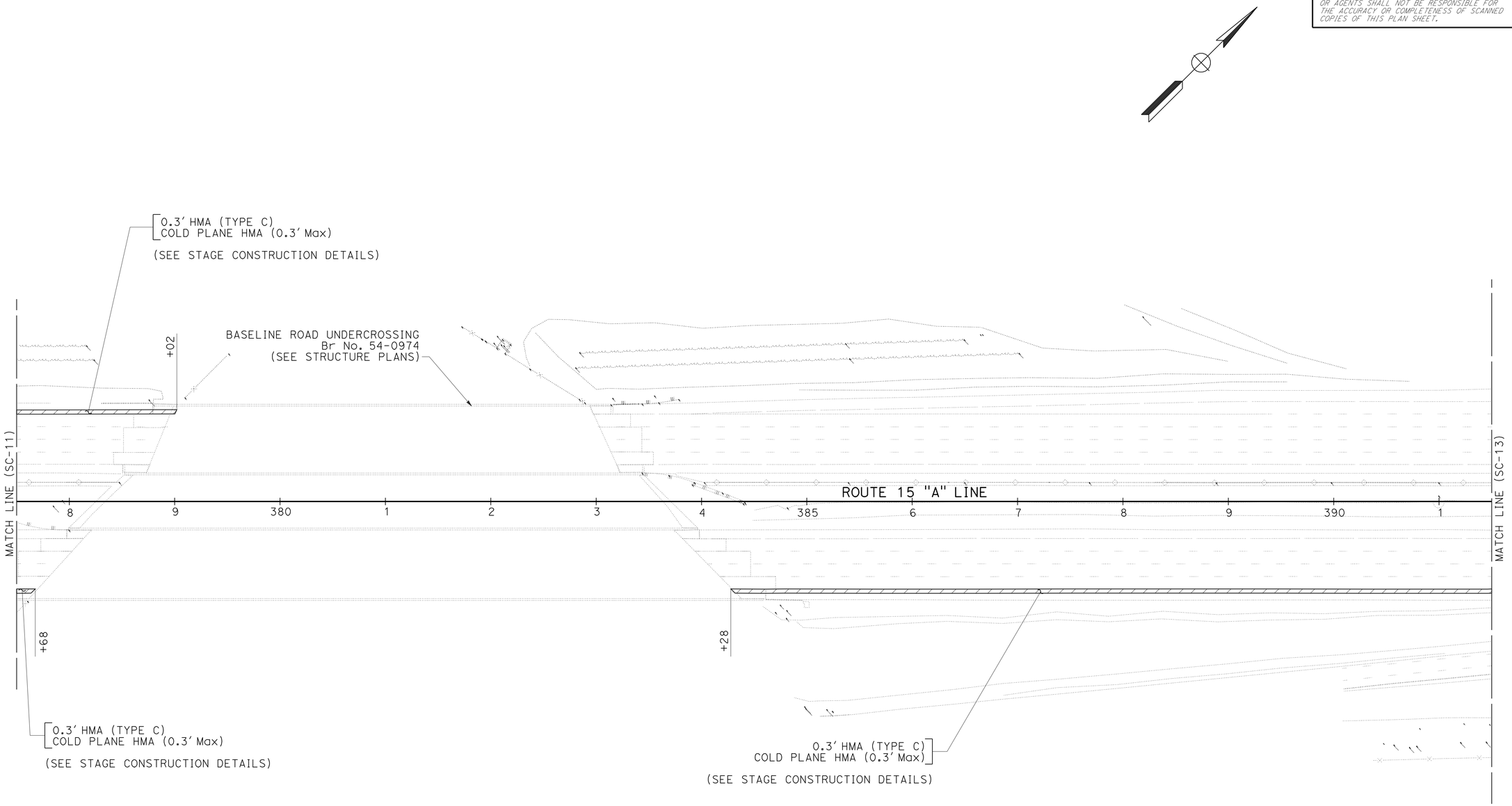

STAGE CONSTRUCTION
STAGE 1
SCALE: 1" = 50'

SC-12

THIS PLAN ACCURATE FOR STAGE CONSTRUCTION WORK ONLY.

REVISED BY	DATE REVISED

CALCULATED-DESIGNED BY: TOM NGUYEN
CHECKED BY: AHMAD SHAH
FUNCTIONAL SUPERVISOR: GEORGE MORHIG

STATE OF CALIFORNIA - DEPARTMENT OF TRANSPORTATION
Caltrans
DESIGN

LAST REVISION 04-14-11
DATE PLOTTED => 17-JUN-2011
TIME PLOTTED => 05:42

Dist	COUNTY	ROUTE	POST MILES TOTAL PROJECT	SHEET No.	TOTAL SHEETS
08	SBd	15	3.8/12.8	278	680

REGISTERED CIVIL ENGINEER 4-14-11 DATE

6-13-11
PLANS APPROVAL DATE

REGISTERED PROFESSIONAL ENGINEER
AHMAD SHAH
No. C55259
Exp. 9-30-12
CIVIL
STATE OF CALIFORNIA

THE STATE OF CALIFORNIA OR ITS OFFICERS OR AGENTS SHALL NOT BE RESPONSIBLE FOR THE ACCURACY OR COMPLETENESS OF SCANNED COPIES OF THIS PLAN SHEET.

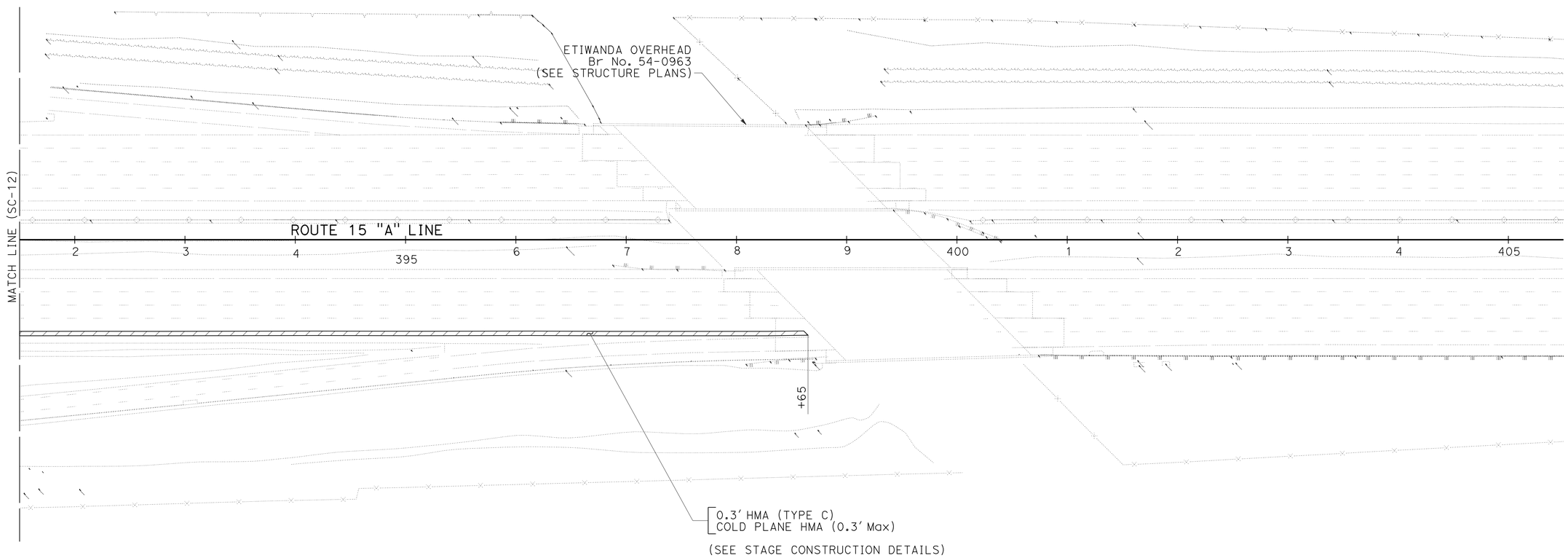

STAGE CONSTRUCTION
STAGE 1
SCALE: 1" = 50'

SC-13

THIS PLAN ACCURATE FOR STAGE CONSTRUCTION WORK ONLY.

REVISED BY | DATE REVISED
TOM NGUYEN | AHMAD SHAH
CALCULATED-DESIGNED BY | CHECKED BY
FUNCTIONAL SUPERVISOR
GEORGE MORHIG

STATE OF CALIFORNIA - DEPARTMENT OF TRANSPORTATION
Caltrans
DESIGN

LAST REVISION 04-14-11
DATE PLOTTED => 17-JUN-2011
TIME PLOTTED => 09:42

Dist	COUNTY	ROUTE	POST MILES TOTAL PROJECT	SHEET No.	TOTAL SHEETS
08	SBd	15	3.8/12.8	279	680

REGISTERED CIVIL ENGINEER 4-14-11 DATE

6-13-11
PLANS APPROVAL DATE

REGISTERED PROFESSIONAL ENGINEER
AHMAD SHAH
No. C55259
Exp. 9-30-12
CIVIL
STATE OF CALIFORNIA

THE STATE OF CALIFORNIA OR ITS OFFICERS OR AGENTS SHALL NOT BE RESPONSIBLE FOR THE ACCURACY OR COMPLETENESS OF SCANNED COPIES OF THIS PLAN SHEET.

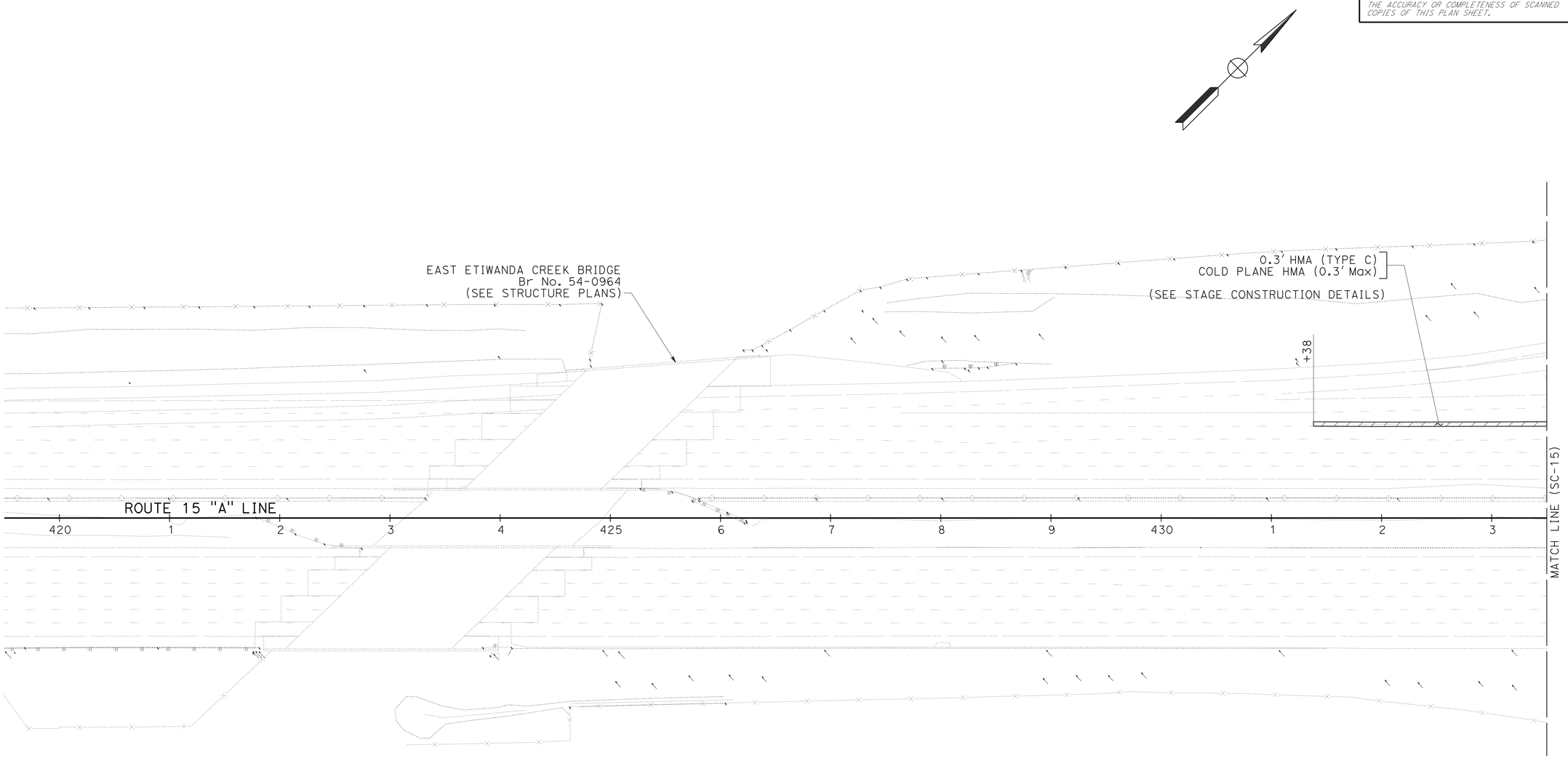

STAGE CONSTRUCTION
STAGE 1

SCALE: 1" = 50'

SC-14

THIS PLAN ACCURATE FOR STAGE CONSTRUCTION WORK ONLY.

STATE OF CALIFORNIA - DEPARTMENT OF TRANSPORTATION
Caltrans®
DESIGN

FUNCTIONAL SUPERVISOR: GEORGE MORHIG
CALCULATED-DESIGNED BY: TOM NGUYEN
CHECKED BY: AHMAD SHAH
REVISED BY
DATE REVISED

LAST REVISION 04-14-11
DATE PLOTTED => 17-JUN-2011
TIME PLOTTED => 05:42

Dist	COUNTY	ROUTE	POST MILES TOTAL PROJECT	SHEET No.	TOTAL SHEETS
08	SBd	15	3.8/12.8	280	680

REGISTERED CIVIL ENGINEER 4-14-11 DATE

6-13-11
PLANS APPROVAL DATE

REGISTERED PROFESSIONAL ENGINEER
AHMAD SHAH
No. C55259
Exp. 9-30-12
CIVIL
STATE OF CALIFORNIA

THE STATE OF CALIFORNIA OR ITS OFFICERS OR AGENTS SHALL NOT BE RESPONSIBLE FOR THE ACCURACY OR COMPLETENESS OF SCANNED COPIES OF THIS PLAN SHEET.

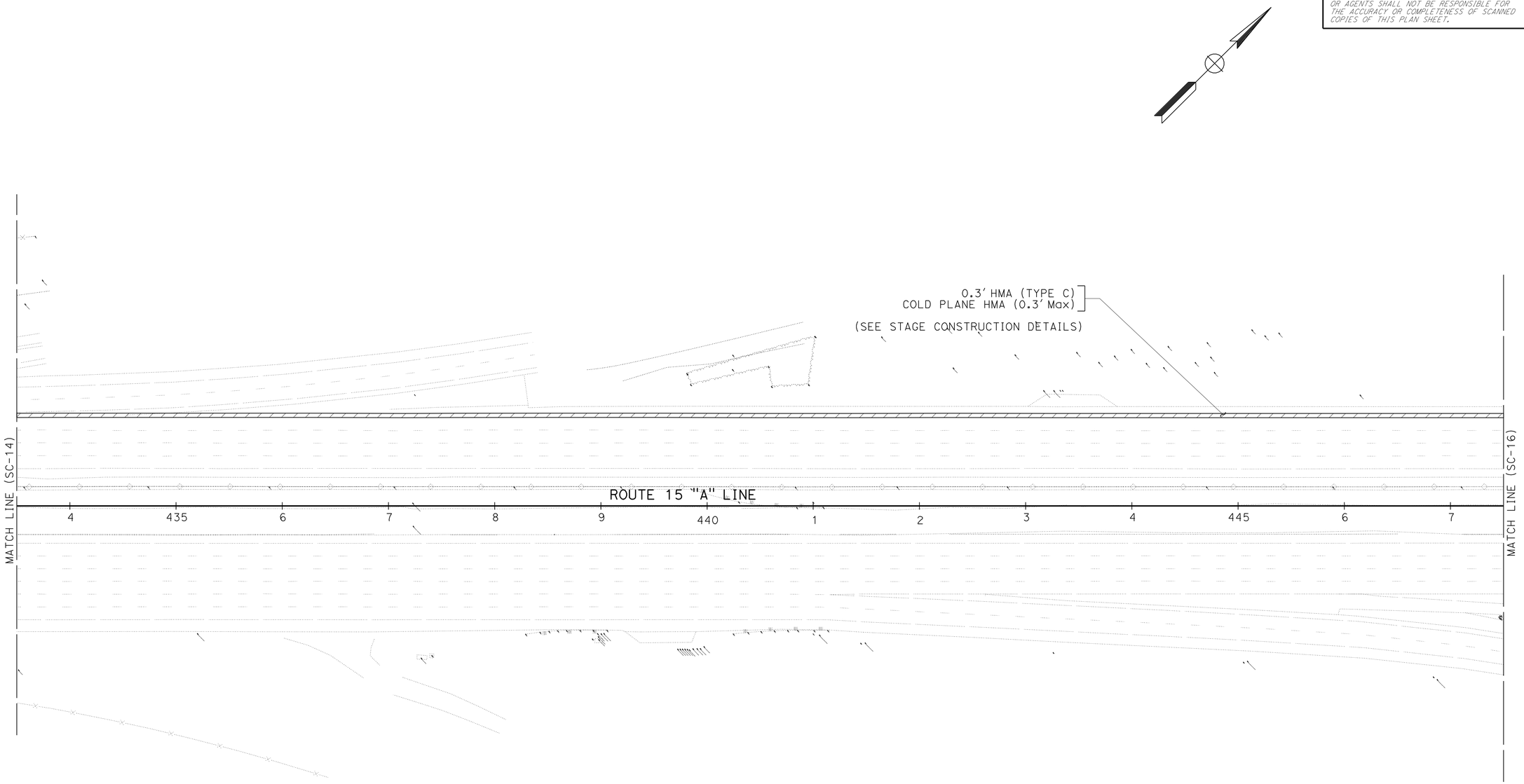

STAGE CONSTRUCTION
STAGE 1
SCALE: 1" = 50'

SC-15

THIS PLAN ACCURATE FOR STAGE CONSTRUCTION WORK ONLY.

STATE OF CALIFORNIA - DEPARTMENT OF TRANSPORTATION
Caltrans
DESIGN

FUNCTIONAL SUPERVISOR: GEORGE MORHIG
CALCULATED-DESIGNED BY: TOM NGUYEN
CHECKED BY: AHMAD SHAH
REVISED BY
DATE REVISED

LAST REVISION 04-14-11
DATE PLOTTED => 17-JUN-2011
TIME PLOTTED => 05:42

Dist	COUNTY	ROUTE	POST MILES TOTAL PROJECT	SHEET No.	TOTAL SHEETS
08	SBd	15	3.8/12.8	281	680

REGISTERED CIVIL ENGINEER 4-14-11 DATE

6-13-11
PLANS APPROVAL DATE

REGISTERED PROFESSIONAL ENGINEER
AHMAD SHAH
No. C55259
Exp. 9-30-12
CIVIL
STATE OF CALIFORNIA

THE STATE OF CALIFORNIA OR ITS OFFICERS OR AGENTS SHALL NOT BE RESPONSIBLE FOR THE ACCURACY OR COMPLETENESS OF SCANNED COPIES OF THIS PLAN SHEET.

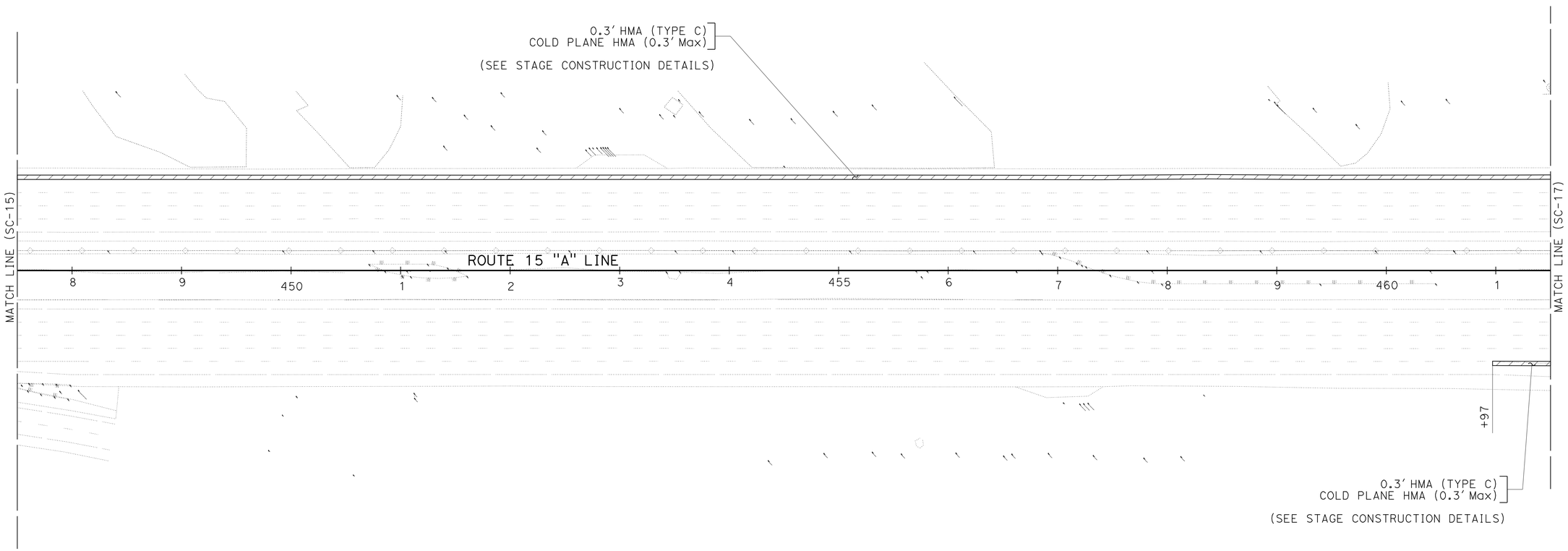

STAGE CONSTRUCTION
STAGE 1
SCALE: 1" = 50'

SC-16

THIS PLAN ACCURATE FOR STATE CONSTRUCTION WORK ONLY.

STATE OF CALIFORNIA - DEPARTMENT OF TRANSPORTATION
Caltrans
DESIGN

FUNCTIONAL SUPERVISOR: GEORGE MORHIG
CALCULATED-DESIGNED BY: TOM NGUYEN
CHECKED BY: AHMAD SHAH
REVISED BY
DATE REVISED

LAST REVISION 04-14-11
DATE PLOTTED => 17-JUN-2011
TIME PLOTTED => 05:42

Dist	COUNTY	ROUTE	POST MILES TOTAL PROJECT	SHEET No.	TOTAL SHEETS
08	SBd	15	3.8/12.8	282	680

REGISTERED CIVIL ENGINEER 4-14-11 DATE

6-13-11
PLANS APPROVAL DATE

REGISTERED PROFESSIONAL ENGINEER
AHMAD SHAH
No. C55259
Exp. 9-30-12
CIVIL
STATE OF CALIFORNIA

THE STATE OF CALIFORNIA OR ITS OFFICERS OR AGENTS SHALL NOT BE RESPONSIBLE FOR THE ACCURACY OR COMPLETENESS OF SCANNED COPIES OF THIS PLAN SHEET.

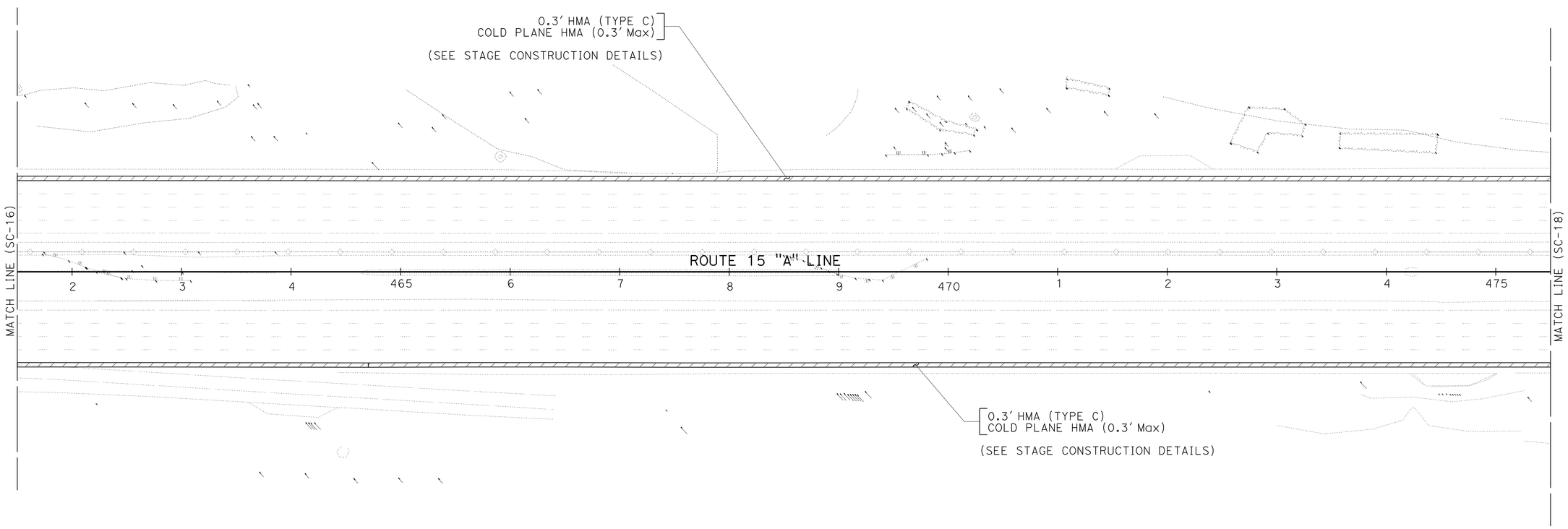

STAGE CONSTRUCTION
STAGE 1
SCALE: 1" = 50'

SC-17

THIS PLAN ACCURATE FOR STAGE CONSTRUCTION WORK ONLY.

STATE OF CALIFORNIA - DEPARTMENT OF TRANSPORTATION
Caltrans®
DESIGN

FUNCTIONAL SUPERVISOR: GEORGE MORHIG
CALCULATED-DESIGNED BY: TOM NGUYEN
CHECKED BY: AHMAD SHAH
REVISED BY
DATE REVISED

LAST REVISION 04-14-11
DATE PLOTTED => 17-JUN-2011
TIME PLOTTED => 05:43

Dist	COUNTY	ROUTE	POST MILES TOTAL PROJECT	SHEET No.	TOTAL SHEETS
08	SBd	15	3.8/12.8	283	680

REGISTERED CIVIL ENGINEER 4-14-11 DATE

6-13-11
PLANS APPROVAL DATE

REGISTERED PROFESSIONAL ENGINEER
AHMAD SHAH
No. C55259
Exp. 9-30-12
CIVIL
STATE OF CALIFORNIA

THE STATE OF CALIFORNIA OR ITS OFFICERS OR AGENTS SHALL NOT BE RESPONSIBLE FOR THE ACCURACY OR COMPLETENESS OF SCANNED COPIES OF THIS PLAN SHEET.

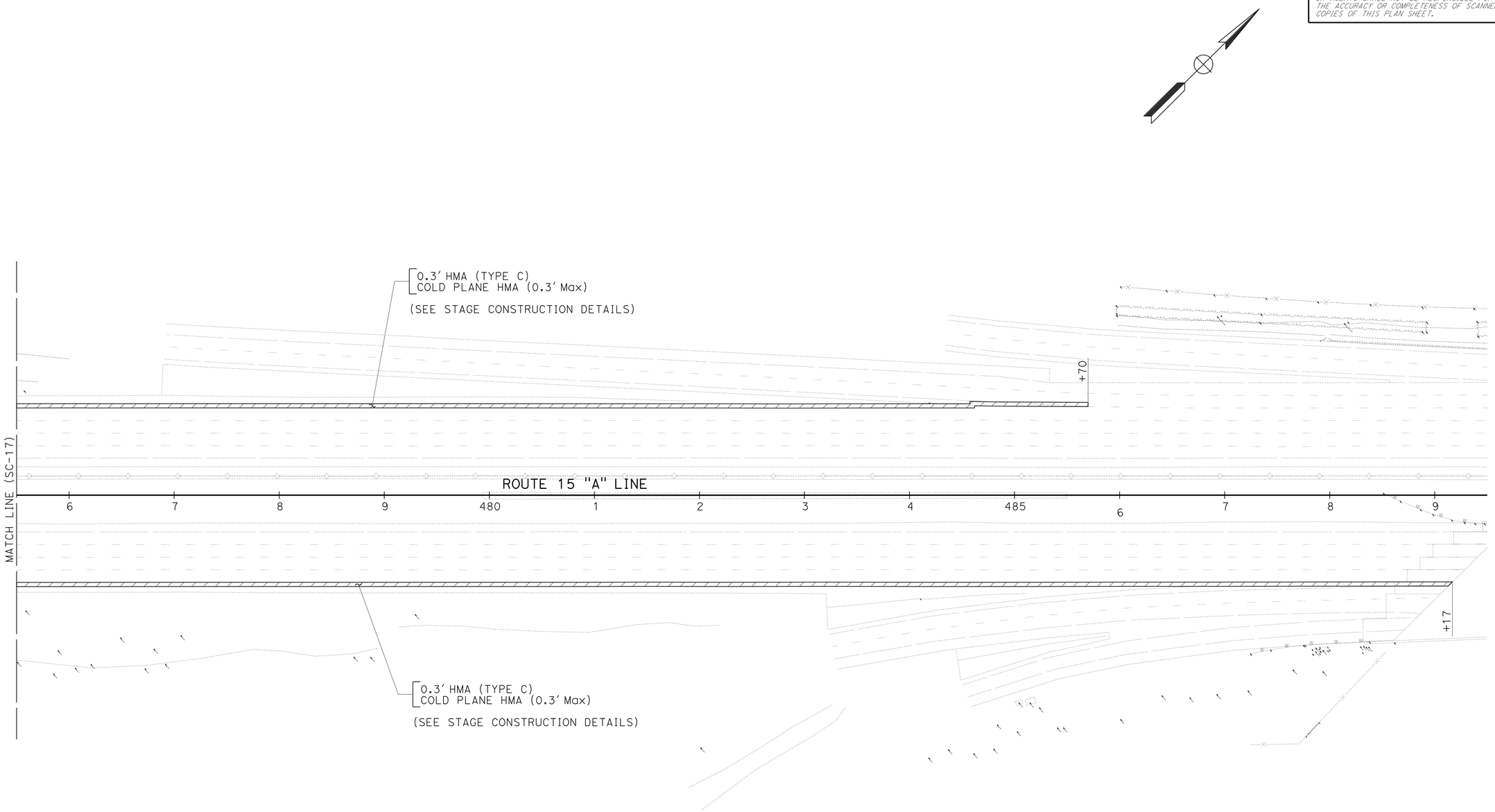

STAGE CONSTRUCTION STAGE 1

SCALE: 1" = 50'

SC-18

THIS PLAN ACCURATE FOR STAGE CONSTRUCTION WORK ONLY.

STATE OF CALIFORNIA - DEPARTMENT OF TRANSPORTATION
Caltrans®
DESIGN

FUNCTIONAL SUPERVISOR: GEORGE MORHIG
CALCULATED-DESIGNED BY: TOM NGUYEN
CHECKED BY: AHMAD SHAH
REVISED BY
DATE REVISED

LAST REVISION 04-14-11
DATE PLOTTED => 17-JUN-2011
TIME PLOTTED => 05:43

Dist	COUNTY	ROUTE	POST MILES TOTAL PROJECT	SHEET No.	TOTAL SHEETS
08	SBd	15	3.8/12.8	284	680

REGISTERED CIVIL ENGINEER 4-14-11 DATE

6-13-11
PLANS APPROVAL DATE

REGISTERED PROFESSIONAL ENGINEER
AHMAD SHAH
No. C55259
Exp. 9-30-12
CIVIL
STATE OF CALIFORNIA

THE STATE OF CALIFORNIA OR ITS OFFICERS OR AGENTS SHALL NOT BE RESPONSIBLE FOR THE ACCURACY OR COMPLETENESS OF SCANNED COPIES OF THIS PLAN SHEET.

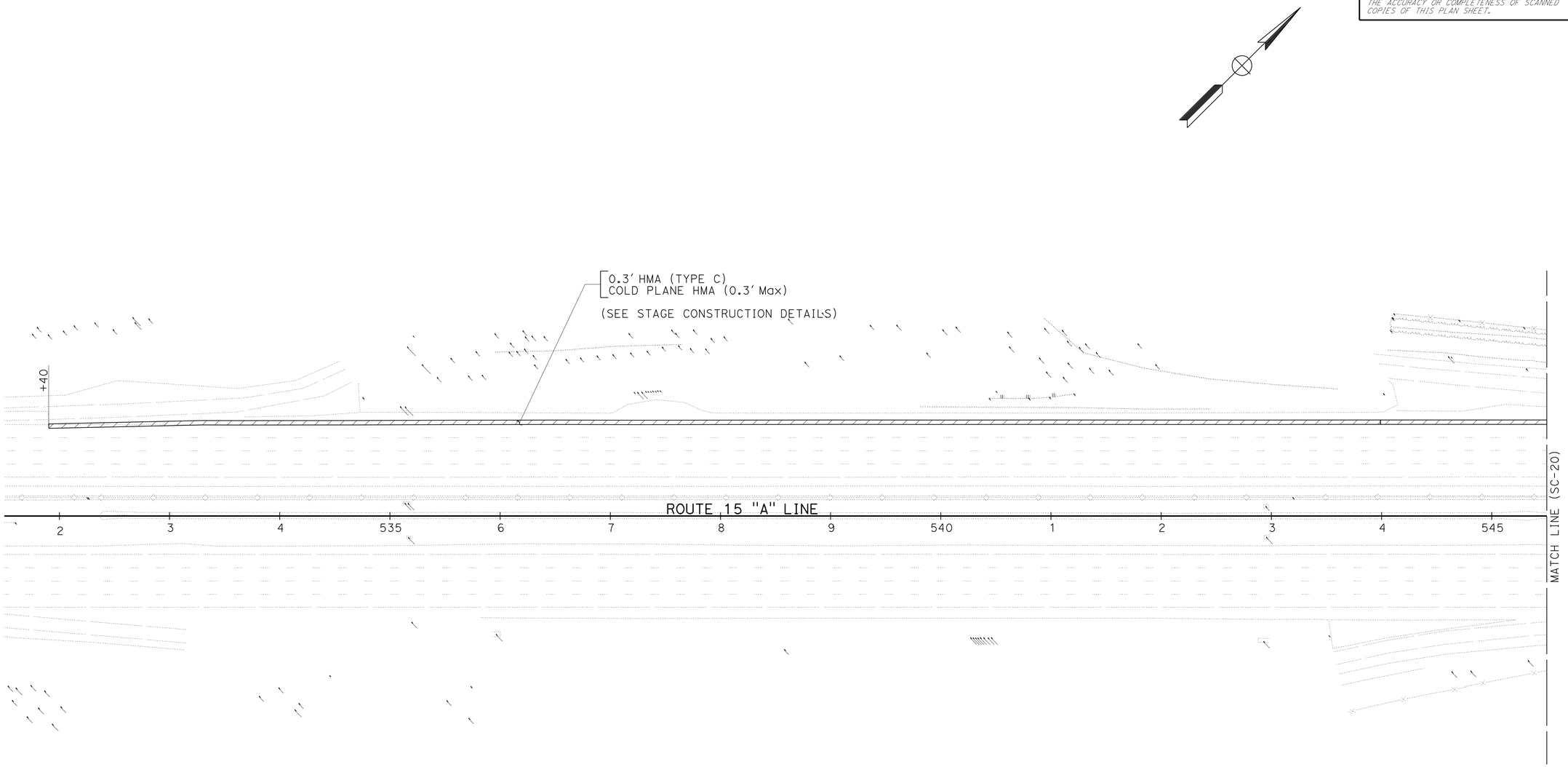

STAGE CONSTRUCTION
STAGE 1

SCALE: 1" = 50'

SC-19

THIS PLAN ACCURATE FOR STAGE CONSTRUCTION WORK ONLY.

STATE OF CALIFORNIA - DEPARTMENT OF TRANSPORTATION
Caltrans
DESIGN

FUNCTIONAL SUPERVISOR: GEORGE MORHIG
CALCULATED-DESIGNED BY: TOM NGUYEN
CHECKED BY: AHMAD SHAH
REVISED BY
DATE REVISED

LAST REVISION 04-14-11
DATE PLOTTED => 17-JUN-2011
TIME PLOTTED => 05:43

Dist	COUNTY	ROUTE	POST MILES TOTAL PROJECT	SHEET No.	TOTAL SHEETS
08	SBd	15	3.8/12.8	285	680

REGISTERED CIVIL ENGINEER 4-14-11 DATE

6-13-11
PLANS APPROVAL DATE

REGISTERED PROFESSIONAL ENGINEER
AHMAD SHAH
No. C55259
Exp. 9-30-12
CIVIL
STATE OF CALIFORNIA

THE STATE OF CALIFORNIA OR ITS OFFICERS OR AGENTS SHALL NOT BE RESPONSIBLE FOR THE ACCURACY OR COMPLETENESS OF SCANNED COPIES OF THIS PLAN SHEET.

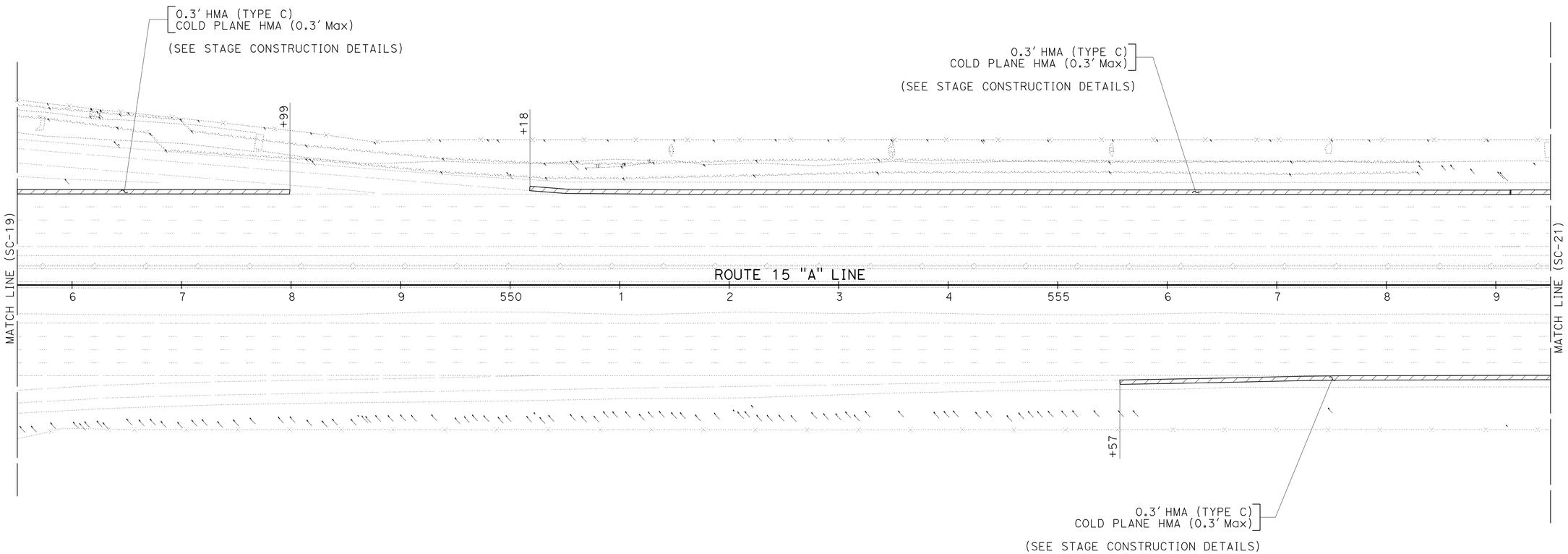

STAGE CONSTRUCTION
STAGE 1
SCALE: 1" = 50'

SC-20

THIS PLAN ACCURATE FOR STAGE CONSTRUCTION WORK ONLY.

STATE OF CALIFORNIA - DEPARTMENT OF TRANSPORTATION
Caltrans®
DESIGN

FUNCTIONAL SUPERVISOR: GEORGE MORHIG
CALCULATED-DESIGNED BY: TOM NGUYEN
CHECKED BY: AHMAD SHAH
REVISED BY
DATE REVISED

LAST REVISION 04-14-11
DATE PLOTTED => 17-JUN-2011
TIME PLOTTED => 05:43

Dist	COUNTY	ROUTE	POST MILES TOTAL PROJECT	SHEET No.	TOTAL SHEETS
08	SBd	15	3.8/12.8	286	680

REGISTERED CIVIL ENGINEER 4-14-11 DATE

6-13-11
PLANS APPROVAL DATE

REGISTERED PROFESSIONAL ENGINEER
AHMAD SHAH
No. C55259
Exp. 9-30-12
CIVIL
STATE OF CALIFORNIA

THE STATE OF CALIFORNIA OR ITS OFFICERS OR AGENTS SHALL NOT BE RESPONSIBLE FOR THE ACCURACY OR COMPLETENESS OF SCANNED COPIES OF THIS PLAN SHEET.

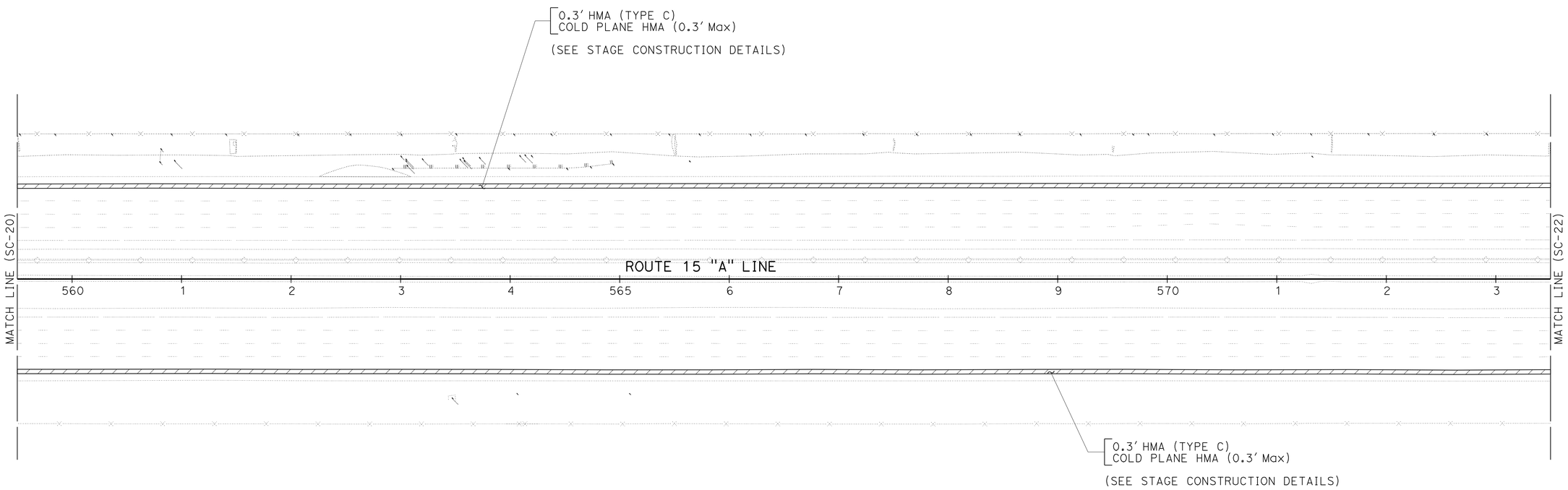

STAGE CONSTRUCTION STAGE 1

SCALE: 1" = 50'

SC-21

THIS PLAN ACCURATE FOR STAGE CONSTRUCTION WORK ONLY.

STATE OF CALIFORNIA - DEPARTMENT OF TRANSPORTATION
Caltrans
DESIGN

FUNCTIONAL SUPERVISOR: GEORGE MORHIG
CALCULATED-DESIGNED BY: TOM NGUYEN
CHECKED BY: AHMAD SHAH
REVISED BY
DATE REVISED

LAST REVISION 04-14-11
DATE PLOTTED => 17-JUN-2011
TIME PLOTTED => 05:43

Dist	COUNTY	ROUTE	POST MILES TOTAL PROJECT	SHEET No.	TOTAL SHEETS
08	SBd	15	3.8/12.8	287	680

REGISTERED CIVIL ENGINEER 4-14-11 DATE

6-13-11
PLANS APPROVAL DATE

REGISTERED PROFESSIONAL ENGINEER
AHMAD SHAH
No. C55259
Exp. 9-30-12
CIVIL
STATE OF CALIFORNIA

THE STATE OF CALIFORNIA OR ITS OFFICERS OR AGENTS SHALL NOT BE RESPONSIBLE FOR THE ACCURACY OR COMPLETENESS OF SCANNED COPIES OF THIS PLAN SHEET.

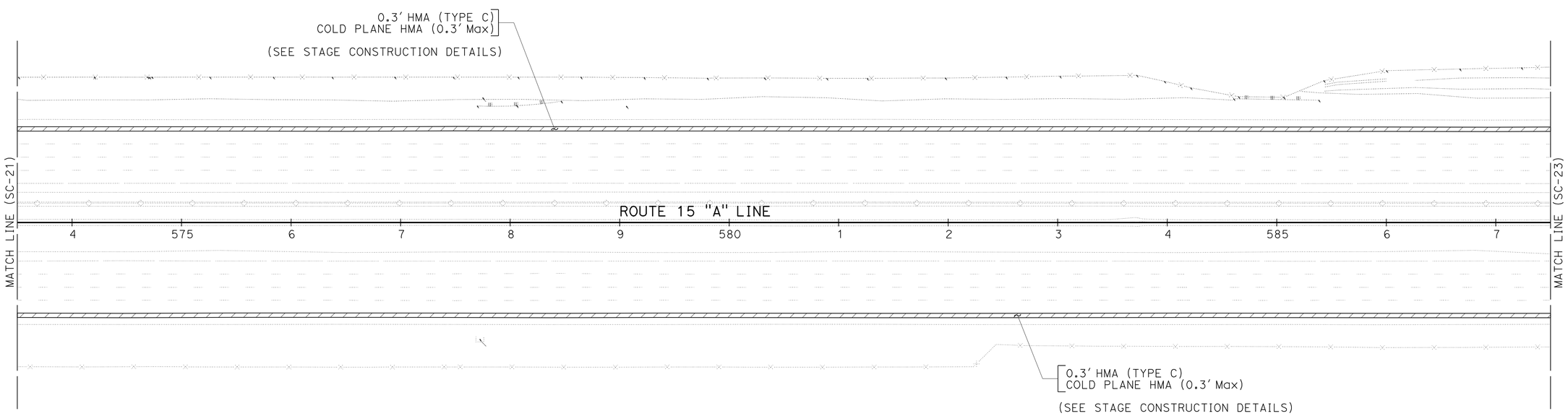

STAGE CONSTRUCTION
STAGE 1
SCALE: 1" = 50'

SC-22

THIS PLAN ACCURATE FOR STAGE CONSTRUCTION WORK ONLY.

STATE OF CALIFORNIA - DEPARTMENT OF TRANSPORTATION
Caltrans® DESIGN

FUNCTIONAL SUPERVISOR: GEORGE MORHIG
CALCULATED-DESIGNED BY: TOM NGUYEN
CHECKED BY: AHMAD SHAH
REVISED BY
DATE REVISED

LAST REVISION 04-14-11
DATE PLOTTED => 17-JUN-2011
TIME PLOTTED => 05:43

Dist	COUNTY	ROUTE	POST MILES TOTAL PROJECT	SHEET No.	TOTAL SHEETS
08	SBd	15	3.8/12.8	288	680

REGISTERED CIVIL ENGINEER 4-14-11 DATE

6-13-11
PLANS APPROVAL DATE

REGISTERED PROFESSIONAL ENGINEER
AHMAD SHAH
No. C55259
Exp. 9-30-12
CIVIL
STATE OF CALIFORNIA

THE STATE OF CALIFORNIA OR ITS OFFICERS OR AGENTS SHALL NOT BE RESPONSIBLE FOR THE ACCURACY OR COMPLETENESS OF SCANNED COPIES OF THIS PLAN SHEET.

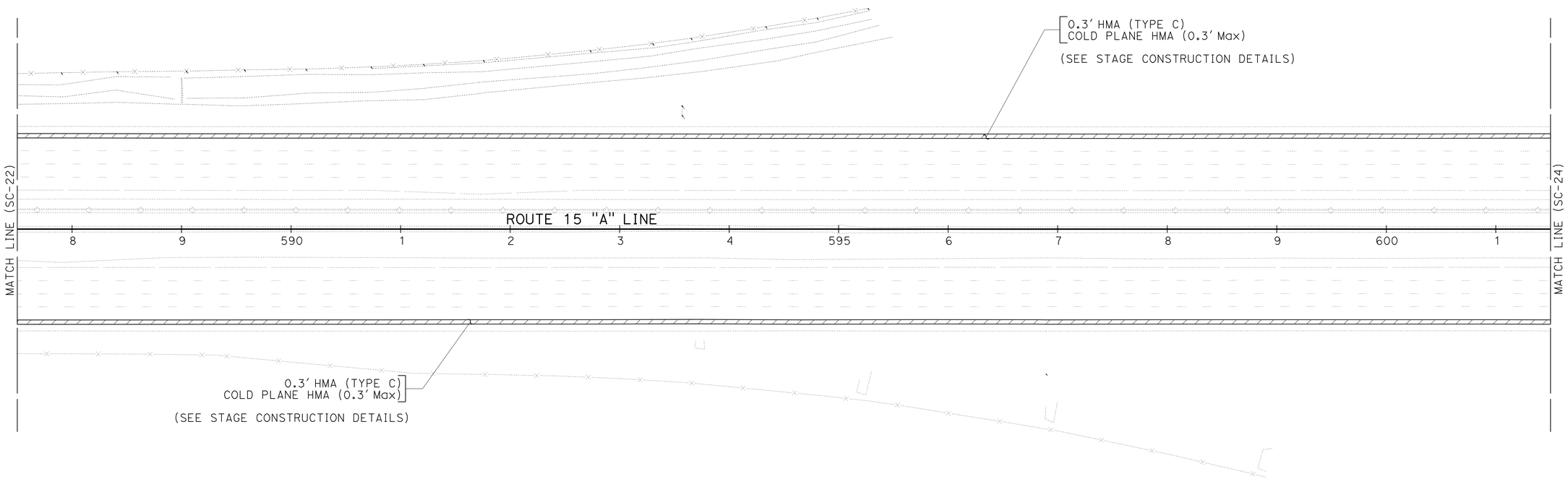

STAGE CONSTRUCTION STAGE 1

SCALE: 1" = 50'

SC-23

THIS PLAN ACCURATE FOR STAGE CONSTRUCTION WORK ONLY.

STATE OF CALIFORNIA - DEPARTMENT OF TRANSPORTATION
Caltrans
DESIGN

FUNCTIONAL SUPERVISOR: GEORGE MORHIG
CALCULATED-DESIGNED BY: TOM NGUYEN
CHECKED BY: AHMAD SHAH
REVISED BY
DATE REVISED

LAST REVISION 04-14-11
DATE PLOTTED => 17-JUN-2011
TIME PLOTTED => 05:43

Dist	COUNTY	ROUTE	POST MILES TOTAL PROJECT	SHEET No.	TOTAL SHEETS
08	SBd	15	3.8/12.8	289	680

REGISTERED CIVIL ENGINEER 4-14-11 DATE

6-13-11
PLANS APPROVAL DATE

REGISTERED PROFESSIONAL ENGINEER
AHMAD SHAH
No. C55259
Exp. 9-30-12
CIVIL
STATE OF CALIFORNIA

THE STATE OF CALIFORNIA OR ITS OFFICERS OR AGENTS SHALL NOT BE RESPONSIBLE FOR THE ACCURACY OR COMPLETENESS OF SCANNED COPIES OF THIS PLAN SHEET.

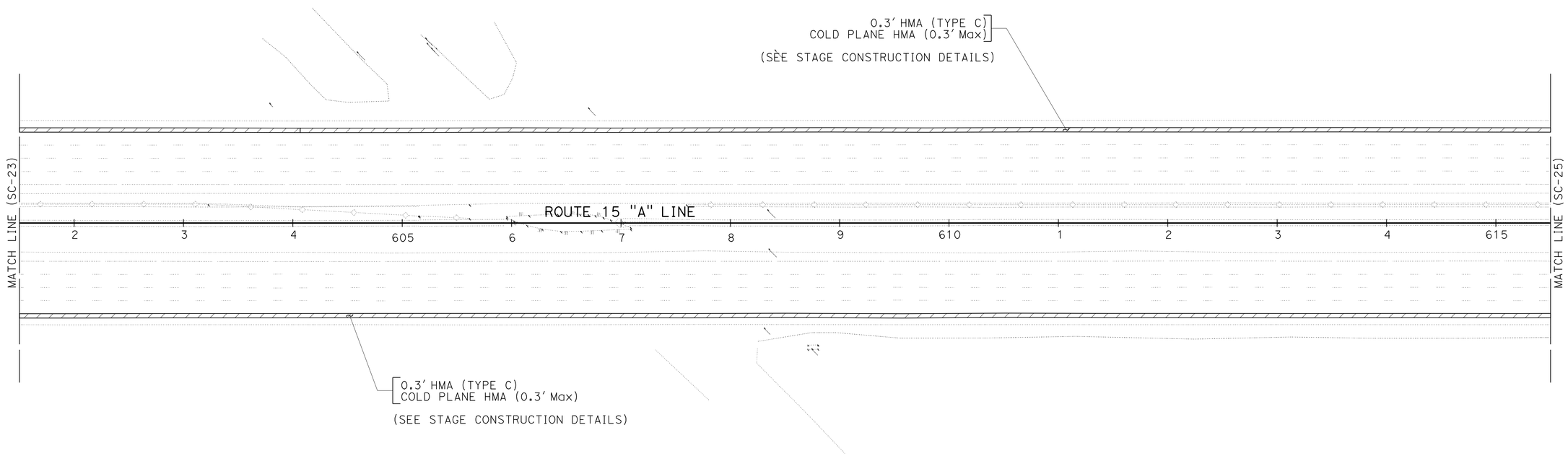

STAGE CONSTRUCTION STAGE 1

SCALE: 1" = 50'

SC-24

THIS PLAN ACCURATE FOR STAGE CONSTRUCTION WORK ONLY.

STATE OF CALIFORNIA - DEPARTMENT OF TRANSPORTATION
Caltrans
DESIGN

FUNCTIONAL SUPERVISOR: GEORGE MORHIG
CALCULATED-DESIGNED BY: TOM NGUYEN
CHECKED BY: AHMAD SHAH
REVISED BY
DATE REVISED

LAST REVISION 04-14-11
DATE PLOTTED => 17-JUN-2011
TIME PLOTTED => 05:43

Dist	COUNTY	ROUTE	POST MILES TOTAL PROJECT	SHEET No.	TOTAL SHEETS
08	SBd	15	3.8/12.8	290	680

REGISTERED CIVIL ENGINEER 4-14-11 DATE

6-13-11
PLANS APPROVAL DATE

REGISTERED PROFESSIONAL ENGINEER
AHMAD SHAH
No. C55259
Exp. 9-30-12
CIVIL
STATE OF CALIFORNIA

THE STATE OF CALIFORNIA OR ITS OFFICERS OR AGENTS SHALL NOT BE RESPONSIBLE FOR THE ACCURACY OR COMPLETENESS OF SCANNED COPIES OF THIS PLAN SHEET.

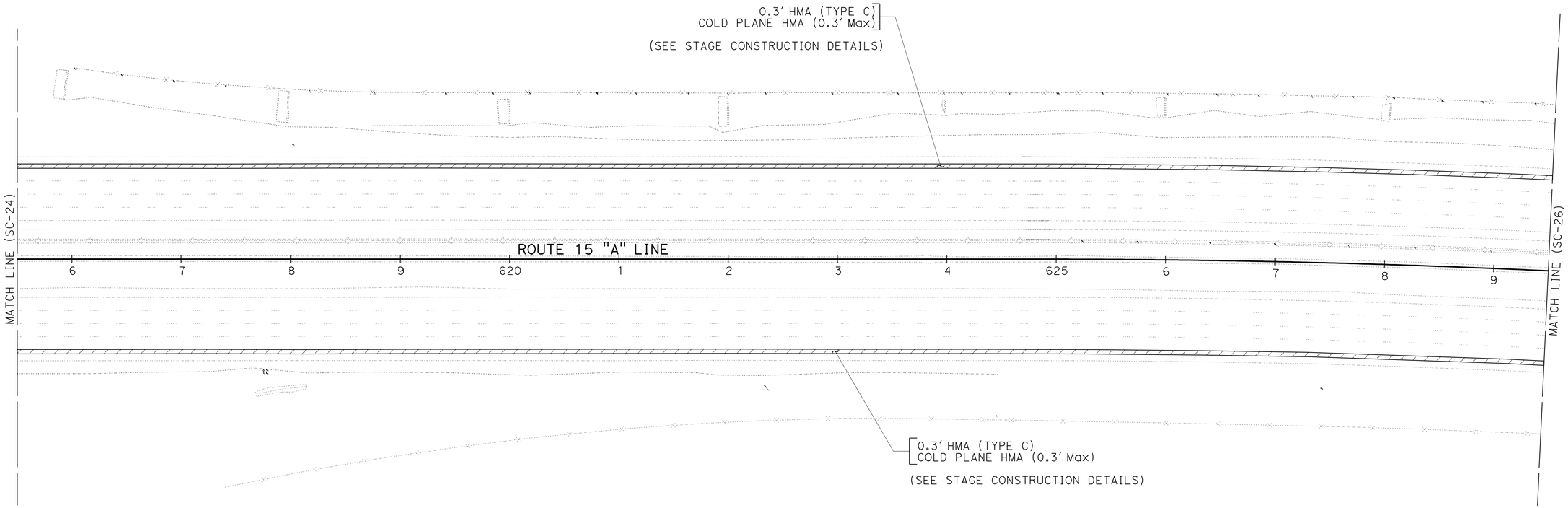

STAGE CONSTRUCTION
STAGE 1
SCALE: 1" = 50'

SC-25

THIS PLAN ACCURATE FOR STAGE CONSTRUCTION WORK ONLY.

STATE OF CALIFORNIA - DEPARTMENT OF TRANSPORTATION
Caltrans
DESIGN

FUNCTIONAL SUPERVISOR: GEORGE MORHIG
CALCULATED-DESIGNED BY: TOM NGUYEN
CHECKED BY: AHMAD SHAH
REVISED BY
DATE REVISED

LAST REVISION 04-14-11
DATE PLOTTED => 17-JUN-2011
TIME PLOTTED => 09:43

Dist	COUNTY	ROUTE	POST MILES TOTAL PROJECT	SHEET No.	TOTAL SHEETS
08	SBd	15	3.8/12.8	291	680

REGISTERED CIVIL ENGINEER 4-14-11 DATE

6-13-11
PLANS APPROVAL DATE

REGISTERED PROFESSIONAL ENGINEER
AHMAD SHAH
No. C55259
Exp. 9-30-12
CIVIL
STATE OF CALIFORNIA

THE STATE OF CALIFORNIA OR ITS OFFICERS OR AGENTS SHALL NOT BE RESPONSIBLE FOR THE ACCURACY OR COMPLETENESS OF SCANNED COPIES OF THIS PLAN SHEET.

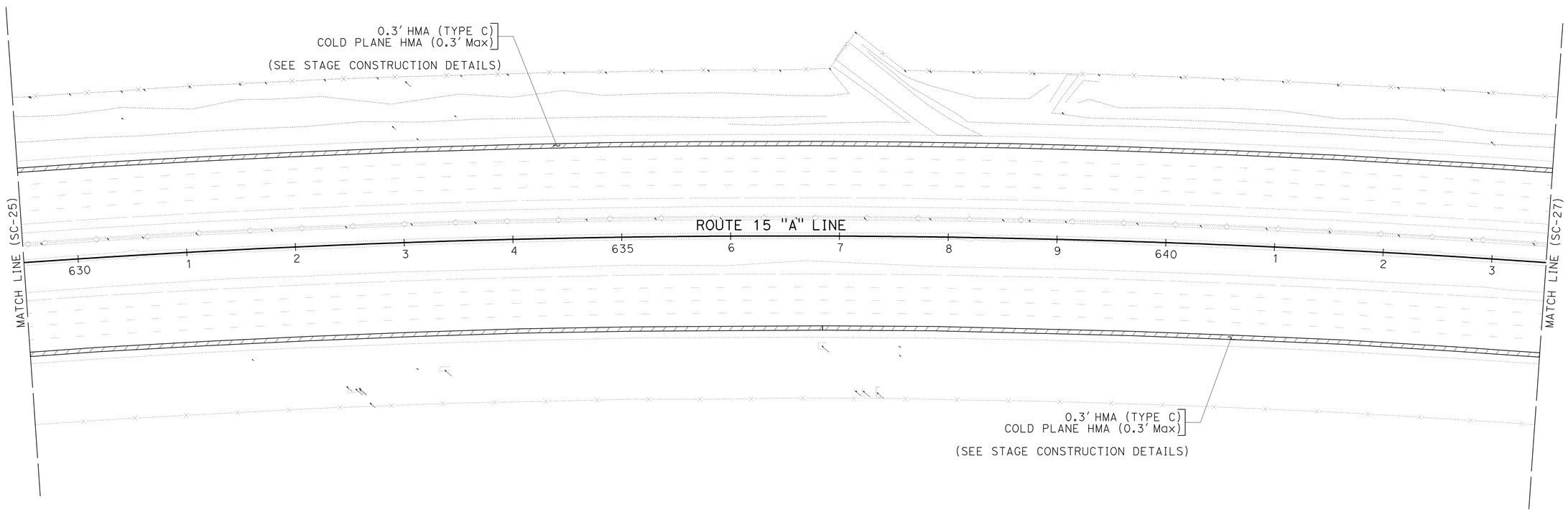

STAGE CONSTRUCTION
STAGE 1
SCALE: 1" = 50'

SC-26

THIS PLAN ACCURATE FOR STAGE CONSTRUCTION WORK ONLY.

STATE OF CALIFORNIA - DEPARTMENT OF TRANSPORTATION
Caltrans
DESIGN

FUNCTIONAL SUPERVISOR: GEORGE MORHIG
CALCULATED-DESIGNED BY: TOM NGUYEN
CHECKED BY: AHMAD SHAH
REVISED BY
DATE REVISED

LAST REVISION 04-14-11
DATE PLOTTED => 17-JUN-2011
TIME PLOTTED => 05:43

Dist	COUNTY	ROUTE	POST MILES TOTAL PROJECT	SHEET No.	TOTAL SHEETS
08	SBd	15	3.8/12.8	292	680

REGISTERED CIVIL ENGINEER 4-14-11 DATE

6-13-11
PLANS APPROVAL DATE

REGISTERED PROFESSIONAL ENGINEER
AHMAD SHAH
No. C55259
Exp. 9-30-12
CIVIL
STATE OF CALIFORNIA

THE STATE OF CALIFORNIA OR ITS OFFICERS OR AGENTS SHALL NOT BE RESPONSIBLE FOR THE ACCURACY OR COMPLETENESS OF SCANNED COPIES OF THIS PLAN SHEET.

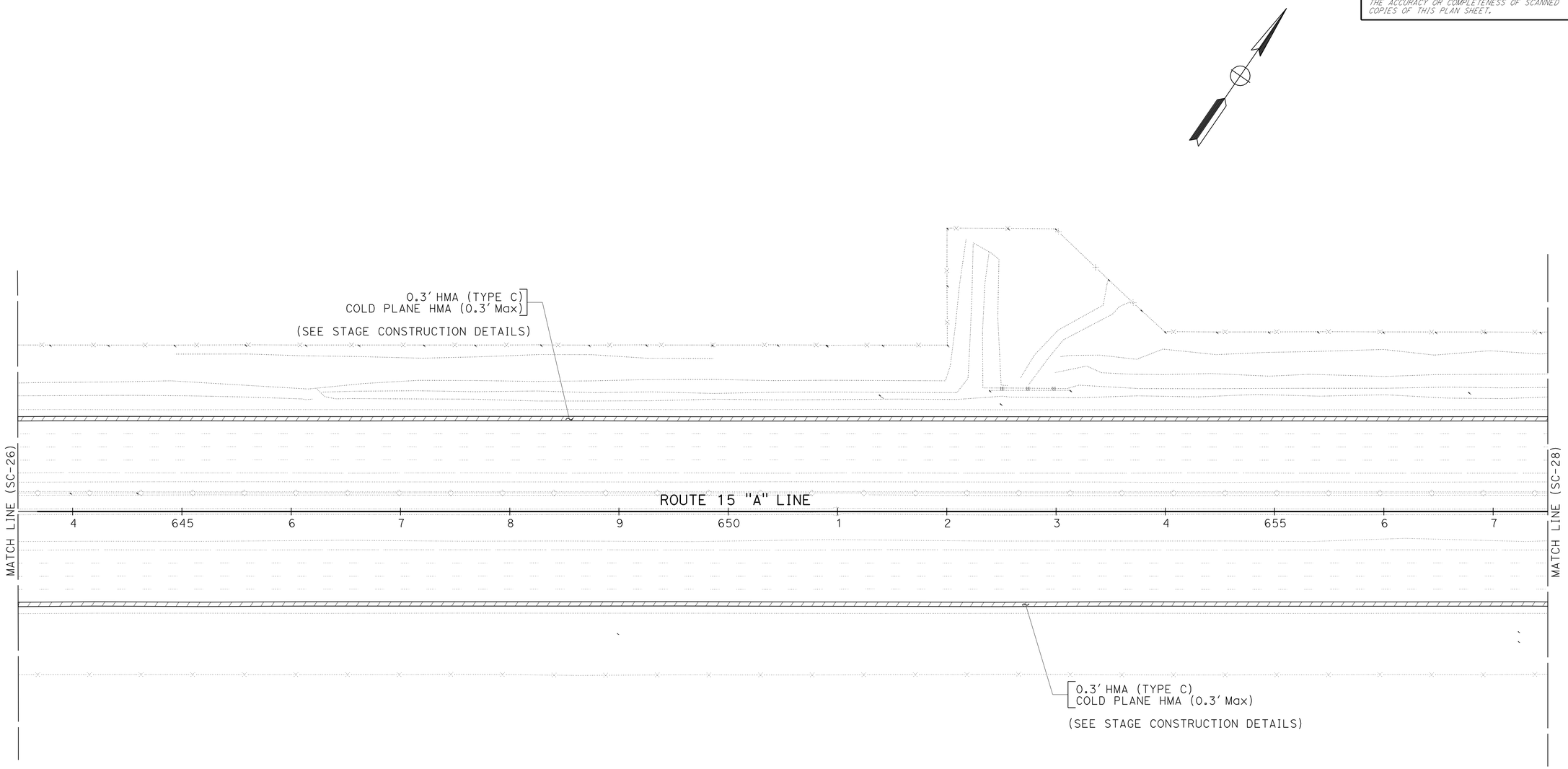

STAGE CONSTRUCTION
STAGE 1
SCALE: 1" = 50'

SC-27

THIS PLAN ACCURATE FOR STAGE CONSTRUCTION WORK ONLY.

STATE OF CALIFORNIA - DEPARTMENT OF TRANSPORTATION
Caltrans
DESIGN

FUNCTIONAL SUPERVISOR: GEORGE MORHIG
CALCULATED-DESIGNED BY: TOM NGUYEN
CHECKED BY: AHMAD SHAH
REVISED BY
DATE REVISED

LAST REVISION 04-14-11
DATE PLOTTED => 17-JUN-2011
TIME PLOTTED => 09:43

Dist	COUNTY	ROUTE	POST MILES TOTAL PROJECT	SHEET No.	TOTAL SHEETS
08	SBd	15	3.8/12.8	293	680

REGISTERED CIVIL ENGINEER 4-14-11 DATE

6-13-11
PLANS APPROVAL DATE

REGISTERED PROFESSIONAL ENGINEER
AHMAD SHAH
No. C55259
Exp. 9-30-12
CIVIL
STATE OF CALIFORNIA

THE STATE OF CALIFORNIA OR ITS OFFICERS OR AGENTS SHALL NOT BE RESPONSIBLE FOR THE ACCURACY OR COMPLETENESS OF SCANNED COPIES OF THIS PLAN SHEET.

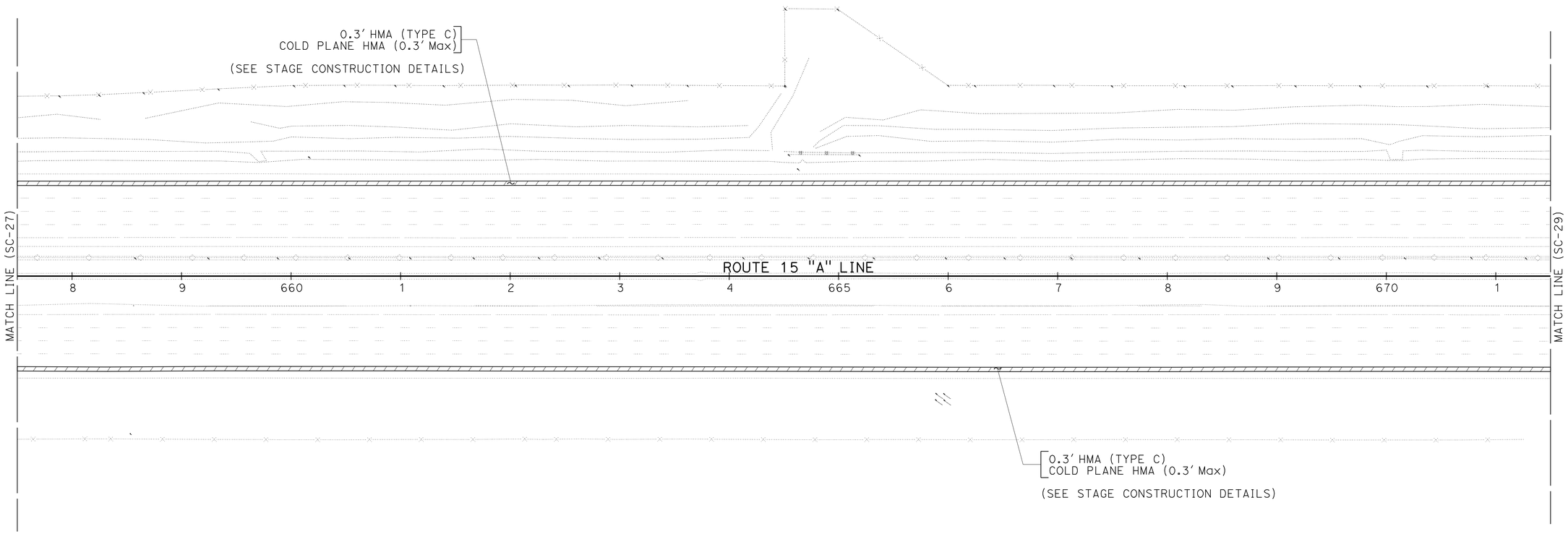

STAGE CONSTRUCTION
STAGE 1
SCALE: 1" = 50'

SC-28

THIS PLAN ACCURATE FOR STAGE CONSTRUCTION WORK ONLY.

STATE OF CALIFORNIA - DEPARTMENT OF TRANSPORTATION
Caltrans
DESIGN

FUNCTIONAL SUPERVISOR: GEORGE MORHIG
CALCULATED-DESIGNED BY: TOM NGUYEN
CHECKED BY: AHMAD SHAH
REVISED BY
DATE REVISED

LAST REVISION 04-14-11
DATE PLOTTED => 17-JUN-2011
TIME PLOTTED => 05:44

Dist	COUNTY	ROUTE	POST MILES TOTAL PROJECT	SHEET No.	TOTAL SHEETS
08	SBd	15	3.8/12.8	294	680

REGISTERED CIVIL ENGINEER 4-14-11 DATE

6-13-11
PLANS APPROVAL DATE

REGISTERED PROFESSIONAL ENGINEER
AHMAD SHAH
No. C55259
Exp. 9-30-12
CIVIL
STATE OF CALIFORNIA

THE STATE OF CALIFORNIA OR ITS OFFICERS OR AGENTS SHALL NOT BE RESPONSIBLE FOR THE ACCURACY OR COMPLETENESS OF SCANNED COPIES OF THIS PLAN SHEET.

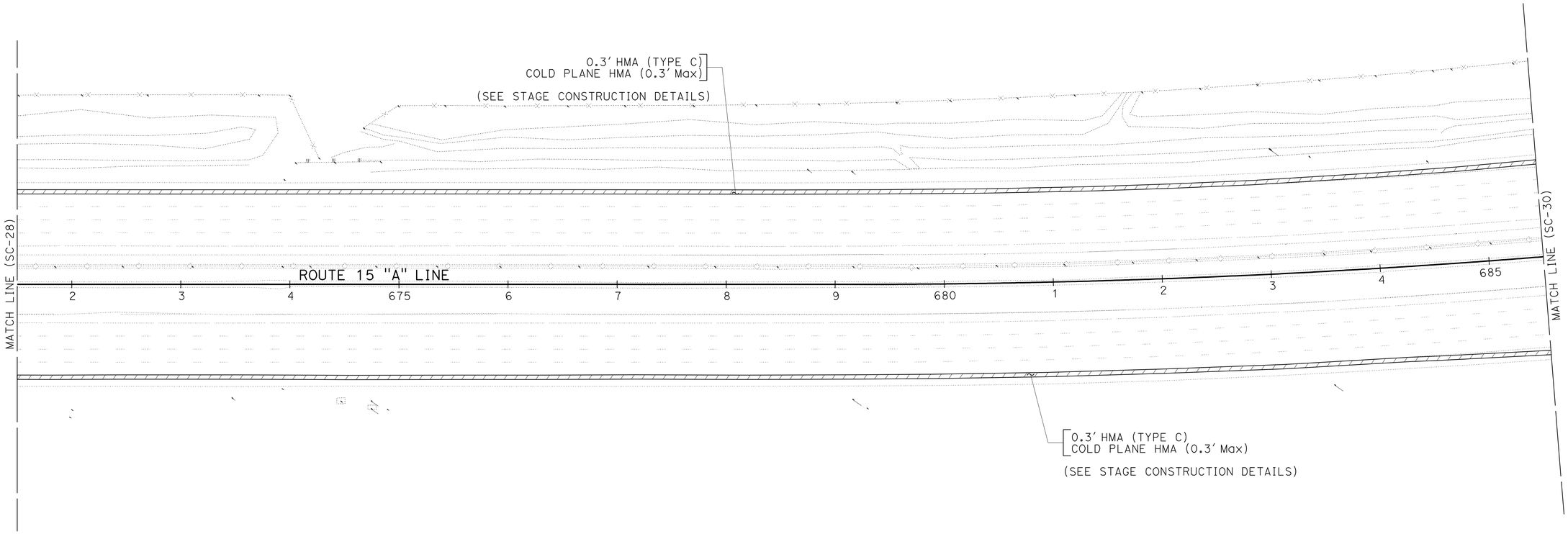

STAGE CONSTRUCTION
STAGE 1
SCALE: 1" = 50'

SC-29

THIS PLAN ACCURATE FOR STAGE CONSTRUCTION WORK ONLY.

STATE OF CALIFORNIA - DEPARTMENT OF TRANSPORTATION
Caltrans
DESIGN

FUNCTIONAL SUPERVISOR: GEORGE MORHIG
CALCULATED-DESIGNED BY: TOM NGUYEN
CHECKED BY: AHMAD SHAH
REVISED BY
DATE REVISED

LAST REVISION 04-14-11
DATE PLOTTED => 17-JUN-2011
TIME PLOTTED => 05:44

Dist	COUNTY	ROUTE	POST MILES TOTAL PROJECT	SHEET No.	TOTAL SHEETS
08	SBd	15	3.8/12.8	295	680

REGISTERED CIVIL ENGINEER 4-14-11 DATE

6-13-11
PLANS APPROVAL DATE

REGISTERED PROFESSIONAL ENGINEER
AHMAD SHAH
No. C55259
Exp. 9-30-12
CIVIL
STATE OF CALIFORNIA

THE STATE OF CALIFORNIA OR ITS OFFICERS OR AGENTS SHALL NOT BE RESPONSIBLE FOR THE ACCURACY OR COMPLETENESS OF SCANNED COPIES OF THIS PLAN SHEET.

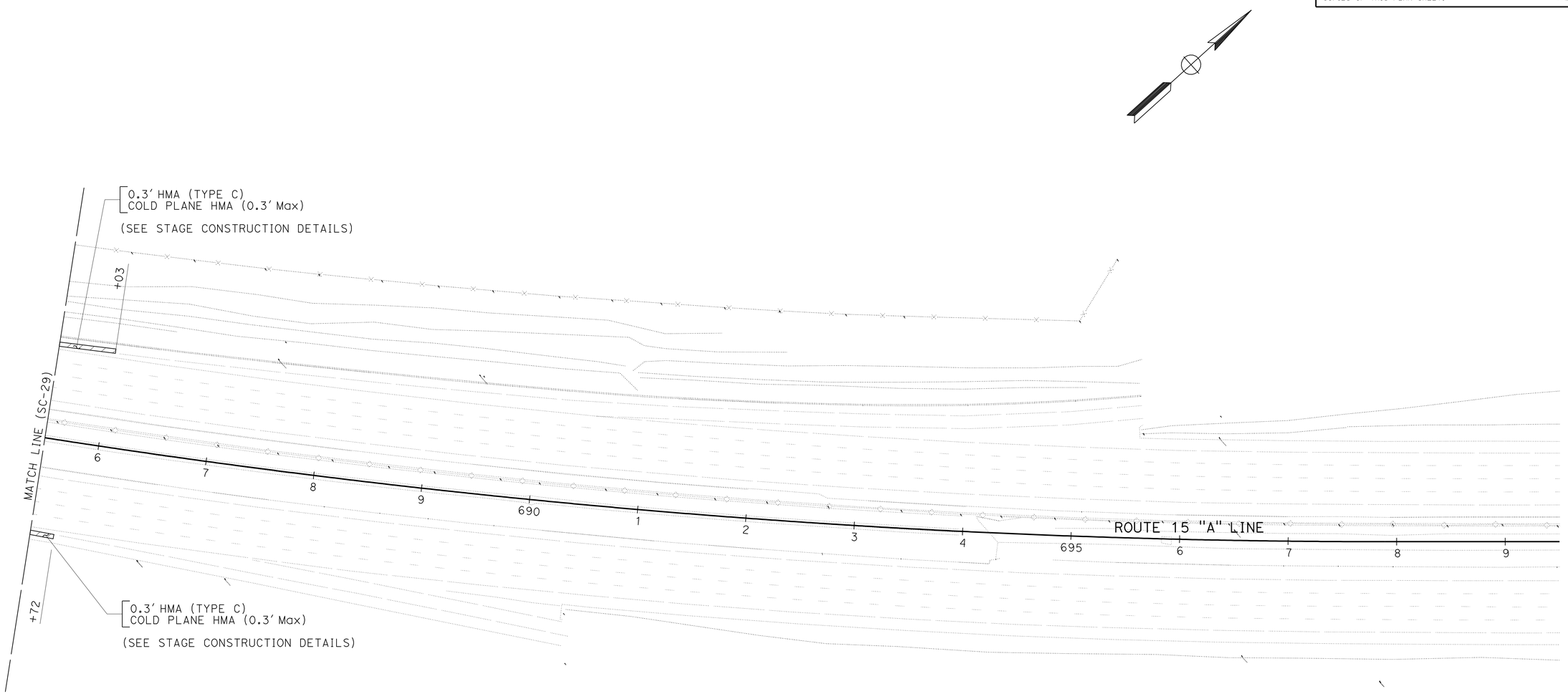

STAGE CONSTRUCTION STAGE 1

SCALE: 1" = 50'

SC-30

THIS PLAN ACCURATE FOR STAGE CONSTRUCTION WORK ONLY.

STATE OF CALIFORNIA - DEPARTMENT OF TRANSPORTATION
Caltrans®
DESIGN

FUNCTIONAL SUPERVISOR: GEORGE MORHIG
CALCULATED-DESIGNED BY: TOM NGUYEN
CHECKED BY: AHMAD SHAH
REVISED BY
DATE REVISED

LAST REVISION 04-14-11
DATE PLOTTED => 17-JUN-2011
TIME PLOTTED => 05:44

Dist	COUNTY	ROUTE	POST MILES TOTAL PROJECT	SHEET No.	TOTAL SHEETS
08	SBd	15	3.8/12.8	296	680

REGISTERED CIVIL ENGINEER 4-14-11 DATE

6-13-11
PLANS APPROVAL DATE

REGISTERED PROFESSIONAL ENGINEER AHMAD SHAH No. C55259 Exp. 9-30-12 CIVIL STATE OF CALIFORNIA

THE STATE OF CALIFORNIA OR ITS OFFICERS OR AGENTS SHALL NOT BE RESPONSIBLE FOR THE ACCURACY OR COMPLETENESS OF SCANNED COPIES OF THIS PLAN SHEET.

NOTES:

1. PRIOR TO CONSTRUCTION OF STAGE 3, CONSTRUCT AND PLACE ALL MEDIAN DTBB, CONCRETE BARRIER (TYPE 60C), AND PORTABLE CONCRETE BARRIER (TYPE 60K).
2. FOR STAGE 2, SEE TRAFFIC HANDLING PLANS.
3. FOR CONNECTION OF PORTABLE CONCRETE BARRIER TO BRIDGE RAILING, SEE LAYOUT SHEETS AND CONSTRUCTION DETAIL SHEETS.

LEGEND:

- STAGE CONSTRUCTION 1
- STAGE CONSTRUCTION 3 (HMA SHOULDER)
- STAGE CONSTRUCTION 3B (RAPID STRENGTH CONCRETE) UP TO 24 HOURS WORK WINDOW
- STAGE CONSTRUCTION 3
- STAGE CONSTRUCTION 3A (RAPID STRENGTH CONCRETE) UP TO 48 HOURS WORK WINDOW
- WORK COMPLETED IN PREVIOUS STAGES
- PCB - PORTABLE CONCRETE BARRIER (TYPE 60K) AND CONCRETE BARRIER (TYPE 60C)

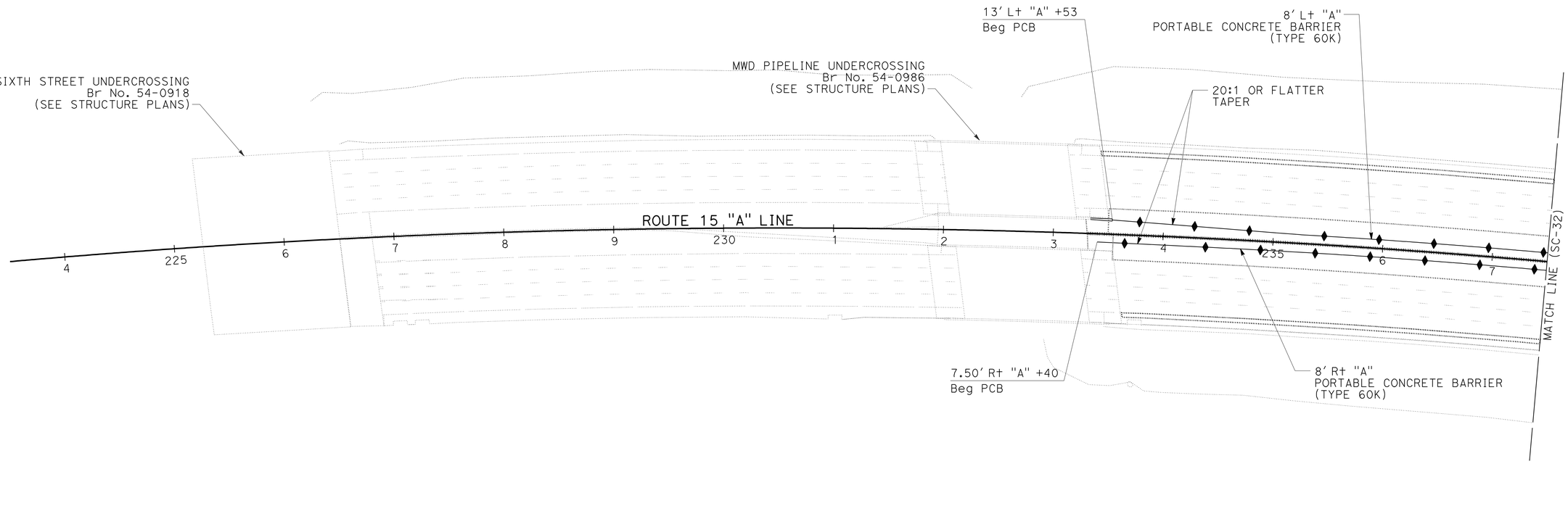

STAGE CONSTRUCTION STAGE 3

SCALE: 1" = 50′

SC-31

THIS PLAN ACCURATE FOR STAGE CONSTRUCTION WORK ONLY.

STATE OF CALIFORNIA - DEPARTMENT OF TRANSPORTATION
Caltrans® DESIGN

FUNCTIONAL SUPERVISOR: GEORGE MORHIG
CALCULATED-DESIGNED BY: TOM NGUYEN
CHECKED BY: AHMAD SHAH
REVISED BY
DATE REVISED

LAST REVISION 04-14-11
DATE PLOTTED => 17-JUN-2011
TIME PLOTTED => 05:44

Dist	COUNTY	ROUTE	POST MILES TOTAL PROJECT	SHEET No.	TOTAL SHEETS
08	SBd	15	3.8/12.8	297	680

REGISTERED CIVIL ENGINEER 4-14-11 DATE

6-13-11
PLANS APPROVAL DATE

REGISTERED PROFESSIONAL ENGINEER
AHMAD SHAH
No. C55259
Exp. 9-30-12
CIVIL
STATE OF CALIFORNIA

THE STATE OF CALIFORNIA OR ITS OFFICERS OR AGENTS SHALL NOT BE RESPONSIBLE FOR THE ACCURACY OR COMPLETENESS OF SCANNED COPIES OF THIS PLAN SHEET.

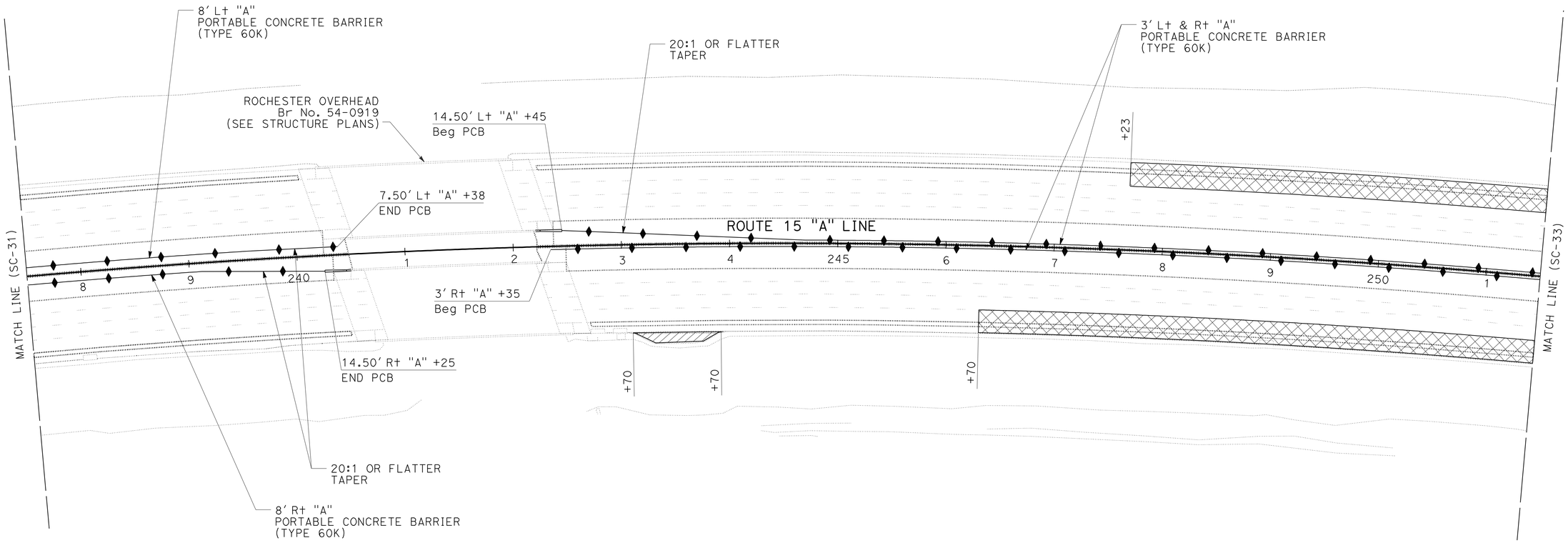

STAGE CONSTRUCTION
STAGE 3

SCALE: 1" = 50′

SC-32

THIS PLAN ACCURATE FOR STAGE CONSTRUCTION WORK ONLY.

STATE OF CALIFORNIA - DEPARTMENT OF TRANSPORTATION
Caltrans®
DESIGN

FUNCTIONAL SUPERVISOR: GEORGE MORHIG
CALCULATED-DESIGNED BY: TOM NGUYEN
CHECKED BY: AHMAD SHAH
REVISED BY
DATE REVISED

LAST REVISION 04-14-11
DATE PLOTTED => 17-JUN-2011
TIME PLOTTED => 05:44

Dist	COUNTY	ROUTE	POST MILES TOTAL PROJECT	SHEET No.	TOTAL SHEETS
08	SBd	15	3.8/12.8	298	680

REGISTERED CIVIL ENGINEER 4-14-11 DATE

6-13-11
PLANS APPROVAL DATE

REGISTERED PROFESSIONAL ENGINEER
AHMAD SHAH
No. C55259
Exp. 9-30-12
CIVIL
STATE OF CALIFORNIA

THE STATE OF CALIFORNIA OR ITS OFFICERS OR AGENTS SHALL NOT BE RESPONSIBLE FOR THE ACCURACY OR COMPLETENESS OF SCANNED COPIES OF THIS PLAN SHEET.

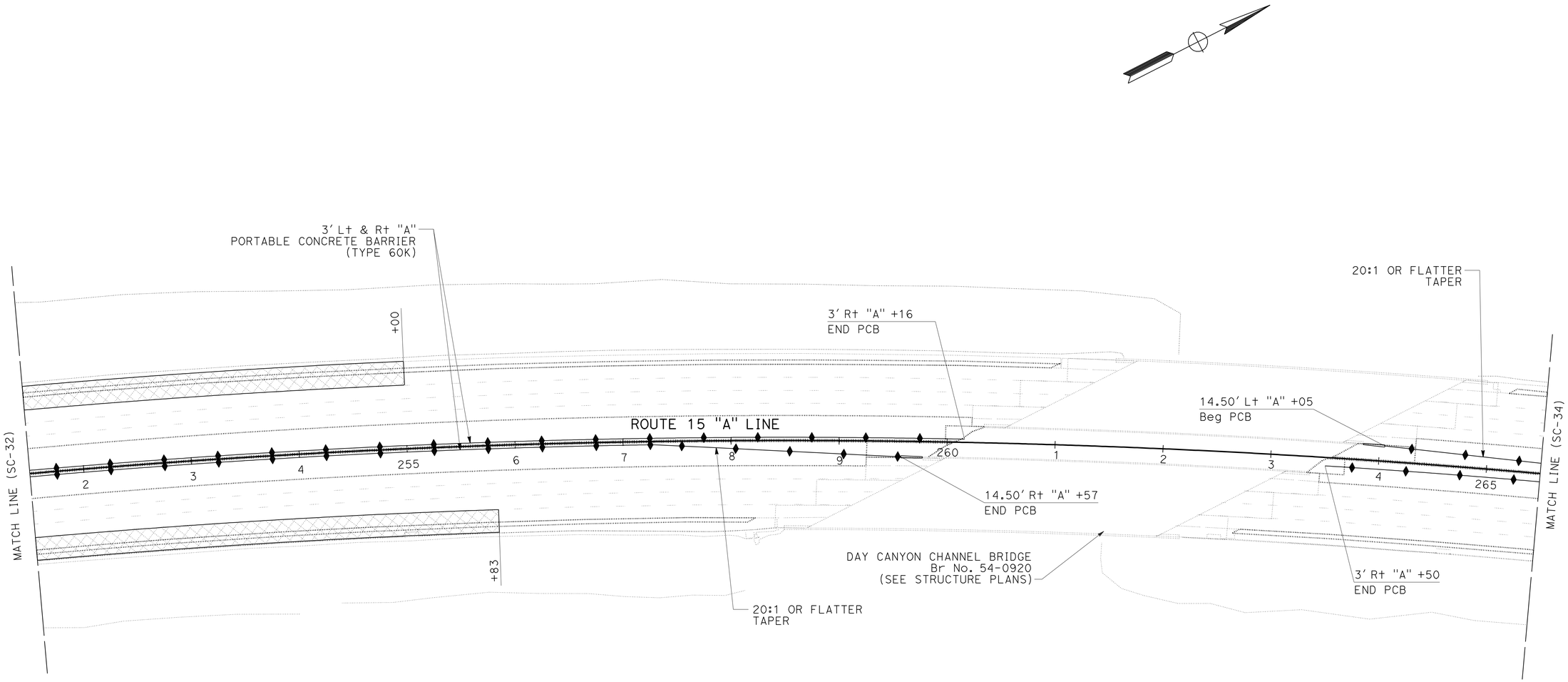

STAGE CONSTRUCTION
STAGE 3

SCALE: 1" = 50'

SC-33

THIS PLAN ACCURATE FOR STAGE CONSTRUCTION WORK ONLY.

REVISED BY	TOM NGUYEN
DATE REVISED	AHMAD SHAH
CALCULATED-DESIGNED BY	
CHECKED BY	
FUNCTIONAL SUPERVISOR	GEORGE MORHIG

STATE OF CALIFORNIA - DEPARTMENT OF TRANSPORTATION

Caltrans

DESIGN

LAST REVISION 04-14-11 | DATE PLOTTED => 17-JUN-2011 | TIME PLOTTED => 05:44

Dist	COUNTY	ROUTE	POST MILES TOTAL PROJECT	SHEET No.	TOTAL SHEETS
08	SBd	15	3.8/12.8	299	680

REGISTERED CIVIL ENGINEER 4-14-11 DATE

6-13-11
PLANS APPROVAL DATE

REGISTERED PROFESSIONAL ENGINEER
AHMAD SHAH
No. C55259
Exp. 9-30-12
CIVIL
STATE OF CALIFORNIA

THE STATE OF CALIFORNIA OR ITS OFFICERS OR AGENTS SHALL NOT BE RESPONSIBLE FOR THE ACCURACY OR COMPLETENESS OF SCANNED COPIES OF THIS PLAN SHEET.

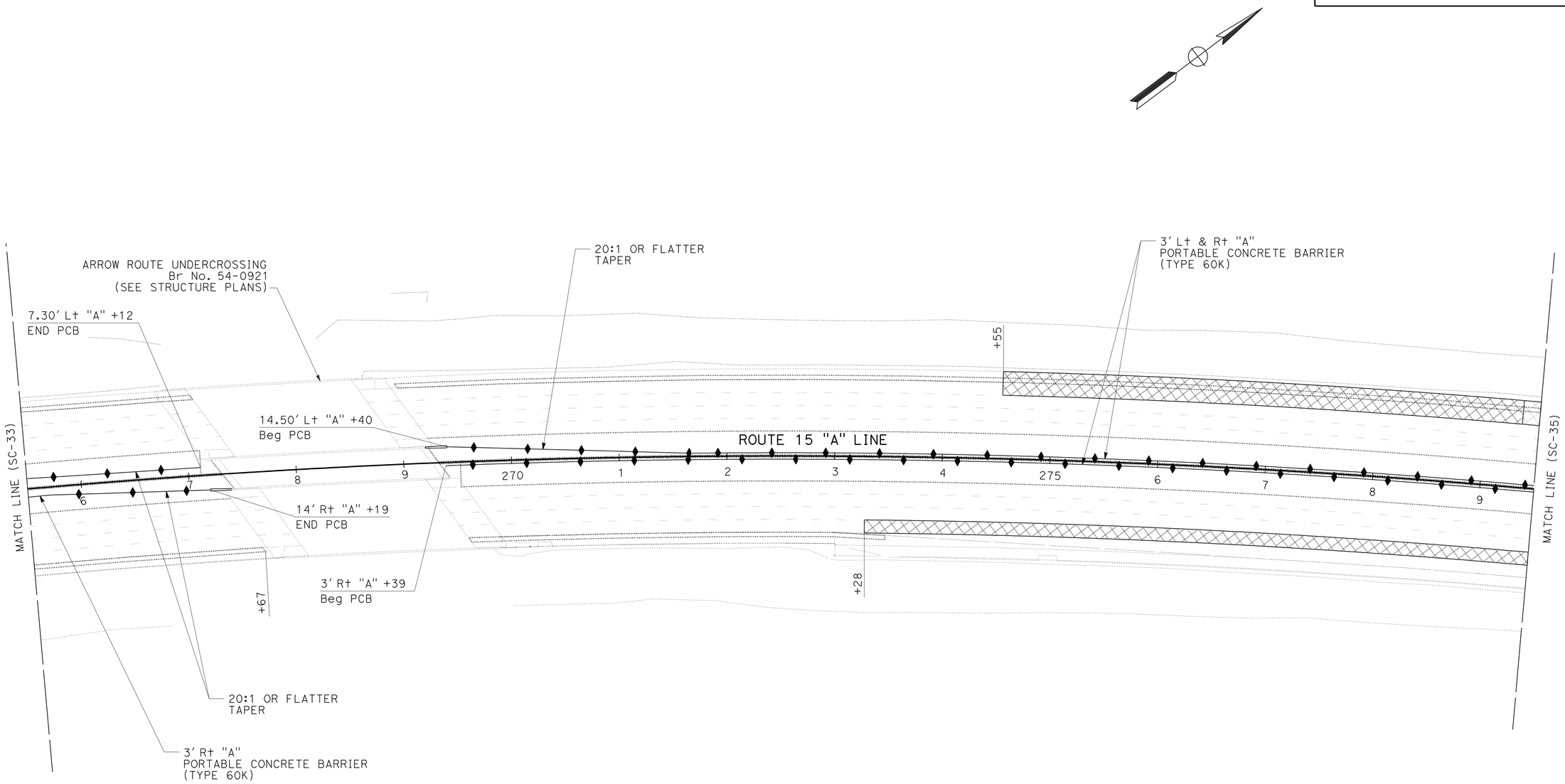

STAGE CONSTRUCTION
STAGE 3
SCALE: 1" = 50′

SC-34

THIS PLAN ACCURATE FOR STAGE CONSTRUCTION WORK ONLY.

STATE OF CALIFORNIA - DEPARTMENT OF TRANSPORTATION
Caltrans
DESIGN

FUNCTIONAL SUPERVISOR: GEORGE MORHIG
CALCULATED-DESIGNED BY: TOM NGUYEN
CHECKED BY: AHMAD SHAH
REVISED BY
DATE REVISED

LAST REVISION 04-14-11
DATE PLOTTED => 17-JUN-2011
TIME PLOTTED => 05:44

Dist	COUNTY	ROUTE	POST MILES TOTAL PROJECT	SHEET No.	TOTAL SHEETS
08	SBd	15	3.8/12.8	300	680

REGISTERED CIVIL ENGINEER 4-14-11 DATE

6-13-11
PLANS APPROVAL DATE

REGISTERED PROFESSIONAL ENGINEER
AHMAD SHAH
No. C55259
Exp. 9-30-12
CIVIL
STATE OF CALIFORNIA

THE STATE OF CALIFORNIA OR ITS OFFICERS OR AGENTS SHALL NOT BE RESPONSIBLE FOR THE ACCURACY OR COMPLETENESS OF SCANNED COPIES OF THIS PLAN SHEET.

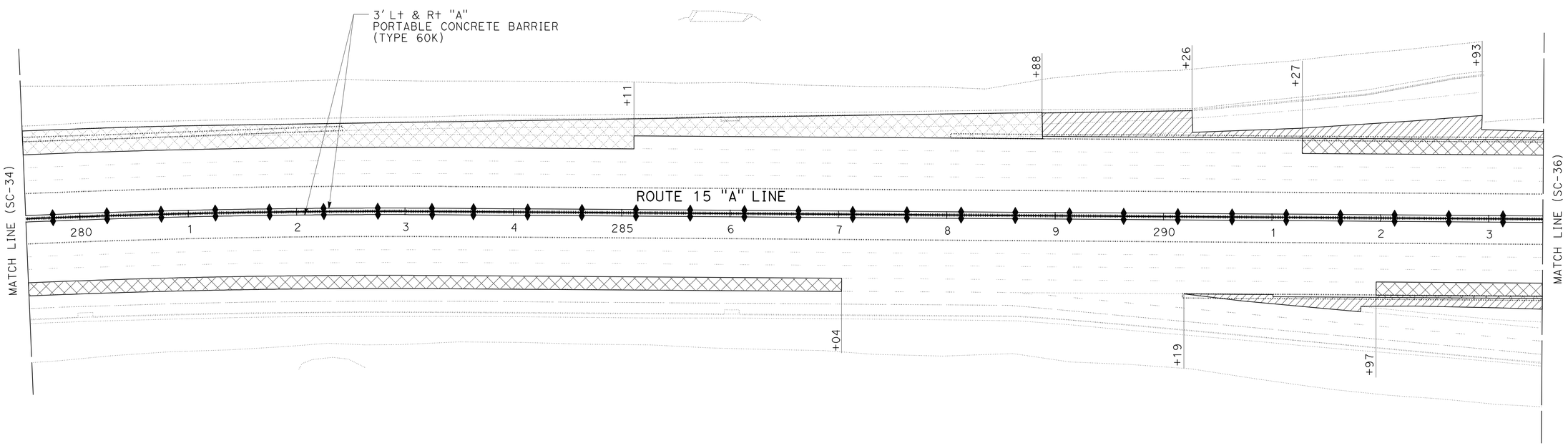

THIS PLAN ACCURATE FOR STAGE CONSTRUCTION WORK ONLY.

STAGE CONSTRUCTION STAGE 3

SCALE: 1" = 50'

SC-35

STATE OF CALIFORNIA - DEPARTMENT OF TRANSPORTATION
Caltrans® **DESIGN**

FUNCTIONAL SUPERVISOR: GEORGE MORHIG
CALCULATED-DESIGNED BY: TOM NGUYEN
CHECKED BY: AHMAD SHAH
REVISED BY
DATE REVISED

LAST REVISION 04-14-11
DATE PLOTTED => 17-JUN-2011
TIME PLOTTED => 09:44