INDEX OF PLANS

SHEET No.	DESCRIPTION
1	TITLE AND LOCATION MAP
2	CONSTRUCTION DETAILS
3-18	DRAINAGE PLAN AND PROFILE
19-20	DRAINAGE QUANTITIES
21	CONSTRUCTION AREA SIGNS
22	SUMMARY OF QUANTITIES
23-26	NEW AND REVISED STANDARD PLANS

THE STANDARD PLAN LIST APPLICABLE TO THIS PROJECT IS INCLUDED IN THE NOTICE TO BIDDERS AND SPECIAL PROVISIONS BOOK.

STATE OF CALIFORNIA

DEPARTMENT OF TRANSPORTATION

PROJECT PLANS FOR CONSTRUCTION ON STATE HIGHWAY

IN INYO COUNTY AT VARIOUS LOCATIONS

TO BE SUPPLEMENTED BY STANDARD PLANS DATED MAY 2006

Dist	COUNTY	ROUTE	POST MILES TOTAL PROJECT	SHEET No.	TOTAL SHEETS
09	Iny	136,190	Var	1	26

LOCATION MAP

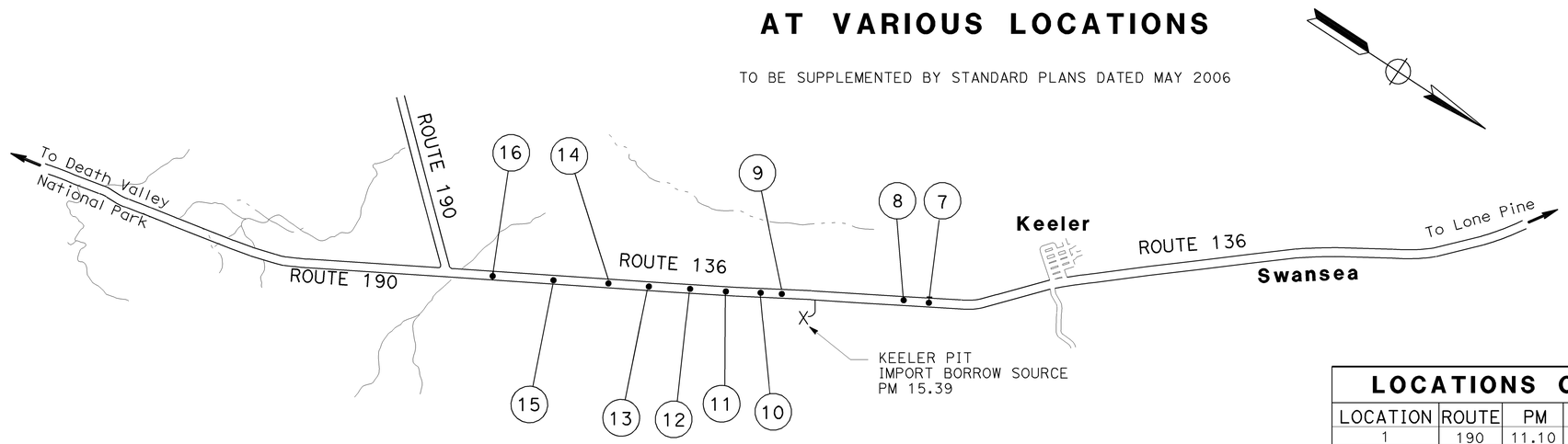

LOCATIONS OF CULVERTS

LOCATION	ROUTE	PM	LOCATION	ROUTE	PM
1	190	11.10	7	136	14.55
2	190	13.26	8	136	14.64
3	190	14.91	9	136	16.67
4	190	15.19	10	136	16.70
5	190	19.20	11	136	16.75
6	190	24.35	12	136	16.80
			13	136	16.85
			14	136	16.90
			15	136	17.00
			16	136	17.55

ROUTE 136 CULVERTS

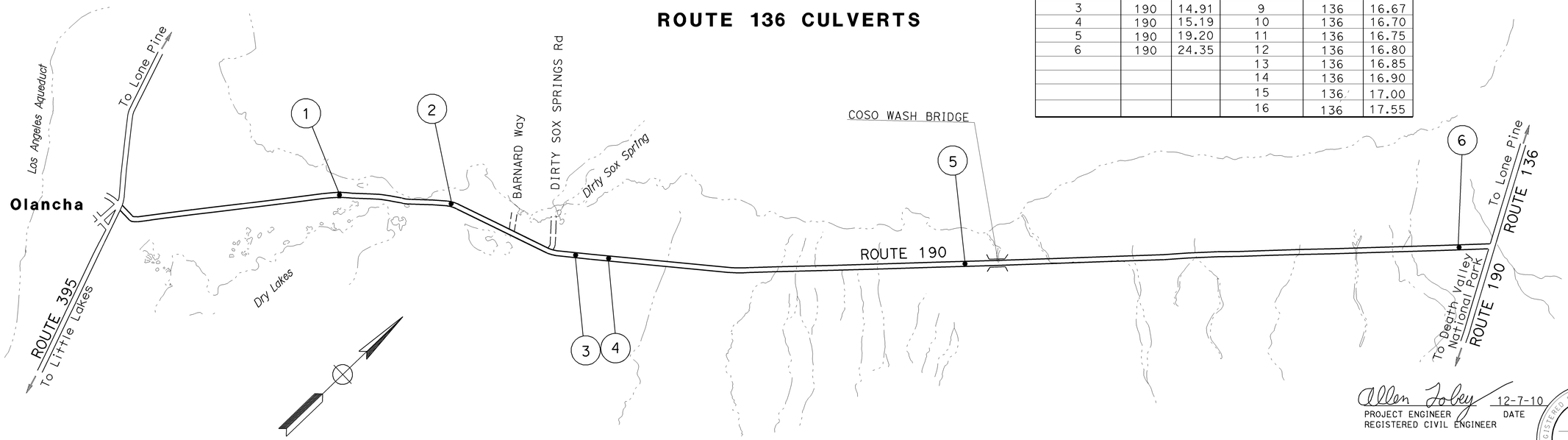

ROUTE 190 CULVERTS

NO SCALE

Allen Tobey 12-7-10
PROJECT ENGINEER DATE
REGISTERED CIVIL ENGINEER

December 13, 2010
PLANS APPROVAL DATE

REGISTERED PROFESSIONAL ENGINEER — Allen C. Tobey — No. 29764 — Exp. 3-31-11 — CIVIL — STATE OF CALIFORNIA

THE STATE OF CALIFORNIA OR ITS OFFICERS OR AGENTS SHALL NOT BE RESPONSIBLE FOR THE ACCURACY OR COMPLETENESS OF SCANNED COPIES OF THIS PLAN SHEET.

THE CONTRACTOR SHALL POSSESS THE CLASS (OR CLASSES) OF LICENSE AS SPECIFIED IN THE "NOTICE TO BIDDERS."

PROJECT MANAGER	JOHN FOX
DESIGN ENGINEER	JOHN FOX

CONTRACT No.	09-348704
PROJECT ID	0900020063

LAST REVISION 12-13-10
DATE PLOTTED => 18-JAN-2011
TIME PLOTTED => 09:51

Dist	COUNTY	ROUTE	POST MILES TOTAL PROJECT	SHEET No.	TOTAL SHEETS
09	Iny	136, 190	Var	2	26

Allen Tobey 12-7-10
REGISTERED CIVIL ENGINEER DATE

12-13-10
PLANS APPROVAL DATE

REGISTERED PROFESSIONAL ENGINEER
ALLEN C.TOBEY
No. 29764
Exp.03-31-11
CIVIL
STATE OF CALIFORNIA

THE STATE OF CALIFORNIA OR ITS OFFICERS OR AGENTS SHALL NOT BE RESPONSIBLE FOR THE ACCURACY OR COMPLETENESS OF SCANNED COPIES OF THIS PLAN SHEET.

NOTES:

1. ALL CULVERTS SHALL BE PLASTIC PIPE WITH A SMOOTH INTERIOR.
2. EQUIPMENT USE AND SOIL DISTURBANCE SHALL BE LIMITED TO THE ASPHALT SURFACED ROADWAY, EXISTING SHOULDERS, AND CULVERT EMBANKMENT AREA.
3. IMPORT BORROW MAY BE OBTAINED FROM THE KELLER PIT AS DIRECTED BY THE ENGINEER.

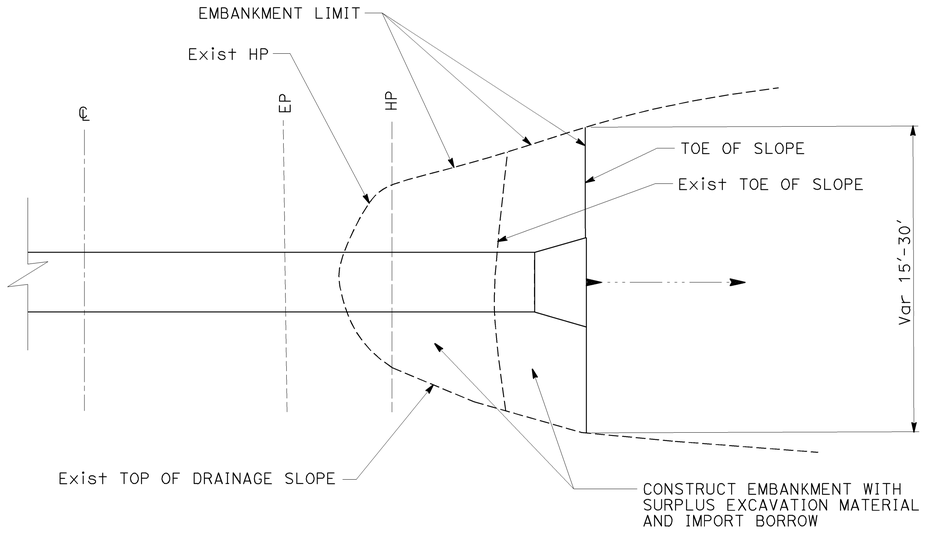

TYPICAL EMBANKMENT

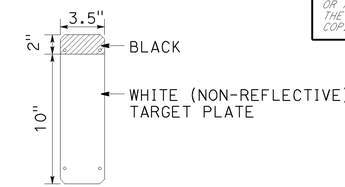

MARKER (CULVERT) PLATE

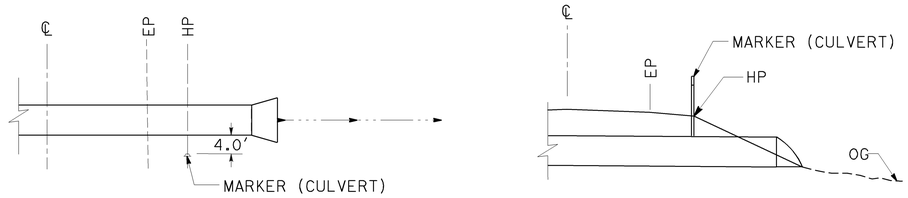

TYPICAL MARKER (CULVERT)

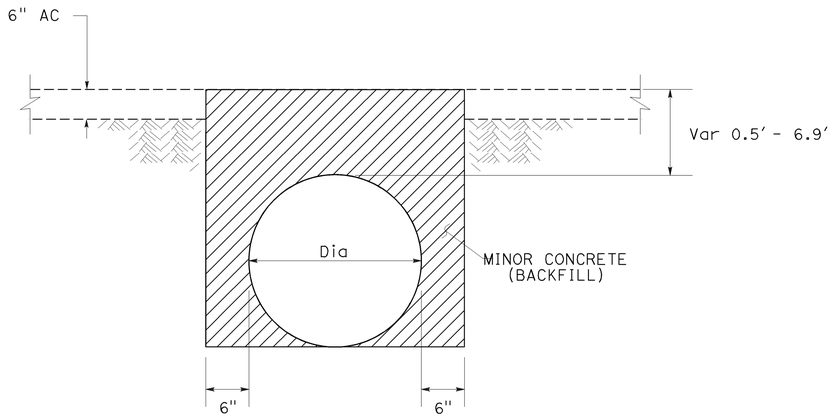

IN PAVED AREAS

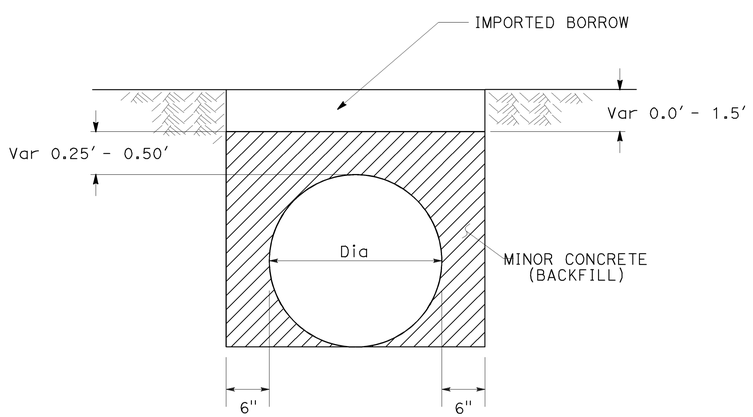

IN UNPAVED SHOULDER AREAS WITH LESS THAN 2' COVER AT ETW

MINOR CONCRETE (BACKFILL) DETAIL

CONSTRUCTION DETAILS

NO SCALE **C-1**

STATE OF CALIFORNIA - DEPARTMENT OF TRANSPORTATION
Caltrans MAINTENANCE ENGINEERING

FUNCTIONAL SUPERVISOR: JOHN FOX
CALCULATED-DESIGNED BY: ALLEN TOBEY
CHECKED BY: MONTASHEEMA AFROZE
REVISED BY: AT
DATE REVISED: 12-8-10
MA: 10-25-10
MR: 12-7-10

LAST REVISION 12-13-10
DATE PLOTTED => 18-JAN-2011
TIME PLOTTED => 09:51

Dist	COUNTY	ROUTE	POST MILES TOTAL PROJECT	SHEET No.	TOTAL SHEETS
09	Iny	136, 190	Var	3	26

Allen Tobey 12-7-10
REGISTERED CIVIL ENGINEER DATE

ALLEN C. TOBEY No. 29764 Exp. 03-31-11 CIVIL
REGISTERED PROFESSIONAL ENGINEER STATE OF CALIFORNIA

12-13-10
PLANS APPROVAL DATE

THE STATE OF CALIFORNIA OR ITS OFFICERS OR AGENTS SHALL NOT BE RESPONSIBLE FOR THE ACCURACY OR COMPLETENESS OF SCANNED COPIES OF THIS PLAN SHEET.

NOTE:

FOR COMPLETE RIGHT OF WAY DATA, CONTACT RIGHT OF WAY ENGINEERING AT THE DISTRICT OFFICE.

LEGEND:

- MINOR CONCRETE (BACKFILL)
- 1 - DRAINAGE SYSTEM No.
- ⓐ - DRAINAGE UNIT

ABBREVIATION:

TBM - TEMPORARY BENCH MARK

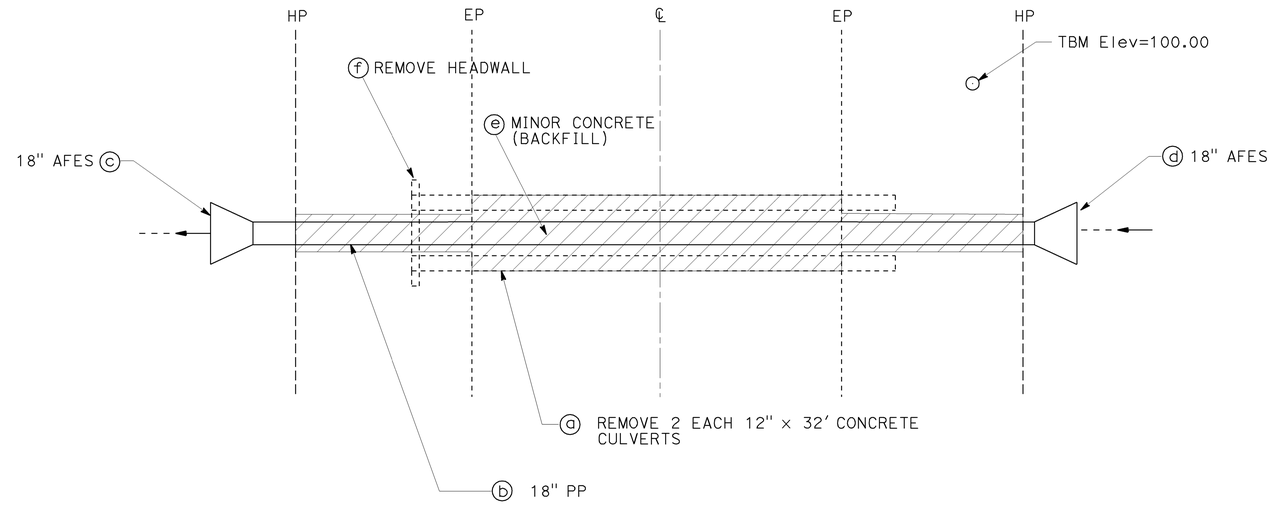

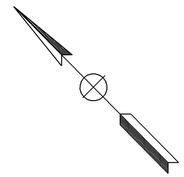

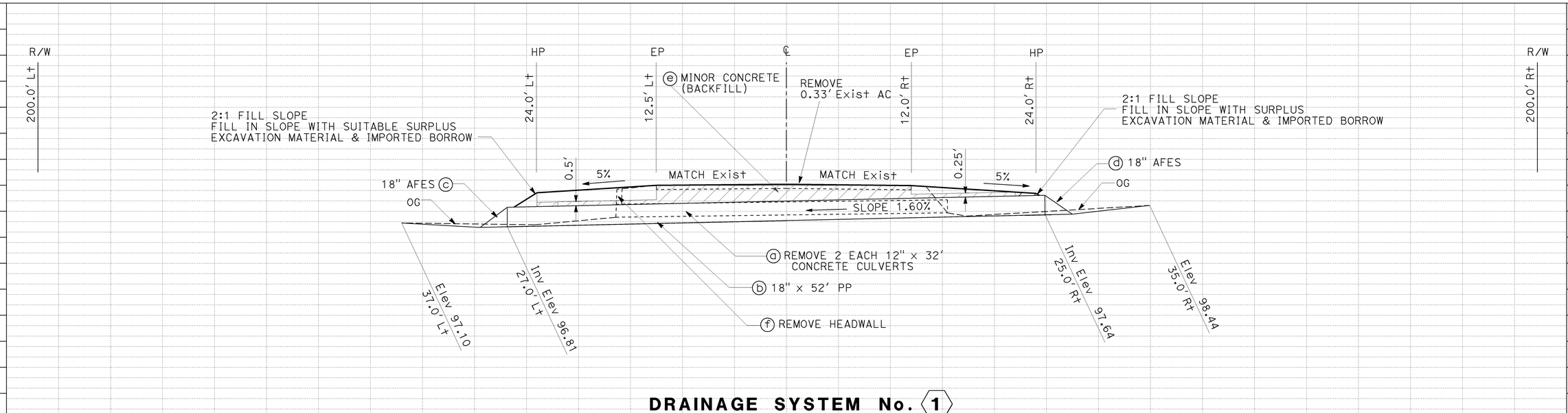

DRAINAGE SYSTEM No. 1

ROUTE 190 PM 11.10
LOCATION 1

THIS PLAN ACCURATE FOR DRAINAGE WORK ONLY.

DRAINAGE PLAN AND PROFILE

SCALE: 1"=5'

D-1

STATE OF CALIFORNIA - DEPARTMENT OF TRANSPORTATION
Caltrans® MAINTENANCE ENGINEERING

FUNCTIONAL SUPERVISOR: JOHN FOX

CALCULATED-DESIGNED BY	ALLEN TOBEY	AT	09-21-10
CHECKED BY	MONTASHEEMA AFROZE	MA	10-25-10
		MR	12-7-10
		REVISED BY	DATE REVISED

LAST REVISION: DATE PLOTTED => 18-JAN-2011
12-13-10 TIME PLOTTED => 09:51

BORDER LAST REVISED 7/2/2010 | USERNAME => S123915 | DGN FILE => 9348701b001.dgn | RELATIVE BORDER SCALE IS IN INCHES 0 1 2 3 | UNIT 2480 | PROJECT NUMBER & PHASE 09000200631

Dist	COUNTY	ROUTE	POST MILES TOTAL PROJECT	SHEET No.	TOTAL SHEETS
09	Iny	136, 190	Var	4	26

Allen Tobey 12-7-10
REGISTERED CIVIL ENGINEER DATE

12-13-10
PLANS APPROVAL DATE

REGISTERED PROFESSIONAL ENGINEER
ALLEN C.TOBEY
No. 29764
Exp.03-31-11
CIVIL
STATE OF CALIFORNIA

THE STATE OF CALIFORNIA OR ITS OFFICERS OR AGENTS SHALL NOT BE RESPONSIBLE FOR THE ACCURACY OR COMPLETENESS OF SCANNED COPIES OF THIS PLAN SHEET.

NOTE:

FOR COMPLETE RIGHT OF WAY DATA, CONTACT RIGHT OF WAY ENGINEERING AT THE DISTRICT OFFICE.

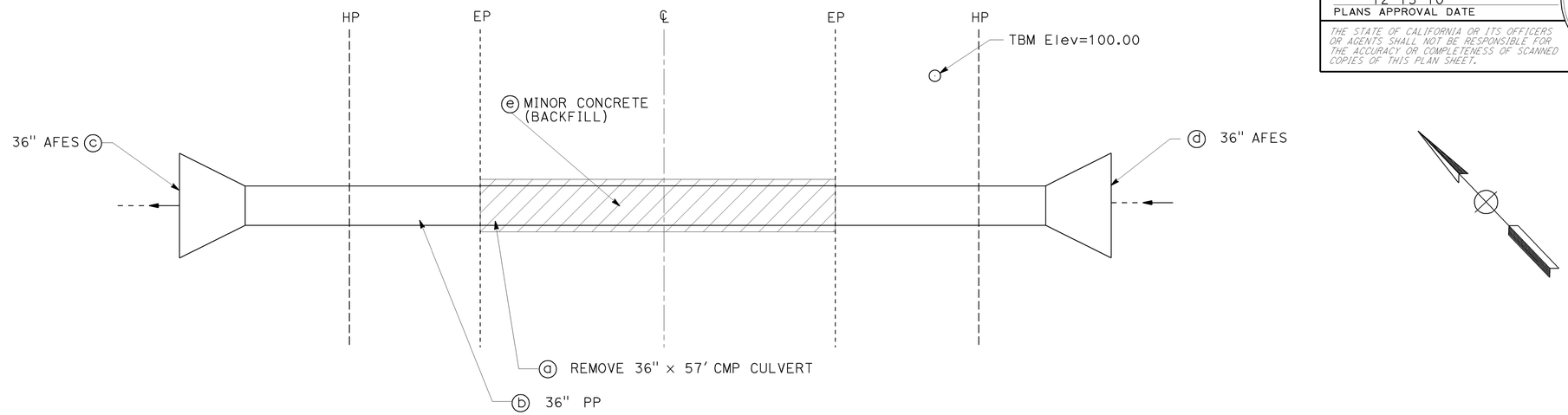

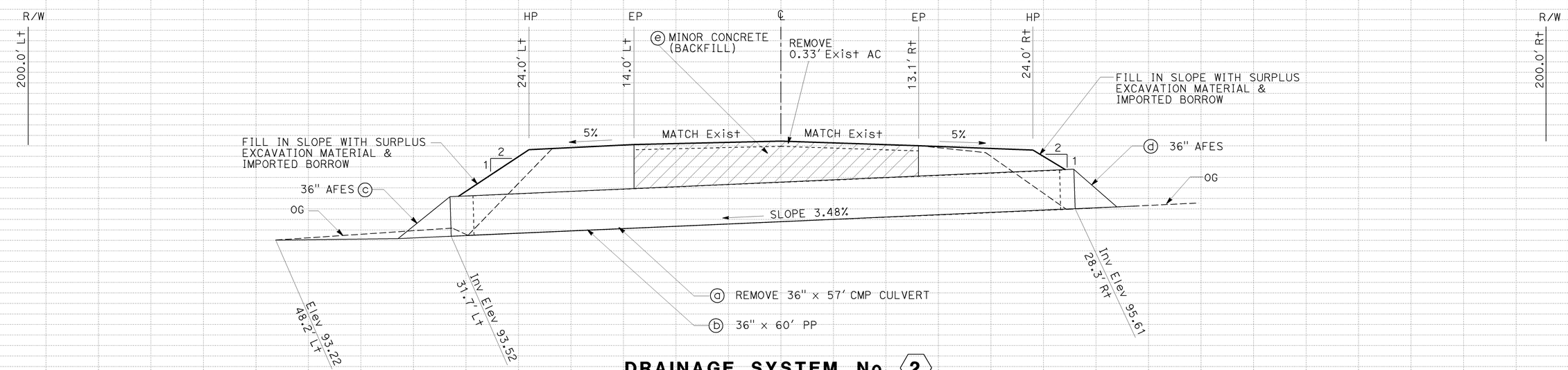

DRAINAGE SYSTEM No. 2

ROUTE 190 PM 13.26
LOCATION 2

THIS PLAN ACCURATE FOR DRAINAGE WORK ONLY.

DRAINAGE PLAN AND PROFILE
D-2

SCALE: 1"=5'

STATE OF CALIFORNIA - DEPARTMENT OF TRANSPORTATION
Caltrans® MAINTENANCE ENGINEERING

FUNCTIONAL SUPERVISOR: JOHN FOX
CALCULATED-DESIGNED BY: ALLEN TOBEY
CHECKED BY: MONTASHEEMA AFROZE
REVISED BY: AT
DATE REVISED: 09-21-10
MA: 10-25-10
MR: 12-7-10

LAST REVISION 12-13-10
DATE PLOTTED => 18-JAN-2011
TIME PLOTTED => 09:51

NOTE:

FOR COMPLETE RIGHT OF WAY DATA, CONTACT RIGHT OF WAY ENGINEERING AT THE DISTRICT OFFICE.

Dist	COUNTY	ROUTE	POST MILES TOTAL PROJECT	SHEET No.	TOTAL SHEETS
09	Iny	136, 190	Var	5	26

Allen Tobey 12-7-10
REGISTERED CIVIL ENGINEER DATE

12-13-10
PLANS APPROVAL DATE

REGISTERED PROFESSIONAL ENGINEER
ALLEN C.TOBEY
No. 29764
Exp.03-31-11
CIVIL
STATE OF CALIFORNIA

THE STATE OF CALIFORNIA OR ITS OFFICERS OR AGENTS SHALL NOT BE RESPONSIBLE FOR THE ACCURACY OR COMPLETENESS OF SCANNED COPIES OF THIS PLAN SHEET.

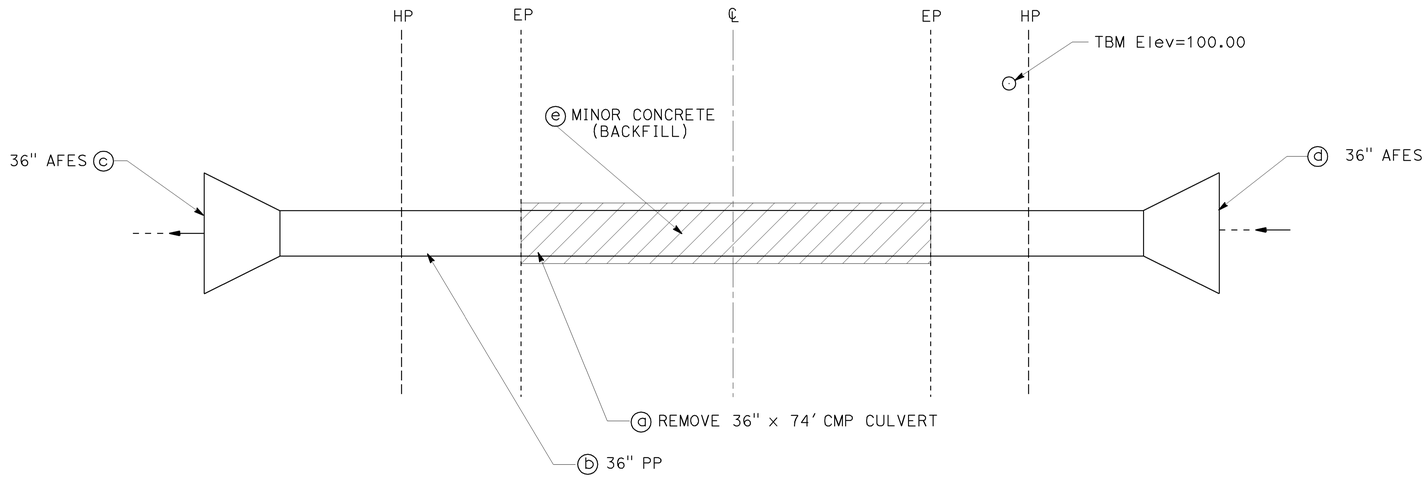

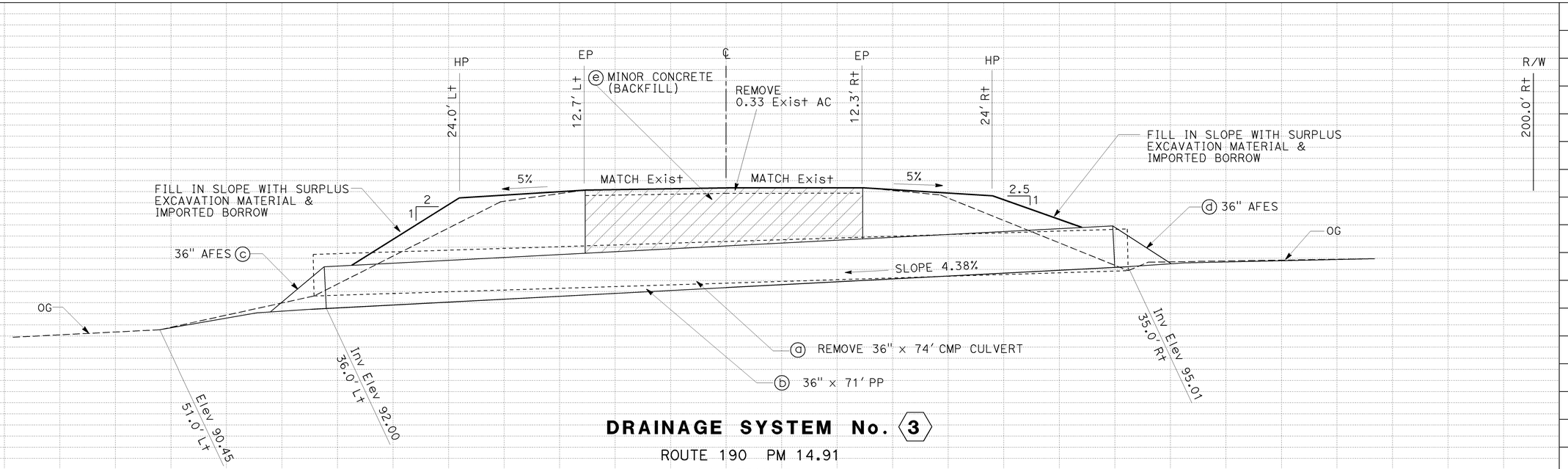

DRAINAGE SYSTEM No. 3

ROUTE 190 PM 14.91
LOCATION 3

THIS PLAN ACCURATE FOR DRAINAGE WORK ONLY.

DRAINAGE PLAN AND PROFILE

SCALE: 1"=5' **D-3**

STATE OF CALIFORNIA - DEPARTMENT OF TRANSPORTATION
Caltrans® MAINTENANCE ENGINEERING
FUNCTIONAL SUPERVISOR: JOHN FOX

CALCULATED-DESIGNED BY	ALLEN TOBEY	REVISED BY	AT	MR
CHECKED BY	MONTASHEEMA AFROZE	DATE REVISED	09-21-10	10-25-10
				12-7-10

LAST REVISION DATE PLOTTED => 18-JAN-2011
TIME PLOTTED => 09:51
12-13-10

BORDER LAST REVISED 7/2/2010

USERNAME => S123915
DGN FILE => 9348701b003.dgn

RELATIVE BORDER SCALE IS IN INCHES 0 1 2 3

UNIT 2480

PROJECT NUMBER & PHASE 09000200631

NOTE:

FOR COMPLETE RIGHT OF WAY DATA, CONTACT RIGHT OF WAY ENGINEERING AT THE DISTRICT OFFICE.

Dist	COUNTY	ROUTE	POST MILES TOTAL PROJECT	SHEET No.	TOTAL SHEETS
09	Iny	136, 190	Var	6	26

Allen Tobey 12-7-10
REGISTERED CIVIL ENGINEER DATE

12-13-10
PLANS APPROVAL DATE

REGISTERED PROFESSIONAL ENGINEER
ALLEN C.TOBEY
No. 29764
Exp.03-31-11
CIVIL
STATE OF CALIFORNIA

THE STATE OF CALIFORNIA OR ITS OFFICERS OR AGENTS SHALL NOT BE RESPONSIBLE FOR THE ACCURACY OR COMPLETENESS OF SCANNED COPIES OF THIS PLAN SHEET.

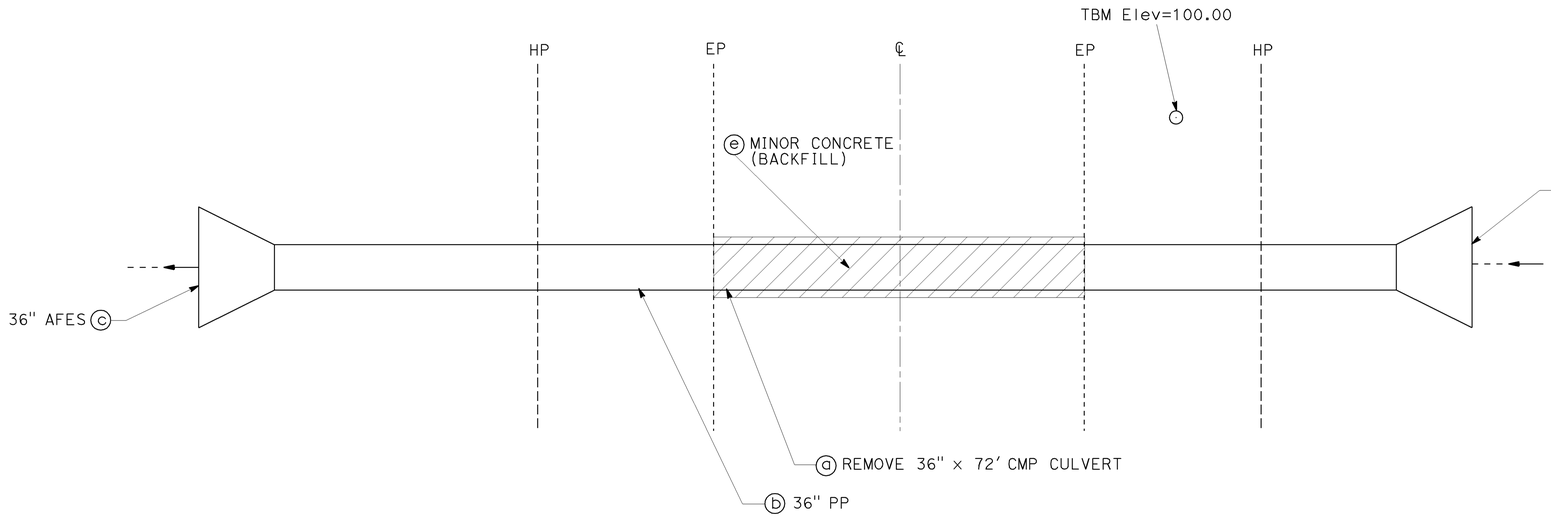

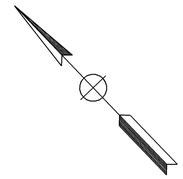

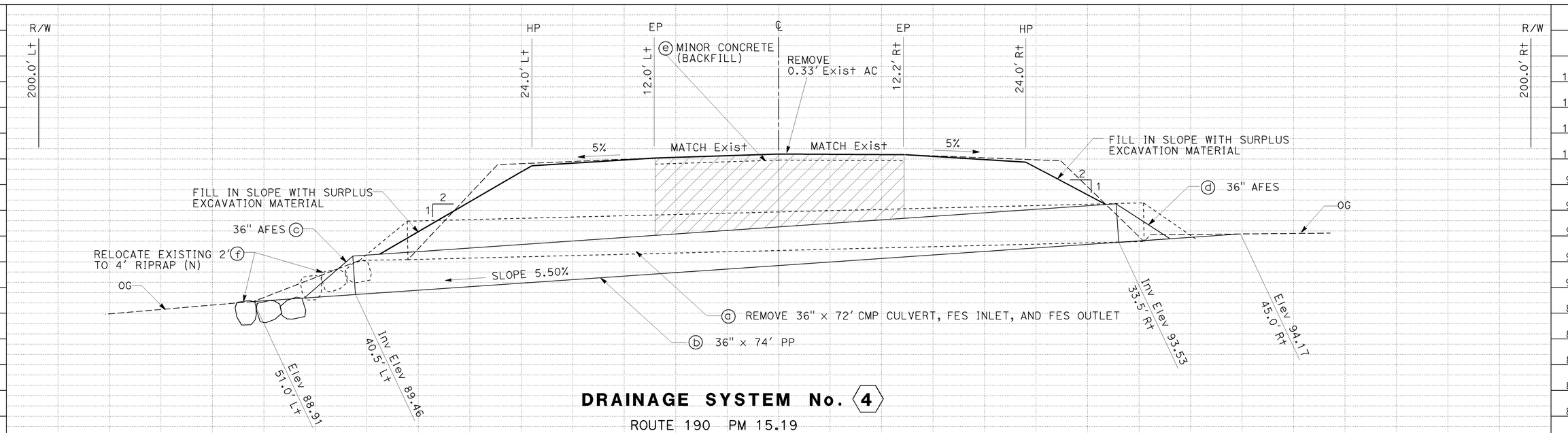

DRAINAGE SYSTEM No. ⑷

ROUTE 190 PM 15.19
LOCATION 4

THIS PLAN ACCURATE FOR DRAINAGE WORK ONLY.

DRAINAGE PLAN AND PROFILE

SCALE: 1"=5'

D-4

STATE OF CALIFORNIA - DEPARTMENT OF TRANSPORTATION
Caltrans® MAINTENANCE ENGINEERING

FUNCTIONAL SUPERVISOR: JOHN FOX

	REVISED BY	DATE REVISED
CALCULATED-DESIGNED BY	AT	09-21-10
CHECKED BY	MA	10-25-10
	MR	12-7-10

ALLEN TOBEY
MONTASHEEMA AFROZE

LAST REVISION DATE PLOTTED => 18-JAN-2011
TIME PLOTTED => 09:51
12-13-10

BORDER LAST REVISED 7/2/2010

USERNAME => S123915
DGN FILE => 9348701b004.dgn

RELATIVE BORDER SCALE IS IN INCHES 0 1 2 3

UNIT 2480

PROJECT NUMBER & PHASE 09000200631

Dist	COUNTY	ROUTE	POST MILES TOTAL PROJECT	SHEET No.	TOTAL SHEETS
09	Iny	136, 190	Var	7	26

Allen Tobey 12-7-10
REGISTERED CIVIL ENGINEER DATE

12-13-10
PLANS APPROVAL DATE

REGISTERED PROFESSIONAL ENGINEER
ALLEN C.TOBEY
No. 29764
Exp.03-31-11
CIVIL
STATE OF CALIFORNIA

THE STATE OF CALIFORNIA OR ITS OFFICERS OR AGENTS SHALL NOT BE RESPONSIBLE FOR THE ACCURACY OR COMPLETENESS OF SCANNED COPIES OF THIS PLAN SHEET.

NOTE:
FOR COMPLETE RIGHT OF WAY DATA, CONTACT RIGHT OF WAY ENGINEERING AT THE DISTRICT OFFICE.

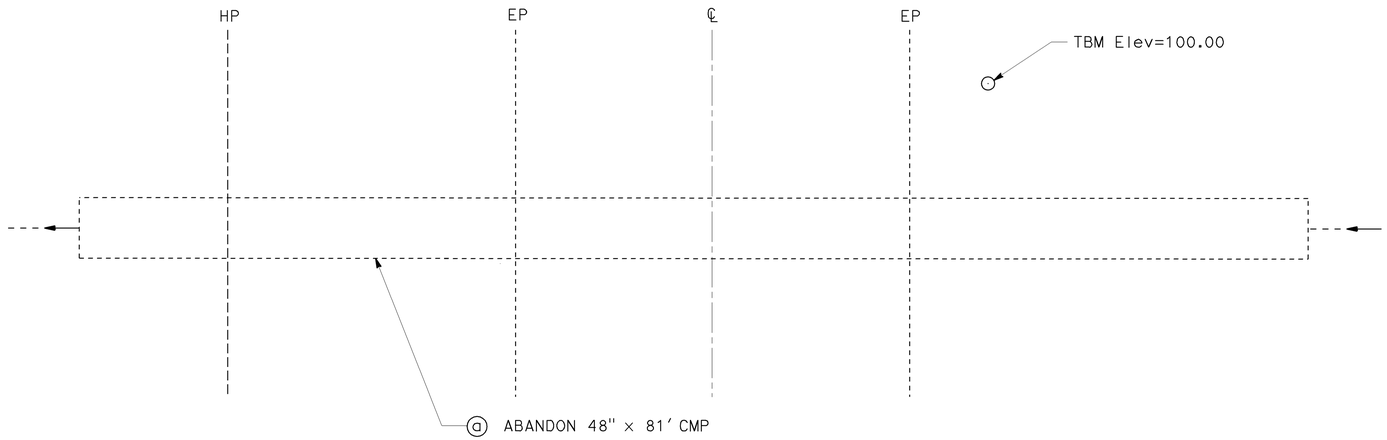

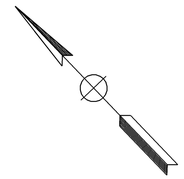

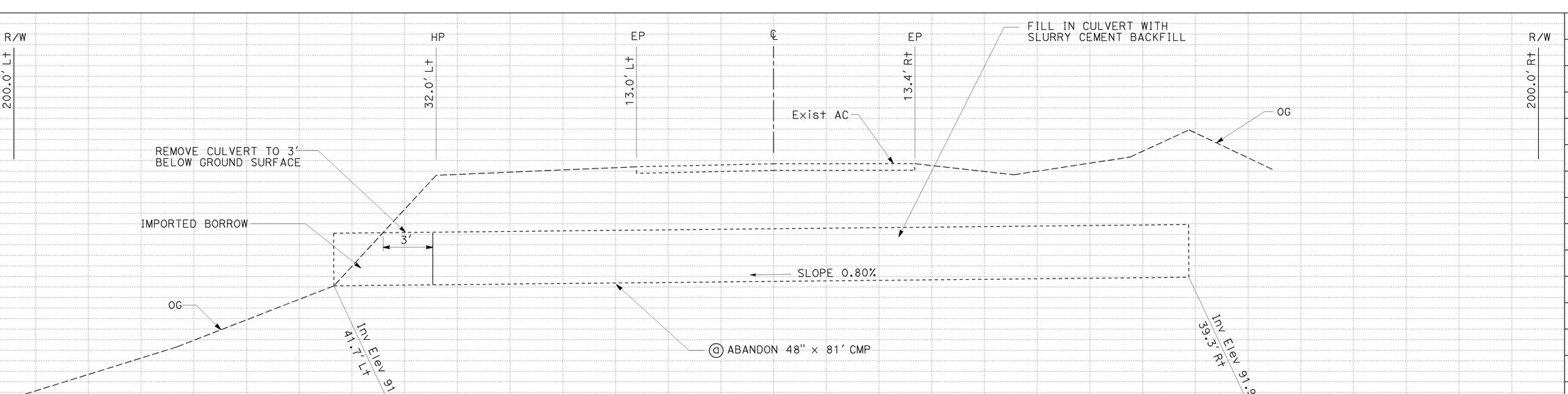

DRAINAGE SYSTEM No. 5

ROUTE 190 PM 19.20

LOCATION 5

THIS PLAN ACCURATE FOR DRAINAGE WORK ONLY.

DRAINAGE PLAN AND PROFILE

SCALE: 1"=5'

D-5

REVISED BY	DATE REVISED
MR	12-7-10
MA	10-25-10
AT	09-21-10

CALCULATED-DESIGNED BY: ALLEN TOBEY
CHECKED BY: MONTASHEEMA AFROZE

FUNCTIONAL SUPERVISOR: JOHN FOX

STATE OF CALIFORNIA - DEPARTMENT OF TRANSPORTATION
Caltrans® MAINTENANCE ENGINEERING

LAST REVISION: DATE PLOTTED => 18-JAN-2011
TIME PLOTTED => 09:51
12-13-10

BORDER LAST REVISED 7/2/2010

USERNAME => S123915
DGN FILE => 9348701b005.dgn

RELATIVE BORDER SCALE IS IN INCHES 0 1 2 3

UNIT 2480

PROJECT NUMBER & PHASE 09000200631

Dist	COUNTY	ROUTE	POST MILES TOTAL PROJECT	SHEET No.	TOTAL SHEETS
09	Iny	136, 190	Var	8	26

Allen Tobey 12-7-10
REGISTERED CIVIL ENGINEER DATE

ALLEN C. TOBEY No. 29764 Exp. 03-31-11 CIVIL — REGISTERED PROFESSIONAL ENGINEER — STATE OF CALIFORNIA

12-13-10
PLANS APPROVAL DATE

THE STATE OF CALIFORNIA OR ITS OFFICERS OR AGENTS SHALL NOT BE RESPONSIBLE FOR THE ACCURACY OR COMPLETENESS OF SCANNED COPIES OF THIS PLAN SHEET.

NOTE:
FOR COMPLETE RIGHT OF WAY DATA, CONTACT RIGHT OF WAY ENGINEERING AT THE DISTRICT OFFICE.

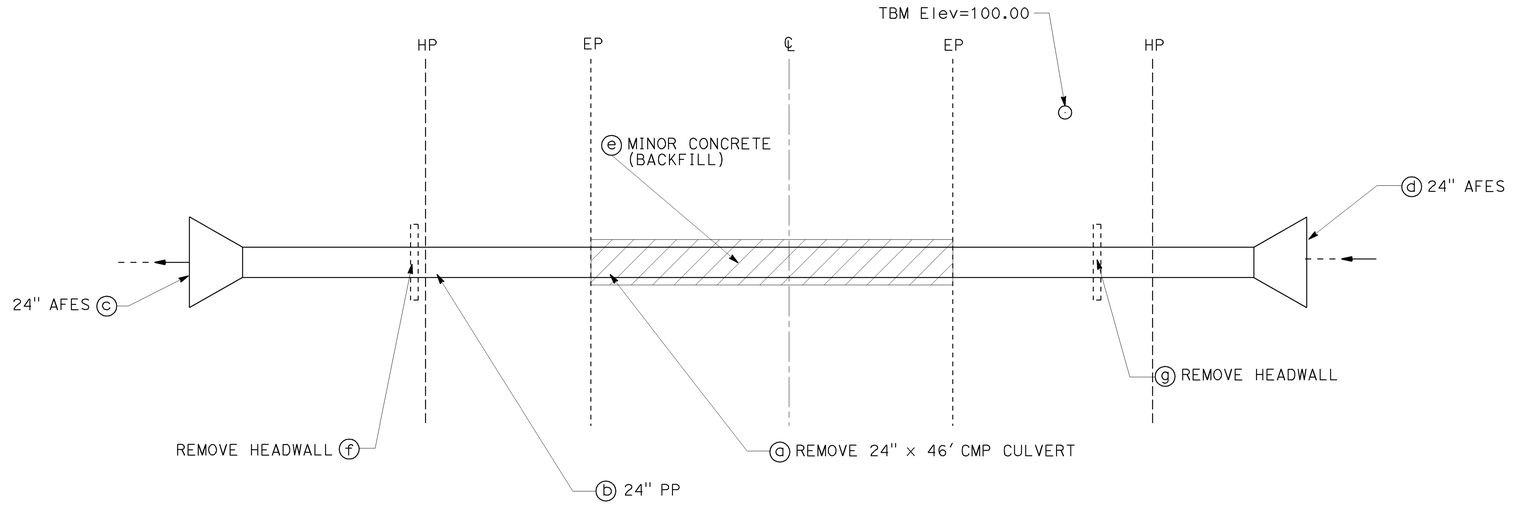

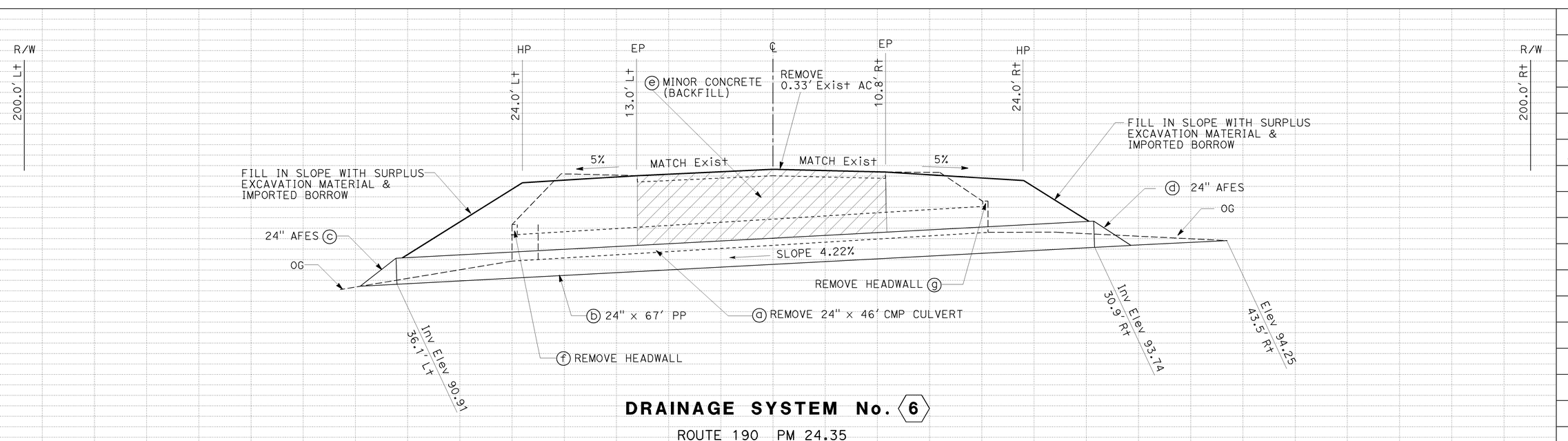

DRAINAGE SYSTEM No. 6

ROUTE 190 PM 24.35
LOCATION 6

THIS PLAN ACCURATE FOR DRAINAGE WORK ONLY.

DRAINAGE PLAN AND PROFILE D-6

SCALE: 1"=5'

STATE OF CALIFORNIA - DEPARTMENT OF TRANSPORTATION
Caltrans® MAINTENANCE ENGINEERING
FUNCTIONAL SUPERVISOR: JOHN FOX
CALCULATED-DESIGNED BY: MONTASHEEMA AFROZE
CHECKED BY: ALLEN TOBEY

REVISED BY	DATE REVISED
AT	09-21-10
MA	10-25-10
MR	12-7-10

LAST REVISION DATE PLOTTED => 18-JAN-2011
TIME PLOTTED => 09:51
12-13-10

BORDER LAST REVISED 7/2/2010
USERNAME => S123915
DGN FILE => 9348701b006.dgn
RELATIVE BORDER SCALE IS IN INCHES 0 1 2 3
UNIT 2480
PROJECT NUMBER & PHASE 09000200631

NOTE:

FOR COMPLETE RIGHT OF WAY DATA, CONTACT RIGHT OF WAY ENGINEERING AT THE DISTRICT OFFICE.

Dist	COUNTY	ROUTE	POST MILES TOTAL PROJECT	SHEET No.	TOTAL SHEETS
09	Iny	136, 190	Var	9	26

Allen Tobey 12-7-10
REGISTERED CIVIL ENGINEER DATE

12-13-10
PLANS APPROVAL DATE

REGISTERED PROFESSIONAL ENGINEER
ALLEN C. TOBEY
No. 29764
Exp. 03-31-11
CIVIL
STATE OF CALIFORNIA

THE STATE OF CALIFORNIA OR ITS OFFICERS OR AGENTS SHALL NOT BE RESPONSIBLE FOR THE ACCURACY OR COMPLETENESS OF SCANNED COPIES OF THIS PLAN SHEET.

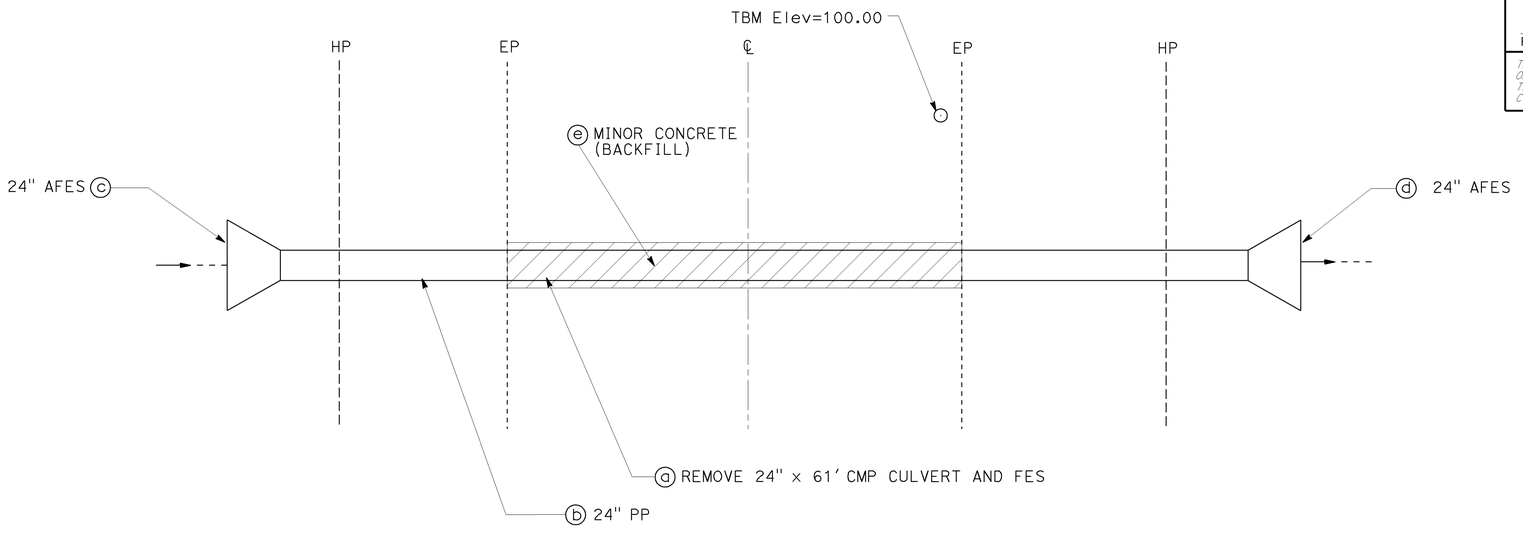

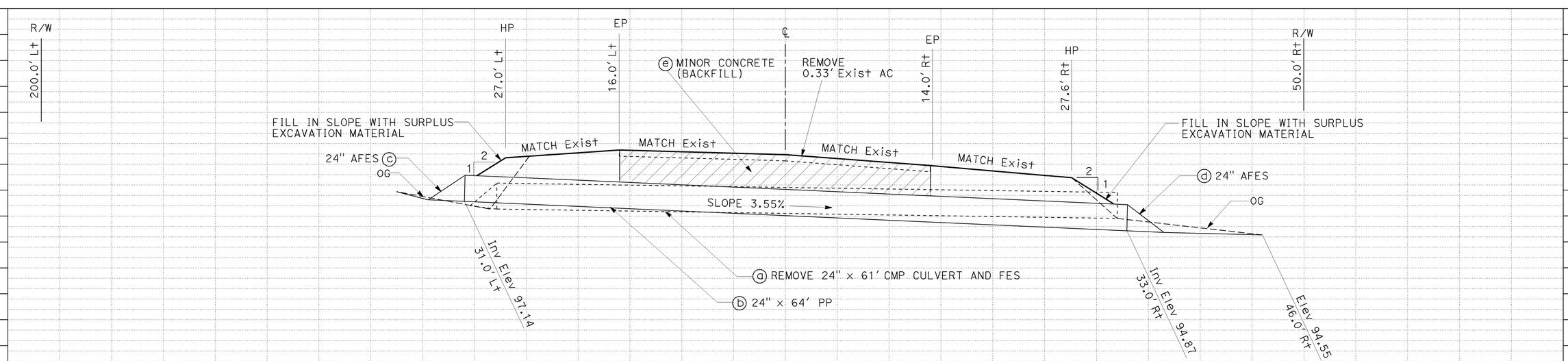

DRAINAGE SYSTEM No. 7

ROUTE 136 PM 14.55

LOCATION 7

THIS PLAN ACCURATE FOR DRAINAGE WORK ONLY.

DRAINAGE PLAN AND PROFILE

SCALE: 1"=5'

D-7

MR	12-7-10	
MA	10-25-10	
AT	09-21-10	
REVISED BY	DATE REVISED	
ALLEN TOBEY	MONTASHEEMA AFROZE	
CALCULATED-DESIGNED BY	CHECKED BY	

FUNCTIONAL SUPERVISOR: JOHN FOX

STATE OF CALIFORNIA - DEPARTMENT OF TRANSPORTATION
Caltrans® MAINTENANCE ENGINEERING

LAST REVISION: DATE PLOTTED => 18-JAN-2011
12-13-10 TIME PLOTTED => 09:51

BORDER LAST REVISED 7/2/2010

USERNAME => S123915
DGN FILE => 9348701b007.dgn

RELATIVE BORDER SCALE IS IN INCHES 0 1 2 3

UNIT 2480

PROJECT NUMBER & PHASE 09000200631

Dist	COUNTY	ROUTE	POST MILES TOTAL PROJECT	SHEET No.	TOTAL SHEETS
09	Iny	136, 190	Var	10	26

Allen Tobey 12-7-10
REGISTERED CIVIL ENGINEER DATE

12-13-10
PLANS APPROVAL DATE

REGISTERED PROFESSIONAL ENGINEER
ALLEN C.TOBEY
No. 29764
Exp.03-31-11
CIVIL
STATE OF CALIFORNIA

THE STATE OF CALIFORNIA OR ITS OFFICERS OR AGENTS SHALL NOT BE RESPONSIBLE FOR THE ACCURACY OR COMPLETENESS OF SCANNED COPIES OF THIS PLAN SHEET.

NOTE:

FOR COMPLETE RIGHT OF WAY DATA, CONTACT RIGHT OF WAY ENGINEERING AT THE DISTRICT OFFICE.

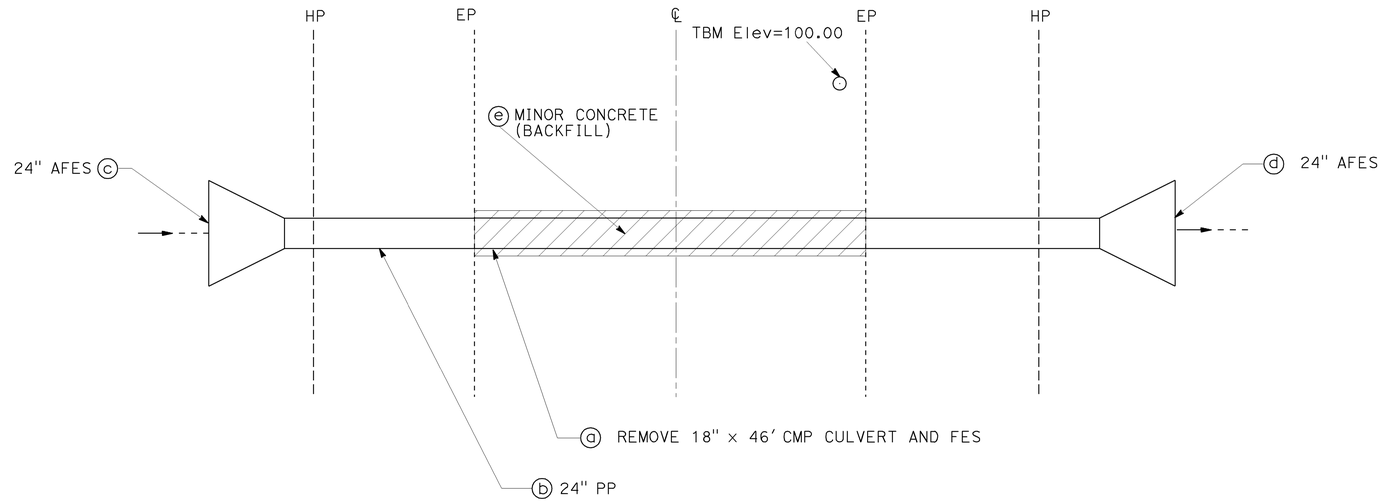

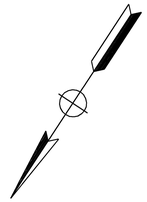

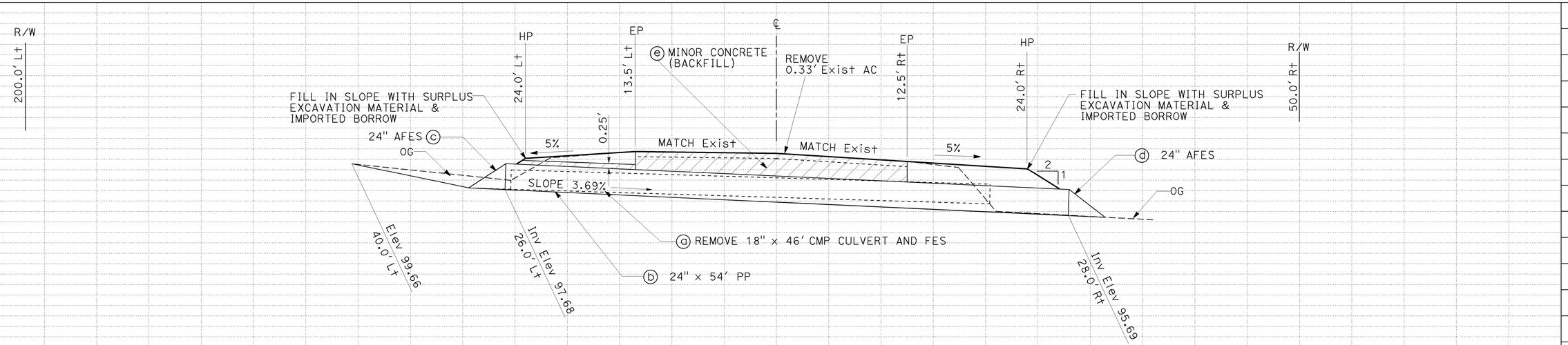

DRAINAGE SYSTEM No. 8

ROUTE 136 PM 14.64

LOCATION 8

THIS PLAN ACCURATE FOR DRAINAGE WORK ONLY.

DRAINAGE PLAN AND PROFILE

SCALE: 1"=5'

D-8

MR	12-7-10
MA	10-25-10
AT	09-21-10
REVISED BY	DATE REVISED
ALLEN TOBEY	MONTASHEEMA AFROZE
CALCULATED-DESIGNED BY	CHECKED BY
FUNCTIONAL SUPERVISOR	JOHN FOX

STATE OF CALIFORNIA - DEPARTMENT OF TRANSPORTATION
Caltrans® MAINTENANCE ENGINEERING

LAST REVISION 12-13-10
DATE PLOTTED => 18-JAN-2011
TIME PLOTTED => 09:51

Dist	COUNTY	ROUTE	POST MILES TOTAL PROJECT	SHEET No.	TOTAL SHEETS
09	Iny	136, 190	Var	11	26

Allen Tobey 12-7-10
REGISTERED CIVIL ENGINEER DATE

12-13-10
PLANS APPROVAL DATE

REGISTERED PROFESSIONAL ENGINEER
ALLEN C.TOBEY
No. 29764
Exp.03-31-11
CIVIL
STATE OF CALIFORNIA

THE STATE OF CALIFORNIA OR ITS OFFICERS OR AGENTS SHALL NOT BE RESPONSIBLE FOR THE ACCURACY OR COMPLETENESS OF SCANNED COPIES OF THIS PLAN SHEET.

NOTE:
FOR COMPLETE RIGHT OF WAY DATA, CONTACT RIGHT OF WAY ENGINEERING AT THE DISTRICT OFFICE.

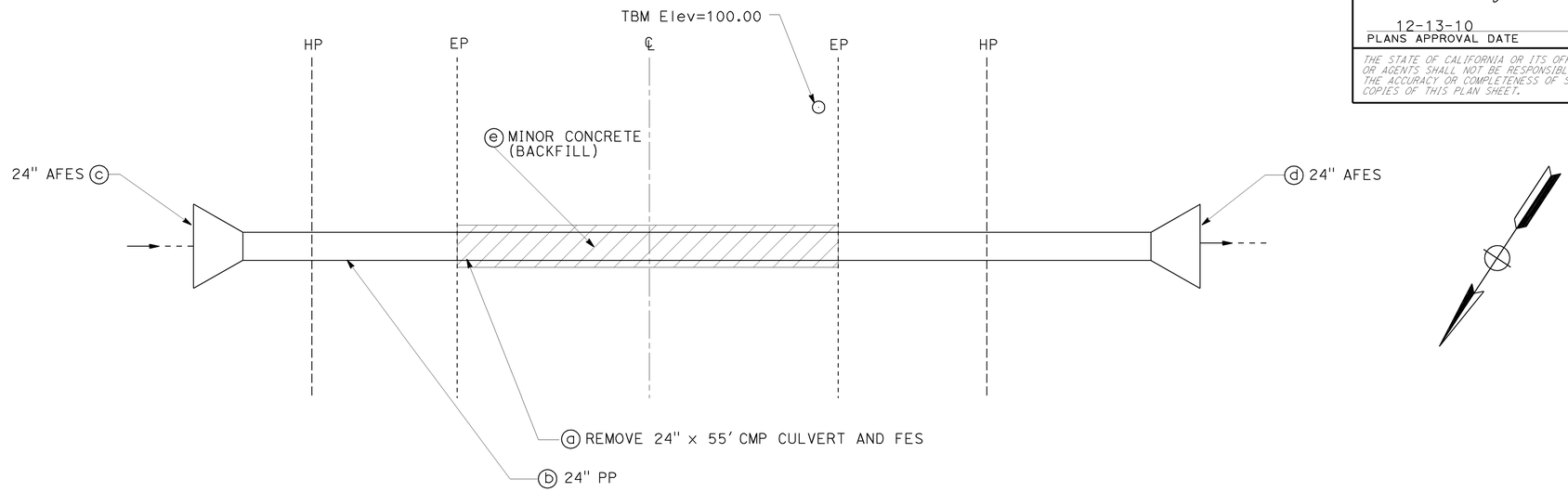

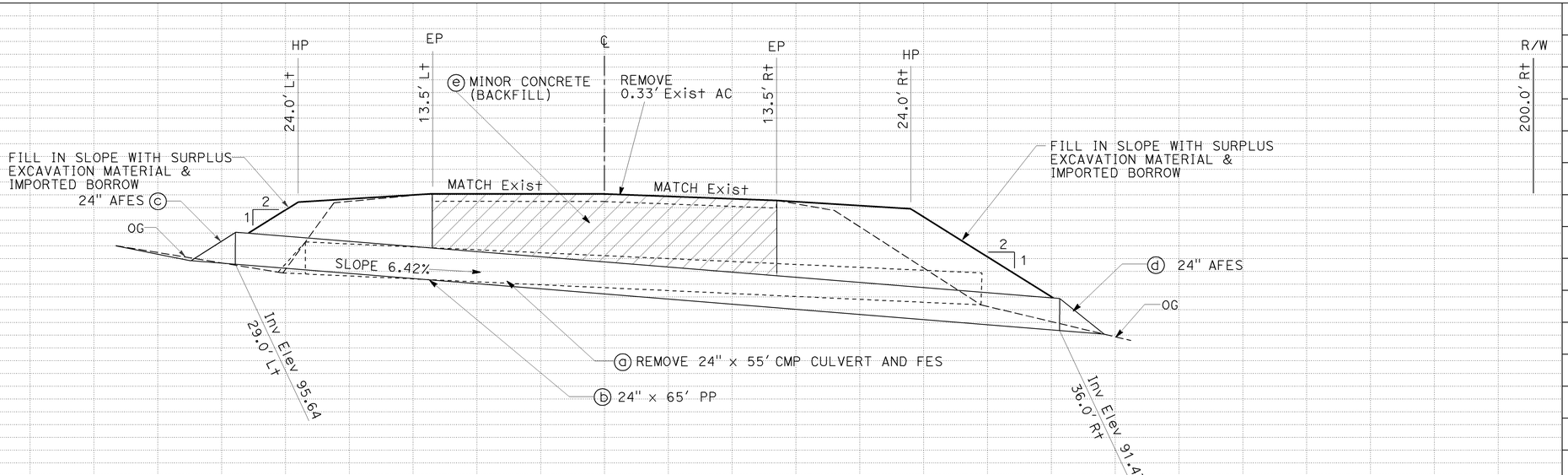

DRAINAGE SYSTEM No. ⑨

ROUTE 136 PM 16.67

LOCATION 9

THIS PLAN ACCURATE FOR DRAINAGE WORK ONLY.

DRAINAGE PLAN AND PROFILE D-9

SCALE: 1"=5'

MR	12-7-10	
MA	10-25-10	
AT	09-21-10	
REVISED BY	DATE REVISED	

ALLEN TOBEY — CALCULATED-DESIGNED BY
MONTASHEEMA AFROZE — CHECKED BY

STATE OF CALIFORNIA - DEPARTMENT OF TRANSPORTATION
Caltrans® MAINTENANCE ENGINEERING
FUNCTIONAL SUPERVISOR: JOHN FOX

LAST REVISION — DATE PLOTTED => 18-JAN-2011
TIME PLOTTED => 09:51
12-13-10

BORDER LAST REVISED 7/2/2010
USERNAME => S123915
DGN FILE => 9348701b009.dgn
RELATIVE BORDER SCALE IS IN INCHES 0 1 2 3
UNIT 2480
PROJECT NUMBER & PHASE 09000200631

Dist	COUNTY	ROUTE	POST MILES TOTAL PROJECT	SHEET No.	TOTAL SHEETS
09	Iny	136, 190	Var	12	26

Allen Tobey 12-7-10
REGISTERED CIVIL ENGINEER DATE

12-13-10
PLANS APPROVAL DATE

REGISTERED PROFESSIONAL ENGINEER
ALLEN C. TOBEY
No. 29764
Exp. 03-31-11
CIVIL
STATE OF CALIFORNIA

THE STATE OF CALIFORNIA OR ITS OFFICERS OR AGENTS SHALL NOT BE RESPONSIBLE FOR THE ACCURACY OR COMPLETENESS OF SCANNED COPIES OF THIS PLAN SHEET.

NOTE:
FOR COMPLETE RIGHT OF WAY DATA, CONTACT RIGHT OF WAY ENGINEERING AT THE DISTRICT OFFICE.

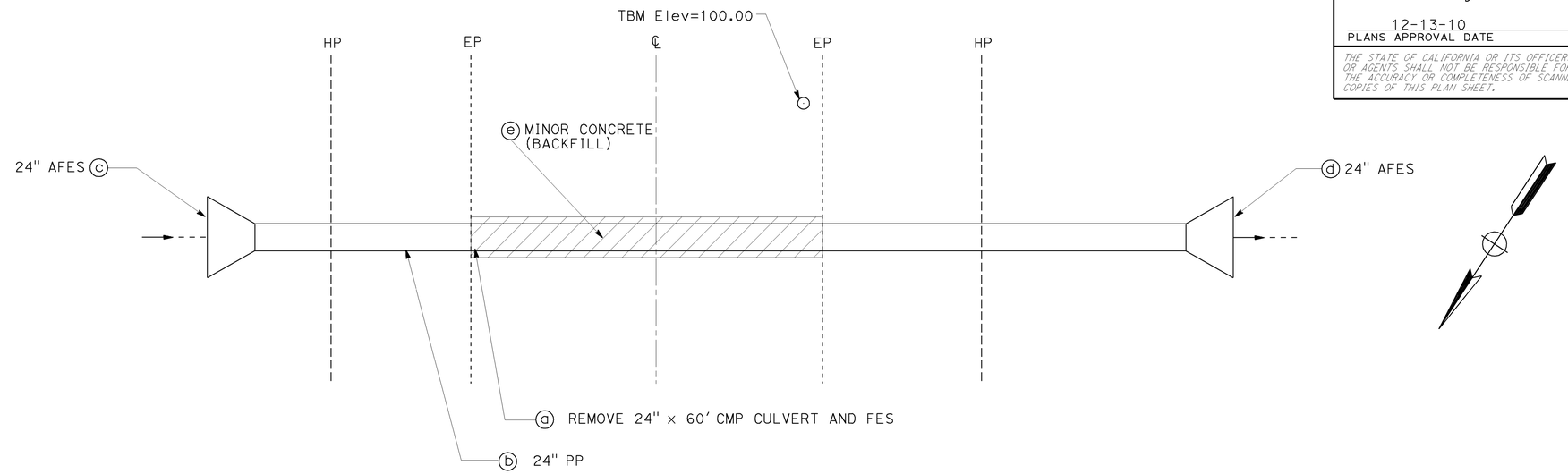

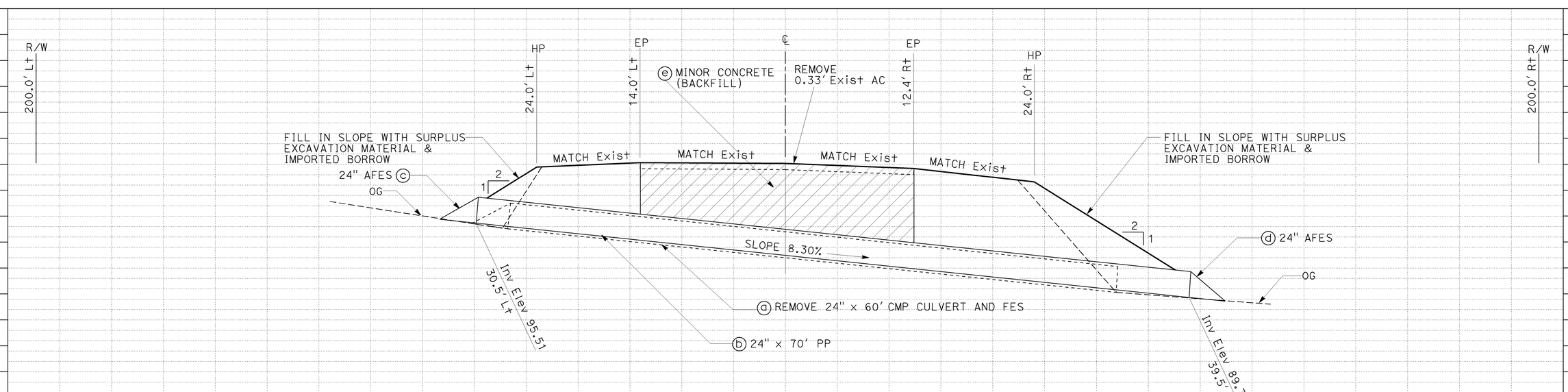

DRAINAGE SYSTEM No. 10

ROUTE 136 PM 16.70
LOCATION 10

THIS PLAN ACCURATE FOR DRAINAGE WORK ONLY.

DRAINAGE PLAN AND PROFILE
D-10

SCALE: 1"=5'

STATE OF CALIFORNIA - DEPARTMENT OF TRANSPORTATION
Caltrans® MAINTENANCE ENGINEERING

FUNCTIONAL SUPERVISOR: JOHN FOX
CALCULATED-DESIGNED BY: ALLEN TOBEY
CHECKED BY: MONTASHEEMA AFROZE
REVISED BY: AT
DATE REVISED: 09-21-10
MA: 10-25-10
MR: 12-7-10

LAST REVISION 12-13-10
DATE PLOTTED => 18-JAN-2011
TIME PLOTTED => 09:51

Dist	COUNTY	ROUTE	POST MILES TOTAL PROJECT	SHEET No.	TOTAL SHEETS
09	Iny	136, 190	Var	13	26

Allen Tobey 12-7-10
REGISTERED CIVIL ENGINEER DATE

12-13-10
PLANS APPROVAL DATE

REGISTERED PROFESSIONAL ENGINEER
ALLEN C.TOBEY
No. 29764
Exp.03-31-11
CIVIL
STATE OF CALIFORNIA

THE STATE OF CALIFORNIA OR ITS OFFICERS OR AGENTS SHALL NOT BE RESPONSIBLE FOR THE ACCURACY OR COMPLETENESS OF SCANNED COPIES OF THIS PLAN SHEET.

NOTE:
FOR COMPLETE RIGHT OFWAY DATA, CONTACT RIGHT OF WAY ENGINEERING AT THE DISTRICT OFFICE.

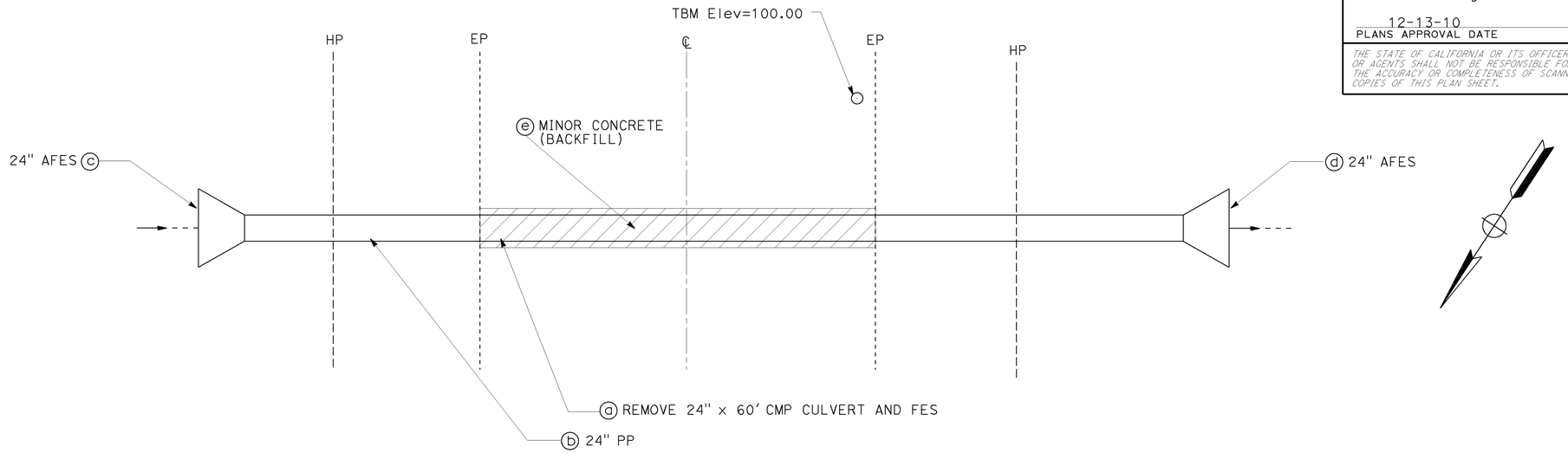

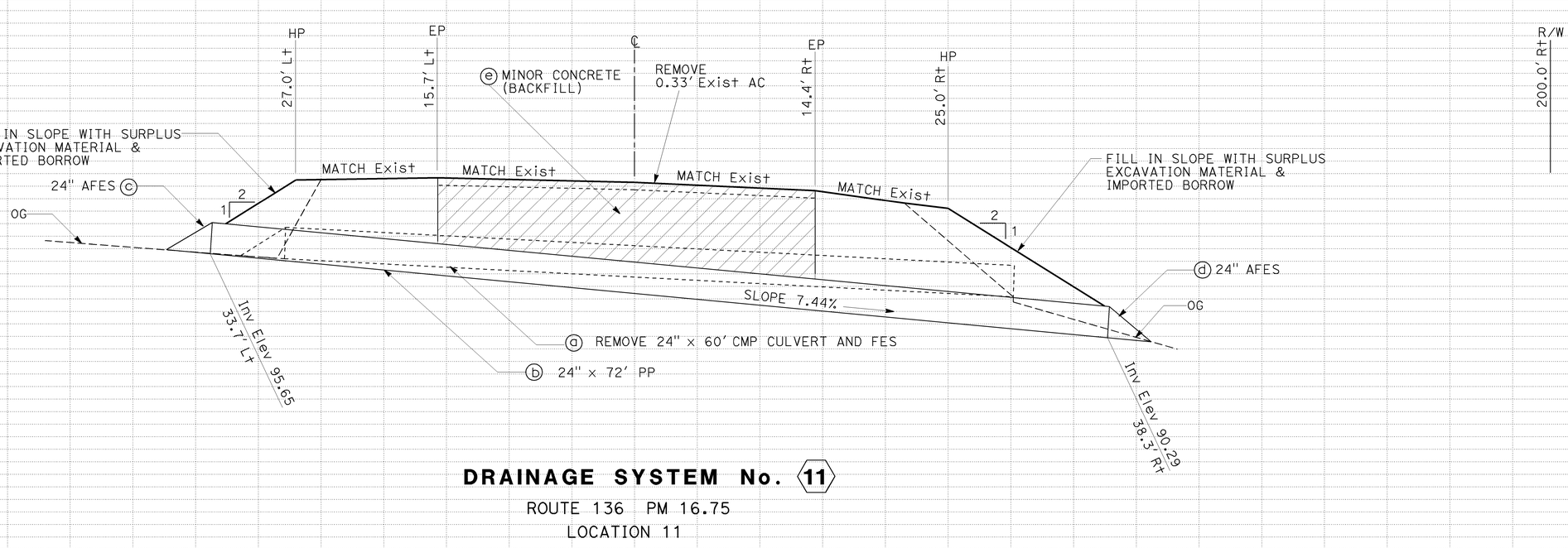

DRAINAGE SYSTEM No. 11

ROUTE 136 PM 16.75
LOCATION 11

THIS PLAN ACCURATE FOR DRAINAGE WORK ONLY.

DRAINAGE PLAN AND PROFILE

SCALE: 1"=5' **D-11**

MR	12-7-10
MA	10-25-10
AT	09-21-10
REVISED BY	DATE REVISED
ALLEN TOBEY	MONTASHEEMA AFROZE
CALCULATED-DESIGNED BY	CHECKED BY
FUNCTIONAL SUPERVISOR	JOHN FOX

STATE OF CALIFORNIA - DEPARTMENT OF TRANSPORTATION
Caltrans® MAINTENANCE ENGINEERING

LAST REVISION DATE PLOTTED => 18-JAN-2011
TIME PLOTTED => 09:51
12-13-10

BORDER LAST REVISED 7/2/2010 | USERNAME => S123915 | DGN FILE => 9348701b011.dgn | RELATIVE BORDER SCALE IS IN INCHES 0 1 2 3 | UNIT 2480 | PROJECT NUMBER & PHASE 09000200631

Dist	COUNTY	ROUTE	POST MILES TOTAL PROJECT	SHEET No.	TOTAL SHEETS
09	Iny	136, 190	Var	14	26

Allen Tobey 12-7-10
REGISTERED CIVIL ENGINEER DATE

12-13-10
PLANS APPROVAL DATE

REGISTERED PROFESSIONAL ENGINEER
ALLEN C. TOBEY
No. 29764
Exp. 03-31-11
CIVIL
STATE OF CALIFORNIA

THE STATE OF CALIFORNIA OR ITS OFFICERS OR AGENTS SHALL NOT BE RESPONSIBLE FOR THE ACCURACY OR COMPLETENESS OF SCANNED COPIES OF THIS PLAN SHEET.

NOTE:
FOR COMPLETE RIGHT OF WAY DATA, CONTACT RIGHT OF WAY ENGINEERING AT THE DISTRICT OFFICE.

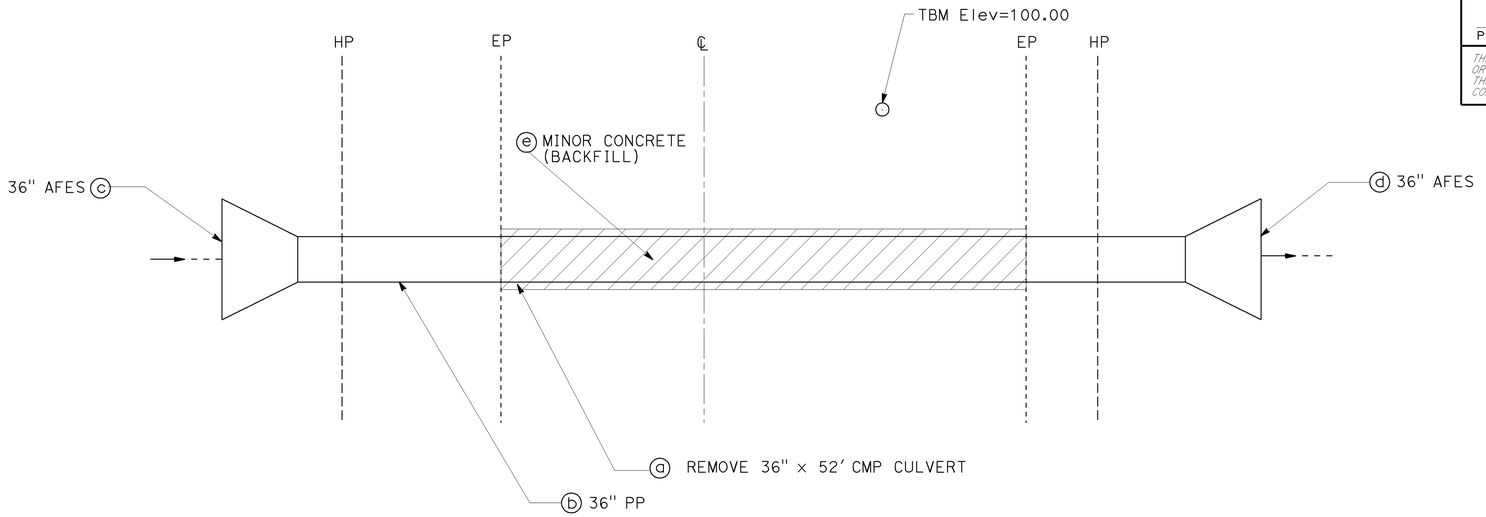

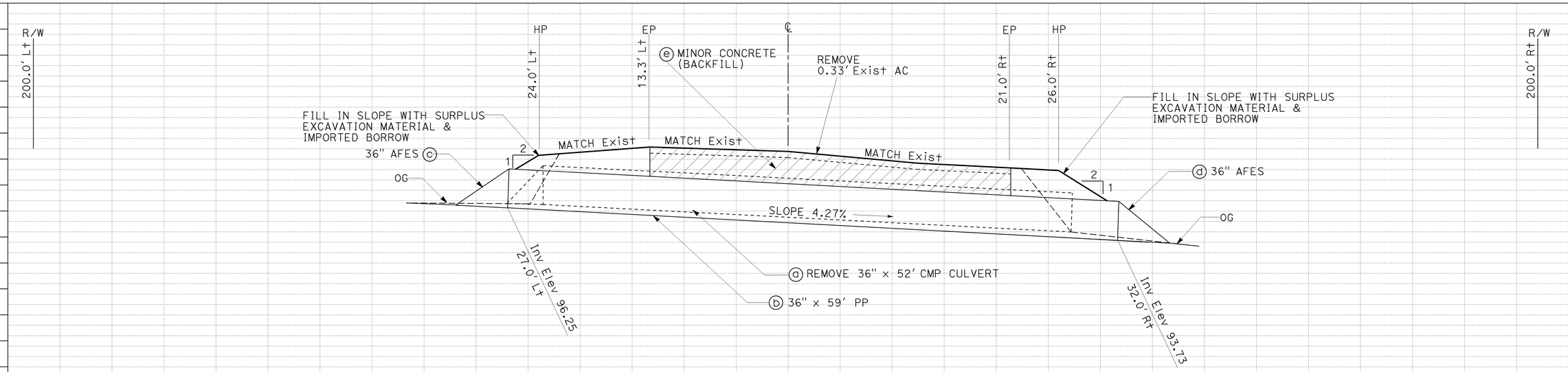

DRAINAGE SYSTEM No. 12

ROUTE 136 PM 16.80
LOCATION 12

THIS PLAN ACCURATE FOR DRAINAGE WORK ONLY.

DRAINAGE PLAN AND PROFILE

SCALE: 1"=5'

D-12

MR	12-7-10	
MA	10-25-10	
AT	09-21-10	
REVISED BY	DATE REVISED	
ALLEN TOBEY	MONTASHEEMA AFROZE	
CALCULATED-DESIGNED BY	CHECKED BY	

FUNCTIONAL SUPERVISOR: JOHN FOX

STATE OF CALIFORNIA - DEPARTMENT OF TRANSPORTATION
Caltrans® MAINTENANCE ENGINEERING

LAST REVISION 12-13-10
DATE PLOTTED => 18-JAN-2011
TIME PLOTTED => 09:51

BORDER LAST REVISED 7/2/2010
USERNAME => S123915
DGN FILE => 934870ib012.dgn
RELATIVE BORDER SCALE IS IN INCHES 0 1 2 3
UNIT 2480
PROJECT NUMBER & PHASE 09000200631

Dist	COUNTY	ROUTE	POST MILES TOTAL PROJECT	SHEET No.	TOTAL SHEETS
09	Iny	136, 190	Var	15	26

Allen Tobey 12-7-10
REGISTERED CIVIL ENGINEER DATE

12-13-10
PLANS APPROVAL DATE

REGISTERED PROFESSIONAL ENGINEER
ALLEN C.TOBEY
No. 29764
Exp.03-31-11
CIVIL
STATE OF CALIFORNIA

THE STATE OF CALIFORNIA OR ITS OFFICERS OR AGENTS SHALL NOT BE RESPONSIBLE FOR THE ACCURACY OR COMPLETENESS OF SCANNED COPIES OF THIS PLAN SHEET.

NOTE:
FOR COMPLETE RIGHT OF WAY DATA, CONTACT RIGHT OF WAY ENGINEERING AT THE DISTRICT OFFICE.

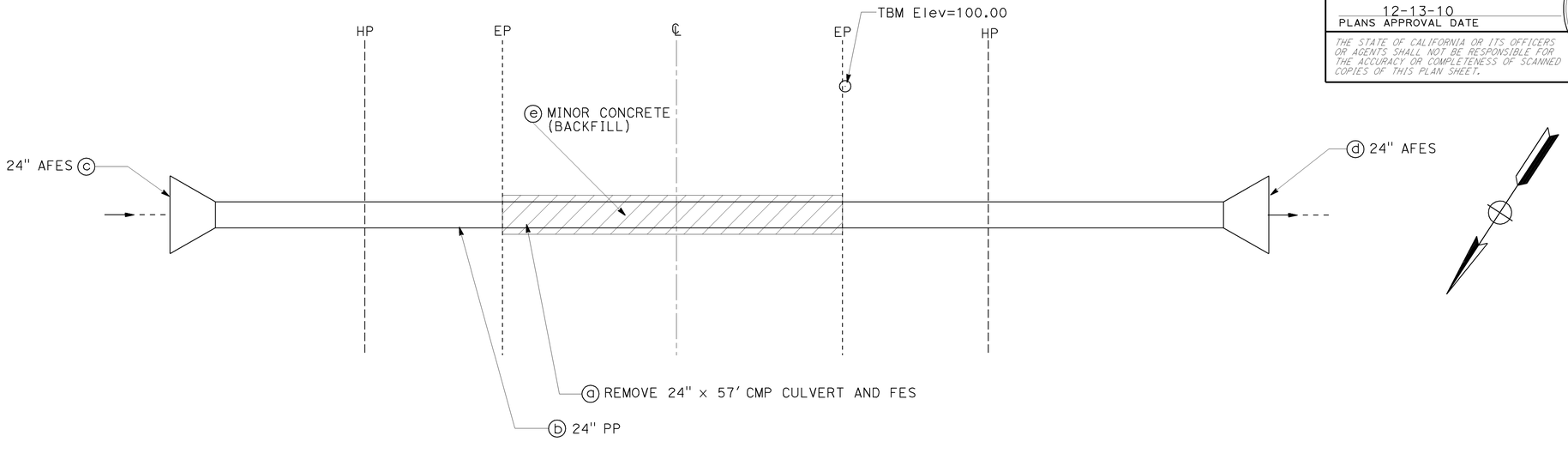

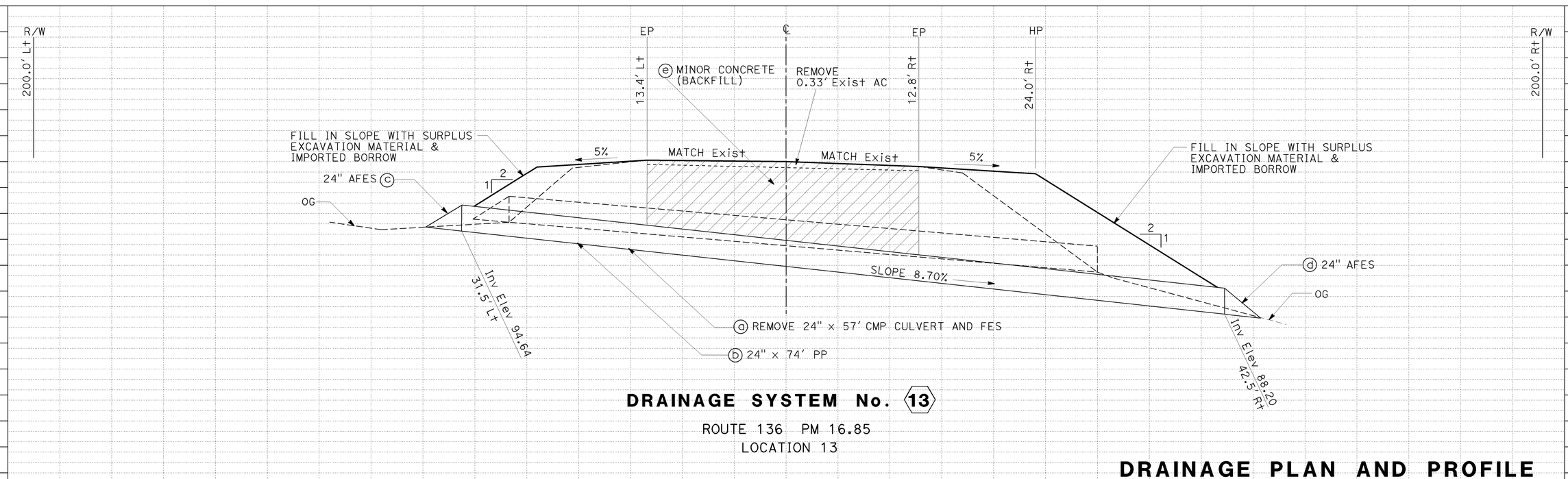

DRAINAGE SYSTEM No. 13

ROUTE 136 PM 16.85
LOCATION 13

DRAINAGE PLAN AND PROFILE

SCALE: 1"=5'

D-13

THIS PLAN ACCURATE FOR DRAINAGE WORK ONLY.

MR	12-7-10		
MA	10-25-10		
AT	09-21-10		
REVISED BY	DATE REVISED		
ALLEN TOBEY	MONTASHEEMA AFROZE		
CALCULATED-DESIGNED BY	CHECKED BY		

FUNCTIONAL SUPERVISOR: JOHN FOX

STATE OF CALIFORNIA - DEPARTMENT OF TRANSPORTATION
Caltrans® MAINTENANCE ENGINEERING

LAST REVISION: DATE PLOTTED => 18-JAN-2011 TIME PLOTTED => 09:51
12-13-10

BORDER LAST REVISED 7/2/2010

USERNAME => S123915
DGN FILE => 9348701b013.dgn

RELATIVE BORDER SCALE IS IN INCHES 0 1 2 3

UNIT 2480

PROJECT NUMBER & PHASE 09000200631

Dist	COUNTY	ROUTE	POST MILES TOTAL PROJECT	SHEET No.	TOTAL SHEETS
09	Iny	136, 190	Var	16	26

Allen Tobey 12-7-10
REGISTERED CIVIL ENGINEER DATE

12-13-10
PLANS APPROVAL DATE

REGISTERED PROFESSIONAL ENGINEER
ALLEN C.TOBEY
No. 29764
Exp.03-31-11
CIVIL
STATE OF CALIFORNIA

THE STATE OF CALIFORNIA OR ITS OFFICERS OR AGENTS SHALL NOT BE RESPONSIBLE FOR THE ACCURACY OR COMPLETENESS OF SCANNED COPIES OF THIS PLAN SHEET.

NOTE:
FOR COMPLETE RIGHT OF WAY DATA, CONTACT RIGHT OF WAY ENGINEERING AT THE DISTRICT OFFICE.

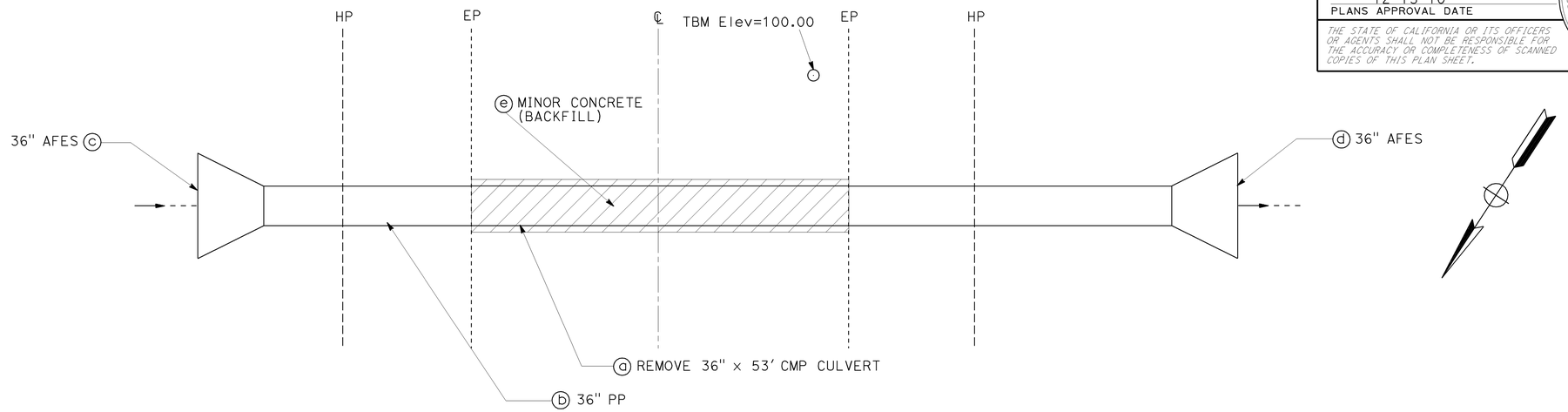

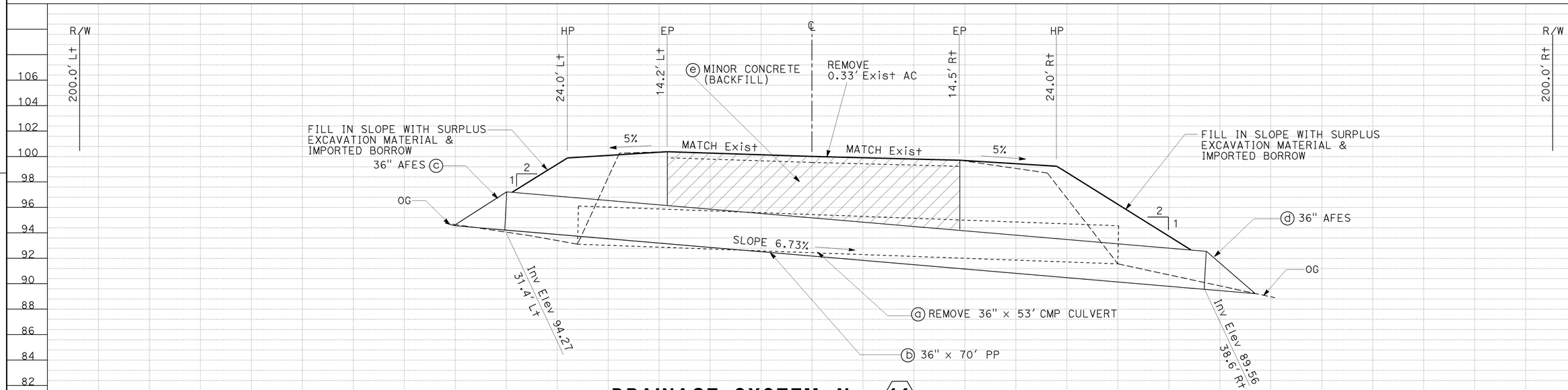

DRAINAGE SYSTEM No. 14

ROUTE 136 PM 16.90

LOCATION 14

THIS PLAN ACCURATE FOR DRAINAGE WORK ONLY.

DRAINAGE PLAN AND PROFILE

SCALE: 1"=5'

D-14

STATE OF CALIFORNIA - DEPARTMENT OF TRANSPORTATION
Caltrans® MAINTENANCE ENGINEERING

FUNCTIONAL SUPERVISOR: JOHN FOX
CALCULATED-DESIGNED BY: ALLEN TOBEY
CHECKED BY: MONTASHEEMA AFROZE
REVISED BY: AT
DATE REVISED: 09-21-10 10-25-10 12-7-10
MA MR

LAST REVISION 12-13-10
DATE PLOTTED => 18-JAN-2011
TIME PLOTTED => 09:51

Dist	COUNTY	ROUTE	POST MILES TOTAL PROJECT	SHEET No.	TOTAL SHEETS
09	Iny	136, 190	Var	17	26

Allen Tobey 12-7-10
REGISTERED CIVIL ENGINEER DATE

12-13-10
PLANS APPROVAL DATE

REGISTERED PROFESSIONAL ENGINEER
ALLEN C.TOBEY
No. 29764
Exp.03-31-11
CIVIL
STATE OF CALIFORNIA

THE STATE OF CALIFORNIA OR ITS OFFICERS OR AGENTS SHALL NOT BE RESPONSIBLE FOR THE ACCURACY OR COMPLETENESS OF SCANNED COPIES OF THIS PLAN SHEET.

NOTE:
FOR COMPLETE RIGHT OF WAY DATA, CONTACT RIGHT OF WAY ENGINEERING AT THE DISTRICT OFFICE.

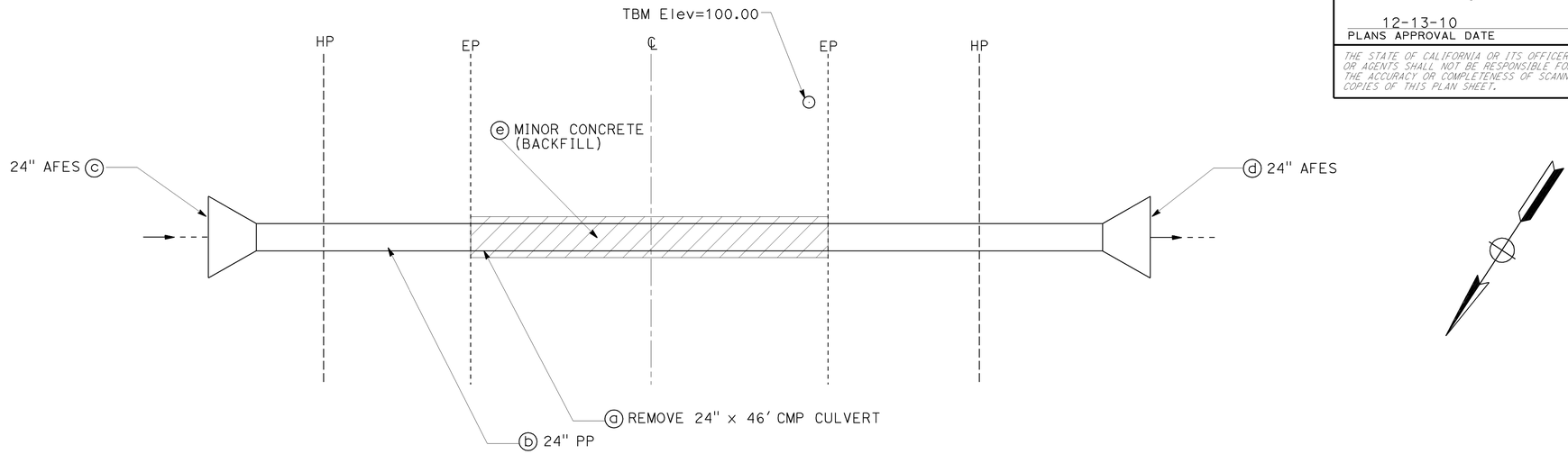

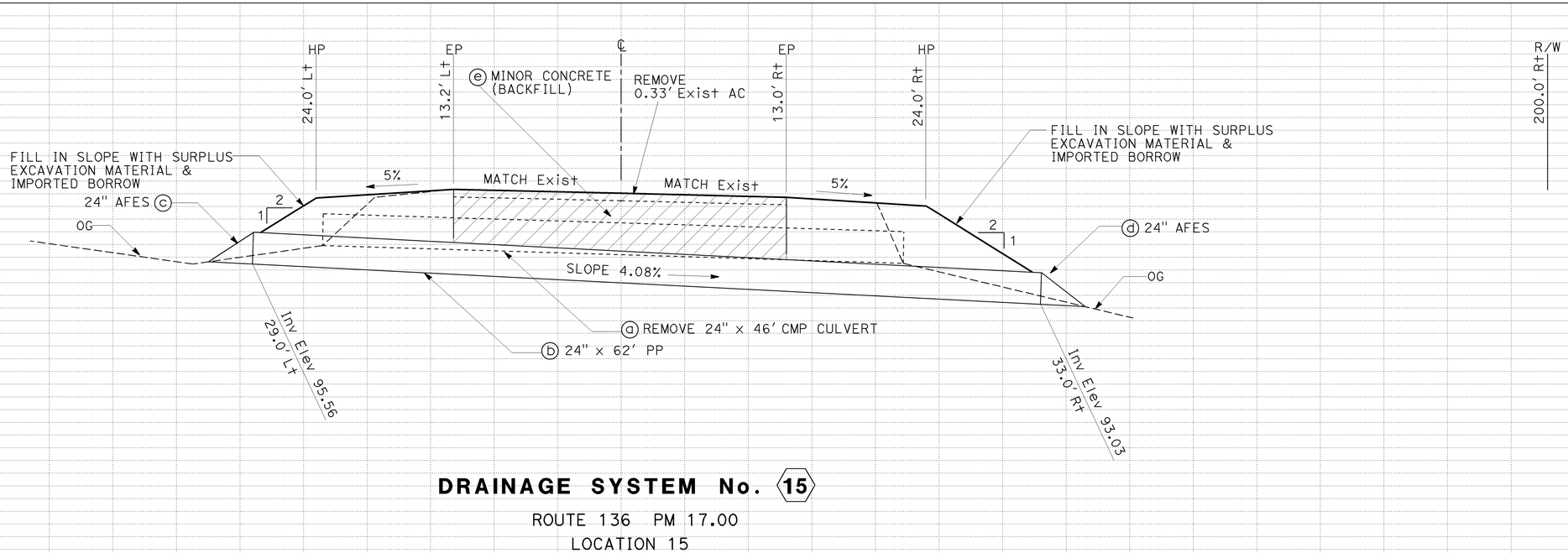

DRAINAGE SYSTEM No. ⟨15⟩

ROUTE 136 PM 17.00
LOCATION 15

THIS PLAN ACCURATE FOR DRAINAGE WORK ONLY.

DRAINAGE PLAN AND PROFILE

SCALE: 1"=5'

D-15

MR 12-7-10
MA 10-25-10
AT 09-21-10
REVISED BY / DATE REVISED
ALLEN TOBEY / MONTASHEEMA AFROZE
CALCULATED-DESIGNED BY / CHECKED BY

FUNCTIONAL SUPERVISOR: JOHN FOX

STATE OF CALIFORNIA - DEPARTMENT OF TRANSPORTATION
Caltrans® MAINTENANCE ENGINEERING

LAST REVISION | DATE PLOTTED => 18-JAN-2011 | TIME PLOTTED => 09:51
12-13-10

BORDER LAST REVISED 7/2/2010 | USERNAME => S123915 | DGN FILE => 934870ib015.dgn | RELATIVE BORDER SCALE IS IN INCHES 0 1 2 3 | UNIT 2480 | PROJECT NUMBER & PHASE 09000200631

Dist	COUNTY	ROUTE	POST MILES TOTAL PROJECT	SHEET No.	TOTAL SHEETS
09	Iny	136, 190	Var	18	26

Allen Tobey 12-7-10
REGISTERED CIVIL ENGINEER DATE

12-13-10
PLANS APPROVAL DATE

REGISTERED PROFESSIONAL ENGINEER
ALLEN C. TOBEY
No. 29764
Exp. 03-31-11
CIVIL
STATE OF CALIFORNIA

THE STATE OF CALIFORNIA OR ITS OFFICERS OR AGENTS SHALL NOT BE RESPONSIBLE FOR THE ACCURACY OR COMPLETENESS OF SCANNED COPIES OF THIS PLAN SHEET.

NOTE:

FOR COMPLETE RIGHT OF WAY DATA, CONTACT RIGHT OF WAY ENGINEERING AT THE DISTRICT OFFICE.

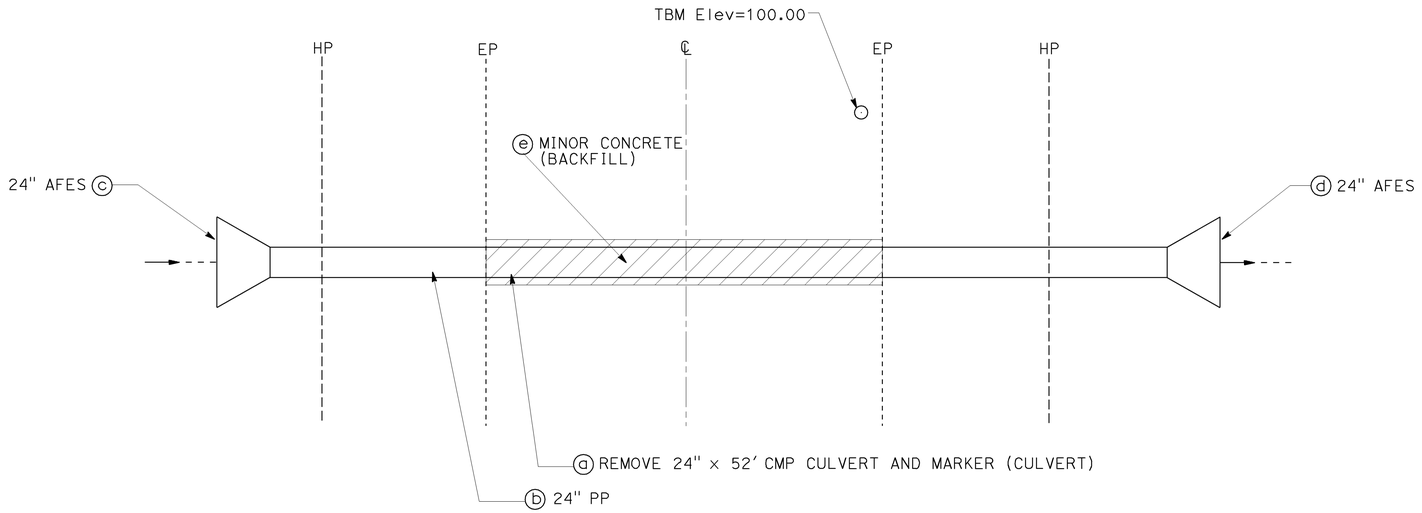

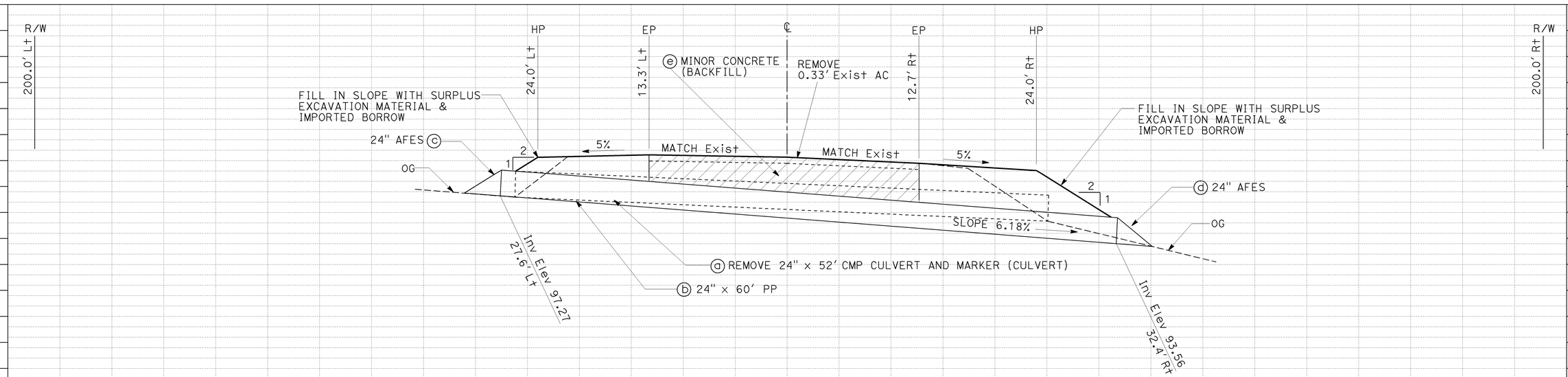

DRAINAGE SYSTEM No. 16

ROUTE 136 PM 17.55

LOCATION 16

THIS PLAN ACCURATE FOR DRAINAGE WORK ONLY.

DRAINAGE PLAN AND PROFILE

SCALE: 1"=5'

D-16

REVISED BY	DATE REVISED
MR	12-7-10
MA	10-25-10
AT	09-21-10

CALCULATED-DESIGNED BY: ALLEN TOBEY
CHECKED BY: MONTASHEEMA AFROZE
FUNCTIONAL SUPERVISOR: JOHN FOX

STATE OF CALIFORNIA - DEPARTMENT OF TRANSPORTATION
Caltrans® MAINTENANCE ENGINEERING

LAST REVISION: DATE PLOTTED => 18-JAN-2011 TIME PLOTTED => 09:51
12-13-10

BORDER LAST REVISED 7/2/2010

USERNAME => S123915
DGN FILE => 934870ib016.dgn

RELATIVE BORDER SCALE IS IN INCHES 0 1 2 3

UNIT 2480

PROJECT NUMBER & PHASE 09000200631

NOTES:

1. (N) NOT A SEPARATE PAY ITEM, FOR INFORMATION ONLY.
2. AFES SHALL BE EITHER PLASTIC OR STEEL.
3. ALL JOINTS SHALL BE STANDARD JOINT TYPE.

DRAINAGE QUANTITIES

DRAINAGE PLAN SHEET No.	DRAINAGE SYSTEM No.	DRAINAGE UNIT	REMOVE PIPE (N) LF	18" PLASTIC PIPE LF	24" PLASTIC PIPE LF	36" PLASTIC PIPE LF	18" AFES EA	24" AFES EA	36" AFES EA	IMPORTED BORROW CY	MINOR CONCRETE (BACKFILL) CY	STRUCTURE BACKFILL (SLURRY CEMENT) CY	ABANDON CULVERT EA	REMOVE HEADWALL (N) EA	RELOCATE RIPRAP (N) CY	DESCRIPTION	LOCATION	DRAINAGE PLAN SHEET No.	DRAINAGE SYSTEM No.	DRAINAGE UNIT
D-1	1	a	64													REMOVE 2 EA-12"x32' Conc CULVERTS	Rte 190, PM 11.10	D-1	1	a
		b		52						12.0						INSTALL 18"x52' PLASTIC PIPE CULVERT				b
		c					1									18" ALTERNATIVE FLARED END SECTION				c
		d					1									18" ALTERNATIVE FLARED END SECTION				d
		e									13.1					MINOR CONCRETE (BACKFILL)				e
		f												1		REMOVE CONCRETE HEADWALL				f
D-2	2	a	57													REMOVE 36"x57' CMP CULVERT	Rte 190, PM 13.26	D-2	2	a
		b				60				8.0						INSTALL 36"x60' PLASTIC PIPE CULVERT				b
		c							1							36" ALTERNATIVE FLARED END SECTION				c
		d							1							36" ALTERNATIVE FLARED END SECTION				d
		e									18.8					MINOR CONCRETE (BACKFILL)				e
D-3	3	a	74													REMOVE 36"x74' CMP CULVERT	Rte 190, PM 14.91	D-3	3	a
		b				71				12.0						INSTALL 36"x71' PLASTIC PIPE CULVERT				b
		c							1							36" ALTERNATIVE FLARED END SECTION				c
		d							1							36" ALTERNATIVE FLARED END SECTION)				d
		e									22.0					MINOR CONCRETE (BACKFILL)				e
D-4	4	a	72													REMOVE 36"x72' CMP CULVERT & FES INLET AND OUTLET	Rte 190, PM 15.19	D-4	4	a
		b				74										INSTALL 36"x74' PLASTIC PIPE CULVERT				b
		c							1							36" ALTERNATIVE FLARED END SECTION				c
		d							1							36" ALTERNATIVE FLARED END SECTION				d
		e									27.0					MINOR CONCRETE (BACKFILL)				e
		f													16	RELOCATE RIPRAP				f
D-5	5	a										35.0	1			ABANDON 48"x81' CMP	Rte 190, PM 19.20	D-5	5	a
D-6	6	a	46													REMOVE 24"x46' CMP CULVERT & HEADWALLS	Rte 190, PM 24.35	D-6	6	a
		b			67					30.0						INSTALL 24"x67' PLASTIC PIPE CULVERT				b
		c						1								24" ALTERNATIVE FLARED END SECTION				c
		d						1								24" ALTERNATIVE FLARED END SECTION				d
		e									17.7					MINOR CONCRETE (BACKFILL)				e
		f												1		REMOVE CONCRETE HEADWALL				f
		g												1		REMOVE CONCRETE HEADWALL				g
D-7	7	a	61													REMOVE 24"x61' CMP CULVERT & FES INLET	Rte 136, PM 14.55	D-7	7	a
		b			64											INSTALL 24"x64' PLASTIC PIPE CULVERT				b
		c						1								24" ALTERNATIVE FLARED END SECTION				c
		d						1								24" ALTERNATIVE FLARED END SECTION				d
		e									12.9					MINOR CONCRETE (BACKFILL)				e
D-8	8	a	46													REMOVE 18"x46' CMP CULVERT & FES INLET	Rte 136, PM 14.64	D-8	8	a
		b			54					8.0						INSTALL 24"x54' PLASTIC PIPE CULVERT				b
		c						1								24" ALTERNATIVE FLARED END SECTION				c
		d						1								24" ALTERNATIVE FLARED END SECTION)				d
		e									11.5					MINOR CONCRETE (BACKFILL)				e
SUBTOTAL			420	52	185	205	2	6	6	70.0	123.0	35.0	1	3	16					

Dist	COUNTY	ROUTE	POST MILES TOTAL PROJECT	SHEET No.	TOTAL SHEETS
09	Iny	136, 190	Var	19	26

Allen Tobey 12-7-10
REGISTERED CIVIL ENGINEER DATE

12-13-10
PLANS APPROVAL DATE

REGISTERED PROFESSIONAL ENGINEER
ALLEN C. TOBEY
No. 29764
Exp. 03-31-11
CIVIL
STATE OF CALIFORNIA

THE STATE OF CALIFORNIA OR ITS OFFICERS OR AGENTS SHALL NOT BE RESPONSIBLE FOR THE ACCURACY OR COMPLETENESS OF SCANNED COPIES OF THIS PLAN SHEET.

MR	12-7-10	
MA	10-25-10	
AT	12-13-10	
REVISED BY	DATE REVISED	

CALCULATED-DESIGNED BY: MONTASHEEMA AFROZE
CHECKED BY: ALLEN TOBEY
FUNCTIONAL SUPERVISOR: JOHN FOX

STATE OF CALIFORNIA - DEPARTMENT OF TRANSPORTATION
Caltrans® MAINTENANCE ENGINEERING

LAST REVISION DATE PLOTTED => 18-JAN-2011
LAST REVISION TIME PLOTTED => 09:51
12-13-10

DRAINAGE QUANTITIES DQ-1

NOTES:

1. (N) NOT A SEPARATE PAY ITEM, FOR INFORMATION ONLY.
2. AFES SHALL BE EITHER PLASTIC OR STEEL.
3. ALL JOINTS SHALL BE STANDARD JOINT TYPE.

Dist	COUNTY	ROUTE	POST MILES TOTAL PROJECT	SHEET No.	TOTAL SHEETS
09	Iny	136, 190	Var	20	26

Allen Tobey 12-7-10
REGISTERED CIVIL ENGINEER DATE

12-13-10
PLANS APPROVAL DATE

REGISTERED PROFESSIONAL ENGINEER — ALLEN C. TOBEY No. 29764 Exp. 03-31-11 CIVIL — STATE OF CALIFORNIA

THE STATE OF CALIFORNIA OR ITS OFFICERS OR AGENTS SHALL NOT BE RESPONSIBLE FOR THE ACCURACY OR COMPLETENESS OF SCANNED COPIES OF THIS PLAN SHEET.

DRAINAGE QUANTITIES (Cont.)

DRAINAGE PLAN SHEET No.	DRAINAGE SYSTEM No. ⬡	DRAINAGE UNIT ○	REMOVE PIPE (N) LF	18" PLASTIC PIPE LF	24" PLASTIC PIPE LF	36" PLASTIC PIPE LF	18" AFES EA	24" AFES EA	36" AFES EA	IMPORTED BORROW CY	MINOR CONCRETE (BACKFILL) CY	STRUCTURE BACKFILL (SLURRY CEMENT) CY	ABANDON CULVERT EA	REMOVE HEADWALL (N) EA	RELOCATE RIPRAP (N) CY	DESCRIPTION	LOCATION	DRAINAGE PLAN SHEET No.	DRAINAGE SYSTEM No. ⬡	DRAINAGE UNIT ○
D-9	9	a	55													REMOVE 24"x55' CMP CULVERT & FES INLET	Rte 136, PM 16.67	D-9	9	a
		b			65					28.0						INSTALL 24"x65' PLASTIC PIPE CULVERT				b
		c						1								24" ALTERNATIVE FLARED END SECTION				c
		d						1								24" ALTERNATIVE FLARED END SECTION				d
		e									17.0					MINOR CONCRETE (BACKFILL)				e
D-10	10	a	60													REMOVE 24"x60' CMP CULVERT & FES INLET	Rte 136, PM 16.70	D-10	10	a
		b			70					25.0						INSTALL 24"x70' PLASTIC PIPE CULVERT				b
		c						1								24" ALTERNATIVE FLARED END SECTION				c
		d						1								24" ALTERNATIVE FLARED END SECTION				d
		e									19.7					MINOR CONCRETE (BACKFILL)				e
D-11	11	a	60													REMOVE 24"x60' CMP CULVERT & FES INLET	Rte 136, PM 16.75	D-11	11	a
		b			72					22.0						INSTALL 24"x72' PLASTIC PIPE CULVERT				b
		c						1								24" ALTERNATIVE FLARED END SECTION				c
		d						1								24" ALTERNATIVE FLARED END SECTION				d
		e									22.0					MINOR CONCRETE (BACKFILL)				e
D-12	12	a	52													REMOVE 36"x52' CMP CULVERT	Rte 136, PM 16.80	D-12	12	a
		b				59				12.0						INSTALL 36"x59' PLASTIC PIPE CULVERT				b
		c							1							36" ALTERNATIVE FLARED END SECTION				c
		d							1							36" ALTERNATIVE FLARED END SECTION				d
		e									20.2					MINOR CONCRETE (BACKFILL)				e
D-13	13	a	57													REMOVE 24"x57' CMP CULVERT & FES INLET	Rte 136, PM 16.85	D-13	13	a
		b			74					68.0						INSTALL 24"x74' PLASTIC PIPE CULVERT				b
		c						1								24" ALTERNATIVE FLARED END SECTION				c
		d						1								24" ALTERNATIVE FLARED END SECTION				d
		e									22.3					MINOR CONCRETE (BACKFILL)				e
D-14	14	a	53													REMOVE 36"x53' CMP CULVERT	Rte 136, PM 16.90	D-14	14	a
		b				70				47.0						INSTALL 36"x70' PLASTIC PIPE CULVERT				b
		c							1							36" ALTERNATIVE FLARED END SECTION				c
		d							1							36" ALTERNATIVE FLARED END SECTION				d
		e									28.5					MINOR CONCRETE (BACKFILL)				e
D-15	15	a	46													REMOVE 24"x46' CMP CULVERT	Rte 136, PM 17.0	D-15	15	a
		b			62					18.0						INSTALL 24"x62' PLASTIC PIPE CULVERT				b
		c						1								24" ALTERNATIVE FLARED END SECTION				c
		d						1								24" ALTERNATIVE FLARED END SECTION				d
		e									14.9					MINOR CONCRETE (BACKFILL)				e
D-16	16	a	52													REMOVE 24"x52' CMP CULVERT & MARKER (CULVERT)	Rte 136, PM 17.55	D-16	16	a
		b			60					25.0						INSTALL 24"x60' PLASTIC PIPE CULVERT				b
		c						1								24" ALTERNATIVE FLARED END SECTION				c
		d						1								24" ALTERNATIVE FLARED END SECTION				d
		e									11.5					MINOR CONCRETE (BACKFILL)				e
SUBTOTAL			435		403	129		12	4	245.0	156.1									
SUBTOTAL (DQ-1)			420	52	185	205	2	6	6	70.0	123.0	35.0	1	3	16					
TOTAL			855	52	588	334	2	18	10	315.0	279.1	35.0	1	3	16					

DRAINAGE QUANTITIES DQ-2

CALCULATED-DESIGNED BY	MONTASHEEMA AFROZE	REVISED BY	MR
CHECKED BY	ALLEN TOBEY	DATE REVISED	12-7-10
		REVISED BY	MA
		DATE REVISED	10-25-10
		REVISED BY	AT
FUNCTIONAL SUPERVISOR	JOHN FOX	DATE REVISED	12-13-10

STATE OF CALIFORNIA - DEPARTMENT OF TRANSPORTATION
Caltrans MAINTENANCE ENGINEERING

LAST REVISION DATE PLOTTED => 18-JAN-2011
TIME PLOTTED => 09:51
12-13-10

Dist	COUNTY	ROUTE	POST MILES TOTAL PROJECT	SHEET No.	TOTAL SHEETS
09	Iny	136, 190	Var	21	26

Allen Tobey 12-7-10
REGISTERED CIVIL ENGINEER DATE

12-13-10
PLANS APPROVAL DATE

REGISTERED PROFESSIONAL ENGINEER
ALLEN C.TOBEY
No. 29764
Exp.03-31-11
CIVIL
STATE OF CALIFORNIA

THE STATE OF CALIFORNIA OR ITS OFFICERS OR AGENTS SHALL NOT BE RESPONSIBLE FOR THE ACCURACY OR COMPLETENESS OF SCANNED COPIES OF THIS PLAN SHEET.

NOTES:

1. FOR SIGN INSTALLATION DETAILS AND DIMENSIONS NOT SHOWN SEE STANDARD PLANS.
2. SEE TABLE FOR PLACEMENT TYPE.
3. THIS PLAN ACCURATE FOR CONSTRUCTION AREA SIGN WORK ONLY.
4. SIGNS IN CONFLICT WITH ADJACENT, ON-GOING PROJECTS SHALL BE COVERED UPON INSTALLATION AS DIRECTED BY THE ENGINEER.
5. LOCATION OF CONSTRUCTION AREA SIGNS SHOWN ARE APPROXIMATE, EXACT LOCATIONS SHALL BE DETERMINED BY THE ENGINEER.

LEGEND:

→ - DIRECTION OF TRAVEL

STATIONARY MOUNTED CONSTRUCTION AREA SIGNS

ROUTE	PM	PLACEMENT	REMARKS
190	10.60	A	BEGIN WORK
190	14.28	B	BARNARD WAY, Lt
190	14.58	B	DIRTY SOX SPRINGS Rd, Lt
136	14.05	A	BEGIN WORK
190	25.05	A	END WORK

PORTABLE CHANGEABLE MESSAGE SIGNS

MESSAGE FOR 2 LANE SECTIONS		
EXPECT DELAYS	REDUCE SPEED	PREPARE TO STOP

1. PORTABLE CHANGEABLE MESSAGE SIGN LOCATIONS TO BE CONFIRMED BY THE ENGINEER BEFORE THE ACTUAL CLOSURE.
2. ALTERNATE MESSAGES MUST BE APPROVED BY THE ENGINEER.
3. MESSAGE MAY BE ALTERED BY THE ENGINEER.
4. PORTABLE CHANGEABLE MESSAGE SIGNS SHALL BE DISPLAYED DURING SWEEPING OPERATIONS AND WHEN CONSTRUCTION OPERATIONS ARE ACTIVELY IN PROGRESS UNLESS ORDERED OTHERWISE BY THE ENGINEER.

STATIONARY MOUNTED CONSTRUCTION AREA SIGN DETAILS

LAYOUT	TYPE	PANEL SIZE	SIGN MESSAGE	No. OF SIGNS	No. OF POSTS	POST SIZE
①	W20-1	48" × 48"	ROAD WORK AHEAD	3	3	6" × 6"
	C23B (CA)	60" × 24"	DRAINAGE IMPROVEMENTS	3		
②	W20-1	36" × 36"	ROAD WORK AHEAD	2	2	4" × 6"
③	G20-2	36" × 18"	END ROAD WORK	5	5	4" × 4"

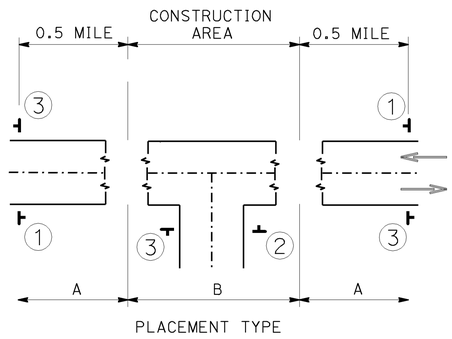

PLACEMENT TYPE

TYPICAL SIGN PLACEMENT FOR UNDIVIDED HIGHWAY

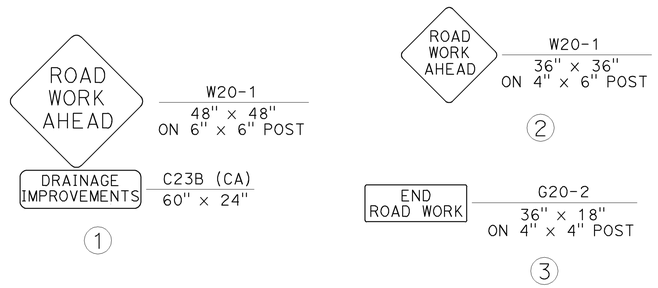

TYPICAL SIGN LAYOUT

MAINTAINING EXISTING TRAFFIC MANAGEMENT SYSTEM ELEMENTS DURING CONSTRUCTION

ROUTE	PM	No.	REMARKS
136	17.66	2	TRAFFIC COUNT STATION-ROUTE 190 JUNCTION
190	24.52	2	TRAFFIC COUNT STATION-ROUTE 136 JUNCTION
TOTAL		4	

CONSTRUCTION AREA SIGNS
NO SCALE

CS-1

CALCULATED-DESIGNED BY	MR	12-7-10	
CHECKED BY	MA	10-25-10	
	AT	09-21-10	
REVISED BY		DATE REVISED	
MONTASHEEMA AFROZE			
ALLEN TOBEY			
FUNCTIONAL SUPERVISOR			
JOHN FOX			

STATE OF CALIFORNIA - DEPARTMENT OF TRANSPORTATION
Caltrans® MAINTENANCE ENGINEERING

LAST REVISION | DATE PLOTTED => 18-JAN-2011
12-13-10 | TIME PLOTTED => 09:51

Dist	COUNTY	ROUTE	POST MILES TOTAL PROJECT	SHEET No.	TOTAL SHEETS
09	Iny	136, 190	Var	22	26

Allen Tobey 12-7-10
REGISTERED CIVIL ENGINEER DATE

12-13-10
PLANS APPROVAL DATE

REGISTERED PROFESSIONAL ENGINEER
ALLEN C.TOBEY
No. 29764
Exp.03-31-11
CIVIL
STATE OF CALIFORNIA

THE STATE OF CALIFORNIA OR ITS OFFICERS OR AGENTS SHALL NOT BE RESPONSIBLE FOR THE ACCURACY OR COMPLETENESS OF SCANNED COPIES OF THIS PLAN SHEET.

NOTES:
(N) NOT A SEPARATE PAY ITEM, FOR INFORMATION ONLY.

MARKERS

DRAINAGE SYSTEM No.	LOCATION	MARKER (CULVERT)	REMOVE MARKER (CULVERT) (N)	REMOVE OBJECT MARKER TYPE L-2(CA) (N)	REMARKS
		EA	EA	EA	
1	Rte 190, PM 11.10	2		2	USE CLASS 2 METAL POST
2	Rte 190, PM 13.26	2	2		USE CLASS 2 METAL POST
3	Rte 190, PM 14.91	2	2		USE CLASS 2 METAL POST
4	Rte 190, PM 15.19	2		1	USE CLASS 2 METAL POST
5	Rte 190, PM 19.20		2		
6	Rte 190, PM 24.35	2		2	USE CLASS 2 METAL POST
7	Rte 136, PM 14.55	2	2		USE CLASS 2 METAL POST
8	Rte 136, PM 14.64	2	1		USE CLASS 2 METAL POST
9	Rte 136, PM 16.67	2		2	USE CLASS 2 METAL POST
10	Rte 136, PM 16.70	2	1	2	USE CLASS 2 METAL POST
11	Rte 136, PM 16.75	2		2	USE CLASS 2 METAL POST
12	Rte 136, PM 16.80	2		2	USE CLASS 2 METAL POST
13	Rte 136, PM 16.85	2	1	2	USE CLASS 2 METAL POST
14	Rte 136, PM 16.90	2		2	USE CLASS 2 METAL POST
15	Rte 136, PM 17.0	2		1	USE CLASS 2 METAL POST
16	Rte 136, PM 17.55	2			USE CLASS 2 METAL POST
TOTAL		30	11	18	

PAINT TRAFFIC STRIPE (2-COAT)

DRAINAGE SYSTEM No.	LOCATION	DETAIL 5	DETAIL 18	DETAIL 21	DETAIL 27B
		LF	LF	LF	LF
1	Rte 190, PM 11.10				20
2	Rte 190, PM 13.26				20
3	Rte 190, PM 14.91	12			20
4	Rte 190, PM 15.19	12			20
6	Rte 190, PM 24.35	12			20
7	Rte 136, PM 14.55		12		20
8	Rte 136, PM 14.64			12	20
9	Rte 136, PM 16.67	12			20
10	Rte 136, PM 16.70	12			20
11	Rte 136, PM 16.75	12			20
12	Rte 136, PM 16.80				20
13	Rte 136, PM 16.85	12			20
14	Rte 136, PM 16.90				20
15	Rte 136, PM 17.0				20
16	Rte 136, PM 17.55				20
SUBTOTAL		84	12	12	300
TOTAL		408			

SUMMARY OF QUANTITIES
Q-1

DATE	REVISED BY	DATE REVISED
	AT	09-21-10
	MA	10-25-10
	MR	12-7-10

MONTASHEEMA AFROZE
ALLEN TOBEY
CALCULATED-DESIGNED BY
CHECKED BY

FUNCTIONAL SUPERVISOR
JOHN FOX

STATE OF CALIFORNIA - DEPARTMENT OF TRANSPORTATION
Caltrans MAINTENANCE ENGINEERING

LAST REVISION 12-13-10
DATE PLOTTED => 18-JAN-2011
TIME PLOTTED => 09:51

BORDER LAST REVISED 7/2/2010
USERNAME => S123915
DGN FILE => 934870pa001.dgn
RELATIVE BORDER SCALE IS IN INCHES 0 1 2 3
UNIT 2480
PROJECT NUMBER & PHASE 09000200631

DIST	COUNTY	ROUTE	POST MILES TOTAL PROJECT	SHEET NO.	TOTAL SHEETS
09	Iny	136, 190	Var	23	26

Raymond Don Tsztoo
REGISTERED CIVIL ENGINEER

March 7, 2008
PLANS APPROVAL DATE

REGISTERED PROFESSIONAL ENGINEER — Raymond Don Tsztoo — No. C37332 — Exp. 6-30-08 — CIVIL — STATE OF CALIFORNIA

The State of California or its officers or agents shall not be responsible for the accuracy or completeness of electronic copies of this plan sheet.

To accompany plans dated 12-13-10

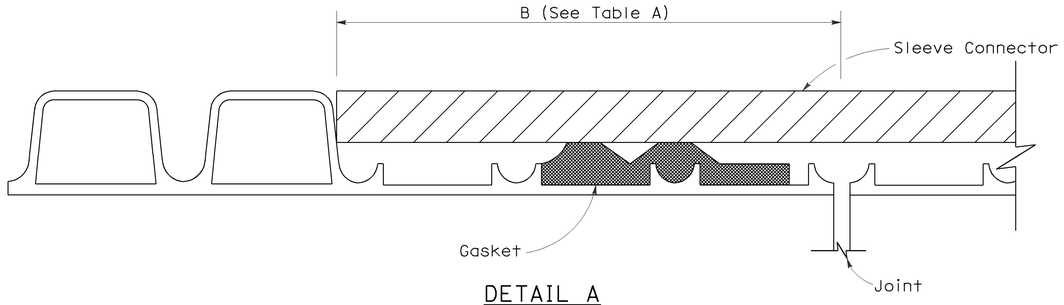

DETAIL A

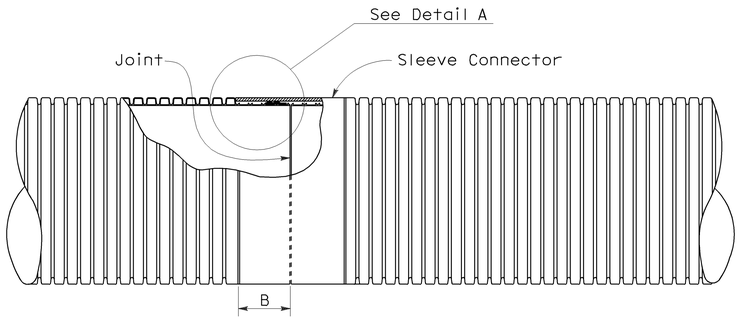

PLAN VIEW
Liner Insert
See Note 4

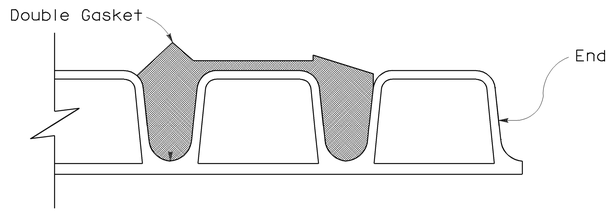

Double Gasket

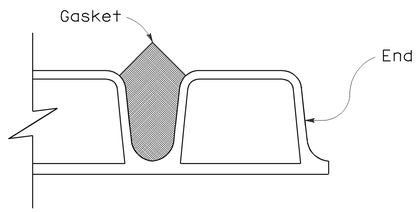

Single Gasket

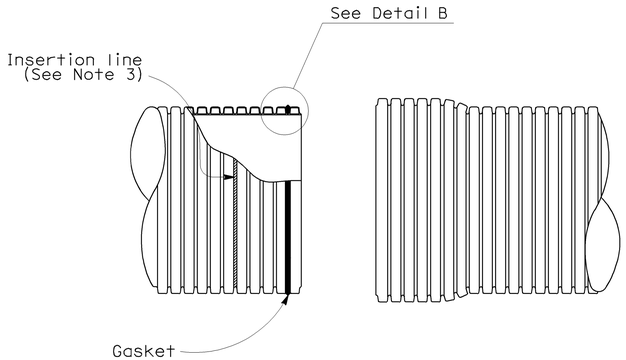

SPIGOT

BELL

DETAIL B

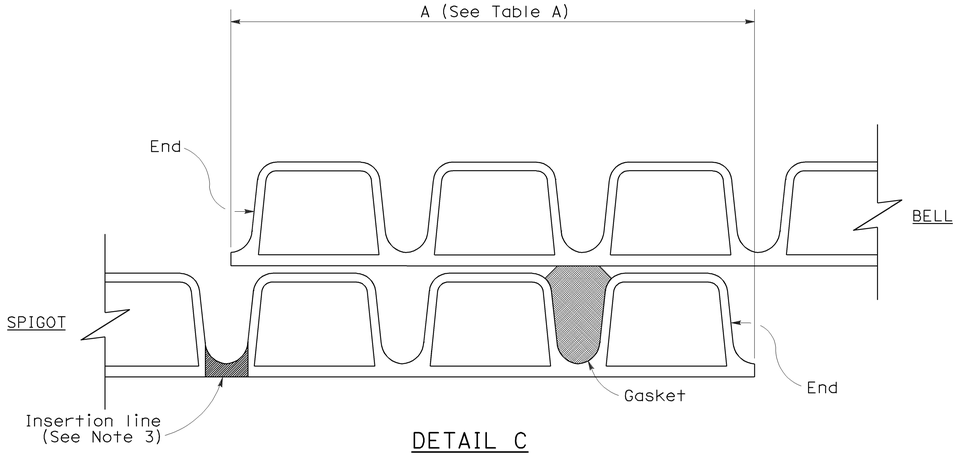

DETAIL C
(Single gasket shown)

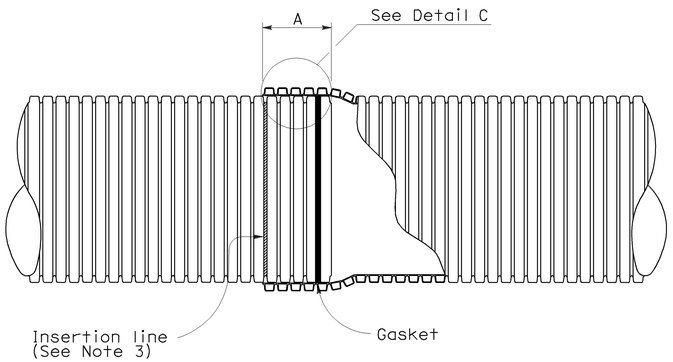

BELL AND SPIGOT JOINT

NOTES:

1. For pipe sections installed on straight alignment, the pipe sections shall be joined to achieve maxium joint overlap at all points on the periphery as indicated in Table A where the plans call for positive or watertight joints. Maxium joint overlap is recommended where the plans call for standard joints, but in no case shall the joint overlap be less than 3½".
2. For pipe sections installed on curved alignment, the maxium angle of deflection from straight alignment at any joint shall not exceed two degrees. Where the plans call for watertightness, field testing for compliance is required. Where plans call for positive joints, the pipe sections shall be joined to achieve Table A Dimensions on one side of the joint. Joints classified as standard shall have no less than 3½" joint overlap at any point on the periphery.
3. Factory applied insertion line limit shall be placed on spigot.
4. Liner insert to be used inside of existing pipe.

TABLE A

JOINT OVERLAP DIMENSIONS		
PIPE Dia (NOMINAL)	A	B
12"	5¾"	4¼"
15"	6¾"	5⅝"
18"	6¾"	5⅝"
21"	8½"	5⅝"
24"	8½"	6⅛"
30"	8½"	7⅛"
36"	8½"	8⅛"

STATE OF CALIFORNIA
DEPARTMENT OF TRANSPORTATION

CORRUGATED POLYVINYL CHLORIDE PIPE WITH SMOOTH INTERIOR STANDARD AND POSITIVE JOINTS

NO SCALE

NSP D97I DATED MARCH 7, 2008 SUPPLEMENTS THE STANDARD PLANS BOOK DATED MAY 2006.

NEW STANDARD PLAN NSP D97I

2006 NEW STANDARD PLAN NSP D97I

190A

2-13-08

DIST	COUNTY	ROUTE	POST MILES TOTAL PROJECT	SHEET NO.	TOTAL SHEETS
09	Iny	136, 190	Var	24	26

Randell D. Hiatt
REGISTERED CIVIL ENGINEER

June 6, 2008
PLANS APPROVAL DATE

REGISTERED PROFESSIONAL ENGINEER — Randell D. Hiatt — No. C50200 — Exp. 6-30-09 — CIVIL — STATE OF CALIFORNIA

The State of California or its officers or agents shall not be responsible for the accuracy or completeness of electronic copies of this plan sheet.

To accompany plans dated 12-13-10

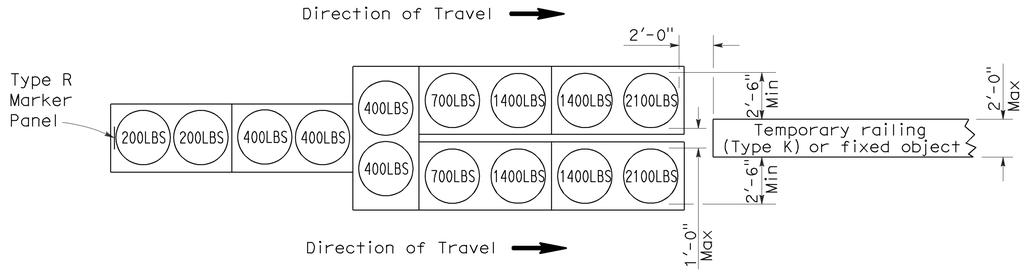

ARRAY 'TU14'

Approach speed 45 mph or more

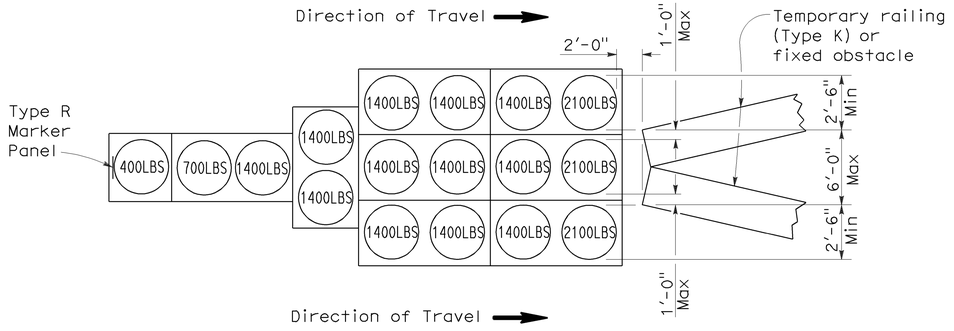

ARRAY 'TU17'

Approach speed less than 45 mph

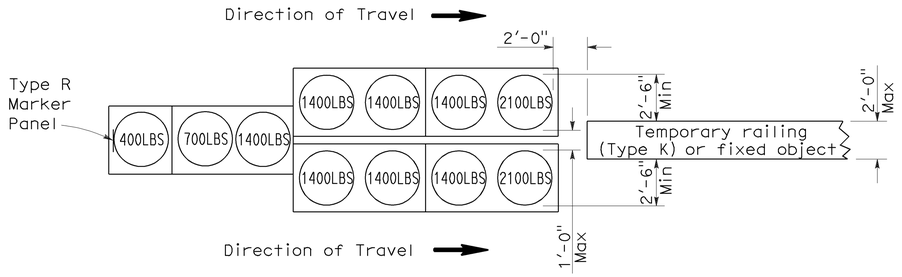

ARRAY 'TU11'

Approach speed less than 45 mph

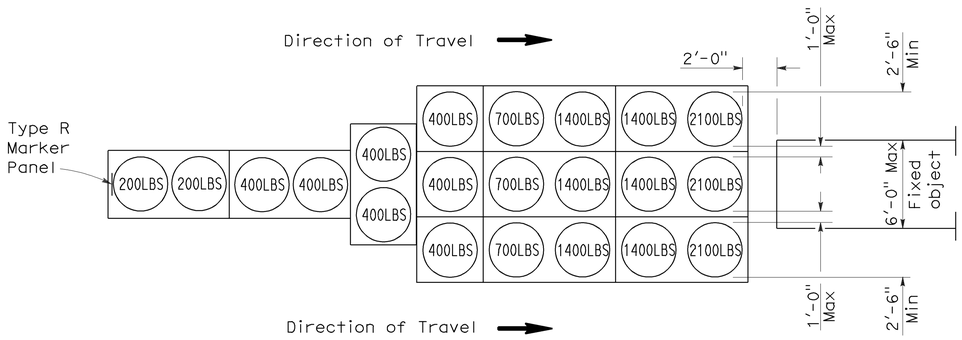

ARRAY 'TU21'

Approach speed 45 mph or more

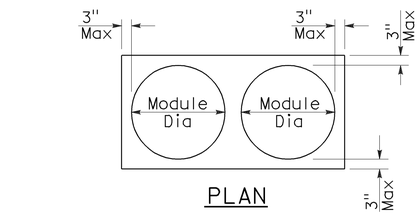

PLAN

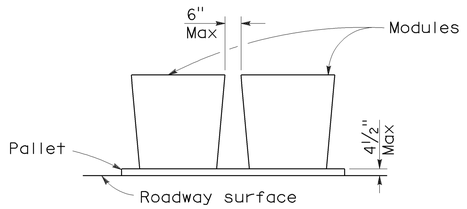

ELEVATION

CRASH CUSHION PALLET DETAIL

See Note 7

NOTES:

1. (XXX) Indicates sand filled module location and weight of sand in pounds for each module. Module spacing is based on the greater diameter of the module.
2. All sand weights are nominal.
3. Temporary crash cushion arrays shall not encroach on the traveled way.
4. Place the top of Type R marker panel 1" below the module lid.
5. Refer to Standard Plan A73B for marker details.
6. Approach speeds indicated conform to NCHRP 350 Report criteria.
7. Use of pallets is optional.

STATE OF CALIFORNIA
DEPARTMENT OF TRANSPORTATION

TEMPORARY CRASH CUSHION, SAND FILLED (UNIDIRECTIONAL)

NO SCALE

RSP T1A DATED JUNE 6, 2008 SUPERSEDES STANDARD PLAN T1A
DATED MAY 1, 2006 - PAGE 211 OF THE STANDARD PLANS BOOK DATED MAY 2006.

REVISED STANDARD PLAN RSP T1A

2006 REVISED STANDARD PLAN RSP T1A

5-15-08

DIST	COUNTY	ROUTE	POST MILES TOTAL PROJECT	SHEET NO.	TOTAL SHEETS
09	Iny	136, 190	Var	25	26

Randell D. Hiatt
REGISTERED CIVIL ENGINEER

June 6, 2008
PLANS APPROVAL DATE

REGISTERED PROFESSIONAL ENGINEER
Randell D. Hiatt
No. C50200
Exp. 6-30-09
CIVIL
STATE OF CALIFORNIA

The State of California or its officers or agents shall not be responsible for the accuracy or completeness of electronic copies of this plan sheet.

To accompany plans dated 12-13-10

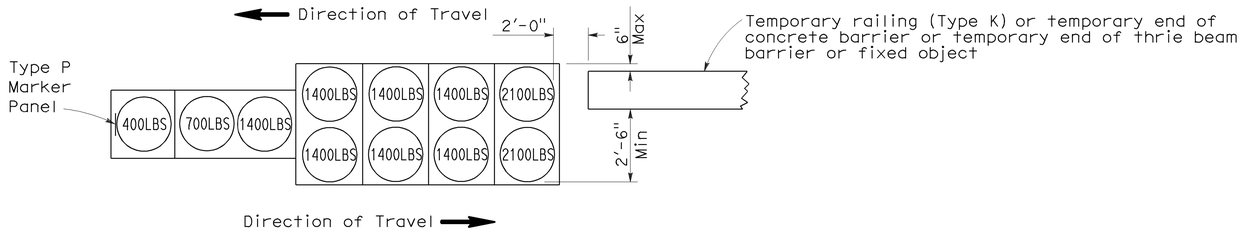

ARRAY 'TB11'

Approach speed less than 45 mph

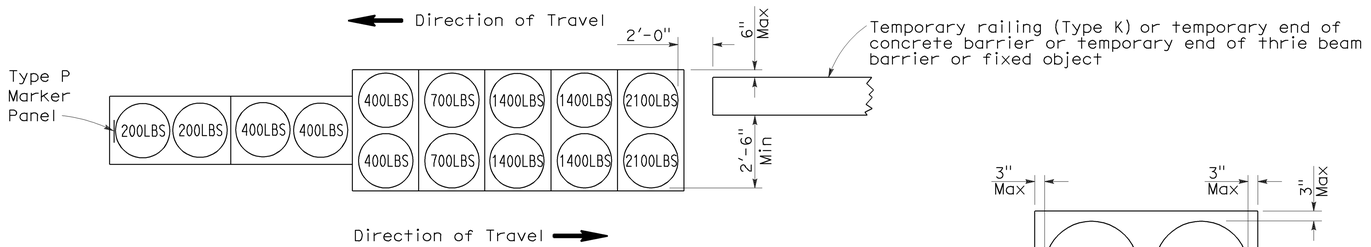

ARRAY 'TB14'

Approach speed 45 mph or more

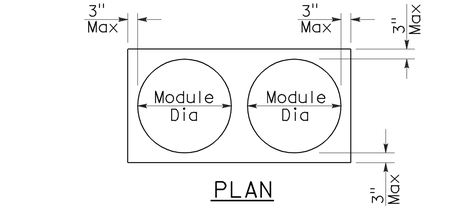

PLAN

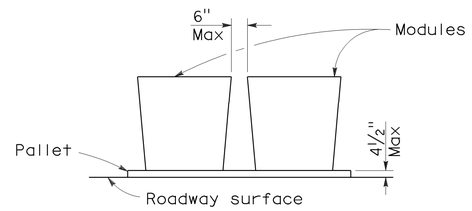

ELEVATION

CRASH CUSHION PALLET DETAIL

See Note 7

NOTES:

1. (XXX) Indicates sand filled module location and weight of sand in pounds for each module. Module spacing is based on the greater diameter of the module.
2. All sand weights are nominal.
3. Temporary crash cushion arrays shall not encroach on the traveled way.
4. Place the Type P marker panel so that the bottom of the panel rests upon the pallet.
5. Refer to Standard Plan A73B for marker details.
6. Approach speeds indicated conform to NCHRP 350 Report criteria.
7. Use of pallets is optional.

STATE OF CALIFORNIA
DEPARTMENT OF TRANSPORTATION

TEMPORARY CRASH CUSHION, SAND FILLED (BIDIRECTIONAL)

NO SCALE

RSP T1B DATED JUNE 6, 2008 SUPERSEDES STANDARD PLAN T1B
DATED MAY 1, 2006 - PAGE 212 OF THE STANDARD PLANS BOOK DATED MAY 2006.

REVISED STANDARD PLAN RSP T1B

2006 REVISED STANDARD PLAN RSP T1B

5-15-08

DIST	COUNTY	ROUTE	POST MILES TOTAL PROJECT	SHEET NO.	TOTAL SHEETS
09	Iny	136, 190	Var	26	26

Randell D. Hiatt
REGISTERED CIVIL ENGINEER

June 6, 2008
PLANS APPROVAL DATE

REGISTERED PROFESSIONAL ENGINEER — Randell D. Hiatt — No. C50200 — Exp. 6-30-09 — CIVIL — STATE OF CALIFORNIA

The State of California or its officers or agents shall not be responsible for the accuracy or completeness of electronic copies of this plan sheet.

To accompany plans dated 12-13-10

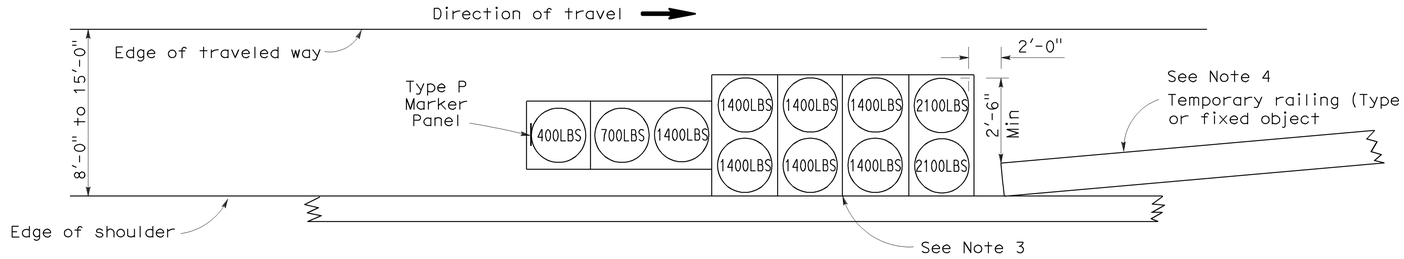

ARRAY 'TS11'

Approach speed less than 45 mph
See Note 9

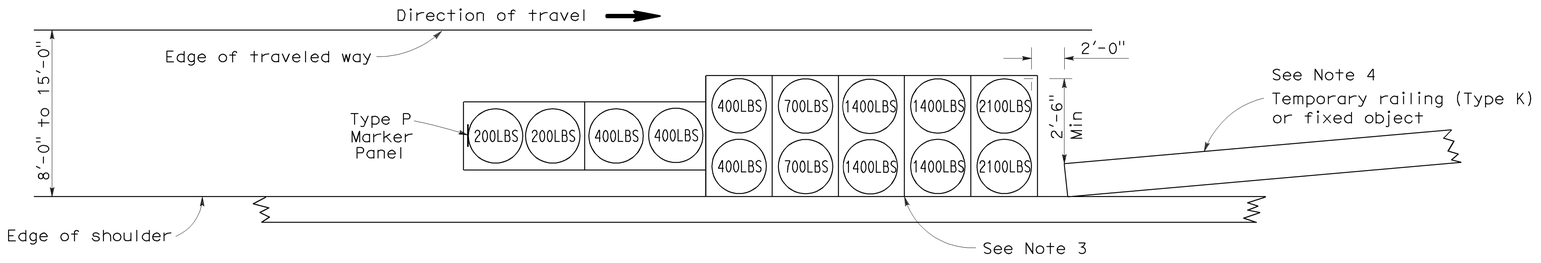

ARRAY 'TS14'

Approach speed 45 mph or more
See Note 9

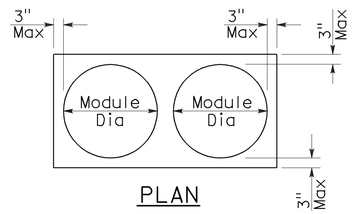

PLAN

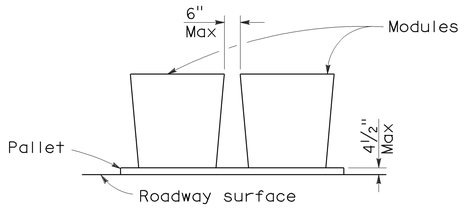

ELEVATION

CRASH CUSHION PALLET DETAIL

See Note 11

NOTES:

1. (XXX) Indicates sand filled module location and weight of sand in pounds for each module. Module spacing is based on the greater diameter of the module.
2. All sand weights are nominal.
3. The temporary crash cushion arrays shown on this plan shall be used only in locations where there will be traffic on one side of the temporary crash cushion array.
4. If the fixed object or approach end of the temporary railing is less than 15'-0" from the edge of traveled way, a temporary crash cushion is required in a construction or work zone.
5. Temporary crash cushion arrays shall not encroach on the traveled way.
6. Arrays for median shoulders shall conform to details shown on this plan for outside shoulders.
7. Place the Type P marker panel so that the bottom of the panel rests upon the pallet and faces traffic.
8. Refer to Standard Plan A73B for marker details.
9. For shoulder widths less than 8'-0", appropriate approved crash cushion protection, other than sand filled modules, shall be provided at fixed objects and at approach ends of temporary railing. The specific type of crash cushion shall be as shown on the project plans or as specified in the Special Provisions, or if not shown on the project plans or specified in the Special Provisions, shall be as approved by the Engineer.
10. Approach speeds indicated conform to NCHRP 350 Report criteria.
11. Use of pallets is optional.

STATE OF CALIFORNIA
DEPARTMENT OF TRANSPORTATION

TEMPORARY CRASH CUSHION, SAND FILLED (SHOULDER INSTALLATIONS)

NO SCALE

RSP T2 DATED JUNE 6, 2008 SUPERSEDES STANDARD PLAN T2
DATED MAY 1, 2006 - PAGE 213 OF THE STANDARD PLANS BOOK DATED MAY 2006.

REVISED STANDARD PLAN RSP T2

2006 REVISED STANDARD PLAN RSP T2

5-15-08