DIST	COUNTY	ROUTE	POST MILES TOTAL PROJECT	SHEET No	TOTAL SHEETS
10	SJ	99	10.6/14.9	401	504

REGISTERED CIVIL ENGINEER 6-24-11 DATE

10-17-11
PLANS APPROVAL DATE

REGISTERED PROFESSIONAL ENGINEER SHARIQ PERVAIZ No. C67068 Exp. 9-30-12 CIVIL STATE OF CALIFORNIA

The State of California or its officers or agents shall not be responsible for the accuracy or completeness of electronic copies of this plan sheet.

SAN JOAQUIN COUNCIL OF GOVERNMENTS
555 E. WEBER AVE.
STOCKTON, CA 95202

HDR ENGINEERING, INC.
2365 IRON POINT ROAD, SUITE 300
FOLSOM, CA 95630

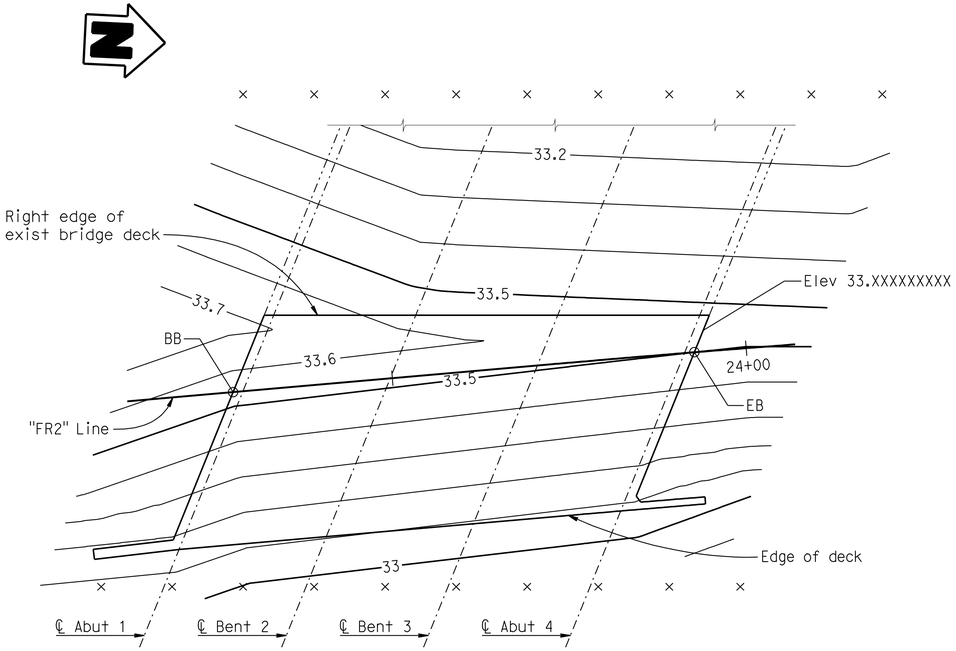

PARTIAL PLAN - DECK CONTOURS

3/32" = 1'-0"

NOTES:

1. x - Indicates 10' intervals along "SR 99" Line.
2. Contour interval = 0.1'.
3. Contours do not include camber or allowance for falsework settlement.
4. Contours are developed to match existing grade & cross slope at edge of deck and indicate top of concrete deck elevation.

INDEX TO PLANS:

1. GENERAL PLAN
2. DECK CONTOURS
3. FOUNDATION PLAN
4. ABUTMENT 1 LAYOUT
5. ABUTMENT 4 LAYOUT
6. ABUTMENT DETAILS NO. 1
7. ABUTMENT DETAILS NO. 2
8. BENT DETAILS
9. TYPICAL SECTION
10. SLAB REINFORCEMENT NO. 1
11. SLAB REINFORCEMENT NO. 2
12. SLAB REINFORCEMENT DETAILS
13. CONCRETE SLOPE PROTECTION DETAILS
14. LOG OF TEST BORINGS NO. 1
15. LOG OF TEST BORINGS NO. 2
16. LOG OF TEST BORINGS NO. 3
17. LOG OF TEST BORINGS NO. 4
18. LOG OF TEST BORINGS NO. 5
19. AS-BUILT LOG OF TEST BORINGS

CALTRANS STANDARD PLANS DATED MAY 2006

A10A	ACRONYMS AND ABBREVIATIONS (SHEET 1 OF 2)
A10B	ACRONYMS AND ABBREVIATIONS (SHEET 2 OF 2)
A10C	SYMBOLS (SHEET 1 of 2)
A10D	SYMBOLS (SHEET 2 of 2)
A62C	LIMITS OF PAYMENT FOR EXCAVATION AND BACKFILL BRIDGE
RSP A76A	CONCRETE BARRIER TYPE 60
B0-1	BRIDGE DETAILS
B0-3	BRIDGE DETAILS
B2-5	PILE DETAILS CLASS 90 AND CLASS 140
B11-55	CONCRETE BARRIER TYPE 732

STANDARD PLAN SHEET NO.

DETAIL NO.

Structural Concrete, Bridge

PC/PS Concrete Pile (Class 140), see "BENT DETAILS" Sheet

PC/PS Concrete Pile (Class 90), Alternative X, see B2-5

CONCRETE STRENGTH AND TYPE LIMITS

No Scale

GENERAL NOTES
LOAD AND RESISTANCE FACTOR DESIGN

DESIGN:
AASHTO LRFD Bridge Design Specifications, 4th Edition and the Caltrans Amendments, preface dated Dec 2008; except that bridge (incl. barrier and railing) details taken from Standard Plans March 2006 and earlier versions, Standard Bridge Details XS sheets, etc) are designed using Bridge Design Specifications (96 AASHTO w/Revisions by Caltrans).

SEISMIC DESIGN:
Caltrans Seismic Design Criteria (SDC), Version 1.4 July 2006.

DEAD LOAD
Includes 35 psf for future wearing surface.

LIVE LOADING:
HL93 and permit design load.

SEISMIC LOADING:
CALTRANS SDC ARS Curve: Figure B.7
(Soil Profile Type D) Magnitude = 6.5± 0.25
(Spectrum Peak Rock Acceleration = 0.2 g)

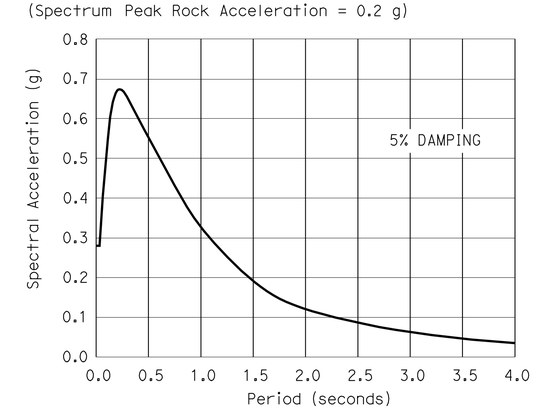

DESIGN A.R.S. CURVE

REINFORCED CONCRETE:
f_y = 60 ksi
f'_c= 3.6 ksi, unless otherwise noted.
n = 8

PILES:
See "Pile Data Table" on "FOUNDATION PLAN" sheet.

Note:
The Contractor shall verify all controlling field dimensions before ordering or fabricating any materials.

Reza Erfanian
DESIGN OVERSIGHT Reza Erfanian
6/24/11
SIGN OFF DATE

	BY	CHECKED
DESIGN	S PERVAIZ	P CHENG
DETAILS	J VOUGHT	P CHENG
QUANTITIES	K SANFORD	E GAHAN

PREPARED FOR THE STATE OF CALIFORNIA DEPARTMENT OF TRANSPORTATION

JOHN A. KLEMUNES, JR.
PROJECT ENGINEER

BRIDGE NO. 29-0023
POST MILE 11.80

LONE TREE SLOUGH BRIDGE (WIDEN)
DECK CONTOURS

DESIGN DETAIL SHEET (ENGLISH) (REV.7/16/10)

ORIGINAL SCALE IN INCHES FOR REDUCED PLANS 0 1 2 3

UNIT: 1455
PROJECT NUMBER & PHASE: 10000204411 CONTRACT NO.: 10-0E6121

DISREGARD PRINTS BEARING EARLIER REVISION DATES

REVISION DATES: 5-3-10 2-4-11 5-18-11 6-24-11

SHEET 2 OF 19

FILE => 29-0023-d-dc01.dgn

USERNAME => s12616 DATE PLOTTED => 01-DEC-2011 TIME PLOTTED => 10:48

DIST	COUNTY	ROUTE	POST MILES TOTAL PROJECT	SHEET No	TOTAL SHEETS
10	SJ	99	10.6/14.9	402	504

REGISTERED CIVIL ENGINEER 6-24-11 DATE

10-17-11
PLANS APPROVAL DATE

REGISTERED PROFESSIONAL ENGINEER SHARIQ PERVAIZ No. C67068 Exp. 9-30-12 CIVIL STATE OF CALIFORNIA

The State of California or its officers or agents shall not be responsible for the accuracy or completeness of electronic copies of this plan sheet.

SAN JOAQUIN COUNCIL OF GOVERNMENTS
555 E. WEBER AVE.
STOCKTON, CA 95202

HDR ENGINEERING, INC.
2365 IRON POINT ROAD, SUITE 300
FOLSOM, CA 95630

PILE DATA TABLE

Location	Pile Type	Nominal Resistance Compression (kips)	Nominal Resistance Tension (kips)	Design Tip Elevations (ft)	Specified Tip Elevation (ft)	Nominal Driving Resistance (kips)
Abut 1	Class 90 Alt 'X'	140	0	-5.0 (a)	-5.0	140
Bent 2 & 3	PC/PS Conc Pile Class 140	280	0	-23.0 (a)(b)	-23.0	310
Abut 4	Class 90 Alt 'X'	140	0	-5.0 (a)	-5.0	140

Design tip elevations for Abutments are controlled by: (a) Compression.
Design tip elevations for Bents are controlled by: (a) Compression (Strength Limit), (b) Scour, respectively.

ABUTMENTS & BENTS ℄ STATIONS

(A) "FR2" Line Sta 23+28.88
(B) "FR2" Line Sta 23+49.70
(C) "FR2" Line Sta 23+70.51
(D) "FR2" Line Sta 23+91.29

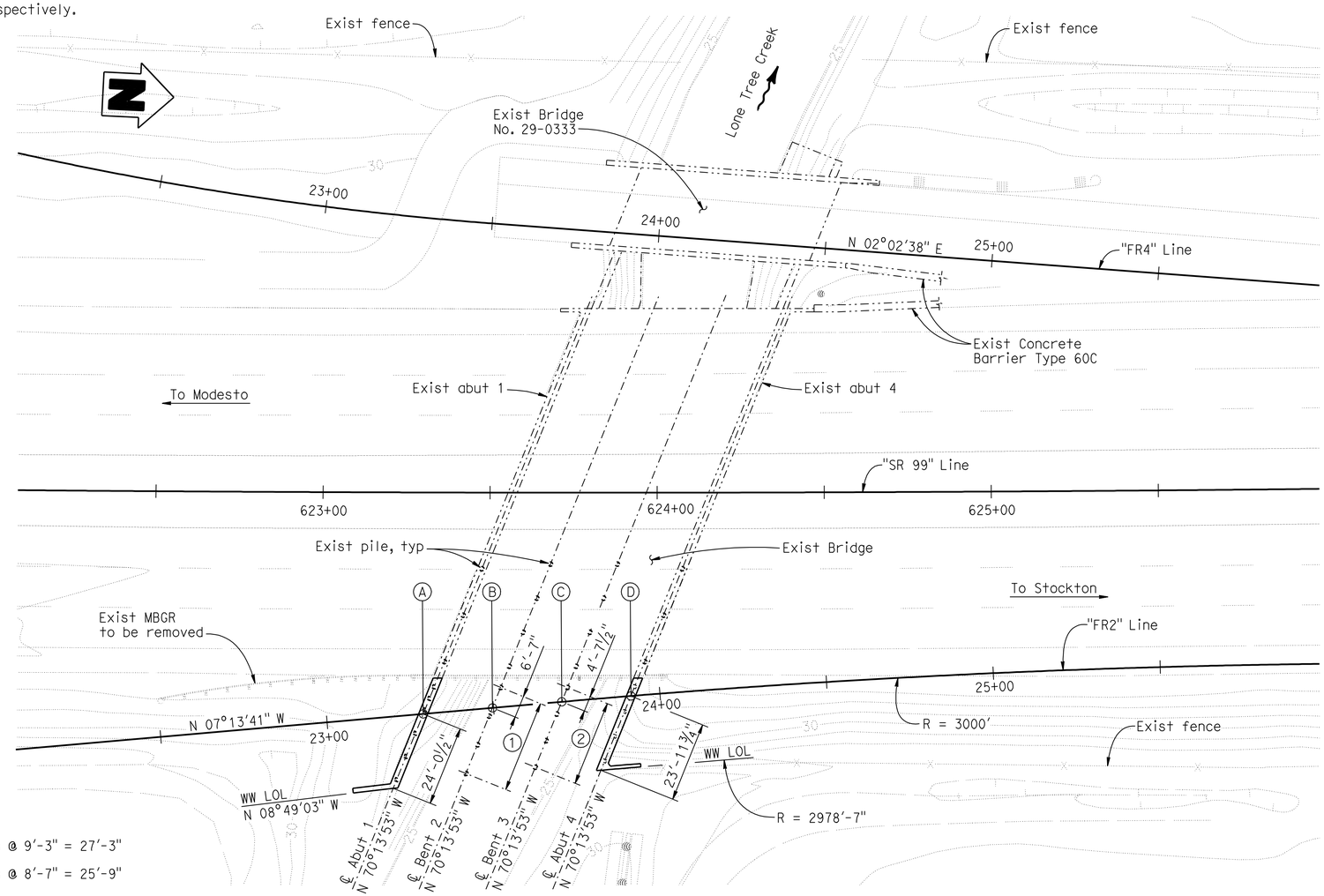

PLAN
1" = 20'

Note:
The Contractor shall verify all controlling field dimensions before ordering or fabricating any materials.

HYDROLOGIC SUMMARY TABLE

Drainage Area: 86.0 Square Miles

	Design Flood	Base Flood	Overtopping Flood
Frequence (Years)	50	100	N/A
Discharge (Cubic Feet per Second)	840	955	2855
Water Surface Elevation at Bridge (Feet)	29.58	30.00	N/A

Flood plain data are based upon information available when the plans were prepared and are shown to meet federal requirements. The accuracy of said information is not warranted by the State and Interested or affected parties should make their own investigation.

BENCH MARKS

BENCHMARK# 658 ELEV. 33.00 Ft
DESCRIPTION: KSN CONTROL POINT, ½" REBAR WITH YELLOW CAP STAMPED "KSN CONTROL", LOCATED AT APPROXIMATE CENTERLINE STATION 625+67, ON THE NORTHBOUND MAINLINE, ON THE OUTSIDE SHOULDER, 1' EAST OF THE EDGE OF PAVEMENT, 205' NORTH OF THE END OF THE CENTERLINE OF LONE TREE CREEK.
NGVD 29, N2138213.81, E6354203.76.

BENCHMARK# 699 ELEV. 31.83 Ft
DESCRIPTION: KSN CONTROL POINT, ½" REBAR WITH YELLOW CAP STAMPED "KSN CONTROL", LOCATED APPROXIMATE CENTERLINE STATION 625+50, ON THE SOUTHBOUND MAINLINE, ON THE OUTSIDE SHOULDER, 3' WEST OF THE EDGE OF PAVEMENT, 140' NORTH OF THE CENTERLINE OF LONE TREE CREEK.
NGVD 29, N2138191.62, E6354088.62.

NOTES:
1. See "ROAD PLANS" for type and locations of all existing and proposed utilities.
2. Location of existing utilities shown are approximate. The Contractor shall verify locations of all affected utilities prior to performing any excavation.
3. Not all piles shown here.

LEGEND:
-·-·-·- Indicates existing structure.
= Indicates driven piles at abutments.
= Indicates driven piles at bents.

GEOTECHNICAL PROFESSIONAL 6-20-11 APPROVAL DATE

DESIGN OVERSIGHT Reza Erfanian
6/24/11
SIGN OFF DATE

SCALE: 1" = 40'	VERT.DATUM NGVD29	HORZ.DATUM NAD1983	DESIGN BY S PERVAIZ	CHECKED P CHENG	PREPARED FOR THE STATE OF CALIFORNIA DEPARTMENT OF TRANSPORTATION
PHOTOGRAMMETRY AS OF: 08/09/2007	ALIGNMENT TIES		DETAILS BY J VOUGHT	CHECKED P CHENG	
SURVEYED BY AERIAL PHOTOMAPPING SERVICES	DRAFTED BY KSN		QUANTITIES BY K SANFORD	CHECKED E GAHAN	
FIELD CHECKED BY KRIS F. NEHMER	CHECKED BY KRIS F. NEHMER				

JOHN A. KLEMUNES, JR.
PROJECT ENGINEER

BRIDGE NO. 29-0023
POST MILE 11.80

LONE TREE SLOUGH BRIDGE (WIDEN)
FOUNDATION PLAN

FOUNDATION PLAN SHEET (ENGLISH) (REV.7/16/10)

ORIGINAL SCALE IN INCHES FOR REDUCED PLANS 0 1 2 3

UNIT: 1455
PROJECT NUMBER & PHASE: 10000204411 CONTRACT NO.: 10-0E6121

DISREGARD PRINTS BEARING EARLIER REVISION DATES

REVISION DATES 5-3-10 2-4-11 5-18-11 6-24-11 SHEET 3 OF 19

FILE => 29-0023-e-fp01.dgn

USERNAME => s8121614 DATE PLOTTED => 01-DEC-2011 TIME PLOTTED => 10:49

DIST	COUNTY	ROUTE	POST MILES TOTAL PROJECT	SHEET No	TOTAL SHEETS
10	SJ	99	10.6/14.9	403	504

REGISTERED CIVIL ENGINEER 6-24-11 DATE

10-17-11
PLANS APPROVAL DATE

REGISTERED PROFESSIONAL ENGINEER SHARIQ PERVAIZ No. C67068 Exp. 9-30-12 CIVIL STATE OF CALIFORNIA

The State of California or its officers or agents shall not be responsible for the accuracy or completeness of electronic copies of this plan sheet.

SAN JOAQUIN COUNCIL OF GOVERNMENTS
555 E. WEBER AVE.
STOCKTON, CA 95202

HDR ENGINEERING, INC.
2365 IRON POINT ROAD, SUITE 300
FOLSOM, CA 95630

Note:
Concrete Barrier
Type 732 not shown.

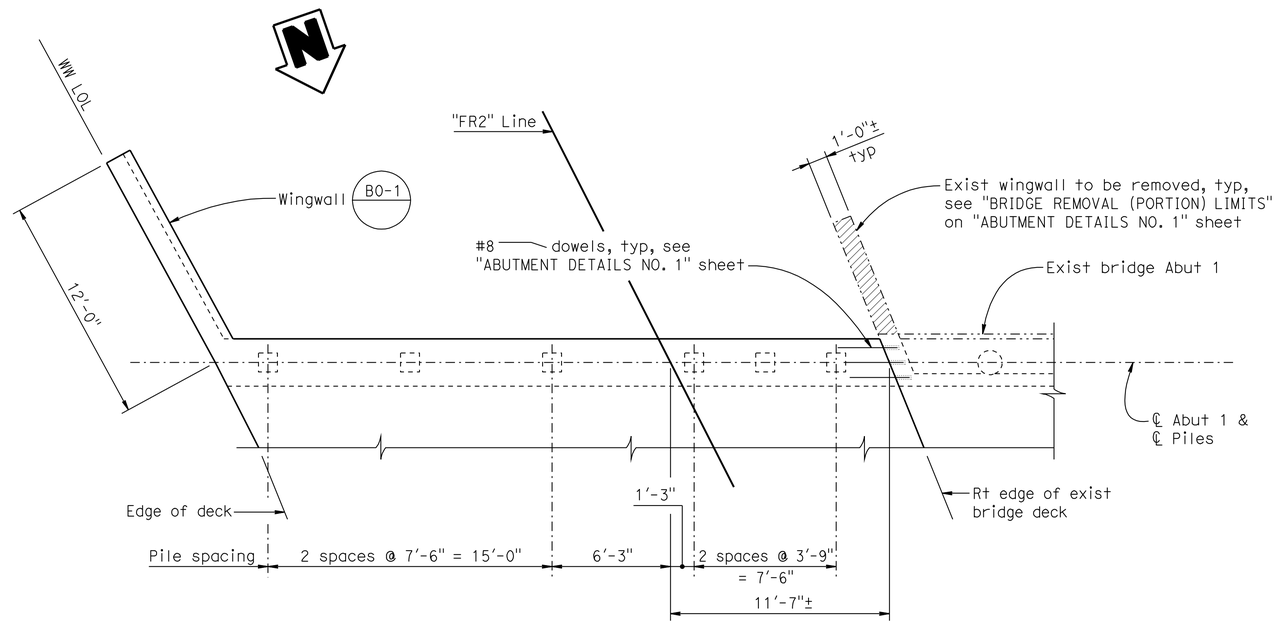

PARTIAL PLAN

1/4" = 1'-0"

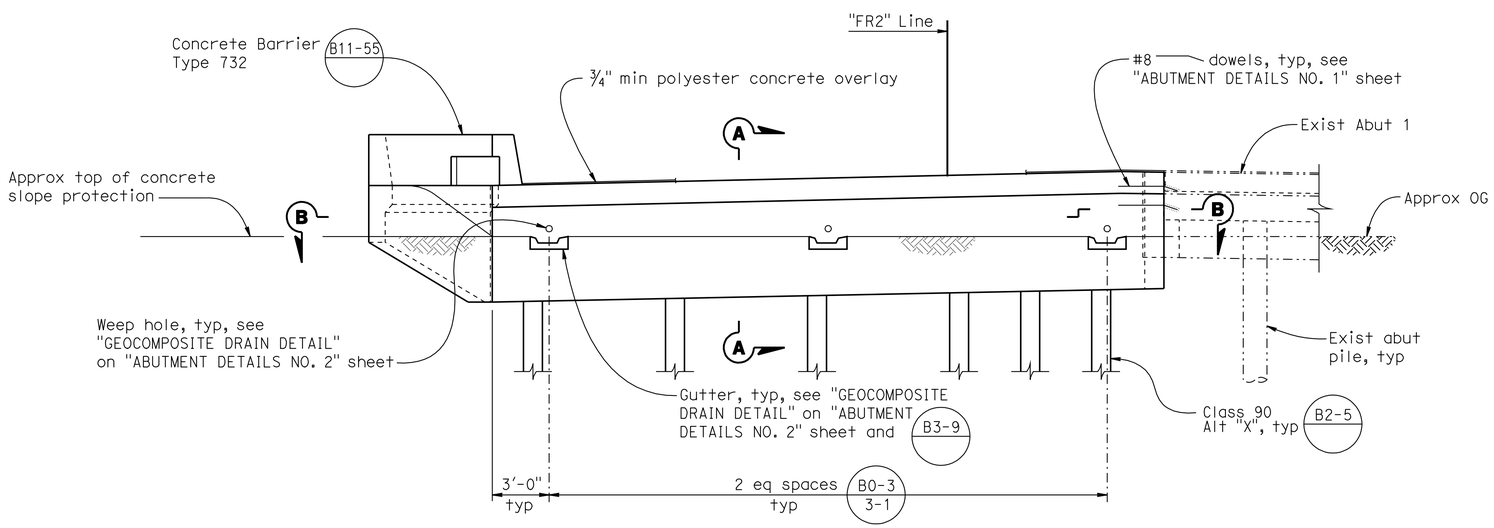

ELEVATION

1/4" = 1'-0"

NOTE:
For sections and details, see "ABUTMENT DETAILS NO. 1 & NO. 2" sheets.

LEGEND:
- Indicates limits of bridge removal (portion).
- Indicates existing structure.
- Indicates new structure.
- Indicates driven piles.
- Indicates existing piles.

Note:
The Contractor shall verify all controlling field dimensions before ordering or fabricating any materials.

Reza Erfanian
DESIGN OVERSIGHT Reza Erfanian
6/24/11
SIGN OFF DATE

	BY	CHECKED
DESIGN	S PERVAIZ	P CHENG
DETAILS	J VOUGHT	P CHENG
QUANTITIES	K SANFORD	E GAHAN

PREPARED FOR THE STATE OF CALIFORNIA DEPARTMENT OF TRANSPORTATION

JOHN A. KLEMUNES, JR.
PROJECT ENGINEER

BRIDGE NO. 29-0023
POST MILE 11.80

LONE TREE SLOUGH BRIDGE (WIDEN)
ABUTMENT 1 LAYOUT

DESIGN DETAIL SHEET (ENGLISH) (REV.7/16/10)

ORIGINAL SCALE IN INCHES FOR REDUCED PLANS 0 1 2 3

UNIT: 1455
PROJECT NUMBER & PHASE: 10000204411 CONTRACT NO.: 10-0E6121

DISREGARD PRINTS BEARING EARLIER REVISION DATES

REVISION DATES: ~~5-3-10~~ ~~2-4-11~~ ~~5-19-11~~ 6-24-11

SHEET 4 OF 19

FILE => 29-0023-f-a01_l01.dgn

USERNAME => s12614 DATE PLOTTED => 01-DEC-2011 TIME PLOTTED => 10:49

DIST	COUNTY	ROUTE	POST MILES TOTAL PROJECT	SHEET No	TOTAL SHEETS
10	SJ	99	10.6/14.9	404	504

REGISTERED CIVIL ENGINEER 6-24-11 DATE

10-17-11
PLANS APPROVAL DATE

REGISTERED PROFESSIONAL ENGINEER SHARIQ PERVAIZ No. C67068 Exp. 9-30-12 CIVIL STATE OF CALIFORNIA

The State of California or its officers or agents shall not be responsible for the accuracy or completeness of electronic copies of this plan sheet.

SAN JOAQUIN COUNCIL OF GOVERNMENTS
555 E. WEBER AVE.
STOCKTON, CA 95202

HDR ENGINEERING, INC.
2365 IRON POINT ROAD, SUITE 300
FOLSOM, CA 95630

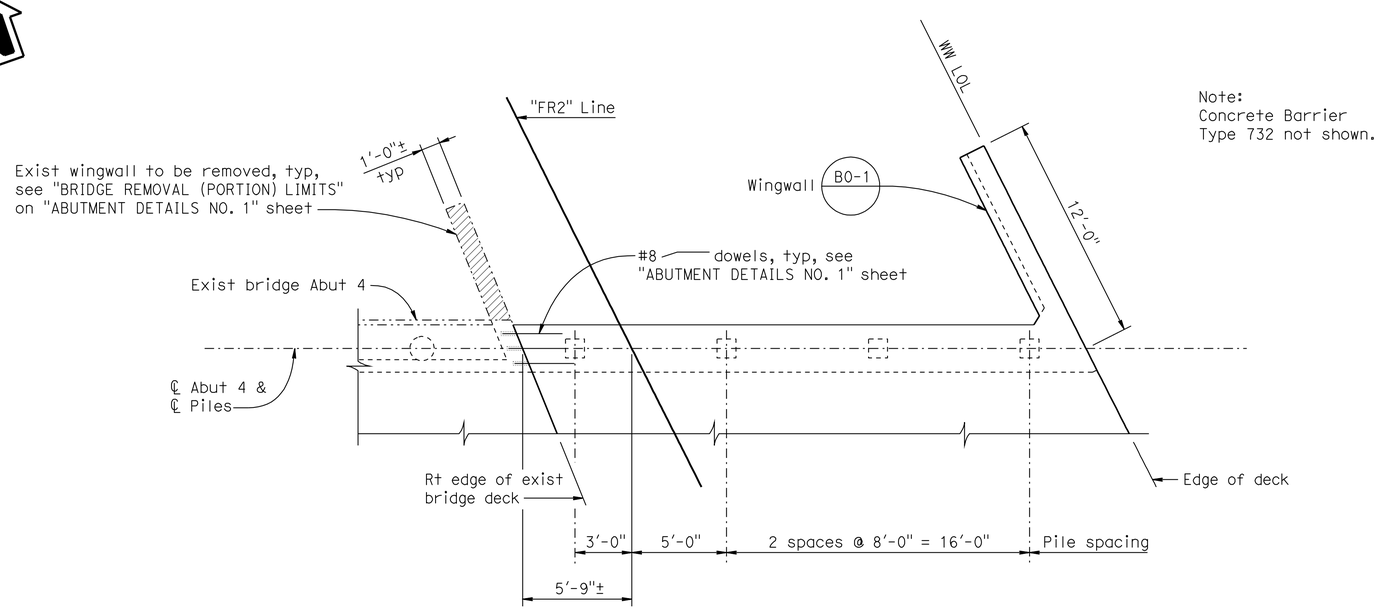

PARTIAL PLAN

1/4" = 1'-0"

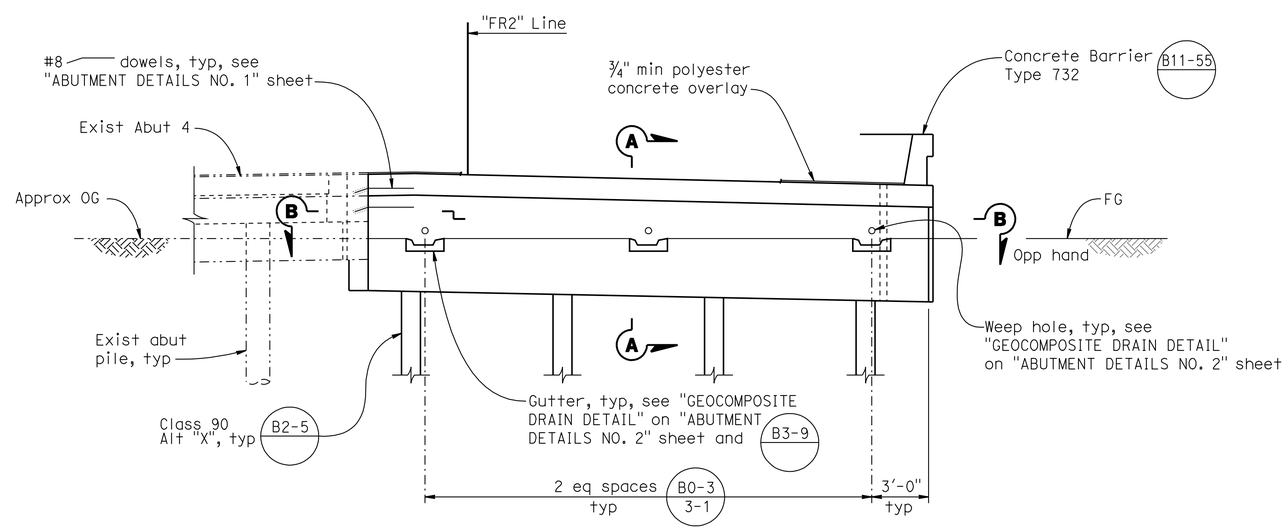

ELEVATION

1/4" = 1'-0"

NOTE:
For sections and details, see "ABUTMENT DETAILS NO. 1 & NO. 2" sheets.

LEGEND:
- Indicates limits of bridge removal (portion).
- Indicates existing structure.
- Indicates new structure.
- Indicates driven piles.
- Indicates existing piles.

Note:
The Contractor shall verify all controlling field dimensions before ordering or fabricating any materials.

Reza Erfanian
DESIGN OVERSIGHT Reza Erfanian
6/24/11
SIGN OFF DATE

	BY	CHECKED
DESIGN	S PERVAIZ	P CHENG
DETAILS	J VOUGHT	P CHENG
QUANTITIES	K SANFORD	E GAHAN

PREPARED FOR THE STATE OF CALIFORNIA DEPARTMENT OF TRANSPORTATION

JOHN A. KLEMUNES, JR.
PROJECT ENGINEER

BRIDGE NO. 29-0023
POST MILE 11.80

LONE TREE SLOUGH BRIDGE (WIDEN)
ABUTMENT 4 LAYOUT

DESIGN DETAIL SHEET (ENGLISH) (REV.7/16/10)

ORIGINAL SCALE IN INCHES FOR REDUCED PLANS 0 1 2 3

UNIT: 1455
PROJECT NUMBER & PHASE: 10000204411 CONTRACT NO.: 10-0E6121

DISREGARD PRINTS BEARING EARLIER REVISION DATES

REVISION DATES: 5-3-10 2-4-11 5-18-11 6-24-11

SHEET 5 OF 19

FILE => 29-0023-f-a01_102.dgn

USERNAME => s121614 DATE PLOTTED => 01-DEC-2011 TIME PLOTTED => 10:49

DIST	COUNTY	ROUTE	POST MILES TOTAL PROJECT	SHEET No	TOTAL SHEETS
10	SJ	99	10.6/14.9	405	504

REGISTERED CIVIL ENGINEER 6-24-11 DATE

10-17-11
PLANS APPROVAL DATE

REGISTERED PROFESSIONAL ENGINEER SHARIQ PERVAIZ No. C67068 Exp. 9-30-12 CIVIL STATE OF CALIFORNIA

The State of California or its officers or agents shall not be responsible for the accuracy or completeness of electronic copies of this plan sheet.

SAN JOAQUIN COUNCIL OF GOVERNMENTS
555 E. WEBER AVE.
STOCKTON, CA 95202

HDR ENGINEERING, INC.
2365 IRON POINT ROAD, SUITE 300
FOLSOM, CA 95630

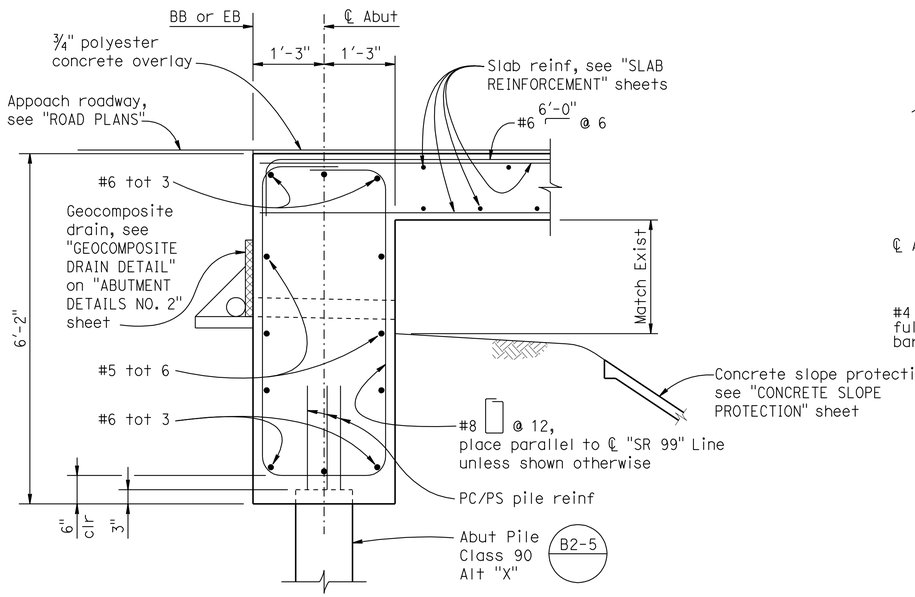

SECTION A-A

3/4" = 1'-0"

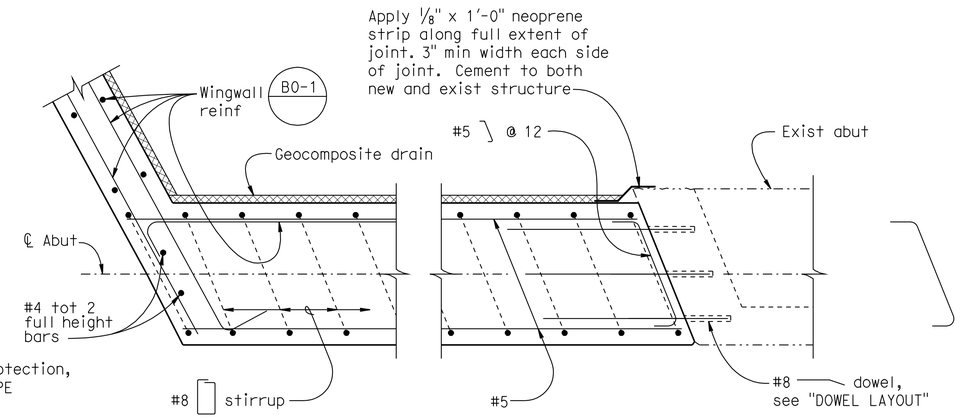

SECTION B-B

3/4" = 1'-0"

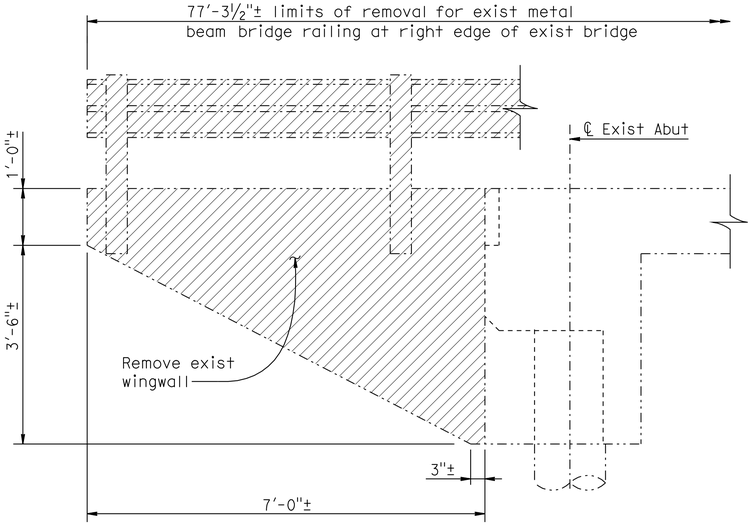

BRIDGE REMOVAL (PORTION) LIMITS

3/4" = 1'-0"

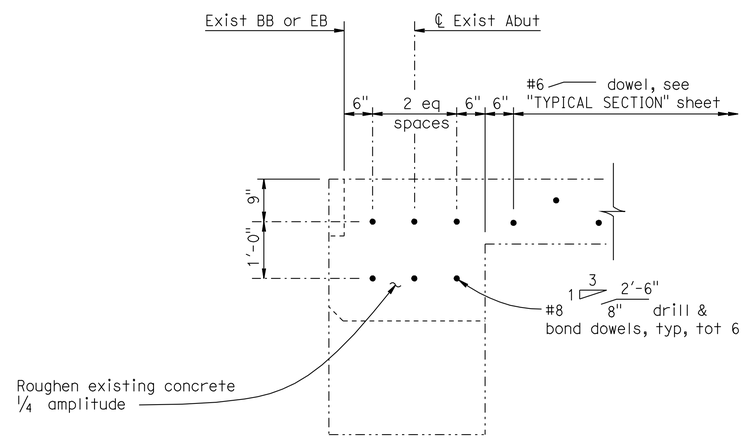

DOWEL LAYOUT

3/4" = 1'-0"

NOTE:

1. For additional information, see "ABUTMENT DETAILS NO. 2" sheet.

LEGEND:

Indicates limits of bridge removal (portion).

Indicates existing structure.

Indicates new structure.

Note:
The Contractor shall verify all controlling field dimensions before ordering or fabricating any materials.

Reza Erfanian
DESIGN OVERSIGHT Reza Erfanian
6/24/11
SIGN OFF DATE

	BY	CHECKED
DESIGN	S PERVAIZ	P CHENG
DETAILS	J VOUGHT	P CHENG
QUANTITIES	K SANFORD	E GAHAN

PREPARED FOR THE STATE OF CALIFORNIA DEPARTMENT OF TRANSPORTATION

JOHN A. KLEMUNES, JR.
PROJECT ENGINEER

BRIDGE NO. 29-0023
POST MILE 11.80

LONE TREE SLOUGH BRIDGE (WIDEN)

ABUTMENT DETAILS NO. 1

DESIGN DETAIL SHEET (ENGLISH) (REV.7/16/10)

ORIGINAL SCALE IN INCHES FOR REDUCED PLANS 0 1 2 3

UNIT: 1455
PROJECT NUMBER & PHASE: 10000204411 CONTRACT NO.: 10-0E6121

DISREGARD PRINTS BEARING EARLIER REVISION DATES

REVISION DATES: 5-3-10 2-4-11 5-18-11 6-24-11

SHEET 6 OF 19

FILE => 29-0023-f-a01dt01.dgn

USERNAME => s6121614 DATE PLOTTED => 01-DEC-2011 TIME PLOTTED => 10:43

DIST	COUNTY	ROUTE	POST MILES TOTAL PROJECT	SHEET No	TOTAL SHEETS
10	SJ	99	10.6/14.9	406	504

REGISTERED CIVIL ENGINEER 6-24-11 DATE

10-17-11
PLANS APPROVAL DATE

REGISTERED PROFESSIONAL ENGINEER SHARIQ PERVAIZ No. C67068 Exp. 9-30-12 CIVIL STATE OF CALIFORNIA

The State of California or its officers or agents shall not be responsible for the accuracy or completeness of electronic copies of this plan sheet.

SAN JOAQUIN COUNCIL OF GOVERNMENTS
555 E. WEBER AVE.
STOCKTON, CA 95202

HDR ENGINEERING, INC.
2365 IRON POINT ROAD, SUITE 300
FOLSOM, CA 95630

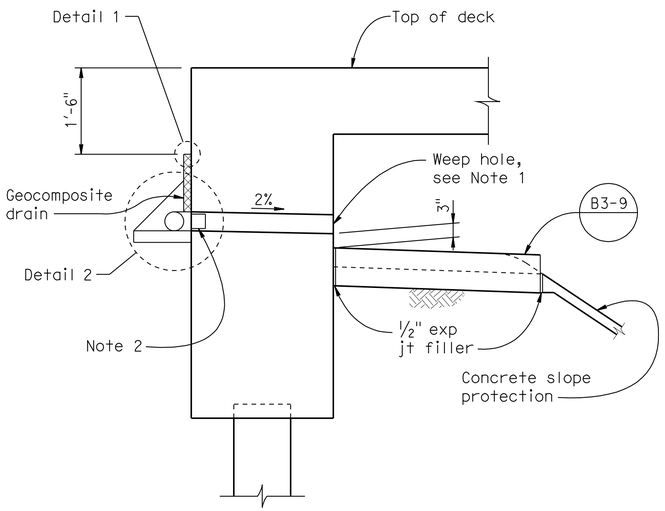

ABUTMENT SECTION

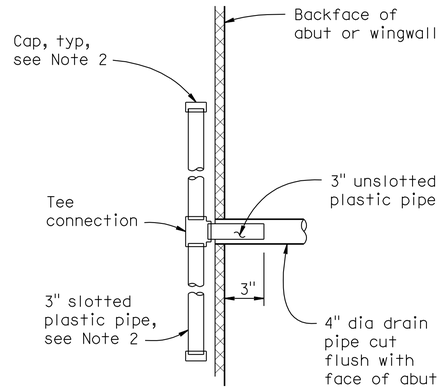

VIEW E-E

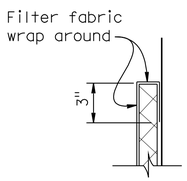

DETAIL 1

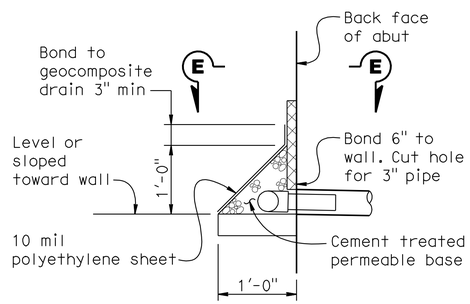

DETAIL 2

GEOCOMPOSITE DRAIN DETAIL

No Scale

Drainage Notes:

1. 4" drains at intermediate sag points and at 25' max center to center. Exposed wall drains shall be located 3"± above finished grade.

2. Geocomposite drain, cement treated permeable base, and 3" dia slotted plastic pipe continuous behind wingwall or abutment. Cap ends of pipe. Provide "Tee" connection at each 4" dia drain.

3. Connect the low end of plastic pipe to the main outlet pipe at weep hole as applicable.

Note:
The Contractor shall verify all controlling field dimensions before ordering or fabricating any materials.

DESIGN OVERSIGHT Reza Erfanian
6/24/11
SIGN OFF DATE

	BY	CHECKED
DESIGN	S PERVAIZ	P CHENG
DETAILS	J VOUGHT	P CHENG
QUANTITIES	K SANFORD	E GAHAN

PREPARED FOR THE STATE OF CALIFORNIA DEPARTMENT OF TRANSPORTATION

JOHN A. KLEMUNES, JR.
PROJECT ENGINEER

BRIDGE NO. 29-0023
POST MILE 11.80

LONE TREE SLOUGH BRIDGE (WIDEN)

ABUTMENT DETAILS NO. 2

DESIGN DETAIL SHEET (ENGLISH) (REV.7/16/10)

ORIGINAL SCALE IN INCHES FOR REDUCED PLANS 0 1 2 3

UNIT: 1455
PROJECT NUMBER & PHASE: 10000204411 CONTRACT NO.: 10-0E6121

DISREGARD PRINTS BEARING EARLIER REVISION DATES

REVISION DATES: 5-3-10 2-4-11 5-18-11 6-24-11

SHEET 7 OF 19

FILE => 29-0023-f-a01dt02.dgn

USERNAME => s121614 DATE PLOTTED => 01-DEC-2011 TIME PLOTTED => 10:49

DIST	COUNTY	ROUTE	POST MILES TOTAL PROJECT	SHEET No	TOTAL SHEETS
10	SJ	99	10.6/14.9	407	504

REGISTERED CIVIL ENGINEER 6-24-11 DATE

10-17-11
PLANS APPROVAL DATE

REGISTERED PROFESSIONAL ENGINEER SHARIQ PERVAIZ No. C67068 Exp. 9-30-12 CIVIL STATE OF CALIFORNIA

The State of California or its officers or agents shall not be responsible for the accuracy or completeness of electronic copies of this plan sheet.

SAN JOAQUIN COUNCIL OF GOVERNMENTS
555 E. WEBER AVE.
STOCKTON, CA 95202

HDR ENGINEERING, INC.
2365 IRON POINT ROAD, SUITE 300
FOLSOM, CA 95630

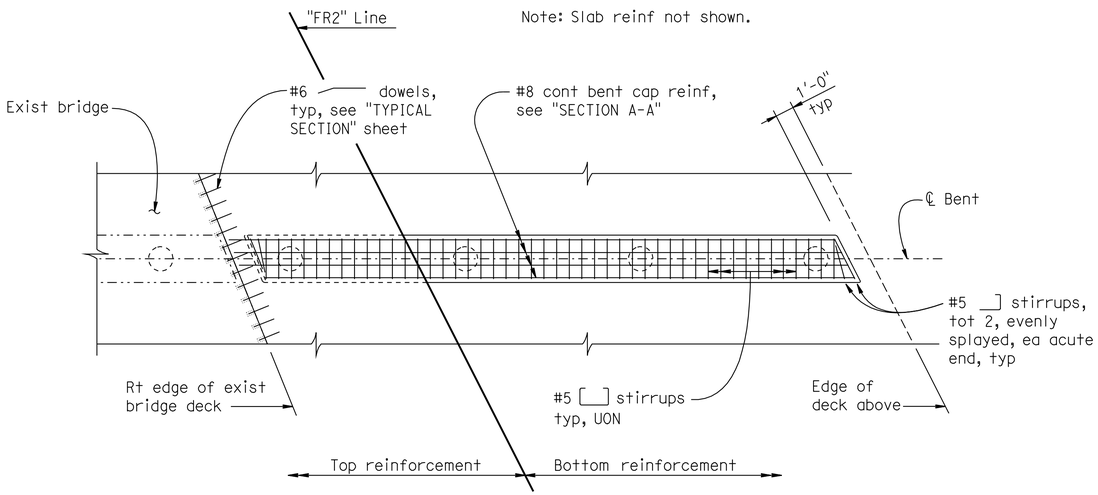

Note: Bent 2 shown, Bent 3 similar.

PARTIAL PLAN

1/4" = 1'-0"

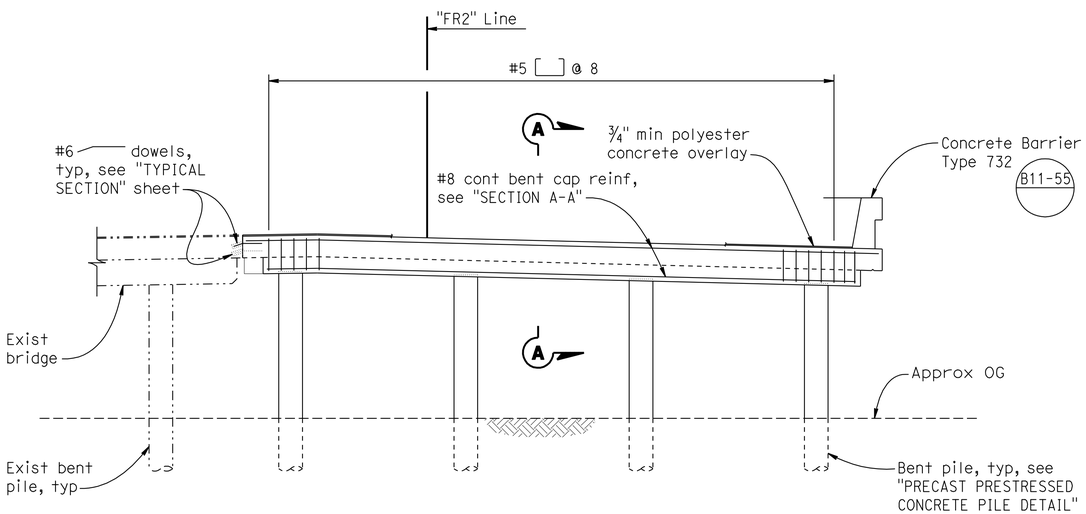

Note: Bent 2 shown, Bent 3 similar.

ELEVATION

1/4" = 1'-0"

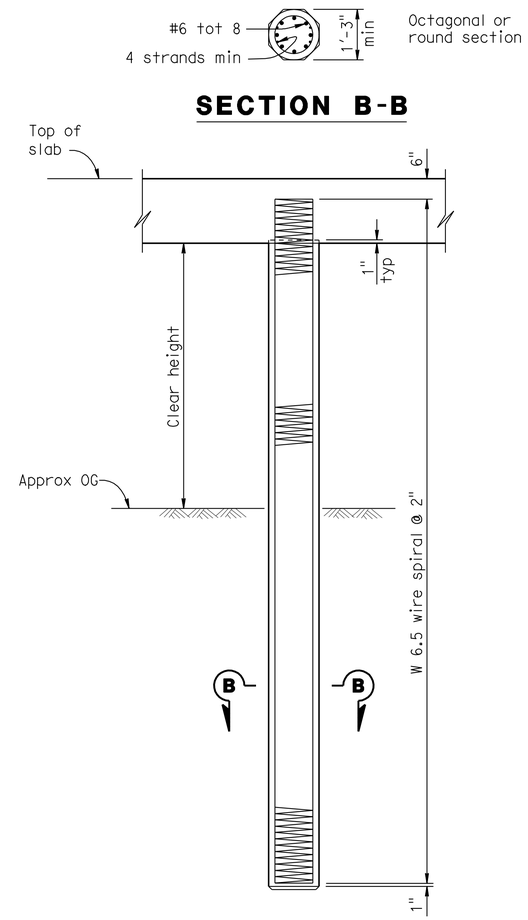

SECTION B-B

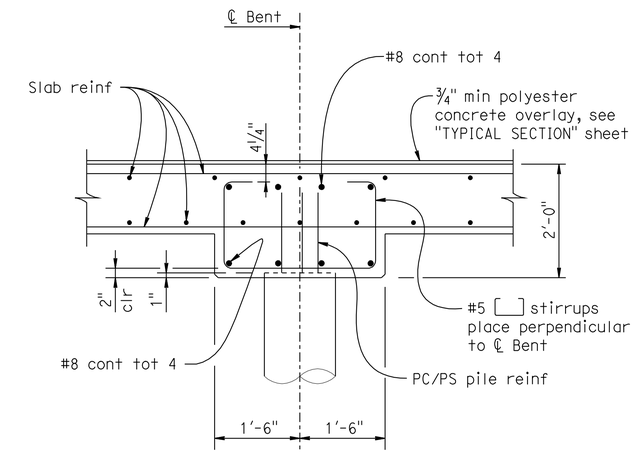

SECTION A-A

3/4" = 1'-0"

NOTES:

1. Design service level loading is 140 kips or less as noted.
2. Maximum size of aggregate is 1".
3. For the prestressed concrete pile:
   A. The prestress force after all losses shall provide 725 psi minimum stress and shall not be less than 130 kips.
   B. The concrete strength shall not be less than 6000 psi at 28 days.
4. No splices allowed in the longitudinal reinforcement within the "clear height" or within 10' below the ground line.

NOTE:
1. For details not shown, see "SLAB REINFORCEMENT DETAILS" sheet.

LEGEND:

-·-·-·- Indicates existing structure.

——— Indicates new structure.

PRECAST PRESTRESSED CONCRETE PILE

No Scale

Note:
The Contractor shall verify all controlling field dimensions before ordering or fabricating any materials.

Reza Erfanian
DESIGN OVERSIGHT Reza Erfanian
6/24/11
SIGN OFF DATE

	BY	CHECKED
DESIGN	S PERVAIZ	P CHENG
DETAILS	J VOUGHT	P CHENG
QUANTITIES	K SANFORD	E GAHAN

PREPARED FOR THE STATE OF CALIFORNIA DEPARTMENT OF TRANSPORTATION

JOHN A. KLEMUNES, JR.
PROJECT ENGINEER

BRIDGE NO. 29-0023
POST MILE 11.80

LONE TREE SLOUGH BRIDGE (WIDEN)

BENT DETAILS

DESIGN DETAIL SHEET (ENGLISH) (REV.7/16/10)

ORIGINAL SCALE IN INCHES FOR REDUCED PLANS 0 1 2 3

UNIT: 1455
PROJECT NUMBER & PHASE: 10000204411 CONTRACT NO.: 10-0E6121

DISREGARD PRINTS BEARING EARLIER REVISION DATES

REVISION DATES: 5-3-10 2-4-11 5-19-11 6-24-11

SHEET 8 OF 19

FILE => 29-0023-h-b01dt.dgn

USERNAME => s121614 DATE PLOTTED => 01-DEC-2011 TIME PLOTTED => 10:49

DIST	COUNTY	ROUTE	POST MILES TOTAL PROJECT	SHEET No	TOTAL SHEETS
10	SJ	99	10.6/14.9	408	504

REGISTERED CIVIL ENGINEER 6-24-11 DATE

10-17-11
PLANS APPROVAL DATE

REGISTERED PROFESSIONAL ENGINEER SHARIQ PERVAIZ No. C67068 Exp. 9-30-12 CIVIL STATE OF CALIFORNIA

The State of California or its officers or agents shall not be responsible for the accuracy or completeness of electronic copies of this plan sheet.

SAN JOAQUIN COUNCIL OF GOVERNMENTS
555 E. WEBER AVE.
STOCKTON, CA 95202

HDR ENGINEERING, INC.
2365 IRON POINT ROAD, SUITE 300
FOLSOM, CA 95630

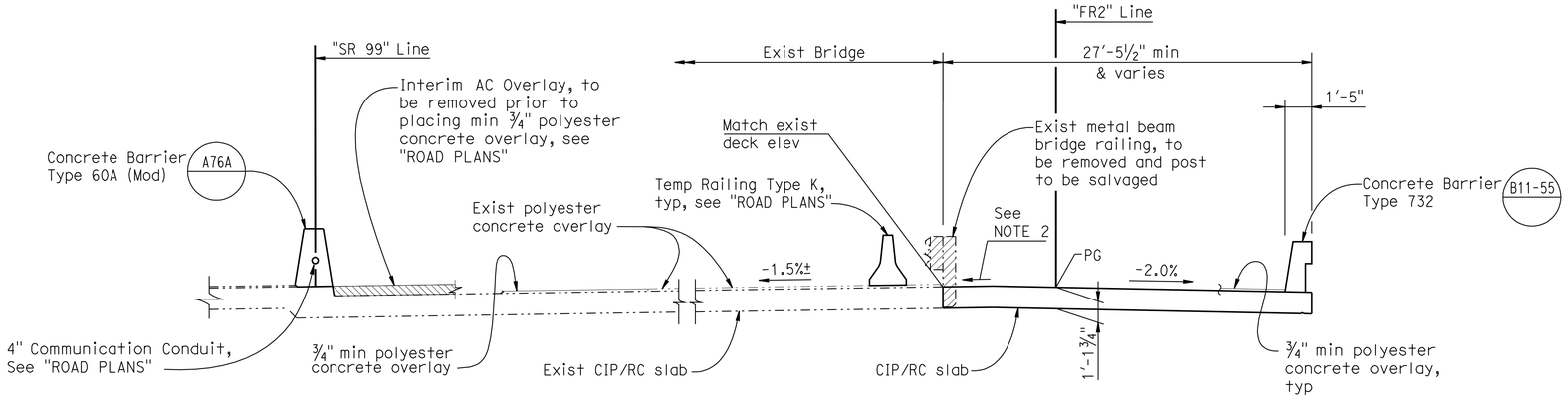

TYPICAL SECTION

¼" = 1'-0"

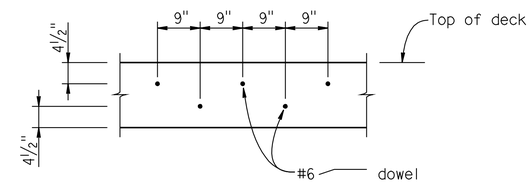

DOWEL LAYOUT

¾" = 1'-0"

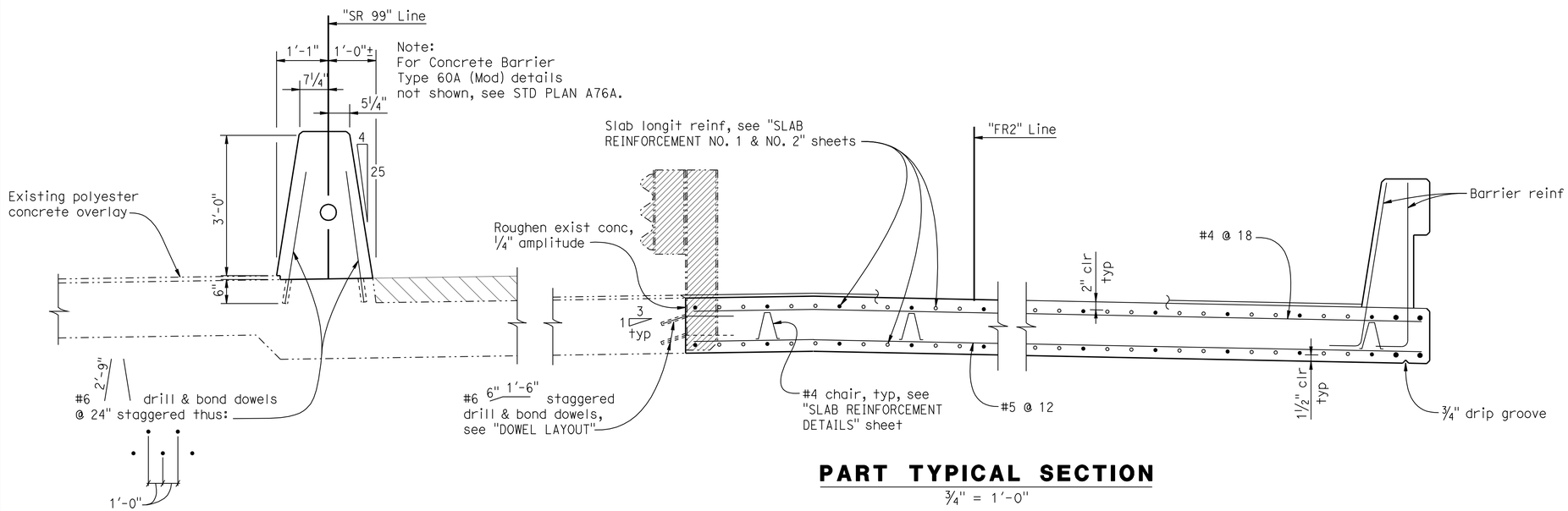

PART TYPICAL SECTION

¾" = 1'-0"

NOTES:

1. For additional information, see "SLAB REINFORCEMENT DETAILS" sheet.
2. Match existing grade and cross slope.

LEGEND:

- Indicates limits of bridge removal (portion).
- Indicates existing structure.
- Indicates new structure.
- • Indicates continuous bar.
- ∘ Indicates partial length bar.

Note:
The Contractor shall verify all controlling field dimensions before ordering or fabricating any materials.

Reza Erfanian
DESIGN OVERSIGHT Reza Erfanian
6/24/11
SIGN OFF DATE

	BY	CHECKED
DESIGN	S PERVAIZ	P CHENG
DETAILS	J VOUGHT	P CHENG
QUANTITIES	K SANFORD	E GAHAN

PREPARED FOR THE STATE OF CALIFORNIA DEPARTMENT OF TRANSPORTATION

JOHN A. KLEMUNES, JR.
PROJECT ENGINEER

BRIDGE NO. 29-0023
POST MILE 11.80

LONE TREE SLOUGH BRIDGE (WIDEN)

TYPICAL SECTION

DESIGN DETAIL SHEET (ENGLISH) (REV.7/16/10)

ORIGINAL SCALE IN INCHES FOR REDUCED PLANS 0 1 2 3

UNIT: 1455
PROJECT NUMBER & PHASE: 10000204411 CONTRACT NO.: 10-0E6121

DISREGARD PRINTS BEARING EARLIER REVISION DATES

REVISION DATES: 5-3-10 2-4-11 5-19-11 6-24-11

SHEET 9 OF 19

FILE => 29-0023-k-ts01.dgn

USERNAME => s8114937 DATE PLOTTED => 22-DEC-2011 TIME PLOTTED => 15:15

DIST	COUNTY	ROUTE	POST MILES TOTAL PROJECT	SHEET No	TOTAL SHEETS
10	SJ	99	10.6/14.9	409	504

REGISTERED CIVIL ENGINEER 6-24-11 DATE

10-17-11
PLANS APPROVAL DATE

REGISTERED PROFESSIONAL ENGINEER SHARIO PERVAIZ No. C67068 Exp. 9-30-12 CIVIL STATE OF CALIFORNIA

The State of California or its officers or agents shall not be responsible for the accuracy or completeness of electronic copies of this plan sheet.

SAN JOAQUIN COUNCIL OF GOVERNMENTS
555 E. WEBER AVE.
STOCKTON, CA 95202

HDR ENGINEERING, INC.
2365 IRON POINT ROAD, SUITE 300
FOLSOM, CA 95630

* Bars shall be centered in span 2.
** Bars shall be centered on ℄ Bent.

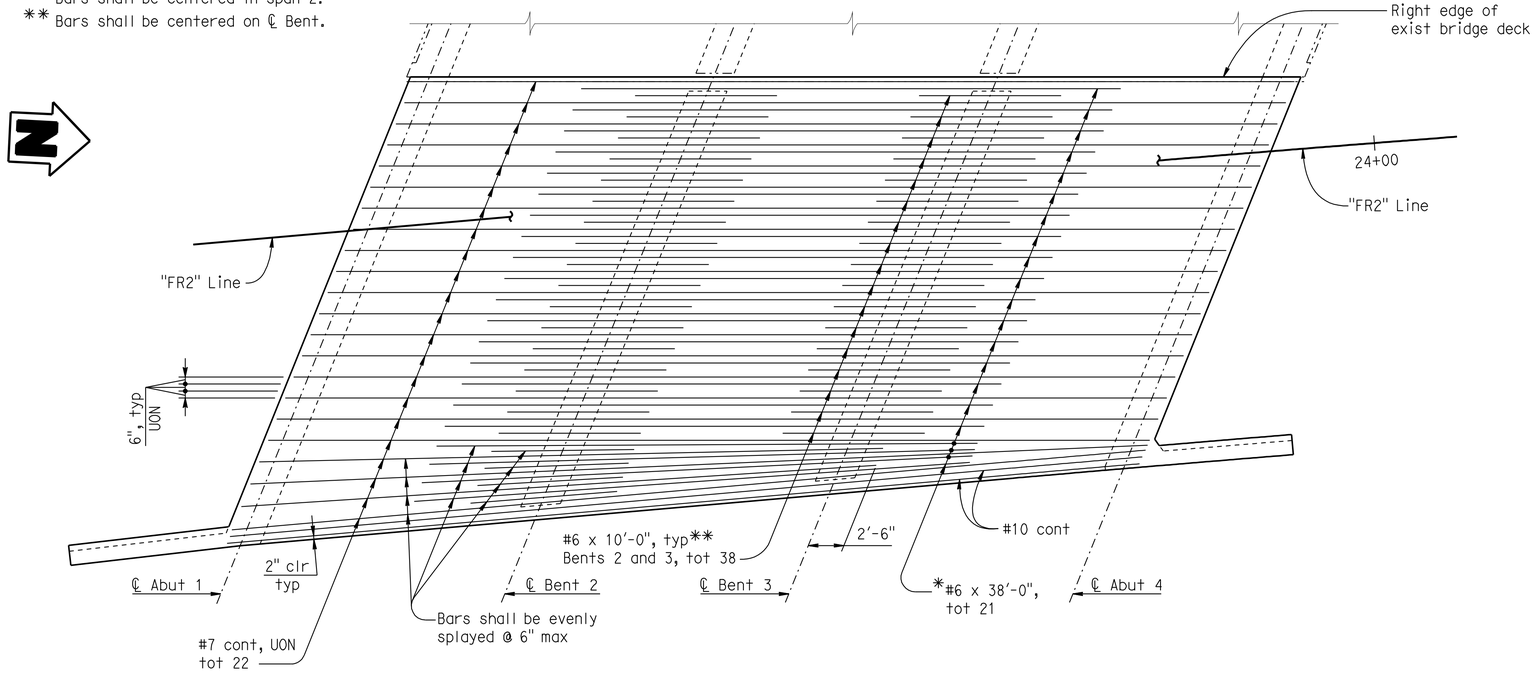

PARTIAL PLAN - TOP REINFORCEMENT

3/16" = 1'=0"

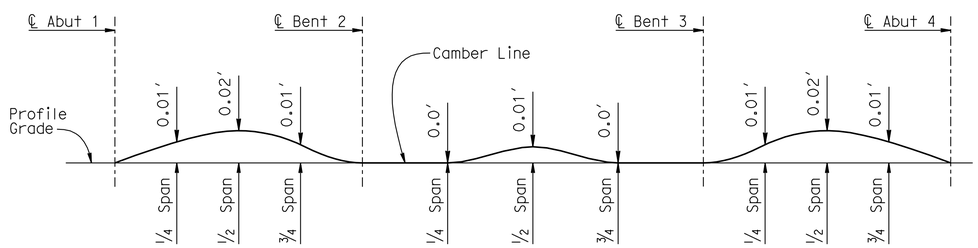

Note:
Does not include allowance for falsework settlement.

CAMBER DIAGRAM

No Scale

NOTES:

1. For transverse reinforcement and Drill & Bond Dowel details, see "TYPICAL SECTION" sheet.
2. For details not shown, see "SLAB REINFORCEMENT DETAILS" sheet.

Note:
The Contractor shall verify all controlling field dimensions before ordering or fabricating any materials.

Reza Erfanian
DESIGN OVERSIGHT Reza Erfanian
6/24/11
SIGN OFF DATE

	BY	CHECKED
DESIGN	S PERVAIZ	P CHENG
DETAILS	J VOUGHT	P CHENG
QUANTITIES	K SANFORD	E GAHAN

PREPARED FOR THE STATE OF CALIFORNIA DEPARTMENT OF TRANSPORTATION

JOHN A. KLEMUNES, JR.
PROJECT ENGINEER

BRIDGE NO. 29-0023
POST MILE 11.80

LONE TREE SLOUGH BRIDGE (WIDEN)
SLAB REINFORCEMENT NO. 1

DESIGN DETAIL SHEET (ENGLISH) (REV.7/16/10)

ORIGINAL SCALE IN INCHES FOR REDUCED PLANS 0 1 2 3

UNIT: 1455
PROJECT NUMBER & PHASE: 10000204411 CONTRACT NO.: 10-0E6121

DISREGARD PRINTS BEARING EARLIER REVISION DATES

REVISION DATES: 5-3-10 2-4-11 5-19-11 6-24-11

SHEET 10 OF 19

FILE => 29-0023-1-sr01.dgn

USERNAME => s12614 DATE PLOTTED => 01-DEC-2011 TIME PLOTTED => 10:50

DIST	COUNTY	ROUTE	POST MILES TOTAL PROJECT	SHEET No	TOTAL SHEETS
10	SJ	99	10.6/14.9	410	504

REGISTERED CIVIL ENGINEER 6-24-11 DATE

10-17-11
PLANS APPROVAL DATE

REGISTERED PROFESSIONAL ENGINEER SHARIQ PERVAIZ No. C67068 Exp. 9-30-12 CIVIL STATE OF CALIFORNIA

The State of California or its officers or agents shall not be responsible for the accuracy or completeness of electronic copies of this plan sheet.

SAN JOAQUIN COUNCIL OF GOVERNMENTS
555 E. WEBER AVE.
STOCKTON, CA 95202

HDR ENGINEERING, INC.
2365 IRON POINT ROAD, SUITE 300
FOLSOM, CA 95630

*Bars shall be centered in Span 2.

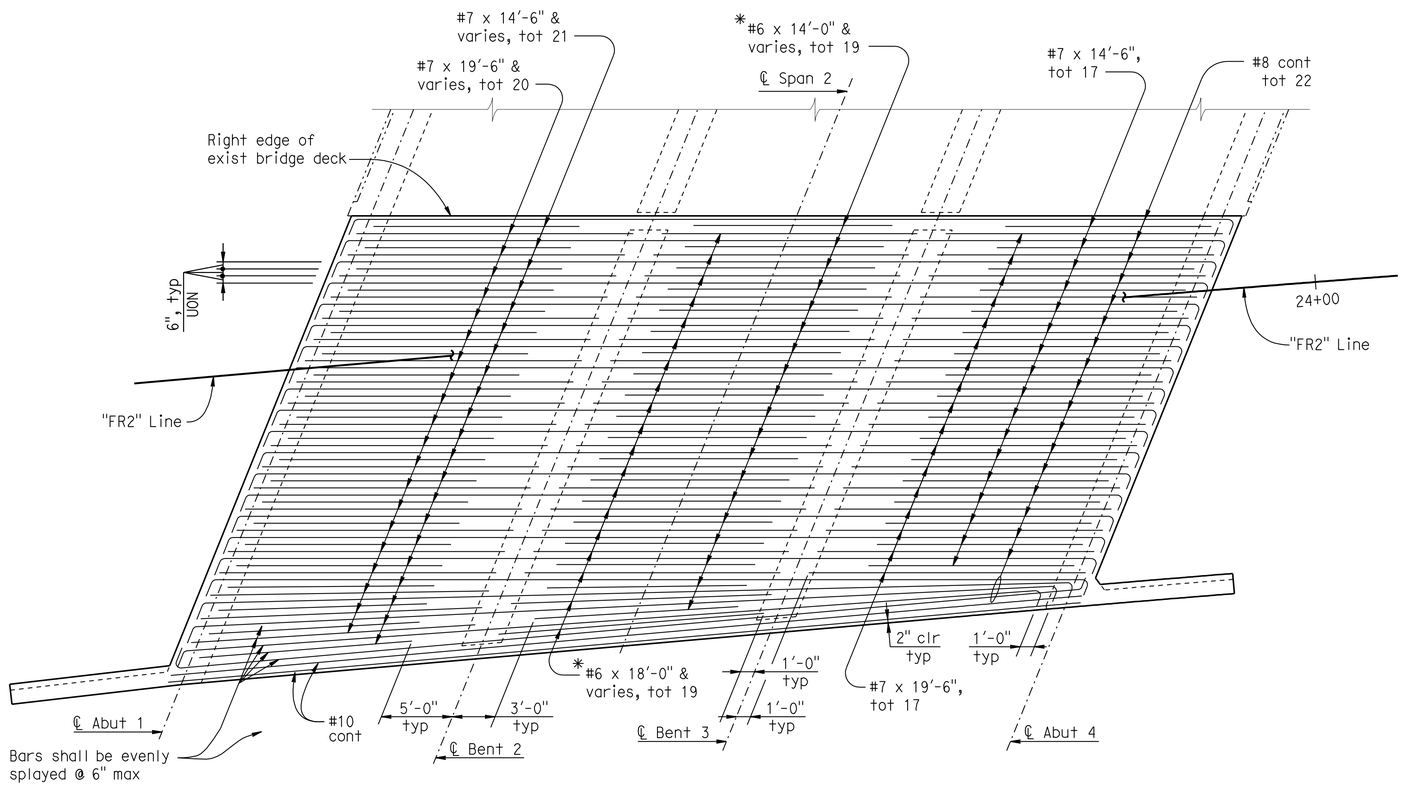

PARTIAL PLAN - BOTTOM REINFORCEMENT

3/16" = 1'=0"

NOTES:

For notes, see "SLAB REINFORCEMENT NO. 1" sheet.

Note:
The Contractor shall verify all controlling field dimensions before ordering or fabricating any materials.

Reza Erfanian
DESIGN OVERSIGHT Reza Erfanian
6/24/11
SIGN OFF DATE

DESIGN	BY S PERVAIZ	CHECKED P CHENG	
DETAILS	BY J VOUGHT	CHECKED P CHENG	
QUANTITIES	BY K SANFORD	CHECKED E GAHAN	

PREPARED FOR THE STATE OF CALIFORNIA DEPARTMENT OF TRANSPORTATION

JOHN A. KLEMUNES, JR.
PROJECT ENGINEER

BRIDGE NO. 29-0023
POST MILE 11.80

LONE TREE SLOUGH BRIDGE (WIDEN)
SLAB REINFORCEMENT NO. 2

DESIGN DETAIL SHEET (ENGLISH) (REV.7/16/10)

ORIGINAL SCALE IN INCHES FOR REDUCED PLANS 0 1 2 3

UNIT: 1455
PROJECT NUMBER & PHASE: 10000204411 CONTRACT NO.: 10-0E6121

DISREGARD PRINTS BEARING EARLIER REVISION DATES

REVISION DATES: ~~5-3-10~~ ~~2-4-11~~ ~~5-19-11~~ 6-24-11

SHEET 11 OF 19

FILE => 29-0023-1-sr02.dgn

USERNAME => s12614 DATE PLOTTED => 01-DEC-2011 TIME PLOTTED => 10:50

DIST.	COUNTY	ROUTE	POST MILES TOTAL PROJECT	SHEET NO.	TOTAL SHEETS
10	SJ	99	10.6/14.9	411	504

REGISTERED ENGINEER - CIVIL 6-24-11

PLANS APPROVAL DATE 10-17-11

REGISTERED PROFESSIONAL ENGINEER SHARIQ PERVAIZ No. C67068 Exp. 9-30-12 CIVIL STATE OF CALIFORNIA

The State of California or its officers or agents shall not be responsible for the accuracy or completeness of electronic copies of this plan sheet.

SAN JOAQUIN COUNCIL OF GOVERNMENTS
555 E. WEBER AVE.
STOCKTON, CA 95202

HDR ENGINEERING, INC.
2365 IRON POINT ROAD, SUITE 300
FOLSOM, CA 95630

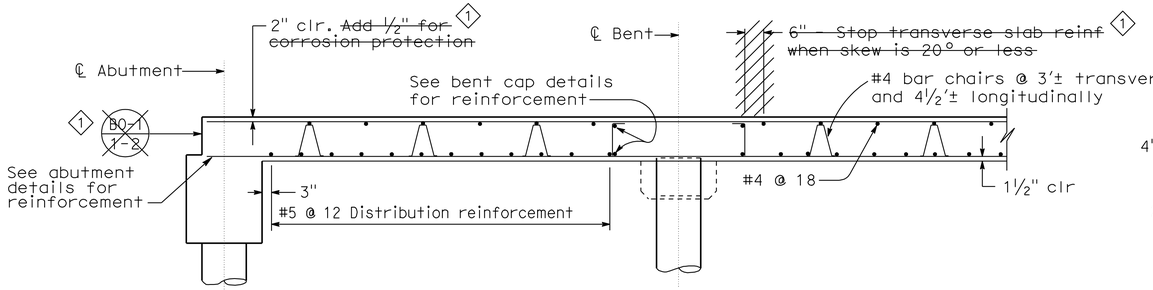

LONGITUDINAL SECTION

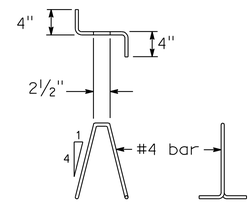

BAR CHAIR DETAIL

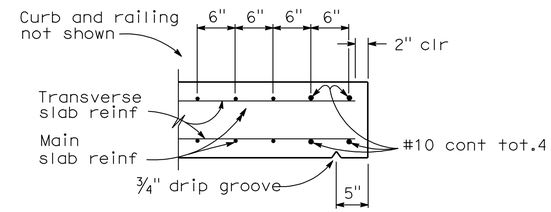

EDGE OF SLAB DETAILS

BAR SPLICE LENGTH								
Bar size	#4	#5	#6	#7	#8	#9	#10	#11
All bars, except top bars in spans over 24'	23"	28"	34"	39"	45"	68"	76"	85"
Top bars in spans over 24'	23"	28"	34"	53"	60"	77"	97"	120"

REINFORCEMENT NOTES:

Splices in top main bars to be located near center of span.
Splices in bottom main bars to be located near bent.
Spacing of all transverse bars is measured along ℄ roadway.
1 ~~Skew 0° to 20°: Place all transverse bars parallel to bent.~~
Skew over 20°: Place transverse slab bars perpendicular to ℄ bridge. See details at right and below.

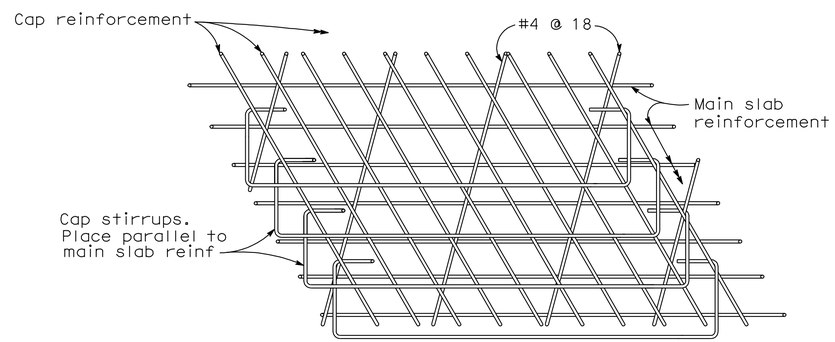

TOP SLAB REINFORCEMENT AT BENT

2 Note: Bar placement for flush cap shown, dropped cap similar.

~~**GENERAL NOTES** 1~~
~~**LOAD FACTOR DESIGN**~~

~~Design: Bridge Design Specifications (1983 AASHTO with Interims and revisions by CALTRANS)~~
~~Dead load: Includes 35 psi for future wearing surface.~~
~~Live loading: HS20-44 and alternative and permit design load.~~
~~Reinforced concrete: fy = 60,000 psi~~
~~f'c = 3,250 psi~~
~~n = 9~~

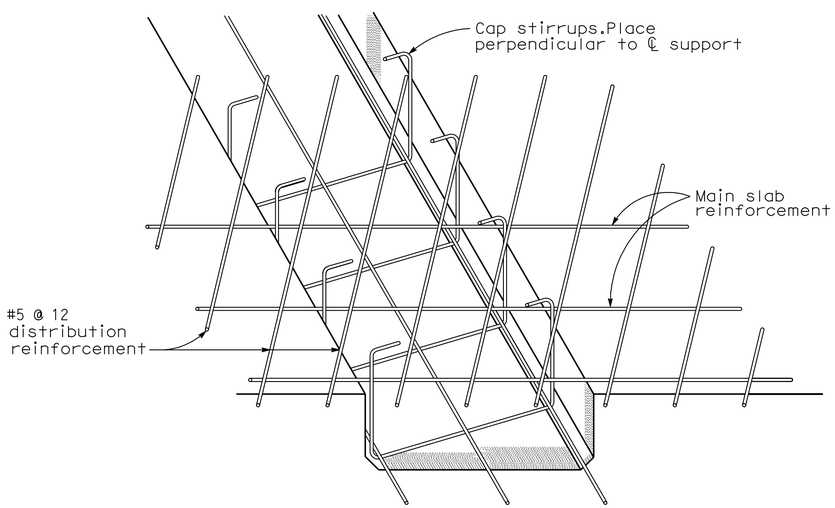

DROPPED CAP

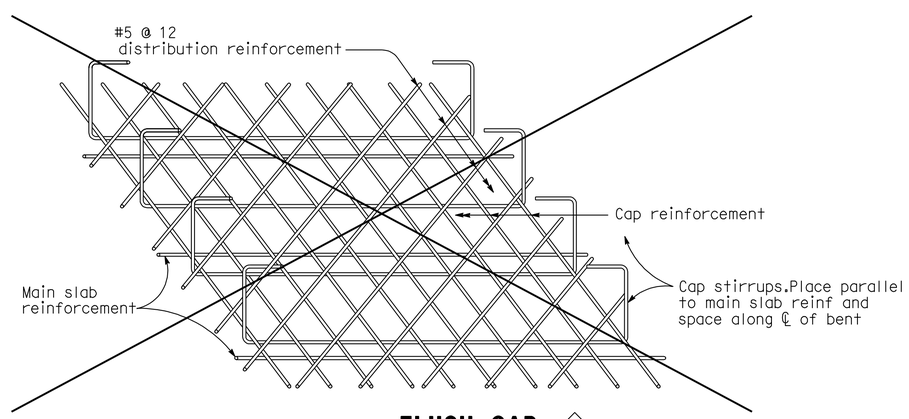

FLUSH CAP 1

BOTTOM SLAB REINFORCEMENT AT BENT

NO SCALE

STANDARD DRAWING				
RELEASE DATE 8/26/97	DESIGN	BY L.Y. LEE	CHECKED T. FARNAN	RELEASED BY
	DETAILS	BY R. YEE	CHECKED T. FARNAN	
FILE NO. xs 1-220	SUBMITTED	BY R.S. WATANABE	DRAWING DATE 8/88	OFFICE CHIEF

1 Deleted Detail
2 Revised Notes

STATE OF CALIFORNIA
DEPARTMENT OF TRANSPORTATION

DIVISION OF ENGINEERING SERVICES

BRIDGE NO. 29-0023
POST MILE 11.80

LONE TREE SLOUGH BRIDGE (WIDEN)
SLAB REINFORCEMENT DETAILS

DS OSD 2147A (METRIC) (REV. 2/25/97)

ORIGINAL SCALE IN INCHES FOR REDUCED PLANS 0 1 2 3

UNIT: 1455
PROJECT NUMBER & PHASE: 10000204411 CONTRACT NO.: 10-0E6121

DISREGARD PRINTS BEARING EARLIER REVISION DATES

REVISION DATES: ~~5-1-10~~ ~~2-4-11~~ ~~5-19-11~~ 6-24-11

SHEET 12 OF 19

USERNAME => s121614

29-0023-1-sr03.dgn

DATE PLOTTED => 01-DEC-2011 TIME PLOTTED => 10:50

DIST	COUNTY	ROUTE	POST MILES TOTAL PROJECT	SHEET No	TOTAL SHEETS
10	SJ	99	10.6/14.9	412	504

REGISTERED CIVIL ENGINEER 6-24-11 DATE

10-17-11
PLANS APPROVAL DATE

REGISTERED PROFESSIONAL ENGINEER SHARIQ PERVAIZ No. C67068 Exp. 9-30-12 CIVIL STATE OF CALIFORNIA

The State of California or its officers or agents shall not be responsible for the accuracy or completeness of electronic copies of this plan sheet.

SAN JOAQUIN COUNCIL OF GOVERNMENTS
555 E. WEBER AVE.
STOCKTON, CA 95202

HDR ENGINEERING, INC.
2365 IRON POINT ROAD, SUITE 300
FOLSOM, CA 95630

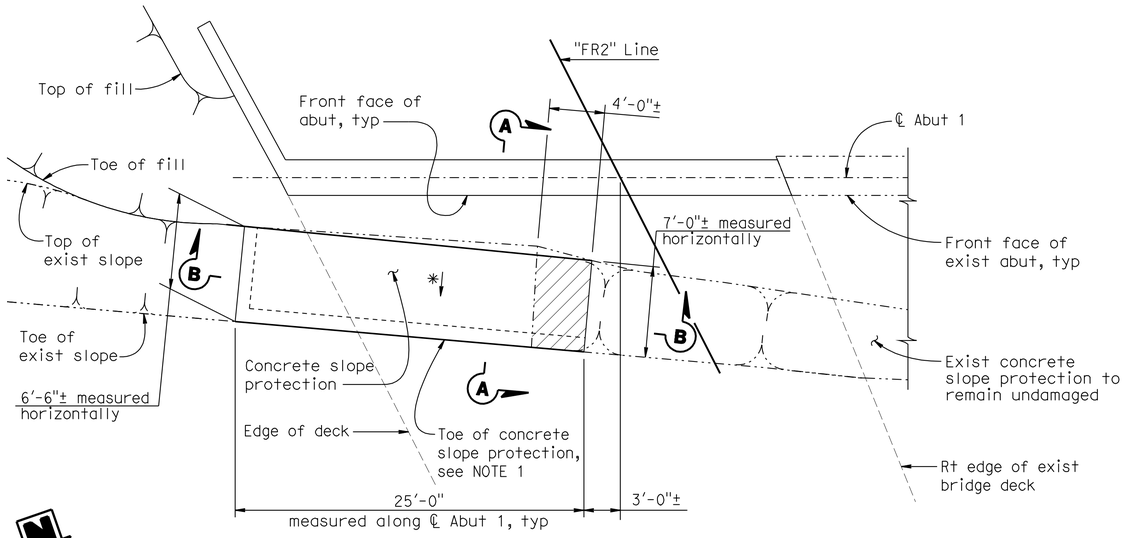

ABUTMENT 1

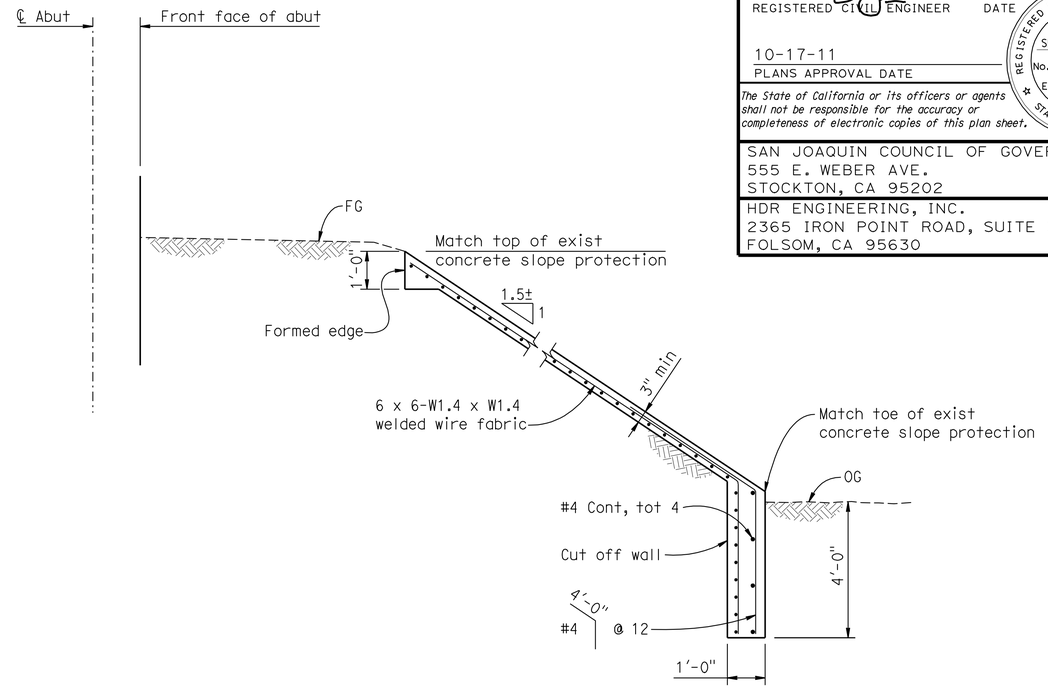

SECTION A-A

½" = 1'-0"

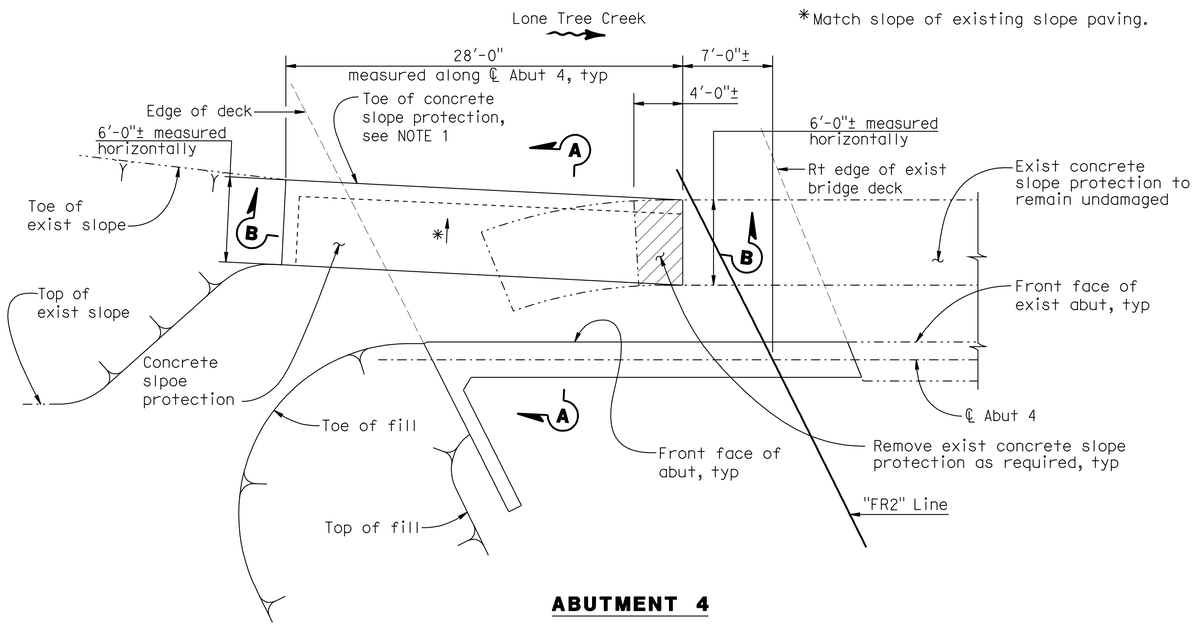

ABUTMENT 4

PARTIAL PLAN

3/16" = 1'-0"

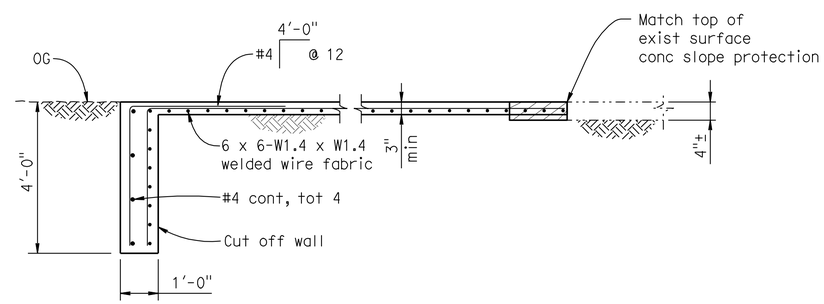

SECTION B-B

½" = 1'-0"

NOTE:

1. Toe of concrete slope protection shall follow the elevation of exist toe of concrete slope protection.

LEGEND:

—·—·— Indicates existing structure.

——— Indicates new structure.

▨ Indicates existing concrete slope protection removal.

Note:
The Contractor shall verify all controlling field dimensions before ordering or fabricating any materials.

Reza Erfanian
DESIGN OVERSIGHT Reza Erfanian
6/24/11
SIGN OFF DATE

	BY	CHECKED
DESIGN	S PERVAIZ	P CHENG
DETAILS	J VOUGHT	P CHENG
QUANTITIES	K SANFORD	E GAHAN

PREPARED FOR THE STATE OF CALIFORNIA DEPARTMENT OF TRANSPORTATION

JOHN A. KLEMUNES, JR.
PROJECT ENGINEER

BRIDGE NO. 29-0023
POST MILE 11.80

LONE TREE SLOUGH BRIDGE (WIDEN)
CONCRETE SLOPE PROTECTION DETAILS

DESIGN DETAIL SHEET (ENGLISH) (REV.7/16/10)

ORIGINAL SCALE IN INCHES FOR REDUCED PLANS 0 1 2 3

UNIT: 1455
PROJECT NUMBER & PHASE: 10000204411 CONTRACT NO.: 10-0E6121

DISREGARD PRINTS BEARING EARLIER REVISION DATES

REVISION DATES: 5-3-10 2-4-11 5-18-11 6-24-11

SHEET 13 OF 19

FILE => 29-0023-y-sp01.dgn

USERNAME => s12614 DATE PLOTTED => 01-DEC-2011 TIME PLOTTED => 10:50

DIST	COUNTY	ROUTE	POST MILES TOTAL PROJECT	SHEET No	TOTAL SHEETS
10	SJ	99	10.6/14.9	413	504

REGISTERED CIVIL ENGINEER — DATE: 6-24-11

PLANS APPROVAL DATE: 10-17-11

The State of California or its officers or agents shall not be responsible for the accuracy or completeness of electronic copies of this plan sheet.

PROFESSIONAL GEOLOGIST — William E. Nichols — No. 2229 — Exp. 1-31-12 — CERTIFIED ENGINEERING GEOLOGIST — STATE OF CALIFORNIA

SAN JOAQUIN COUNCIL OF GOVERNMENTS
555 E. WEBER AVE.
STOCKTON, CA 95202

BLACKBURN CONSULTING
2491 BOATMAN AVENUE
WEST SACRAMENTO, CA 95691 FILE No. 1201.7b

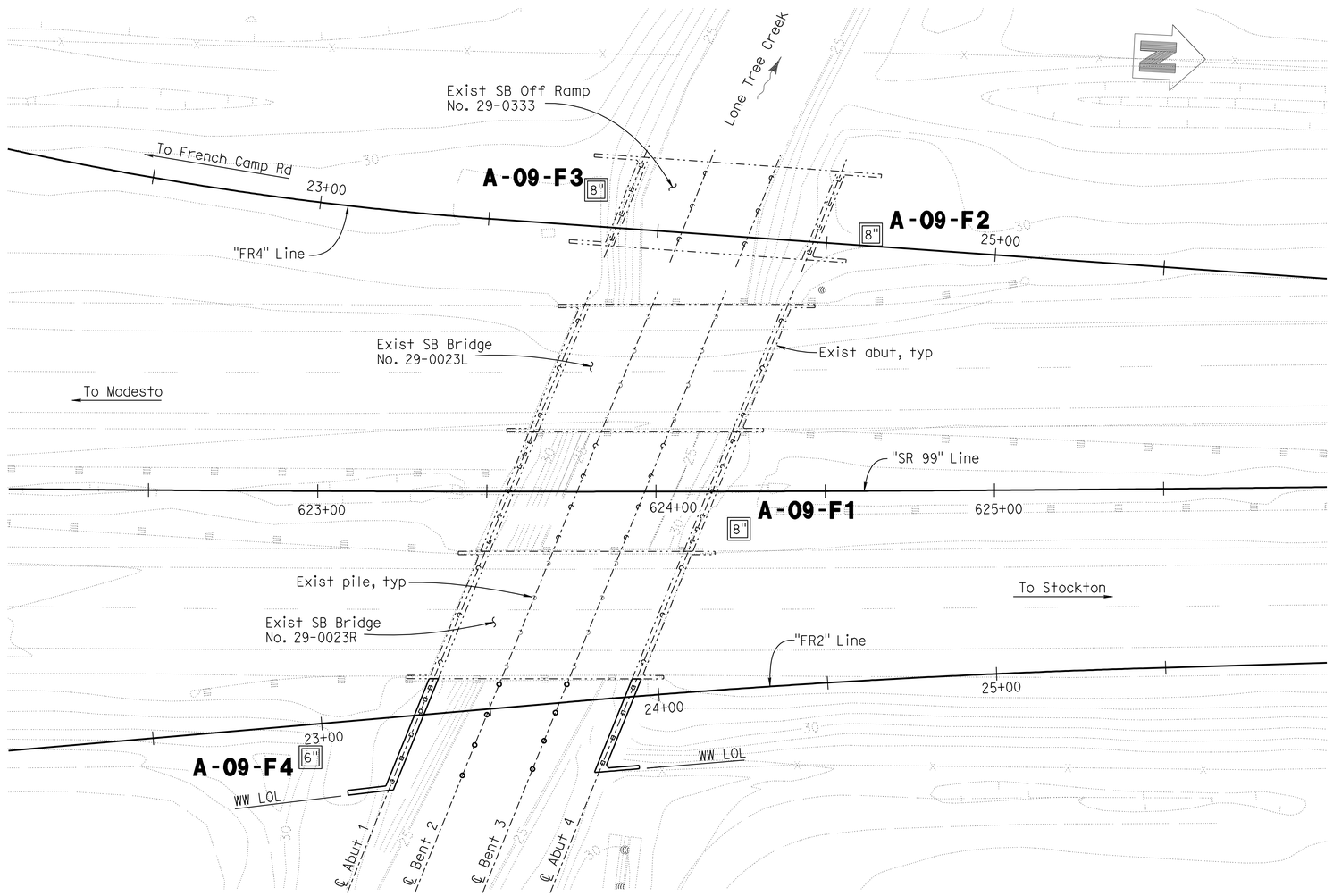

PLAN
1" = 20'

Legend:

- Indicates existing structure.
- ▫ Indicates driven piles at abutments.
- ∘ Indicates driven piles at bents.

DESIGN OVERSIGHT: Reza Erfanian	DRAWN BY: M ROBERTSON	A WOOD — FIELD INVESTIGATION BY:	PREPARED FOR THE STATE OF CALIFORNIA DEPARTMENT OF TRANSPORTATION
6/24/11 — SIGN OFF DATE	CHECKED BY: A SHINNEFIELD	DATE: March, August 2009	

JOHN A. KLEMUNES, JR. — PROJECT ENGINEER

BRIDGE NO. 29-0023 — POST MILE 11.80

LONE TREE SLOUGH BRIDGE (WIDEN)
LOG OF TEST BORINGS NO. 1

GS GEOLOGIST LOG OF TEST BORINGS SHEET (ENGLISH) (REV. 7/16/10)

ORIGINAL SCALE IN INCHES FOR REDUCED PLANS: 0 1 2 3

UNIT: 1455
PROJECT NUMBER & PHASE: 10000204411 CONTRACT NO.: 10-0E6121

DISREGARD PRINTS BEARING EARLIER REVISION DATES → REVISION DATES: 3-10-10, 2-04-11, 5-18-11, 6-24-11

SHEET 14 OF 19

FILE => 29-0023-z-1tb01.dgn

USERNAME => s121614 DATE PLOTTED => 01-DEC-2011 TIME PLOTTED => 10:50

DIST	COUNTY	ROUTE	POST MILES TOTAL PROJECT	SHEET No	TOTAL SHEETS
10	SJ	99	10.6/14.9	414	504

REGISTERED CIVIL ENGINEER — DATE: 6-24-11

PROFESSIONAL GEOLOGIST William E. Nichols No. 2229 Exp. 1-31-12 CERTIFIED ENGINEERING GEOLOGIST STATE OF CALIFORNIA

10-17-11
PLANS APPROVAL DATE

The State of California or its officers or agents shall not be responsible for the accuracy or completeness of electronic copies of this plan sheet.

SAN JOAQUIN COUNCIL OF GOVERNMENTS
555 E. WEBER AVE.
STOCKTON, CA 95202

BLACKBURN CONSULTING
2491 BOATMAN AVENUE
WEST SACRAMENTO, CA 95691 FILE No. 1201.7b

BENCH MARKS

BENCHMARK# 658 ELEV. 33.00 Ft
DESCRIPTION: KSN Control Point, 1/2" REBAR WITH YELLOW CAP STAMPED "KSN CONTROL", LOCATED AT APPROXIMATE CENTERLINE STATION 625+67, ON THE NORTHBOUND MAINLINE, ON THE OUTSIDE SHOULDER, 1' EAST OF THE EDGE OF PAVEMENT, 205' NORTH OF THE END OF THE CENTERLINE OF LONE TREE CREEK. NGVD 29, N2138213.81, E6354203.76.

BENCHMARK# 699 ELEV. 31.83 Ft
DESCRIPTION: KSN Control Point, 1/2" REBAR WITH YELLOW CAP STAMPED "KSN CONTROL", LOCATED APPROXIMATE CENTERLINE STATION 625+50, ON THE SOUTHBOUND MAINLINE, ON THE OUTSIDE SHOULDER, 3' WEST OF THE EDGE OF PAVEMENT, 140' NORTH OF THE CENTERLINE OF LONE TREE CREEK. NGVD 29, N2138191.62, E6354088.62.

FOR PLAN VIEW
SEE LOG OF TEST BORINGS 1 OF 6

NOTES:

1. Field classification of soils was in accordance with the Caltrans Soil & Rock Logging, Classification, and Presentation Manual (June 2007). See Log of Test Borings No. 4 and 5, "Soil Legend".
2. Standard Penetration tests were performed in accordance with ASTM D 1586-99 using a hammer operated with an automated drop system. Drill rods were 1 5/8-inch diameter "A"-rods; sampler was driven with brass liners.
3. "2.4 inch sampler": ID=2.4 inch, OD=2.9 inch. Driven in same manner as SPT ("1.4 inch") sampler.
4. Where less than the 0.5 inches of penetration is achieved, the blow count shown is for that fraction of the interval actually penetrated.
5. If laboratory tests are not shown as being performed, the soil descriptions presented in the LOTB are based solely on the visual practices described in the before mentioned Manual.
6. The length of each sampled interval is shown graphically on the boring log.
7. Consistency of soils shown in ( ) where estimated.
8. Groundwater surface (GWS) reflect the fluid level in the borings on the specified date. Groundwater surface is subject to seasonal fluctuations and may occur at higher or lower elevations depending on the conditions at any particular time.
9. Electronic media for plan view provided by HDR Engineering, Inc., dated 11/20/09.
10. Boring elevations are approximate and based on "Planning Study" plans dated 1/23/09 provided by HDR Engineering, Inc.
11. The "Log of Test Borings" drawing is included with plans in accordance with Section 2-1.03 of Caltrans "Standard Specifications".

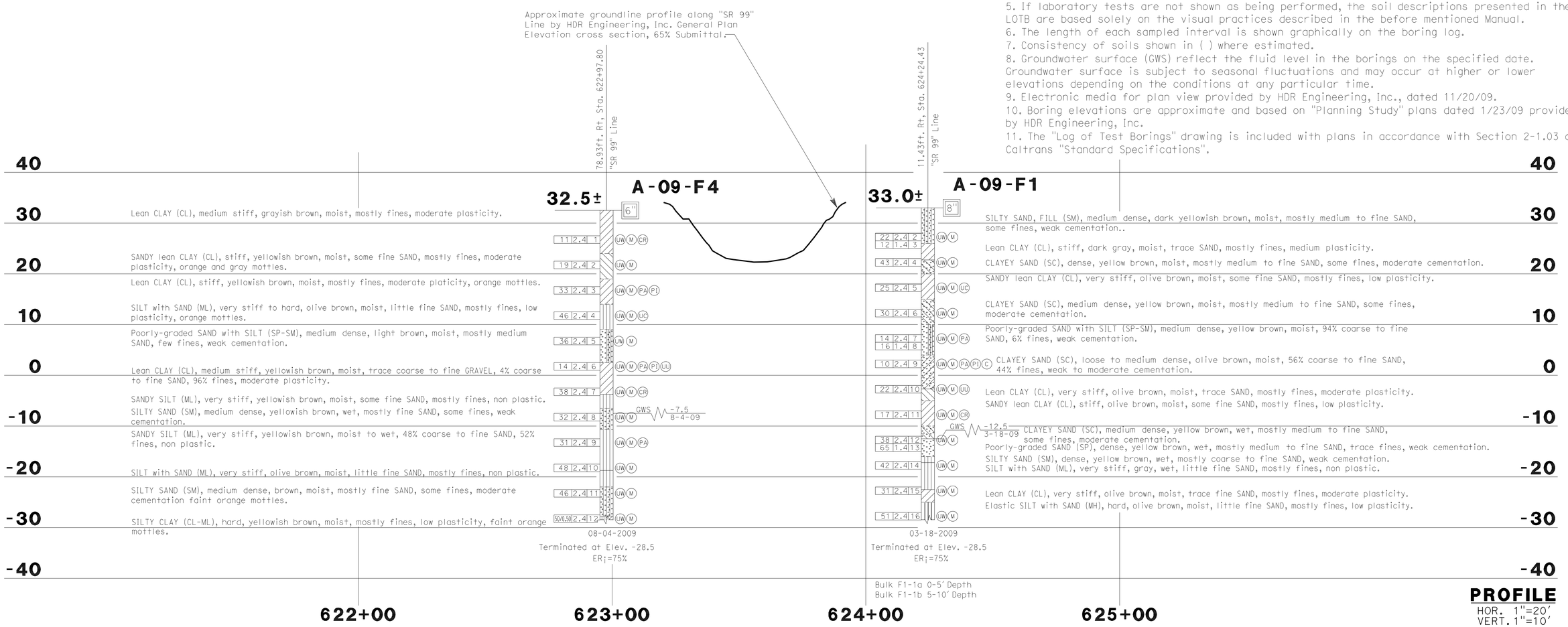

PROFILE
HOR. 1"=20'
VERT. 1"=10'

Reza Erfanian — DESIGN OVERSIGHT Reza Erfanian — 6/24/11 SIGN OFF DATE	DRAWN BY M ROBERTSON	A WOOD — FIELD INVESTIGATION BY:	PREPARED FOR THE STATE OF CALIFORNIA DEPARTMENT OF TRANSPORTATION
	CHECKED BY A SHINNEFIELD	DATE: March, August 2009	

JOHN A. KLEMUNES, JR.
PROJECT ENGINEER

BRIDGE NO. 29-0023
POST MILE 11.80

LONE TREE SLOUGH BRIDGE (WIDEN)
LOG OF TEST BORINGS NO. 2

GS GEOLOGIST LOG OF TEST BORINGS SHEET (ENGLISH) (REV. 7/16/10)

ORIGINAL SCALE IN INCHES FOR REDUCED PLANS 0 1 2 3

UNIT: 1455
PROJECT NUMBER & PHASE: 10000204411 CONTRACT NO.: 10-0E6121

DISREGARD PRINTS BEARING EARLIER REVISION DATES → REVISION DATES ~~3-10-10~~ ~~2-04-11~~ ~~5-18-11~~ 6-24-11

SHEET 15 OF 19

FILE => 29-0023-z-ltb02.dgn

USERNAME => s6121614 DATE PLOTTED => 01-DEC-2011 TIME PLOTTED => 10:50

DIST	COUNTY	ROUTE	POST MILES TOTAL PROJECT	SHEET No	TOTAL SHEETS
10	SJ	99	10.6/14.9	415	504

REGISTERED CIVIL ENGINEER — DATE: 6-24-11

PROFESSIONAL GEOLOGIST William E. Nichols No. 2229 Exp. 1-31-12 CERTIFIED ENGINEERING GEOLOGIST STATE OF CALIFORNIA

10-17-11
PLANS APPROVAL DATE

The State of California or its officers or agents shall not be responsible for the accuracy or completeness of electronic copies of this plan sheet.

SAN JOAQUIN COUNCIL OF GOVERNMENTS
555 E. WEBER AVE.
STOCKTON, CA 95202

BLACKBURN CONSULTING
2491 BOATMAN AVENUE
WEST SACRAMENTO, CA 95691 FILE No. 1201.7b

BENCH MARKS

BENCHMARK# 658 ELEV. 33.00 Ft
DESCRIPTION: KSN Control Point, 1/2" REBAR WITH YELLOW CAP STAMPED "KSN CONTROL", LOCATED AT APPROXIMATE CENTERLINE STATION 625+67, ON THE NORTHBOUND MAINLINE, ON THE OUTSIDE SHOULDER, 1' EAST OF THE EDGE OF PAVEMENT, 205' NORTH OF THE END OF THE CENTERLINE OF LONE TREE CREEK. NGVD 29, N2138213.81, E6354203.76.

BENCHMARK# 699 ELEV. 31.83 Ft
DESCRIPTION: KSN Control Point, 1/2" REBAR WITH YELLOW CAP STAMPED "KSN CONTROL", LOCATED APPROXIMATE CENTERLINE STATION 625+50, ON THE SOUTHBOUND MAINLINE, ON THE OUTSIDE SHOULDER, 3' WEST OF THE EDGE OF PAVEMENT, 140' NORTH OF THE CENTERLINE OF LONE TREE CREEK. NGVD 29, N2138191.62, E6354088.62.

FOR PLAN VIEW
SEE LOG OF TEST BORINGS 1 OF 6

NOTES:

1. Field classification of soils was in accordance with the Caltrans Soil & Rock Logging,Classification, and Presentation Manual (June 2007). See Log of Test Borings No. 4 and 5,"Soil Legend".2. Standard Penetration tests were performed in accordance with ASTM D 1586-99 using ahammer operated with an automated drop system. Drill rods were 1 5/8-inch diameter"A"-rods; sampler was driven with brass liners. 3. "2.4 inch sampler": ID=2.4 inch, OD=2.9 inch. Driven in same manner as SPT ("1.4inch") sampler.4. Where less than the 0.5 inches of penetration is achieved, the blow count shown is forthat fraction of the interval actually penetrated.5. If laboratory tests are not shown as being performed, the soil descriptions presented inthe LOTB are based solely on the visual practices described in the before mentioned Manual.6. The length of each sampled interval is shown graphically on the boring log.7. Consistency of soils shown in ( ) where estimated.8. Groundwater surface (GWS) reflect the fluid level in the borings on the specified date.Groundwater surface is subject to seasonal fluctuations and may occur at higher or lowerelevations depending on the conditions at any particular time.9. Electronic media for plan view provided by HDR Engineering, Inc., December 2009.10. Boring elevations are approximate and based on "Planning Study" plans dated 1/23/09provided by HDR Engineering, Inc.11. The "Log of Test Borings" drawing is included with plans in accordance with Section 2-1.03 of Caltrans "Standard Specifications".

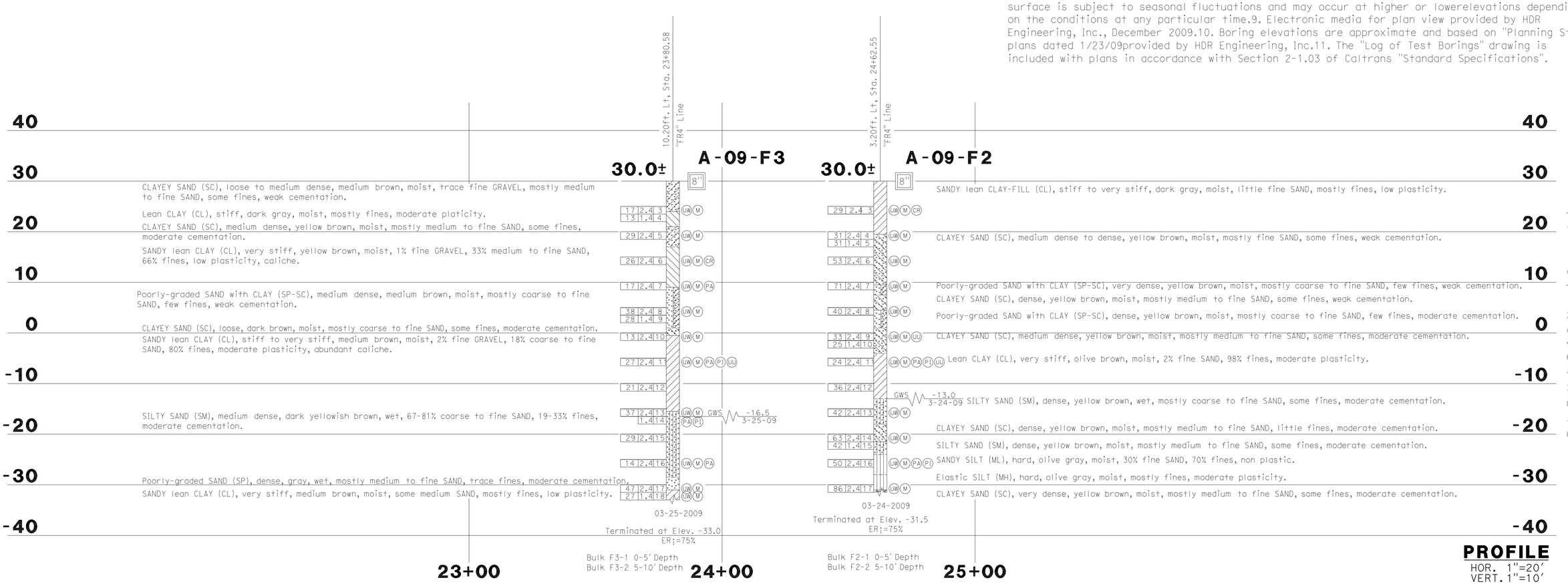

PROFILE
HOR. 1"=20'
VERT. 1"=10'

Reza Erfanian DESIGN OVERSIGHT Reza Erfanian 6/24/11 SIGN OFF DATE	DRAWN BY M ROBERTSON	A WOOD FIELD INVESTIGATION BY:	PREPARED FOR THE STATE OF CALIFORNIA DEPARTMENT OF TRANSPORTATION	JOHN A. KLEMUNES, JR. PROJECT ENGINEER	BRIDGE NO. 29-0023 POST MILE 11.80
	CHECKED BY A SHINNEFIELD	DATE: March, August 2009			

LONE TREE SLOUGH BRIDGE (WIDEN)
LOG OF TEST BORINGS NO. 3

GS GEOLOGIST LOG OF TEST BORINGS SHEET (ENGLISH) (REV. 7/16/10)

ORIGINAL SCALE IN INCHES FOR REDUCED PLANS 0 1 2 3

UNIT: 1455
PROJECT NUMBER & PHASE: 10000204411 CONTRACT NO.: 10-0E6121

DISREGARD PRINTS BEARING EARLIER REVISION DATES

REVISION DATES: 3-10-10 2-04-11 5-18-11 6-24-11

SHEET 16 OF 19

FILE => 29-0023-z-ltb03.dgn

USERNAME => s121614 DATE PLOTTED => 01-DEC-2011 TIME PLOTTED => 10:51

DIST	COUNTY	ROUTE	POST MILES TOTAL PROJECT	SHEET No	TOTAL SHEETS
10	SJ	99	10.6/14.9	416	504

REGISTERED CIVIL ENGINEER — DATE 6-24-11

10-17-11
PLANS APPROVAL DATE

PROFESSIONAL GEOLOGIST William E. Nichols No. 2229 Exp. 1-31-12 CERTIFIED ENGINEERING GEOLOGIST STATE OF CALIFORNIA

The State of California or its officers or agents shall not be responsible for the accuracy or completeness of electronic copies of this plan sheet.

SAN JOAQUIN COUNCIL OF GOVERNMENTS
555 E. WEBER AVE.
STOCKTON, CA 95202

BLACKBURN CONSULTING
2491 BOATMAN AVENUE
WEST SACRAMENTO, CA 95691 FILE No. 1201.7b

REFERENCE: CALTRANS SOIL & ROCK LOGGING, CLASSIFICATION, AND PRESENTATION MANUAL, (JUNE, 2007)

CEMENTATION

Description	Criteria
Weak	Crumbles or breaks with handling or little finger pressure.
Moderate	Crumbles or breaks with considerable finger pressure.
Strong	Will not crumble or break with finger pressure.

CONSISTENCY OF COHESIVE SOILS

Description	Unconfined Compressive Strength (tsf)	Pocket Penetrometer Measurement (tsf)	Torvane Measurement (tsf)	Field Approximation
Very Soft	<0.25	<0.25	<0.12	Easily penetrated several inches by fist
Soft	0.25 to 0.50	0.25 to 0.50	0.12 to 0.25	Easily penetrated several inches by thumb
Medium Stiff	0.50 to 1.0	0.50 to 1.0	0.25 to 0.50	Penetrated several inches by thumb with moderate effort
Stiff	1 to 2	1 to 2	0.50 to 1.0	Readily indented by thumb but penetrated only with great effort
Very Stiff	2 to 4	2 to 4	1.0 to 2.0	Readily indented by thumbnail
Hard	> 4.0	> 4.0	> 2.0	Indented by thumbnail with difficulty

BOREHOLE IDENTIFICATION

Symbol	Hole Type	Description
Size	A	Auger Boring
Size	R P	Rotary drilled boring Rotary percussion boring (air)
Size	R	Rotary drilled diamond core
Size	HD HA	Hand driven (1-inch soil tube) Hand Auger
○	D	Dynamic Cone Penetration Boring
▲	CPT	Cone Penetration Test (ASTM D 5778)
□	O	Other

NOTE: Size in inches.

PLASTICITY OF FINE-GRAINED SOILS

Description	Criteria
Nonplastic	A 1/8-inch thread cannot be rolled at any water content.
Low	The thread can barely be rolled and the lump cannot be formed when drier than the plastic limit.
Medium	The thread is easy to roll and not much time is required to reach the plastic limit. The thread cannot be rerolled after reaching the plastic limit. The lump crumbles when drier than the plastic limit.
High	It takes considerable time rolling and kneading to reach the plastic limit. The thread can be rerolled several times after reaching the plastic limit. The lump can be formed without crumbling when drier than the plastic limit.

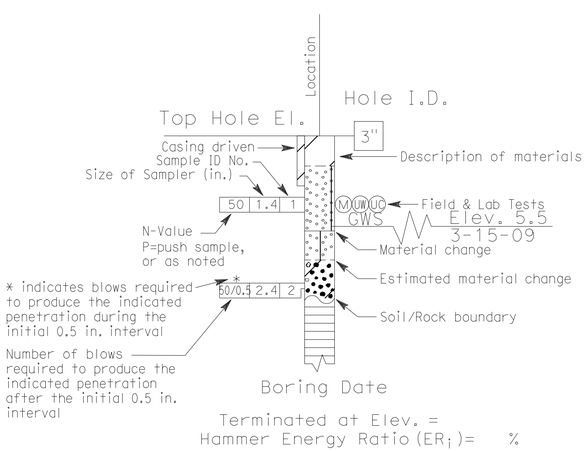

ROTARY BORING

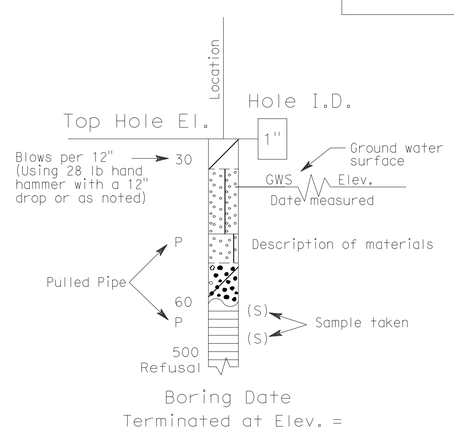

HAND BORING

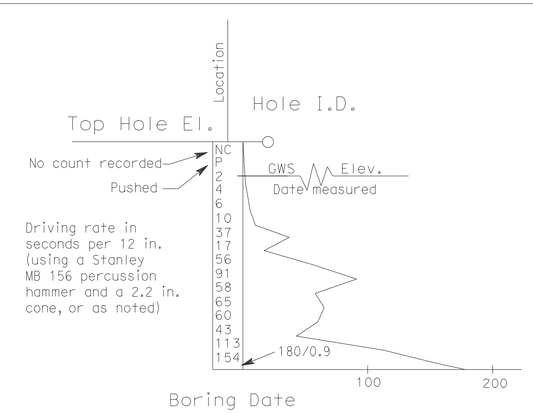

DYNAMIC CONE PENETRATION BORING

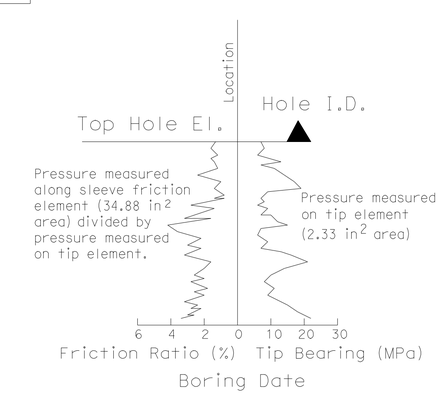

CONE PENETRATION TEST (CPT) SOUNDING

SOIL LEGEND

LONE TREE SLOUGH BRIDGE (WIDEN)

LOG OF TEST BORINGS NO. 4

DESIGN OVERSIGHT Reza Erfanian
6/24/11
SIGN OFF DATE

DRAWN BY M ROBERTSON
CHECKED BY A SHINNEFIELD

A WOOD
FIELD INVESTIGATION BY:
DATE: March, August 2009

PREPARED FOR THE STATE OF CALIFORNIA DEPARTMENT OF TRANSPORTATION

JOHN A. KLEMUNES, JR.
PROJECT ENGINEER

BRIDGE NO. 29-0023
POST MILE 11.80

GS LOTB SOIL LEGEND SHEET 1 (ENGLISH) (REV. 07/16/10)

ORIGINAL SCALE IN INCHES FOR REDUCED PLANS 0 1 2 3

UNIT: 1455
PROJECT NUMBER & PHASE: 10000204411 CONTRACT NO.: 10-0E6121

DISREGARD PRINTS BEARING EARLIER REVISION DATES

REVISION DATES 3-10-10 2-24-11 5-18-11 6-24-11

SHEET 17 OF 19

FILE => 29-0023-z-ltb04.gdn

USERNAME => s121614 DATE PLOTTED => 01-DEC-2011 TIME PLOTTED => 10:51

DIST	COUNTY	ROUTE	POST MILES TOTAL PROJECT	SHEET No	TOTAL SHEETS
10	SJ	99	10.6/14.9	417	504

REGISTERED CIVIL ENGINEER — DATE: 6-24-11

10-17-11
PLANS APPROVAL DATE

PROFESSIONAL GEOLOGIST William E. Nichols No. 2229 Exp. 1-31-12 CERTIFIED ENGINEERING GEOLOGIST STATE OF CALIFORNIA

The State of California or its officers or agents shall not be responsible for the accuracy or completeness of electronic copies of this plan sheet.

SAN JOAQUIN COUNCIL OF GOVERNMENTS
555 E. WEBER AVE.
STOCKTON, CA 95202

BLACKBURN CONSULTING
2491 BOATMAN AVENUE
WEST SACRAMENTO, CA 95691 FILE No. 1201.7b

REFERENCE: CALTRANS SOIL & ROCK LOGGING, CLASSIFICATION, AND PRESENTATION MANUAL, (JUNE, 2007)

GROUP SYMBOLS AND NAMES

Graphic/Symbol	Group Names	Graphic/Symbol	Group Names
GW	Well-graded GRAVEL Well-graded GRAVEL with SAND	CL	Lean CLAY Lean CLAY with SAND Lean CLAY with GRAVEL SANDY lean CLAY SANDY lean CLAY with GRAVEL GRAVELLY lean CLAY GRAVELLY lean CLAY with SAND
GP	Poorly-graded GRAVEL Poorly-graded GRAVEL with SAND		
GW-GM	Well-graded GRAVEL with SILT Well-graded GRAVEL with SILT and SAND	CL-ML	SILTY CLAY SILTY CLAY with SAND SILTY CLAY with GRAVEL SANDY SILTY CLAY SANDY SILTY CLAY with GRAVEL GRAVELLY SILTY CLAY GRAVELLY SILTY CLAY with SAND
GW-GC	Well-graded GRAVEL with CLAY (or SILTY CLAY) Well-graded GRAVEL with CLAY and SAND (or SILTY CLAY and SAND)		
GP-GM	Poorly-graded GRAVEL with SILT Poorly-graded GRAVEL with SILT and SAND	ML	SILT SILT with SAND SILT with GRAVEL SANDY SILT SANDY SILT with GRAVEL GRAVELLY SILT GRAVELLY SILT with SAND
GP-GC	Poorly-graded GRAVEL with CLAY (or SILTY CLAY) Poorly-graded GRAVEL with CLAY and SAND (or SILTY CLAY and SAND)		
GM	SILTY GRAVEL SILTY GRAVEL with SAND	OL	ORGANIC lean Clay ORGANIC lean Clay with SAND ORGANIC lean Clay with GRAVEL SANDY ORGANIC lean CLAY SANDY ORGANIC lean CLAY with GRAVEL GRAVELLY ORGANIC lean CLAY GRAVELLY ORGANIC lean CLAY with SAND
GC	CLAYEY GRAVEL CLAYEY GRAVEL with SAND		
GC-GM	SILTY, CLAYEY GRAVEL SILTY, CLAYEY GRAVEL with SAND	OL	ORGANIC SILT ORGANIC SILT with SAND ORGANIC SILT with GRAVEL SANDY ORGANIC SILT SANDY ORGANIC SILT with GRAVEL GRAVELLY ORGANIC SILT GRAVELLY ORGANIC SILT with SAND
SW	Well-graded SAND Well-graded SAND with GRAVEL		
SP	Poorly-graded SAND Poorly-graded SAND with GRAVEL	CH	Fat CLAY Fat CLAY with SAND Fat CLAY with GRAVEL SANDY fat CLAY SANDY fat CLAY with GRAVEL GRAVELLY fat CLAY GRAVELLY fat CLAY with SAND
SW-SM	Well-graded SAND with SILT Well-graded SAND with SILT and GRAVEL		
SW-SC	Well-graded SAND with CLAY (or SILTY CLAY) Well-graded SAND with CLAY and GRAVEL (or SILTY CLAY and GRAVEL)	MH	Elastic SILT Elastic SILT with SAND Elastic SILT with GRAVEL SANDY elastic SILT SANDY elastic SILT with GRAVEL GRAVELLY elastic SILT GRAVELLY elastic SILT with SAND
SP-SM	Poorly-graded SAND with SILT Poorly-graded SAND with SILT and GRAVEL		
SP-SC	Poorly-graded SAND with CLAY (or SILTY CLAY) Poorly-graded SAND with CLAY and GRAVEL (or SILTY CLAY and GRAVEL)	OH	ORGANIC fat CLAY ORGANIC fat CLAY with SAND ORGANIC fat CLAY with GRAVEL SANDY ORGANIC fat CLAY SANDY ORGANIC fat CLAY with GRAVEL GRAVELLY ORGANIC fat CLAY GRAVELLY ORGANIC fat CLAY with SAND
SM	SILTY SAND SILTY SAND with GRAVEL		
SC	CLAYEY SAND CLAYEY SAND with GRAVEL	OH	ORGANIC elastic SILT ORGANIC elastic SILT with SAND ORGANIC elastic SILT with GRAVEL SANDY ORGANIC elastic SILT SANDY ORGANIC elastic SILT with GRAVEL GRAVELLY ORGANIC elastic SILT GRAVELLY ORGANIC elastic SILT with SAND
SC-SM	SILTY, CLAYEY SAND SILTY, CLAYEY SAND with GRAVEL		
PT	PEAT	OH/OL	ORGANIC SOIL ORGANIC SOIL with SAND ORGANIC SOIL with GRAVEL SANDY ORGANIC SOIL SANDY ORGANIC SOIL with GRAVEL GRAVELLY ORGANIC SOIL GRAVELLY ORGANIC SOIL with SAND
	COBBLES COBBLES and BOULDERS BOULDERS		

FIELD AND LABORATORY TESTING

- (C) Consolidation (ASTM D 2435)
- (CL) Collapse Potential (ASTM D 5333)
- (CP) Compaction Curve (CTM 216)
- (CR) Corrosivity Testing (CTM 643, CTM 422, CTM 417)
- (CU) Consolidated Undrained Triaxial (ASTM D 4767)
- (DS) Direct Shear (ASTM D 3080)
- (EI) Expansion Index (ASTM D 4829)
- (M) Moisture Content (ASTM D 2216)
- (OC) Organic Content-% (ASTM D 2974)
- (P) Permeability (CTM 220)
- (PA) Particle Size Analysis (ASTM D 422)
- (PI) Plasticity Index (AASHTO T 90) Liquid Limit (AASHTO T 89)
- (PL) Point Load Index (ASTM D 5731)
- (PM) Pressure Meter
- (PP) Pocket Penetrometer
- (R) R-Value (CTM 301)
- (SE) Sand Equivalent (CTM 217)
- (SG) Specific Gravity (AASHTO T 100)
- (SL) Shrinkage Limit (ASTM D 427)
- (SW) Swell Potential (ASTM D 4546)
- (TV) Pocket Torvane
- (UC) Unconfined Compression-Soil (ASTM D 2166) Unconfined Compression-Rock (ASTM D 2938)
- (UU) Unconsolidated Undrained Triaxial (ASTM D 2850)
- (UW) Unit Weight (ASTM D 2937)
- (VS) Vane Shear (AASHTO T 223)

APPARENT DENSITY OF COHESIONLESS SOILS

Description	SPT N_{60}-Value (Blows / 12 inches)
Very Loose	0 - 4
Loose	5 - 10
Medium Dense	11 - 30
Dense	31 - 50
Very Dense	> 50

MOISTURE

Description	Criteria
Dry	Absence of moisture, dusty, dry to the touch
Moist	Damp but no visible water
Wet	Visible free water, usually soil is below water table

PERCENT OR PROPORTION OF SOILS

Description	Criteria
Trace	Particles are present but estimated to be less than 5%
Few	5 to 10%
Little	15 to 25%
Some	30 to 45%
Mostly	50 to 100%

PARTICLE SIZE

Description		Size
Boulder		> 12"
Cobble		3" to 12"
Gravel	Coarse	3/4" to 3"
	Fine	No. 4 to 3/4"
Sand	Coarse	No. 10 to No. 4
	Medium	No. 40 to No. 10
	Fine	No. 200 to No. 40

SOIL LEGEND

LONE TREE SLOUGH BRIDGE (WIDEN)

LOG OF TEST BORINGS NO. 5

DESIGN OVERSIGHT: Reza Erfanian
6/24/11
SIGN OFF DATE

DRAWN BY: M ROBERTSON
CHECKED BY: A SHINNEFIELD

A WOOD
FIELD INVESTIGATION BY:
DATE: March, August 2009

PREPARED FOR THE STATE OF CALIFORNIA DEPARTMENT OF TRANSPORTATION

JOHN A. KLEMUNES, JR.
PROJECT ENGINEER

BRIDGE NO. 29-0023
POST MILE 11.80

GS LOTB SOIL LEGEND SHEET 2 (ENGLISH) (REV. 07/16/10)

ORIGINAL SCALE IN INCHES FOR REDUCED PLANS 0 1 2 3

UNIT: 1455
PROJECT NUMBER & PHASE: 10000204411 CONTRACT NO.: 10-0E6121

DISREGARD PRINTS BEARING EARLIER REVISION DATES

REVISION DATES: 3-10-10 2-04-11 5-18-11 6-24-11 | SHEET 18 OF 19

FILE => 29-0023-z-ltb05.dgn

USERNAME => s8121614 DATE PLOTTED => 01-DEC-2011 TIME PLOTTED => 10:51

DIST.	COUNTY	ROUTE	SECTION	SHEET NO.	TOTAL SHEETS
X	SJ	4	E		

BRIDGE ENGINEER — CIVIL AND STRUCTURAL ENGINEER — LICENSE 5585

DATE APPROVED

TO ACCOMPANY PLANS DATED 10-17-11

DIVISION OF ENGINEERING SERVICES - GEOTECHNICAL SERVICES

As-Built Log of Test Borings sheet is considered an informational document only. As such, the State of California registration seal with signature, license number and registration certificate expiration date confirm that this is a true and accurate copy of the original document. This drawing is available and presented only for the convenience of any bidder, contractor or other interested party.

DIST.	COUNTY	ROUTE	POST MILES-TOTAL PROJECT	Sheet No.	Total Sheets
10	SJ	99	10.6/14.9	418	504

REGISTERED CIVIL ENGINEER — DATE 6-24-11

PROFESSIONAL GEOLOGIST William E. Nichols No. 2229 Exp. 1-31-12 CERTIFIED ENGINEERING GEOLOGIST STATE OF CALIFORNIA

LONE TREE SLOUGH BRIDGE (WIDEN)

AS-BUILT LOG OF TEST BORINGS

NOTE: A COPY OF THIS LOG OF TEST BORINGS IS AVAILABLE AT OFFICE OF STRUCTURE MAINTENANCE AND INVESTIGATIONS, SACRAMENTO, CALIFORNIA

UNIT: 1455
PROJECT NUMBER & PHASE: 10000204411

BRIDGE No.	Sheet	of
29-0023	19	19

Revisions made to this Log of Test Borings from the original 1963 Log of Test Borings are the addition of the following table and notes:

Boring	Station	Offset from "SR 99" Line
B-1	623+51.55	45.88 ft Lt
B-2	624+63.22	39.57 ft Lt

1. See Log of Test Borings 1 of 6 for stationing.

2. The table above are the locations for the As-Built Test Borings referenced to the proposed new structure location. This table is presented on the As-Built Log of Test Boring sheet for the convenience of any bidder, contractor or other interested party.

STRUCTURAL FOUNDATIONS BRANCH - ENGINEERING SERVICE CENTER

As-Built Log of Test Borings sheet is considered an informational document only. As such, the State of California registration seal with signature, license number and registration certificate expiration date will not be required. This drawing is available and presented only for the convenience of any bidder, contractor or other interested party.

DIST.	COUNTY	ROUTE	POST MILES - TOTAL PROJECT	Sheet No.	Total Sheets
10	SJ	99			

LONE TREE SLOUGH BRIDGE (WIDEN)

LOG OF TEST BORINGS

The State of California or its officers or agents shall not be responsible for the accuracy or completeness of electronic copies of this plan sheet.

CU: 10
EA: 401311

BRIDGE No. 29-0023 L/R

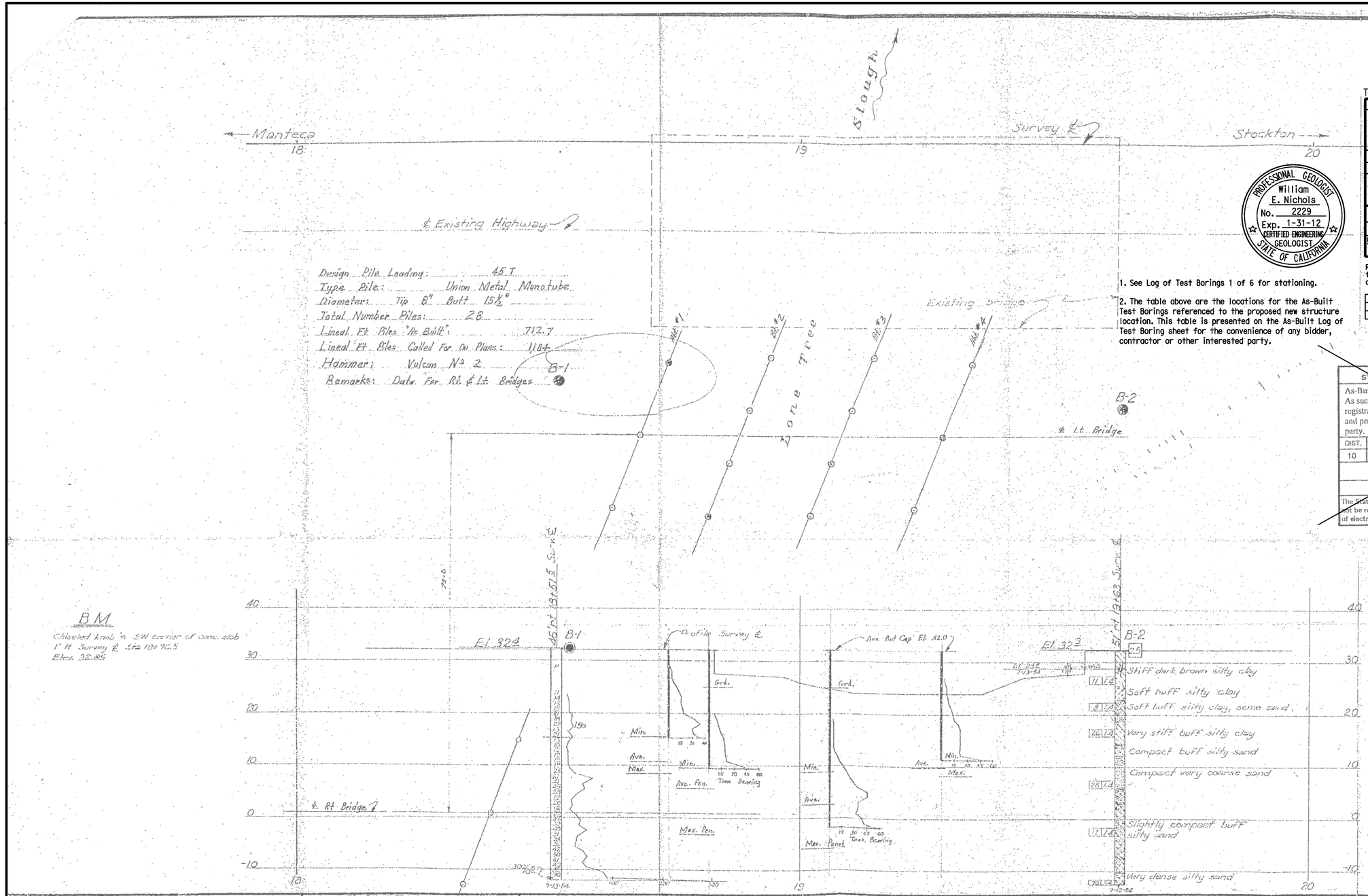

SSIFICATION OF MATERIAL BASED ON STANDARD GRADE SIZE LIMITS

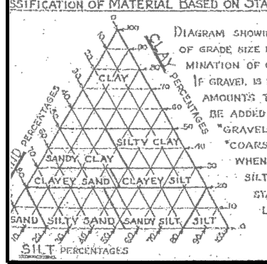

DIAGRAM SHOWING THE BASIS FOR ESTIMATES OF GRADE SIZE DISTRIBUTION USED IN DETERMINATION OF CLASS NAMES.

IF GRAVEL IS PRESENT IN APPRECIABLE AMOUNTS THE TERM "GRAVELLY" MAY BE ADDED TO THE CLASS NAME, VIZ. "GRAVELLY SAND." THE TERMS "COARSE", "MEDIUM" AND "FINE" WHEN USED TO DESCRIBE SAND, SILT AND GRAVEL REFER TO STANDARD GRADE SIZE LIMITS.

LEGEND OF EARTH MATERIALS

- GRAVEL
- SAND
- SILT
- CLAY
- SANDY CLAY OR CLAYEY SAND
- SANDY SILT OR SILTY SAND
- SILTY CLAY OR CLAYEY SILT
- PEAT AND/OR ORGANIC MATTER
- FILL MATERIAL
- IGNEOUS ROCK
- SEDIMENTARY ROCK
- METAMORPHIC ROCK

LEGEND OF BORING OPERATIONS

- PLAN OF ANY BORING
- PENETROMETER
- 2¼" CONE PENETROMETER
- SAMPLER BORING (DRY)
- ROTARY BORING (WET)
- AUGER BORING (DRY)
- JET BORING
- CORE BORING
- TEST PIT

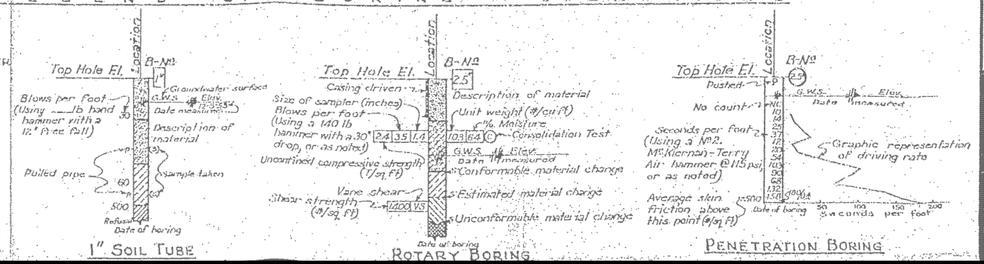

NOTES

The contractor's attention is directed to Section 2, Article (c) of the Standard Specifications and to the Special Provisions accompanying this set of plans.

Classification of earth material as shown on this sheet is based upon field inspection and is not to be construed to imply mechanical analysis.

STATE OF CALIFORNIA
DEPARTMENT OF PUBLIC WORKS
DIVISION OF HIGHWAYS

BRIDGE ACROSS LONE TREE SLOUGH

LOG OF TEST BORINGS

SCALE 1" = 10' | BRIDGE 29-23 | FILE | DRAWING PR-4011-3

29-0023-z-ltb06.tif

DIST	COUNTY	ROUTE	POST MILES TOTAL PROJECT	SHEET No	TOTAL SHEETS
10	SJ	99	10.6/14.9	419	504

REGISTERED CIVIL ENGINEER 6-24-11 DATE

10-17-11
PLANS APPROVAL DATE

REGISTERED PROFESSIONAL ENGINEER SHARIQ PERVAIZ No. C67068 Exp. 9-30-12 CIVIL STATE OF CALIFORNIA

The State of California or its officers or agents shall not be responsible for the accuracy or completeness of electronic copies of this plan sheet.

SAN JOAQUIN COUNCIL OF GOVERNMENTS
555 E. WEBER AVE.
STOCKTON, CA 95202

HDR ENGINEERING, INC.
2365 IRON POINT ROAD, SUITE 300
FOLSOM, CA 95630

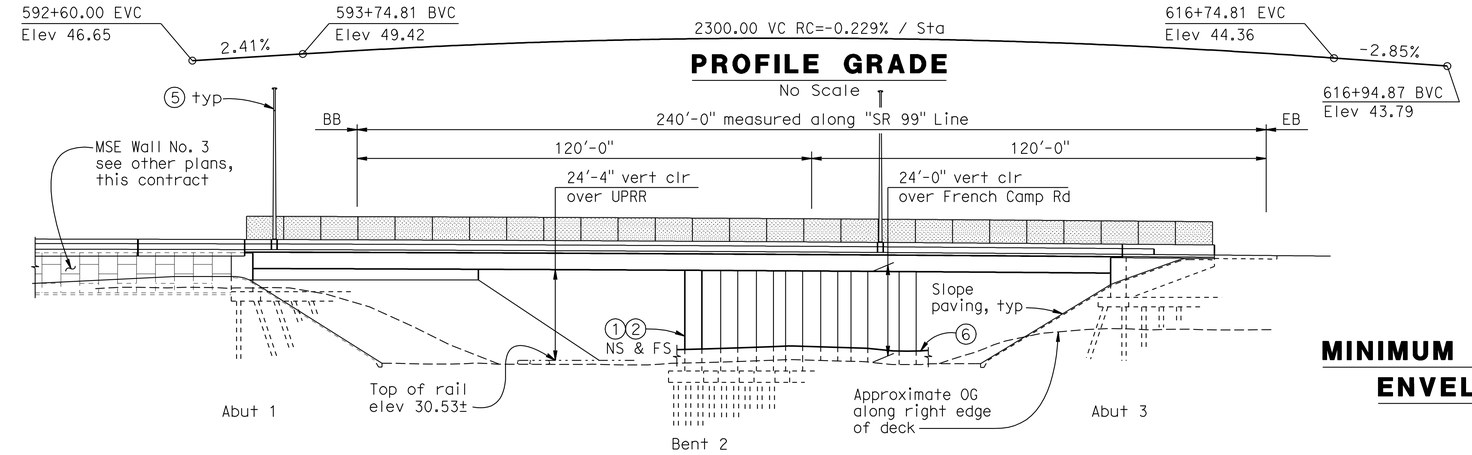

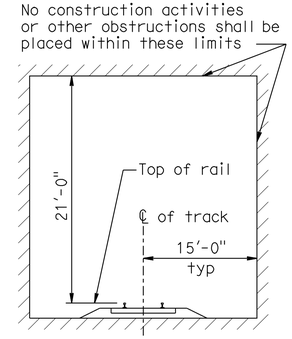

MINIMUM CONSTRUCTION CLEARANCE ENVELOPE OVER UPRR TRACK

(Normal to tracks)
1" = 20'

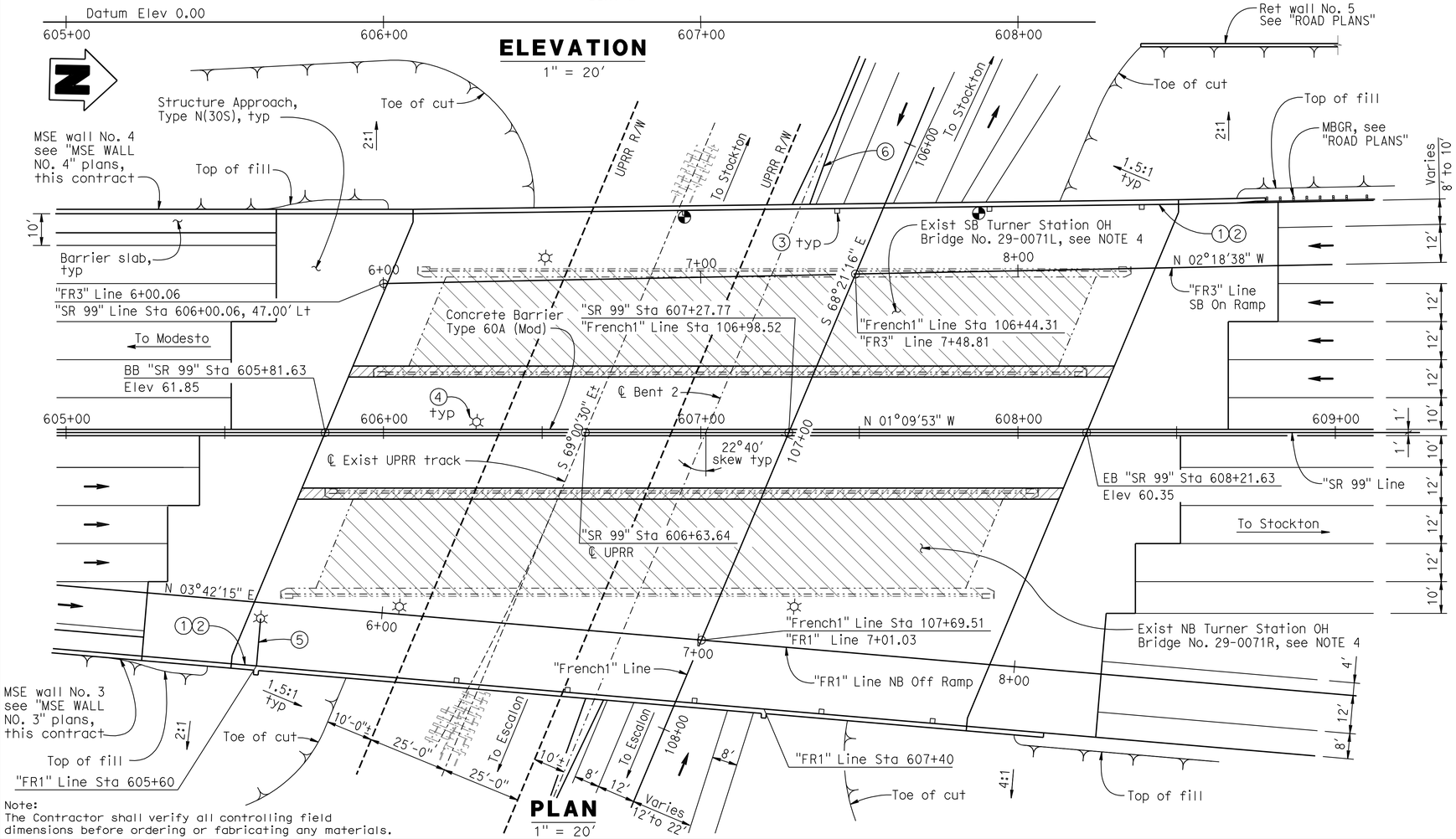

Note:
The Contractor shall verify all controlling field dimensions before ordering or fabricating any materials.

TURNER STATION OVERHEAD (REPLACE) BR NO 29-0332

QUANTITIES

BRIDGE REMOVAL	LUMP	SUM
STRUCTURE EXCAVATION (BRIDGE)	1,153	CY
STRUCTURE BACKFILL (BRIDGE)	652	CY
FURNISH PILING (CLASS 140) (ALTERNATIVE X)	5,777	LF
DRIVE PILE (CLASS 140) (ALTERNATIVE X)	96	EA
FURNISH PILING (CLASS 200) (ALTERATIVE X)	3020	LF
DRIVE PILE (CLASS 200) (ALTERNATIVE X)	66	EA
PRESTRESSING CAST-IN-PLACE CONCRETE	LUMP	SUM
STRUCTURAL CONCRETE, BRIDGE FOOTING	354	CY
STRUCTURAL CONCRETE, BRIDGE	2,975	CY
STRUCTURAL CONCRETE, APPROACH SLAB (TYPE N)	422	CY
JOINT SEAL (MR 2")	339	LF
BAR REINFORCING STEEL (BRIDGE)	943,971	LB
WELDED STEEL PIPE CASING (BRIDGE)	184	LF
SLOPE PAVING (CONCRETE)	149	CY
BRIDGE DECK DRAINAGE SYSTEM	6,933	LB
CHAIN LINK RAILING (TYPE 7 MODIFIED)	509	LF
CONCRETE BARRIER (TYPE 60A) (MODIFIED)	240	LF
CONCRETE BARRIER (TYPE 732)	584	LF

LEGEND:

① Paint "Bridge No. 29-0332 & year of construction".
② Paint "Turner Station Overhead".
③ Deck Drain Type D-2
④ Flush Soffit Luminaire
⑤ Lighting Standard Type 21.
⑥ Concrete Barrier Type 60E, see "ROAD PLANS".
—— Indicates new structure.
-·-·- Indicates existing structure.
Indicates point of minimum vertical clearance.
Indicates closure pour.
Remove existing structure in stages.
Indicates direction of traffic.

NOTES:
1. For "GENERAL NOTES", see "DECK CONTOURS" sheet.
2. For deck drains layout, see "GIRDER LAYOUT" sheet.
3. For UPRR General Notes, Index to Plans & "STANDARD PLANS MAY 2006", see "GENERAL PLAN NO. 2" sheet.
4. For limits of removal, see "DEMOLITION DETAILS" sheet.

Reza Erfanian
DESIGN OVERSIGHT Reza Erfanian
7/12/11
SIGN OFF DATE

	BY	CHECKED
DESIGN	S PERVAIZ	J MANISCALCO
DETAILS	J VOUGHT	J MANISCALCO
QUANTITIES	K SANFORD	E GAHAN

LOAD & RESISTANCE FACTOR DESIGN — LIVE LOADING: HL93 W/"LOW-BOY"; PERMIT DESIGN VEHICLE

	BY	CHECKED
LAYOUT	S PERVAIZ	J MANISCALCO
SPECIFICATIONS	S PERVAIZ	PLANS AND SPECS COMPARED J MANISCALCO

PREPARED FOR THE STATE OF CALIFORNIA DEPARTMENT OF TRANSPORTATION

JOHN A. KLEMUNES, JR.
PROJECT ENGINEER

BRIDGE NO. 29-0332
POST MILES 11.47

TURNER STATION OVERHEAD (REPLACE)
GENERAL PLAN NO. 1

DESIGN GENERAL PLAN SHEET (ENGLISH) (REV.7/16/10)

ORIGINAL SCALE IN INCHES FOR REDUCED PLANS 0 1 2 3

UNIT: 1455
PROJECT NUMBER & PHASE: 10000204411 CONTRACT NO.: 10-0E6121

DISREGARD PRINTS BEARING EARLIER REVISION DATES

REVISION DATES: 2-24-11 5-19-11 6-24-11 7-12-11

SHEET 1 OF 29

FILE => 29-0332-a-gp01.dgn

USERNAME => s114937 DATE PLOTTED => 22-DEC-2011 TIME PLOTTED => 15:15

DIST	COUNTY	ROUTE	POST MILES TOTAL PROJECT	SHEET No	TOTAL SHEETS
10	SJ	99	10.6/14.9	420	504

REGISTERED CIVIL ENGINEER 6-24-11 DATE

10-17-11
PLANS APPROVAL DATE

REGISTERED PROFESSIONAL ENGINEER SHARIO PERVAIZ No. C67068 Exp. 9-30-12 CIVIL STATE OF CALIFORNIA

The State of California or its officers or agents shall not be responsible for the accuracy or completeness of electronic copies of this plan sheet.

SAN JOAQUIN COUNCIL OF GOVERNMENTS
555 E. WEBER AVE.
STOCKTON, CA 95202

HDR ENGINEERING, INC.
2365 IRON POINT ROAD, SUITE 300
FOLSOM, CA 95630

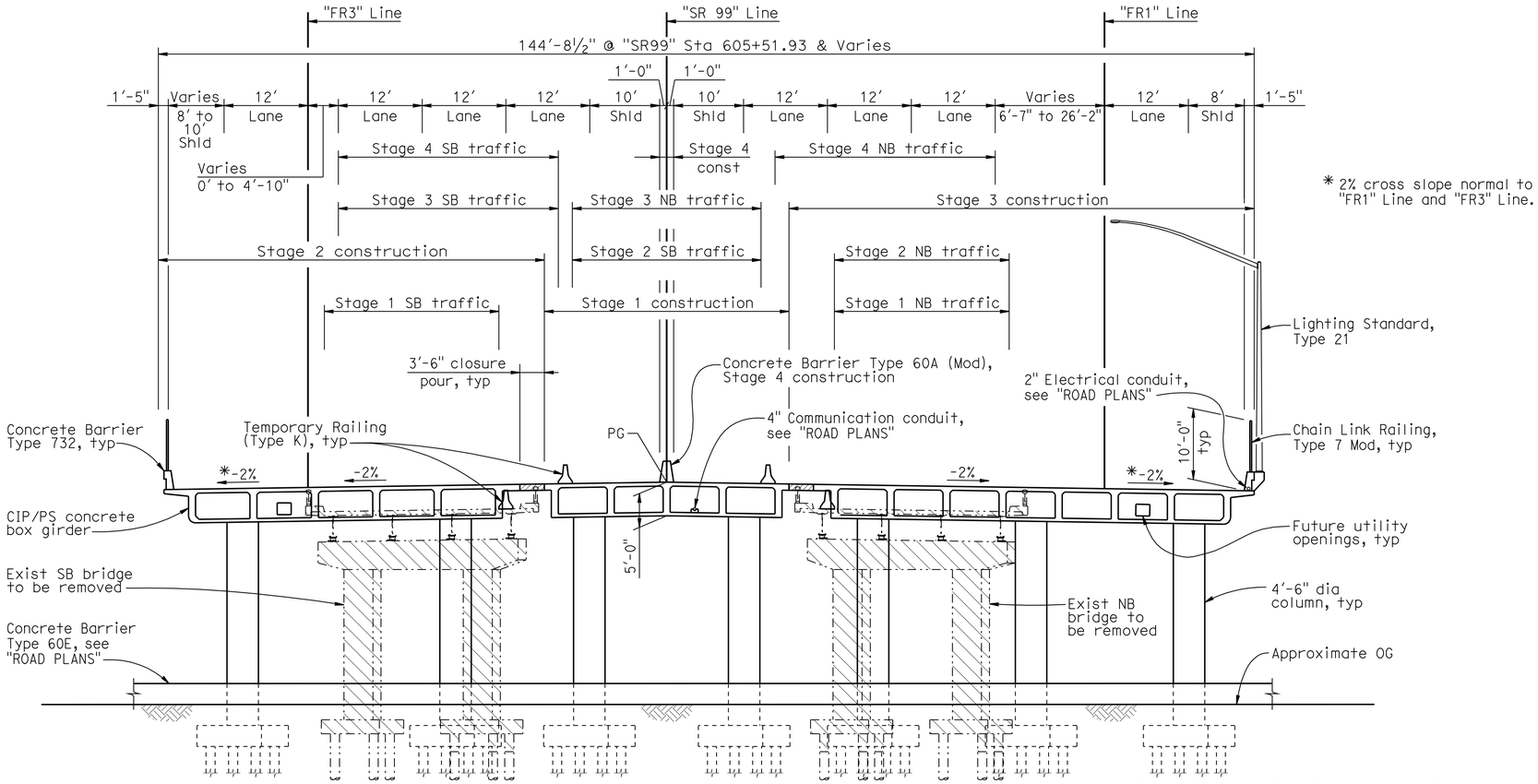

* 2% cross slope normal to "FR1" Line and "FR3" Line.

TYPICAL SECTION

1" = 10'

INDEX TO PLANS:

1. GENERAL PLAN NO. 1
2. GENERAL PLAN NO. 2
3. DECK CONTOURS
4. FOUNDATION PLAN
5. DEMOLITION DETAILS
6. ABUTMENT 1 LAYOUT
7. ABUTMENT 3 LAYOUT
8. ABUTMENT DETAILS NO. 1
9. ABUTMENT DETAILS NO. 2
10. ABUTMENT DETAILS NO. 3
11. BENT LAYOUT NO. 1
12. BENT LAYOUT NO. 2
13. BENT DETAILS NO. 1
14. BENT DETAILS NO. 2
15. TYPICAL SECTION
16. GIRDER LAYOUT NO. 1
17. GIRDER LAYOUT NO. 2
18. LONGITUDINAL SECTION
19. GIRDER REINFORCEMENT
20. STRUCTURE APPROACH TYPE N(30S)
21. STRUCTURE APPROACH DRAINAGE DETAILS
22. SLOPE PAVING - FULL SLOPE
23. CHAIN LINK RAILING TYPE 7 MODIFIED
24. LOG OF TEST BORINGS NO. 1
25. LOG OF TEST BORINGS NO. 2
26. LOG OF TEST BORINGS NO. 3
27. LOG OF TEST BORINGS NO. 4
28. LOG OF TEST BORINGS NO. 5
29. AS-BUILT LOG OF TEST BORINGS

Note:
The Contractor shall verify all controlling field dimensions before ordering or fabricating any materials.

PILE DATA TABLE

Support		Pile Type	Nominal Resistance Compression (kips)	Nominal Resistance Tension (kips)	Design Tip Elevations (ft)	Specified Tip Elevation (ft)	Nominal Driving Resistance (kips)
Abut 1		Class 140 Alt 'X'	280	0	-13.0 (a) 24.0 (b)	-13.0	280
Bent 2	Type 1 Footing	Class 200 Alt 'X'	370	0	-21.0 (a) 2.0 (b)	-21.0	370
	Type 2 Footing	Class 200 Alt 'X'	380	0	-21.0 (a) 2.0 (b)	-21.0	380
Abut 3		Class 140 Alt 'X'	280	0	-13.0 (a) 22.0 (b)	-13.0	280

Design tip elevations are controlled by: (a) Compression, (b) Lateral Load, respectively.

CALTRANS STANDARD PLANS DATED MAY 2006

	A10A	ACRONYMS AND ABBREVIATIONS (SHEET 1 OF 2)
	A10B	ACRONYMS AND ABBREVIATIONS (SHEET 2 OF 2)
	A10C	SYMBOLS (SHEET 1 of 2)
	A10D	SYMBOLS (SHEET 2 of 2)
	A62C	LIMITS OF PAYMENT FOR EXCAVATION AND BACKFILL BRIDGE
RSP	A76A	CONCRETE BARRIER TYPE 60
	B0-1	BRIDGE DETAILS
	B0-3	BRIDGE DETAILS
	B0-5	BRIDGE DETAILS
	B0-13	BRIDGE DETAILS
	B2-5	PILE DETAILS CLASS 90 AND CLASS 140
RSP	B2-8	PILE DETAILS CLASS 200
RSP	B6-21	JOINT SEALS (MAXIMUM MOVEMENT RATING = 2")
	B7-1	BOX GIRDER DETAILS
	B7-5	DECK DRAIN TYPES D-1 AND D-2
	B7-8	DECK DRAINAGE DETAILS
	B7-10	UTILITY OPENING BOX GIRDER
	B8-5	CAST-IN-PLACE PRESTRESSED GIRDER DETAILS
	B11-55	CONCRETE BARRIER TYPE 732
	B14-3	COMMUNICATIONS AND SPRINKLER CONTROL CONDUITS (CONDUIT LESS THAN 4")
	B14-5	WATER SUPPLY LINE (DETAILS) (PIPE SIZES LESS THAN 4")
	ES-6B	ELECTRICAL SYSTEMS(LIGHTING STANDARDS TYPE 15 AND 21 BARRIER RAIL MOUNTED DETAILS)
RSP	ES-6E	ELECTRICAL SYSTEM (LIGHTING STANDARD TYPE 30 AND 31)

STANDARD PLAN SHEET NO.
DETAIL NO.

UPRR GENERAL NOTES:

1. The proposed grade separation project shall not increase the quantity and/or characteristics of the flow in the Railroad's ditches and/or drainage structures.
2. The elevation of the existing top-of-rail profile shall be verified before begining construction. All discrepancies shall be brought to the attention of the Railroad prior to construction.
3. All shoring systems that impact the Railroad's operations and/or supports the Railroad's embankment shall be designed and constructed per current Railroad Guidelines for Temporary Shoring.
4. All demolitions within the Railroad's right-of-way and/or demolition that may impact the Railroad's tracks or operations shall be in compliance with the Railroad's Demolition Guidelines.
5. Erection over the Railroad's right-of-way shall be designed to cause no interruption to the Railroad's operation, enabling the track(s) to remain open to traffic per the Railroad's requirements.
6. Railroad requirements do not allow work within 50 feet of track centerline when a train passes the work site and all personnel must clear the area within 25 feet of the track centerline and secure all equipment.
7. All permanent clearances shall be verified before project closing.

LEGEND:

Indicates new structure.
Indicates existing structure.
Indicates closure pour.
Remove existing structure.

NOTES:

1. For "GENERAL NOTES", see "DECK CONTOURS" sheet.
2. For traffic staging, see "ROAD PLANS".

Reza Erfanian
DESIGN OVERSIGHT Reza Erfanian
7/12/11
SIGN OFF DATE

	BY	CHECKED				
DESIGN	S PERVAIZ	J MANISCALCO	LOAD & RESISTANCE FACTOR DESIGN	LIVE LOADING: HL93 W/"LOW-BOY"; PERMIT DESIGN VEHICLE		
DETAILS	J VOUGHT	J MANISCALCO	LAYOUT	S PERVAIZ	CHECKED	J MANISCALCO
QUANTITIES	K SANFORD	E GAHAN	SPECIFICATIONS	S PERVAIZ	PLANS AND SPECS COMPARED	J MANISCALCO

PREPARED FOR THE STATE OF CALIFORNIA DEPARTMENT OF TRANSPORTATION

JOHN A. KLEMUNES, JR.
PROJECT ENGINEER

BRIDGE NO. 29-0332
POST MILES 11.47

TURNER STATION OVERHEAD (REPLACE)
GENERAL PLAN NO. 2

DESIGN GENERAL PLAN SHEET (ENGLISH) (REV.7/16/10)

ORIGINAL SCALE IN INCHES FOR REDUCED PLANS 0 1 2 3

UNIT: 1455
PROJECT NUMBER & PHASE: 10000204411 CONTRACT NO.: 10-0E6121

DISREGARD PRINTS BEARING EARLIER REVISION DATES

REVISION DATES 2-24-11 5-19-11 6-24-11 7-12-11

SHEET 2 OF 29

USERNAME => s12614 DATE PLOTTED => 01-DEC-2011 TIME PLOTTED => 10:51

FILE => 29-0332-a-gp02.dgn

DIST	COUNTY	ROUTE	POST MILES TOTAL PROJECT	SHEET No	TOTAL SHEETS
10	SJ	99	10.6/14.9	421	504

REGISTERED CIVIL ENGINEER 6-24-11 DATE

10-17-11
PLANS APPROVAL DATE

REGISTERED PROFESSIONAL ENGINEER SHARIO PERVAIZ No. C67068 Exp. 9-30-12 CIVIL STATE OF CALIFORNIA

The State of California or its officers or agents shall not be responsible for the accuracy or completeness of electronic copies of this plan sheet.

SAN JOAQUIN COUNCIL OF GOVERNMENTS
555 E. WEBER AVE.
STOCKTON, CA 95202

HDR ENGINEERING, INC.
2365 IRON POINT ROAD, SUITE 300
FOLSOM, CA 95630

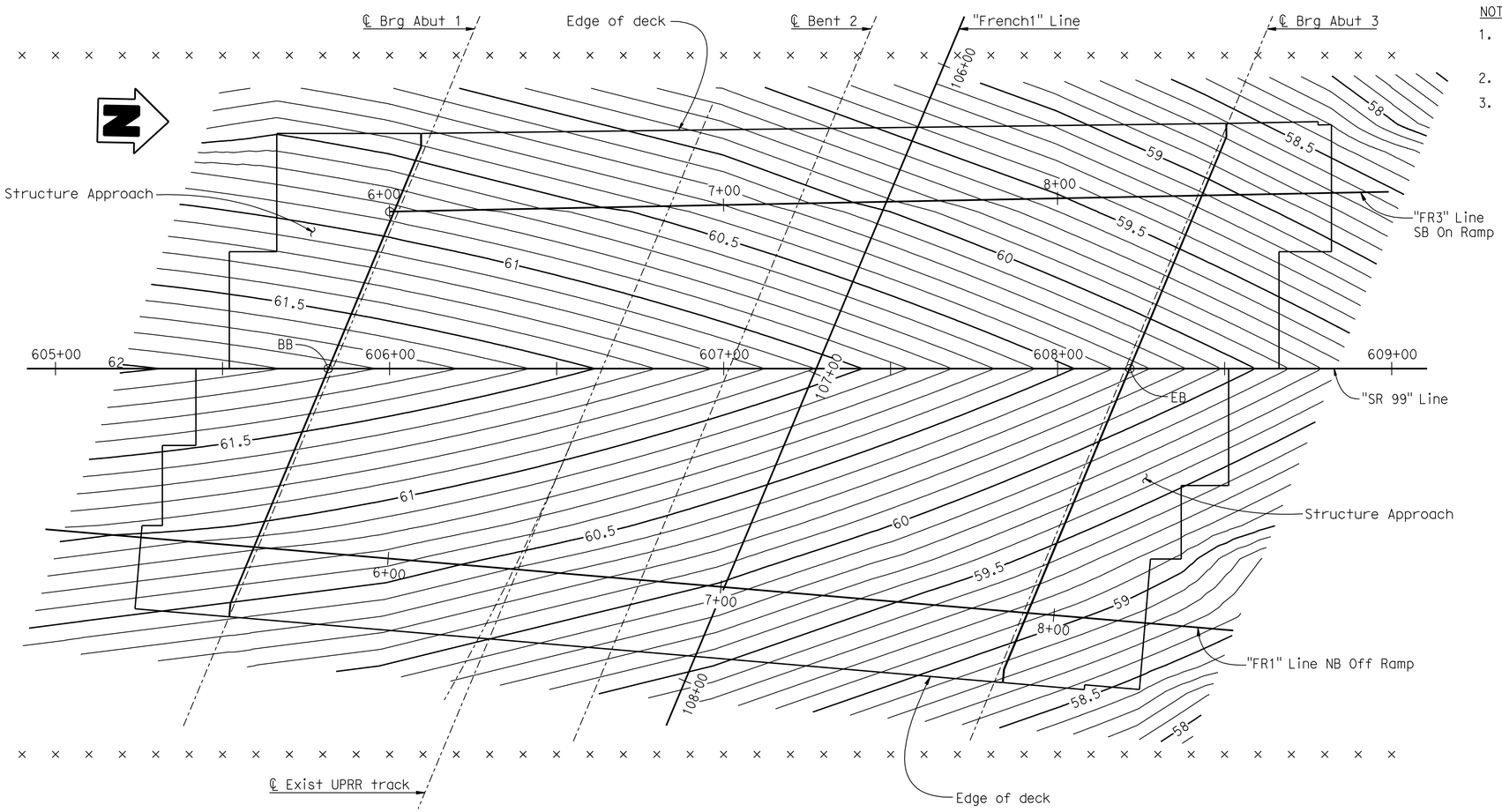

PLAN

1" = 20'

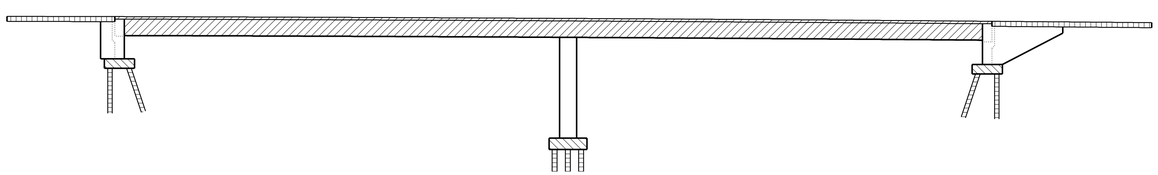

- Structural Concrete, Bridge (f'c = 3.6 ksi @ 28 days)
- Structural Concrete, Bridge (see "PRESTRESSING NOTES" on "LONGITUDINAL SECTION" sheet)
- Structural Concrete, Bridge Footing (f'c = 3.6 ksi @ 28 days)
- Structural Concrete, Structure Approach (f'c = 3.6 ksi @ 28 days)
- PC/PS Concrete Pile, Alt X see B2-5 B2-8

CONCRETE STRENGTH AND TYPE LIMITS

No Scale

Note:
The Contractor shall verify all controlling field dimensions before ordering or fabricating any materials.

NOTES:

1. × - Indicates 10' intervals along "SR 99" Line.
2. Contour interval = 0.1'.
3. Contours do not include camber or allowance for falsework settlement.

GENERAL NOTES

LOAD & RESISTANCE FACTOR DESIGN

DESIGN:
AASHTO LRFD Bridge Design Specifications, 4th Edition and the Caltrans Amendments, preface dated Dec 2008; except that bridge (incl. barrier and railing) details taken from Standard Plans March 2006 and earlier versions, Standard Bridge Details XS sheets, etc) are designed using Bridge Design Specifications (96 AASHTO w/Revisions by Caltrans).

SEISMIC DESIGN:
Caltrans Seismic Design Criteria (SDC), Version 1.4 July 2006.

DEAD LOAD
Includes 35 psf for future wearing surface.

LIVE LOADING:
HL93 W/"Low Boy" and permit design vehicle.

SEISMIC LOADING:
CALTRANS SDC ARS Curve: Figure B.7
(Soil Profile Type D) Magnitude = 6.5± 0.25
(Spectrum Peak Rock Acceleration = 0.2 g)

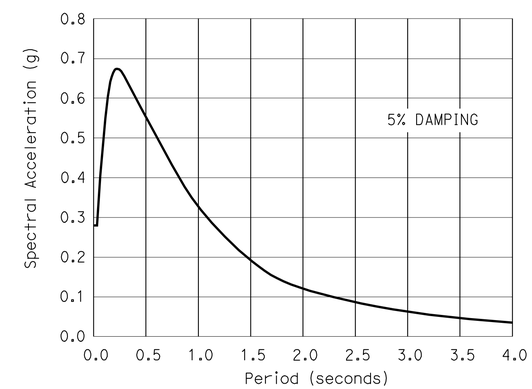

DESIGN A.R.S. CURVE

REINFORCED CONCRETE:
f_y = 60 ksi
f'_c= 3.6 ksi, unless otherwise noted.
n = 8

PRESTRESSED CONCRETE:
See "PRESTRESSING NOTES" on "LONGITUDINAL SECTION" sheet.

PILES:
See "PILE DATA TABLE" on "GENERAL PLAN NO. 2" sheet.

DESIGN OVERSIGHT Reza Erfanian	DESIGN	BY S PERVAIZ	CHECKED J MANISCALCO
6/24/11 SIGN OFF DATE	DETAILS	BY J VOUGHT	CHECKED J MANISCALCO
	QUANTITIES	BY K SANFORD	CHECKED E GAHAN

PREPARED FOR THE STATE OF CALIFORNIA DEPARTMENT OF TRANSPORTATION

JOHN A. KLEMUNES, JR.
PROJECT ENGINEER

BRIDGE NO. 29-0332
POST MILE 11.47

TURNER STATION OVERHEAD (REPLACE)

DECK CONTOURS

DESIGN DETAIL SHEET (ENGLISH) (REV.7/16/10)

ORIGINAL SCALE IN INCHES FOR REDUCED PLANS 0 1 2 3

UNIT: 1455
PROJECT NUMBER & PHASE: 10000204411 CONTRACT NO.: 10-0E6121

DISREGARD PRINTS BEARING EARLIER REVISION DATES

REVISION DATES: 5-3-10 2-4-11 5-18-11 6-24-11

SHEET 3 OF 29

FILE => 29-0332-d-dc01.dgn

USERNAME => s6121614 DATE PLOTTED => 01-DEC-2011 TIME PLOTTED => 10:52

DIST	COUNTY	ROUTE	POST MILES TOTAL PROJECT	SHEET No	TOTAL SHEETS
10	SJ	99	10.6/14.9	422	504

REGISTERED CIVIL ENGINEER — DATE 6-24-11

10-17-11
PLANS APPROVAL DATE

REGISTERED PROFESSIONAL ENGINEER — SHARIQ PERVAIZ — No. C67068 — Exp. 9-30-12 — CIVIL — STATE OF CALIFORNIA

The State of California or its officers or agents shall not be responsible for the accuracy or completeness of electronic copies of this plan sheet.

SAN JOAQUIN COUNCIL OF GOVERNMENTS
555 E. WEBER AVE.
STOCKTON, CA 95202

HDR ENGINEERING, INC.
2365 IRON POINT ROAD, SUITE 300
FOLSOM, CA 95630

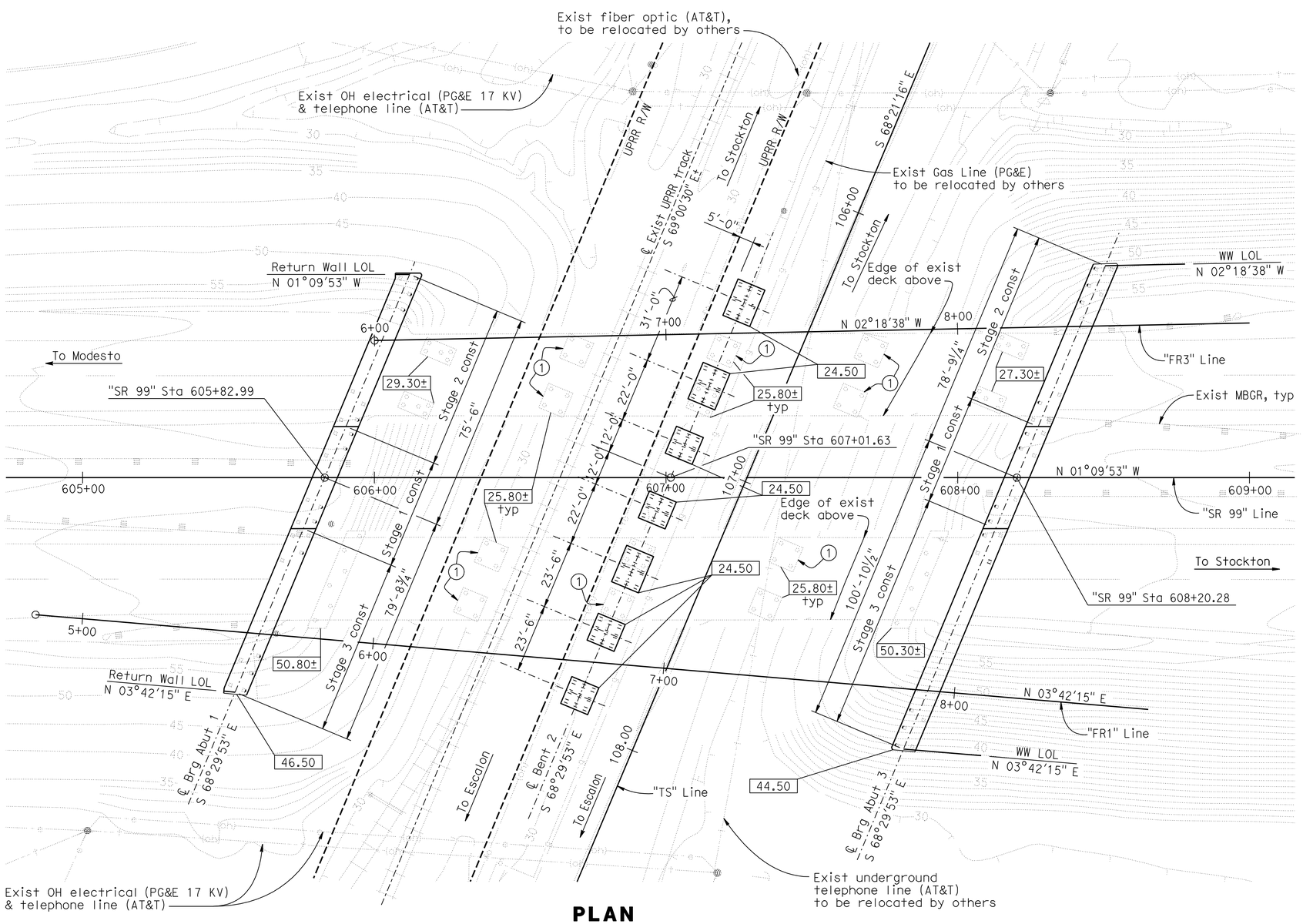

PLAN
1" = 20'

BENCH MARKS

BENCHMARK# 645 — ELEV. 58.24 Ft
DESCRIPTION: KSN CONTROL POINT, 1/2 " REBAR WITH YELLOW CAP STAMPED "KSN CONTROL", LOCATED AT APPROXIMATE CENTERLINE STATION 605+95 ON THE SOUTHBOUND MAINLINE, ON THE INSIDE SHOULDER, 3.5′ EAST OF THE EDGE OF PAVEMENT, 11′ WEST OF THE FACE OF THE GUARDRAIL, AND 4′ SOUTH OF THE SOUTHEAST CORNER OF THE FRENCH CAMP OVER CROSSING BRIDGE.
NGVD 29, N2136239.71, E6354178.61.

BENCHMARK# 641 — ELEV. 56.89 Ft
DESCRIPTION: KSN CONTROL POINT, 1/2 " REBAR WITH YELLOW CAP STAMPED "KSN CONTROL", LOCATED APPROXIMATE CENTERLINE STATION 608+14 ON THE NORTHBOUND MAINLINE, ON THE INSIDE SHOULDER, 2′ WEST OF THE EDGE OF PAVEMENT, 10.5′ EAST OF THE FACE OF THE GUARDRAIL, 6′ NORTH OF THE FRENCH CAMP OVER CROSSING BRIDGE.
NGVD 29, N2136459.41, E6354207.75.

NOTES:
1. See "Road Plans" for type and locations of all existing and proposed utilities.
2. Location of existing utilities shown are approximate. The Contractor shall verify locations of all affected utilities prior to performing any excavation.
3. Not all piles shown here.

LEGEND:
- XX.XX — Indicates bottom of footing elevation.
- Indicates vertical piles.
- Indicates battered piles.
- Indicates existing electrical poles.
- Indicates existing piles.
- Indicates new structure.
- Indicates existing structure.
- (1) Exist SB/NB Bridge Footing, See "DEMOLITION DETAILS" sheet

GEOTECHNICAL PROFESSIONAL — APPROVAL DATE 6-20-11

Note:
The Contractor shall verify all controlling field dimensions before ordering or fabricating any materials.

DESIGN OVERSIGHT Reza Erfanian — 6/24/11 — SIGN OFF DATE

SCALE: 1"=40′	VERT.DATUM NGVD29	HORZ.DATUM NAD1983	
PHOTOGRAMMETRY AS OF: 08/09/2007	ALIGNMENT TIES		
SURVEYED	BY AERIAL PHOTOMAPPING SERVICES	DRAFTED	BY KSN
FIELD CHECKED	BY KRIS F. NEHMER	CHECKED	BY KRIS F. NEHMER

	BY	CHECKED
DESIGN	S PERVAIZ	J MANISCALCO
DETAILS	J VOUGHT	J MANISCALCO
QUANTITIES	K SANFORD	E GAHAN

PREPARED FOR THE STATE OF CALIFORNIA DEPARTMENT OF TRANSPORTATION

JOHN A. KLEMUNES, JR.
PROJECT ENGINEER

BRIDGE NO. 29-0332
POST MILE 11.47

TURNER STATION OVERHEAD (REPLACE)
FOUNDATION PLAN

FOUNDATION PLAN SHEET (ENGLISH) (REV.7/16/10)

ORIGINAL SCALE IN INCHES FOR REDUCED PLANS 0 1 2 3

UNIT: 1455
PROJECT NUMBER & PHASE: 10000204411
CONTRACT NO.: 10-0E6121

DISREGARD PRINTS BEARING EARLIER REVISION DATES

REVISION DATES: 5-3-10 2-4-11 5-19-11 6-24-11

SHEET 4 OF 29

FILE => 29-0332-e-fp01.dgn

USERNAME => s6121614 DATE PLOTTED => 01-DEC-2011 TIME PLOTTED => 10:52

DIST	COUNTY	ROUTE	POST MILES TOTAL PROJECT	SHEET No	TOTAL SHEETS
10	SJ	99	10.6/14.9	423	504

REGISTERED CIVIL ENGINEER 6-24-11 DATE

10-17-11
PLANS APPROVAL DATE

REGISTERED PROFESSIONAL ENGINEER SHARIQ PERVAIZ No. C67068 Exp. 9-30-12 CIVIL STATE OF CALIFORNIA

The State of California or its officers or agents shall not be responsible for the accuracy or completeness of electronic copies of this plan sheet.

SAN JOAQUIN COUNCIL OF GOVERNMENTS
555 E. WEBER AVE.
STOCKTON, CA 95202

HDR ENGINEERING, INC.
2365 IRON POINT ROAD, SUITE 300
FOLSOM, CA 95630

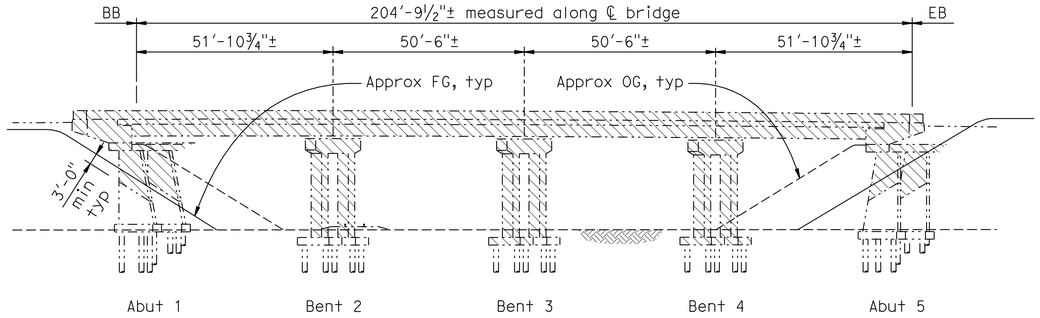

ELEVATION - EXISTING SB BRIDGE

No Scale

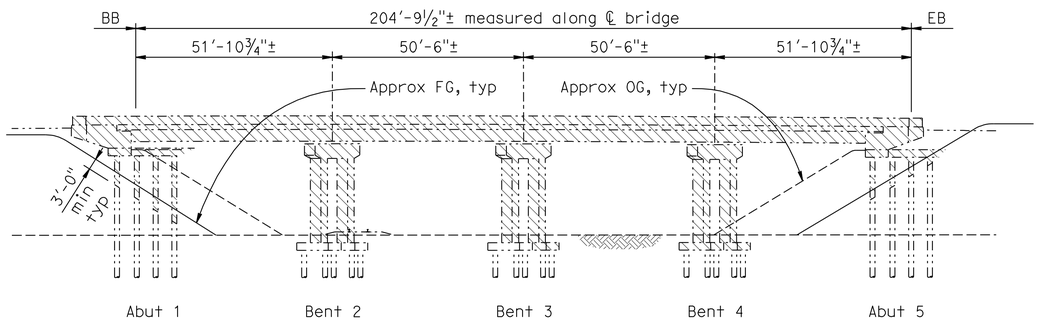

ELEVATION - EXISTING NB BRIDGE

No Scale

NOTES:

1. The demolition details shown on this sheet are for the existing Turner Station NB & SB bridges.
2. For dimensions, details and information not shown, see "AS-BUILT PLANS".
3. Existing NB & SB bridges to be completely removed during stage construction except the portion that does not interfere with new construction will be removed 3'-0" min below FG UON. Existing piles at Bent 3 that interfere with the bent footings of new bridge shall be removed to bottom of new footings. Existing wingwall at each corner shall be completely removed.

LEGEND:

Indicates existing bridge removal.
Indicates existing structure.
Indicates existing piles.

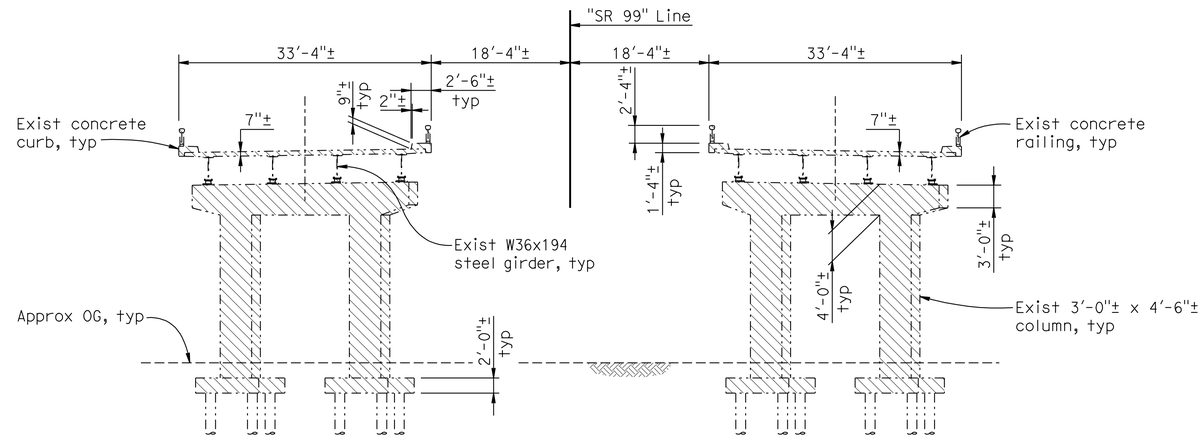

TYPICAL SECTION

No Scale

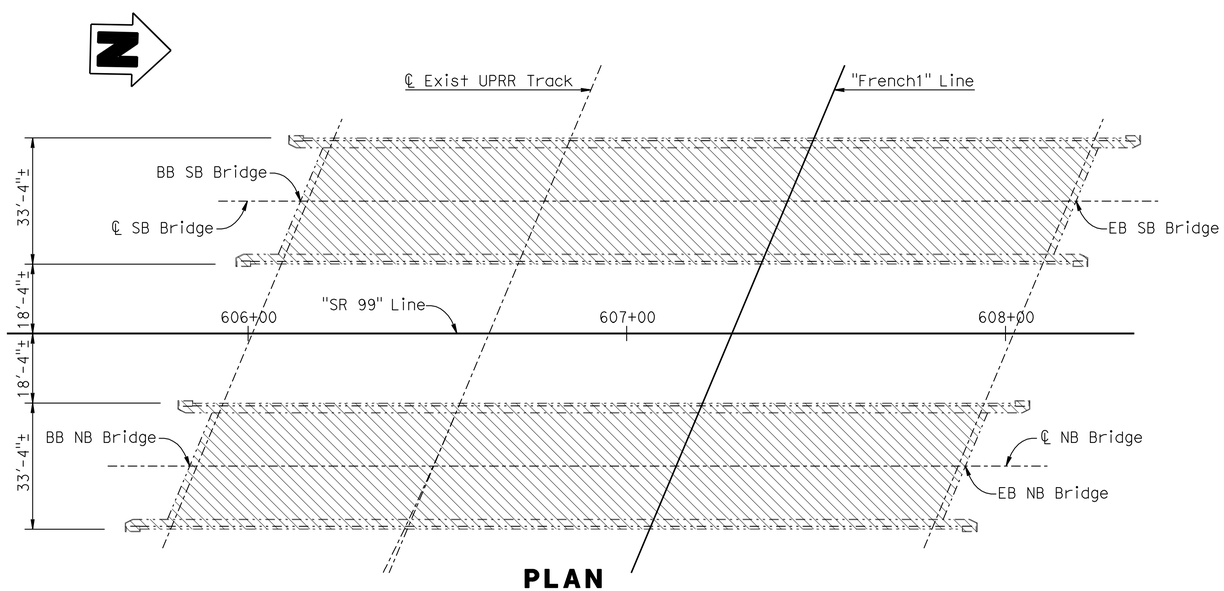

PLAN

No Scale

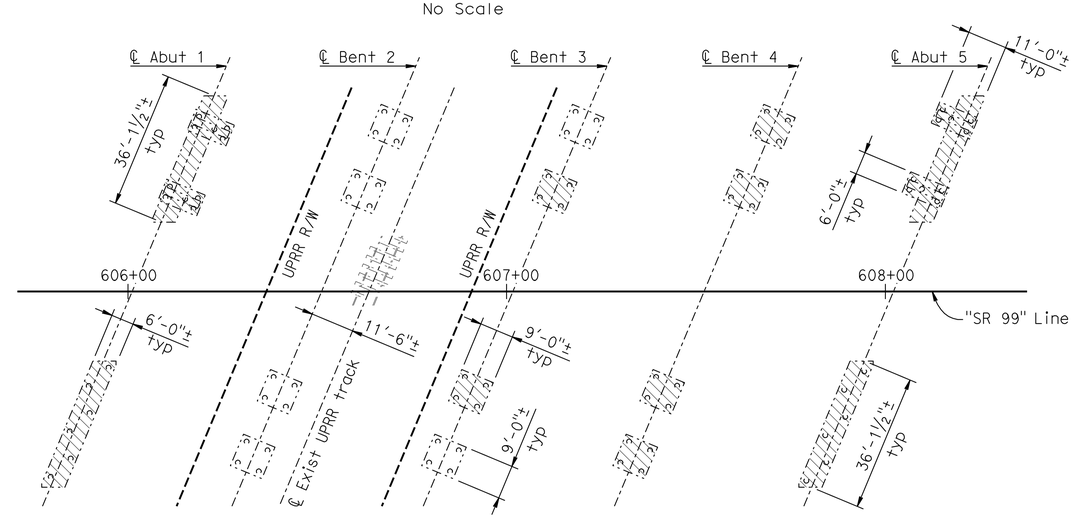

FOUNDATION LAYOUT

No Scale

Note:
The Contractor shall verify all controlling field dimensions before ordering or fabricating any materials.

Reza Erfanian
DESIGN OVERSIGHT Reza Erfanian
6/24/11
SIGN OFF DATE

	BY	CHECKED
DESIGN	S PERVAIZ	J MANISCALCO
DETAILS	J VOUGHT	J MANISCALCO
QUANTITIES	K SANFORD	E GAHAN

PREPARED FOR THE STATE OF CALIFORNIA DEPARTMENT OF TRANSPORTATION

JOHN A. KLEMUNES, JR.
PROJECT ENGINEER

BRIDGE NO. 29-0332
POST MILE 11.47

TURNER STATION OVERHEAD (REPLACE)
DEMOLITION DETAILS

DESIGN DETAIL SHEET (ENGLISH) (REV.7/16/10)

ORIGINAL SCALE IN INCHES FOR REDUCED PLANS 0 1 2 3

UNIT: 1455
PROJECT NUMBER & PHASE: 10000204411 CONTRACT NO.: 10-0E6121

DISREGARD PRINTS BEARING EARLIER REVISION DATES

REVISION DATES: 5-3-10 2-4-11 5-18-11 6-24-11

SHEET 5 OF 29

FILE => 29-0332-e-gdd01.dgn

USERNAME => s12161d4 DATE PLOTTED => 01-DEC-2011 TIME PLOTTED => 10:52

DIST	COUNTY	ROUTE	POST MILES TOTAL PROJECT	SHEET No	TOTAL SHEETS
10	SJ	99	10.6/14.9	424	504

REGISTERED CIVIL ENGINEER 6-24-11 DATE

10-17-11
PLANS APPROVAL DATE

REGISTERED PROFESSIONAL ENGINEER SHARIQ PERVAIZ No. C67068 Exp. 9-30-12 CIVIL STATE OF CALIFORNIA

The State of California or its officers or agents shall not be responsible for the accuracy or completeness of electronic copies of this plan sheet.

SAN JOAQUIN COUNCIL OF GOVERNMENTS
555 E. WEBER AVE.
STOCKTON, CA 95202

HDR ENGINEERING, INC.
2365 IRON POINT ROAD, SUITE 300
FOLSOM, CA 95630

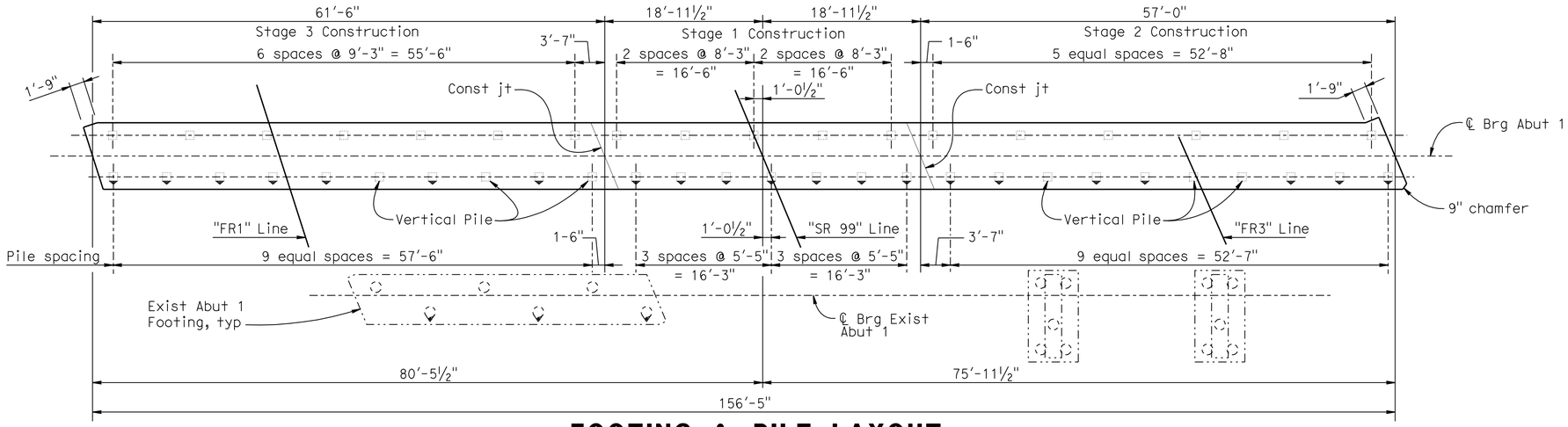

FOOTING & PILE LAYOUT

⅛" = 1'-0"

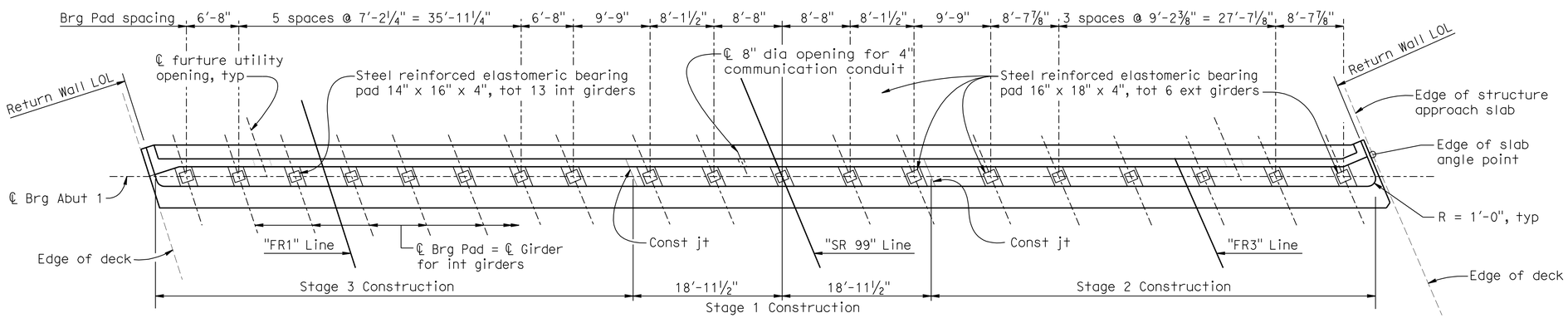

PLAN

⅛" = 1'-0"

NOTES:

1. For "TYPICAL SECTION", see "ABUTMENT DETAILS NO. 1" sheet
2. "SECTIONS A-A & B-B", see "ABUTMENT DETAILS NO. 2" sheet,
3. For structure approach details, see "STRUCTURE APPROACH TYPE N(30S)" sheet.
4. For slope paving details, see "SLOPE PAVING - FULL SLOPE" sheet.
5. Existing abutment piles shall be located prior to installation of abutment piles. Contractor may adjust pile locations maximum of 1'± in direction parallel to ℄ Brg Abut to avoid conflict with existing vertical piles.

LEGEND:

- Indicates vertical piles.
- Indicates battered piles.
- Indicates exist vertical piles.
- Indicates exist battered piles.
- Indicates new structure.
- Indicates existing structure.

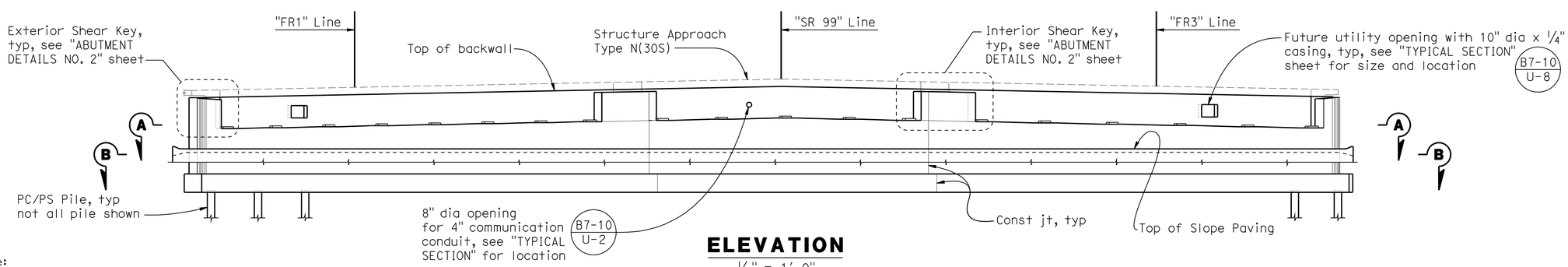

ELEVATION

⅛" = 1'-0"

Note:
The Contractor shall verify all controlling field dimensions before ordering or fabricating any materials.

Reza Erfanian
DESIGN OVERSIGHT Reza Erfanian
6/24/11
SIGN OFF DATE

	BY	CHECKED
DESIGN	S PERVAIZ	J MANISCALCO
DETAILS	J VOUGHT	J MANISCALCO
QUANTITIES	K SANFORD	E GAHAN

PREPARED FOR THE STATE OF CALIFORNIA DEPARTMENT OF TRANSPORTATION

JOHN A. KLEMUNES, JR.
PROJECT ENGINEER

BRIDGE NO. 29-0332
POST MILE 11.47

TURNER STATION OVERHEAD (REPLACE)

ABUTMENT 1 LAYOUT

DESIGN DETAIL SHEET (ENGLISH) (REV.7/16/10)

ORIGINAL SCALE IN INCHES FOR REDUCED PLANS 0 1 2 3

UNIT: 1455
PROJECT NUMBER & PHASE: 10000204411
CONTRACT NO.: 10-0E6121

DISREGARD PRINTS BEARING EARLIER REVISION DATES

REVISION DATES: 5-3-10 2-4-11 5-19-11 6-24-11

SHEET 6 OF 29

FILE => 29-0332-f-a01_lo1.dgn

USERNAME => s114937 DATE PLOTTED => 22-DEC-2011 TIME PLOTTED => 15:15

DIST	COUNTY	ROUTE	POST MILES TOTAL PROJECT	SHEET No	TOTAL SHEETS
10	SJ	99	10.6/14.9	425	504

REGISTERED CIVIL ENGINEER 6-24-11 DATE

10-17-11
PLANS APPROVAL DATE

REGISTERED PROFESSIONAL ENGINEER SHARIO PERVAIZ No. C67068 Exp. 9-30-12 CIVIL STATE OF CALIFORNIA

The State of California or its officers or agents shall not be responsible for the accuracy or completeness of electronic copies of this plan sheet.

SAN JOAQUIN COUNCIL OF GOVERNMENTS
555 E. WEBER AVE.
STOCKTON, CA 95202

HDR ENGINEERING, INC.
2365 IRON POINT ROAD, SUITE 300
FOLSOM, CA 95630

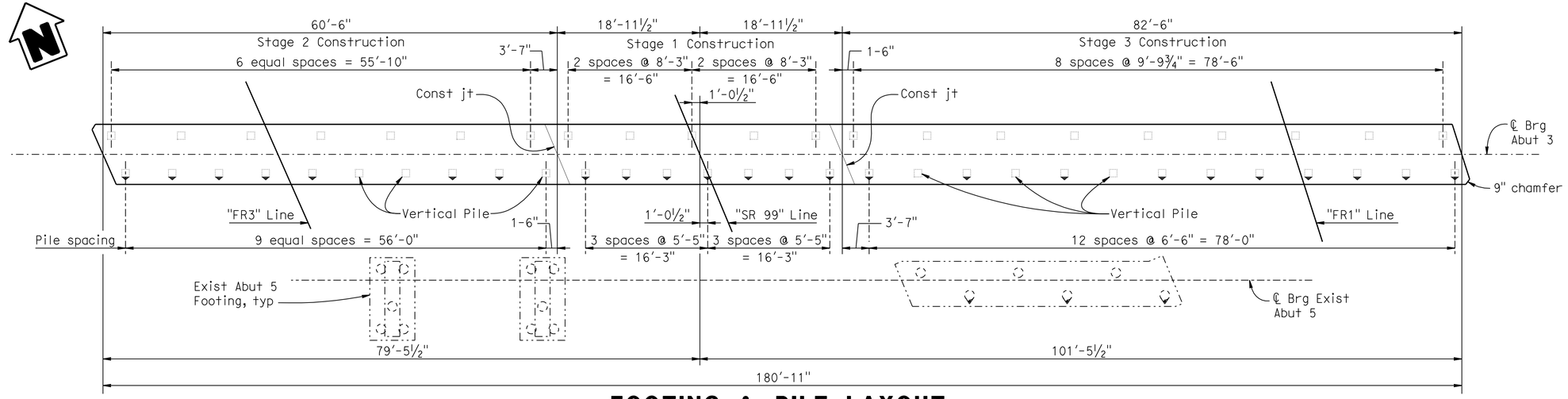

FOOTING & PILE LAYOUT

⅛" = 1'-0"

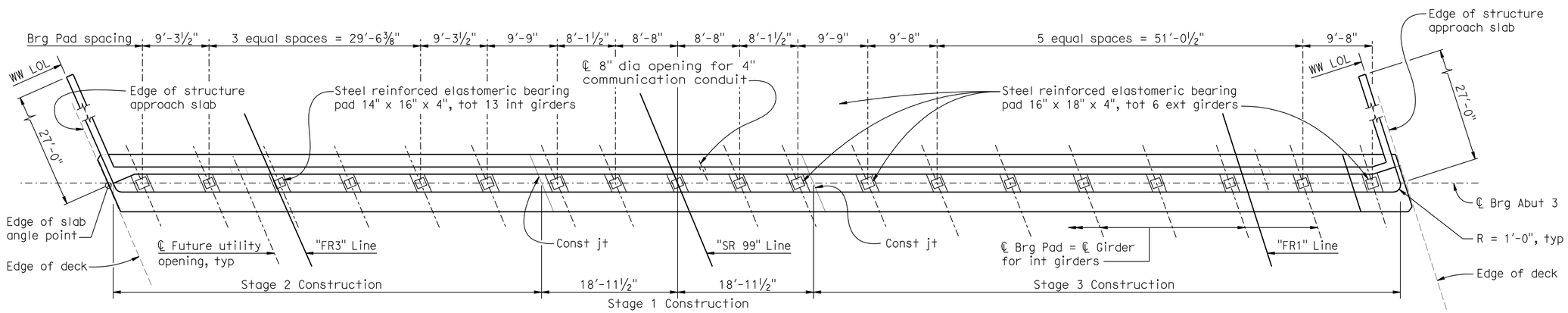

PLAN

⅛" = 1'-0"

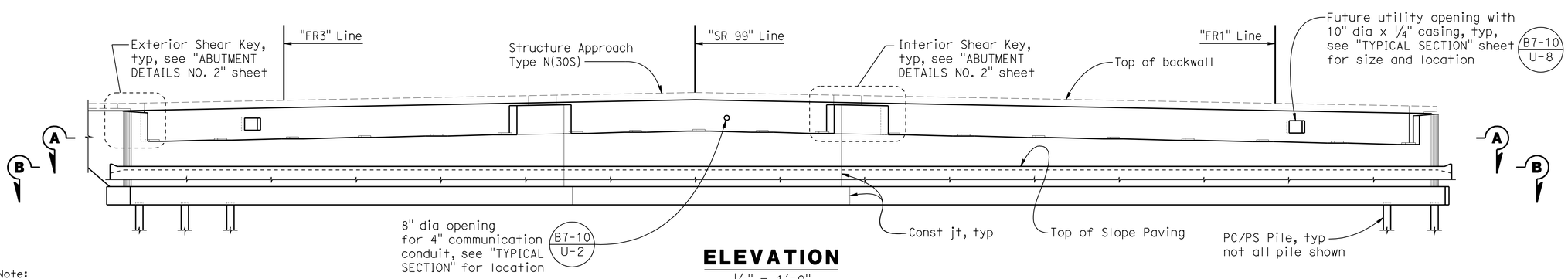

ELEVATION

⅛" = 1'-0"

NOTES:

1. For Notes and Legend, see "ABUTMENT 1 LAYOUT" sheet.
2. For "TYPICAL SECTION", see "ABUTMENT DETAILS NO. 1" sheet
3. "SECTIONS A-A & B-B", see "ABUTMENT DETAILS NO. 2" sheet,

Note:
The Contractor shall verify all controlling field dimensions before ordering or fabricating any materials.

DESIGN OVERSIGHT Reza Erfanian
6/24/11
SIGN OFF DATE

	BY	CHECKED
DESIGN	S PERVAIZ	J MANISCALCO
DETAILS	J VOUGHT	J MANISCALCO
QUANTITIES	K SANFORD	E GAHAN

PREPARED FOR THE STATE OF CALIFORNIA DEPARTMENT OF TRANSPORTATION

JOHN A. KLEMUNES, JR.
PROJECT ENGINEER

BRIDGE NO. 29-0332
POST MILE 11.47

TURNER STATION OVERHEAD (REPLACE)

ABUTMENT 3 LAYOUT

DESIGN DETAIL SHEET (ENGLISH) (REV.7/16/10)

ORIGINAL SCALE IN INCHES FOR REDUCED PLANS 0 1 2 3

UNIT: 1455
PROJECT NUMBER & PHASE: 10000204411 CONTRACT NO.: 10-0E6121

DISREGARD PRINTS BEARING EARLIER REVISION DATES

REVISION DATES: 5-3-10 2-4-11 5-18-11 6-24-11

SHEET 7 OF 29

FILE => 29-0332-f-a01_1o2.dgn

USERNAME => s114937 DATE PLOTTED => 22-DEC-2011 TIME PLOTTED => 15:16

DIST	COUNTY	ROUTE	POST MILES TOTAL PROJECT	SHEET No	TOTAL SHEETS
10	SJ	99	10.6/14.9	426	504

REGISTERED CIVIL ENGINEER 6-24-11 DATE

10-17-11
PLANS APPROVAL DATE

REGISTERED PROFESSIONAL ENGINEER SHARIQ PERVAIZ No. C67068 Exp. 9-30-12 CIVIL STATE OF CALIFORNIA

The State of California or its officers or agents shall not be responsible for the accuracy or completeness of electronic copies of this plan sheet.

SAN JOAQUIN COUNCIL OF GOVERNMENTS
555 E. WEBER AVE.
STOCKTON, CA 95202

HDR ENGINEERING, INC.
2365 IRON POINT ROAD, SUITE 300
FOLSOM, CA 95630

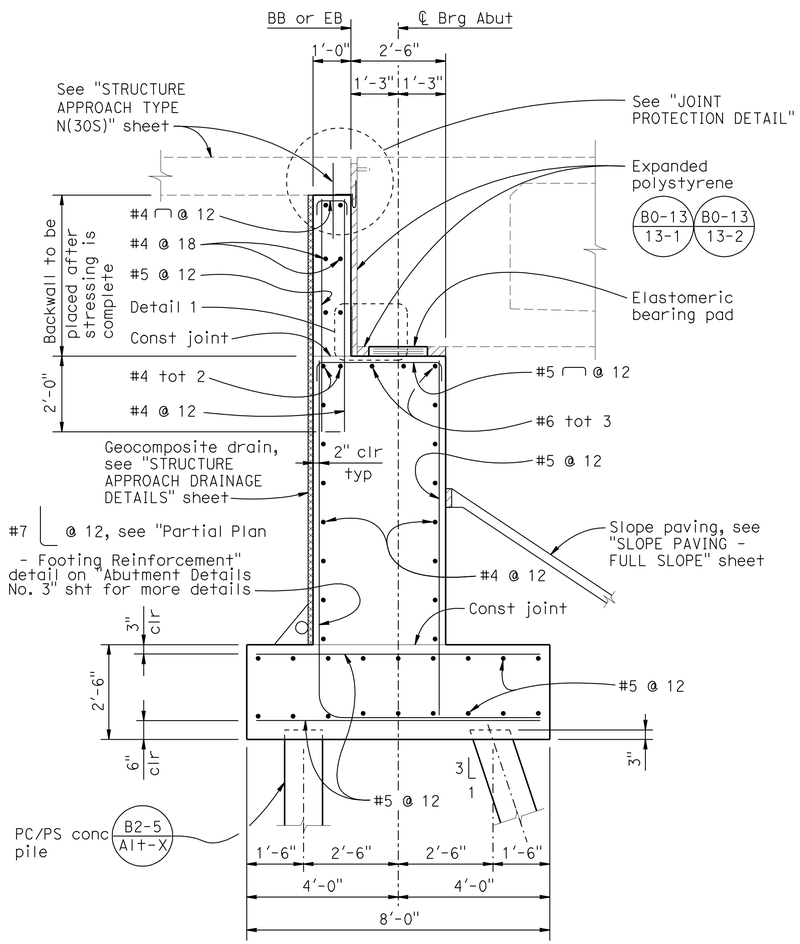

TYPICAL SECTION

½" = 1'-0"

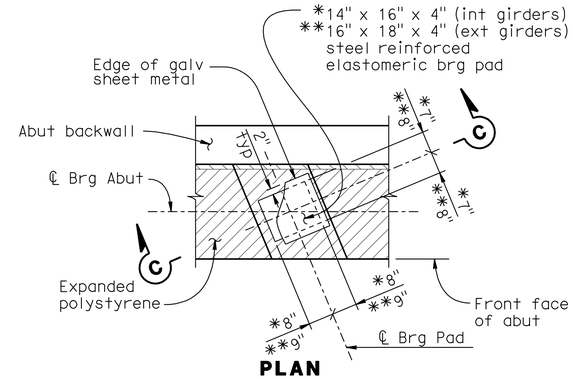

PLAN

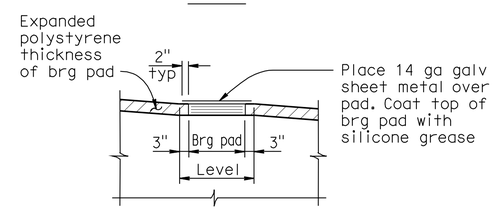

SECTION C-C

BEARING PAD DETAIL

½" = 1'-0"

Interior girder bearing pad shown, exterior girder bearing pad similar.

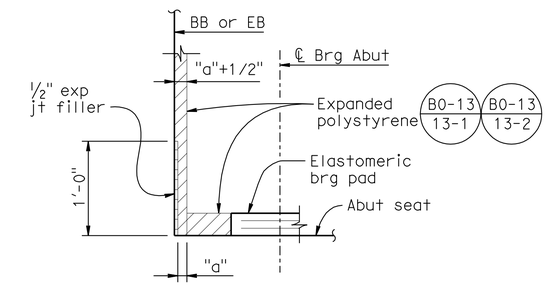

DETAIL 1

B6-21

No Scale

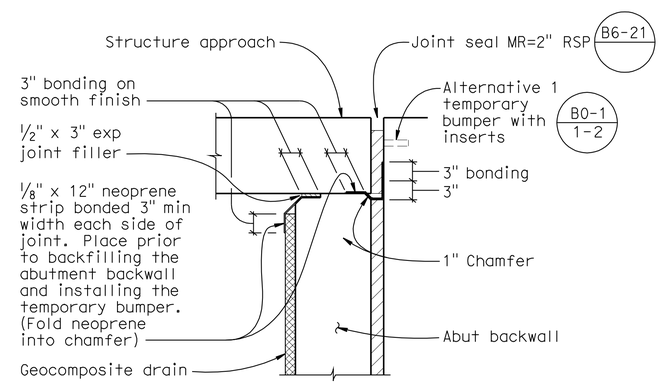

JOINT PROTECTION DETAIL

1" = 1'-0"

LEGEND:

Indicates Expanded Polystyrene.

Indicates Geocomposite Drain.

Note:
The Contractor shall verify all controlling field dimensions before ordering or fabricating any materials.

DESIGN	BY S PERVAIZ	CHECKED J MANISCALCO	
DETAILS	BY J VOUGHT	CHECKED J MANISCALCO	
QUANTITIES	BY K SANFORD	CHECKED E GAHAN	

DESIGN OVERSIGHT Reza Erfanian
6/24/11
SIGN OFF DATE

PREPARED FOR THE STATE OF CALIFORNIA DEPARTMENT OF TRANSPORTATION

JOHN A. KLEMUNES, JR.
PROJECT ENGINEER

BRIDGE NO. 29-0332
POST MILE 11.47

TURNER STATION OVERHEAD (REPLACE)

ABUTMENT DETAILS NO. 1

DESIGN DETAIL SHEET (ENGLISH) (REV.7/16/10)

ORIGINAL SCALE IN INCHES FOR REDUCED PLANS 0 1 2 3

UNIT: 1455
PROJECT NUMBER & PHASE: 10000204411 CONTRACT NO.: 10-0E6121

DISREGARD PRINTS BEARING EARLIER REVISION DATES

REVISION DATES 5-3-10 2-4-11 5-18-11 6-24-11 SHEET 8 OF 29

FILE => 29-0332-f-a01dt01.dgn

USERNAME => s6121614 DATE PLOTTED => 01-DEC-2011 TIME PLOTTED => 10:53

DIST	COUNTY	ROUTE	POST MILES TOTAL PROJECT	SHEET No	TOTAL SHEETS
10	SJ	99	10.6/14.9	427	504

REGISTERED CIVIL ENGINEER 6-24-11 DATE

10-17-11
PLANS APPROVAL DATE

REGISTERED PROFESSIONAL ENGINEER SHARIO PERVAIZ No. C67068 Exp. 9-30-12 CIVIL STATE OF CALIFORNIA

The State of California or its officers or agents shall not be responsible for the accuracy or completeness of electronic copies of this plan sheet.

SAN JOAQUIN COUNCIL OF GOVERNMENTS
555 E. WEBER AVE.
STOCKTON, CA 95202

HDR ENGINEERING, INC.
2365 IRON POINT ROAD, SUITE 300
FOLSOM, CA 95630

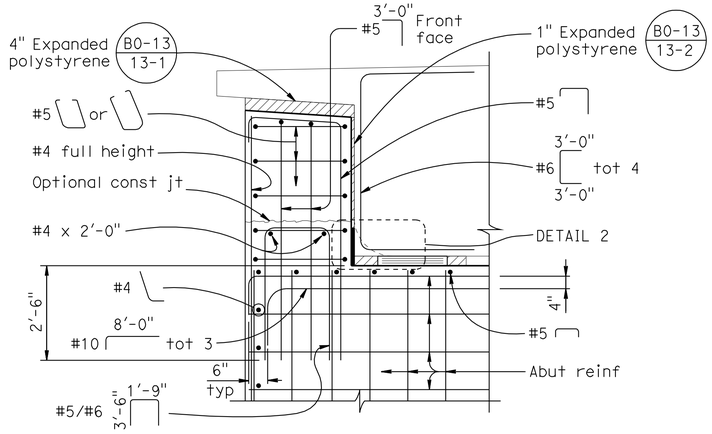

EXTERIOR SHEAR KEY

½" = 1'-0"

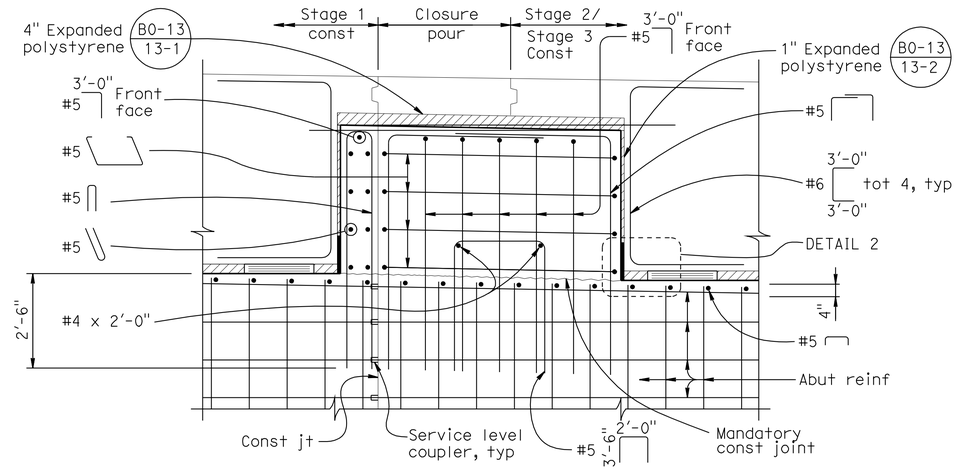

INTERIOR SHEAR KEY

½" = 1'-0"

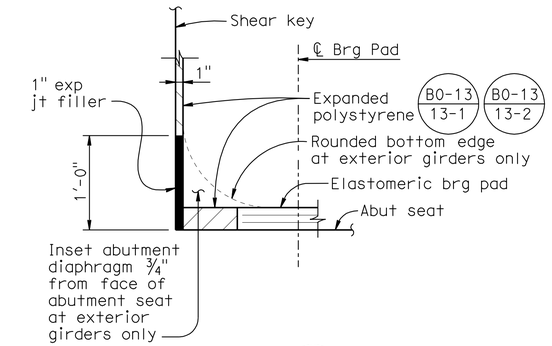

DETAIL 2

B6-21

No Scale

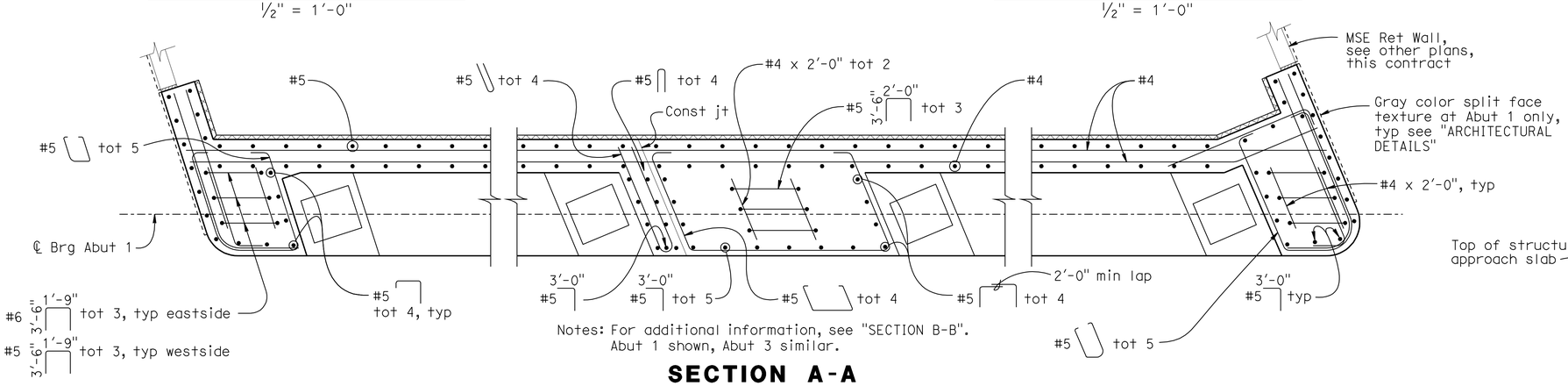

Notes: For additional information, see "SECTION B-B".
Abut 1 shown, Abut 3 similar.

SECTION A-A

½" = 1'-0"

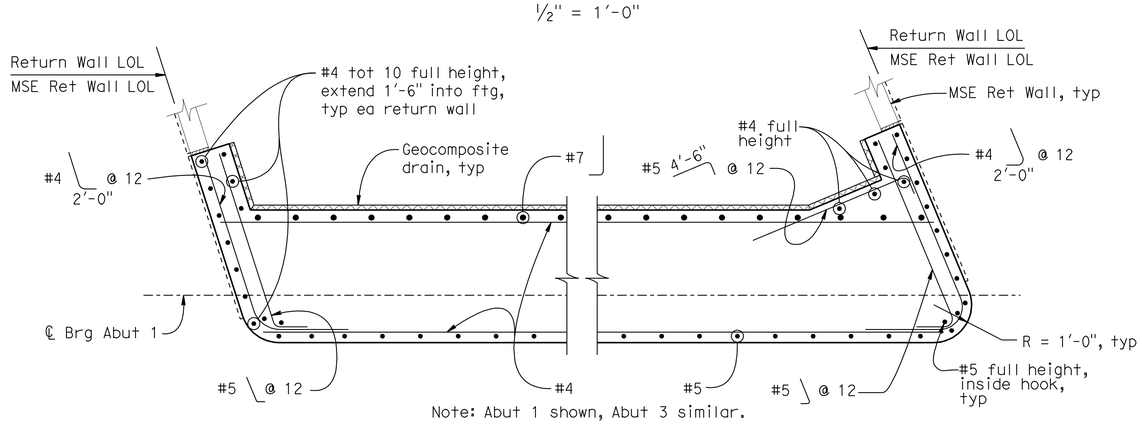

Note: Abut 1 shown, Abut 3 similar.

SECTION B-B

½" = 1'-0"

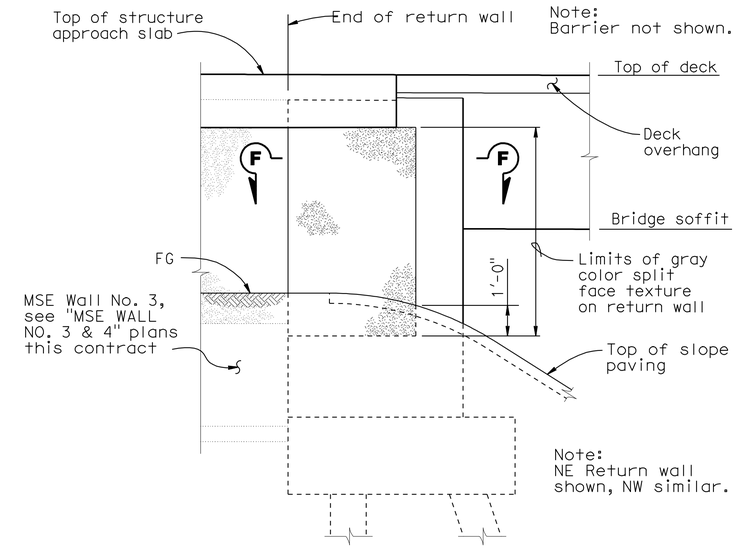

Note:
Barrier not shown.

Note:
NE Return wall shown, NW similar.

ELEVATION

ARCHITECTURAL DETAILS

No Scale

NOTES:
1. For closure pour details, see "TYPICAL SECTION" sheet.
2. For "SECTION F-F", see "ABUTMENT DETAILS NO. 3" sheet.

Note:
The Contractor shall verify all controlling field dimensions before ordering or fabricating any materials.

DESIGN OVERSIGHT Reza Erfanian	DESIGN	BY S PERVAIZ	CHECKED J MANISCALCO
6/24/11 SIGN OFF DATE	DETAILS	BY J VOUGHT	CHECKED J MANISCALCO
	QUANTITIES	BY K SANFORD	CHECKED E GAHAN

PREPARED FOR THE STATE OF CALIFORNIA DEPARTMENT OF TRANSPORTATION

JOHN A. KLEMUNES, JR.
PROJECT ENGINEER

BRIDGE NO. 29-0332
POST MILE 11.47

TURNER STATION OVERHEAD (REPLACE)

ABUTMENT DETAILS NO. 2

DESIGN DETAIL SHEET (ENGLISH) (REV.7/16/10)

ORIGINAL SCALE IN INCHES FOR REDUCED PLANS 0 1 2 3

UNIT: 1455
PROJECT NUMBER & PHASE: 10000204411 CONTRACT NO.: 10-0E6121

DISREGARD PRINTS BEARING EARLIER REVISION DATES

REVISION DATES 5-3-10 2-4-11 5-18-11 6-24-11 SHEET 9 OF 29

FILE => 29-0332-f-a01dt02.dgn

USERNAME => s6121614 DATE PLOTTED => 01-DEC-2011 TIME PLOTTED => 10:53

DIST	COUNTY	ROUTE	POST MILES TOTAL PROJECT	SHEET No	TOTAL SHEETS
10	SJ	99	10.6/14.9	428	504

REGISTERED CIVIL ENGINEER 6-24-11 DATE

10-17-11
PLANS APPROVAL DATE

REGISTERED PROFESSIONAL ENGINEER SHARIO PERVAIZ No. C67068 Exp. 9-30-12 CIVIL STATE OF CALIFORNIA

The State of California or its officers or agents shall not be responsible for the accuracy or completeness of electronic copies of this plan sheet.

SAN JOAQUIN COUNCIL OF GOVERNMENTS
555 E. WEBER AVE.
STOCKTON, CA 95202

HDR ENGINEERING, INC.
2365 IRON POINT ROAD, SUITE 300
FOLSOM, CA 95630

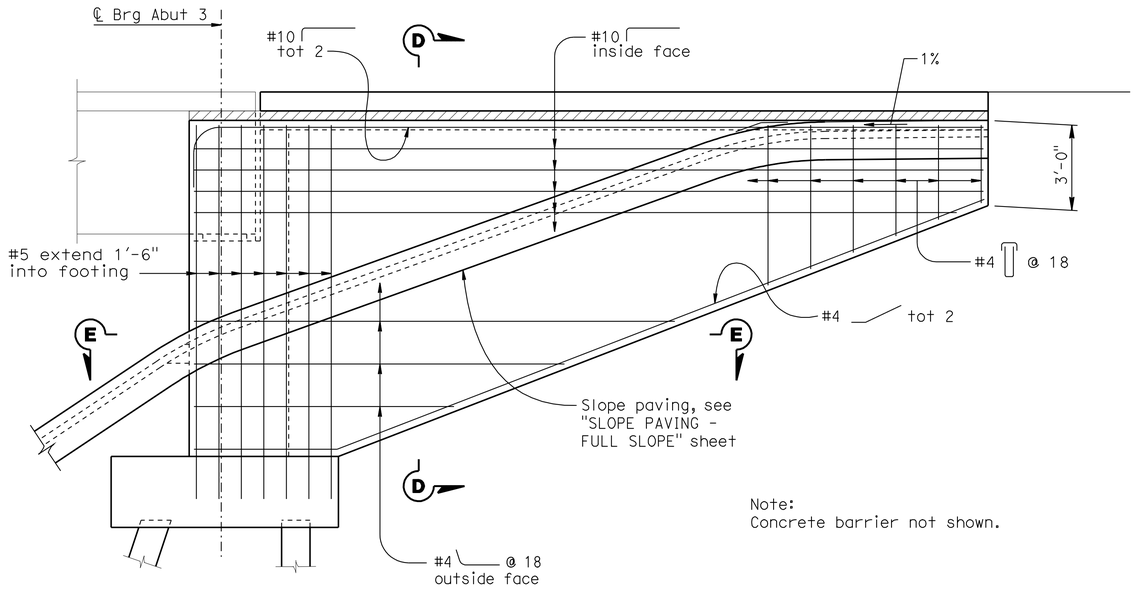

Note:
Concrete barrier not shown.

NE wingwall shown, NW wingwall similar.

WINGWALL ELEVATION AT ABUTMENT 3

3/8" = 1'-0"

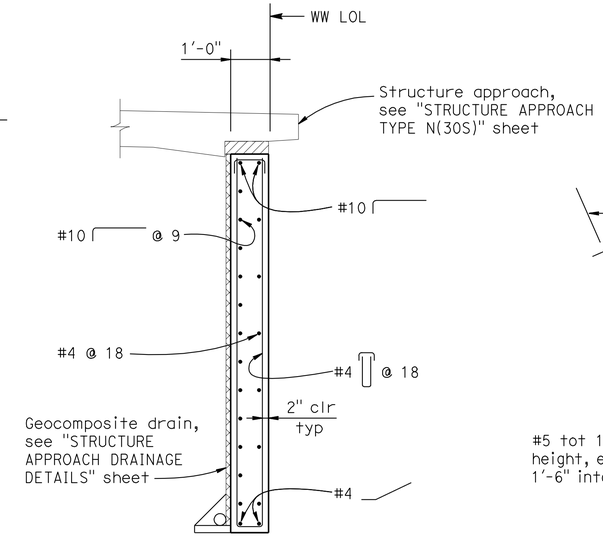

SECTION D-D

1/2" = 1'-0"

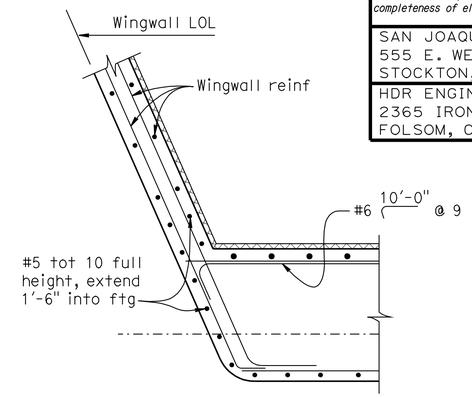

Note:
For additional information, see "SECTION B-B" on "ABUTMENT DETAILS NO. 2" sheet.

SECTION E-E

1/2" = 1'-0"

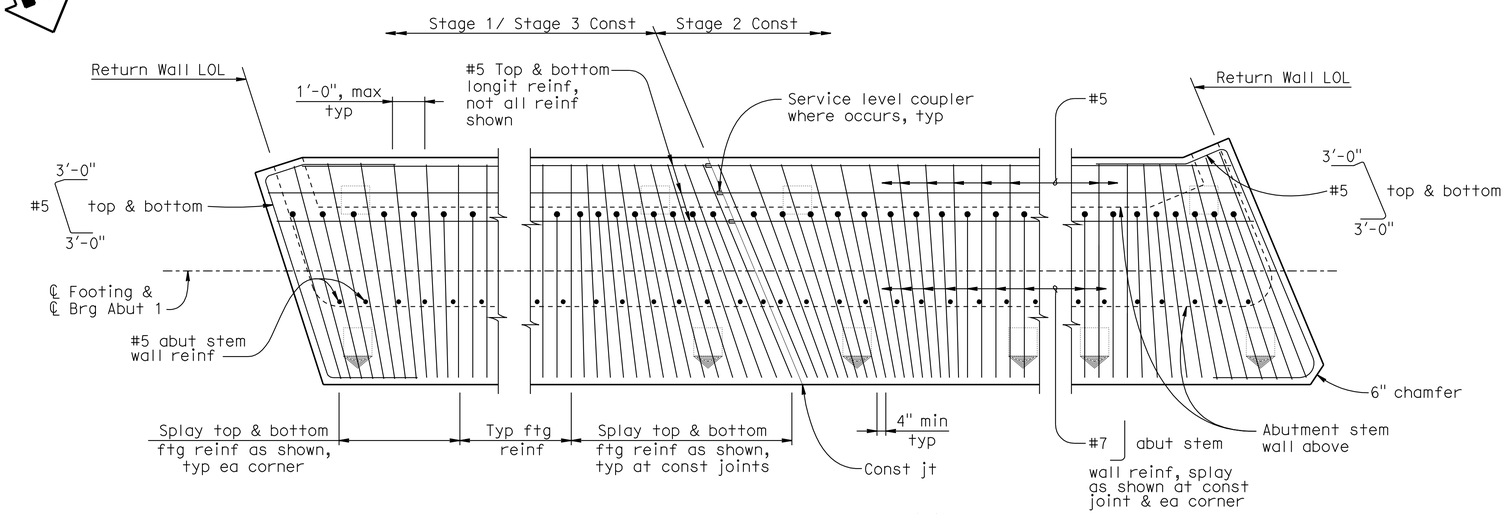

Note: Abut 1 shown, Abut 3 similar.

PARTIAL PLAN - FOOTING REINFORCEMENT

3/8" = 1'-0"

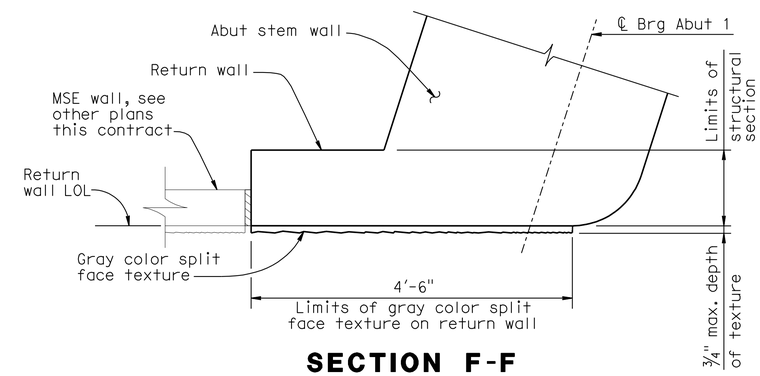

SECTION F-F

1" = 1'-0"

LEGEND:

Indicates vertical piles

Indicates battered piles

Note:
The Contractor shall verify all controlling field dimensions before ordering or fabricating any materials.

DESIGN	BY S PERVAIZ	CHECKED J MANISCALCO	
DETAILS	BY J VOUGHT	CHECKED J MANISCALCO	
QUANTITIES	BY K SANFORD	CHECKED E GAHAN	

Reza Erfanian
DESIGN OVERSIGHT Reza Erfanian
6/24/11
SIGN OFF DATE

PREPARED FOR THE STATE OF CALIFORNIA DEPARTMENT OF TRANSPORTATION

JOHN A. KLEMUNES, JR.
PROJECT ENGINEER

BRIDGE NO. 29-0332
POST MILE 11.47

TURNER STATION OVERHEAD (REPLACE)
ABUTMENT DETAILS NO. 3

DESIGN DETAIL SHEET (ENGLISH) (REV.7/16/10)

ORIGINAL SCALE IN INCHES FOR REDUCED PLANS 0 1 2 3

UNIT: 1455
PROJECT NUMBER & PHASE: 10000204411 CONTRACT NO.: 10-0E6121

DISREGARD PRINTS BEARING EARLIER REVISION DATES

REVISION DATES: 5-3-10 2-4-11 5-18-11 6-24-11

SHEET 10 OF 29

FILE => 29-0332-f-a01dt03.dgn

USERNAME => s114937 DATE PLOTTED => 22-DEC-2011 TIME PLOTTED => 15:16

DIST	COUNTY	ROUTE	POST MILES TOTAL PROJECT	SHEET No	TOTAL SHEETS
10	SJ	99	10.6/14.9	429	504

REGISTERED CIVIL ENGINEER 6-24-11 DATE

10-17-11
PLANS APPROVAL DATE

REGISTERED PROFESSIONAL ENGINEER SHARIO PERVAIZ No. C67068 Exp. 9-30-12 CIVIL STATE OF CALIFORNIA

The State of California or its officers or agents shall not be responsible for the accuracy or completeness of electronic copies of this plan sheet.

SAN JOAQUIN COUNCIL OF GOVERNMENTS
555 E. WEBER AVE.
STOCKTON, CA 95202

HDR ENGINEERING, INC.
2365 IRON POINT ROAD, SUITE 300
FOLSOM, CA 95630

Note:
No lap splices allowed for top and bottom main bent cap reinf.

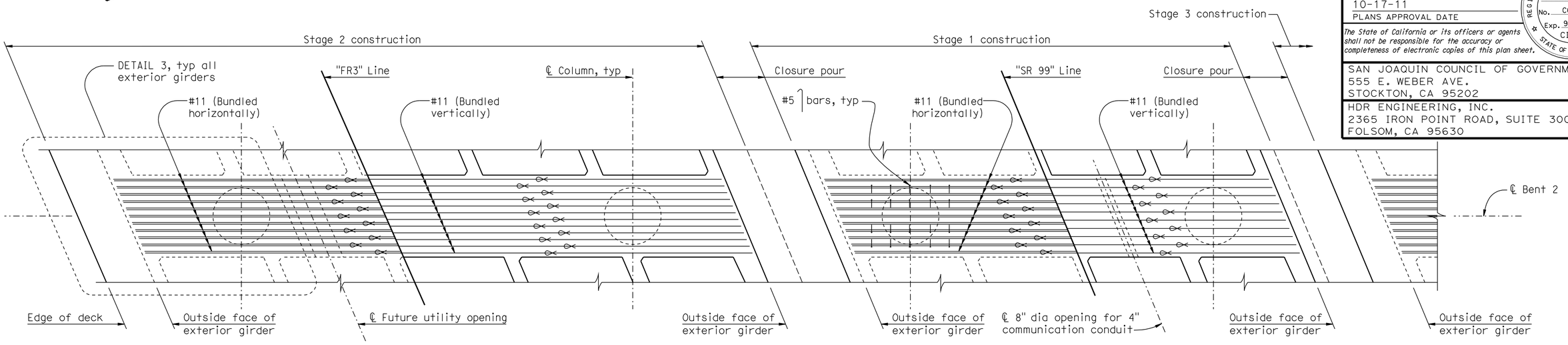

PLAN

1/4" = 1'-0"

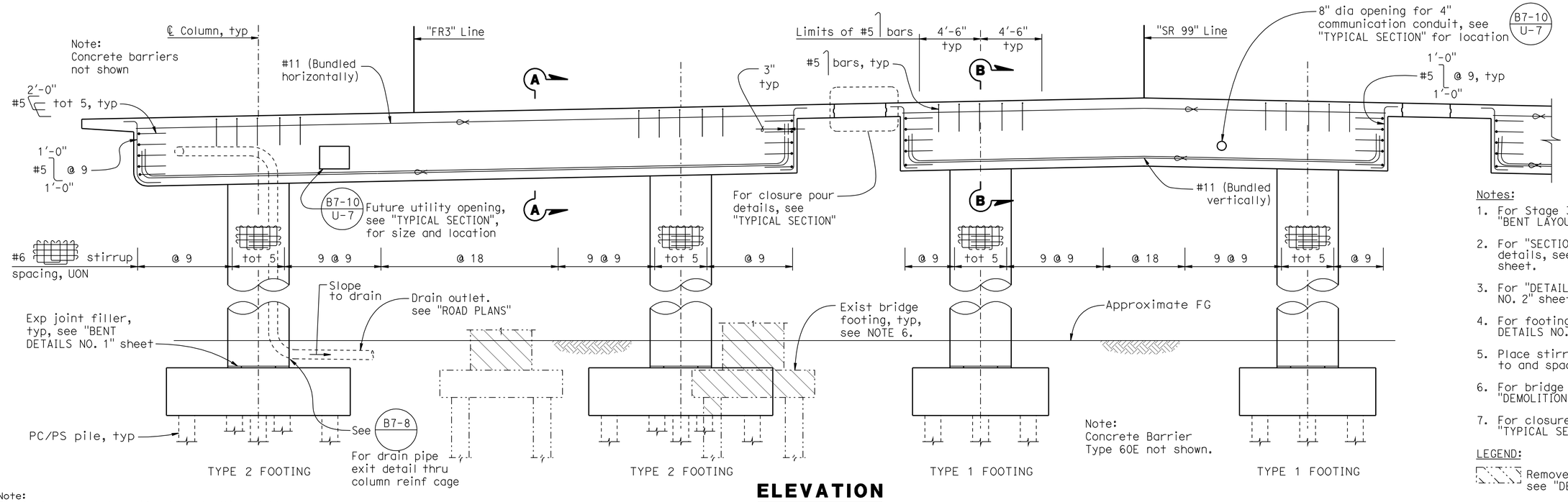

ELEVATION

1/4" = 1'-0"

Note:
The Contractor shall verify all controlling field dimensions before ordering or fabricating any materials.

Notes:

1. For Stage 3 Construction, see "BENT LAYOUT NO. 2" sheet.
2. For "SECTION A-A, B-B" & column details, see "BENT DETAILS NO. 1" sheet.
3. For "DETAIL 3" see "BENT DETAILS NO. 2" sheet.
4. For footing details, see "BENT DETAILS NO. 2" sheet.
5. Place stirrups perpendicular to and space along ℄ Bent.
6. For bridge removal limits, see "DEMOLITION DETAILS" sheet.
7. For closure pour details, see "TYPICAL SECTION" sheet.

LEGEND:

Remove existing structure, see "DEMOLITION DETAILS" sheet.

Denotes bundled bars.

Reza Erfanian
DESIGN OVERSIGHT Reza Erfanian
6/24/11
SIGN OFF DATE

	BY	CHECKED
DESIGN	S PERVAIZ	J MANISCALCO
DETAILS	J VOUGHT	J MANISCALCO
QUANTITIES	K SANFORD	E GAHAN

PREPARED FOR THE STATE OF CALIFORNIA DEPARTMENT OF TRANSPORTATION

JOHN A. KLEMUNES, JR.
PROJECT ENGINEER

BRIDGE NO. 29-0332
POST MILE 11.47

TURNER STATION OVERHEAD (REPLACE)

BENT LAYOUT NO. 1

DESIGN DETAIL SHEET (ENGLISH) (REV.7/16/10)

ORIGINAL SCALE IN INCHES FOR REDUCED PLANS 0 1 2 3

UNIT: 1455
PROJECT NUMBER & PHASE: 10000204411 CONTRACT NO.: 10-0E6121

DISREGARD PRINTS BEARING EARLIER REVISION DATES

REVISION DATES: 5-3-10 2-4-11 5-18-11 6-24-11

SHEET 11 OF 29

FILE => 29-0332-h-b01_lo1.dgn

USERNAME => s121614 DATE PLOTTED => 01-DEC-2011 TIME PLOTTED => 10:53

DIST	COUNTY	ROUTE	POST MILES TOTAL PROJECT	SHEET No	TOTAL SHEETS
10	SJ	99	10.6/14.9	430	504

REGISTERED CIVIL ENGINEER 6-24-11 DATE

10-17-11
PLANS APPROVAL DATE

REGISTERED PROFESSIONAL ENGINEER SHARIQ PERVAIZ No. C67068 Exp. 9-30-12 CIVIL STATE OF CALIFORNIA

The State of California or its officers or agents shall not be responsible for the accuracy or completeness of electronic copies of this plan sheet.

SAN JOAQUIN COUNCIL OF GOVERNMENTS
555 E. WEBER AVE.
STOCKTON, CA 95202

HDR ENGINEERING, INC.
2365 IRON POINT ROAD, SUITE 300
FOLSOM, CA 95630

Note:
No lap splices allowed for top and bottom main bent cap reinf.

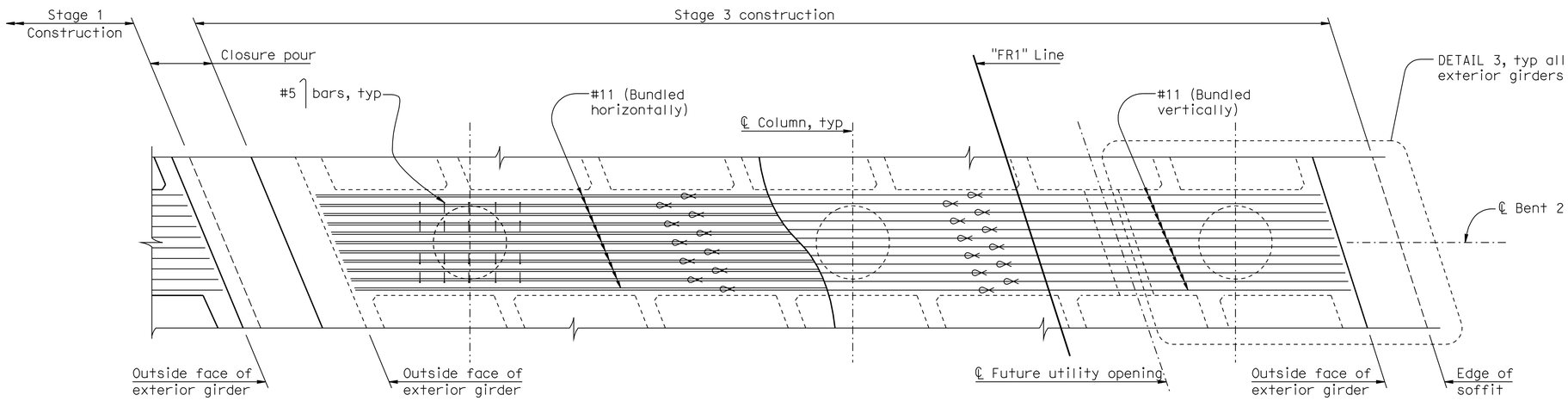

PLAN
1/4" = 1'-0"

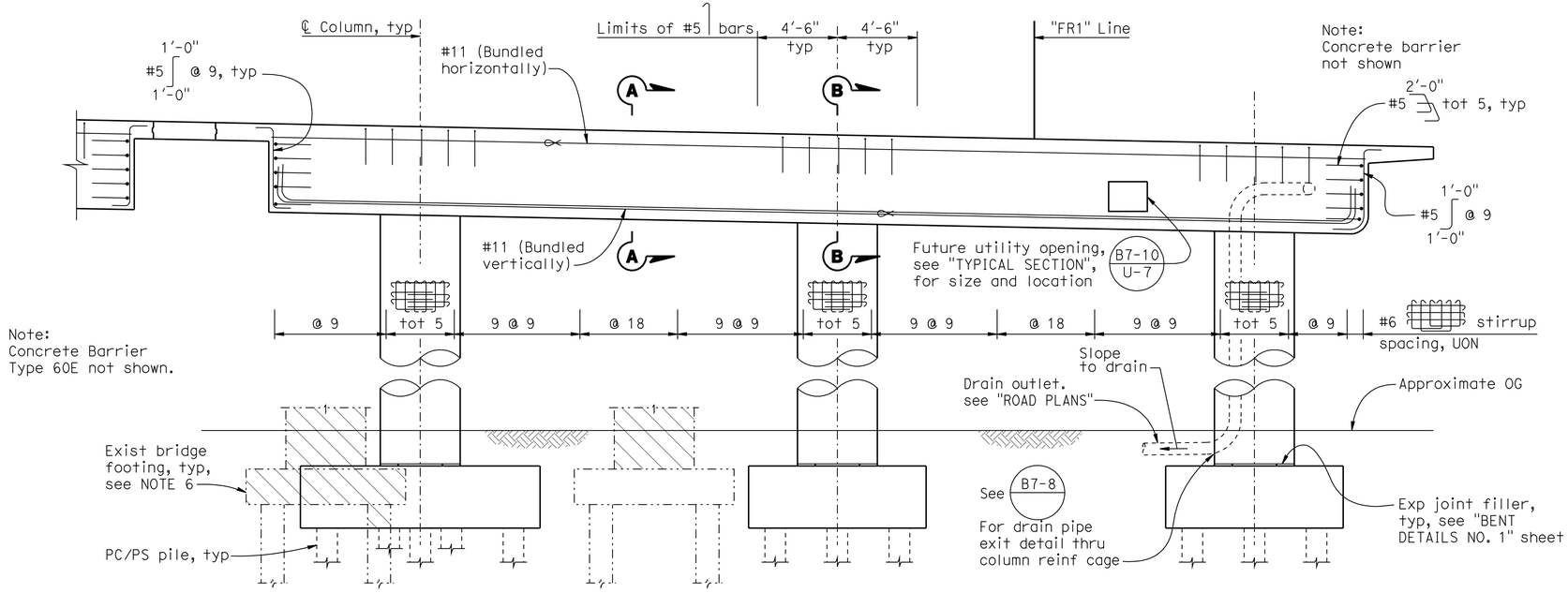

ELEVATION
1/4" = 1'-0"

Notes:
1. For Stage 1 & 2 Construction, see "BENT LAYOUT NO. 1" sheet.
2. For Notes and Legend, see "BENT LAYOUT NO. 1" sheet.

Note:
The Contractor shall verify all controlling field dimensions before ordering or fabricating any materials.

Reza Erfanian
DESIGN OVERSIGHT Reza Erfanian
6/24/11
SIGN OFF DATE

	BY	CHECKED
DESIGN	S PERVAIZ	J MANISCALCO
DETAILS	J VOUGHT	J MANISCALCO
QUANTITIES	K SANFORD	E GAHAN

PREPARED FOR THE STATE OF CALIFORNIA DEPARTMENT OF TRANSPORTATION

JOHN A. KLEMUNES, JR.
PROJECT ENGINEER

BRIDGE NO. 29-0332
POST MILE 11.47

TURNER STATION OVERHEAD (REPLACE)
BENT LAYOUT NO. 2

DESIGN DETAIL SHEET (ENGLISH) (REV.7/16/10)

ORIGINAL SCALE IN INCHES FOR REDUCED PLANS 0 1 2 3

UNIT: 1455
PROJECT NUMBER & PHASE: 10000204411 CONTRACT NO.: 10-0E6121

DISREGARD PRINTS BEARING EARLIER REVISION DATES

REVISION DATES: 5-3-10 2-4-11 5-18-11 6-24-11

SHEET 12 OF 29

FILE => 29-0332-h-b01_lo2.dgn

USERNAME => s1216l4 DATE PLOTTED => 01-DEC-2011 TIME PLOTTED => 10:53

DIST	COUNTY	ROUTE	POST MILES TOTAL PROJECT	SHEET No	TOTAL SHEETS
10	SJ	99	10.6/14.9	431	504

REGISTERED CIVIL ENGINEER 6-24-11 DATE

10-17-11
PLANS APPROVAL DATE

REGISTERED PROFESSIONAL ENGINEER SHARIO PERVAIZ No. C67068 Exp. 9-30-12 CIVIL STATE OF CALIFORNIA

The State of California or its officers or agents shall not be responsible for the accuracy or completeness of electronic copies of this plan sheet.

SAN JOAQUIN COUNCIL OF GOVERNMENTS
555 E. WEBER AVE.
STOCKTON, CA 95202

HDR ENGINEERING, INC.
2365 IRON POINT ROAD, SUITE 300
FOLSOM, CA 95630

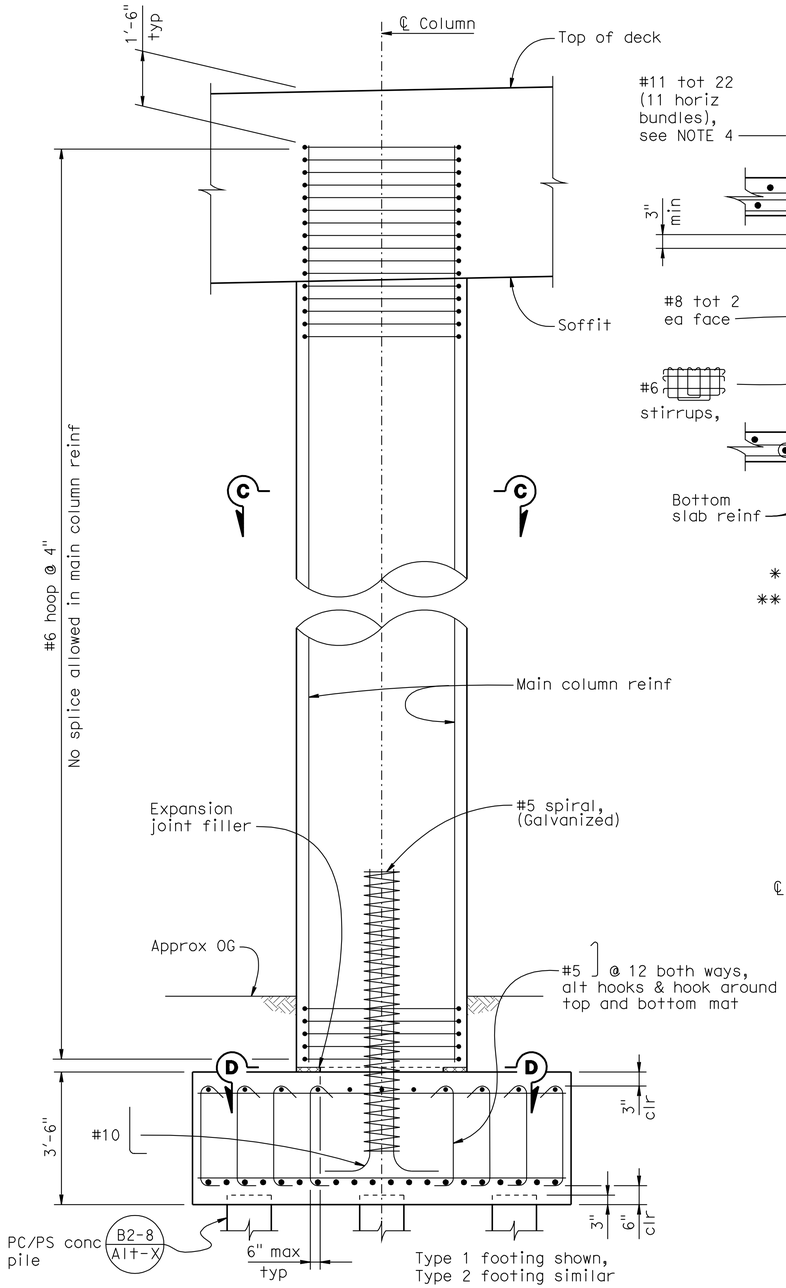

COLUMN ELEVATION

½" = 1'-0"

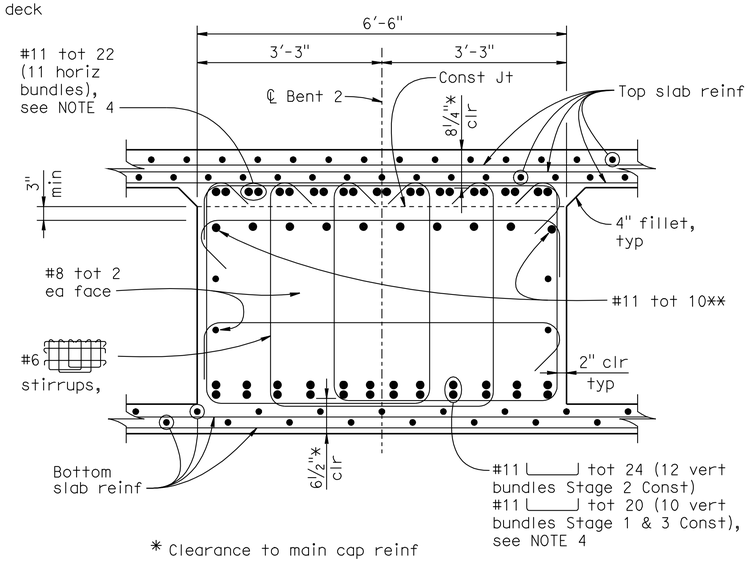

* Clearance to main cap reinf

** Reinf may be bent or lowered to clear P/S ducts as directed by the Engineer

SECTION A-A

¾" = 1'-0"

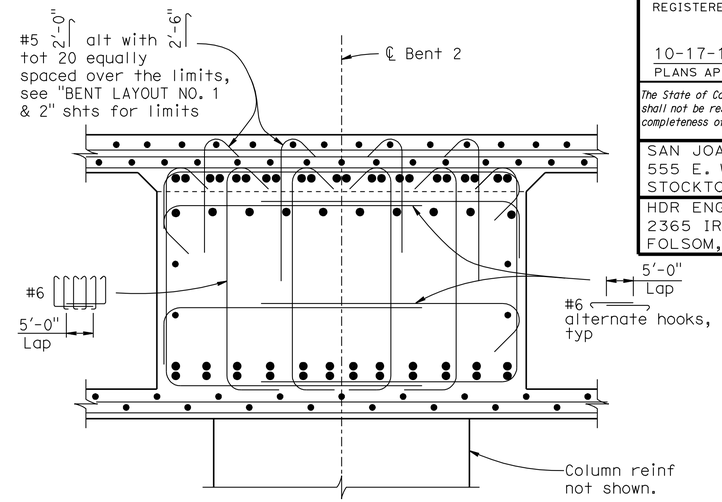

Note: For details not shown, see "SECTION A-A".

SECTION B-B

¾" = 1'-0"

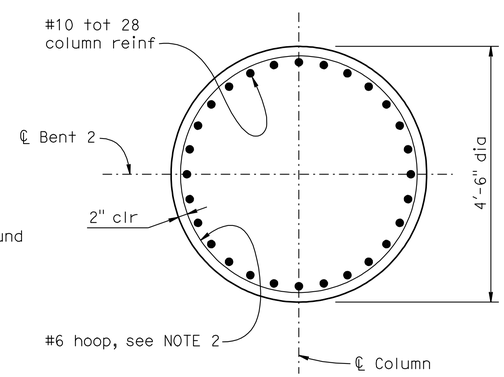

SECTION C-C

¾" = 1'-0"

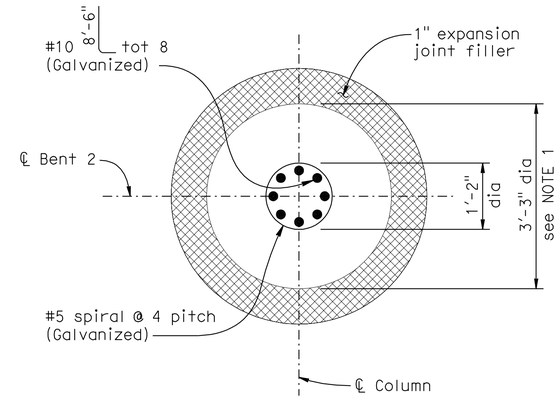

SECTION D-D

¾" = 1'-0"

NOTES:

1. Key area shall be roughened to ¼" amplitude.
2. Main column hoop reinf to meet ultimate splice requirements.
3. For footing details, see "BENT DETAILS NO. 2" sheet.
4. No splice allowed for top and bottom main bent cap reinforcement.

Note:
The Contractor shall verify all controlling field dimensions before ordering or fabricating any materials.

Reza Erfanian
DESIGN OVERSIGHT Reza Erfanian
6/24/11
SIGN OFF DATE

	BY	CHECKED
DESIGN	S PERVAIZ	J MANISCALCO
DETAILS	J VOUGHT	J MANISCALCO
QUANTITIES	K SANFORD	E GAHAN

PREPARED FOR THE STATE OF CALIFORNIA DEPARTMENT OF TRANSPORTATION

JOHN A. KLEMUNES, JR.
PROJECT ENGINEER

BRIDGE NO. 29-0332
POST MILE 11.47

TURNER STATION OVERHEAD (REPLACE)

BENT DETAILS NO. 1

DESIGN DETAIL SHEET (ENGLISH) (REV.7/16/10)

ORIGINAL SCALE IN INCHES FOR REDUCED PLANS 0 1 2 3

UNIT: 1455
PROJECT NUMBER & PHASE: 10000204411 CONTRACT NO.: 10-0E6121

DISREGARD PRINTS BEARING EARLIER REVISION DATES

REVISION DATES: 5-3-10 2-4-11 5-18-11 6-24-11

SHEET 13 OF 29

FILE => 29-0332-h-b01dt01.dgn

USERNAME => s121614 DATE PLOTTED => 01-DEC-2011 TIME PLOTTED => 10:53

DIST	COUNTY	ROUTE	POST MILES TOTAL PROJECT	SHEET No	TOTAL SHEETS
10	SJ	99	10.6/14.9	432	504

REGISTERED CIVIL ENGINEER 6-24-11 DATE

10-17-11
PLANS APPROVAL DATE

REGISTERED PROFESSIONAL ENGINEER SHARIQ PERVAIZ No. C67068 Exp. 9-30-12 CIVIL STATE OF CALIFORNIA

The State of California or its officers or agents shall not be responsible for the accuracy or completeness of electronic copies of this plan sheet.

SAN JOAQUIN COUNCIL OF GOVERNMENTS
555 E. WEBER AVE.
STOCKTON, CA 95202

HDR ENGINEERING, INC.
2365 IRON POINT ROAD, SUITE 300
FOLSOM, CA 95630

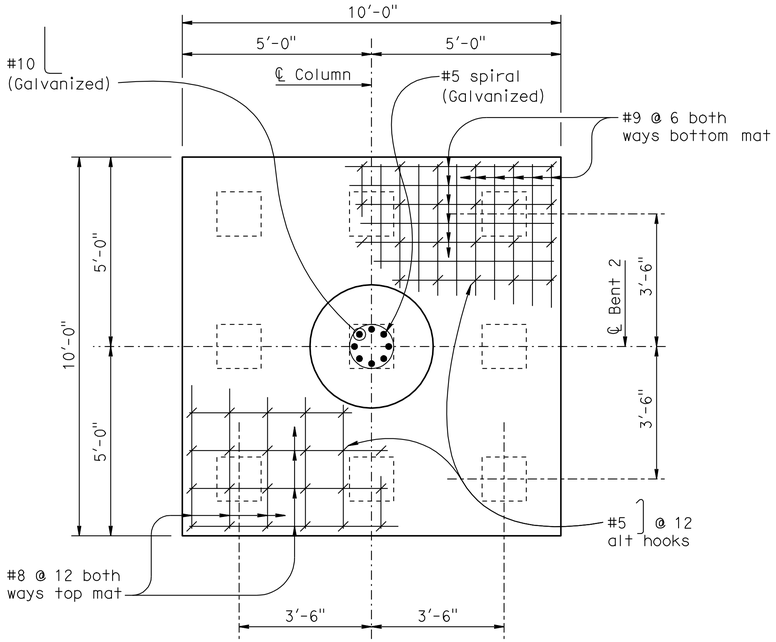

TYPE 1 FOOTING PLAN

½" = 1'-0"

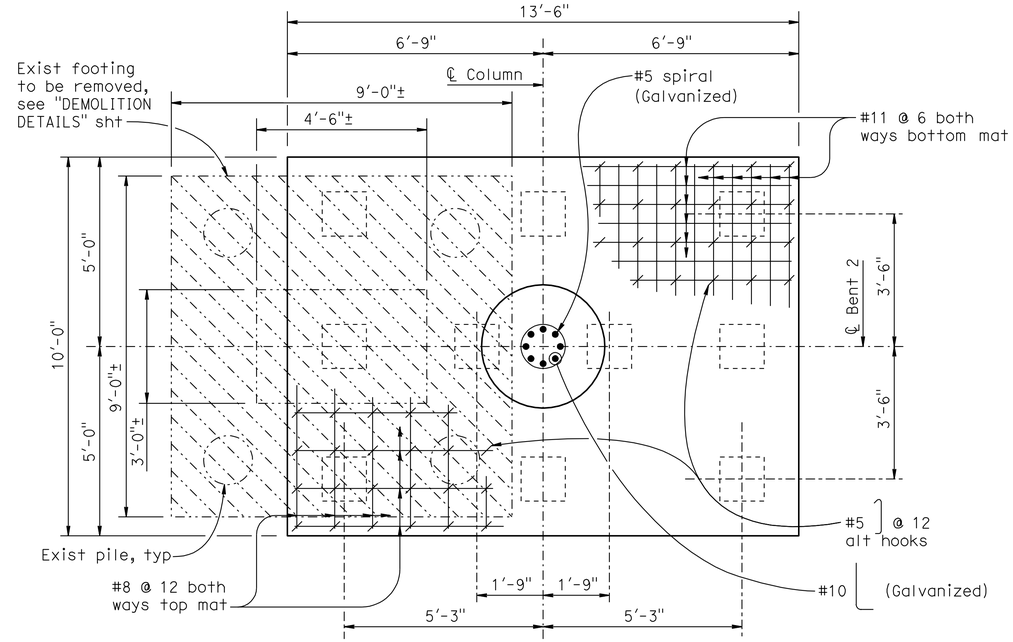

Type 2 Footing Stage 3 Construction shown,
Type 2 Footing Stage 2 Construction similar.

TYPE 2 FOOTING PLAN

½" = 1'-0"

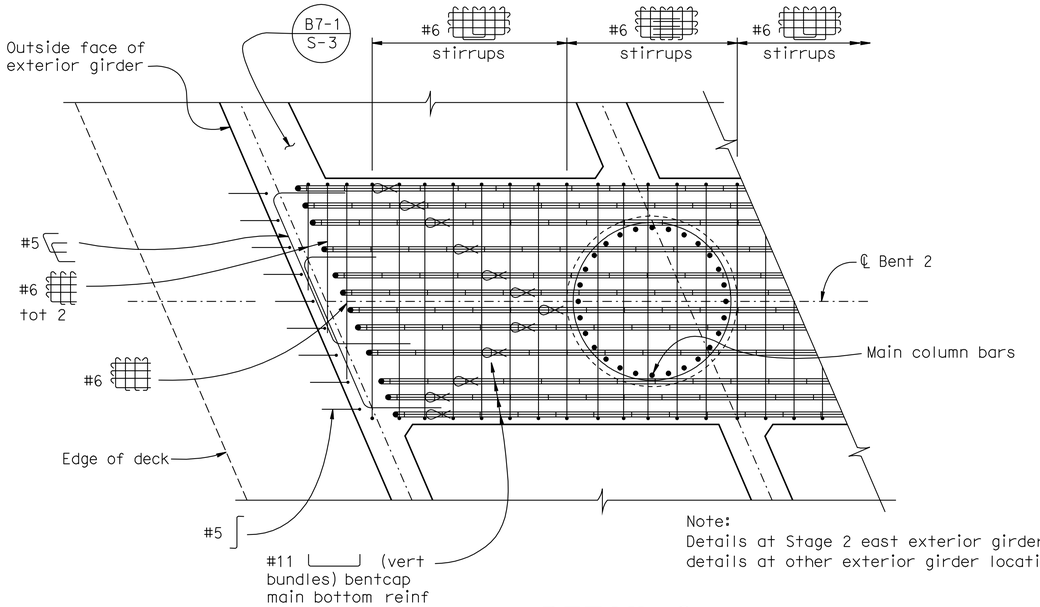

Note:
Details at Stage 2 east exterior girder shown,
details at other exterior girder locations similar.

DETAIL 3

½" = 1'-0"

LEGEND:

- Remove existing structure.
- Denotes bundled bars.
- Indicates vertical piles.
- Indicates exist vertical piles.
- Indicates existing structure.
- Indicates new structure.

Note:
The Contractor shall verify all controlling field dimensions before ordering or fabricating any materials.

Reza Erfanian
DESIGN OVERSIGHT Reza Erfanian
6/24/11
SIGN OFF DATE

	BY	CHECKED
DESIGN	S PERVAIZ	J MANISCALCO
DETAILS	J VOUGHT	J MANISCALCO
QUANTITIES	K SANFORD	E GAHAN

PREPARED FOR THE STATE OF CALIFORNIA DEPARTMENT OF TRANSPORTATION

JOHN A. KLEMUNES, JR.
PROJECT ENGINEER

BRIDGE NO. 29-0332
POST MILE 11.47

TURNER STATION OVERHEAD (REPLACE)

BENT DETAILS NO. 2

DESIGN DETAIL SHEET (ENGLISH) (REV.7/16/10)

ORIGINAL SCALE IN INCHES FOR REDUCED PLANS 0 1 2 3

UNIT: 1455
PROJECT NUMBER & PHASE: 10000204411 CONTRACT NO.: 10-0E6121

DISREGARD PRINTS BEARING EARLIER REVISION DATES

REVISION DATES: 5-3-10 2-4-11 5-18-11 6-24-11

SHEET 14 OF 29

FILE => 29-0332-h-b01dt02.dgn

USERNAME => s12614 DATE PLOTTED => 01-DEC-2011 TIME PLOTTED => 10:54

DIST	COUNTY	ROUTE	POST MILES TOTAL PROJECT	SHEET No	TOTAL SHEETS
10	SJ	99	10.6/14.9	433	504

REGISTERED CIVIL ENGINEER — DATE 6-24-11

10-17-11
PLANS APPROVAL DATE

REGISTERED PROFESSIONAL ENGINEER — SHARIQ PERVAIZ — No. C67068 — Exp. 9-30-12 — CIVIL — STATE OF CALIFORNIA

The State of California or its officers or agents shall not be responsible for the accuracy or completeness of electronic copies of this plan sheet.

SAN JOAQUIN COUNCIL OF GOVERNMENTS
555 E. WEBER AVE.
STOCKTON, CA 95202

HDR ENGINEERING, INC.
2365 IRON POINT ROAD, SUITE 300
FOLSOM, CA 95630

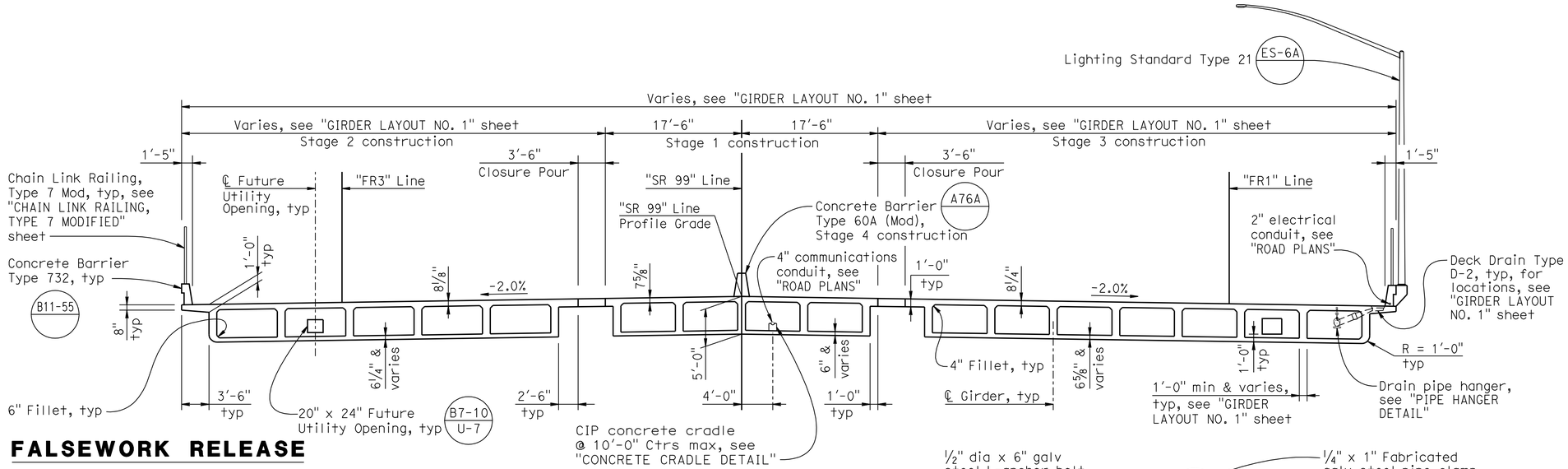

FALSEWORK RELEASE

ALTERNATIVE 1:
Falsework shall be released as soon as permitted by the specifications. Closure pour shall not be placed sooner than 60 days after the falsewrok has been released.

ALTERNATIVE 2:
Falsework shall not be released less than 28 days after the last concrete has been placed. Closure pour shall not be placed sooner than 14 days after the falsework has been released

When Falsework Released Alternative 2 is used, camber values are 0.75 times those shown.

TYPICAL SECTION

1/8" = 1'-0"

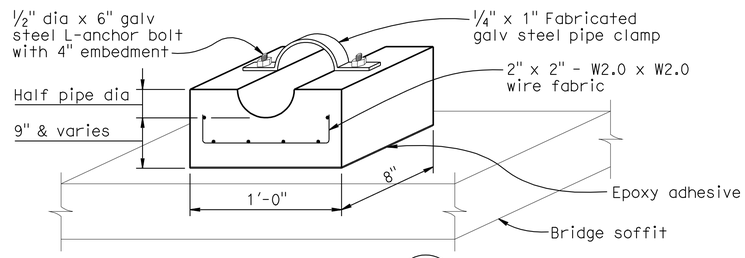

For details not shown, see (B14-3)

CONCRETE CRADLE DETAIL

No Scale

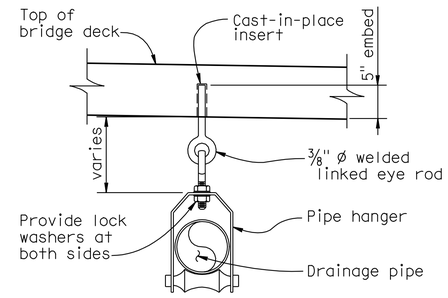

NOTES:
1. Pipe hangers shall be spaced at 10'-0" max
2. All hardware shall be hot dipped galvanized

PIPE HANGER DETAIL

No Scale

Note:
For Concrete Barrier Type 60A (Mod) details not shown, see STD PLAN A76A.

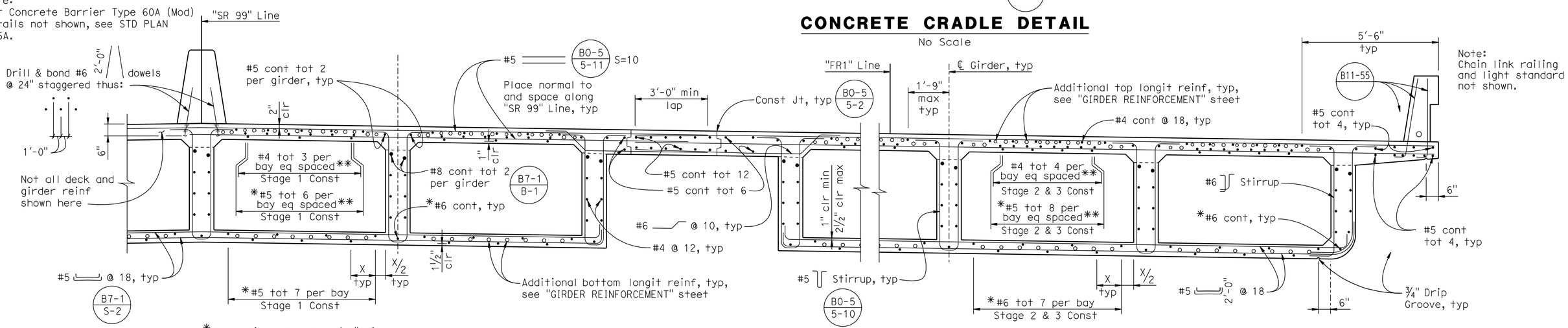

*Lap splices shall be 3'-0" min and shall be placed within 30'-0" from ℄ span.
**Bars shall be centered in each bay.

PARTIAL TYPICAL SECTION

1/2" = 1'-0"

(B0-5) (B7-1) (B8-5)

NOTE:
Stage 1 and Stage 3 Construction shown, Stage 2 Construction is similar to Stage 3 Construction.
4" Communication conduit/concrete cradle not shown.

Note:
The Contractor shall verify all controlling field dimensions before ordering or fabricating any materials.

DESIGN OVERSIGHT Reza Erfanian
7/12/11
SIGN OFF DATE

	BY	CHECKED
DESIGN	S PERVAIZ	J MANISCALCO
DETAILS	J VOUGHT	J MANISCALCO
QUANTITIES	K SANFORD	E GAHAN

PREPARED FOR THE STATE OF CALIFORNIA DEPARTMENT OF TRANSPORTATION

JOHN A. KLEMUNES, JR.
PROJECT ENGINEER

BRIDGE NO. 29-0332
POST MILE 11.47

TURNER STATION OVERHEAD (REPLACE)
TYPICAL SECTION

DESIGN DETAIL SHEET (ENGLISH) (REV.7/16/10)

ORIGINAL SCALE IN INCHES FOR REDUCED PLANS 0 1 2 3

UNIT: 1455
PROJECT NUMBER & PHASE: 10000204411
CONTRACT NO.: 10-0E6121

DISREGARD PRINTS BEARING EARLIER REVISION DATES

REVISION DATES: 2-4-11 5-19-11 6-24-11 7-12-11

SHEET 15 OF 29

FILE => 29-0332-k-ts01.dgn

USERNAME => s12614 DATE PLOTTED => 01-DEC-2011 TIME PLOTTED => 10:54

DIST	COUNTY	ROUTE	POST MILES TOTAL PROJECT	SHEET No	TOTAL SHEETS
10	SJ	99	10.6/14.9	434	504

REGISTERED CIVIL ENGINEER 6-24-11 DATE

10-17-11
PLANS APPROVAL DATE

REGISTERED PROFESSIONAL ENGINEER SHARIO PERVAIZ No. C67068 Exp. 9-30-12 CIVIL STATE OF CALIFORNIA

The State of California or its officers or agents shall not be responsible for the accuracy or completeness of electronic copies of this plan sheet.

SAN JOAQUIN COUNCIL OF GOVERNMENTS
555 E. WEBER AVE.
STOCKTON, CA 95202

HDR ENGINEERING, INC.
2365 IRON POINT ROAD, SUITE 300
FOLSOM, CA 95630

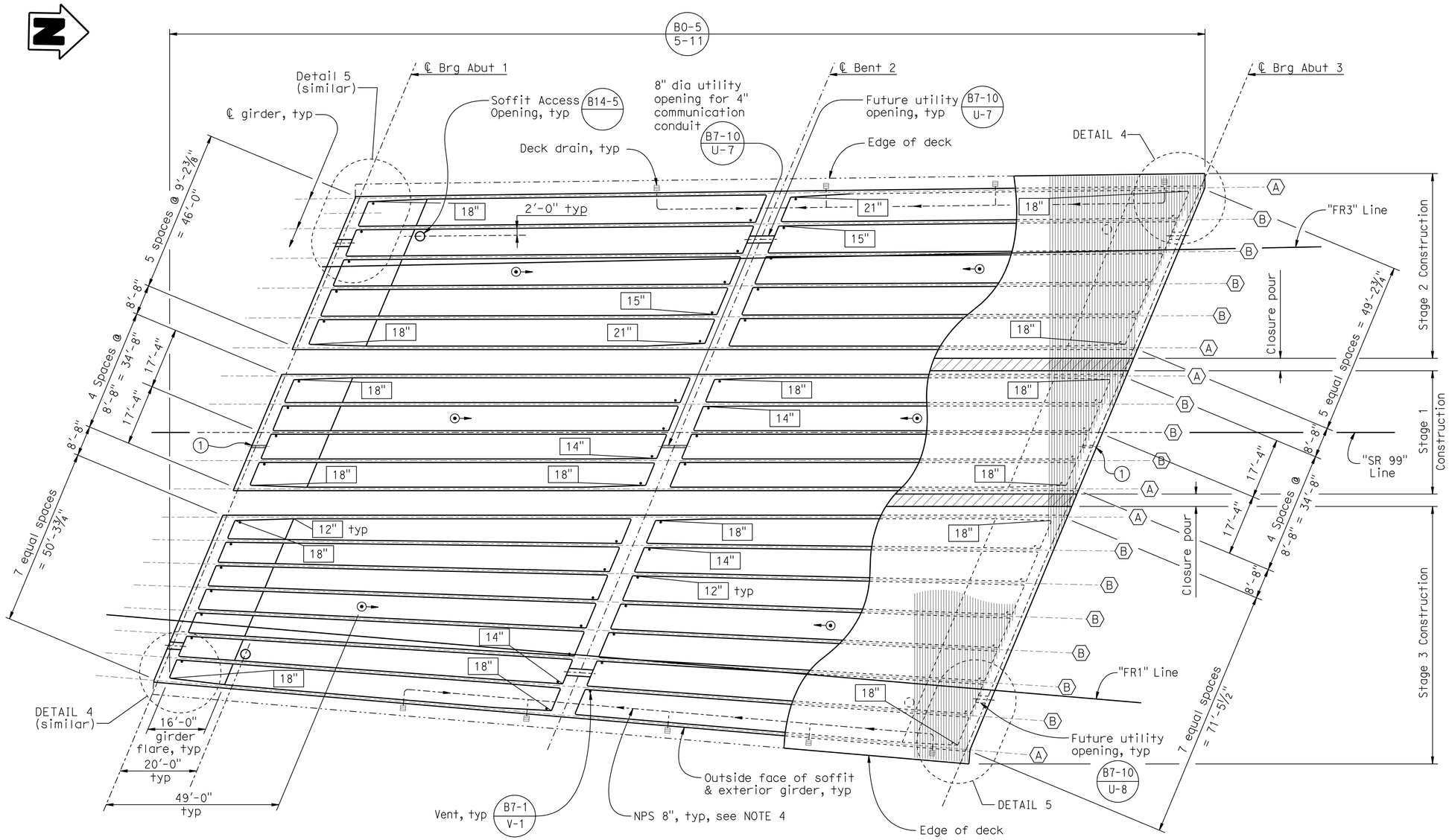

NOTES:

1. For "DETAIL 4 & DETAIL 5", see "GIRDER LAYOUT NO. 2" sheet.
2. For size and location of future utility openings, see "TYPICAL SECTION" sheet.
3. For details not shown, see "TYPICAL SECTIONI sheet.
4. Horizontal drain pipe shall be installed with a minimum of 2% slope.
5. For Prestressing Notes and Longitudinal Section, see" "LONGITUDINAL SECTION" sheet

LEGEND:

- XX — Indicates girder flare width. (B7-1 / S-3)
- Indicates Flush Soffit Luminaire placed at ℄ bay, see "Road Plans". (B7-1 / F-1)
- Indicates Deck Drain Type D-2. (B7-6 / 7-8)
- Indicates Deck Drain Pipe and direction of flow.
- (A) Indicates Girder Designation.
- (1) 8" dia opening for 4" communication conduit. (B7-10 / U-3)

DECK DRAIN LOCATIONS	
Along East Side	Along West Side
606+23.00	606+95.00
606+58.00	607+43.00
606+98.00	607+91.00
607+38.00	608+39.00
607+73.00	—

Note: For additional details, see "Typical Section" sheet.

GIRDER LAYOUT

1/16" = 1'-0"

B0-5 B7-1 B7-6 B7-10 B14-5

Note:
The Contractor shall verify all controlling field dimensions before ordering or fabricating any materials.

Reza Erfanian
DESIGN OVERSIGHT Reza Erfanian
6/24/11
SIGN OFF DATE

	BY	CHECKED
DESIGN	S PERVAIZ	J MANISCALCO
DETAILS	J VOUGHT	J MANISCALCO
QUANTITIES	K SANFORD	E GAHAN

PREPARED FOR THE STATE OF CALIFORNIA DEPARTMENT OF TRANSPORTATION

JOHN A. KLEMUNES, JR.
PROJECT ENGINEER

BRIDGE NO. 29-0332
POST MILE 11.47

TURNER STATION OVERHEAD (REPLACE)

GIRDER LAYOUT NO. 1

DESIGN DETAIL SHEET (ENGLISH) (REV.7/16/10)

ORIGINAL SCALE IN INCHES FOR REDUCED PLANS 0 1 2 3

UNIT: 1455
PROJECT NUMBER & PHASE: 10000204411 CONTRACT NO.: 10-0E6121

DISREGARD PRINTS BEARING EARLIER REVISION DATES

REVISION DATES: 5-3-10 2-4-11 5-18-11 6-24-11

SHEET 16 OF 29

FILE => 29-0332-1-g_lo01.dgn

USERNAME => s121614 DATE PLOTTED => 01-DEC-2011 TIME PLOTTED => 10:54

DIST	COUNTY	ROUTE	POST MILES TOTAL PROJECT	SHEET No	TOTAL SHEETS
10	SJ	99	10.6/14.9	435	504

REGISTERED CIVIL ENGINEER 6-24-11 DATE

10-17-11
PLANS APPROVAL DATE

REGISTERED PROFESSIONAL ENGINEER SHARIQ PERVAIZ No. C67068 Exp. 9-30-12 CIVIL STATE OF CALIFORNIA

The State of California or its officers or agents shall not be responsible for the accuracy or completeness of electronic copies of this plan sheet.

SAN JOAQUIN COUNCIL OF GOVERNMENTS
555 E. WEBER AVE.
STOCKTON, CA 95202

HDR ENGINEERING, INC.
2365 IRON POINT ROAD, SUITE 300
FOLSOM, CA 95630

Note:
Stirrups and Longit reinf not shown.

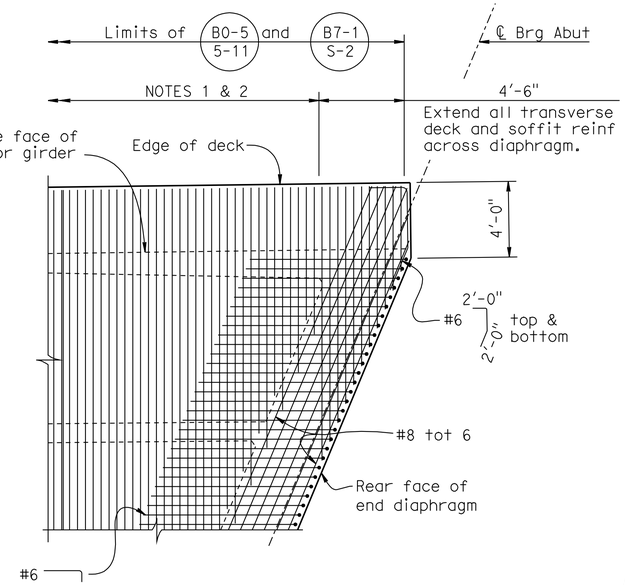

DETAIL 4

1/4" = 1'-0"

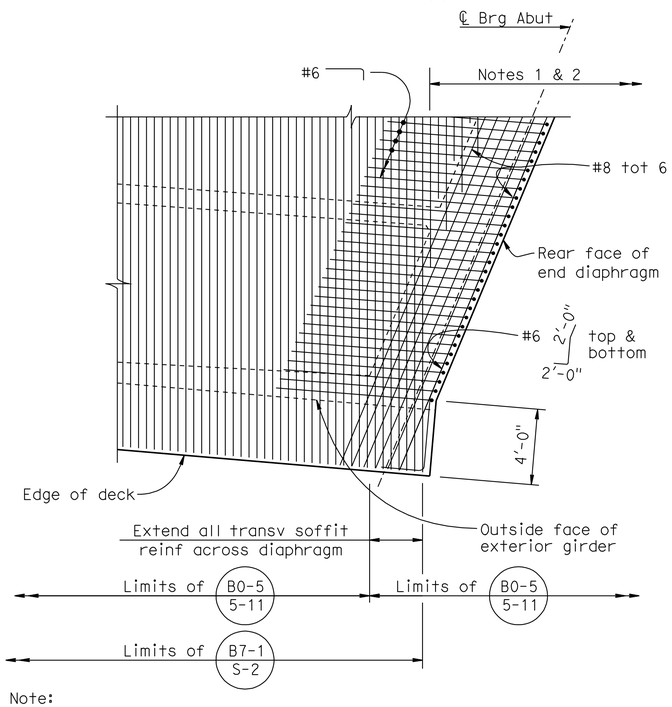

Note:
Longit reinf not shown.

DETAIL 5

1/4" = 1'-0"

Note:
The Contractor shall verify all controlling field dimensions before ordering or fabricating any materials.

Note:
End diaphragm and deck transv & Longit reinf not shown for clarity

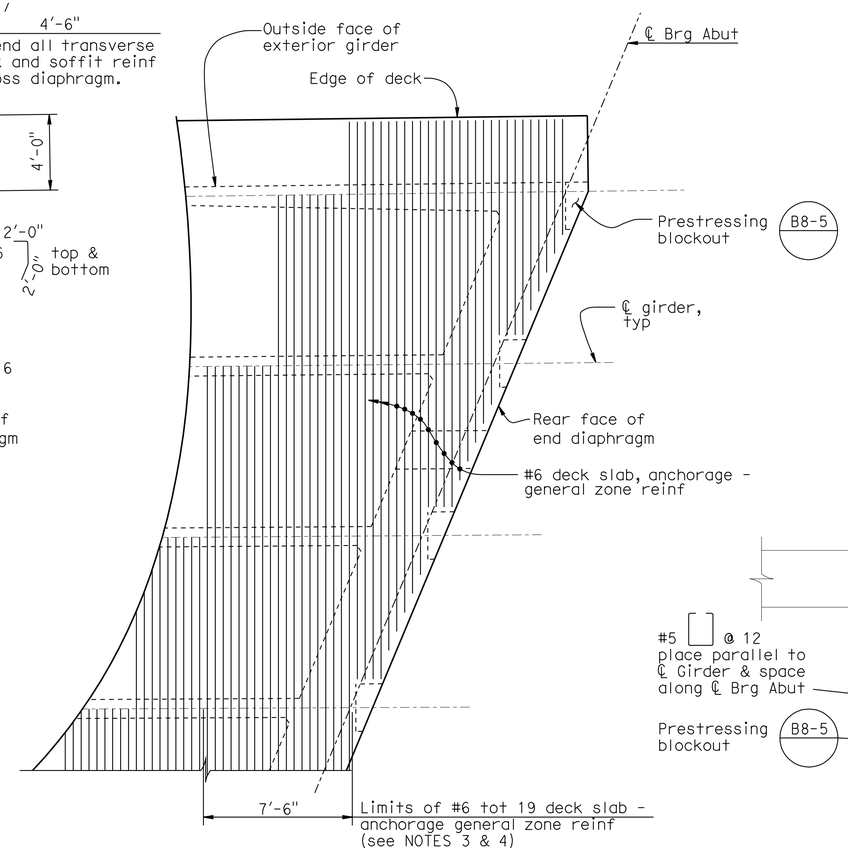

DECK SLAB AND BOTTOM SLAB ANCHORAGE - GENERAL ZONE REINFORCEMENT

No Scale

NOTES:

1. Extend alternate top transverse deck reinforcement 18" into diaphragm. Stop remaining transverse deck reinforcement 3" from face of diaphragm.
2. #4 B7-1 S-2
   Extend lower transverse soffit reinforcement 18" into diaphragm. Stop remaining transverse soffit reinforcement 3" from face of diaphragm.
3. Extend deck and soffit slabs general zone reinf to atleast the second girder beyond girder of note, within 7.5' from bearing plate.
4. Deck slab reinf shown soffit slab reinf similar.
5. Soffit slab reinf may be placed as shown or as directed by the Engineer.

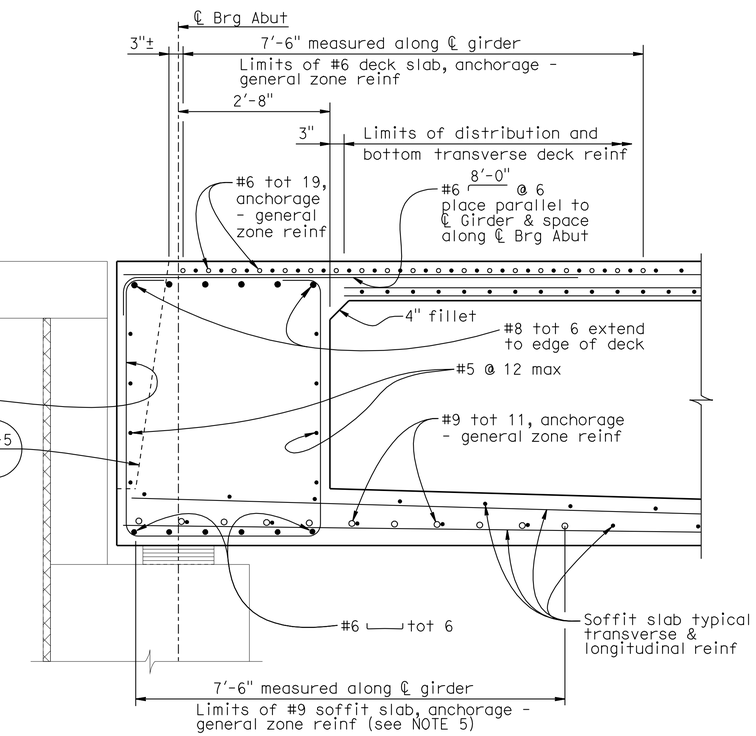

Note:
For web anchorage - general zone reinf, see "LONGITUDINAL SECTION" on "LONGITUDINAL SECTION" sht

END DIAPHRAGM SECTION/ ANCHORAGE - GENERAL ZONE REINFORCEMENT

3/4" = 1'-0"

Reza Erfanian
DESIGN OVERSIGHT Reza Erfanian
6/24/11
SIGN OFF DATE

	BY	CHECKED
DESIGN	S PERVAIZ	J MANISCALCO
DETAILS	J VOUGHT	J MANISCALCO
QUANTITIES	K SANFORD	E GAHAN

PREPARED FOR THE STATE OF CALIFORNIA DEPARTMENT OF TRANSPORTATION

JOHN A. KLEMUNES, JR.
PROJECT ENGINEER

BRIDGE NO. 29-0332
POST MILE 11.47

TURNER STATION OVERHEAD (REPLACE)

GIRDER LAYOUT NO. 2

DESIGN DETAIL SHEET (ENGLISH) (REV.7/16/10)

ORIGINAL SCALE IN INCHES FOR REDUCED PLANS 0 1 2 3

UNIT: 1455
PROJECT NUMBER & PHASE: 10000204411 CONTRACT NO.: 10-0E6121

DISREGARD PRINTS BEARING EARLIER REVISION DATES

REVISION DATES 5-3-10 2-4-11 5-19-11 6-24-11

SHEET 17 OF 29

FILE => 29-0332-1-g_1002.dgn

USERNAME => s121614 DATE PLOTTED => 01-DEC-2011 TIME PLOTTED => 10:54

DIST	COUNTY	ROUTE	POST MILES TOTAL PROJECT	SHEET No	TOTAL SHEETS
10	SJ	99	10.6/14.9	436	504

REGISTERED CIVIL ENGINEER 6-24-11 DATE

10-17-11
PLANS APPROVAL DATE

REGISTERED PROFESSIONAL ENGINEER SHARIO PERVAIZ No. C67068 Exp. 9-30-12 CIVIL STATE OF CALIFORNIA

The State of California or its officers or agents shall not be responsible for the accuracy or completeness of electronic copies of this plan sheet.

SAN JOAQUIN COUNCIL OF GOVERNMENTS
555 E. WEBER AVE.
STOCKTON, CA 95202

HDR ENGINEERING, INC.
2365 IRON POINT ROAD, SUITE 300
FOLSOM, CA 95630

PRESTRESSING NOTES

270 ksi Low Relaxation Strand:

	Stage 1 Construction	Stage 2 Construction	Stage 3 Construction
Pjack	6,600 Kips	8,200 Kips	10,325 Kips
Total No. of Girders	5	6	8

Anchor Set = 3/8"

Distribution of prestress force (Pjack) between girders shall not exceed the ratio of 3:2. Maximum final force variation between girders shall not exceed 725 kips.

Concrete: f'c = 4,000 psi @ 28 days
f'ci = 3,500 psi @ time of stressing

Contractor shall submit elongation calculations based on initial stress at point of no movement at ☒ = 0.896 times jacking stress.

One end stressing shall be performed from Abutment 1.

Design is based on μ = 0.15 and k = 0.0002.

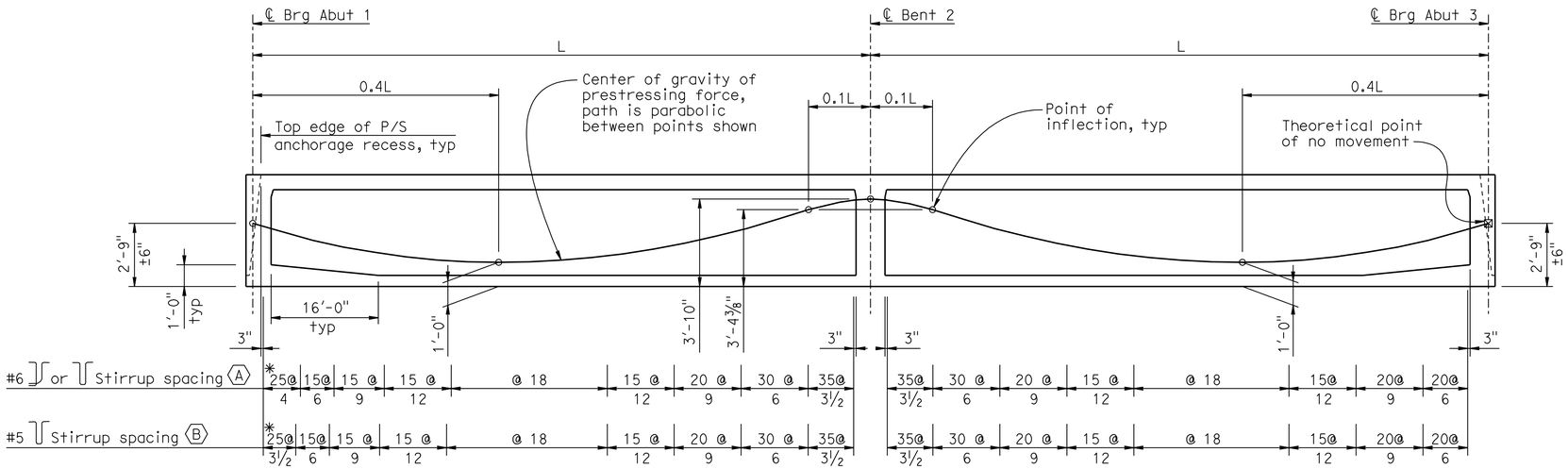

*Includes anchorage general zone web reinforcement.

LONGITUDINAL SECTION

No Scale

B0-5 B7-1 B8-5

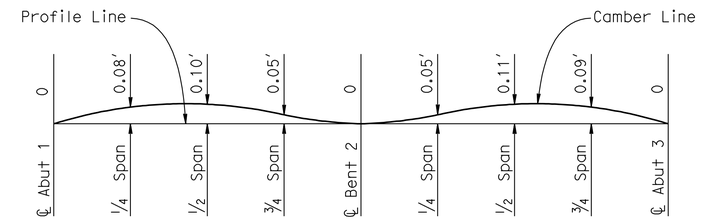

CAMBER DIAGRAM
STAGE 1 CONSTRUCTION

No Scale
(Does not include allowance for falsework settlement)

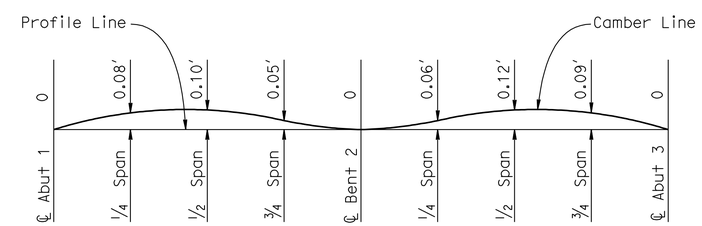

CAMBER DIAGRAM
STAGE 2 CONSTRUCTION

No Scale
(Does not include allowance for falsework settlement)

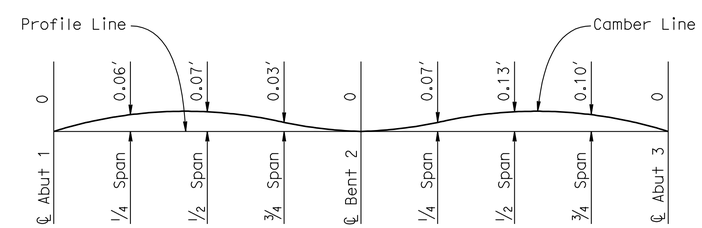

CAMBER DIAGRAM
STAGE 3 CONSTRUCTION

No Scale
(Does not include allowance for falsework settlement)

Note:
The Contractor shall verify all controlling field dimensions before ordering or fabricating any materials.

Reza Erfanian
DESIGN OVERSIGHT Reza Erfanian
6/24/11
SIGN OFF DATE

	BY	CHECKED
DESIGN	S PERVAIZ	J MANISCALCO
DETAILS	J VOUGHT	J MANISCALCO
QUANTITIES	K SANFORD	E GAHAN

PREPARED FOR THE STATE OF CALIFORNIA DEPARTMENT OF TRANSPORTATION

JOHN A. KLEMUNES, JR.
PROJECT ENGINEER

BRIDGE NO. 29-0332
POST MILE 11.47

TURNER STATION OVERHEAD (REPLACE)
LONGITUDINAL SECTION

DESIGN DETAIL SHEET (ENGLISH) (REV.7/16/10)

ORIGINAL SCALE IN INCHES FOR REDUCED PLANS 0 1 2 3

UNIT: 1455
PROJECT NUMBER & PHASE: 10000204411
CONTRACT NO.: 10-0E6121

DISREGARD PRINTS BEARING EARLIER REVISION DATES
REVISION DATES 5-3-10 2-4-11 5-19-11 6-24-11

SHEET 18 OF 29

FILE => 29-0332-l-g_lo03.dgn

USERNAME => s12614 DATE PLOTTED => 01-DEC-2011 TIME PLOTTED => 10:54

DIST	COUNTY	ROUTE	POST MILES TOTAL PROJECT	SHEET No	TOTAL SHEETS
10	SJ	99	10.6/14.9	437	504

REGISTERED CIVIL ENGINEER 6-24-11 DATE

10-17-11
PLANS APPROVAL DATE

REGISTERED PROFESSIONAL ENGINEER SHARIQ PERVAIZ No. C67068 Exp. 9-30-12 CIVIL STATE OF CALIFORNIA

The State of California or its officers or agents shall not be responsible for the accuracy or completeness of electronic copies of this plan sheet.

SAN JOAQUIN COUNCIL OF GOVERNMENTS
555 E. WEBER AVE.
STOCKTON, CA 95202

HDR ENGINEERING, INC.
2365 IRON POINT ROAD, SUITE 300
FOLSOM, CA 95630

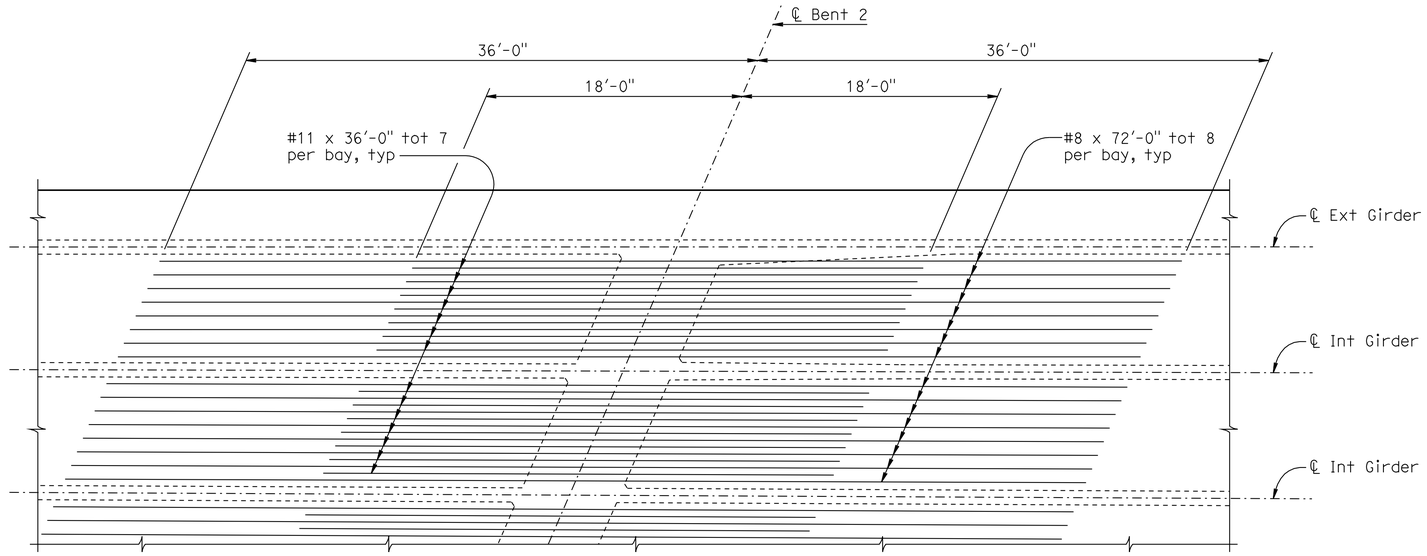

ADDITIONAL TOP LONGITUDINAL REINFORCEMENT

3/16" = 1'-0"

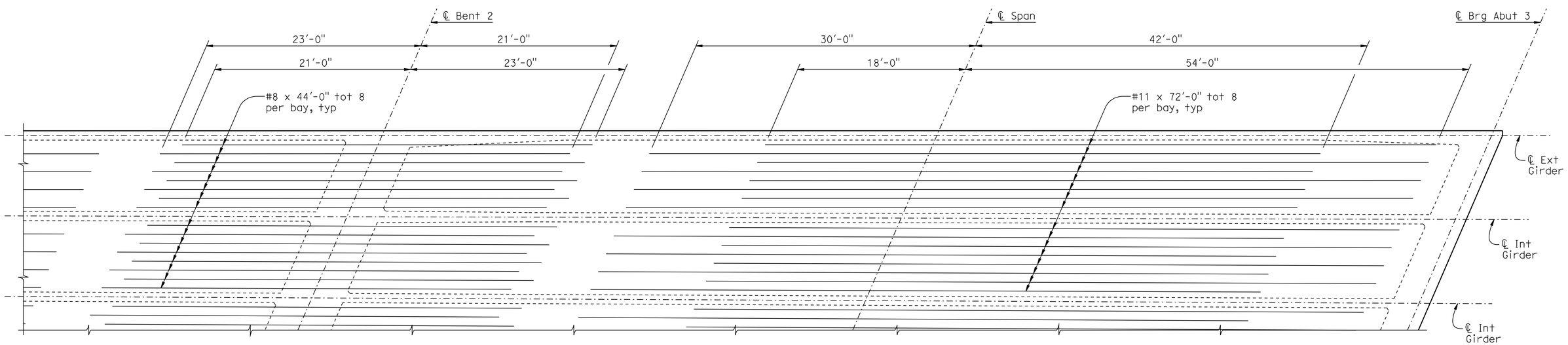

Note:
Span 2 shown, Span 1 similar.

ADDITIONAL BOTTOM LONGITUDINAL REINFORCEMENT

3/16" = 1'-0"

NOTES:
1. For additional detail and reinforcement, see "TYPICAL SECTION" sheet.
2. No splices allowed in longitudinal reinforcement.
3. Additional reinforcement shall be spaced equally within bays as shown on "TYPICAL SECTION" sheet.

Note:
The Contractor shall verify all controlling field dimensions before ordering or fabricating any materials.

Reza Erfanian
DESIGN OVERSIGHT Reza Erfanian
6/24/11
SIGN OFF DATE

	BY	CHECKED
DESIGN	S PERVAIZ	J MANISCALCO
DETAILS	J VOUGHT	J MANISCALCO
QUANTITIES	K SANFORD	E GAHAN

PREPARED FOR THE STATE OF CALIFORNIA DEPARTMENT OF TRANSPORTATION

JOHN A. KLEMUNES, JR.
PROJECT ENGINEER

BRIDGE NO. 29-0332
POST MILE 11.47

TURNER STATION OVERHEAD (REPLACE)
GIRDER REINFORCEMENT

DESIGN DETAIL SHEET (ENGLISH) (REV.7/16/10)

ORIGINAL SCALE IN INCHES FOR REDUCED PLANS 0 1 2 3

UNIT: 1455
PROJECT NUMBER & PHASE: 10000204411 CONTRACT NO.: 10-0E6121

DISREGARD PRINTS BEARING EARLIER REVISION DATES

REVISION DATES: 5-3-10 2-4-11 5-18-11 6-24-11

SHEET 19 OF 29

FILE => 29-0332-1-g_lo04.dgn

USERNAME => s121614 DATE PLOTTED => 01-DEC-2011 TIME PLOTTED => 10:54

DIST.	COUNTY	ROUTE	POST MILES TOTAL PROJECT	SHEET NO.	TOTAL SHEETS
10	SJ	99	10.6/14.9	438	504

REGISTERED ENGINEER - CIVIL 6-24-11

10-17-11
PLANS APPROVAL DATE

REGISTERED PROFESSIONAL ENGINEER SHARIQ PERVAIZ No. C67068 Exp. 9-30-12 CIVIL STATE OF CALIFORNIA

The State of California or its officers or agents shall not be responsible for the accuracy or completeness of electronic copies of this plan sheet.

SAN JOAQUIN COUNCIL OF GOVERNMENTS
555 E. WEBER AVE.
STOCKTON, CA 95202

HDR ENGINEERING, INC.
2365 IRON POINT ROAD, SUITE 300
FOLSOM, CA 95630

DETAIL A
DETAIL B
EDGE ANGLE DETAIL
SECTION C-C (TYPE E-2)
STRUCTURE APPROACH - END STAGGER DETAIL
SEAT TYPE ABUTMENT TIE DETAILS (MR>2")

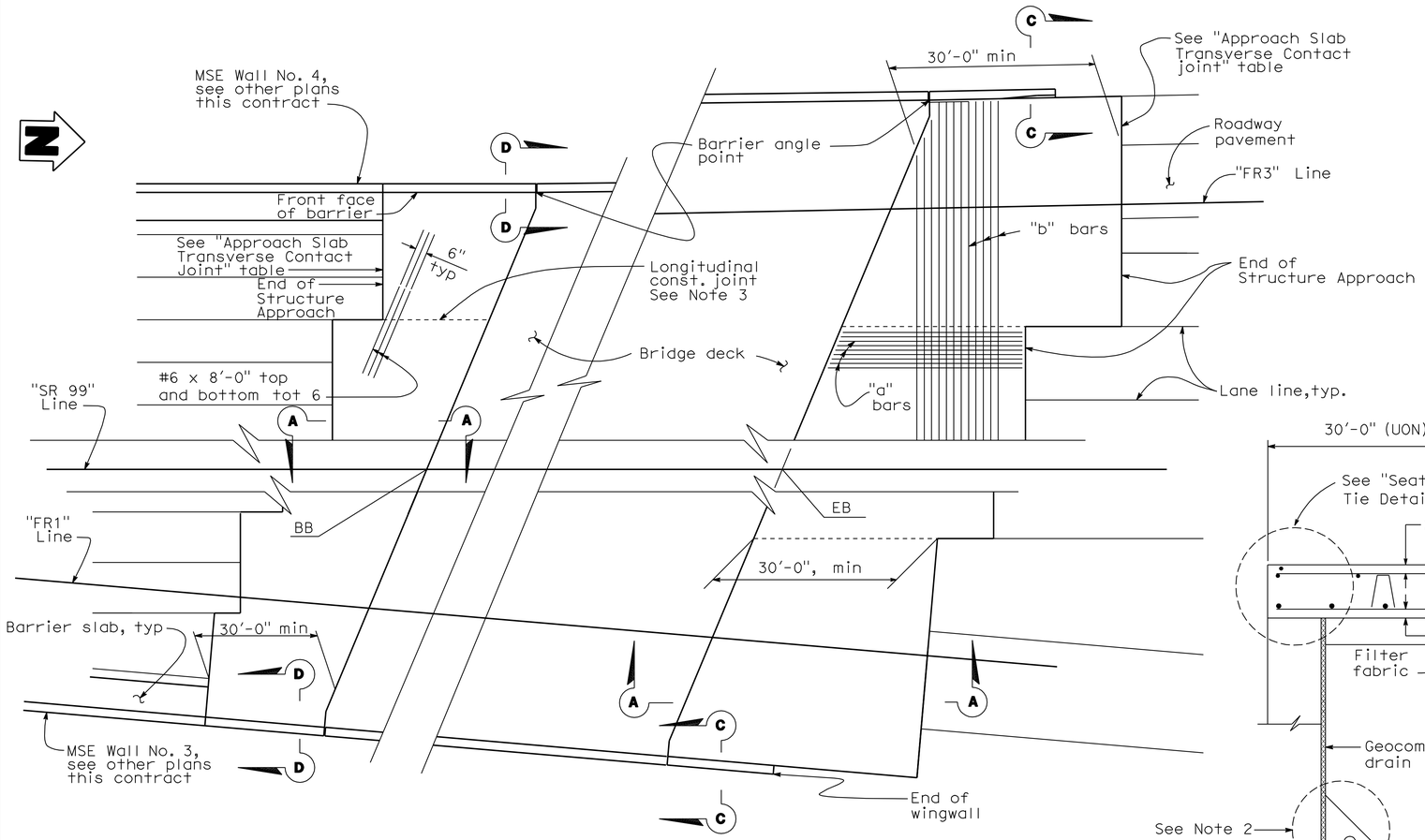

PLAN
No Scale

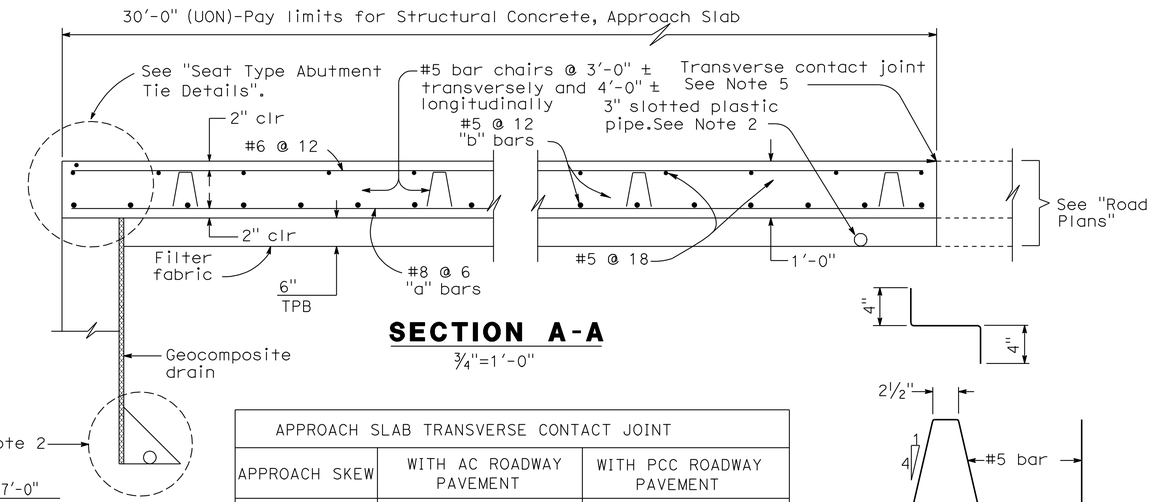

SECTION A-A
3/4"=1'-0"

APPROACH SLAB TRANSVERSE CONTACT JOINT		
APPROACH SKEW	WITH AC ROADWAY PAVEMENT	WITH PCC ROADWAY PAVEMENT
< 20°	Parallel to face of paving notch	Parallel to face of paving notch
20° - 45°	Parallel to face of P N use (Detail A)	Stagger lines 24' to 36' apart.
> 45°	Parallel to face of P N use (Detail A)	Stagger at each lane line.

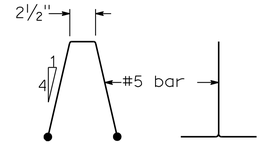

BAR CHAIR DETAIL
1 1/2"=1'-0"

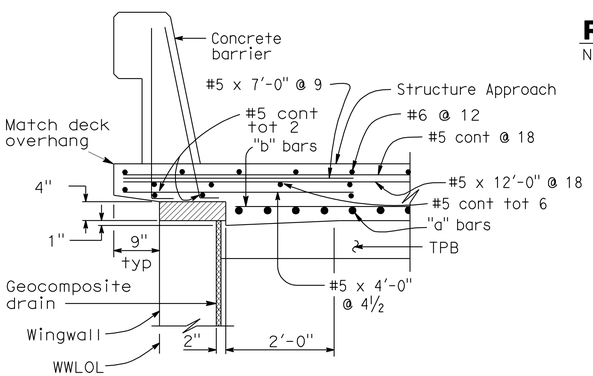

Note:
For approach slab overhang details over MSE wall, see "MSE WALL NO. 3 & 4" plans this contract

TYPE E-1
SECTION C-C
3/4"=1'-0"

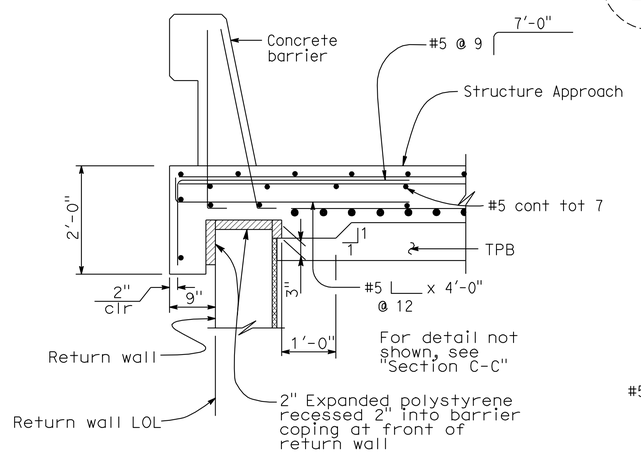

TYPE E-1
SECTION D-D
3/4"=1'-0"

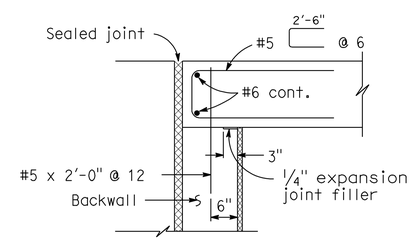

MR ≤ 2" (SEE NOTE 1)
SEAT TYPE ABUTMENT TIE DETAILS
3/4"=1'-0"

NOTES:

1. For details not shown,see Structure Plans. For MR ≤ 2",adjust bar reinforcement to clear a sawcut for sealed joint,when required.
2. For drainage details,see "Structure Approach Drainage Details" sheet.
3. Longitudinal construction joints,when permitted by the Engineer, shall be located on lane lines.
4. End angle or plate at beginning of barrier transition, end of wingwall or end of structure approach as applicable.
5. For transverse contact joint with new PCC paving, refer to Standard Plan P10.
6. At the contractor's option, approach slab transverse reinforcement may be placed parallel to paving notch. Spacing of transverse reinforcement is measured along ℄ roadway.

Remove all polystyrene.

STANDARD DRAWING

RELEASE DATE 3/14/05	DESIGN	BY M.TRAFFALIS	CHECKED E.THORKILDSEN	RELEASED BY
FILE NO. xs3-120e	DETAILS	BY R.YEE	CHECKED E.THORKILDSEN	
	SUBMITTED	BY M.HA	DRAWING DATE 4/98	OFFICE CHIEF

1 Modified Details 3 Added Details
2 Deleted Details

STATE OF CALIFORNIA
DEPARTMENT OF TRANSPORTATION

DIVISION OF ENGINEERING SERVICES

BRIDGE NO. 29-0332
POST MILE 11.47

TURNER STATION OVERHEAD (REPLACE)
STRUCTURE APPROACH TYPE N(30S)

DS OSD 2147A (ENGLISH) (REV. X/XX/XX)

ORIGINAL SCALE IN INCHES FOR REDUCED PLANS 0 1 2 3

UNIT: 1455
PROJECT NUMBER & PHASE: 10000204411 CONTRACT NO.: 10-0E6121

DISREGARD PRINTS BEARING EARLIER REVISION DATES

REVISION DATES 5-3-10 2-4-11 5-18-11 6-24-11

SHEET 20 OF 29

USERNAME => s121614

29-0332-s-sa01.dgn

DATE PLOTTED => 01-DEC-2011 TIME PLOTTED => 10:55

DIST.	COUNTY	ROUTE	POST MILES TOTAL PROJECT	SHEET NO.	TOTAL SHEETS
10	SJ	99	10.6/14.9	439	504

REGISTERED ENGINEER - CIVIL 6-24-11

PLANS APPROVAL DATE 10-17-11

REGISTERED PROFESSIONAL ENGINEER SHARIQ PERVAIZ No. C67068 Exp. 9-30-12 CIVIL STATE OF CALIFORNIA

The State of California or its officers or agents shall not be responsible for the accuracy or completeness of electronic copies of this plan sheet.

SAN JOAQUIN COUNCIL OF GOVERNMENTS
555 E. WEBER AVE.
STOCKTON, CA 95202

HDR ENGINEERING, INC.
2365 IRON POINT ROAD, SUITE 300
FOLSOM, CA 95630

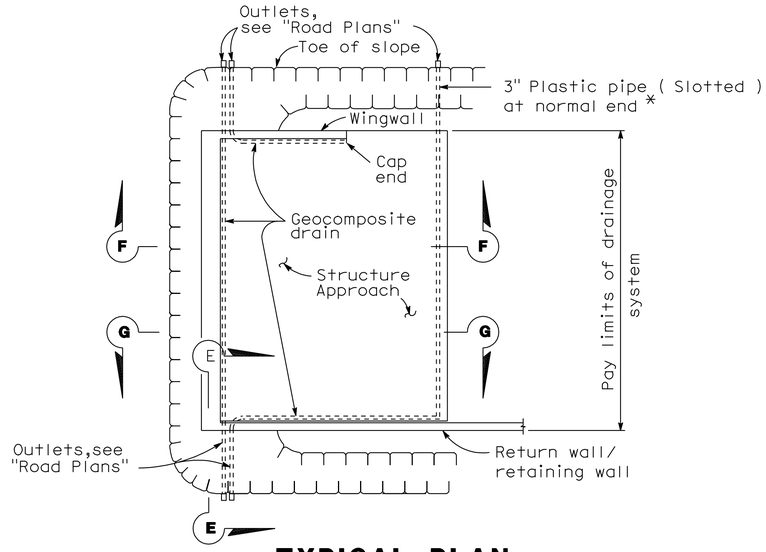

TYPICAL PLAN

1"=10'

*For pipe layout at staggered end,see "Detail B".

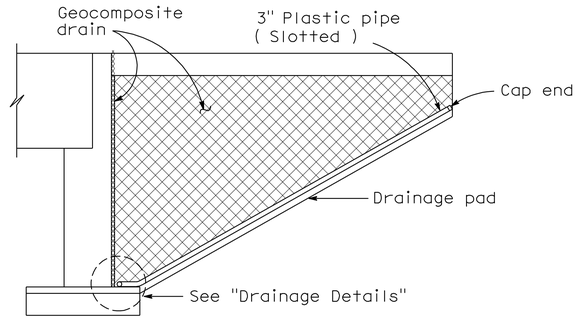

CANTILEVER WINGWALL SECTION F-F

1/4"=1'-0"

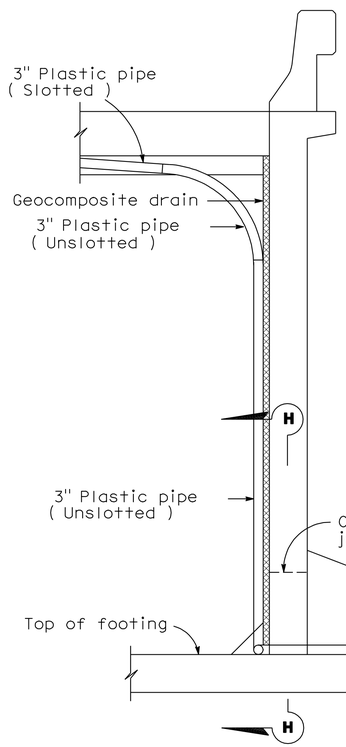

SECTION E-E

1/2"=1'-0"

NOTE: Bends and junctions in 3" plastic pipe are 30" radius min.

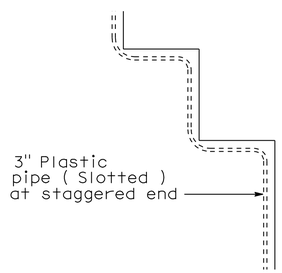

DETAIL B

No Scale

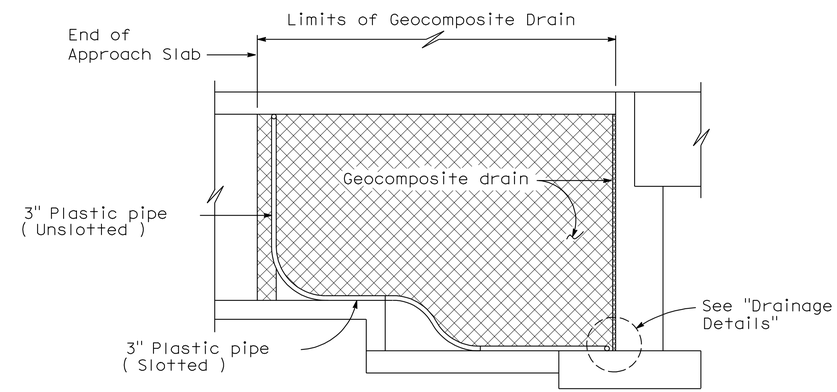

RETAINING WALL/RETURN WALL SECTION G-G

1/4"=1'-0"

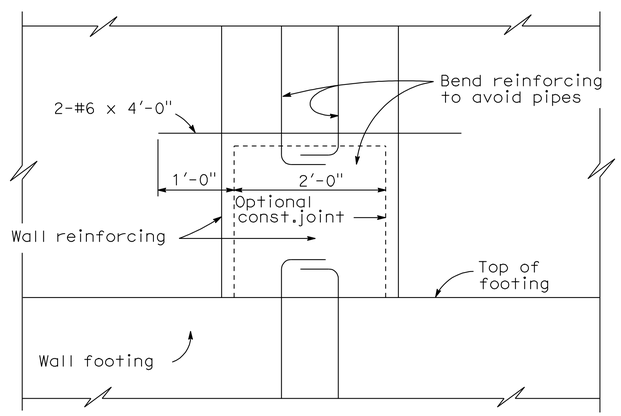

SECTION H-H

1"=1'-0"

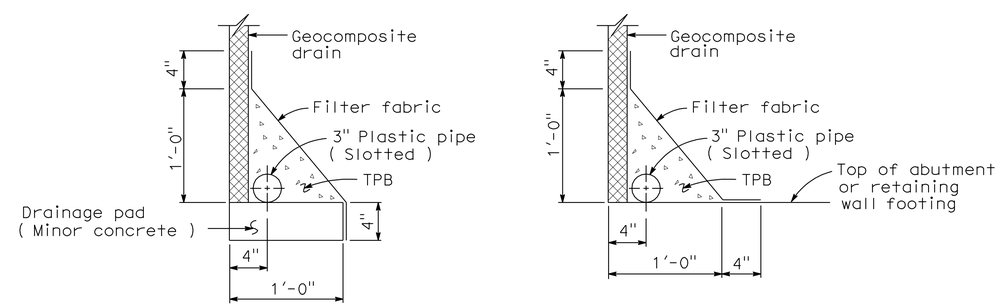

WITHOUT FOOTING WITH FOOTING

DRAINAGE DETAILS

1 1/2"=1'-0"

STANDARD DRAWING				
RELEASE DATE 4/23/98	DESIGN	BY M.TRAFFALIS	CHECKED E.THORKILDSEN	RELEASED BY
FILE NO. xs3-110e	DETAILS	BY R.YEE	CHECKED E.THORKILDSEN	OFFICE CHIEF
	SUBMITTED	BY M.HA	DRAWING DATE 4/98	

STATE OF CALIFORNIA DEPARTMENT OF TRANSPORTATION

DIVISION OF ENGINEERING SERVICES

BRIDGE NO. 29-0332 POST MILE 11.47

TURNER STATION OVERHEAD (REPLACE)

STRUCTURE APPROACH DRAINAGE DETAILS

DS OSD 2147A (ENGLISH) (REV. X/XX/XX)

ORIGINAL SCALE IN INCHES FOR REDUCED PLANS 0 1 2 3

UNIT: 1455
PROJECT NUMBER & PHASE: 10000204411 CONTRACT NO.: 10-0E6121

DISREGARD PRINTS BEARING EARLIER REVISION DATES

REVISION DATES 5-3-10 2-4-11 5-18-11 6-24-11 SHEET 21 OF 29

USERNAME => s121614

29-0332-s-sadd.dgn

DATE PLOTTED => 01-DEC-2011 TIME PLOTTED => 10:55

DIST	COUNTY	ROUTE	KILOMETER POST TOTAL PROJECT	SHEET No	TOTAL SHEETS
10	SJ	99	10.6/14.9	440	504

REGISTERED CIVIL ENGINEER 6-24-11 DATE

10-17-11
PLANS APPROVAL DATE

REGISTERED PROFESSIONAL ENGINEER SHARIQ PERVAIZ No. C67068 Exp. 9-30-12 CIVIL STATE OF CALIFORNIA

The State of California or its officers or agents shall not be responsible for the accuracy or completeness of electronic copies of this plan sheet.

SAN JOAQUIN COUNCIL OF GOVERNMENTS
555 E. WEBER AVE.
STOCKTON, CA 95202

HDR ENGINEERING, INC.
2365 IRON POINT ROAD, SUITE 300
FOLSOM, CA 95630

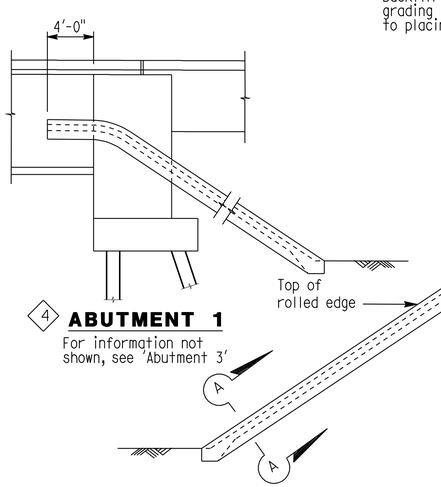

4 **ABUTMENT 1**
For information not shown, see 'Abutment 3'

WINGWALL ELEVATION

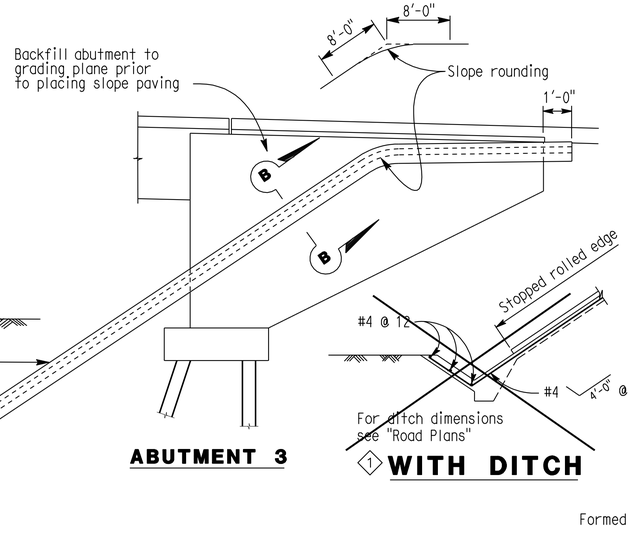

ABUTMENT 3

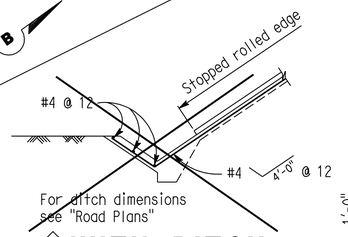

1 **WITH DITCH**

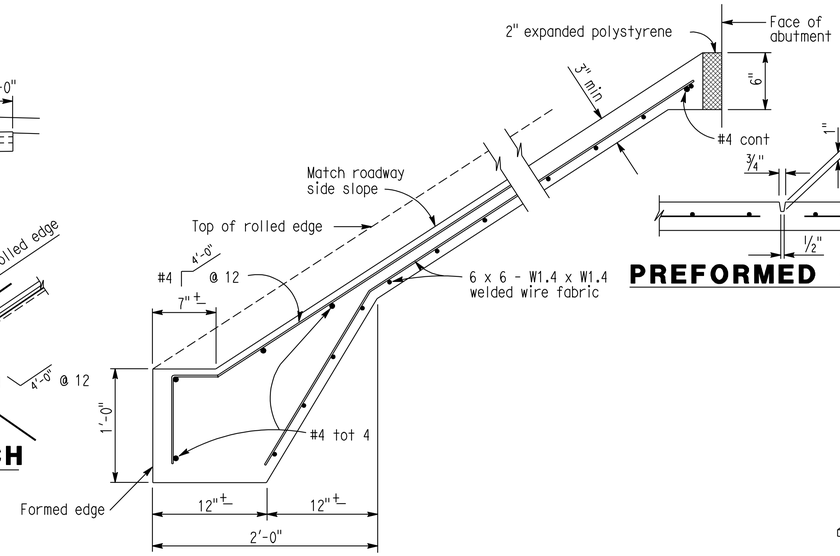

PREFORMED GROOVE

TYPICAL SECTION - CONCRETE PAVING

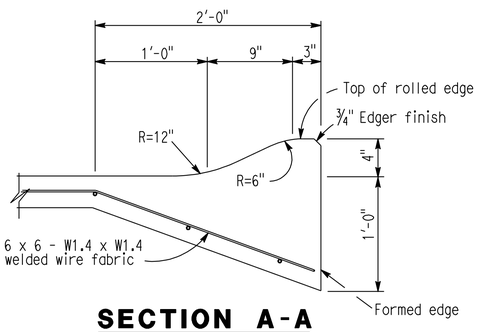

SECTION A-A

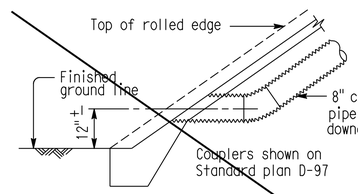

TYPICAL - NO CURB

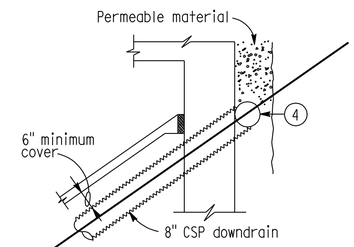

TYPICAL - DRAIN CONNECTION

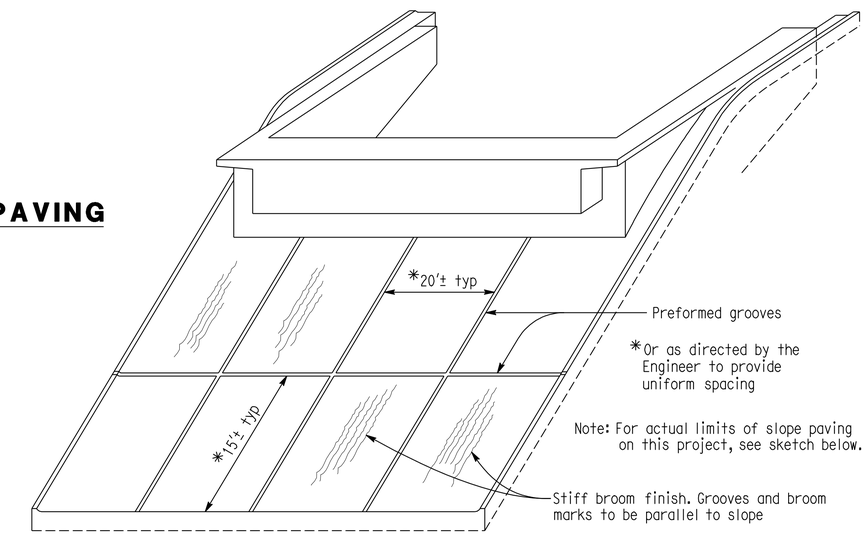

PICTORIAL VIEW OF TYPICAL INSTALLATION 3

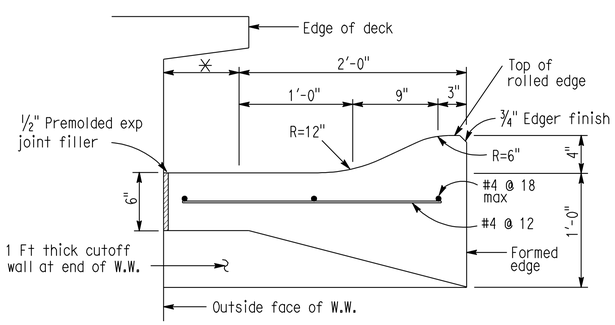

SECTION B-B

*This dimension becomes zero when edge of deck is at outside face of W.W.

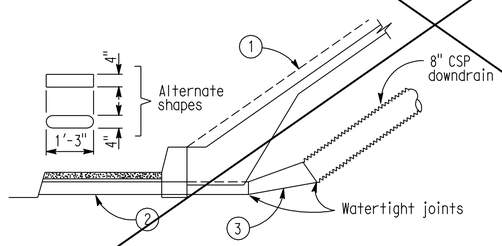

TYPICAL - WITH SIDEWALK

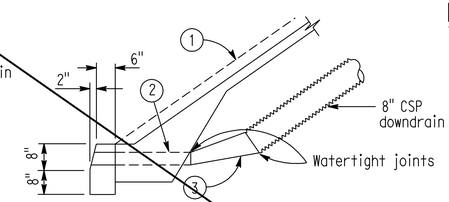

TYPICAL - WITH CURB

1 **DRAINAGE DETAILS**

Note: Drainage details are only applicable when is indicated on detail sheets. B0-3 / 3-5

2
1. Top of rolled edge
2. Conduit: 0.064" galv corrugated steel or 0.109" smooth galv steel
3. Taper: 0.064" galv corrugated steel or 0.109" smooth galv steel
4. 8" perforated steel pipe (0.064" thick) underdrain behind abutment. Connect to downdrain as shown on limits of Slope Paving & Drainage layout.

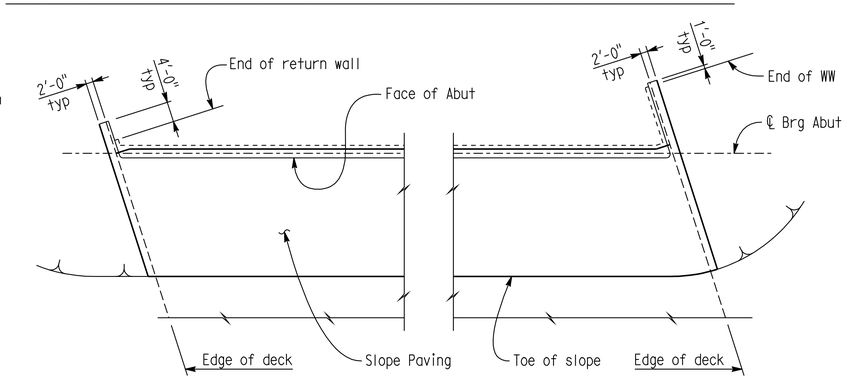

ABUTMENT 1
East corner shown, West corner similar.

ABUTMENT 3
East corner shown, West corner similar.

LIMITS OF SLOPE PAVING

STANDARD DRAWING

RELEASE DATE	DESIGN	BY	CHECKED	RELEASED BY
FILE NO. xs4-210	DETAILS	BY D. Wooten	CHECKED	Susan Hida OFFICE CHIEF
	SUBMITTED	BY Dan Adams	DRAWING DATE 6/07	

1 DELETED DETAIL
2 DELETED NOTE
3 REVISED DETAIL
4 ADDED DETAIL

STATE OF CALIFORNIA
DEPARTMENT OF TRANSPORTATION

DIVISION OF ENGINEERING SERVICES

BRIDGE NO. 29-0332
POST MILE 11.47

TURNER STATION OVERHEAD (REPLACE)

SLOPE PAVING - FULL SLOPE

DS OSD 2147A (CADD) (REV. 4/07)

ORIGINAL SCALE IN INCHES FOR REDUCED PLANS 0 1 2 3

UNIT: 1455
PROJECT NUMBER & PHASE: 10000204411 CONTRACT NO.: 10-0E6121

DISREGARD PRINTS BEARING EARLIER REVISION DATES

REVISION DATES 5-3-10 2-4-11 5-18-11 6-24-11

SHEET 22 OF 29

USERNAME => s121614

29-0332-t-sp01.dgn

DATE PLOTTED => 01-DEC-2011 TIME PLOTTED => 10:55

DIST.	COUNTY	ROUTE	POST MILES TOTAL PROJECT	SHEET NO.	TOTAL SHEETS
10	SJ	99	10.6/14.9	441	504

REGISTERED ENGINEER - CIVIL 6-24-11

10-17-11
PLANS APPROVAL DATE

REGISTERED PROFESSIONAL ENGINEER SHARIQ PERVAIZ No. C67068 Exp. 9-30-12 CIVIL STATE OF CALIFORNIA

The State of California or its officers or agents shall not be responsible for the accuracy or completeness of electronic copies of this plan sheet.

SAN JOAQUIN COUNCIL OF GOVERNMENTS
555 E. WEBER AVE.
STOCKTON, CA 95202

HDR ENGINEERING, INC.
2365 IRON POINT ROAD, SUITE 300
FOLSOM, CA 95630

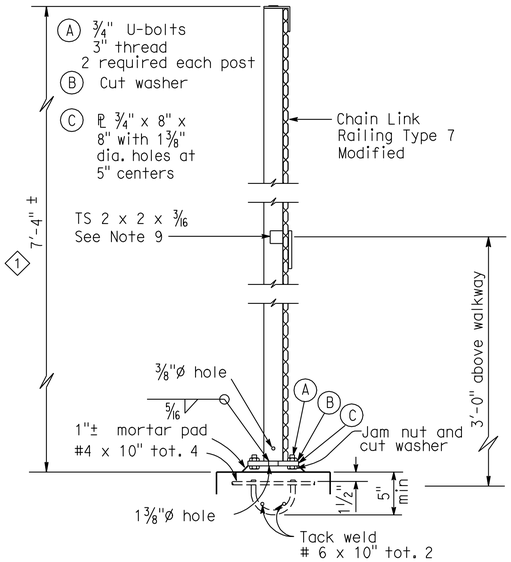

TYPICAL POST DETAIL

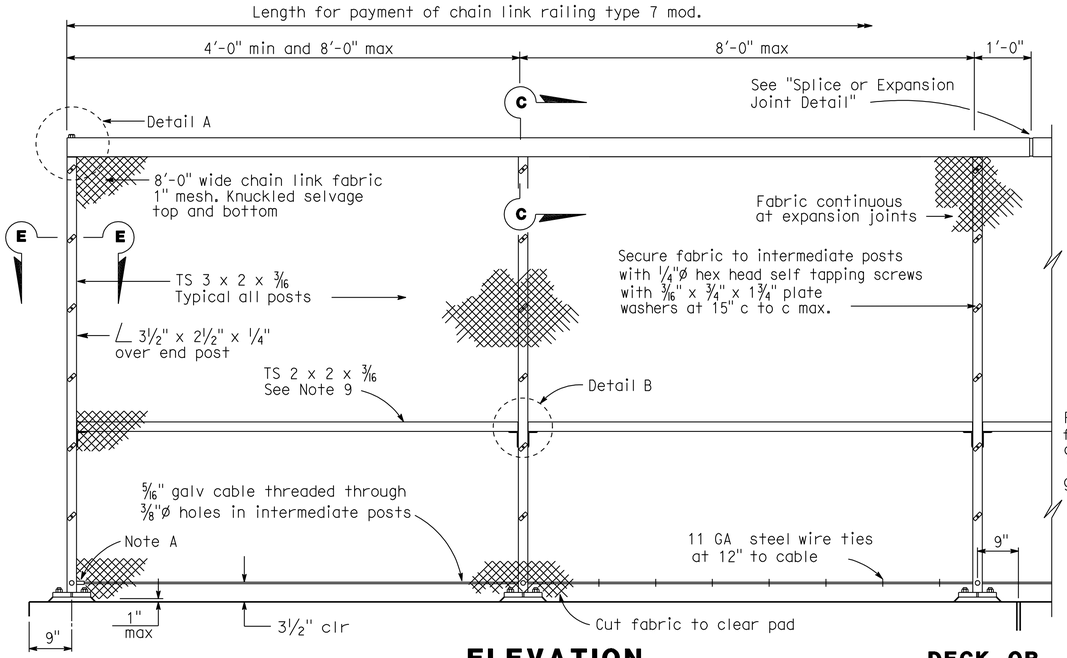

END POST

ELEVATION

DECK OR WALL JOINT

Note A: Anchor 5/16" galvanized cable at end post with ½"Ø stud socket assembly or ½"Ø welded eyebolt and crimped sleeve clamp. Provide 1½" min. take-up at each anchorage.

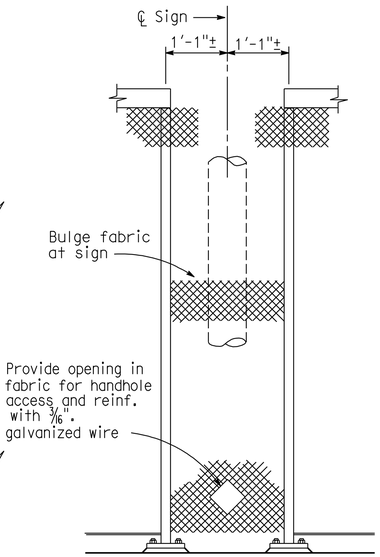

SIGN PANEL

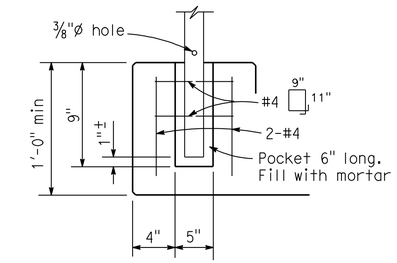

ALTERNATIVE ANCHORAGE DETAIL

May be used when thickness of concrete is 1'-0" or more. Not to be used when post contains electrical conduit.

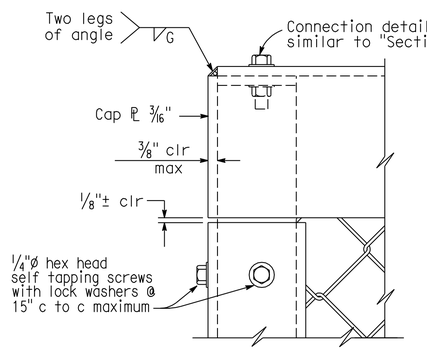

DETAIL A

1 ¼"Ø hex head self-tapping screws with lock washers @ 15" c.to c. maximum

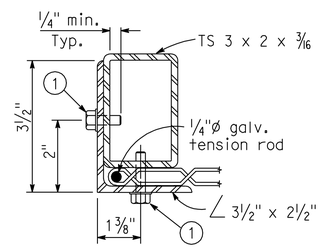

SECTION E-E

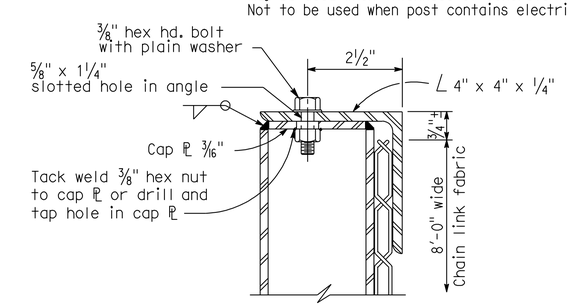

SECTION C-C

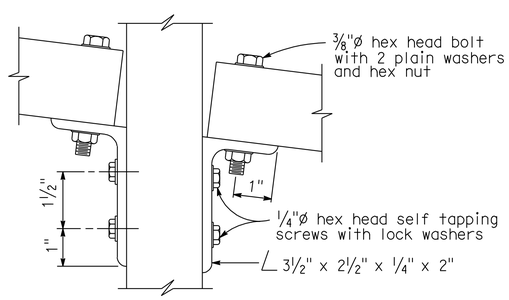

DETAIL B

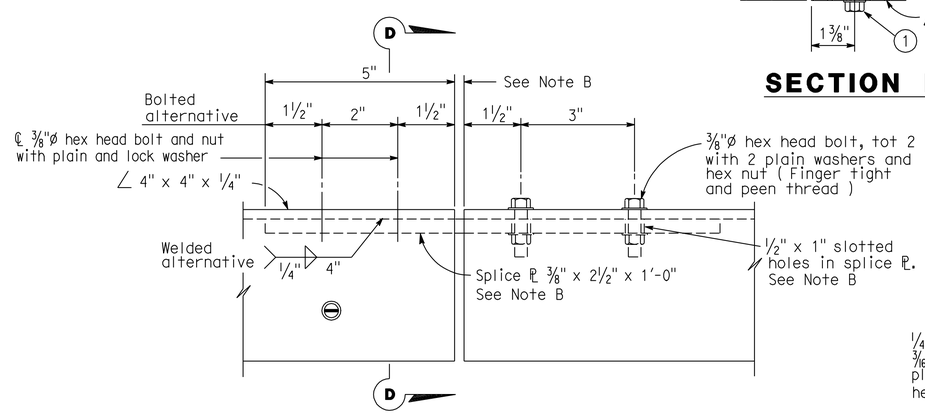

SPLICE OR EXPANSION JOINT DETAIL

Note B: Expansion joint same dimension as expansion joint in deck or wall. Increase slotted hole length and splice PL length correspondingly.

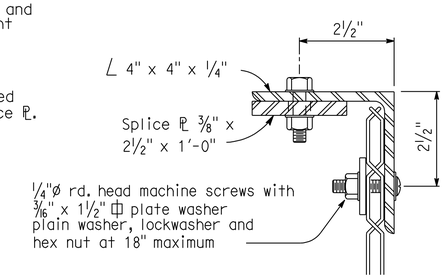

SECTION D-D

NOTES:

1. Railing assembly except chain link fabric to be galvanized after fabrication.
2. Railing shall conform to horizontal and vertical alignment. Post shall be vertical. Horizontal angle shall be bent to conform to horizontal alignment if radius is 150'-0" or less.
3. Horizontal angle shall be continuous over not less than two intermediate posts,except that a shorter length is permitted at expansion joints and other rail discontinuities.
4. When railing is placed on curved horizontal alignment with radius of 150'-0" or less,drill ½"Ø x 3" deep hole in slab and set in epoxy adhesives ⅜"Ø welded eyebolt for 5/16" cable to limit the midordinate distance between the 5/16" cable and curve to be 1" max.
5. Place fabric parallel to slope.
6. Alternative details may be submitted by the Contractor for Engineer's approval.
7. Provide thimbles at all cable loops.
8. Peen all exposed bolts.
9. TS 2 x 2 x 3/16 required for curves with radius of 150'-0" or less. Bend to conform to curve.

STANDARD DRAWING

FILE NO. xs16-360e

APPROVED BY T SATTER — RESPONSIBLE TECHNICAL SPECIALIST
APPROVAL DATE 4-15-08

RELEASED BY ROBERTO LACALLE — RESPONSIBLE OFFICE CHIEF
RELEASE DATE 4-15-08

1 Revised Dimension

STATE OF CALIFORNIA DEPARTMENT OF TRANSPORTATION

DIVISION OF ENGINEERING SERVICES

BRIDGE NO. 29-0332
POST MILE 11.47

TURNER STATION OVERHEAD (REPLACE)

CHAIN LINK RAILING TYPE 7 MODIFIED

DS OSD 2147A (ENGLISH STANDARD DRAWING "XS" BORDER REV. 01/11/08)

ORIGINAL SCALE IN INCHES FOR REDUCED PLANS 0 1 2 3

UNIT: 1455
PROJECT NUMBER & PHASE: 10000204411 CONTRACT NO.: 10-0E6121

DISREGARD PRINTS BEARING EARLIER REVISION DATES

REVISION DATES: 5-3-10 2-4-11 5-18-11 6-24-11

SHEET 23 OF 29

USERNAME => s121614

29-0332-u-clr01.dgn

DATE PLOTTED -> 01-DEC-2011 TIME PLOTTED -> 10:55

DIST	COUNTY	ROUTE	POST MILES TOTAL PROJECT	SHEET No	TOTAL SHEETS
10	SJ	99	10.6/14.9	442	504

CERTIFIED ENGINEERING GEOLOGIST — DATE 6-24-11

PROFESSIONAL GEOLOGIST William E. Nichols No. 2229 Exp. 1-31-12 CERTIFIED ENGINEERING GEOLOGIST STATE OF CALIFORNIA

10-17-11
PLANS APPROVAL DATE

The State of California or its officers or agents shall not be responsible for the accuracy or completeness of electronic copies of this plan sheet.

SAN JOAQUIN COUNCIL OF GOVERNMENTS
555 E. WEBER AVE.
STOCKTON, CA 95202

BLACKBURN CONSULTING
2491 BOATMAN AVENUE
WEST SACRAMENTO, CA 95691 FILE No. 1201.6d

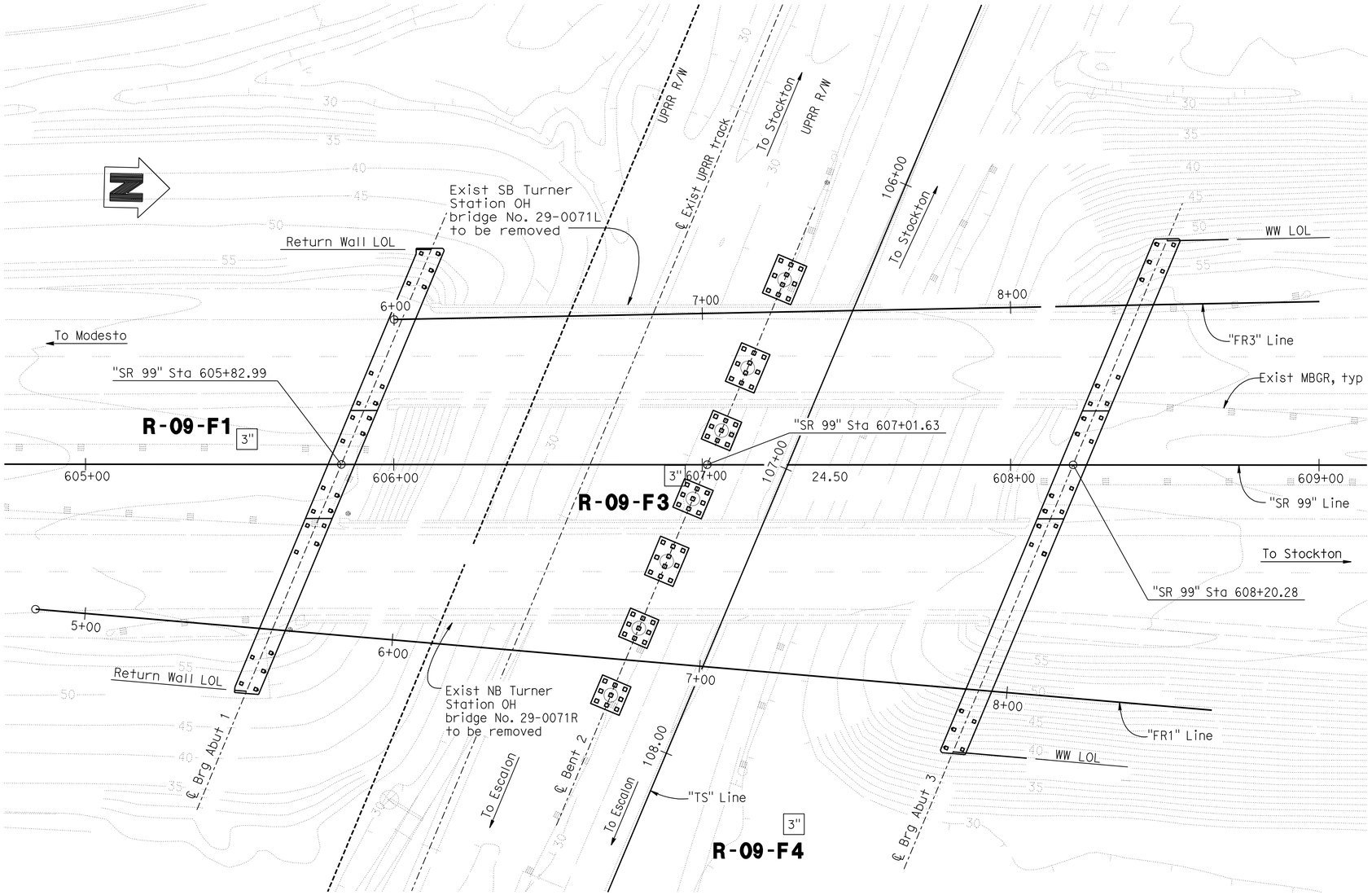

PLAN
1" = 20'

NOTES:

1. Field classification of soils was in accordance with the Caltrans Soil & Rock Logging, Classification, and Presentation Manual (June 2007). See Log of Test Borings No. 4 and 5, "Soil Legend".
2. Standard Penetration tests were performed in accordance with ASTM D 1586-99 using a hammer operated with an automated drop system. Drill rods were 1 5/8-inch diameter "A"-rods; sampler was driven with brass liners.
3. "2.4 inch sampler": ID=2.4 inch, OD=2.9 inch. Driven in same manner as SPT ("1.4 inch") sampler.
4. Where less than the 0.5 inches of penetration is achieved, the blow count shown is for that fraction of the interval actually penetrated.
5. If laboratory tests are not shown as being performed, the soil descriptions presented in the LOTB are based solely on the visual practices described in the before mentioned Manual.
6. The length of each sampled interval is shown graphically on the boring log.
7. Consistency of soils shown in ( ) where estimated.
8. Groundwater surface (GWS) reflect the fluid level in the borings on the specified date. Groundwater surface is subject to seasonal fluctuations and may occur at higher or lower elevations depending on the conditions at any particular time.
9. Electronic media for plan view provided by HDR Engineering, Foundation Plans, 65%, plot date 11/19/09.
10. Boring elevations are approximate and based on "Planning Study" plans dated 1/23/09 provided by HDR Engineering, Inc.
11. The "Log of Test Borings" drawing is included with plans in accordance with Section 2-1.03 of Caltrans "Standard Specifications".

BENCH MARKS

BENCHMARK# 645 ELEV. 58.24 Ft
DESCRIPTION: KSN Control Point, 1/2" REBAR WITH YELLOW CAP STAMPED "KSN CONTROL", LOCATED AT APPROXIMATE CENTERLINE STATION 605+95 ON THE SOUTHBOUND MAINLINE, ON THE INSIDE SHOULDER, 3.5' EAST OF THE EDGE OF PAVEMENT, 11' WEST OF THE FACE OF THE GUARDRAIL, AND 4' SOUTH OF THE SOUTHEAST CORNER OF THE FRENCH CAMP OVER CROSSING BRIDGE. NGVD 29, N2136239.71, E6354178.61.

BENCHMARK# 641 ELEV. 56.89 Ft
DESCRIPTION: KSN Control Point, 1/2" REBAR WITH YELLOW CAP STAMPED "KSN CONTROL", LOCATED APPROXIMATE CENTERLINE STATION 608+14 ON THE NORTHBOUND MAINLINE, ON THE INSIDE SHOULDER, 2' WEST OF THE EDGE OF PAVEMENT, 10.5' EAST OF THE FACE OF THE GUARDRAIL, 6' NORTH OF THE FRENCH CAMP OVER CROSSING BRIDGE. NGVD 29, N2136459.41, E6354207.75.

Reza Erfanian — DESIGN OVERSIGHT Reza Erfanian	DRAWN BY	M ROBERTSON	A. SHINNEFIELD — FIELD INVESTIGATION BY:
6/24/11 — SIGN OFF DATE	CHECKED BY	K. CHAPMAN	DATE: March, May and July 2009

PREPARED FOR THE STATE OF CALIFORNIA DEPARTMENT OF TRANSPORTATION

JOHN A. KLEMUNES, JR. — PROJECT ENGINEER

BRIDGE NO. 29-0332 — POST MILE 11.47

TURNER STATION OVERHEAD (REPLACE)
LOG OF TEST BORINGS NO. 1

GS LOTB SOIL LEGEND SHEET 1 (ENGLISH) (REV. 07/16/10)

ORIGINAL SCALE IN INCHES FOR REDUCED PLANS 0 1 2 3

UNIT: 1455
PROJECT NUMBER & PHASE: 10000204411 CONTRACT NO.: 10-0E6121

DISREGARD PRINTS BEARING EARLIER REVISION DATES → 3-10-10 2-24-11 5-18-11 6-24-11

SHEET 24 OF 29

FILE => 29-0332-z-ltb01.dgn

USERNAME => s12161d DATE PLOTTED => 01-DEC-2011 TIME PLOTTED => 10:56

DIST	COUNTY	ROUTE	POST MILES TOTAL PROJECT	SHEET No	TOTAL SHEETS
10	SJ	99	10.6/14.9	443	504

CERTIFIED ENGINEERING GEOLOGIST — DATE 6-24-11

PROFESSIONAL GEOLOGIST William E. Nichols No. 2229 Exp. 1-31-12 CERTIFIED ENGINEERING GEOLOGIST STATE OF CALIFORNIA

10-17-11
PLANS APPROVAL DATE

The State of California or its officers or agents shall not be responsible for the accuracy or completeness of electronic copies of this plan sheet.

SAN JOAQUIN COUNCIL OF GOVERNMENTS
555 E. WEBER AVE.
STOCKTON, CA 95202

BLACKBURN CONSULTING
2491 BOATMAN AVENUE
WEST SACRAMENTO, CA 95691 FILE No. 1201.6d

FOR PLAN VIEW AND NOTES SEE LOG OF TEST BORINGS 1 OF 6

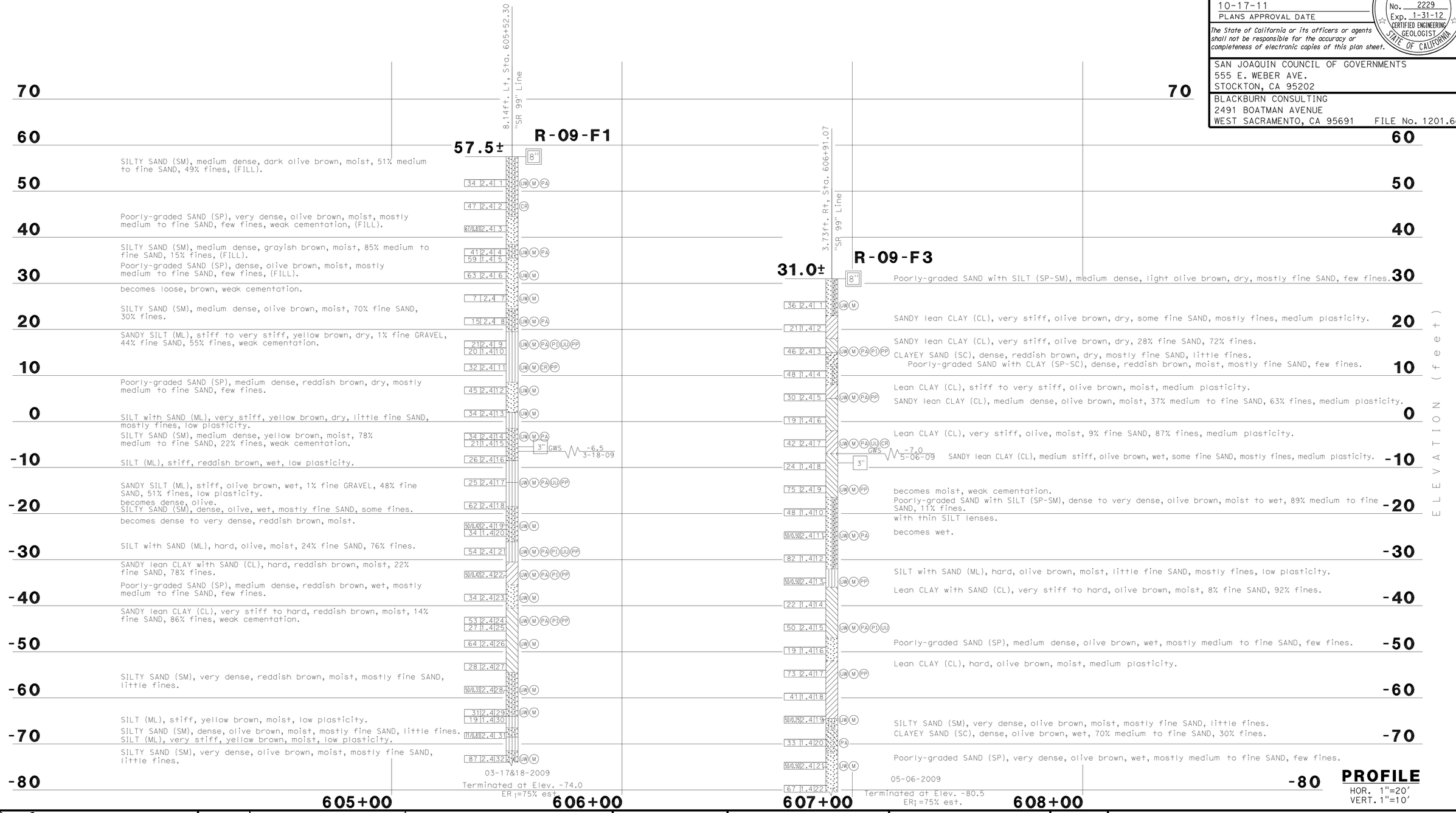

Reza Erfanian
DESIGN OVERSIGHT Reza Erfanian
6/24/11
SIGN OFF DATE

DRAWN BY M ROBERTSON
CHECKED BY K. CHAPMAN

A. SHINNEFIELD
FIELD INVESTIGATION BY:
DATE: March, May and July 2009

PREPARED FOR THE STATE OF CALIFORNIA DEPARTMENT OF TRANSPORTATION

JOHN A. KLEMUNES, JR.
PROJECT ENGINEER

BRIDGE NO. 29-0332
POST MILE 11.47

TURNER STATION OVERHEAD (REPLACE)

LOG OF TEST BORINGS NO. 2

GS LOTB SOIL LEGEND SHEET 1 (ENGLISH) (REV. 07/16/10)

ORIGINAL SCALE IN INCHES FOR REDUCED PLANS 0 1 2 3

UNIT: 1455
PROJECT NUMBER & PHASE: 10000204411 CONTRACT NO.: 10-0E6121

DISREGARD PRINTS BEARING EARLIER REVISION DATES

REVISION DATES 3-18-10 2-24-11 5-18-11 6-24-11

SHEET 25 OF 29

FILE => 29-0332-z-ltb02.dgn

USERNAME => s12161614 DATE PLOTTED => 01-DEC-2011 TIME PLOTTED => 10:56

DIST	COUNTY	ROUTE	POST MILES TOTAL PROJECT	SHEET No	TOTAL SHEETS
10	SJ	99	10.6/14.9	444	504

CERTIFIED ENGINEERING GEOLOGIST — DATE 6-24-11

PROFESSIONAL GEOLOGIST William E. Nichols No. 2229 Exp. 1-31-12 CERTIFIED ENGINEERING GEOLOGIST STATE OF CALIFORNIA

10-17-11
PLANS APPROVAL DATE

The State of California or its officers or agents shall not be responsible for the accuracy or completeness of electronic copies of this plan sheet.

SAN JOAQUIN COUNCIL OF GOVERNMENTS
555 E. WEBER AVE.
STOCKTON, CA 95202

BLACKBURN CONSULTING
2491 BOATMAN AVENUE
WEST SACRAMENTO, CA 95691 FILE No. 1201.6d

FOR PLAN VIEW AND NOTES SEE LOG OF TEST BORINGS 1 OF 6

PROFILE
HOR. 1"=20'
VERT. 1"=10'

Reza Erfanian — DESIGN OVERSIGHT Reza Erfanian — 6/24/11 — SIGN OFF DATE	DRAWN BY M ROBERTSON	A. SHINNEFIELD — FIELD INVESTIGATION BY:	PREPARED FOR THE STATE OF CALIFORNIA DEPARTMENT OF TRANSPORTATION
	CHECKED BY K. CHAPMAN	DATE: March, May and July 2009	

JOHN A. KLEMUNES, JR. — PROJECT ENGINEER

BRIDGE NO. 29-0332
POST MILE 11.47

TURNER STATION OVERHEAD (REPLACE)
LOG OF TEST BORINGS NO. 3

GS LOTB SOIL LEGEND SHEET 1 (ENGLISH) (REV. 07/16/10)

ORIGINAL SCALE IN INCHES FOR REDUCED PLANS 0 1 2 3

UNIT: 1455
PROJECT NUMBER & PHASE: 10000204411 CONTRACT NO.: 10-0E6121

DISREGARD PRINTS BEARING EARLIER REVISION DATES

REVISION DATES: 3-10-10 2-04-11 5-18-11 6-24-11

SHEET 26 OF 29

FILE => 29-0332-z-1tb03.dgn

USERNAME => s121614 DATE PLOTTED => 01-DEC-2011 TIME PLOTTED => 10:56

DIST	COUNTY	ROUTE	POST MILES TOTAL PROJECT	SHEET No	TOTAL SHEETS
10	SJ	99	10.6/14.9	445	504

CERTIFIED ENGINEERING GEOLOGIST — DATE 6-24-11

10-17-11
PLANS APPROVAL DATE

The State of California or its officers or agents shall not be responsible for the accuracy or completeness of electronic copies of this plan sheet.

PROFESSIONAL GEOLOGIST William E. Nichols No. 2229 Exp. 1-31-12 CERTIFIED ENGINEERING GEOLOGIST STATE OF CALIFORNIA

SAN JOAQUIN COUNCIL OF GOVERNMENTS
555 E. WEBER AVE.
STOCKTON, CA 95202

BLACKBURN CONSULTING
2491 BOATMAN AVENUE
WEST SACRAMENTO, CA 95691 FILE No. 1201.6d

REFERENCE: CALTRANS SOIL & ROCK LOGGING, CLASSIFICATION, AND PRESENTATION MANUAL, (JUNE, 2007)

CEMENTATION

Description	Criteria
Weak	Crumbles or breaks with handling or little finger pressure.
Moderate	Crumbles or breaks with considerable finger pressure.
Strong	Will not crumble or break with finger pressure.

CONSISTENCY OF COHESIVE SOILS

Description	Unconfined Compressive Strength (tsf)	Pocket Penetrometer Measurement (tsf)	Torvane Measurement (tsf)	Field Approximation
Very Soft	<0.25	<0.25	<0.12	Easily penetrated several inches by fist
Soft	0.25 to 0.50	0.25 to 0.50	0.12 to 0.25	Easily penetrated several inches by thumb
Medium Stiff	0.50 to 1.0	0.50 to 1.0	0.25 to 0.50	Penetrated several inches by thumb with moderate effort
Stiff	1 to 2	1 to 2	0.50 to 1.0	Readily indented by thumb but penetrated only with great effort
Very Stiff	2 to 4	2 to 4	1.0 to 2.0	Readily indented by thumbnail
Hard	> 4.0	> 4.0	> 2.0	Indented by thumbnail with difficulty

BOREHOLE IDENTIFICATION

Symbol	Hole Type	Description
Size	A	Auger Boring
Size	R P	Rotary drilled boring Rotary percussion boring (air)
Size	R	Rotary drilled diamond core
Size	HD HA	Hand driven (1-inch soil tube) Hand Auger
○	D	Dynamic Cone Penetration Boring
▲	CPT	Cone Penetration Test (ASTM D 5778)
□	O	Other

NOTE: Size in inches.

PLASTICITY OF FINE-GRAINED SOILS

Description	Criteria
Nonplastic	A 1/8-inch thread cannot be rolled at any water content.
Low	The thread can barely be rolled and the lump cannot be formed when drier than the plastic limit.
Medium	The thread is easy to roll and not much time is required to reach the plastic limit. The thread cannot be rerolled after reaching the plastic limit. The lump crumbles when drier than the plastic limit.
High	It takes considerable time rolling and kneading to reach the plastic limit. The thread can be rerolled several times after reaching the plastic limit. The lump can be formed without crumbling when drier than the plastic limit.

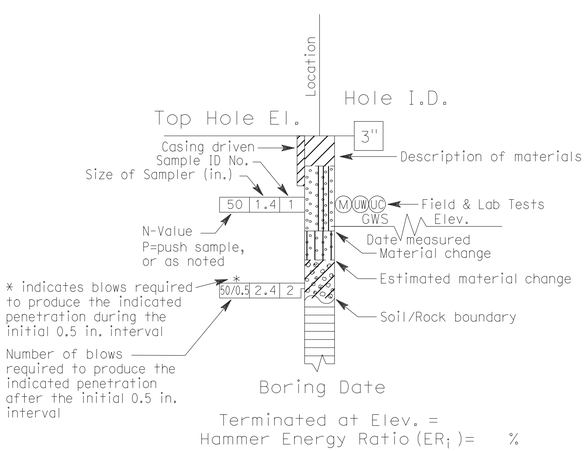

ROTARY BORING

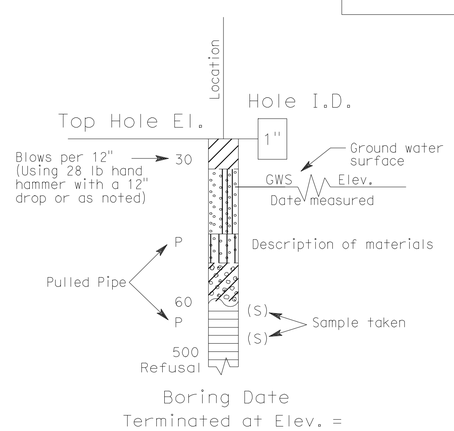

HAND BORING

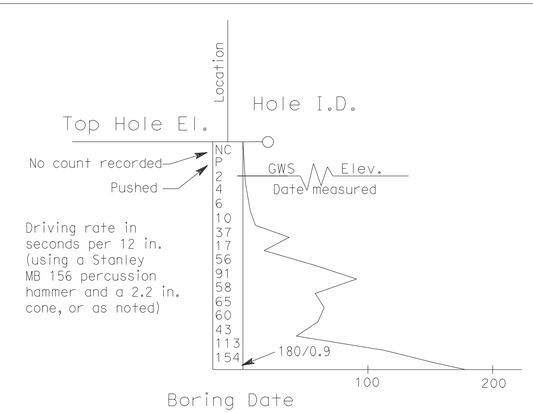

DYNAMIC CONE PENETRATION BORING

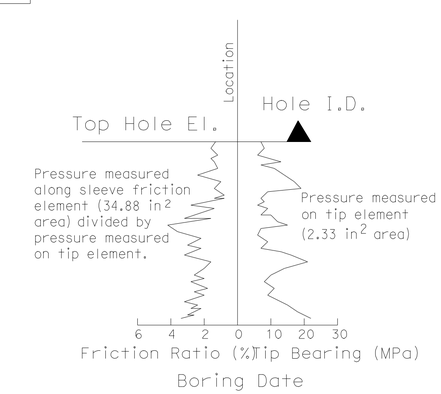

CONE PENETRATION TEST (CPT) SOUNDING

SOIL LEGEND

DESIGN OVERSIGHT Reza Erfanian
6/24/11
SIGN OFF DATE

DRAWN BY M ROBERTSON
CHECKED BY K. CHAPMAN

A. SHINNEFIELD
FIELD INVESTIGATION BY:
DATE: March, May and July 2009

PREPARED FOR THE STATE OF CALIFORNIA DEPARTMENT OF TRANSPORTATION

JOHN A. KLEMUNES, JR.
PROJECT ENGINEER

BRIDGE NO. 29-0332
POST MILE 11.47

TURNER STATION OVERHEAD (REPLACE)

LOG OF TEST BORINGS NO. 4

GS LOTB SOIL LEGEND SHEET 1 (ENGLISH) (REV. 07/16/10)

ORIGINAL SCALE IN INCHES FOR REDUCED PLANS 0 1 2 3

UNIT: 1455
PROJECT NUMBER & PHASE: 10000204411 CONTRACT NO.: 10-0E6121

DISREGARD PRINTS BEARING EARLIER REVISION DATES

REVISION DATES 3-10-10 2-04-11 5-18-11 6-24-11

SHEET 27 OF 29

FILE => 29-0332-z-ltb04.dgn

USERNAME => s121614 DATE PLOTTED => 01-DEC-2011 TIME PLOTTED => 10:56

DIST	COUNTY	ROUTE	POST MILES TOTAL PROJECT	SHEET No	TOTAL SHEETS
10	SJ	99	10.6/14.9	446	504

CERTIFIED ENGINEERING GEOLOGIST — DATE 6-24-11

PROFESSIONAL GEOLOGIST William E. Nichols No. 2229 Exp. 1-31-12 CERTIFIED ENGINEERING GEOLOGIST STATE OF CALIFORNIA

10-17-11
PLANS APPROVAL DATE

The State of California or its officers or agents shall not be responsible for the accuracy or completeness of electronic copies of this plan sheet.

SAN JOAQUIN COUNCIL OF GOVERNMENTS
555 E. WEBER AVE.
STOCKTON, CA 95202

BLACKBURN CONSULTING
2491 BOATMAN AVENUE
WEST SACRAMENTO, CA 95691 FILE No. 1201.6d

REFERENCE: CALTRANS SOIL & ROCK LOGGING, CLASSIFICATION, AND PRESENTATION MANUAL, (JUNE, 2007)

GROUP SYMBOLS AND NAMES

Graphic/Symbol	Group Names
GW	Well-graded GRAVEL Well-graded GRAVEL with SAND
GP	Poorly-graded GRAVEL Poorly-graded GRAVEL with SAND
GW-GM	Well-graded GRAVEL with SILT Well-graded GRAVEL with SILT and SAND
GW-GC	Well-graded GRAVEL with CLAY (or SILTY CLAY) Well-graded GRAVEL with CLAY and SAND (or SILTY CLAY and SAND)
GP-GM	Poorly-graded GRAVEL with SILT Poorly-graded GRAVEL with SILT and SAND
GP-GC	Poorly-graded GRAVEL with CLAY (or SILTY CLAY) Poorly-graded GRAVEL with CLAY and SAND (or SILTY CLAY and SAND)
GM	SILTY GRAVEL SILTY GRAVEL with SAND
GC	CLAYEY GRAVEL CLAYEY GRAVEL with SAND
GC-GM	SILTY, CLAYEY GRAVEL SILTY, CLAYEY GRAVEL with SAND
SW	Well-graded SAND Well-graded SAND with GRAVEL
SP	Poorly-graded SAND Poorly-graded SAND with GRAVEL
SW-SM	Well-graded SAND with SILT Well-graded SAND with SILT and GRAVEL
SW-SC	Well-graded SAND with CLAY (or SILTY CLAY) Well-graded SAND with CLAY and GRAVEL (or SILTY CLAY and GRAVEL)
SP-SM	Poorly-graded SAND with SILT Poorly-graded SAND with SILT and GRAVEL
SP-SC	Poorly-graded SAND with CLAY (or SILTY CLAY) Poorly-graded SAND with CLAY and GRAVEL (or SILTY CLAY and GRAVEL)
SM	SILTY SAND SILTY SAND with GRAVEL
SC	CLAYEY SAND CLAYEY SAND with GRAVEL
SC-SM	SILTY, CLAYEY SAND SILTY, CLAYEY SAND with GRAVEL
PT	PEAT
	COBBLES COBBLES and BOULDERS BOULDERS

Graphic/Symbol	Group Names
CL	Lean CLAY Lean CLAY with SAND Lean CLAY with GRAVEL SANDY lean CLAY SANDY lean CLAY with GRAVEL GRAVELLY lean CLAY GRAVELLY lean CLAY with SAND
CL-ML	SILTY CLAY SILTY CLAY with SAND SILTY CLAY with GRAVEL SANDY SILTY CLAY SANDY SILTY CLAY with GRAVEL GRAVELLY SILTY CLAY GRAVELLY SILTY CLAY with SAND
ML	SILT SILT with SAND SILT with GRAVEL SANDY SILT SANDY SILT with GRAVEL GRAVELLY SILT GRAVELLY SILT with SAND
OL	ORGANIC lean Clay ORGANIC lean Clay with SAND ORGANIC lean Clay with GRAVEL SANDY ORGANIC lean CLAY SANDY ORGANIC lean CLAY with GRAVEL GRAVELLY ORGANIC lean CLAY GRAVELLY ORGANIC lean CLAY with SAND
OL	ORGANIC SILT ORGANIC SILT with SAND ORGANIC SILT with GRAVEL SANDY ORGANIC SILT SANDY ORGANIC SILT with GRAVEL GRAVELLY ORGANIC SILT GRAVELLY ORGANIC SILT with SAND
CH	Fat CLAY Fat CLAY with SAND Fat CLAY with GRAVEL SANDY fat CLAY SANDY fat CLAY with GRAVEL GRAVELLY fat CLAY GRAVELLY fat CLAY with SAND
MH	Elastic SILT Elastic SILT with SAND Elastic SILT with GRAVEL SANDY elastic SILT SANDY elastic SILT with GRAVEL GRAVELLY elastic SILT GRAVELLY elastic SILT with SAND
OH	ORGANIC fat CLAY ORGANIC fat CLAY with SAND ORGANIC fat CLAY with GRAVEL SANDY ORGANIC fat CLAY SANDY ORGANIC fat CLAY with GRAVEL GRAVELLY ORGANIC fat CLAY GRAVELLY ORGANIC fat CLAY with SAND
OH	ORGANIC elastic SILT ORGANIC elastic SILT with SAND ORGANIC elastic SILT with GRAVEL SANDY ORGANIC elastic SILT SANDY ORGANIC elastic SILT with GRAVEL GRAVELLY ORGANIC elastic SILT GRAVELLY ORGANIC elastic SILT with SAND
OH/OL	ORGANIC SOIL ORGANIC SOIL with SAND ORGANIC SOIL with GRAVEL SANDY ORGANIC SOIL SANDY ORGANIC SOIL with GRAVEL GRAVELLY ORGANIC SOIL GRAVELLY ORGANIC SOIL with SAND

FIELD AND LABORATORY TESTING

- (C) Consolidation (ASTM D 2435)
- (CL) Collapse Potential (ASTM D 5333)
- (CP) Compaction Curve (CTM 216)
- (CR) Corrosivity Testing (CTM 643, CTM 422, CTM 417)
- (CU) Consolidated Undrained Triaxial (ASTM D 4767)
- (DS) Direct Shear (ASTM D 3080)
- (EI) Expansion Index (ASTM D 4829)
- (M) Moisture Content (ASTM D 2216)
- (OC) Organic Content-% (ASTM D 2974)
- (P) Permeability (CTM 220)
- (PA) Particle Size Analysis (ASTM D 422)
- (PI) Plasticity Index (AASHTO T 90) Liquid Limit (AASHTO T 89)
- (PL) Point Load Index (ASTM D 5731)
- (PM) Pressure Meter
- (PP) Pocket Penetrometer
- (R) R-Value (CTM 301)
- (SE) Sand Equivalent (CTM 217)
- (SG) Specific Gravity (AASHTO T 100)
- (SL) Shrinkage Limit (ASTM D 427)
- (SW) Swell Potential (ASTM D 4546)
- (TV) Pocket Torvane
- (UC) Unconfined Compression-Soil (ASTM D 2166) Unconfined Compression-Rock (ASTM D 2938)
- (UU) Unconsolidated Undrained Triaxial (ASTM D 2850)
- (UW) Unit Weight (ASTM D 2937)
- (VS) Vane Shear (AASHTO T 223)

APPARENT DENSITY OF COHESIONLESS SOILS

Description	SPT N_{60}-Value (Blows / 12 inches)
Very Loose	0 - 4
Loose	5 - 10
Medium Dense	11 - 30
Dense	31 - 50
Very Dense	> 50

MOISTURE

Description	Criteria
Dry	Absence of moisture, dusty, dry to the touch
Moist	Damp but no visible water
Wet	Visible free water, usually soil is below water table

PERCENT OR PROPORTION OF SOILS

Description	Criteria
Trace	Particles are present but estimated to be less than 5%
Few	5 to 10%
Little	15 to 25%
Some	30 to 45%
Mostly	50 to 100%

PARTICLE SIZE

Description		Size
Boulder		> 12"
Cobble		3" to 12"
Gravel	Coarse	3/4" to 3"
	Fine	No. 4 to 3/4"
Sand	Coarse	No. 10 to No. 4
	Medium	No. 40 to No. 10
	Fine	No. 200 to No. 40

SOIL LEGEND
TURNER STATION OVERHEAD (REPLACE)
LOG OF TEST BORINGS NO. 5

DESIGN OVERSIGHT Reza Erfanian
6/24/11
SIGN OFF DATE

DRAWN BY M ROBERTSON
CHECKED BY K. CHAPMAN

A. SHINNEFIELD
FIELD INVESTIGATION BY:
DATE: March, May and July 2009

PREPARED FOR THE STATE OF CALIFORNIA DEPARTMENT OF TRANSPORTATION

JOHN A. KLEMUNES, JR.
PROJECT ENGINEER

BRIDGE NO. 29-0332
POST MILE 11.47

GS LOTB SOIL LEGEND SHEET 1 (ENGLISH) (REV. 07/16/10)

ORIGINAL SCALE IN INCHES FOR REDUCED PLANS 0 1 2 3

UNIT: 1455
PROJECT NUMBER & PHASE: 10000204411 CONTRACT NO.: 10-0E6121

DISREGARD PRINTS BEARING EARLIER REVISION DATES

REVISION DATES 3-10-10 2-04-11 5-18-11 6-24-11 SHEET 28 OF 29

FILE => 29-0332-z-ltb05.dgn

USERNAME => s8121614 DATE PLOTTED => 01-DEC-2011 TIME PLOTTED => 10:56

F-192(3)

FED. ROAD DIV NO	STATE	PROJ NO	FISCAL YEAR	SHEET NO.	TOTAL SHEETS
7	CAL			42	42

654

Dist.	COUNTY	ROUTE	SECTION	SHEET NO.	TOTAL SHEETS
X	SJ	4	BrE	11	11

99

Date approved November 28, 1955

TO ACCOMPANY PLANS
DATED 10-17-11

DIVISION OF ENGINEERING SERVICES - GEOTECHNICAL SERVICES

As-Built Log of Test Borings sheet is considered an informational document only. As such, the State of California registration seal with signature, license number and registration certificate expiration date confirm that this is a true and accurate copy of the original document. This drawing is available and presented only for the convenience of any bidder, contractor or other interested party.

DIST.	COUNTY	ROUTE	POST MILES-TOTAL PROJECT	Sheet No.	Total Sheets
10	SJ	99	10.6/14.9	447	504

REGISTERED CIVIL ENGINEER — 6-24-11 DATE

TURNER STATION OVERHEAD (REPLACE)

AS-BUILT LOG OF TEST BORINGS

NOTE: A COPY OF THIS LOG OF TEST BORINGS IS AVAILABLE AT OFFICE OF STRUCTURE MAINTENANCE AND INVESTIGATIONS, SACRAMENTO, CALIFORNIA

UNIT: 1455
PROJECT NUMBER & PHASE: 10000204411

BRIDGE No.	Sheet	of
29-0332	29	29

Revisions made to this Log of Test Borings from the original 1963 Log of Test Borings are the addition of the following table and notes:

PROFESSIONAL GEOLOGIST William E. Nichols No. 2229 Exp. 1-31-12 CERTIFIED ENGINEERING GEOLOGIST STATE OF CALIFORNIA

PLAN
Scale: 1"=20'

Boring	Station	Offset from "SR 99" Line
B-1	606+6.86	41.26 ft Lt
B-2	606+0.00	01.12 ft Lt
B-3	607+58.28	0.12 ft Rt
B-4	607+0.91	53.38 ft Lt
B-5	606+93.48	43.95 ft Rt
B-6	608+19.87	53.54 ft Lt
B-7	607+79.39	45.47 ft Rt
B-8	605+61.11	45.12 ft Rt
B-9	606+26.29	38.51 ft Rt
B-10	607+61.30	44.22 ft Lt

1. See Log of Test Borings 1 of 6 for stationing.

2. The table above are the locations for the As-Built Test Borings referenced to the proposed new structure location. This table is presented on the As-Built Log of Test Boring sheet for the convenience of any bidder, contractor or other interested party.

AS BUILTS
CORRECTIONS BY. E. C. Lee
CONTRACT NO. 56-10TC20-F

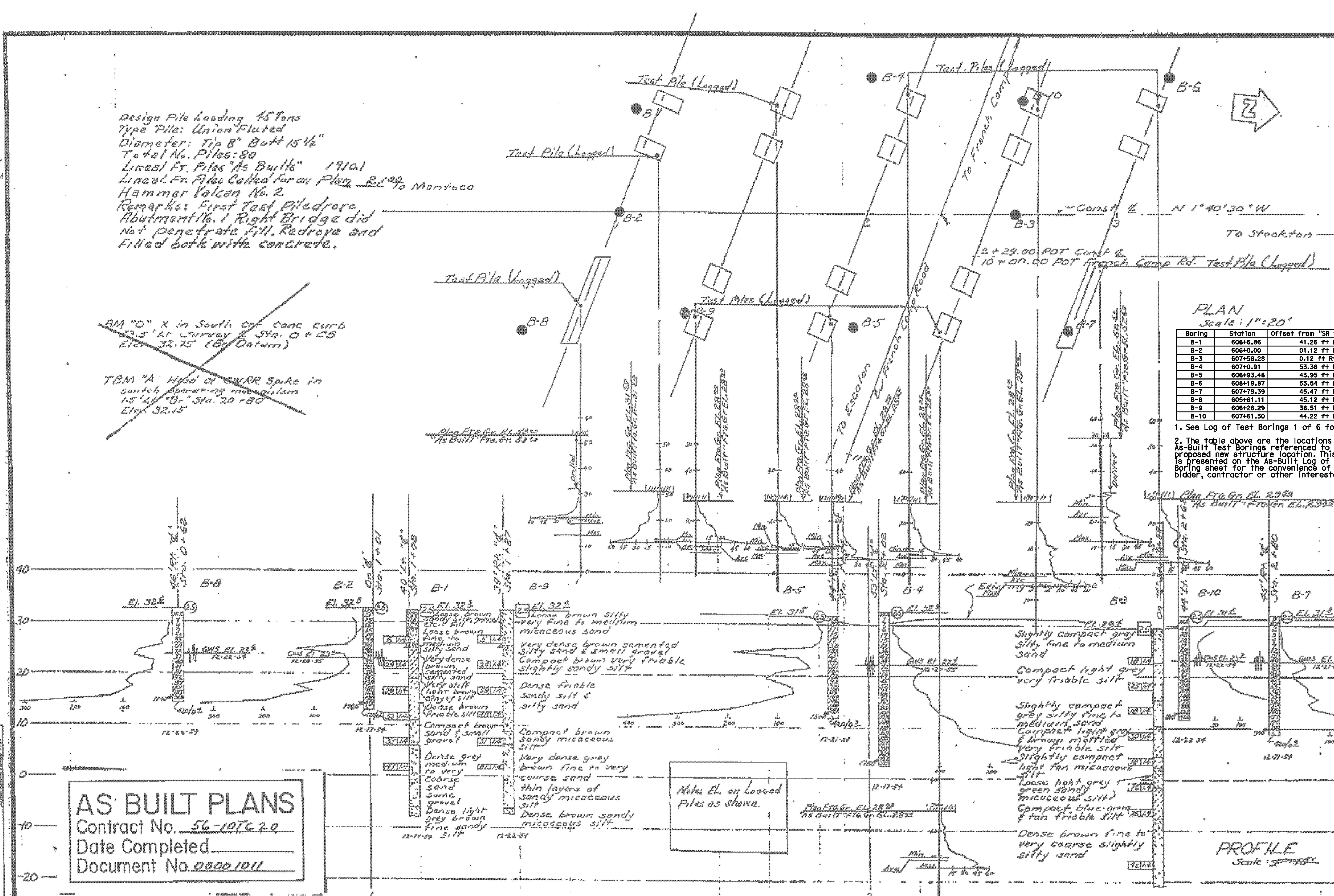

BRIDGE DEPARTMENT

FIELD STUDY	R. Reynolds	Dec. 1954
DRAWN	M. Pleaney	1-1955
CHECKED	R. Reynolds	2-14-55

AS BUILT PLANS
Contract No. 56-10TC20
Date Completed
Document No. 00001011

CLASSIFICATION OF MATERIAL BASED ON STANDARD GRADE SIZE LIMITS

DIAGRAM SHOWING THE BASIS FOR ESTIMATES OF GRADE SIZE DISTRIBUTION USED IN DETERMINATION OF CLASS NAMES.
IF GRAVEL IS PRESENT IN APPRECIABLE AMOUNTS THE TERM "GRAVELLY" MAY BE ADDED TO THE CLASS NAME, VIZ. "GRAVELLY SAND". THE TERMS "COARSE", "MEDIUM" AND "FINE" WHEN USED TO DESCRIBE SAND, SILT AND GRAVEL REFER TO STANDARD GRADE SIZE LIMITS.

LEGEND OF EARTH MATERIALS

Gravel · Sand · Silt · Clay · Sandy Clay or Clayey Sand · Sandy Silt or Silty Sand · Silty Clay or Clayey Silt · Peat and/or Organic Matter · Fill Material · Igneous Rock · Sedimentary Rock · Metamorphic Rock

LEGEND OF BORING OPERATIONS

Plan of any boring · Penetrometer · 2¼" Cone Penetrometer · Sampler boring (dry) · Rotary boring (wet) · Auger boring (dry) · Jet boring · Core boring · Test pit

1" SOIL TUBE · ROTARY BORING · PENETRATION BORING

NOTES

The contractor's attention is directed to Section 2, Article (r) of the Standard Specifications and to the Special Provisions accompanying this set of plans.

Classification of earth material as shown on this sheet is based upon field inspection and is not to be construed to imply mechanical analysis.

STATE OF CALIFORNIA
DEPARTMENT OF PUBLIC WORKS
DIVISION OF HIGHWAYS

TURNER STATION OVERHEAD

LOG OF TEST BORINGS

SCALE As Noted | BRIDGE 29-71 R&L | FILE E-29 | DRAWING C-2665-11

71-2481.2

PREL. DRAWING No. P-2665

29-0332-z-ltb06.tif

DIST	COUNTY	ROUTE	POST MILES TOTAL PROJECT	SHEET No	TOTAL SHEETS
10	SJ	99	10.6/14.9	448	504

REGISTERED CIVIL ENGINEER 6-24-11 DATE

10-17-11
PLANS APPROVAL DATE

REGISTERED PROFESSIONAL ENGINEER SHARIQ PERVAIZ No. C67068 Exp. 9-30-12 CIVIL STATE OF CALIFORNIA

The State of California or its officers or agents shall not be responsible for the accuracy or completeness of electronic copies of this plan sheet.

SAN JOAQUIN COUNCIL OF GOVERNMENTS
555 E. WEBER AVE.
STOCKTON, CA 95202

HDR ENGINEERING, INC.
2365 IRON POINT ROAD, SUITE 300
FOLSOM, CA 95630

NOTES:

1. For MSE Walls "GENERAL NOTES", see "MECHANICALLY STABILIZED EMBANKMENT DETAIL No. 2" sheet.

LEGEND:

- Indicates new construction.
- Indicates existing feature.
- Indicates direction of traffic.
- * Indicates top of wall elevation, see "WALL PANEL LAYOUT" sheets.
- ** Indicates top of leveling pad, elevation, see "WALL PANEL LAYOUT" sheets.
- (A) 18" dia exist storm drain to be removed, see "ROAD PLANS".
- (B) Drainage Inlet, typ, see "ROAD PLANS" for locations. See "MSE WALL DETAILS NO. 3" sheet for details.

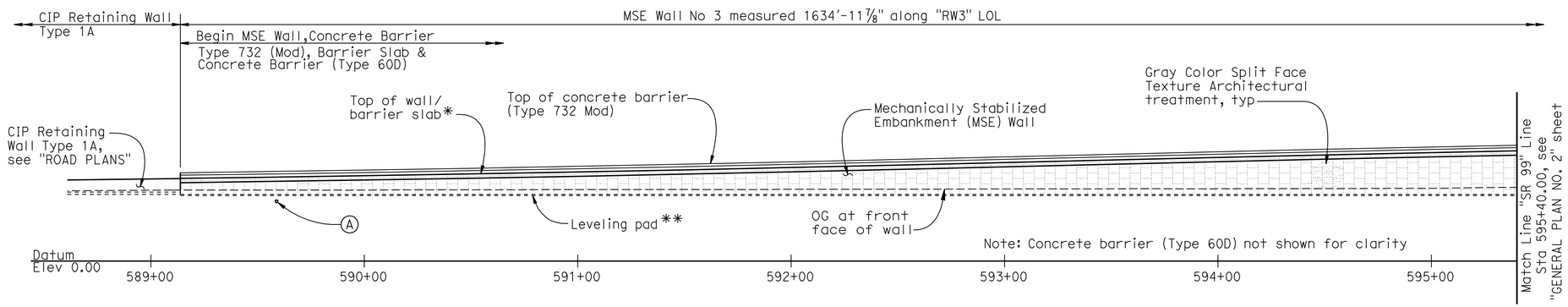

PART ELEVATION

1" = 30'

MSE WALL NO. 3 BR NO 29E0004

QUANTITIES

MECHANICALLY STABILIZED EMBANKMENT, LOCATION A	27,356	SQFT
STRUCTURAL CONCRETE, BARRIER SLAB	766	CY
CONCRETE BARRIER (TYPE 732 MODIFIED)	1,635	LF

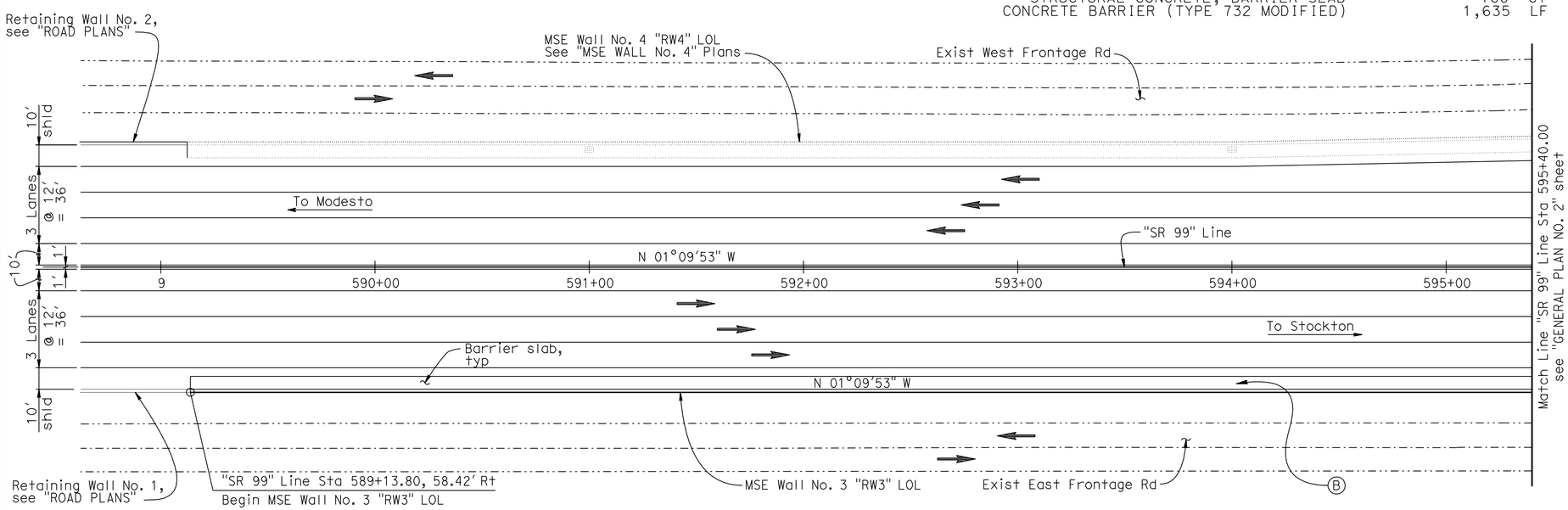

PART PLAN

1" = 30'

Note:
The Contractor shall verify all controlling field dimensions before ordering or fabricating any materials.

INDEX TO PLANS:

1. GENERAL PLAN NO. 1
2. GENERAL PLAN NO. 2
3. GENERAL PLAN NO. 3
4. FOUNDATION PLAN NO. 1
5. FOUNDATION PLAN NO. 2
6. FOUNDATION PLAN NO. 3
7. WALL PANEL LAYOUT No. 1
8. WALL PANEL LAYOUT No. 2
9. WALL PANEL LAYOUT No. 3
10. WALL PANEL LAYOUT No. 4
11. WALL PANEL LAYOUT No. 5
12. WALL PANEL LAYOUT No. 6
13. WALL PANEL LAYOUT No. 7
14. WALL PANEL LAYOUT No. 8
15. MSE WALL DETAILS NO. 1
16. MSE WALL DETAILS NO. 2
17. MSE WALL DETAILS NO. 3
18. MECHANICALLY STABILIZED EMBANKMENT - DETAIL No. 1
19. MECHANICALLY STABILIZED EMBANKMENT - DETAIL No. 2
20. MECHANICALLY STABILIZED EMBANKMENT - DETAIL No. 3
21. MECHANICALLY STABILIZED EMBANKMENT - DETAIL No. 4
22. MECHANICALLY STABILIZED EMBANKMENT - DETAIL No. 5
23. MECHANICALLY STABILIZED EMBANKMENT - DETAIL No. 6
24. LOG OF TEST BORINGS NO. 1
25. LOG OF TEST BORINGS NO. 2
26. LOG OF TEST BORINGS NO. 3
27. LOG OF TEST BORINGS NO. 4
28. LOG OF TEST BORINGS NO. 5

CALTRANS STANDARD PLANS DATED MAY 2006

A10A	ACRONYMS AND ABBREVIATIONS (SHEET 1 OF 2)
A10B	ACRONYMS AND ABBREVIATIONS (SHEET 2 OF 2)
A10C	SYMBOLS (SHEET 1 of 2)
A10D	SYMBOLS (SHEET 2 of 2)
RSP A76A	CONCRETE BARRIER TYPE 60
B11-55	CONCRETE BARRIER TYPE 732

STANDARD PLAN SHEET NO.
DETAIL NO.

Reza Erfanian
DESIGN OVERSIGHT Reza Erfanian
6/24/11
SIGN OFF DATE

DESIGN	BY S PERVAIZ	CHECKED T KENG	LOAD & RESISTANCE FACTOR DESIGN — LIVE LOADING: HS20-44 AND ALTERNATIVE AND PERMIT DESIGN VEHICLE
DETAILS	BY J VOUGHT	CHECKED T KENG	LAYOUT BY S PERVAIZ — CHECKED T KENG
QUANTITIES	BY T KENG	CHECKED J VOUGHT	SPECIFICATIONS BY T KENG — PLANS AND SPECS COMPARED J MANISCALCO

PREPARED FOR THE STATE OF CALIFORNIA DEPARTMENT OF TRANSPORTATION

JOHN A. KLEMUNES, JR.
PROJECT ENGINEER

BRIDGE NO. 29E0004
POST MILES 10.97

MSE WALL NO. 3
GENERAL PLAN NO. 1

DESIGN GENERAL PLAN SHEET (ENGLISH) (REV.7/16/10)

ORIGINAL SCALE IN INCHES FOR REDUCED PLANS 0 1 2 3

UNIT: 1455
PROJECT NUMBER & PHASE: 10000204411 CONTRACT NO.: 10-0E6121

DISREGARD PRINTS BEARING EARLIER REVISION DATES

REVISION DATES: 5-3-10 2-4-11 5-18-11 6-24-11 SHEET 1 OF 28

FILE => 29E0004-a-gp01.dgn

USERNAME => s12614 DATE PLOTTED => 23-DEC-2011 TIME PLOTTED => 05:56

DIST	COUNTY	ROUTE	POST MILES TOTAL PROJECT	SHEET No	TOTAL SHEETS
10	SJ	99	10.6/14.9	449	504

REGISTERED CIVIL ENGINEER 6-24-11 DATE

10-17-11
PLANS APPROVAL DATE

REGISTERED PROFESSIONAL ENGINEER SHARIQ PERVAIZ No. C67068 Exp. 9-30-12 CIVIL STATE OF CALIFORNIA

The State of California or its officers or agents shall not be responsible for the accuracy or completeness of electronic copies of this plan sheet.

SAN JOAQUIN COUNCIL OF GOVERNMENTS
555 E. WEBER AVE.
STOCKTON, CA 95202

HDR ENGINEERING, INC.
2365 IRON POINT ROAD, SUITE 300
FOLSOM, CA 95630

Note: Concrete barrier (Type 60D) not shown for clarity

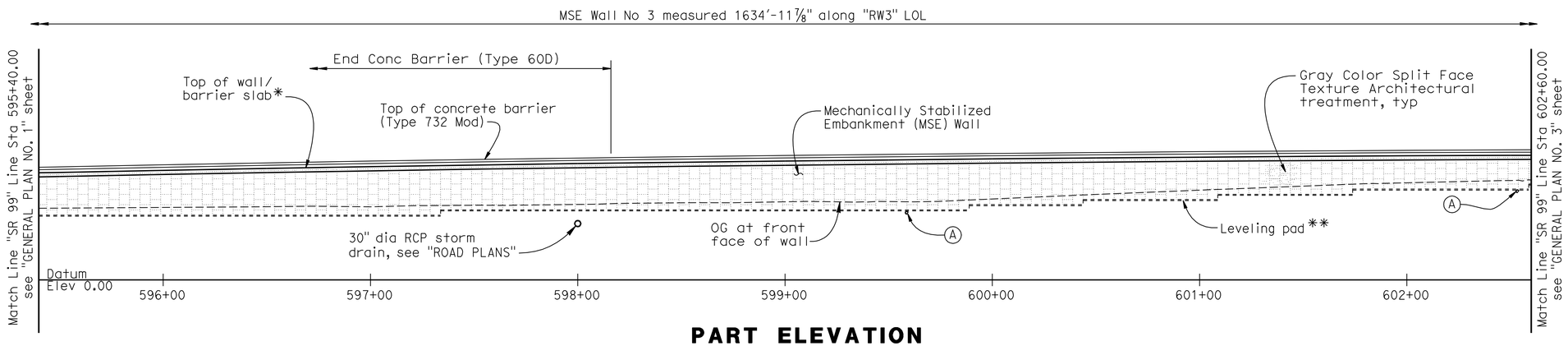

PART ELEVATION

1" = 30'

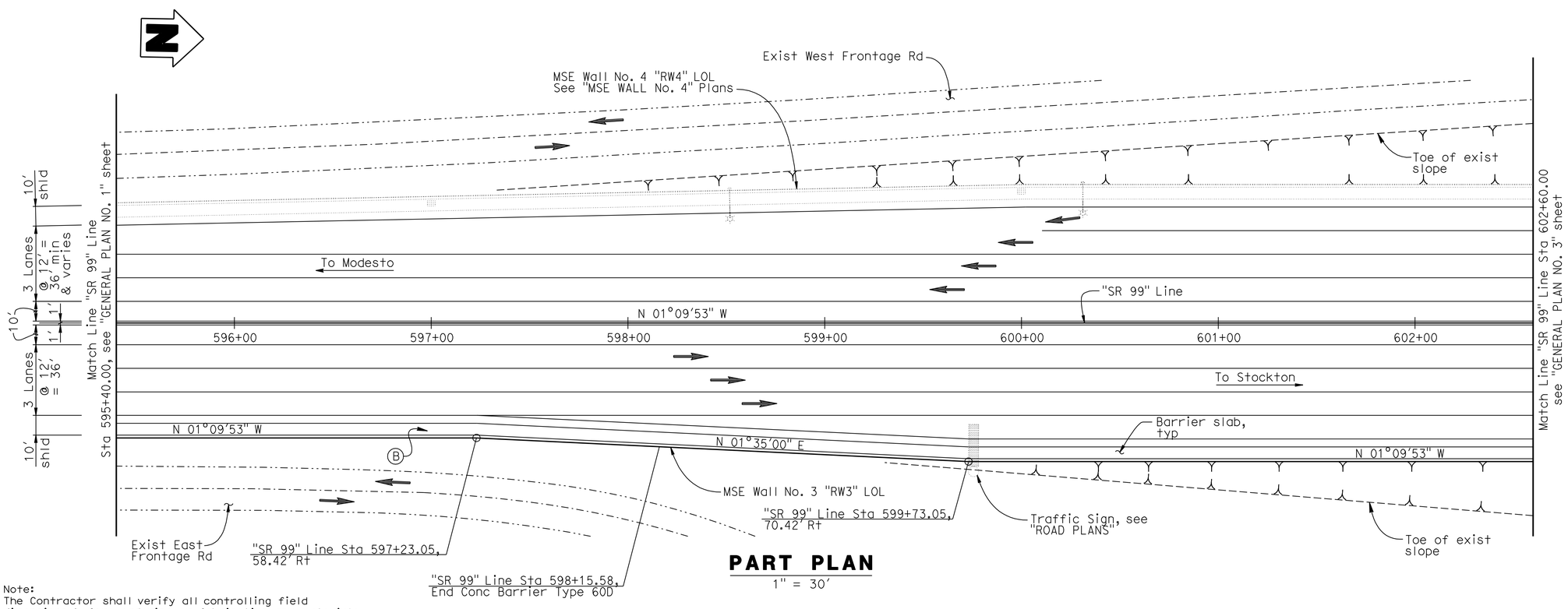

PART PLAN

1" = 30'

NOTES:

1. For MSE Walls "GENERAL NOTES", see "MECHANICALLY STABILIZED EMBANKMENT DETAIL No. 2" sheet.

LEGEND:

- ——— Indicates new construction.
- -·-·- Indicates existing feature.
- ➡ Indicates direction of traffic.
- * Indicates top of wall elevation, see "WALL PANEL LAYOUT" sheets.
- ** Indicates top of leveling pad, elevation, see "WALL PANEL LAYOUT" sheets.
- (A) 18" dia exist storm drain to be removed, see "ROAD PLANS".
- (B) Drainage Inlet, typ, see "ROAD PLANS" for locations. See "MSE WALL DETAILS NO. 3" sheet for details.

Note:
The Contractor shall verify all controlling field dimensions before ordering or fabricating any materials.

Reza Erfanian DESIGN OVERSIGHT Reza Erfanian 6/24/11 SIGN OFF DATE	DESIGN	BY S PERVAIZ	CHECKED T KENG	LOAD & RESISTANCE FACTOR DESIGN	LIVE LOADING: HS20-44 AND ALTERNATIVE AND PERMIT DESIGN VEHICLE
	DETAILS	BY J VOUGHT	CHECKED T KENG	LAYOUT BY S PERVAIZ	CHECKED T KENG
	QUANTITIES	BY T KENG	CHECKED J VOUGHT	SPECIFICATIONS BY T KENG	PLANS AND SPECS COMPARED J MANISCALCO

PREPARED FOR THE STATE OF CALIFORNIA DEPARTMENT OF TRANSPORTATION

JOHN A. KLEMUNES, JR.
PROJECT ENGINEER

BRIDGE NO. 29E0004
POST MILES 10.97

MSE WALL NO. 3
GENERAL PLAN NO. 2

DESIGN GENERAL PLAN SHEET (ENGLISH) (REV.7/16/10)

ORIGINAL SCALE IN INCHES FOR REDUCED PLANS 0 1 2 3

UNIT: 1455
PROJECT NUMBER & PHASE: 10000204411 CONTRACT NO.: 10-0E6121

DISREGARD PRINTS BEARING EARLIER REVISION DATES

REVISION DATES: 5-3-10 2-4-11 5-18-11 6-24-11

SHEET 2 OF 28

FILE => 29E0004-a-gp02.dgn

USERNAME => s12614 DATE PLOTTED => 01-DEC-2011 TIME PLOTTED => 10:57

DIST	COUNTY	ROUTE	POST MILES TOTAL PROJECT	SHEET No	TOTAL SHEETS
10	SJ	99	10.6/14.9	450	504

REGISTERED CIVIL ENGINEER 6-24-11 DATE

10-17-11
PLANS APPROVAL DATE

REGISTERED PROFESSIONAL ENGINEER SHARIQ PERVAIZ No. C67068 Exp. 9-30-12 CIVIL STATE OF CALIFORNIA

The State of California or its officers or agents shall not be responsible for the accuracy or completeness of electronic copies of this plan sheet.

SAN JOAQUIN COUNCIL OF GOVERNMENTS
555 E. WEBER AVE.
STOCKTON, CA 95202

HDR ENGINEERING, INC.
2365 IRON POINT ROAD, SUITE 300
FOLSOM, CA 95630

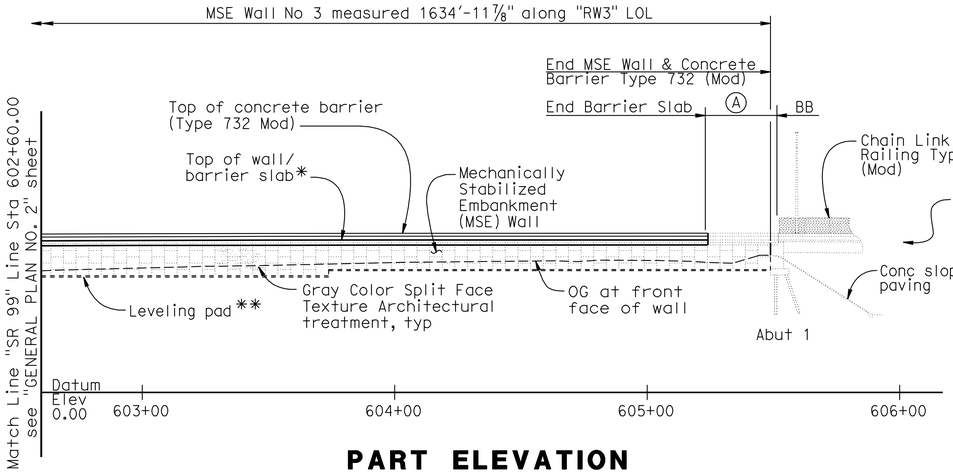

PART ELEVATION

1" = 30'

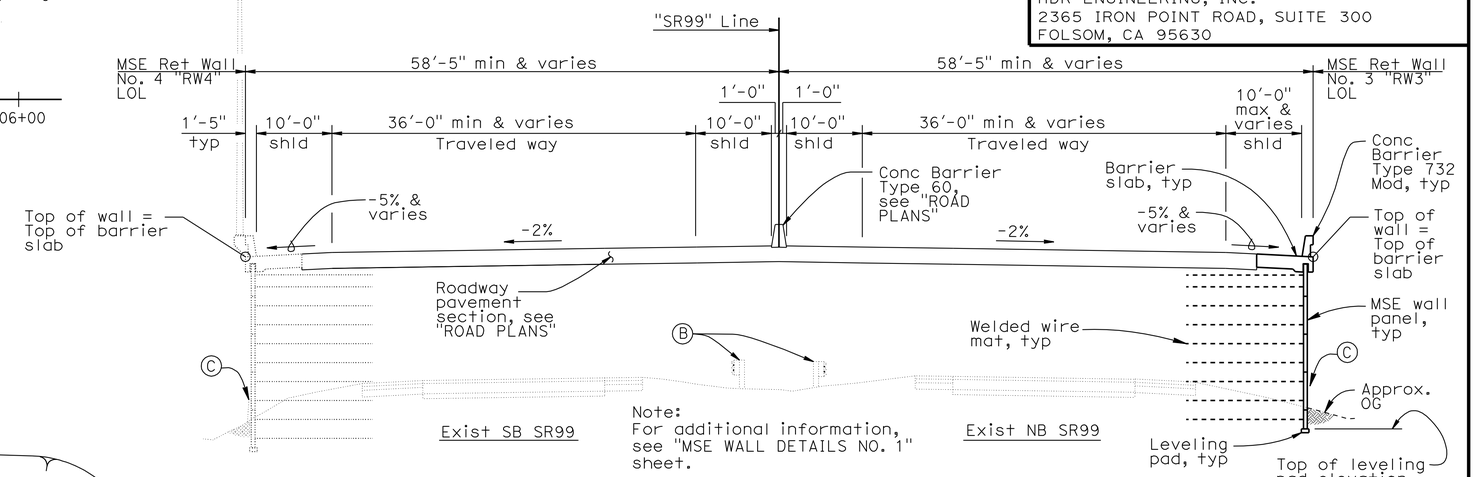

Note:
For additional information, see "MSE WALL DETAILS NO. 1" sheet.

TYPICAL SECTION

1" = 10'

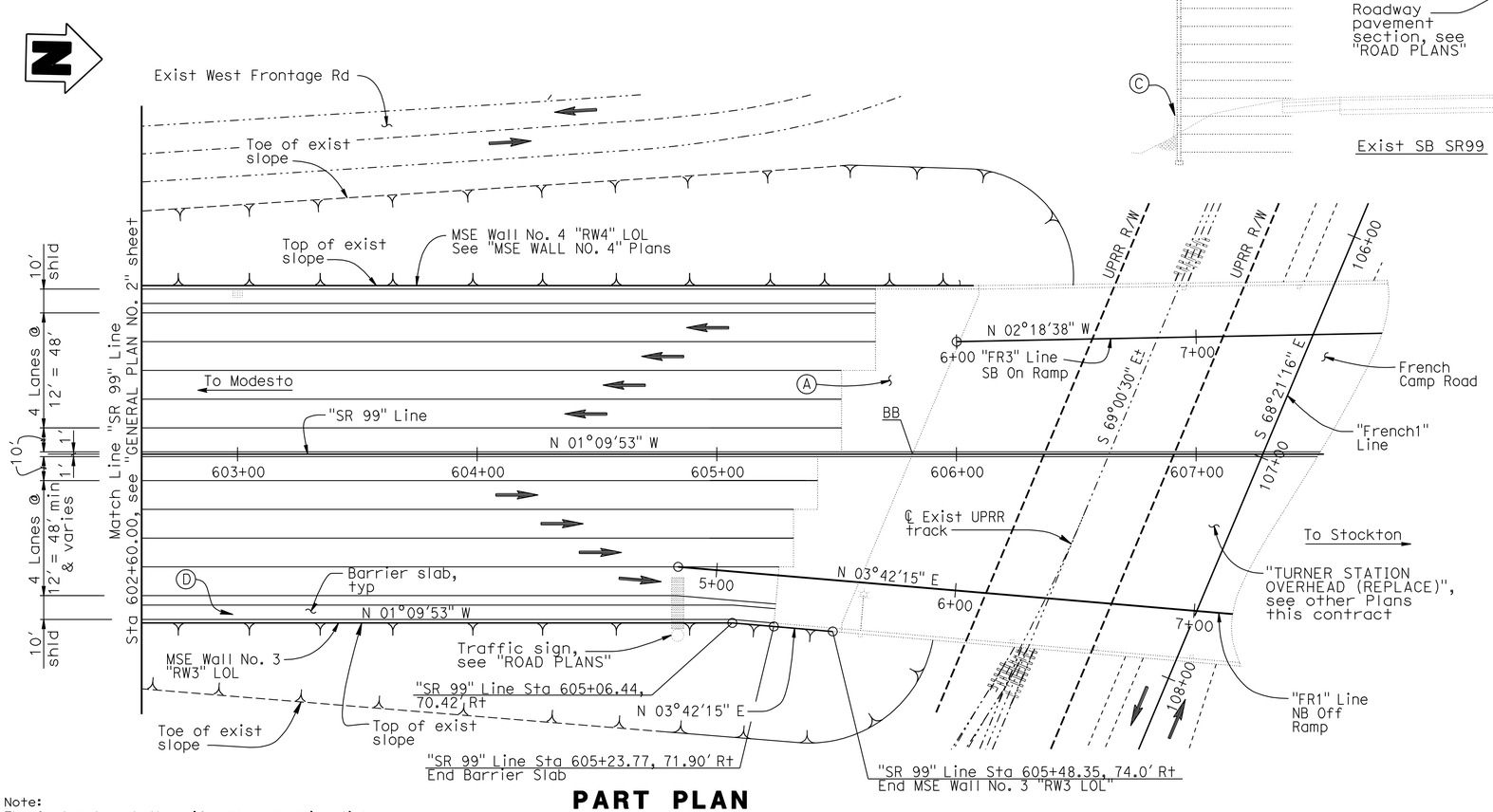

PART PLAN

1" = 30'

NOTES:

1. For MSE Walls "GENERAL NOTES", see "MECHANICALLY STABILIZED EMBANKMENT DETAIL No. 2" sheet.
2. For Traffic Staging, see 'ROAD PLANS'.

LEGEND:

———	Indicates new construction.
-·-·-·-	Indicates existing feature.
➡	Indicates direction of traffic.
*	Indicates top of wall elevation, see "WALL PANEL LAYOUT" sheets.
**	Indicates top of leveling pad, elevation, see "WALL PANEL LAYOUT" sheets.
(A)	Structure Approach Type N(30S), see "TURNER STATION OVERHEAD (REPLACE)" PLANS.
(B)	Exist TBB to be removed, see "ROAD PLANS".
(C)	Concrete Barrier Type 60D, where occurs, see "ROAD PLANS". (A76A)
(D)	Drainage Inlet, typ, see "ROAD PLANS" for locations. See "MSE WALL DETAILS NO. 3" sheet for details.

Note:
The Contractor shall verify all controlling field dimensions before ordering or fabricating any materials.

DESIGN OVERSIGHT Reza Erfanian 6/24/11 SIGN OFF DATE	DESIGN	BY S PERVAIZ	CHECKED T KENG	LOAD & RESISTANCE FACTOR DESIGN	LIVE LOADING: HS20-44 AND ALTERNATIVE AND PERMIT DESIGN VEHICLE
	DETAILS	BY J VOUGHT	CHECKED T KENG	LAYOUT BY S PERVAIZ	CHECKED T KENG
	QUANTITIES	BY T KENG	CHECKED J VOUGHT	SPECIFICATIONS BY T KENG	PLANS AND SPECS COMPARED J MANISCALCO

PREPARED FOR THE STATE OF CALIFORNIA DEPARTMENT OF TRANSPORTATION

JOHN A. KLEMUNES, JR.
PROJECT ENGINEER

BRIDGE NO. 29E0004
POST MILES 10.97

MSE WALL NO. 3
GENERAL PLAN NO. 3

DESIGN GENERAL PLAN SHEET (ENGLISH) (REV.7/16/10)

ORIGINAL SCALE IN INCHES FOR REDUCED PLANS 0 1 2 3

UNIT: 1455
PROJECT NUMBER & PHASE: 10000204411 CONTRACT NO.: 10-0E6121

DISREGARD PRINTS BEARING EARLIER REVISION DATES

REVISION DATES: 5-3-10 2-4-11 5-18-11 6-24-11

SHEET 3 OF 28

FILE => 29E0004-a-gp03.dgn

USERNAME => s12616 DATE PLOTTED => 01-DEC-2011 TIME PLOTTED => 10:57

DIST	COUNTY	ROUTE	POST MILES TOTAL PROJECT	SHEET No	TOTAL SHEETS
10	SJ	99	10.6/14.9	451	504

REGISTERED CIVIL ENGINEER 6-24-11 DATE

10-17-11
PLANS APPROVAL DATE

REGISTERED PROFESSIONAL ENGINEER SHARIQ PERVAIZ No. C67068 Exp. 9-30-12 CIVIL STATE OF CALIFORNIA

The State of California or its officers or agents shall not be responsible for the accuracy or completeness of electronic copies of this plan sheet.

SAN JOAQUIN COUNCIL OF GOVERNMENTS
555 E. WEBER AVE.
STOCKTON, CA 95202

HDR ENGINEERING, INC.
2365 IRON POINT ROAD, SUITE 300
FOLSOM, CA 95630

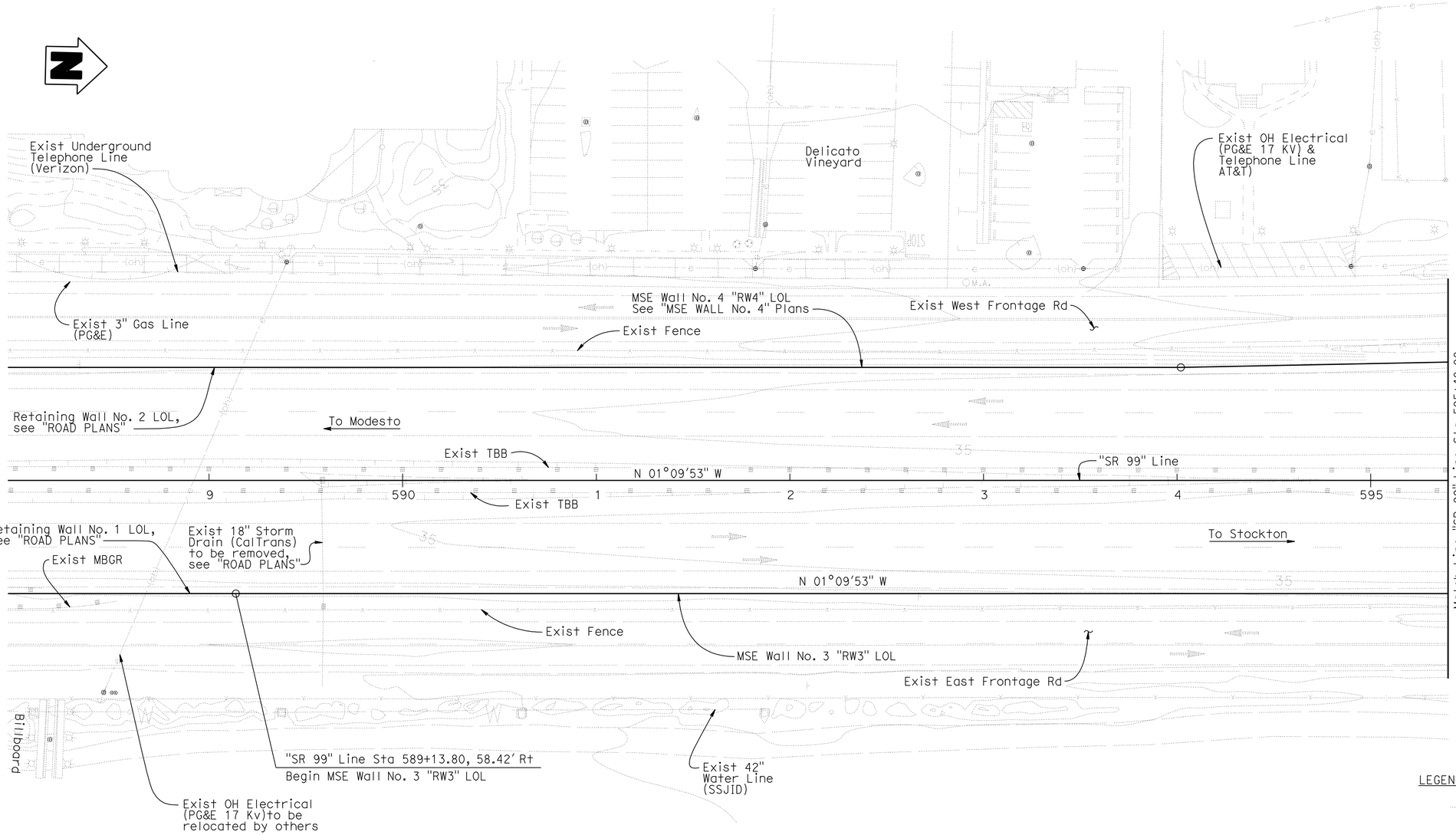

PART PLAN

1" = 30'

BENCH MARKS

BENCHMARK# 645 ELEV. 58.24 Ft

DESCRIPTION: KSN CONTROL POINT, 1/2 " REBAR WITH YELLOW CAP STAMPED "KSN CONTROL", LOCATED AT APPROXIMATE CENTERLINE STATION 605+95 ON THE SOUTHBOUND MAINLINE, ON THE INSIDE SHOULDER, 3.5' EAST OF THE EDGE OF PAVEMENT, 11' WEST OF THE FACE OF THE GUARDRAIL, AND 4' SOUTH OF THE SOUTHEAST CORNER OF THE FRENCH CAMP OVER CROSSING BRIDGE.
NGVD 29, N2136239.71, E6354178.61.

BENCHMARK# 641 ELEV. 56.89 Ft

DESCRIPTION: KSN CONTROL POINT, 1/2 " REBAR WITH YELLOW CAP STAMPED "KSN CONTROL", LOCATED APPROXIMATE CENTERLINE STATION 608+14 ON THE NORTHBOUND MAINLINE, ON THE INSIDE SHOULDER, 2' WEST OF THE EDGE OF PAVEMENT, 10.5' EAST OF THE FACE OF THE GUARDRAIL, 6' NORTH OF THE FRENCH CAMP OVER CROSSING BRIDGE.
NGVD 29, N2136459.41, E6354207.75.

LEGEND:

Indicates existing electrical poles.

NOTES:

1. See "ROAD PLANS" for type and locations of all existing and proposed utilities.
2. Location of existing utilities shown are approximate. The Contractor shall verify locations of all affected utilities prior to performing any excavation.

Note:
The Contractor shall verify all controlling field dimensions before ordering or fabricating any materials.

GEOTECHNICAL PROFESSIONAL 6-20-11 APPROVAL DATE

DESIGN OVERSIGHT Reza Erfanian
6/24/11
SIGN OFF DATE

SCALE: 1" = 40'	VERT.DATUM NGVD29	HORZ.DATUM NAD1983	
PHOTOGRAMMETRY AS OF: 08/09/2007	ALIGNMENT TIES		
SURVEYED	BY AERIAL PHOTOMAPPING SERVICES	DRAFTED	BY KSN
FIELD CHECKED	BY KRIS F. NEHMER	CHECKED	BY KRIS F. NEHMER

DESIGN	BY S PERVAIZ	CHECKED	J MANISCALCO
DETAILS	BY J VOUGHT	CHECKED	J MANISCALCO
QUANTITIES	BY T KENG	CHECKED	J VOUGHT

PREPARED FOR THE STATE OF CALIFORNIA DEPARTMENT OF TRANSPORTATION

JOHN A. KLEMUNES, JR.
PROJECT ENGINEER

BRIDGE NO. 29E0004
POST MILES 10.97

MSE WALL NO. 3
FOUNDATION PLAN NO 1

FOUNDATION PLAN SHEET (ENGLISH) (REV.7/16/10)

ORIGINAL SCALE IN INCHES FOR REDUCED PLANS 0 1 2 3

UNIT: 1455
PROJECT NUMBER & PHASE: 10000204411 CONTRACT NO.: 10-0E6121

DISREGARD PRINTS BEARING EARLIER REVISION DATES

REVISION DATES				SHEET	OF
5-3-10	2-4-11	5-19-11	6-24-11	4	28

FILE => 29E0004-b-fp01.dgn

USERNAME => s6121614 DATE PLOTTED => 01-DEC-2011 TIME PLOTTED => 10:57

DIST	COUNTY	ROUTE	POST MILES TOTAL PROJECT	SHEET No	TOTAL SHEETS
10	SJ	99	10.6/14.9	452	504

REGISTERED CIVIL ENGINEER — DATE 6-24-11

10-17-11
PLANS APPROVAL DATE

REGISTERED PROFESSIONAL ENGINEER — SHARIQ PERVAIZ — No. C67068 — Exp. 9-30-12 — CIVIL — STATE OF CALIFORNIA

The State of California or its officers or agents shall not be responsible for the accuracy or completeness of electronic copies of this plan sheet.

SAN JOAQUIN COUNCIL OF GOVERNMENTS
555 E. WEBER AVE.
STOCKTON, CA 95202

HDR ENGINEERING, INC.
2365 IRON POINT ROAD, SUITE 300
FOLSOM, CA 95630

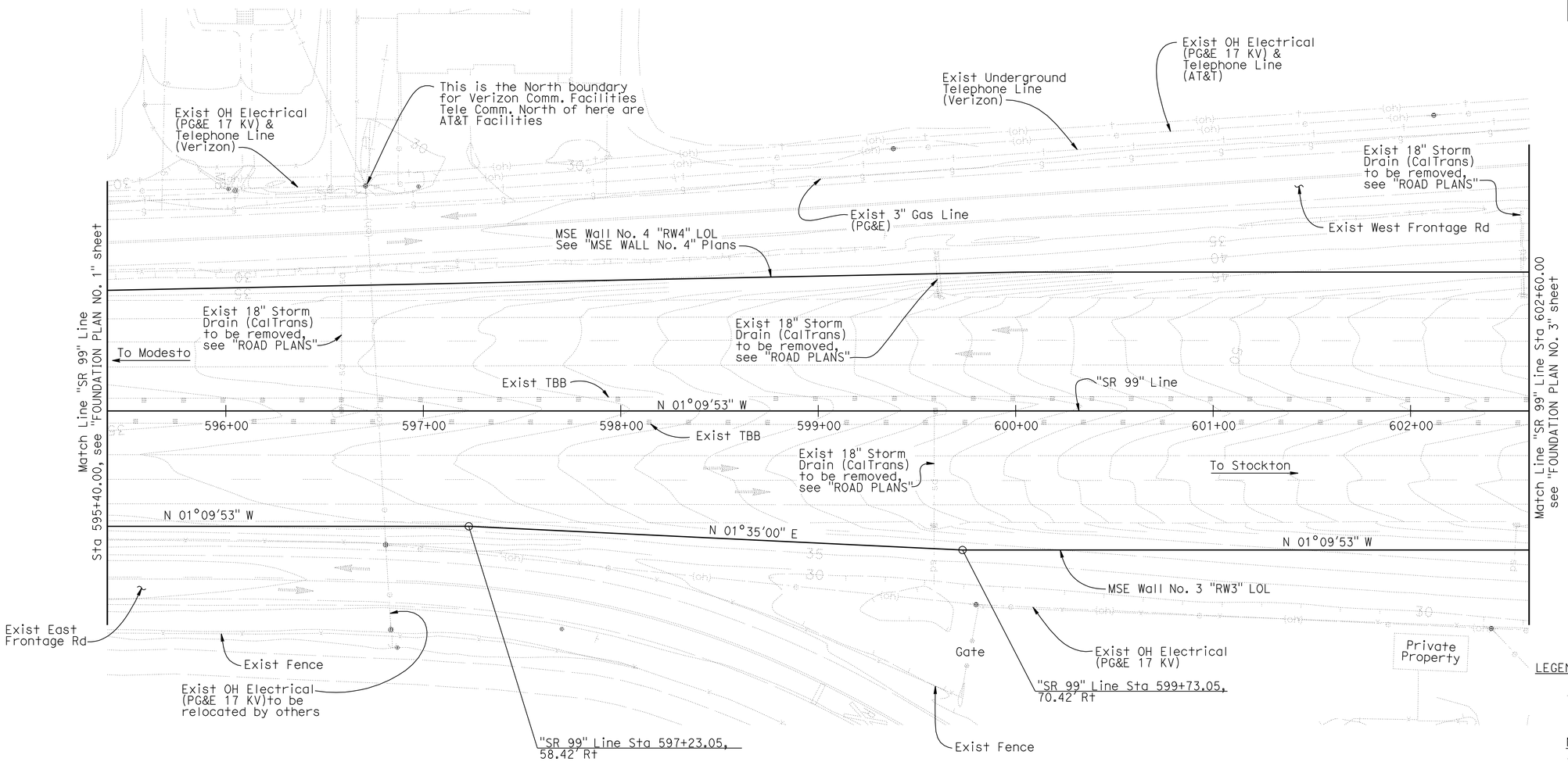

PART PLAN

1" = 30'

LEGEND:

Indicates existing electrical poles.

NOTES:

1. See "ROAD PLANS" for type and locations of all existing and proposed utilities.
2. Location of existing utilities shown are approximate. The Contractor shall verify locations of all affected utilities prior to performing any excavation.

GEOTECHNICAL PROFESSIONAL — APPROVAL DATE 6-20-11

Note:
The Contractor shall verify all controlling field dimensions before ordering or fabricating any materials.

DESIGN OVERSIGHT Reza Erfanian
6/24/11
SIGN OFF DATE

SCALE: 1" = 30'	VERT.DATUM NGVD29	HORZ.DATUM NAD1983	
PHOTOGRAMMETRY AS OF: 08/09/2007	ALIGNMENT TIES		
SURVEYED	BY AERIAL PHOTOMAPPING SERVICES	DRAFTED	BY KSN
FIELD CHECKED	BY KRIS F. NEHMER	CHECKED	BY KRIS F. NEHMER

DESIGN	BY S PERVAIZ	CHECKED	J MANISCALCO
DETAILS	BY J VOUGHT	CHECKED	J MANISCALCO
QUANTITIES	BY T KENG	CHECKED	J VOUGHT

PREPARED FOR THE STATE OF CALIFORNIA DEPARTMENT OF TRANSPORTATION

JOHN A. KLEMUNES, JR.
PROJECT ENGINEER

BRIDGE NO. 29E0004
POST MILES 10.97

MSE WALL NO. 3
FOUNDATION PLAN NO. 2

FOUNDATION PLAN SHEET (ENGLISH) (REV.7/16/10)

ORIGINAL SCALE IN INCHES FOR REDUCED PLANS 0 1 2 3

UNIT: 1455
PROJECT NUMBER & PHASE: 10000204411 CONTRACT NO.: 10-0E6121

DISREGARD PRINTS BEARING EARLIER REVISION DATES

REVISION DATES: 5-3-10 2-4-11 5-18-11 6-24-11

SHEET 5 OF 28

FILE => 29E0004-b-fp02.dgn

USERNAME => s121614 DATE PLOTTED => 01-DEC-2011 TIME PLOTTED => 10:57

DIST	COUNTY	ROUTE	POST MILES TOTAL PROJECT	SHEET No	TOTAL SHEETS
10	SJ	99	10.6/14.9	453	504

REGISTERED CIVIL ENGINEER 6-24-11 DATE

10-17-11
PLANS APPROVAL DATE

REGISTERED PROFESSIONAL ENGINEER SHARIQ PERVAIZ No. C67068 Exp. 9-30-12 CIVIL STATE OF CALIFORNIA

The State of California or its officers or agents shall not be responsible for the accuracy or completeness of electronic copies of this plan sheet.

SAN JOAQUIN COUNCIL OF GOVERNMENTS
555 E. WEBER AVE.
STOCKTON, CA 95202

HDR ENGINEERING, INC.
2365 IRON POINT ROAD, SUITE 300
FOLSOM, CA 95630

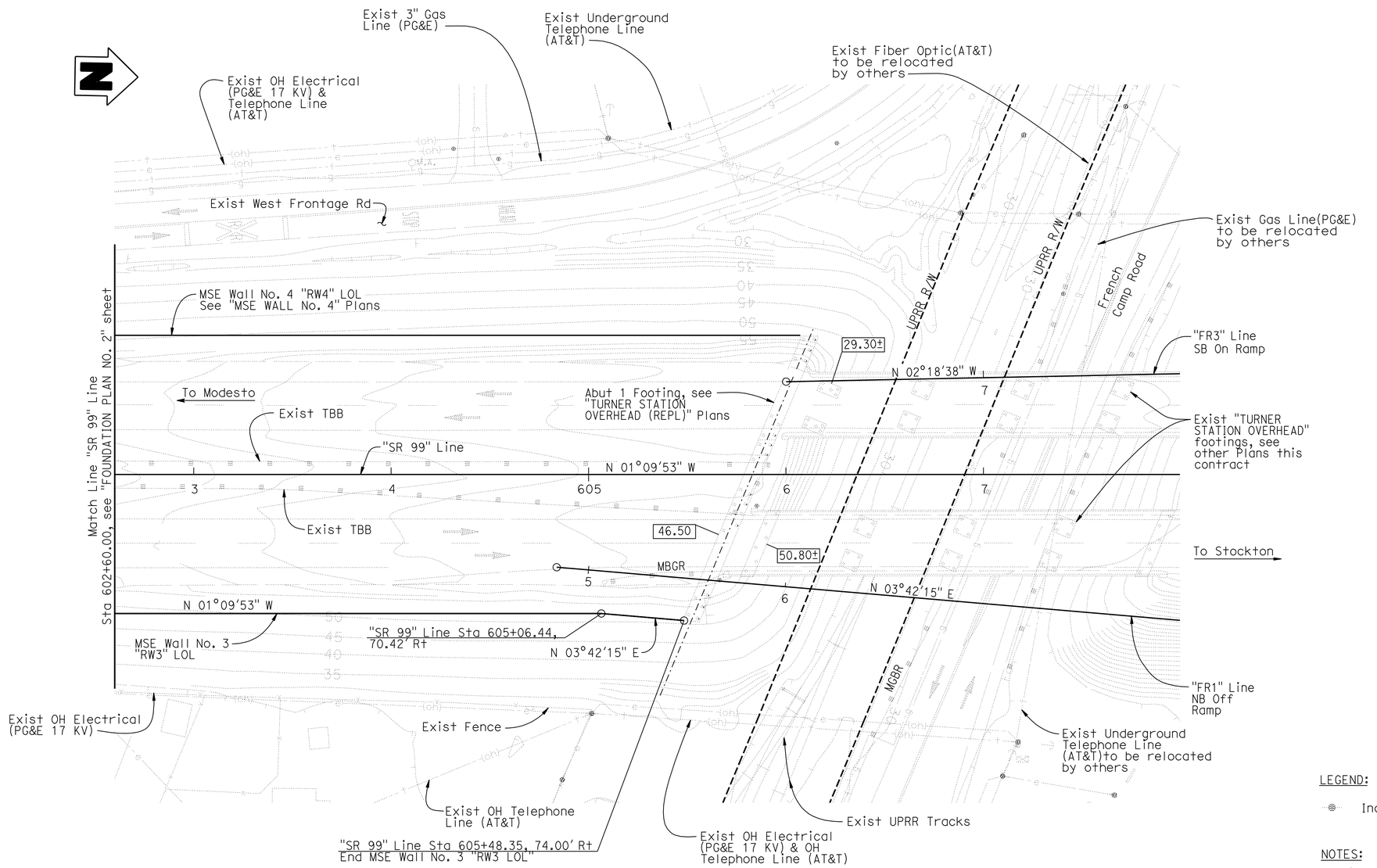

Note: Bent 2 footings for "TURNER STATION OH (REPLACE)" structure not shown for clarity.

PART PLAN

1" = 30'

LEGEND:

Indicates existing electrical poles.

NOTES:

1. See "ROAD PLANS" for type and locations of all existing and proposed utilities.
2. Location of existing utilities shown are approximate. The Contractor shall verify locations of all affected utilities prior to performing any excavation.

GEOTECHNICAL PROFESSIONAL APPROVAL DATE 6-20-11

Note:
The Contractor shall verify all controlling field dimensions before ordering or fabricating any materials.

DESIGN OVERSIGHT Reza Erfanian
6/24/11
SIGN OFF DATE

SCALE: 1"=30'	VERT.DATUM NGVD29	HORZ.DATUM NAD1983			
PHOTOGRAMMETRY AS OF: 08/09/2007	ALIGNMENT TIES				
SURVEYED	BY AERIAL PHOTOMAPPING SERVICES	DRAFTED	BY KSN		
FIELD CHECKED	BY KRIS F. NEHMER	CHECKED	BY KRIS F. NEHMER		

DESIGN	BY S PERVAIZ	CHECKED J MANISCALCO	
DETAILS	BY J VOUGHT	CHECKED J MANISCALCO	
QUANTITIES	BY T KENG	CHECKED J VOUGHT	

PREPARED FOR THE STATE OF CALIFORNIA DEPARTMENT OF TRANSPORTATION

JOHN A. KLEMUNES, JR.
PROJECT ENGINEER

BRIDGE NO. 29E0004
POST MILES 10.97

MSE WALL NO. 3
FOUNDATION PLAN NO 3

FOUNDATION PLAN SHEET (ENGLISH) (REV.7/16/10)

ORIGINAL SCALE IN INCHES FOR REDUCED PLANS 0 1 2 3

UNIT: 1455
PROJECT NUMBER & PHASE: 10000204411 CONTRACT NO.: 10-0E6121

DISREGARD PRINTS BEARING EARLIER REVISION DATES

REVISION DATES 5-3-10 2-4-11 5-18-11 6-24-11

SHEET 6 OF 28

FILE => 29E0004-b-fp03.dgn

USERNAME => s12614 DATE PLOTTED => 01-DEC-2011 TIME PLOTTED => 10:57

DIST	COUNTY	ROUTE	POST MILES TOTAL PROJECT	SHEET No	TOTAL SHEETS
10	SJ	99	10.6/14.9	454	504

REGISTERED CIVIL ENGINEER — DATE 6-24-11

10-17-11
PLANS APPROVAL DATE

REGISTERED PROFESSIONAL ENGINEER — SHARIQ PERVAIZ — No. C67068 — Exp. 9-30-12 — CIVIL — STATE OF CALIFORNIA

The State of California or its officers or agents shall not be responsible for the accuracy or completeness of electronic copies of this plan sheet.

SAN JOAQUIN COUNCIL OF GOVERNMENTS
555 E. WEBER AVE.
STOCKTON, CA 95202

HDR ENGINEERING, INC.
2365 IRON POINT ROAD, SUITE 300
FOLSOM, CA 95630

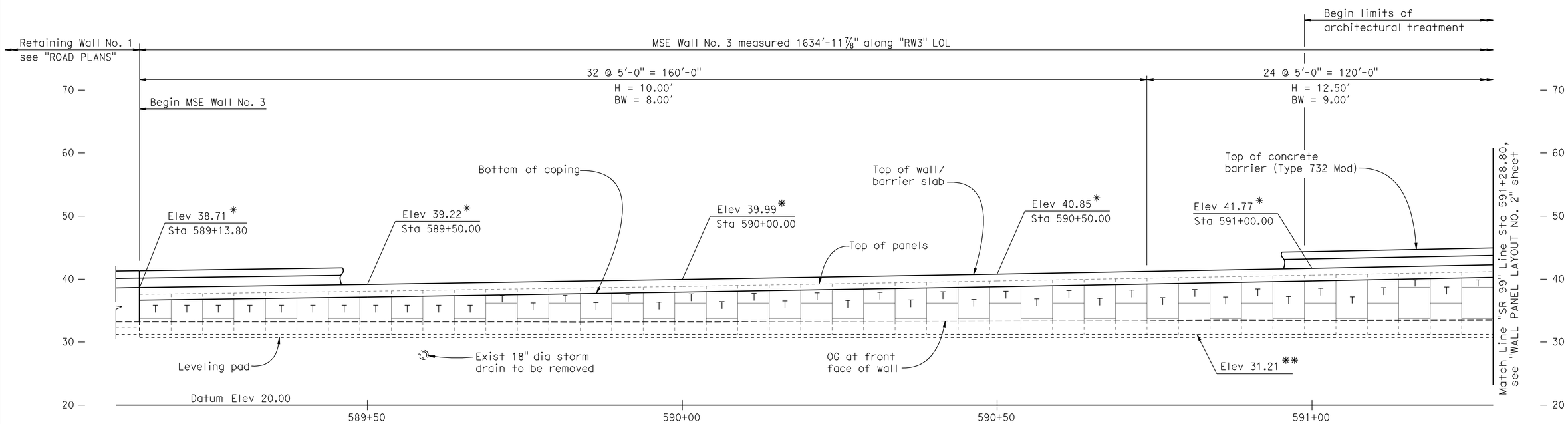

ELEVATION MSE WALL NO. 3

1/8" = 1'-0"

LEGEND:

- * Indicates top of wall elevation
- ** Indicates top of leveling pad elevation
- H = Design Height, see "WALL DETAIL NO. 1" sheet
- BW = Base Width, see "WALL DETAIL NO. 1" sheet
- T — Indicates Top Panel, see "WALL DETAIL NO. 2" sheet
- Indicates Intermediate or Bottom Panel, see "WALL DETAIL NO. 2" sheet
- Indicates Bottom Half Panel, see "WALL DETAIL NO. 2" sheet

NOTES:

1. Concrete barrier (Type 60D) not shown for clarity.
2. Architectural details not shown.
3. For Wall Panel & Barrier Slab Details, see "MSE WALL DETAILS NO. 1 THRU 4" sheets.

Note:
The Contractor shall verify all controlling field dimensions before ordering or fabricating any materials.

DESIGN OVERSIGHT Reza Erfanian
6/24/11
SIGN OFF DATE

	BY	CHECKED
DESIGN	S PERVAIZ	T KENG
DETAILS	J VOUGHT	T KENG
QUANTITIES	T KENG	J VOUGHT

PREPARED FOR THE STATE OF CALIFORNIA DEPARTMENT OF TRANSPORTATION

JOHN A. KLEMUNES, JR.
PROJECT ENGINEER

BRIDGE NO. 29E0004
POST MILE 10.97

MSE WALL NO. 3
WALL PANEL LAYOUT NO. 1

DESIGN DETAIL SHEET (ENGLISH) (REV.7/16/10)

ORIGINAL SCALE IN INCHES FOR REDUCED PLANS 0 1 2 3

UNIT: 1455
PROJECT NUMBER & PHASE: 10000204411 CONTRACT NO.: 10-0E6121

DISREGARD PRINTS BEARING EARLIER REVISION DATES

REVISION DATES: ~~5-3-10~~ ~~2-4-11~~ ~~5-19-11~~ 6-24-11

SHEET 7 OF 28

FILE => 29E0004-c-wp101.dgn

USERNAME => s12614 DATE PLOTTED => 01-DEC-2011 TIME PLOTTED => 10:58

DIST	COUNTY	ROUTE	POST MILES TOTAL PROJECT	SHEET No	TOTAL SHEETS
10	SJ	99	10.6/14.9	455	504

REGISTERED CIVIL ENGINEER 6-24-11 DATE

10-17-11
PLANS APPROVAL DATE

REGISTERED PROFESSIONAL ENGINEER SHARIQ PERVAIZ No. C67068 Exp. 9-30-12 CIVIL STATE OF CALIFORNIA

The State of California or its officers or agents shall not be responsible for the accuracy or completeness of electronic copies of this plan sheet.

SAN JOAQUIN COUNCIL OF GOVERNMENTS
555 E. WEBER AVE.
STOCKTON, CA 95202

HDR ENGINEERING, INC.
2365 IRON POINT ROAD, SUITE 300
FOLSOM, CA 95630

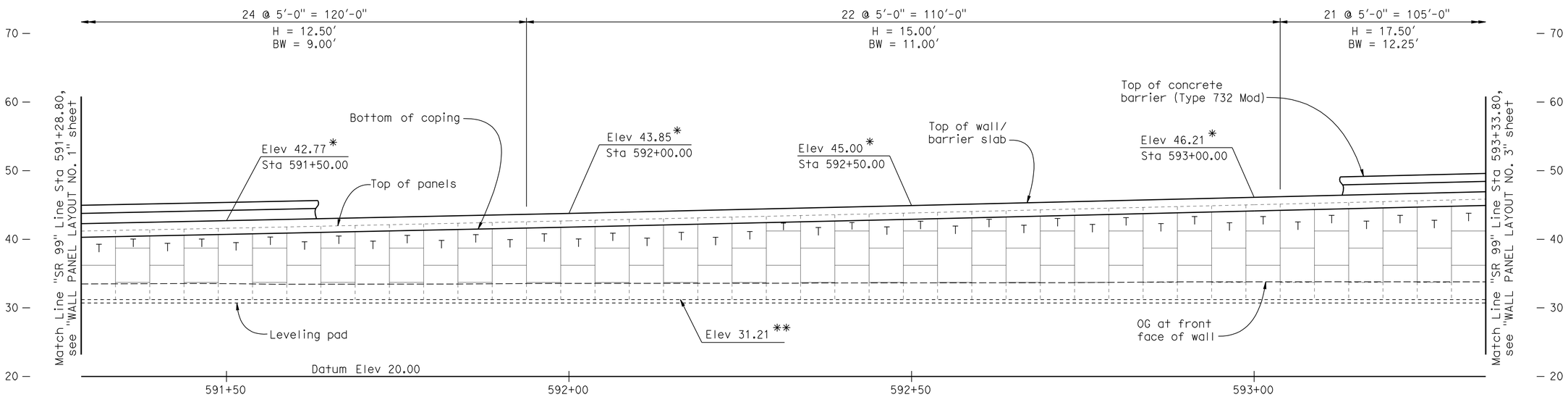

ELEVATION MSE WALL NO. 3

1/8" = 1'-0"

LEGEND:

*	Indicates top of wall elevation
**	Indicates top of leveling pad elevation
H =	Design Height, see "WALL DETAIL NO. 1" sheet
BW =	Base Width, see "WALL DETAIL NO. 1" sheet
T	Indicates Top Panel, see "WALL DETAIL NO. 2" sheet
	Indicates Intermediate or Bottom Panel, see "WALL DETAIL NO. 2" sheet
	Indicates Bottom Half Panel, see "WALL DETAIL NO. 2" sheet

NOTES:

1. Concrete barrier (Type 60D) not shown for clarity.
2. Architectural details not shown.
3. For Wall Panel & Barrier Slab Details, see "MSE WALL DETAILS NO. 1 THRU 4" sheets.

Note:
The Contractor shall verify all controlling field dimensions before ordering or fabricating any materials.

Reza Erfanian
DESIGN OVERSIGHT Reza Erfanian
6/24/11
SIGN OFF DATE

	BY	CHECKED
DESIGN	S PERVAIZ	T KENG
DETAILS	J VOUGHT	T KENG
QUANTITIES	T KENG	J VOUGHT

PREPARED FOR THE STATE OF CALIFORNIA DEPARTMENT OF TRANSPORTATION

JOHN A. KLEMUNES, JR.
PROJECT ENGINEER

BRIDGE NO. 29E0004
POST MILE 10.97

MSE WALL NO. 3
WALL PANEL LAYOUT NO. 2

DESIGN DETAIL SHEET (ENGLISH) (REV.7/16/10)

ORIGINAL SCALE IN INCHES FOR REDUCED PLANS 0 1 2 3

UNIT: 1455
PROJECT NUMBER & PHASE: 10000204411 CONTRACT NO.: 10-0E6121

DISREGARD PRINTS BEARING EARLIER REVISION DATES

REVISION DATES: 5-3-10 2-4-11 5-18-11 6-24-11

SHEET 8 OF 28

FILE => 29E0004-c-wpl02.dgn

USERNAME => s121614 DATE PLOTTED => 01-DEC-2011 TIME PLOTTED => 10:58

DIST	COUNTY	ROUTE	POST MILES TOTAL PROJECT	SHEET No	TOTAL SHEETS
10	SJ	99	10.6/14.9	456	504

REGISTERED CIVIL ENGINEER 6-24-11 DATE

10-17-11
PLANS APPROVAL DATE

REGISTERED PROFESSIONAL ENGINEER SHARIQ PERVAIZ No. C67068 Exp. 9-30-12 CIVIL STATE OF CALIFORNIA

The State of California or its officers or agents shall not be responsible for the accuracy or completeness of electronic copies of this plan sheet.

SAN JOAQUIN COUNCIL OF GOVERNMENTS
555 E. WEBER AVE.
STOCKTON, CA 95202

HDR ENGINEERING, INC.
2365 IRON POINT ROAD, SUITE 300
FOLSOM, CA 95630

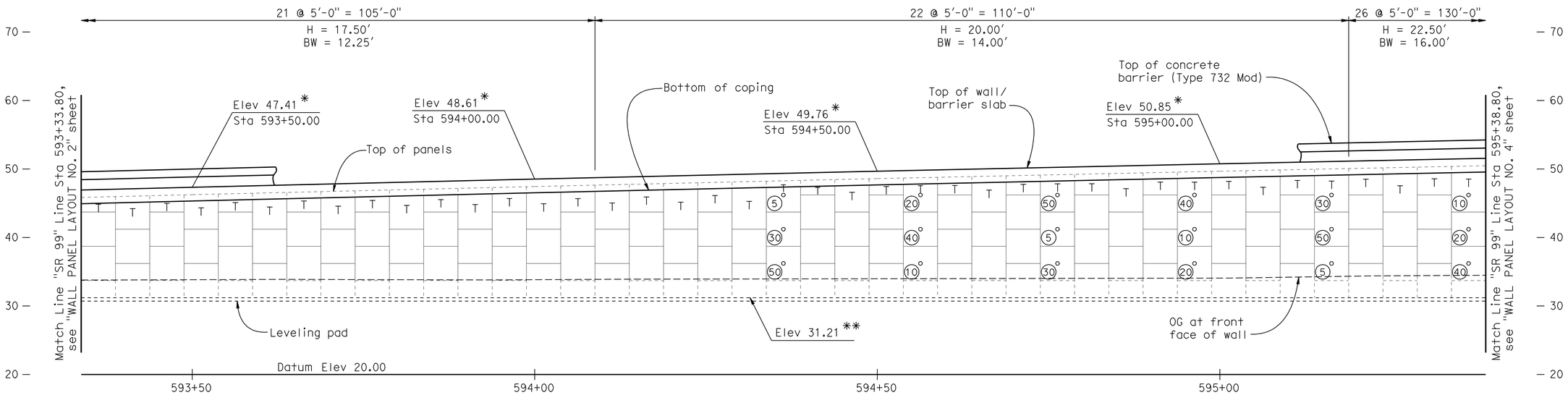

ELEVATION MSE WALL NO. 3

1/8" = 1'-0"

LEGEND:

*	Indicates top of wall elevation
**	Indicates top of leveling pad elevation
H =	Design Height, see "WALL DETAIL NO. 1" sheet
BW =	Base Width, see "WALL DETAIL NO. 1" sheet
T	Indicates Top Panel, see "WALL DETAIL NO. 2" sheet
	Indicates Intermediate or Bottom Panel, see "WALL DETAIL NO. 2" sheet
	Indicates Bottom Half Panel, see "WALL DETAIL NO. 2" sheet

30 Indicates Inspection Wire Panel

Indicates location of inspection wire replacement, see "MECHANICALLY STABILIZED EMBANKMENT - DETAIL NO. 3" sheet

Indicates interval in years from construction to removal of Inspection Wire

NOTES:

1. Concrete barrier (Type 60D) not shown for clarity.
2. Architectural details not shown.
3. For Wall Panel & Barrier Slab Details, see "MSE WALL DETAILS NO. 1 THRU 4" sheets.

Note:
The Contractor shall verify all controlling field dimensions before ordering or fabricating any materials.

Reza Erfanian
DESIGN OVERSIGHT Reza Erfanian
6/24/11
SIGN OFF DATE

	BY	CHECKED
DESIGN	S PERVAIZ	T KENG
DETAILS	J VOUGHT	T KENG
QUANTITIES	T KENG	J VOUGHT

PREPARED FOR THE STATE OF CALIFORNIA DEPARTMENT OF TRANSPORTATION

JOHN A. KLEMUNES, JR.
PROJECT ENGINEER

BRIDGE NO. 29E0004
POST MILE 10.97

MSE WALL NO. 3
WALL PANEL LAYOUT NO. 3

DESIGN DETAIL SHEET (ENGLISH) (REV.7/16/10)

ORIGINAL SCALE IN INCHES FOR REDUCED PLANS 0 1 2 3

UNIT: 1455
PROJECT NUMBER & PHASE: 10000204411 CONTRACT NO.: 10-0E6121

DISREGARD PRINTS BEARING EARLIER REVISION DATES

REVISION DATES				SHEET	OF
5-3-10	2-4-11	5-18-11	6-24-11	9	28

FILE => 29E0004-c-wpl03.dgn

USERNAME => s8121614 DATE PLOTTED => 01-DEC-2011 TIME PLOTTED => 10:58

DIST	COUNTY	ROUTE	POST MILES TOTAL PROJECT	SHEET No	TOTAL SHEETS
10	SJ	99	10.6/14.9	457	504

REGISTERED CIVIL ENGINEER 6-24-11 DATE

10-17-11
PLANS APPROVAL DATE

REGISTERED PROFESSIONAL ENGINEER SHARIQ PERVAIZ No. C67068 Exp. 9-30-12 CIVIL STATE OF CALIFORNIA

The State of California or its officers or agents shall not be responsible for the accuracy or completeness of electronic copies of this plan sheet.

SAN JOAQUIN COUNCIL OF GOVERNMENTS
555 E. WEBER AVE.
STOCKTON, CA 95202

HDR ENGINEERING, INC.
2365 IRON POINT ROAD, SUITE 300
FOLSOM, CA 95630

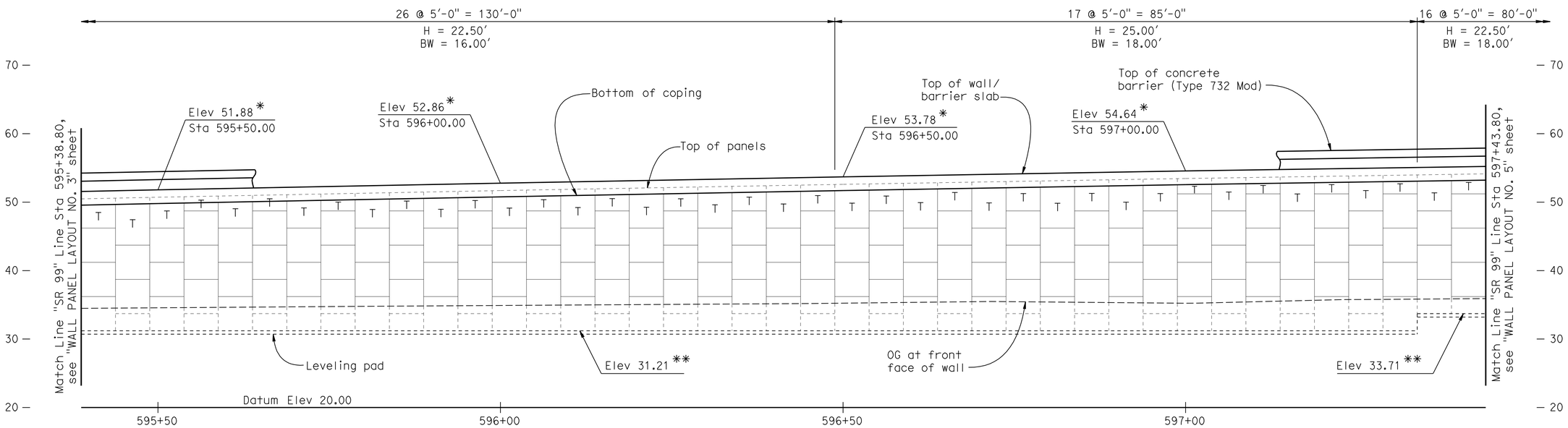

ELEVATION MSE WALL NO. 3

1/8" = 1'-0"

LEGEND:

*	Indicates top of wall elevation
**	Indicates top of leveling pad elevation
H =	Design Height, see "WALL DETAIL NO. 1" sheet
BW =	Base Width, see "WALL DETAIL NO. 1" sheet
T	Indicates Top Panel, see "WALL DETAIL NO. 2" sheet
	Indicates Intermediate or Bottom Panel, see "WALL DETAIL NO. 2" sheet
	Indicates Bottom Half Panel, see "WALL DETAIL NO. 2" sheet

NOTES:

1. Concrete barrier (Type 60D) not shown for clarity.
2. Architectural details not shown.
3. For Wall Panel & Barrier Slab Details, see "MSE WALL DETAILS NO. 1 THRU 4" sheets.

Note:
The Contractor shall verify all controlling field dimensions before ordering or fabricating any materials.

Reza Erfanian
DESIGN OVERSIGHT Reza Erfanian
6/24/11
SIGN OFF DATE

	BY	CHECKED
DESIGN	S PERVAIZ	T KENG
DETAILS	J VOUGHT	T KENG
QUANTITIES	T KENG	J VOUGHT

PREPARED FOR THE STATE OF CALIFORNIA DEPARTMENT OF TRANSPORTATION

JOHN A. KLEMUNES, JR.
PROJECT ENGINEER

BRIDGE NO. 29E0004
POST MILE 10.97

MSE WALL NO. 3
WALL PANEL LAYOUT NO. 4

DESIGN DETAIL SHEET (ENGLISH) (REV.7/16/10)

ORIGINAL SCALE IN INCHES FOR REDUCED PLANS 0 1 2 3

UNIT: 1455
PROJECT NUMBER & PHASE: 10000204411 CONTRACT NO.: 10-0E6121

DISREGARD PRINTS BEARING EARLIER REVISION DATES

REVISION DATES: 5-3-10 2-4-11 5-18-11 6-24-11 SHEET 10 OF 28

FILE => 29E0004-c-wpl04.dgn

USERNAME => s8121614 DATE PLOTTED => 01-DEC-2011 TIME PLOTTED => 10:58

DIST	COUNTY	ROUTE	POST MILES TOTAL PROJECT	SHEET No	TOTAL SHEETS
10	SJ	99	10.6/14.9	458	504

REGISTERED CIVIL ENGINEER 6-24-11 DATE

10-17-11
PLANS APPROVAL DATE

REGISTERED PROFESSIONAL ENGINEER
SHARIQ PERVAIZ
No. C67068
Exp. 9-30-12
CIVIL
STATE OF CALIFORNIA

The State of California or its officers or agents shall not be responsible for the accuracy or completeness of electronic copies of this plan sheet.

SAN JOAQUIN COUNCIL OF GOVERNMENTS
555 E. WEBER AVE.
STOCKTON, CA 95202

HDR ENGINEERING, INC.
2365 IRON POINT ROAD, SUITE 300
FOLSOM, CA 95630

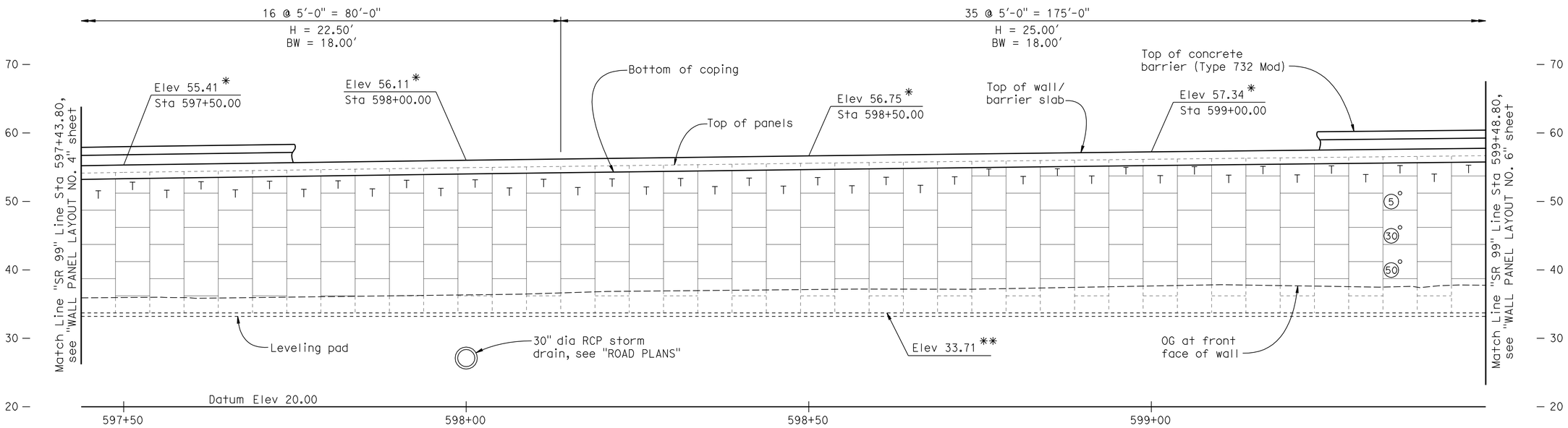

ELEVATION MSE WALL NO. 3

1/8" = 1'-0"

LEGEND:

*	Indicates top of wall elevation
**	Indicates top of leveling pad elevation
H =	Design Height, see "WALL DETAIL NO. 1" sheet
BW =	Base Width, see "WALL DETAIL NO. 1" sheet
T	Indicates Top Panel, see "WALL DETAIL NO. 2" sheet
	Indicates Intermediate or Bottom Panel, see "WALL DETAIL NO. 2" sheet
	Indicates Bottom Half Panel, see "WALL DETAIL NO. 2" sheet

30 Indicates Inspection Wire Panel

Indicates location of inspection wire replacement, see "MECHANICALLY STABILIZED EMBANKMENT - DETAIL NO. 3" sheet

Indicates interval in years from construction to removal of Inspection Wire

NOTES:

1. Concrete barrier (Type 60D) not shown for clarity.
2. Architectural details not shown.
3. For Wall Panel & Barrier Slab Details, see "MSE WALL DETAILS NO. 1 THRU 4" sheets.

Note:
The Contractor shall verify all controlling field dimensions before ordering or fabricating any materials.

Reza Erfanian
DESIGN OVERSIGHT Reza Erfanian
6/24/11
SIGN OFF DATE

	BY	CHECKED
DESIGN	S PERVAIZ	T KENG
DETAILS	J VOUGHT	T KENG
QUANTITIES	T KENG	J VOUGHT

PREPARED FOR THE STATE OF CALIFORNIA DEPARTMENT OF TRANSPORTATION

JOHN A. KLEMUNES, JR.
PROJECT ENGINEER

BRIDGE NO. 29E0004
POST MILE 10.97

MSE WALL NO. 3
WALL PANEL LAYOUT NO. 5

DESIGN DETAIL SHEET (ENGLISH) (REV.7/16/10)

ORIGINAL SCALE IN INCHES FOR REDUCED PLANS 0 1 2 3

UNIT: 1455
PROJECT NUMBER & PHASE: 10000204411 CONTRACT NO.: 10-0E6121

DISREGARD PRINTS BEARING EARLIER REVISION DATES

REVISION DATES: 5-3-10 2-4-11 5-19-11 6-24-11

SHEET 11 OF 28

FILE => 29E0004-c-wpl05.dgn

USERNAME => s6121614 DATE PLOTTED => 01-DEC-2011 TIME PLOTTED => 10:58

DIST	COUNTY	ROUTE	POST MILES TOTAL PROJECT	SHEET No	TOTAL SHEETS
10	SJ	99	10.6/14.9	459	504

REGISTERED CIVIL ENGINEER 6-24-11 DATE

10-17-11
PLANS APPROVAL DATE

REGISTERED PROFESSIONAL ENGINEER SHARIQ PERVAIZ No. C67068 Exp. 9-30-12 CIVIL STATE OF CALIFORNIA

The State of California or its officers or agents shall not be responsible for the accuracy or completeness of electronic copies of this plan sheet.

SAN JOAQUIN COUNCIL OF GOVERNMENTS
555 E. WEBER AVE.
STOCKTON, CA 95202

HDR ENGINEERING, INC.
2365 IRON POINT ROAD, SUITE 300
FOLSOM, CA 95630

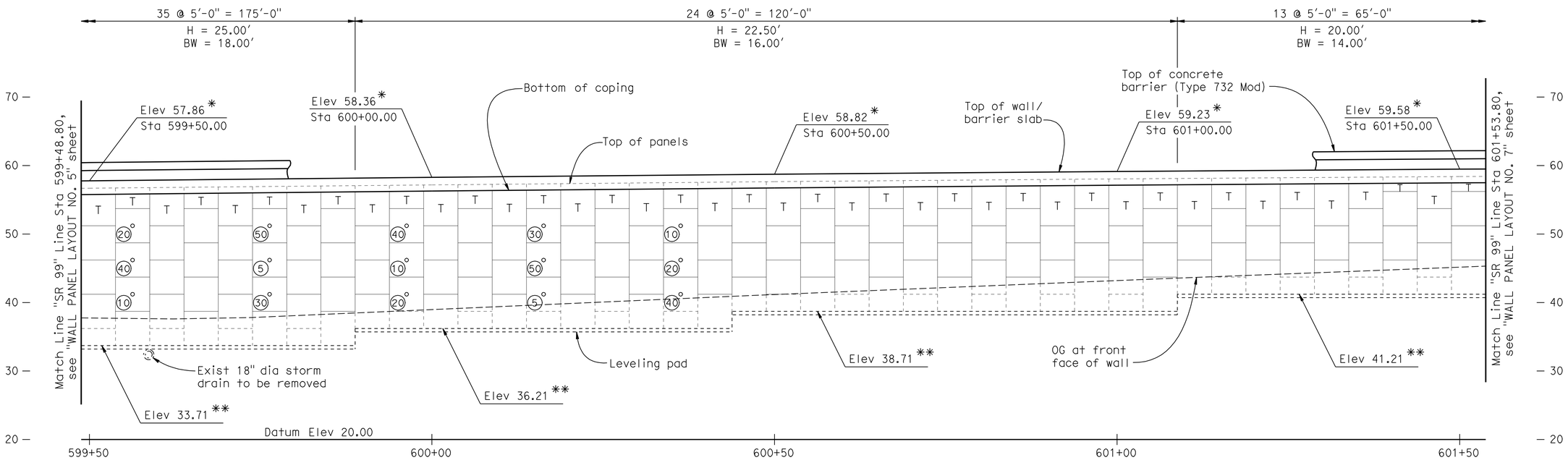

ELEVATION MSE WALL NO. 3

1/8" = 1'-0"

LEGEND:

*	Indicates top of wall elevation
**	Indicates top of leveling pad elevation
H =	Design Height, see "WALL DETAIL NO. 1" sheet
BW =	Base Width, see "WALL DETAIL NO. 1" sheet
T	Indicates Top Panel, see "WALL DETAIL NO. 2" sheet
	Indicates Intermediate or Bottom Panel, see "WALL DETAIL NO. 2" sheet
	Indicates Bottom Half Panel, see "WALL DETAIL NO. 2" sheet

Indicates Inspection Wire Panel

Indicates location of inspection wire replacement, see "MECHANICALLY STABILIZED EMBANKMENT - DETAIL NO. 3" sheet

Indicates interval in years from construction to removal of Inspection Wire

NOTES:

1. Concrete barrier (Type 60D) not shown for clarity.
2. Architectural details not shown.
3. For Wall Panel & Barrier Slab Details, see "MSE WALL DETAILS NO. 1 THRU 4" sheets.

Note:
The Contractor shall verify all controlling field dimensions before ordering or fabricating any materials.

DESIGN OVERSIGHT Reza Erfanian
6/24/11
SIGN OFF DATE

	BY	CHECKED
DESIGN	S PERVAIZ	T KENG
DETAILS	J VOUGHT	T KENG
QUANTITIES	T KENG	J VOUGHT

PREPARED FOR THE STATE OF CALIFORNIA DEPARTMENT OF TRANSPORTATION

JOHN A. KLEMUNES, JR.
PROJECT ENGINEER

BRIDGE NO. 29E0004
POST MILE 10.97

MSE WALL NO. 3
WALL PANEL LAYOUT NO. 6

DESIGN DETAIL SHEET (ENGLISH) (REV.7/16/10)

ORIGINAL SCALE IN INCHES FOR REDUCED PLANS 0 1 2 3

UNIT: 1455
PROJECT NUMBER & PHASE: 10000204411
CONTRACT NO.: 10-0E6121

DISREGARD PRINTS BEARING EARLIER REVISION DATES

REVISION DATES: 5-3-10 2-4-11 5-18-11 6-24-11

SHEET 12 OF 28

FILE => 29E0004-c-wpl06.dgn

USERNAME => s121614 DATE PLOTTED => 01-DEC-2011 TIME PLOTTED => 10:58

DIST	COUNTY	ROUTE	POST MILES TOTAL PROJECT	SHEET No	TOTAL SHEETS
10	SJ	99	10.6/14.9	460	504

REGISTERED CIVIL ENGINEER 6-24-11 DATE

10-17-11
PLANS APPROVAL DATE

REGISTERED PROFESSIONAL ENGINEER SHARIQ PERVAIZ No. C67068 Exp. 9-30-12 CIVIL STATE OF CALIFORNIA

The State of California or its officers or agents shall not be responsible for the accuracy or completeness of electronic copies of this plan sheet.

SAN JOAQUIN COUNCIL OF GOVERNMENTS
555 E. WEBER AVE.
STOCKTON, CA 95202

HDR ENGINEERING, INC.
2365 IRON POINT ROAD, SUITE 300
FOLSOM, CA 95630

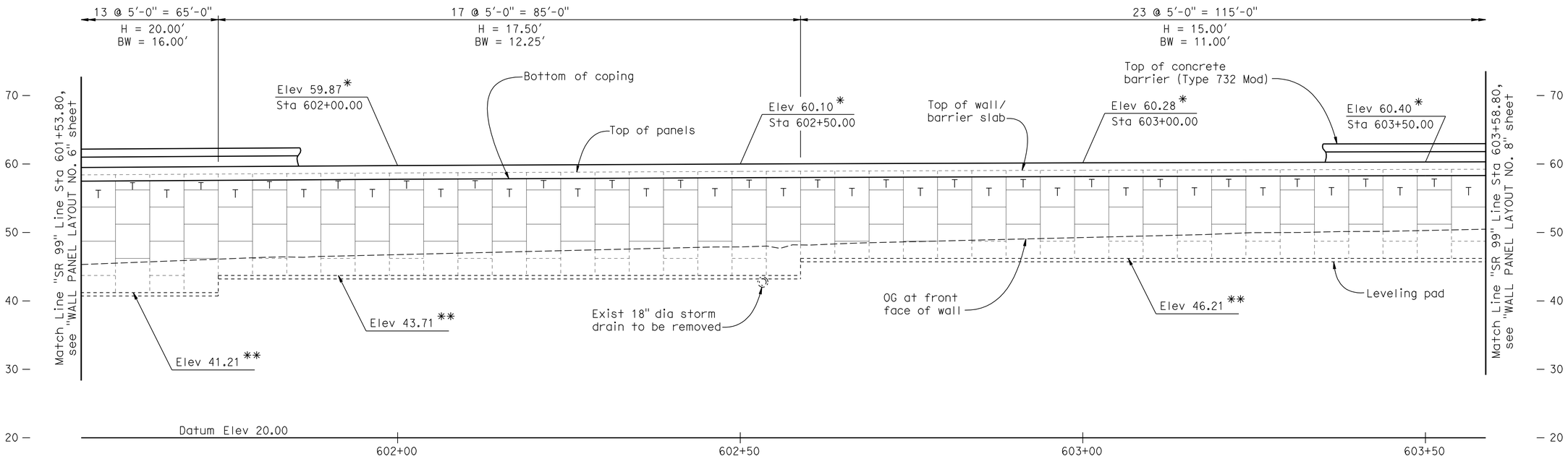

ELEVATION MSE WALL NO. 3

1/8" = 1'-0"

LEGEND:

*	Indicates top of wall elevation
**	Indicates top of leveling pad elevation
H =	Design Height, see "WALL DETAIL NO. 1" sheet
BW =	Base Width, see "WALL DETAIL NO. 1" sheet
T	Indicates Top Panel, see "WALL DETAIL NO. 2" sheet
	Indicates Intermediate or Bottom Panel, see "WALL DETAIL NO. 2" sheet
	Indicates Bottom Half Panel, see "WALL DETAIL NO. 2" sheet

NOTES:

1. Concrete barrier (Type 60D) not shown for clarity.
2. Architectural details not shown.
3. For Wall Panel & Barrier Slab Details, see "MSE WALL DETAILS NO. 1 THRU 4" sheets.

Note:
The Contractor shall verify all controlling field dimensions before ordering or fabricating any materials.

Reza Erfanian
DESIGN OVERSIGHT Reza Erfanian
6/24/11
SIGN OFF DATE

	BY	CHECKED
DESIGN	S PERVAIZ	T KENG
DETAILS	J VOUGHT	T KENG
QUANTITIES	T KENG	J VOUGHT

PREPARED FOR THE STATE OF CALIFORNIA DEPARTMENT OF TRANSPORTATION

JOHN A. KLEMUNES, JR.
PROJECT ENGINEER

BRIDGE NO. 29E0004
POST MILE 10.97

MSE WALL NO. 3
WALL PANEL LAYOUT NO. 7

DESIGN DETAIL SHEET (ENGLISH) (REV.7/16/10)

ORIGINAL SCALE IN INCHES FOR REDUCED PLANS 0 1 2 3

UNIT: 1455
PROJECT NUMBER & PHASE: 10000204411 CONTRACT NO.: 10-0E6121

DISREGARD PRINTS BEARING EARLIER REVISION DATES

REVISION DATES: 5-3-10 2-4-11 5-18-11 6-24-11

SHEET 13 OF 28

FILE => 29E0004-c-wp107.dgn

USERNAME => s121614 DATE PLOTTED => 01-DEC-2011 TIME PLOTTED => 10:58

DIST	COUNTY	ROUTE	POST MILES TOTAL PROJECT	SHEET No	TOTAL SHEETS
10	SJ	99	10.6/14.9	461	504

REGISTERED CIVIL ENGINEER 6-24-11 DATE

10-17-11
PLANS APPROVAL DATE

REGISTERED PROFESSIONAL ENGINEER SHARIQ PERVAIZ No. C67068 Exp. 9-30-12 CIVIL STATE OF CALIFORNIA

The State of California or its officers or agents shall not be responsible for the accuracy or completeness of electronic copies of this plan sheet.

SAN JOAQUIN COUNCIL OF GOVERNMENTS
555 E. WEBER AVE.
STOCKTON, CA 95202

HDR ENGINEERING, INC.
2365 IRON POINT ROAD, SUITE 300
FOLSOM, CA 95630

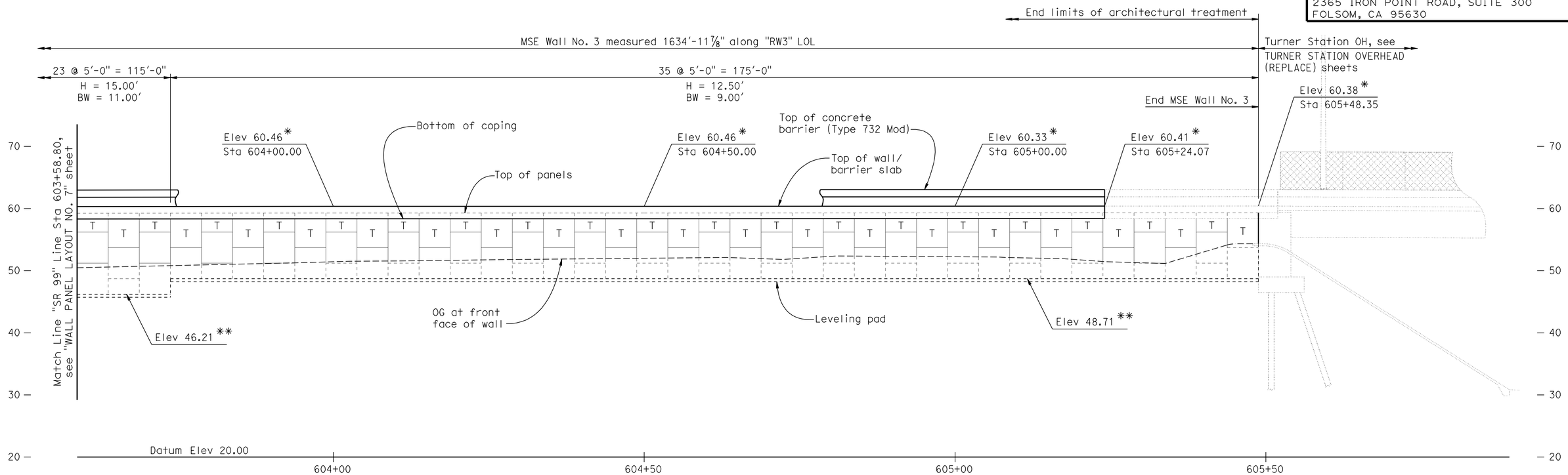

ELEVATION MSE WALL NO. 3

1/8" = 1'-0"

LEGEND:

*	Indicates top of wall elevation
**	Indicates top of leveling pad elevation
H =	Design Height, see "WALL DETAIL NO. 1" sheet
BW =	Base Width, see "WALL DETAIL NO. 1" sheet
T	Indicates Top Panel, see "WALL DETAIL NO. 2" sheet
	Indicates Intermediate or Bottom Panel, see "WALL DETAIL NO. 2" sheet
	Indicates Bottom Half Panel, see "WALL DETAIL NO. 2" sheet

NOTES:

1. Concrete barrier (Type 60D) not shown for clarity.
2. Architectural details not shown.
3. For Wall Panel & Barrier Slab Details, see "MSE WALL DETAILS NO. 1 THRU 4" sheets.

Note:
The Contractor shall verify all controlling field dimensions before ordering or fabricating any materials.

Reza Erfanian
DESIGN OVERSIGHT Reza Erfanian
6/24/11
SIGN OFF DATE

	BY	CHECKED
DESIGN	S PERVAIZ	T KENG
DETAILS	J VOUGHT	T KENG
QUANTITIES	T KENG	J VOUGHT

PREPARED FOR THE STATE OF CALIFORNIA DEPARTMENT OF TRANSPORTATION

JOHN A. KLEMUNES, JR.
PROJECT ENGINEER

BRIDGE NO. 29E0004
POST MILE 10.97

MSE WALL NO. 3
WALL PANEL LAYOUT NO. 8

DESIGN DETAIL SHEET (ENGLISH) (REV.7/16/10)

ORIGINAL SCALE IN INCHES FOR REDUCED PLANS 0 1 2 3

UNIT: 1455
PROJECT NUMBER & PHASE: 10000204411 CONTRACT NO.: 10-0E6121

DISREGARD PRINTS BEARING EARLIER REVISION DATES

REVISION DATES: 5-3-10 2-4-11 5-18-11 6-24-11

SHEET 14 OF 28

FILE => 29E0004-c-wp108.dgn

USERNAME => s121614 DATE PLOTTED => 01-DEC-2011 TIME PLOTTED => 10:58

DIST	COUNTY	ROUTE	POST MILES TOTAL PROJECT	SHEET No	TOTAL SHEETS
10	SJ	99	10.6/14.9	462	504

REGISTERED CIVIL ENGINEER 6-24-11 DATE

10-17-11
PLANS APPROVAL DATE

REGISTERED PROFESSIONAL ENGINEER SHARIO PERVAIZ No. C67068 Exp. 9-30-12 CIVIL STATE OF CALIFORNIA

The State of California or its officers or agents shall not be responsible for the accuracy or completeness of electronic copies of this plan sheet.

SAN JOAQUIN COUNCIL OF GOVERNMENTS
555 E. WEBER AVE.
STOCKTON, CA 95202

HDR ENGINEERING, INC.
2365 IRON POINT ROAD, SUITE 300
FOLSOM, CA 95630

WELDED WIRE MAT SOIL REINFORCEMENT SCHEDULE

Maximum Wall Design height, H	H ≤ 10′	H ≤ 12.5′	H ≤ 15′	H ≤ 17.5′
Type of welded wire mats at different layers starting at top layer of the top panel. See Note 2.	2 @ W11xW11+6"x9" 2 @ W11xW11+6"x12"	2 @ W11xW11+6"x9" 2 @ W11xW11+6"x12" 1 @ W11xW11+6"x18"	2 @ W11xW11+6"x9" 2 @ W11xW11+6"x12" 1 @ W11xW11+6"x18" 1 @ W11xW11+6"x24"	2 @ W11xW11+6"x9" 2 @ W11xW11+6"x12" 1 @ W11xW11+6"x18" 2 @ W11xW11+6"x24"
Maximum Wall Design height, H	**H ≤ 20′**	**H ≤ 22.5′**	**H ≤ 25′**	**H ≤ 27.5′**
Type of welded wire mats at different layers starting at top layer of the top panel. See Note 2.	2 @ W11xW11+6"x9" 3 @ W11xW11+6"x18" 3 @ W11xW11+6"x24"	5 @ W11xW11+6"x18" 4 @ W11xW11+6"x24"	5 @ W11xW11+6"x18" 5 @ W11xW11+6"x24"	5 @ W11xW11+6"x18" 5 @ W11xW11+6"x24" 1 @ W11xW11+6"x30"

Notes:
1. For base wall details, see "MECHANICALLY STABILIZED EMBANKMENT DETAIL NO.1" and "MECHANICALLY STABILIZED EMBANKMENT DETAIL NO. 2" sheets.
2. See "MSE WALL DETAILS NO. 3" sheet for welded wire mat soil reinforcement around drainage inlet.
3. 5 @ W11xW11 + 6"x30"
   - 6"x30" — Transverse wire spacing
   - 6" — Longitudinal wire spacing
   - W11 — Transverse wire size
   - W11 — Longitudinal wire size
   - 5 — Number of layers of the type of weled wire mat required

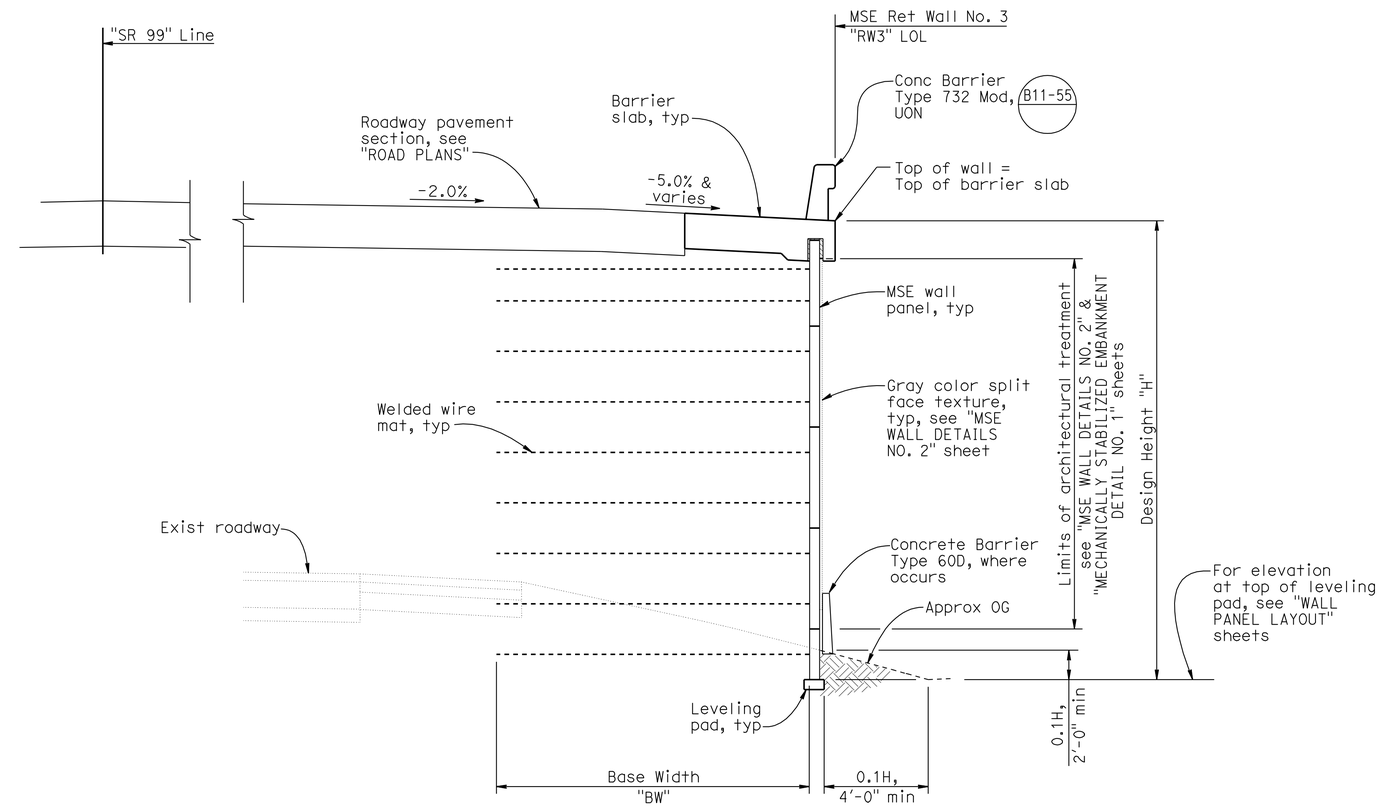

TYPICAL SECTION

1/4" = 1′-0"

Note:
The Contractor shall verify all controlling field dimensions before ordering or fabricating any materials.

Reza Erfanian
DESIGN OVERSIGHT Reza Erfanian
6/24/11
SIGN OFF DATE

	BY	CHECKED
DESIGN	S PERVAIZ	T KENG
DETAILS	J VOUGHT	T KENG
QUANTITIES	T KENG	J VOUGHT

PREPARED FOR THE STATE OF CALIFORNIA DEPARTMENT OF TRANSPORTATION

JOHN A. KLEMUNES, JR.
PROJECT ENGINEER

BRIDGE NO. 29E0004
POST MILE 10.97

MSE WALL NO. 3
MSE WALL DETAILS NO. 1

DESIGN DETAIL SHEET (ENGLISH) (REV.7/16/10)

ORIGINAL SCALE IN INCHES FOR REDUCED PLANS 0 1 2 3

UNIT: 1455
PROJECT NUMBER & PHASE: 10000204411 CONTRACT NO.: 10-0E6121

DISREGARD PRINTS BEARING EARLIER REVISION DATES

REVISION DATES: 5-3-10 2-4-11 5-19-11 6-24-11

SHEET 15 OF 28

FILE => 29E0004-g-msedt01.dgn

USERNAME => s121614 DATE PLOTTED => 01-DEC-2011 TIME PLOTTED => 10:58

DIST	COUNTY	ROUTE	POST MILES TOTAL PROJECT	SHEET No	TOTAL SHEETS
10	SJ	99	10.6/14.9	463	504

REGISTERED CIVIL ENGINEER 6-24-11 DATE

10-17-11
PLANS APPROVAL DATE

REGISTERED PROFESSIONAL ENGINEER SHARIQ PERVAIZ No. C67068 Exp. 9-30-12 CIVIL STATE OF CALIFORNIA

The State of California or its officers or agents shall not be responsible for the accuracy or completeness of electronic copies of this plan sheet.

SAN JOAQUIN COUNCIL OF GOVERNMENTS
555 E. WEBER AVE.
STOCKTON, CA 95202

HDR ENGINEERING, INC.
2365 IRON POINT ROAD, SUITE 300
FOLSOM, CA 95630

NOTES:

1. For additional information, see "MECHANICALLY STABILIZED EMBANKMENT - DETAIL NO. 1" sheet.
2. Top of panels shall be cast to conform to wall profile.
3. Omit wire mat when vertical spacing between mats is less than 6".

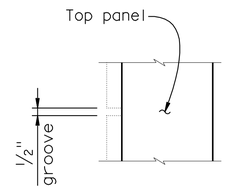

GROOVE DETAIL

No Scale

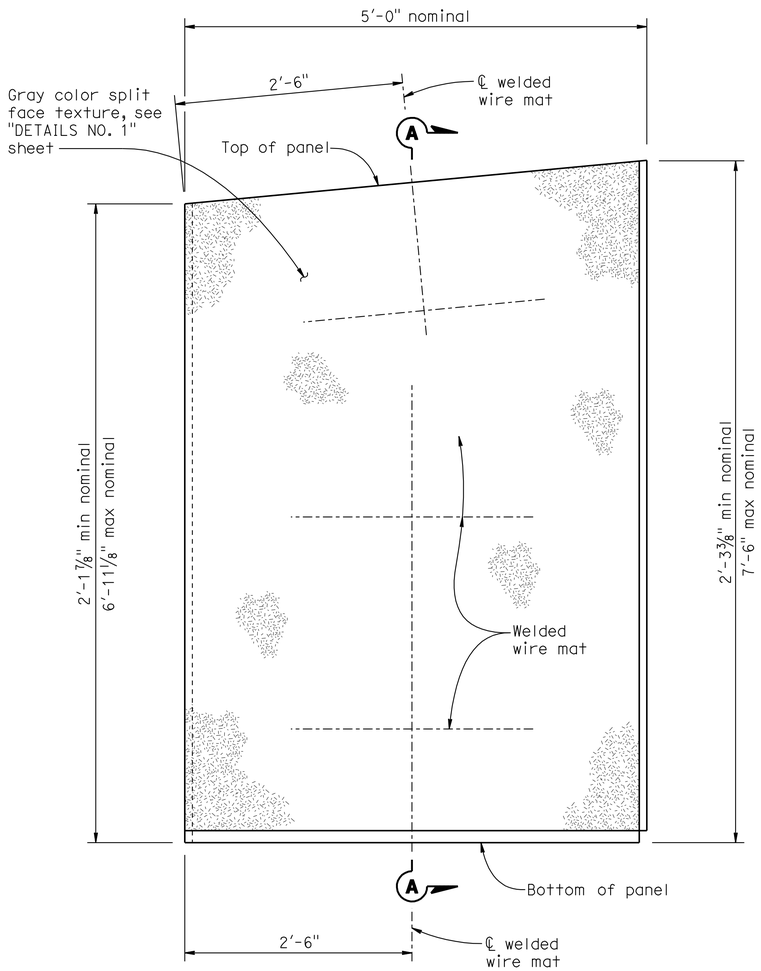

TOP PANEL

1"=10'

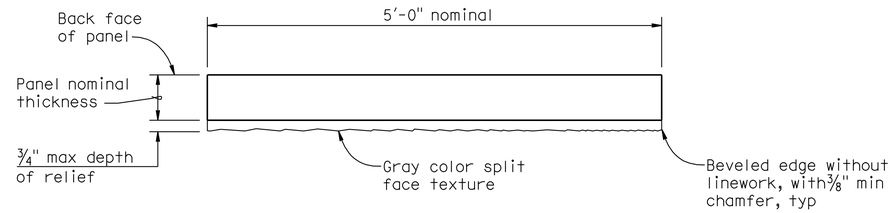

ARCHITECTURAL DETAIL

1"=10'

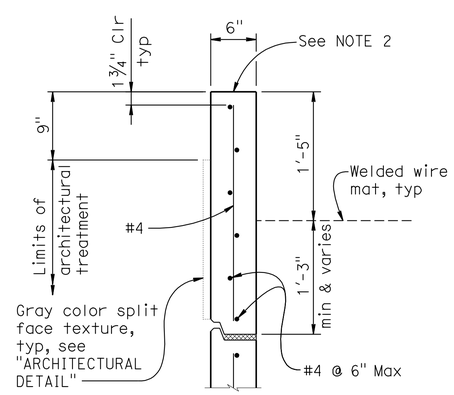

SINGLE LAYER MAT

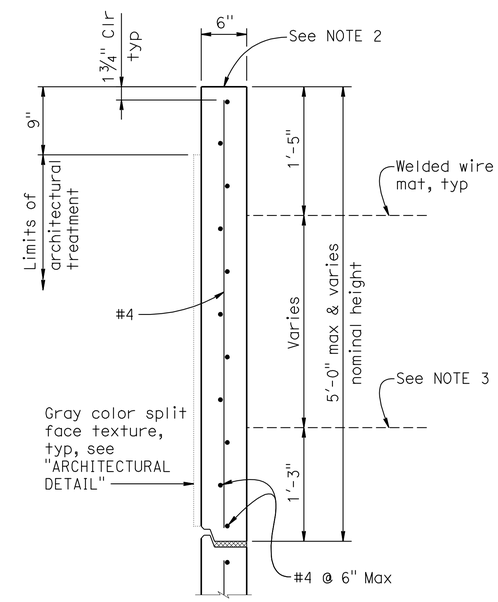

DOUBLE LAYER MAT

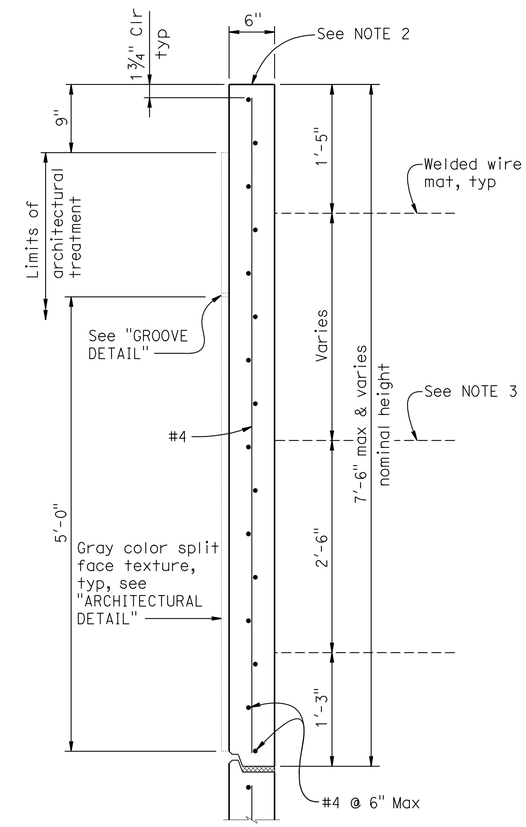

TRIPLE LAYER MAT

SECTION A-A

1"=10'

Note:
The Contractor shall verify all controlling field dimensions before ordering or fabricating any materials.

Reza Erfanian
DESIGN OVERSIGHT Reza Erfanian
6/24/11
SIGN OFF DATE

	BY	CHECKED
DESIGN	S PERVAIZ	T KENG
DETAILS	J VOUGHT	T KENG
QUANTITIES	T KENG	J VOUGHT

PREPARED FOR THE STATE OF CALIFORNIA DEPARTMENT OF TRANSPORTATION

JOHN A. KLEMUNES, JR.
PROJECT ENGINEER

BRIDGE NO. 29E0004
POST MILE 10.97

MSE WALL NO. 3

MSE WALL DETAILS NO. 2

DESIGN DETAIL SHEET (ENGLISH) (REV.7/16/10)

ORIGINAL SCALE IN INCHES FOR REDUCED PLANS 0 1 2 3

UNIT: 1455
PROJECT NUMBER & PHASE: 10000204411 CONTRACT NO.: 10-0E6121

DISREGARD PRINTS BEARING EARLIER REVISION DATES

REVISION DATES: 5-3-10 2-4-11 5-19-11 6-24-11

SHEET 16 OF 28

FILE => 29E0004-g-msedt02.dgn

USERNAME => s121614 DATE PLOTTED => 01-DEC-2011 TIME PLOTTED => 10:59

DIST	COUNTY	ROUTE	POST MILES TOTAL PROJECT	SHEET No	TOTAL SHEETS
10	SJ	99	10.6/14.9	464	504

REGISTERED CIVIL ENGINEER 6-24-11 DATE

10-17-11
PLANS APPROVAL DATE

REGISTERED PROFESSIONAL ENGINEER SHARIO PERVAIZ No. C67068 Exp. 9-30-12 CIVIL STATE OF CALIFORNIA

The State of California or its officers or agents shall not be responsible for the accuracy or completeness of electronic copies of this plan sheet.

SAN JOAQUIN COUNCIL OF GOVERNMENTS
555 E. WEBER AVE.
STOCKTON, CA 95202

HDR ENGINEERING, INC.
2365 IRON POINT ROAD, SUITE 300
FOLSOM, CA 95630

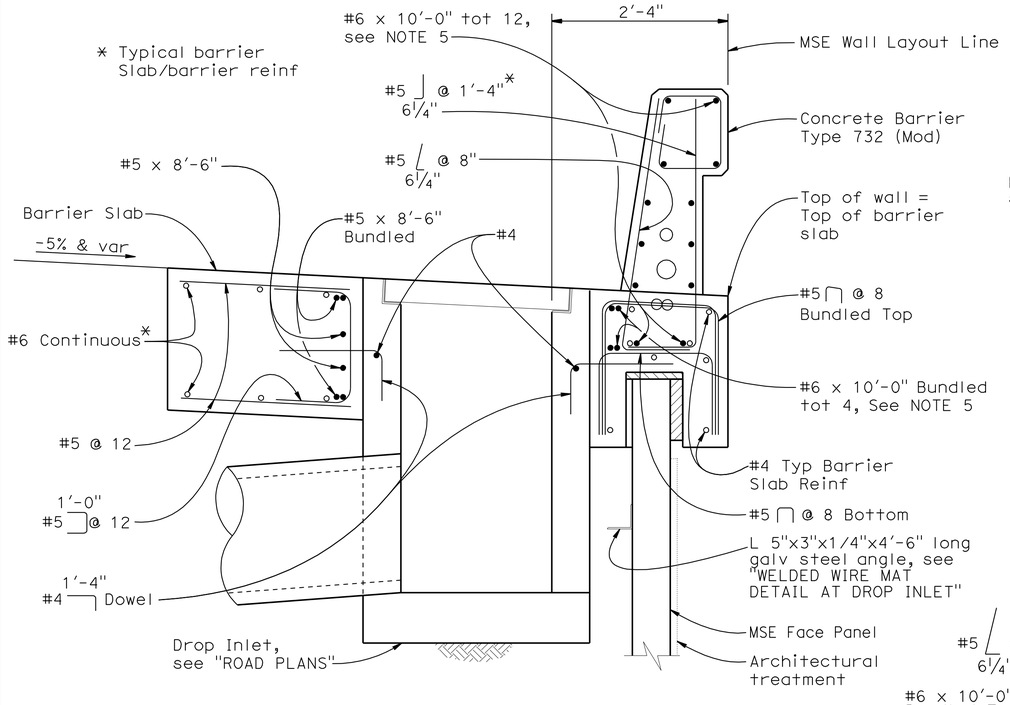

SECTION A-A

1" = 1'-0"

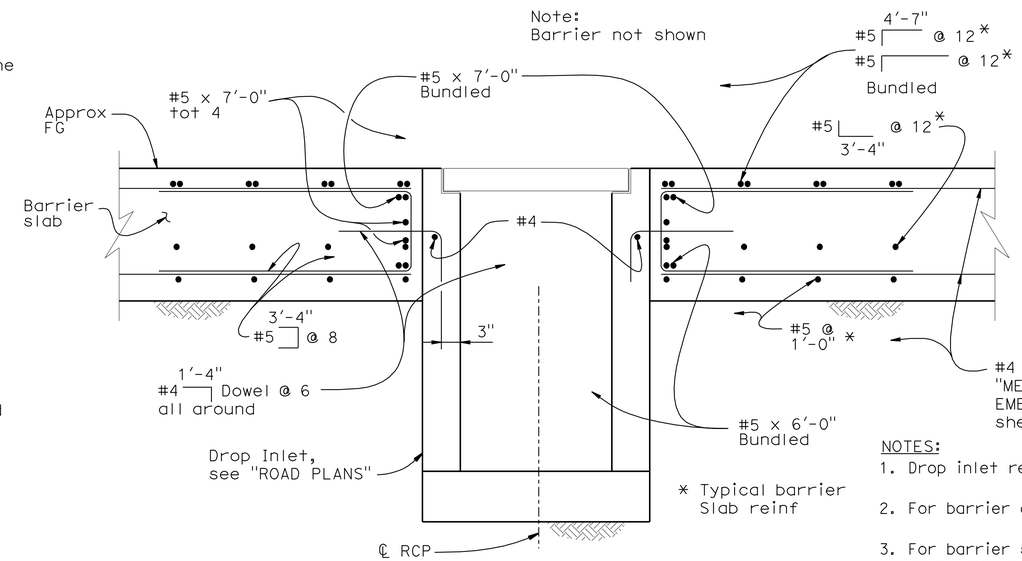

SECTION B-B

¾" = 1'-0"

NOTES:

1. Drop inlet reinforcement not shown.
2. For barrier details, see B11-55
3. For barrier slab details not shown, see "MECHANICALLY STABILIZED EMBANKMENT DETAIL NO. 4" sheet.
4. For drainage system location and details, see "ROAD PLANS".
5. Reinforcement in addition to Standard Barrier/Barrier Slab continuous reinforcement to be bundled with Standard Barrier reinforcement.
6. Drop inlet shall be centered on vertical panel joint.

LEGEND:

Denotes Bundled Bars, Typ

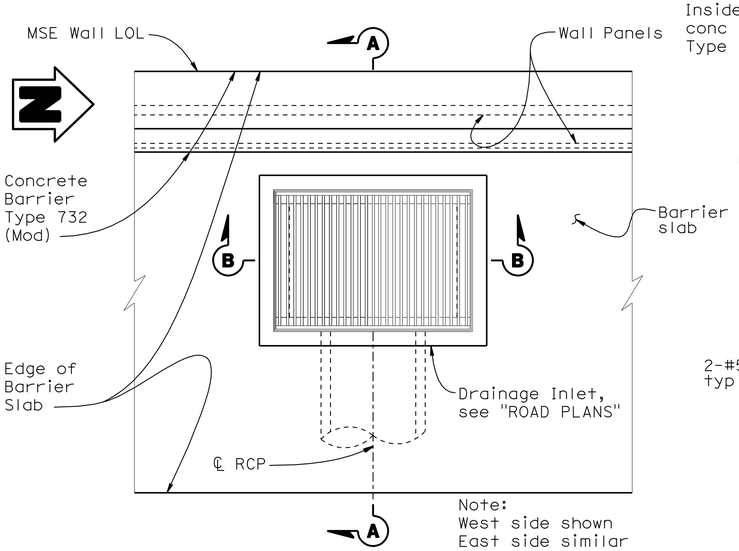

PART PLAN

¾" = 1'-0"

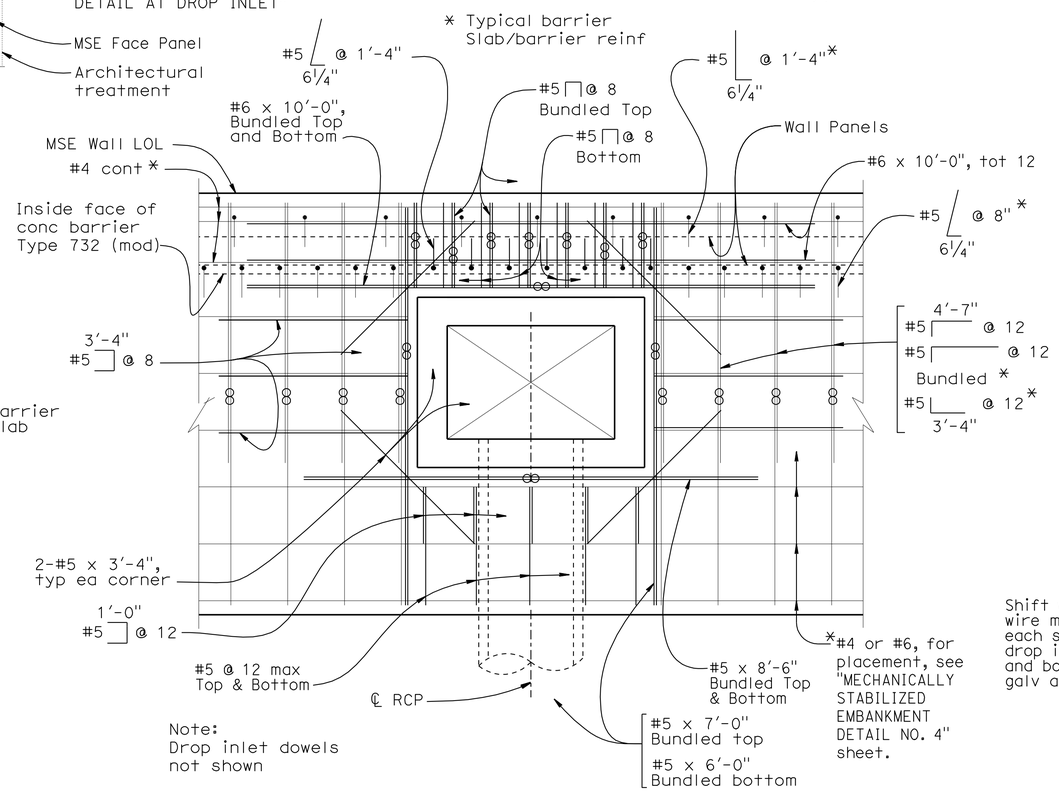

PART PLAN-BARRIER SLAB REINFORCEMENT

¾" = 1'-0"

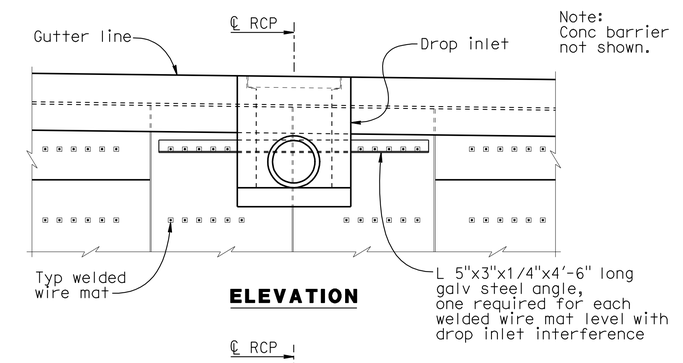

ELEVATION

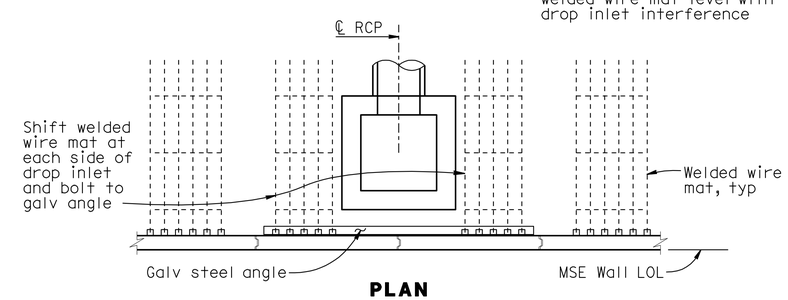

PLAN

WELDED WIRE MAT DETAIL AT DROP INLET

No Scale

Note:
The Contractor shall verify all controlling field dimensions before ordering or fabricating any materials.

DESIGN OVERSIGHT Reza Erfanian	DESIGN	BY S PERVAIZ	CHECKED T KENG	PREPARED FOR THE STATE OF CALIFORNIA DEPARTMENT OF TRANSPORTATION	JOHN A. KLEMUNES, JR. PROJECT ENGINEER
6/24/11 SIGN OFF DATE	DETAILS	BY J VOUGHT	CHECKED T KENG		BRIDGE NO. 29E0004 / POST MILE 10.97
	QUANTITIES	BY T KENG	CHECKED J VOUGHT		

MSE WALL NO. 3

MSE WALL DETAILS NO. 3

DESIGN DETAIL SHEET (ENGLISH) (REV.7/16/10)

ORIGINAL SCALE IN INCHES FOR REDUCED PLANS 0 1 2 3

UNIT: 1455
PROJECT NUMBER & PHASE: 10000204411 CONTRACT NO.: 10-0E6121

DISREGARD PRINTS BEARING EARLIER REVISION DATES

REVISION DATES: 5-3-10 2-4-11 5-18-11 6-24-11 SHEET 17 OF 28

FILE => 29E0004-g-msedt03.dgn

USERNAME => s12614 DATE PLOTTED => 01-DEC-2011 TIME PLOTTED => 10:59

DIST.	COUNTY	ROUTE	POST MILES TOTAL PROJECT	SHEET NO.	TOTAL SHEETS
10	SJ	99	10.6/14.9	465	504

REGISTERED ENGINEER - CIVIL 6-24-11

10-17-11
PLANS APPROVAL DATE

REGISTERED PROFESSIONAL ENGINEER SHARIQ PERVAIZ No. C67068 Exp. 9-30-12 CIVIL STATE OF CALIFORNIA

The State of California or its officers or agents shall not be responsible for the accuracy or completeness of electronic copies of this plan sheet.

SAN JOAQUIN COUNCIL OF GOVERNMENTS
555 E. WEBER AVE.
STOCKTON, CA 95202

HDR ENGINEERING, INC.
2365 IRON POINT ROAD, SUITE 300
FOLSOM, CA 95630

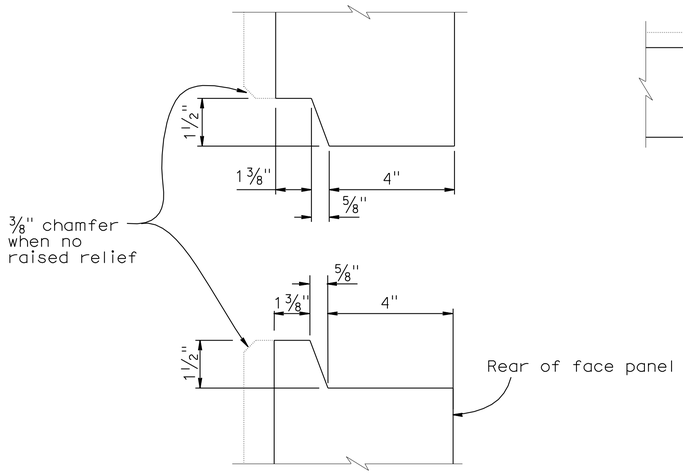

HORIZONTAL JOINT DETAIL 2
1:2.5

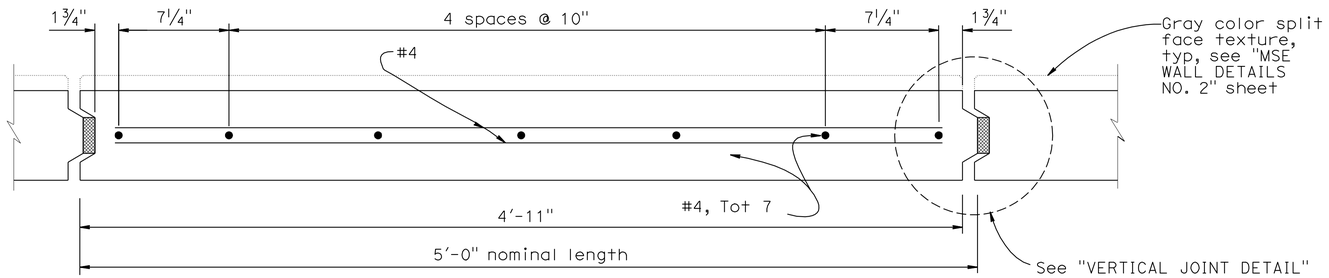

PLAN - FACE PANEL 2

NOTES:

3 ~~1. Architectural treatment not shown.~~

2. Place reinforced elastomeric bearing pads in all of the panel joints between the panels. Place one in each vertical joint where the horizontal joint intersects it. Place two per panel in each horizontal joint.
   3/4" x 2 3/8" x 6" for vertical joints
   3/4" x 4" x 6" for horizontal joints.

3. Bond a strip of filter fabric, 1'- 0" wide, over the full length of all panel joints.

1 4. For top panel details, see "MSE WALL DETAILS NO. 2" sheet.

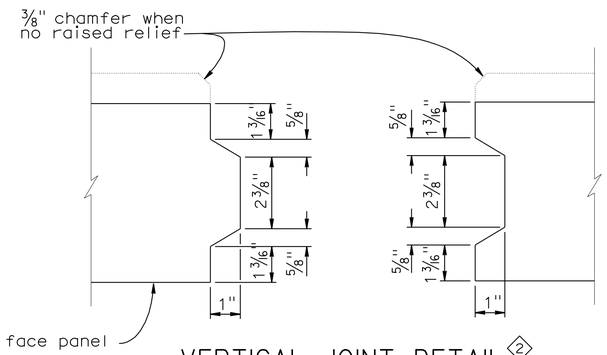

VERTICAL JOINT DETAIL 2
1:2.5

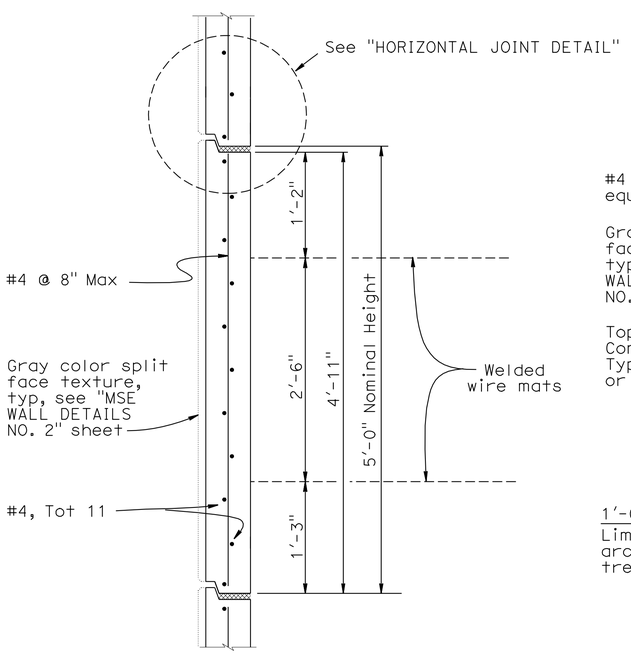

INTERMEDIATE PANEL 2
1:10

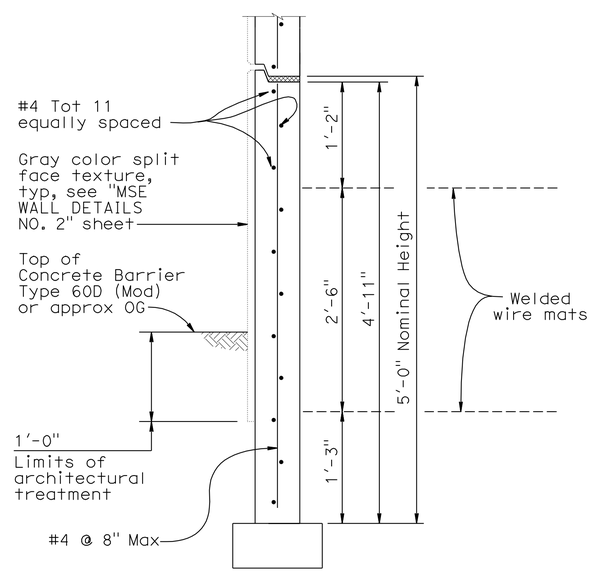

BOTTOM PANEL 2
1:10

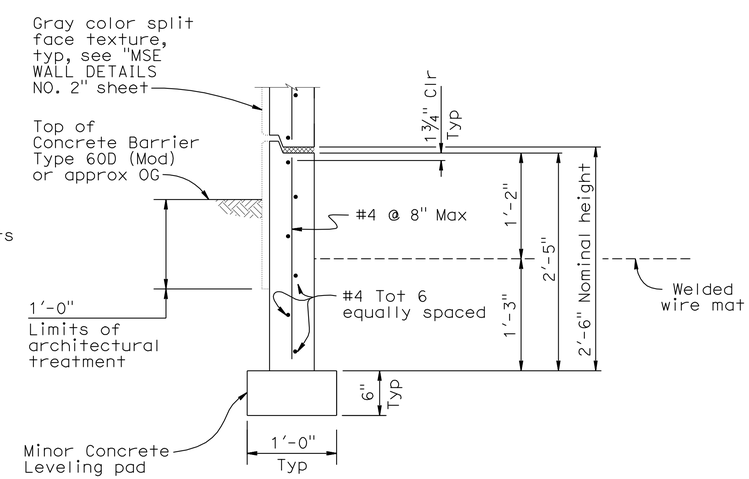

BOTTOM HALF PANEL 2
1:10

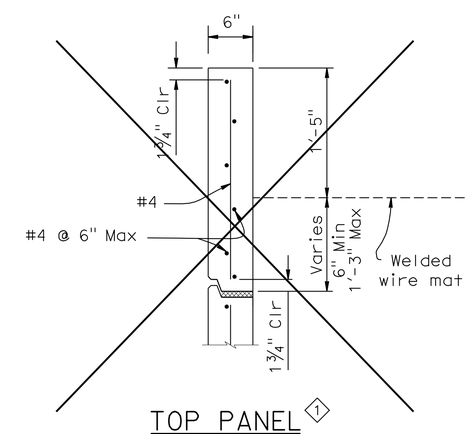

TOP PANEL 1
1:10

STANDARD DRAWING		
FILE NO. xs13-020-1e	APPROVED BY K. GRISWELL, RESPONSIBLE TECHNICAL SPECIALIST; APPROVAL DATE 5-6-08	RELEASED BY ROBERTO LACALLE, RESPONSIBLE OFFICE CHIEF; RELEASE DATE 5-6-08

1 Deleted Detail
2 Modified Detail
3 Deleted Note

STATE OF CALIFORNIA
DEPARTMENT OF TRANSPORTATION

DIVISION OF ENGINEERING SERVICES

BRIDGE NO. 29E0004
POST MILE 10.97

MSE RETAINING WALL NO. 3

MECHANICALLY STABILIZED EMBANKMENT

DETAIL NO. 1

DS OSD 2147A (ENGLISH STANDARD DRAWING "XS" BORDER REV. 01/11/08)

ORIGINAL SCALE IN INCHES FOR REDUCED PLANS 0 1 2 3

UNIT: 1455
PROJECT NUMBER & PHASE: 10000204411 CONTRACT NO.: 10-0E6121

DISREGARD PRINTS BEARING EARLIER REVISION DATES

REVISION DATES: 5-3-10, 2-4-11, 5-19-11, 6-24-11

SHEET 18 OF 28

USERNAME => s121614

29E0004-g-msedt04.dgn

DATE PLOTTED => 01-DEC-2011 TIME PLOTTED => 10:59

DIST.	COUNTY	ROUTE	POST MILES TOTAL PROJECT	SHEET NO.	TOTAL SHEETS
10	SJ	99	10.6/14.9	466	504

6-24-11
REGISTERED ENGINEER - CIVIL

10-17-11
PLANS APPROVAL DATE

REGISTERED PROFESSIONAL ENGINEER
SHARIQ PERVAIZ
No. C67068
Exp. 9-30-12
CIVIL
STATE OF CALIFORNIA

The State of California or its officers or agents shall not be responsible for the accuracy or completeness of electronic copies of this plan sheet.

SAN JOAQUIN COUNCIL OF GOVERNMENTS
555 E. WEBER AVE.
STOCKTON, CA 95202

HDR ENGINEERING, INC.
2365 IRON POINT ROAD, SUITE 300
FOLSOM, CA 95630

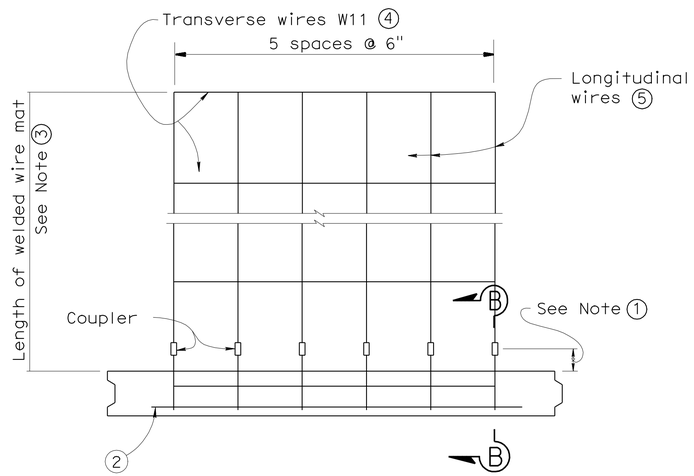

PLAN OF PANEL WITH WELDED WIRE MAT
No scale

GENERAL NOTES (MSE WALLS)

Live loading: Surcharge = 240 lb/ft^2

Soil parameters:

Internal design ϕ = 34°, γ = 120 lb/ft^3
External design ϕ(Backfill) = 34°, γ = 120 lb/ft^3
ϕ(Foundation) = 30°

Precast concrete panels:

f'c = 4,000 psi (Concrete compressive strength at 28 days)
fy = 60,000 psi (Yield strength of reinforcement)

Soil reinforcement:

Welded wire mats: fy = 65,000 psi (Yield strength)
Coupler: fy = 36,000 psi (Yield strength)
Corrosion rate = 1.1 mils/year

Reinforced concrete:

f'c = 3,600 psi, except as noted
(Concrete compressive strength at 28 days)

fy = 60,000 psi (Yield strength of reinforcement)

MSE = Mechanically stabilized embankment

Notes:

① Distance as required to permit coupler to be swaged.

② Place #4 bar, 3' - 2" long, centered on connector mat, but not welded to it.

③ Length equals "Base width" of wall, except it shall not be less than 16' for the top 2 levels of mats at the top of the wall.

④ All Transverse Wires size W11 at various spacings as shown elsewhere in plans.

⑤ All Longitudinal Wires at 6" spacing, of various sizes, as shown elsewhere in plans.

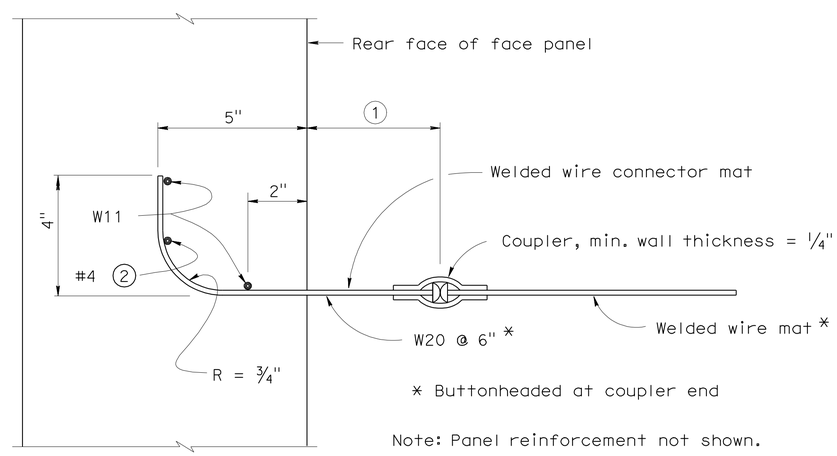

SECTION B-B
No scale

STANDARD DRAWING

FILE NO. xs13-020-2e

APPROVED BY K. GRISWELL
RESPONSIBLE TECHNICAL SPECIALIST
APPROVAL DATE 5-6-08

RELEASED BY ROBERTO LACALLE
RESPONSIBLE OFFICE CHIEF
RELEASE DATE 5-6-08

STATE OF CALIFORNIA
DEPARTMENT OF TRANSPORTATION

DIVISION OF ENGINEERING SERVICES

BRIDGE NO. 29E0004
POST MILE 10.97

MSE RETAINING WALL NO. 3

MECHANICALLY STABILIZED EMBANKMENT

DETAIL NO. 2

DS OSD 2147A (ENGLISH STANDARD DRAWING "XS" BORDER REV. 01/11/08)

ORIGINAL SCALE IN INCHES FOR REDUCED PLANS 0 1 2 3

UNIT: 1455
PROJECT NUMBER & PHASE: 10000204411 CONTRACT NO.: 10-0E6121

DISREGARD PRINTS BEARING EARLIER REVISION DATES

REVISION DATES: 5-1-10 2-4-11 5-19-11 6-24-11

SHEET 19 OF 28

DATE PLOTTED => 01-DEC-2011 TIME PLOTTED => 10:59

USERNAME => s121614

29E0004-g-msedt05.dgn

DIST.	COUNTY	ROUTE	POST MILES TOTAL PROJECT	SHEET NO.	TOTAL SHEETS
10	SJ	99	10.6/14.9	467	504

6-24-11
REGISTERED ENGINEER - CIVIL

10-17-11
PLANS APPROVAL DATE

REGISTERED PROFESSIONAL ENGINEER
SHARIQ PERVAIZ
No. C67068
Exp. 9-30-12
CIVIL
STATE OF CALIFORNIA

The State of California or its officers or agents shall not be responsible for the accuracy or completeness of electronic copies of this plan sheet.

SAN JOAQUIN COUNCIL OF GOVERNMENTS
555 E. WEBER AVE.
STOCKTON, CA 95202

HDR ENGINEERING, INC.
2365 IRON POINT ROAD, SUITE 300
FOLSOM, CA 95630

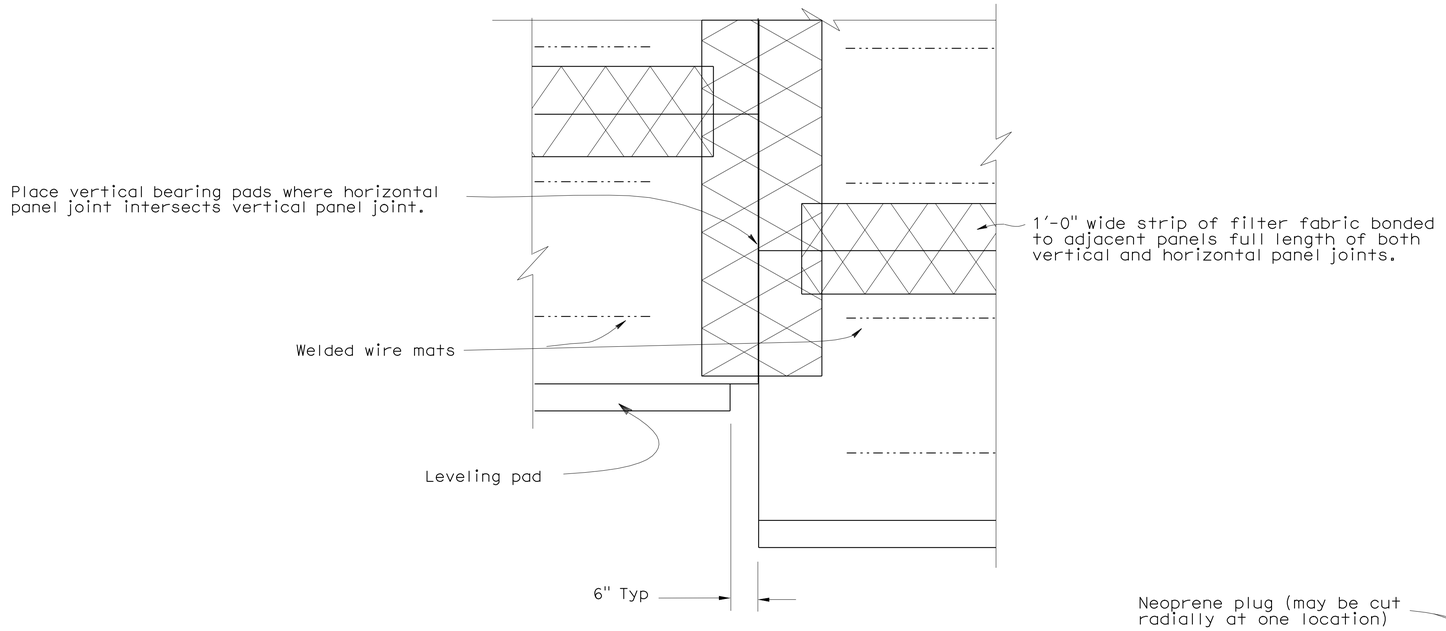

REAR ELEVATION

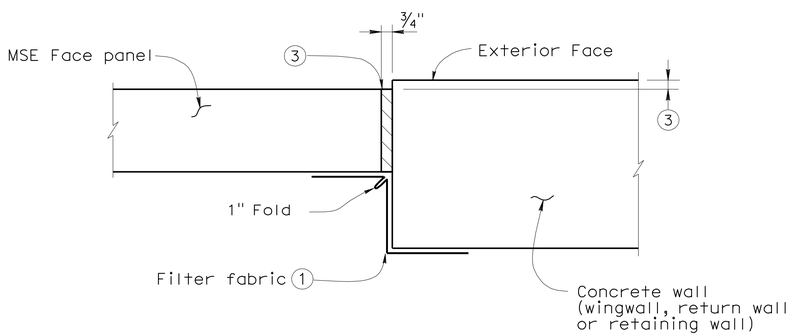

MSE FACE PANEL-TO-CONCRETE WALL JOINT DETAIL

LEGEND:

1. Bond a strip of filter fabric, 1'-6" wide, to back of MSE panels and the adjacent concrete wall for entire length of vertical joint.
2. Bond expansion joint material to the concrete wall.
3. Offset between face of MSE face panel and face of the concrete wall as dictated by location of layout lines shown elsewhere in Project Plans.

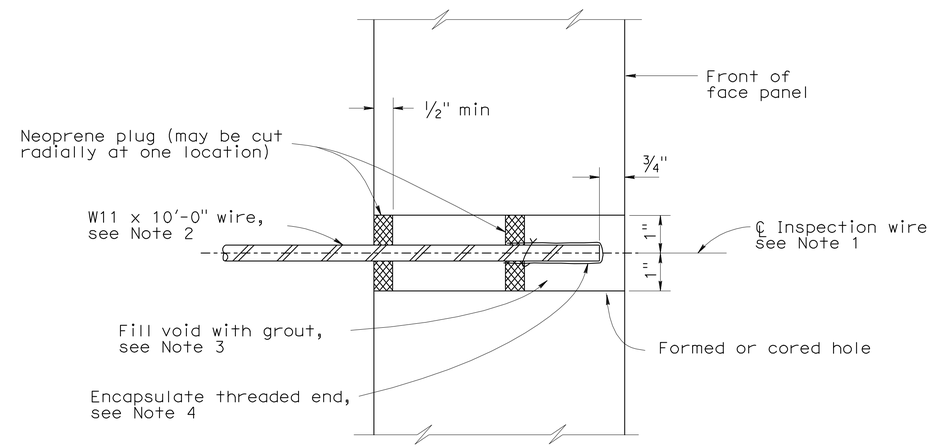

SECTION THRU INSPECTION WIRE

NOTES:

1. Center inspection wire in face panel.
2. Fabricate inspection wires from W11 wire representative of the welded wire mats, with 3/8" dia - 16 UNC threads for at least 1 1/2" of one end.
3. Place inspection wire horizontal and perpendicular to the wall panel prior to backfilling. After backfill placement to a level at least 2'-0" above the inspection wire, dry pack opening with 1000 to 1500 psi mortar. Trowel mortar smooth and flush with face of panel.
4. Encapsulate threaded end with corrosion inhibiting mastic, and secure round vinyl cover with nylon tie.

   UNC = Unified coarse threads

STANDARD DRAWING

FILE NO. xs13-020-3e

APPROVED BY K. GRISWELL
RESPONSIBLE TECHNICAL SPECIALIST
APPROVAL DATE 5-6-08

RELEASED BY ROBERTO LACALLE
RESPONSIBLE OFFICE CHIEF
RELEASE DATE 5-6-08

STATE OF CALIFORNIA
DEPARTMENT OF TRANSPORTATION

DIVISION OF ENGINEERING SERVICES

BRIDGE NO. 29E0004
POST MILE 10.97

MSE RETAINING WALL NO. 3

MECHANICALLY STABILIZED EMBANKMENT

DETAIL NO. 3

DS OSD 2147A (ENGLISH STANDARD DRAWING "XS" BORDER REV. 01/11/08)

ORIGINAL SCALE IN INCHES FOR REDUCED PLANS 0 1 2 3

UNIT: 1455
PROJECT NUMBER & PHASE: 10000204411 CONTRACT NO.: 10-0E6121

DISREGARD PRINTS BEARING EARLIER REVISION DATES

REVISION DATES: 5-3-10 2-4-11 5-18-11 6-24-11

SHEET 20 OF 28

DATE PLOTTED => 01-DEC-2011 TIME PLOTTED => 10:59

USERNAME => s121614

29E0004-g-msedt06.dgn

DIST.	COUNTY	ROUTE	POST MILES TOTAL PROJECT	SHEET NO.	TOTAL SHEETS
10	SJ	99	10.6/14.9	468	504

6-24-11
REGISTERED ENGINEER - CIVIL

10-17-11
PLANS APPROVAL DATE

REGISTERED PROFESSIONAL ENGINEER SHARIQ PERVAIZ No. C67068 Exp. 9-30-12 CIVIL STATE OF CALIFORNIA

The State of California or its officers or agents shall not be responsible for the accuracy or completeness of electronic copies of this plan sheet.

SAN JOAQUIN COUNCIL OF GOVERNMENTS
555 E. WEBER AVE.
STOCKTON, CA 95202

HDR ENGINEERING, INC.
2365 IRON POINT ROAD, SUITE 300
FOLSOM, CA 95630

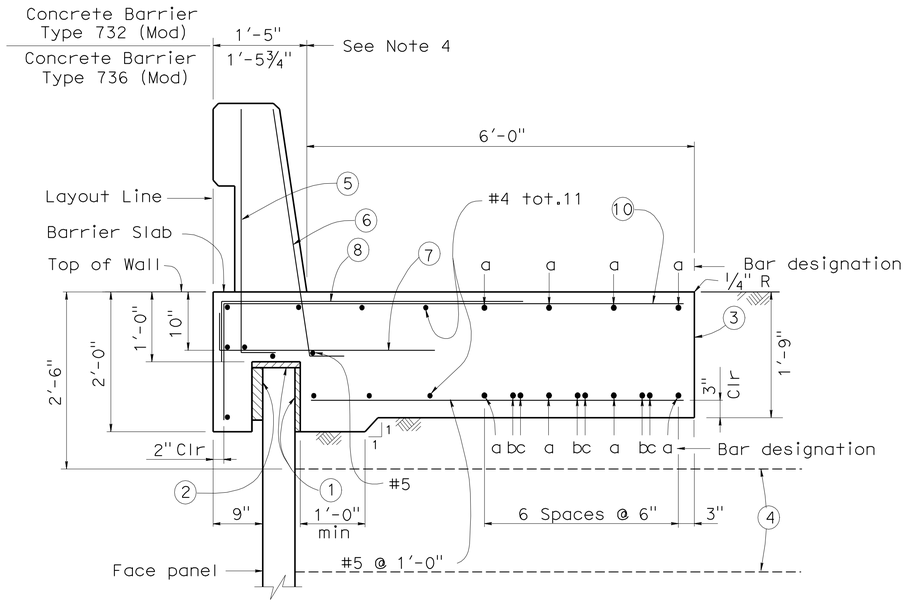

SECTION AT TOP OF WALL WITH BARRIER SLAB AND CONCRETE BARRIER ◇2

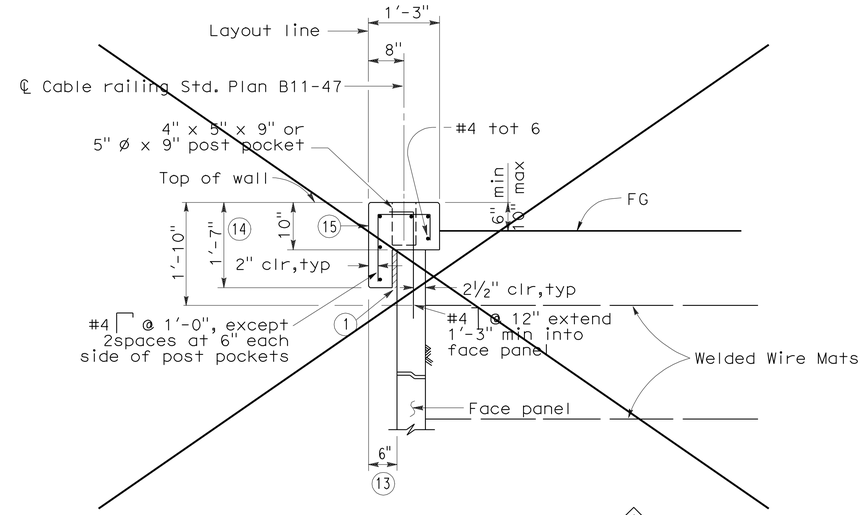

SECTION AT TOP OF WALL ◇1 WITH COPING

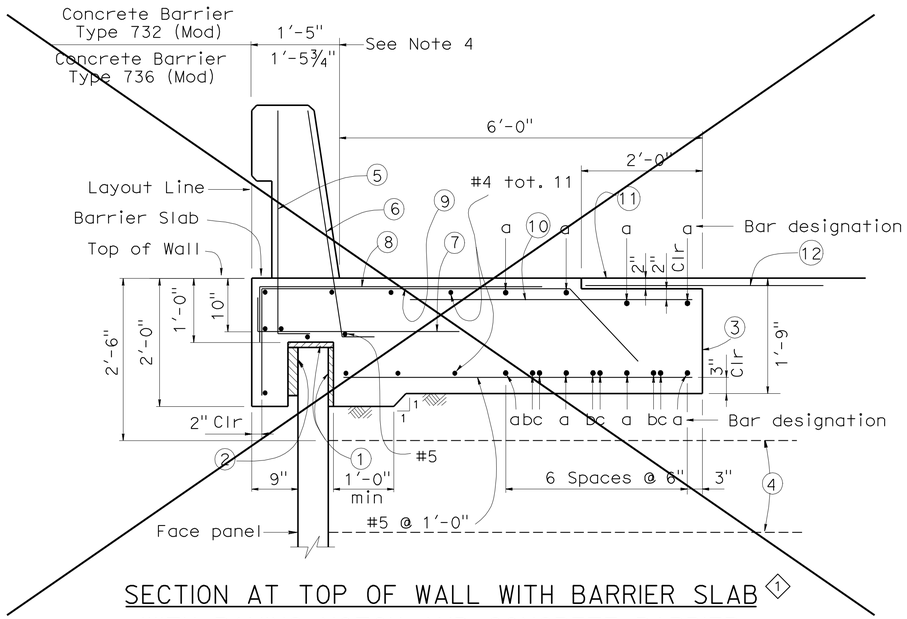

SECTION AT TOP OF WALL WITH BARRIER SLAB ◇1 WITH PAVING NOTCH AND CONCRETE BARRIER

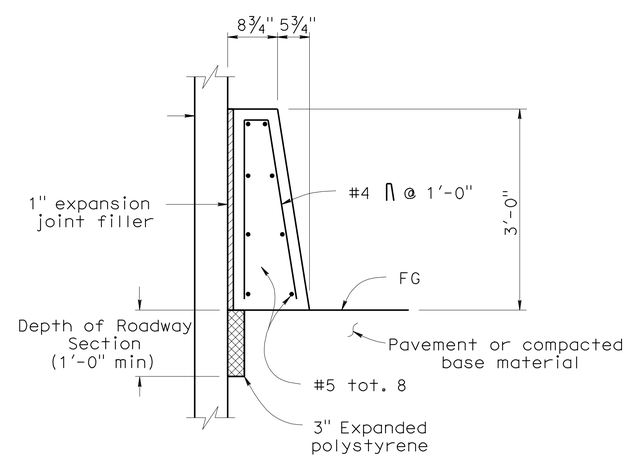

CONCRETE BARRIER TYPE 60D (MOD) ◇1 AT FACE OF MSE WALL

NOTES:

1. Clearance to reinforcing steel in concrete barrier to be 1".
2. Not all barrier reinforcement shown.
3. No expansion joints in concrete barrier or barrier slab within MSE wall limits.
4. Specific concrete barrier to be utilized as shown on typical section elsewhere in Project Plans.
5. Install cable railing or chain link fence when indicated in Project Plans.

LEGEND:

(1) 1" Expanded polystyrene.

(2) 2" Expanded polystyrene. Recess expanded polystyrene 2" into barrier slab.

(3) Contact joint.

(4) Welded Wire Mat Soil reinforcement.

(5) #5 6¼" @ 1'-4" (To be in place prior to barrier slab concrete).

(6) #5 6¼" @ 8" (To be in place prior to barrier slab concrete).

(7) #5 6¼" 3'-4" @ 1'-0"

◇2 (8) #5 4'-7" @ 1'-0" bundled with (9) (10) bars.

◇1 ~~(9) #5 5'-0" 7" 3¾" @ 1'-0"~~

◇2 (10) ~~#5 X 1400 @ 1'-0"~~ #5 @ 1'-0"

"a" bar = #6 continuous.
"b" bar = #6 X 59'-0"
"c" bar = #6 X 49'-2"
Place "b" and "c" bars at beginning and ending ends of barrier slab.

◇1 ~~(11) AC Overlay on barrier slab.~~

◇1 ~~(12) 4'-0" wide pavement reinforcing fabric.~~

◇1 ~~(13) Except 9" when coping and barrier slab occur along the top of the same wall.~~

◇1 ~~(14) Except 2'-0" when coping and barrier slab occur along the top of the same wall.~~

◇1 ~~(15) ½" expansion joints in coping at every fourth panel joint.~~

STANDARD DRAWING

FILE NO. xs13-020-4e

APPROVED BY K. GRISWELL
RESPONSIBLE TECHNICAL SPECIALIST
APPROVAL DATE 5-6-08

RELEASED BY ROBERTO LACALLE
RESPONSIBLE OFFICE CHIEF
RELEASE DATE 5-6-08

◇1 Deleted Detail
◇2 Modified Detail

STATE OF CALIFORNIA
DEPARTMENT OF TRANSPORTATION

DIVISION OF ENGINEERING SERVICES

BRIDGE NO. 29E0004
POST MILE 10.97

MSE RETAINING WALL NO. 3

MECHANICALLY STABILIZED EMBANKMENT

DETAIL NO. 4

DS OSD 2147A (ENGLISH STANDARD DRAWING "XS" BORDER REV. 01/11/08)

ORIGINAL SCALE IN INCHES FOR REDUCED PLANS 0 1 2 3

UNIT: 1455
PROJECT NUMBER & PHASE: 10000204411 CONTRACT NO.: 10-0E6121

DISREGARD PRINTS BEARING EARLIER REVISION DATES

REVISION DATES: 5-3-10 2-4-11 5-19-11 6-24-11

SHEET 21 OF 28

USERNAME => s121614

29E0004-g-msedt07.dgn

DATE PLOTTED => 01-DEC-2011 TIME PLOTTED => 10:59

DIST.	COUNTY	ROUTE	POST MILES TOTAL PROJECT	SHEET NO.	TOTAL SHEETS
10	SJ	99	10.6/14.9	469	504

REGISTERED ENGINEER - CIVIL 6-24-11

PLANS APPROVAL DATE 10-17-11

REGISTERED PROFESSIONAL ENGINEER SHARIQ PERVAIZ No. C67068 Exp. 9-30-12 CIVIL STATE OF CALIFORNIA

The State of California or its officers or agents shall not be responsible for the accuracy or completeness of electronic copies of this plan sheet.

SAN JOAQUIN COUNCIL OF GOVERNMENTS
555 E. WEBER AVE.
STOCKTON, CA 95202

HDR ENGINEERING, INC.
2365 IRON POINT ROAD, SUITE 300
FOLSOM, CA 95630

NOTES:

1. Low end of subgrade drain shown, at high end install cap at end of ¾" slotted pipe. Subgrade drain located at end of structure approach slab, see "Subgrade Drain Detail".
2. Not all barrier reinforcement shown.
3. Outlet details shown elsewhere in Project Plans.
4. At acute corners of approach slab, bend reinforcement as required to clear expansion joint.
5. Specific concrete barrier to be utilized as shown on typical section elsewhere in Project Plans.

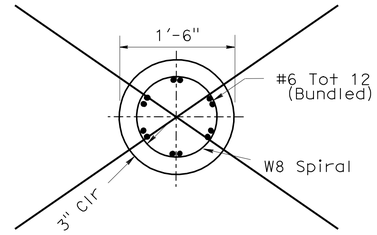

SECTION A-A (1)

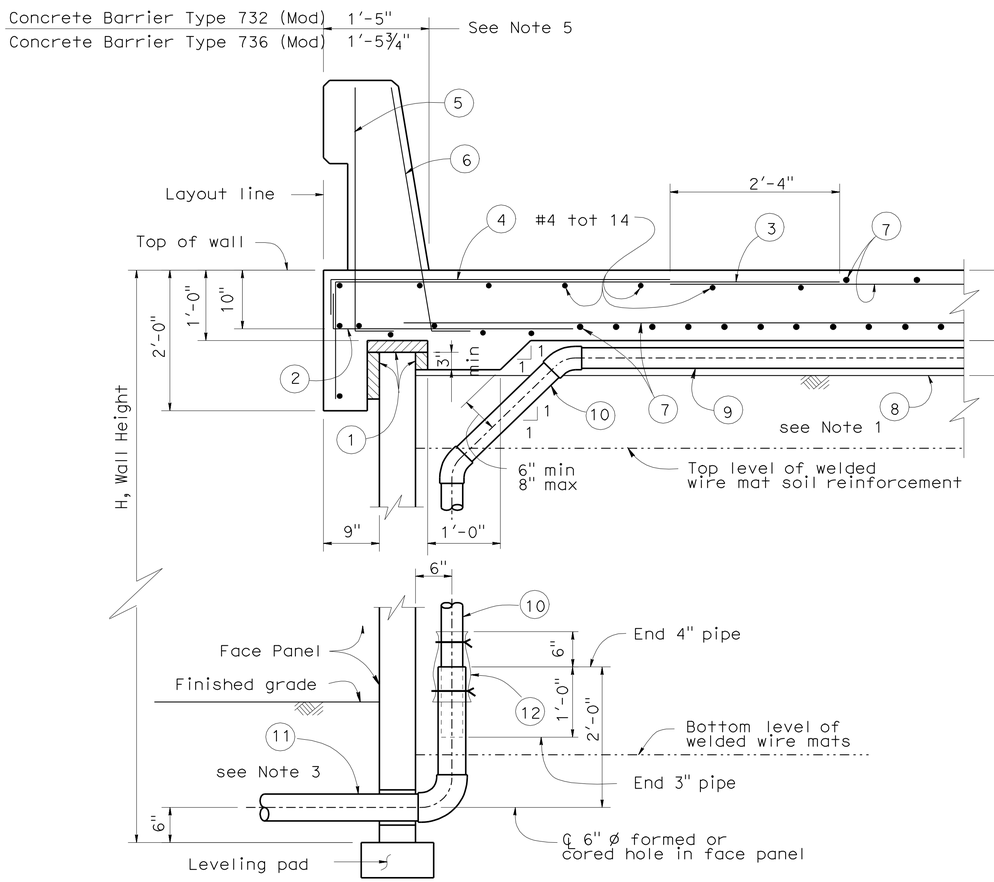

SECTION AT TOP OF WALL WITH STRUCTURE APPROACH SLAB AND CONCRETE BARRIER

LEGEND:

1. 2" Expanded polystyrene recessed 2" into barrier slab at front of MSE face panel.
2. #5 ¼" 6¼" 3'-4" @ 1'-0"
3. #5 6'-10⅝" @ 1'-0"
4. #5 4'-7" @ 1'-0" bundle with (3) bars.
5. #5 @ 1'-4" (To be in place prior to 6¼" approach slab concrete).
6. #5 @ 8" (To be in place prior to 6¼" approach slab concrete).
7. Approach slab reinforcement.
8. Filter fabric.
9. 3" Plastic pipe (slotted).
10. 3" Plastic pipe and fittings (unslotted).
11. 4" Sch 80 PVC outlet pipe and fittings (unslotted).
12. 1'-0" wide x 2'-0" filter fabric wrapped around pipe and secured with nylon ties.

(1) ~~13. 1" Expanded polystyrene.~~

(1) ~~14. Five elastomeric bearing pads ¾" x 4" x 6" bonded to top of MSE face panel.~~

(1) ~~15. 0.5" Expanded polystyrene.~~

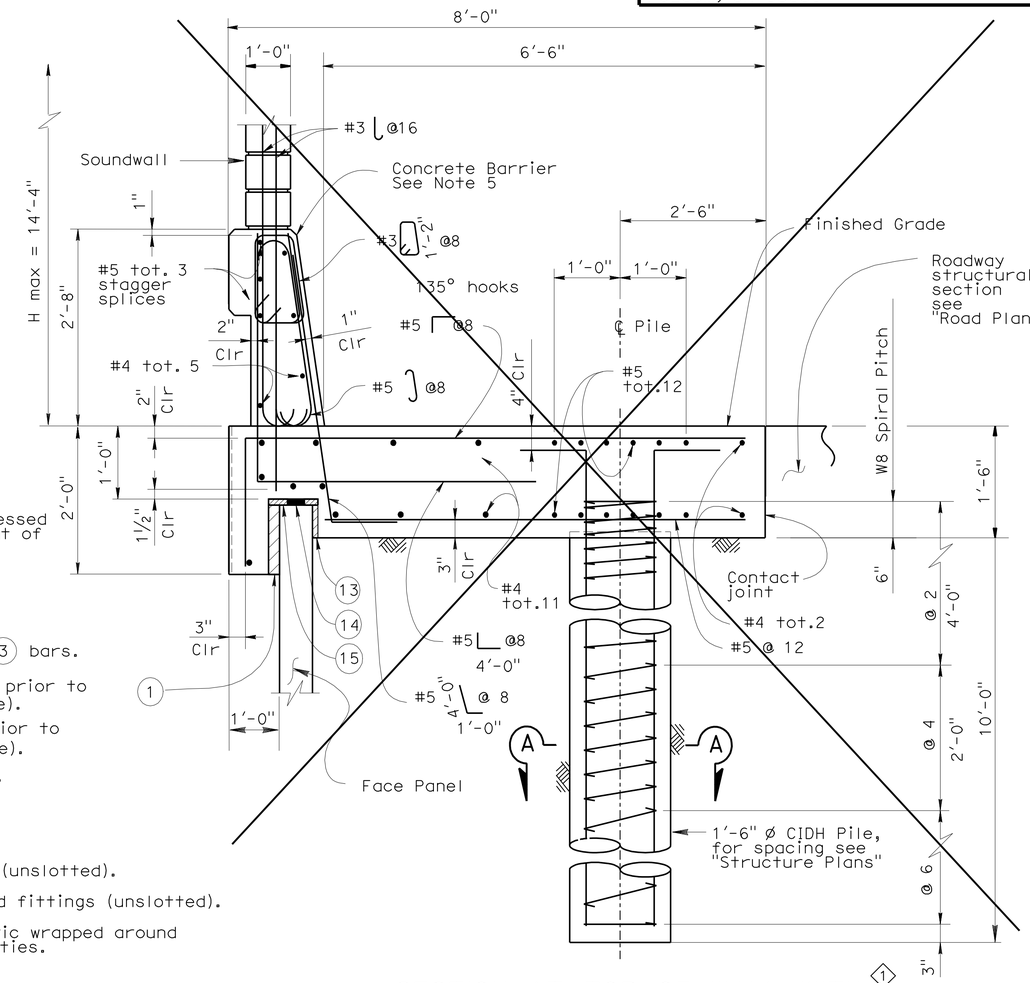

SECTION AT TOP OF WALL WITH SOUNDWALL AND CONCRETE BARRIER (1)

STANDARD DRAWING

FILE NO. xs13-020-5e

APPROVED BY K. GRISWELL — RESPONSIBLE TECHNICAL SPECIALIST
APPROVAL DATE 5-6-08

RELEASED BY ROBERTO LACALLE — RESPONSIBLE OFFICE CHIEF
RELEASE DATE 5-6-08

(1) Deleted Detail

STATE OF CALIFORNIA
DEPARTMENT OF TRANSPORTATION

DIVISION OF ENGINEERING SERVICES

BRIDGE NO. 29E0004
POST MILE 10.97

MSE RETAINING WALL NO. 3

MECHANICALLY STABILIZED EMBANKMENT

DETAIL NO. 5

DS OSD 2147A (ENGLISH STANDARD DRAWING "XS" BORDER REV. 01/11/08)

ORIGINAL SCALE IN INCHES FOR REDUCED PLANS 0 1 2 3

UNIT: 1455
PROJECT NUMBER & PHASE: 10000204411 CONTRACT NO.: 10-0E6121

DISREGARD PRINTS BEARING EARLIER REVISION DATES

REVISION DATES: 5-3-10 2-4-11 5-13-11 6-24-11

SHEET 22 OF 28

DATE PLOTTED => 01-DEC-2011 TIME PLOTTED => 10:53

USERNAME => s121614

29E0004-g-msed108.dgn

DIST.	COUNTY	ROUTE	POST MILES TOTAL PROJECT	SHEET NO.	TOTAL SHEETS
10	SJ	99	10.6/14.9	470	504

6-24-11
REGISTERED ENGINEER - CIVIL

10-17-11
PLANS APPROVAL DATE

REGISTERED PROFESSIONAL ENGINEER SHARIQ PERVAIZ No. C67068 Exp. 9-30-12 CIVIL STATE OF CALIFORNIA

The State of California or its officers or agents shall not be responsible for the accuracy or completeness of electronic copies of this plan sheet.

SAN JOAQUIN COUNCIL OF GOVERNMENTS
555 E. WEBER AVE.
STOCKTON, CA 95202

HDR ENGINEERING, INC.
2365 IRON POINT ROAD, SUITE 300
FOLSOM, CA 95630

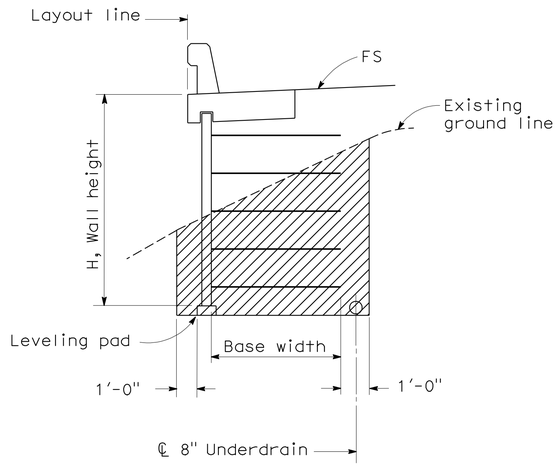

LIMITS OF EXCAVATION ②
No Scale

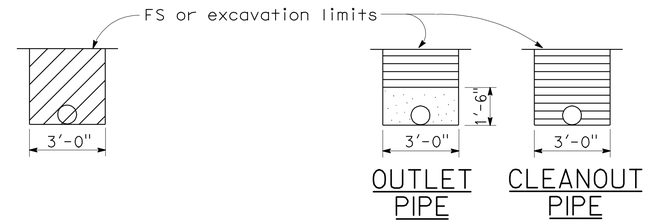

EXCAVATION BACKFILL

OUTLET OR CLEANOUT PIPE FOR UNDERDRAIN
No Scale

ABBREVIATIONS

OG	Original ground
FS	Planned finished surface
GP	Planned grading plane

LEGEND

- Limits of structure excavation
- Limits of structure backfill
- Limits of permeable material

NOTES:

1. Limits to FS except to GP when in roadway section.
2. Locate 8" perforated underdrain below bottom level of welded wire mats.
3. Maximum spacing of outlet pipes is 200 ft.
4. At sags in profile of underdrain, install outlet pipe for each direction of flow.

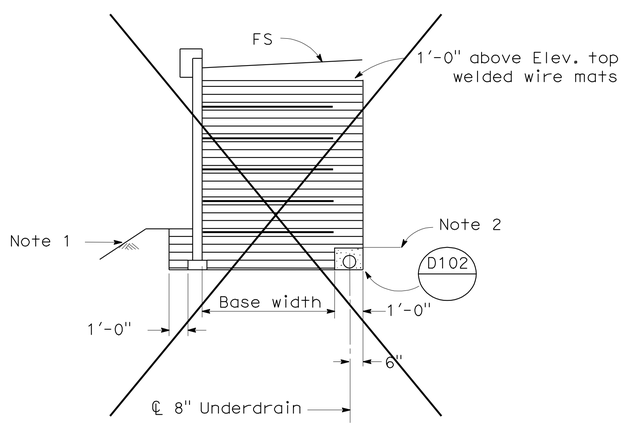

SLOPING FINISHED SURFACE ①

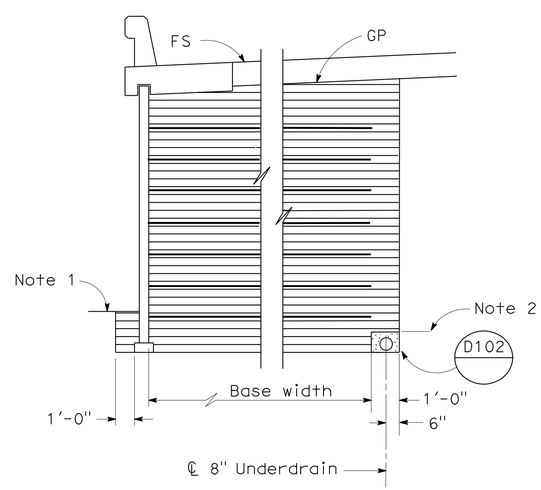

ROADWAY SECTION WITH BASE WIDTH 16' OR GREATER

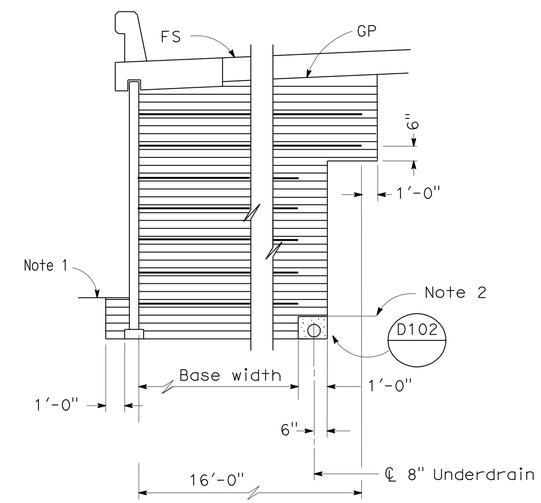

ROADWAY SECTION WITH BASE WIDTH LESS THAN 16'

LIMITS OF BACKFILL
No Scale

STANDARD DRAWING

FILE NO. xs13-020-6e

APPROVED BY K. GRISWELL
RESPONSIBLE TECHNICAL SPECIALIST
APPROVAL DATE 5-6-08

RELEASED BY ROBERTO LACALLE
RESPONSIBLE OFFICE CHIEF
RELEASE DATE 5-6-08

① Deleted Detail
② Revised Detail

STATE OF CALIFORNIA
DEPARTMENT OF TRANSPORTATION

DIVISION OF ENGINEERING SERVICES

BRIDGE NO. 29E0004
POST MILE 10.97

MSE RETAINING WALL NO. 3

MECHANICALLY STABILIZED EMBANKMENT

DETAIL NO. 6

DS OSD 2147A (ENGLISH STANDARD DRAWING "XS" BORDER REV. 01/11/08)

ORIGINAL SCALE IN INCHES FOR REDUCED PLANS 0 1 2 3

UNIT: 1455
PROJECT NUMBER & PHASE: 10000204411 CONTRACT NO.: 10-0E6121

DISREGARD PRINTS BEARING EARLIER REVISION DATES

REVISION DATES: 5-1-10 2-4-11 5-19-11 6-24-11

SHEET 23 OF 28

USERNAME => s121614

29E0004-g-msedt09.dgn

DATE PLOTTED => 01-DEC-2011 TIME PLOTTED => 11:00

DIST	COUNTY	ROUTE	POST MILES TOTAL PROJECT	SHEET No	TOTAL SHEETS
10	SJ	99	10.6/14.9	471	504

REGISTERED CIVIL ENGINEER — DATE 6-24-11

10-17-11
PLANS APPROVAL DATE

REGISTERED PROFESSIONAL ENGINEER — BENJAMIN D. CRAWFORD — No. 68457 — Exp. 9/30/11 — CIVIL — STATE OF CALIFORNIA

The State of California or its officers or agents shall not be responsible for the accuracy or completeness of electronic copies of this plan sheet.

SAN JOAQUIN COUNCIL OF GOVERNMENTS
555 E. WEBER AVE.
STOCKTON, CA 95202

BLACKBURN CONSULTING
2491 BOATMAN AVENUE
WEST SACRAMENTO, CA 95691 FILE No. 1201.6a

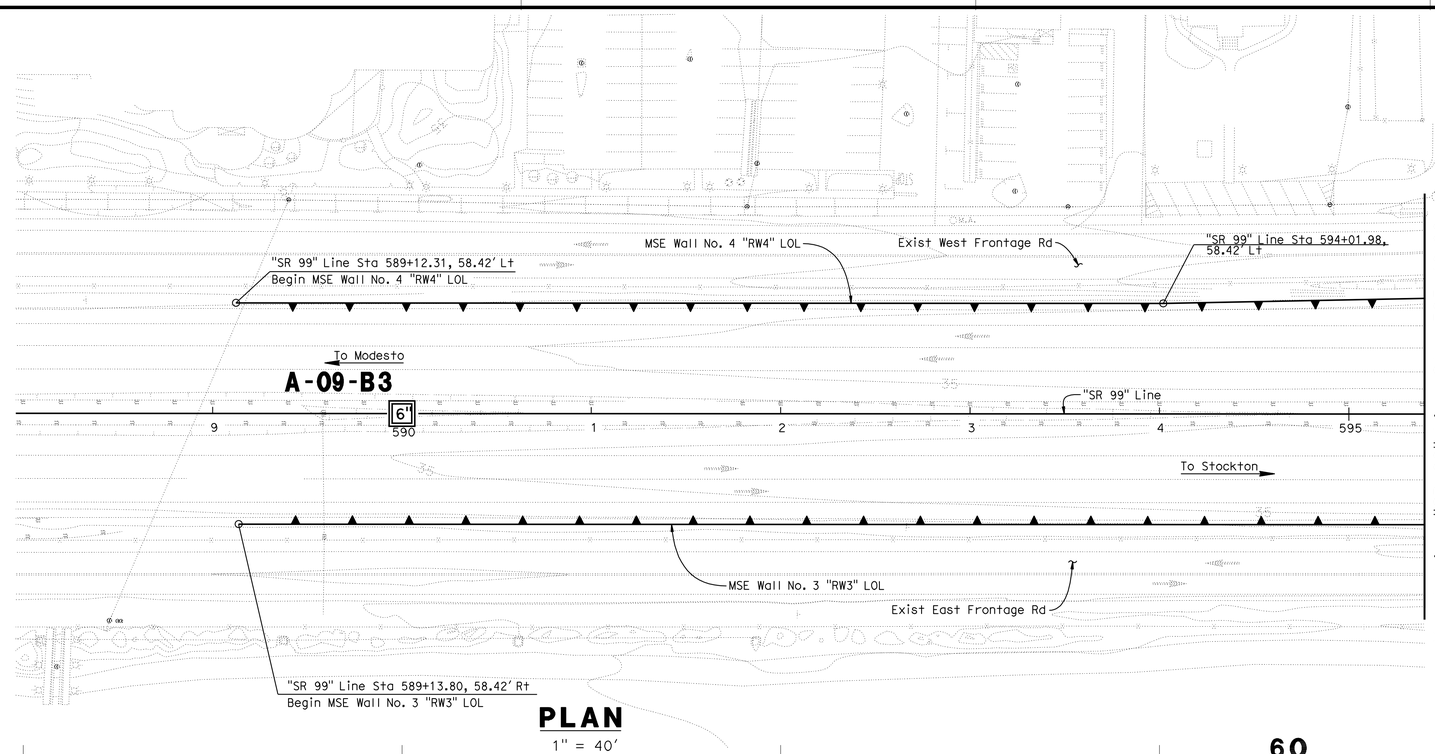

Match Line "SR 99" Line Sta. 595+40.00 see "Log of Test Borings 2 of 5" sheet

PLAN
1" = 40'

BENCH MARKS

BENCHMARK# 645 ELEV. 58.24 Ft

DESCRIPTION: KSN CONTROL POINT, 1/2 " REBAR WITH YELLOW CAP STAMPED "KSN CONTROL", LOCATED AT APPROXIMATE CENTERLINE STATION 605+95 ON THE SOUTHBOUND MAINLINE, ON THE INSIDE SHOULDER, 3.5' EAST OF THE EDGE OF PAVEMENT, 11' WEST OF THE FACE OF THE GUARDRAIL, AND 4' SOUTH OF THE SOUTHEAST CORNER OF THE FRENCH CAMP OVER CROSSING BRIDGE.
NGVD 29, N2136239.71, E6354178.61.

BENCHMARK# 641 ELEV. 56.89 Ft

DESCRIPTION: KSN CONTROL POINT, 1/2 " REBAR WITH YELLOW CAP STAMPED "KSN CONTROL", LOCATED APPROXIMATE CENTERLINE STATION 608+14 ON THE NORTHBOUND MAINLINE, ON THE INSIDE SHOULDER, 2' WEST OF THE EDGE OF PAVEMENT, 10.5' EAST OF THE FACE OF THE GUARDRAIL, 6' NORTH OF THE FRENCH CAMP OVER CROSSING BRIDGE.
NGVD 29, N2136459.41, E6354207.75.

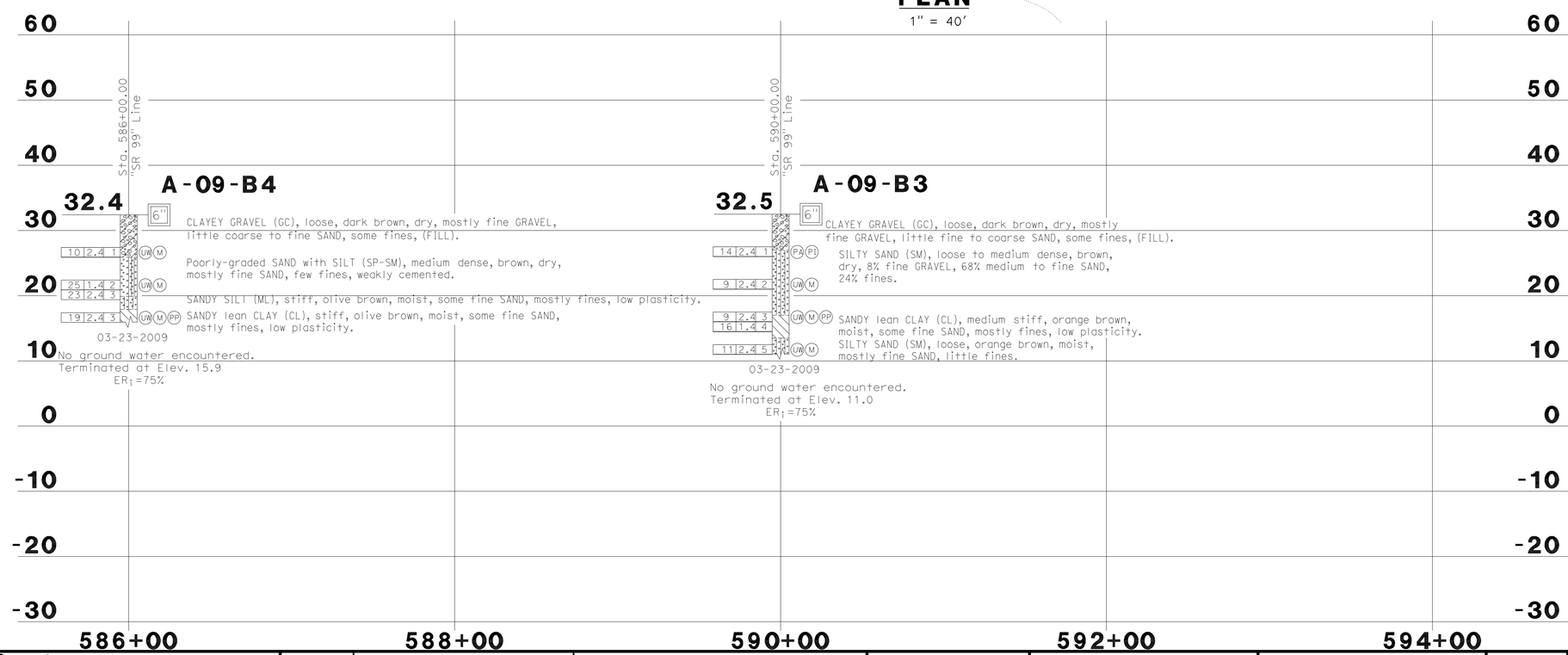

NOTES:

1. Field classification of soils was in accordance with the Caltrans Soil & Rock Logging, Classification, and Presentation Manual (June 2007). See Log of Test Borings No. 4 and 5, "Soil Legend".
2. Standard Penetration tests were performed in accordance with ASTM D 1586-99 using a hammer operated with an automated drop system. Drill rods were 1 5/8-inch diameter "A"-rods; sampler was driven with brass liners.
3. "2.4 inch sampler": ID=2.4 inch, OD=2.9 inch. Driven in same manner as SPT ("1.4 inch") sampler.
4. Where less than the 0.5 inches of penetration is achieved, the blow count shown is for that fraction of the interval actually penetrated.
5. If laboratory tests are not shown as being performed, the soil descriptions presented in the LOTB are based solely on the visual practices described in the before mentioned Manual.
6. The length of each sampled interval is shown graphically on the boring log.
7. Consistency of soils shown in ( ) where estimated.
8. Groundwater surface (GWS) reflect the fluid level in the borings on the specified date. Groundwater surface is subject to seasonal fluctuations and may occur at higher or lower elevations depending on the conditions at any particular time.
9. Electronic media for plan view provided by HDR Engineering, MSE Wall No. 3 & 4, Foundations Plans, 90% Submittal, January 2011.
10. Boring elevations are approximate and based on "Planning Study" plans dated 1/23/09 provided by HDR Engineering, Inc.
11. The "Log of Test Borings" drawing is included with plans in accordance with Section 2-1.03 of Caltrans "Standard Specifications".

PROFILE
HOR. 1"=40'
VERT. 1"=10'

Reza Erfanian
DESIGN OVERSIGHT Reza Erfanian
6/24/11
SIGN OFF DATE

DRAWN BY M ROBERTSON
CHECKED BY K. CHAPMAN
A. SHINNEFIELD
FIELD INVESTIGATION BY:
DATE: MARCH 2009

PREPARED FOR THE STATE OF CALIFORNIA DEPARTMENT OF TRANSPORTATION

JOHN A. KLEMUNES, JR.
PROJECT ENGINEER

BRIDGE NO. 29E0004
POST MILE 10.97

MSE RETAINING WALL NO. 3
LOG OF TEST BORINGS NO. 1

GS LOTB SOIL LEGEND SHEET 1 (ENGLISH) (REV. 07/16/10)

ORIGINAL SCALE IN INCHES FOR REDUCED PLANS 0 1 2 3

UNIT: 1455
PROJECT NUMBER & PHASE: 10000204411 CONTRACT NO.: 10-0E6121

DISREGARD PRINTS BEARING EARLIER REVISION DATES
REVISION DATES 3-10-10 2-04-11 5-19-11 6-24-11
SHEET 24 OF 28

FILE => 29E0004-z-ltb01.dgn

USERNAME => s12614 DATE PLOTTED => 01-DEC-2011 TIME PLOTTED => 11:00

DIST	COUNTY	ROUTE	POST MILES TOTAL PROJECT	SHEET No	TOTAL SHEETS
10	SJ	99	10.6/14.9	472	504

REGISTERED CIVIL ENGINEER — DATE 6-24-11

10-17-11
PLANS APPROVAL DATE

REGISTERED PROFESSIONAL ENGINEER — BENJAMIN D. CRAWFORD — No. 68457 — Exp. 9/30/11 — CIVIL — STATE OF CALIFORNIA

The State of California or its officers or agents shall not be responsible for the accuracy or completeness of electronic copies of this plan sheet.

SAN JOAQUIN COUNCIL OF GOVERNMENTS
555 E. WEBER AVE.
STOCKTON, CA 95202

BLACKBURN CONSULTING
2491 BOATMAN AVENUE
WEST SACRAMENTO, CA 95691 FILE No. 1201.6a

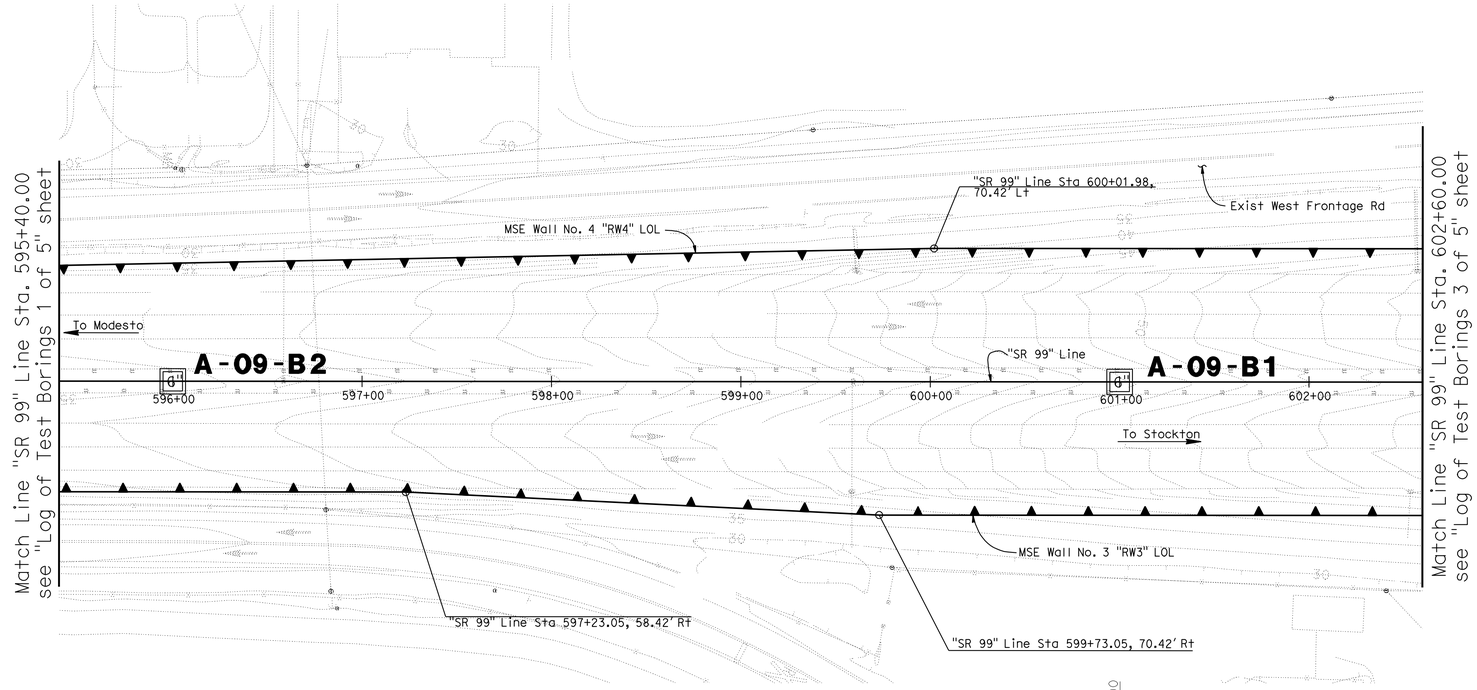

PLAN
1" = 40'

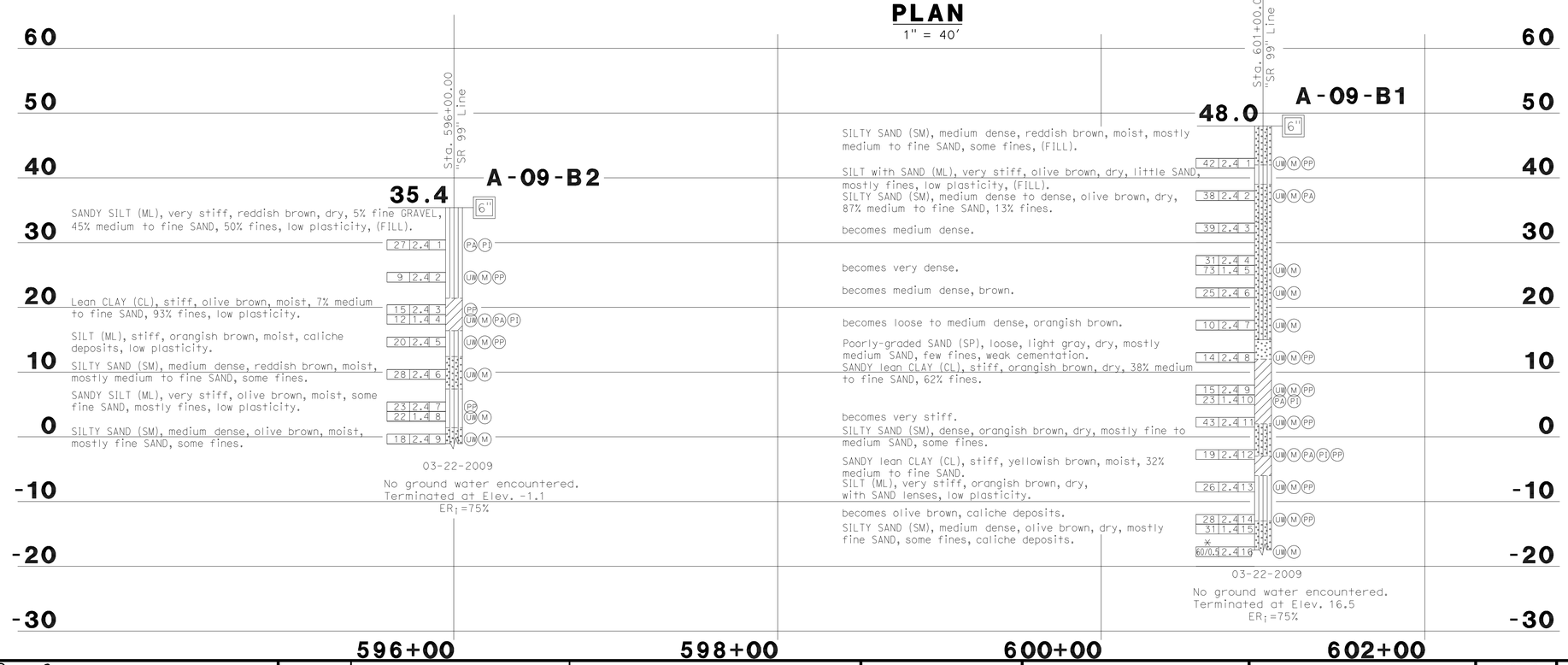

PROFILE
HOR. 1"=40'
VERT. 1"=10'

BENCH MARKS

BENCHMARK# 645 ELEV. 58.24 Ft

DESCRIPTION: KSN CONTROL POINT, 1/2 " REBAR WITH YELLOW CAP STAMPED "KSN CONTROL", LOCATED AT APPROXIMATE CENTERLINE STATION 605+95 ON THE SOUTHBOUND MAINLINE, ON THE INSIDE SHOULDER, 3.5' EAST OF THE EDGE OF PAVEMENT, 11' WEST OF THE FACE OF THE GUARDRAIL, AND 4' SOUTH OF THE SOUTHEAST CORNER OF THE FRENCH CAMP OVER CROSSING BRIDGE.
NGVD 29, N2136239.71, E6354178.61.

BENCHMARK# 641 ELEV. 56.89 Ft

DESCRIPTION: KSN CONTROL POINT, 1/2 " REBAR WITH YELLOW CAP STAMPED "KSN CONTROL", LOCATED APPROXIMATE CENTERLINE STATION 608+14 ON THE NORTHBOUND MAINLINE, ON THE INSIDE SHOULDER, 2' WEST OF THE EDGE OF PAVEMENT, 10.5' EAST OF THE FACE OF THE GUARDRAIL, 6' NORTH OF THE FRENCH CAMP OVER CROSSING BRIDGE.
NGVD 29, N2136459.41, E6354207.75.

NOTES:

1. Field classification of soils was in accordance with the Caltrans Soil & Rock Logging, Classification, and Presentation Manual (June 2007). See Log of Test Borings No. 4 and 5, "Soil Legend".
2. Standard Penetration tests were performed in accordance with ASTM D 1586-99 using a hammer operated with an automated drop system. Drill rods were 1 5/8-inch diameter "A"-rods; sampler was driven with brass liners.
3. "2.4 inch sampler": ID=2.4 inch, OD=2.9 inch. Driven in same manner as SPT ("1.4 inch") sampler.
4. Where less than the 0.5 inches of penetration is achieved, the blow count shown is for that fraction of the interval actually penetrated.
5. If laboratory tests are not shown as being performed, the soil descriptions presented in the LOTB are based solely on the visual practices described in the before mentioned Manual.
6. The length of each sampled interval is shown graphically on the boring log.
7. Consistency of soils shown in ( ) where estimated.
8. Groundwater surface (GWS) reflect the fluid level in the borings on the specified date. Groundwater surface is subject to seasonal fluctuations and may occur at higher or lower elevations depending on the conditions at any particular time.
9. Electronic media for plan view provided by HDR Engineering, MSE Wall No. 3 & 4, Foundations Plans, 90% Submittal, January 2011.
10. Boring elevations are approximate and based on "Planning Study" plans dated 1/23/09 provided by HDR Engineering, Inc.
11. The "Log of Test Borings" drawing is included with plans in accordance with Section 2-1.03 of Caltrans "Standard Specifications".

Reza Erfanian
DESIGN OVERSIGHT Reza Erfanian
6/24/11
SIGN OFF DATE

DRAWN BY M ROBERTSON
CHECKED BY K. CHAPMAN

A. SHINNEFIELD
FIELD INVESTIGATION BY:
DATE: MARCH 2009

PREPARED FOR THE STATE OF CALIFORNIA DEPARTMENT OF TRANSPORTATION

JOHN A. KLEMUNES, JR.
PROJECT ENGINEER

BRIDGE NO. 29E0004
POST MILE 10.97

MSE RETAINING WALL NO. 3
LOG OF TEST BORINGS NO. 2

GS LOTB SOIL LEGEND SHEET 1 (ENGLISH) (REV. 07/16/10)

ORIGINAL SCALE IN INCHES FOR REDUCED PLANS 0 1 2 3

UNIT: 1455
PROJECT NUMBER & PHASE: 10000204411 CONTRACT NO.: 10-0E6121

DISREGARD PRINTS BEARING EARLIER REVISION DATES

REVISION DATES: 3-10-10 2-24-11 5-19-11 6-24-11

SHEET 25 OF 28

FILE => 29E0004-z-ltb02.dgn

USERNAME => s12614 DATE PLOTTED => 01-DEC-2011 TIME PLOTTED => 11:00

DIST	COUNTY	ROUTE	POST MILES TOTAL PROJECT	SHEET No	TOTAL SHEETS
10	SJ	99	10.6/14.9	473	504

REGISTERED CIVIL ENGINEER — DATE 6-24-11

10-17-11
PLANS APPROVAL DATE

The State of California or its officers or agents shall not be responsible for the accuracy or completeness of electronic copies of this plan sheet.

REGISTERED PROFESSIONAL ENGINEER — BENJAMIN D. CRAWFORD — No. 68457 — Exp. 9/30/11 — CIVIL — STATE OF CALIFORNIA

SAN JOAQUIN COUNCIL OF GOVERNMENTS
555 E. WEBER AVE.
STOCKTON, CA 95202

BLACKBURN CONSULTING
2491 BOATMAN AVENUE
WEST SACRAMENTO, CA 95691 FILE No. 1201.6a

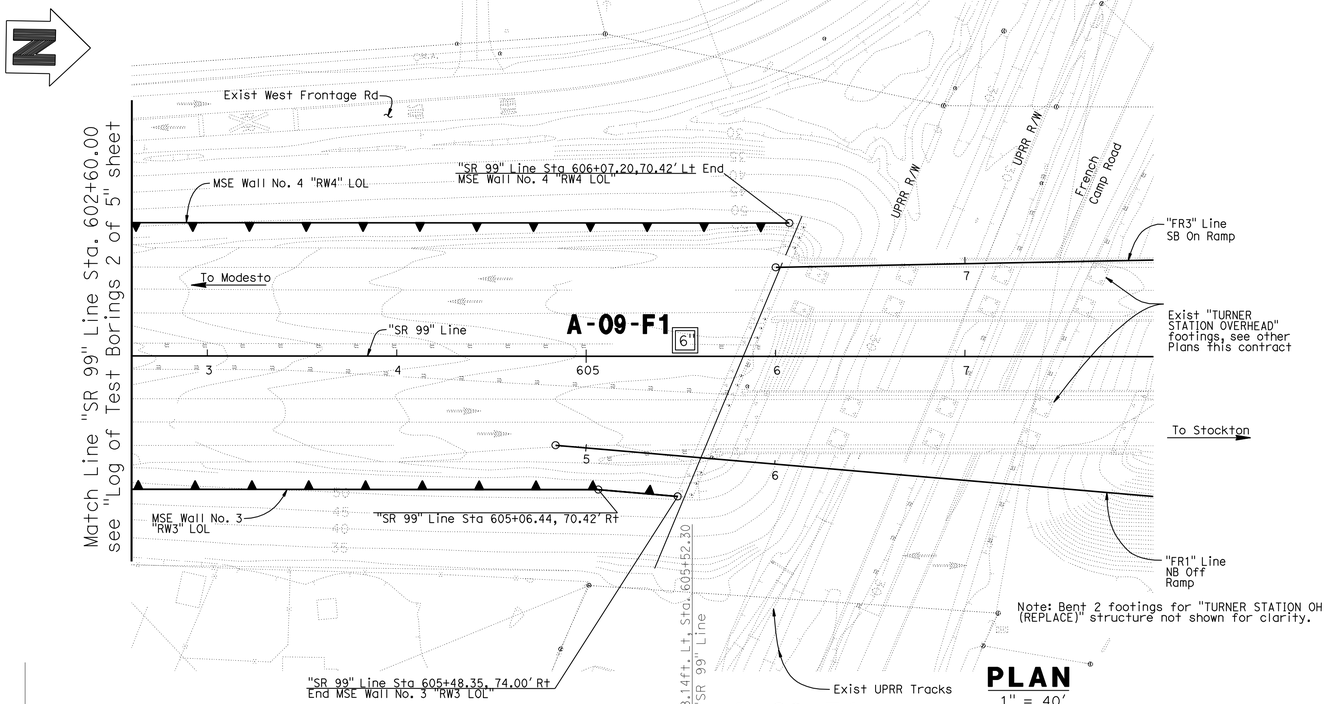

PLAN
1" = 40'

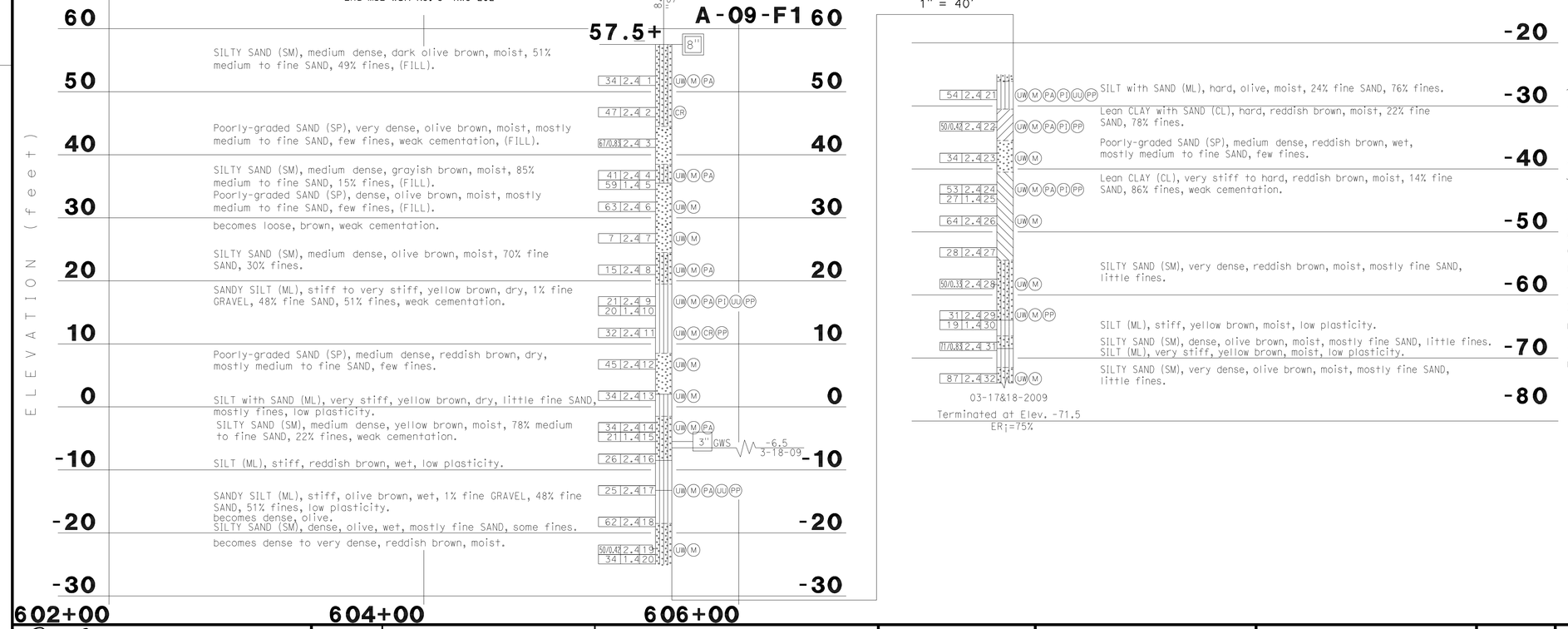

BENCH MARKS

BENCHMARK# 645 ELEV. 58.24 Ft

DESCRIPTION: KSN CONTROL POINT, 1/2 " REBAR WITH YELLOW CAP STAMPED "KSN CONTROL", LOCATED AT APPROXIMATE CENTERLINE STATION 605+95 ON THE SOUTHBOUND MAINLINE, ON THE INSIDE SHOULDER, 3.5' EAST OF THE EDGE OF PAVEMENT, 11' WEST OF THE FACE OF THE GUARDRAIL, AND 4' SOUTH OF THE SOUTHEAST CORNER OF THE FRENCH CAMP OVER CROSSING BRIDGE.
NGVD 29, N2136239.71, E6354178.61.

BENCHMARK# 641 ELEV. 56.89 Ft

DESCRIPTION: KSN CONTROL POINT, 1/2 " REBAR WITH YELLOW CAP STAMPED "KSN CONTROL", LOCATED APPROXIMATE CENTERLINE STATION 608+14 ON THE NORTHBOUND MAINLINE, ON THE INSIDE SHOULDER, 2' WEST OF THE EDGE OF PAVEMENT, 10.5' EAST OF THE FACE OF THE GUARDRAIL, 6' NORTH OF THE FRENCH CAMP OVER CROSSING BRIDGE.
NGVD 29, N2136459.41, E6354207.75.

NOTES:

1. Field classification of soils was in accordance with the Caltrans Soil & Rock Logging, Classification, and Presentation Manual (June 2007). See Log of Test Borings No. 4 and 5, "Soil Legend".
2. Standard Penetration tests were performed in accordance with ASTM D 1586-99 using a hammer operated with an automated drop system. Drill rods were 1 5/8-inch diameter "A"-rods; sampler was driven with brass liners.
3. "2.4 inch sampler": ID=2.4 inch, OD=2.9 inch. Driven in same manner as SPT ("1.4 inch") sampler.
4. Where less than the 0.5 inches of penetration is achieved, the blow count shown is for that fraction of the interval actually penetrated.
5. If laboratory tests are not shown as being performed, the soil descriptions presented in the LOTB are based solely on the visual practices described in the before mentioned Manual.
6. The length of each sampled interval is shown graphically on the boring log.
7. Consistency of soils shown in ( ) where estimated.
8. Groundwater surface (GWS) reflect the fluid level in the borings on the specified date. Groundwater surface is subject to seasonal fluctuations and may occur at higher or lower elevations depending on the conditions at any particular time.
9. Electronic media for plan view provided by HDR Engineering, MSE Wall No. 3 & 4, Foundations Plans, 90% Submittal, January 2011.
10. Boring elevations are approximate and based on "Planning Study" plans dated 1/23/09 provided by HDR Engineering, Inc.
11. The "Log of Test Borings" drawing is included with plans in

PROFILE
HOR. 1"=40'
VERT. 1"=10'

Reza Erfanian — DESIGN OVERSIGHT Reza Erfanian — 6/24/11 SIGN OFF DATE	DRAWN BY M ROBERTSON	A. SHINNEFIELD — FIELD INVESTIGATION BY:	PREPARED FOR THE STATE OF CALIFORNIA DEPARTMENT OF TRANSPORTATION
	CHECKED BY K. CHAPMAN	DATE: MARCH 2009	

JOHN A. KLEMUNES, JR. — PROJECT ENGINEER

BRIDGE NO. 29E0004 — POST MILE 10.97

MSE RETAINING WALL NO. 3
LOG OF TEST BORINGS NO. 3

GS LOTB SOIL LEGEND SHEET 1 (ENGLISH) (REV. 07/16/10)

ORIGINAL SCALE IN INCHES FOR REDUCED PLANS 0 1 2 3

UNIT: 1455
PROJECT NUMBER & PHASE: 10000204411 CONTRACT NO.: 10-0E6121

DISREGARD PRINTS BEARING EARLIER REVISION DATES

REVISION DATES: 3-18-10 2-24-11 5-18-11 6-24-11

SHEET 26 OF 28

USERNAME => s12161d4 DATE PLOTTED => 01-DEC-2011 TIME PLOTTED => 11:00

FILE => 29E0004-z-ltb03.dgn

DIST	COUNTY	ROUTE	POST MILES TOTAL PROJECT	SHEET No	TOTAL SHEETS
10	SJ	99	10.6/14.9	474	504

REGISTERED CIVIL ENGINEER — DATE 6-24-11

10-17-11
PLANS APPROVAL DATE

REGISTERED PROFESSIONAL ENGINEER — BENJAMIN D. CRAWFORD — No. 68457 — Exp. 9/30/11 — CIVIL — STATE OF CALIFORNIA

The State of California or its officers or agents shall not be responsible for the accuracy or completeness of electronic copies of this plan sheet.

SAN JOAQUIN COUNCIL OF GOVERNMENTS
555 E. WEBER AVE.
STOCKTON, CA 95202

BLACKBURN CONSULTING
2491 BOATMAN AVENUE
WEST SACRAMENTO, CA 95691 FILE No. 1201.6a

REFERENCE: CALTRANS SOIL & ROCK LOGGING, CLASSIFICATION, AND PRESENTATION MANUAL, (JUNE, 2007)

CEMENTATION

Description	Criteria
Weak	Crumbles or breaks with handling or little finger pressure.
Moderate	Crumbles or breaks with considerable finger pressure.
Strong	Will not crumble or break with finger pressure.

CONSISTENCY OF COHESIVE SOILS

Description	Unconfined Compressive Strength (tsf)	Pocket Penetrometer Measurement (tsf)	Torvane Measurement (tsf)	Field Approximation
Very Soft	<0.25	<0.25	<0.12	Easily penetrated several inches by fist
Soft	0.25 to 0.50	0.25 to 0.50	0.12 to 0.25	Easily penetrated several inches by thumb
Medium Stiff	0.50 to 1.0	0.50 to 1.0	0.25 to 0.50	Penetrated several inches by thumb with moderate effort
Stiff	1 to 2	1 to 2	0.50 to 1.0	Readily indented by thumb but penetrated only with great effort
Very Stiff	2 to 4	2 to 4	1.0 to 2.0	Readily indented by thumbnail
Hard	> 4.0	> 4.0	> 2.0	Indented by thumbnail with difficulty

BOREHOLE IDENTIFICATION

Symbol	Hole Type	Description
Size	A	Auger Boring
Size	R P	Rotary drilled boring Rotary percussion boring (air)
Size	R	Rotary drilled diamond core
Size	HD HA	Hand driven (1-inch soil tube) Hand Auger
○	D	Dynamic Cone Penetration Boring
▲	CPT	Cone Penetration Test (ASTM D 5778)
□	O	Other

NOTE: Size in inches.

PLASTICITY OF FINE-GRAINED SOILS

Description	Criteria
Nonplastic	A 1/8-inch thread cannot be rolled at any water content.
Low	The thread can barely be rolled and the lump cannot be formed when drier than the plastic limit.
Medium	The thread is easy to roll and not much time is required to reach the plastic limit. The thread cannot be rerolled after reaching the plastic limit. The lump crumbles when drier than the plastic limit.
High	It takes considerable time rolling and kneading to reach the plastic limit. The thread can be rerolled several times after reaching the plastic limit. The lump can be formed without crumbling when drier than the plastic limit.

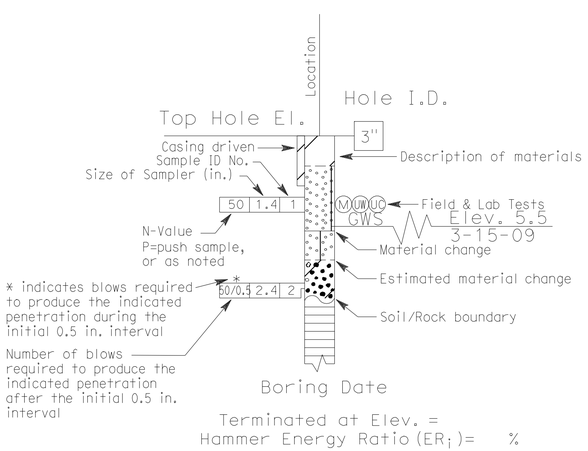

ROTARY BORING

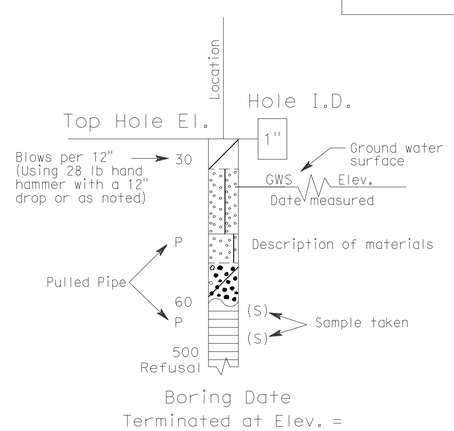

HAND BORING

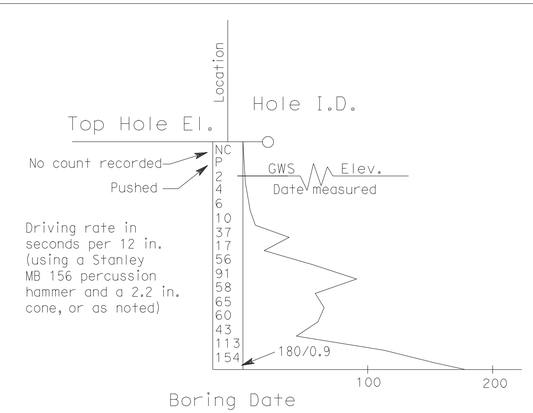

DYNAMIC CONE PENETRATION BORING

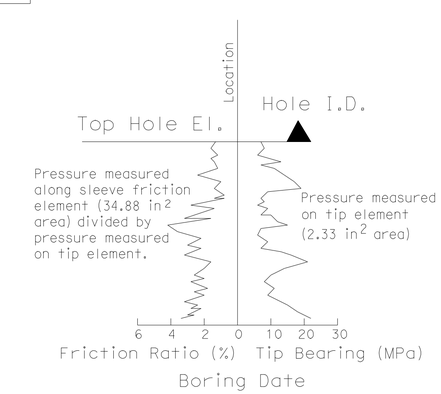

CONE PENETRATION TEST (CPT) SOUNDING

SOIL LEGEND

Reza Erfanian DESIGN OVERSIGHT Reza Erfanian 6/24/11 SIGN OFF DATE	DRAWN BY M ROBERTSON CHECKED BY K. CHAPMAN	A. SHINNEFIELD FIELD INVESTIGATION BY: DATE: MARCH 2009	PREPARED FOR THE STATE OF CALIFORNIA DEPARTMENT OF TRANSPORTATION

JOHN A. KLEMUNES, JR.
PROJECT ENGINEER

BRIDGE NO. 29E0004
POST MILE 10.97

MSE RETAINING WALL NO. 3
LOG OF TEST BORINGS NO. 4

GS LOTB SOIL LEGEND SHEET 1 (ENGLISH) (REV. 07/16/10)

ORIGINAL SCALE IN INCHES FOR REDUCED PLANS 0 1 2 3

UNIT: 1455
PROJECT NUMBER & PHASE: 10000204411 CONTRACT NO.: 10-0E6121

DISREGARD PRINTS BEARING EARLIER REVISION DATES

REVISION DATES: 3-10-10 2-04-11 5-18-11 6-24-11

SHEET 27 OF 28

FILE => 29E0004-z-ltb04.dgn

USERNAME => s121614 DATE PLOTTED => 01-DEC-2011 TIME PLOTTED => 11:00

DIST	COUNTY	ROUTE	POST MILES TOTAL PROJECT	SHEET No	TOTAL SHEETS
10	SJ	99	10.6/14.9	475	504

REGISTERED CIVIL ENGINEER — DATE 6-24-11

10-17-11
PLANS APPROVAL DATE

REGISTERED PROFESSIONAL ENGINEER — BENJAMIN D. CRAWFORD — No. 68457 — Exp. 9/30/11 — CIVIL — STATE OF CALIFORNIA

The State of California or its officers or agents shall not be responsible for the accuracy or completeness of electronic copies of this plan sheet.

SAN JOAQUIN COUNCIL OF GOVERNMENTS
555 E. WEBER AVE.
STOCKTON, CA 95202

BLACKBURN CONSULTING
2491 BOATMAN AVENUE
WEST SACRAMENTO, CA 95691 FILE No. 1201.6a

REFERENCE: CALTRANS SOIL & ROCK LOGGING, CLASSIFICATION, AND PRESENTATION MANUAL, (JUNE, 2007)

GROUP SYMBOLS AND NAMES

Graphic/Symbol	Group Names	Graphic/Symbol	Group Names
GW	Well-graded GRAVEL Well-graded GRAVEL with SAND	CL	Lean CLAY Lean CLAY with SAND Lean CLAY with GRAVEL SANDY lean CLAY SANDY lean CLAY with GRAVEL GRAVELLY lean CLAY GRAVELLY lean CLAY with SAND
GP	Poorly-graded GRAVEL Poorly-graded GRAVEL with SAND		
GW-GM	Well-graded GRAVEL with SILT Well-graded GRAVEL with SILT and SAND	CL-ML	SILTY CLAY SILTY CLAY with SAND SILTY CLAY with GRAVEL SANDY SILTY CLAY SANDY SILTY CLAY with GRAVEL GRAVELLY SILTY CLAY GRAVELLY SILTY CLAY with SAND
GW-GC	Well-graded GRAVEL with CLAY (or SILTY CLAY) Well-graded GRAVEL with CLAY and SAND (or SILTY CLAY and SAND)		
GP-GM	Poorly-graded GRAVEL with SILT Poorly-graded GRAVEL with SILT and SAND	ML	SILT SILT with SAND SILT with GRAVEL SANDY SILT SANDY SILT with GRAVEL GRAVELLY SILT GRAVELLY SILT with SAND
GP-GC	Poorly-graded GRAVEL with CLAY (or SILTY CLAY) Poorly-graded GRAVEL with CLAY and SAND (or SILTY CLAY and SAND)		
GM	SILTY GRAVEL SILTY GRAVEL with SAND	OL	ORGANIC lean Clay ORGANIC lean Clay with SAND ORGANIC lean Clay with GRAVEL SANDY ORGANIC lean CLAY SANDY ORGANIC lean CLAY with GRAVEL GRAVELLY ORGANIC lean CLAY GRAVELLY ORGANIC lean CLAY with SAND
GC	CLAYEY GRAVEL CLAYEY GRAVEL with SAND		
GC-GM	SILTY, CLAYEY GRAVEL SILTY, CLAYEY GRAVEL with SAND	OL	ORGANIC SILT ORGANIC SILT with SAND ORGANIC SILT with GRAVEL SANDY ORGANIC SILT SANDY ORGANIC SILT with GRAVEL GRAVELLY ORGANIC SILT GRAVELLY ORGANIC SILT with SAND
SW	Well-graded SAND Well-graded SAND with GRAVEL		
SP	Poorly-graded SAND Poorly-graded SAND with GRAVEL	CH	Fat CLAY Fat CLAY with SAND Fat CLAY with GRAVEL SANDY fat CLAY SANDY fat CLAY with GRAVEL GRAVELLY fat CLAY GRAVELLY fat CLAY with SAND
SW-SM	Well-graded SAND with SILT Well-graded SAND with SILT and GRAVEL		
SW-SC	Well-graded SAND with CLAY (or SILTY CLAY) Well-graded SAND with CLAY and GRAVEL (or SILTY CLAY and GRAVEL)	MH	Elastic SILT Elastic SILT with SAND Elastic SILT with GRAVEL SANDY elastic SILT SANDY elastic SILT with GRAVEL GRAVELLY elastic SILT GRAVELLY elastic SILT with SAND
SP-SM	Poorly-graded SAND with SILT Poorly-graded SAND with SILT and GRAVEL		
SP-SC	Poorly-graded SAND with CLAY (or SILTY CLAY) Poorly-graded SAND with CLAY and GRAVEL (or SILTY CLAY and GRAVEL)	OH	ORGANIC fat CLAY ORGANIC fat CLAY with SAND ORGANIC fat CLAY with GRAVEL SANDY ORGANIC fat CLAY SANDY ORGANIC fat CLAY with GRAVEL GRAVELLY ORGANIC fat CLAY GRAVELLY ORGANIC fat CLAY with SAND
SM	SILTY SAND SILTY SAND with GRAVEL		
SC	CLAYEY SAND CLAYEY SAND with GRAVEL	OH	ORGANIC elastic SILT ORGANIC elastic SILT with SAND ORGANIC elastic SILT with GRAVEL SANDY ORGANIC elastic SILT SANDY ORGANIC elastic SILT with GRAVEL GRAVELLY ORGANIC elastic SILT GRAVELLY ORGANIC elastic SILT with SAND
SC-SM	SILTY, CLAYEY SAND SILTY, CLAYEY SAND with GRAVEL		
PT	PEAT	OH/OL	ORGANIC SOIL ORGANIC SOIL with SAND ORGANIC SOIL with GRAVEL SANDY ORGANIC SOIL SANDY ORGANIC SOIL with GRAVEL GRAVELLY ORGANIC SOIL GRAVELLY ORGANIC SOIL with SAND
	COBBLES COBBLES and BOULDERS BOULDERS		

FIELD AND LABORATORY TESTING

- (C) Consolidation (ASTM D 2435)
- (CL) Collapse Potential (ASTM D 5333)
- (CP) Compaction Curve (CTM 216)
- (CR) Corrosivity Testing (CTM 643, CTM 422, CTM 417)
- (CU) Consolidated Undrained Triaxial (ASTM D 4767)
- (DS) Direct Shear (ASTM D 3080)
- (EI) Expansion Index (ASTM D 4829)
- (M) Moisture Content (ASTM D 2216)
- (OC) Organic Content-% (ASTM D 2974)
- (P) Permeability (CTM 220)
- (PA) Particle Size Analysis (ASTM D 422)
- (PI) Plasticity Index (AASHTO T 90) Liquid Limit (AASHTO T 89)
- (PL) Point Load Index (ASTM D 5731)
- (PM) Pressure Meter
- (PP) Pocket Penetrometer
- (R) R-Value (CTM 301)
- (SE) Sand Equivalent (CTM 217)
- (SG) Specific Gravity (AASHTO T 100)
- (SL) Shrinkage Limit (ASTM D 427)
- (SW) Swell Potential (ASTM D 4546)
- (TV) Pocket Torvane
- (UC) Unconfined Compression-Soil (ASTM D 2166) Unconfined Compression-Rock (ASTM D 2938)
- (UU) Unconsolidated Undrained Triaxial (ASTM D 2850)
- (UW) Unit Weight (ASTM D 2937)
- (VS) Vane Shear (AASHTO T 223)

APPARENT DENSITY OF COHESIONLESS SOILS

Description	SPT N_{60}-Value (Blows / 12 inches)
Very Loose	0 - 4
Loose	5 - 10
Medium Dense	11 - 30
Dense	31 - 50
Very Dense	> 50

MOISTURE

Description	Criteria
Dry	Absence of moisture, dusty, dry to the touch
Moist	Damp but no visible water
Wet	Visible free water, usually soil is below water table

PERCENT OR PROPORTION OF SOILS

Description	Criteria
Trace	Particles are present but estimated to be less than 5%
Few	5 to 10%
Little	15 to 25%
Some	30 to 45%
Mostly	50 to 100%

PARTICLE SIZE

Description		Size
Boulder		> 12"
Cobble		3" to 12"
Gravel	Coarse	3/4" to 3"
	Fine	No. 4 to 3/4"
Sand	Coarse	No. 10 to No. 4
	Medium	No. 40 to No. 10
	Fine	No. 200 to No. 40

SOIL LEGEND

DESIGN OVERSIGHT Reza Erfanian
6/24/11
SIGN OFF DATE

DRAWN BY M ROBERTSON
CHECKED BY K. CHAPMAN

A. SHINNEFIELD
FIELD INVESTIGATION BY:
DATE: MARCH 2009

PREPARED FOR THE STATE OF CALIFORNIA DEPARTMENT OF TRANSPORTATION

JOHN A. KLEMUNES, JR.
PROJECT ENGINEER

BRIDGE NO. 29E0004
POST MILE 10.97

MSE RETAINING WALL NO. 3
LOG OF TEST BORINGS NO. 5

GS LOTB SOIL LEGEND SHEET 2 (ENGLISH) (REV. 07/16/10)

ORIGINAL SCALE IN INCHES FOR REDUCED PLANS 0 1 2 3

UNIT: 1455
PROJECT NUMBER & PHASE: 10000204411 CONTRACT NO.: 10-0E6121

DISREGARD PRINTS BEARING EARLIER REVISION DATES

REVISION DATES 3-10-10 2-04-11 5-18-11 6-24-11 SHEET 28 OF 28

FILE => 29E0004-z-ltb05.dgn

USERNAME => s8121614 DATE PLOTTED => 01-DEC-2011 TIME PLOTTED => 11:01

DIST	COUNTY	ROUTE	POST MILES TOTAL PROJECT	SHEET No	TOTAL SHEETS
10	SJ	99	10.6/14.9	476	504

REGISTERED CIVIL ENGINEER 6-24-11 DATE

10-17-11
PLANS APPROVAL DATE

REGISTERED PROFESSIONAL ENGINEER SHARIQ PERVAIZ No. C67068 Exp. 9-30-12 CIVIL STATE OF CALIFORNIA

The State of California or its officers or agents shall not be responsible for the accuracy or completeness of electronic copies of this plan sheet.

SAN JOAQUIN COUNCIL OF GOVERNMENTS
555 E. WEBER AVE.
STOCKTON, CA 95202

HDR ENGINEERING, INC.
2365 IRON POINT ROAD, SUITE 300
FOLSOM, CA 95630

NOTES:

1. For MSE Walls "GENERAL NOTES", see "MECHANICALLY STABILIZED EMBANKMENT DETAIL No. 2" sheet.

LEGEND:

- Indicates new construction.
- Indicates existing feature.
- Indicates direction of traffic.
- * Indicates top of wall elevation, see "WALL PANEL LAYOUT" sheets.
- ** Indicates top of leveling pad, elevation, see "WALL PANEL LAYOUT" sheets.
- (A) Drainage Inlet, typ, see "ROAD PLANS" for locations. See "MSE WALL DETAILS NO. 3" sheet for details.

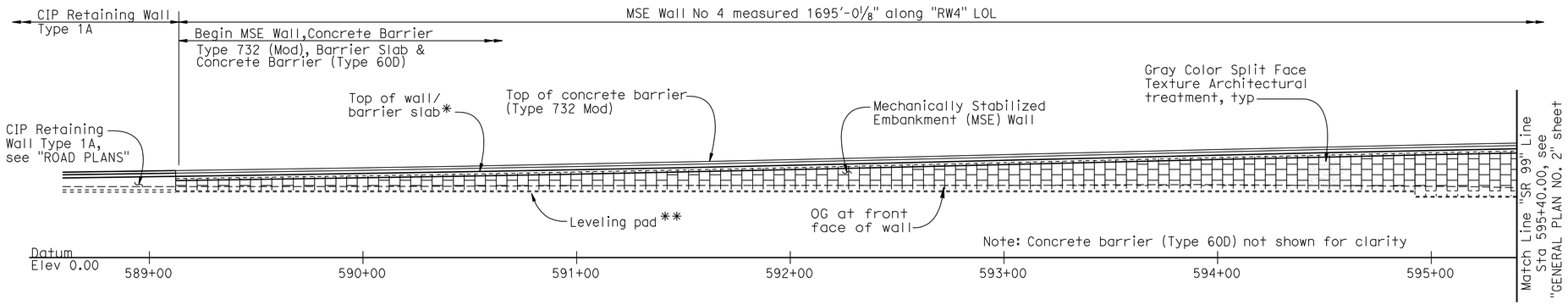

PART ELEVATION

1" = 30'

MSE WALL NO. 4

BR NO 29E0005

QUANTITIES

MECHANICALLY STABILIZED EMBANKMENT, LOCATION B	27,872	SQFT
STRUCTURAL CONCRETE, BARRIER SLAB	787	CY
CONCRETE BARRIER (TYPE 732 MODIFIED)	1,696	LF

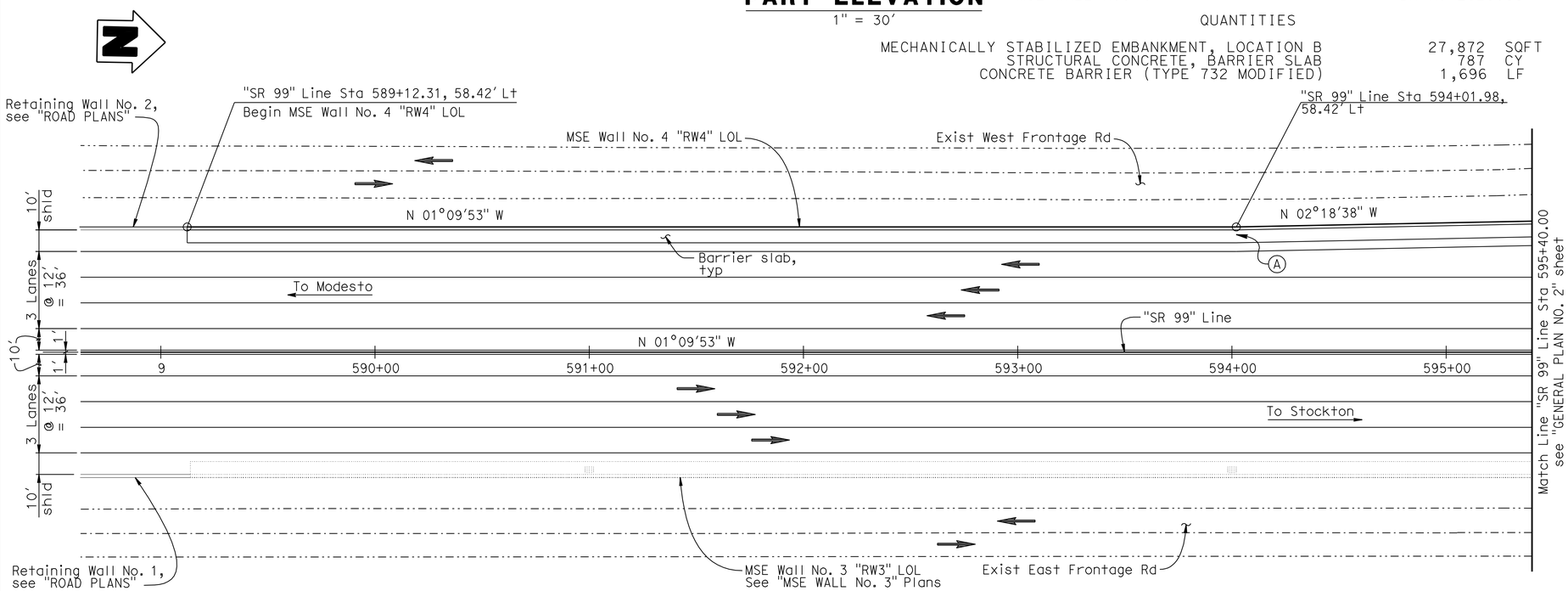

PART PLAN

1" = 30'

Note:
The Contractor shall verify all controlling field dimensions before ordering or fabricating any materials.

INDEX TO PLANS:

1. GENERAL PLAN NO. 1
2. GENERAL PLAN NO. 2
3. GENERAL PLAN NO. 3
4. FOUNDATION PLAN NO. 1
5. FOUNDATION PLAN NO. 2
6. FOUNDATION PLAN NO. 3
7. WALL PANEL LAYOUT No. 1
8. WALL PANEL LAYOUT No. 2
9. WALL PANEL LAYOUT No. 3
10. WALL PANEL LAYOUT No. 4
11. WALL PANEL LAYOUT No. 5
12. WALL PANEL LAYOUT No. 6
13. WALL PANEL LAYOUT No. 7
14. WALL PANEL LAYOUT No. 8
15. WALL PANEL LAYOUT No. 9
16. MSE WALL DETAILS NO. 1
17. MSE WALL DETAILS NO. 2
18. MSE WALL DETAILS NO. 3
19. MECHANICALLY STABILIZED EMBANKMENT - DETAIL No. 1
20. MECHANICALLY STABILIZED EMBANKMENT - DETAIL No. 2
21. MECHANICALLY STABILIZED EMBANKMENT - DETAIL No. 3
22. MECHANICALLY STABILIZED EMBANKMENT - DETAIL No. 4
23. MECHANICALLY STABILIZED EMBANKMENT - DETAIL No. 5
24. MECHANICALLY STABILIZED EMBANKMENT - DETAIL No. 6
25. LOG OF TEST BORINGS NO. 1
26. LOG OF TEST BORINGS NO. 2
27. LOG OF TEST BORINGS NO. 3
28. LOG OF TEST BORINGS NO. 4
29. LOG OF TEST BORINGS NO. 5

CALTRANS STANDARD PLANS DATED MAY 2006

A10A	ACRONYMS AND ABBREVIATIONS (SHEET 1 OF 2)
A10B	ACRONYMS AND ABBREVIATIONS (SHEET 2 OF 2)
A10C	SYMBOLS (SHEET 1 of 2)
A10D	SYMBOLS (SHEET 2 of 2)
RSP A76A	CONCRETE BARRIER TYPE 60
B11-55	CONCRETE BARRIER TYPE 732

STANDARD PLAN SHEET NO.
DETAIL NO.

Reza Erfanian
DESIGN OVERSIGHT Reza Erfanian
6/24/11
SIGN OFF DATE

	BY	CHECKED
DESIGN	S PERVAIZ	T KENG
DETAILS	J VOUGHT	T KENG
QUANTITIES	T KENG	J VOUGHT

LOAD & RESISTANCE FACTOR DESIGN — LIVE LOADING: HS20-44 AND ALTERNATIVE AND PERMIT DESIGN VEHICLE

	BY	CHECKED
LAYOUT	S PERVAIZ	T KENG
SPECIFICATIONS	T KENG	PLANS AND SPECS COMPARED J MANISCALCO

PREPARED FOR THE STATE OF CALIFORNIA DEPARTMENT OF TRANSPORTATION

JOHN A. KLEMUNES, JR.
PROJECT ENGINEER

BRIDGE NO. 29E0005
POST MILES 10.97

MSE WALL NO. 4
GENERAL PLAN NO. 1

DESIGN GENERAL PLAN SHEET (ENGLISH) (REV.7/16/10)

ORIGINAL SCALE IN INCHES FOR REDUCED PLANS 0 1 2 3

UNIT: 1455
PROJECT NUMBER & PHASE: 10000204411 CONTRACT NO.: 10-0E6121

DISREGARD PRINTS BEARING EARLIER REVISION DATES

REVISION DATES: 5-3-10 2-4-11 5-18-11 6-24-11

SHEET 1 OF 29

FILE => 29E0005-a-gp01.dgn

USERNAME => s121614 DATE PLOTTED => 23-DEC-2011 TIME PLOTTED => 05:56

DIST	COUNTY	ROUTE	POST MILES TOTAL PROJECT	SHEET No	TOTAL SHEETS
10	SJ	99	10.6/14.9	477	504

REGISTERED CIVIL ENGINEER 6-24-11 DATE

10-17-11
PLANS APPROVAL DATE

REGISTERED PROFESSIONAL ENGINEER SHARIQ PERVAIZ No. C67068 Exp. 9-30-12 CIVIL STATE OF CALIFORNIA

The State of California or its officers or agents shall not be responsible for the accuracy or completeness of electronic copies of this plan sheet.

SAN JOAQUIN COUNCIL OF GOVERNMENTS
555 E. WEBER AVE.
STOCKTON, CA 95202

HDR ENGINEERING, INC.
2365 IRON POINT ROAD, SUITE 300
FOLSOM, CA 95630

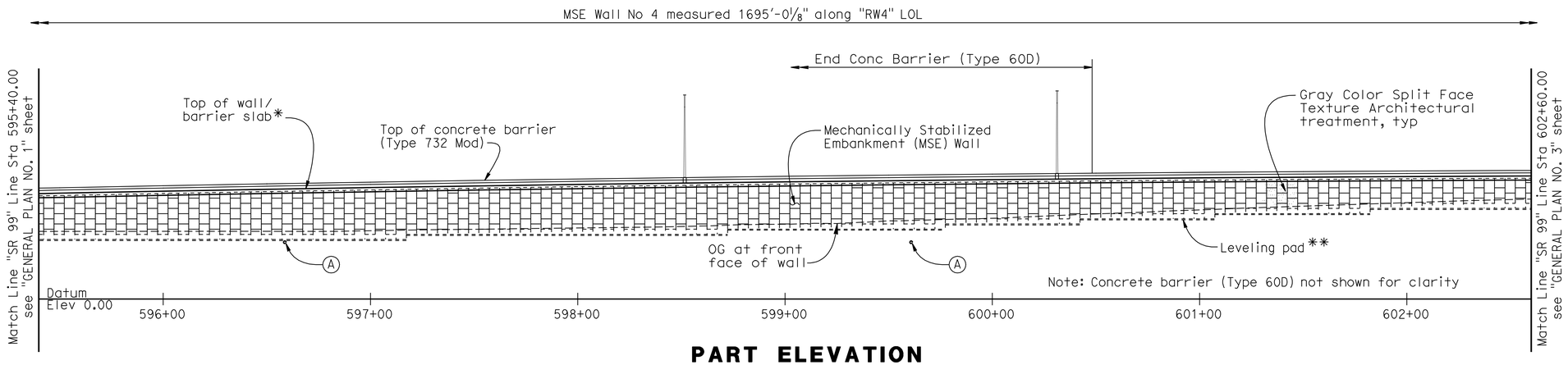

PART ELEVATION

1" = 30'

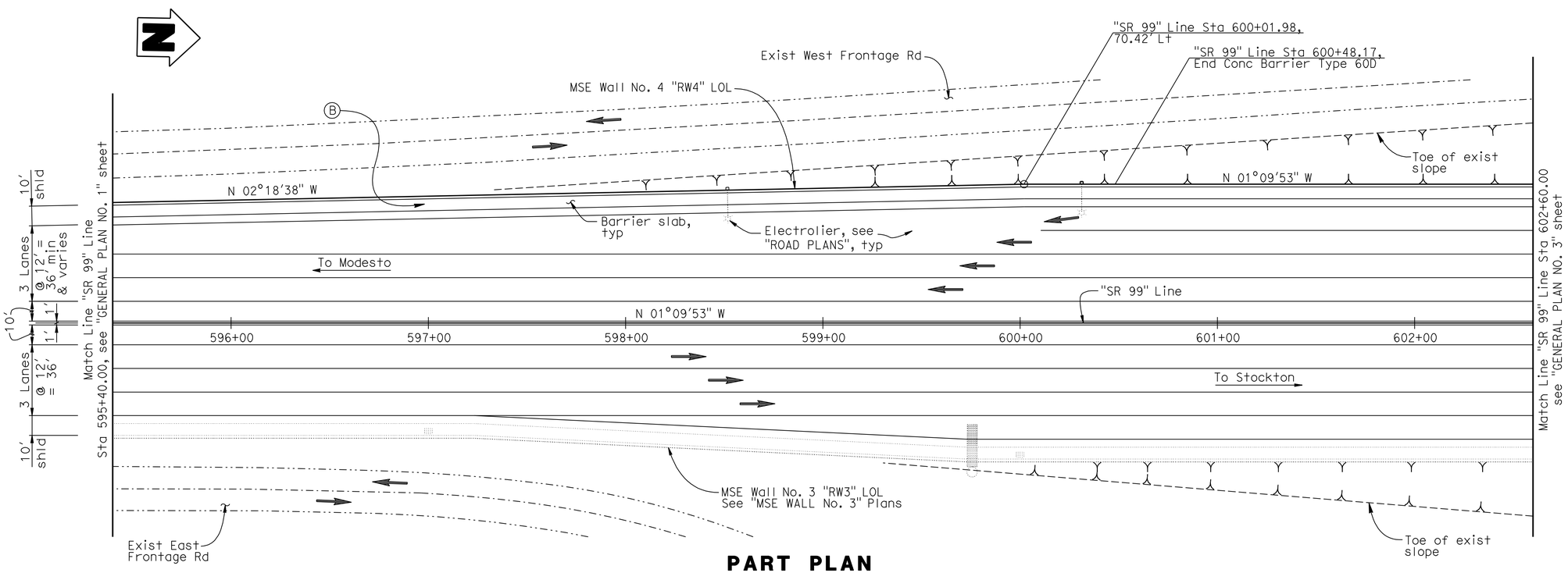

PART PLAN

1" = 30'

NOTES:

1. For MSE Walls "GENERAL NOTES", see "MECHANICALLY STABILIZED EMBANKMENT DETAIL No. 2" sheet.

LEGEND:

- ——— Indicates new construction.
- -·-·- Indicates existing feature.
- ➡ Indicates direction of traffic.
- * Indicates top of wall elevation, see "WALL PANEL LAYOUT" sheets.
- ** Indicates top of leveling pad, elevation, see "WALL PANEL LAYOUT" sheets.
- (A) 18" dia exist storm drain to be removed, see "ROAD PLANS".
- (B) Drainage Inlet, typ, see "ROAD PLANS" for locations. See "MSE WALL DETAILS NO. 3" sheet for details.

Note:
The Contractor shall verify all controlling field dimensions before ordering or fabricating any materials.

Reza Erfanian
DESIGN OVERSIGHT Reza Erfanian
6/24/11
SIGN OFF DATE

	BY	CHECKED				
DESIGN	S PERVAIZ	T KENG	LOAD & RESISTANCE FACTOR DESIGN	LIVE LOADING: HS20-44 AND ALTERNATIVE AND PERMIT DESIGN VEHICLE		
DETAILS	J VOUGHT	T KENG	LAYOUT	S PERVAIZ	T KENG	
QUANTITIES	T KENG	J VOUGHT	SPECIFICATIONS	T KENG	PLANS AND SPECS COMPARED	J MANISCALCO

PREPARED FOR THE STATE OF CALIFORNIA DEPARTMENT OF TRANSPORTATION

JOHN A. KLEMUNES, JR.
PROJECT ENGINEER

BRIDGE NO. 29E0005
POST MILES 10.97

MSE WALL NO. 4
GENERAL PLAN NO. 2

DESIGN GENERAL PLAN SHEET (ENGLISH) (REV.7/16/10)

ORIGINAL SCALE IN INCHES FOR REDUCED PLANS 0 1 2 3

UNIT: 1455
PROJECT NUMBER & PHASE: 10000204411 CONTRACT NO.: 10-0E6121

DISREGARD PRINTS BEARING EARLIER REVISION DATES

REVISION DATES ~~5-3-10~~ ~~2-4-11~~ ~~5-18-11~~ 6-24-11

SHEET 2 OF 29

FILE => 29E0005-a-gp02.dgn

USERNAME => s121614 DATE PLOTTED => 01-DEC-2011 TIME PLOTTED => 11:01

DIST	COUNTY	ROUTE	POST MILES TOTAL PROJECT	SHEET No	TOTAL SHEETS
10	SJ	99	10.6/14.9	478	504

REGISTERED CIVIL ENGINEER 6-24-11 DATE

10-17-11
PLANS APPROVAL DATE

REGISTERED PROFESSIONAL ENGINEER SHARIQ PERVAIZ No. C67068 Exp. 9-30-12 CIVIL STATE OF CALIFORNIA

The State of California or its officers or agents shall not be responsible for the accuracy or completeness of electronic copies of this plan sheet.

SAN JOAQUIN COUNCIL OF GOVERNMENTS
555 E. WEBER AVE.
STOCKTON, CA 95202

HDR ENGINEERING, INC.
2365 IRON POINT ROAD, SUITE 300
FOLSOM, CA 95630

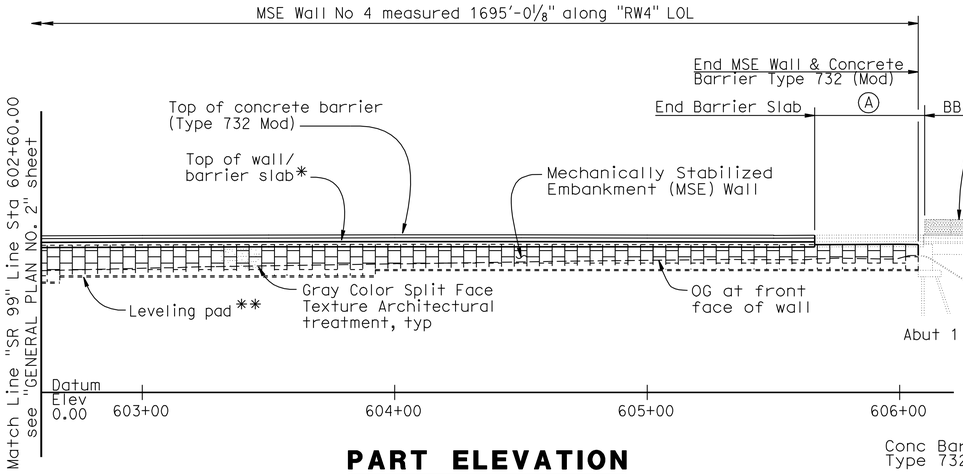

PART ELEVATION

1" = 30'

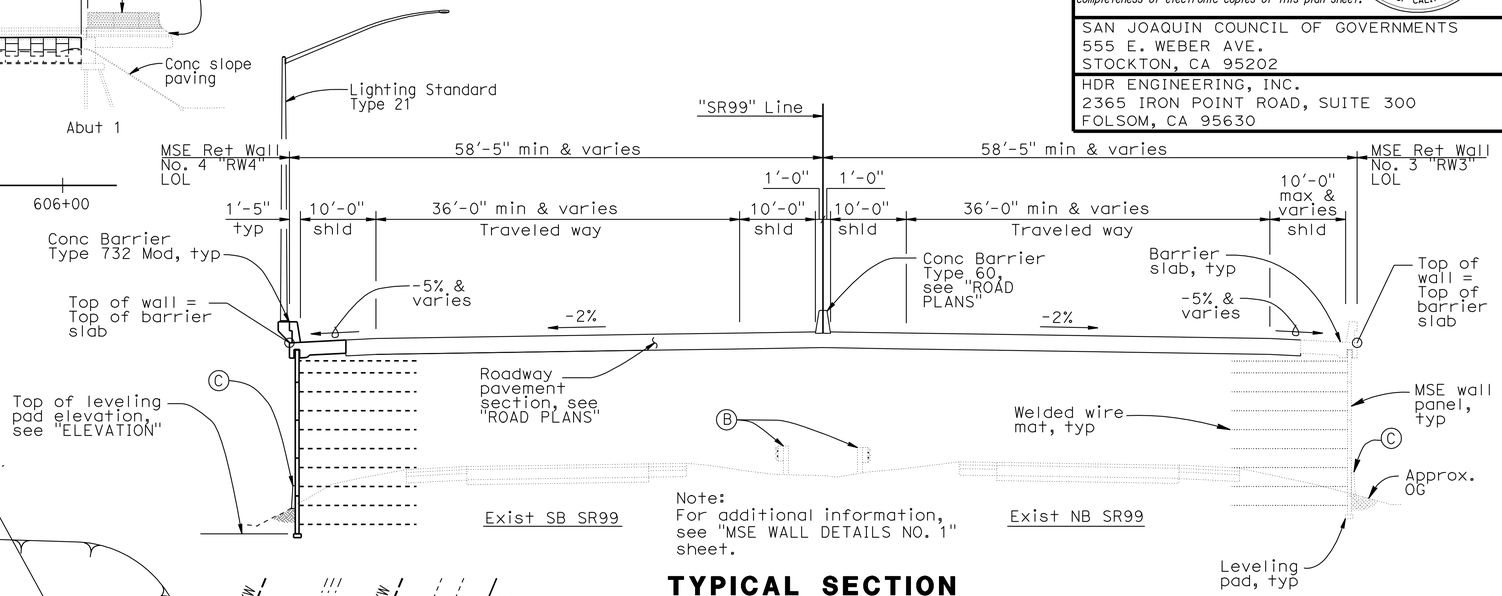

Note:
For additional information, see "MSE WALL DETAILS NO. 1" sheet.

TYPICAL SECTION

1" = 10'

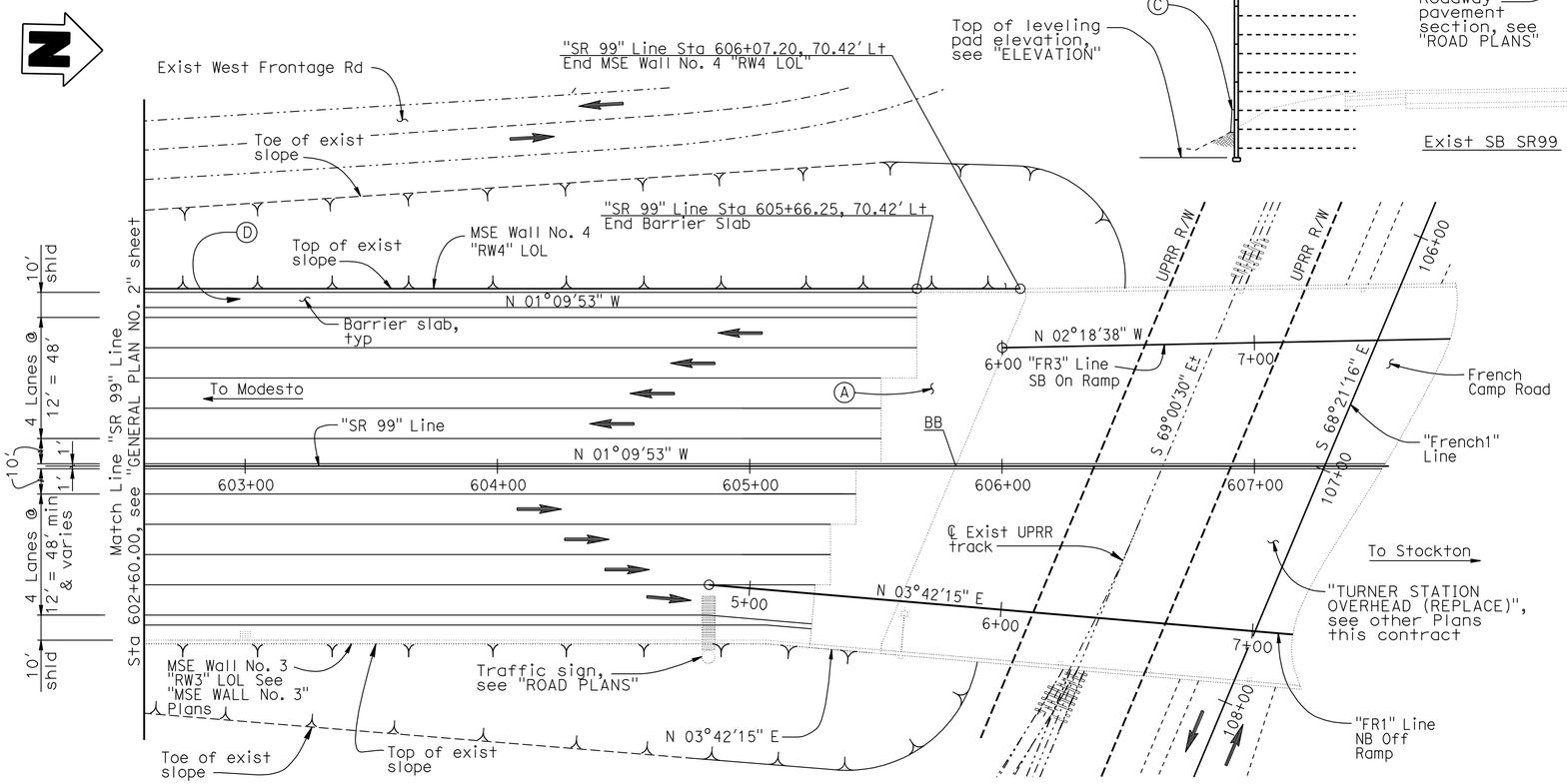

PART PLAN

1" = 30'

NOTES:

1. For MSE Walls "GENERAL NOTES", see "MECHANICALLY STABILIZED EMBANKMENT DETAIL No. 2" sheet.
2. For Traffic Staging, see 'ROAD PLANS'.

LEGEND:

———	Indicates new construction.
–·–·–	Indicates existing feature.
➡	Indicates direction of traffic.
*	Indicates top of wall elevation, see "WALL PANEL LAYOUT" sheets.
**	Indicates top of leveling pad, elevation, see "WALL PANEL LAYOUT" sheets.
Ⓐ	Structure Approach Type N(30S), see "TURNER STATION OVERHEAD (REPLACE)" PLANS.
Ⓑ	Exist TBB to be removed, see "ROAD PLANS".
Ⓒ	Concrete Barrier Type 60D, where occurs, see "ROAD PLANS". (A76A)
Ⓓ	Drainage Inlet, typ, see "ROAD PLANS" for locations. See "MSE WALL DETAILS NO. 3" sheet for details.

Note:
The Contractor shall verify all controlling field dimensions before ordering or fabricating any materials.

DESIGN OVERSIGHT Reza Erfanian 6/24/11 SIGN OFF DATE	DESIGN	BY S PERVAIZ	CHECKED T KENG	LOAD & RESISTANCE FACTOR DESIGN — LIVE LOADING: HS20-44 AND ALTERNATIVE AND PERMIT DESIGN VEHICLE
	DETAILS	BY J VOUGHT	CHECKED T KENG	LAYOUT — BY S PERVAIZ — CHECKED T KENG
	QUANTITIES	BY T KENG	CHECKED J VOUGHT	SPECIFICATIONS — BY T KENG — PLANS AND SPECS COMPARED J MANISCALCO

PREPARED FOR THE STATE OF CALIFORNIA DEPARTMENT OF TRANSPORTATION

JOHN A. KLEMUNES, JR.
PROJECT ENGINEER

BRIDGE NO. 29E0005
POST MILES 10.97

MSE WALL NO. 4
GENERAL PLAN NO. 3

DESIGN GENERAL PLAN SHEET (ENGLISH) (REV.7/16/10)

ORIGINAL SCALE IN INCHES FOR REDUCED PLANS 0 1 2 3

UNIT: 1455
PROJECT NUMBER & PHASE: 10000204411 CONTRACT NO.: 10-0E6121

DISREGARD PRINTS BEARING EARLIER REVISION DATES

REVISION DATES: 5-3-10 2-4-11 5-18-11 6-24-11 — SHEET 3 OF 29

FILE => 29E0005-a-gp03.dgn

USERNAME => s121614 DATE PLOTTED => 01-DEC-2011 TIME PLOTTED => 11:01

DIST	COUNTY	ROUTE	POST MILES TOTAL PROJECT	SHEET No	TOTAL SHEETS
10	SJ	99	10.6/14.9	479	504

REGISTERED CIVIL ENGINEER 6-24-11 DATE

10-17-11
PLANS APPROVAL DATE

REGISTERED PROFESSIONAL ENGINEER SHARIQ PERVAIZ No. C67068 Exp. 9-30-12 CIVIL STATE OF CALIFORNIA

The State of California or its officers or agents shall not be responsible for the accuracy or completeness of electronic copies of this plan sheet.

SAN JOAQUIN COUNCIL OF GOVERNMENTS
555 E. WEBER AVE.
STOCKTON, CA 95202

HDR ENGINEERING, INC.
2365 IRON POINT ROAD, SUITE 300
FOLSOM, CA 95630

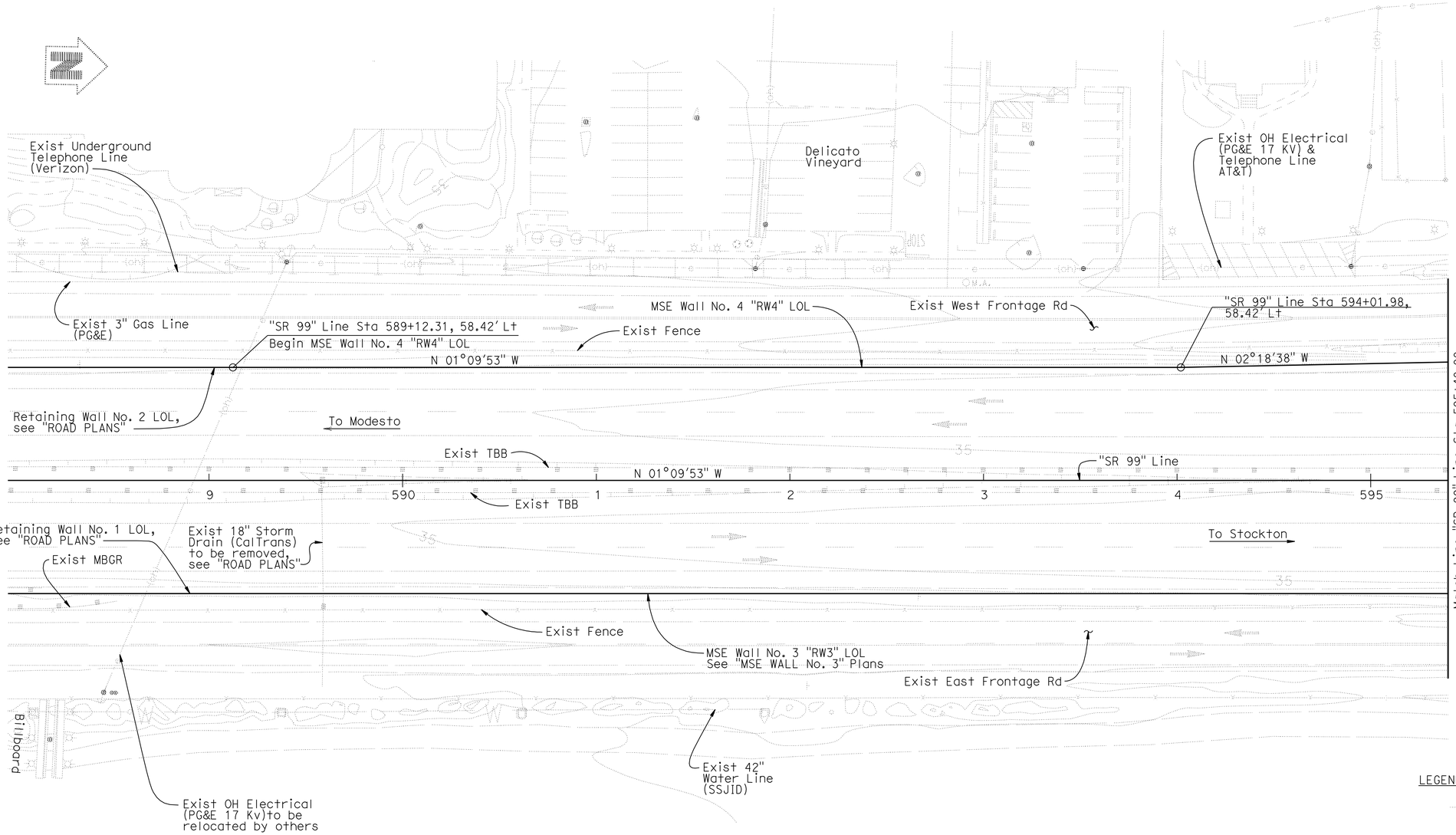

PART PLAN

1" = 30'

BENCH MARKS

BENCHMARK# 645 ELEV. 58.24 Ft

DESCRIPTION: KSN CONTROL POINT, 1/2 " REBAR WITH YELLOW CAP STAMPED "KSN CONTROL", LOCATED AT APPROXIMATE CENTERLINE STATION 605+95 ON THE SOUTHBOUND MAINLINE, ON THE INSIDE SHOULDER, 3.5' EAST OF THE EDGE OF PAVEMENT, 11' WEST OF THE FACE OF THE GUARDRAIL, AND 4' SOUTH OF THE SOUTHEAST CORNER OF THE FRENCH CAMP OVER CROSSING BRIDGE.
NGVD 29, N2136239.71, E6354178.61.

BENCHMARK# 641 ELEV. 56.89 Ft

DESCRIPTION: KSN CONTROL POINT, 1/2 " REBAR WITH YELLOW CAP STAMPED "KSN CONTROL", LOCATED APPROXIMATE CENTERLINE STATION 608+14 ON THE NORTHBOUND MAINLINE, ON THE INSIDE SHOULDER, 2' WEST OF THE EDGE OF PAVEMENT, 10.5' EAST OF THE FACE OF THE GUARDRAIL, 6' NORTH OF THE FRENCH CAMP OVER CROSSING BRIDGE.
NGVD 29, N2136459.41, E6354207.75.

LEGEND:

Indicates existing electrical poles.

NOTES:

1. See "ROAD PLANS" for type and locations of all existing and proposed utilities.
2. Location of existing utilities shown are approximate. The Contractor shall verify locations of all affected utilities prior to performing any excavation.

Note:
The Contractor shall verify all controlling field dimensions before ordering or fabricating any materials.

GEOTECHNICAL PROFESSIONAL 6-20-11 APPROVAL DATE

Reza Erfanian
DESIGN OVERSIGHT Reza Erfanian
6/24/11
SIGN OFF DATE

SCALE: 1" = 40'	VERT.DATUM NGVD29	HORZ.DATUM NAD1983	
PHOTOGRAMMETRY AS OF: 08/09/2007	ALIGNMENT TIES		
SURVEYED	BY AERIAL PHOTOMAPPING SERVICES	DRAFTED	BY KSN
FIELD CHECKED	BY KRIS F. NEHMER	CHECKED	BY KRIS F. NEHMER

DESIGN	BY S PERVAIZ	CHECKED	J MANISCALCO
DETAILS	BY J VOUGHT	CHECKED	J MANISCALCO
QUANTITIES	BY T KENG	CHECKED	J VOUGHT

PREPARED FOR THE STATE OF CALIFORNIA DEPARTMENT OF TRANSPORTATION

JOHN A. KLEMUNES, JR.
PROJECT ENGINEER

BRIDGE NO. 29E0005
POST MILES 10.97

MSE WALL NO. 4
FOUNDATION PLAN NO 1

FOUNDATION PLAN SHEET (ENGLISH) (REV.7/16/10)

ORIGINAL SCALE IN INCHES FOR REDUCED PLANS 0 1 2 3

UNIT: 1455
PROJECT NUMBER & PHASE: 10000204411 CONTRACT NO.: 10-0E6121

DISREGARD PRINTS BEARING EARLIER REVISION DATES

REVISION DATES: 5-3-10 2-4-11 5-19-11 6-24-11

SHEET 4 OF 29

FILE => 29E0005-b-fp01.dgn

USERNAME => s6121614 DATE PLOTTED => 01-DEC-2011 TIME PLOTTED => 11:01

DIST	COUNTY	ROUTE	POST MILES TOTAL PROJECT	SHEET No	TOTAL SHEETS
10	SJ	99	10.6/14.9	480	504

REGISTERED CIVIL ENGINEER 6-24-11 DATE

10-17-11
PLANS APPROVAL DATE

REGISTERED PROFESSIONAL ENGINEER SHARIQ PERVAIZ No. C67068 Exp. 9-30-12 CIVIL STATE OF CALIFORNIA

The State of California or its officers or agents shall not be responsible for the accuracy or completeness of electronic copies of this plan sheet.

SAN JOAQUIN COUNCIL OF GOVERNMENTS
555 E. WEBER AVE.
STOCKTON, CA 95202

HDR ENGINEERING, INC.
2365 IRON POINT ROAD, SUITE 300
FOLSOM, CA 95630

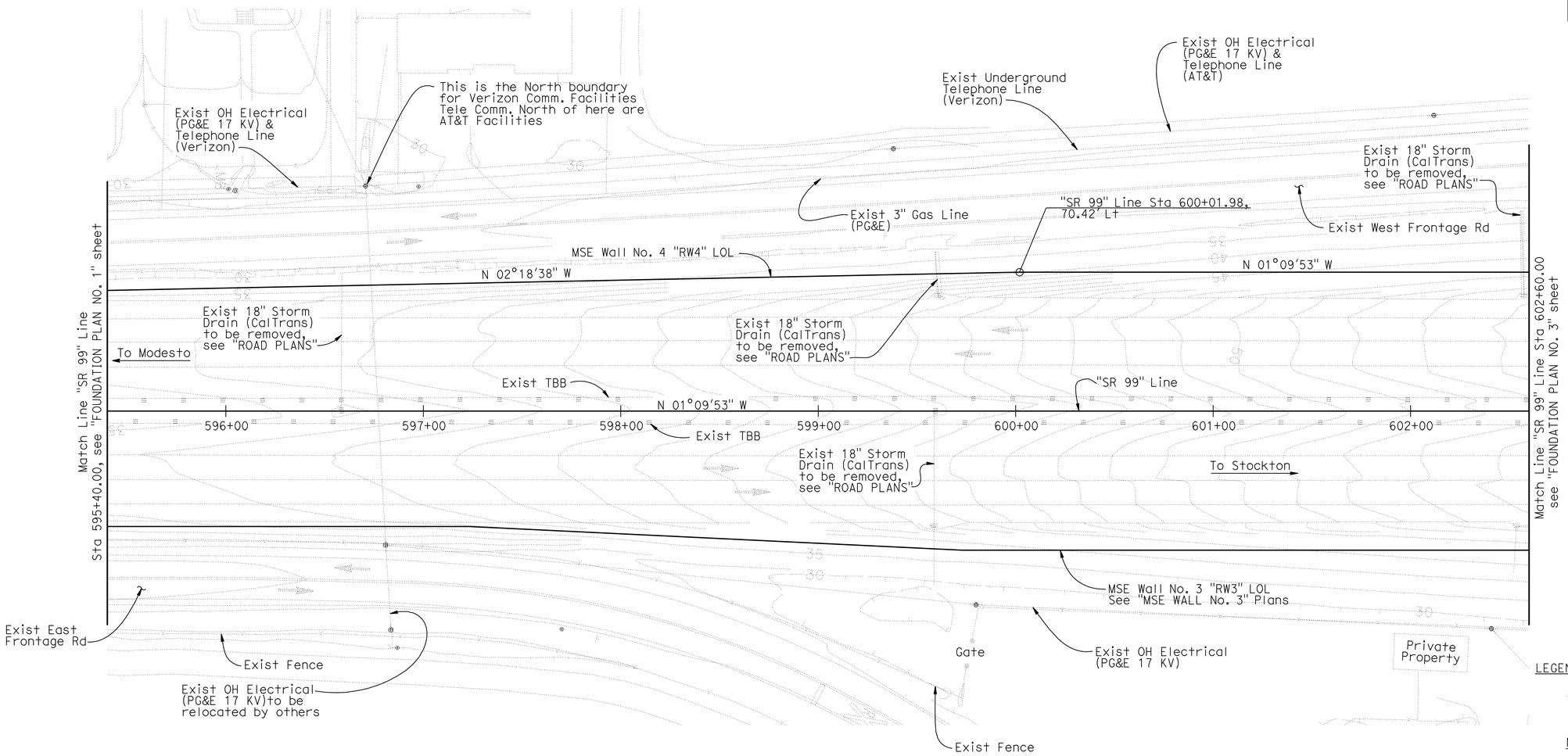

PART PLAN

1" = 30'

LEGEND:

Indicates existing electrical poles.

NOTES:

1. See "ROAD PLANS" for type and locations of all existing and proposed utilities.
2. Location of existing utilities shown are approximate. The Contractor shall verify locations of all affected utilities prior to performing any excavation.

GEOTECHNICAL PROFESSIONAL 6-20-11 APPROVAL DATE

Note:
The Contractor shall verify all controlling field dimensions before ordering or fabricating any materials.

Reza Erfanian
DESIGN OVERSIGHT Reza Erfanian
6/24/11
SIGN OFF DATE

SCALE: 1"=30'	VERT.DATUM NGVD29	HORZ.DATUM NAD1983	
PHOTOGRAMMETRY AS OF: 08/09/2007	ALIGNMENT TIES		
SURVEYED	BY AERIAL PHOTOMAPPING SERVICES	DRAFTED	BY KSN
FIELD CHECKED	BY KRIS F. NEHMER	CHECKED	BY KRIS F. NEHMER

DESIGN	BY S PERVAIZ	CHECKED	J MANISCALCO
DETAILS	BY J VOUGHT	CHECKED	J MANISCALCO
QUANTITIES	BY T KENG	CHECKED	J VOUGHT

PREPARED FOR THE STATE OF CALIFORNIA DEPARTMENT OF TRANSPORTATION

JOHN A. KLEMUNES, JR.
PROJECT ENGINEER

BRIDGE NO. 29E0005
POST MILES 10.97

MSE WALL NO. 4
FOUNDATION PLAN NO. 2

FOUNDATION PLAN SHEET (ENGLISH) (REV.7/16/10)

ORIGINAL SCALE IN INCHES FOR REDUCED PLANS 0 1 2 3

UNIT: 1455
PROJECT NUMBER & PHASE: 10000204411 CONTRACT NO.: 10-0E6121

DISREGARD PRINTS BEARING EARLIER REVISION DATES

REVISION DATES: 5-3-10 2-4-11 5-18-11 6-24-11

SHEET 5 OF 29

FILE => 29E0005-b-fp02.dgn

USERNAME => s121614 DATE PLOTTED => 01-DEC-2011 TIME PLOTTED => 11:01

DIST	COUNTY	ROUTE	POST MILES TOTAL PROJECT	SHEET No	TOTAL SHEETS
10	SJ	99	10.6/14.9	481	504

REGISTERED CIVIL ENGINEER 6-24-11 DATE

10-17-11
PLANS APPROVAL DATE

REGISTERED PROFESSIONAL ENGINEER SHARIQ PERVAIZ No. C67068 Exp. 9-30-12 CIVIL STATE OF CALIFORNIA

The State of California or its officers or agents shall not be responsible for the accuracy or completeness of electronic copies of this plan sheet.

SAN JOAQUIN COUNCIL OF GOVERNMENTS
555 E. WEBER AVE.
STOCKTON, CA 95202

HDR ENGINEERING, INC.
2365 IRON POINT ROAD, SUITE 300
FOLSOM, CA 95630

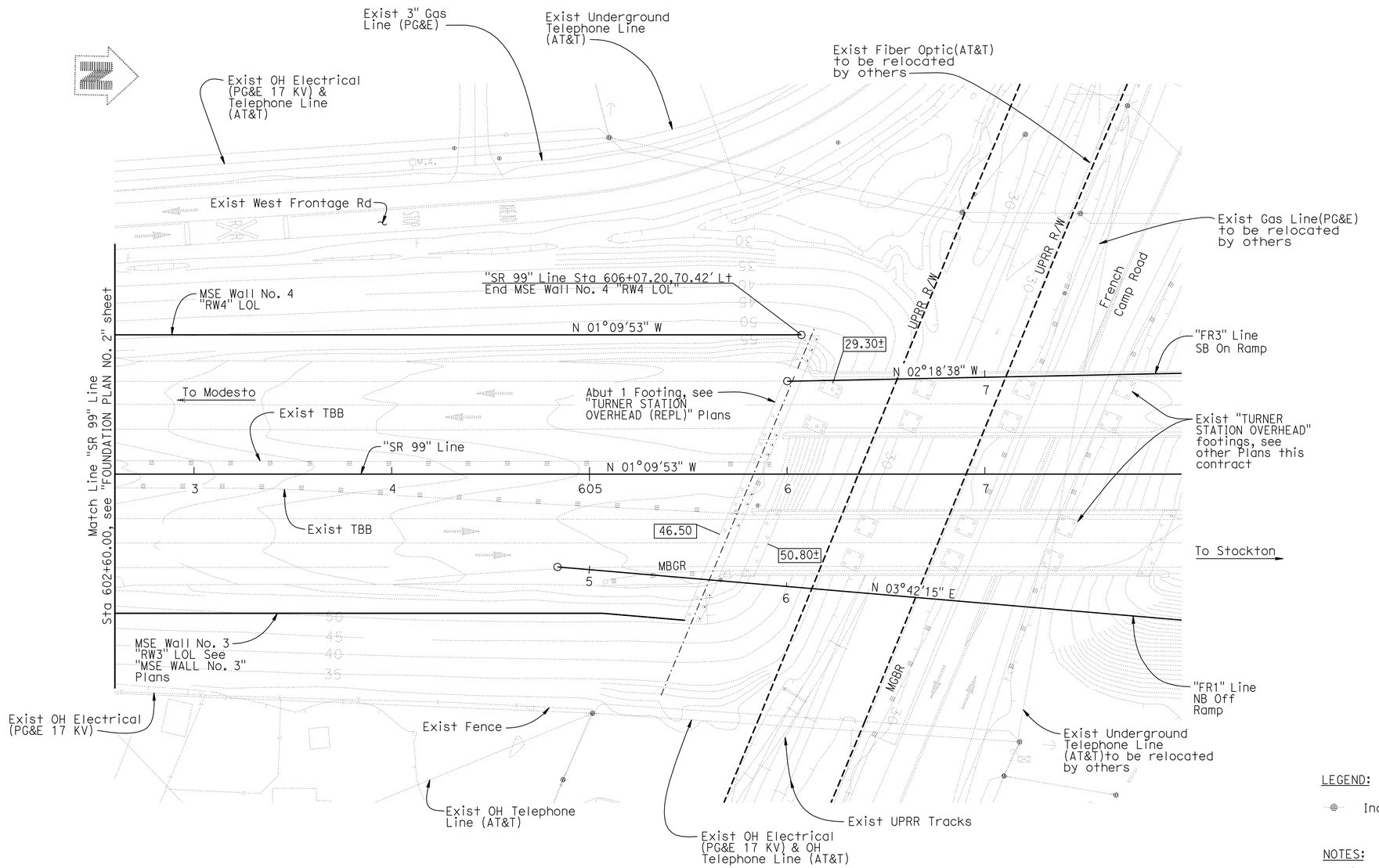

Note: Bent 2 footings for "TURNER STATION OH (REPLACE)" structure not shown for clarity.

PART PLAN

1" = 30'

LEGEND:

Indicates existing electrical poles.

NOTES:

1. See "ROAD PLANS" for type and locations of all existing and proposed utilities.
2. Location of existing utilities shown are approximate. The Contractor shall verify locations of all affected utilities prior to performing any excavation.

GEOTECHNICAL PROFESSIONAL APPROVAL DATE 6-20-11

Note:
The Contractor shall verify all controlling field dimensions before ordering or fabricating any materials.

DESIGN OVERSIGHT Reza Erfanian
6/24/11
SIGN OFF DATE

SCALE: 1" = 30'	VERT.DATUM NGVD29	HORZ.DATUM NAD1983			
PHOTOGRAMMETRY AS OF: 08/09/2007	ALIGNMENT TIES				
SURVEYED	BY AERIAL PHOTOMAPPING SERVICES	DRAFTED	BY KSN		
FIELD CHECKED	BY KRIS F. NEHMER	CHECKED	BY KRIS F. NEHMER		

DESIGN	BY S PERVAIZ	CHECKED	J MANISCALCO
DETAILS	BY J VOUGHT	CHECKED	J MANISCALCO
QUANTITIES	BY T KENG	CHECKED	J VOUGHT

PREPARED FOR THE STATE OF CALIFORNIA DEPARTMENT OF TRANSPORTATION

JOHN A. KLEMUNES, JR.
PROJECT ENGINEER

BRIDGE NO. 29E0005
POST MILES 10.97

MSE WALL NO. 4
FOUNDATION PLAN NO 3

FOUNDATION PLAN SHEET (ENGLISH) (REV.7/16/10)

ORIGINAL SCALE IN INCHES FOR REDUCED PLANS 0 1 2 3

UNIT: 1455
PROJECT NUMBER & PHASE: 10000204411 CONTRACT NO.: 10-0E6121

DISREGARD PRINTS BEARING EARLIER REVISION DATES

REVISION DATES: 5-3-10 2-4-11 5-18-11 6-24-11

SHEET 6 OF 29

FILE => 29E0005-b-fp03.dgn

USERNAME => s121614 DATE PLOTTED => 01-DEC-2011 TIME PLOTTED => 11:02

DIST	COUNTY	ROUTE	POST MILES TOTAL PROJECT	SHEET No	TOTAL SHEETS
10	SJ	99	10.6/14.9	482	504

REGISTERED CIVIL ENGINEER 6-24-11 DATE

10-17-11
PLANS APPROVAL DATE

REGISTERED PROFESSIONAL ENGINEER SHARIQ PERVAIZ No. C67068 Exp. 9-30-12 CIVIL STATE OF CALIFORNIA

The State of California or its officers or agents shall not be responsible for the accuracy or completeness of electronic copies of this plan sheet.

SAN JOAQUIN COUNCIL OF GOVERNMENTS
555 E. WEBER AVE.
STOCKTON, CA 95202

HDR ENGINEERING, INC.
2365 IRON POINT ROAD, SUITE 300
FOLSOM, CA 95630

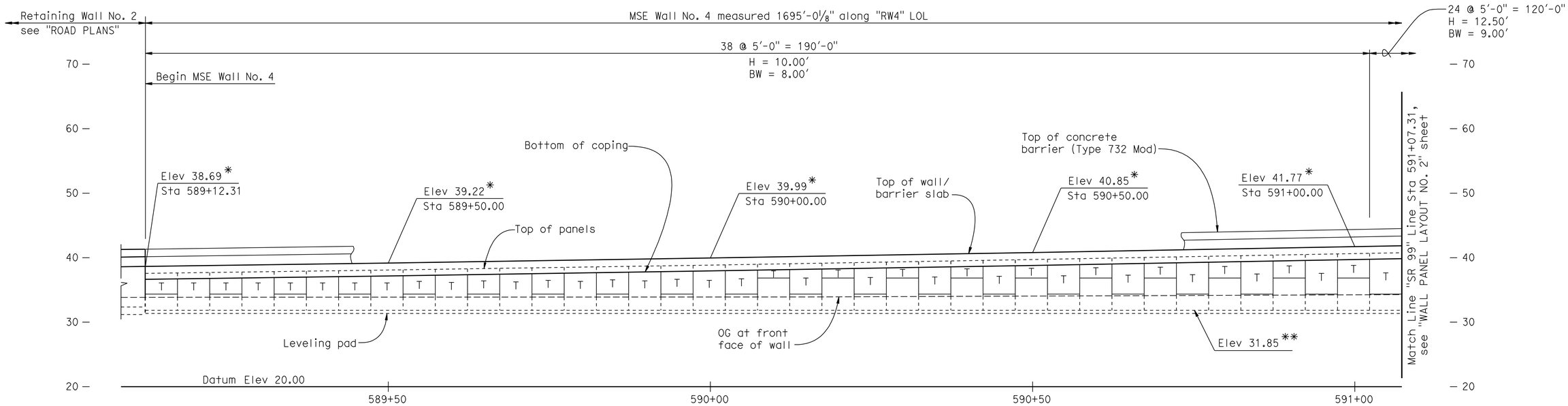

MIRRORED ELEVATION MSE WALL NO. 4

1/8" = 1'-0"

LEGEND:

*	Indicates top of wall elevation
**	Indicates top of leveling pad elevation
H =	Design Height, see "WALL DETAIL NO. 1" sheet
BW =	Base Width, see "WALL DETAIL NO. 1" sheet
T	Indicates Top Panel, see "WALL DETAIL NO. 2" sheet
	Indicates Intermediate or Bottom Panel, see "WALL DETAIL NO. 2" sheet
	Indicates Bottom Half Panel, see "WALL DETAIL NO. 2" sheet

NOTES:

1. Concrete barrier (Type 60D) not shown for clarity.
2. Architectural details not shown.
3. For Wall Panel & Barrier Slab Details, see "MSE WALL DETAILS NO. 1 THRU 4" sheets.

Note:
The Contractor shall verify all controlling field dimensions before ordering or fabricating any materials.

Reza Erfanian
DESIGN OVERSIGHT Reza Erfanian
6/24/11
SIGN OFF DATE

	BY	CHECKED
DESIGN	S PERVAIZ	T KENG
DETAILS	J VOUGHT	T KENG
QUANTITIES	T KENG	J VOUGHT

PREPARED FOR THE STATE OF CALIFORNIA DEPARTMENT OF TRANSPORTATION

JOHN A. KLEMUNES, JR.
PROJECT ENGINEER

BRIDGE NO. 29E0005
POST MILE 10.97

MSE WALL NO. 4
WALL PANEL LAYOUT NO. 1

DESIGN DETAIL SHEET (ENGLISH) (REV.7/16/10)

ORIGINAL SCALE IN INCHES FOR REDUCED PLANS 0 1 2 3

UNIT: 1455
PROJECT NUMBER & PHASE: 10000204411 CONTRACT NO.: 10-0E6121

DISREGARD PRINTS BEARING EARLIER REVISION DATES

REVISION DATES: 5-3-10 2-4-11 5-18-11 6-24-11

SHEET 7 OF 29

FILE => 29E0005-c-wpl1.dgn

USERNAME => s12614 DATE PLOTTED => 01-DEC-2011 TIME PLOTTED => 11:02

DIST	COUNTY	ROUTE	POST MILES TOTAL PROJECT	SHEET No	TOTAL SHEETS
10	SJ	99	10.6/14.9	483	504

REGISTERED CIVIL ENGINEER 6-24-11 DATE

10-17-11
PLANS APPROVAL DATE

REGISTERED PROFESSIONAL ENGINEER SHARIQ PERVAIZ No. C67068 Exp. 9-30-12 CIVIL STATE OF CALIFORNIA

The State of California or its officers or agents shall not be responsible for the accuracy or completeness of electronic copies of this plan sheet.

SAN JOAQUIN COUNCIL OF GOVERNMENTS
555 E. WEBER AVE.
STOCKTON, CA 95202

HDR ENGINEERING, INC.
2365 IRON POINT ROAD, SUITE 300
FOLSOM, CA 95630

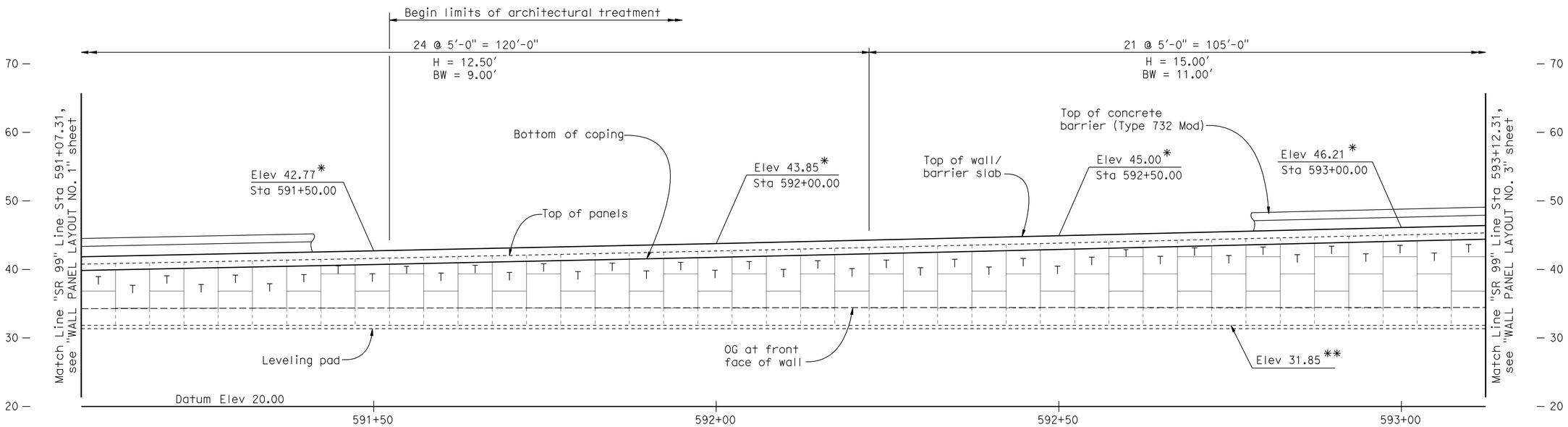

MIRRORED ELEVATION MSE WALL NO. 4

1/8" = 1'-0"

LEGEND:

*	Indicates top of wall elevation
**	Indicates top of leveling pad elevation
H =	Design Height, see "WALL DETAIL NO. 1" sheet
BW =	Base Width, see "WALL DETAIL NO. 1" sheet
T	Indicates Top Panel, see "WALL DETAIL NO. 2" sheet
	Indicates Intermediate or Bottom Panel, see "WALL DETAIL NO. 2" sheet
	Indicates Bottom Half Panel, see "WALL DETAIL NO. 2" sheet

NOTES:

1. Concrete barrier (Type 60D) not shown for clarity.
2. Architectural details not shown.
3. For Wall Panel & Barrier Slab Details, see "MSE WALL DETAILS NO. 1 THRU 4" sheets.

Note:
The Contractor shall verify all controlling field dimensions before ordering or fabricating any materials.

Reza Erfanian
DESIGN OVERSIGHT Reza Erfanian
6/24/11
SIGN OFF DATE

	BY	CHECKED
DESIGN	S PERVAIZ	T KENG
DETAILS	J VOUGHT	T KENG
QUANTITIES	T KENG	J VOUGHT

PREPARED FOR THE STATE OF CALIFORNIA DEPARTMENT OF TRANSPORTATION

JOHN A. KLEMUNES, JR.
PROJECT ENGINEER

BRIDGE NO. 29E0005
POST MILE 10.97

MSE WALL NO. 4
WALL PANEL LAYOUT NO. 2

DESIGN DETAIL SHEET (ENGLISH) (REV.7/16/10)

ORIGINAL SCALE IN INCHES FOR REDUCED PLANS 0 1 2 3

UNIT: 1455
PROJECT NUMBER & PHASE: 10000204411 CONTRACT NO.: 10-0E6121

DISREGARD PRINTS BEARING EARLIER REVISION DATES

REVISION DATES: 5-3-10 2-4-11 5-18-11 6-24-11

SHEET 8 OF 29

FILE => 29E0005-c-wpl2.dgn

USERNAME => s12614 DATE PLOTTED => 01-DEC-2011 TIME PLOTTED => 11:02

DIST	COUNTY	ROUTE	POST MILES TOTAL PROJECT	SHEET No	TOTAL SHEETS
10	SJ	99	10.6/14.9	484	504

REGISTERED CIVIL ENGINEER — DATE 6-24-11

10-17-11
PLANS APPROVAL DATE

REGISTERED PROFESSIONAL ENGINEER — SHARIQ PERVAIZ — No. C67068 — Exp. 9-30-12 — CIVIL — STATE OF CALIFORNIA

The State of California or its officers or agents shall not be responsible for the accuracy or completeness of electronic copies of this plan sheet.

SAN JOAQUIN COUNCIL OF GOVERNMENTS
555 E. WEBER AVE.
STOCKTON, CA 95202

HDR ENGINEERING, INC.
2365 IRON POINT ROAD, SUITE 300
FOLSOM, CA 95630

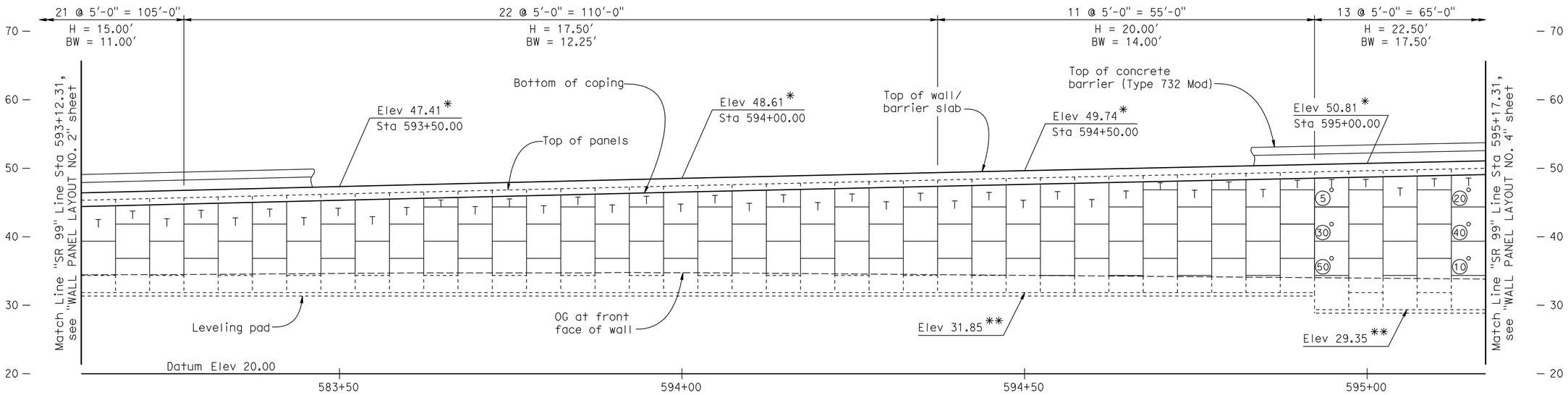

MIRRORED ELEVATION MSE WALL NO. 4

1/8" = 1'-0"

LEGEND:

*	Indicates top of wall elevation
**	Indicates top of leveling pad elevation
H =	Design Height, see "WALL DETAIL NO. 1" sheet
BW =	Base Width, see "WALL DETAIL NO. 1" sheet
T	Indicates Top Panel, see "WALL DETAIL NO. 2" sheet
	Indicates Intermediate or Bottom Panel, see "WALL DETAIL NO. 2" sheet
	Indicates Bottom Half Panel, see "WALL DETAIL NO. 2" sheet

30° — Indicates Inspection Wire Panel

Indicates location of inspection wire replacement, see "MECHANICALLY STABILIZED EMBANKMENT - DETAIL NO. 3" sheet

Indicates interval in years from construction to removal of Inspection Wire

NOTES:

1. Concrete barrier (Type 60D) not shown for clarity.
2. Architectural details not shown.
3. For Wall Panel & Barrier Slab Details, see "MSE WALL DETAILS NO. 1 THRU 4" sheets.

Note:
The Contractor shall verify all controlling field dimensions before ordering or fabricating any materials.

Reza Erfanian
DESIGN OVERSIGHT Reza Erfanian
6/24/11
SIGN OFF DATE

	BY	CHECKED
DESIGN	S PERVAIZ	T KENG
DETAILS	J VOUGHT	T KENG
QUANTITIES	T KENG	J VOUGHT

PREPARED FOR THE STATE OF CALIFORNIA DEPARTMENT OF TRANSPORTATION

JOHN A. KLEMUNES, JR.
PROJECT ENGINEER

BRIDGE NO. 29E0005
POST MILE 10.97

MSE WALL NO. 4
WALL PANEL LAYOUT NO. 3

DESIGN DETAIL SHEET (ENGLISH) (REV.7/16/10)

ORIGINAL SCALE IN INCHES FOR REDUCED PLANS 0 1 2 3

UNIT: 1455
PROJECT NUMBER & PHASE: 10000204411 CONTRACT NO.: 10-0E6121

DISREGARD PRINTS BEARING EARLIER REVISION DATES

REVISION DATES: 5-3-10 2-4-11 5-18-11 6-24-11 — SHEET 9 OF 29

FILE => 29E0005-c-wpl3.dgn

USERNAME => s121614 DATE PLOTTED => 01-DEC-2011 TIME PLOTTED => 11:02

DIST	COUNTY	ROUTE	POST MILES TOTAL PROJECT	SHEET No	TOTAL SHEETS
10	SJ	99	10.6/14.9	485	504

REGISTERED CIVIL ENGINEER — DATE 6-24-11

10-17-11
PLANS APPROVAL DATE

REGISTERED PROFESSIONAL ENGINEER — SHARIQ PERVAIZ — No. C67068 — Exp. 9-30-12 — CIVIL — STATE OF CALIFORNIA

The State of California or its officers or agents shall not be responsible for the accuracy or completeness of electronic copies of this plan sheet.

SAN JOAQUIN COUNCIL OF GOVERNMENTS
555 E. WEBER AVE.
STOCKTON, CA 95202

HDR ENGINEERING, INC.
2365 IRON POINT ROAD, SUITE 300
FOLSOM, CA 95630

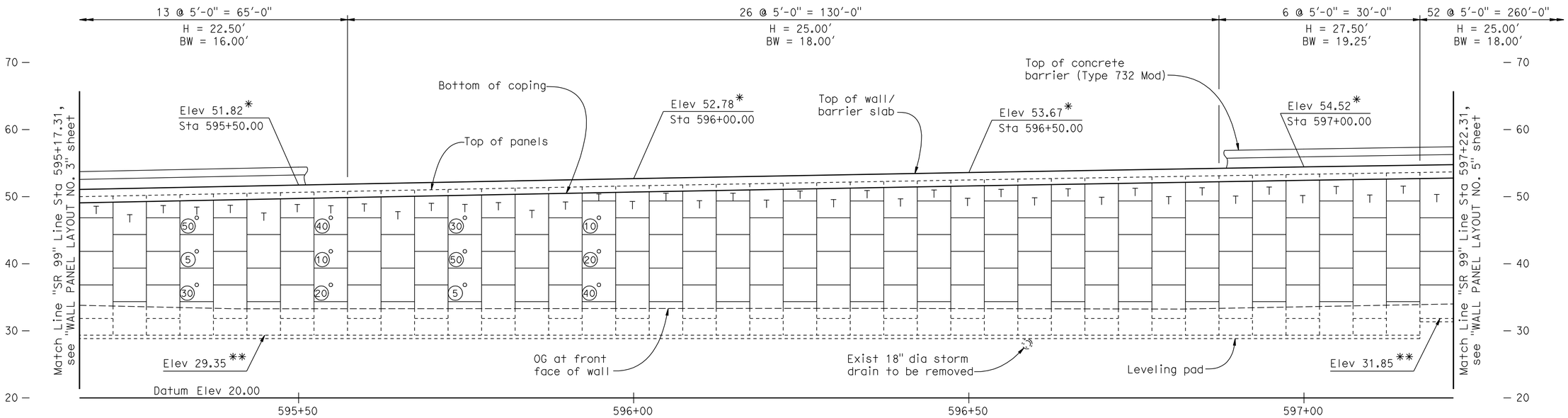

MIRRORED ELEVATION MSE WALL NO. 4

1/8" = 1'-0"

LEGEND:

- * Indicates top of wall elevation
- ** Indicates top of leveling pad elevation
- H = Design Height, see "WALL DETAIL NO. 1" sheet
- BW = Base Width, see "WALL DETAIL NO. 1" sheet
- T — Indicates Top Panel, see "WALL DETAIL NO. 2" sheet
- Indicates Intermediate or Bottom Panel, see "WALL DETAIL NO. 2" sheet
- Indicates Bottom Half Panel, see "WALL DETAIL NO. 2" sheet
- (30°) — Indicates Inspection Wire Panel
  - Indicates location of inspection wire replacement, see "MECHANICALLY STABILIZED EMBANKMENT - DETAIL NO. 3" sheet
  - Indicates interval in years from construction to removal of Inspection Wire

NOTES:

1. Concrete barrier (Type 60D) not shown for clarity.
2. Architectural details not shown.
3. For Wall Panel & Barrier Slab Details, see "MSE WALL DETAILS NO. 1 THRU 4" sheets.

Note:
The Contractor shall verify all controlling field dimensions before ordering or fabricating any materials.

Reza Erfanian
DESIGN OVERSIGHT Reza Erfanian
6/24/11
SIGN OFF DATE

	BY	CHECKED
DESIGN	S PERVAIZ	T KENG
DETAILS	J VOUGHT	T KENG
QUANTITIES	T KENG	J VOUGHT

PREPARED FOR THE STATE OF CALIFORNIA DEPARTMENT OF TRANSPORTATION

JOHN A. KLEMUNES, JR.
PROJECT ENGINEER

BRIDGE NO. 29E0005
POST MILE 10.97

MSE WALL NO. 4
WALL PANEL LAYOUT NO. 4

DESIGN DETAIL SHEET (ENGLISH) (REV.7/16/10)

ORIGINAL SCALE IN INCHES FOR REDUCED PLANS 0 1 2 3

UNIT: 1455
PROJECT NUMBER & PHASE: 10000204411 CONTRACT NO.: 10-0E6121

DISREGARD PRINTS BEARING EARLIER REVISION DATES

REVISION DATES: 5-3-10 2-4-11 5-19-11 6-24-11

SHEET 10 OF 29

FILE => 29E0005-c-wpl4.dgn

USERNAME => s121614 DATE PLOTTED => 01-DEC-2011 TIME PLOTTED => 11:02

DIST	COUNTY	ROUTE	POST MILES TOTAL PROJECT	SHEET No	TOTAL SHEETS
10	SJ	99	10.6/14.9	486	504

REGISTERED CIVIL ENGINEER 6-24-11 DATE

10-17-11
PLANS APPROVAL DATE

REGISTERED PROFESSIONAL ENGINEER SHARIQ PERVAIZ No. C67068 Exp. 9-30-12 CIVIL STATE OF CALIFORNIA

The State of California or its officers or agents shall not be responsible for the accuracy or completeness of electronic copies of this plan sheet.

SAN JOAQUIN COUNCIL OF GOVERNMENTS
555 E. WEBER AVE.
STOCKTON, CA 95202

HDR ENGINEERING, INC.
2365 IRON POINT ROAD, SUITE 300
FOLSOM, CA 95630

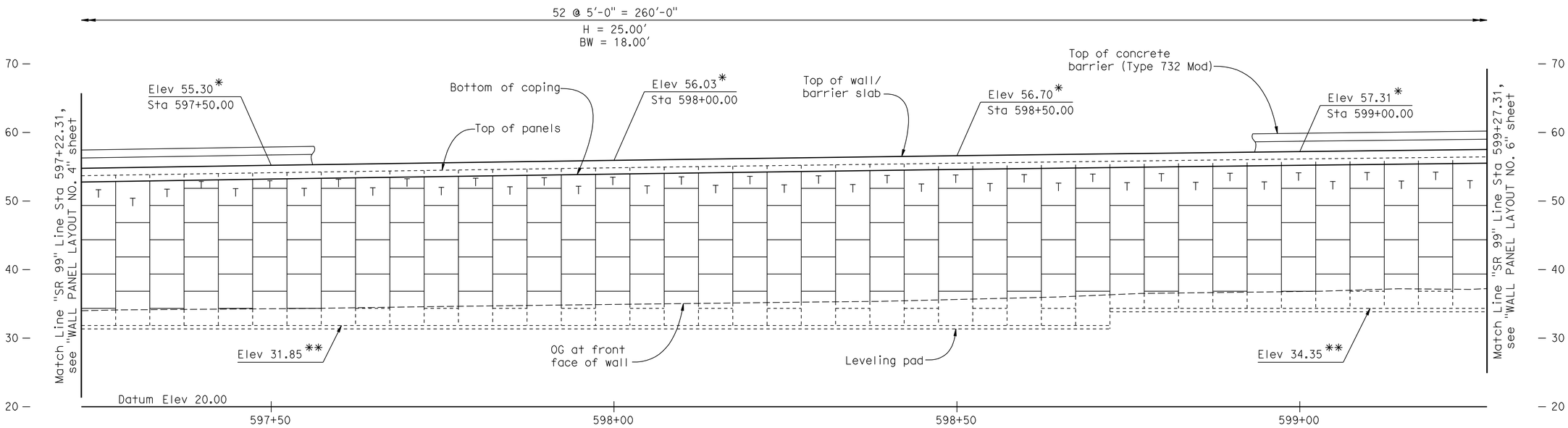

MIRRORED ELEVATION MSE WALL NO. 4

1/8" = 1'-0"

LEGEND:

*	Indicates top of wall elevation
**	Indicates top of leveling pad elevation
H =	Design Height, see "WALL DETAIL NO. 1" sheet
BW =	Base Width, see "WALL DETAIL NO. 1" sheet
T	Indicates Top Panel, see "WALL DETAIL NO. 2" sheet
	Indicates Intermediate or Bottom Panel, see "WALL DETAIL NO. 2" sheet
	Indicates Bottom Half Panel, see "WALL DETAIL NO. 2" sheet

NOTES:

1. Concrete barrier (Type 60D) not shown for clarity.
2. Architectural details not shown.
3. For Wall Panel & Barrier Slab Details, see "MSE WALL DETAILS NO. 1 THRU 4" sheets.

Note:
The Contractor shall verify all controlling field dimensions before ordering or fabricating any materials.

Reza Erfanian
DESIGN OVERSIGHT Reza Erfanian
6/24/11
SIGN OFF DATE

	BY	CHECKED
DESIGN	S PERVAIZ	T KENG
DETAILS	J VOUGHT	T KENG
QUANTITIES	T KENG	J VOUGHT

PREPARED FOR THE STATE OF CALIFORNIA DEPARTMENT OF TRANSPORTATION

JOHN A. KLEMUNES, JR.
PROJECT ENGINEER

BRIDGE NO. 29E0005
POST MILE 10.97

MSE WALL NO. 4
WALL PANEL LAYOUT NO. 5

DESIGN DETAIL SHEET (ENGLISH) (REV.7/16/10)

ORIGINAL SCALE IN INCHES FOR REDUCED PLANS 0 1 2 3

UNIT: 1455
PROJECT NUMBER & PHASE: 10000204411 CONTRACT NO.: 10-0E6121

DISREGARD PRINTS BEARING EARLIER REVISION DATES

REVISION DATES: 5-3-10 2-4-11 5-18-11 6-24-11

SHEET 11 OF 29

FILE => 29E0005-c-wpl5.dgn

USERNAME => s8121614 DATE PLOTTED => 01-DEC-2011 TIME PLOTTED => 11:02

DIST	COUNTY	ROUTE	POST MILES TOTAL PROJECT	SHEET No	TOTAL SHEETS
10	SJ	99	10.6/14.9	487	504

REGISTERED CIVIL ENGINEER 6-24-11 DATE

10-17-11
PLANS APPROVAL DATE

REGISTERED PROFESSIONAL ENGINEER SHARIQ PERVAIZ No. C67068 Exp. 9-30-12 CIVIL STATE OF CALIFORNIA

The State of California or its officers or agents shall not be responsible for the accuracy or completeness of electronic copies of this plan sheet.

SAN JOAQUIN COUNCIL OF GOVERNMENTS
555 E. WEBER AVE.
STOCKTON, CA 95202

HDR ENGINEERING, INC.
2365 IRON POINT ROAD, SUITE 300
FOLSOM, CA 95630

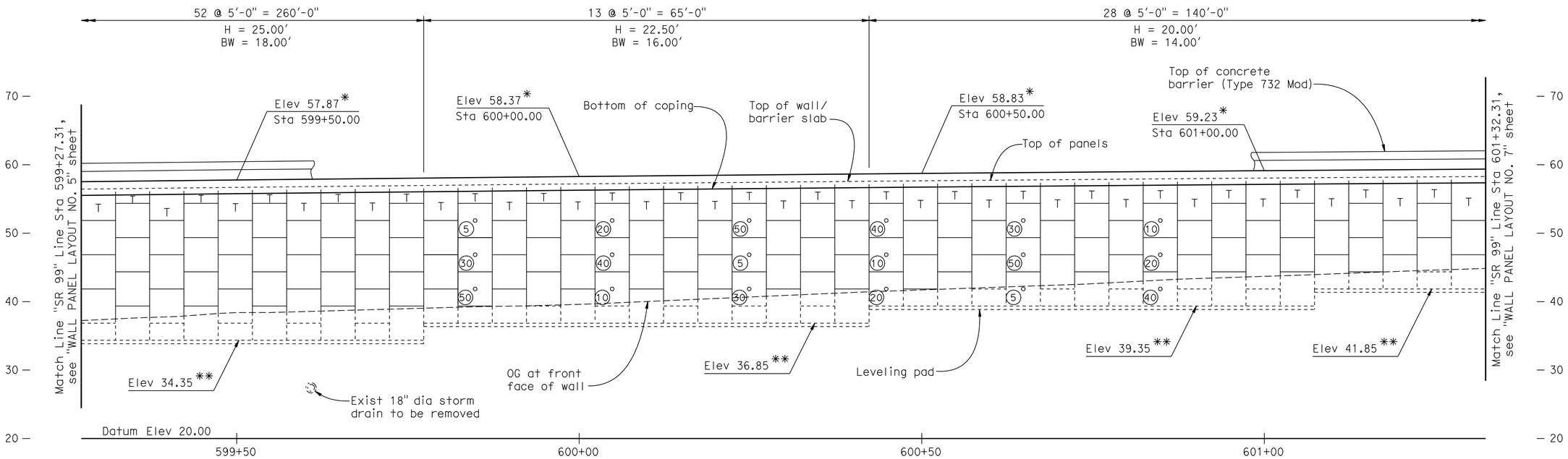

MIRRORED ELEVATION MSE WALL NO. 4

1/8" = 1'-0"

LEGEND:

*	Indicates top of wall elevation
**	Indicates top of leveling pad elevation
H =	Design Height, see "WALL DETAIL NO. 1" sheet
BW =	Base Width, see "WALL DETAIL NO. 1" sheet
T	Indicates Top Panel, see "WALL DETAIL NO. 2" sheet
	Indicates Intermediate or Bottom Panel, see "WALL DETAIL NO. 2" sheet
	Indicates Bottom Half Panel, see "WALL DETAIL NO. 2" sheet

Indicates Inspection Wire Panel

Indicates location of inspection wire replacement, see "MECHANICALLY STABILIZED EMBANKMENT - DETAIL NO. 3" sheet

Indicates interval in years from construction to removal of Inspection Wire

NOTES:

1. Concrete barrier (Type 60D) not shown for clarity.
2. Architectural details not shown.
3. For Wall Panel & Barrier Slab Details, see "MSE WALL DETAILS NO. 1 THRU 4" sheets.

Note:
The Contractor shall verify all controlling field dimensions before ordering or fabricating any materials.

Reza Erfanian
DESIGN OVERSIGHT Reza Erfanian
6/24/11
SIGN OFF DATE

	BY	CHECKED
DESIGN	S PERVAIZ	T KENG
DETAILS	J VOUGHT	T KENG
QUANTITIES	T KENG	J VOUGHT

PREPARED FOR THE STATE OF CALIFORNIA DEPARTMENT OF TRANSPORTATION

JOHN A. KLEMUNES, JR.
PROJECT ENGINEER

BRIDGE NO. 29E0005
POST MILE 10.97

MSE WALL NO. 4
WALL PANEL LAYOUT NO. 6

DESIGN DETAIL SHEET (ENGLISH) (REV.7/16/10)

ORIGINAL SCALE IN INCHES FOR REDUCED PLANS 0 1 2 3

UNIT: 1455
PROJECT NUMBER & PHASE: 10000204411 CONTRACT NO.: 10-0E6121

DISREGARD PRINTS BEARING EARLIER REVISION DATES

REVISION DATES: 5-3-10 2-4-11 5-18-11 6-24-11

SHEET 12 OF 29

FILE => 29E0005-c-wpl6.dgn

USERNAME => s12614 DATE PLOTTED => 01-DEC-2011 TIME PLOTTED => 11:02

DIST	COUNTY	ROUTE	POST MILES TOTAL PROJECT	SHEET No	TOTAL SHEETS
10	SJ	99	10.6/14.9	488	504

REGISTERED CIVIL ENGINEER — DATE 6-24-11

10-17-11
PLANS APPROVAL DATE

REGISTERED PROFESSIONAL ENGINEER — SHARIQ PERVAIZ — No. C67068 — Exp. 9-30-12 — CIVIL — STATE OF CALIFORNIA

The State of California or its officers or agents shall not be responsible for the accuracy or completeness of electronic copies of this plan sheet.

SAN JOAQUIN COUNCIL OF GOVERNMENTS
555 E. WEBER AVE.
STOCKTON, CA 95202

HDR ENGINEERING, INC.
2365 IRON POINT ROAD, SUITE 300
FOLSOM, CA 95630

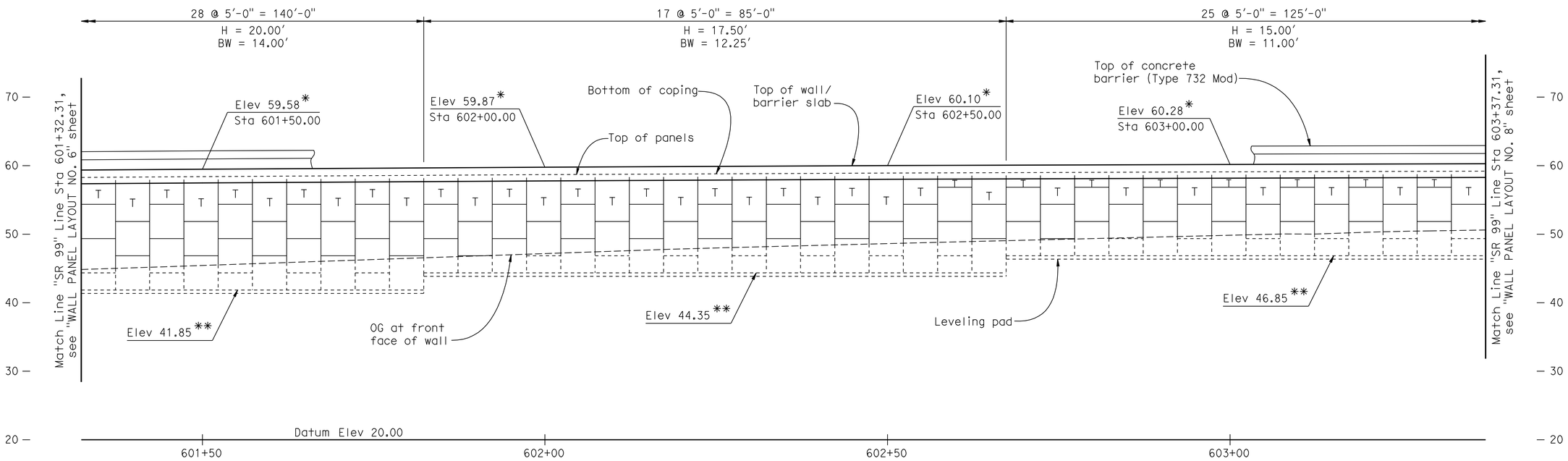

MIRRORED ELEVATION MSE WALL NO. 4

1/8" = 1'-0"

LEGEND:

- * Indicates top of wall elevation
- ** Indicates top of leveling pad elevation
- H = Design Height, see "WALL DETAIL NO. 1" sheet
- BW = Base Width, see "WALL DETAIL NO. 1" sheet
- T — Indicates Top Panel, see "WALL DETAIL NO. 2" sheet
- Indicates Intermediate or Bottom Panel, see "WALL DETAIL NO. 2" sheet
- Indicates Bottom Half Panel, see "WALL DETAIL NO. 2" sheet

NOTES:

1. Concrete barrier (Type 60D) not shown for clarity.
2. Architectural details not shown.
3. For Wall Panel & Barrier Slab Details, see "MSE WALL DETAILS NO. 1 THRU 4" sheets.

Note:
The Contractor shall verify all controlling field dimensions before ordering or fabricating any materials.

DESIGN OVERSIGHT Reza Erfanian
6/24/11
SIGN OFF DATE

	BY	CHECKED
DESIGN	S PERVAIZ	T KENG
DETAILS	J VOUGHT	T KENG
QUANTITIES	T KENG	J VOUGHT

PREPARED FOR THE STATE OF CALIFORNIA DEPARTMENT OF TRANSPORTATION

JOHN A. KLEMUNES, JR.
PROJECT ENGINEER

BRIDGE NO. 29E0005
POST MILE 10.97

MSE WALL NO. 4
WALL PANEL LAYOUT NO. 7

DESIGN DETAIL SHEET (ENGLISH) (REV.7/16/10)

ORIGINAL SCALE IN INCHES FOR REDUCED PLANS 0 1 2 3

UNIT: 1455
PROJECT NUMBER & PHASE: 10000204411 CONTRACT NO.: 10-0E6121

DISREGARD PRINTS BEARING EARLIER REVISION DATES

REVISION DATES: 5-3-10 2-4-11 5-18-11 6-24-11

SHEET 13 OF 29

FILE => 29E0005-c-wpl7.dgn

USERNAME => s121614 DATE PLOTTED => 01-DEC-2011 TIME PLOTTED => 11:02

DIST	COUNTY	ROUTE	POST MILES TOTAL PROJECT	SHEET No	TOTAL SHEETS
10	SJ	99	10.6/14.9	489	504

REGISTERED CIVIL ENGINEER 6-24-11 DATE

10-17-11
PLANS APPROVAL DATE

REGISTERED PROFESSIONAL ENGINEER SHARIQ PERVAIZ No. C67068 Exp. 9-30-12 CIVIL STATE OF CALIFORNIA

The State of California or its officers or agents shall not be responsible for the accuracy or completeness of electronic copies of this plan sheet.

SAN JOAQUIN COUNCIL OF GOVERNMENTS
555 E. WEBER AVE.
STOCKTON, CA 95202

HDR ENGINEERING, INC.
2365 IRON POINT ROAD, SUITE 300
FOLSOM, CA 95630

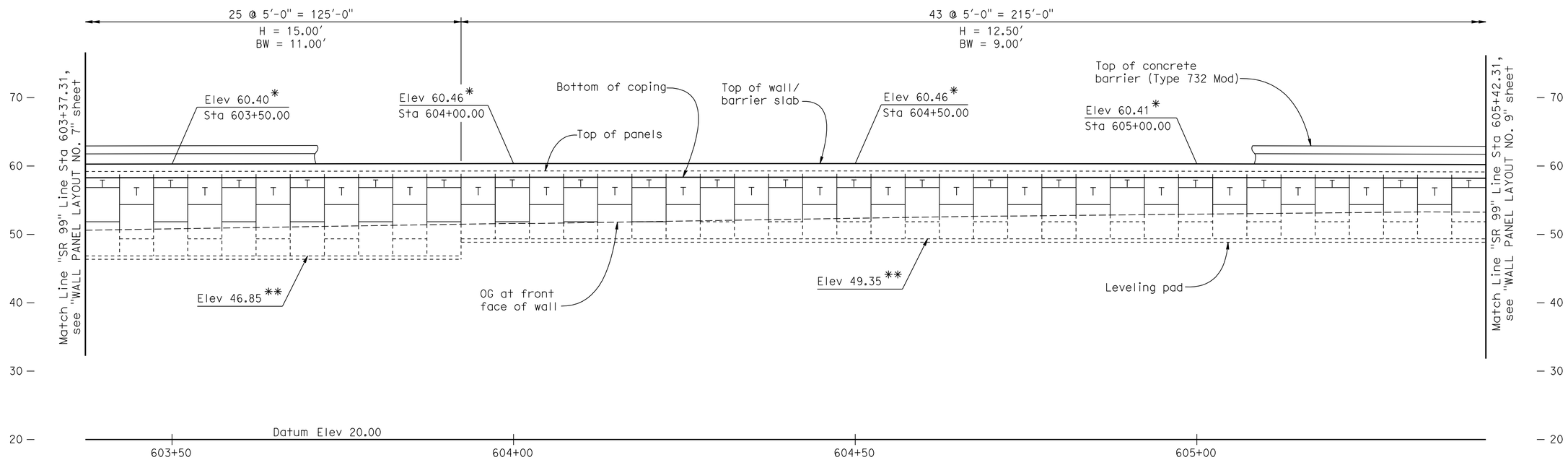

MIRRORED ELEVATION MSE WALL NO. 4

1/8" = 1'-0"

LEGEND:

*	Indicates top of wall elevation
**	Indicates top of leveling pad elevation
H =	Design Height, see "WALL DETAIL NO. 1" sheet
BW =	Base Width, see "WALL DETAIL NO. 1" sheet
T	Indicates Top Panel, see "WALL DETAIL NO. 2" sheet
	Indicates Intermediate or Bottom Panel, see "WALL DETAIL NO. 2" sheet
	Indicates Bottom Half Panel, see "WALL DETAIL NO. 2" sheet

NOTES:

1. Concrete barrier (Type 60D) not shown for clarity.
2. Architectural details not shown.
3. For Wall Panel & Barrier Slab Details, see "MSE WALL DETAILS NO. 1 THRU 4" sheets.

Note:
The Contractor shall verify all controlling field dimensions before ordering or fabricating any materials.

Reza Erfanian
DESIGN OVERSIGHT Reza Erfanian
6/24/11
SIGN OFF DATE

	BY	CHECKED
DESIGN	S PERVAIZ	T KENG
DETAILS	J VOUGHT	T KENG
QUANTITIES	T KENG	J VOUGHT

PREPARED FOR THE STATE OF CALIFORNIA DEPARTMENT OF TRANSPORTATION

JOHN A. KLEMUNES, JR.
PROJECT ENGINEER

BRIDGE NO. 29E0005
POST MILE 10.97

MSE WALL NO. 4
WALL PANEL LAYOUT NO. 8

DESIGN DETAIL SHEET (ENGLISH) (REV.7/16/10)

ORIGINAL SCALE IN INCHES FOR REDUCED PLANS 0 1 2 3

UNIT: 1455
PROJECT NUMBER & PHASE: 10000204411 CONTRACT NO.: 10-0E6121

DISREGARD PRINTS BEARING EARLIER REVISION DATES

REVISION DATES: 5-1-10 2-4-11 5-19-11 6-24-11

SHEET 14 OF 29

FILE => 29E0005-c-wpl8.dgn

USERNAME => s12614 DATE PLOTTED => 01-DEC-2011 TIME PLOTTED => 11:03

DIST	COUNTY	ROUTE	POST MILES TOTAL PROJECT	SHEET No	TOTAL SHEETS
10	SJ	99	10.6/14.9	490	504

REGISTERED CIVIL ENGINEER 6-24-11 DATE

10-17-11
PLANS APPROVAL DATE

REGISTERED PROFESSIONAL ENGINEER SHARIQ PERVAIZ No. C67068 Exp. 9-30-12 CIVIL STATE OF CALIFORNIA

The State of California or its officers or agents shall not be responsible for the accuracy or completeness of electronic copies of this plan sheet.

SAN JOAQUIN COUNCIL OF GOVERNMENTS
555 E. WEBER AVE.
STOCKTON, CA 95202

HDR ENGINEERING, INC.
2365 IRON POINT ROAD, SUITE 300
FOLSOM, CA 95630

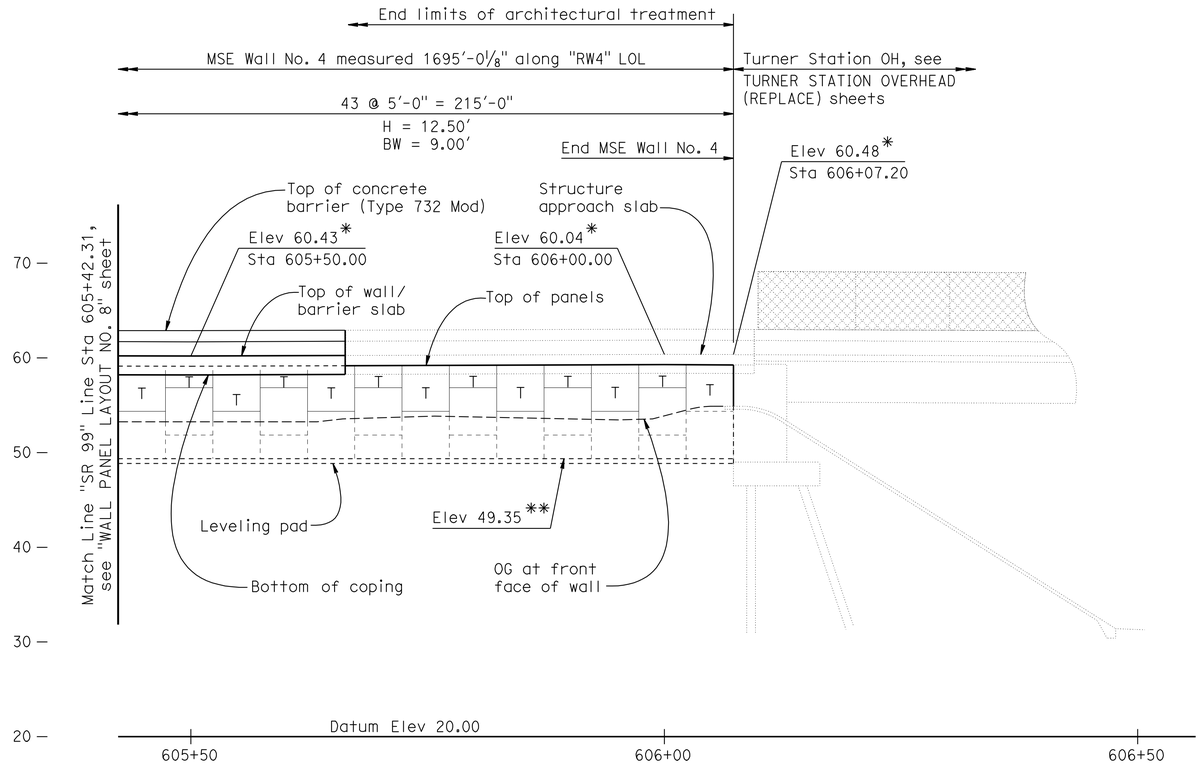

MIRRORED ELEVATION MSE WALL NO. 4

1/8" = 1'-0"

LEGEND:

*	Indicates top of wall elevation
**	Indicates top of leveling pad elevation
H =	Design Height, see "WALL DETAIL NO. 1" sheet
BW =	Base Width, see "WALL DETAIL NO. 1" sheet
T	Indicates Top Panel, see "WALL DETAIL NO. 2" sheet
	Indicates Intermediate or Bottom Panel, see "WALL DETAIL NO. 2" sheet
	Indicates Bottom Half Panel, see "WALL DETAIL NO. 2" sheet

NOTES:

1. Concrete barrier (Type 60D) not shown for clarity.
2. Architectural details not shown.
3. For Wall Panel & Barrier Slab Details, see "MSE WALL DETAILS NO. 1 THRU 4" sheets.

Note:
The Contractor shall verify all controlling field dimensions before ordering or fabricating any materials.

DESIGN OVERSIGHT Reza Erfanian
6/24/11
SIGN OFF DATE

	BY	CHECKED
DESIGN	S PERVAIZ	T KENG
DETAILS	J VOUGHT	T KENG
QUANTITIES	T KENG	J VOUGHT

PREPARED FOR THE STATE OF CALIFORNIA DEPARTMENT OF TRANSPORTATION

JOHN A. KLEMUNES, JR.
PROJECT ENGINEER

BRIDGE NO. 29E0005
POST MILE 10.97

MSE WALL NO. 4
WALL PANEL LAYOUT NO. 9

DESIGN DETAIL SHEET (ENGLISH) (REV.7/16/10)

ORIGINAL SCALE IN INCHES FOR REDUCED PLANS 0 1 2 3

UNIT: 1455
PROJECT NUMBER & PHASE: 10000204411 CONTRACT NO.: 10-0E6121

DISREGARD PRINTS BEARING EARLIER REVISION DATES

REVISION DATES: ~~5-3-10~~ ~~2-4-11~~ ~~5-18-11~~ 6-24-11

SHEET 15 OF 29

FILE => 29E0005-c-wpl9.dgn

USERNAME => s12614 DATE PLOTTED => 01-DEC-2011 TIME PLOTTED => 11:03

DIST	COUNTY	ROUTE	POST MILES TOTAL PROJECT	SHEET No	TOTAL SHEETS
10	SJ	99	10.6/14.9	491	504

REGISTERED CIVIL ENGINEER 6-24-11 DATE

10-17-11
PLANS APPROVAL DATE

REGISTERED PROFESSIONAL ENGINEER SHARIO PERVAIZ No. C67068 Exp. 9-30-12 CIVIL STATE OF CALIFORNIA

The State of California or its officers or agents shall not be responsible for the accuracy or completeness of electronic copies of this plan sheet.

SAN JOAQUIN COUNCIL OF GOVERNMENTS
555 E. WEBER AVE.
STOCKTON, CA 95202

HDR ENGINEERING, INC.
2365 IRON POINT ROAD, SUITE 300
FOLSOM, CA 95630

WELDED WIRE MAT SOIL REINFORCEMENT SCHEDULE

Maximum Wall Design height, H	H ≤ 10′	H ≤ 12.5′	H ≤ 15′	H ≤ 17.5′
Type of welded wire mats at different layers starting at top layer of the top panel. See Note 2.	2 @ W11xW11+6"x9" 2 @ W11xW11+6"x12"	2 @ W11xW11+6"x9" 2 @ W11xW11+6"x12" 1 @ W11xW11+6"x18"	2 @ W11xW11+6"x9" 2 @ W11xW11+6"x12" 1 @ W11xW11+6"x18" 1 @ W11xW11+6"x24"	2 @ W11xW11+6"x9" 2 @ W11xW11+6"x12" 1 @ W11xW11+6"x18" 2 @ W11xW11+6"x24"
Maximum Wall Design height, H	**H ≤ 20′**	**H ≤ 22.5′**	**H ≤ 25′**	**H ≤ 27.5′**
Type of welded wire mats at different layers starting at top layer of the top panel. See Note 2.	2 @ W11xW11+6"x9" 3 @ W11xW11+6"x18" 3 @ W11xW11+6"x24"	5 @ W11xW11+6"x18" 4 @ W11xW11+6"x24"	5 @ W11xW11+6"x18" 5 @ W11xW11+6"x24"	5 @ W11xW11+6"x18" 5 @ W11xW11+6"x24" 1 @ W11xW11+6"x30"

Notes:
1. For base wall details, see "MECHANICALLY STABILIZED EMBANKMENT DETAIL NO.1" and "MECHANICALLY STABILIZED EMBANKMENT DETAIL NO. 2" sheets.
2. See "MSE WALL DETAILS NO. 3" sheet for welded wire mat soil reinforcement around drainage inlet.
3. 5 @ W11xW11 + 6"x30"
   - 6" — Transverse wire spacing
   - 6" — Longitudinal wire spacing
   - W11 — Transverse wire size
   - W11 — Longitudinal wire size
   - 5 — Number of layers of the type of weled wire mat required

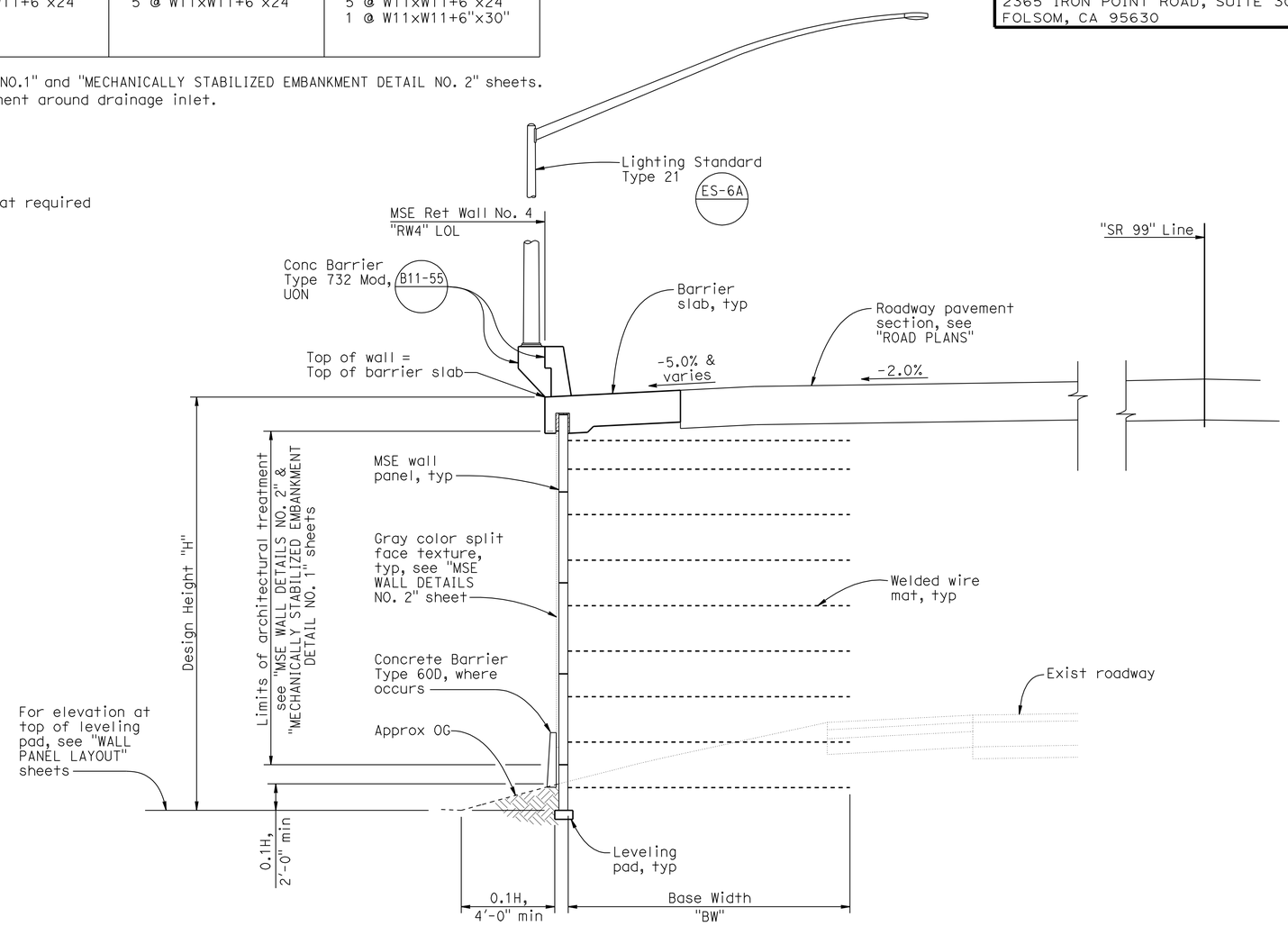

TYPICAL SECTION
1/4" = 1′-0"

Note:
The Contractor shall verify all controlling field dimensions before ordering or fabricating any materials.

Reza Erfanian
DESIGN OVERSIGHT Reza Erfanian
6/24/11
SIGN OFF DATE

	BY	CHECKED
DESIGN	S PERVAIZ	T KENG
DETAILS	J VOUGHT	T KENG
QUANTITIES	T KENG	J VOUGHT

PREPARED FOR THE STATE OF CALIFORNIA DEPARTMENT OF TRANSPORTATION

JOHN A. KLEMUNES, JR.
PROJECT ENGINEER

BRIDGE NO. 29E0005
POST MILE 10.97

MSE WALL NO. 4
MSE WALL DETAILS NO. 1

DESIGN DETAIL SHEET (ENGLISH) (REV.7/16/10)

ORIGINAL SCALE IN INCHES FOR REDUCED PLANS 0 1 2 3

UNIT: 1455
PROJECT NUMBER & PHASE: 10000204411 CONTRACT NO.: 10-0E6121

DISREGARD PRINTS BEARING EARLIER REVISION DATES

REVISION DATES: 5-3-10 2-4-11 5-19-11 6-24-11

SHEET 16 OF 29

FILE => 29E0005-g-msedt01.dgn

USERNAME => s6121614 DATE PLOTTED => 01-DEC-2011 TIME PLOTTED => 11:03

DIST	COUNTY	ROUTE	POST MILES TOTAL PROJECT	SHEET No	TOTAL SHEETS
10	SJ	99	10.6/14.9	492	504

REGISTERED CIVIL ENGINEER 6-24-11 DATE

10-17-11
PLANS APPROVAL DATE

REGISTERED PROFESSIONAL ENGINEER SHARIQ PERVAIZ No. C67068 Exp. 9-30-12 CIVIL STATE OF CALIFORNIA

The State of California or its officers or agents shall not be responsible for the accuracy or completeness of electronic copies of this plan sheet.

SAN JOAQUIN COUNCIL OF GOVERNMENTS
555 E. WEBER AVE.
STOCKTON, CA 95202

HDR ENGINEERING, INC.
2365 IRON POINT ROAD, SUITE 300
FOLSOM, CA 95630

NOTES:

1. For additional information, see "MECHANICALLY STABILIZED EMBANKMENT - DETAIL NO. 1" sheet.
2. Top of panels shall be cast to conform to wall profile.
3. Omit wire mat when vertical spacing between mats is less than 6".

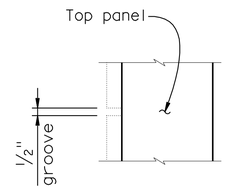

GROOVE DETAIL

No Scale

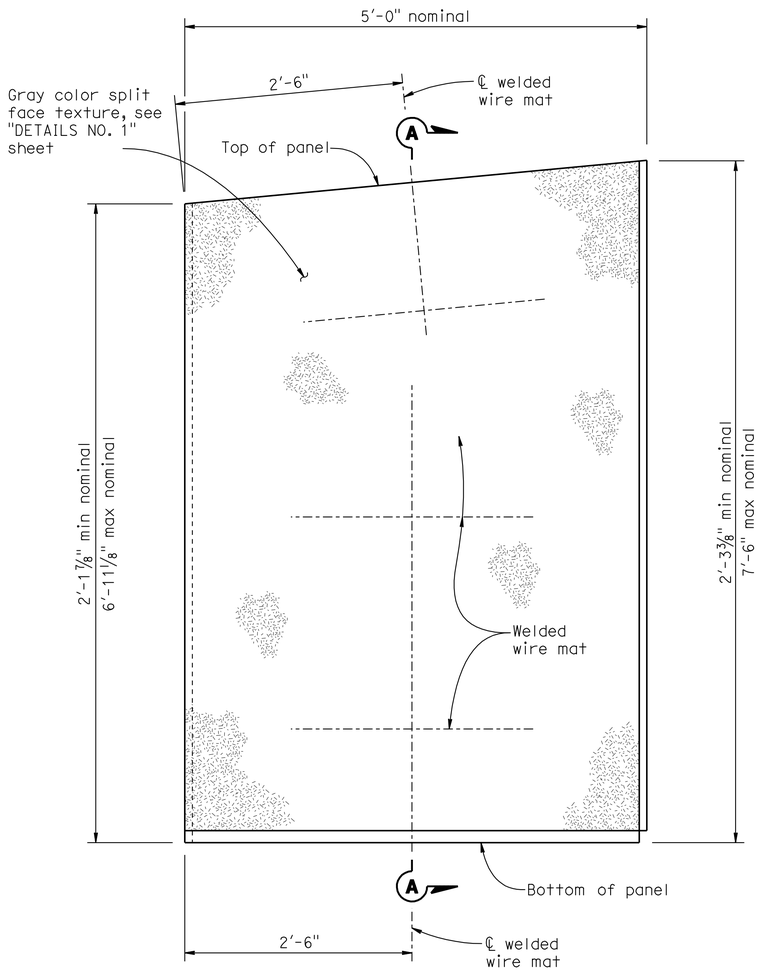

TOP PANEL

1"=10'

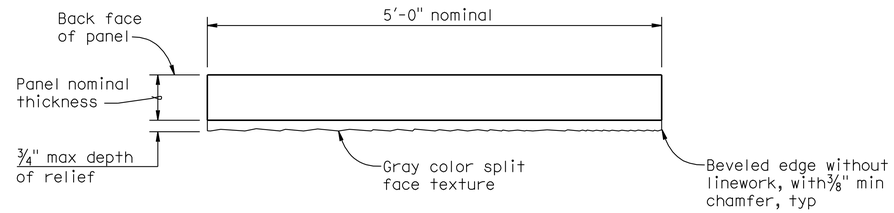

ARCHITECTURAL DETAIL

1"=10'

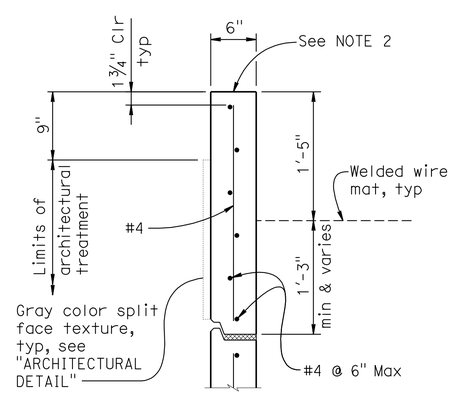

SINGLE LAYER MAT

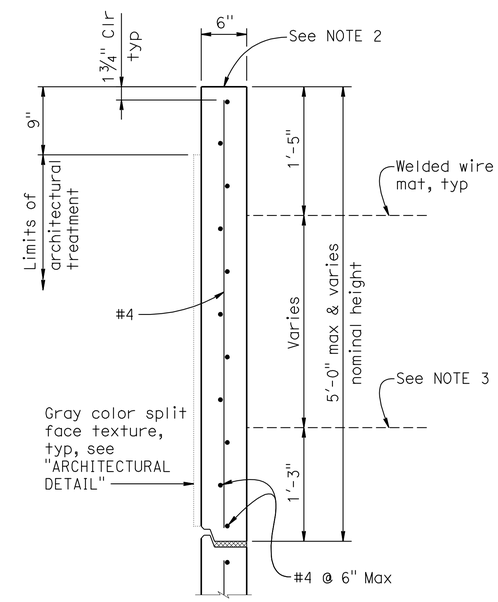

DOUBLE LAYER MAT

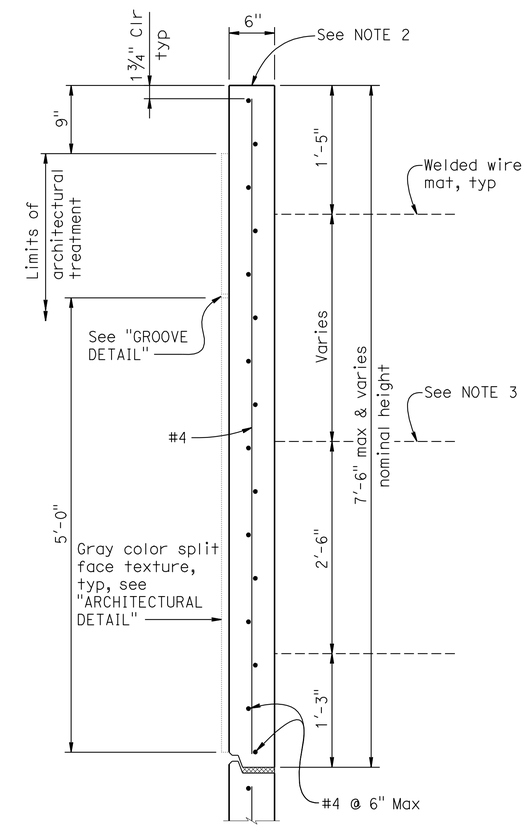

TRIPLE LAYER MAT

SECTION A-A

1"=10'

Note:
The Contractor shall verify all controlling field dimensions before ordering or fabricating any materials.

Reza Erfanian
DESIGN OVERSIGHT Reza Erfanian
6/24/11
SIGN OFF DATE

	BY	CHECKED
DESIGN	S PERVAIZ	T KENG
DETAILS	J VOUGHT	T KENG
QUANTITIES	T KENG	J VOUGHT

PREPARED FOR THE STATE OF CALIFORNIA DEPARTMENT OF TRANSPORTATION

JOHN A. KLEMUNES, JR.
PROJECT ENGINEER

BRIDGE NO. 29E0005
POST MILE 10.97

MSE WALL NO. 4

MSE WALL DETAILS NO. 2

DESIGN DETAIL SHEET (ENGLISH) (REV.7/16/10)

ORIGINAL SCALE IN INCHES FOR REDUCED PLANS 0 1 2 3

UNIT: 1455
PROJECT NUMBER & PHASE: 10000204411 CONTRACT NO.: 10-0E6121

DISREGARD PRINTS BEARING EARLIER REVISION DATES

REVISION DATES 5-7-10 2-4-11 5-19-11 6-24-11

SHEET 17 OF 29

FILE => 29E0005-g-msedt02.dgn

USERNAME => s121614 DATE PLOTTED => 01-DEC-2011 TIME PLOTTED => 11:03

DIST	COUNTY	ROUTE	POST MILES TOTAL PROJECT	SHEET No	TOTAL SHEETS
10	SJ	99	10.6/14.9	493	504

REGISTERED CIVIL ENGINEER 6-24-11 DATE

10-17-11
PLANS APPROVAL DATE

REGISTERED PROFESSIONAL ENGINEER SHARIO PERVAIZ No. C67068 Exp. 9-30-12 CIVIL STATE OF CALIFORNIA

The State of California or its officers or agents shall not be responsible for the accuracy or completeness of electronic copies of this plan sheet.

SAN JOAQUIN COUNCIL OF GOVERNMENTS
555 E. WEBER AVE.
STOCKTON, CA 95202

HDR ENGINEERING, INC.
2365 IRON POINT ROAD, SUITE 300
FOLSOM, CA 95630

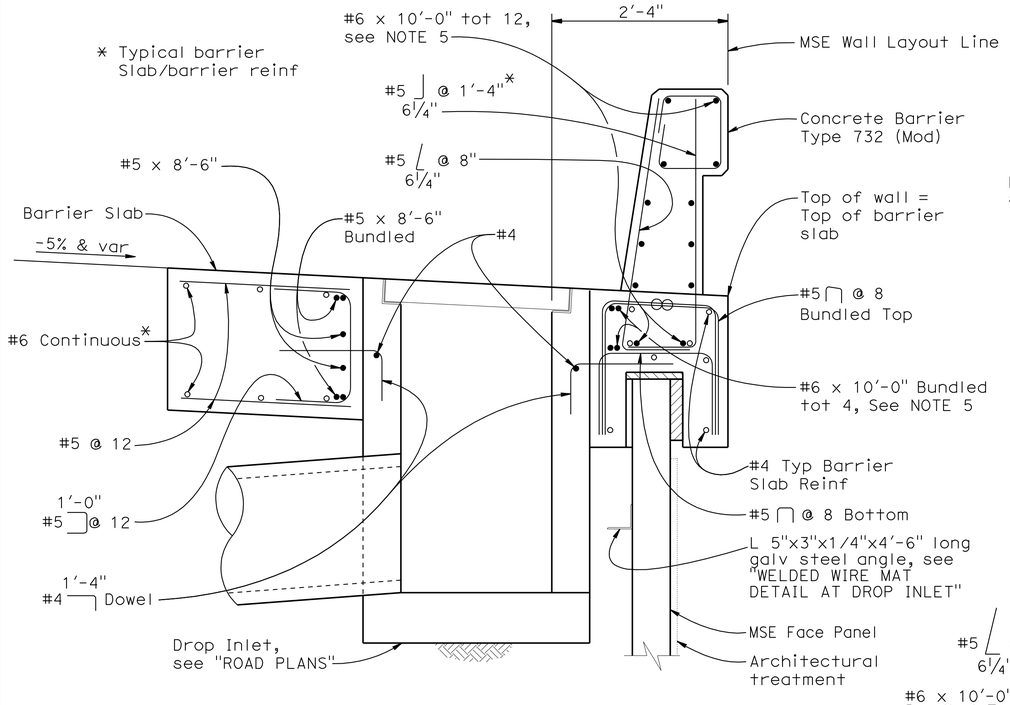

SECTION A-A

1" = 1'-0"

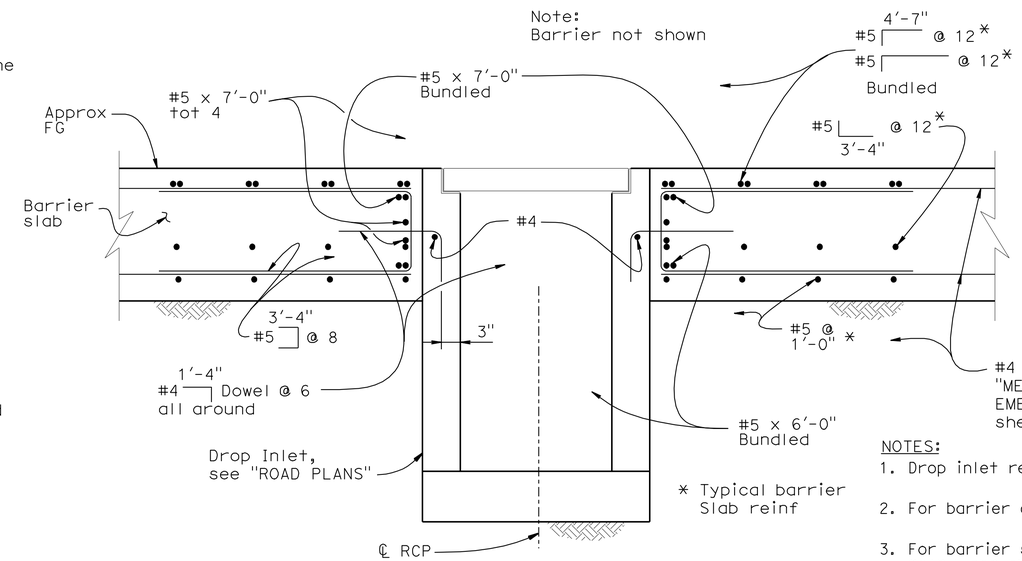

SECTION B-B

¾" = 1'-0"

NOTES:

1. Drop inlet reinforcement not shown.
2. For barrier details, see B11-55
3. For barrier slab details not shown, see "MECHANICALLY STABILIZED EMBANKMENT DETAIL NO. 4" sheet.
4. For drainage system location and details, see "ROAD PLANS".
5. Reinforcement in addition to Standard Barrier/Barrier Slab continuous reinforcement to be bundled with Standard Barrier reinforcement.
6. Drop inlet shall be centered on vertical panel joint.

LEGEND:

Denotes Bundled Bars, Typ

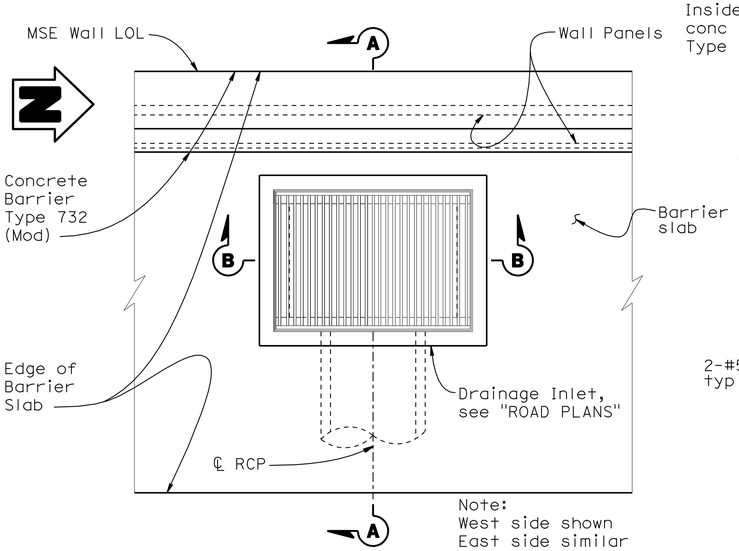

PART PLAN

¾" = 1'-0"

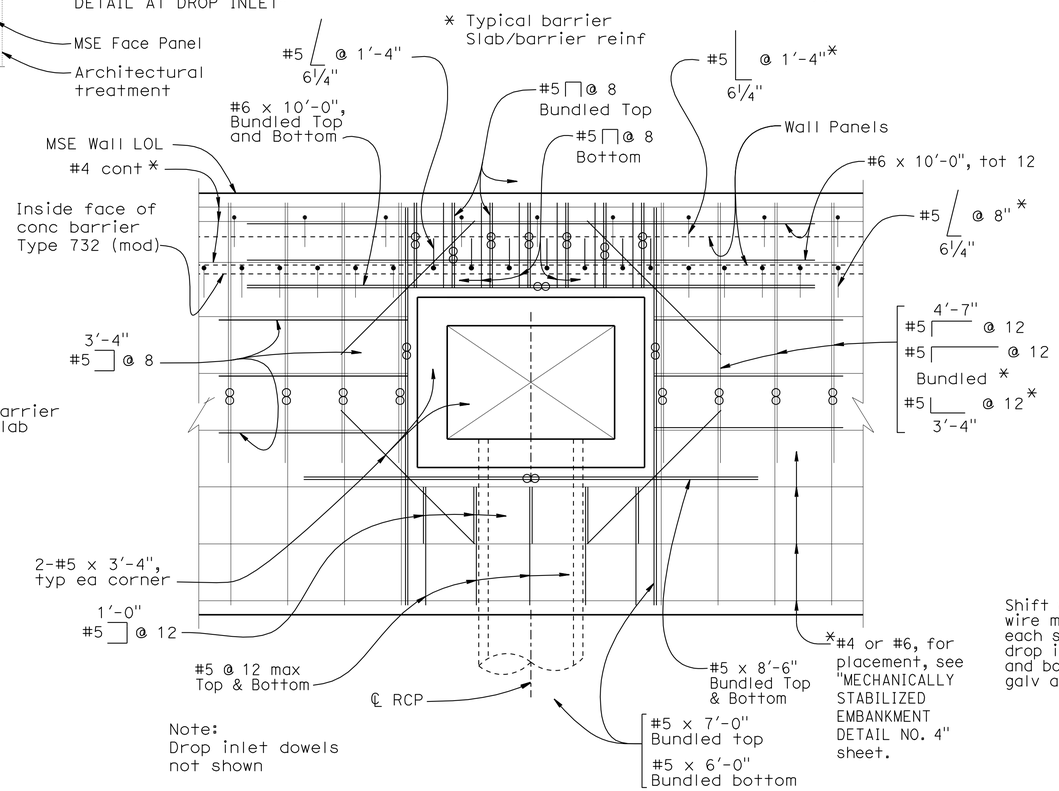

PART PLAN-BARRIER SLAB REINFORCEMENT

¾" = 1'-0"

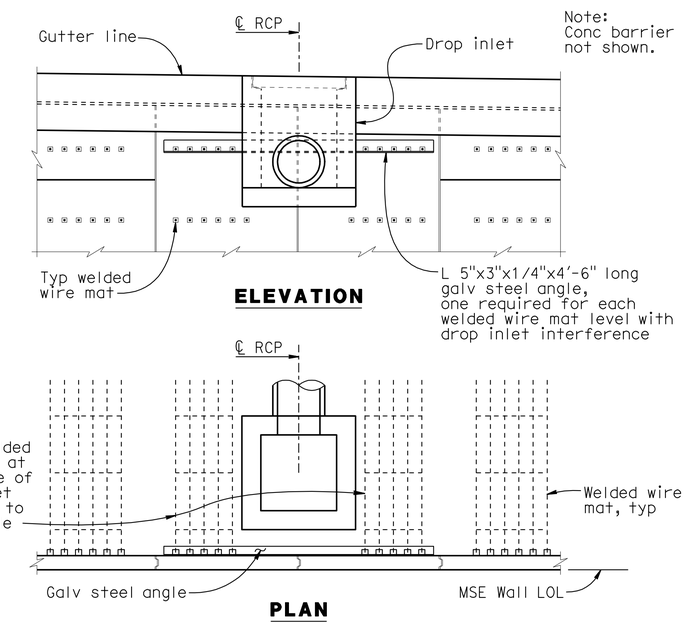

WELDED WIRE MAT DETAIL AT DROP INLET

No Scale

Note:
The Contractor shall verify all controlling field dimensions before ordering or fabricating any materials.

Reza Erfanian
DESIGN OVERSIGHT Reza Erfanian
6/24/11
SIGN OFF DATE

	BY	CHECKED
DESIGN	S PERVAIZ	T KENG
DETAILS	J VOUGHT	T KENG
QUANTITIES	T KENG	J VOUGHT

PREPARED FOR THE STATE OF CALIFORNIA DEPARTMENT OF TRANSPORTATION

JOHN A. KLEMUNES, JR.
PROJECT ENGINEER

BRIDGE NO. 29E0005
POST MILE 10.97

MSE WALL NO. 4
MSE WALL DETAILS NO. 3

DESIGN DETAIL SHEET (ENGLISH) (REV.7/16/10)

ORIGINAL SCALE IN INCHES FOR REDUCED PLANS 0 1 2 3

UNIT: 1455
PROJECT NUMBER & PHASE: 10000204411 CONTRACT NO.: 10-0E6121

DISREGARD PRINTS BEARING EARLIER REVISION DATES

REVISION DATES: 5-3-10 2-4-11 5-18-11 6-24-11

SHEET 18 OF 29

FILE => 29E0005-g-msedt03.dgn

USERNAME => s114937 DATE PLOTTED => 22-DEC-2011 TIME PLOTTED => 15:16

DIST.	COUNTY	ROUTE	POST MILES TOTAL PROJECT	SHEET NO.	TOTAL SHEETS
10	SJ	99	10.6/14.9	494	504

REGISTERED ENGINEER - CIVIL 6-24-11

10-17-11
PLANS APPROVAL DATE

REGISTERED PROFESSIONAL ENGINEER SHARIQ PERVAIZ No. C67068 Exp. 9-30-12 CIVIL STATE OF CALIFORNIA

The State of California or its officers or agents shall not be responsible for the accuracy or completeness of electronic copies of this plan sheet.

SAN JOAQUIN COUNCIL OF GOVERNMENTS
555 E. WEBER AVE.
STOCKTON, CA 95202

HDR ENGINEERING, INC.
2365 IRON POINT ROAD, SUITE 300
FOLSOM, CA 95630

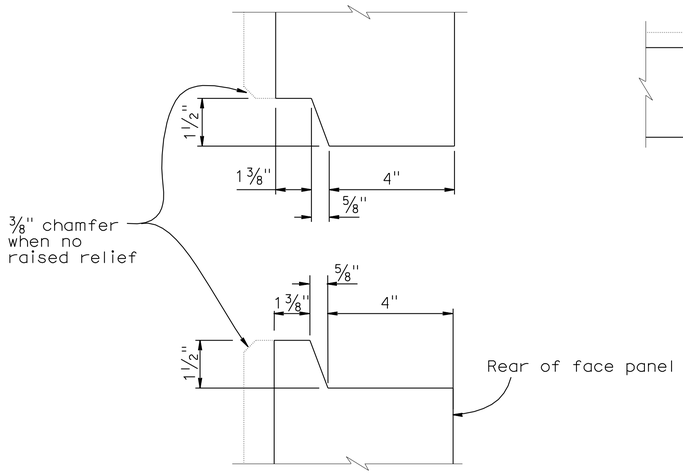

HORIZONTAL JOINT DETAIL 2
1:2.5

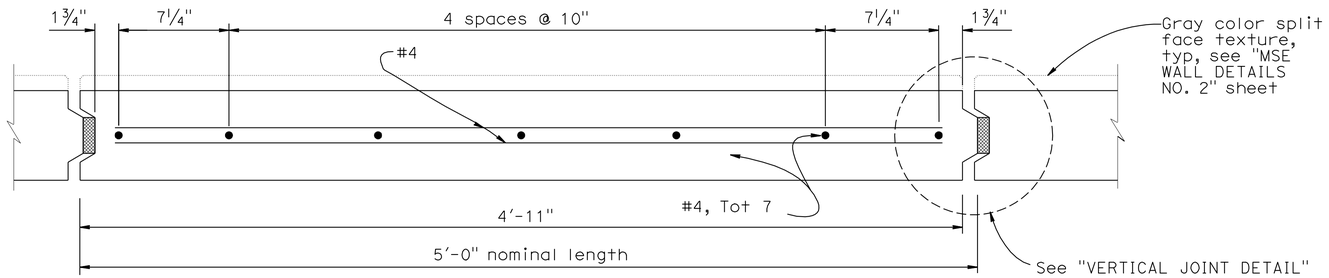

PLAN - FACE PANEL 2

NOTES:

3 ~~1. Architectural treatment not shown.~~

2. Place reinforced elastomeric bearing pads in all of the panel joints between the panels. Place one in each vertical joint where the horizontal joint intersects it. Place two per panel in each horizontal joint.
3/4" x 2 3/8" x 6" for vertical joints
3/4" x 4" x 6" for horizontal joints.

3. Bond a strip of filter fabric, 1'- 0" wide, over the full length of all panel joints.

1 4. For top panel details, see "MSE WALL DETAILS NO. 2" sheet.

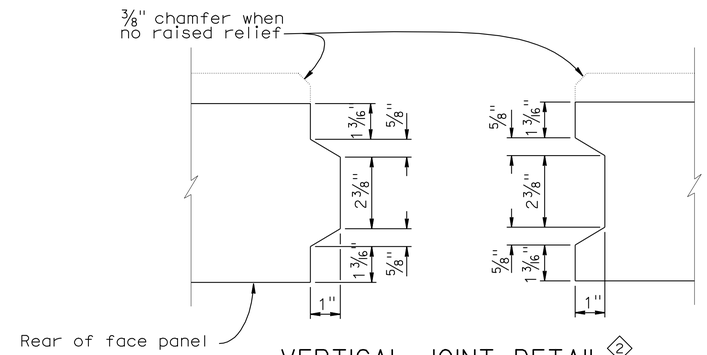

VERTICAL JOINT DETAIL 2
1:2.5

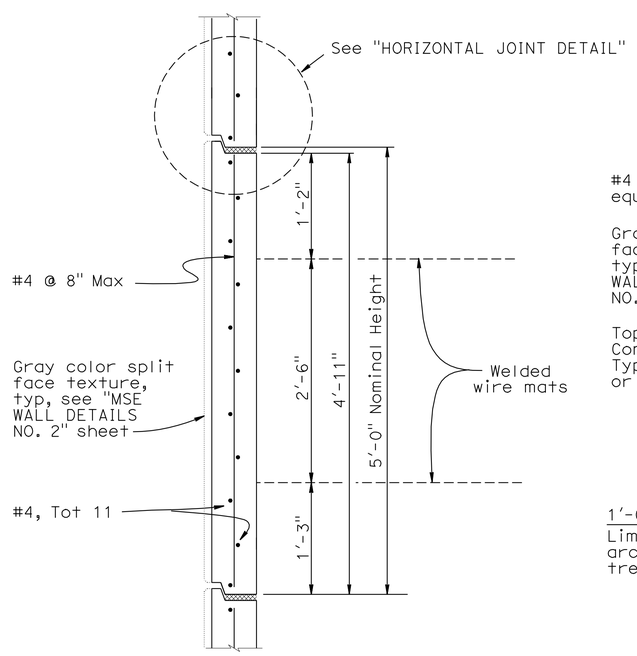

INTERMEDIATE PANEL 2
1:10

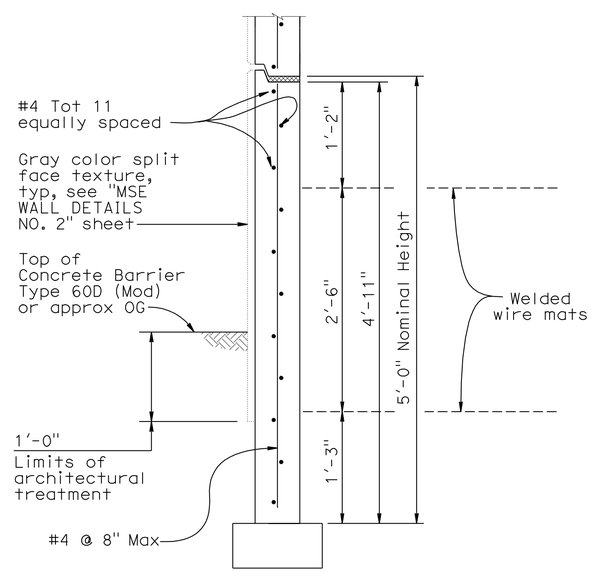

BOTTOM PANEL 2
1:10

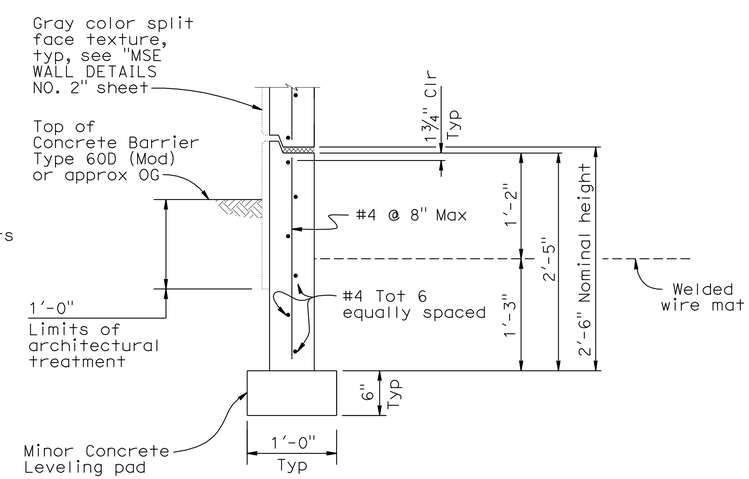

BOTTOM HALF PANEL 2
1:10

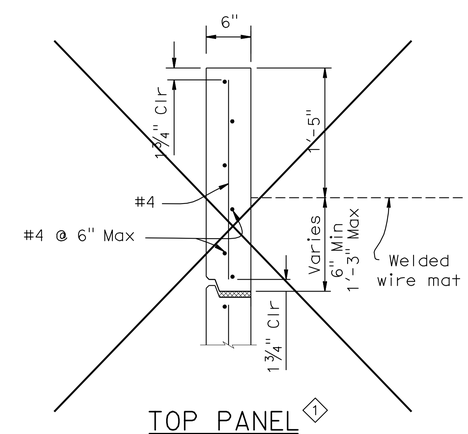

TOP PANEL 1
1:10

STANDARD DRAWING			
FILE NO. xs13-020-1e	APPROVED BY K. GRISWELL (RESPONSIBLE TECHNICAL SPECIALIST)	RELEASED BY ROBERTO LACALLE (RESPONSIBLE OFFICE CHIEF)	
	APPROVAL DATE 5-6-08	RELEASE DATE 5-6-08	

1 Deleted Detail
2 Modified Detail
3 Deleted Note

STATE OF CALIFORNIA
DEPARTMENT OF TRANSPORTATION

DIVISION OF ENGINEERING SERVICES

BRIDGE NO. 29E0005
POST MILE 10.97

MSE RETAINING WALL NO. 4

MECHANICALLY STABILIZED EMBANKMENT

DETAIL NO. 1

DS OSD 2147A (ENGLISH STANDARD DRAWING "XS" BORDER REV. 01/11/08)

ORIGINAL SCALE IN INCHES FOR REDUCED PLANS 0 1 2 3

UNIT: 1455
PROJECT NUMBER & PHASE: 10000204411 CONTRACT NO.: 10-0E6121

DISREGARD PRINTS BEARING EARLIER REVISION DATES

REVISION DATES				SHEET	OF
5-3-10	2-4-11	5-19-11	6-24-11	19	29

USERNAME => s121614

29E0005-g-msedt04.dgn

DATE PLOTTED => 01-DEC-2011 TIME PLOTTED => 11:03

DIST.	COUNTY	ROUTE	POST MILES TOTAL PROJECT	SHEET NO.	TOTAL SHEETS
10	SJ	99	10.6/14.9	495	504

6-24-11
REGISTERED ENGINEER - CIVIL

10-17-11
PLANS APPROVAL DATE

REGISTERED PROFESSIONAL ENGINEER
SHARIQ PERVAIZ
No. C67068
Exp. 9-30-12
CIVIL
STATE OF CALIFORNIA

The State of California or its officers or agents shall not be responsible for the accuracy or completeness of electronic copies of this plan sheet.

SAN JOAQUIN COUNCIL OF GOVERNMENTS
555 E. WEBER AVE.
STOCKTON, CA 95202

HDR ENGINEERING, INC.
2365 IRON POINT ROAD, SUITE 300
FOLSOM, CA 95630

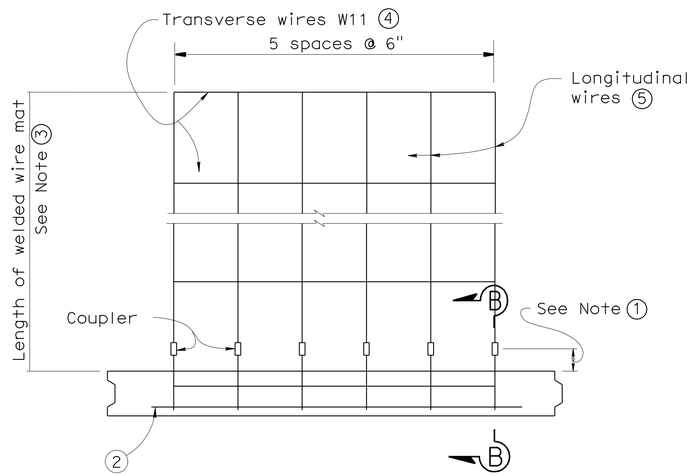

PLAN OF PANEL WITH WELDED WIRE MAT
No scale

GENERAL NOTES (MSE WALLS)

Live loading: Surcharge = 240 lb/ft^2

Soil parameters:

Internal design ϕ = 34°, γ = 120 lb/ft^3
External design ϕ(Backfill) = 34°, γ = 120 lb/ft^3
ϕ(Foundation) = 30°

Precast concrete panels:

f'c = 4,000 psi (Concrete compressive strength at 28 days)
fy = 60,000 psi (Yield strength of reinforcement)

Soil reinforcement:

Welded wire mats: fy = 65,000 psi (Yield strength)
Coupler: fy = 36,000 psi (Yield strength)
Corrosion rate = 1.1 mils/year

Reinforced concrete:

f'c = 3,600 psi, except as noted
(Concrete compressive strength at 28 days)

fy = 60,000 psi (Yield strength of reinforcement)

MSE = Mechanically stabilized embankment

Notes:

① Distance as required to permit coupler to be swaged.

② Place #4 bar, 3' - 2" long, centered on connector mat, but not welded to it.

③ Length equals "Base width" of wall, except it shall not be less than 16' for the top 2 levels of mats at the top of the wall.

④ All Transverse Wires size W11 at various spacings as shown elsewhere in plans.

⑤ All Longitudinal Wires at 6" spacing, of various sizes, as shown elsewhere in plans.

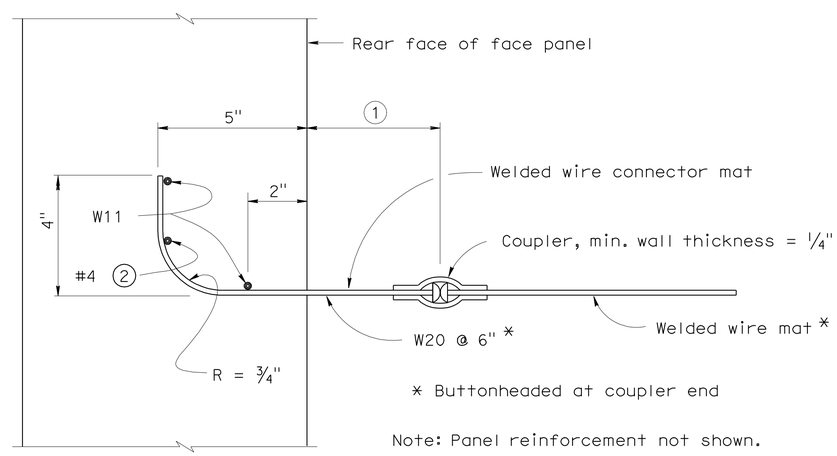

SECTION B-B
No scale

STANDARD DRAWING

FILE NO. xs13-020-2e

APPROVED BY K. GRISWELL
RESPONSIBLE TECHNICAL SPECIALIST
APPROVAL DATE 5-6-08

RELEASED BY ROBERTO LACALLE
RESPONSIBLE OFFICE CHIEF
RELEASE DATE 5-6-08

STATE OF CALIFORNIA
DEPARTMENT OF TRANSPORTATION

DIVISION OF ENGINEERING SERVICES

BRIDGE NO. 29E0005
POST MILE 10.97

MSE RETAINING WALL NO. 4

MECHANICALLY STABILIZED EMBANKMENT

DETAIL NO. 2

DS OSD 2147A (ENGLISH STANDARD DRAWING "XS" BORDER REV. 01/11/08)

ORIGINAL SCALE IN INCHES FOR REDUCED PLANS 0 1 2 3

UNIT: 1455
PROJECT NUMBER & PHASE: 10000204411 CONTRACT NO.: 10-0E6121

DISREGARD PRINTS BEARING EARLIER REVISION DATES

REVISION DATES: 5-1-10 2-4-11 5-19-11 6-24-11

SHEET 20 OF 29

DATE PLOTTED => 01-DEC-2011 TIME PLOTTED => 11:03

USERNAME => s121614

29E0005-g-msedt05.dgn

DIST.	COUNTY	ROUTE	POST MILES TOTAL PROJECT	SHEET NO.	TOTAL SHEETS
10	SJ	99	10.6/14.9	496	504

6-24-11
REGISTERED ENGINEER - CIVIL

10-17-11
PLANS APPROVAL DATE

REGISTERED PROFESSIONAL ENGINEER
SHARIQ PERVAIZ
No. C67068
Exp. 9-30-12
CIVIL
STATE OF CALIFORNIA

The State of California or its officers or agents shall not be responsible for the accuracy or completeness of electronic copies of this plan sheet.

SAN JOAQUIN COUNCIL OF GOVERNMENTS
555 E. WEBER AVE.
STOCKTON, CA 95202

HDR ENGINEERING, INC.
2365 IRON POINT ROAD, SUITE 300
FOLSOM, CA 95630

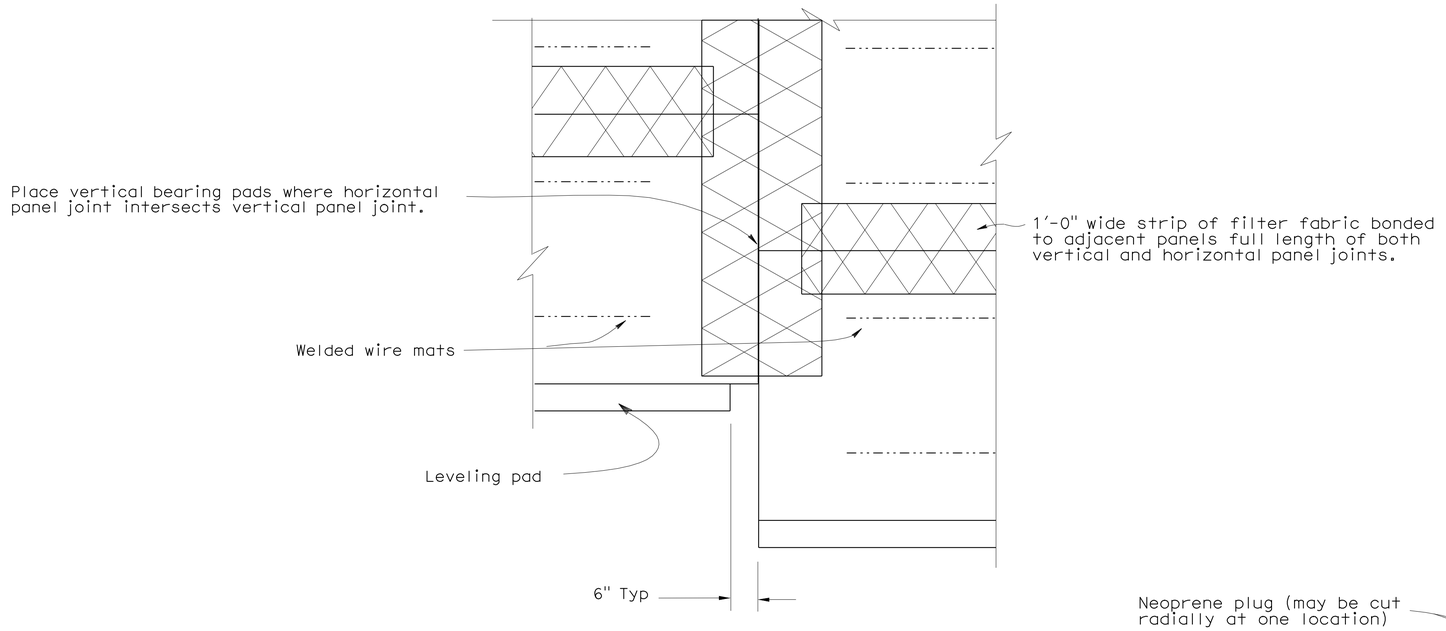

REAR ELEVATION

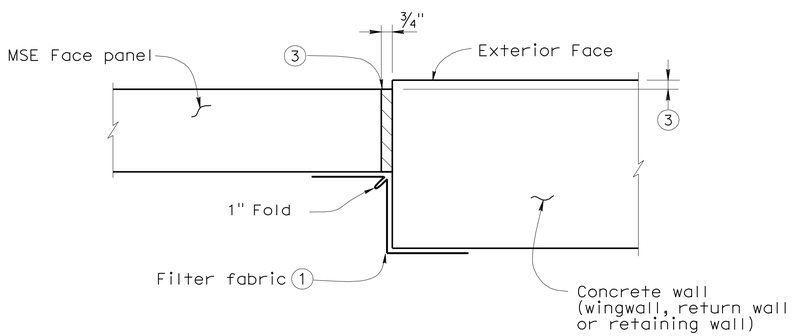

MSE FACE PANEL-TO-CONCRETE WALL JOINT DETAIL

LEGEND:

1. Bond a strip of filter fabric, 1'-6" wide, to back of MSE panels and the adjacent concrete wall for entire length of vertical joint.
2. Bond expansion joint material to the concrete wall.
3. Offset between face of MSE face panel and face of the concrete wall as dictated by location of layout lines shown elsewhere in Project Plans.

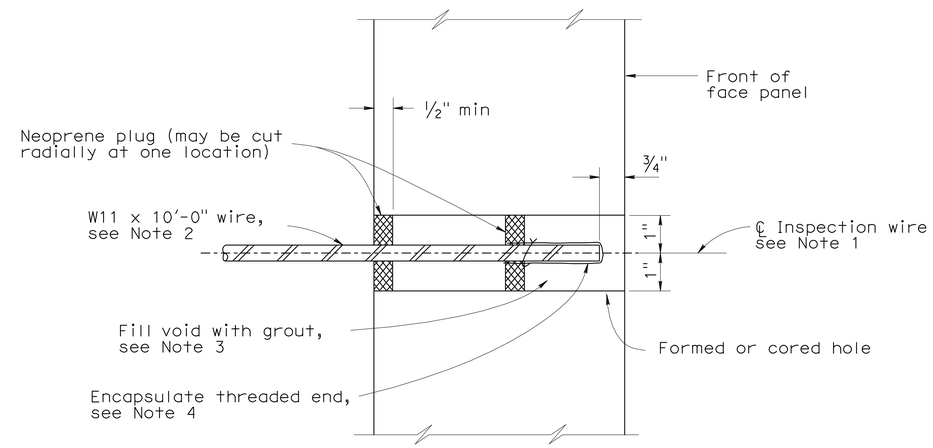

SECTION THRU INSPECTION WIRE

NOTES:

1. Center inspection wire in face panel.
2. Fabricate inspection wires from W11 wire representative of the welded wire mats, with 3/8" dia - 16 UNC threads for at least 1 1/2" of one end.
3. Place inspection wire horizontal and perpendicular to the wall panel prior to backfilling. After backfill placement to a level at least 2'-0" above the inspection wire, dry pack opening with 1000 to 1500 psi mortar. Trowel mortar smooth and flush with face of panel.
4. Encapsulate threaded end with corrosion inhibiting mastic, and secure round vinyl cover with nylon tie.

   UNC = Unified coarse threads

STANDARD DRAWING

FILE NO. xs13-020-3e

APPROVED BY K. GRISWELL
RESPONSIBLE TECHNICAL SPECIALIST
APPROVAL DATE 5-6-08

RELEASED BY ROBERTO LACALLE
RESPONSIBLE OFFICE CHIEF
RELEASE DATE 5-6-08

STATE OF CALIFORNIA
DEPARTMENT OF TRANSPORTATION

DIVISION OF ENGINEERING SERVICES

BRIDGE NO. 29E0005
POST MILE 10.97

MSE RETAINING WALL NO. 4

MECHANICALLY STABILIZED EMBANKMENT

DETAIL NO. 3

DS OSD 2147A (ENGLISH STANDARD DRAWING "XS" BORDER REV. 01/11/08)

ORIGINAL SCALE IN INCHES FOR REDUCED PLANS 0 1 2 3

UNIT: 1455
PROJECT NUMBER & PHASE: 10000204411 CONTRACT NO.: 10-0E6121

DISREGARD PRINTS BEARING EARLIER REVISION DATES

REVISION DATES: 5-3-10 2-4-11 5-18-11 6-24-11

SHEET 21 OF 29

DATE PLOTTED => 01-DEC-2011 TIME PLOTTED => 11:03

USERNAME => s121614

29E0005-g-msedt06.dgn

DIST.	COUNTY	ROUTE	POST MILES TOTAL PROJECT	SHEET NO.	TOTAL SHEETS
10	SJ	99	10.6/14.9	497	504

REGISTERED ENGINEER - CIVIL 6-24-11

10-17-11
PLANS APPROVAL DATE

REGISTERED PROFESSIONAL ENGINEER SHARIQ PERVAIZ No. C67068 Exp. 9-30-12 CIVIL STATE OF CALIFORNIA

The State of California or its officers or agents shall not be responsible for the accuracy or completeness of electronic copies of this plan sheet.

SAN JOAQUIN COUNCIL OF GOVERNMENTS
555 E. WEBER AVE.
STOCKTON, CA 95202

HDR ENGINEERING, INC.
2365 IRON POINT ROAD, SUITE 300
FOLSOM, CA 95630

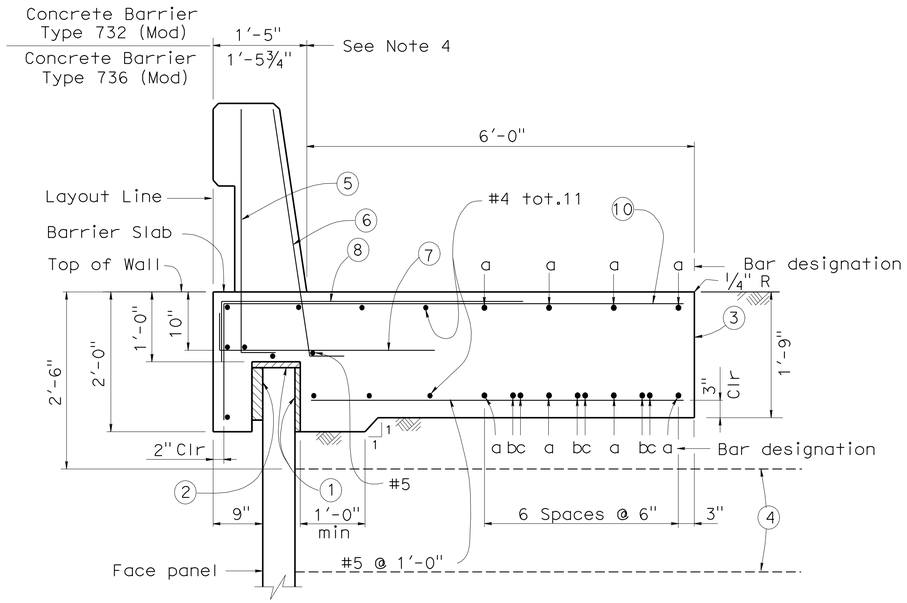

SECTION AT TOP OF WALL WITH BARRIER SLAB AND CONCRETE BARRIER ◇2

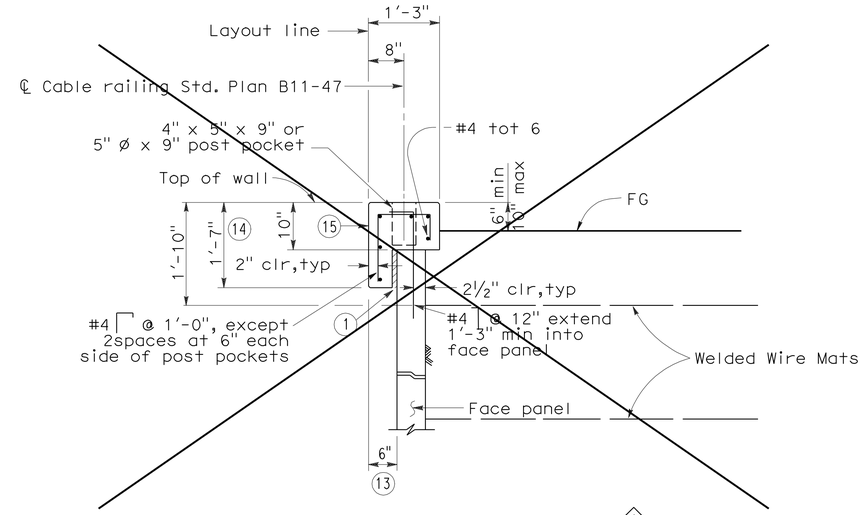

SECTION AT TOP OF WALL ◇1 WITH COPING

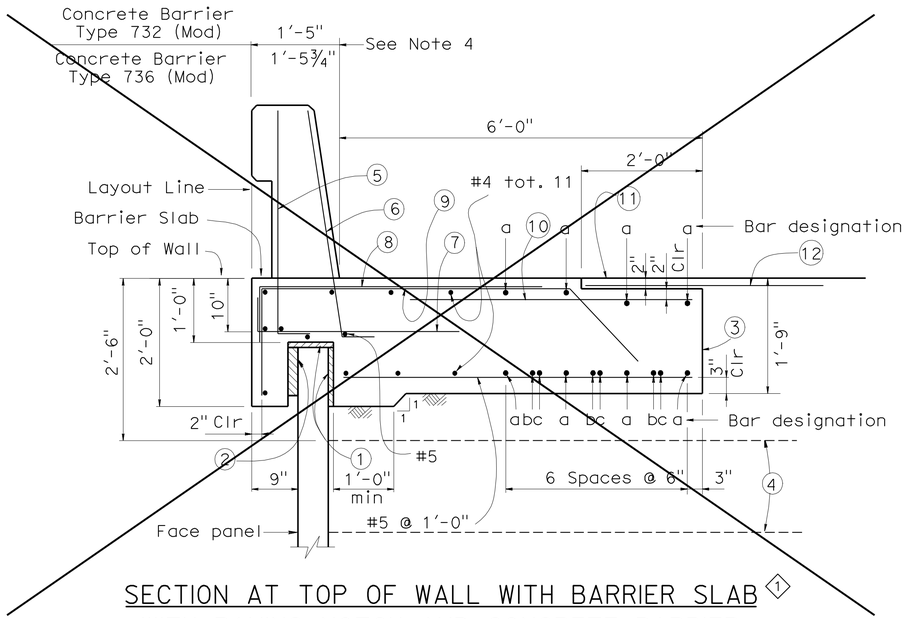

SECTION AT TOP OF WALL WITH BARRIER SLAB ◇1 WITH PAVING NOTCH AND CONCRETE BARRIER

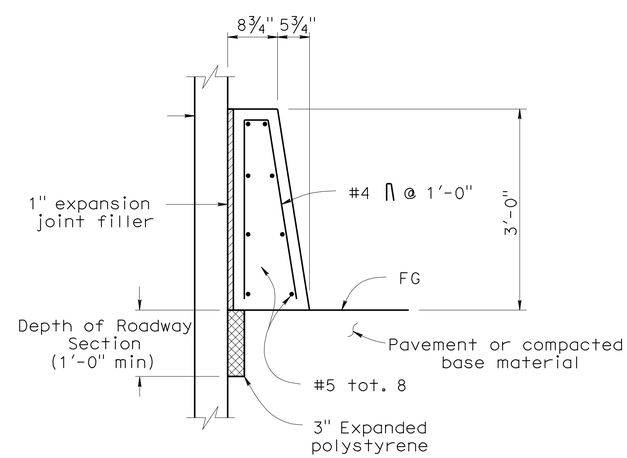

CONCRETE BARRIER TYPE 60D (MOD) ◇1 AT FACE OF MSE WALL

NOTES:

1. Clearance to reinforcing steel in concrete barrier to be 1".
2. Not all barrier reinforcement shown.
3. No expansion joints in concrete barrier or barrier slab within MSE wall limits.
4. Specific concrete barrier to be utilized as shown on typical section elsewhere in Project Plans.
5. Install cable railing or chain link fence when indicated in Project Plans.

LEGEND:

(1) 1" Expanded polystyrene.

(2) 2" Expanded polystyrene. Recess expanded polystyrene 2" into barrier slab.

(3) Contact joint.

(4) Welded Wire Mat Soil reinforcement.

(5) #5 6¼" @ 1'-4" (To be in place prior to barrier slab concrete).

(6) #5 6¼" @ 8" (To be in place prior to barrier slab concrete).

(7) #5 6¼" 3'-4" @ 1'-0"

◇2 (8) #5 4'-7" @ 1'-0" bundled with ~~(9)~~ (10) bars.

◇1 ~~(9) #5 5'-0" 7" 3¾" @ 1'-0"~~

◇2 (10) ~~#5 X 1400 @ 1'-0"~~ #5 @ 1'-0"

"a" bar = #6 continuous.
"b" bar = #6 X 59'-0"
"c" bar = #6 X 49'-2"
Place "b" and "c" bars at beginning and ending ends of barrier slab.

◇1 ~~(11) AC Overlay on barrier slab.~~

◇1 ~~(12) 4' 0" wide pavement reinforcing fabric.~~

◇1 ~~(13) Except 9" when coping and barrier slab occur along the top of the same wall.~~

◇1 ~~(14) Except 2' 0" when coping and barrier slab occur along the top of the same wall.~~

◇1 ~~(15) ½" expansion joints in coping at every fourth panel joint.~~

STANDARD DRAWING

FILE NO. xs13-020-4e

APPROVED BY K. GRISWELL
RESPONSIBLE TECHNICAL SPECIALIST
APPROVAL DATE 5-6-08

RELEASED BY ROBERTO LACALLE
RESPONSIBLE OFFICE CHIEF
RELEASE DATE 5-6-08

◇1 Deleted Detail
◇2 Modified Detail

STATE OF CALIFORNIA
DEPARTMENT OF TRANSPORTATION

DIVISION OF ENGINEERING SERVICES

BRIDGE NO. 29E0005
POST MILE 10.97

MSE RETAINING WALL NO. 4

MECHANICALLY STABILIZED EMBANKMENT

DETAIL NO. 4

DS OSD 2147A (ENGLISH STANDARD DRAWING "XS" BORDER REV. 01/11/08)

ORIGINAL SCALE IN INCHES FOR REDUCED PLANS 0 1 2 3

UNIT: 1455
PROJECT NUMBER & PHASE: 10000204411 CONTRACT NO.: 10-0E6121

DISREGARD PRINTS BEARING EARLIER REVISION DATES

REVISION DATES: 5-3-10 2-4-11 5-19-11 6-24-11

SHEET 22 OF 29

USERNAME => s121614

29E0005-g-msedt07.dgn

DATE PLOTTED => 22-DEC-2011 TIME PLOTTED => 14:11

DIST.	COUNTY	ROUTE	POST MILES TOTAL PROJECT	SHEET NO.	TOTAL SHEETS
10	SJ	99	10.6/14.9	498	504

REGISTERED ENGINEER - CIVIL 6-24-11

PLANS APPROVAL DATE 10-17-11

REGISTERED PROFESSIONAL ENGINEER SHARIQ PERVAIZ No. C67068 Exp. 9-30-12 CIVIL STATE OF CALIFORNIA

The State of California or its officers or agents shall not be responsible for the accuracy or completeness of electronic copies of this plan sheet.

SAN JOAQUIN COUNCIL OF GOVERNMENTS
555 E. WEBER AVE.
STOCKTON, CA 95202

HDR ENGINEERING, INC.
2365 IRON POINT ROAD, SUITE 300
FOLSOM, CA 95630

NOTES:

1. Low end of subgrade drain shown, at high end install cap at end of ¾" slotted pipe. Subgrade drain located at end of structure approach slab, see "Subgrade Drain Detail".
2. Not all barrier reinforcement shown.
3. Outlet details shown elsewhere in Project Plans.
4. At acute corners of approach slab, bend reinforcement as required to clear expansion joint.
5. Specific concrete barrier to be utilized as shown on typical section elsewhere in Project Plans.

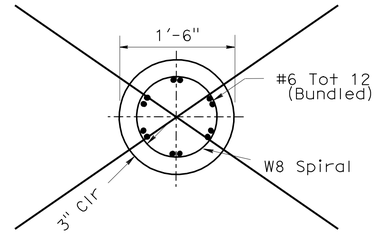

SECTION A-A (1)

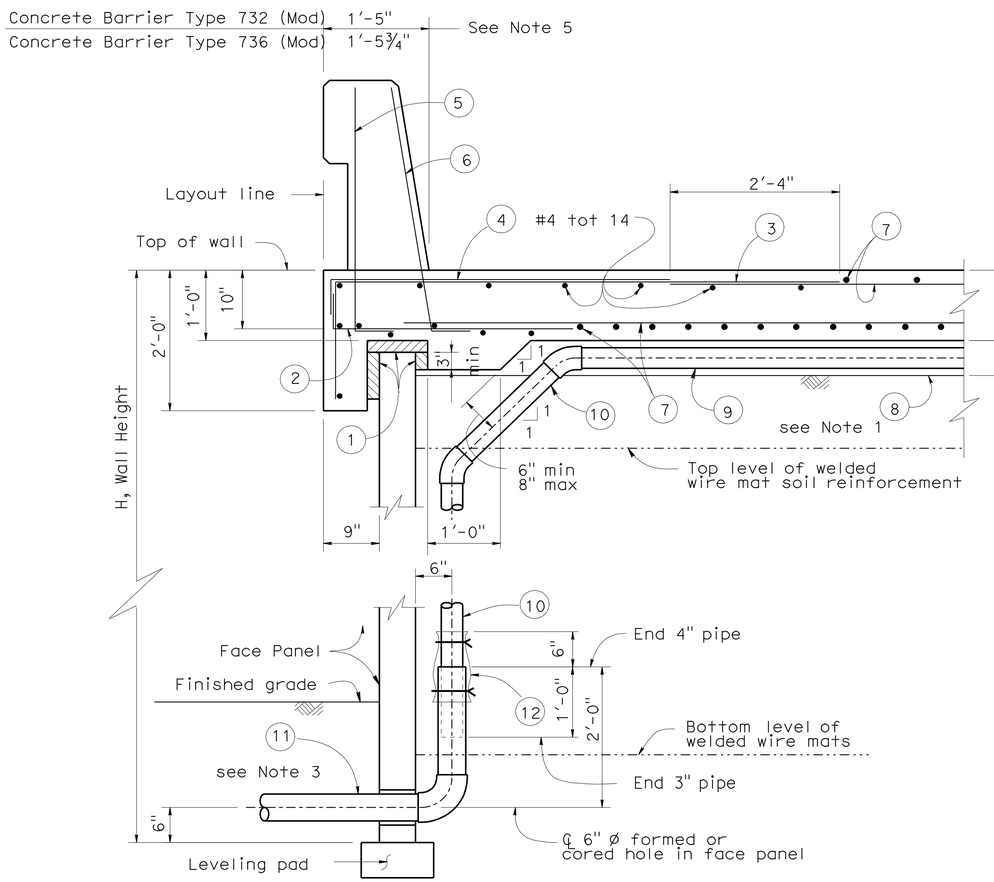

SECTION AT TOP OF WALL WITH STRUCTURE APPROACH SLAB AND CONCRETE BARRIER

LEGEND:

1. 2" Expanded polystyrene recessed 2" into barrier slab at front of MSE face panel.
2. #5 ¼" 6¼" 3'-4" @ 1'-0"
3. #5 6'-10⅝" @ 1'-0"
4. #5 4'-7" @ 1'-0" bundle with (3) bars.
5. #5 L @ 1'-4" (To be in place prior to 6¼" approach slab concrete).
6. #5 L @ 8" (To be in place prior to 6¼" approach slab concrete).
7. Approach slab reinforcement.
8. Filter fabric.
9. 3" Plastic pipe (slotted).
10. 3" Plastic pipe and fittings (unslotted).
11. 4" Sch 80 PVC outlet pipe and fittings (unslotted).
12. 1'-0" wide x 2'-0" filter fabric wrapped around pipe and secured with nylon ties.

(1) ~~13. 1" Expanded polystyrene.~~

(1) ~~14. Five elastomeric bearing pads ¾" x 4" x 6" bonded to top of MSE face panel.~~

(1) ~~15. 0.5" Expanded polystyrene.~~

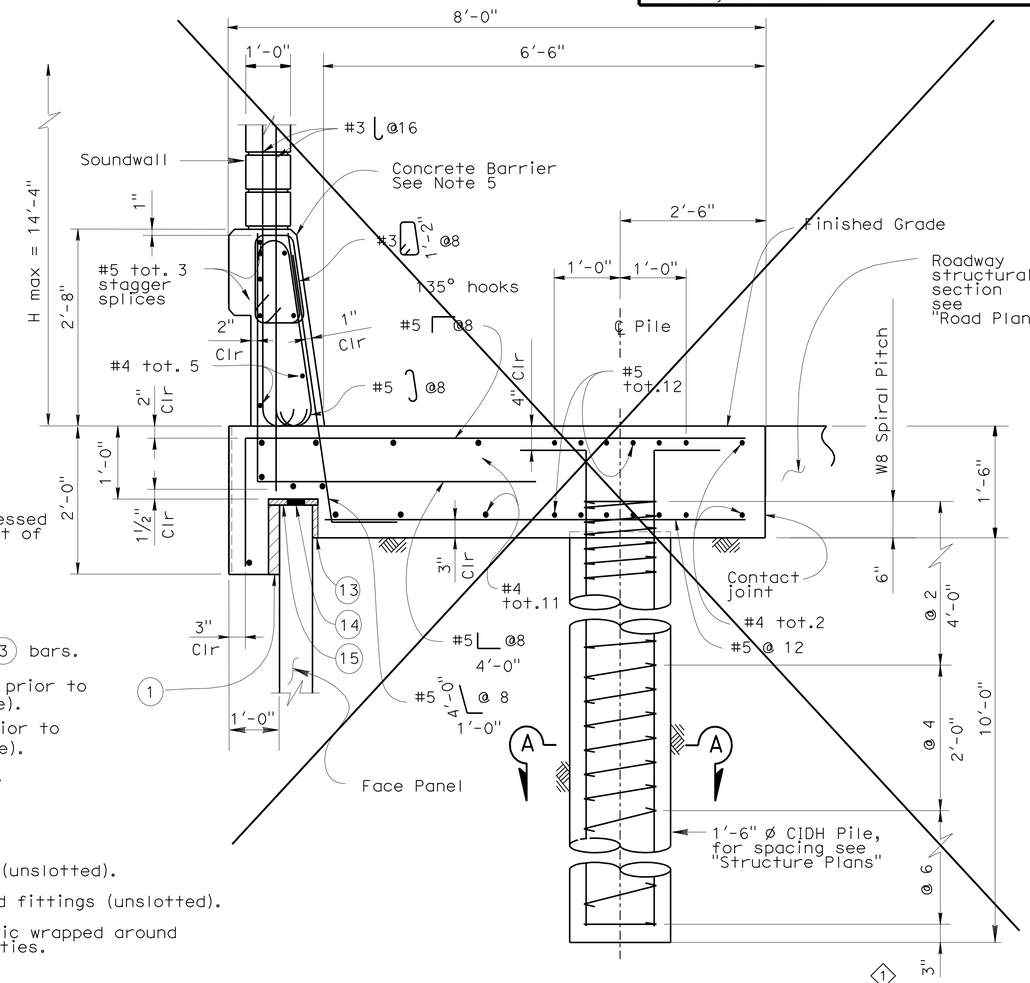

SECTION AT TOP OF WALL WITH SOUNDWALL AND CONCRETE BARRIER (1)

(1) Deleted Detail

STANDARD DRAWING

FILE NO. xs13-020-5e

APPROVED BY K. GRISWELL — RESPONSIBLE TECHNICAL SPECIALIST
APPROVAL DATE 5-6-08

RELEASED BY ROBERTO LACALLE — RESPONSIBLE OFFICE CHIEF
RELEASE DATE 5-6-08

STATE OF CALIFORNIA DEPARTMENT OF TRANSPORTATION

DIVISION OF ENGINEERING SERVICES

BRIDGE NO. 29E0005
POST MILE 10.97

MSE RETAINING WALL NO. 4

MECHANICALLY STABILIZED EMBANKMENT

DETAIL NO. 5

DS OSD 2147A (ENGLISH STANDARD DRAWING "XS" BORDER REV. 01/11/08)

ORIGINAL SCALE IN INCHES FOR REDUCED PLANS 0 1 2 3

UNIT: 1455
PROJECT NUMBER & PHASE: 10000204411 CONTRACT NO.: 10-0E6121

DISREGARD PRINTS BEARING EARLIER REVISION DATES

REVISION DATES			SHEET	OF
5-3-10	2-4-11	5-13-11	23	29

USERNAME => s121614

29E0005-g-msed108.dgn

DATE PLOTTED => 22-DEC-2011 TIME PLOTTED => 14:11

DIST.	COUNTY	ROUTE	POST MILES TOTAL PROJECT	SHEET NO.	TOTAL SHEETS
10	SJ	99	10.6/14.9	499	504

6-24-11
REGISTERED ENGINEER - CIVIL

10-17-11
PLANS APPROVAL DATE

REGISTERED PROFESSIONAL ENGINEER SHARIQ PERVAIZ No. C67068 Exp. 9-30-12 CIVIL STATE OF CALIFORNIA

The State of California or its officers or agents shall not be responsible for the accuracy or completeness of electronic copies of this plan sheet.

SAN JOAQUIN COUNCIL OF GOVERNMENTS
555 E. WEBER AVE.
STOCKTON, CA 95202

HDR ENGINEERING, INC.
2365 IRON POINT ROAD, SUITE 300
FOLSOM, CA 95630

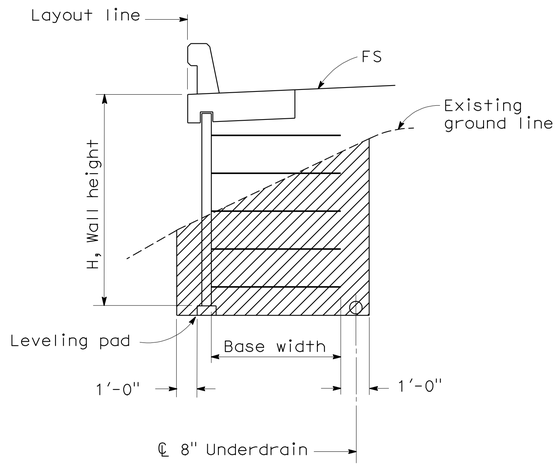

LIMITS OF EXCAVATION ②

No Scale

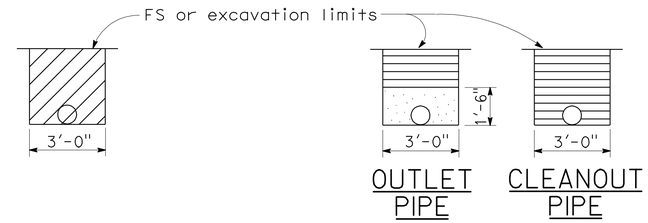

EXCAVATION BACKFILL

OUTLET OR CLEANOUT PIPE FOR UNDERDRAIN

No Scale

ABBREVIATIONS

OG	Original ground
FS	Planned finished surface
GP	Planned grading plane

LEGEND

- Limits of structure excavation
- Limits of structure backfill
- Limits of permeable material

NOTES:

1. Limits to FS except to GP when in roadway section.
2. Locate 8" perforated underdrain below bottom level of welded wire mats.
3. Maximum spacing of outlet pipes is 200 ft.
4. At sags in profile of underdrain, install outlet pipe for each direction of flow.

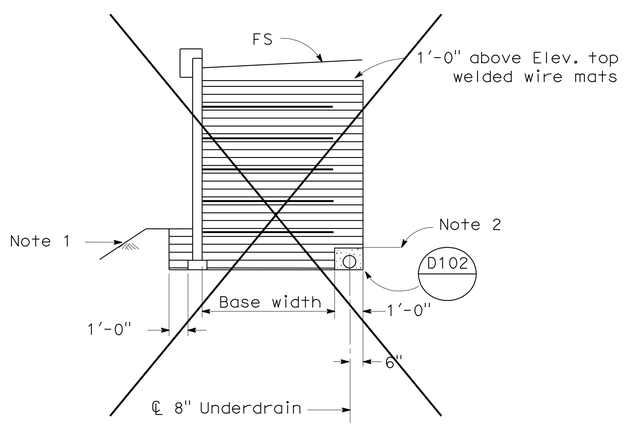

SLOPING FINISHED SURFACE ①

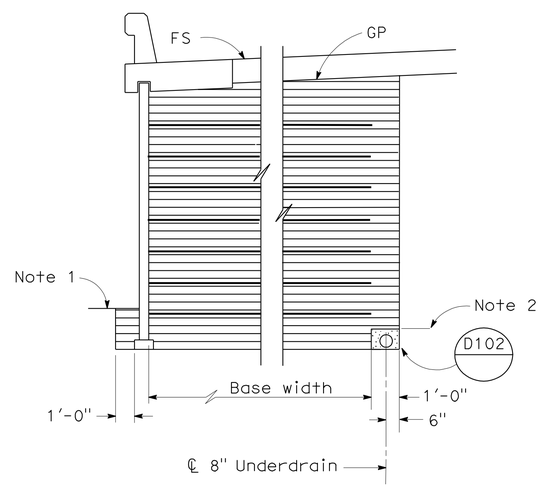

ROADWAY SECTION WITH BASE WIDTH 16' OR GREATER

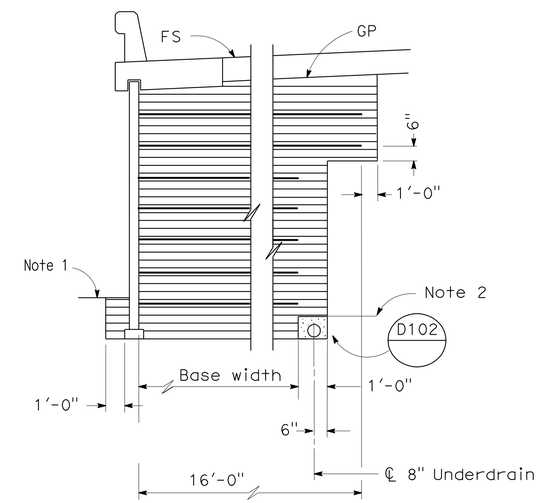

ROADWAY SECTION WITH BASE WIDTH LESS THAN 16'

LIMITS OF BACKFILL

No Scale

STANDARD DRAWING

FILE NO. xs13-020-6e

APPROVED BY K. GRISWELL
RESPONSIBLE TECHNICAL SPECIALIST
APPROVAL DATE 5-6-08

RELEASED BY ROBERTO LACALLE
RESPONSIBLE OFFICE CHIEF
RELEASE DATE 5-6-08

① Deleted Detail
② Revised Detail

STATE OF CALIFORNIA
DEPARTMENT OF TRANSPORTATION

DIVISION OF ENGINEERING SERVICES

BRIDGE NO. 29E0005
POST MILE 10.97

MSE RETAINING WALL NO. 4

MECHANICALLY STABILIZED EMBANKMENT

DETAIL NO. 6

DS OSD 2147A (ENGLISH STANDARD DRAWING "XS" BORDER REV. 01/11/08)

ORIGINAL SCALE IN INCHES FOR REDUCED PLANS 0 1 2 3

UNIT: 1455
PROJECT NUMBER & PHASE: 10000204411 CONTRACT NO.: 10-0E6121

DISREGARD PRINTS BEARING EARLIER REVISION DATES

REVISION DATES: 5-1-10 2-4-11 5-19-11 6-24-11

SHEET 24 OF 29

DIST	COUNTY	ROUTE	POST MILES TOTAL PROJECT	SHEET No	TOTAL SHEETS
10	SJ	99	10.6/14.9	500	504

REGISTERED CIVIL ENGINEER — DATE 6-24-11

10-17-11
PLANS APPROVAL DATE

REGISTERED PROFESSIONAL ENGINEER — BENJAMIN D. CRAWFORD — No. 68457 — Exp. 9/30/11 — CIVIL — STATE OF CALIFORNIA

The State of California or its officers or agents shall not be responsible for the accuracy or completeness of electronic copies of this plan sheet.

SAN JOAQUIN COUNCIL OF GOVERNMENTS
555 E. WEBER AVE.
STOCKTON, CA 95202

BLACKBURN CONSULTING
2491 BOATMAN AVENUE
WEST SACRAMENTO, CA 95691 FILE No. 1201.6a

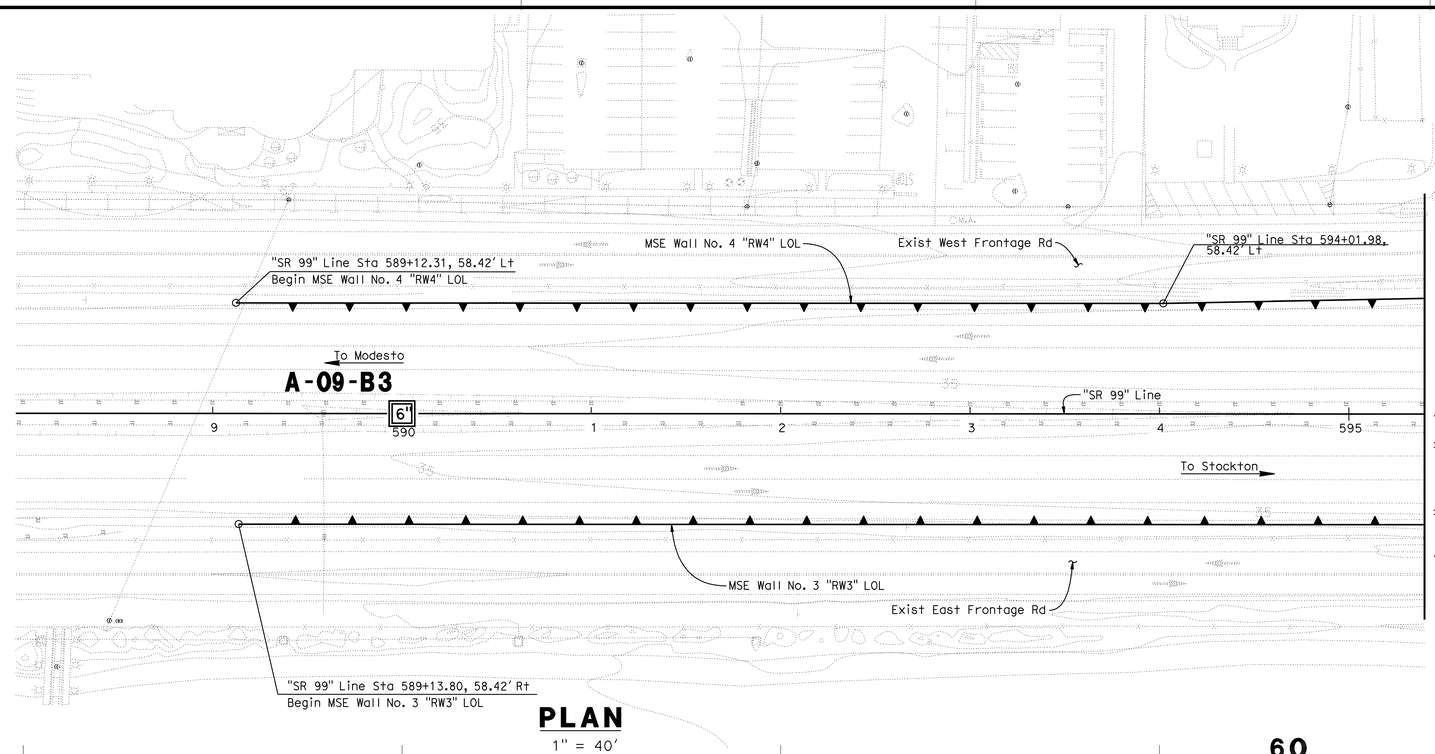

Match Line "SR 99" Line Sta. 595+40.00 see "Log of Test Borings 2 of 5" sheet

PLAN
1" = 40'

BENCH MARKS

BENCHMARK# 645 ELEV. 58.24 Ft

DESCRIPTION: KSN CONTROL POINT, 1/2 " REBAR WITH YELLOW CAP STAMPED "KSN CONTROL", LOCATED AT APPROXIMATE CENTERLINE STATION 605+95 ON THE SOUTHBOUND MAINLINE, ON THE INSIDE SHOULDER, 3.5' EAST OF THE EDGE OF PAVEMENT, 11' WEST OF THE FACE OF THE GUARDRAIL, AND 4' SOUTH OF THE SOUTHEAST CORNER OF THE FRENCH CAMP OVER CROSSING BRIDGE.
NGVD 29, N2136239.71, E6354178.61.

BENCHMARK# 641 ELEV. 56.89 Ft

DESCRIPTION: KSN CONTROL POINT, 1/2 " REBAR WITH YELLOW CAP STAMPED "KSN CONTROL", LOCATED APPROXIMATE CENTERLINE STATION 608+14 ON THE NORTHBOUND MAINLINE, ON THE INSIDE SHOULDER, 2' WEST OF THE EDGE OF PAVEMENT, 10.5' EAST OF THE FACE OF THE GUARDRAIL, 6' NORTH OF THE FRENCH CAMP OVER CROSSING BRIDGE.
NGVD 29, N2136459.41, E6354207.75.

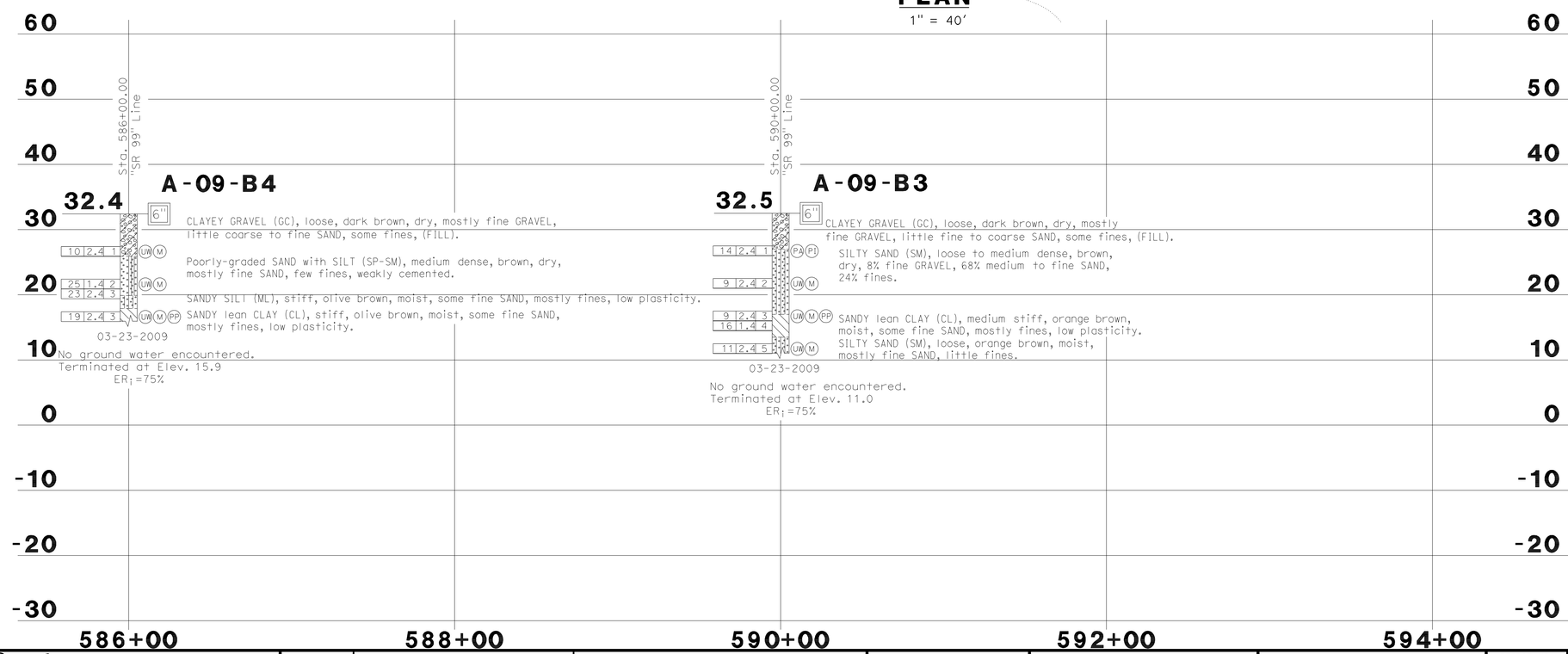

NOTES:

1. Field classification of soils was in accordance with the Caltrans Soil & Rock Logging, Classification, and Presentation Manual (June 2007). See Log of Test Borings No. 4 and 5, "Soil Legend".
2. Standard Penetration tests were performed in accordance with ASTM D 1586-99 using a hammer operated with an automated drop system. Drill rods were 1 5/8-inch diameter "A"-rods; sampler was driven with brass liners.
3. "2.4 inch sampler": ID=2.4 inch, OD=2.9 inch. Driven in same manner as SPT ("1.4 inch") sampler.
4. Where less than the 0.5 inches of penetration is achieved, the blow count shown is for that fraction of the interval actually penetrated.
5. If laboratory tests are not shown as being performed, the soil descriptions presented in the LOTB are based solely on the visual practices described in the before mentioned Manual.
6. The length of each sampled interval is shown graphically on the boring log.
7. Consistency of soils shown in ( ) where estimated.
8. Groundwater surface (GWS) reflect the fluid level in the borings on the specified date. Groundwater surface is subject to seasonal fluctuations and may occur at higher or lower elevations depending on the conditions at any particular time.
9. Electronic media for plan view provided by HDR Engineering, MSE Wall No. 3 & 4, Foundations Plans, 90% Submittal, January 2011.
10. Boring elevations are approximate and based on "Planning Study" plans dated 1/23/09 provided by HDR Engineering, Inc.
11. The "Log of Test Borings" drawing is included with plans in accordance with Section 2-1.03 of Caltrans "Standard Specifications".

PROFILE
HOR. 1"=40'
VERT. 1"=10'

Reza Erfanian
DESIGN OVERSIGHT Reza Erfanian
6/24/11
SIGN OFF DATE

DRAWN BY M ROBERTSON
CHECKED BY K. CHAPMAN
A. SHINNEFIELD
FIELD INVESTIGATION BY:
DATE: MARCH 2009

PREPARED FOR THE STATE OF CALIFORNIA DEPARTMENT OF TRANSPORTATION

JOHN A. KLEMUNES, JR.
PROJECT ENGINEER

BRIDGE NO. 29E0005
POST MILE 10.97

MSE RETAINING WALL NO. 4
LOG OF TEST BORINGS NO. 1

GS LOTB SOIL LEGEND SHEET 1 (ENGLISH) (REV. 07/16/10)

ORIGINAL SCALE IN INCHES FOR REDUCED PLANS 0 1 2 3

UNIT: 1455
PROJECT NUMBER & PHASE: 10000204411 CONTRACT NO.: 10-0E6121

DISREGARD PRINTS BEARING EARLIER REVISION DATES
REVISION DATES 3-10-10 2-04-11 5-19-11 6-24-11
SHEET 25 OF 29

FILE => 29E0005-z-ltb01.dgn

USERNAME => s12614 DATE PLOTTED => 01-DEC-2011 TIME PLOTTED => 11:04

DIST	COUNTY	ROUTE	POST MILES TOTAL PROJECT	SHEET No	TOTAL SHEETS
10	SJ	99	10.6/14.9	501	504

REGISTERED CIVIL ENGINEER — DATE 6-24-11

10-17-11
PLANS APPROVAL DATE

REGISTERED PROFESSIONAL ENGINEER — BENJAMIN D. CRAWFORD — No. 68457 — Exp. 9/30/11 — CIVIL — STATE OF CALIFORNIA

The State of California or its officers or agents shall not be responsible for the accuracy or completeness of electronic copies of this plan sheet.

SAN JOAQUIN COUNCIL OF GOVERNMENTS
555 E. WEBER AVE.
STOCKTON, CA 95202

BLACKBURN CONSULTING
2491 BOATMAN AVENUE
WEST SACRAMENTO, CA 95691 FILE No. 1201.6a

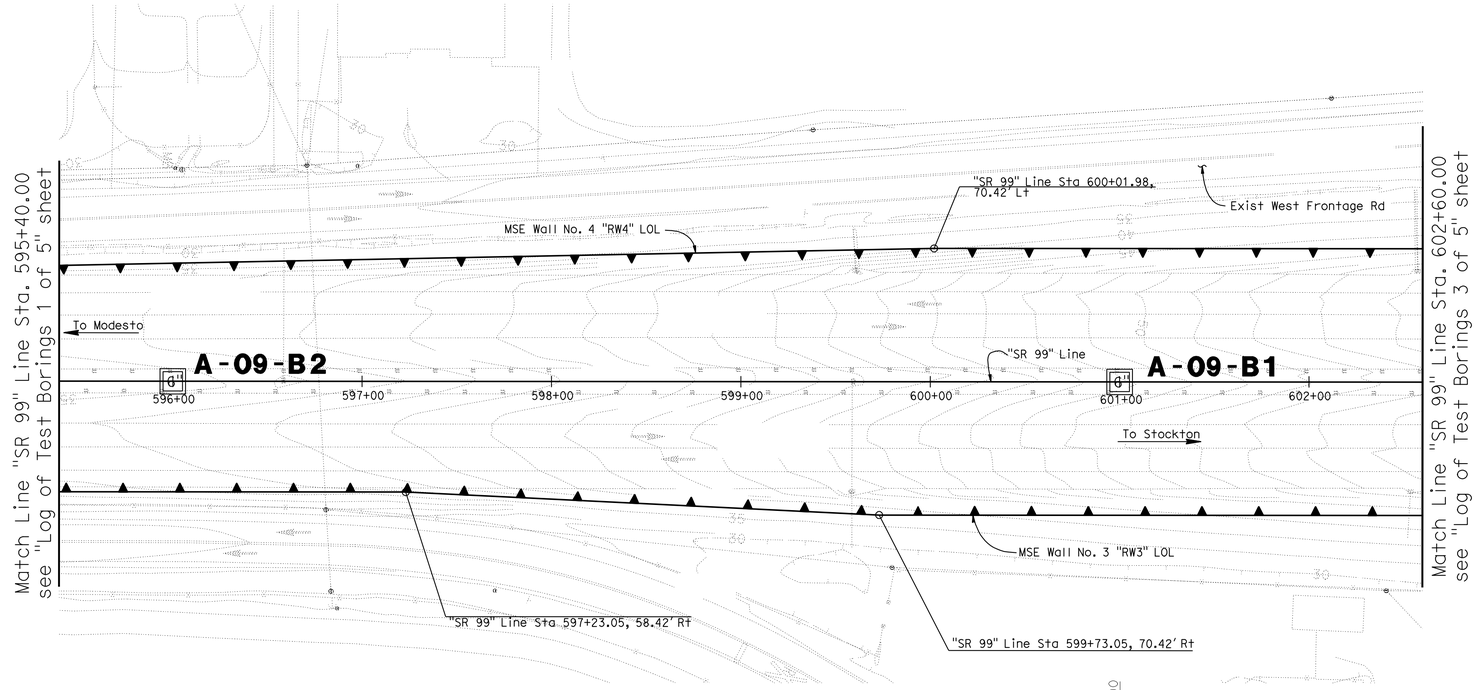

PLAN
1" = 40'

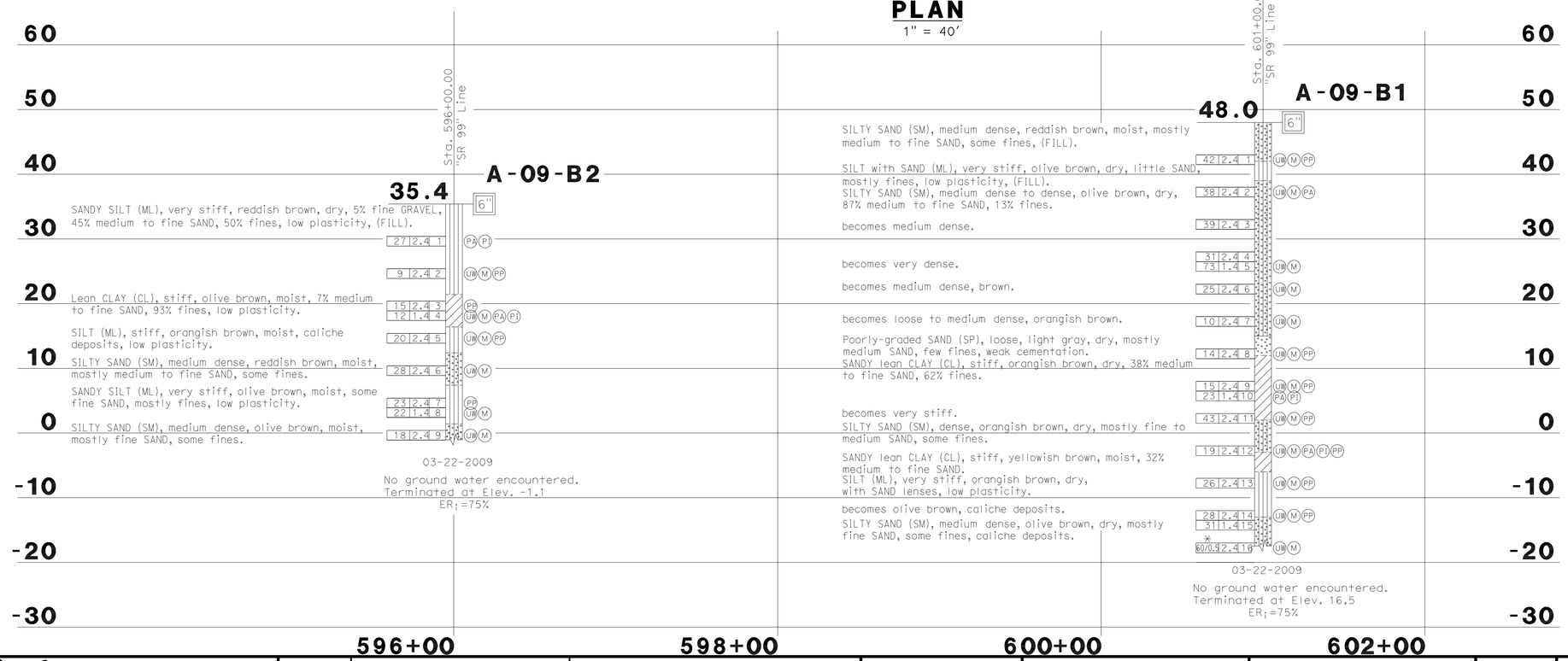

PROFILE
HOR. 1"=40'
VERT. 1"=10'

BENCH MARKS

BENCHMARK# 645 ELEV. 58.24 Ft

DESCRIPTION: KSN CONTROL POINT, 1/2 " REBAR WITH YELLOW CAP STAMPED "KSN CONTROL", LOCATED AT APPROXIMATE CENTERLINE STATION 605+95 ON THE SOUTHBOUND MAINLINE, ON THE INSIDE SHOULDER, 3.5' EAST OF THE EDGE OF PAVEMENT, 11' WEST OF THE FACE OF THE GUARDRAIL, AND 4' SOUTH OF THE SOUTHEAST CORNER OF THE FRENCH CAMP OVER CROSSING BRIDGE.
NGVD 29, N2136239.71, E6354178.61.

BENCHMARK# 641 ELEV. 56.89 Ft

DESCRIPTION: KSN CONTROL POINT, 1/2 " REBAR WITH YELLOW CAP STAMPED "KSN CONTROL", LOCATED APPROXIMATE CENTERLINE STATION 608+14 ON THE NORTHBOUND MAINLINE, ON THE INSIDE SHOULDER, 2' WEST OF THE EDGE OF PAVEMENT, 10.5' EAST OF THE FACE OF THE GUARDRAIL, 6' NORTH OF THE FRENCH CAMP OVER CROSSING BRIDGE.
NGVD 29, N2136459.41, E6354207.75.

NOTES:

1. Field classification of soils was in accordance with the Caltrans Soil & Rock Logging, Classification, and Presentation Manual (June 2007). See Log of Test Borings No. 4 and 5, "Soil Legend".
2. Standard Penetration tests were performed in accordance with ASTM D 1586-99 using a hammer operated with an automated drop system. Drill rods were 1 5/8-inch diameter "A"-rods; sampler was driven with brass liners.
3. "2.4 inch sampler": ID=2.4 inch, OD=2.9 inch. Driven in same manner as SPT ("1.4 inch") sampler.
4. Where less than the 0.5 inches of penetration is achieved, the blow count shown is for that fraction of the interval actually penetrated.
5. If laboratory tests are not shown as being performed, the soil descriptions presented in the LOTB are based solely on the visual practices described in the before mentioned Manual.
6. The length of each sampled interval is shown graphically on the boring log.
7. Consistency of soils shown in ( ) where estimated.
8. Groundwater surface (GWS) reflect the fluid level in the borings on the specified date. Groundwater surface is subject to seasonal fluctuations and may occur at higher or lower elevations depending on the conditions at any particular time.
9. Electronic media for plan view provided by HDR Engineering, MSE Wall No. 3 & 4, Foundations Plans, 90% Submittal, January 2011.
10. Boring elevations are approximate and based on "Planning Study" plans dated 1/23/09 provided by HDR Engineering, Inc.
11. The "Log of Test Borings" drawing is included with plans in accordance with Section 2-1.03 of Caltrans "Standard Specifications".

Reza Erfanian
DESIGN OVERSIGHT Reza Erfanian
6/24/11
SIGN OFF DATE

DRAWN BY M ROBERTSON
CHECKED BY K. CHAPMAN

A. SHINNEFIELD
FIELD INVESTIGATION BY:
DATE: MARCH 2009

PREPARED FOR THE STATE OF CALIFORNIA DEPARTMENT OF TRANSPORTATION

JOHN A. KLEMUNES, JR.
PROJECT ENGINEER

BRIDGE NO. 29E0005
POST MILE 10.97

MSE RETAINING WALL NO. 4
LOG OF TEST BORINGS NO. 2

GS LOTB SOIL LEGEND SHEET 1 (ENGLISH) (REV. 07/16/10)

ORIGINAL SCALE IN INCHES FOR REDUCED PLANS 0 1 2 3

UNIT: 1455
PROJECT NUMBER & PHASE: 10000204411 CONTRACT NO.: 10-0E6121

DISREGARD PRINTS BEARING EARLIER REVISION DATES

REVISION DATES: 3-10-10 2-24-11 5-19-11 6-24-11

SHEET 26 OF 29

FILE => 29E0005-z-ltb02.dgn

USERNAME => s12614 DATE PLOTTED => 01-DEC-2011 TIME PLOTTED => 11:04

DIST	COUNTY	ROUTE	POST MILES TOTAL PROJECT	SHEET No	TOTAL SHEETS
10	SJ	99	10.6/14.9	502	504

REGISTERED CIVIL ENGINEER — DATE 6-24-11

10-17-11
PLANS APPROVAL DATE

REGISTERED PROFESSIONAL ENGINEER — BENJAMIN D. CRAWFORD — No. 68457 — Exp. 9/30/11 — CIVIL — STATE OF CALIFORNIA

The State of California or its officers or agents shall not be responsible for the accuracy or completeness of electronic copies of this plan sheet.

SAN JOAQUIN COUNCIL OF GOVERNMENTS
555 E. WEBER AVE.
STOCKTON, CA 95202

BLACKBURN CONSULTING
2491 BOATMAN AVENUE
WEST SACRAMENTO, CA 95691 FILE No. 1201.6a

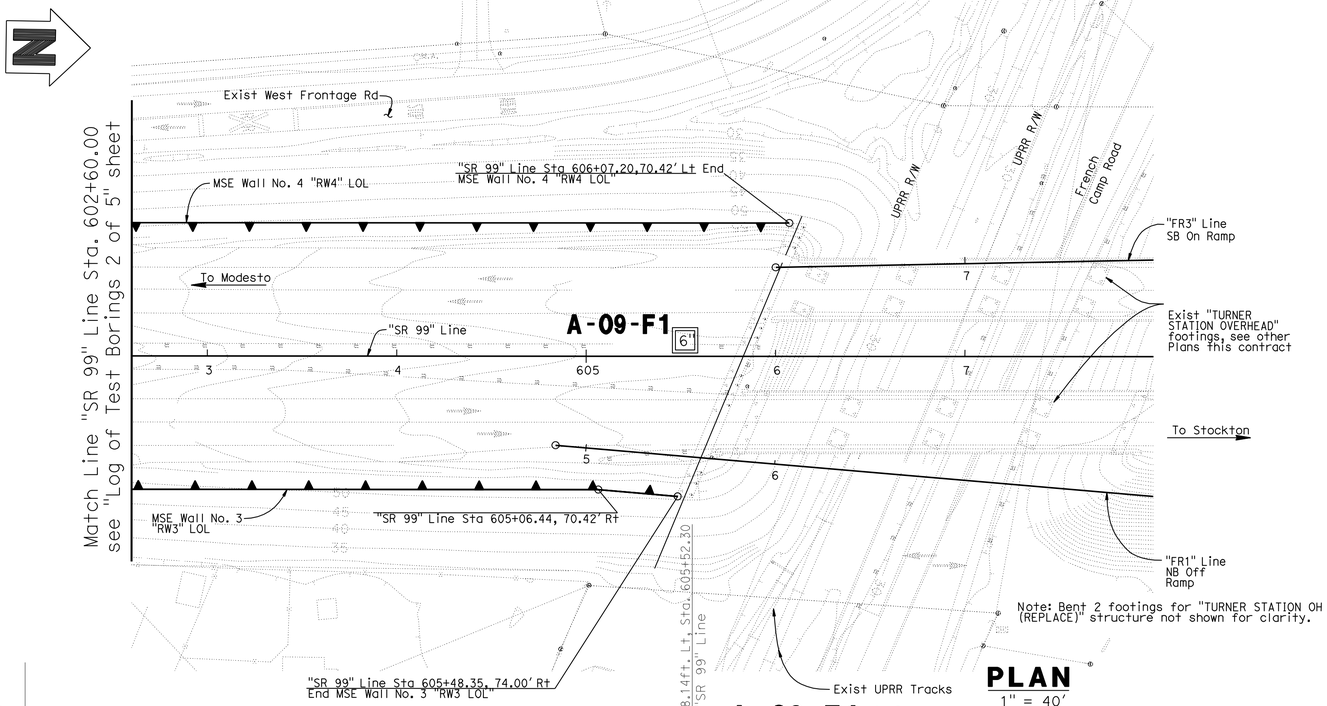

PLAN
1" = 40'

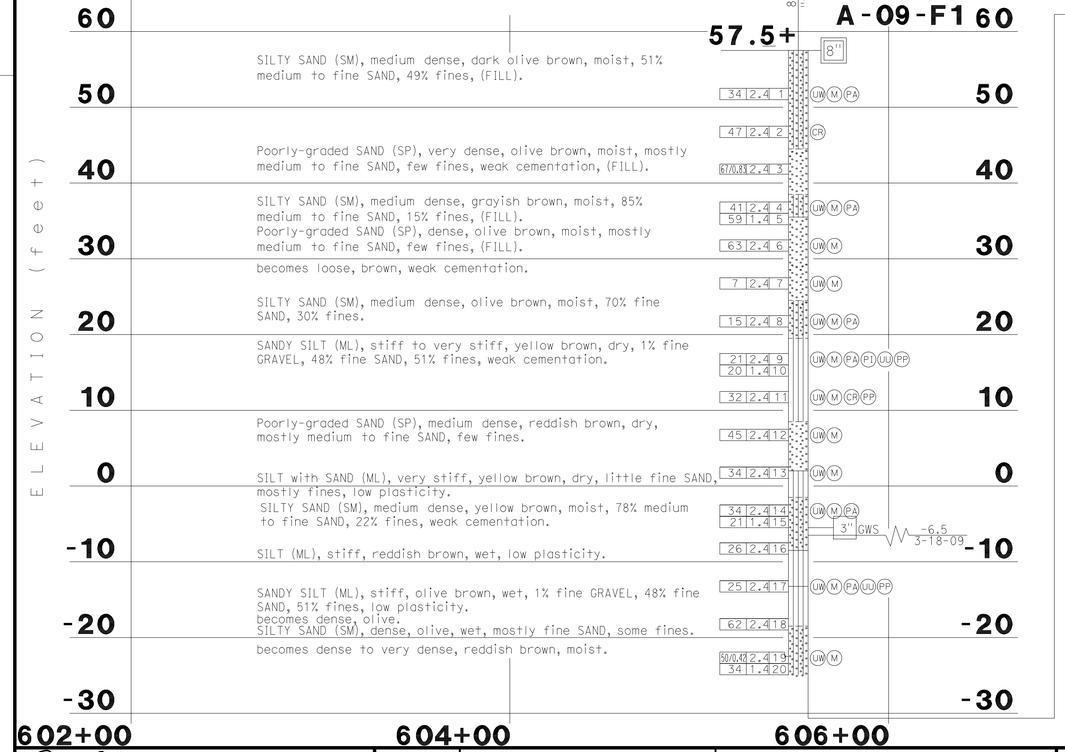

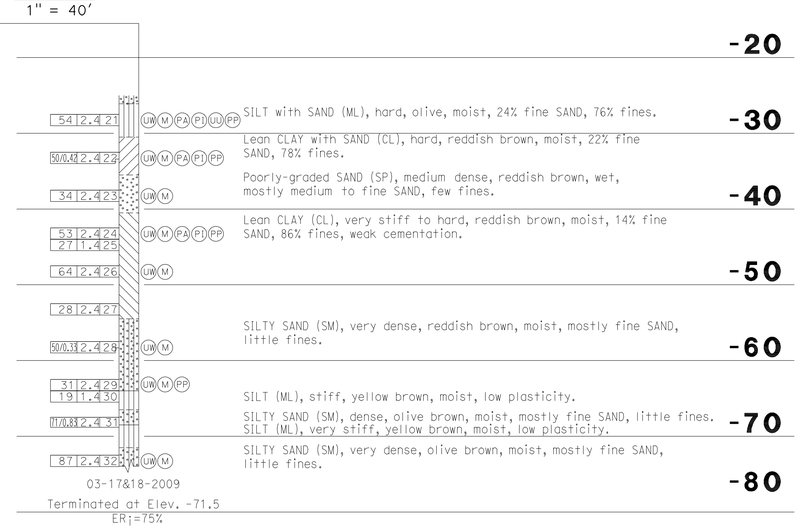

BENCH MARKS

BENCHMARK# 645 ELEV. 58.24 Ft

DESCRIPTION: KSN CONTROL POINT, 1/2 " REBAR WITH YELLOW CAP STAMPED "KSN CONTROL", LOCATED AT APPROXIMATE CENTERLINE STATION 605+95 ON THE SOUTHBOUND MAINLINE, ON THE INSIDE SHOULDER, 3.5' EAST OF THE EDGE OF PAVEMENT, 11' WEST OF THE FACE OF THE GUARDRAIL, AND 4' SOUTH OF THE SOUTHEAST CORNER OF THE FRENCH CAMP OVER CROSSING BRIDGE.
NGVD 29, N2136239.71, E6354178.61.

BENCHMARK# 641 ELEV. 56.89 Ft

DESCRIPTION: KSN CONTROL POINT, 1/2 " REBAR WITH YELLOW CAP STAMPED "KSN CONTROL", LOCATED APPROXIMATE CENTERLINE STATION 608+14 ON THE NORTHBOUND MAINLINE, ON THE INSIDE SHOULDER, 2' WEST OF THE EDGE OF PAVEMENT, 10.5' EAST OF THE FACE OF THE GUARDRAIL, 6' NORTH OF THE FRENCH CAMP OVER CROSSING BRIDGE.
NGVD 29, N2136459.41, E6354207.75.

NOTES:

1. Field classification of soils was in accordance with the Caltrans Soil & Rock Logging, Classification, and Presentation Manual (June 2007). See Log of Test Borings No. 4 and 5, "Soil Legend".
2. Standard Penetration tests were performed in accordance with ASTM D 1586-99 using a hammer operated with an automated drop system. Drill rods were 1 5/8-inch diameter "A"-rods; sampler was driven with brass liners.
3. "2.4 inch sampler": ID=2.4 inch, OD=2.9 inch. Driven in same manner as SPT ("1.4 inch") sampler.
4. Where less than the 0.5 inches of penetration is achieved, the blow count shown is for that fraction of the interval actually penetrated.
5. If laboratory tests are not shown as being performed, the soil descriptions presented in the LOTB are based solely on the visual practices described in the before mentioned Manual.
6. The length of each sampled interval is shown graphically on the boring log.
7. Consistency of soils shown in ( ) where estimated.
8. Groundwater surface (GWS) reflect the fluid level in the borings on the specified date. Groundwater surface is subject to seasonal fluctuations and may occur at higher or lower elevations depending on the conditions at any particular time.
9. Electronic media for plan view provided by HDR Engineering, MSE Wall No. 3 & 4, Foundations Plans, 90% Submittal, January 2011.
10. Boring elevations are approximate and based on "Planning Study" plans dated 1/23/09 provided by HDR Engineering, Inc.
11. The "Log of Test Borings" drawing is included with plans in accordance with Section 2-1.03 of Caltrans "Standard Specifications".

PROFILE
HOR. 1"=40'
VERT. 1"=10'

Reza Erfanian
DESIGN OVERSIGHT Reza Erfanian
6/24/11
SIGN OFF DATE

DRAWN BY M ROBERTSON
CHECKED BY K. CHAPMAN
A. SHINNEFIELD
FIELD INVESTIGATION BY:
DATE: MARCH 2009

PREPARED FOR THE STATE OF CALIFORNIA DEPARTMENT OF TRANSPORTATION

JOHN A. KLEMUNES, JR.
PROJECT ENGINEER

BRIDGE NO. 29E0005
POST MILE 10.97

MSE RETAINING WALL NO. 4
LOG OF TEST BORINGS NO. 3

GS LOTB SOIL LEGEND SHEET 1 (ENGLISH) (REV. 07/16/10)

ORIGINAL SCALE IN INCHES FOR REDUCED PLANS 0 1 2 3

UNIT: 1455
PROJECT NUMBER & PHASE: 10000204411 CONTRACT NO.: 10-0E6121

DISREGARD PRINTS BEARING EARLIER REVISION DATES

REVISION DATES: 3-18-10 2-24-11 5-18-11 6-24-11

SHEET 27 OF 29

FILE => 29E0005-z-ltb03.dgn

USERNAME => s12161d DATE PLOTTED => 01-DEC-2011 TIME PLOTTED => 11:04

DIST	COUNTY	ROUTE	POST MILES TOTAL PROJECT	SHEET No	TOTAL SHEETS
10	SJ	99	10.6/14.9	503	504

REGISTERED CIVIL ENGINEER — DATE 6-24-11

10-17-11
PLANS APPROVAL DATE

REGISTERED PROFESSIONAL ENGINEER — BENJAMIN D. CRAWFORD — No. 68457 — Exp. 9/30/11 — CIVIL — STATE OF CALIFORNIA

The State of California or its officers or agents shall not be responsible for the accuracy or completeness of electronic copies of this plan sheet.

SAN JOAQUIN COUNCIL OF GOVERNMENTS
555 E. WEBER AVE.
STOCKTON, CA 95202

BLACKBURN CONSULTING
2491 BOATMAN AVENUE
WEST SACRAMENTO, CA 95691 FILE No. 1201.6a

REFERENCE: CALTRANS SOIL & ROCK LOGGING, CLASSIFICATION, AND PRESENTATION MANUAL, (JUNE, 2007)

CEMENTATION

Description	Criteria
Weak	Crumbles or breaks with handling or little finger pressure.
Moderate	Crumbles or breaks with considerable finger pressure.
Strong	Will not crumble or break with finger pressure.

CONSISTENCY OF COHESIVE SOILS

Description	Unconfined Compressive Strength (tsf)	Pocket Penetrometer Measurement (tsf)	Torvane Measurement (tsf)	Field Approximation
Very Soft	<0.25	<0.25	<0.12	Easily penetrated several inches by fist
Soft	0.25 to 0.50	0.25 to 0.50	0.12 to 0.25	Easily penetrated several inches by thumb
Medium Stiff	0.50 to 1.0	0.50 to 1.0	0.25 to 0.50	Penetrated several inches by thumb with moderate effort
Stiff	1 to 2	1 to 2	0.50 to 1.0	Readily indented by thumb but penetrated only with great effort
Very Stiff	2 to 4	2 to 4	1.0 to 2.0	Readily indented by thumbnail
Hard	> 4.0	> 4.0	> 2.0	Indented by thumbnail with difficulty

BOREHOLE IDENTIFICATION

Symbol	Hole Type	Description
Size	A	Auger Boring
Size	R P	Rotary drilled boring Rotary percussion boring (air)
Size	R	Rotary drilled diamond core
Size	HD HA	Hand driven (1-inch soil tube) Hand Auger
○	D	Dynamic Cone Penetration Boring
▲	CPT	Cone Penetration Test (ASTM D 5778)
□	O	Other

NOTE: Size in inches.

PLASTICITY OF FINE-GRAINED SOILS

Description	Criteria
Nonplastic	A 1/8-inch thread cannot be rolled at any water content.
Low	The thread can barely be rolled and the lump cannot be formed when drier than the plastic limit.
Medium	The thread is easy to roll and not much time is required to reach the plastic limit. The thread cannot be rerolled after reaching the plastic limit. The lump crumbles when drier than the plastic limit.
High	It takes considerable time rolling and kneading to reach the plastic limit. The thread can be rerolled several times after reaching the plastic limit. The lump can be formed without crumbling when drier than the plastic limit.

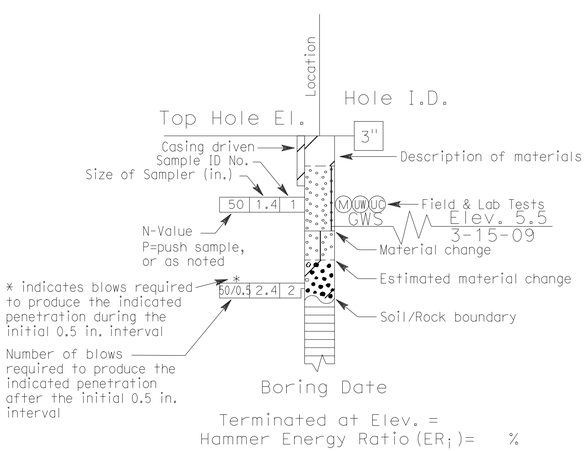

ROTARY BORING

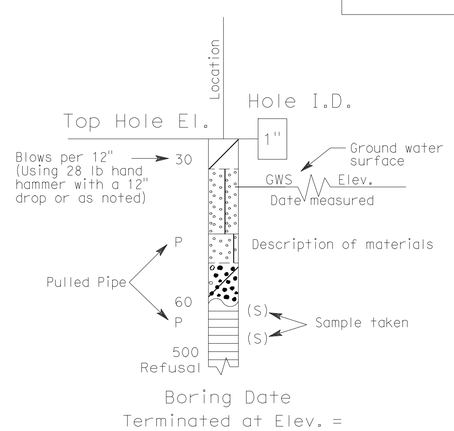

HAND BORING

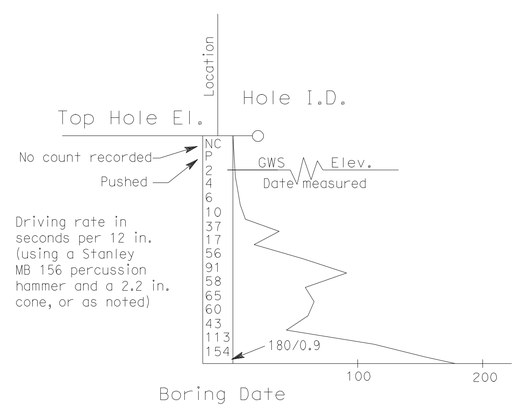

DYNAMIC CONE PENETRATION BORING

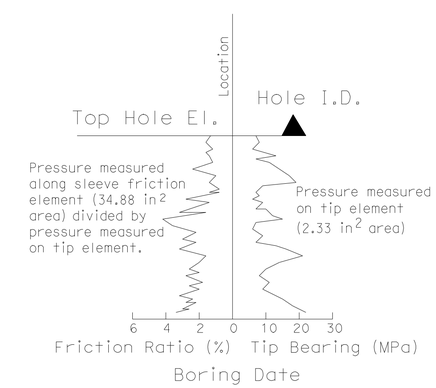

CONE PENETRATION TEST (CPT) SOUNDING

SOIL LEGEND

Reza Erfanian
DESIGN OVERSIGHT Reza Erfanian
6/24/11
SIGN OFF DATE

DRAWN BY M ROBERTSON
CHECKED BY K. CHAPMAN

A. SHINNEFIELD
FIELD INVESTIGATION BY:
DATE: MARCH 2009

PREPARED FOR THE STATE OF CALIFORNIA DEPARTMENT OF TRANSPORTATION

JOHN A. KLEMUNES, JR.
PROJECT ENGINEER

BRIDGE NO. 29E0005
POST MILE 10.97

MSE RETAINING WALL NO. 4

LOG OF TEST BORINGS NO. 4

GS LOTB SOIL LEGEND SHEET 1 (ENGLISH) (REV. 07/16/10)

ORIGINAL SCALE IN INCHES FOR REDUCED PLANS 0 1 2 3

UNIT: 1455
PROJECT NUMBER & PHASE: 10000204411 CONTRACT NO.: 10-0E6121

DISREGARD PRINTS BEARING EARLIER REVISION DATES

REVISION DATES 3-10-10 2-04-11 5-18-11 6-24-11

SHEET 28 OF 29

FILE => 29E0005-z-ltb04.dgn

USERNAME => s121614 DATE PLOTTED => 01-DEC-2011 TIME PLOTTED => 11:05

DIST	COUNTY	ROUTE	POST MILES TOTAL PROJECT	SHEET No	TOTAL SHEETS
10	SJ	99	10.6/14.9	504	504

REGISTERED CIVIL ENGINEER — DATE 6-24-11

10-17-11
PLANS APPROVAL DATE

REGISTERED PROFESSIONAL ENGINEER — BENJAMIN D. CRAWFORD — No. 68457 — Exp. 9/30/11 — CIVIL — STATE OF CALIFORNIA

The State of California or its officers or agents shall not be responsible for the accuracy or completeness of electronic copies of this plan sheet.

SAN JOAQUIN COUNCIL OF GOVERNMENTS
555 E. WEBER AVE.
STOCKTON, CA 95202

BLACKBURN CONSULTING
2491 BOATMAN AVENUE
WEST SACRAMENTO, CA 95691 FILE No. 1201.6a

REFERENCE: CALTRANS SOIL & ROCK LOGGING, CLASSIFICATION, AND PRESENTATION MANUAL, (JUNE, 2007)

GROUP SYMBOLS AND NAMES

Graphic/Symbol	Group Names	Graphic/Symbol	Group Names
GW	Well-graded GRAVEL Well-graded GRAVEL with SAND	CL	Lean CLAY Lean CLAY with SAND Lean CLAY with GRAVEL SANDY lean CLAY SANDY lean CLAY with GRAVEL GRAVELLY lean CLAY GRAVELLY lean CLAY with SAND
GP	Poorly-graded GRAVEL Poorly-graded GRAVEL with SAND		
GW-GM	Well-graded GRAVEL with SILT Well-graded GRAVEL with SILT and SAND	CL-ML	SILTY CLAY SILTY CLAY with SAND SILTY CLAY with GRAVEL SANDY SILTY CLAY SANDY SILTY CLAY with GRAVEL GRAVELLY SILTY CLAY GRAVELLY SILTY CLAY with SAND
GW-GC	Well-graded GRAVEL with CLAY (or SILTY CLAY) Well-graded GRAVEL with CLAY and SAND (or SILTY CLAY and SAND)		
GP-GM	Poorly-graded GRAVEL with SILT Poorly-graded GRAVEL with SILT and SAND	ML	SILT SILT with SAND SILT with GRAVEL SANDY SILT SANDY SILT with GRAVEL GRAVELLY SILT GRAVELLY SILT with SAND
GP-GC	Poorly-graded GRAVEL with CLAY (or SILTY CLAY) Poorly-graded GRAVEL with CLAY and SAND (or SILTY CLAY and SAND)		
GM	SILTY GRAVEL SILTY GRAVEL with SAND	OL	ORGANIC lean Clay ORGANIC lean Clay with SAND ORGANIC lean Clay with GRAVEL SANDY ORGANIC lean CLAY SANDY ORGANIC lean CLAY with GRAVEL GRAVELLY ORGANIC lean CLAY GRAVELLY ORGANIC lean CLAY with SAND
GC	CLAYEY GRAVEL CLAYEY GRAVEL with SAND		
GC-GM	SILTY, CLAYEY GRAVEL SILTY, CLAYEY GRAVEL with SAND	OL	ORGANIC SILT ORGANIC SILT with SAND ORGANIC SILT with GRAVEL SANDY ORGANIC SILT SANDY ORGANIC SILT with GRAVEL GRAVELLY ORGANIC SILT GRAVELLY ORGANIC SILT with SAND
SW	Well-graded SAND Well-graded SAND with GRAVEL		
SP	Poorly-graded SAND Poorly-graded SAND with GRAVEL	CH	Fat CLAY Fat CLAY with SAND Fat CLAY with GRAVEL SANDY fat CLAY SANDY fat CLAY with GRAVEL GRAVELLY fat CLAY GRAVELLY fat CLAY with SAND
SW-SM	Well-graded SAND with SILT Well-graded SAND with SILT and GRAVEL		
SW-SC	Well-graded SAND with CLAY (or SILTY CLAY) Well-graded SAND with CLAY and GRAVEL (or SILTY CLAY and GRAVEL)	MH	Elastic SILT Elastic SILT with SAND Elastic SILT with GRAVEL SANDY elastic SILT SANDY elastic SILT with GRAVEL GRAVELLY elastic SILT GRAVELLY elastic SILT with SAND
SP-SM	Poorly-graded SAND with SILT Poorly-graded SAND with SILT and GRAVEL		
SP-SC	Poorly-graded SAND with CLAY (or SILTY CLAY) Poorly-graded SAND with CLAY and GRAVEL (or SILTY CLAY and GRAVEL)	OH	ORGANIC fat CLAY ORGANIC fat CLAY with SAND ORGANIC fat CLAY with GRAVEL SANDY ORGANIC fat CLAY SANDY ORGANIC fat CLAY with GRAVEL GRAVELLY ORGANIC fat CLAY GRAVELLY ORGANIC fat CLAY with SAND
SM	SILTY SAND SILTY SAND with GRAVEL		
SC	CLAYEY SAND CLAYEY SAND with GRAVEL	OH	ORGANIC elastic SILT ORGANIC elastic SILT with SAND ORGANIC elastic SILT with GRAVEL SANDY ORGANIC elastic SILT SANDY ORGANIC elastic SILT with GRAVEL GRAVELLY ORGANIC elastic SILT GRAVELLY ORGANIC elastic SILT with SAND
SC-SM	SILTY, CLAYEY SAND SILTY, CLAYEY SAND with GRAVEL		
PT	PEAT	OH/OL	ORGANIC SOIL ORGANIC SOIL with SAND ORGANIC SOIL with GRAVEL SANDY ORGANIC SOIL SANDY ORGANIC SOIL with GRAVEL GRAVELLY ORGANIC SOIL GRAVELLY ORGANIC SOIL with SAND
	COBBLES COBBLES and BOULDERS BOULDERS		

FIELD AND LABORATORY TESTING

- (C) Consolidation (ASTM D 2435)
- (CL) Collapse Potential (ASTM D 5333)
- (CP) Compaction Curve (CTM 216)
- (CR) Corrosivity Testing (CTM 643, CTM 422, CTM 417)
- (CU) Consolidated Undrained Triaxial (ASTM D 4767)
- (DS) Direct Shear (ASTM D 3080)
- (EI) Expansion Index (ASTM D 4829)
- (M) Moisture Content (ASTM D 2216)
- (OC) Organic Content-% (ASTM D 2974)
- (P) Permeability (CTM 220)
- (PA) Particle Size Analysis (ASTM D 422)
- (PI) Plasticity Index (AASHTO T 90) Liquid Limit (AASHTO T 89)
- (PL) Point Load Index (ASTM D 5731)
- (PM) Pressure Meter
- (PP) Pocket Penetrometer
- (R) R-Value (CTM 301)
- (SE) Sand Equivalent (CTM 217)
- (SG) Specific Gravity (AASHTO T 100)
- (SL) Shrinkage Limit (ASTM D 427)
- (SW) Swell Potential (ASTM D 4546)
- (TV) Pocket Torvane
- (UC) Unconfined Compression-Soil (ASTM D 2166) Unconfined Compression-Rock (ASTM D 2938)
- (UU) Unconsolidated Undrained Triaxial (ASTM D 2850)
- (UW) Unit Weight (ASTM D 2937)
- (VS) Vane Shear (AASHTO T 223)

APPARENT DENSITY OF COHESIONLESS SOILS

Description	SPT N_{60}-Value (Blows / 12 inches)
Very Loose	0 - 4
Loose	5 - 10
Medium Dense	11 - 30
Dense	31 - 50
Very Dense	> 50

MOISTURE

Description	Criteria
Dry	Absence of moisture, dusty, dry to the touch
Moist	Damp but no visible water
Wet	Visible free water, usually soil is below water table

PERCENT OR PROPORTION OF SOILS

Description	Criteria
Trace	Particles are present but estimated to be less than 5%
Few	5 to 10%
Little	15 to 25%
Some	30 to 45%
Mostly	50 to 100%

PARTICLE SIZE

Description		Size
Boulder		> 12"
Cobble		3" to 12"
Gravel	Coarse	3/4" to 3"
	Fine	No. 4 to 3/4"
Sand	Coarse	No. 10 to No. 4
	Medium	No. 40 to No. 10
	Fine	No. 200 to No. 40

SOIL LEGEND

Reza Erfanian
DESIGN OVERSIGHT Reza Erfanian
6/24/11
SIGN OFF DATE

DRAWN BY M ROBERTSON
CHECKED BY K. CHAPMAN
A. SHINNEFIELD
FIELD INVESTIGATION BY:
DATE: MARCH 2009

PREPARED FOR THE STATE OF CALIFORNIA DEPARTMENT OF TRANSPORTATION

JOHN A. KLEMUNES, JR.
PROJECT ENGINEER

BRIDGE NO. 29E0005
POST MILE 10.97

MSE RETAINING WALL NO. 4
LOG OF TEST BORINGS NO. 5

GS LOTB SOIL LEGEND SHEET 2 (ENGLISH) (REV. 07/16/10)

ORIGINAL SCALE IN INCHES FOR REDUCED PLANS 0 1 2 3

UNIT: 1455
PROJECT NUMBER & PHASE: 10000204411 CONTRACT NO.: 10-0E6121

DISREGARD PRINTS BEARING EARLIER REVISION DATES

REVISION DATES: 3-10-10 2-04-11 5-18-11 6-24-11 SHEET 29 OF 29

FILE => 29E0005-z-ltb05.dgn

USERNAME => s8121614 DATE PLOTTED => 01-DEC-2011 TIME PLOTTED => 11:05