DIST	COUNTY	ROUTE	POST MILES TOTAL PROJECT	SHEET No	TOTAL SHEETS
12	Ora	22,405, 605	R0.3/R0.9, 22.3/24.0,3.0/R1.6	1701	1929

REGISTERED CIVIL ENGINEER 07/27/09 DATE

2-1-10
PLANS APPROVAL DATE

REGISTERED PROFESSIONAL ENGINEER G.J.Gunaranjan No. C71758 Exp.12-31-09 CIVIL STATE OF CALIFORNIA

The State of California or its officers or agents shall not be responsible for the accuracy or completeness of electronic copies of this plan sheet.

OCTA
550 SOUTH MAIN STREET
ORANGE, CA 92863

EARTH MECHANICS, INC.
17660, NEWHOPE STREET, SUITE E
FOUNTAIN VALLEY, CA 92708

BENCHMARKS:

Monument: 1A-144-04

Described by OCS 2005 - Found 3.75" OCS aluminum benchmark disk stamped "1A-144-04", set in the southwesterly corner of a 4.4 ft by 4.4 ft concrete catch basin. Monument is located in the northeasterly corner of the intersection of Seal Beach Boulevard and St. Cloud Drive, 44 ft easterly of the centerline of Seal Beach Boulevard and 58 ft northerly of the centerline of St. Cloud Dr. Monument is set level with the sidewalk.

Elevation: 15.37 feet

NOTES:

(1) This LOTB sheet (Boring Record) was prepared in accordance with the Caltrans Soil and Rock Classification Logging, Classification and Presentation Manual (June 2007).

(2) 2.4" samples were taken using a California Modified Sampler.

(3) A rope and cat-head hammer system consisting of a hammer weight of 140 lbs falling a distance of 30" was used to advance the drive sampler.

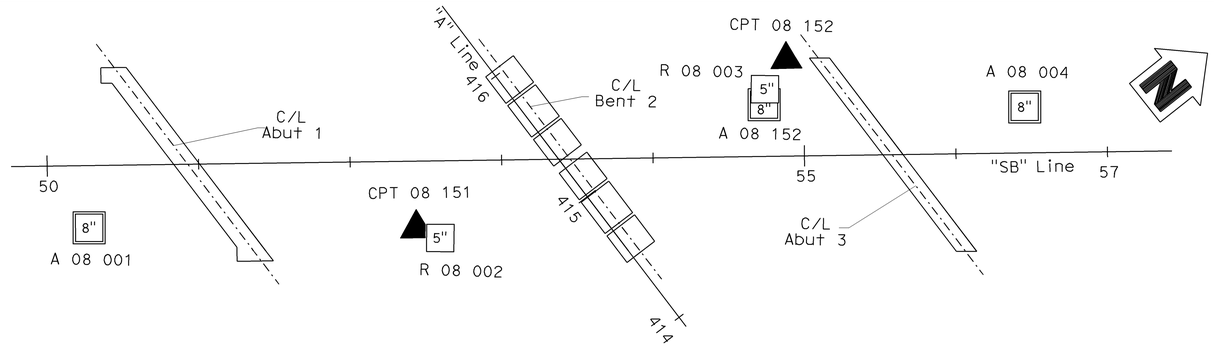

PLAN

1" = 50'

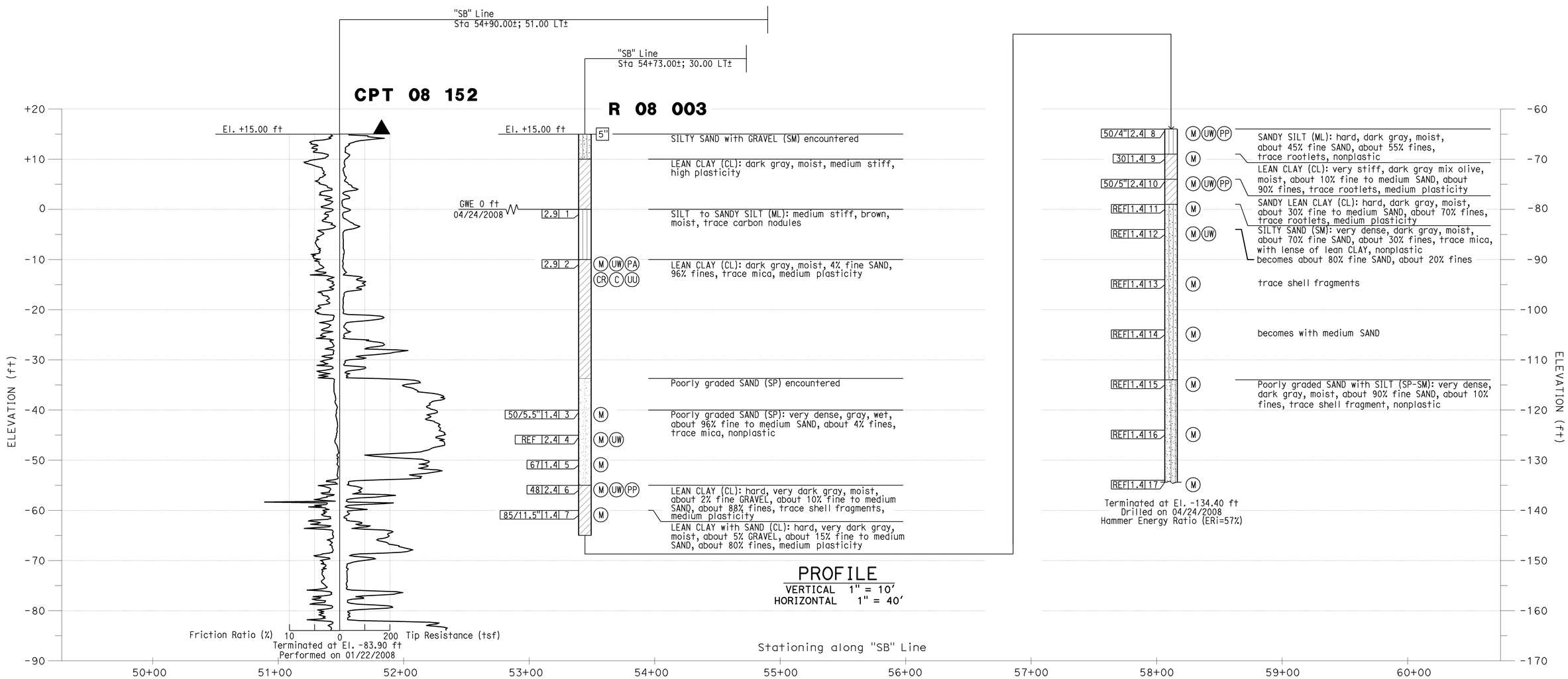

PROFILE

VERTICAL 1" = 10'
HORIZONTAL 1" = 40'

Sudhakar Vatti
DESIGN OVERSIGHT Sudhakar Vatti

8-10-09
SIGN OFF DATE

DRAWN BY: J.Fang

CHECKED BY: K.Pratheepan

FIELD INVESTIGATION BY:
R.Jie

PREPARED FOR THE STATE OF CALIFORNIA DEPARTMENT OF TRANSPORTATION

G.J.Gunaranjan
PROJECT ENGINEER

BRIDGE NO. 55-1099
POST MILE 22.64

SEAL BEACH BLVD OC (REPLACE)

LOG OF TEST BORINGS NO. 5

OSF CIVIL LOG OF TEST BORINGS SHEET (ENGLISH) (REV. 2-25-05)

ORIGINAL SCALE IN INCHES FOR REDUCED PLANS 0 1 2 3

CU 12235
EA 071631

DISREGARD PRINTS BEARING EARLIER REVISION DATES

REVISION DATES (PRELIMINARY STAGE ONLY) 09/17/08 03/23/09 04/06/09 07/27/09

SHEET 43 OF 45

FILE => 55-1099-z-1tb05.dgn

USERNAME => trlenard DATE PLOTTED => 04-FEB-2010 TIME PLOTTED => 06:19

DIST.	COUNTY	ROUTE	KILOMETER POST-TOTAL PROJECT	Sheet No.	Total Sheets
12	Ora	22, 405, 605	R0.3/R0.9,22.3/24.0,3.0/R1.6	1702	1929

DIVISION OF ENGINEERING SERVICES - GEOTECHNICAL SERVICES

As-Built Log of Test Borings sheet is considered an informational document only. As such, the State of California registration seal with signature, license number and registration certificate expiration date confirm that this is a true and accurate copy of the original document. This drawing is available and presented only for the convenience of any bidder, contractor or other interested party.

REGISTERED CIVIL ENGINEER — DATE 07/27/09

LOG OF TEST BORINGS NO. 6

NOTE: A COPY OF THIS LOG OF TEST BORINGS IS AVAILABLE AT OFFICE OF STRUCTURE MAINTENANCE AND INVESTIGATIONS, SACRAMENTO, CALIFORNIA

CU: 12235
EA: 071631

BRIDGE No. 55-1099

Sheet 44 of 45

Revisions made to this Log of Test Borings from the original 1965 Log of Test Borings are the addition of the following table and notes:

To accompany plans dated 2-1-10

BENCH MARK #227-A-59

Fd. L. & T. in P.C.C. gov't 41' Rt. of Route 179 Sta. 227+00 Ult. & Const.

ELEV. 15.22

REGISTERED PROFESSIONAL ENGINEER — G. J. Gunaranjan — No. C71758 — Exp. 12-31-09 — CIVIL — STATE OF CALIFORNIA

AS BUILT PLANS
Contract No. 07-031804
Date Completed
Document No. 7000244

Dist.	County	Route	Section	Sheet	Total Sheets
VII	Ora	405			

Bridge Engineer — Civil Engineer — Date approved

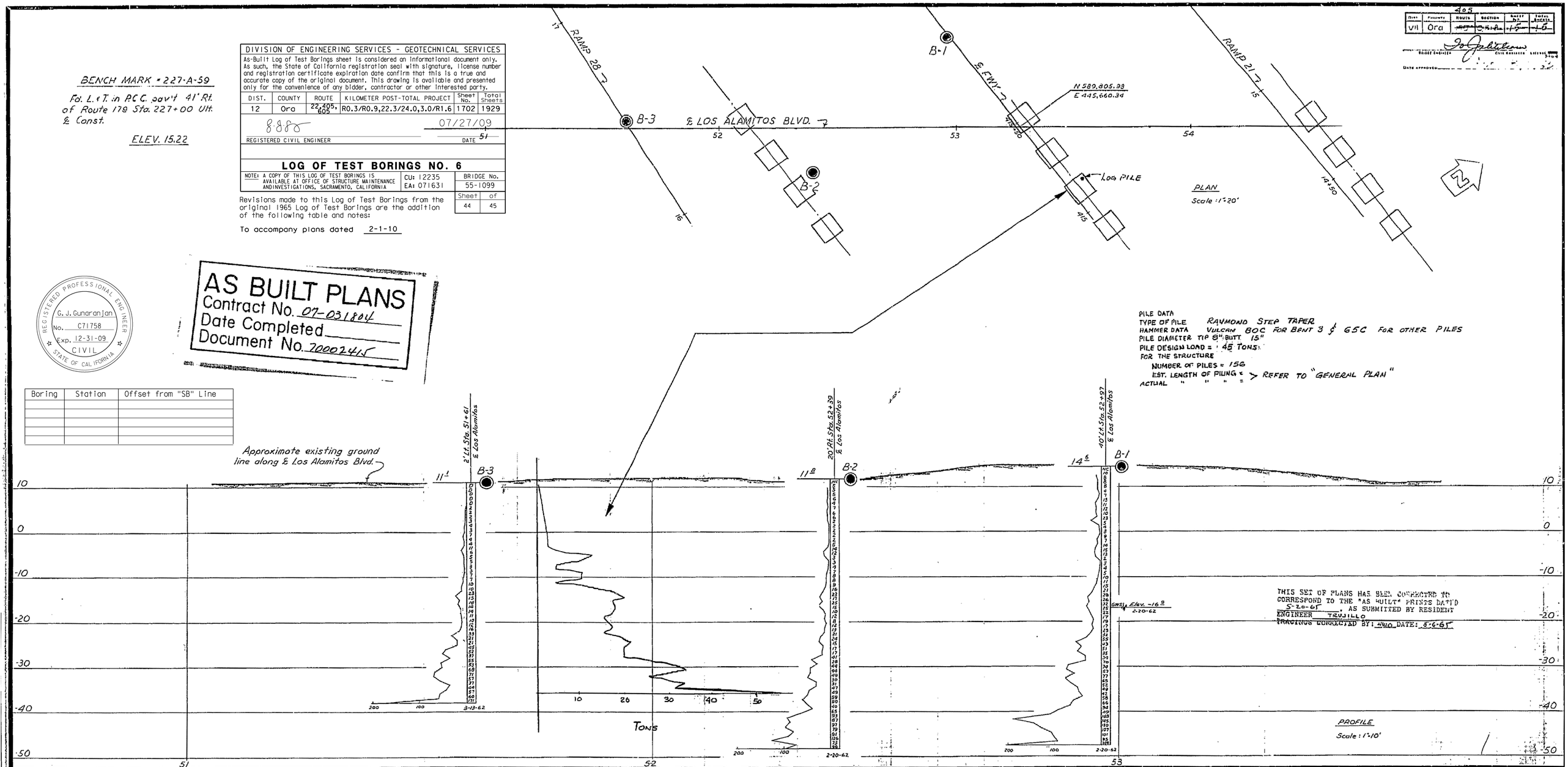

PILE DATA
TYPE OF PILE RAYMOND STEP TAPER
HAMMER DATA VULCAN 80C FOR BENT 3 & 65C FOR OTHER PILES
PILE DIAMETER TIP 8" BUTT 15"
PILE DESIGN LOAD = 45 TONS
FOR THE STRUCTURE
NUMBER OF PILES = 156
EST. LENGTH OF PILING = > REFER TO "GENERAL PLAN"
ACTUAL " " " =

Boring	Station	Offset from "SB" Line

CLASSIFICATION OF MATERIAL BASED ON STANDARD GRADE SIZE LIMITS

DIAGRAM SHOWING THE BASIS FOR ESTIMATES OF GRADE SIZE DISTRIBUTION USED IN DETERMINATION OF CLASS NAMES.

IF GRAVEL IS PRESENT IN APPRECIABLE AMOUNTS THE TERM "GRAVELLY" MAY BE ADDED TO THE CLASS NAME, VIZ. "GRAVELLY SAND". THE TERMS "COARSE", "MEDIUM" AND "FINE" WHEN USED TO DESCRIBE SAND, SILT AND GRAVEL REFER TO STANDARD GRADE SIZE LIMITS.

SILT PERCENTAGES — SAND PERCENTAGES — CLAY PERCENTAGES

LEGEND OF EARTH MATERIALS

- GRAVEL
- SAND
- SILT
- CLAY
- SANDY CLAY OR CLAYEY SAND
- SANDY SILT OR SILTY SAND
- SILTY CLAY OR CLAYEY SILT
- PEAT AND/OR ORGANIC MATTER
- FILL MATERIAL
- IGNEOUS ROCK
- SEDIMENTARY ROCK
- METAMORPHIC ROCK

LEGEND OF BORING OPERATIONS

- PENETROMETER
- 2¼" CONE PENETROMETER
- SAMPLER BORING (DRY)
- ROTARY BORING (WET)
- AUGER BORING (DRY)
- JET BORING
- CORE BORING
- TEST PIT

1" SOIL TUBE — ROTARY BORING — PENETRATION BORING

NOTE

Classification of earth material as shown on this sheet is based upon field inspection and is not to be construed to imply mechanical analysis.

STATE OF CALIFORNIA
DEPARTMENT OF PUBLIC WORKS
DIVISION OF HIGHWAYS

LOS ALAMITOS BOULEVARD SEPARATION

LOG OF TEST BORINGS

SCALE As Noted	BRIDGE 55-365	FILE	DRAWING C-55365-15

PREL. DRAWING NO. P-55365-22

FILENAME => 55-1099-z-1tb06.tif

DIST.	COUNTY	ROUTE	POST MILES—TOTAL PROJECT	SHEET NO.	TOTAL SHEETS
07	Ora	405	21.2/23.3	69	69

A.E. Bachu
REGION SECTION SUPERVISOR — REGISTERED CIVIL ENGINEER NO. 35591
DATE APPROVED May 24, 1971

BENCH MARK

B.M. # 1A-103-68 Elev. 39.47
Fed. Std. OCS alloy cap Mon. stamped "1A-103-68" at NE corner Br. #55-365 Los Alamitos OC at 405 Fwy. 1 ft. S. of N end of E sidewalk (no record).

To accompany plans dated 2-1-10

DIVISION OF ENGINEERING SERVICES - GEOTECHNICAL SERVICES					
As-Built Log of Test Borings sheet is considered an informational document only. As such, the State of California registration seal with signature, license number and registration certificate expiration date confirm that this is a true and accurate copy of the original document. This drawing is available and presented only for the convenience of any bidder, contractor or other interested party.					
DIST.	COUNTY	ROUTE	KILOMETER POST-TOTAL PROJECT	Sheet No.	Total Sheets
12	Ora	22, 405, 605	R0.3/R0.9, 22.3/24.0, 3.0/R1.6	1703	1929
8-880 REGISTERED CIVIL ENGINEER			07/27/09 DATE		

REGISTERED PROFESSIONAL ENGINEER — G. J. Gunaranjan — No. C71758 — Exp. 12-31-09 — CIVIL — STATE OF CALIFORNIA

LOG OF TEST BORINGS NO. 7

NOTE: A COPY OF THIS LOG OF TEST BORINGS IS AVAILABLE AT OFFICE OF STRUCTURE MAINTENANCE AND INVESTIGATIONS, SACRAMENTO, CALIFORNIA	CU: 12235 EA: 071631	BRIDGE No. 55-1099	
		Sheet 45	of 45

Revisions made to this Log of Test Borings from the original 1971 Log of Test Borings are the addition of the following table and notes:

Boring	Station	Offset from "SB" Line

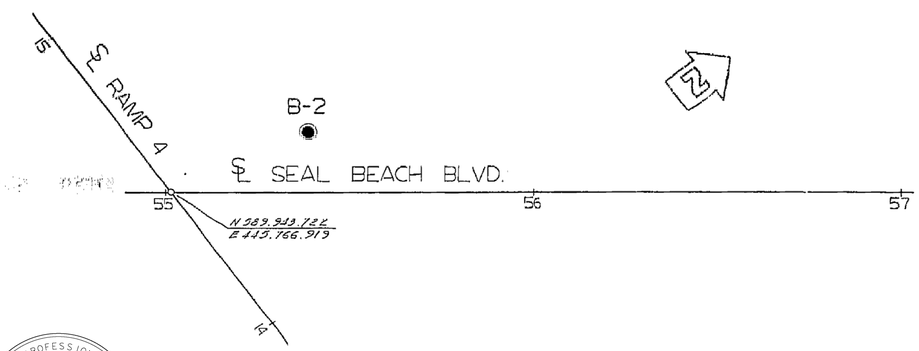

PLAN

Scale: 1" = 20'

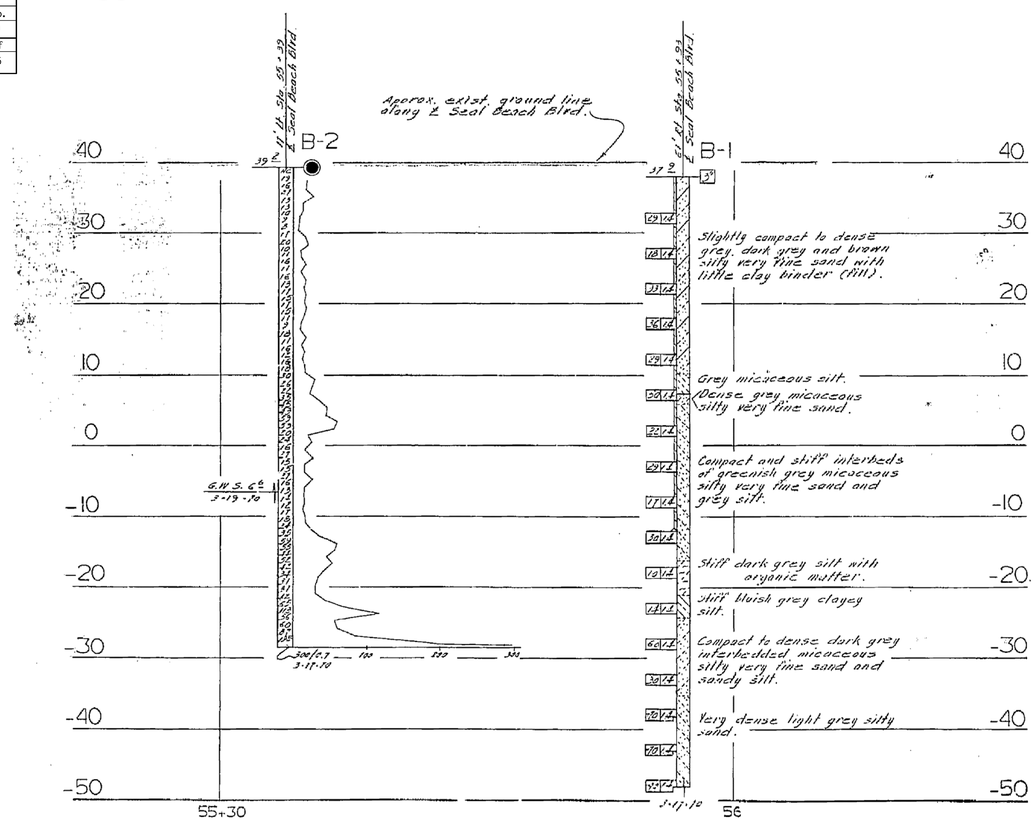

PROFILE

Scale: Vert. 1" = 10'
Horiz. 1" = 10'

LEGEND OF BORING OPERATIONS

PENETROMETER
2½" CONE PENETROMETER
SAMPLER BORING (DRY)
ROTARY BORING (WET)
AUGER BORING (DRY)
JET BORING
CORE BORING
TEST PIT

PENETRATION BORING
ROTARY BORING
1" SOIL TUBE

LEGEND OF EARTH MATERIALS

GRAVEL — SILTY CLAY OR CLAYEY SILT
SAND — PEAT AND ORGANIC MATTER
SILT — FILL MATERIAL
CLAY — IGNEOUS ROCK
SANDY CLAY OR CLAYEY SAND — SEDIMENTARY ROCK
SANDY SILT OR SILTY SAND — METAMORPHIC ROCK

CLASSIFICATION OF MATERIAL BASED ON STANDARD GRADE SIZE LIMITS

DIAGRAM SHOWING THE BASIS FOR ESTIMATES OF GRAIN SIZE DISTRIBUTION USED IN DETERMINING SOIL CLASS NAMES.
IF COBBLE IS PRESENT IN APPRECIABLE AMOUNTS THE TERM "GRAVELLY" MAY BE ADDED TO THE CLASS NAME, VIZ. "GRAVELLY SILTY SAND". THE TERMS "COARSE", "MEDIUM" AND "FINE" WHEN USED TO DESCRIBE SAND, SILT AND GRAVEL, REFER TO STANDARD GRAIN SIZE LIMITS.

NOTE: Classification of earth material as shown on this sheet is based upon field inspection and is not to be construed to imply mechanical analysis.

FIELD STUDY By O. Mikes 3-11-10
DRAWN By J. Law 3-25-10
CHECKED By O. Mikes 3-30-10
Approved Recommended by Engineering Geologist

BRIDGE DEPARTMENT
ENGINEERING GEOLOGY SECTION

AS BUILT PLANS
Contract No. 07-221314
Date Completed 05-24-71
Document No. 2000 6139

STATE OF CALIFORNIA
TRANSPORTATION AGENCY
DEPARTMENT OF PUBLIC WORKS
DIVISION OF HIGHWAYS

SEAL BEACH BOULEVARD OVERCROSSING (LEWITHEN)

LOG OF TEST BORINGS

BRIDGE NO. 55-365	POST MILE 22.6	DRAWING NO.	SHEET 15	OF 15

REVISION DATES (PRELIMINARY STAGE ONLY) 2/26/10

FILENAME => 55-1099-z-1tb07.tif

WO 221311
CU 01210

Disregard prints bearing earlier revision dates

I HEREBY CERTIFY THAT THIS IS A TRUE AND ACCURATE COPY OF THE ABOVE DOCUMENT TAKEN UNDER MY DIRECTION AND CONTROL ON THIS DATE IN SACRAMENTO, CALIFORNIA PURSUANT TO AUTHORIZATION BY THE DIRECTOR OF TRANSPORTATION.

DATE 2/19/74 — SIGNATURE — TITLE Reproduction Supervisor

69

DIST	COUNTY	ROUTE	POST MILES TOTAL PROJECT	SHEET No	TOTAL SHEETS
12	Ora	22,405, 605	R0.3/R0.9, 22.3/24.0,3.0/R1.6	1704	1929

REGISTERED CIVIL ENGINEER 07-27-09 DATE

2-1-10
PLANS APPROVAL DATE

REGISTERED PROFESSIONAL ENGINEER J. Hermstad No. C 66045 Exp. 06-30-10 CIVIL STATE OF CALIFORNIA

The State of California or its officers or agents shall not be responsible for the accuracy or completeness of electronic copies of this plan sheet.

OCTA
550 SOUTH MAIN STREET
ORANGE, CA 92863

TRC
21 TECHNOLOGY DR
IRVINE, CA 92618

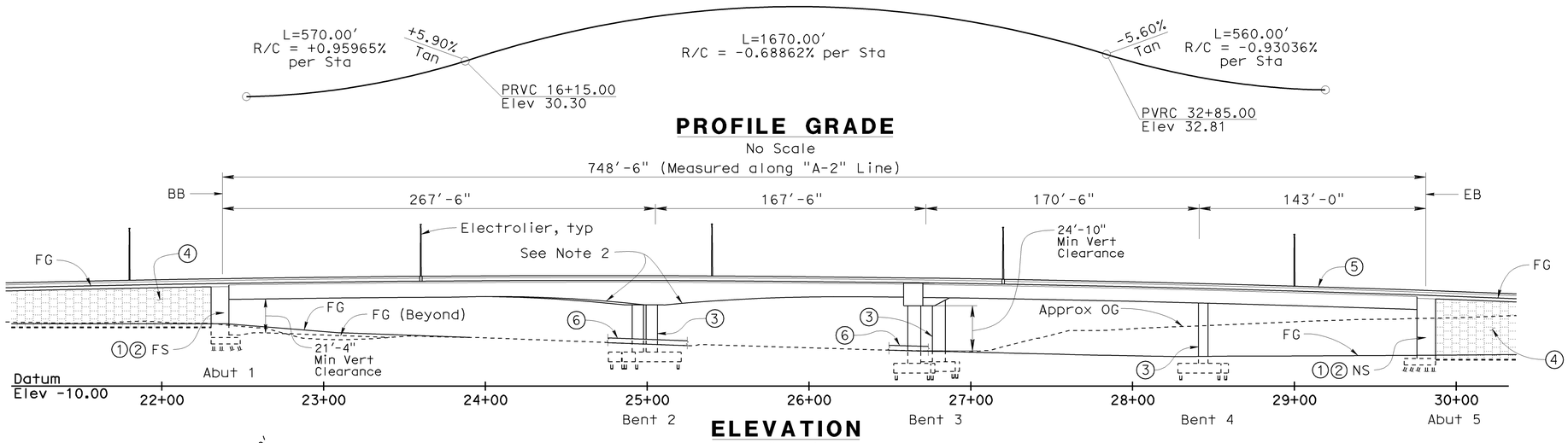

PROFILE GRADE

No Scale

ELEVATION

1"= 40'

Note: Existing Structure not shown
All piles not shown

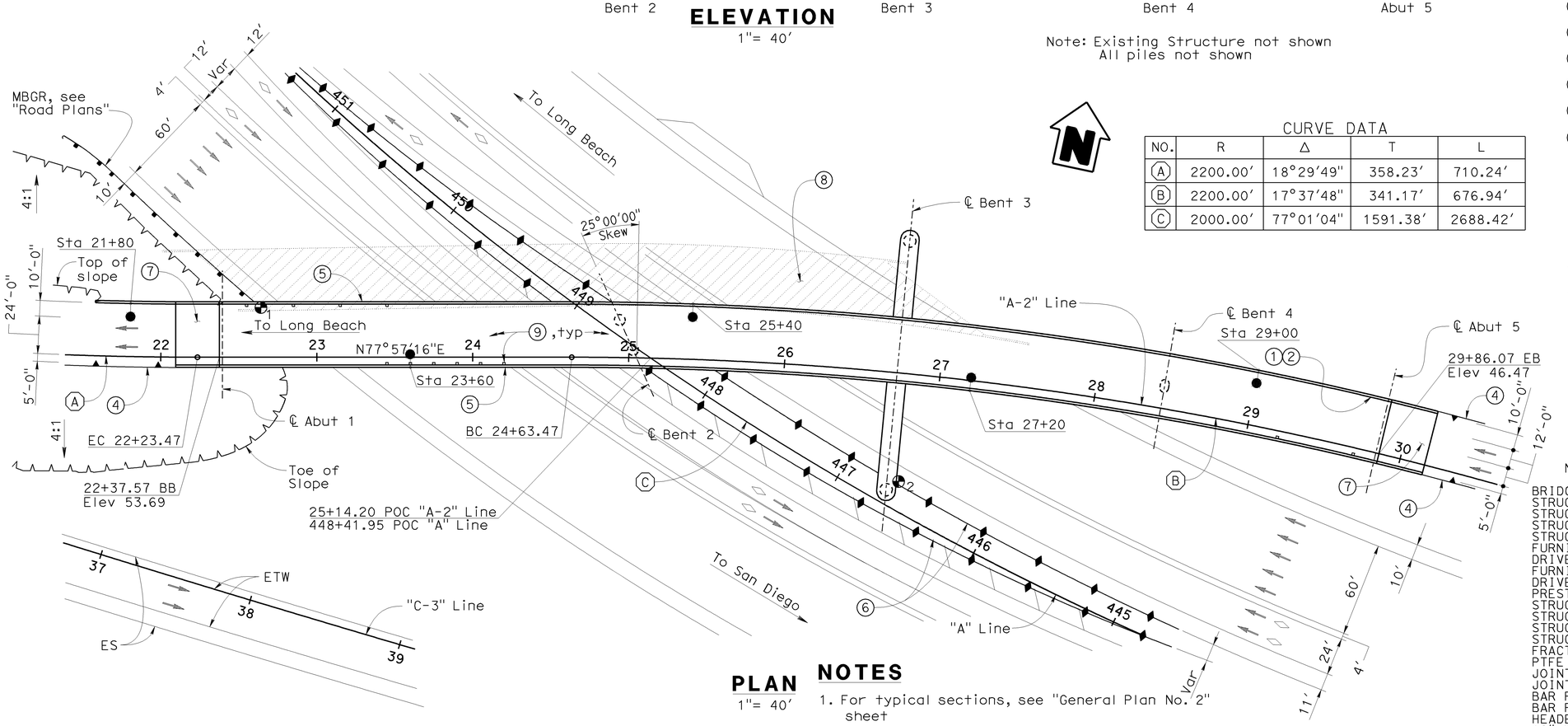

PLAN

1"= 40'

CURVE DATA

NO.	R	Δ	T	L
A	2200.00'	18°29'49"	358.23'	710.24'
B	2200.00'	17°37'48"	341.17'	676.94'
C	2000.00'	77°01'04"	1591.38'	2688.42'

LEGEND

1. Paint "Bridge No. 55-1100G" and year constructed
2. Paint "N405-W22 Connector Separation"
3. Paint Bent Number
4. MSE Wall, see "Structure Plans"
5. Concrete Barrier (Type 736 Mod)
6. Concrete Barrier (Type 60G), see "Road Plans"
7. Structure Approach, Type N(30S)
8. Remove Exist Bridge (Br No. 55-0333L)
9. Deck Drain (Type D-2)

- ◐1 Point of Minimum Vertical Clearance
- ◐2 Point of Minimum Vertical Clearance at outrigger bent
- Bridge Removal, Location B
- New Structure
- Existing Structure
- Electrolier, for locations see "Lighting Plans"

NOTES

1. For typical sections, see "General Plan No. 2" sheet
2. Concrete box girder superstructure varies in depth through parabolic haunches at Bent 2

N405-W22 CONNECTOR SEP (REPLACE) BR NO 55-1100G
QUANTITIES

BRIDGE REMOVAL, LOCATION B	LUMP	SUM
STRUCTURE EXCAVATION (BRIDGE)	3,670	CY
STRUCTURE EXCAVATION (RETAINING WALL)	660	CY
STRUCTURE BACKFILL (BRIDGE)	2,040	CY
STRUCTURE BACKFILL (RETAINING WALL)	545	CY
FURNISH PILING (CLASS 200) (ALTERNATIVE W)	12,312	LF
DRIVE PILE (CLASS 200) (ALTERNATIVE W)	213	EA
FURNISH PILING (CLASS 200) (ALTERNATIVE X)	6,077	LF
DRIVE PILE (CLASS 200)(ALTERNATIVE X)	109	EA
PRESTRESSING CAST-IN-PLACE CONCRETE	LUMP	SUM
STRUCTURAL CONCRETE, BRIDGE FOOTING	956	CY
STRUCTURAL CONCRETE, BRIDGE	4,250	CY
STRUCTURAL CONCRETE, RETAINING WALL	180	CY
STRUCTURAL CONCRETE, APPROACH SLAB (TYPE N)	95	CY
FRACTURED RIB TEXTURE	3,750	SQFT
PTFE BEARING	8	EA
JOINT SEAL ASSEMBLY (MR 5")	42	LF
JOINT SEAL ASSEMBLY (MR 6")	42	LF
BAR REINFORCING STEEL (BRIDGE)	1,277,000	LB
BAR REINFORCING STEEL (RETAINING WALL)	28,600	LB
HEADED BAR REINFORCEMENT	1,990	EA
12" WELDED STEEL PIPE CASING (BRIDGE)	30	LF
BRIDGE DECK DRAINAGE SYSTEM	5,900	LB
CONCRETE BARRIER (TYPE 736 MODIFIED)	1,673	LF

NOTE:
THE CONTRACTOR SHALL VERIFY ALL CONTROLLING FIELD DIMENSIONS BEFORE ORDERING OR FABRICATING ANY MATERIAL.

Sudhakar Vatti
DESIGN OVERSIGHT Sudhakar Vatti
8-10-09
SIGN OFF DATE

	BY	CHECKED			
DESIGN	J. Hermstad	K. Michalski	LOAD AND RESISTANCE FACTOR DESIGN (LRFD)	LIVE LOADING: HL-93 W/ "LOW BOY" PERMIT DESIGN VEHICLE	
DETAILS	J. Hermstad	K. Michalski	LAYOUT	J. Hermstad	K. Michalski
QUANTITIES	J. Wong	K. Michalski	SPECIFICATIONS	EL Tyk	PLANS AND SPECS COMPARED J. Hermstad

PREPARED FOR THE STATE OF CALIFORNIA DEPARTMENT OF TRANSPORTATION

J. Hermstad
PROJECT ENGINEER

CU 12235
EA 071631

BRIDGE NO. 55-1100G
POST MILES 23.27

N405-W22 CONNECTOR SEP (REPLACE)

GENERAL PLAN NO. 1

DISREGARD PRINTS BEARING EARLIER REVISION DATES

REVISION DATES (PRELIMINARY STAGE ONLY) 03/28/08 04/11/08 07/25/08 10/15/08 04/06/09 07/21/09

SHEET 1 OF 51

DESIGN GENERAL PLAN SHEET (ENGLISH) (REV.2/25/05)

ORIGINAL SCALE IN INCHES FOR REDUCED PLANS 0 1 2 3

FILE => 55-1100g-a-gp01.dgn

USERNAME => rfriehard DATE PLOTTED => 04-FEB-2010 TIME PLOTTED => 07:06

DIST	COUNTY	ROUTE	POST MILES TOTAL PROJECT	SHEET No	TOTAL SHEETS
12	Ora	22,405, 605	R0.3/R0.9, 22.3/24.0,3.0/R1.6	1705	1929

REGISTERED CIVIL ENGINEER 07-27-09 DATE

2-1-10
PLANS APPROVAL DATE

REGISTERED PROFESSIONAL ENGINEER J. Hermstad No. C 66045 Exp. 06-30-10 CIVIL STATE OF CALIFORNIA

The State of California or its officers or agents shall not be responsible for the accuracy or completeness of electronic copies of this plan sheet.

OCTA
550 SOUTH MAIN STREET
ORANGE, CA 92863

TRC
21 TECHNOLOGY DR
IRVINE, CA 92618

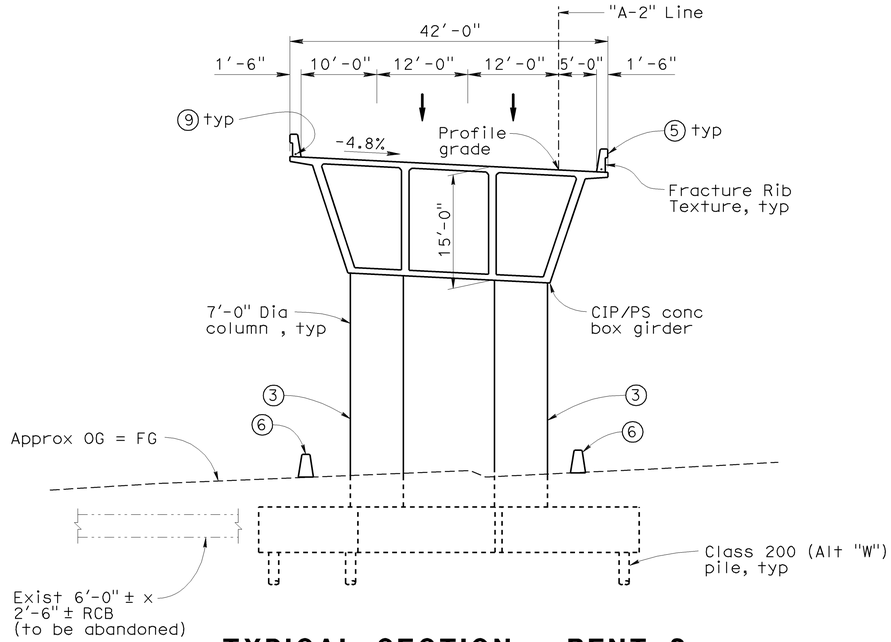

TYPICAL SECTION - BENT 2

1"= 10'

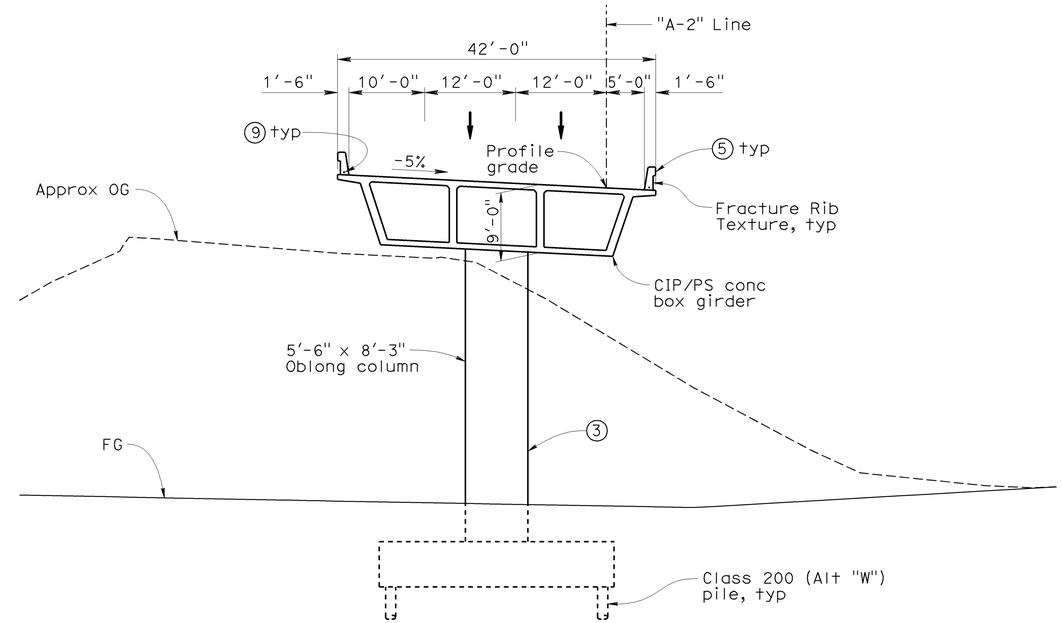

TYPICAL SECTION - BENT 4

1"= 10'

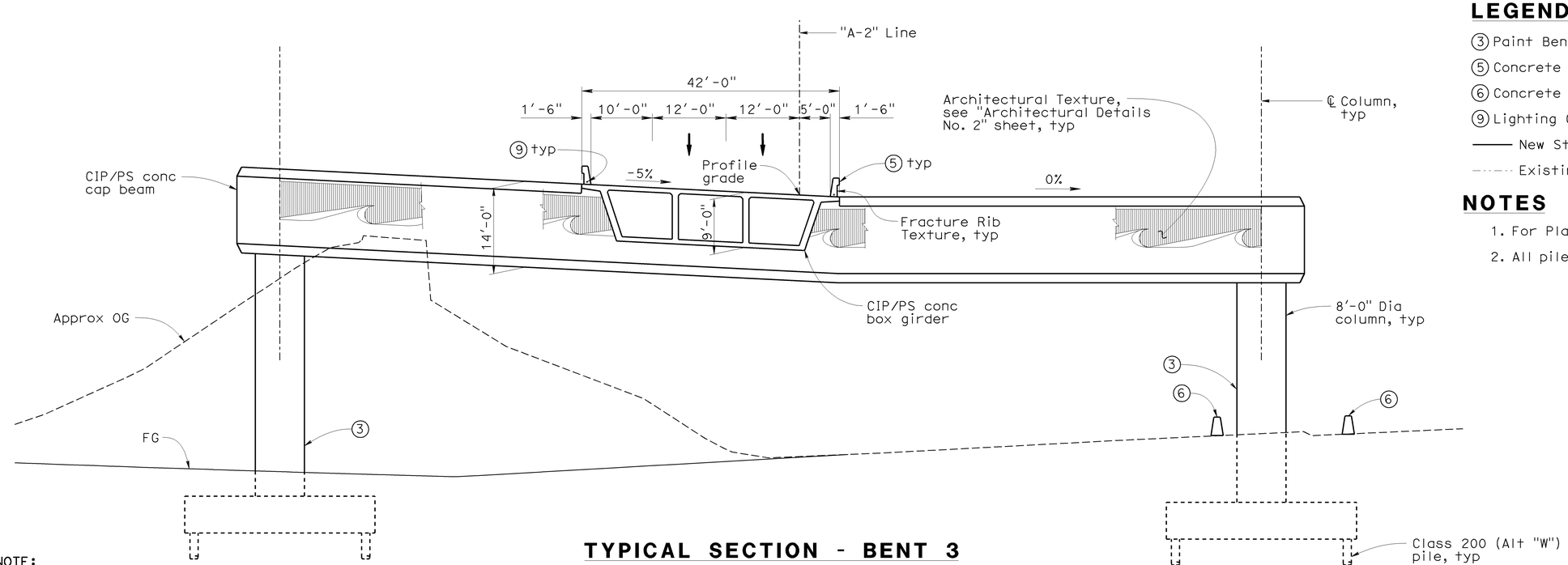

TYPICAL SECTION - BENT 3

1"= 10'

LEGEND

3 Paint Bent Number
5 Concrete Barrier (Type 736 Mod)
6 Concrete Barrier (Type 60G), see "Road Plans"
9 Lighting Conduit, see "Lighting Plans"
—— New Structure
-·-·- Existing Structure

NOTES

1. For Plan and Elevation, see "General Plan No. 1" sheet
2. All piles not shown

NOTE:
THE CONTRACTOR SHALL VERIFY ALL CONTROLLING FIELD DIMENSIONS BEFORE ORDERING OR FABRICATING ANY MATERIAL.

Sudhakar Vatti
DESIGN OVERSIGHT Sudhakar Vatti
8-10-09
SIGN OFF DATE

	BY	CHECKED
DESIGN	J. Hermstad	K. Michalski
DETAILS	J. Hermstad	K. Michalski
QUANTITIES	J. Wong	K. Michalski

LOAD AND RESISTANCE FACTOR DESIGN (LRFD) — LIVE LOADING: HL-93 W/ "LOW BOY" PERMIT DESIGN VEHICLE

	BY	CHECKED
LAYOUT	J. Hermstad	K. Michalski
SPECIFICATIONS	EL Tyk	PLANS AND SPECS COMPARED J. Hermstad

PREPARED FOR THE STATE OF CALIFORNIA DEPARTMENT OF TRANSPORTATION

J. Hermstad
PROJECT ENGINEER

BRIDGE NO. 55-1100G
POST MILES 23.27

N405-W22 CONNECTOR SEP (REPLACE)

GENERAL PLAN NO. 2

DESIGN GENERAL PLAN SHEET (ENGLISH) (REV.2/25/05)

ORIGINAL SCALE IN INCHES FOR REDUCED PLANS 0 1 2 3

CU 12235
EA 071631

DISREGARD PRINTS BEARING EARLIER REVISION DATES

REVISION DATES (PRELIMINARY STAGE ONLY): 03/20/08 04/11/08 01/25/08 10/15/08 04/06/09 01/21/09

SHEET 2 OF 51

FILE => 55-1100g-a-gp02.dgn

USERNAME => trlenard DATE PLOTTED => 04-FEB-2010 TIME PLOTTED => 07:06

DIST	COUNTY	ROUTE	POST MILES TOTAL PROJECT	SHEET No	TOTAL SHEETS
12	Ora	22,405, 605	R0.3/R0.9, 22.3/24.0,3.0/R1.6	1706	1929

07-27-09
REGISTERED CIVIL ENGINEER DATE

2-1-10
PLANS APPROVAL DATE

REGISTERED PROFESSIONAL ENGINEER J. Hermstad No. C 66045 Exp. 06-30-10 CIVIL STATE OF CALIFORNIA

The State of California or its officers or agents shall not be responsible for the accuracy or completeness of electronic copies of this plan sheet.

OCTA
550 SOUTH MAIN STREET
ORANGE, CA 92863

TRC
21 TECHNOLOGY DR
IRVINE, CA 92618

STANDARD PLANS DATED MAY 2006

	A10A	Acronyms and Abbreviations (Sheet 1 of 2)
	A10B	Acronyms and Abbreviations (Sheet 2 of 2)
	A10C	Symbols (Sheet 1 of 2)
	A10D	Symbols (Sheet 2 of 2)
	A62B	Limits of payment for excavation and backfill bridge surcharge and wall
	A62C	Limits of payment for excavation and backfill bridge
	A74	Survey Monuments
	D99B	Edge Drain Outlet and Vent Details
	B0-1	Bridge Details
	B0-3	Bridge Details
	B0-5	Bridge Details
	B0-13	Bridge Details
RSP	B2-8	Pile Details Class 200
	B3-1	Retaining Wall Type 1 H= 4′ Through 30′
	B3-8	Retaining Wall Details No. 1
	B7-1	Box Girder Details
	B7-6	Deck Drains Types D-1 and D-2
	B7-8	Deck Drainage Details
	B7-10	Utility Opening - Box Girder
	B8-5	Cast-in-Place Prestressed Girder Details
	B11-56	Concrete Barrier Type 736
	B14-5	Water Supply Line (Details) (Pipe sizes less than 4")
RSP	ES-6A	Electrical Systems Lighting (Types 15 and 21)

Standard Plan Sheet No.

Detail No.

INDEX TO BRIDGE PLANS

SHEET NO.	TITLE	SHEET NO.	TITLE
1	General Plan No. 1	26	Bent 4 Details No. 2
2	General Plan No. 2	27	Typical Section No. 1
3	Index to Plans	28	Typical Section No. 2
4	Deck Contours	29	Girder Layout No. 1
5	Foundation Plan	30	Girder Layout No. 2
6	Bridge Removal Details	31	Girder Layout No. 3
7	Abutment 1 Layout	32	Girder Reinforcement No. 1
8	Abutment 5 Layout	33	Girder Reinforcement No. 2
9	Abutment Details No. 1	34	Girder Reinforcement No. 3
10	Abutment Details No. 2	35	Architectural Details No. 1
11	Abutment Details No. 3	36	Architectural Details No. 2
12	Abutment Details No. 4	37	Architectural Details No. 3
13	PTFE/Elastomeric Bearing	38	Joint Seal - Abutment Details (Movement Rating Greater than 4")
14	Bent 2 Layout	39	Deck Drainage Layout
15	Bent 2 Details No. 1	40	Deck Drainage Details
16	Bent 2 Details No. 2	41	Structure Approach Type N(30S)
17	Bent 2 Details No. 3	42	Structure Approach Drainage Details
18	Bent 3 Layout	43	Log of Test Borings No. 1
19	Bent 3 Details No. 1	44	Log of Test Borings No. 2
20	Bent 3 Details No. 2	45	Log of Test Borings No. 3
21	Bent 3 Details No. 3	46	Log of Test Borings No. 4
22	Bent 3 Details No. 4	47	Log of Test Borings No. 5
23	Bent 3 Details No. 5	48	Log of Test Borings No. 6
24	Bent 4 layout	49	Log of Test Borings No. 7
25	Bent 4 Details No. 1	50	Log of Test Borings No. 8
		51	Log of Test Borings No. 9 (As-built)

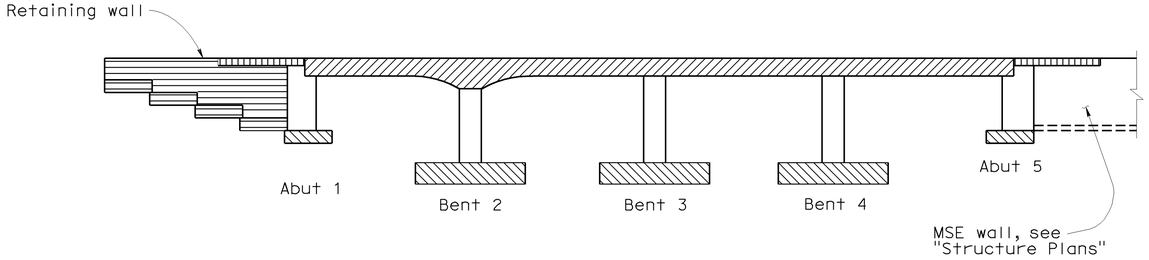

Structural Concrete, Bridge

Structural Concrete, Bridge (f′c = 5.4 ksi @ 28 days)

Structural Concrete, Bridge Footing

Structural Concrete, Approach Slab

Structural Concrete, Retaining Wall

CONCRETE STRENGTH AND TYPE LIMITS

No Scale

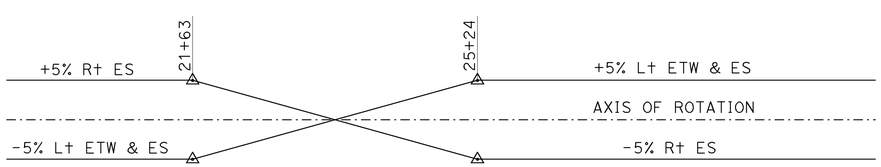

SUPERELEVATION DIAGRAM

No Scale

GENERAL NOTES
LOAD AND RESISTANCE FACTOR DESIGN

DESIGN: AASHTO LRFD Bridge Design Specifications, 3rd edition with Interims through 2006 and the Caltrans Amendments v3.06.01"; except that earth retaining systems, bridge barrier and structure approach slabs are designed using Bridge Design Specifications ('96 AASHTO w/ Revisions by Caltrans).

SEISMIC DESIGN: CALTRANS SEISMIC DESIGN CRITERIA (SDC), Version 1.4 dated June 2006.

DEAD LOAD: Includes 35 psf for future wearing surface

LIVE LOADING: HL93 and permit design load.

SEISMIC LOADING: Site Specific ARS as Shown

Modified SDC ARS Curve for Soil Profile D
(M=7.25± 0.25)
(Peak Rock Acceleration = 0.6g)
(Includes modifications for distance to fault)

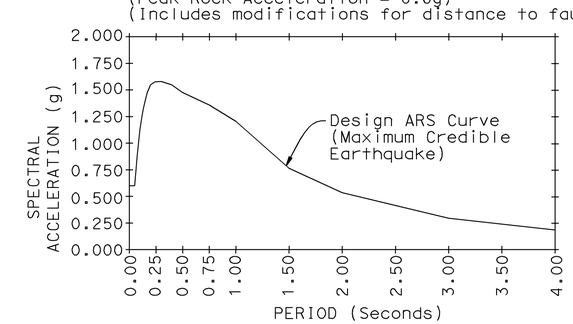

CONCRETE: f_y = 60 ksi
f'_c = 3.6 ksi
n = 8
See prestressing notes on "Girder Layout" sheets

STRUCTURAL STEEL: Steel Pipe Piles: ASTM A252 Grade 3

Sudhakar Vatti
DESIGN OVERSIGHT Sudhakar Vatti
8-10-09
SIGN OFF DATE

	BY	CHECKED
DESIGN	J. Hermstad	K. Michalski
DETAILS	J. Hermstad	K. Michalski
QUANTITIES	J. Wong	K. Michalski

PREPARED FOR THE STATE OF CALIFORNIA DEPARTMENT OF TRANSPORTATION

J. Hermstad
PROJECT ENGINEER

BRIDGE NO. 55-1100G
POST MILE 23.27

N405-W22 CONNECTOR SEP (REPLACE)
INDEX TO PLANS

DESIGN DETAIL SHEET (ENGLISH) (REV. 2/25/05)

ORIGINAL SCALE IN INCHES FOR REDUCED PLANS 0 1 2 3

CU 12235
EA 071631

DISREGARD PRINTS BEARING EARLIER REVISION DATES

REVISION DATES (PRELIMINARY STAGE ONLY) 10/15/08 04/06/09 07/27/09

SHEET 3 OF 51

FILE => 55-1100g-a-itp.dgn

USERNAME => rfriehard DATE PLOTTED => 04-FEB-2010 TIME PLOTTED => 07:06

DIST	COUNTY	ROUTE	POST MILES TOTAL PROJECT	SHEET No	TOTAL SHEETS
12	Ora	22,405, 605	R0.3/R0.9, 22.3/24.0,3.0/R1.6	1707	1929

REGISTERED CIVIL ENGINEER 07-27-09 DATE

2-1-10
PLANS APPROVAL DATE

REGISTERED PROFESSIONAL ENGINEER J. Hermstad No. C 66045 Exp. 06-30-10 CIVIL STATE OF CALIFORNIA

The State of California or its officers or agents shall not be responsible for the accuracy or completeness of electronic copies of this plan sheet.

OCTA
550 SOUTH MAIN STREET
ORANGE, CA 92863

TRC
21 TECHNOLOGY DR
IRVINE, CA 92618

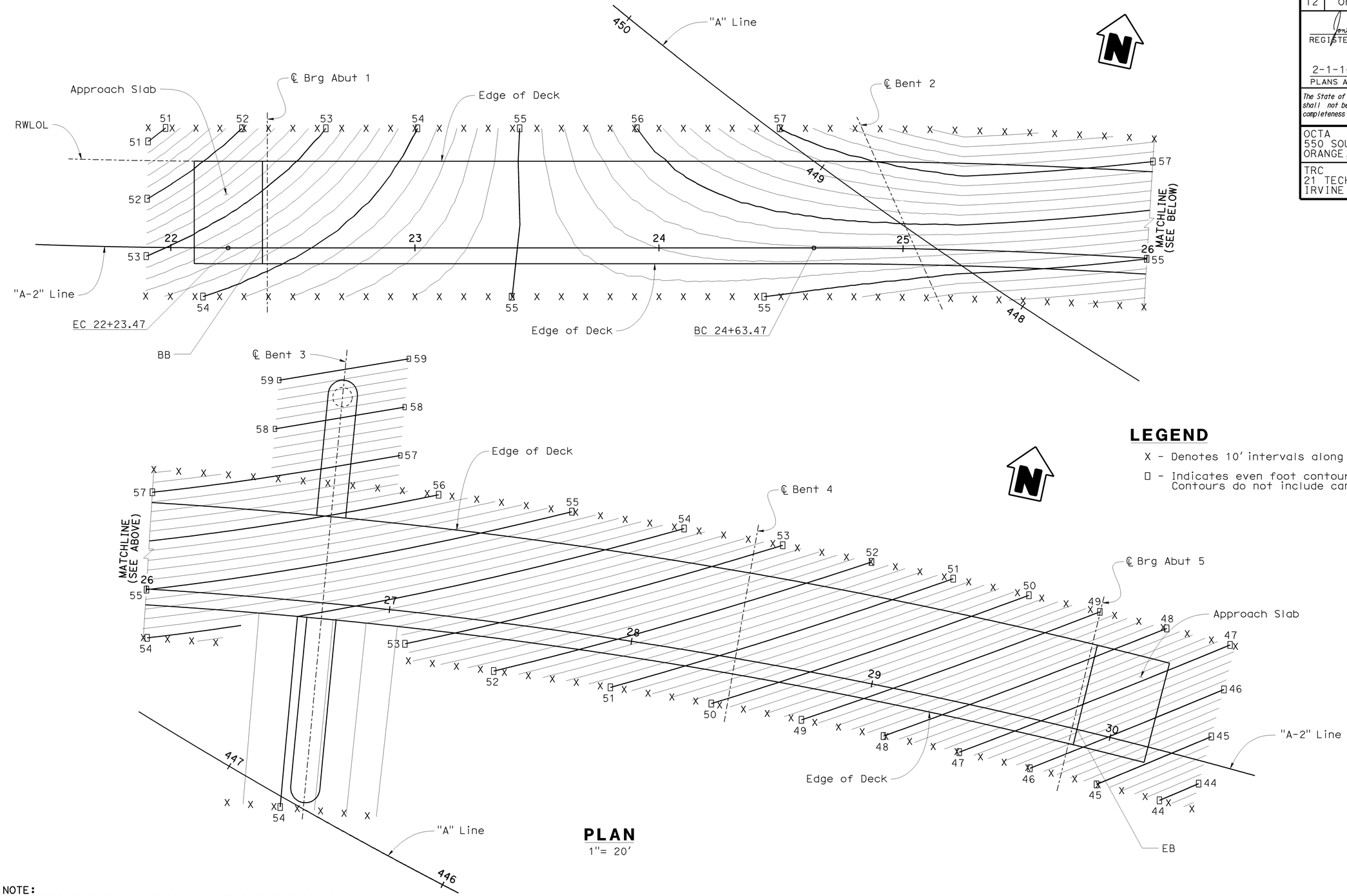

LEGEND

X - Denotes 10' intervals along "A-2" Line

□ - Indicates even foot contours. Contour interval is 0.2'
Contours do not include camber.

PLAN

1"= 20'

NOTE:
THE CONTRACTOR SHALL VERIFY ALL CONTROLLING FIELD DIMENSIONS BEFORE ORDERING OR FABRICATING ANY MATERIAL.

Sudhakar Vatti
DESIGN OVERSIGHT Sudhakar Vatti
8-10-09
SIGN OFF DATE

	BY	CHECKED
DESIGN	J. Hermstad	K. Michalski
DETAILS	J. Hermstad	K. Michalski
QUANTITIES	J. Wong	K. Michalski

PREPARED FOR THE STATE OF CALIFORNIA DEPARTMENT OF TRANSPORTATION

J. Hermstad
PROJECT ENGINEER

BRIDGE NO. 55-1100G
POST MILE 23.27

N405-W22 CONNECTOR SEP (REPLACE)

DECK CONTOURS

DESIGN DETAIL SHEET (ENGLISH) (REV. 2/25/05)

ORIGINAL SCALE IN INCHES FOR REDUCED PLANS 0 1 2 3

CU 12235
EA 071631

DISREGARD PRINTS BEARING EARLIER REVISION DATES → 10/25/08 04/06/09 07/27/09

SHEET 4 OF 51

FILE => 55-1100g-d-dc01.dgn

USERNAME => trlenard DATE PLOTTED => 04-FEB-2010 TIME PLOTTED => 07:06

DIST	COUNTY	ROUTE	POST MILES TOTAL PROJECT	SHEET No	TOTAL SHEETS
12	Ora	22,405, 605	R0.3/R0.9, 22.3/24.0,3.0/R1.6	1708	1929

REGISTERED CIVIL ENGINEER 07-27-09 DATE

2-1-10
PLANS APPROVAL DATE

REGISTERED PROFESSIONAL ENGINEER J. Hermstad No. C 66045 Exp. 06-30-10 CIVIL STATE OF CALIFORNIA

The State of California or its officers or agents shall not be responsible for the accuracy or completeness of electronic copies of this plan sheet.

OCTA
550 SOUTH MAIN STREET
ORANGE, CA 92863

TRC
21 TECHNOLOGY DR
IRVINE, CA 92618

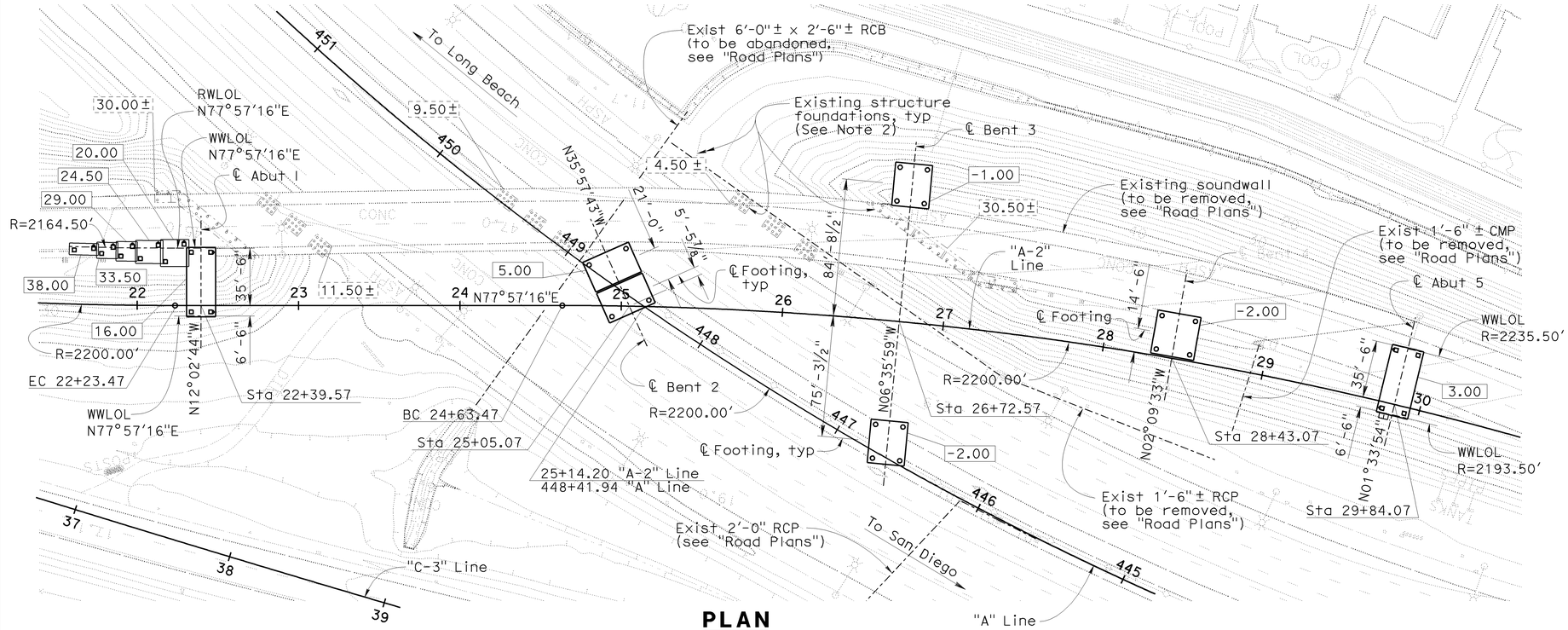

PLAN
1"= 40'

LEGEND

XX.XX±	Indicates bottom of existing footing elevation
XX.XX	Indicates bottom of footing elevation
▫	Indicates Class 200, Alt "X" Pile
◪	Indicates Class 200, Alt "X" pile (Battered 1:3)
○	Indicates Class 200, Alt "W" pile
———	New Structure
- - - -	Existing Structure

NOTES

1. All piles not shown
2. Locations of existing structure foundations are approximate

PILE DATA TABLE

Location	Pile Type	Nominal Resistance Compression (kips)	Nominal Resistance Tension (kips)	Design Tip Elevation (ft)	Specified Tip Elevation (ft)	Nominal Driving Resistance (kips)
Abut 1 Northerly Retaining Wall	Class 200, Alt "X"	280	0	-41 (a), -36 (c), -10 (d)	-41	280
Abut 1	Class 200, Alt "X"	380	0	-41 (a), -36 (c), -14 (d)	-41	380
Bent 2	Class 200, Alt "W"	400	170	-54 (a), -40 (b), -34 (c), -25 (d)	-54	400
Bent 3 L	Class 200, Alt "W"	350	170	-59 (a), -40 (b), -34 (c), -31 (d)	-59	350
Bent 3 R	Class 200, Alt "W"	350	170	-57 (a), -38 (b), -34 (c), -32 (d)	-57	350
Bent 4	Class 200, Alt "W"	330	160	-59 (a), -36 (b), -34 (c), -32 (d)	-59	330
Abut 5	Class 200, Alt "X"	280	0	-32 (a), -23 (c), -27 (d)	-32	280

Notes: 1) Design tip elevations for Abutments are controlled by : (a) Compression, (c) Settlement, (d) Lateral Load
2) Design tip elevations for Bents are controlled by: (a) Compression, (b) Tension, (c) Settlement, (d) Lateral Load
3) The specified tip elevation shall not be raised above the design tip elevations for tension load, lateral load, and tolerable settlement

BASIS OF COORDINATES

Bearings and coordinates as shown hereon are in terms of the California Coordinate System of 1983 (Epoch 1991.35), Zone 6; based locally upon the following County of Orange Control Stations as published by the County of Orange

Name	Northing (ft)	Easting (ft)
3756	2,230,831.57	6,007,513.47
3898R1	2,236,670.48	6,003,468.80

BENCHMARK

Monument: 1A-144-04

Described by OCS 2005 - Found 3¾" OCS aluminum benchmark disk stamped "1A-144-04", set in the southwesterly corner of a 4.4 ft by 4.4 ft concrete catch basin. Monument is located in the northeasterly corner of the intersection of Seal Beach Boulevard and St. Cloud Drive, 44 ft easterly of the centerline of Seal Beach Boulevard and 58 ft northerly of the centerline of St. Cloud Dr. Monument is set level with the sidewalk.

Elevation: 15.370 feet

Monument 1A-123-70

Described by OCS 2002 - Found 3¾" OCS aluminum benchmark disk stamped "1A-123-70", set in a concrete channel wall. Monument is located 0.6 miles northerly along Seal Beach Boulevard from its intersection with Westminister Avenue, 65 ft easterly from the centerline of Seal Beach Boulevard and 1 ft northeasterly of the south end of a concrete headwall. Monument is down 1.5 ft from the top of the headwall.

Elevation: 11.631 feet

GEOTECHNICAL PROFESSIONAL APPROVAL DATE 07-27-09

NOTE:
THE CONTRACTOR SHALL VERIFY ALL CONTROLLING FIELD DIMENSIONS BEFORE ORDERING OR FABRICATING ANY MATERIAL.

Sudhakar Vatti
DESIGN OVERSIGHT Sudhakar Vatti
8-10-09
SIGN OFF DATE

SCALE:	VERT.DATUM NAVD88	HORZ.DATUM CCS83
PHOTOGRAMMETRY AS OF: 12/07	ALIGNMENT TIES	
SURVEYED BY CALTRANS	DRAFTED BY AE, Inc.	
FIELD CHECKED BY AE, Inc.	CHECKED BY AE, Inc.	

	BY	CHECKED
DESIGN	J. Hermstad	K. Michalski
DETAILS	J. Hermstad	K. Michalski
QUANTITIES	J. Wong	K. Michalski

PREPARED FOR THE STATE OF CALIFORNIA DEPARTMENT OF TRANSPORTATION

J. Hermstad
PROJECT ENGINEER

BRIDGE NO. 55-1100G
POST MILE 23.27

N405-W22 CONNECTOR SEP (REPLACE)
FOUNDATION PLAN

FOUNDATION PLAN SHEET (ENGLISH) (REV. 2-25-05)

ORIGINAL SCALE IN INCHES FOR REDUCED PLANS 0 1 2 3

CU 12235
EA 071631

DISREGARD PRINTS BEARING EARLIER REVISION DATES

REVISION DATES (PRELIMINARY STAGE ONLY) 03/28/08 04/17/08 07/28/08 10/15/08 04/06/09 07/21/09

SHEET 5 OF 51

FILE => 55-1100g-e-fdp101.dgn

USERNAME = trlehard DATE PLOTTED => 04-FEB-2010 TIME PLOTTED => 07:06

DIST	COUNTY	ROUTE	POST MILES TOTAL PROJECT	SHEET No	TOTAL SHEETS
12	Ora	22,405, 605	R0.3/R0.9, 22.3/24.0,3.0/R1.6	1709	1929

REGISTERED CIVIL ENGINEER 07-27-09 DATE

2-1-10
PLANS APPROVAL DATE

REGISTERED PROFESSIONAL ENGINEER J. Hermstad No. C 66045 Exp. 06-30-10 CIVIL STATE OF CALIFORNIA

The State of California or its officers or agents shall not be responsible for the accuracy or completeness of electronic copies of this plan sheet.

OCTA
550 SOUTH MAIN STREET
ORANGE, CA 92863

TRC
21 TECHNOLOGY DR
IRVINE, CA 92618

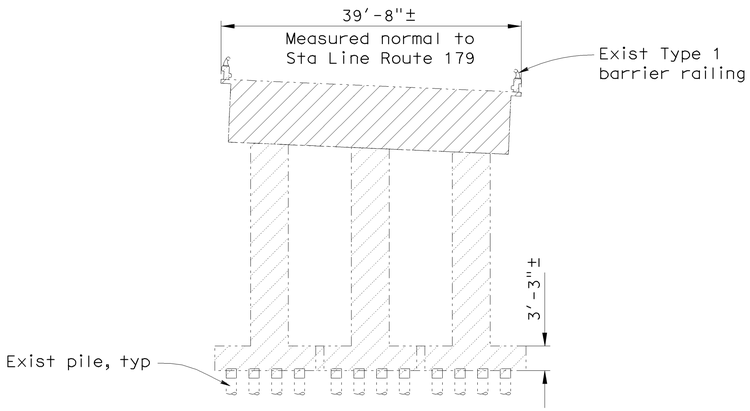

Note: Exist Bent 3 shown, exist Bent 2 and Bent 4 similar

TYPICAL SECTION

1" = 10'

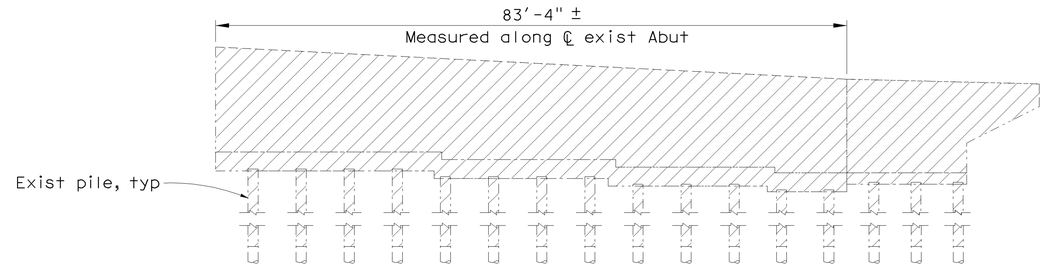

Note: Exist Abut 5 shown, exist Abut 1 similar

ABUTMENT ELEVATION

1" = 10'

LEGEND

Indicates Limits of Existing Br No. 55-0333L to be removed

NOTES

1. For dimensions, details and information not shown, see As-Built plans

EXISTING PILING REMOVAL LIMITS TABLE

Existing Bridge Locations:	Abut 1	Bent 2	Bent 3	Bent 4	Abut 5
Pile Removal Elevation	15.00 ±	10.50 ±	8.50 ±	3.50 ±	-3.00 ±

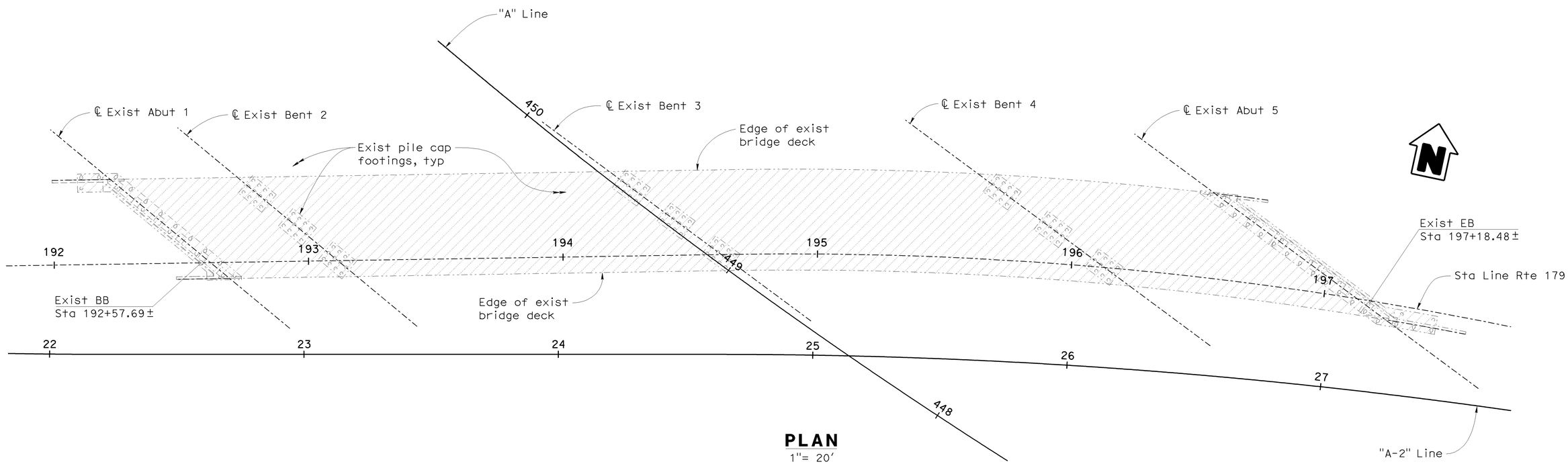

PLAN

1"= 20'

NOTE:
THE CONTRACTOR SHALL VERIFY ALL CONTROLLING FIELD DIMENSIONS BEFORE ORDERING OR FABRICATING ANY MATERIAL.

Sudhakar Vatti
DESIGN OVERSIGHT Sudhakar Vatti
8-10-09
SIGN OFF DATE

	BY	CHECKED
DESIGN	J. Hermstad	K. Michalski
DETAILS	J. Hermstad	K. Michalski
QUANTITIES	J. Wong	K. Michalski

PREPARED FOR THE STATE OF CALIFORNIA DEPARTMENT OF TRANSPORTATION

J. Hermstad
PROJECT ENGINEER

BRIDGE NO. 55-1100G
POST MILE 23.27

N405-W22 CONNECTOR SEP (REPLACE)
BRIDGE REMOVAL DETAILS

DESIGN DETAIL SHEET (ENGLISH) (REV. 2/25/05)

ORIGINAL SCALE IN INCHES FOR REDUCED PLANS 0 1 2 3

CU 12235
EA 071631

DISREGARD PRINTS BEARING EARLIER REVISION DATES

REVISION DATES (PRELIMINARY STAGE ONLY) 10/15/08 04/06/09 07/27/09

SHEET 6 OF 51

FILE => 55-1100g-d-rem01.dgn

USERNAME => rtrenord DATE PLOTTED => 04-FEB-2010 TIME PLOTTED => 07:06

DIST	COUNTY	ROUTE	POST MILES TOTAL PROJECT	SHEET No	TOTAL SHEETS
12	Ora	22,405, 605	R0.3/R0.9, 22.3/24.0,3.0/R1.6	1710	1929

REGISTERED CIVIL ENGINEER 07-27-09 DATE

2-1-10
PLANS APPROVAL DATE

REGISTERED PROFESSIONAL ENGINEER J. Hermstad No. C 66045 Exp. 06-30-10 CIVIL STATE OF CALIFORNIA

The State of California or its officers or agents shall not be responsible for the accuracy or completeness of electronic copies of this plan sheet.

OCTA
550 SOUTH MAIN STREET
ORANGE, CA 92863

TRC
21 TECHNOLOGY DR
IRVINE, CA 92618

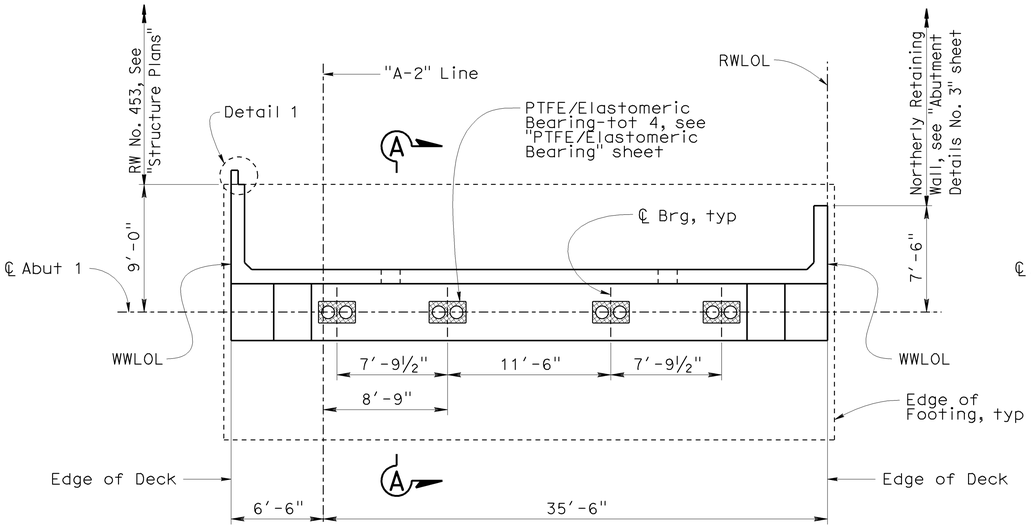

PLAN

3/16"= 1'-0"

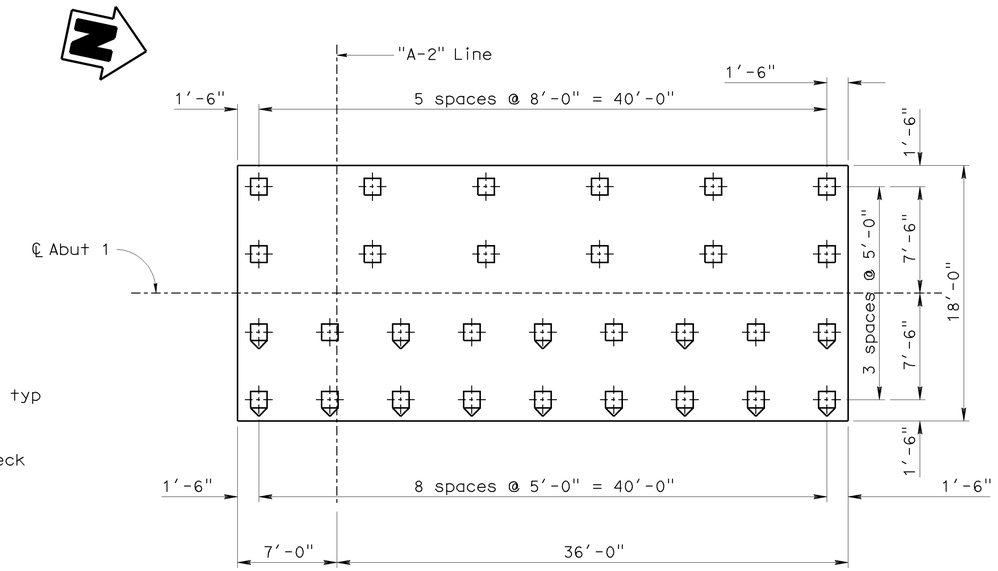

FOOTING PLAN

3/16"= 1'-0"

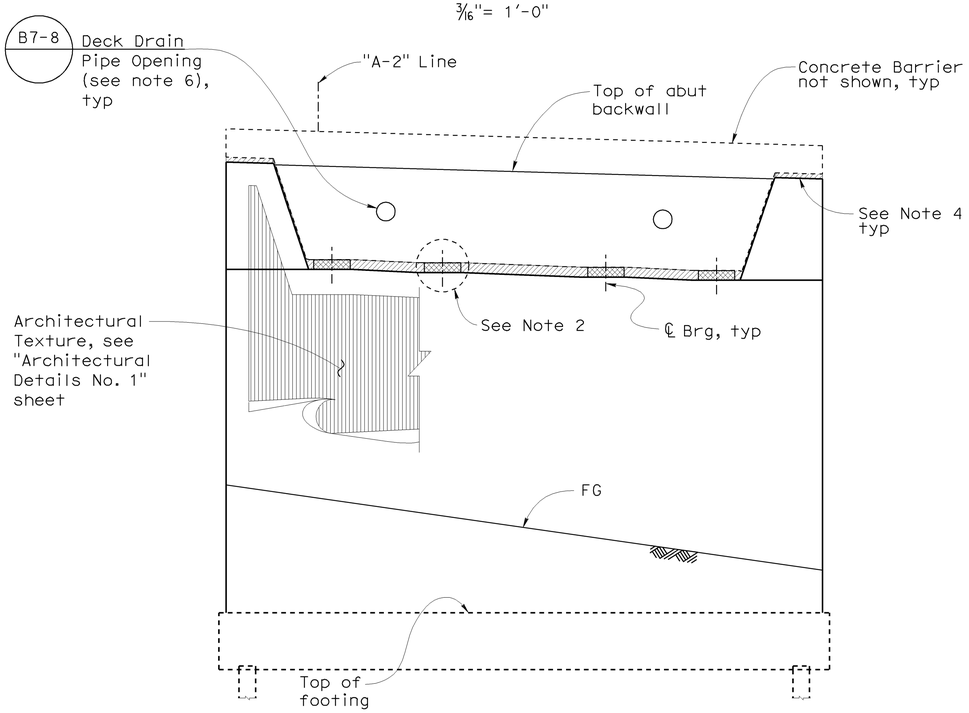

ELEVATION

3/16"= 1'-0"

Note: All piles not shown

LEGEND

Indicates Class 200, Alt "X" Pile

Indicates Class 200, Alt "X" Pile (Battered 1:3)

NOTES

1. For Section A-A, see "Abutment Details No. 1" sheet
2. For Bearing Pad Details, see "Abutment Details No. 2" sheet and "PTFE/Elastomeric Bearing" sheet
3. For shear key details, see "Abutment Details No. 4" sheet
4. Outer 6" of expanded polystyrene to be removed after construction
5. For Detail 1 see "Abutment 5 Layout" sheet
6. For deck drainage information, see "Deck Drainage Layout" sheet and "Deck Drainage Details" sheet

Sudhakar Vatti
DESIGN OVERSIGHT Sudhakar Vatti
8-10-09
SIGN OFF DATE

	BY	CHECKED
DESIGN	J. Hermstad	K. Michalski
DETAILS	J. Hermstad	K. Michalski
QUANTITIES	J. Wong	K. Michalski

PREPARED FOR THE STATE OF CALIFORNIA DEPARTMENT OF TRANSPORTATION

J. Hermstad
PROJECT ENGINEER

BRIDGE NO. 55-1100G
POST MILE 23.27

N405-W22 CONNECTOR SEP (REPLACE)
ABUTMENT 1 LAYOUT

DESIGN DETAIL SHEET (ENGLISH) (REV. 2/25/05)

ORIGINAL SCALE IN INCHES FOR REDUCED PLANS 0 1 2 3

CU 12235
EA 071631

DISREGARD PRINTS BEARING EARLIER REVISION DATES 10/15/08 04/06/09 07/27/09

REVISION DATES (PRELIMINARY STAGE ONLY)

SHEET 7 OF 51

FILE => 55-1100g-f-a01.dgn

USERNAME => trlenard DATE PLOTTED => 04-FEB-2010 TIME PLOTTED => 07:06

DIST	COUNTY	ROUTE	POST MILES TOTAL PROJECT	SHEET No	TOTAL SHEETS
12	Ora	22,405, 605	R0.3/R0.9, 22.3/24.0,3.0/R1.6	1711	1929

REGISTERED CIVIL ENGINEER 07-27-09 DATE

2-1-10
PLANS APPROVAL DATE

REGISTERED PROFESSIONAL ENGINEER J. Hermstad No. C 66045 Exp. 06-30-10 CIVIL STATE OF CALIFORNIA

The State of California or its officers or agents shall not be responsible for the accuracy or completeness of electronic copies of this plan sheet.

OCTA
550 SOUTH MAIN STREET
ORANGE, CA 92863

TRC
21 TECHNOLOGY DR
IRVINE, CA 92618

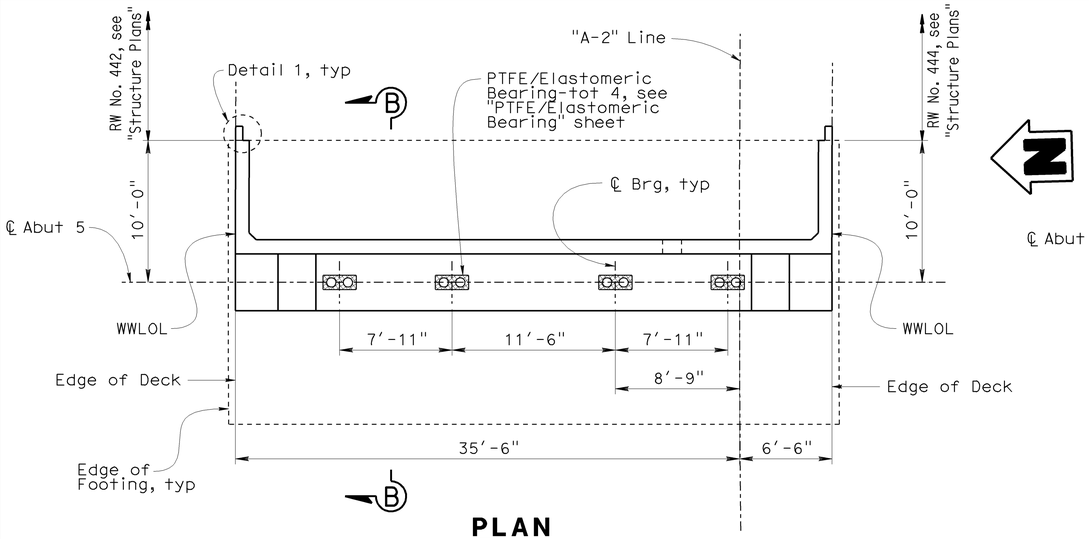

PLAN

3/16"= 1'-0"

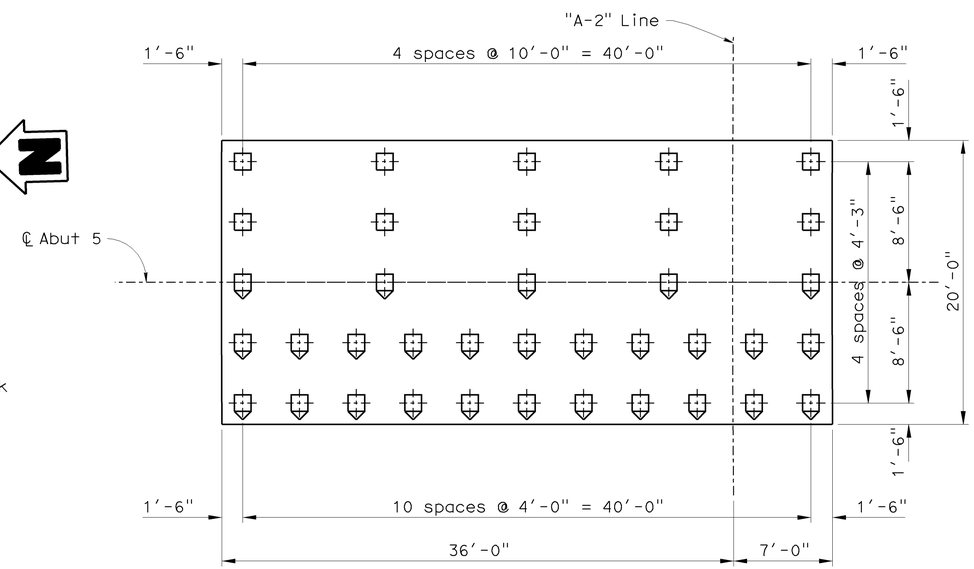

FOOTING PLAN

3/16"= 1'-0"

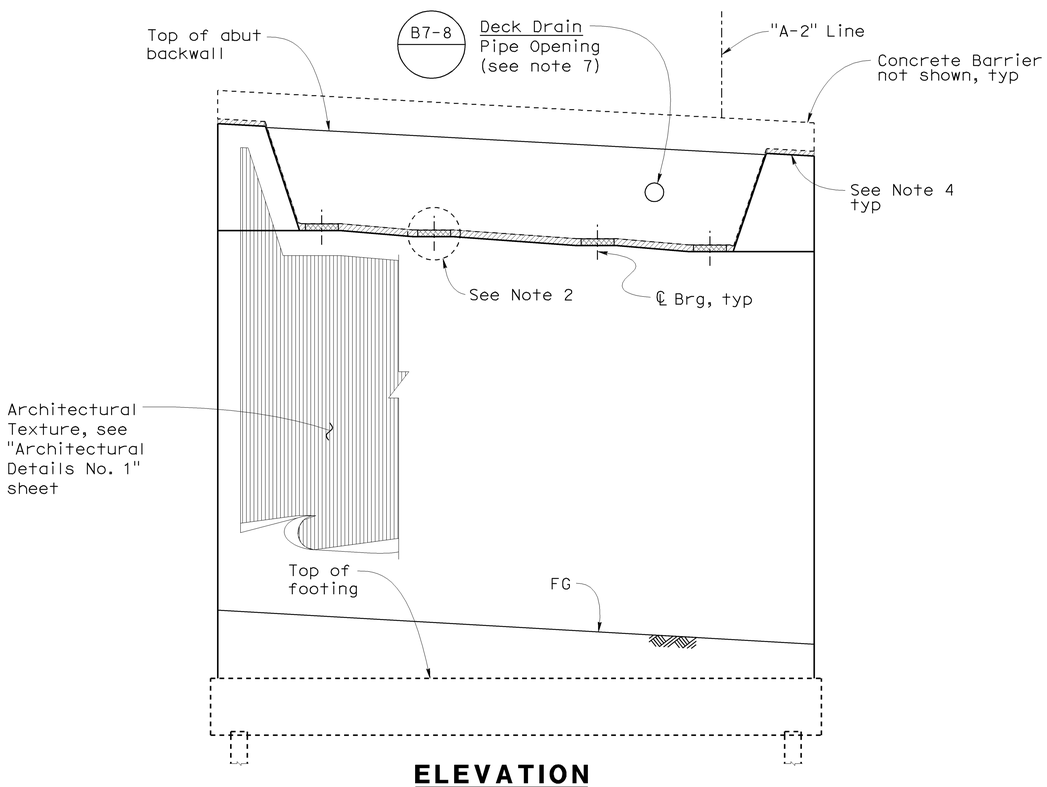

ELEVATION

3/16"= 1'-0"

Note: All piles not shown

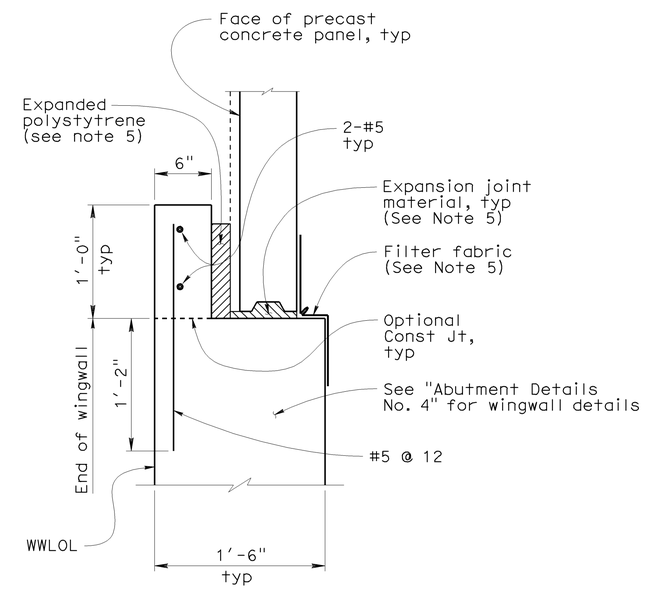

DETAIL 1

No Scale

LEGEND

Indicates Class 200, Alt "X" Pile

Indicates Class 200, Alt "X" Pile (Battered 1:3)

NOTES

1. For Section B-B, see "Abutment Details No. 2" sheet
2. For Bearing Pad Details, see "Abutment Details No. 2" sheet and "PTFE/Elastomeric Bearing" sheet
3. For shear key details, see "Abutment Details No. 4" sheet
4. Outer 6" of expanded polystyrene to be removed after construction
5. For additional information see "Structure Plans" for RW No. 442, RW No. 444, and RW No. 453
6. Offset between face of MSE panel and face of the concrete wall as dictated by location layout lines shown elsewhere in Project Plans
7. For deck drainage information, see "Deck Drainage Layout" sheet and "Deck Drainage Details" sheet

Sudhakar Vatti
DESIGN OVERSIGHT Sudhakar Vatti
8-10-09
SIGN OFF DATE

	BY	CHECKED
DESIGN	J. Hermstad	K. Michalski
DETAILS	J. Hermstad	K. Michalski
QUANTITIES	J. Wong	K. Michalski

PREPARED FOR THE STATE OF CALIFORNIA DEPARTMENT OF TRANSPORTATION

J. Hermstad
PROJECT ENGINEER

BRIDGE NO. 55-1100G
POST MILE 23.27

N405-W22 CONNECTOR SEP (REPLACE)

ABUTMENT 5 LAYOUT

DESIGN DETAIL SHEET (ENGLISH) (REV. 2/25/05)

ORIGINAL SCALE IN INCHES FOR REDUCED PLANS 0 1 2 3

CU 12235
EA 071631

DISREGARD PRINTS BEARING EARLIER REVISION DATES

REVISION DATES (PRELIMINARY STAGE ONLY) 10/25/08 04/06/09 07/27/09

SHEET 8 OF 51

FILE => 55-1100g-f-a02.dgn

USERNAME => friehard DATE PLOTTED => 04-FEB-2010 TIME PLOTTED => 07:06

DIST	COUNTY	ROUTE	POST MILES TOTAL PROJECT	SHEET No	TOTAL SHEETS
12	Ora	22,405, 605	R0.3/R0.9, 22.3/24.0,3.0/R1.6	1712	1929

REGISTERED CIVIL ENGINEER 07-27-09 DATE

2-1-10
PLANS APPROVAL DATE

REGISTERED PROFESSIONAL ENGINEER J. Hermstad No. C 66045 Exp. 06-30-10 CIVIL STATE OF CALIFORNIA

The State of California or its officers or agents shall not be responsible for the accuracy or completeness of electronic copies of this plan sheet.

OCTA
550 SOUTH MAIN STREET
ORANGE, CA 92863

TRC
21 TECHNOLOGY DR
IRVINE, CA 92618

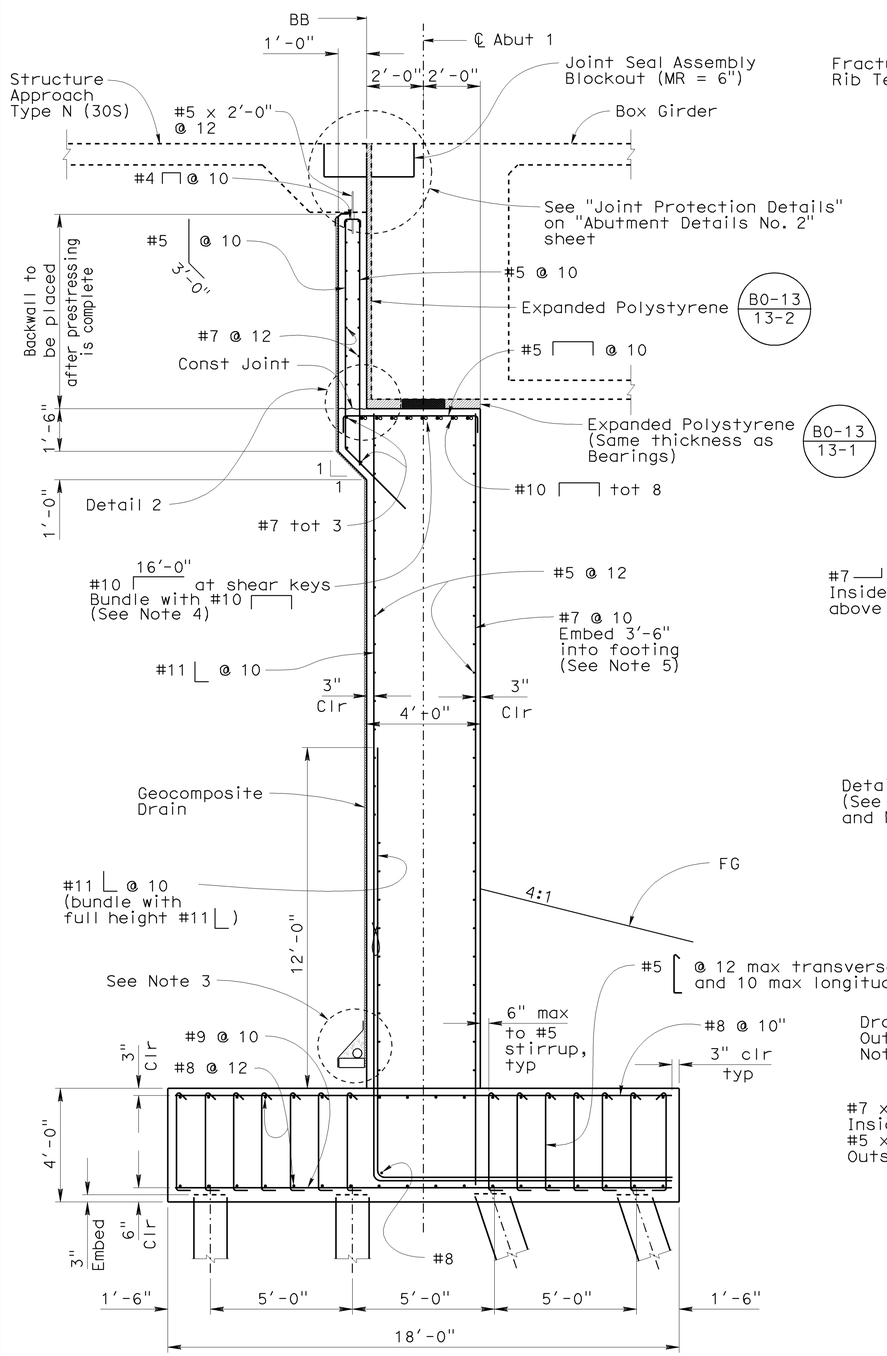

SECTION A-A

3/8"= 1'-0"

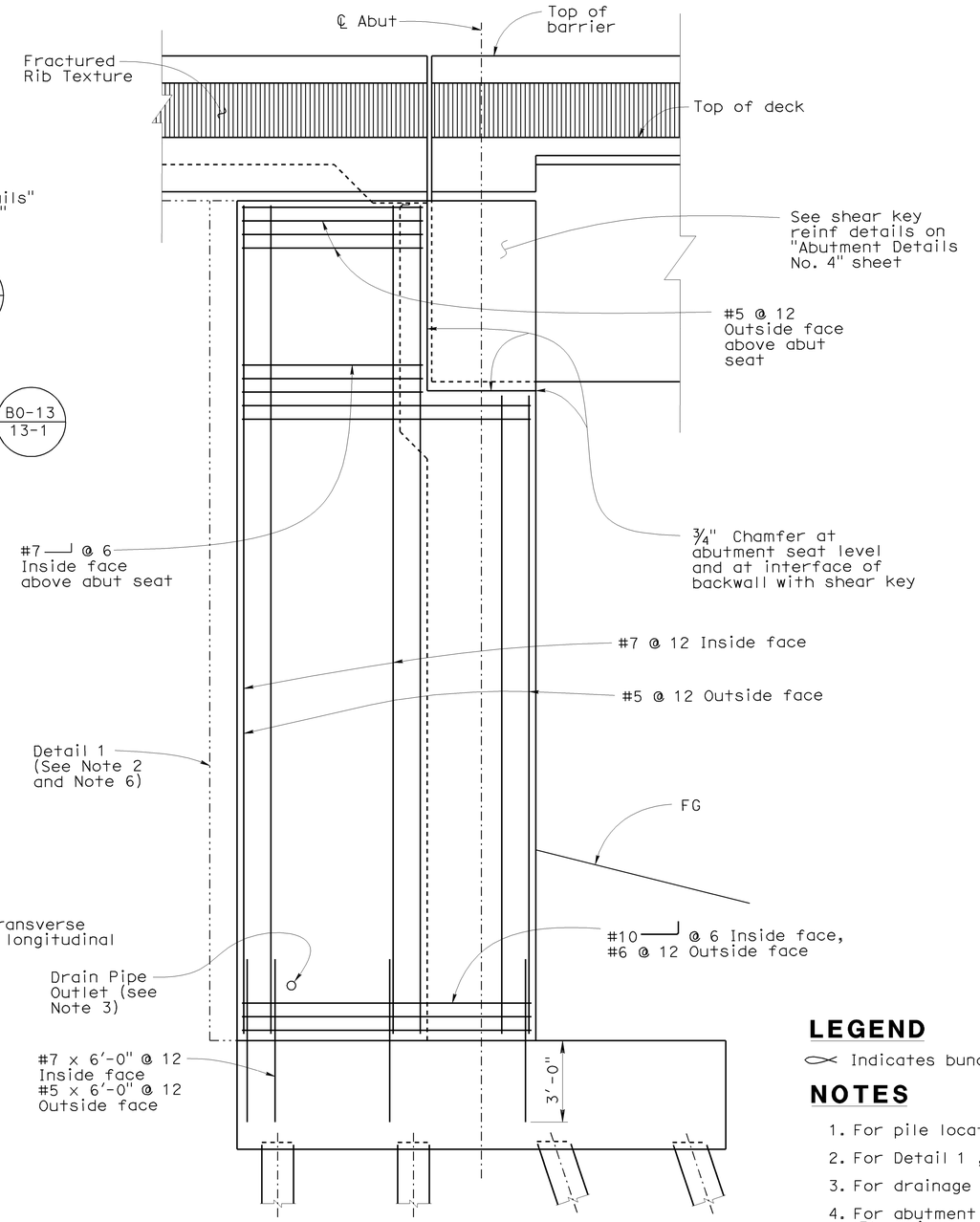

Note: Abutment 1 South Wingwall shown. Other wingwalls similar.

WINGWALL ELEVATION

3/8"= 1'-0"

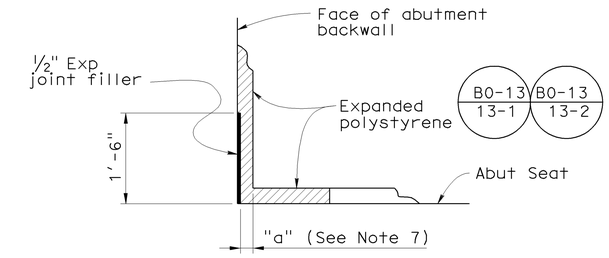

DETAIL 2

No Scale

LEGEND

Indicates bundled bars

NOTES

1. For pile locations, see "Abutment 1 Layout" sheet
2. For Detail 1 , see "Abutment 5 Layout" sheet
3. For drainage details, see "Structure Approach Drainage Details" sheet
4. For abutment hanger bars at shear keys, see Typical Shear Key Elevation detail on "Abutment Details No. 4" sheet
5. Terminate typical abutment front face reinforcement at base of shear keys
6. Concrete wall extension occurs where wingwall abuts MSE wall. See Abutment Layout sheets for location of concrete wall extension.
7. For "a" dimension see "Joint Seal - Abutment Details" sheet

Sudhakar Vatti
DESIGN OVERSIGHT Sudhakar Vatti
8-10-09
SIGN OFF DATE

	BY	CHECKED
DESIGN	J. Hermstad	K. Michalski
DETAILS	J. Hermstad	K. Michalski
QUANTITIES	J. Wong	K. Michalski

PREPARED FOR THE STATE OF CALIFORNIA DEPARTMENT OF TRANSPORTATION

J. Hermstad
PROJECT ENGINEER

BRIDGE NO. 55-1100G
POST MILE 23.27

N405-W22 CONNECTOR SEP (REPLACE)
ABUTMENT DETAILS NO. 1

DESIGN DETAIL SHEET (ENGLISH) (REV. 2/25/05)

ORIGINAL SCALE IN INCHES FOR REDUCED PLANS 0 1 2 3

CU 12235
EA 071631

DISREGARD PRINTS BEARING EARLIER REVISION DATES
REVISION DATES (PRELIMINARY STAGE ONLY) 10/25/08 04/06/09 07/27/09

SHEET 9 OF 51

FILE => 55-1100g-f-adt01.dgn

USERNAME => friehard DATE PLOTTED => 04-FEB-2010 TIME PLOTTED => 07:07

DIST	COUNTY	ROUTE	POST MILES TOTAL PROJECT	SHEET No	TOTAL SHEETS
12	Ora	22,405, 605	R0.3/R0.9, 22.3/24.0,3.0/R1.6	1713	1929

REGISTERED CIVIL ENGINEER 07-27-09 DATE

2-1-10
PLANS APPROVAL DATE

REGISTERED PROFESSIONAL ENGINEER J. Hermstad No. C 66045 Exp. 06-30-10 CIVIL STATE OF CALIFORNIA

The State of California or its officers or agents shall not be responsible for the accuracy or completeness of electronic copies of this plan sheet.

OCTA
550 SOUTH MAIN STREET
ORANGE, CA 92863

TRC
21 TECHNOLOGY DR
IRVINE, CA 92618

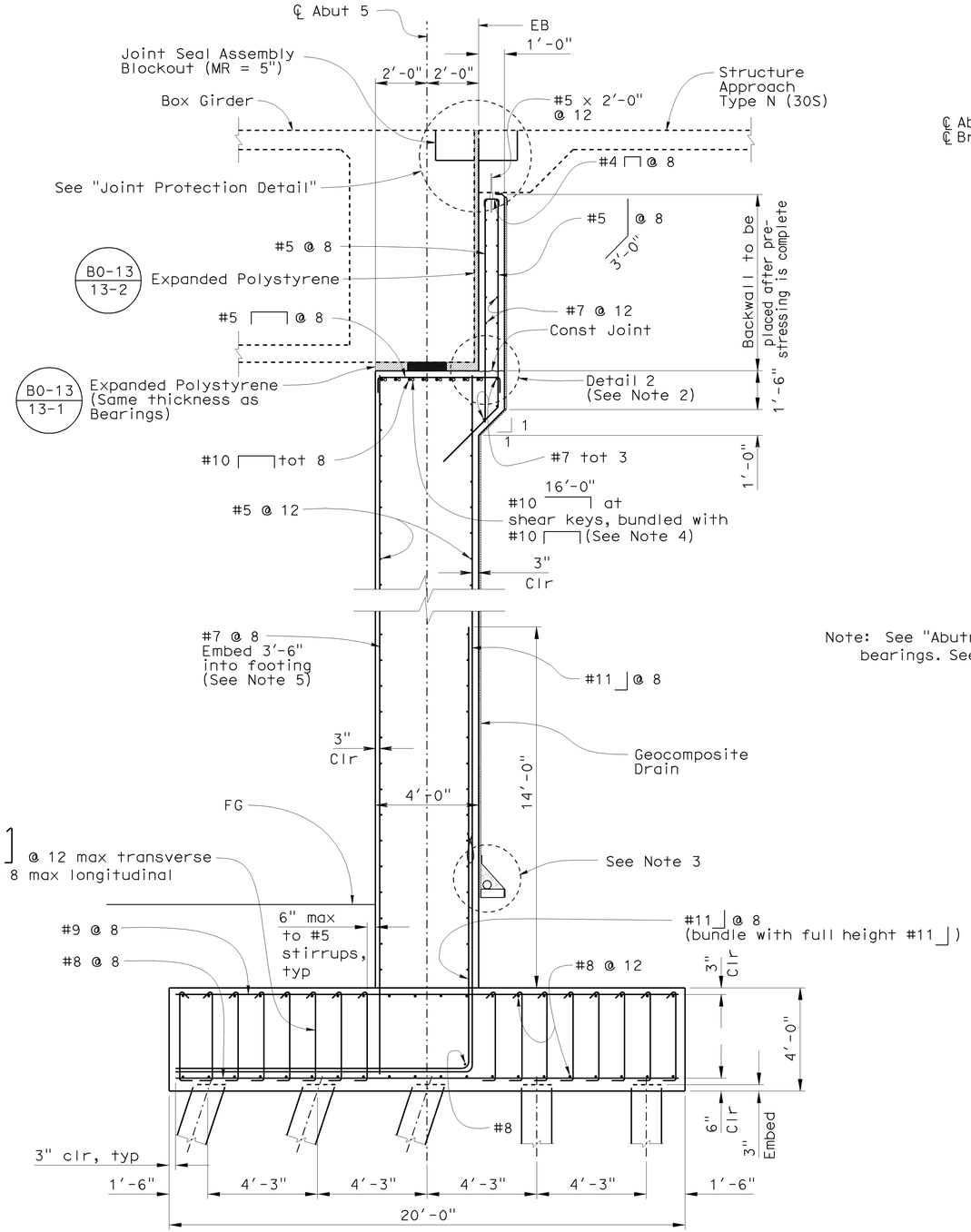

SECTION B-B

3/8"= 1'-0"

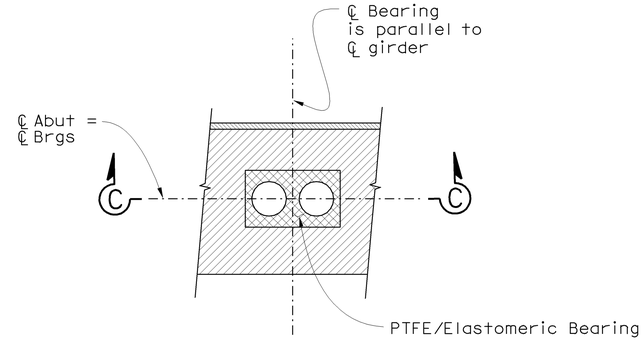

PLAN

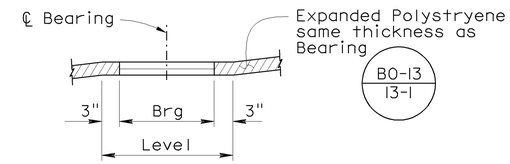

SECTION C-C

Note: See "Abutment 1 Layout" and "Abutment 5 Layout" sheets for locations of bearings. See "PTFE/Elastomeric Bearing" sheet for other bearing details

TYPICAL BEARING DETAIL

No Scale

NOTES

1. For pile locations, see "Abutment 5 Layout" sheet
2. For Detail 2, see "Abutment Details No. 1" sheet
3. For drainage details, see "Structure Approach Drainage Details" sheet
4. For abutment hanger bars at shear keys, see Typical Shear Key Elevation detail on "Abutment Details No. 4" sheet
5. Terminate typical abutment front face reinforcement at base of shear keys

LEGEND

Indicates bundled bars

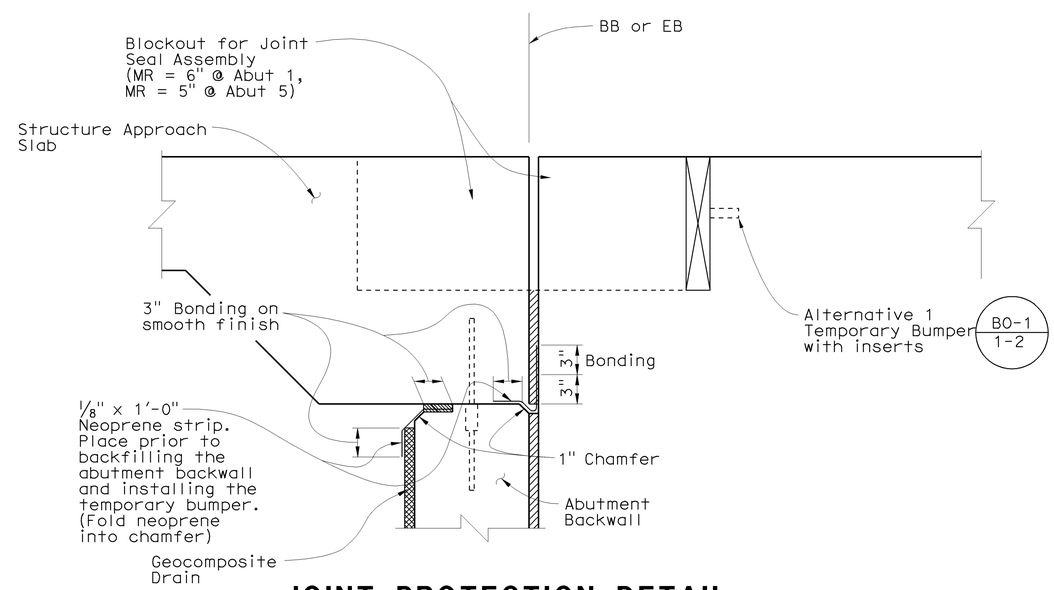

JOINT PROTECTION DETAIL

No Scale

Sudhakar Vatti
DESIGN OVERSIGHT Sudhakar Vatti
8-10-09
SIGN OFF DATE

	BY	CHECKED
DESIGN	J. Hermstad	K. Michalski
DETAILS	J. Hermstad	K. Michalski
QUANTITIES	J. Wong	K. Michalski

PREPARED FOR THE STATE OF CALIFORNIA DEPARTMENT OF TRANSPORTATION

J. Hermstad
PROJECT ENGINEER

BRIDGE NO. 55-1100G
POST MILE 23.27

N405-W22 CONNECTOR SEP (REPLACE)
ABUTMENT DETAILS NO. 2

DESIGN DETAIL SHEET (ENGLISH) (REV. 2/25/05)

ORIGINAL SCALE IN INCHES FOR REDUCED PLANS 0 1 2 3

CU 12235
EA 071631

DISREGARD PRINTS BEARING EARLIER REVISION DATES
REVISION DATES (PRELIMINARY STAGE ONLY) 10/15/08 04/06/09 07/27/09

SHEET 10 OF 51

FILE => 55-1100g-f-adt02.dgn

USERNAME => trlenard DATE PLOTTED => 04-FEB-2010 TIME PLOTTED => 07:07

DIST	COUNTY	ROUTE	POST MILES TOTAL PROJECT	SHEET No	TOTAL SHEETS
12	Ora	22,405, 605	R0.3/R0.9, 22.3/24.0,3.0/R1.6	1714	1929

REGISTERED CIVIL ENGINEER 07-27-09 DATE

2-1-10
PLANS APPROVAL DATE

REGISTERED PROFESSIONAL ENGINEER J. Hermstad No. C 66045 Exp. 06-30-10 CIVIL STATE OF CALIFORNIA

The State of California or its officers or agents shall not be responsible for the accuracy or completeness of electronic copies of this plan sheet.

OCTA
550 SOUTH MAIN STREET
ORANGE, CA 92863

TRC
21 TECHNOLOGY DR
IRVINE, CA 92618

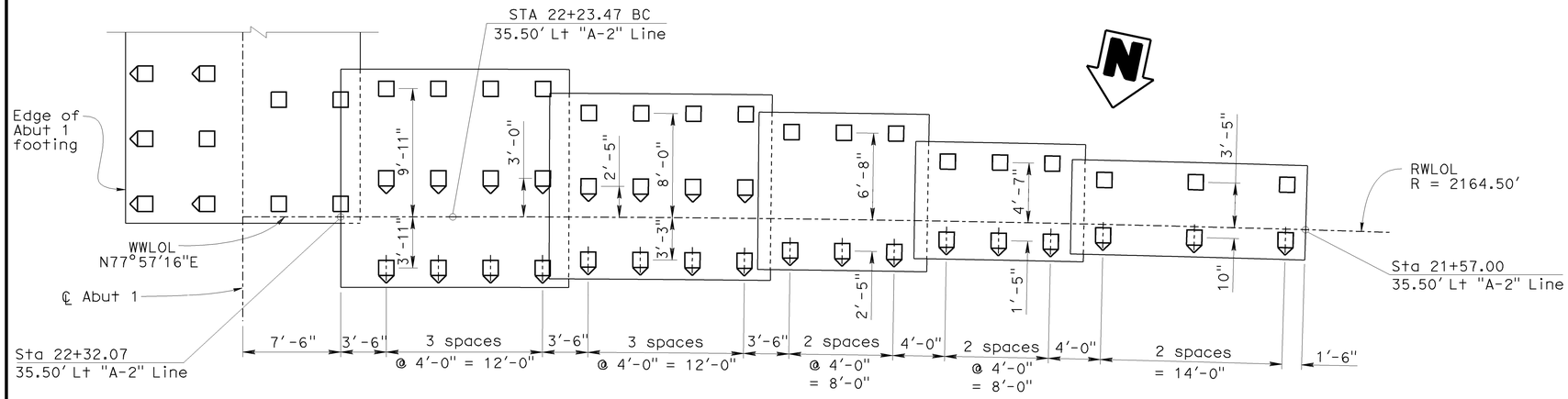

ABUTMENT 1 - PLAN
NORTHERLY RETAINING WALL

3/16"= 1'-0"

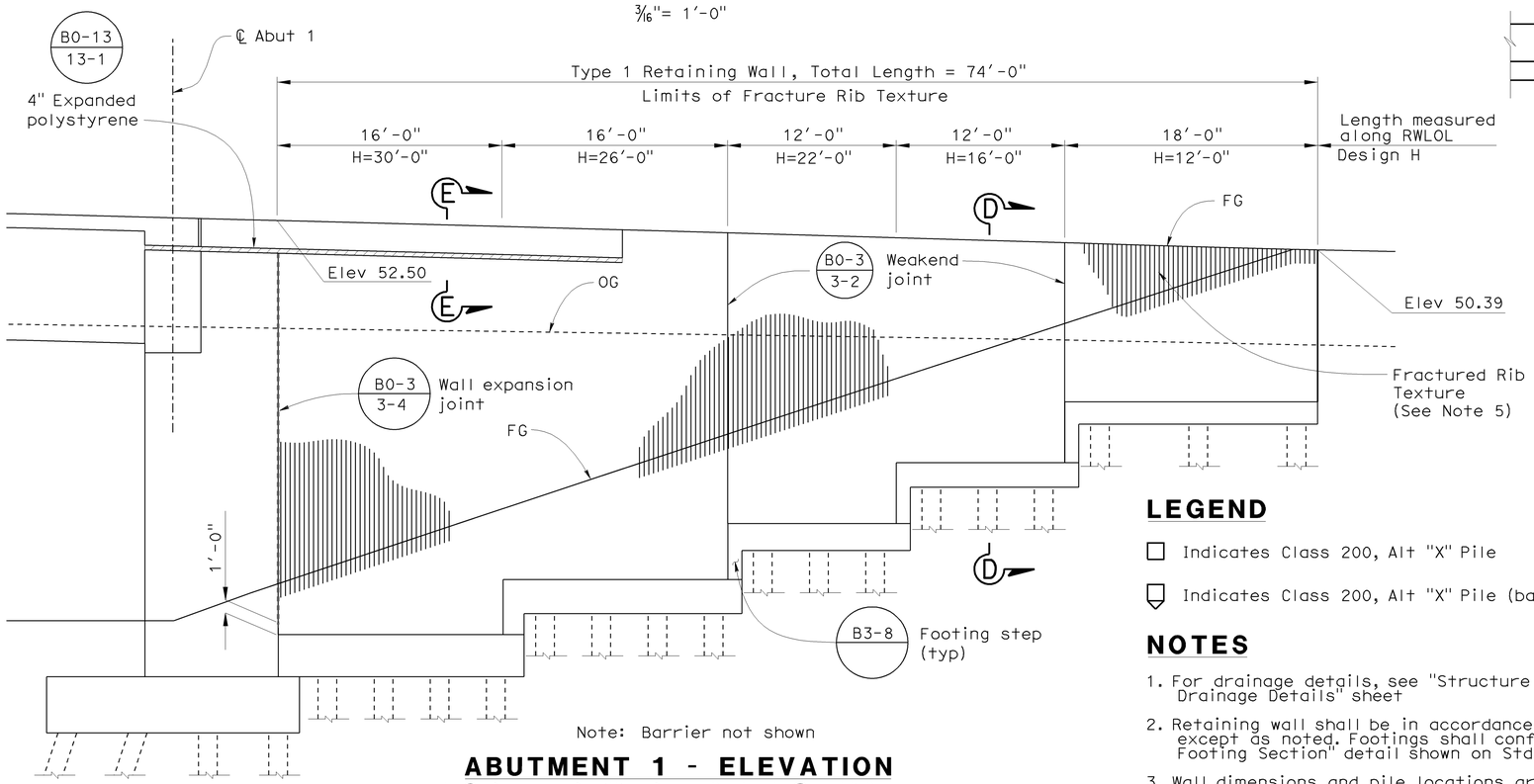

Note: Barrier not shown

ABUTMENT 1 - ELEVATION
NORTHERLY RETAINING WALL

3/16"= 1'-0"

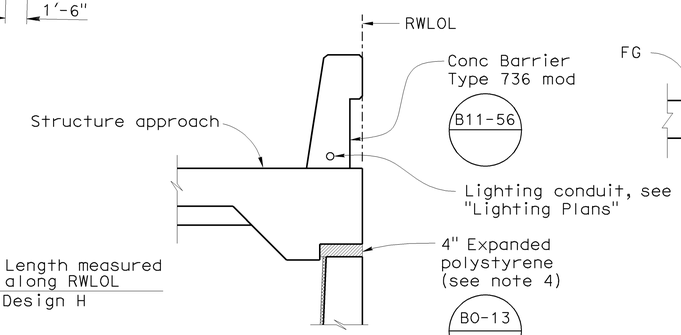

SECTION E-E

1/2" = 1'-0"

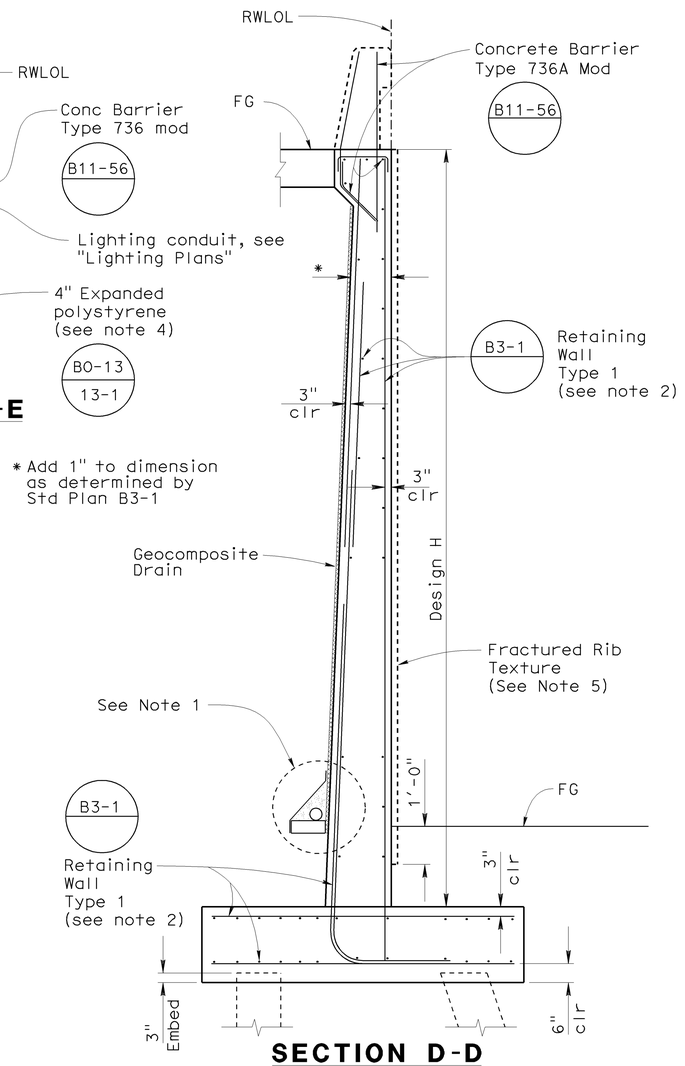

SECTION D-D

1/2"= 1'-0"

LEGEND

☐ Indicates Class 200, Alt "X" Pile

Indicates Class 200, Alt "X" Pile (battered 3:1)

NOTES

1. For drainage details, see "Structure Approach Drainage Details" sheet
2. Retaining wall shall be in accordance to Std Plan B3-1, except as noted. Footings shall conform to "90K Pile Footing Section" detail shown on Std. Plan B3-1.
3. Wall dimensions and pile locations are measured along RWLOL
4. Outer 6" of expanded polystyrene to be removed after construction
5. See "Architectural Details No. 3" sheet for Fractured Rib Texture detail

Sudhakar Vatti
DESIGN OVERSIGHT Sudhakar Vatti
8-10-09
SIGN OFF DATE

	BY	CHECKED
DESIGN	J. Hermstad	K. Michalski
DETAILS	J. Hermstad	K. Michalski
QUANTITIES	J. Wong	K. Michalski

PREPARED FOR THE STATE OF CALIFORNIA DEPARTMENT OF TRANSPORTATION

J. Hermstad
PROJECT ENGINEER

BRIDGE NO. 55-1100G
POST MILE 23.27

N405-W22 CONNECTOR SEP (REPLACE)
ABUTMENT DETAILS NO. 3

DESIGN DETAIL SHEET (ENGLISH) (REV. 2/25/05)

ORIGINAL SCALE IN INCHES FOR REDUCED PLANS 0 1 2 3

CU 12235
EA 071631

DISREGARD PRINTS BEARING EARLIER REVISION DATES

REVISION DATES (PRELIMINARY STAGE ONLY) 10/25/08 04/06/09 07/27/09

SHEET 11 OF 51

FILE => 55-1100g-f-adt03.dgn

USERNAME => friehard DATE PLOTTED => 04-FEB-2010 TIME PLOTTED => 07:07

DIST	COUNTY	ROUTE	POST MILES TOTAL PROJECT	SHEET No	TOTAL SHEETS
12	Ora	22,405, 605	R0.3/R0.9, 22.3/24.0,3.0/R1.6	1715	1929

REGISTERED CIVIL ENGINEER 07-27-09 DATE

2-1-10
PLANS APPROVAL DATE

REGISTERED PROFESSIONAL ENGINEER J. Hermstad No. C 66045 Exp. 06-30-10 CIVIL STATE OF CALIFORNIA

The State of California or its officers or agents shall not be responsible for the accuracy or completeness of electronic copies of this plan sheet.

OCTA
550 SOUTH MAIN STREET
ORANGE, CA 92863

TRC
21 TECHNOLOGY DR
IRVINE, CA 92618

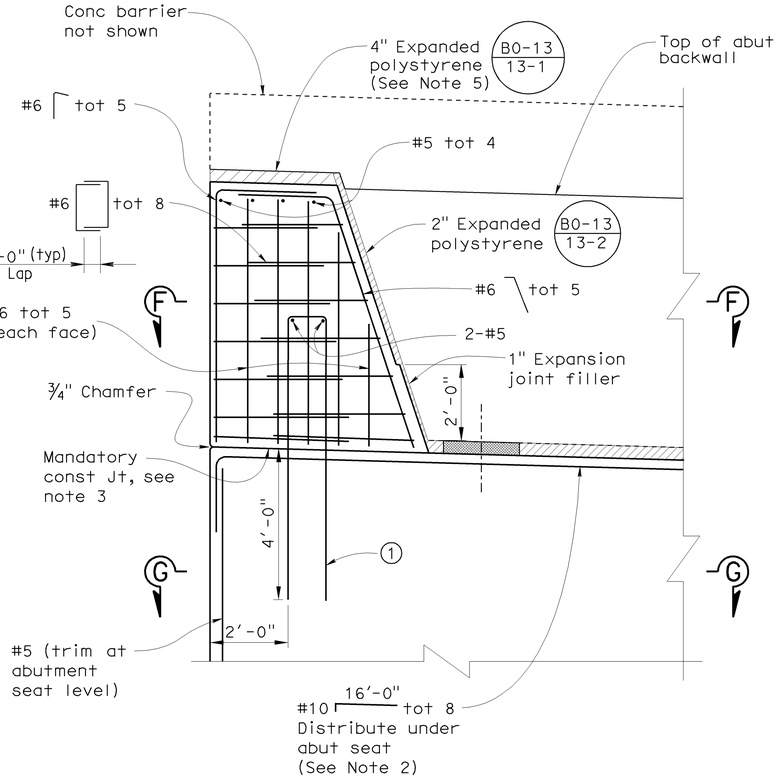

TYPICAL SHEAR KEY ELEVATION

½"= 1'-0"

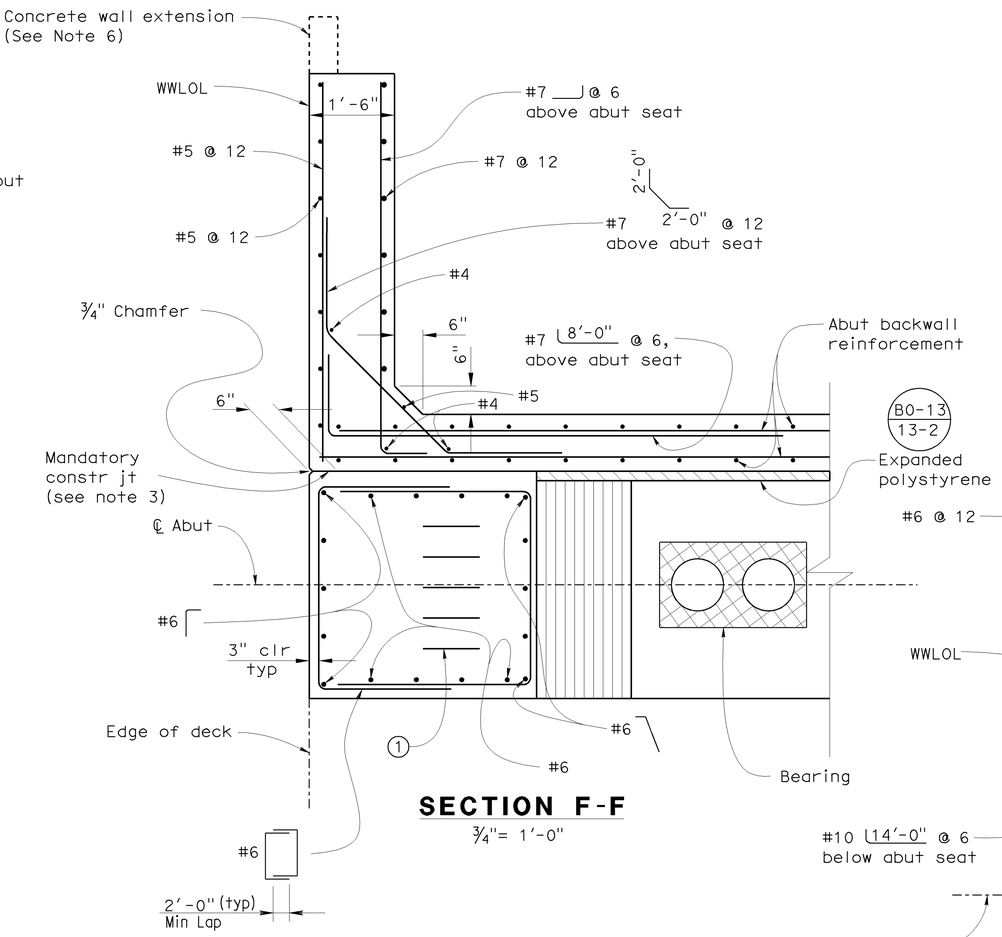

SECTION F-F

¾"= 1'-0"

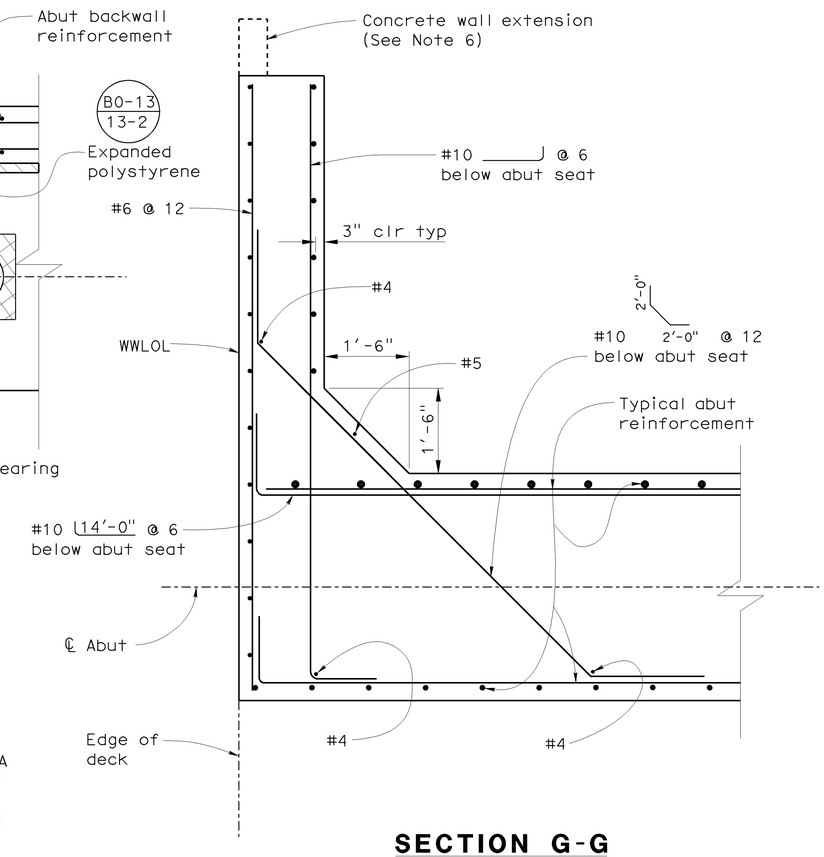

SECTION G-G

¾"= 1'-0"

NOTES

1. For wingwall elevation, see "Abutment Details No. 1" sheet
2. For location of abutment hanger bars, see Section A-A on "Abutment Details No. 1" sheet, and Section B-B on "Abutment Details No. 2" sheet
3. Mandatory construction joint shall be smooth finished and lined with 15 pound construction paper
4. Terminate typical abutment front face reinforcement at base of shear keys
5. Outer 6" of expanded polystyrene to be removed after construction
6. Concrete wall extension occurs where wingwall abuts MSE wall. See Abutment Layout sheets for location of concrete wall extension
7. Shear key shall be poured separate from abutment seat and backwall

	Shape	Abut 1	Abut 5
1	1'-0" / 6"-7"	#8 tot 5	#6 tot 5

Sudhakar Vatti
DESIGN OVERSIGHT Sudhakar Vatti
8-10-09
SIGN OFF DATE

	BY	CHECKED
DESIGN	J. Hermstad	K. Michalski
DETAILS	J. Hermstad	K. Michalski
QUANTITIES	J. Wong	K. Michalski

PREPARED FOR THE STATE OF CALIFORNIA DEPARTMENT OF TRANSPORTATION

J. Hermstad
PROJECT ENGINEER

BRIDGE NO. 55-1100G
POST MILE 23.27

N405-W22 CONNECTOR SEP (REPLACE)
ABUTMENT DETAILS NO. 4

DESIGN DETAIL SHEET (ENGLISH) (REV. 2/25/05)

ORIGINAL SCALE IN INCHES FOR REDUCED PLANS 0 1 2 3

CU 12235
EA 071631

DISREGARD PRINTS BEARING EARLIER REVISION DATES
REVISION DATES (PRELIMINARY STAGE ONLY) 10/15/08 04/06/09 07/27/09

SHEET 12 OF 51

FILE => 55-1100g-f-adt04.dgn

USERNAME => rfrenord DATE PLOTTED => 04-FEB-2010 TIME PLOTTED => 07:07

DIST	COUNTY	ROUTE	POST MILES TOTAL PROJECT	SHEET No	TOTAL SHEETS
12	Ora	22,405, 605	R0.3/R0.9, 22.3/24.0,3.0/R1.6	1716	1929

REGISTERED CIVIL ENGINEER 07-27-09 DATE

2-1-10
PLANS APPROVAL DATE

REGISTERED PROFESSIONAL ENGINEER J. Hermstad No. C 66045 Exp. 06-30-10 CIVIL STATE OF CALIFORNIA

The State of California or its officers or agents shall not be responsible for the accuracy or completeness of electronic copies of this plan sheet.

OCTA
550 SOUTH MAIN STREET
ORANGE, CA 92863

TRC
21 TECHNOLOGY DR
IRVINE, CA 92618

Location	Sole Plate			Intermediate Plate (Note 1)			Masonry Plate			Bearing Pad (Note 1 & 2)	Number of Bearings	Max Vert Load * (Kips)	Min Dead Load * (Kips)
	Tp	W	L	T1	S1	D	Tm	Wm	Lm	H			
Abut 1	1.75	38	30	1.50	7.50	11.00	0.75	18	30	4.50	4	530	440
Abut 5	1.75	38	30	1.50	7.00	8.00	0.75	12	28	2.00	4	310	230

* Per bearing

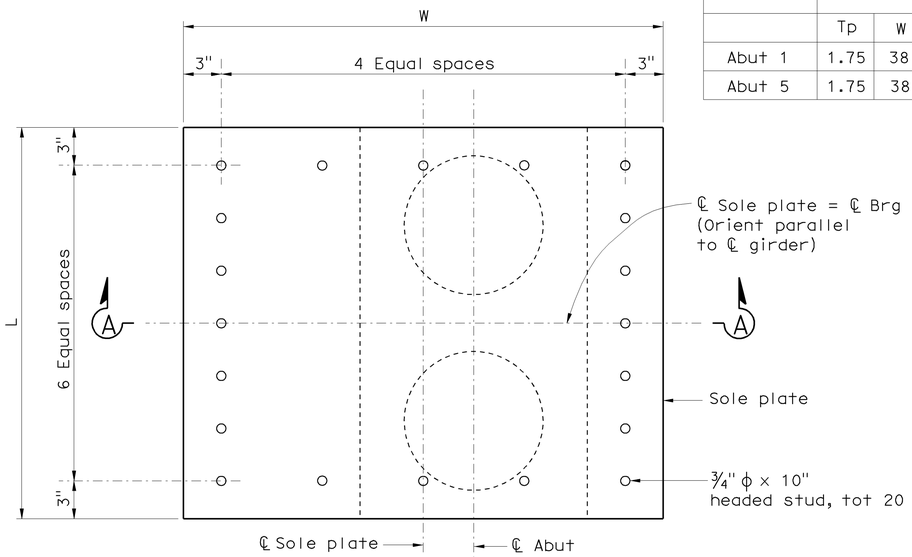

SOLE PLATE PLAN
No Scale

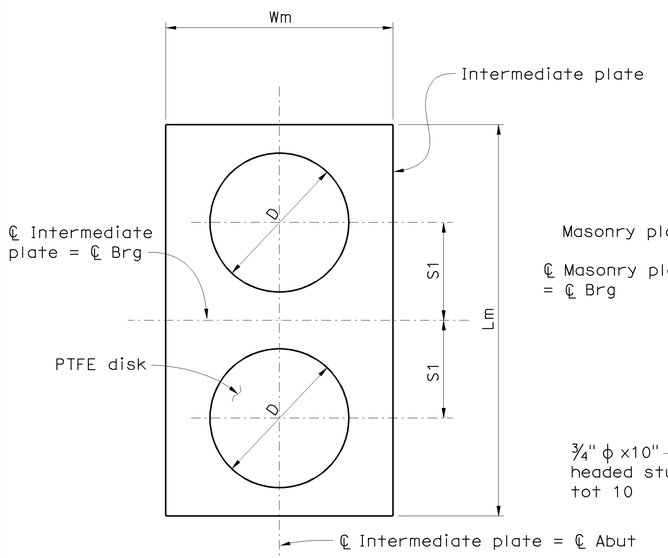

INTERMEDIATE PLATE PLAN
No Scale

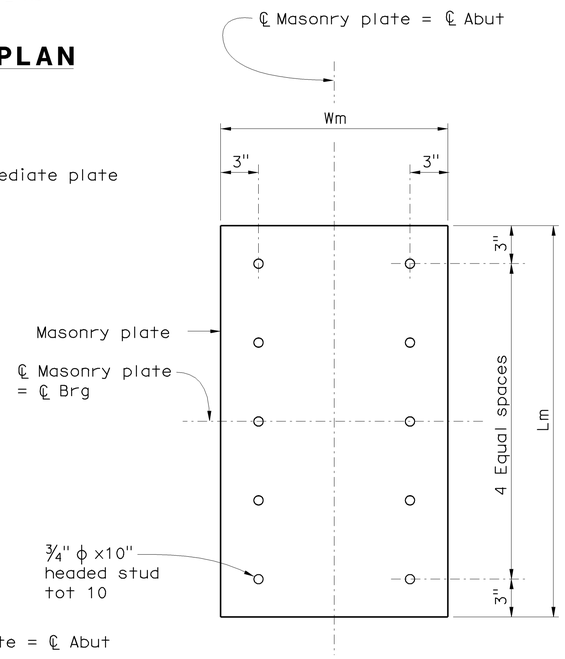

MASONRY PLATE PLAN
No Scale

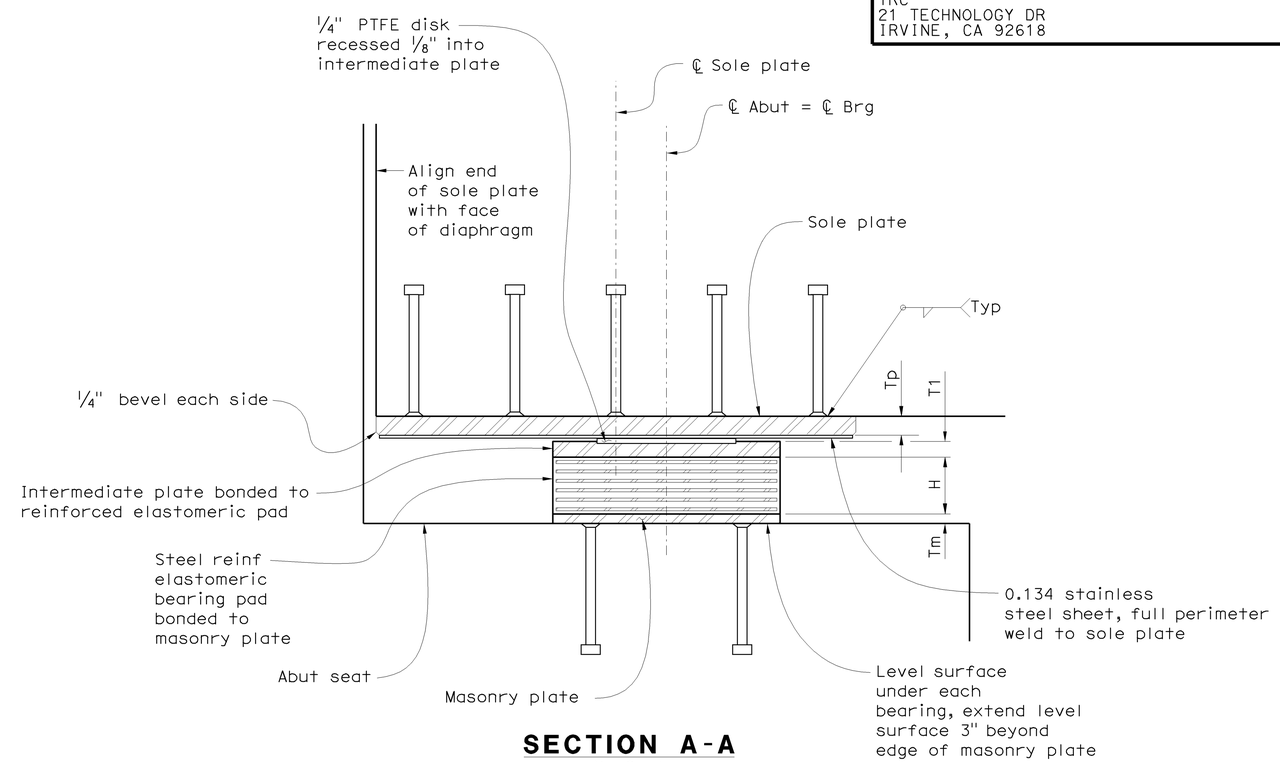

SECTION A-A
No Scale

NOTES

1. Intermediate Plate and Elastomeric Pad Plan dimensions same as Masonry Plate
2. Elastomeric thickness only
3. All dimensions are in inch unless otherwise shown
4. Expanded polystyrene not shown

Sudhakar Vatti
DESIGN OVERSIGHT Sudhakar Vatti
8-10-09
SIGN OFF DATE

	BY	CHECKED
DESIGN	J. Hermstad	K. Michalski
DETAILS	J. Hermstad	K. Michalski
QUANTITIES	J. Wong	K. Michalski

PREPARED FOR THE STATE OF CALIFORNIA DEPARTMENT OF TRANSPORTATION

J. Hermstad
PROJECT ENGINEER

BRIDGE NO. 55-1100G
POST MILE 23.27

N405-W22 CONNECTOR SEP (REPLACE)
PTFE/ELASTOMERIC BEARING

DESIGN DETAIL SHEET (ENGLISH) (REV. 2/25/05)

ORIGINAL SCALE IN INCHES FOR REDUCED PLANS 0 1 2 3

CU 12235
EA 071631

DISREGARD PRINTS BEARING EARLIER REVISION DATES

REVISION DATES (PRELIMINARY STAGE ONLY) 10/15/08 04/06/09 07/27/09

SHEET 13 OF 51

FILE => 55-1100g-q-brgel.dgn

USERNAME => friehord DATE PLOTTED => 04-FEB-2010 TIME PLOTTED => 07:07

DIST	COUNTY	ROUTE	POST MILES TOTAL PROJECT	SHEET No	TOTAL SHEETS
12	Ora	22,405, 605	R0.3/R0.9, 22.3/24.0,3.0/R1.6	1717	1929

REGISTERED CIVIL ENGINEER 07-27-09 DATE

2-1-10
PLANS APPROVAL DATE

REGISTERED PROFESSIONAL ENGINEER J. Hermstad No. C 66045 Exp. 06-30-10 CIVIL STATE OF CALIFORNIA

The State of California or its officers or agents shall not be responsible for the accuracy or completeness of electronic copies of this plan sheet.

OCTA
550 SOUTH MAIN STREET
ORANGE, CA 92863

TRC
21 TECHNOLOGY DR
IRVINE, CA 92618

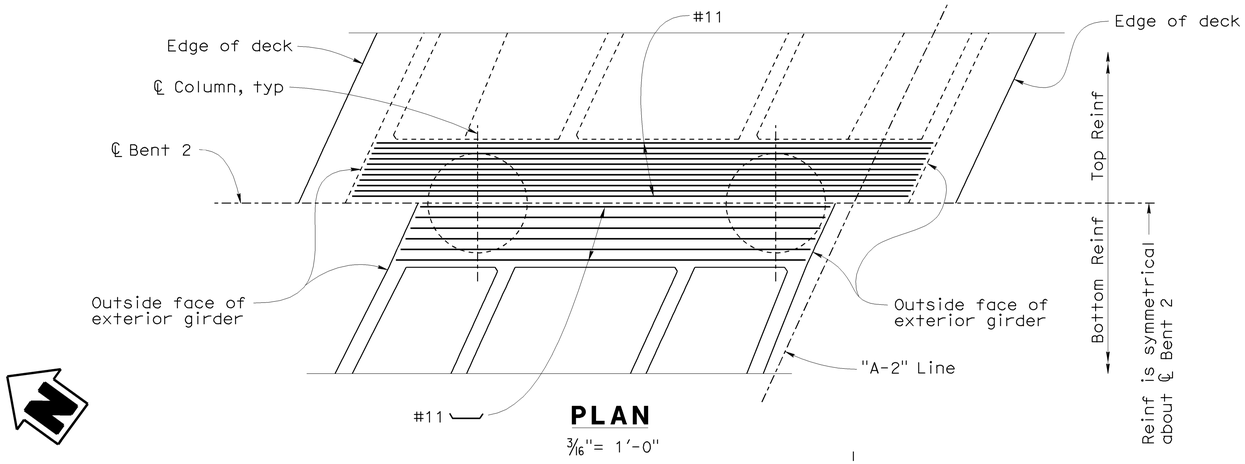

PLAN
3/16"= 1'-0"

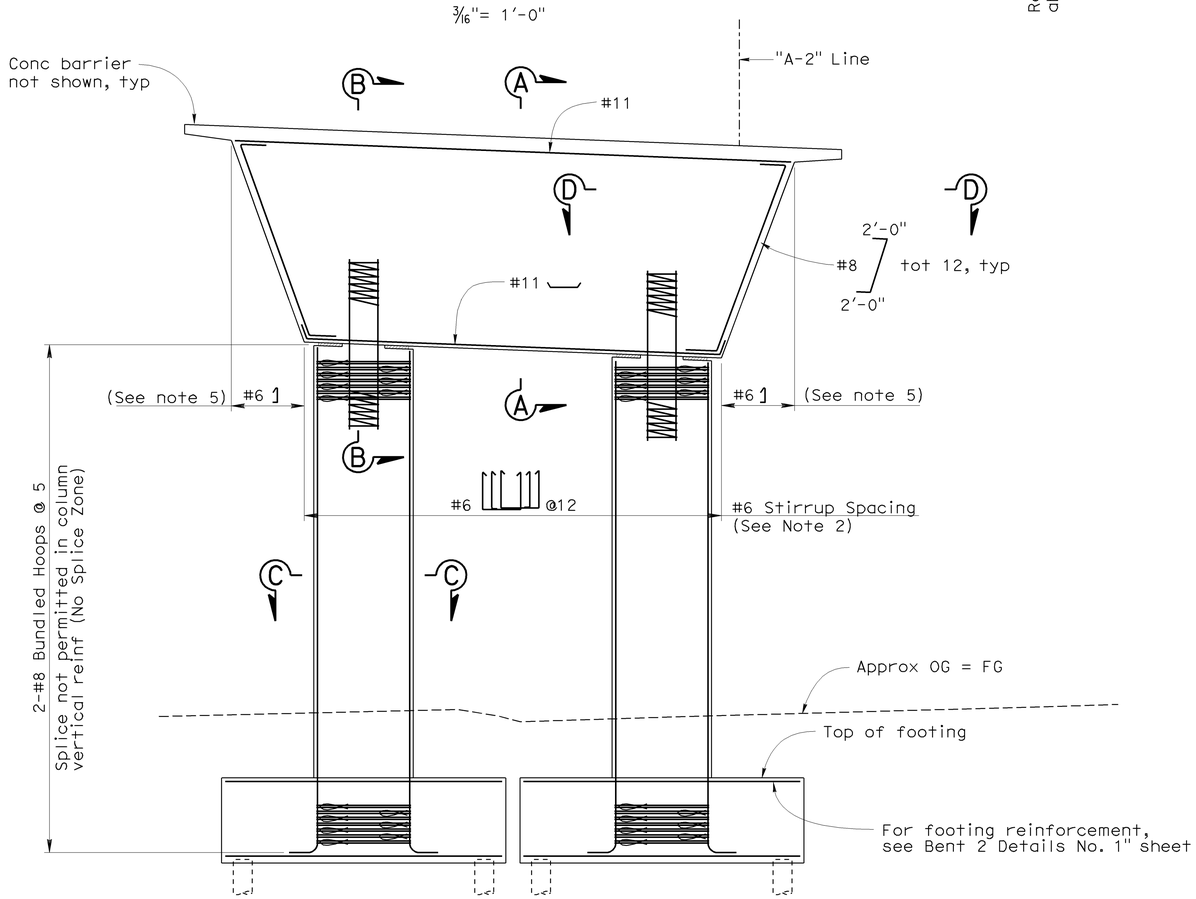

ELEVATION
3/16"= 1'-0"

Note: All piles not shown

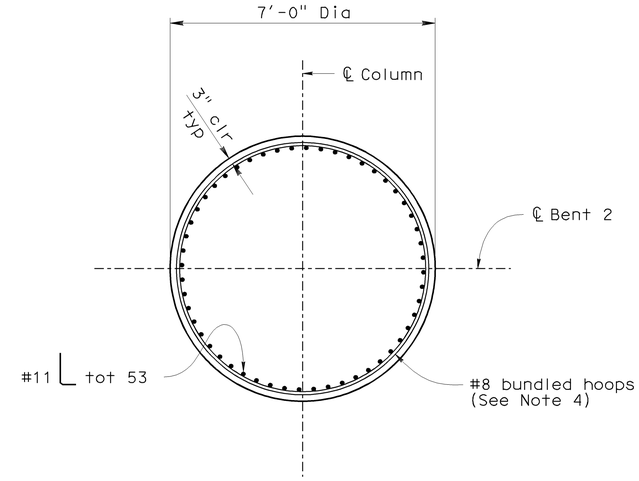

SECTION C-C
1/2"= 1'-0"

LEGEND

Indicates bundled bars

NOTES

1. For Sections A-A and B-B, see "Bent 2 Details No. 2" sheet
2. Place stirrups normal to and space along ℄ Bent 2
3. Splices are not permitted in main cap reinforcement
4. All hoops shall be butt welded continuous and meet "Ultimate Splice" requirements
5. For location and spacing of #6 in sloped bent face, see "Bent 2 Part Elevation" and Section D-D on "Bent 2 Details No. 3" sheet
6. For Section D-D see "Bent 2 Details No. 3" sheet

DESIGN OVERSIGHT Sudhakar Vatti
8-10-09
SIGN OFF DATE

	BY	CHECKED
DESIGN	J. Hermstad	K. Michalski
DETAILS	J. Hermstad	K. Michalski
QUANTITIES	J. Wong	K. Michalski

PREPARED FOR THE STATE OF CALIFORNIA DEPARTMENT OF TRANSPORTATION

J. Hermstad
PROJECT ENGINEER

BRIDGE NO. 55-1100G
POST MILE 23.27

N405-W22 CONNECTOR SEP (REPLACE)
BENT 2 LAYOUT

DESIGN DETAIL SHEET (ENGLISH) (REV. 2/25/05)

ORIGINAL SCALE IN INCHES FOR REDUCED PLANS 0 1 2 3

CU 12235
EA 071631

DISREGARD PRINTS BEARING EARLIER REVISION DATES

REVISION DATES (PRELIMINARY STAGE ONLY) 10/25/08 04/06/09 07/27/09

SHEET 14 OF 51

FILE => 55-1100g-h-b2-01.dgn

USERNAME => friehard DATE PLOTTED => 04-FEB-2010 TIME PLOTTED => 07:07

DIST	COUNTY	ROUTE	POST MILES TOTAL PROJECT	SHEET No	TOTAL SHEETS
12	Ora	22,405, 605	R0.3/R0.9, 22.3/24.0,3.0/R1.6	1718	1929

REGISTERED CIVIL ENGINEER 07-27-09 DATE

2-1-10
PLANS APPROVAL DATE

The State of California or its officers or agents shall not be responsible for the accuracy or completeness of electronic copies of this plan sheet.

REGISTERED PROFESSIONAL ENGINEER J. Hermstad No. C 66045 Exp. 06-30-10 CIVIL STATE OF CALIFORNIA

OCTA
550 SOUTH MAIN STREET
ORANGE, CA 92863

TRC
21 TECHNOLOGY DR
IRVINE, CA 92618

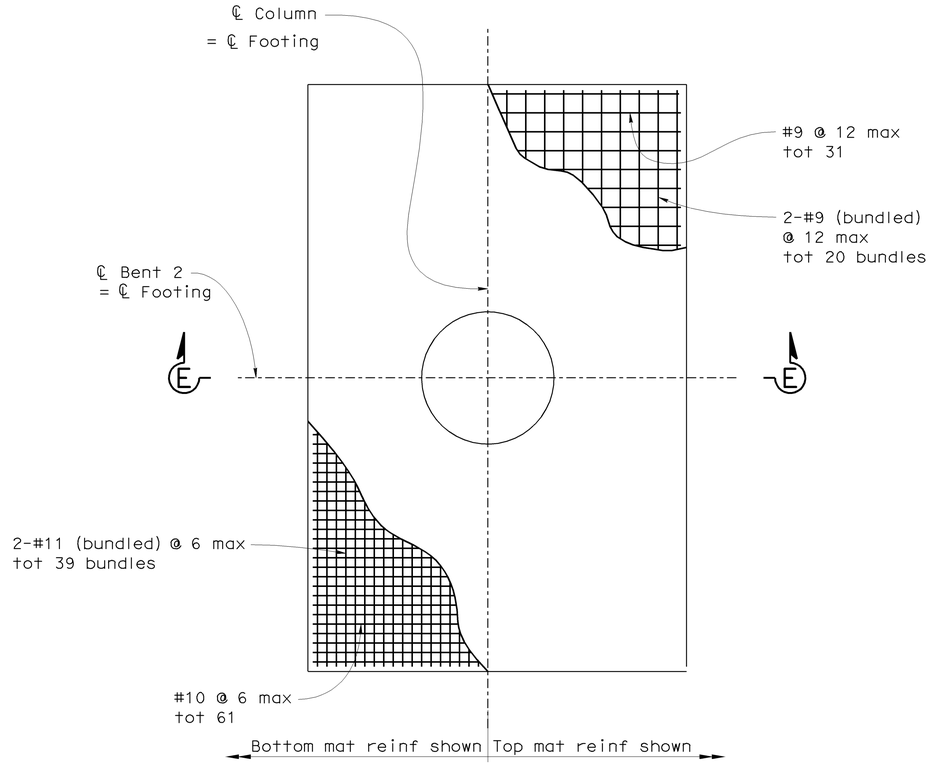

FOOTING REINFORCEMENT PLAN

1/4"= 1'-0"

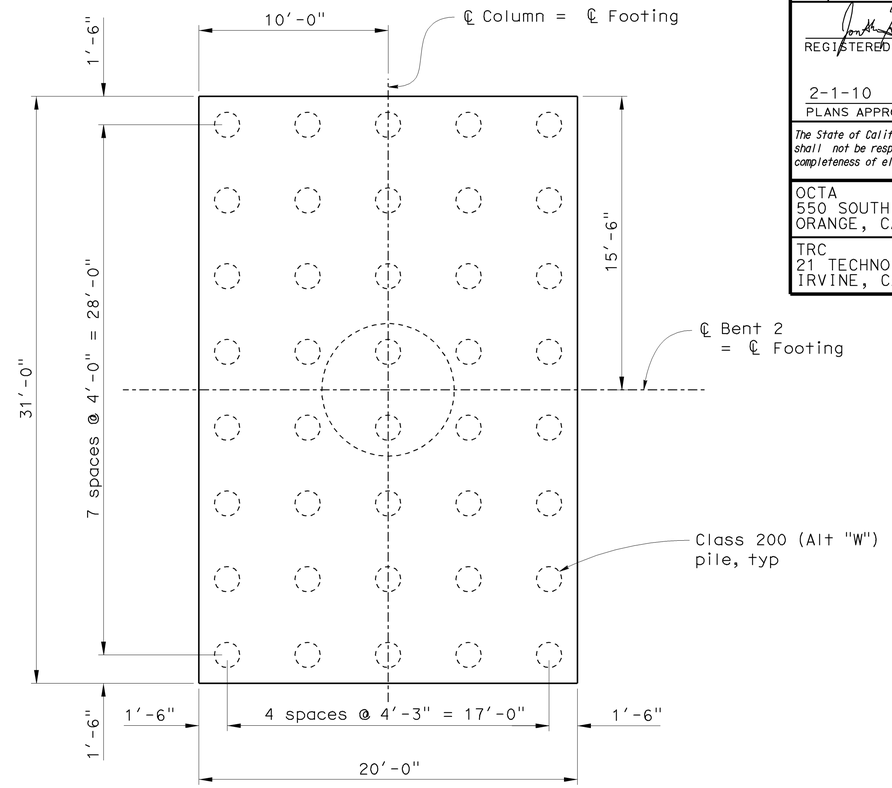

PILE LAYOUT PLAN

1/4"= 1'-0"

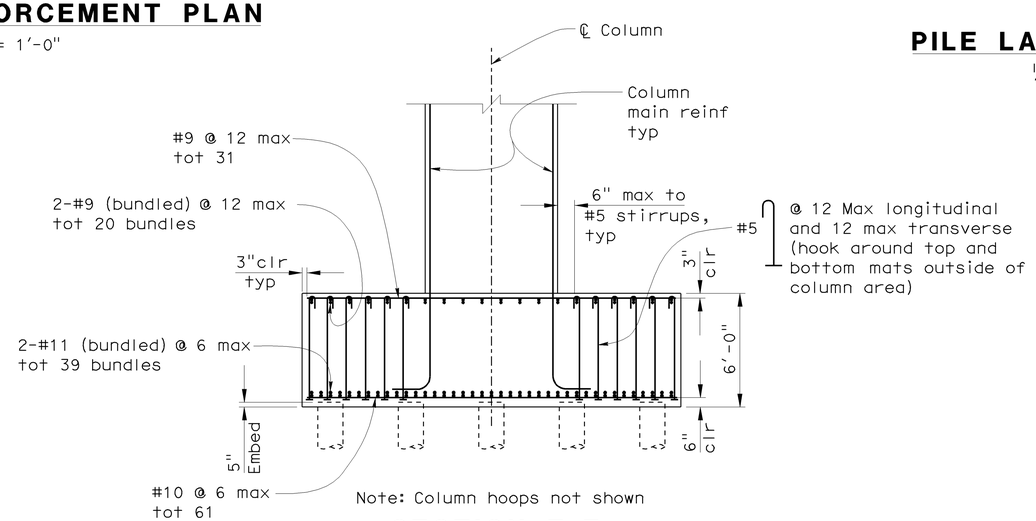

SECTION E-E

1/4"= 1'-0"

NOTES

1. Splices are not permitted in footing reinforcement

LEGEND

—┤ Indicates headed bar reinforcement

Sudhakar Vatti
DESIGN OVERSIGHT Sudhakar Vatti
8-10-09
SIGN OFF DATE

	BY	CHECKED
DESIGN	J. Hermstad	K. Michalski
DETAILS	J. Hermstad	K. Michalski
QUANTITIES	J. Wong	K. Michalski

PREPARED FOR THE STATE OF CALIFORNIA DEPARTMENT OF TRANSPORTATION

J. Hermstad
PROJECT ENGINEER

BRIDGE NO. 55-1100G
POST MILE 23.27

N405-W22 CONNECTOR SEP (REPLACE)
BENT 2 DETAILS NO. 1

DESIGN DETAIL SHEET (ENGLISH) (REV. 2/25/05)

ORIGINAL SCALE IN INCHES FOR REDUCED PLANS 0 1 2 3

CU 12235
EA 071631

DISREGARD PRINTS BEARING EARLIER REVISION DATES

REVISION DATES (PRELIMINARY STAGE ONLY) 10/25/08 04/06/09 07/27/09

SHEET 15 OF 51

FILE => 55-1100g-h-b2-dt01.dgn

USERNAME => trrichard DATE PLOTTED => 04-FEB-2010 TIME PLOTTED => 07:07

DIST	COUNTY	ROUTE	POST MILES TOTAL PROJECT	SHEET No	TOTAL SHEETS
12	Ora	22,405, 605	R0.3/R0.9, 22.3/24.0,3.0/R1.6	1719	1929

REGISTERED CIVIL ENGINEER 07-27-09 DATE

2-1-10
PLANS APPROVAL DATE

REGISTERED PROFESSIONAL ENGINEER J. Hermstad No. C 66045 Exp. 06-30-10 CIVIL STATE OF CALIFORNIA

The State of California or its officers or agents shall not be responsible for the accuracy or completeness of electronic copies of this plan sheet.

OCTA
550 SOUTH MAIN STREET
ORANGE, CA 92863

TRC
21 TECHNOLOGY DR
IRVINE, CA 92618

LEGEND

Indicates bundled bars

Expanded polystyrene

NOTES

1. 3'-0" Dimension is approximate. Place reinforcement 2" below prestress duct arrangement.

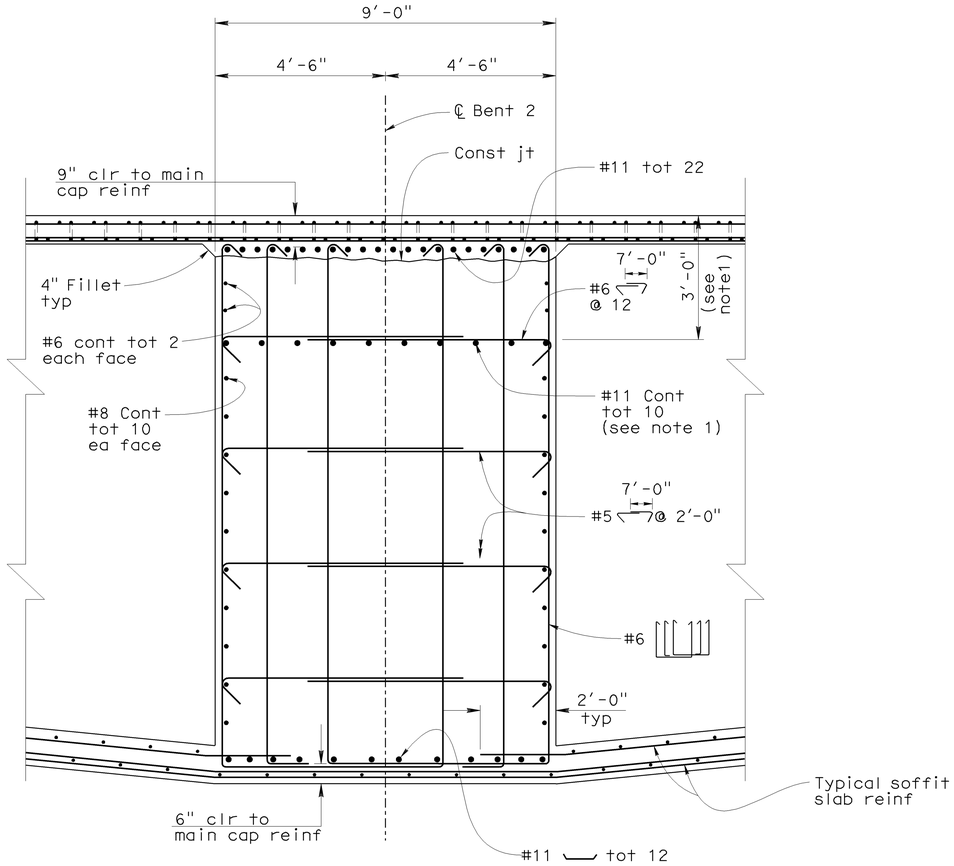

SECTION A-A

½"= 1'-0"

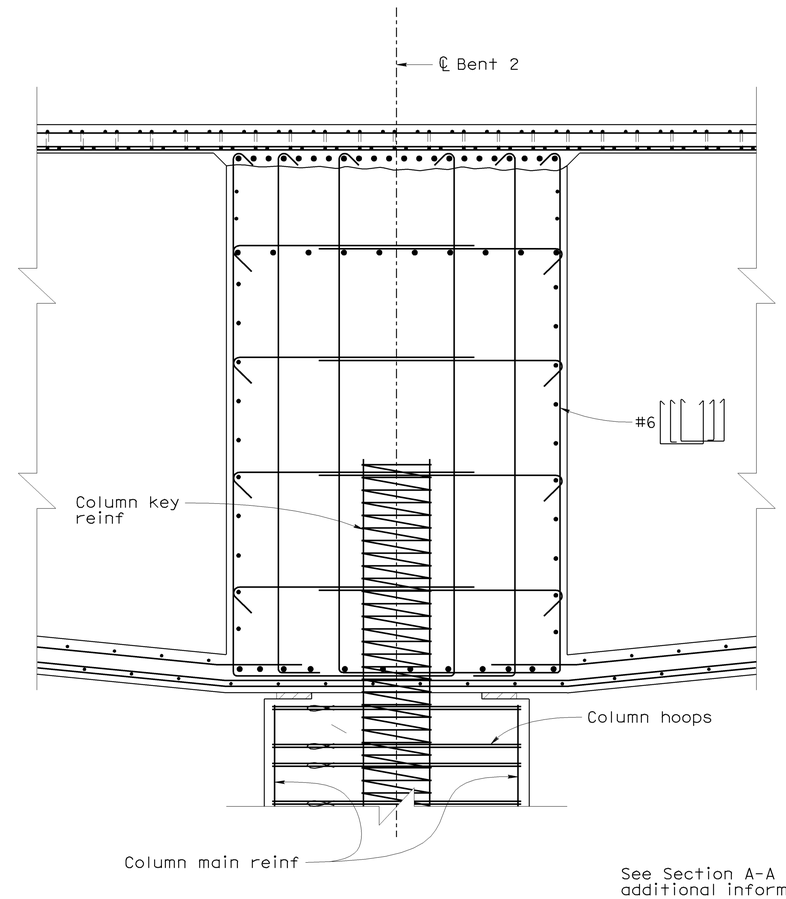

See Section A-A for additional information

SECTION B-B

½"= 1'-0"

Sudhakar Vatti
DESIGN OVERSIGHT Sudhakar Vatti
8-10-09
SIGN OFF DATE

	BY	CHECKED
DESIGN	J. Hermstad	K. Michalski
DETAILS	J. Hermstad	K. Michalski
QUANTITIES	J. Wong	K. Michalski

PREPARED FOR THE STATE OF CALIFORNIA DEPARTMENT OF TRANSPORTATION

J. Hermstad
PROJECT ENGINEER

BRIDGE NO. 55-1100G
POST MILE 23.27

N405-W22 CONNECTOR SEP (REPLACE)

BENT 2 DETAILS NO. 2

DESIGN DETAIL SHEET (ENGLISH) (REV. 2/25/05)

ORIGINAL SCALE IN INCHES FOR REDUCED PLANS 0 1 2 3

CU 12235
EA 071631

DISREGARD PRINTS BEARING EARLIER REVISION DATES → 10/05/08 04/06/09 07/27/09

REVISION DATES (PRELIMINARY STAGE ONLY)

SHEET 16 OF 51

FILE => 55-1100g-h-b2-dt02.dgn

USERNAME => trlenard DATE PLOTTED => 04-FEB-2010 TIME PLOTTED => 07:07

DIST	COUNTY	ROUTE	POST MILES TOTAL PROJECT	SHEET No	TOTAL SHEETS
12	Ora	22,405, 605	R0.3/R0.9, 22.3/24.0,3.0/R1.6	1720	1929

REGISTERED CIVIL ENGINEER 07-27-09 DATE

2-1-10
PLANS APPROVAL DATE

REGISTERED PROFESSIONAL ENGINEER J. Hermstad No. C 66045 Exp. 06-30-10 CIVIL STATE OF CALIFORNIA

The State of California or its officers or agents shall not be responsible for the accuracy or completeness of electronic copies of this plan sheet.

OCTA
550 SOUTH MAIN STREET
ORANGE, CA 92863

TRC
21 TECHNOLOGY DR
IRVINE, CA 92618

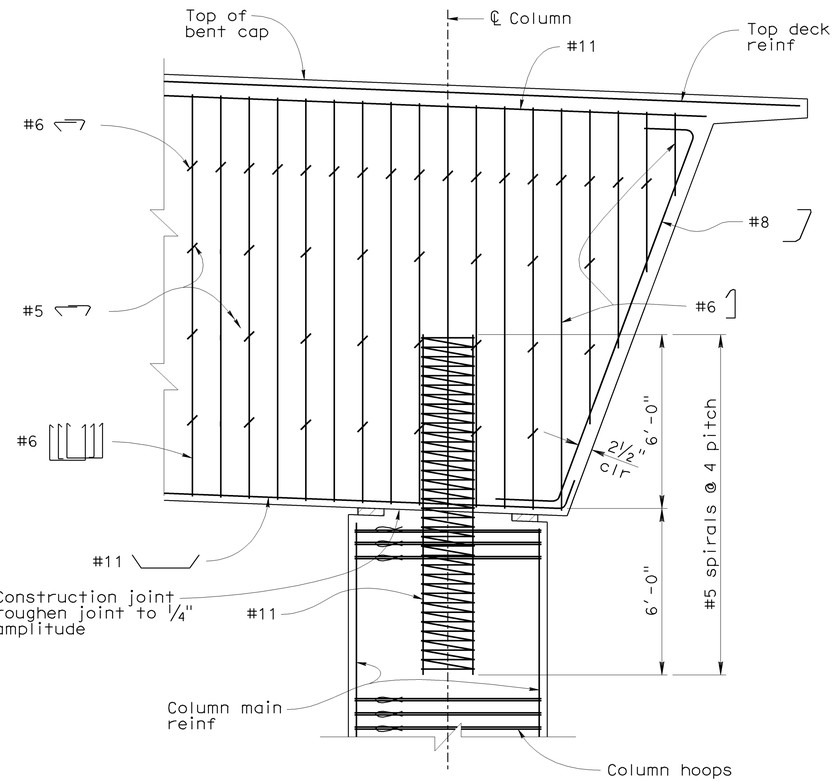

Note: Not all reinf shown

BENT 2 PART ELEVATION

⅜"= 1'-0"

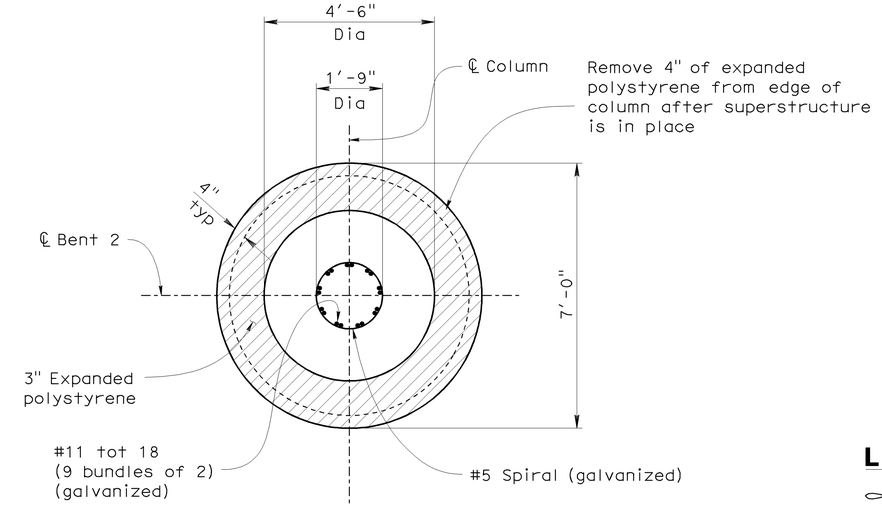

KEY PLAN

½"= 1'-0"

LEGEND

Indicates bundled bars

Expanded polystyrene

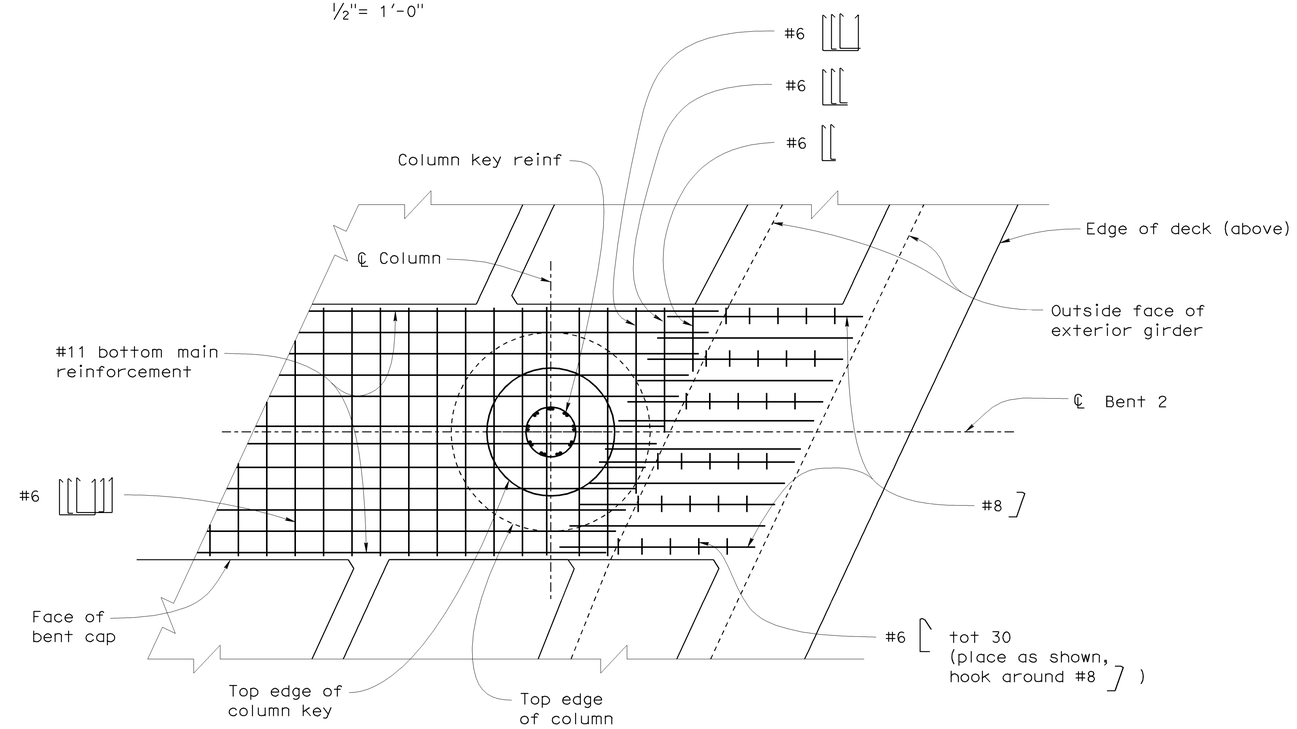

Note: Not all reinf shown

SECTION D-D

⅜"= 1'-0"

Sudhakar Vatti DESIGN OVERSIGHT Sudhakar Vatti 8-10-09 SIGN OFF DATE	DESIGN BY J. Hermstad	CHECKED K. Michalski	PREPARED FOR THE STATE OF CALIFORNIA DEPARTMENT OF TRANSPORTATION
	DETAILS BY J. Hermstad	CHECKED K. Michalski	
	QUANTITIES BY J. Wong	CHECKED K. Michalski	

J. Hermstad
PROJECT ENGINEER

BRIDGE NO. 55-1100G
POST MILE 23.27

N405-W22 CONNECTOR SEP (REPLACE)

BENT 2 DETAILS NO. 3

DESIGN DETAIL SHEET (ENGLISH) (REV. 2/25/05)

ORIGINAL SCALE IN INCHES FOR REDUCED PLANS 0 1 2 3

CU 12235
EA 071631

DISREGARD PRINTS BEARING EARLIER REVISION DATES

REVISION DATES (PRELIMINARY STAGE ONLY) 10/15/08 04/06/09 07/27/09

SHEET 17 OF 51

FILE => 55-1100g-h-b2-dt03.dgn

USERNAME => trlenard DATE PLOTTED => 04-FEB-2010 TIME PLOTTED => 07:07

DIST	COUNTY	ROUTE	POST MILES TOTAL PROJECT	SHEET No	TOTAL SHEETS
12	Ora	22,405, 605	R0.3/R0.9, 22.3/24.0,3.0/R1.6	1721	1929

REGISTERED CIVIL ENGINEER 07-27-09 DATE

2-1-10
PLANS APPROVAL DATE

REGISTERED PROFESSIONAL ENGINEER J. Hermstad No. C 66045 Exp. 06-30-10 CIVIL STATE OF CALIFORNIA

The State of California or its officers or agents shall not be responsible for the accuracy or completeness of electronic copies of this plan sheet.

OCTA
550 SOUTH MAIN STREET
ORANGE, CA 92863

TRC
21 TECHNOLOGY DR
IRVINE, CA 92618

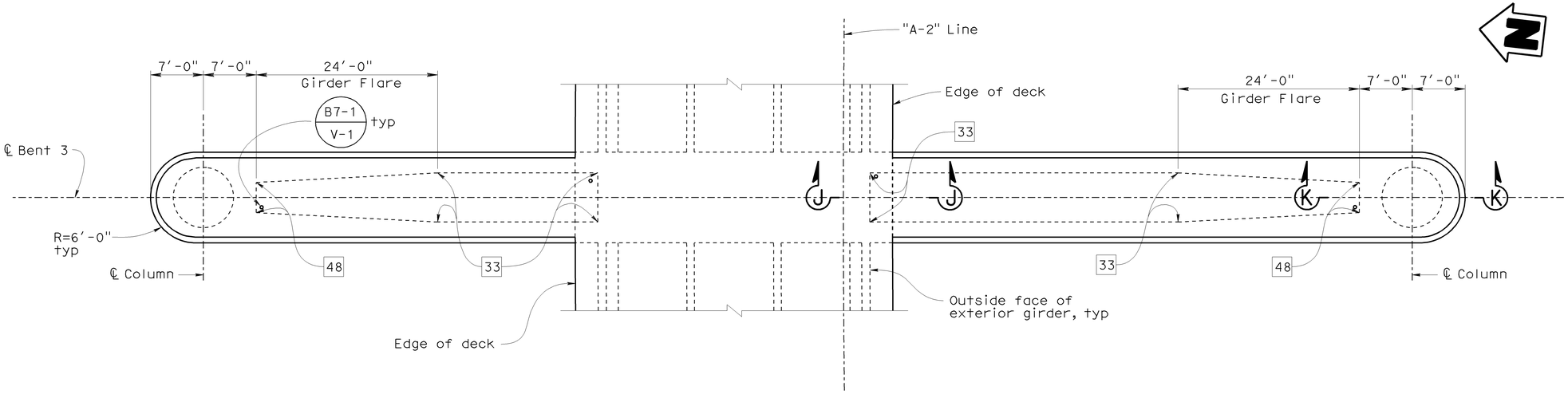

PLAN

1/8"= 1'-0"

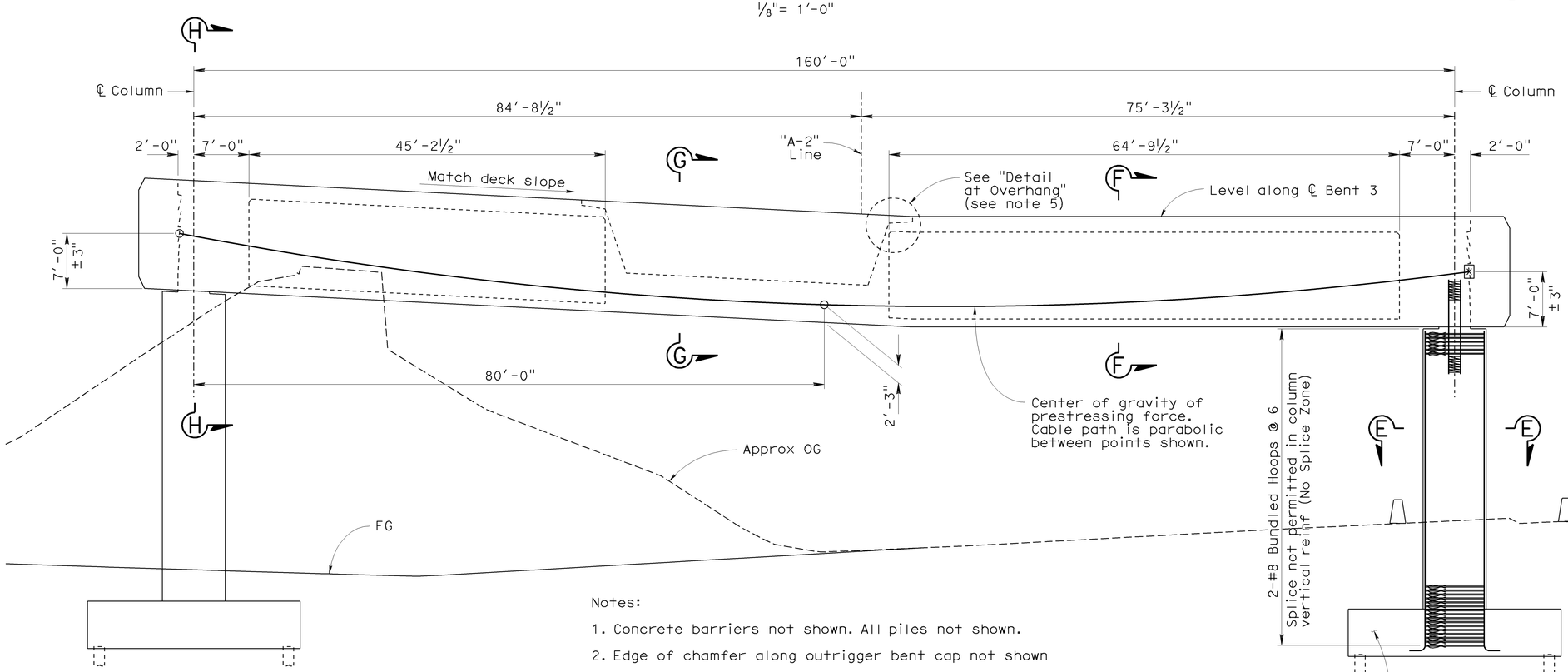

Notes:

1. Concrete barriers not shown. All piles not shown.
2. Edge of chamfer along outrigger bent cap not shown

ELEVATION

1/8"= 1'-0"

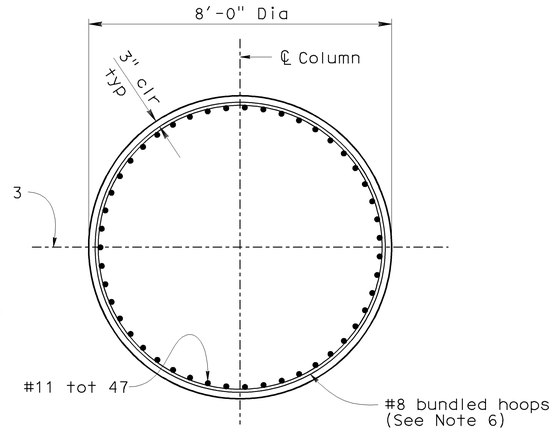

SECTION E-E

1/2"= 1'-0"

LEGEND

- XX — Indicates girder stem width in inches
- ⊠ — Indicates theoretical point of no movement for prestressing
- Indicates bundled bars

NOTES

1. For Sections F-F, G-G and J-J see "Bent 3 Details No. 2" sheet
2. For Section H-H see "Bent 3 Details No. 3" sheet
3. For Section K-K see "Bent 3 Details No. 5" sheet
4. For Prestressing Notes and Outrigger Camber Diagram, see "Bent 3 Details No. 3" sheet
5. For "Detail at Overhang," see "Bent 3 Details No. 2" sheet
6. All hoops shall be butt welded continuous and meet "Ultimate Splice" requirements
7. For architectural details, see "Architectural Details No. 2" sheet

Sudhakar Vatti
DESIGN OVERSIGHT Sudhakar Vatti

8-10-09
SIGN OFF DATE

	BY	CHECKED
DESIGN	J. Hermstad	K. Michalski
DETAILS	J. Hermstad	K. Michalski
QUANTITIES	J. Wong	K. Michalski

PREPARED FOR THE STATE OF CALIFORNIA DEPARTMENT OF TRANSPORTATION

J. Hermstad
PROJECT ENGINEER

BRIDGE NO. 55-1100G
POST MILE 23.27

N405-W22 CONNECTOR SEP (REPLACE)

BENT 3 LAYOUT

DESIGN DETAIL SHEET (ENGLISH) (REV. 2/25/05)

ORIGINAL SCALE IN INCHES FOR REDUCED PLANS 0 1 2 3

CU 12235
EA 071631

DISREGARD PRINTS BEARING EARLIER REVISION DATES

REVISION DATES (PRELIMINARY STAGE ONLY) 10/15/08 04/06/09 07/27/09

SHEET 18 OF 51

FILE => 55-1100g-h-b3-01.dgn

USERNAME => trlenard DATE PLOTTED => 04-FEB-2010 TIME PLOTTED => 07:07

DIST	COUNTY	ROUTE	POST MILES TOTAL PROJECT	SHEET No	TOTAL SHEETS
12	Ora	22,405, 605	R0.3/R0.9, 22.3/24.0,3.0/R1.6	1722	1929

REGISTERED CIVIL ENGINEER 07-27-09 DATE

2-1-10
PLANS APPROVAL DATE

REGISTERED PROFESSIONAL ENGINEER J. Hermstad No. C 66045 Exp. 06-30-10 CIVIL STATE OF CALIFORNIA

The State of California or its officers or agents shall not be responsible for the accuracy or completeness of electronic copies of this plan sheet.

OCTA
550 SOUTH MAIN STREET
ORANGE, CA 92863

TRC
21 TECHNOLOGY DR
IRVINE, CA 92618

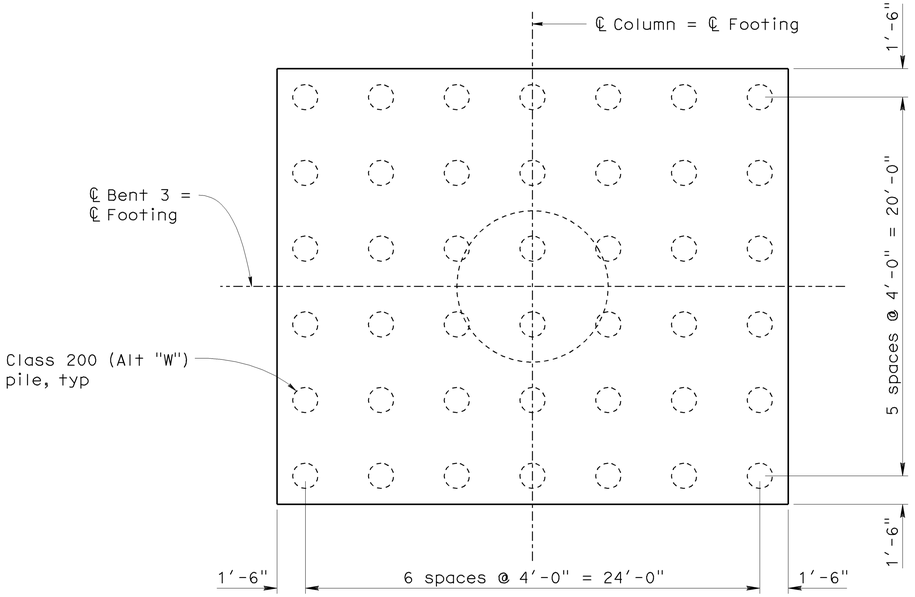

PILE LAYOUT

1/4"= 1'-0"

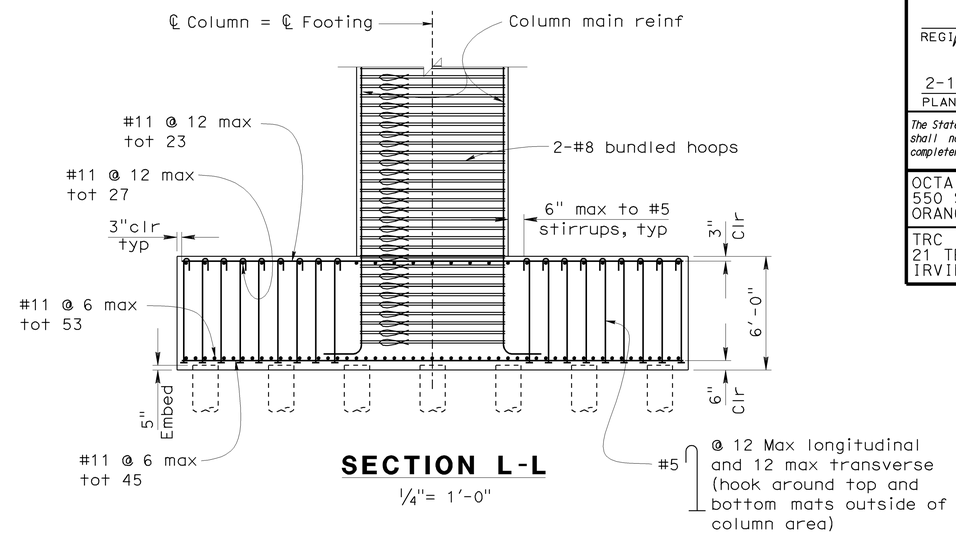

SECTION L-L

1/4"= 1'-0"

LEGEND

Indicates bundled bars

Indicates headed bar reinforcement

NOTES

1. Splices are not permitted in footing reinforcement

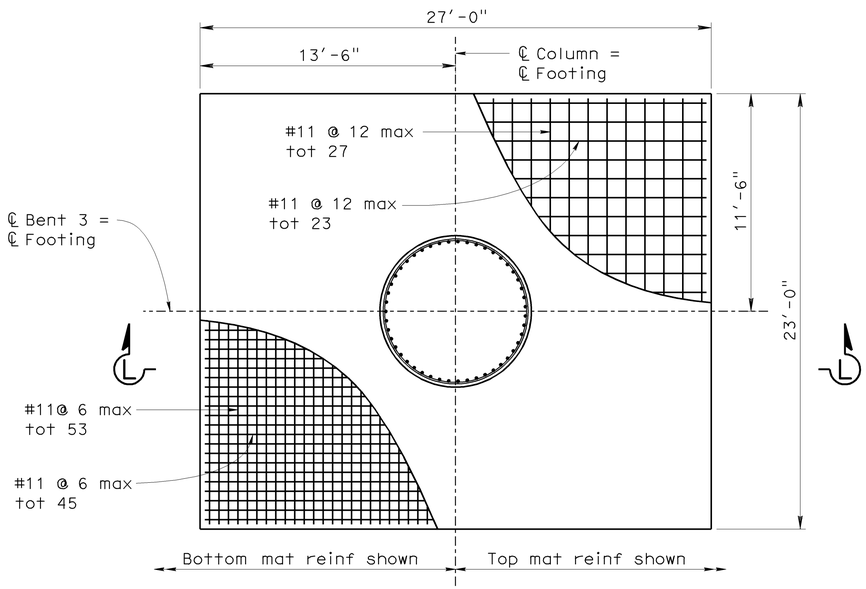

FOOTING REINFORCEMENT PLAN

1/4"= 1'-0"

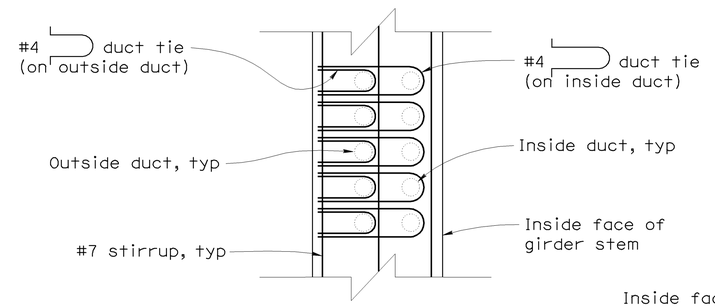

SECTION M-M

5/8" = 1'-0"

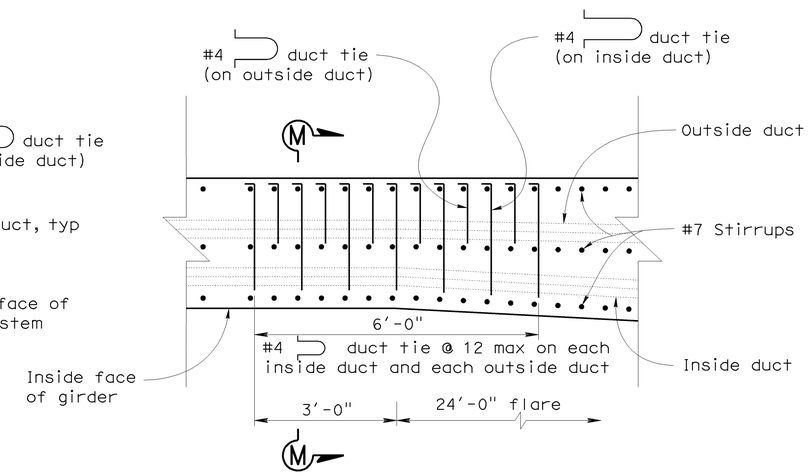

PLAN

5/8" = 1'-0"

Notes:

1. Not all reinforcement shown
2. Place closed end of duct ties towards inside face of girder stem
3. Hook of duct tie shall wrap around #7 stirrup

REINFORCEMENT AT FLARE OF GIRDER STEM

Sudhakar Vatti
DESIGN OVERSIGHT Sudhakar Vatti
8-10-09
SIGN OFF DATE

	BY	CHECKED
DESIGN	J. Hermstad	K. Michalski
DETAILS	J. Hermstad	K. Michalski
QUANTITIES	J. Wong	K. Michalski

PREPARED FOR THE STATE OF CALIFORNIA DEPARTMENT OF TRANSPORTATION

J. Hermstad
PROJECT ENGINEER

BRIDGE NO. 55-1100G
POST MILE 23.27

N405-W22 CONNECTOR SEP (REPLACE)

BENT 3 DETAILS NO. 1

DESIGN DETAIL SHEET (ENGLISH) (REV. 2/25/05)

ORIGINAL SCALE IN INCHES FOR REDUCED PLANS 0 1 2 3

CU 12235
EA 071631

DISREGARD PRINTS BEARING EARLIER REVISION DATES

REVISION DATES (PRELIMINARY STAGE ONLY) 10/15/08 04/06/09 07/27/09

SHEET 19 OF 51

FILE => 55-1100g-h-b3-dt01.dgn

USERNAME => friehord DATE PLOTTED => 04-FEB-2010 TIME PLOTTED => 07:08

DIST	COUNTY	ROUTE	POST MILES TOTAL PROJECT	SHEET No	TOTAL SHEETS
12	Ora	22,405, 605	R0.3/R0.9, 22.3/24.0,3.0/R1.6	1723	1929

REGISTERED CIVIL ENGINEER 07-27-09 DATE

2-1-10
PLANS APPROVAL DATE

REGISTERED PROFESSIONAL ENGINEER J. Hermstad No. C 66045 Exp. 06-30-10 CIVIL STATE OF CALIFORNIA

The State of California or its officers or agents shall not be responsible for the accuracy or completeness of electronic copies of this plan sheet.

OCTA
550 SOUTH MAIN STREET
ORANGE, CA 92863

TRC
21 TECHNOLOGY DR
IRVINE, CA 92618

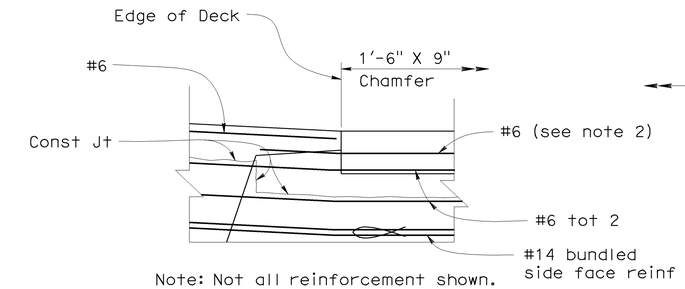

Note: Not all reinforcement shown.
Barrier not shown.

DETAIL AT OVERHANG

3/8"= 1'-0"

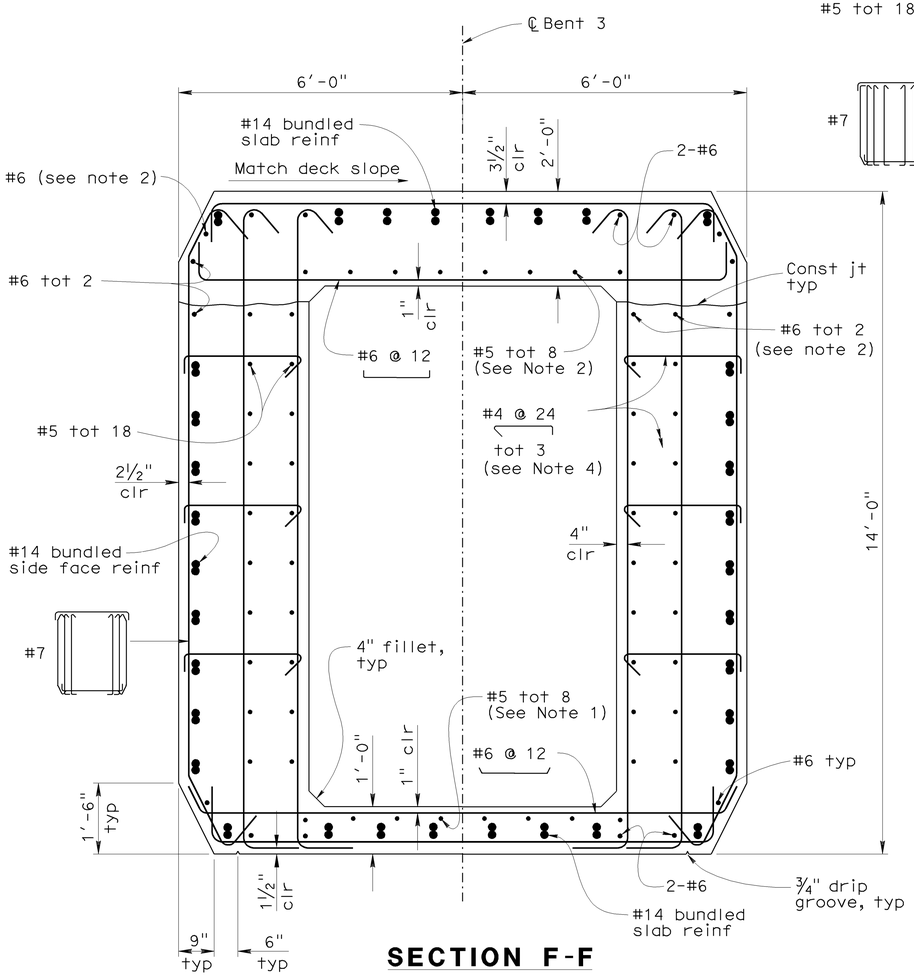

SECTION F-F

5/8"= 1'-0"

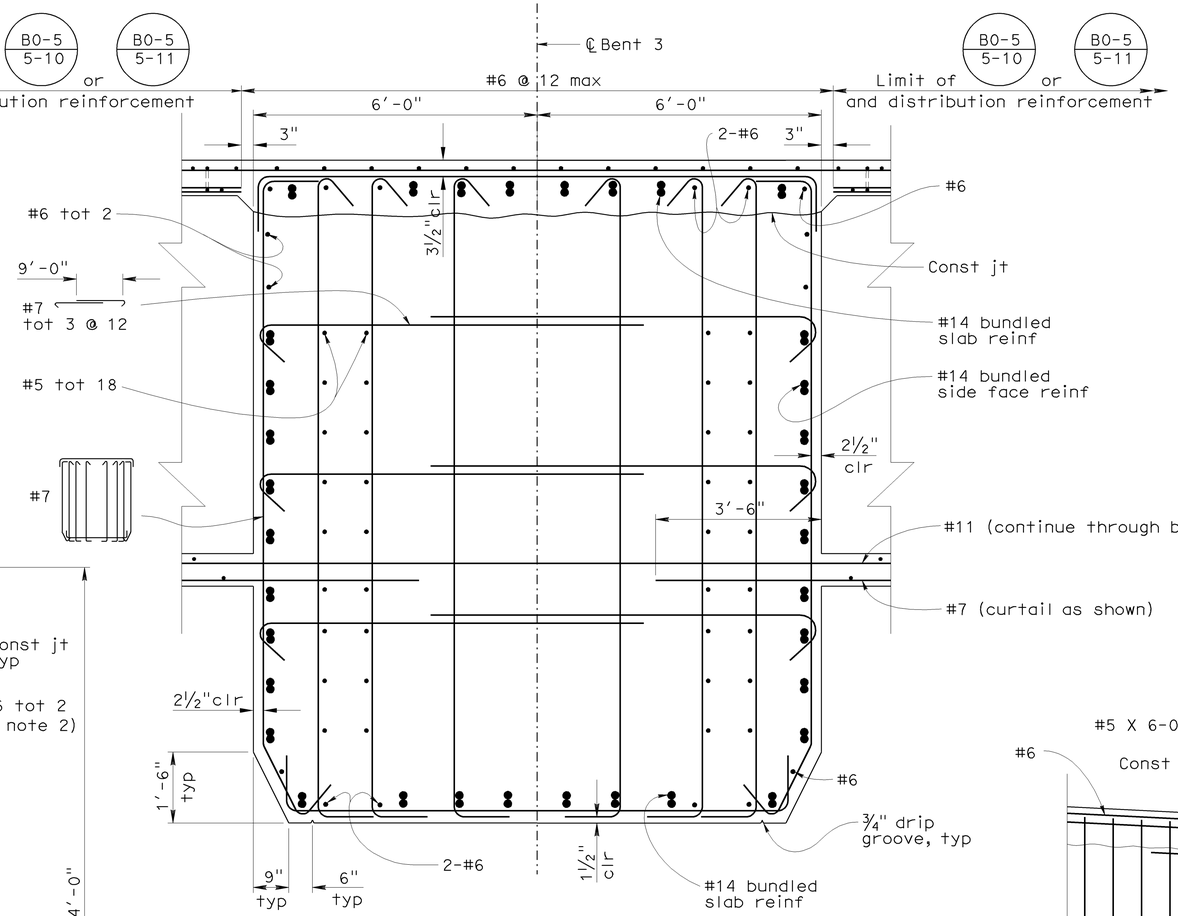

SECTION G-G

5/8"= 1'-0"

NOTES

Indicates bundled bars

NOTES

1. Embed bar 2'-0" into solid bent cap. See Section J-J for additional information.
2. Curtail bar at solid bent cap. See Section J-J for additional information.
3. Reinforcing and dimensioning is symmetrical about the centerline of Bent 3
4. #4 may be adjusted as necessary to accommodate installation of prestressing ducts

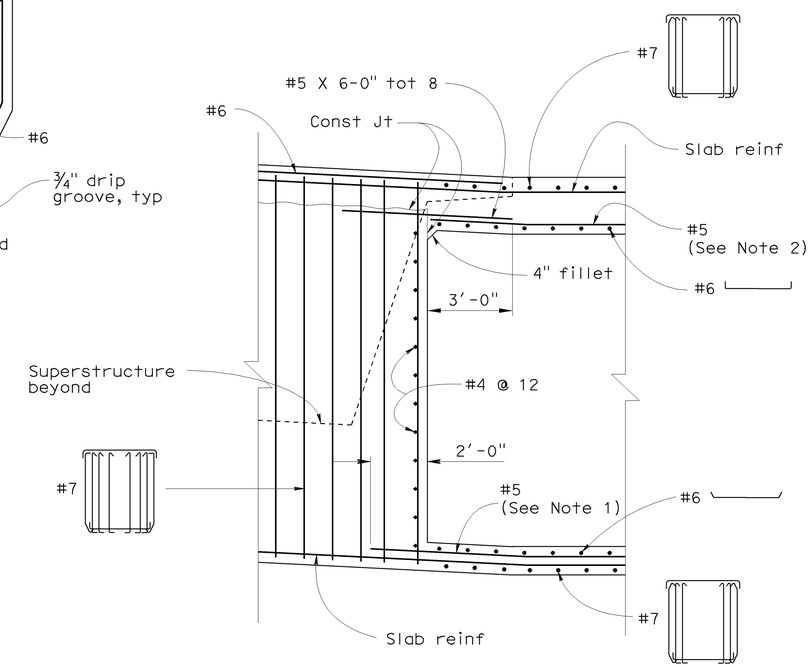

Note: Not all reinforcement shown

SECTION J-J

3/8"= 1'-0"

Sudhakar Vatti DESIGN OVERSIGHT Sudhakar Vatti 8-10-09 SIGN OFF DATE	DESIGN	BY J. Hermstad	CHECKED K. Michalski	PREPARED FOR THE STATE OF CALIFORNIA DEPARTMENT OF TRANSPORTATION	J. Hermstad PROJECT ENGINEER
	DETAILS	BY J. Hermstad	CHECKED K. Michalski		
	QUANTITIES	BY J. Wong	CHECKED K. Michalski		

BRIDGE NO. 55-1100G
POST MILE 23.27

N405-W22 CONNECTOR SEP (REPLACE)
BENT 3 DETAILS NO. 2

DESIGN DETAIL SHEET (ENGLISH) (REV. 2/25/05)

ORIGINAL SCALE IN INCHES FOR REDUCED PLANS 0 1 2 3

CU 12235
EA 071631

DISREGARD PRINTS BEARING EARLIER REVISION DATES → 10/15/08 04/06/09 07/27/09

REVISION DATES (PRELIMINARY STAGE ONLY)

SHEET 20 OF 51

FILE => 55-1100g-h-b3-dt02.dgn

USERNAME => trlenard DATE PLOTTED => 04-FEB-2010 TIME PLOTTED => 07:08

DIST	COUNTY	ROUTE	POST MILES TOTAL PROJECT	SHEET No	TOTAL SHEETS
12	Ora	22,405, 605	R0.3/R0.9, 22.3/24.0,3.0/R1.6	1724	1929

REGISTERED CIVIL ENGINEER 07-27-09 DATE

2-1-10
PLANS APPROVAL DATE

REGISTERED PROFESSIONAL ENGINEER J. Hermstad No. C 66045 Exp. 06-30-10 CIVIL STATE OF CALIFORNIA

The State of California or its officers or agents shall not be responsible for the accuracy or completeness of electronic copies of this plan sheet.

OCTA
550 SOUTH MAIN STREET
ORANGE, CA 92863

TRC
21 TECHNOLOGY DR
IRVINE, CA 92618

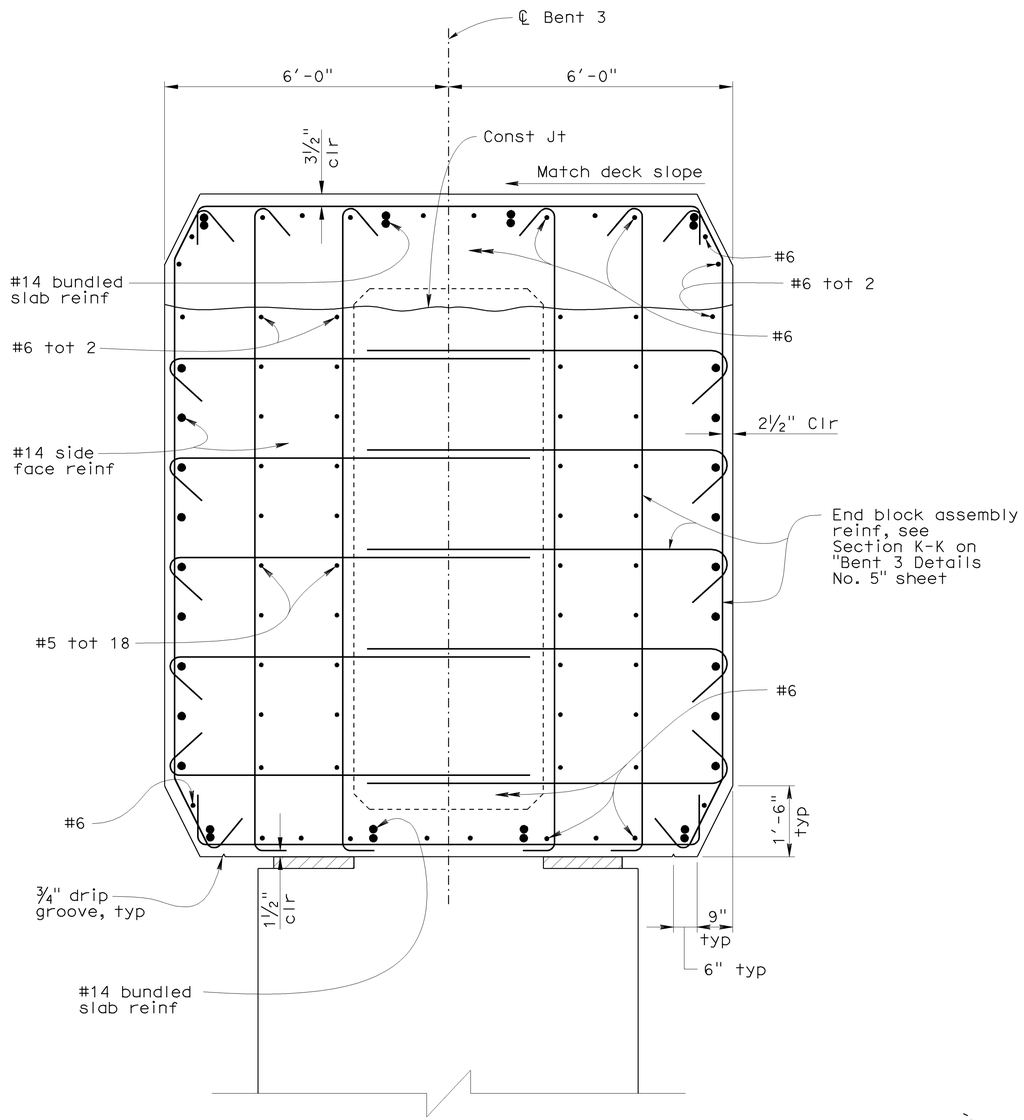

Notes:

1. Reinforcing and dimensioning is symmetrical about the centerline of Bent 3
2. Column reinforcement not shown

SECTION H-H

⅝"= 1'-0"

LEGEND

Expanded polystyrene

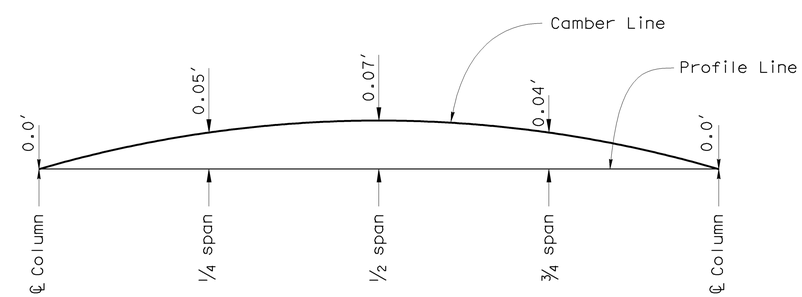

OUTRIGGER CAMBER DIAGRAM

No Scale
(Camber values do not include allowance for falsework settlement)

PRESTRESSING NOTES

270 Ksi Low Relaxation Strands:	
Pjack	= 22500 kips
Anchor Set	= ⅜ inch
Total Number of Girders	= 2
Friction curvature coefficient	= 15 x 10^{-2} (1/rad)
Friction wobble coefficient	K = 20 x 10^{-5}(1/ft)
Distribution of prestress force (Pjack) between girders shall be equal.	
The maximum prestress duct size is 4½". The minimum vertical clear distance between ducts shall not be less than 1½"	
Concrete: f'_c = 5.4 ksi @ 28 days f'_{ci} = 4.5 ksi @ time of stressing	
Contractor shall submit elongation calculations based on inital stress at ☒ = 0.928 times jacking stress	
One end stressing shall be performed from the north end only	

PRESTRESSING SEQUENCE

Stressing shall not take place until the deck has been placed and reached required strength

Pjack to be applied in stages:
Stage 1: Stress outrigger cap to 50% Pjack
Stage 2: Stress superstructure to 50% Pjack
Stage 3: Stress outrigger cap to 100% Pjack
Stage 4: Stress superstructure to 100% Pjack

At no time during the stressing sequence will more than 1/10 of the total outrigger prestressing force be applied eccentrically about the centerline of Bent 3

Removal of falsework is not allowed until all stressing and grouting is complete

For girder prestressing, see "Girder Layout No. 1" sheet

Sudhakar Vatti
DESIGN OVERSIGHT Sudhakar Vatti
8-10-09
SIGN OFF DATE

	BY	CHECKED
DESIGN	J. Hermstad	K. Michalski
DETAILS	J. Hermstad	K. Michalski
QUANTITIES	J. Wong	K. Michalski

PREPARED FOR THE STATE OF CALIFORNIA DEPARTMENT OF TRANSPORTATION

J. Hermstad
PROJECT ENGINEER

BRIDGE NO. 55-1100G
POST MILE 23.27

N405-W22 CONNECTOR SEP (REPLACE)
BENT 3 DETAILS NO. 3

DESIGN DETAIL SHEET (ENGLISH) (REV. 2/25/05)

ORIGINAL SCALE IN INCHES FOR REDUCED PLANS 0 1 2 3

CU 12235
EA 071631

DISREGARD PRINTS BEARING EARLIER REVISION DATES → 10/15/08 04/06/09 07/27/09

SHEET 21 OF 51

FILE => 55-1100g-h-b3-dt03.dgn

USERNAME => trlenard DATE PLOTTED => 04-FEB-2010 TIME PLOTTED => 07:08

DIST	COUNTY	ROUTE	POST MILES TOTAL PROJECT	SHEET No	TOTAL SHEETS
12	Ora	22,405, 605	R0.3/R0.9, 22.3/24.0,3.0/R1.6	1725	1929

REGISTERED CIVIL ENGINEER 07-27-09 DATE

2-1-10
PLANS APPROVAL DATE

REGISTERED PROFESSIONAL ENGINEER J. Hermstad No. C 66045 Exp. 06-30-10 CIVIL STATE OF CALIFORNIA

The State of California or its officers or agents shall not be responsible for the accuracy or completeness of electronic copies of this plan sheet.

OCTA
550 SOUTH MAIN STREET
ORANGE, CA 92863

TRC
21 TECHNOLOGY DR
IRVINE, CA 92618

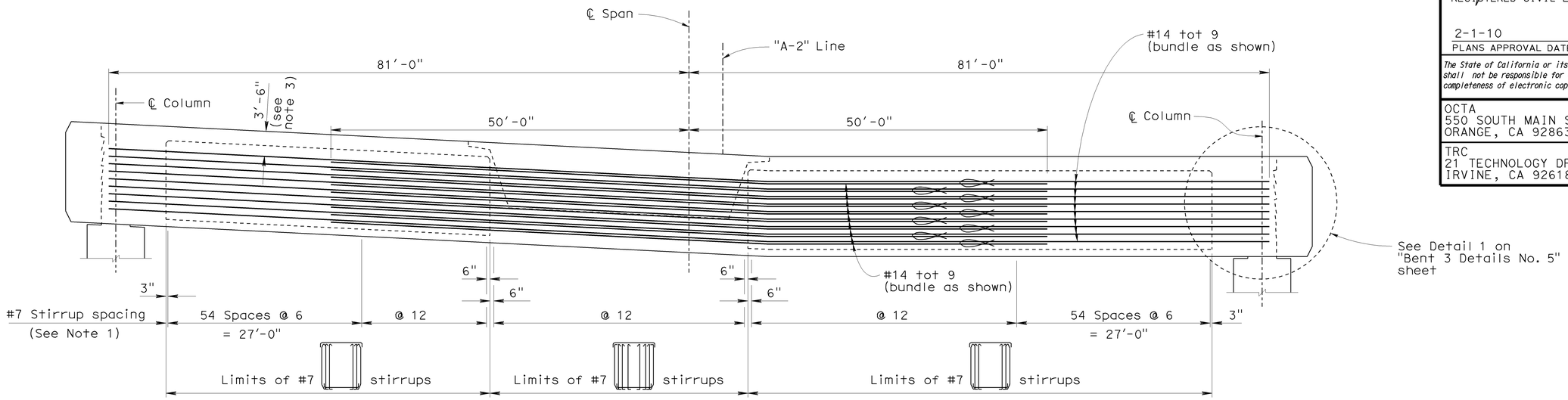

Note: Concrete barriers not shown. Edge of chamfer along outrigger bent cap not shown

SIDE FACE REINFORCEMENT LAYOUT

1/8"= 1'-0"

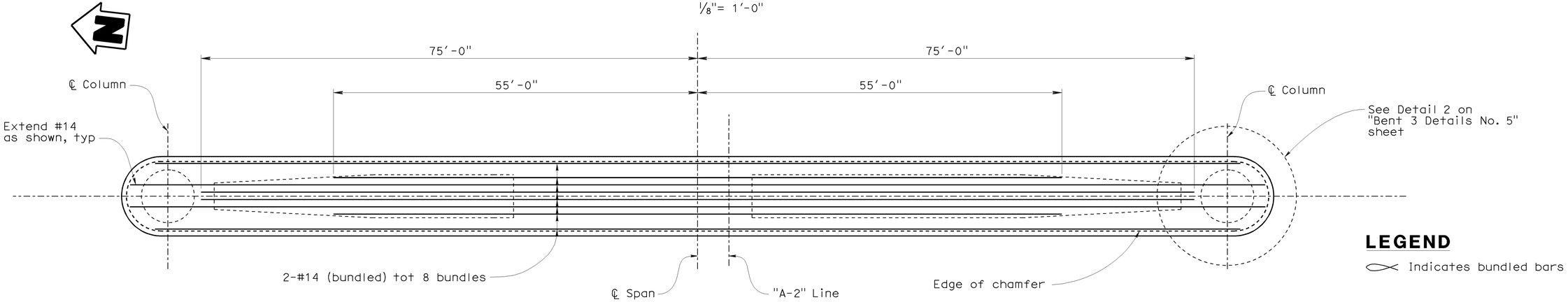

Note: Bottom reinforcement shown, top reinforcement similar

SLAB REINFORCEMENT LAYOUT

1/8"= 1'-0"

LEGEND

Indicates bundled bars

NOTES

1. Place stirrups normal to and along ℄ Bent 3
2. Lap splicing of #14 side face reinforcement and #14 slab reinforcement is not allowed. Splicing shall meet "Service Splice" requirements. Splices shall be staggered. Splicing of reinforcing shall not occur within 20'-0" of the centerline of span.
3. 3'-6" Dimension is approximate. Place #14 side face reinforcement 2" below superstructure prestress duct arrangement.

Sudhakar Vatti
DESIGN OVERSIGHT Sudhakar Vatti
8-10-09
SIGN OFF DATE

	BY	CHECKED
DESIGN	J. Hermstad	K. Michalski
DETAILS	J. Hermstad	K. Michalski
QUANTITIES	J. Wong	K. Michalski

PREPARED FOR THE STATE OF CALIFORNIA DEPARTMENT OF TRANSPORTATION

J. Hermstad
PROJECT ENGINEER

BRIDGE NO. 55-1100G
POST MILE 23.27

N405-W22 CONNECTOR SEP (REPLACE)

BENT 3 DETAILS NO. 4

DESIGN DETAIL SHEET (ENGLISH) (REV. 2/25/05)

ORIGINAL SCALE IN INCHES FOR REDUCED PLANS 0 1 2 3

CU 12235
EA 071631

DISREGARD PRINTS BEARING EARLIER REVISION DATES

REVISION DATES (PRELIMINARY STAGE ONLY) 10/25/08 04/06/09 07/27/09

SHEET 22 OF 51

FILE => 55-1100g-h-b3-dt04.dgn

USERNAME => rtrmikesl DATE PLOTTED => 04-FEB-2010 TIME PLOTTED => 12:30

DIST	COUNTY	ROUTE	POST MILES TOTAL PROJECT	SHEET No	TOTAL SHEETS
12	Ora	22,405, 605	R0.3/R0.9, 22.3/24.0,3.0/R1.6	1726	1929

REGISTERED CIVIL ENGINEER 07-27-09 DATE

2-1-10
PLANS APPROVAL DATE

REGISTERED PROFESSIONAL ENGINEER J. Hermstad No. C 66045 Exp. 06-30-10 CIVIL STATE OF CALIFORNIA

The State of California or its officers or agents shall not be responsible for the accuracy or completeness of electronic copies of this plan sheet.

OCTA
550 SOUTH MAIN STREET
ORANGE, CA 92863

TRC
21 TECHNOLOGY DR
IRVINE, CA 92618

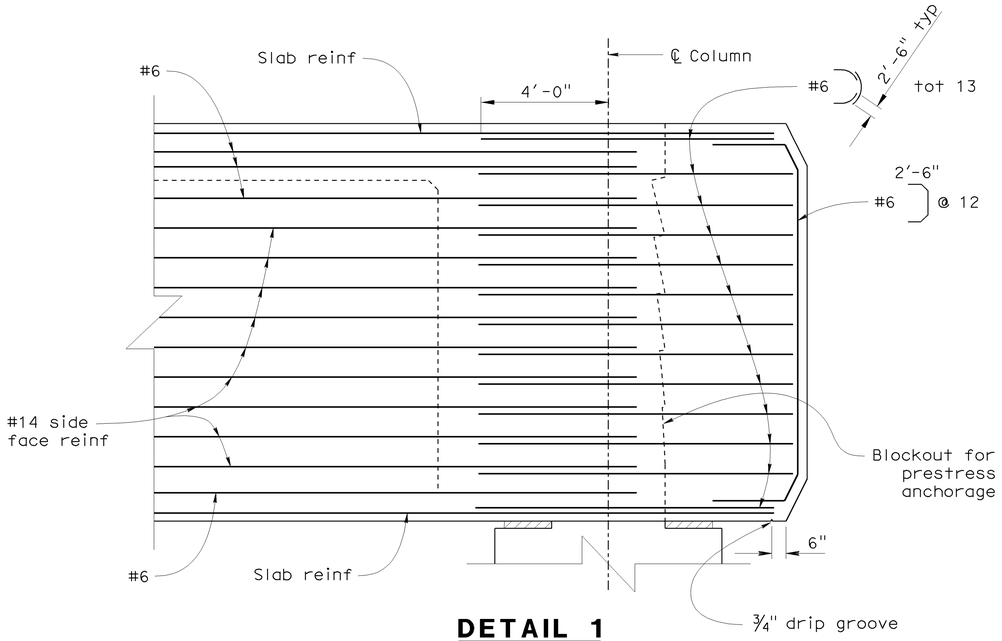

DETAIL 1

⅜"= 1'-0"

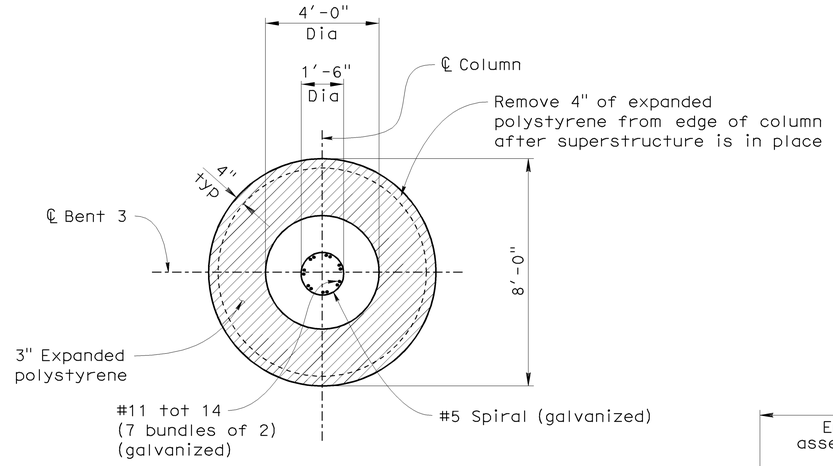

KEY PLAN

⅜"= 1'-0"

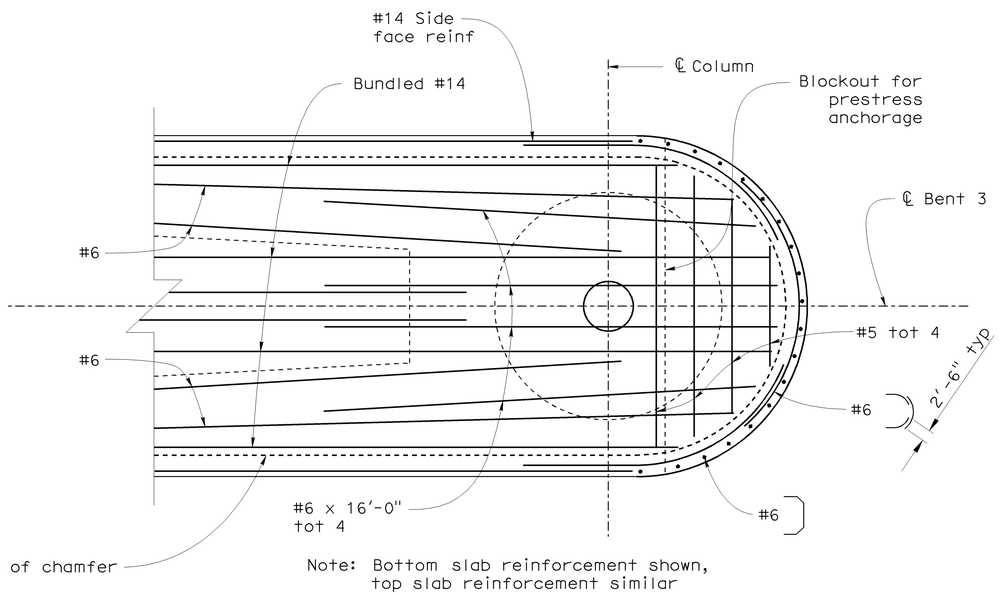

Note: Bottom slab reinforcement shown, top slab reinforcement similar

DETAIL 2

⅜"= 1'-0"

LEGEND

1. See B8-5 for bearing plate prestressing path

LEGEND

Indicates bundled bars

Expanded polystyrene

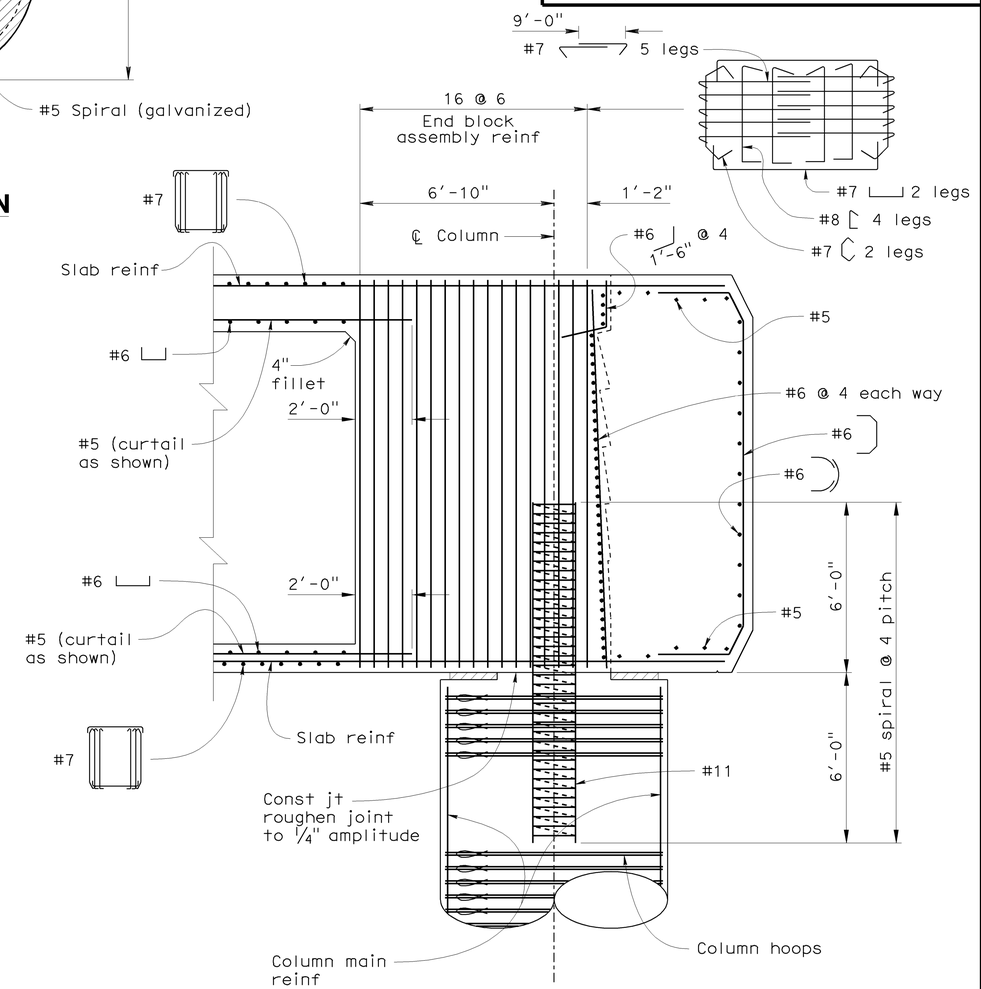

SECTION K-K

⅜" = 1'-0"

Sudhakar Vatti
DESIGN OVERSIGHT Sudhakar Vatti
8-10-09
SIGN OFF DATE

	BY	CHECKED
DESIGN	J. Hermstad	K. Michalski
DETAILS	J. Hermstad	K. Michalski
QUANTITIES	J. Wong	K. Michalski

PREPARED FOR THE STATE OF CALIFORNIA DEPARTMENT OF TRANSPORTATION

J. Hermstad
PROJECT ENGINEER

BRIDGE NO. 55-1100G
POST MILE 23.27

N405-W22 CONNECTOR SEP (REPLACE)

BENT 3 DETAILS NO. 5

DESIGN DETAIL SHEET (ENGLISH) (REV. 2/25/05)

ORIGINAL SCALE IN INCHES FOR REDUCED PLANS 0 1 2 3

CU 12235
EA 071631

DISREGARD PRINTS BEARING EARLIER REVISION DATES → 10/25/08 04/06/09 07/27/09

SHEET 23 OF 51

FILE => 55-1100g-h-b3-dt05.dgn

USERNAME => trlenard DATE PLOTTED => 04-FEB-2010 TIME PLOTTED => 07:08

DIST	COUNTY	ROUTE	POST MILES TOTAL PROJECT	SHEET No	TOTAL SHEETS
12	Ora	22,405, 605	R0.3/R0.9, 22.3/24.0,3.0/R1.6	1727	1929

REGISTERED CIVIL ENGINEER 07-27-09 DATE

2-1-10
PLANS APPROVAL DATE

REGISTERED PROFESSIONAL ENGINEER J. Hermstad No. C 66045 Exp. 06-30-10 CIVIL STATE OF CALIFORNIA

The State of California or its officers or agents shall not be responsible for the accuracy or completeness of electronic copies of this plan sheet.

OCTA
550 SOUTH MAIN STREET
ORANGE, CA 92863

TRC
21 TECHNOLOGY DR
IRVINE, CA 92618

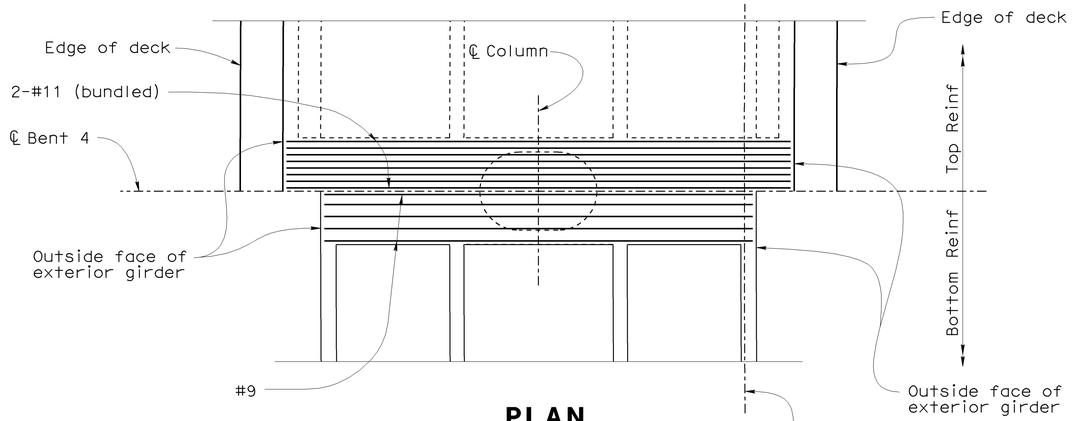

PLAN

3/16"= 1'-0"

Location	#6 Stirrup Configuration
①	
②	7'-0"
③	Varies

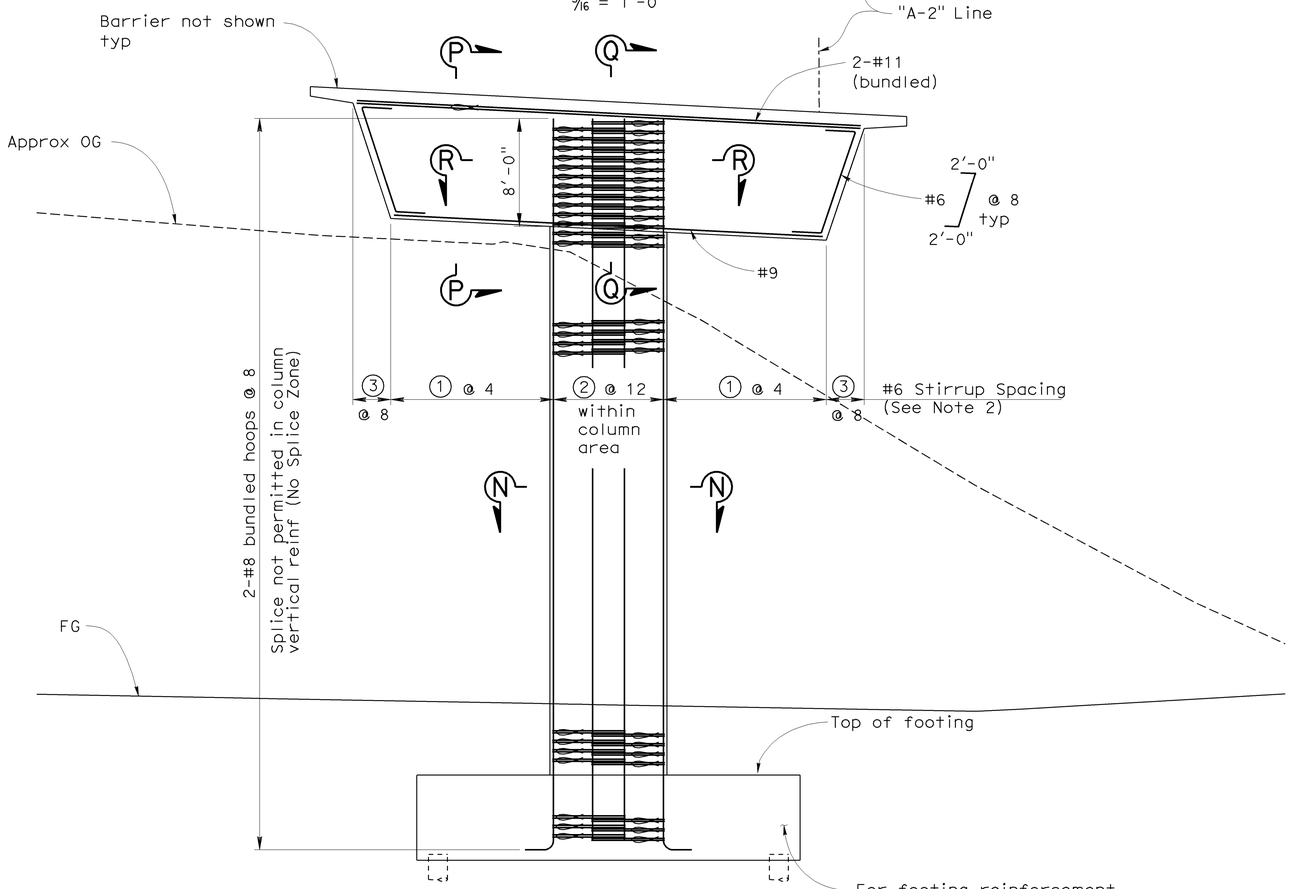

ELEVATION

3/16"= 1'-0"

Note: All piles not shown

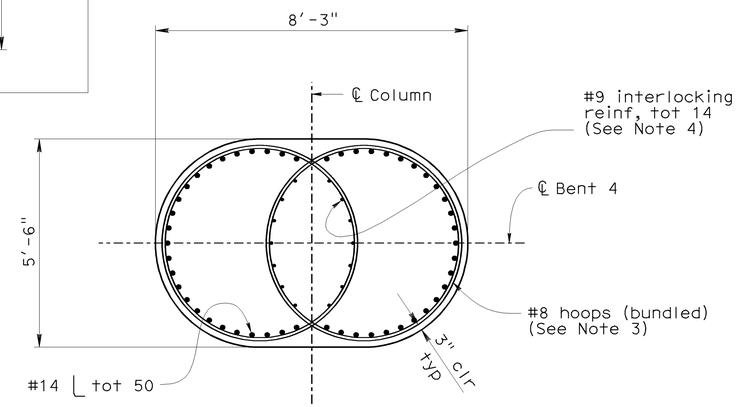

SECTION N-N

1/2"= 1'-0"

LEGEND

Indicates bundled bars

NOTES

1. For Sections P-P, Q-Q, and R-R, see "Bent 4 Details No. 2" sheet
2. Place stirrups normal to and space along ℄ Bent 4. Stirrups may be shifted slightly to clear prestressing duct
3. All hoops shall be butt welded continuous and meet "Ultimate Splice" requirements
4. Extend #9 interlocking reinforcement to 1'-0" below deck and 8" above footing bottom
5. Splices are not permitted in main cap reinforcement

Sudhakar Vatti
DESIGN OVERSIGHT Sudhakar Vatti
8-10-09
SIGN OFF DATE

	BY	CHECKED
DESIGN	J. Hermstad	K. Michalski
DETAILS	J. Hermstad	K. Michalski
QUANTITIES	J. Wong	K. Michalski

PREPARED FOR THE STATE OF CALIFORNIA DEPARTMENT OF TRANSPORTATION

J. Hermstad
PROJECT ENGINEER

BRIDGE NO. 55-1100G
POST MILE 23.27

N405-W22 CONNECTOR SEP (REPLACE)
BENT 4 LAYOUT

DESIGN DETAIL SHEET (ENGLISH) (REV. 2/25/05)

ORIGINAL SCALE IN INCHES FOR REDUCED PLANS 0 1 2 3

CU 12235
EA 071631

DISREGARD PRINTS BEARING EARLIER REVISION DATES

REVISION DATES (PRELIMINARY STAGE ONLY) 10/15/08 04/06/09 07/27/09

SHEET 24 OF 51

FILE => 55-1100g-h-b4-01.dgn

USERNAME => trlenard DATE PLOTTED => 04-FEB-2010 TIME PLOTTED => 07:08

DIST	COUNTY	ROUTE	POST MILES TOTAL PROJECT	SHEET No	TOTAL SHEETS
12	Ora	22,405, 605	R0.3/R0.9, 22.3/24.0,3.0/R1.6	1728	1929

REGISTERED CIVIL ENGINEER 07-27-09 DATE

2-1-10
PLANS APPROVAL DATE

REGISTERED PROFESSIONAL ENGINEER J. Hermstad No. C 66045 Exp. 06-30-10 CIVIL STATE OF CALIFORNIA

The State of California or its officers or agents shall not be responsible for the accuracy or completeness of electronic copies of this plan sheet.

OCTA
550 SOUTH MAIN STREET
ORANGE, CA 92863

TRC
21 TECHNOLOGY DR
IRVINE, CA 92618

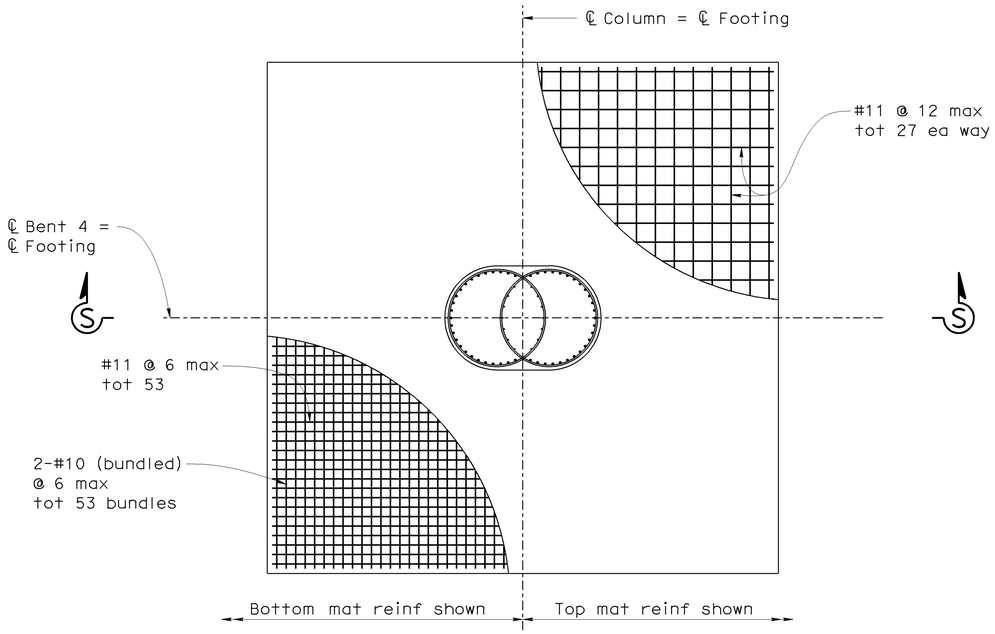

FOOTING REINFORCEMENT PLAN

1/4"= 1'-0"

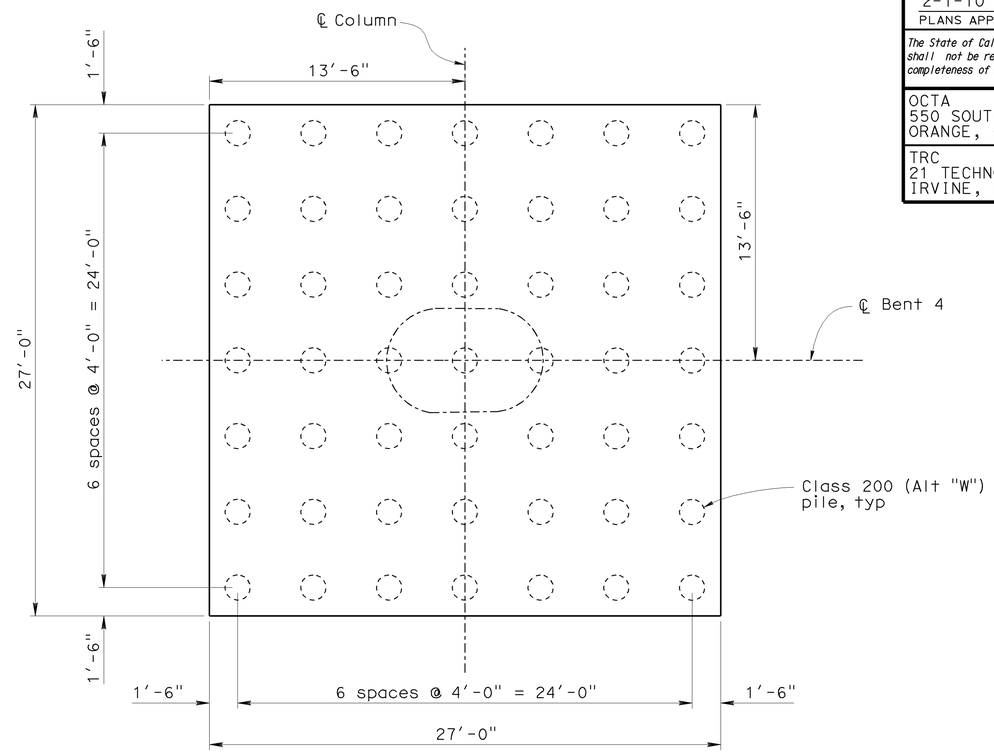

PILE LAYOUT

1/4"= 1'-0"

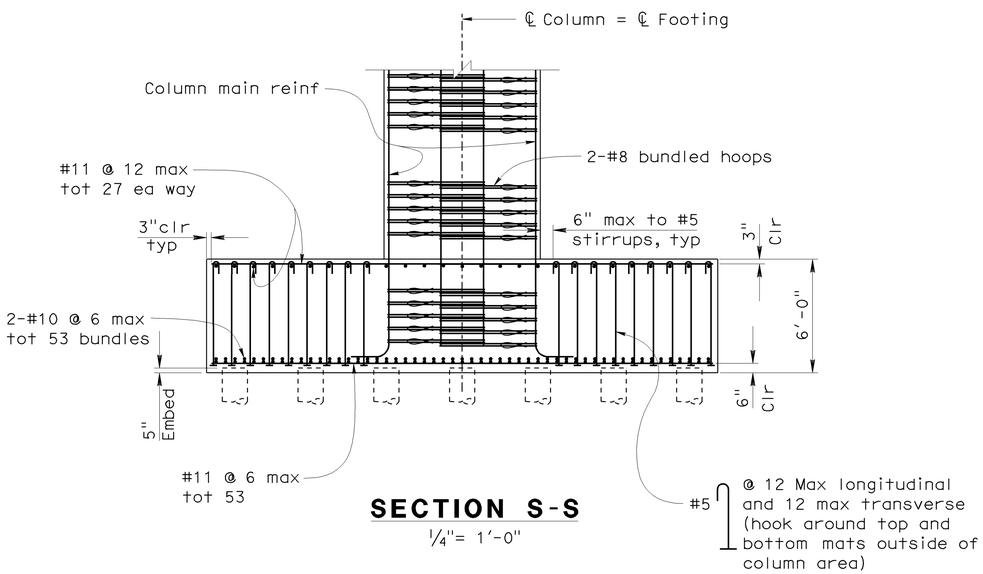

SECTION S-S

1/4"= 1'-0"

LEGEND

Indicates bundled bars

Indicates headed bar reinforcement

NOTES

1. Splices are not permitted in footing reinforcement

DESIGN	BY J. Hermstad	CHECKED K. Michalski	
DETAILS	BY J. Hermstad	CHECKED K. Michalski	
QUANTITIES	BY J. Wong	CHECKED K. Michalski	

Sudhakar Vatti
DESIGN OVERSIGHT Sudhakar Vatti
8-10-09
SIGN OFF DATE

PREPARED FOR THE STATE OF CALIFORNIA DEPARTMENT OF TRANSPORTATION

J. Hermstad
PROJECT ENGINEER

BRIDGE NO. 55-1100G
POST MILE 23.27

N405-W22 CONNECTOR SEP (REPLACE)

BENT 4 DETAILS NO. 1

DESIGN DETAIL SHEET (ENGLISH) (REV. 2/25/05)

ORIGINAL SCALE IN INCHES FOR REDUCED PLANS 0 1 2 3

CU 12235
EA 071631

DISREGARD PRINTS BEARING EARLIER REVISION DATES → 10/15/08 04/06/09 07/27/09

REVISION DATES (PRELIMINARY STAGE ONLY)

SHEET 25 OF 51

FILE => 55-1100g-h-b4-dt01.dgn

USERNAME => trlenard DATE PLOTTED => 04-FEB-2010 TIME PLOTTED => 07:08

DIST	COUNTY	ROUTE	POST MILES TOTAL PROJECT	SHEET No	TOTAL SHEETS
12	Ora	22,405, 605	R0.3/R0.9, 22.3/24.0,3.0/R1.6	1729	1929

REGISTERED CIVIL ENGINEER 07-27-09 DATE

2-1-10
PLANS APPROVAL DATE

REGISTERED PROFESSIONAL ENGINEER J. Hermstad No. C 66045 Exp. 06-30-10 CIVIL STATE OF CALIFORNIA

The State of California or its officers or agents shall not be responsible for the accuracy or completeness of electronic copies of this plan sheet.

OCTA
550 SOUTH MAIN STREET
ORANGE, CA 92863

TRC
21 TECHNOLOGY DR
IRVINE, CA 92618

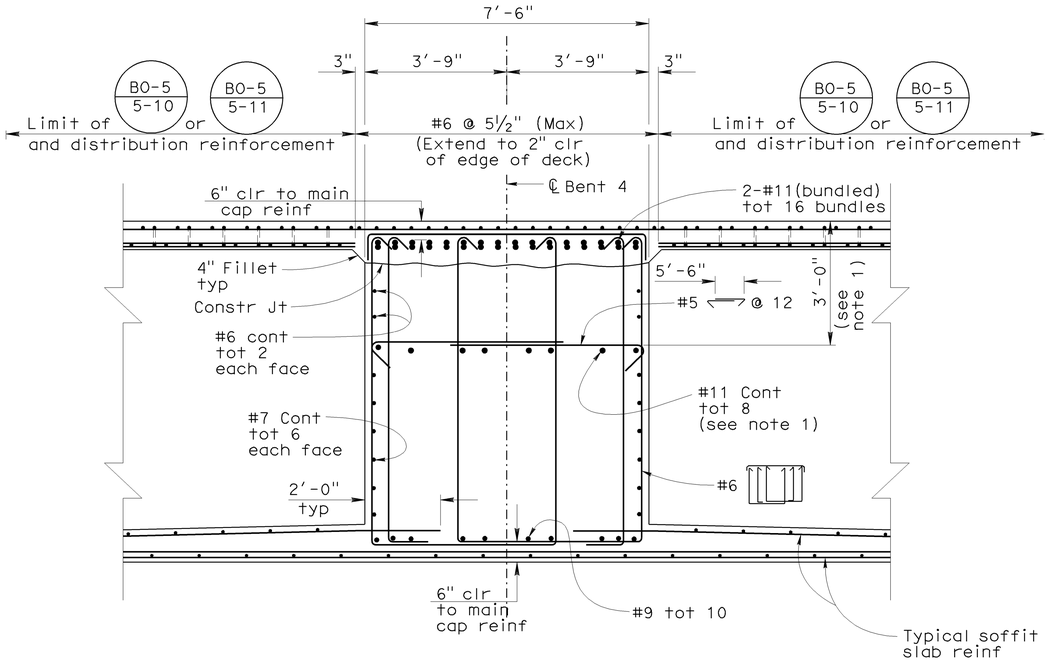

SECTION P-P

½"= 1'-0"

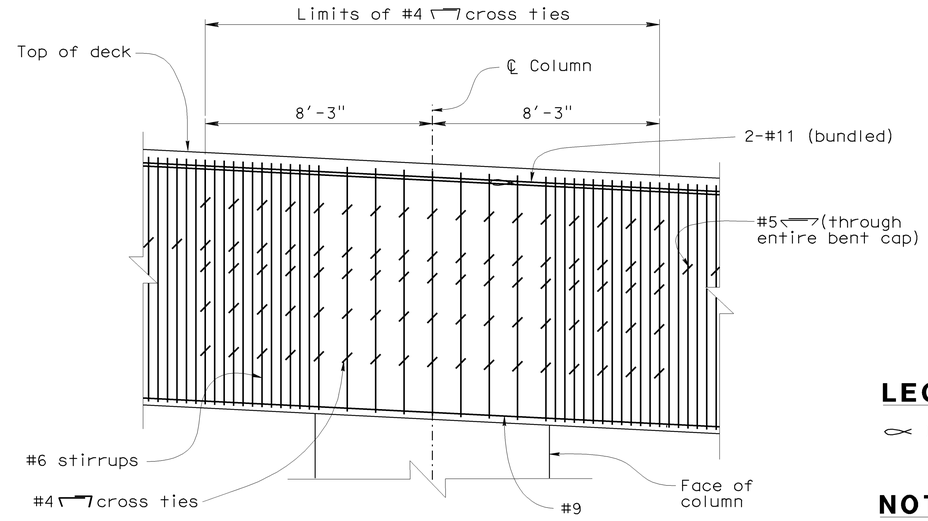

Note: Column reinforcement not shown

ELEVATION - BENT CAP JOINT REGION

⅜"= 1'-0"

LEGEND

Indicates bundled bars

NOTES

1. 3'-0" Dimension is approximate. Place reinforcement 2" below presress duct arrangement.

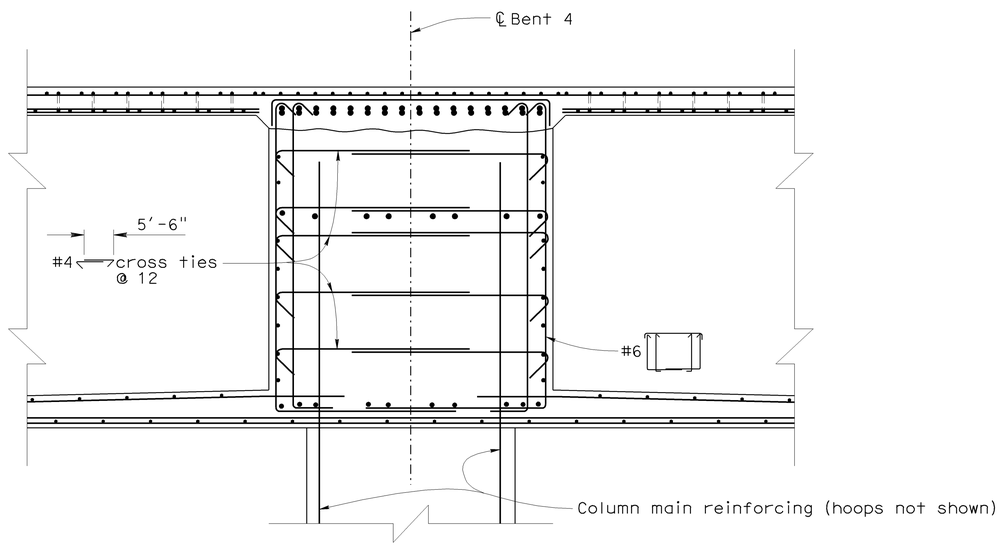

SECTION Q-Q

½"= 1'-0"

See Section P-P for information not shown

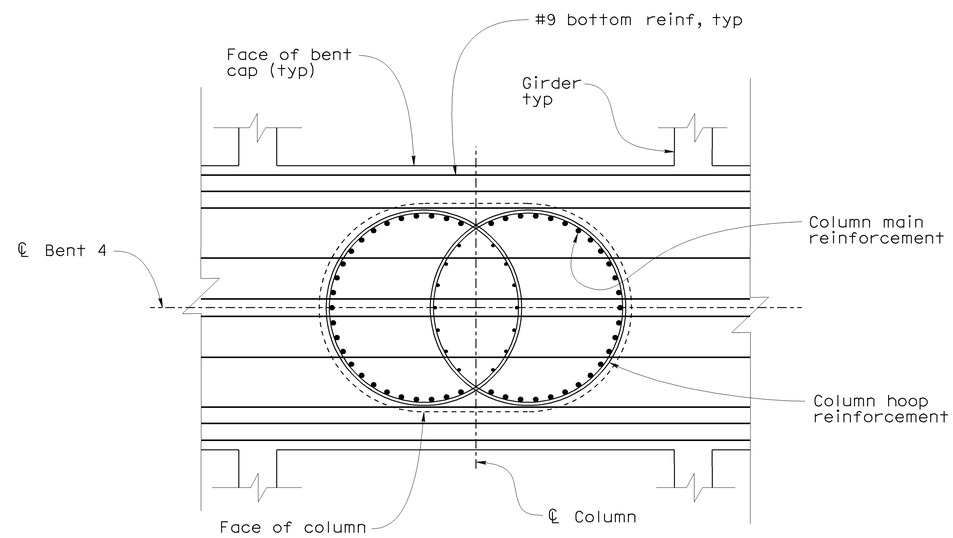

BAR PLACEMENT DETAIL (SECTION R-R)

½"= 1'-0"

Sudhakar Vatti
DESIGN OVERSIGHT Sudhakar Vatti
8-10-09
SIGN OFF DATE

DESIGN DETAIL SHEET (ENGLISH) (REV. 2/25/05)

	BY	CHECKED
DESIGN	J. Hermstad	K. Michalski
DETAILS	J. Hermstad	K. Michalski
QUANTITIES	J. Wong	K. Michalski

ORIGINAL SCALE IN INCHES FOR REDUCED PLANS 0 1 2 3

PREPARED FOR THE STATE OF CALIFORNIA DEPARTMENT OF TRANSPORTATION

J. Hermstad
PROJECT ENGINEER

CU 12235
EA 071631

BRIDGE NO. 55-1100G
POST MILE 23.27

N405-W22 CONNECTOR SEP (REPLACE)

BENT 4 DETAILS NO. 2

DISREGARD PRINTS BEARING EARLIER REVISION DATES

REVISION DATES (PRELIMINARY STAGE ONLY) 10/25/08 04/06/09 07/27/09

SHEET 26 OF 51

FILE => 55-1100g-h-b4-dt02.dgn

USERNAME => friehard DATE PLOTTED => 04-FEB-2010 TIME PLOTTED => 07:08

DIST	COUNTY	ROUTE	POST MILES TOTAL PROJECT	SHEET No	TOTAL SHEETS
12	Ora	22,405, 605	R0.3/R0.9, 22.3/24.0,3.0/R1.6	1730	1929

REGISTERED CIVIL ENGINEER 07-27-09 DATE

2-1-10
PLANS APPROVAL DATE

REGISTERED PROFESSIONAL ENGINEER J. Hermstad No. C 66045 Exp. 06-30-10 CIVIL STATE OF CALIFORNIA

The State of California or its officers or agents shall not be responsible for the accuracy or completeness of electronic copies of this plan sheet.

OCTA
550 SOUTH MAIN STREET
ORANGE, CA 92863

TRC
21 TECHNOLOGY DR
IRVINE, CA 92618

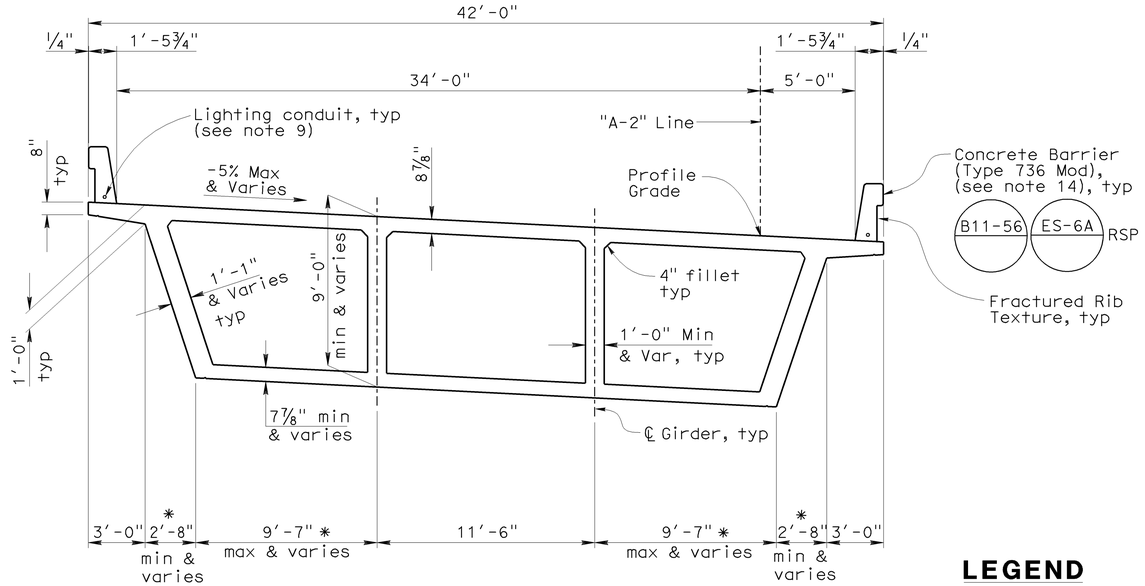

* Offset dimension and distance to interior girder shall vary parabolically through 120'-0" parabolic haunch. Maintain 3V:1H slope on exterior girder.

TYPICAL SECTION

1/4"= 1'-0"

NOTES

1. For stirrup placement and prestressing information, see "Girder Layout No. 1" and "Girder Layout No. 2" sheets
2. For location of deck drains, piping location, and deck reinforcement adjustments at deck drains, see "Deck Drainage Layout" sheet
3. For additional slab reinforcement, see "Girder Reinforcement No. 1" and "Girder Reinforcement No. 2" sheets
4. #11 cont reinf in deck and soffit slab, and top & bottom of girders shall be made continuous and meet "Service Splice" requirements
5. For Section A-A, see "Typical Section No. 2" sheet
6. Bottom slab reinforcement to be adjusted to accommodate soffit access opening
7. For parabolic haunch details, see "Girder Layout No. 3" sheet
8. For additional girder side reinforcement, see "Girder Reinforcement No. 2" sheet
9. For lighting conduit, see "Lighting Plans"
10. At End Diaphragm Detail, Abut 1 shown, Abut 5 similar
11. Reinforcing bars may be adjusted as necessary to accommodate installation of the joint seal assembly blockout as directed by the Engineer
12. See "Girder Reinforcement No. 3" sheet for additional information
13. Bottom of blockout should be located at or above the top surface of the bottom slab
14. For architectural details see "Architectural Details No. 3" sheet

LEGEND

- ∘ Indicates Additional Slab Reinforcement
- • Indicates Continuous Slab and Girder Reinforcement
- ⌒ Indicates bundled bars

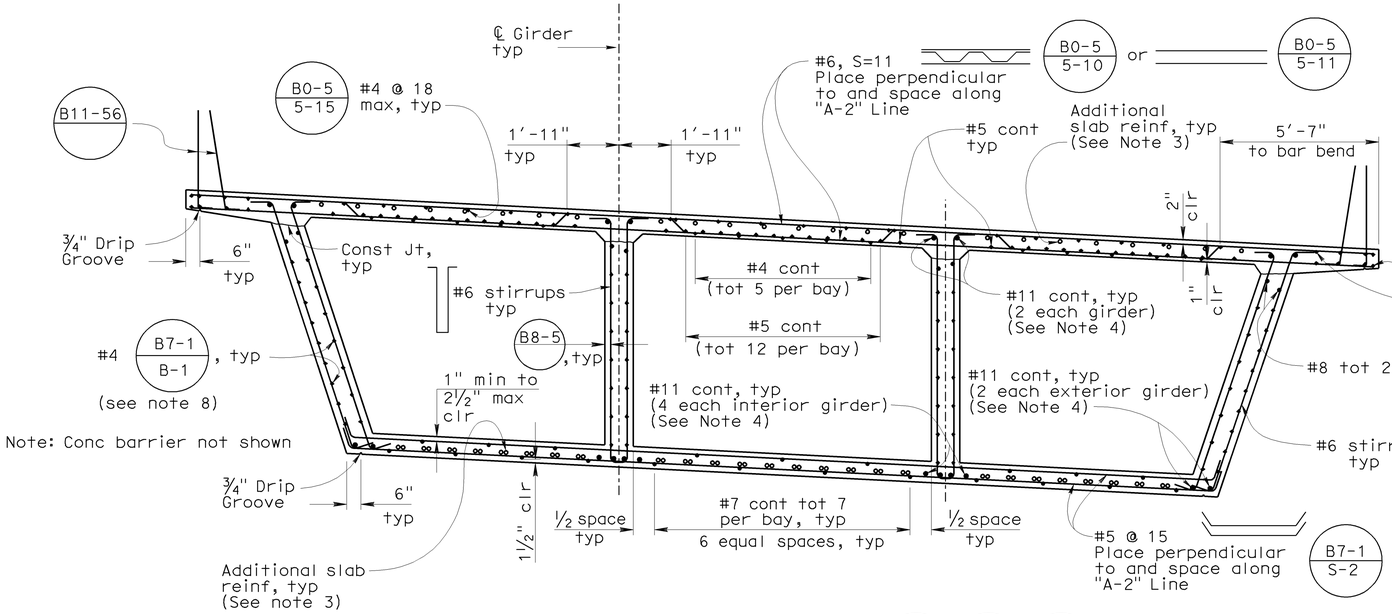

TYPICAL SECTION

B0-5 B7-1 B8-5

3/8"= 1'-0"

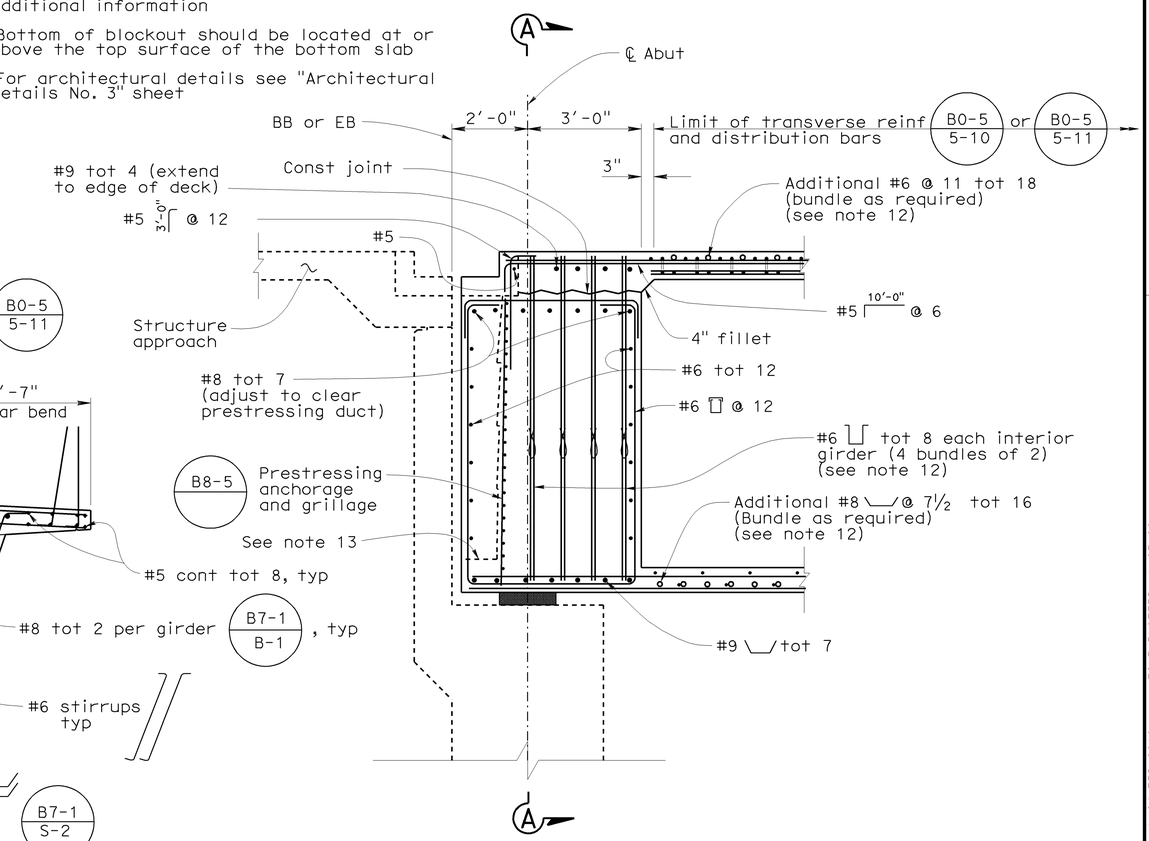

END DIAPHRAGM DETAIL

1/2"= 1'-0"

Sudhakar Vatti
DESIGN OVERSIGHT Sudhakar Vatti
8-10-09
SIGN OFF DATE

	BY	CHECKED
DESIGN	J. Hermstad	K. Michalski
DETAILS	J. Hermstad	K. Michalski
QUANTITIES	J. Wong	K. Michalski

PREPARED FOR THE STATE OF CALIFORNIA DEPARTMENT OF TRANSPORTATION

J. Hermstad
PROJECT ENGINEER

BRIDGE NO. 55-1100G
POST MILE 23.27

N405-W22 CONNECTOR SEP (REPLACE)

TYPICAL SECTION NO. 1

DESIGN DETAIL SHEET (ENGLISH) (REV. 2/25/05)

ORIGINAL SCALE IN INCHES FOR REDUCED PLANS 0 1 2 3

CU 12235
EA 071631

DISREGARD PRINTS BEARING EARLIER REVISION DATES

REVISION DATES (PRELIMINARY STAGE ONLY) 10/25/08 04/06/09 07/27/09

SHEET 27 OF 51

FILE => 55-1100g-k-ts01.dgn

USERNAME => friehard DATE PLOTTED => 04-FEB-2010 TIME PLOTTED => 07:08

DIST	COUNTY	ROUTE	POST MILES TOTAL PROJECT	SHEET No	TOTAL SHEETS
12	Ora	22,405, 605	R0.3/R0.9, 22.3/24.0,3.0/R1.6	1731	1929

REGISTERED CIVIL ENGINEER 07-27-09 DATE

2-1-10
PLANS APPROVAL DATE

REGISTERED PROFESSIONAL ENGINEER J. Hermstad No. C 66045 Exp. 06-30-10 CIVIL STATE OF CALIFORNIA

The State of California or its officers or agents shall not be responsible for the accuracy or completeness of electronic copies of this plan sheet.

OCTA
550 SOUTH MAIN STREET
ORANGE, CA 92863

TRC
21 TECHNOLOGY DR
IRVINE, CA 92618

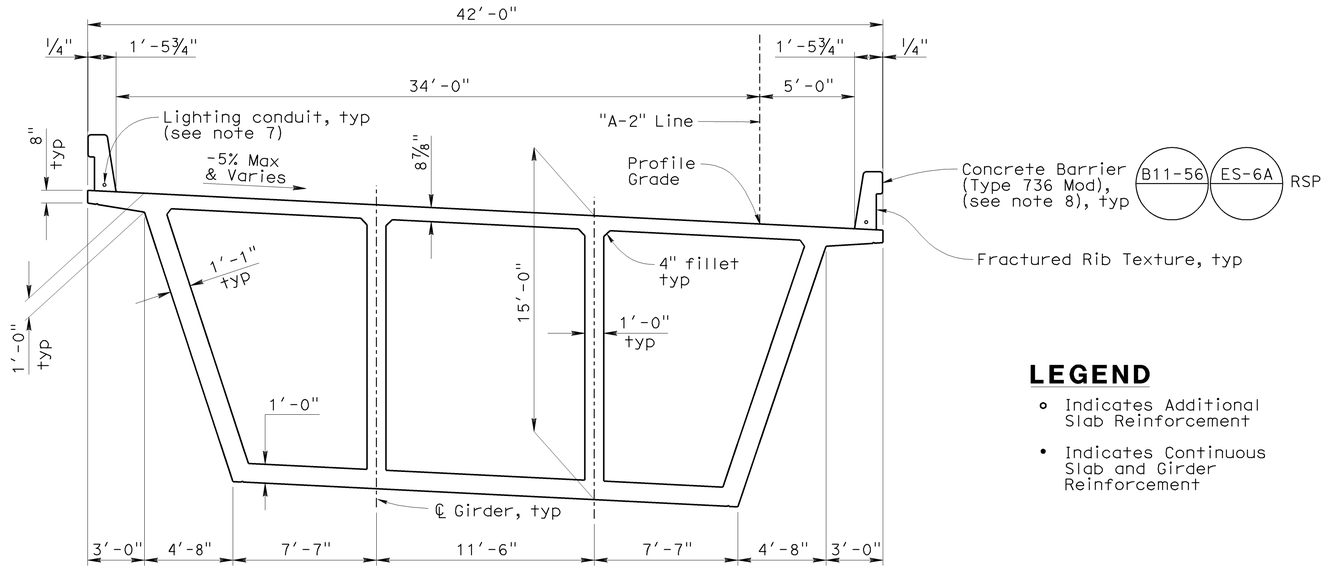

TYPICAL SECTION @ BENT 2

1/4"= 1'-0"

Note: Conc barrier not shown

LEGEND

- ∘ Indicates Additional Slab Reinforcement
- • Indicates Continuous Slab and Girder Reinforcement

NOTES

1. For stirrup placement and prestressing information, see "Girder Layout No. 1" and "Girder Layout No. 2" sheets
2. For location of deck drains, piping location, and deck reinforcement adjustments at deck drains, see "Deck Drainage Layout" sheet
3. For additional slab reinforcement, see "Girder Reinforcement No. 1" sheet and "Girder Reinforcement No. 2" sheet
4. #11 cont reinf in deck and soffit slab, and top & bottom of girders shall be made continuous and meet "Service Splice" requirements
5. Bottom slab reinforcement to be adjusted to accommodate soffit access opening
6. For additional girder side reinforcement, see "Girder Reinforcement No. 3" sheet
7. For lighting conduit, see "Lighting Plans"
8. For architectural details, see "Architectural Details No. 3" sheet

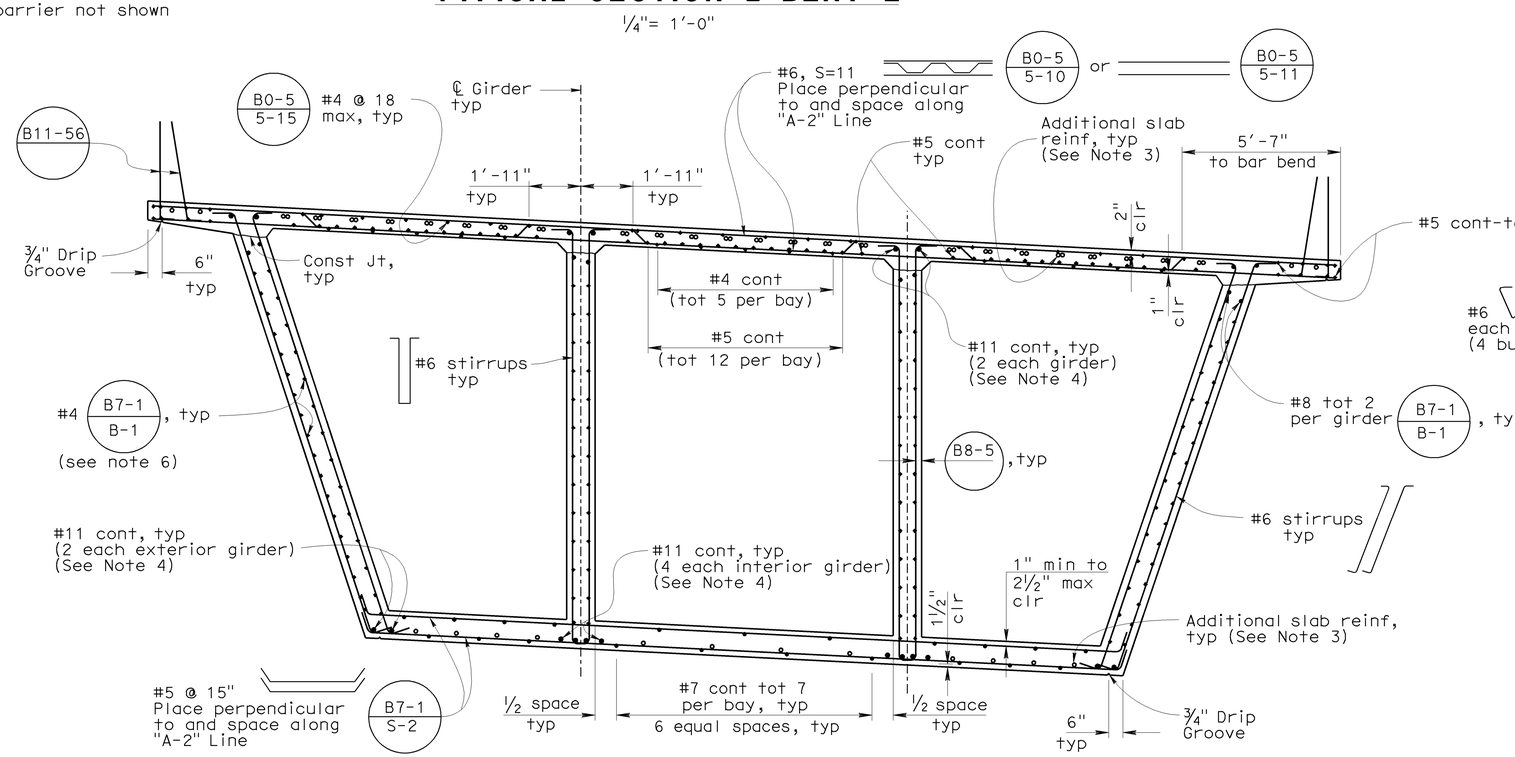

TYPICAL SECTION @ BENT 2

3/8"= 1'-0"

B0-5 B7-1 B8-5

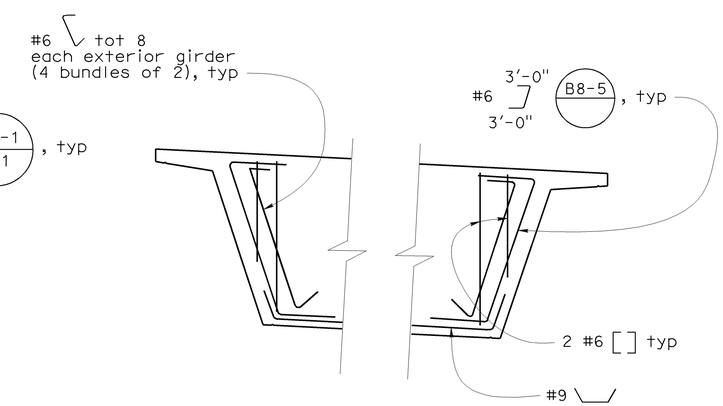

SECTION A-A

1/4"= 1'-0"

DESIGN OVERSIGHT Sudhakar Vatti	DESIGN	BY J. Hermstad	CHECKED K. Michalski
8-10-09 SIGN OFF DATE	DETAILS	BY J. Hermstad	CHECKED K. Michalski
	QUANTITIES	BY J. Wong	CHECKED K. Michalski

PREPARED FOR THE STATE OF CALIFORNIA DEPARTMENT OF TRANSPORTATION

J. Hermstad
PROJECT ENGINEER

BRIDGE NO. 55-1100G
POST MILE 23.27

N405-W22 CONNECTOR SEP (REPLACE)

TYPICAL SECTION NO. 2

DESIGN DETAIL SHEET (ENGLISH) (REV. 2/25/05)

ORIGINAL SCALE IN INCHES FOR REDUCED PLANS 0 1 2 3

CU 12235
EA 071631

DISREGARD PRINTS BEARING EARLIER REVISION DATES

REVISION DATES (PRELIMINARY STAGE ONLY) 10/15/08 04/06/09 07/27/09

SHEET 28 OF 51

FILE => 55-1100g-k-ts02.dgn

USERNAME => friehard DATE PLOTTED => 04-FEB-2010 TIME PLOTTED => 07:18

DIST	COUNTY	ROUTE	POST MILES TOTAL PROJECT	SHEET No	TOTAL SHEETS
12	Ora	22,405, 605	R0.3/R0.9, 22.3/24.0,3.0/R1.6	1732	1929

REGISTERED CIVIL ENGINEER 07-27-09 DATE

2-1-10
PLANS APPROVAL DATE

REGISTERED PROFESSIONAL ENGINEER J. Hermstad No. C 66045 Exp. 06-30-10 CIVIL STATE OF CALIFORNIA

The State of California or its officers or agents shall not be responsible for the accuracy or completeness of electronic copies of this plan sheet.

OCTA
550 SOUTH MAIN STREET
ORANGE, CA 92863

TRC
21 TECHNOLOGY DR
IRVINE, CA 92618

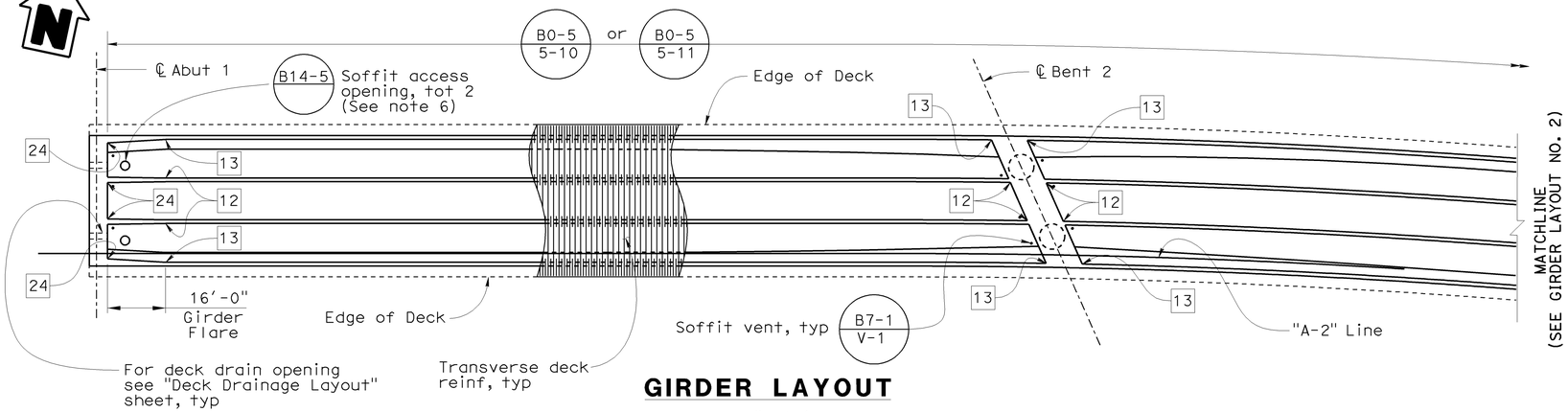

GIRDER LAYOUT

1"= 20'

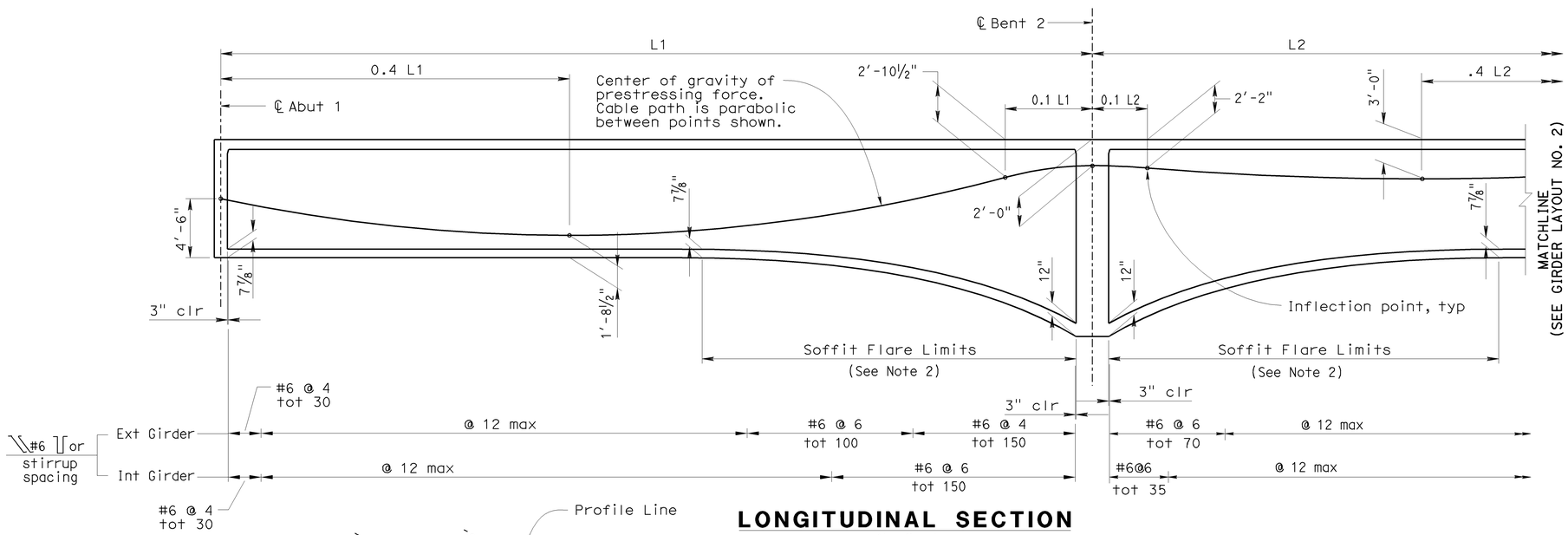

LONGITUDINAL SECTION

No Scale

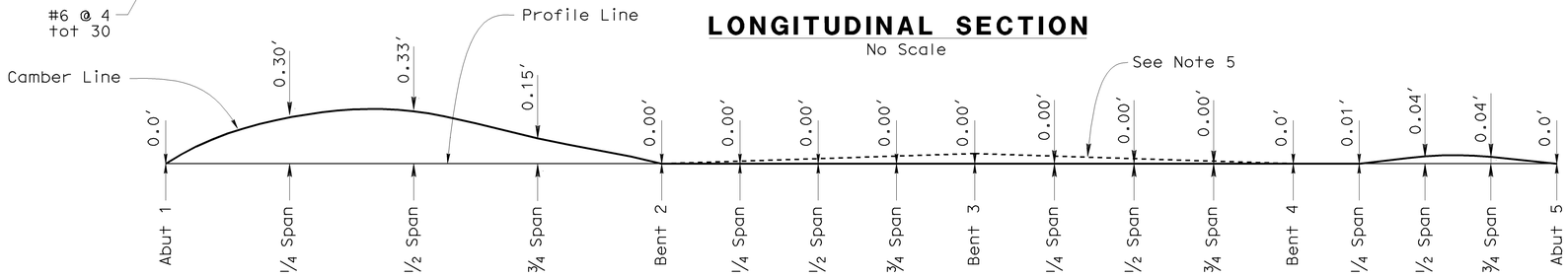

CAMBER DIAGRAM

No Scale

(Camber values do not include allowance for falsework settlement)

LEGEND

XX Indicates girder stem width in inches, see B7-1 / S-3

NOTES

1. Stressing sequence with bent 3 outrigger prestress required. See "Bent 3 Details No. 3" sheet.
2. Soffit shall flare linearly through 120'-0" parabolic haunch. For parabolic haunch details see "Girder Layout No. 3" sheet.
3. Prestressing force design includes the effects of horizontal curvature
4. L = Distance measured along ℄ girder between ℄ bents or ℄ abutments
5. Outrigger camber at Bent 3 is not included in the Camber Diagram. See Outrigger Camber Diagram on "Bent 3 Details No. 3" sheet.
6. Soffit access openings to be located in center of bay, 10'-0" from face of diaphragm

PRESTRESSING NOTES

270 Ksi Low Relaxation Strands:	
Pjack	= 18200 kips
Anchor Set	= ⅜ inch
Total Number of Girders	= 4
Friction curvature coefficient	= 20 x 10^{-2} (1/rad)
Friction wobble coefficient	K = 20 x 10^{-5}(1/ft)
Distribution of prestress force (Pjack) between girders shall not exceed the ratio of 3:2.	
Maximum final force variation between girders shall not exceed 725 kips.	
Concrete: f'_c = 5.4 ksi @ 28 days f'_{ci} = 4.5 ksi @ time of stressing	
Contractor shall submit elongation calculations based on inital stress at ☒ = 0.863 times jacking stress	
Two end stressing shall be performed	

Sudhakar Vatti
DESIGN OVERSIGHT Sudhakar Vatti
8-10-09
SIGN OFF DATE

	BY	CHECKED
DESIGN	J. Hermstad	K. Michalski
DETAILS	J. Hermstad	K. Michalski
QUANTITIES	J. Wong	K. Michalski

PREPARED FOR THE STATE OF CALIFORNIA DEPARTMENT OF TRANSPORTATION

J. Hermstad
PROJECT ENGINEER

BRIDGE NO. 55-1100G
POST MILE 23.27

N405-W22 CONNECTOR SEP (REPLACE)

GIRDER LAYOUT NO. 1

DESIGN DETAIL SHEET (ENGLISH) (REV. 2/25/05)

ORIGINAL SCALE IN INCHES FOR REDUCED PLANS 0 1 2 3

CU 12235
EA 071631

DISREGARD PRINTS BEARING EARLIER REVISION DATES

REVISION DATES (PRELIMINARY STAGE ONLY) 10/25/08 04/06/09 07/27/09

SHEET 29 OF 51

FILE => 55-1100g-l-glo01.dgn

USERNAME => trienard DATE PLOTTED => 04-FEB-2010 TIME PLOTTED => 07:18

DIST	COUNTY	ROUTE	POST MILES TOTAL PROJECT	SHEET No	TOTAL SHEETS
12	Ora	22,405, 605	R0.3/R0.9, 22.3/24.0,3.0/R1.6	1733	1929

REGISTERED CIVIL ENGINEER 07-27-09 DATE

2-1-10
PLANS APPROVAL DATE

REGISTERED PROFESSIONAL ENGINEER J. Hermstad No. C 66045 Exp. 06-30-10 CIVIL STATE OF CALIFORNIA

The State of California or its officers or agents shall not be responsible for the accuracy or completeness of electronic copies of this plan sheet.

OCTA
550 SOUTH MAIN STREET
ORANGE, CA 92863

TRC
21 TECHNOLOGY DR
IRVINE, CA 92618

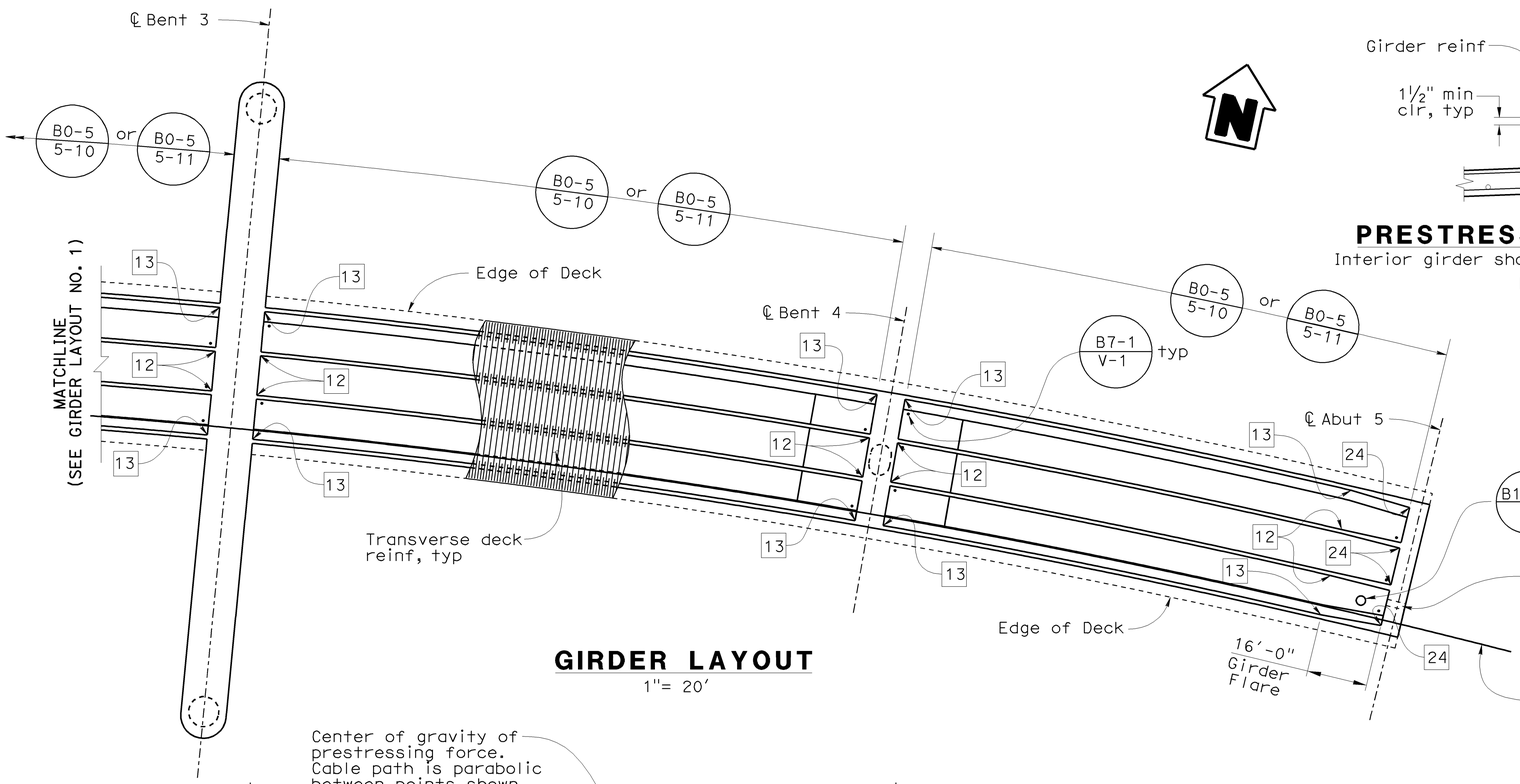

GIRDER LAYOUT
1"= 20'

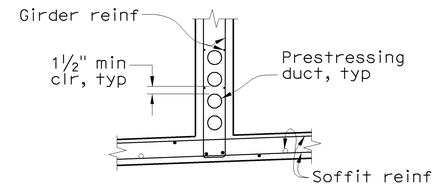

PRESTRESS DUCT DETAIL
Interior girder shown, exterior girder similar
No Scale

LEGEND

XX Indicates girder stem width in inches, see B7-1 / S-3

• Indicates soffit vent

⊠ Indicates theoretical point of no movement for prestressing

NOTES

1. For girder stressing and camber diagram, see "Girder Layout No. 1" sheet.
2. Stressing sequence with bent 3 outrigger prestress required. See "Bent 3 Details No. 3" sheet.
3. Prestressing force design includes the effects of horizontal curvature
4. L = Distance measured along ℄ girder between ℄ bents or ℄ abutments
5. Soffit access opening to be located in center of bay, 10'-0" from face of diaphragm

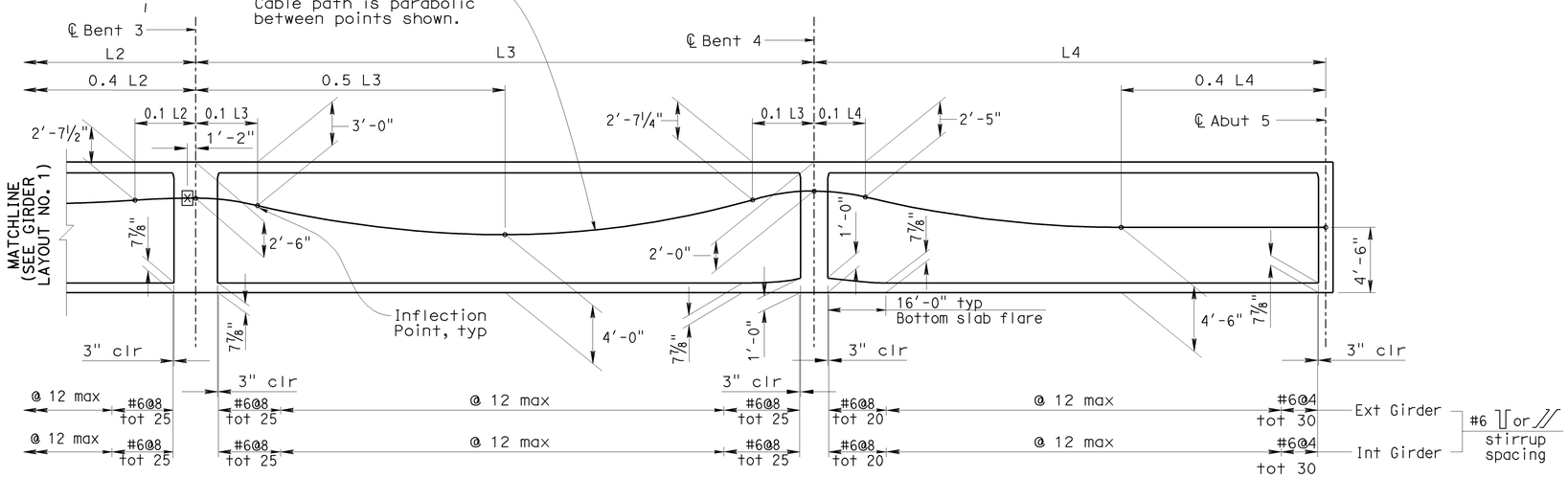

LONGITUDINAL SECTION
No Scale

DESIGN OVERSIGHT Sudhakar Vatti	DESIGN	BY J. Hermstad	CHECKED K. Michalski
8-10-09 SIGN OFF DATE	DETAILS	BY J. Hermstad	CHECKED K. Michalski
	QUANTITIES	BY J. Wong	CHECKED K. Michalski

PREPARED FOR THE STATE OF CALIFORNIA DEPARTMENT OF TRANSPORTATION

J. Hermstad
PROJECT ENGINEER

BRIDGE NO. 55-1100G
POST MILE 23.27

N405-W22 CONNECTOR SEP (REPLACE)
GIRDER LAYOUT NO. 2

DESIGN DETAIL SHEET (ENGLISH) (REV. 2/25/05)

ORIGINAL SCALE IN INCHES FOR REDUCED PLANS 0 1 2 3

CU 12235
EA 071631

DISREGARD PRINTS BEARING EARLIER REVISION DATES

REVISION DATES (PRELIMINARY STAGE ONLY) 10/15/08 04/06/09 07/27/09

SHEET 30 OF 51

FILE => 55-1100g-1-gl002.dgn

USERNAME => rtrenhard DATE PLOTTED => 04-FEB-2010 TIME PLOTTED => 07:18

DIST	COUNTY	ROUTE	POST MILES TOTAL PROJECT	SHEET No	TOTAL SHEETS
12	Ora	22,405, 605	R0.3/R0.9, 22.3/24.0,3.0/R1.6	1734	1929

REGISTERED CIVIL ENGINEER 07-27-09 DATE

2-1-10
PLANS APPROVAL DATE

REGISTERED PROFESSIONAL ENGINEER J. Hermstad No. C 66045 Exp. 06-30-10 CIVIL STATE OF CALIFORNIA

The State of California or its officers or agents shall not be responsible for the accuracy or completeness of electronic copies of this plan sheet.

OCTA
550 SOUTH MAIN STREET
ORANGE, CA 92863

TRC
21 TECHNOLOGY DR
IRVINE, CA 92618

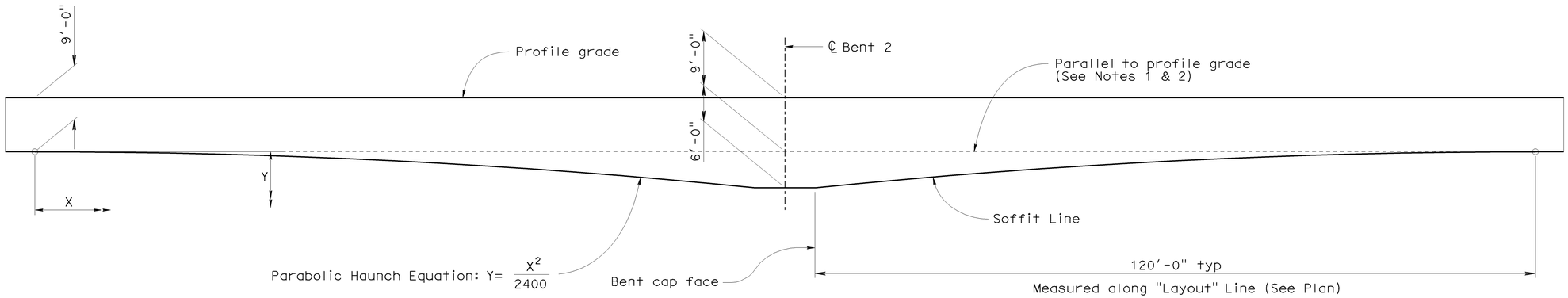

ELEVATION - PARABOLIC HAUNCH

No Scale

NOTES

1. Diagram is shown parallel to "A-2" Line
2. For camber adjustments to soffit line and profile grade, see Camber Diagram on "Girder Layout No. 1" sheet

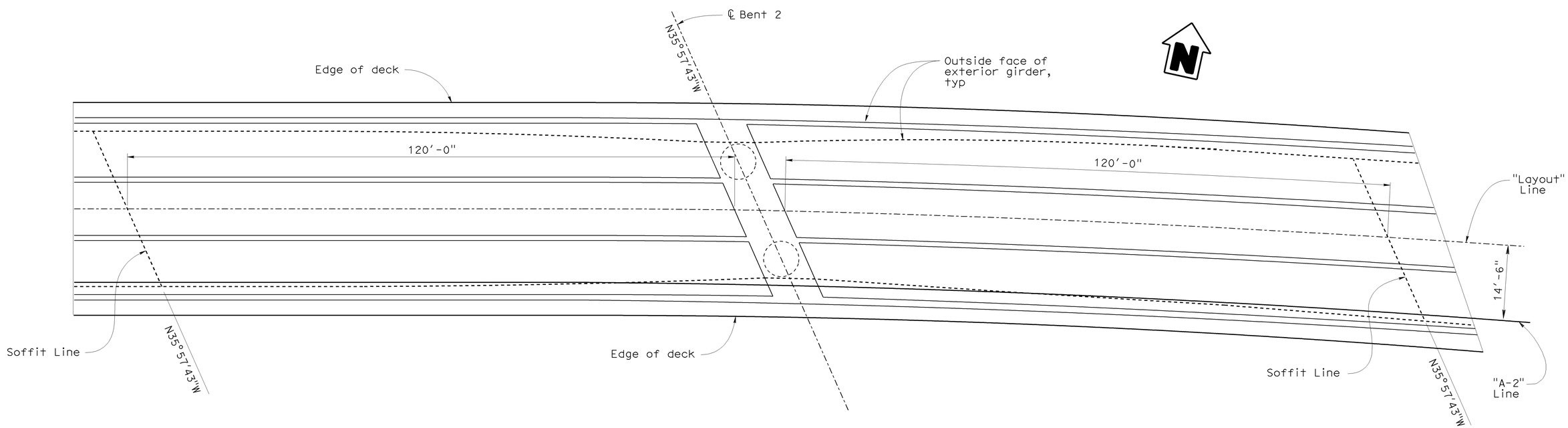

PLAN - PARABOLIC HAUNCH

No Scale

Sudhakar Vatti — DESIGN OVERSIGHT Sudhakar Vatti; 8-10-09 SIGN OFF DATE	DESIGN	BY J. Hermstad	CHECKED K. Michalski	PREPARED FOR THE STATE OF CALIFORNIA DEPARTMENT OF TRANSPORTATION	J. Hermstad PROJECT ENGINEER
	DETAILS	BY J. Hermstad	CHECKED K. Michalski		
	QUANTITIES	BY J. Wong	CHECKED K. Michalski		

BRIDGE NO. 55-11100G
POST MILE 23.27

N405-W22 CONNECTOR SEP (REPLACE)
GIRDER LAYOUT NO. 3

DESIGN DETAIL SHEET (ENGLISH) (REV. 2/25/05)

ORIGINAL SCALE IN INCHES FOR REDUCED PLANS 0 1 2 3

CU 12235
EA 071631

DISREGARD PRINTS BEARING EARLIER REVISION DATES → REVISION DATES (PRELIMINARY STAGE ONLY) ~~10/25/08~~ ~~04/06/09~~ 07/27/09

SHEET 31 OF 51

FILE => 55-1100g-1-gl003.dgn

USERNAME => trlenard DATE PLOTTED => 04-FEB-2010 TIME PLOTTED => 07:18

DIST	COUNTY	ROUTE	POST MILES TOTAL PROJECT	SHEET No	TOTAL SHEETS
12	Ora	22,405, 605	R0.3/R0.9, 22.3/24.0,3.0/R1.6	1735	1929

REGISTERED CIVIL ENGINEER 07-27-09 DATE

2-1-10
PLANS APPROVAL DATE

REGISTERED PROFESSIONAL ENGINEER J. Hermstad No. C 66045 Exp. 06-30-10 CIVIL STATE OF CALIFORNIA

The State of California or its officers or agents shall not be responsible for the accuracy or completeness of electronic copies of this plan sheet.

OCTA
550 SOUTH MAIN STREET
ORANGE, CA 92863

TRC
21 TECHNOLOGY DR
IRVINE, CA 92618

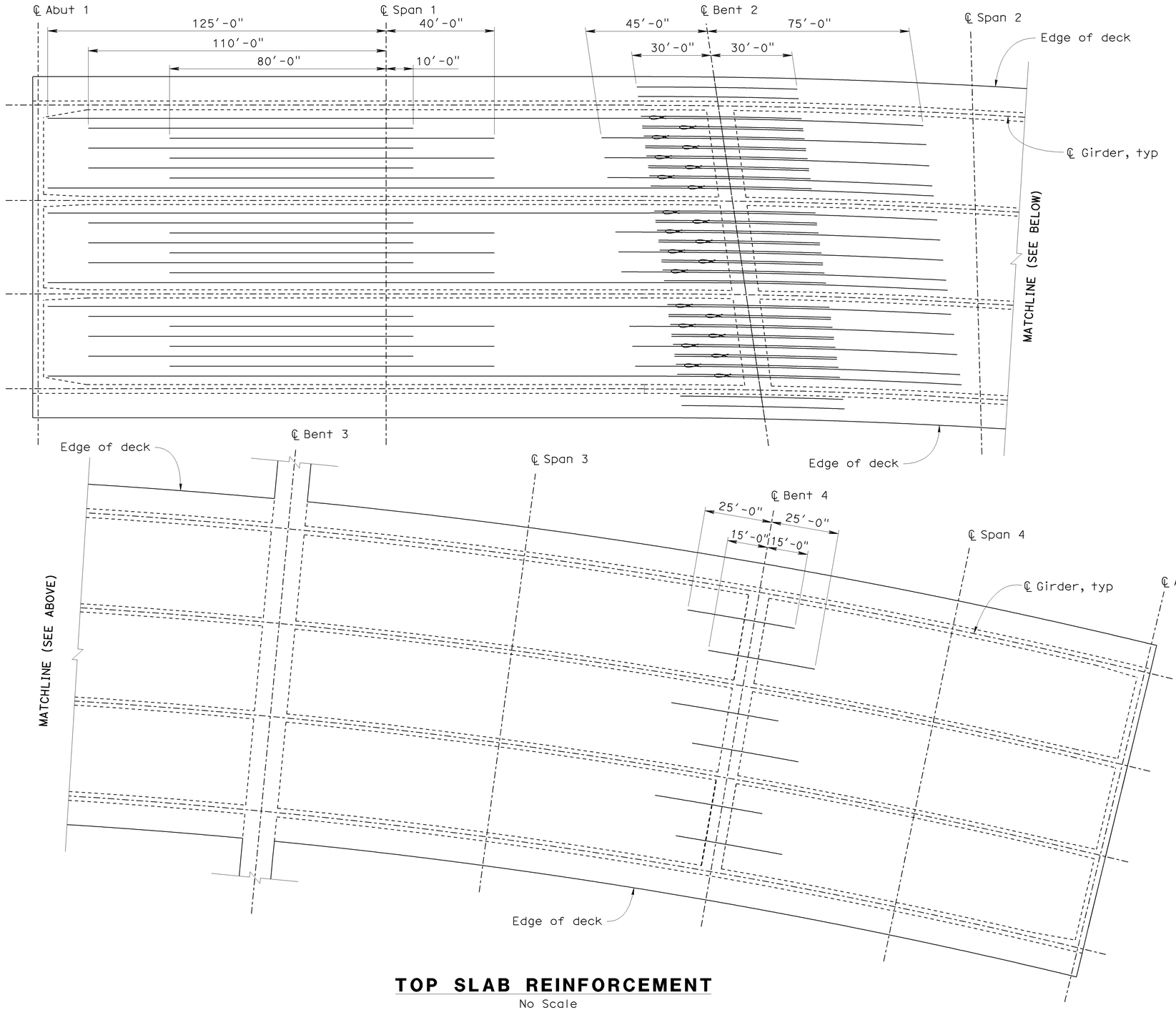

TOP SLAB REINFORCEMENT

No Scale

NOTES

1. All distances measured from center line
2. All bars #11 except as noted
3. All #11 reinforcement shall meet "Service Splice" requirements. No splices are allowed within 25'-0" from the centerline of bent and 25'-0" from the centerline of span.

LEGEND

Indicates bundled bars

Sudhakar Vatti
DESIGN OVERSIGHT Sudhakar Vatti
8-10-09
SIGN OFF DATE

	BY	CHECKED
DESIGN	J. Hermstad	K. Michalski
DETAILS	J. Hermstad	K. Michalski
QUANTITIES	J. Wong	K. Michalski

PREPARED FOR THE STATE OF CALIFORNIA DEPARTMENT OF TRANSPORTATION

J. Hermstad
PROJECT ENGINEER

BRIDGE NO. 55-1100G
POST MILE 23.27

N405-W22 CONNECTOR SEP (REPLACE)
GIRDER REINFORCEMENT NO. 1

DESIGN DETAIL SHEET (ENGLISH) (REV. 2/25/05)

ORIGINAL SCALE IN INCHES FOR REDUCED PLANS 0 1 2 3

CU 12235
EA 071631

DISREGARD PRINTS BEARING EARLIER REVISION DATES → 10/25/08 04/06/09 07/27/09

SHEET 32 OF 51

FILE => 55-1100g-o-grf01.dgn

USERNAME => trlenard DATE PLOTTED => 04-FEB-2010 TIME PLOTTED => 07:18

DIST	COUNTY	ROUTE	POST MILES TOTAL PROJECT	SHEET No	TOTAL SHEETS
12	Ora	22,405, 605	R0.3/R0.9, 22.3/24.0,3.0/R1.6	1736	1929

REGISTERED CIVIL ENGINEER 07-27-09 DATE

2-1-10
PLANS APPROVAL DATE

REGISTERED PROFESSIONAL ENGINEER J. Hermstad No. C 66045 Exp. 06-30-10 CIVIL STATE OF CALIFORNIA

The State of California or its officers or agents shall not be responsible for the accuracy or completeness of electronic copies of this plan sheet.

OCTA
550 SOUTH MAIN STREET
ORANGE, CA 92863

TRC
21 TECHNOLOGY DR
IRVINE, CA 92618

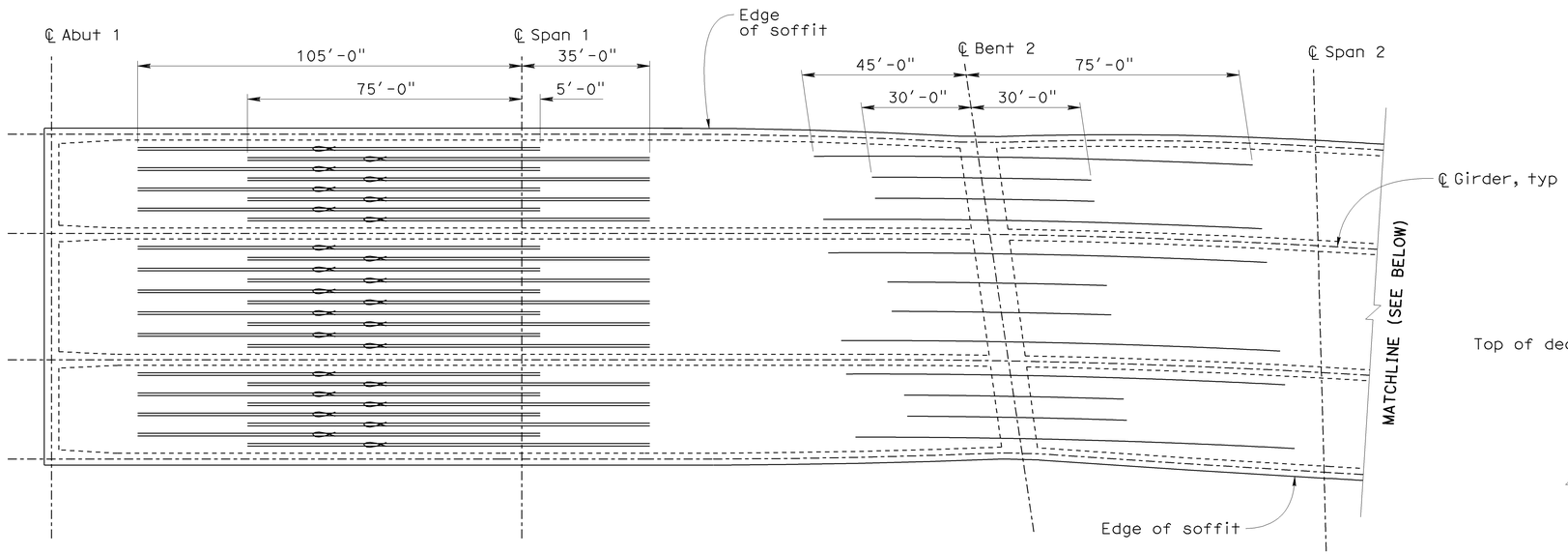

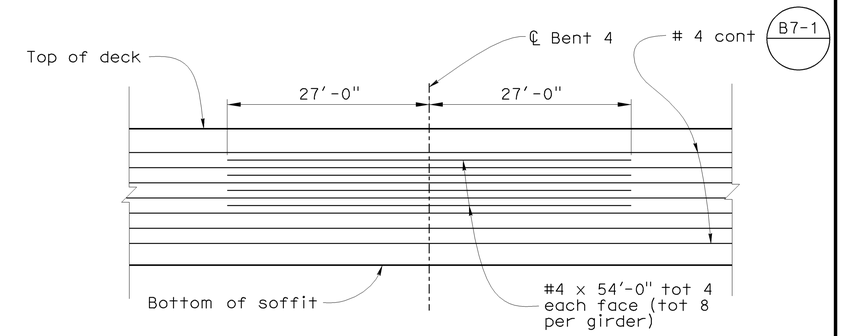

BENT 4 GIRDER ELEVATION ADDITIONAL GIRDER STEM REINFORCEMENT

No Scale

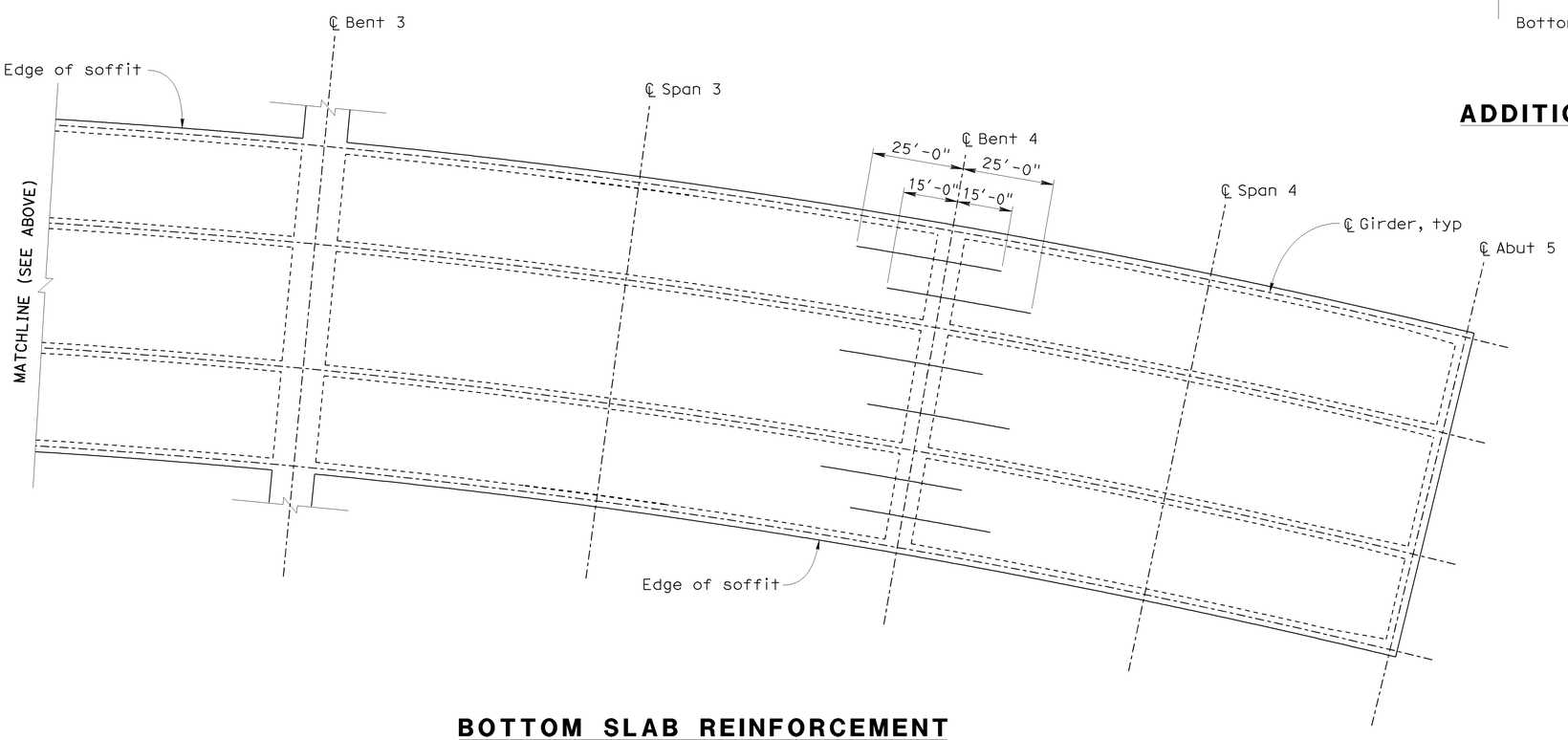

BOTTOM SLAB REINFORCEMENT

No Scale

NOTES

1. All distances measured from center line
2. All bars #11 except as noted
3. All #11 reinforcement shall meet "Service Splice" requirements. No splices are allowed within 25'-0" from the centerline of bent and 25'-0" from the centerline of span.

LEGEND

Indicates bundled bars

Sudhakar Vatti
DESIGN OVERSIGHT Sudhakar Vatti
8-10-09
SIGN OFF DATE

	BY	CHECKED
DESIGN	J. Hermstad	K. Michalski
DETAILS	J. Hermstad	K. Michalski
QUANTITIES	J. Wong	K. Michalski

PREPARED FOR THE STATE OF CALIFORNIA DEPARTMENT OF TRANSPORTATION

J. Hermstad
PROJECT ENGINEER

BRIDGE NO. 55-1100G
POST MILE 23.27

N405-W22 CONNECTOR SEP (REPLACE)
GIRDER REINFORCEMENT NO. 2

DESIGN DETAIL SHEET (ENGLISH) (REV. 2/25/05)

ORIGINAL SCALE IN INCHES FOR REDUCED PLANS 0 1 2 3

CU 12235
EA 071631

DISREGARD PRINTS BEARING EARLIER REVISION DATES → 10/15/08 04/06/09 07/27/09

REVISION DATES (PRELIMINARY STAGE ONLY)

SHEET 33 OF 51

FILE => 55-1100g-o-grf02.dgn

USERNAME => trlenard DATE PLOTTED => 04-FEB-2010 TIME PLOTTED => 07:18

DIST	COUNTY	ROUTE	POST MILES TOTAL PROJECT	SHEET No	TOTAL SHEETS
12	Ora	22,405, 605	R0.3/R0.9, 22.3/24.0,3.0/R1.6	1737	1929

REGISTERED CIVIL ENGINEER 07-27-09 DATE

2-1-10
PLANS APPROVAL DATE

REGISTERED PROFESSIONAL ENGINEER J. Hermstad No. C 66045 Exp. 06-30-10 CIVIL STATE OF CALIFORNIA

The State of California or its officers or agents shall not be responsible for the accuracy or completeness of electronic copies of this plan sheet.

OCTA
550 SOUTH MAIN STREET
ORANGE, CA 92863

TRC
21 TECHNOLOGY DR
IRVINE, CA 92618

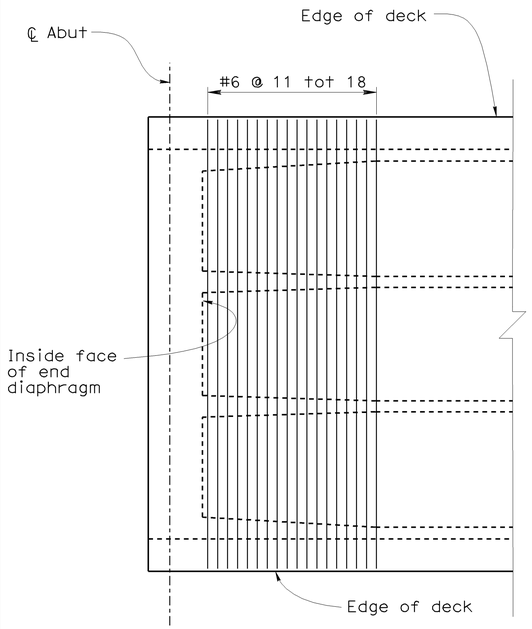

Note: Abutment 1 shown, Abutment 5 similar

DECK REINFORCEMENT

No Scale

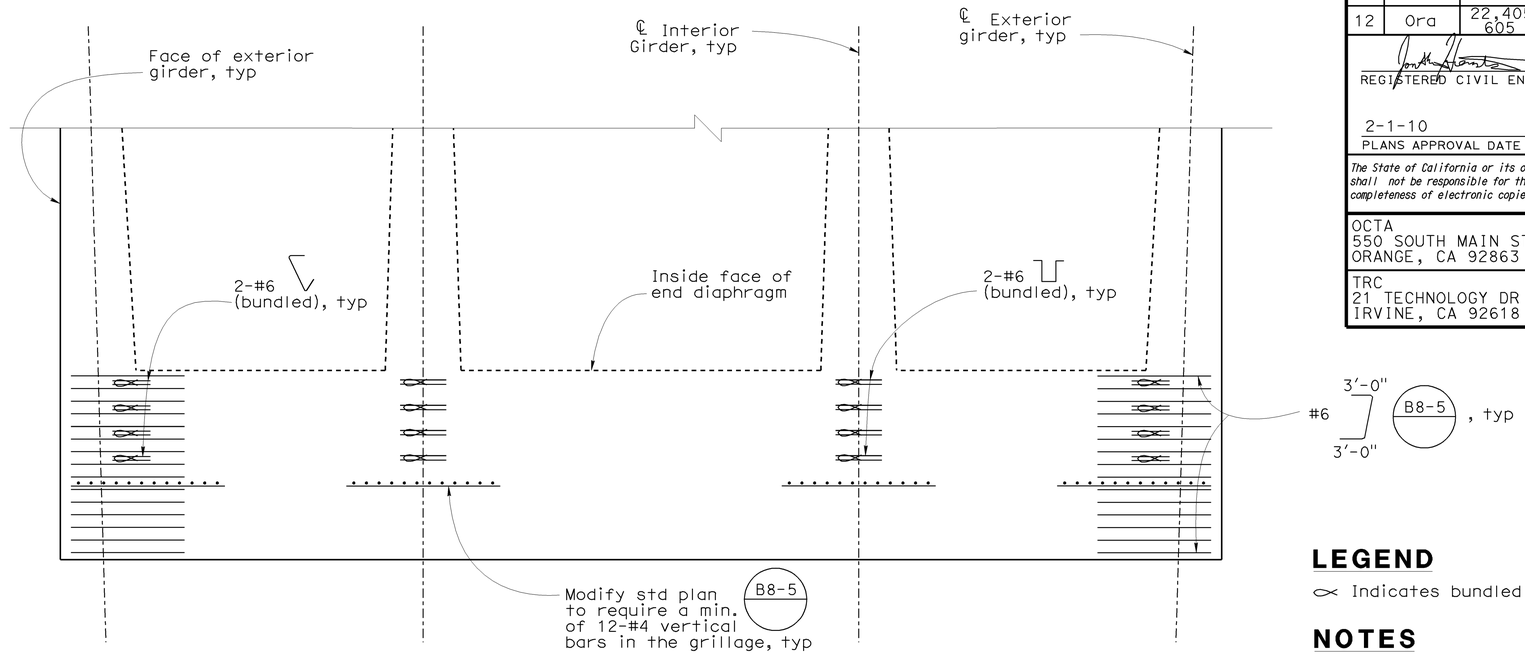

PRESTRESS ANCHORAGE DETAIL AT ABUTMENTS

½" = 1'-0"

LEGEND

Indicates bundled bars

NOTES

1. All reinforcement not shown
2. See End Diaphragm Detail on "Typical Section No. 1" sheet for additional information

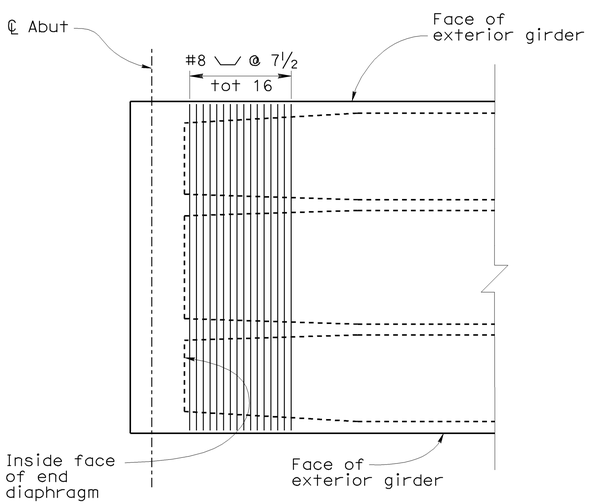

Note: Abutment 1 shown, Abutment 5 similar

BOTTOM SLAB REINFORCEMENT

No Scale

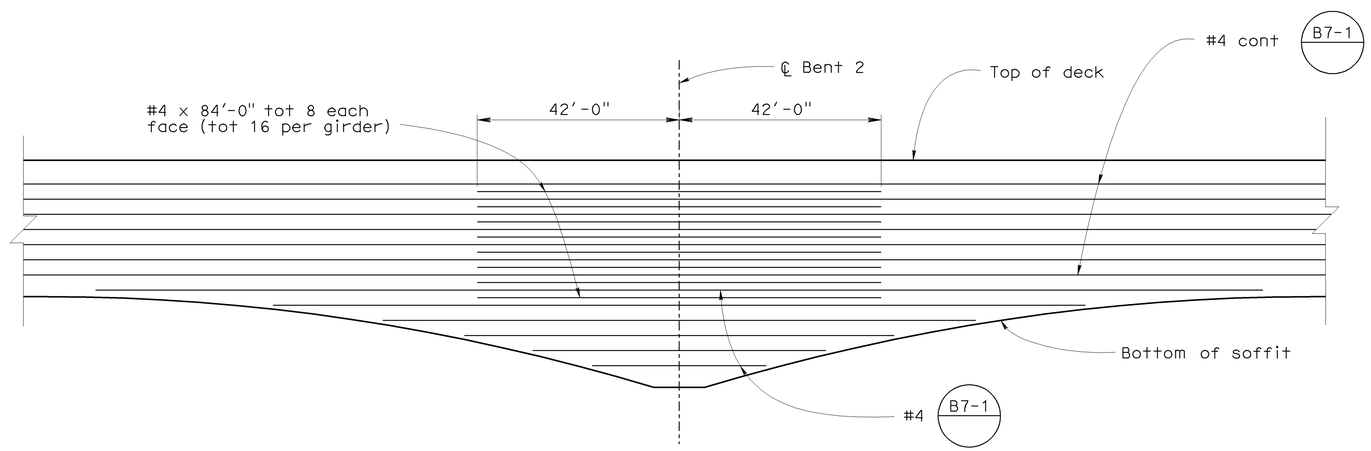

BENT 2 GIRDER ELEVATION
ADDITIONAL GIRDER STEM REINFORCEMENT

No scale

Sudhakar Vatti
DESIGN OVERSIGHT Sudhakar Vatti
8-10-09
SIGN OFF DATE

	BY	CHECKED
DESIGN	J. Hermstad	K. Michalski
DETAILS	J. Hermstad	K. Michalski
QUANTITIES	J. Wong	K. Michalski

PREPARED FOR THE STATE OF CALIFORNIA DEPARTMENT OF TRANSPORTATION

J. Hermstad
PROJECT ENGINEER

BRIDGE NO. 55-1100G
POST MILE 23.27

N405-W22 CONNECTOR SEP (REPLACE)
GIRDER REINFORCEMENT NO. 3

DESIGN DETAIL SHEET (ENGLISH) (REV. 2/25/05)

ORIGINAL SCALE IN INCHES FOR REDUCED PLANS 0 1 2 3

CU 12235
EA 071631

DISREGARD PRINTS BEARING EARLIER REVISION DATES

REVISION DATES (PRELIMINARY STAGE ONLY) 10/15/08 04/06/09 07/27/09

SHEET 34 OF 51

FILE => 55-1100g-o-grf03.dgn

USERNAME => friehard DATE PLOTTED => 04-FEB-2010 TIME PLOTTED => 07:18

DIST	COUNTY	ROUTE	POST MILES TOTAL PROJECT	SHEET No	TOTAL SHEETS
12	Ora	22, 405, 605	R0.3/R0.9, 22.3/24.0,3.0/R1.6	1738	1929

LICENSED LANDSCAPE ARCHITECT

2-1-10
PLANS APPROVAL DATE

LICENSED LANDSCAPE ARCHITECT
CATHY L. JOHNSON
NO. 4545
01-31-10
Renewal Date
07-27-09
Date
STATE OF CALIFORNIA

The State of California or its officers or agents shall not be responsible for the accuracy or completeness of electronic copies of this plan sheet.

OCTA
550 SOUTH MAIN STREET
ORANGE, CA 92863

RBF CONSULTING
14725 ALTON PARKWAY
IRVINE, CA 92618

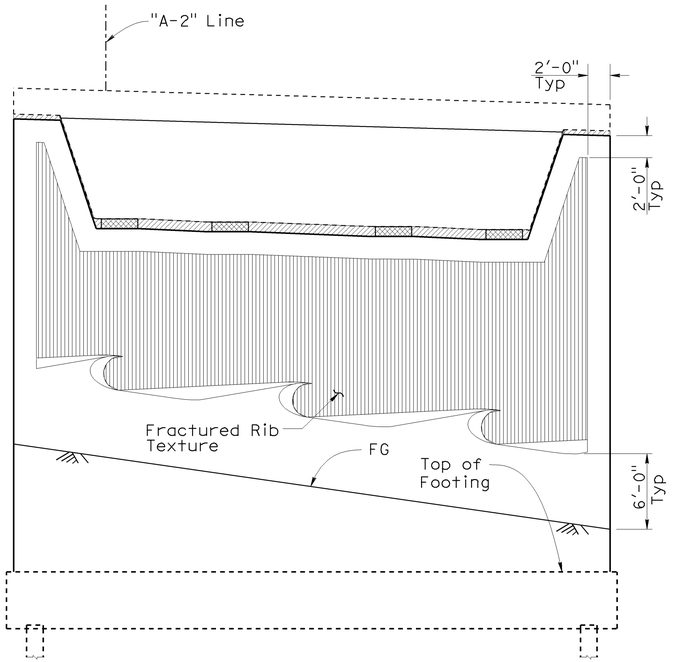

Note: All Piles Not Shown

ARCHITECTURAL TEXTURE
ABUTMENT 1 ELEVATION

3/16" = 1'-0"

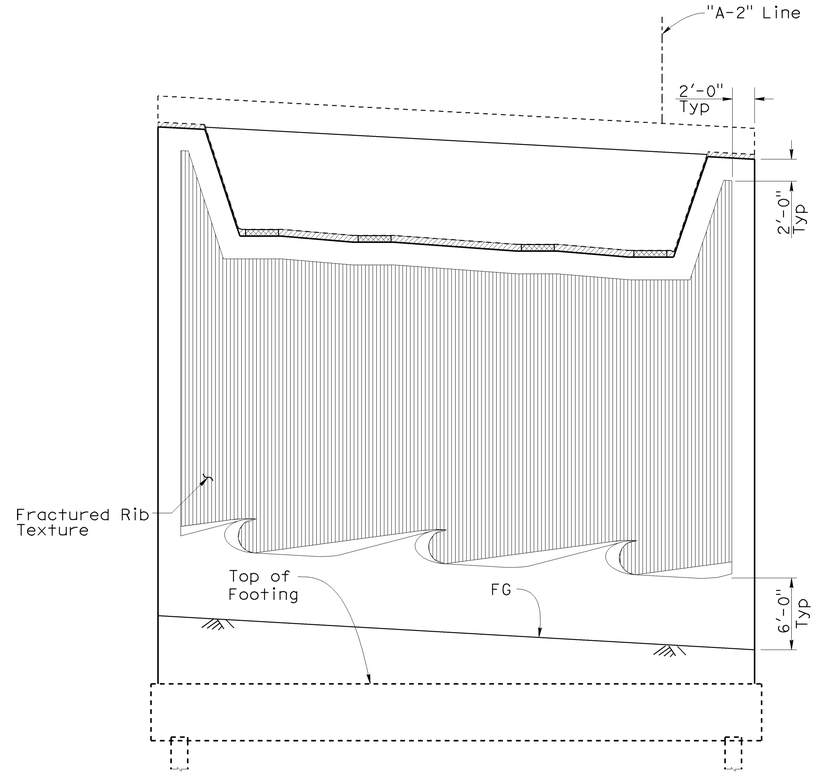

Note: All Piles Not Shown

ARCHITECTURAL TEXTURE
ABUTMENT 5 ELEVATION

3/16" = 1'-0"

NOTES

1. For Fractured Rib Texture Detail, See "Architectural Details No. 3" Sheet

Sudhakar Vatti
DESIGN OVERSIGHT Sudhakar Vatti
8-10-09
SIGN OFF DATE

	BY	CHECKED
DESIGN	C. JOHNSON	A. SU
DETAILS	R. KELCHER	A. SU
QUANTITIES	J. WONG	K. MICHALSKI

PREPARED FOR THE
STATE OF CALIFORNIA
DEPARTMENT OF TRANSPORTATION

J. HERMSTAD
PROJECT ENGINEER

BRIDGE NO. 55-1100G
POST MILE 23.27

N405-W22 CONNECTOR SEP (REPLACE)
ARCHITECTURAL DETAILS NO. 1

DESIGN DETAIL SHEET (ENGLISH) (REV. 2/25/05)

ORIGINAL SCALE IN INCHES FOR REDUCED PLANS 0 1 2 3

CU 12235
EA 071631

DISREGARD PRINTS BEARING EARLIER REVISION DATES

REVISION DATES (PRELIMINARY STAGE ONLY) 04/06/09 07/27/09

SHEET 35 OF 51

FILE => 55-1100g-s-arch01.dgn

USERNAME => rrlehord DATE PLOTTED => 04-FEB-2010 TIME PLOTTED => 07:19

DIST	COUNTY	ROUTE	POST MILES TOTAL PROJECT	SHEET No	TOTAL SHEETS
12	Ora	22, 405, 605	R0.3/R0.9, 22.3/24.0,3.0/R1.6	1739	1929

LICENSED LANDSCAPE ARCHITECT

2-1-10
PLANS APPROVAL DATE

LICENSED LANDSCAPE ARCHITECT CATHY L. JOHNSON NO. 4545 01-31-10 Renewal Date 07-27-09 Date STATE OF CALIFORNIA

The State of California or its officers or agents shall not be responsible for the accuracy or completeness of electronic copies of this plan sheet.

OCTA
550 SOUTH MAIN STREET
ORANGE, CA 92863

RBF CONSULTING
14725 ALTON PARKWAY
IRVINE, CA 92618

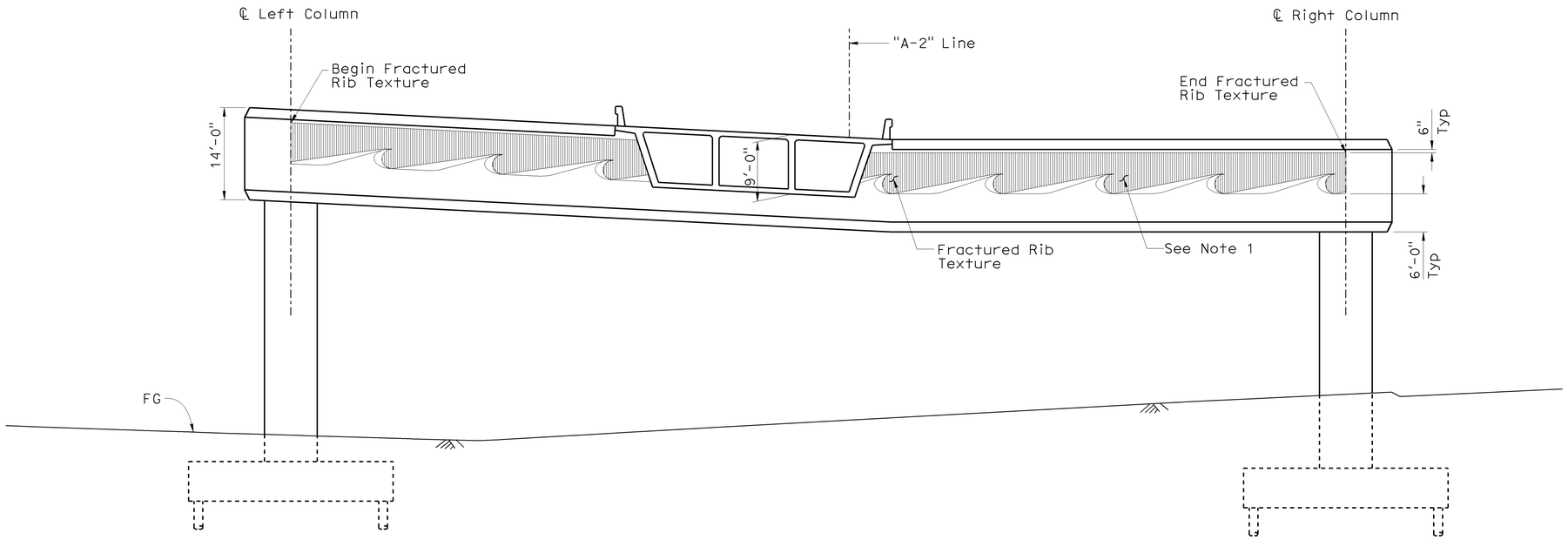

Note: All Piles Not Shown

ARCHITECTURAL TEXTURE - BENT 3

1"= 10'

Note: All Piles Not Shown

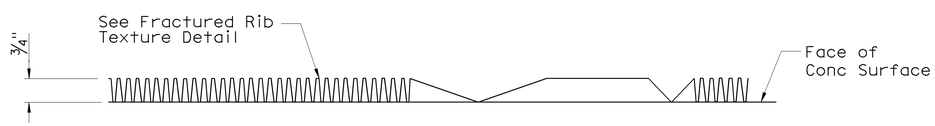

SECTION A-A

1W:10H

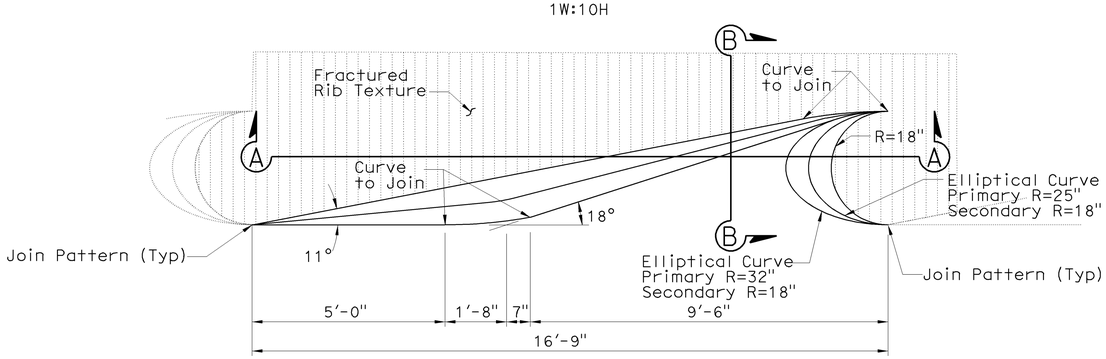

ELEVATION

No Scale

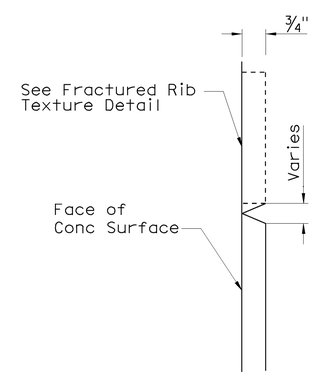

SECTION B-B

10W:1H

NOTES

1. Texture Shall Be Applied on Both Sides of Structure
2. For Fractured Rib Texture Detail, See "Architectural Details No. 3" Sheet

Sudhakar Vatti
DESIGN OVERSIGHT Sudhakar Vatti
8-10-09
SIGN OFF DATE

	BY	CHECKED
DESIGN	C. JOHNSON	A. SU
DETAILS	R. KELCHER	A. SU
QUANTITIES	J. WONG	K. MICHALSKI

PREPARED FOR THE STATE OF CALIFORNIA DEPARTMENT OF TRANSPORTATION

J. HERMSTAD
PROJECT ENGINEER

BRIDGE NO. 55-1100G
POST MILE 23.27

N405-W22 CONNECTOR SEP (REPLACE)

ARCHITECTURAL DETAILS NO. 2

DESIGN DETAIL SHEET (ENGLISH) (REV. 2/25/05)

ORIGINAL SCALE IN INCHES FOR REDUCED PLANS 0 1 2 3

CU 12235
EA 071631

DISREGARD PRINTS BEARING EARLIER REVISION DATES

REVISION DATES (PRELIMINARY STAGE ONLY) 04/06/09 07/21/09

SHEET 36 OF 51

FILE => 55-1100g-s-arch02.dgn

USERNAME => friehard DATE PLOTTED => 04-FEB-2010 TIME PLOTTED => 07:19

DIST	COUNTY	ROUTE	POST MILES TOTAL PROJECT	SHEET No	TOTAL SHEETS
12	Ora	22,405, 605	R0.3/R0.9, 22.3/24.0,3.0/R1.6	1740	1929

LICENSED LANDSCAPE ARCHITECT

2-1-10
PLANS APPROVAL DATE

LICENSED LANDSCAPE ARCHITECT
CATHY L. JOHNSON
NO. 4545
01-31-10
Renewal Date
07-27-09
Date
STATE OF CALIFORNIA

The State of California or its officers or agents shall not be responsible for the accuracy or completeness of electronic copies of this plan sheet.

OCTA
550 SOUTH MAIN STREET
ORANGE, CA 92863

RBF CONSULTING
14725 ALTON PARKWAY
IRVINE, CA 92618

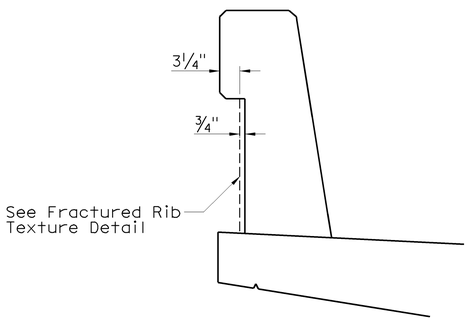

CONCRETE BARRIER (TYPE 736 MOD)

SCALE: 1" = 1'-0"

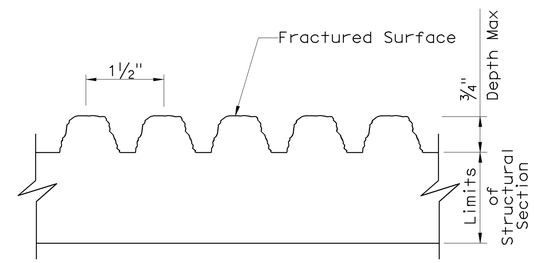

FRACTURED RIB TEXTURE

No Scale

Sudhakar Vatti
DESIGN OVERSIGHT
Sudhakar Vatti

8-10-09
SIGN OFF DATE

	BY	CHECKED
DESIGN	C. JOHNSON	A. SU
DETAILS	R. KELCHER	A. SU
QUANTITIES	J. WONG	K. MICHALSKI

PREPARED FOR THE
STATE OF CALIFORNIA
DEPARTMENT OF TRANSPORTATION

J. HERMSTAD
PROJECT ENGINEER

BRIDGE NO. 55-1100G
POST MILE 23.27

N405-W22 CONNECTOR SEP (REPLACE)
ARCHITECTURAL DETAILS NO. 3

DESIGN DETAIL SHEET (ENGLISH) (REV. 2/25/05)

ORIGINAL SCALE IN INCHES FOR REDUCED PLANS 0 1 2 3

CU 12235
EA 071631

DISREGARD PRINTS BEARING EARLIER REVISION DATES

REVISION DATES (PRELIMINARY STAGE ONLY) 04/06/09 07/21/09

SHEET 37 OF 51

FILE => 55-1100g-s-arch03.dgn

USERNAME => trcorrol DATE PLOTTED => 04-FEB-2010 TIME PLOTTED => 09:52

DIST	COUNTY	ROUTE	POST MILES TOTAL PROJECT	SHEET No	TOTAL SHEETS
12	Ora	22,405, 605	R0.3/R0.9, 22.3/24.0,3.0/R1.6	1741	1929

REGISTERED CIVIL ENGINEER 07-27-09 DATE

2-1-10
PLANS APPROVAL DATE

REGISTERED PROFESSIONAL ENGINEER J. Hermstad No. C 66045 Exp. 06-30-10 CIVIL STATE OF CALIFORNIA

The State of California or its officers or agents shall not be responsible for the accuracy or completeness of electronic copies of this plan sheet.

OCTA
550 SOUTH MAIN STREET
ORANGE, CA 92863

TRC
21 TECHNOLOGY DR
IRVINE, CA 92618

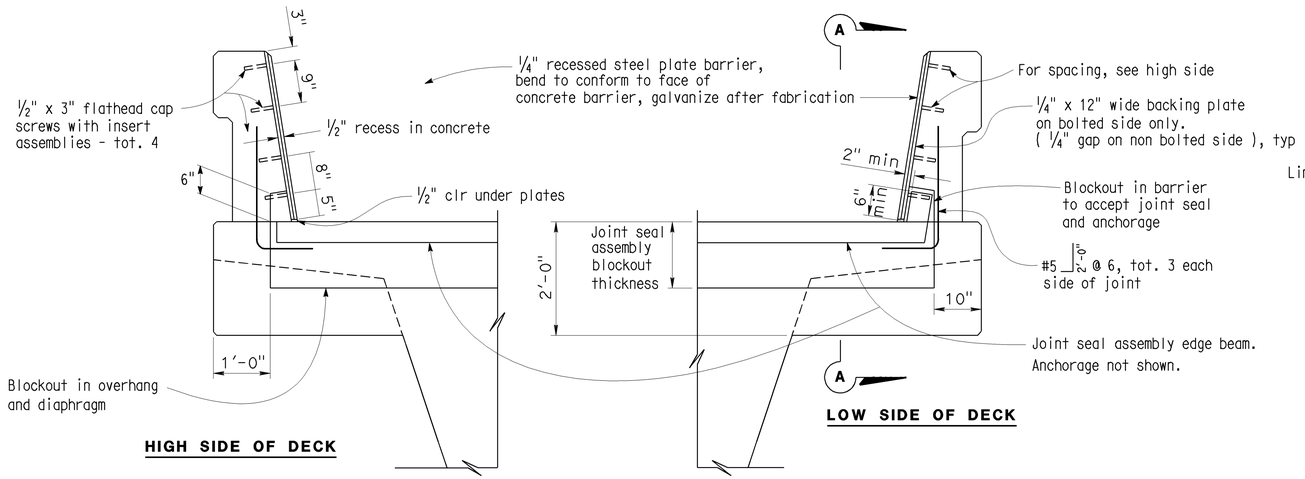

SEAL INSTALLATION

3/4" = 1'-0"

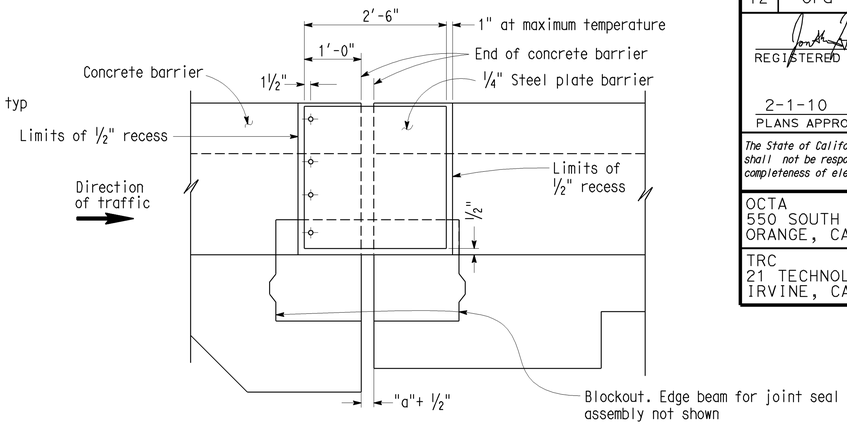

ELEVATION A-A

3/4" = 1'-0"

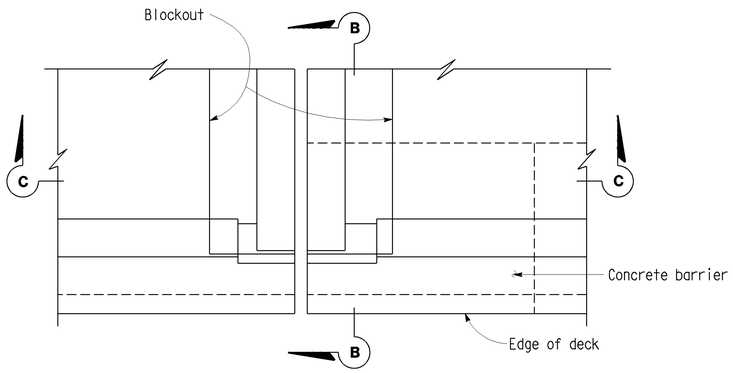

PLAN - DECK JOINT

3/4" = 1'-0"

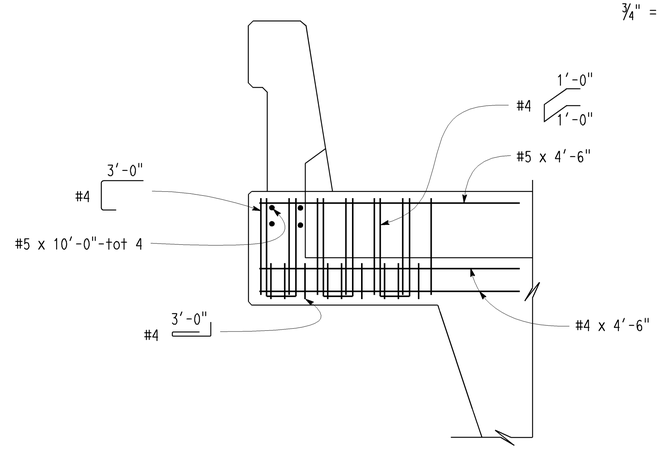

SECTION B-B

3/4" = 1'-0"

Reinf. shown is in addition to slab reinf.

JOINT INFORMATION		"a" DIMENSIONS			
LOCATION	MOVEMENT RATING (M.R.)	SKEW	WINTER	SPRING & FALL	SUMMER
Abut 1	6"	0	2 3/4"	2"	1 3/8"
Abut 5	5"	0	2 3/8"	1 3/4"	1 1/8"

Notes:

1) For details not shown, see Bridge Plans
2) x is greater than or equal to y

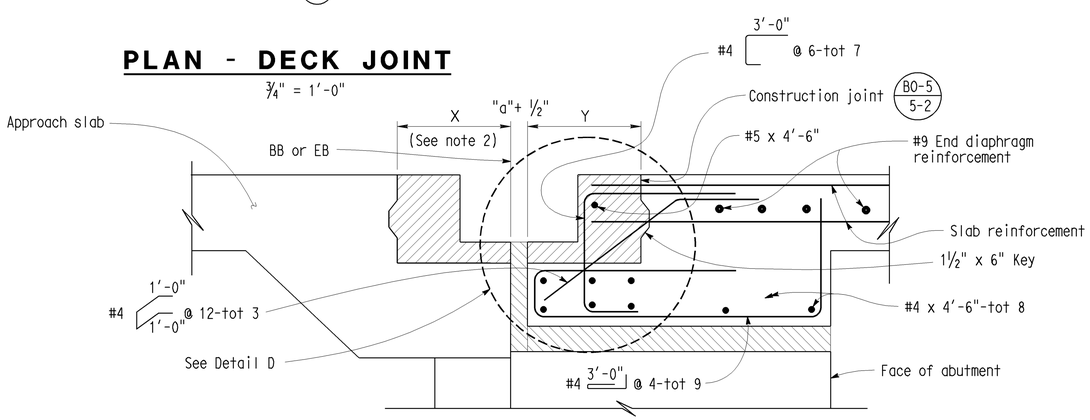

SECTION C-C

1 " = 1'-0"

Indicates joint seal assembly blockout

Indicates expanded polystyrene

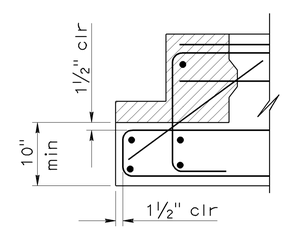

Note: See Section C-C for information not shown

DETAIL D

1 " = 1'-0"

Sudhakar Vatti
DESIGN OVERSIGHT Sudhakar Vatti
8-10-09
SIGN OFF DATE

	BY	CHECKED
DESIGN	J. Hermstad	K. Michalski
DETAILS	J. Hermstad	K. Michalski
QUANTITIES	J. Wong	K. Michalski

PREPARED FOR THE STATE OF CALIFORNIA DEPARTMENT OF TRANSPORTATION

J. Hermstad
PROJECT ENGINEER

CU 12235
EA 071631

BRIDGE NO. 55-1100G
POST MILE 23.27

N405-W22 CONNECTOR SEP (REPLACE)

JOINT SEAL - ABUTMENT DETAILS
MOVEMENT RATING GREATER THAN 4"

DESIGN DETAIL SHEET (ENGLISH) (REV. 2/25/05)

ORIGINAL SCALE IN INCHES FOR REDUCED PLANS 0 1 2 3

DISREGARD PRINTS BEARING EARLIER REVISION DATES

REVISION DATES (PRELIMINARY STAGE ONLY) 10/15/08 04/06/09 07/27/09

SHEET 38 OF 51

FILE => 55-1100g-q-jtsa01.dgn

USERNAME => rtrcar01 DATE PLOTTED => 04-FEB-2010 TIME PLOTTED => 09:52

DIST	COUNTY	ROUTE	POST MILES TOTAL PROJECT	SHEET No	TOTAL SHEETS
12	Ora	22,405, 605	R0.3/R0.9, 22.3/24.0,3.0/R1.6	1742	1929

REGISTERED CIVIL ENGINEER 07-27-09 DATE

2-1-10
PLANS APPROVAL DATE

REGISTERED PROFESSIONAL ENGINEER J. Hermstad No. C 66045 Exp. 06-30-10 CIVIL STATE OF CALIFORNIA

The State of California or its officers or agents shall not be responsible for the accuracy or completeness of electronic copies of this plan sheet.

OCTA
550 SOUTH MAIN STREET
ORANGE, CA 92863

TRC
21 TECHNOLOGY DR
IRVINE, CA 92618

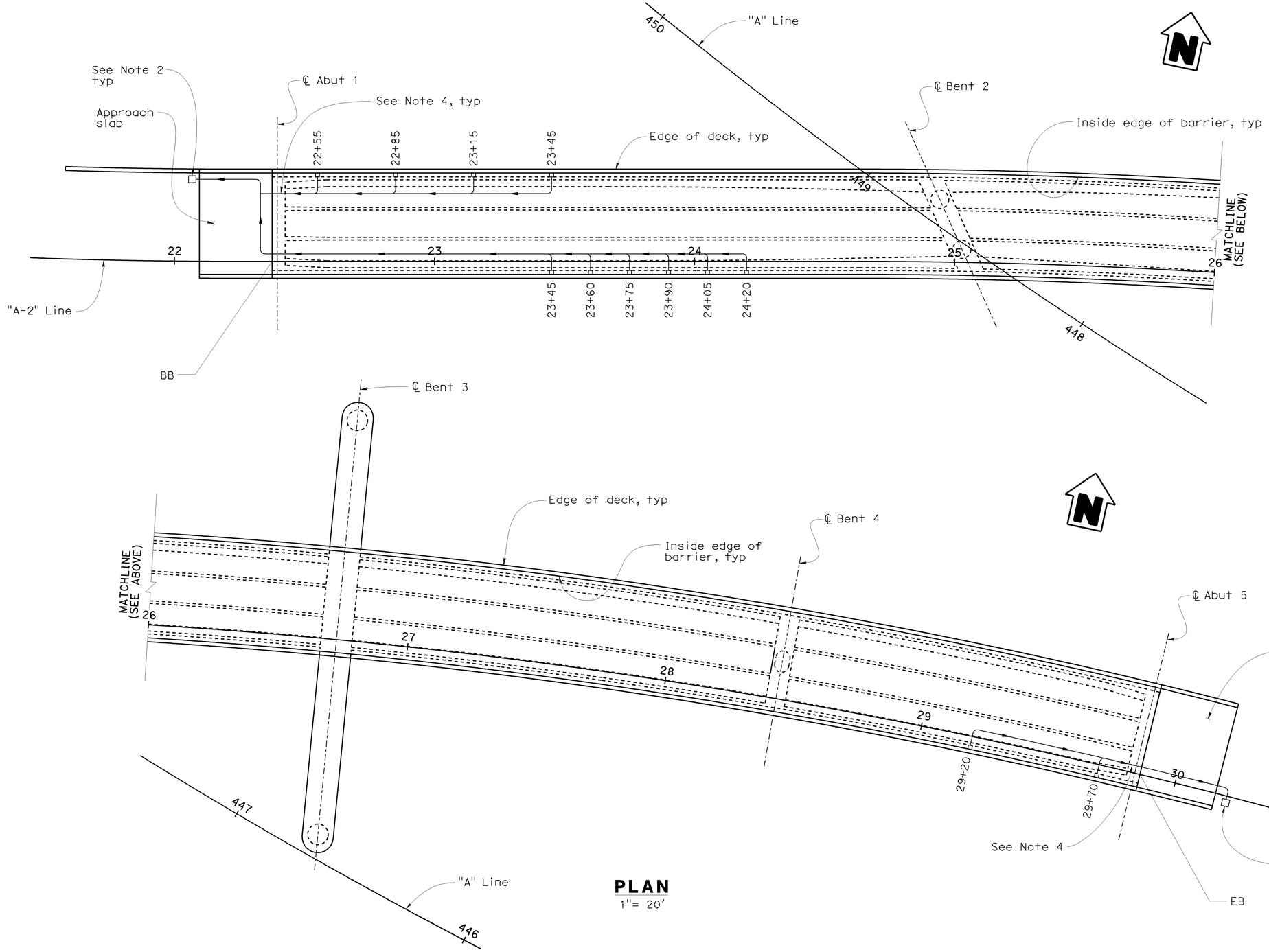

PLAN
1"= 20'

LEGEND

▫ Denotes D-2 deck drain

⟵ Denotes NPS 8 deck drain piping and direction of flow

NOTES

1. For additional details, see "Deck Drainage Details" sheet
2. At Abutment 1 connect deck drain outlets to Drainage System No. 38, see "Drainage Plans"
3. At Abutment 5 connect deck drain outlet to Drainage System No. 30F, see "Drainage Plans"
4. For opening details at diaphragm and backwall and expansion coupling details, see B7-8 and B7-10. Pipe casing should extend 3'-0" beyond backwall

Sudhakar Vatti
DESIGN OVERSIGHT Sudhakar Vatti
8-10-09
SIGN OFF DATE

	BY	CHECKED
DESIGN	J. Hermstad	K. Michalski
DETAILS	J. Hermstad	K. Michalski
QUANTITIES	J. Wong	K. Michalski

PREPARED FOR THE STATE OF CALIFORNIA DEPARTMENT OF TRANSPORTATION

J. Hermstad
PROJECT ENGINEER

BRIDGE NO. 55-1100G
POST MILE 23.27

N405-W22 CONNECTOR SEP (REPLACE)
DECK DRAINAGE LAYOUT

DESIGN DETAIL SHEET (ENGLISH) (REV. 2/25/05)

ORIGINAL SCALE IN INCHES FOR REDUCED PLANS 0 1 2 3

CU 12235
EA 071631

DISREGARD PRINTS BEARING EARLIER REVISION DATES → REVISION DATES (PRELIMINARY STAGE ONLY) 10/05/08 04/06/09 07/27/09

SHEET 39 OF 51

FILE => 55-1100g-r-dd01.dgn

USERNAME => trcarol DATE PLOTTED => 04-FEB-2010 TIME PLOTTED => 09:52

DIST	COUNTY	ROUTE	POST MILES TOTAL PROJECT	SHEET No	TOTAL SHEETS
12	Ora	22,405, 605	R0.3/R0.9, 22.3/24.0,3.0/R1.6	1743	1929

REGISTERED CIVIL ENGINEER 07-27-09 DATE

2-1-10
PLANS APPROVAL DATE

REGISTERED PROFESSIONAL ENGINEER J. Hermstad No. C 66045 Exp. 06-30-10 CIVIL STATE OF CALIFORNIA

The State of California or its officers or agents shall not be responsible for the accuracy or completeness of electronic copies of this plan sheet.

OCTA
550 SOUTH MAIN STREET
ORANGE, CA 92863

TRC
21 TECHNOLOGY DR
IRVINE, CA 92618

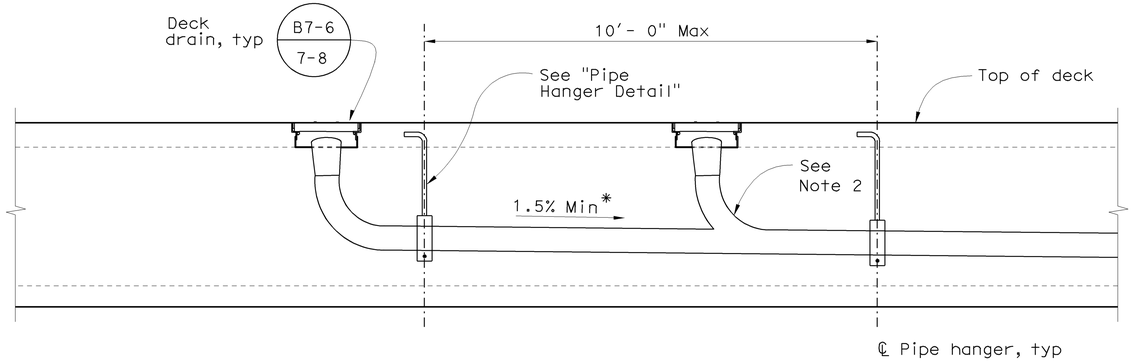

* 1.5% Min slope shall occur after falsework release

ELEVATION - DECK DRAINAGE PIPING

No Scale

NOTES

1. For information not shown, see B7-8
2. Pipe bends to be 2'-0" min radius measured along pipe. All bends to be smooth.
3. See "Deck Drainage Layout" sheet for pipe size

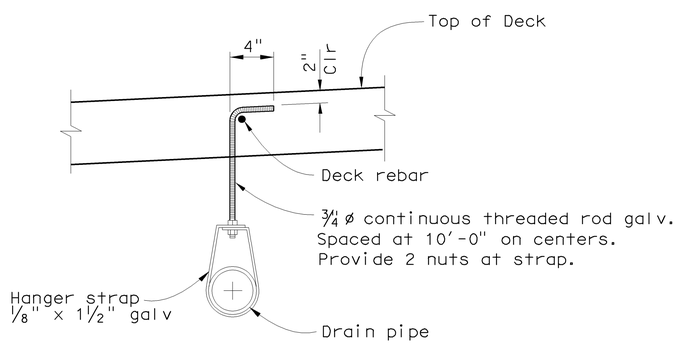

PIPE HANGER DETAIL

No Scale

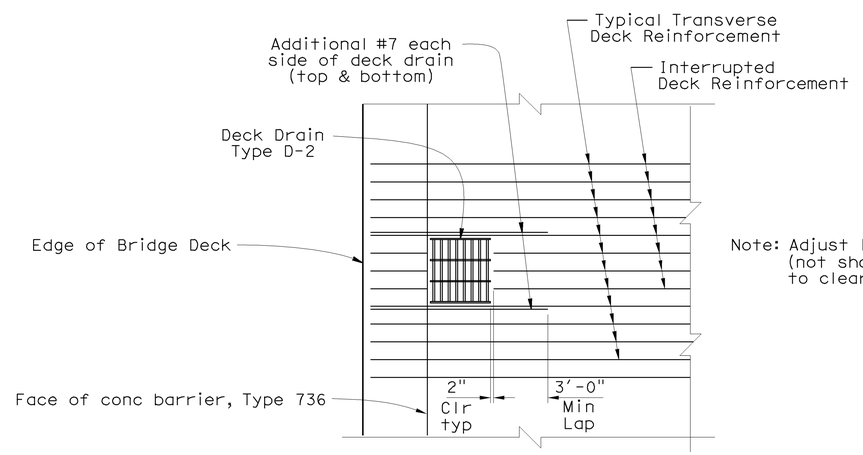

Note: Adjust longit deck reinf (not shown) as necessary to clear deck drains.

ADDITIONAL DECK DRAIN REINF DETAIL

No Scale

Sudhakar Vatti
DESIGN OVERSIGHT Sudhakar Vatti
8-10-09
SIGN OFF DATE

	BY	CHECKED
DESIGN	J. Hermstad	K. Michalski
DETAILS	J. Hermstad	K. Michalski
QUANTITIES	J. Wong	K. Michalski

PREPARED FOR THE STATE OF CALIFORNIA DEPARTMENT OF TRANSPORTATION

J. Hermstad
PROJECT ENGINEER

BRIDGE NO. 55-1100G
POST MILE 23.27

N405-W22 CONNECTOR SEP (REPLACE)
DECK DRAINAGE DETAILS

DESIGN DETAIL SHEET (ENGLISH) (REV. 2/25/05)

ORIGINAL SCALE IN INCHES FOR REDUCED PLANS 0 1 2 3

CU 12235
EA 071631

DISREGARD PRINTS BEARING EARLIER REVISION DATES
REVISION DATES (PRELIMINARY STAGE ONLY) 10/15/08 04/06/09 07/27/09

SHEET 40 OF 51

FILE => 55-1100g-r-dd02.dgn

USERNAME => trcarol DATE PLOTTED => 04-FEB-2010 TIME PLOTTED => 09:52

DIST	COUNTY	ROUTE	POST MILES TOTAL PROJECT	SHEET No	TOTAL SHEETS
12	Ora	22,405, 605	R0.3/R0.9, 22.3/24.0,3.0/R1.6	1744	1929

REGISTERED CIVIL ENGINEER — DATE 07-27-09

2-1-10
PLANS APPROVAL DATE

REGISTERED PROFESSIONAL ENGINEER — J. Hermstad — No. C 66045 — Exp. 06-30-10 — CIVIL — STATE OF CALIFORNIA

The State of California or its officers or agents shall not be responsible for the accuracy or completeness of electronic copies of this plan sheet.

OCTA
550 SOUTH MAIN STREET
ORANGE, CA 92863

TRC
21 TECHNOLOGY DR
IRVINE, CA 92618

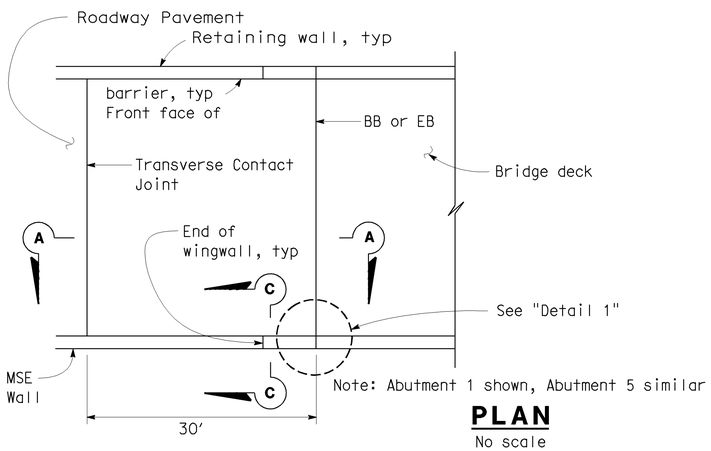

PLAN
No scale

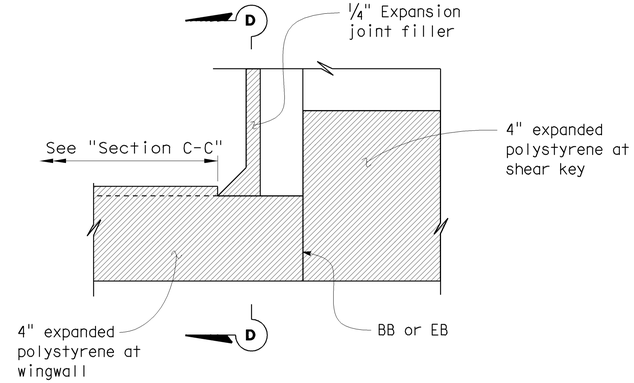

DETAIL 1
No scale

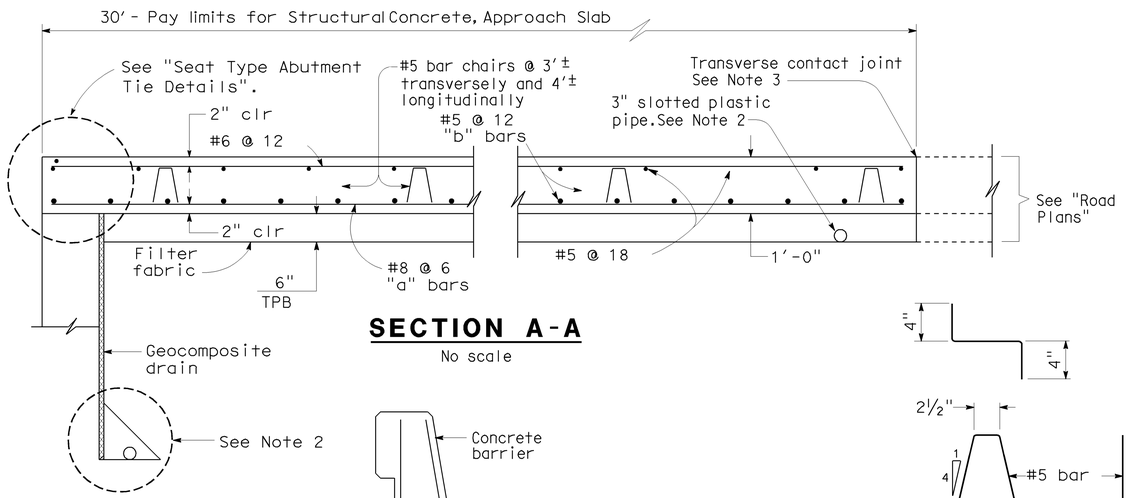

SECTION A-A
No scale

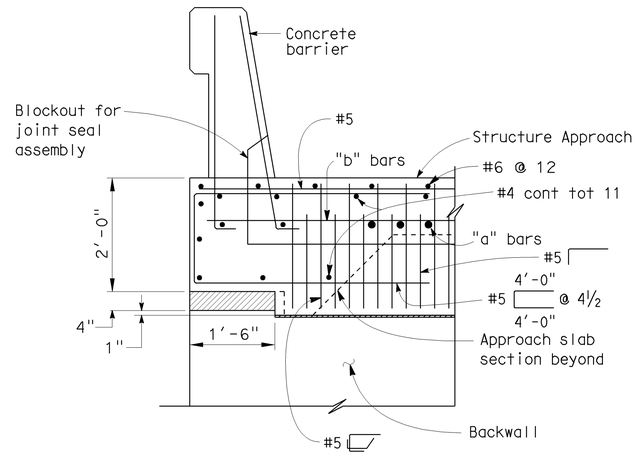

SECTION D-D
No scale

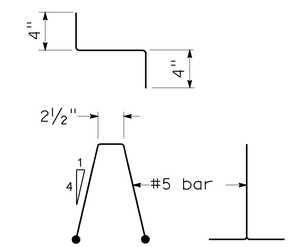

BAR CHAIR DETAIL
No scale

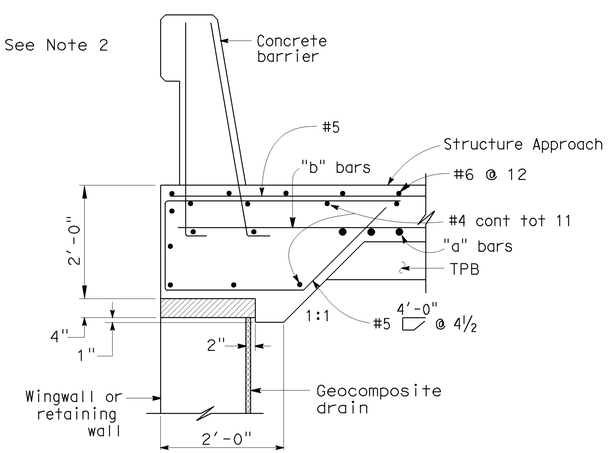

TYPE E-1

SECTION C-C
No scale

Note: Type E-1 to be used, except at MSE Wall. For section at MSE wall see "Structure Plans" for RW No. 442, RW No. 444 and RW No. 453.

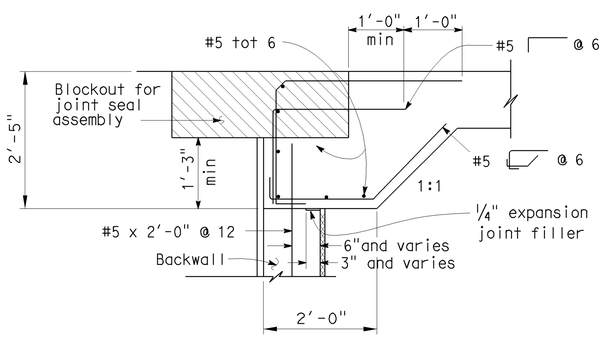

SEAT TYPE ABUTMENT TIE DETAILS (SEE NOTE 1)
No scale

NOTES:

1. For details not shown, see Structure Plans.
2. For drainage details, see "Structure Approach Drainage Details" sheet.
3. For transverse contact joint with new PCC paving, refer to Standard Plan P-10.
4. Spacing of transverse reinforcement is measured along ℄ roadway.

Remove polystyrene as indicated on other sheets

Sudhakar Vatti
DESIGN OVERSIGHT — Sudhakar Vatti
8-10-09
SIGN OFF DATE

	BY	CHECKED
DESIGN	J. Hermstad	K. Michalski
DETAILS	J. Hermstad	K. Michalski
QUANTITIES	J. Wong	K. Michalski

PREPARED FOR THE STATE OF CALIFORNIA DEPARTMENT OF TRANSPORTATION

J. Hermstad
PROJECT ENGINEER

CU 12235
EA 071631

BRIDGE NO. 55-1100G
POST MILE 23.27

N405-W22 CONNECTOR SEP (REPLACE)
STRUCTURE APPROACH TYPE N(30S)

DESIGN DETAIL SHEET (ENGLISH) (REV. 2/25/05)

ORIGINAL SCALE IN INCHES FOR REDUCED PLANS 0 1 2 3

DISREGARD PRINTS BEARING EARLIER REVISION DATES — REVISION DATES (PRELIMINARY STAGE ONLY) 10/25/08 04/06/09 07/27/09

SHEET 41 OF 51

FILE => 55-1100g-s-sadt01.dgn

USERNAME => rrcarol DATE PLOTTED => 04-FEB-2010 TIME PLOTTED => 09:53

DIST	COUNTY	ROUTE	POST MILES TOTAL PROJECT	SHEET No	TOTAL SHEETS
12	Ora	22,405, 605	R0.3/R0.9, 22.3/24.0,3.0/R1.6	1745	1929

REGISTERED CIVIL ENGINEER 07-27-09 DATE

2-1-10
PLANS APPROVAL DATE

REGISTERED PROFESSIONAL ENGINEER J. Hermstad No. C 66045 Exp. 06-30-10 CIVIL STATE OF CALIFORNIA

The State of California or its officers or agents shall not be responsible for the accuracy or completeness of electronic copies of this plan sheet.

OCTA
550 SOUTH MAIN STREET
ORANGE, CA 92863

TRC
21 TECHNOLOGY DR
IRVINE, CA 92618

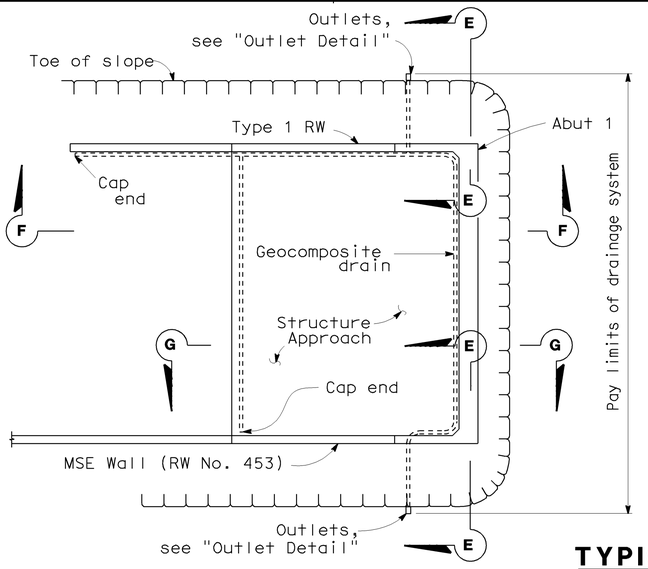

TYPICAL PLAN
No scale

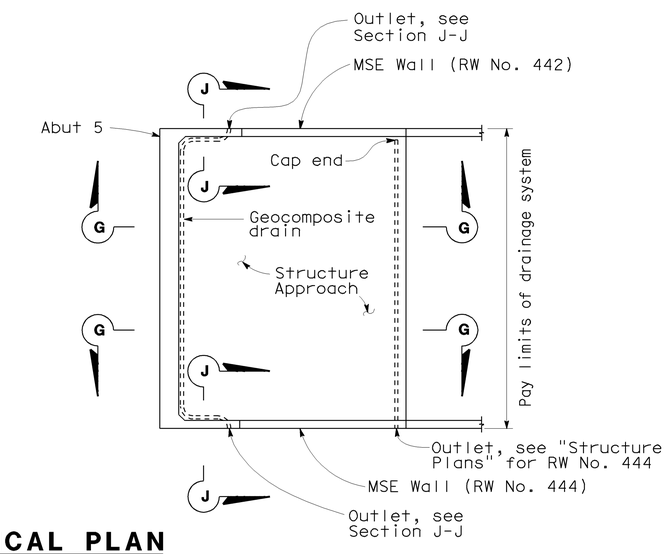

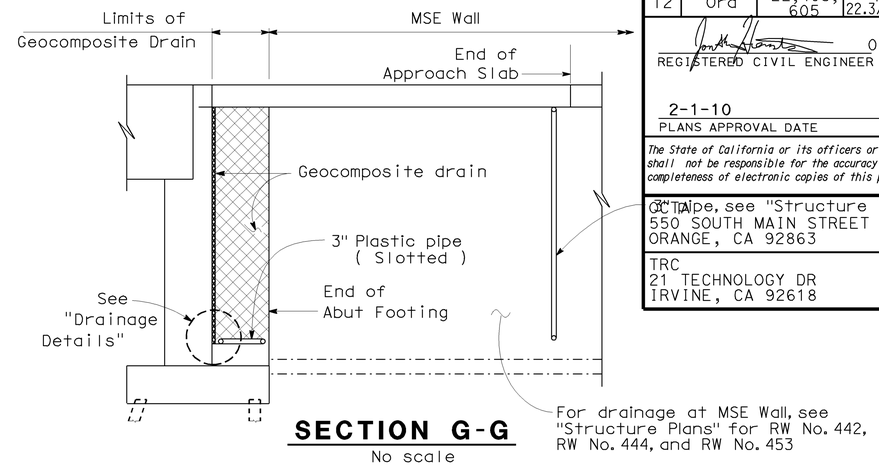

SECTION G-G
No scale

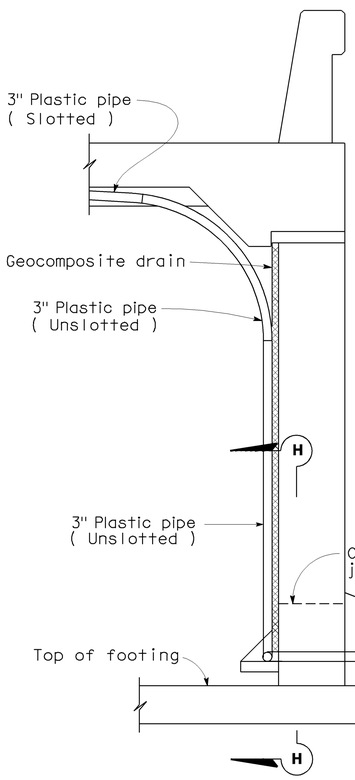

SECTION E-E
No scale

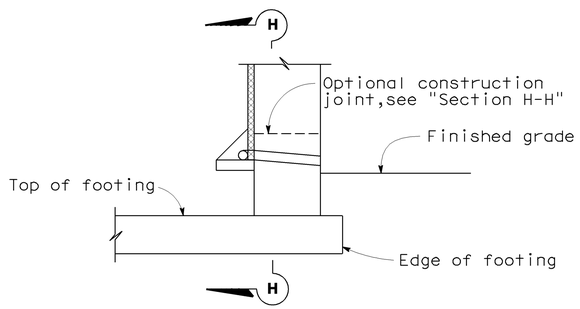

SECTION J-J
No scale

NOTE: Bends and junctions in 3" plastic pipe are 2'-6" radius min.

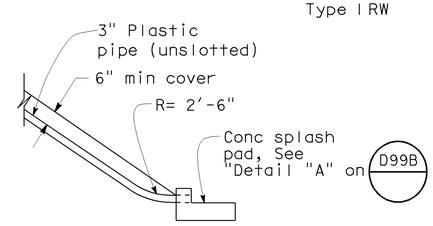

OUTLET DETAIL
No scale

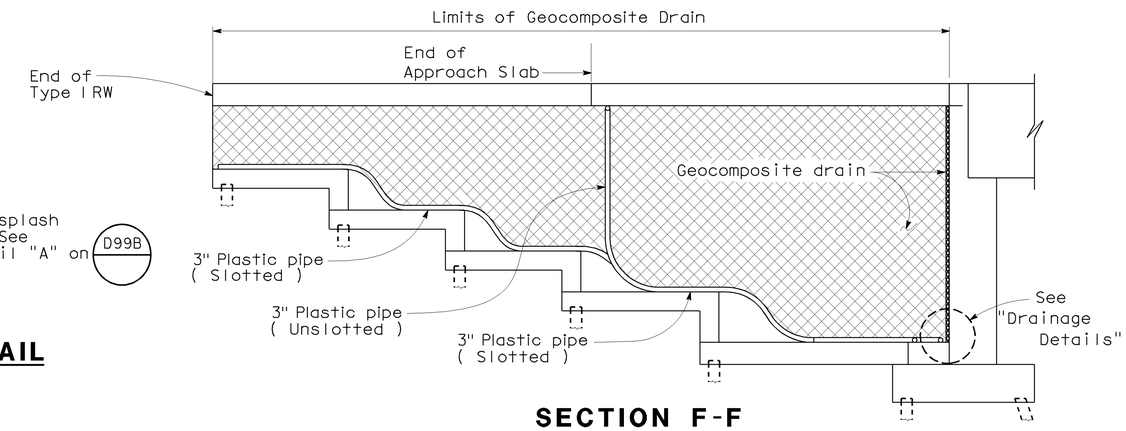

SECTION F-F
No scale

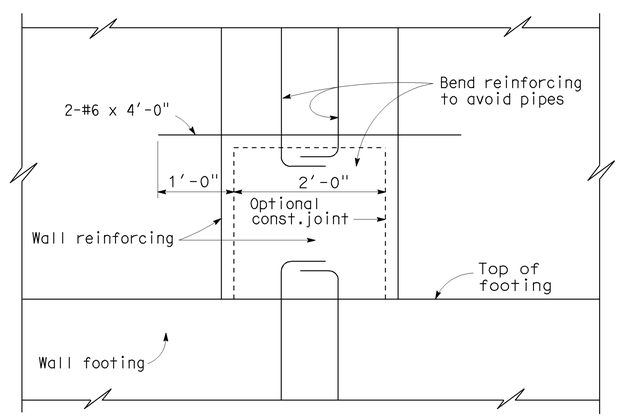

SECTION H-H
No scale

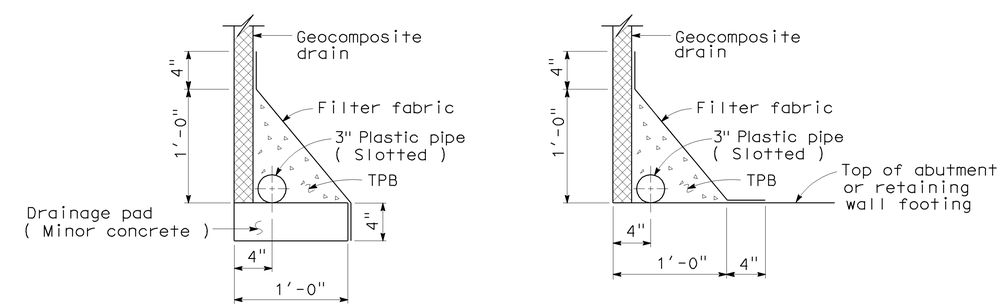

WITHOUT FOOTING WITH FOOTING

DRAINAGE DETAILS
No scale

Sudhakar Vatti
DESIGN OVERSIGHT Sudhakar Vatti
8-10-09
SIGN OFF DATE

	BY	CHECKED
DESIGN	J. Hermstad	K. Michalski
DETAILS	J. Hermstad	K. Michalski
QUANTITIES	J. Wong	K. Michalski

PREPARED FOR THE STATE OF CALIFORNIA DEPARTMENT OF TRANSPORTATION

J. Hermstad
PROJECT ENGINEER

BRIDGE NO. 55-1100G
POST MILE 23.27

N405-W22 CONNECTOR SEP (REPLACE)
STRUCTURE APPROACH DRAINAGE DETAILS

DESIGN DETAIL SHEET (ENGLISH) (REV. 2/25/05)

ORIGINAL SCALE IN INCHES FOR REDUCED PLANS 0 1 2 3

CU 12235
EA 071631

DISREGARD PRINTS BEARING EARLIER REVISION DATES
REVISION DATES (PRELIMINARY STAGE ONLY) 10/15/08 04/06/09 07/27/09

SHEET 42 OF 51

FILE => 55-1100g-s-sadt02.dgn

USERNAME => trcadrol DATE PLOTTED => 04-FEB-2010 TIME PLOTTED => 09:53

REFERENCE: CALTRANS SOIL & ROCK LOGGING, CLASSIFICATION, AND PRESENTATION MANUAL (JUNE 2007)

DIST	COUNTY	ROUTE	POST MILES TOTAL PROJECT	SHEET No	TOTAL SHEETS
12	Ora	22,405, 605	R0.3/R0.9, 22.3/24.0,3.0/R1.6	1746	1929

07/27/09
REGISTERED CIVIL ENGINEER DATE

2-1-10
PLANS APPROVAL DATE

REGISTERED PROFESSIONAL ENGINEER
Eric Brown
No. GE-2806
Exp. 06/30/10
GEOTECHNICAL
STATE OF CALIFORNIA

The State of California or its officers or agents shall not be responsible for the accuracy or completeness of electronic copies of this plan sheet.

OCTA
550 SOUTH MAIN STREET
ORANGE, CA 92863

EARTH MECHANICS, INC.
17660, NEWHOPE STREET, SUITE E
FOUNTAIN VALLEY, CA 92708

CEMENTATION

Description	Criteria
Weak	Crumbles or breaks with handling or little finger pressure.
Moderate	Crumbles or breaks with considerable finger pressure.
Strong	Will not crumble or break with finger pressure.

CONSISTENCY OF COHESIVE SOILS

Description	Unconfined Compressive Strength (tsf)	Pocket Penetrometer Measurement (tsf)	Torvane Measurement (tsf)	Field Approximation
Very Soft	< 0.25	< 0.25	< 0.12	Easily penetrated several inches by fist
Soft	0.25 to 0.50	0.25 to 0.50	0.12 to 0.25	Easily penetrated several inches by thumb
Medium Stiff	0.50 to 1.0	0.50 to 1.0	0.25 to 0.50	Penetrated several inches by thumb with moderate effort
Stiff	1 to 2	1 to 2	0.50 to 1.0	Readily indented by thumb but penetrated only with great effort
Very Stiff	2 to 4	2 to 4	1.0 to 2.0	Readily indented by thumbnail
Hard	> 4.0	> 4.0	> 2.0	Indented by thumbnail with difficulty

BOREHOLE IDENTIFICATION

Symbol	Hole Type	Description
Size	A	Auger Boring
Size	R P	Rotary drilled boring Rotary percussion boring (air)
Size	R	Rotary drilled diamond core
Size	HD HA	Hand driven (1-inch soil tube) Hand Auger
●	D	Dynamic Cone Penetration Boring
▲	CPT	Cone Penetration Test (ASTM D 5778-95)
□	O	Other

Note: Size in inches.

PLASTICITY OF FINE-GRAINED SOILS

Description	Criteria
Nonplastic	A 1/8-inch thread cannot be rolled at any water content.
Low	The thread can barely be rolled and the lump cannot be formed when drier than the plastic limit.
Medium	The thread is easy to roll and not much time is required to reach the plastic limit. The thread cannot be rerolled after reaching the plastic limit. The lump crumbles when drier than the plastic limit.
High	It takes considerable time rolling and kneading to reach the plastic limit. The thread can be rerolled several times after reaching the plastic limit. The lump can be formed without crumbling when drier than the plastic limit.

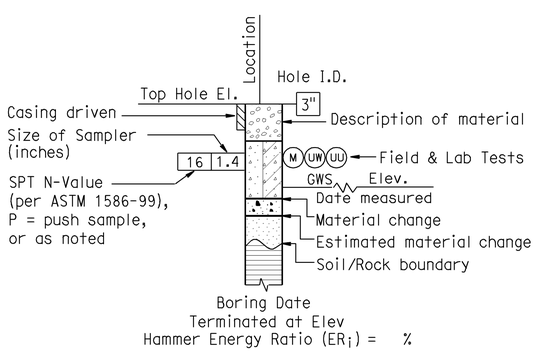

ROTARY BORING

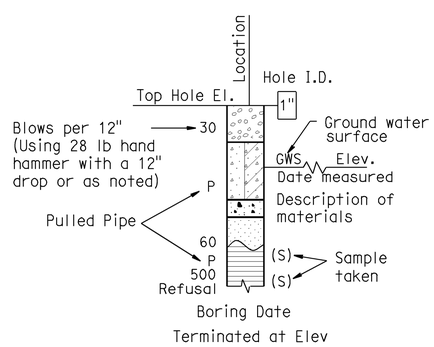

HAND BORING

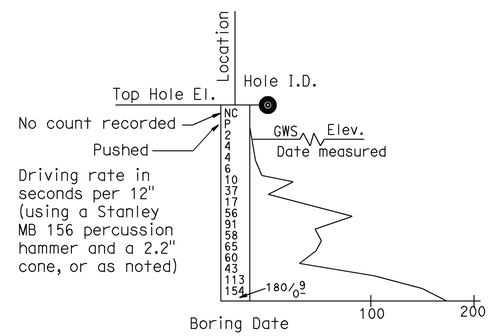

DYNAMIC CONE PENETRATION BORING

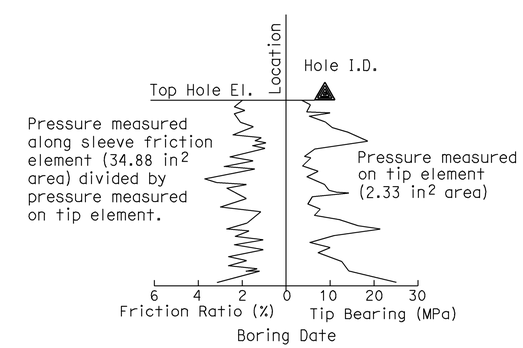

CONE PENETRATION TEST (CPT) SOUNDING

Sudhakar Vatti
DESIGN OVERSIGHT Sudhakar Vatti
8-10-09
SIGN OFF DATE

DRAWN BY: J.Fang
CHECKED BY: K.Pratheepan

FIELD INVESTIGATION BY: R.Jie

PREPARED FOR THE STATE OF CALIFORNIA DEPARTMENT OF TRANSPORTATION

E.Brown
PROJECT ENGINEER

BRIDGE NO. 55-1100G
POST MILE 23.27

N405-W22 CONNECTOR SEP (REPLACE)
LOG OF TEST BORINGS NO. 1

OSF CIVIL LOG OF TEST BORINGS SHEET (ENGLISH) (REV. 2-25-05)

ORIGINAL SCALE IN INCHES FOR REDUCED PLANS 0 1 2 3

CU 12235
EA 071631

DISREGARD PRINTS BEARING EARLIER REVISION DATES
REVISION DATES (PRELIMINARY STAGE ONLY) 10/25/08 03/25/09 04/06/09 07/27/09

SHEET 43 OF 51

FILE => 55-1100G-z-ltb01.dgn

USERNAME => trcarol DATE PLOTTED => 04-FEB-2010 TIME PLOTTED => 09:53

REFERENCE: CALTRANS SOIL & ROCK LOGGING, CLASSIFICATION, AND PRESENTATION MANUAL (JUNE 2007)

DIST	COUNTY	ROUTE	POST MILES TOTAL PROJECT	SHEET No	TOTAL SHEETS
12	Ora	22,405, 605	R0.3/R0.9, 22.3/24.0,3.0/R1.6	1747	1929

07/27/09
REGISTERED CIVIL ENGINEER DATE

2-1-10
PLANS APPROVAL DATE

REGISTERED PROFESSIONAL ENGINEER Eric Brown No. GE-2806 Exp. 06/30/10 GEOTECHNICAL STATE OF CALIFORNIA

The State of California or its officers or agents shall not be responsible for the accuracy or completeness of electronic copies of this plan sheet.

OCTA
550 SOUTH MAIN STREET
ORANGE, CA 92863

EARTH MECHANICS, INC.
17660, NEWHOPE STREET, SUITE E
FOUNTAIN VALLEY, CA 92708

GROUP SYMBOLS AND NAMES

Graphic/Symbol	Group Names	Graphic/Symbol	Group Names
GW	Well-graded GRAVEL Well-graded GRAVEL with SAND	CL	Lean CLAY Lean CLAY with SAND Lean CLAY with GRAVEL SANDY lean CLAY SANDY lean CLAY with GRAVEL GRAVELLY lean CLAY GRAVELLY lean CLAY with SAND
GP	Poorly graded GRAVEL Poorly graded GRAVEL with SAND		
GW-GM	Well-graded GRAVEL with SILT Well-graded GRAVEL with SILT and SAND	CL-ML	SILTY CLAY SILTY CLAY with SAND SILTY CLAY with GRAVEL SANDY SILTY CLAY SANDY SILTY CLAY with GRAVEL GRAVELLY SILTY CLAY GRAVELLY SILTY CLAY with SAND
GW-GC	Well-graded GRAVEL with CLAY (or SILTY CLAY) Well-graded GRAVEL with CLAY and SAND (or SILTY CLAY and SAND)		
GP-GM	Poorly graded GRAVEL with SILT Poorly graded GRAVEL with SILT and SAND	ML	SILT SILT with SAND SILT with GRAVEL SANDY SILT SANDY SILT with GRAVEL GRAVELLY SILT GRAVELLY SILT with SAND
GP-GC	Poorly graded GRAVEL with CLAY (or SILTY CLAY) Poorly graded GRAVEL with CLAY and SAND (or SILTY CLAY and SAND)		
GM	SILTY GRAVEL SILTY GRAVEL with SAND	OL	ORGANIC lean CLAY ORGANIC lean CLAY with SAND ORGANIC lean CLAY with GRAVEL SANDY ORGANIC lean CLAY SANDY ORGANIC lean CLAY with GRAVEL GRAVELLY ORGANIC lean CLAY GRAVELLY ORGANIC lean CLAY with SAND
GC	CLAYEY GRAVEL CLAYEY GRAVEL with SAND		
GC-GM	SILTY, CLAYEY GRAVEL SILTY, CLAYEY GRAVEL with SAND	OL	ORGANIC SILT ORGANIC SILT with SAND ORGANIC SILT with GRAVEL SANDY ORGANIC SILT SANDY ORGANIC SILT with GRAVEL GRAVELLY ORGANIC SILT GRAVELLY ORGANIC SILT with SAND
SW	Well-graded SAND Well-graded SAND with GRAVEL		
SP	Poorly graded SAND Poorly graded SAND with GRAVEL	CH	Fat CLAY Fat CLAY with SAND Fat CLAY with GRAVEL SANDY fat CLAY SANDY fat CLAY with GRAVEL GRAVELLY fat CLAY GRAVELLY fat CLAY with SAND
SW-SM	Well-graded SAND with SILT Well-graded SAND with SILT and GRAVEL		
SW-SC	Well-graded SAND with CLAY (or SILTY CLAY) Well-graded SAND with CLAY and GRAVEL (or SILTY CLAY and GRAVEL)	MH	Elastic SILT Elastic SILT with SAND Elastic SILT with GRAVEL SANDY elastic SILT SANDY elastic SILT with GRAVEL GRAVELLY elastic SILT GRAVELLY elastic SILT with SAND
SP-SM	Poorly graded SAND with SILT Poorly graded SAND with SILT and GRAVEL		
SP-SC	Poorly graded SAND with CLAY (or SILTY CLAY) Poorly graded SAND with CLAY and GRAVEL (or SILTY CLAY and GRAVEL)	OH	ORGANIC fat CLAY ORGANIC fat CLAY with SAND ORGANIC fat CLAY with GRAVEL SANDY ORGANIC fat CLAY SANDY ORGANIC fat CLAY with GRAVEL GRAVELLY ORGANIC fat CLAY GRAVELLY ORGANIC fat CLAY with SAND
SM	SILTY SAND SILTY SAND with GRAVEL		
SC	CLAYEY SAND CLAYEY SAND with GRAVEL	OH	ORGANIC elastic SILT ORGANIC elastic SILT with SAND ORGANIC elastic SILT with GRAVEL SANDY ORGANIC elastic SILT SANDY ORGANIC elastic SILT with GRAVEL GRAVELLY ORGANIC elastic SILT GRAVELLY ORGANIC elastic SILT with SAND
SC-SM	SILTY, CLAYEY SAND SILTY, CLAYEY SAND with GRAVEL		
PT	PEAT	OL/OH	ORGANIC SOIL ORGANIC SOIL with SAND ORGANIC SOIL with GRAVEL SANDY ORGANIC SOIL SANDY ORGANIC SOIL with GRAVEL GRAVELLY ORGANIC SOIL GRAVELLY ORGANIC SOIL with SAND
	COBBLES COBBLES and BOULDERS BOULDERS		

FIELD AND LABORATORY TESTING

- (C) Consolidation (ASTM D 2435)
- (CL) Collapse Potential (ASTM D 5333)
- (CP) Compaction Curve (CTM 216)
- (CR) Corrosivity Testing (CTM 643, CTM 422, CTM 417)
- (CU) Consolidated Undrained Triaxial (ASTM D 4767)
- (DS) Direct Shear (ASTM D 3080)
- (EI) Expansion Index (ASTM D 4829)
- (M) Moisture Content (ASTM D 2216)
- (OC) Organic Content-% (ASTM D 2974)
- (P) Permeability (CTM 220)
- (PA) Particle Size Analysis (ASTM D 422)
- (PI) Plasticity Index (AASHTO T 90) Liquid Limit (AASHTO T 89)
- (PL) Point Load Index (ASTM D 5731)
- (PM) Pressure Meter
- (PP) Pocket Penetrometer
- (R) R-Value (CTM 301)
- (SE) Sand Equivalent (CTM 217)
- (SG) Specific Gravity (AASHTO T 100)
- (SL) Shrinkage Limit (ASTM D 427)
- (SW) Swell Potential (ASTM D 4546)
- (TV) Pocket Torvane
- (UC) Unconfined Compression-Soil (ASTM D 2166) Unconfined Compression-Rock (ASTM D 2938)
- (UU) Unconsolidated Undrained Triaxial (ASTM D 2850)
- (UW) Unit Weight (ASTM D 4767)
- (VS) Vane Shear (AASHTO T 223)

APPARENT DENSITY OF COHESIONLESS SOILS

Description	SPT N_{60} (Blows / 12 inches)
Very loose	0 - 4
Loose	5 - 10
Medium Dense	11 - 30
Dense	31 - 50
Very Dense	> 50

MOISTURE

Description	Criteria
Dry	Absence of moisture, dusty, dry to the touch
Moist	Damp but no visible water
Wet	Visible free water, usually soil is below water table

PERCENT OR PROPORTION OF SOILS

Description	Criteria
Trace	Particles are present but estimated to be less than 5%
Few	5 to 10%
Little	15 to 25%
Some	30 to 45%
Mostly	50 to 100%

PARTICLE SIZE

Description		Size
Boulder		> 12"
Cobble		3" to 12"
Gravel	Coarse	3/4" to 3"
	Fine	No. 4 to 3/4"
Sand	Coarse	No. 10 to No. 4
	Medium	No. 40 to No. 10
	Fine	No. 200 to No. 40

Sudhakar Vatti
DESIGN OVERSIGHT Sudhakar Vatti
8-10-09
SIGN OFF DATE

DRAWN BY: J.Fang
CHECKED BY: K.Pratheepan

FIELD INVESTIGATION BY: R.Jie

PREPARED FOR THE STATE OF CALIFORNIA DEPARTMENT OF TRANSPORTATION

E.Brown
PROJECT ENGINEER

BRIDGE NO. 55-1100G
POST MILE 23.27

N405-W22 CONNECTOR SEP (REPLACE)
LOG OF TEST BORINGS NO. 2

OSF CIVIL LOG OF TEST BORINGS SHEET (ENGLISH) (REV. 2-25-05)

ORIGINAL SCALE IN INCHES FOR REDUCED PLANS 0 1 2 3

CU 12235
EA 071631

DISREGARD PRINTS BEARING EARLIER REVISION DATES
REVISION DATES (PRELIMINARY STAGE ONLY) 10/15/08 03/25/09 04/06/09 07/21/09

SHEET 44 OF 51

FILE => 55-1100G-z-ltb02.dgn

USERNAME => trcarol DATE PLOTTED => 04-FEB-2010 TIME PLOTTED => 09:53

DIST	COUNTY	ROUTE	POST MILES TOTAL PROJECT	SHEET No	TOTAL SHEETS
12	Ora	22,405, 605	R0.3/R0.9, 22.3/24.0,3.0/R1.6	1748	1929

REGISTERED CIVIL ENGINEER 07/27/09 DATE

2-1-10
PLANS APPROVAL DATE

REGISTERED PROFESSIONAL ENGINEER Eric Brown No. GE-2806 Exp. 06/30/10 GEOTECHNICAL STATE OF CALIFORNIA

The State of California or its officers or agents shall not be responsible for the accuracy or completeness of electronic copies of this plan sheet.

OCTA
550 SOUTH MAIN STREET
ORANGE, CA 92863

EARTH MECHANICS, INC.
17660, NEWHOPE STREET, SUITE E
FOUNTAIN VALLEY, CA 92708

BENCHMARKS:

Monument: 1A-144-04

Described by OCS 2005 - Found 3.75" OCS aluminum benchmark disk stamped "1A-144-04", set in the southwesterly corner of a 4.4 ft by 4.4 ft concrete catch basin. Monument is located in the northeasterly corner of the intersection of Seal Beach Boulevard and St. Cloud Drive, 44 ft easterly of the centerline of Seal Beach Boulevard and 58 ft northerly of the centerline of St. Cloud Dr. Monument is set level with the sidewalk.

Elevation: 15.37 feet

NOTES:

(1) This LOTB sheet (Boring Record) was prepared in accordance with the Caltrans Soil and Rock Classification Logging, Classification and Presentation Manual (June 2007).

(2) 2.4" samples were taken using a California Modified Sampler.

(3) An automatic trip hammer system consisting of a hammer weight of 140 lbs falling a distance of 30" was used to advance the drive sampler.

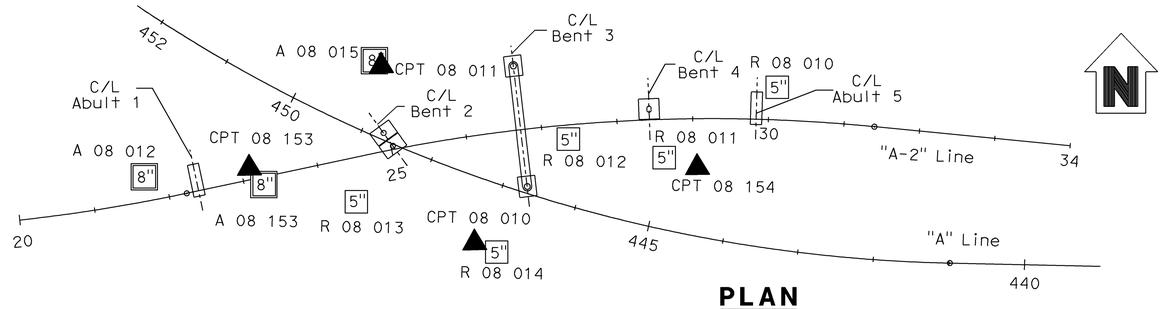

PLAN
1" = 100'

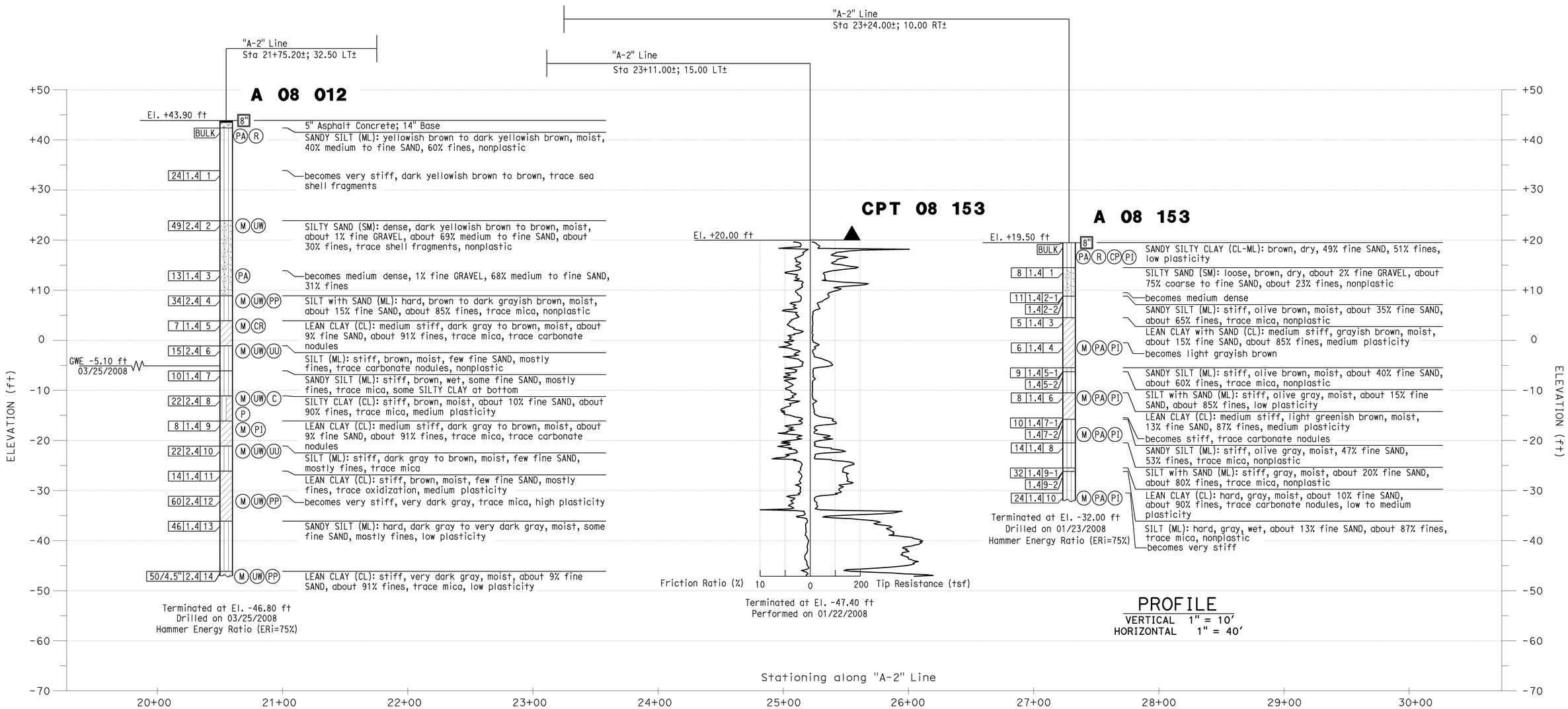

PROFILE
VERTICAL 1" = 10'
HORIZONTAL 1" = 40'

Sudhakar Vatti
DESIGN OVERSIGHT Sudhakar Vatti
8-10-09
SIGN OFF DATE

DRAWN BY: J.Fang
CHECKED BY: K.Pratheepan

FIELD INVESTIGATION BY: R.Jie

PREPARED FOR THE STATE OF CALIFORNIA DEPARTMENT OF TRANSPORTATION

E.Brown
PROJECT ENGINEER

BRIDGE NO. 55-1100G
POST MILE 23.27

N405-W22 CONNECTOR SEP (REPLACE)
LOG OF TEST BORINGS NO. 3

OSF CIVIL LOG OF TEST BORINGS SHEET (ENGLISH) (REV. 2-25-05)

ORIGINAL SCALE IN INCHES FOR REDUCED PLANS 0 1 2 3

CU 12235
EA 071631

DISREGARD PRINTS BEARING EARLIER REVISION DATES

REVISION DATES (PRELIMINARY STAGE ONLY) 10/25/08 03/25/09 04/06/09 07/21/09

SHEET 45 OF 51

FILE => 55-1100G-z-1tb03.dgn

USERNAME => trcarol DATE PLOTTED => 04-FEB-2010 TIME PLOTTED => 09:53

DIST	COUNTY	ROUTE	POST MILES TOTAL PROJECT	SHEET No	TOTAL SHEETS
12	Ora	22,405, 605	R0.3/R0.9, 22.3/24.0,3.0/R1.6	1749	1929

REGISTERED CIVIL ENGINEER — DATE 07/27/09

2-1-10
PLANS APPROVAL DATE

REGISTERED PROFESSIONAL ENGINEER — Eric Brown — No. GE-2806 — Exp. 06/30/10 — GEOTECHNICAL — STATE OF CALIFORNIA

The State of California or its officers or agents shall not be responsible for the accuracy or completeness of electronic copies of this plan sheet.

OCTA
550 SOUTH MAIN STREET
ORANGE, CA 92863

EARTH MECHANICS, INC.
17660, NEWHOPE STREET, SUITE E
FOUNTAIN VALLEY, CA 92708

BENCHMARKS:

Monument: 1A-144-04

Described by OCS 2005 - Found 3.75" OCS aluminum benchmark disk stamped "1A-144-04", set in the southwesterly corner of a 4.4 ft by 4.4 ft concrete catch basin. Monument is located in the northeasterly corner of the intersection of Seal Beach Boulevard and St. Cloud Drive, 44 ft easterly of the centerline of Seal Beach Boulevard and 58 ft northerly of the centerline of St. Cloud Dr. Monument is set level with the sidewalk.

Elevation: 15.37 feet

NOTES:

(1) This LOTB sheet (Boring Record) was prepared in accordance with the Caltrans Soil and Rock Classification Logging, Classification and Presentation Manual (June 2007).

(2) 2.4" samples were taken using a California Modified Sampler.

(3) A rope and cat-head hammer system consisting of a hammer weight of 140 lbs falling a distance of 30" was used to advance the drive sampler.

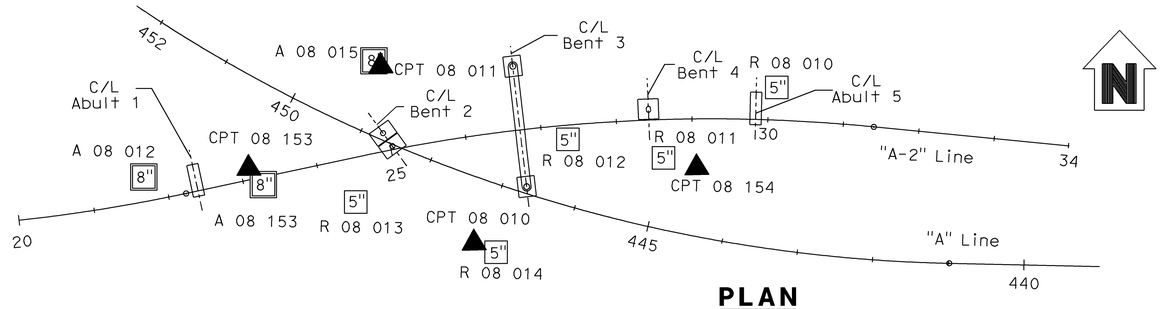

PLAN

1" = 100'

"A-2" Line
Sta 24+40.50±; 57.00 RT±

R 08 013

El. +20.40 ft

PROFILE

VERTICAL 1" = 10'
HORIZONTAL 1" = 40'

Sudhakar Vatti — DESIGN OVERSIGHT Sudhakar Vatti; 8-10-09 SIGN OFF DATE	DRAWN BY: J.Fang; CHECKED BY: K.Pratheepan	FIELD INVESTIGATION BY: R.Jie	PREPARED FOR THE STATE OF CALIFORNIA DEPARTMENT OF TRANSPORTATION	E.Brown PROJECT ENGINEER	BRIDGE NO. 55-1100G; POST MILE 23.27

N405-W22 CONNECTOR SEP (REPLACE)

LOG OF TEST BORINGS NO. 4

OSF CIVIL LOG OF TEST BORINGS SHEET (ENGLISH) (REV. 2-25-05)

ORIGINAL SCALE IN INCHES FOR REDUCED PLANS 0 1 2 3

CU 12235
EA 071631

DISREGARD PRINTS BEARING EARLIER REVISION DATES

REVISION DATES (PRELIMINARY STAGE ONLY) 10/15/08 03/25/09 04/06/09 07/21/09

SHEET 46 OF 51

FILE => 55-1100G-z-ltb04.dgn

USERNAME => ttrcgrot DATE PLOTTED => 04-FEB-2010 TIME PLOTTED => 09:53

DIST	COUNTY	ROUTE	POST MILES TOTAL PROJECT	SHEET No	TOTAL SHEETS
12	Ora	22,405, 605	R0.3/R0.9, 22.3/24.0,3.0/R1.6	1750	1929

REGISTERED CIVIL ENGINEER 07/27/09 DATE

2-1-10
PLANS APPROVAL DATE

The State of California or its officers or agents shall not be responsible for the accuracy or completeness of electronic copies of this plan sheet.

REGISTERED PROFESSIONAL ENGINEER Eric Brown No. GE-2806 Exp. 06/30/10 GEOTECHNICAL STATE OF CALIFORNIA

OCTA
550 SOUTH MAIN STREET
ORANGE, CA 92863

EARTH MECHANICS, INC.
17660, NEWHOPE STREET, SUITE E
FOUNTAIN VALLEY, CA 92708

BENCHMARKS:

Monument: 1A-144-04

Described by OCS 2005 - Found 3.75" OCS aluminum benchmark disk stamped "1A-144-04", set in the southwesterly corner of a 4.4 ft by 4.4 ft concrete catch basin. Monument is located in the northeasterly corner of the intersection of Seal Beach Boulevard and St. Cloud Drive, 44 ft easterly of the centerline of Seal Beach Boulevard and 58 ft northerly of the centerline of St. Cloud Dr. Monument is set level with the sidewalk.

Elevation: 15.37 feet

NOTES:

(1) This LOTB sheet (Boring Record) was prepared in accordance with the Caltrans Soil and Rock Classification Logging, Classification and Presentation Manual (June 2007).

(2) 2.4" samples were taken using a California Modified Sampler.

(3) An automatic trip hammer system consisting of a hammer weight of 140 lbs falling a distance of 30" was used to advance the drive sampler.

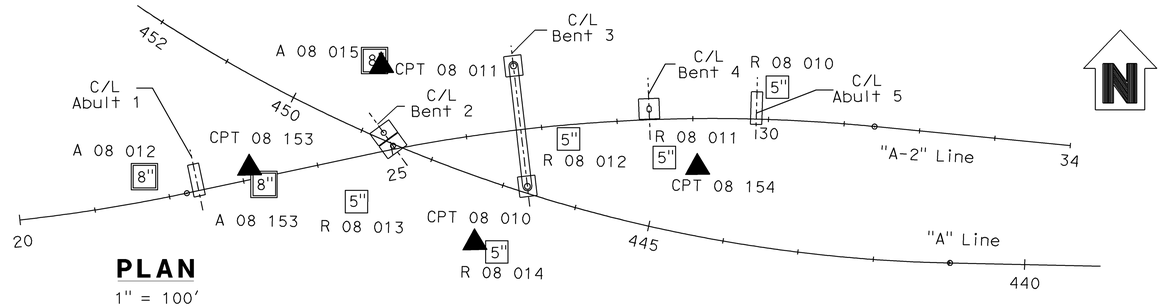

PLAN
1" = 100'

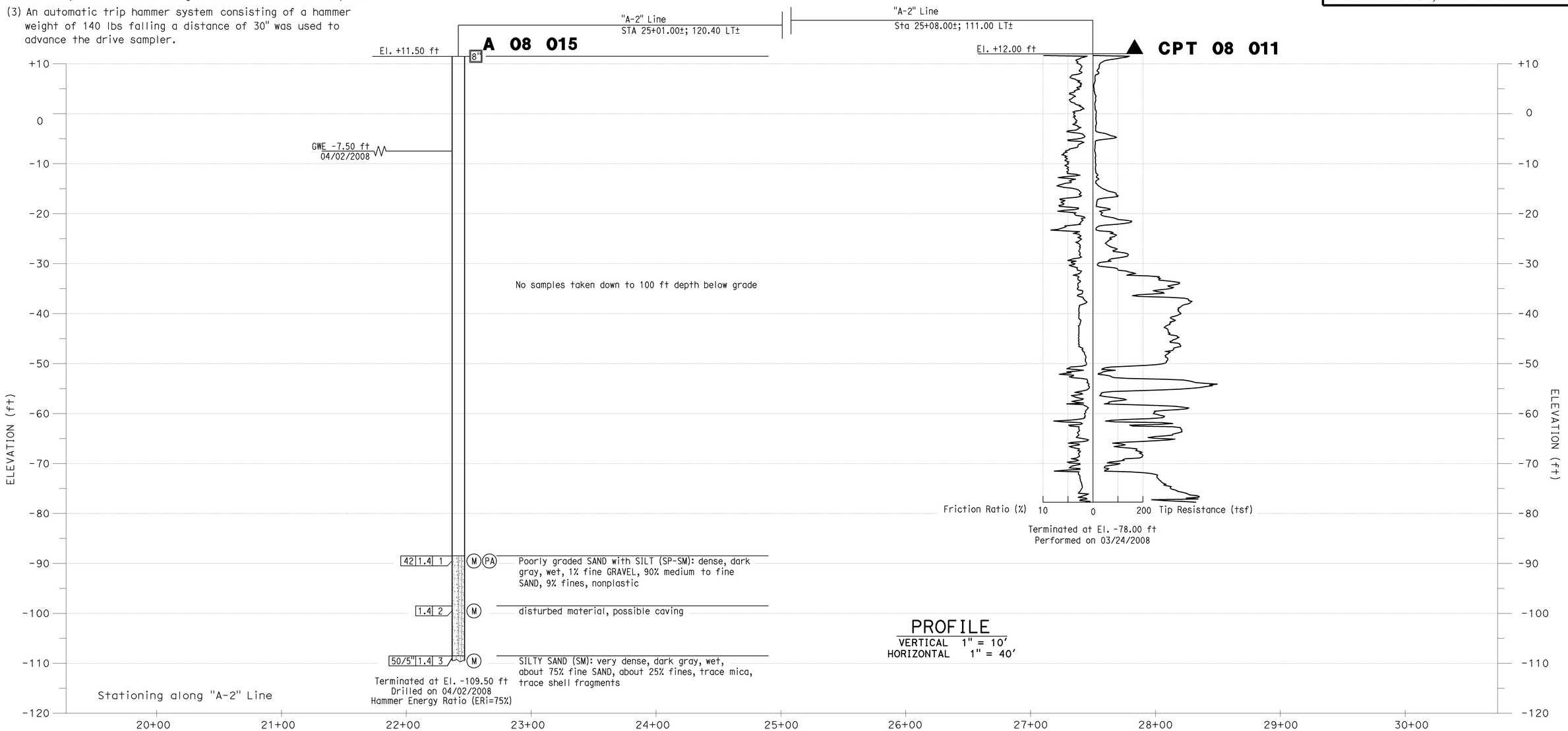

PROFILE
VERTICAL 1" = 10'
HORIZONTAL 1" = 40'

Sudhakar Vatti DESIGN OVERSIGHT Sudhakar Vatti 8-10-09 SIGN OFF DATE	DRAWN BY: J.Fang CHECKED BY: K.Pratheepan	FIELD INVESTIGATION BY: R.Jie	PREPARED FOR THE STATE OF CALIFORNIA DEPARTMENT OF TRANSPORTATION	E.Brown PROJECT ENGINEER	BRIDGE NO. 55-1100G POST MILE 23.27

N405-W22 CONNECTOR SEP (REPLACE)

LOG OF TEST BORINGS NO. 5

OSF CIVIL LOG OF TEST BORINGS SHEET (ENGLISH) (REV. 2-25-05)

ORIGINAL SCALE IN INCHES FOR REDUCED PLANS 0 1 2 3

CU 12235
EA 071631

DISREGARD PRINTS BEARING EARLIER REVISION DATES

REVISION DATES (PRELIMINARY STAGE ONLY) 10/15/08 03/23/09 04/06/09 07/21/09

SHEET 47 OF 51

FILE => 55-1100G-z-1tb05.dgn

USERNAME => trcarrol DATE PLOTTED => 04-FEB-2010 TIME PLOTTED => 09:53

DIST	COUNTY	ROUTE	POST MILES TOTAL PROJECT	SHEET No	TOTAL SHEETS
12	Ora	22,405, 605	R0.3/R0.9, 22.3/24.0,3.0/R1.6	1751	1929

REGISTERED CIVIL ENGINEER 07/27/09 DATE

2-1-10
PLANS APPROVAL DATE

REGISTERED PROFESSIONAL ENGINEER Eric Brown No. GE-2806 Exp. 06/30/10 GEOTECHNICAL STATE OF CALIFORNIA

The State of California or its officers or agents shall not be responsible for the accuracy or completeness of electronic copies of this plan sheet.

OCTA
550 SOUTH MAIN STREET
ORANGE, CA 92863

EARTH MECHANICS, INC.
17660, NEWHOPE STREET, SUITE E
FOUNTAIN VALLEY, CA 92708

BENCHMARKS:

Monument: 1A-144-04

Described by OCS 2005 - Found 3.75" OCS aluminum benchmark disk stamped "1A-144-04", set in the southwesterly corner of a 4.4 ft by 4.4 ft concrete catch basin. Monument is located in the northeasterly corner of the intersection of Seal Beach Boulevard and St. Cloud Drive, 44 ft easterly of the centerline of Seal Beach Boulevard and 58 ft northerly of the centerline of St. Cloud Dr. Monument is set level with the sidewalk.

Elevation: 15.37 feet

NOTES:

(1) This LOTB sheet (Boring Record) was prepared in accordance with the Caltrans Soil and Rock Classification Logging, Classification and Presentation Manual (June 2007).

(2) 2.4" samples were taken using a California Modified Sampler.

(3) A rope and cat-head hammer system consisting of a hammer weight of 140 lbs falling a distance of 30" was used to advance the drive sampler.

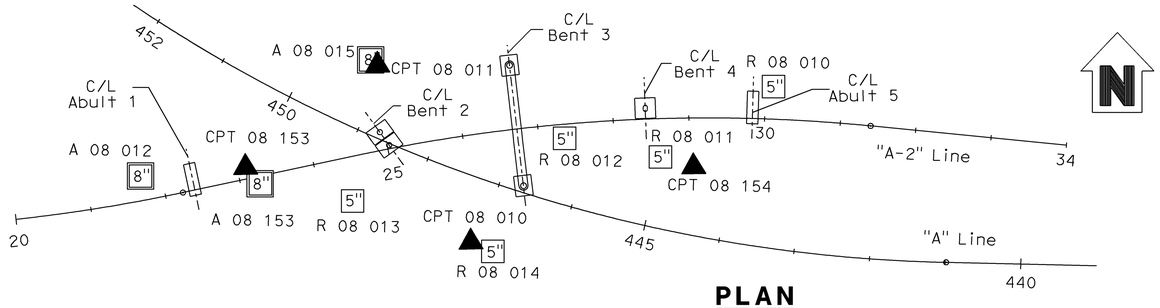

PLAN

1" = 100'

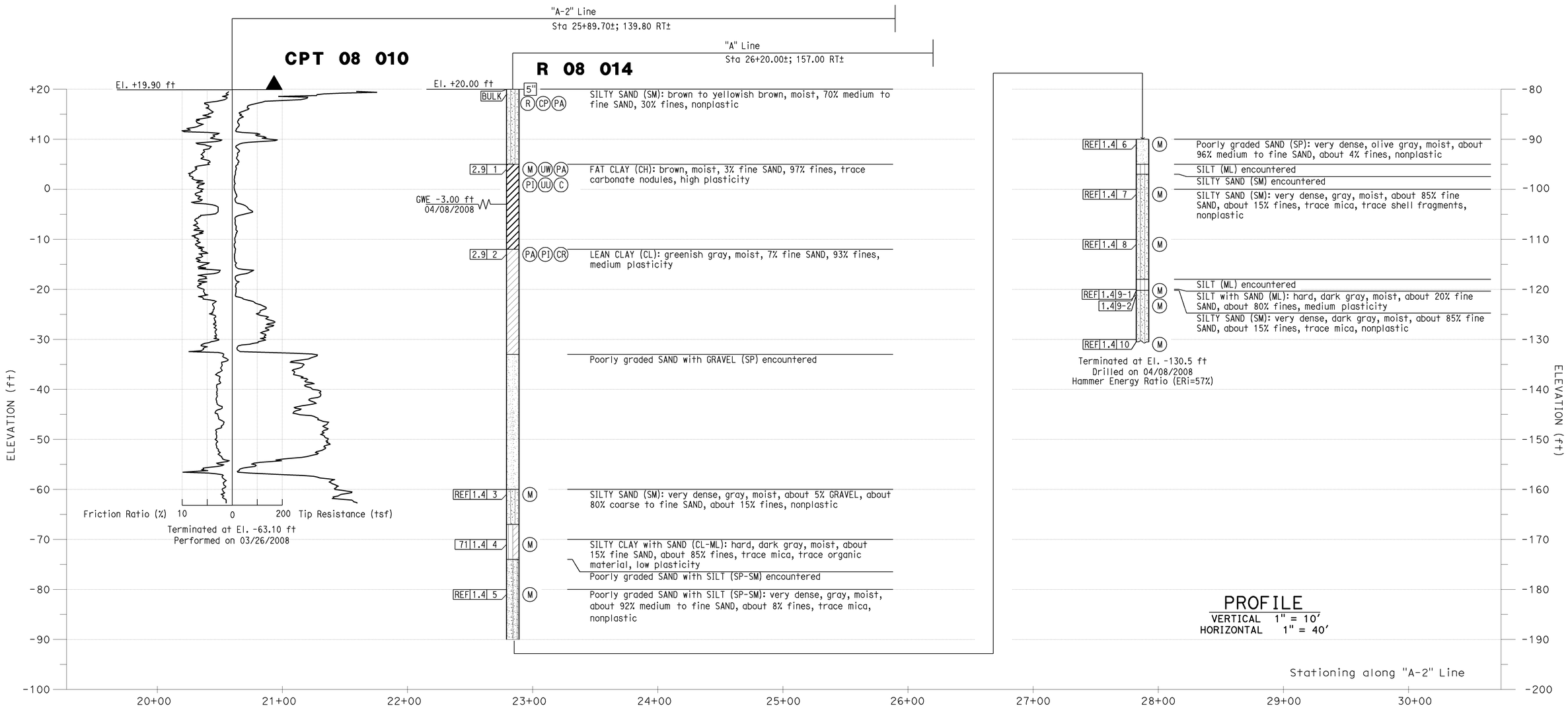

PROFILE

VERTICAL 1" = 10'
HORIZONTAL 1" = 40'

Sudhakar Vatti DESIGN OVERSIGHT Sudhakar Vatti	DRAWN BY: J.Fang	FIELD INVESTIGATION BY:	PREPARED FOR THE STATE OF CALIFORNIA DEPARTMENT OF TRANSPORTATION	E.Brown PROJECT ENGINEER	BRIDGE NO. 55-1100G POST MILE 23.27
8-10-09 SIGN OFF DATE	CHECKED BY: K.Pratheepan	R.Jie			

N405-W22 CONNECTOR SEP (REPLACE)

LOG OF TEST BORINGS NO. 6

OSF CIVIL LOG OF TEST BORINGS SHEET (ENGLISH) (REV. 2-25-05)

ORIGINAL SCALE IN INCHES FOR REDUCED PLANS 0 1 2 3

CU 12235
EA 071631

DISREGARD PRINTS BEARING EARLIER REVISION DATES

REVISION DATES (PRELIMINARY STAGE ONLY) 10/25/08 03/25/09 04/06/09 07/21/09

SHEET 48 OF 51

FILE => 55-1100G-z-ltb06.dgn

USERNAME => rrcarol DATE PLOTTED => 04-FEB-2010 TIME PLOTTED => 09:53

DIST	COUNTY	ROUTE	POST MILES TOTAL PROJECT	SHEET No	TOTAL SHEETS
12	Ora	22,405, 605	R0.3/R0.9, 22.3/24.0,3.0/R1.6	1752	1929

REGISTERED CIVIL ENGINEER 07/27/09 DATE

2-1-10
PLANS APPROVAL DATE

The State of California or its officers or agents shall not be responsible for the accuracy or completeness of electronic copies of this plan sheet.

REGISTERED PROFESSIONAL ENGINEER Eric Brown No. GE-2806 Exp. 06/30/10 GEOTECHNICAL STATE OF CALIFORNIA

OCTA
550 SOUTH MAIN STREET
ORANGE, CA 92863

EARTH MECHANICS, INC.
17660, NEWHOPE STREET, SUITE E
FOUNTAIN VALLEY, CA 92708

BENCHMARKS:

Monument: 1A-144-04

Described by OCS 2005 - Found 3.75" OCS aluminum benchmark disk stamped "1A-144-04", set in the southwesterly corner of a 4.4 ft by 4.4 ft concrete catch basin. Monument is located in the northeasterly corner of the intersection of Seal Beach Boulevard and St. Cloud Drive, 44 ft easterly of the centerline of Seal Beach Boulevard and 58 ft northerly of the centerline of St. Cloud Dr. Monument is set level with the sidewalk.

Elevation: 15.37 feet

NOTES:

(1) This LOTB sheet (Boring Record) was prepared in accordance with the Caltrans Soil and Rock Classification Logging, Classification and Presentation Manual (June 2007).

(2) 2.4" samples were taken using a California Modified Sampler.

(3) A rope and cat-head hammer system consisting of a hammer weight of 140 lbs falling a distance of 30" was used to advance the drive sampler.

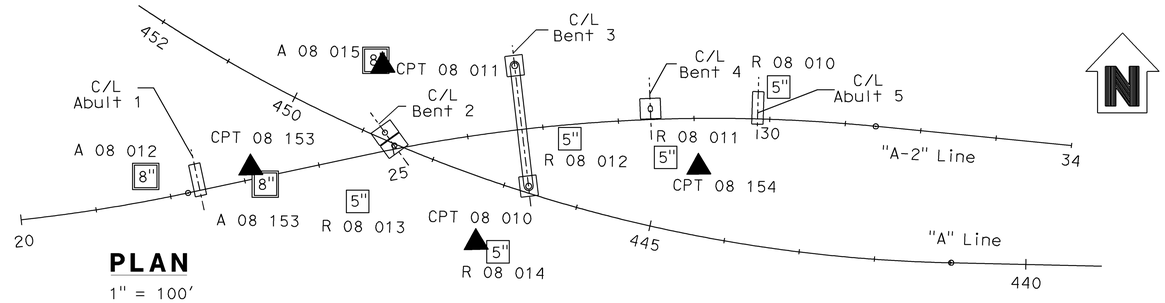

PLAN
1" = 100'

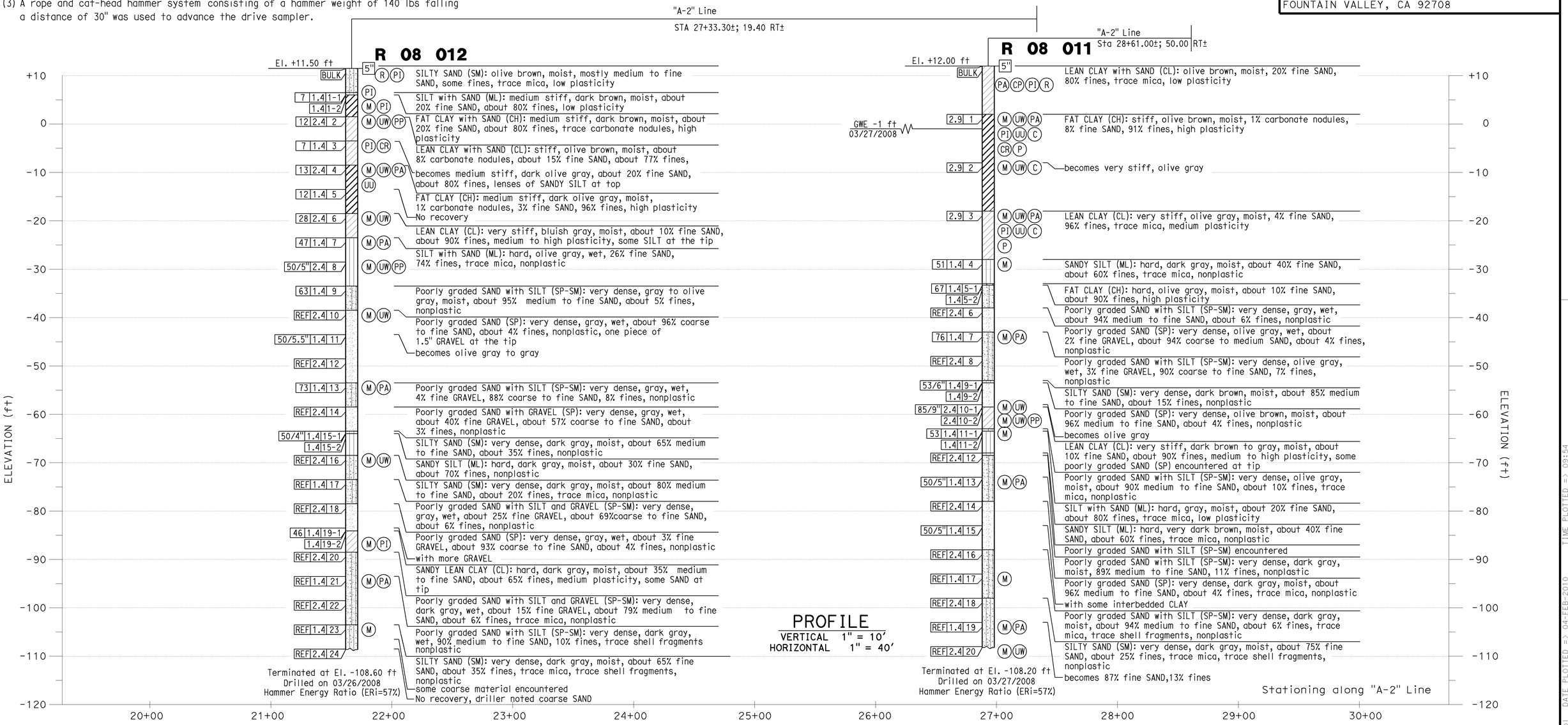

Sudhakar Vatti
DESIGN OVERSIGHT Sudhakar Vatti

8-10-09
SIGN OFF DATE

DRAWN BY: J.Fang

CHECKED BY: K.Pratheepan

FIELD INVESTIGATION BY: R.Jie

PREPARED FOR THE STATE OF CALIFORNIA DEPARTMENT OF TRANSPORTATION

E.Brown
PROJECT ENGINEER

BRIDGE NO. 55-1100G
POST MILE 23.27

N405-W22 CONNECTOR SEP (REPLACE)

LOG OF TEST BORINGS NO. 7

OSF CIVIL LOG OF TEST BORINGS SHEET (ENGLISH) (REV. 2-25-05)

ORIGINAL SCALE IN INCHES FOR REDUCED PLANS 0 1 2 3

CU 12235
EA 071631

DISREGARD PRINTS BEARING EARLIER REVISION DATES

REVISION DATES (PRELIMINARY STAGE ONLY) 10/25/08 03/25/09 04/06/09 07/21/09

SHEET 49 OF 51

FILE => 55-1100G-z-ltb07.dgn

USERNAME => trcarol DATE PLOTTED => 04-FEB-2010 TIME PLOTTED => 09:54

DIST	COUNTY	ROUTE	POST MILES TOTAL PROJECT	SHEET No	TOTAL SHEETS
12	Ora	22,405, 605	R0.3/R0.9, 22.3/24.0,3.0/R1.6	1753	1929

REGISTERED CIVIL ENGINEER 07/27/09 DATE

2-1-10
PLANS APPROVAL DATE

REGISTERED PROFESSIONAL ENGINEER Eric Brown No. GE-2806 Exp. 06/30/10 GEOTECHNICAL STATE OF CALIFORNIA

The State of California or its officers or agents shall not be responsible for the accuracy or completeness of electronic copies of this plan sheet.

OCTA
550 SOUTH MAIN STREET
ORANGE, CA 92863

EARTH MECHANICS, INC.
17660, NEWHOPE STREET, SUITE E
FOUNTAIN VALLEY, CA 92708

BENCHMARKS:

Monument: 1A-144-04

Described by OCS 2005 - Found 3.75" OCS aluminum benchmark disk stamped "1A-144-04", set in the southwesterly corner of a 4.4 ft by 4.4 ft concrete catch basin. Monument is located in the northeasterly corner of the intersection of Seal Beach Boulevard and St. Cloud Drive, 44 ft easterly of the centerline of Seal Beach Boulevard and 58 ft northerly of the centerline of St. Cloud Dr. Monument is set level with the sidewalk.

Elevation: 15.37 feet

NOTES:

(1) This LOTB sheet (Boring Record) was prepared in accordance with the Caltrans Soil and Rock Classification Logging, Classification and Presentation Manual (June 2007).

(2) 2.4" samples were taken using a California Modified Sampler.

(3) A rope and cat-head hammer system consisting of a hammer weight of 140 lbs falling a distance of 30" was used to advance the drive sampler.

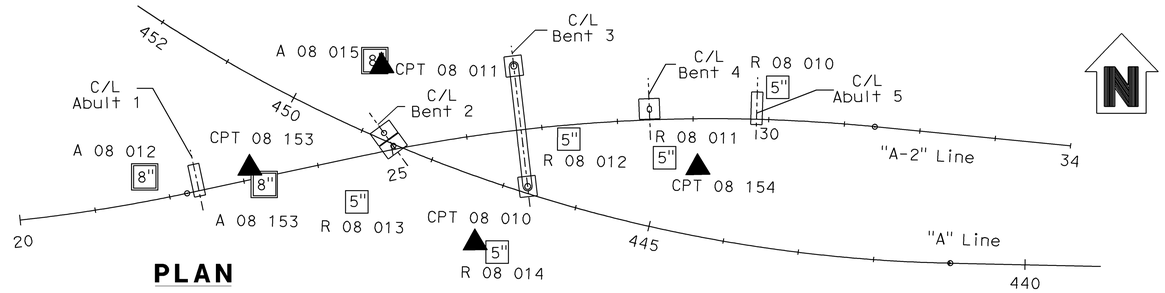

PLAN

1" = 100'

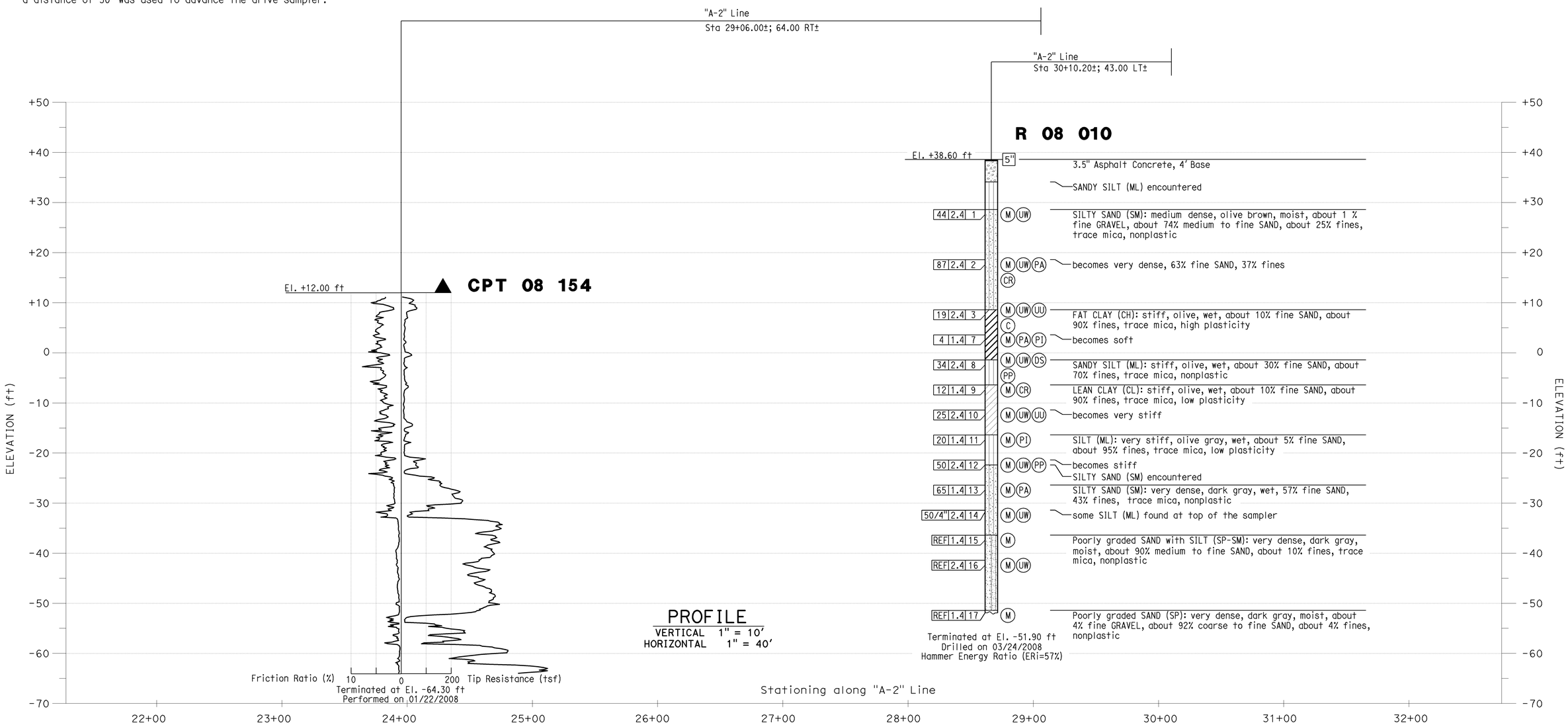

PROFILE

VERTICAL 1" = 10'
HORIZONTAL 1" = 40'

Sudhakar Vatti DESIGN OVERSIGHT Sudhakar Vatti 8-10-09 SIGN OFF DATE	DRAWN BY: J.Fang CHECKED BY: K.Pratheepan	FIELD INVESTIGATION BY: R.Jie	PREPARED FOR THE STATE OF CALIFORNIA DEPARTMENT OF TRANSPORTATION	E.Brown PROJECT ENGINEER	BRIDGE NO. 55-1100G POST MILE 23.27

N405-W22 CONNECTOR SEP (REPLACE)

LOG OF TEST BORINGS NO. 8

OSF CIVIL LOG OF TEST BORINGS SHEET (ENGLISH) (REV. 2-25-05)

ORIGINAL SCALE IN INCHES FOR REDUCED PLANS 0 1 2 3

CU 12235
EA 071631

DISREGARD PRINTS BEARING EARLIER REVISION DATES

REVISION DATES (PRELIMINARY STAGE ONLY) 10/15/08 03/25/09 04/06/09 07/27/09

SHEET 50 OF 51

FILE => 55-1100G-z-ltb08.dgn

USERNAME => trcarol DATE PLOTTED => 04-FEB-2010 TIME PLOTTED => 09:54

FED. ROAD DIV. NO.	STATE	PROJ. NO.	FISCAL YEAR	SHEET NO.	TOTAL SHEETS
7	CAL.			368	372

DIST.	COUNTY	ROUTE	SECTION	SHEET NO.	TOTAL SHEETS
VII	Ora	22	A	12	12

RAYMOND GRIBBLE — CHIEF ENGINEER — GEOTECHNICAL SERVICES

DATE APPROVED April 8, 3

Bench Mark "200-A-59
Rd. C.S. T&W 41' Rt. of Rte. 179
Sta. 200+59.47 B.C. Ult. & Const.
Elev. 14.96

REGISTERED PROFESSIONAL ENGINEER
Eric Brown
No. GE-2806
Exp. 06/30/10
GEOTECHNICAL
STATE OF CALIFORNIA

AS BUILT PLANS
Contract No. 07-031804
Date Completed
Document No. 70002415

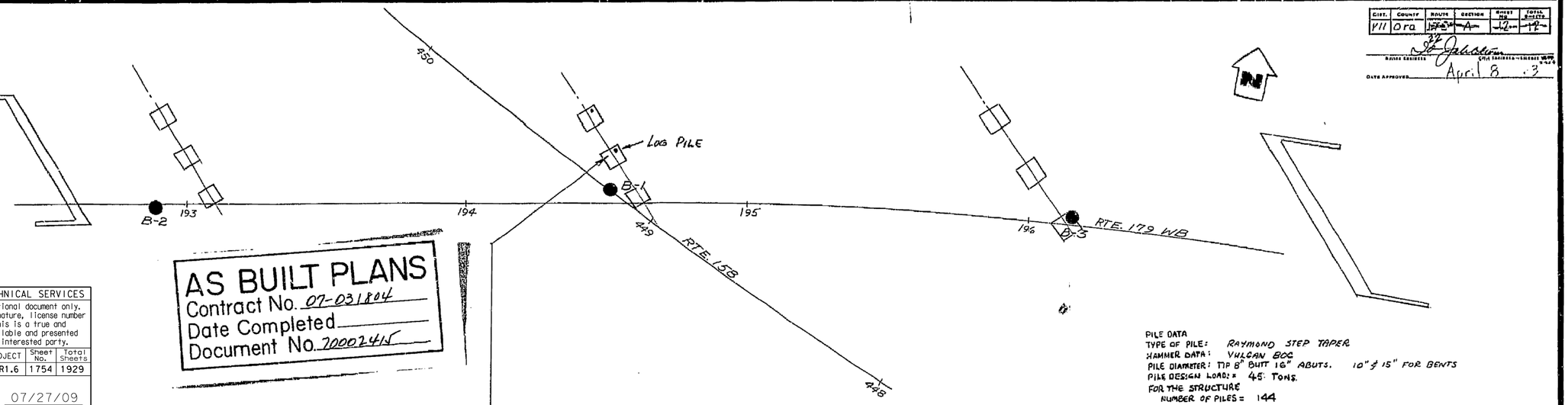

PILE DATA
TYPE OF PILE: RAYMOND STEP TAPER
HAMMER DATA: VULCAN 80C
PILE DIAMETER: TIP 8" BUTT 16" ABUTS. 10" & 15" FOR BENTS
PILE DESIGN LOAD: = 45 TONS.
FOR THE STRUCTURE
NUMBER OF PILES = 144

DIVISION OF ENGINEERING SERVICES - GEOTECHNICAL SERVICES					
As-Built Log of Test Borings sheet is considered an informational document only. As such, the State of California registration seal with signature, license number and registration certificate expiration date confirm that this is a true and accurate copy of the original document. This drawing is available and presented only for the convenience of any bidder, contractor or other interested party.					
DIST.	COUNTY	ROUTE	KILOMETER POST-TOTAL PROJECT	Sheet No.	Total Sheets
12	Ora	22, 405, 605	R0.3/R0.9,22.3/24.0,3.0/R1.6	1754	1929
REGISTERED CIVIL ENGINEER			DATE 07/27/09		

LOG OF TEST BORINGS NO. 9

NOTE: A COPY OF THIS LOG OF TEST BORINGS IS AVAILABLE AT OFFICE OF STRUCTURE MAINTENANCE AND INVESTIGATIONS, SACRAMENTO, CALIFORNIA

CU: 12235
EA: 071631

BRIDGE No. 55-1100G

Sheet 51 of 51

Revisions made to this Log of Test Borings from the original 1965 Log of Test Borings are the addition of the following table and notes:

To accompany plans dated 2-1-10

Boring	Station	Offset from "A-2" Line

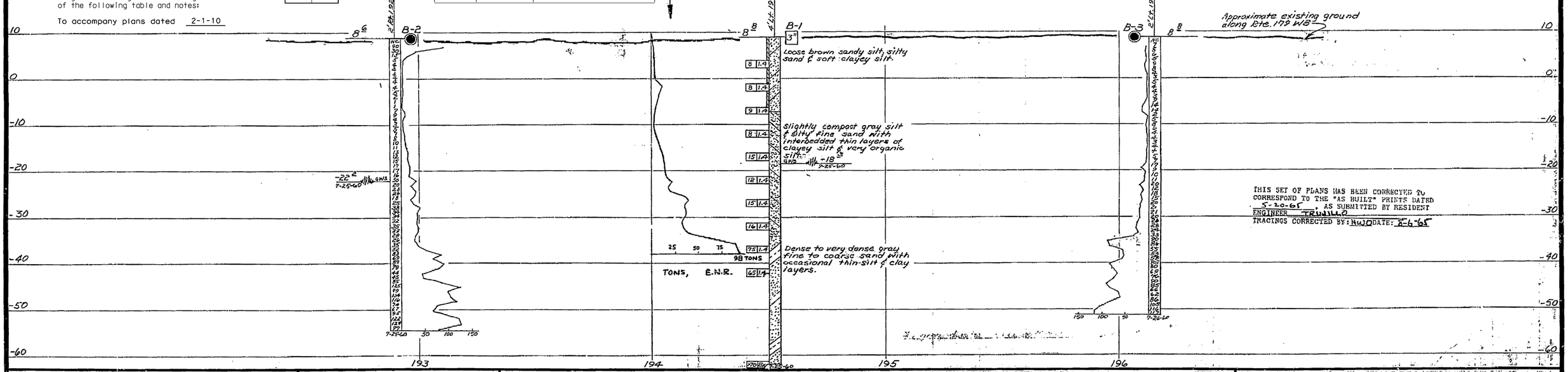

FIELD STUDY: W.J.T. Fagan 7-26-60
DRAWN: W. Glen Dandy 8-4-60
CHECKED: W.M. Fernandez 8-17-60
Approval Recommended by: Robert E. Wood, Chief Engineer, Materials & Research Department

CLASSIFICATION OF MATERIAL BASED ON STANDARD GRADE SIZE LIMITS

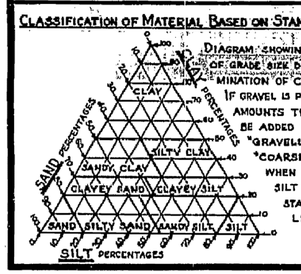

DIAGRAM SHOWING THE BASIS FOR ESTIMATES OF GRADE SIZE DISTRIBUTION USED IN DETERMINATION OF CLASS NAMES.

IF GRAVEL IS PRESENT IN APPRECIABLE AMOUNTS THE TERM "GRAVELLY" MAY BE ADDED TO THE CLASS NAME, VIZ. "GRAVELLY SAND." THE TERMS "COARSE", "MEDIUM" AND "FINE" WHEN USED TO DESCRIBE SAND, SILT AND GRAVEL REFER TO STANDARD GRADE SIZE LIMITS.

LEGEND OF EARTH MATERIALS

- GRAVEL
- SAND
- SILT
- CLAY
- SANDY CLAY OR CLAYEY SAND
- SANDY SILT OR SILTY SAND
- SILTY CLAY OR CLAYEY SILT
- PEAT AND/OR ORGANIC MATTER
- FILL MATERIAL
- IGNEOUS ROCK
- SEDIMENTARY ROCK
- METAMORPHIC ROCK

LEGEND OF BORING OPERATIONS

- PLAN OF ANY BORING
- PENETROMETER
- 2¼" CONE PENETROMETER
- SAMPLER BORING (DRY)
- ROTARY BORING (WET)
- AUGER BORING (DRY)
- JET BORING
- CORE BORING
- TEST PIT

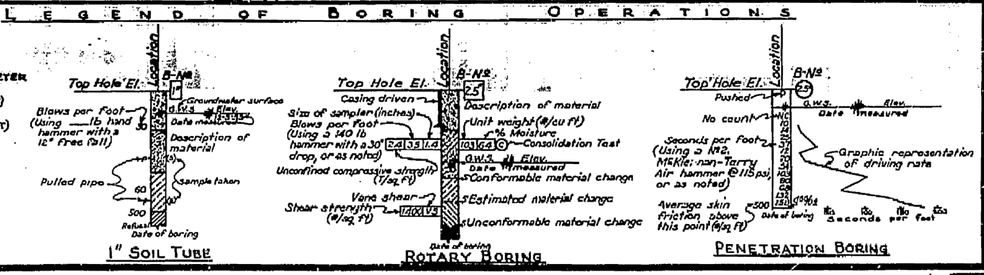

NOTES

Classification of earth material as shown on this sheet is based upon field inspection and is not to be construed to imply mechanical analysis.

RTE 22/405

STATE OF CALIFORNIA
DEPARTMENT OF PUBLIC WORKS
DIVISION OF HIGHWAYS

ROUTE ~~179/158~~ SEPARATION

LOG OF TEST BORINGS

SCALE Horiz: 1"=20' Vert: 1"=10'
BRIDGE 55-333L
FILE
DRAWING C-55333-12

PREL. DRAWING NO. P-55333-8 (3-16-61)

Bridge Dept.

FILENAME => 55-1100G-z-ltb09.tif

I HEREBY CERTIFY THAT THIS IS A TRUE AND ACCURATE COPY OF THE ABOVE DOCUMENT TAKEN UNDER MY DIRECTION AND CONTROL ON THIS DATE IN SACRAMENTO, CALIFORNIA PURSUANT TO AUTHORIZATION BY THE DIRECTOR OF PUBLIC WORKS.

DATE 2-10-22 SIGNATURE [illegible] TITLE SR 12010

368

DIST	COUNTY	ROUTE	POST MILES TOTAL PROJECT	SHEET No	TOTAL SHEETS
12	Ora	22,405, 605	R0.3/R0.9, 22.3/24.0,3.0/R1.6	1755	1929

REGISTERED CIVIL ENGINEER 07-27-09 DATE

2-1-10
PLANS APPROVAL DATE

REGISTERED PROFESSIONAL ENGINEER A. Priley No. C 73375 Exp. 12-31-10 CIVIL STATE OF CALIFORNIA

The State of California or its officers or agents shall not be responsible for the accuracy or completeness of electronic copies of this plan sheet.

OCTA
550 SOUTH MAIN STREET
ORANGE, CA 92863

TRC
21 TECHNOLOGY DR
IRVINE, CA 92618

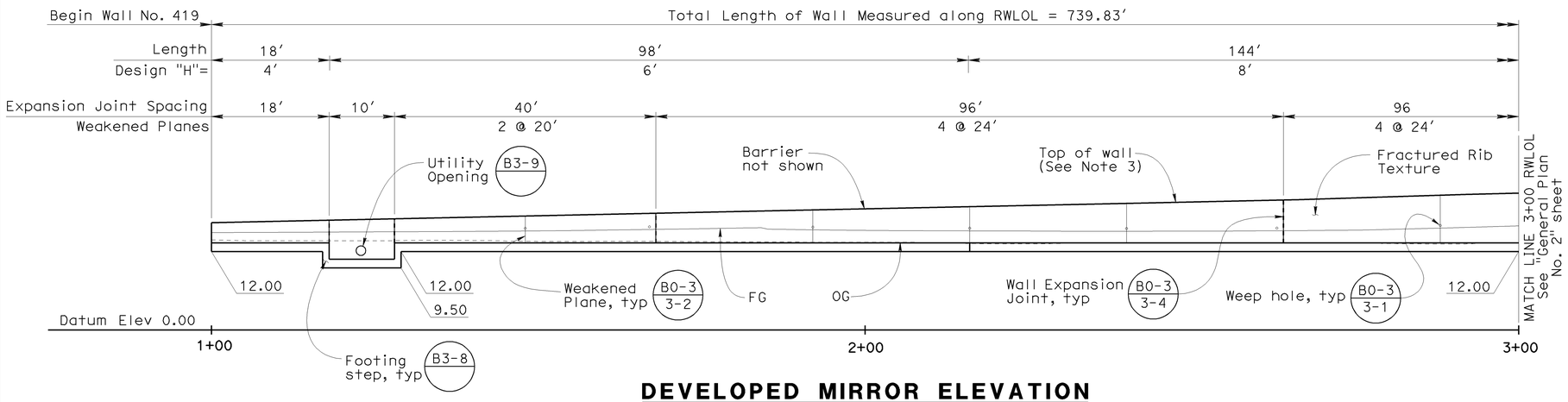

DEVELOPED MIRROR ELEVATION

1" = 10'

CURVE DATA

NO.	R	Δ	T	L
A	1227.0'	8°11'59"	87.95'	175.60'
B	1186.0'	36°18'58"	388.98'	751.73'

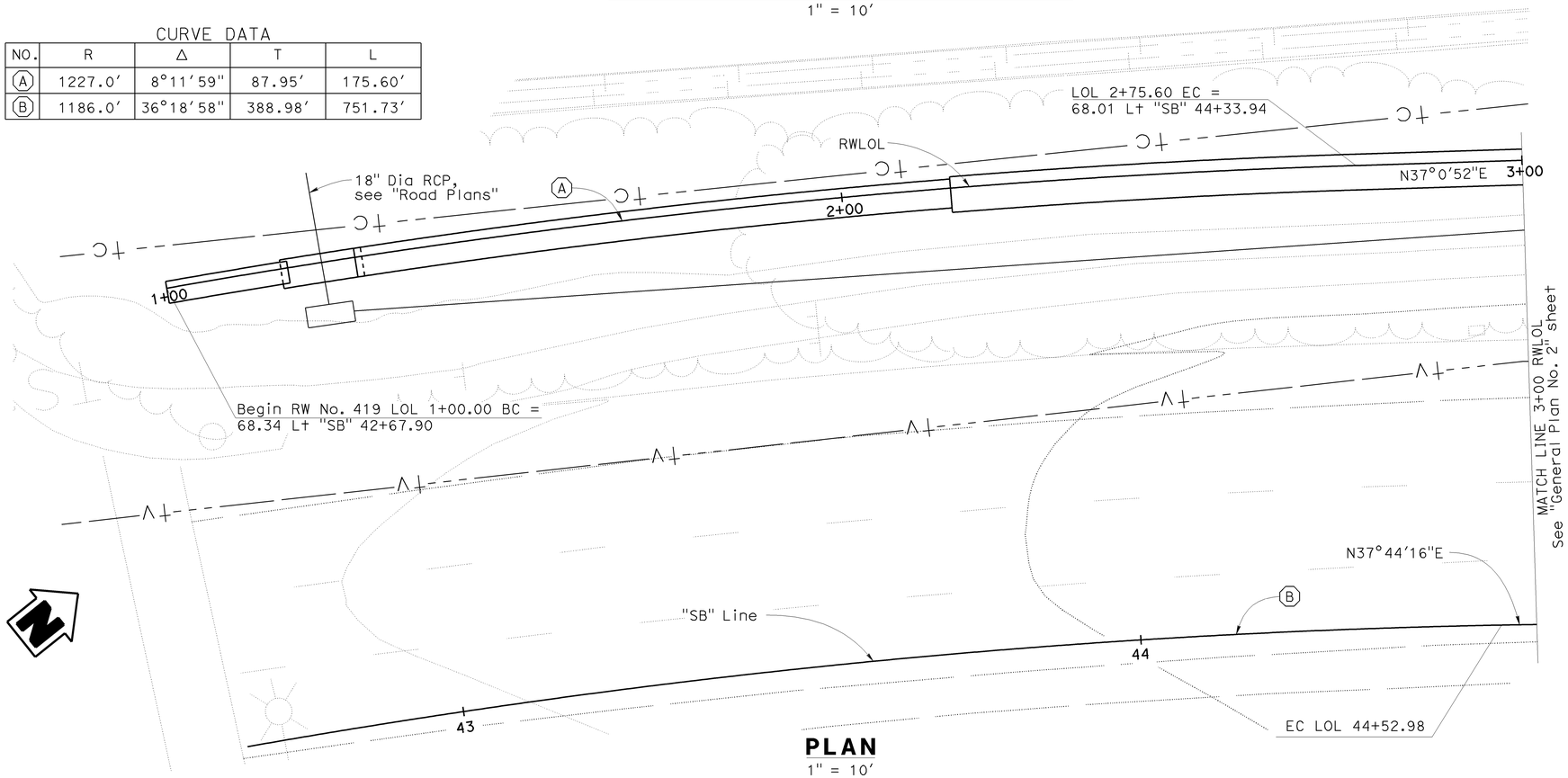

PLAN

1" = 10'

NOTES

1. For fractured rib texture, see "Architectural Details" sheet
2. For Concrete Barrier (Type 26A Mod) Details, see "Retaining Wall Details No. 2" sheet
3. For top of wall elevations, see "Retaining Wall Details No. 2" sheet

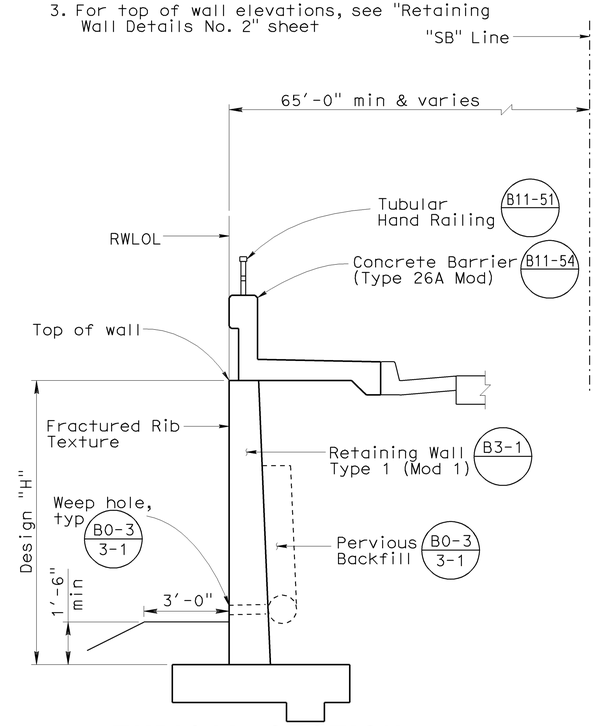

TYPICAL SECTION
STA 1+00.00 TO 4+56.00

3/8" = 1'-0"

RETAINING WALL NO 419 BR NO 55E0100

QUANTITIES

STRUCTURE EXCAVATION (RETAINING WALL)	1,450	CY
STRUCTURE BACKFILL (RETAINING WALL)	1,940	CY
PERVIOUS BACKFILL MATERIAL (RETAINING WALL)	113	CY
FURNISH PILING (CLASS 200) (ALTERNATIVE X)	6,992	LF
DRIVE PILE (CLASS 200)(ALTERNATIVE X)	112	EA
STRUCTURAL CONCRETE, RETAINING WALL	710	CY
FRACTURED RIB TEXTURE	7,350	SQFT
BAR REINFORCING STEEL (RETAINING WALL)	81,500	LB
TUBULAR HANDRAILING	740	LF
CONCRETE BARRIER (TYPE 26 MODIFIED)	740	LF

Sudhakar Vatti
DESIGN OVERSIGHT Sudhakar Vatti
8-10-09
SIGN OFF DATE

	BY	CHECKED			
DESIGN	A. Priley	K. Michalski	LOAD FACTOR DESIGN (LFD)	LIVE LOADING: HS20-44 AND ALTERNATIVE AND PERMIT DESIGN LOAD	
DETAILS	A. Priley	K. Michalski	LAYOUT	K. Michalski	A. Priley
QUANTITIES	A. Priley	J. Wong	SPECIFICATIONS	EL Tyk	PLANS AND SPECS COMPARED J. Hermstad

PREPARED FOR THE STATE OF CALIFORNIA DEPARTMENT OF TRANSPORTATION

A. Priley
PROJECT ENGINEER

CU 12235
EA 071631

BRIDGE NO. 55E0100
POST MILES 22.7

RETAINING WALL NO. 419
GENERAL PLAN NO. 1

DESIGN GENERAL PLAN SHEET (ENGLISH) (REV.2/25/05)

ORIGINAL SCALE IN INCHES FOR REDUCED PLANS 0 1 2 3

DISREGARD PRINTS BEARING EARLIER REVISION DATES 02/16/09 04/06/09 07/27/09

REVISION DATES (PRELIMINARY STAGE ONLY)

SHEET 1 OF 15

FILE => 55-e0100-a-gp01.dgn

USERNAME => rtrcarol DATE PLOTTED => 04-FEB-2010 TIME PLOTTED => 09:54

DIST	COUNTY	ROUTE	POST MILES TOTAL PROJECT	SHEET No	TOTAL SHEETS
12	Ora	22,405, 605	R0.3/R0.9, 22.3/24.0,3.0/R1.6	1756	1929

07-27-09
REGISTERED CIVIL ENGINEER DATE

REGISTERED PROFESSIONAL ENGINEER
A. Priley
No. C 73375
Exp. 12-31-10
CIVIL
STATE OF CALIFORNIA

2-1-10
PLANS APPROVAL DATE

The State of California or its officers or agents shall not be responsible for the accuracy or completeness of electronic copies of this plan sheet.

OCTA
550 SOUTH MAIN STREET
ORANGE, CA 92863

TRC
21 TECHNOLOGY DR
IRVINE, CA 92618

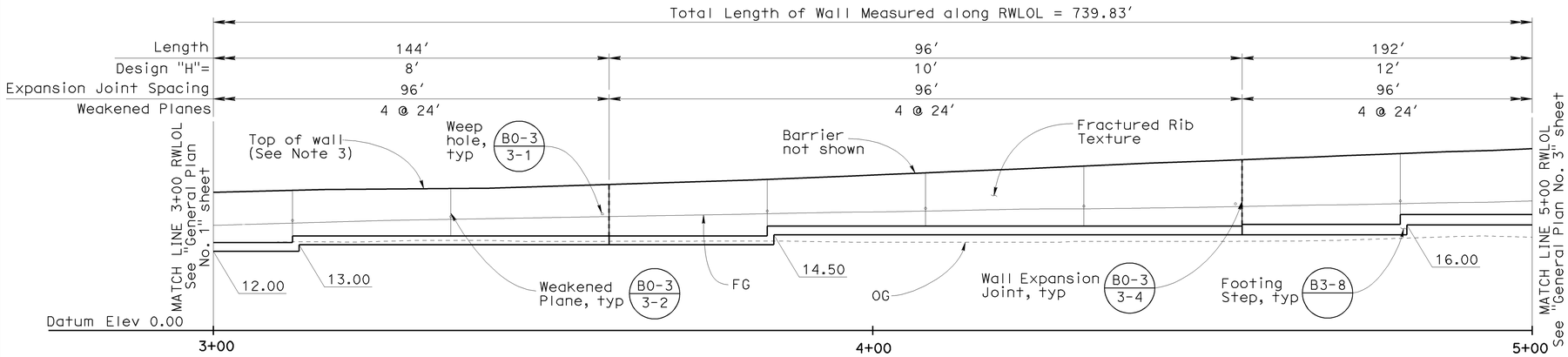

DEVELOPED MIRROR ELEVATION

1" = 10'

NOTES

1. For fractured rib texture, see "Architectural Details" sheet
2. For Concrete Barrier (Type 26A Mod) Details, see "Retaining Wall Details No. 2" sheet
3. For top of wall elevations, see "Retaining Wall Details No. 2" sheet

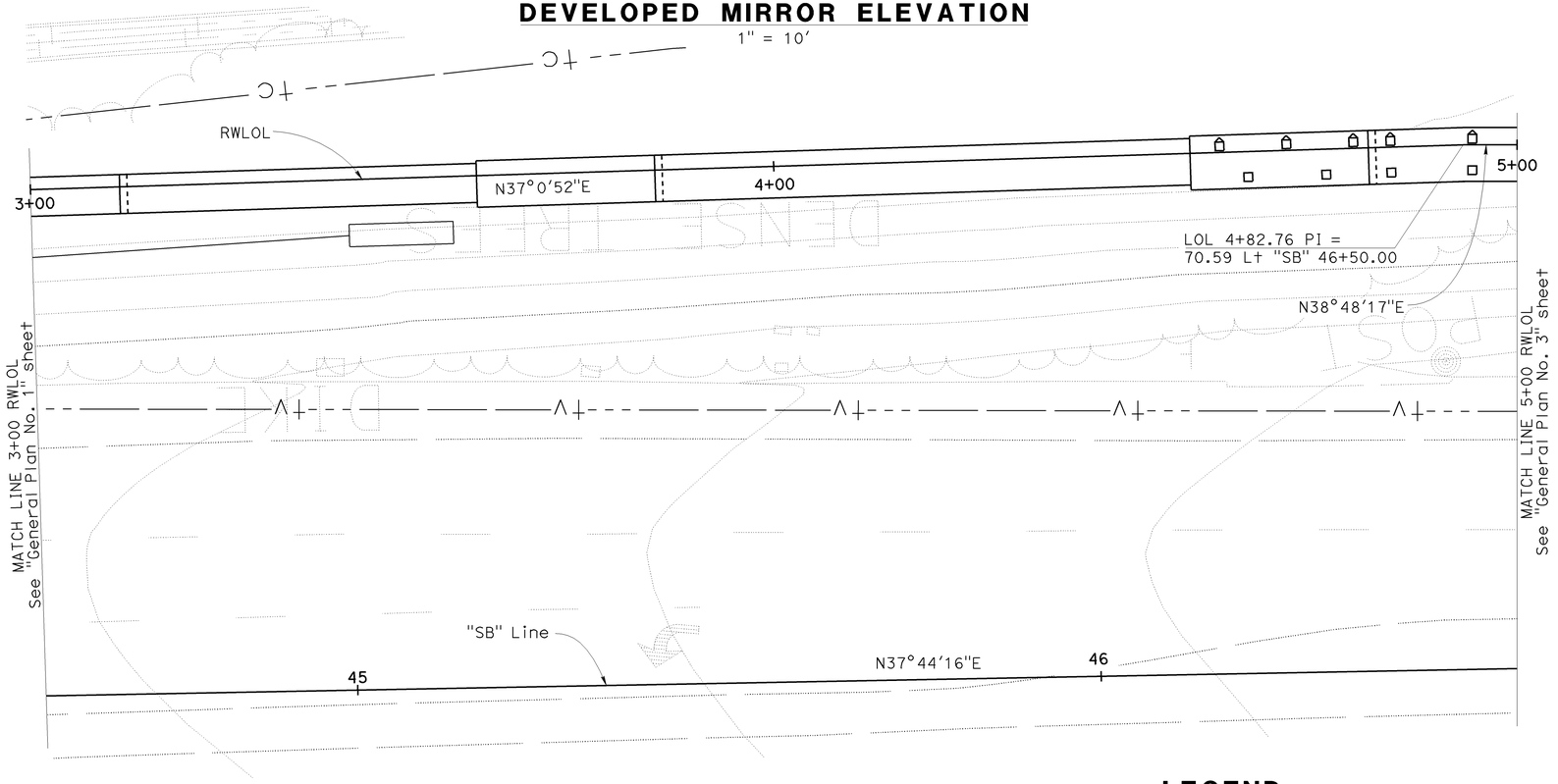

PLAN

1" = 10'

LEGEND

- ☐ Indicates Class 200, Alt "X" Pile
- ⌂ Indicates Class 200, Alt "X" Pile (Battered 3:1)

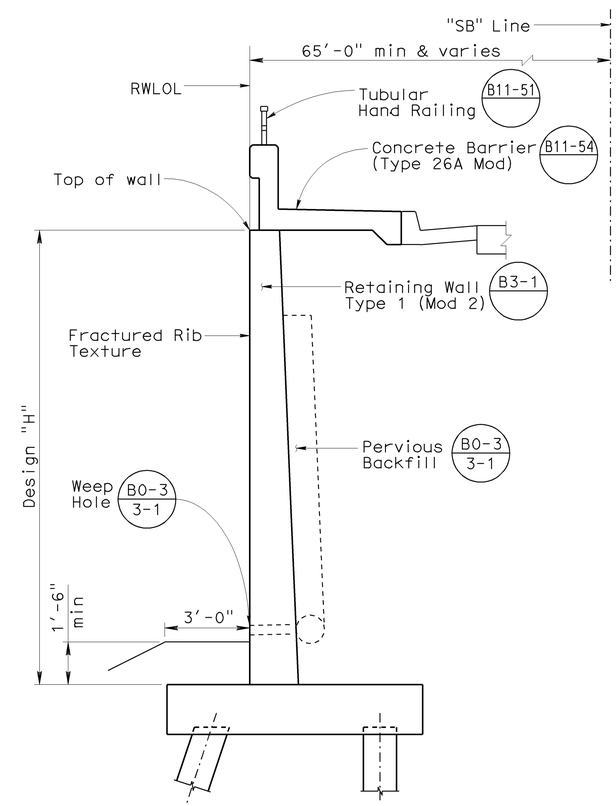

TYPICAL SECTION
STA 4+56.00 TO 7+44.00

3/8" = 1'-0"

Sudhakar Vatti
DESIGN OVERSIGHT Sudhakar Vatti
8-10-09
SIGN OFF DATE

	BY	CHECKED			
DESIGN	A. Priley	K. Michalski	LOAD FACTOR DESIGN (LFD)	LIVE LOADING: HS20-44 AND ALTERNATIVE AND PERMIT DESIGN LOAD	
DETAILS	A. Priley	K. Michalski	LAYOUT	K. Michalski	A. Priley
QUANTITIES	A. Priley	J. Wong	SPECIFICATIONS	EL Tyk	PLANS AND SPECS COMPARED J. Hermstad

PREPARED FOR THE STATE OF CALIFORNIA DEPARTMENT OF TRANSPORTATION

A. Priley
PROJECT ENGINEER

CU 12235
EA 071631

BRIDGE NO. 55E0100
POST MILES 22.7

RETAINING WALL NO. 419
GENERAL PLAN NO. 2

DESIGN GENERAL PLAN SHEET (ENGLISH) (REV.2/25/05)

ORIGINAL SCALE IN INCHES FOR REDUCED PLANS 0 1 2 3

DISREGARD PRINTS BEARING EARLIER REVISION DATES
REVISION DATES (PRELIMINARY STAGE ONLY) 02/26/09 04/06/09 07/27/09

SHEET 2 OF 15

FILE => 55-e0100-a-gp02.dgn

USERNAME => rrcarol DATE PLOTTED => 04-FEB-2010 TIME PLOTTED => 09:54

DIST	COUNTY	ROUTE	POST MILES TOTAL PROJECT	SHEET No	TOTAL SHEETS
12	Ora	22,405, 605	R0.3/R0.9, 22.3/24.0,3.0/R1.6	1757	1929

REGISTERED CIVIL ENGINEER 07-27-09 DATE

2-1-10
PLANS APPROVAL DATE

REGISTERED PROFESSIONAL ENGINEER A. Priley No. C 73375 Exp. 12-31-10 CIVIL STATE OF CALIFORNIA

The State of California or its officers or agents shall not be responsible for the accuracy or completeness of electronic copies of this plan sheet.

OCTA
550 SOUTH MAIN STREET
ORANGE, CA 92863

TRC
21 TECHNOLOGY DR
IRVINE, CA 92618

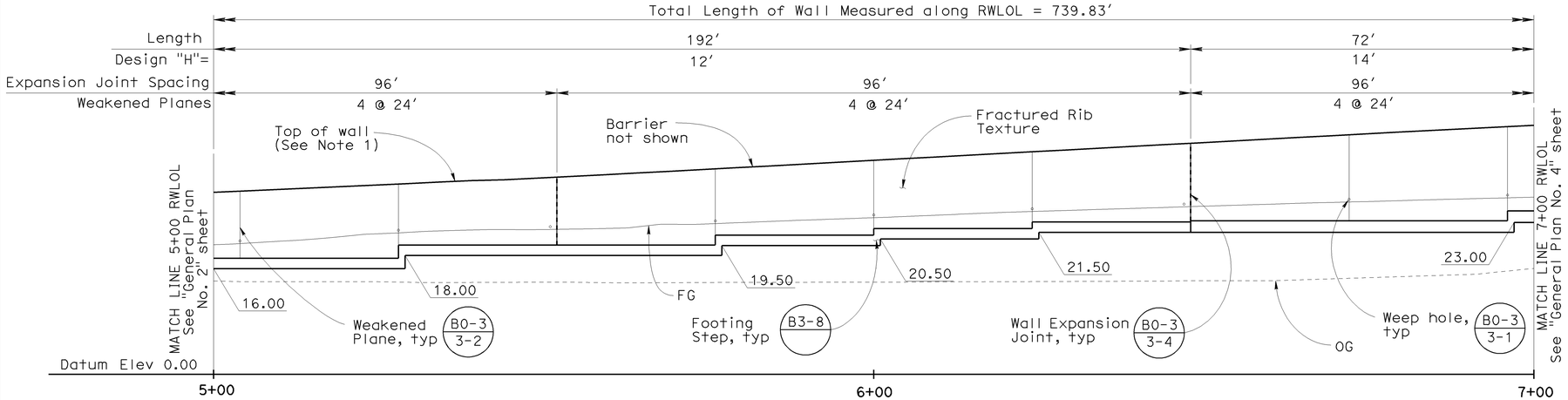

DEVELOPED MIRROR ELEVATION

1" = 10'

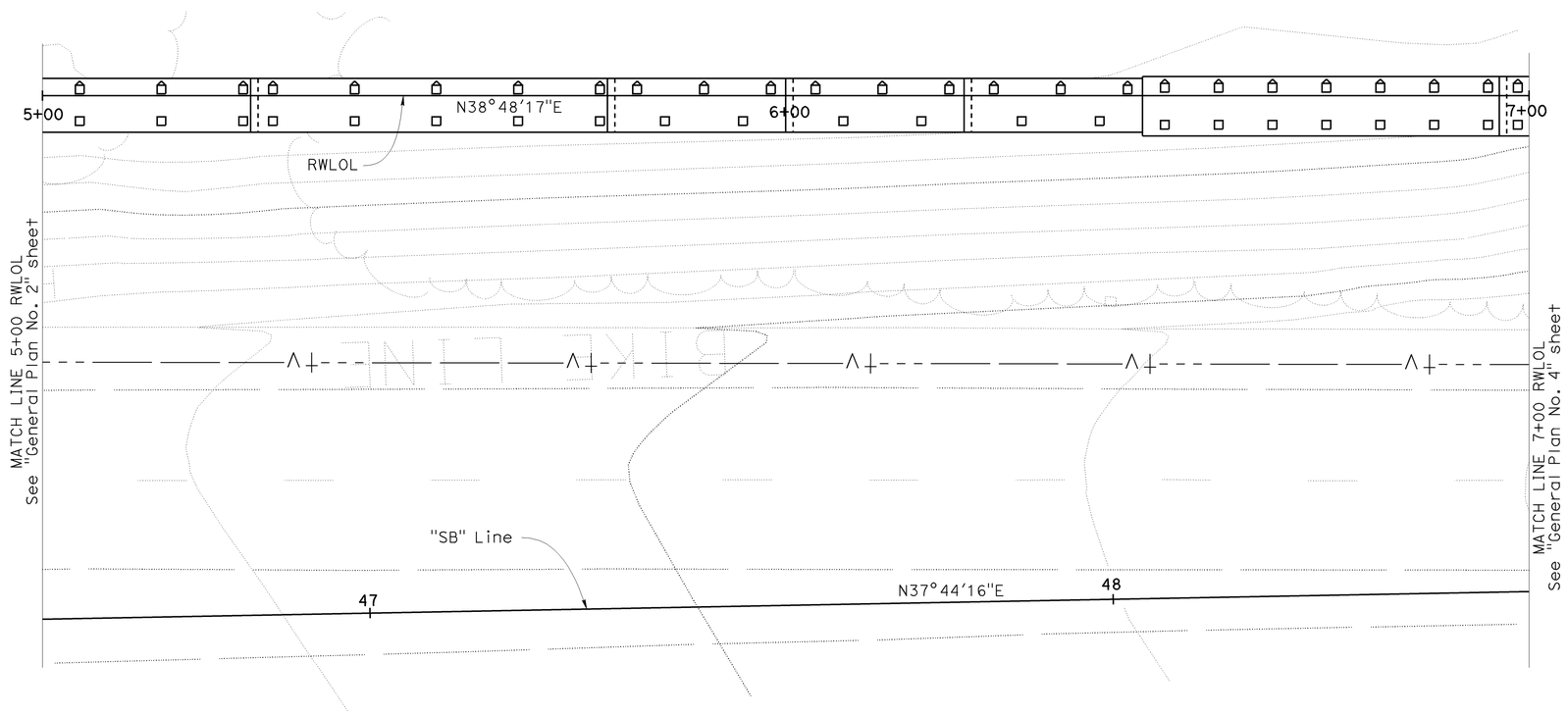

PLAN

1" = 10'

NOTES

1. For top of wall elevations, see "Retaining Wall Details No. 2" sheet
2. For fractured rib texture, see "Architectural Details" sheet

LEGEND

- Indicates Class 200, Alt "X" Pile
- Indicates Class 200, Alt "X" Pile (Battered 3:1)

Sudhakar Vatti — DESIGN OVERSIGHT Sudhakar Vatti; 8-10-09 SIGN OFF DATE	DESIGN	BY A. Priley	CHECKED K. Michalski	LOAD FACTOR DESIGN (LFD)	LIVE LOADING: HS20-44 AND ALTERNATIVE AND PERMIT DESIGN LOAD
	DETAILS	BY A. Priley	CHECKED K. Michalski	LAYOUT	BY K. Michalski / CHECKED A. Priley
	QUANTITIES	BY A. Priley	CHECKED J. Wong	SPECIFICATIONS	BY EL Tyk / PLANS AND SPECS COMPARED J. Hermstad

PREPARED FOR THE STATE OF CALIFORNIA DEPARTMENT OF TRANSPORTATION

A. Priley — PROJECT ENGINEER

BRIDGE NO. 55E0100
POST MILES 22.7

RETAINING WALL NO. 419
GENERAL PLAN NO. 3

DESIGN GENERAL PLAN SHEET (ENGLISH) (REV.2/25/05)

ORIGINAL SCALE IN INCHES FOR REDUCED PLANS 0 1 2 3

CU 12235
EA 071631

DISREGARD PRINTS BEARING EARLIER REVISION DATES → REVISION DATES (PRELIMINARY STAGE ONLY) 02/06/09 04/06/09 07/27/09

SHEET 3 OF 15

FILE => 55-e0100-a-gp03.dgn

USERNAME => trcgarol DATE PLOTTED => 04-FEB-2010 TIME PLOTTED => 03:54

DIST	COUNTY	ROUTE	POST MILES TOTAL PROJECT	SHEET No	TOTAL SHEETS
12	Ora	22,405, 605	R0.3/R0.9, 22.3/24.0,3.0/R1.6	1758	1929

REGISTERED CIVIL ENGINEER — DATE 07-27-09

2-1-10
PLANS APPROVAL DATE

REGISTERED PROFESSIONAL ENGINEER — A. Priley — No. C 73375 — Exp. 12-31-10 — CIVIL — STATE OF CALIFORNIA

The State of California or its officers or agents shall not be responsible for the accuracy or completeness of electronic copies of this plan sheet.

OCTA
550 SOUTH MAIN STREET
ORANGE, CA 92863

TRC
21 TECHNOLOGY DR
IRVINE, CA 92618

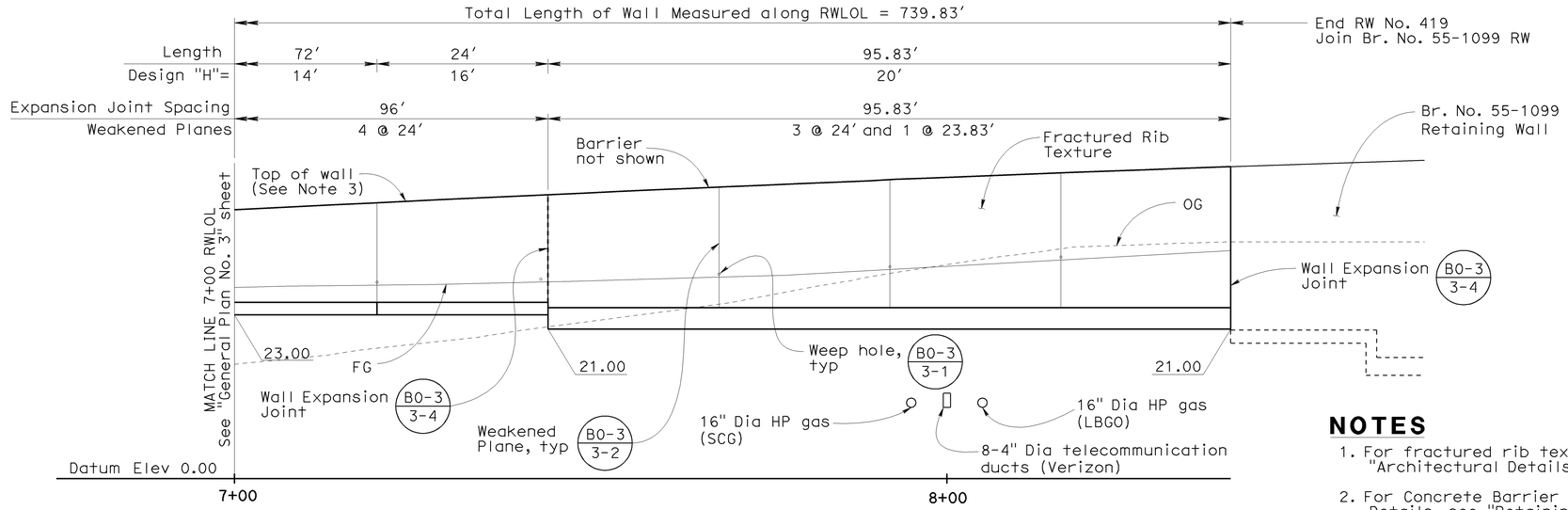

DEVELOPED MIRROR ELEVATION

1" = 10'

NOTES

1. For fractured rib texture, see "Architectural Details" sheet
2. For Concrete Barrier (Type 26A Mod) Details, see "Retaining Wall Details No. 2" sheet
3. For top of wall elevations, see "Retaining Wall Details No. 2" sheet

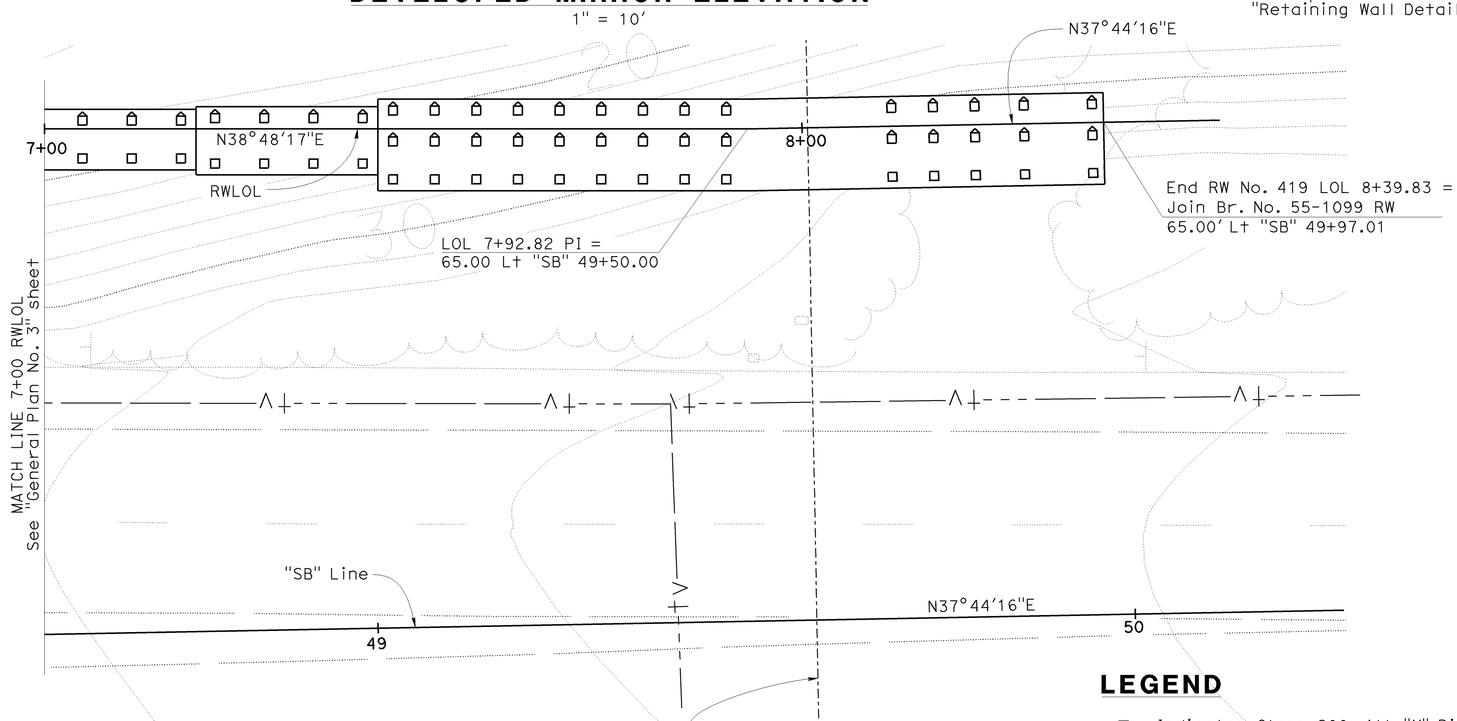

PLAN

1" = 10'

LEGEND

- ☐ Indicates Class 200, Alt "X" Pile
- ⌂ Indicates Class 200, Alt "X" Pile (Battered 3:1)

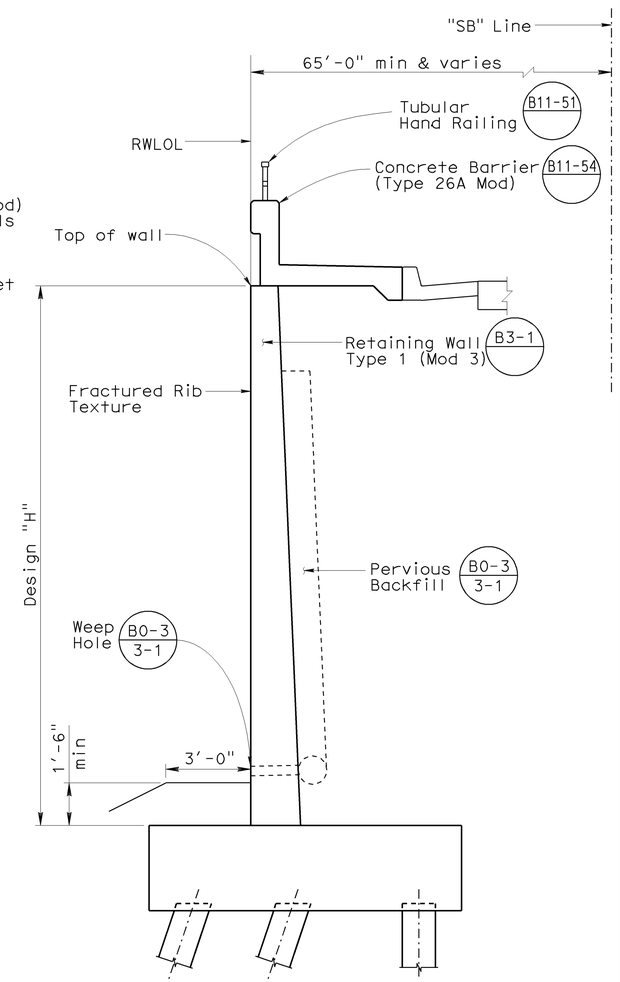

TYPICAL SECTION
STA 7+44.00 TO 8+39.83

3/8" = 1'-0"

Sudhakar Vatti — DESIGN OVERSIGHT — Sudhakar Vatti; 9-9-09 — SIGN OFF DATE	DESIGN	BY A. Priley	CHECKED K. Michalski	LOAD FACTOR DESIGN (LFD)	LIVE LOADING: HS20--44 AND ALTERNATIVE AND PERMIT DESIGN LOAD		
	DETAILS	BY A. Priley	CHECKED K. Michalski	LAYOUT	BY K. Michalski	CHECKED A. Priley	
	QUANTITIES	BY A. Priley	CHECKED J. Wong	SPECIFICATIONS	BY EL Tyk	PLANS AND SPECS COMPARED J. Hermstad	

PREPARED FOR THE STATE OF CALIFORNIA DEPARTMENT OF TRANSPORTATION

A. Priley — PROJECT ENGINEER

BRIDGE NO. 55E0100 — POST MILES 22.7

RETAINING WALL NO. 419
GENERAL PLAN NO. 4

DESIGN GENERAL PLAN SHEET (ENGLISH) (REV.2/25/05)

ORIGINAL SCALE IN INCHES FOR REDUCED PLANS 0 1 2 3

CU 12235
EA 071631

DISREGARD PRINTS BEARING EARLIER REVISION DATES — REVISION DATES (PRELIMINARY STAGE ONLY) 02/06/09 04/06/09 07/27/09

SHEET 4 OF 15

FILE => 55-e0100-a-gp04.dgn

USERNAME => trcaarol DATE PLOTTED => 04-FEB-2010 TIME PLOTTED => 03:54

DIST	COUNTY	ROUTE	POST MILES TOTAL PROJECT	SHEET No	TOTAL SHEETS
12	Ora	22,405, 605	R0.3/R0.9, 22.3/24.0,3.0/R1.6	1759	1929

REGISTERED CIVIL ENGINEER 07-27-09 DATE

2-1-10
PLANS APPROVAL DATE

REGISTERED PROFESSIONAL ENGINEER A. Priley No. C 73375 Exp. 12-31-10 CIVIL STATE OF CALIFORNIA

The State of California or its officers or agents shall not be responsible for the accuracy or completeness of electronic copies of this plan sheet.

OCTA
550 SOUTH MAIN STREET
ORANGE, CA 92863

TRC
21 TECHNOLOGY DR
IRVINE, CA 92618

STANDARD PLANS DATED MAY 2006

A10A	Acronyms and Abbreviations (Sheet 1 of 2)
A10B	Acronyms and Abbreviations (Sheet 2 of 2)
A10C	Symbols (Sheet 1 of 2)
A10D	Symbols (Sheet 2 of 2)
A62B	Limits of Payment for Excavation and Backfill - Bridge Surcharge and Wall
A74	Survey Monuments
B0-3	Bridge Details
B2-8	Pile Details - Class 200
B3-1	Retaining Wall Type 1 - H=4' Through 30'
B3-8	Retaining Wall Details No. 1
B3-9	Retaining Wall Details No. 2
B11-51	Tubular Hand Railing
B11-54	Concrete Barrier Type 26

Standard Plan Sheet No.

Detail No.

INDEX TO PLANS

SHEET NO.	TITLE
1	General Plan No. 1
2	General Plan No. 2
3	General Plan No. 3
4	General Plan No. 4
5	Index to Plans
6	Foundation Layout No. 1
7	Foundation Layout No. 2
8	Foundation Layout No. 3
9	Retaining Wall Details No. 1
10	Retaining Wall Details No. 2
11	Architectural Details
12	Log of Test Borings No. 1
13	Log of Test Borings No. 2
14	Log of Test Borings No. 3
15	Log of Test Borings No. 4

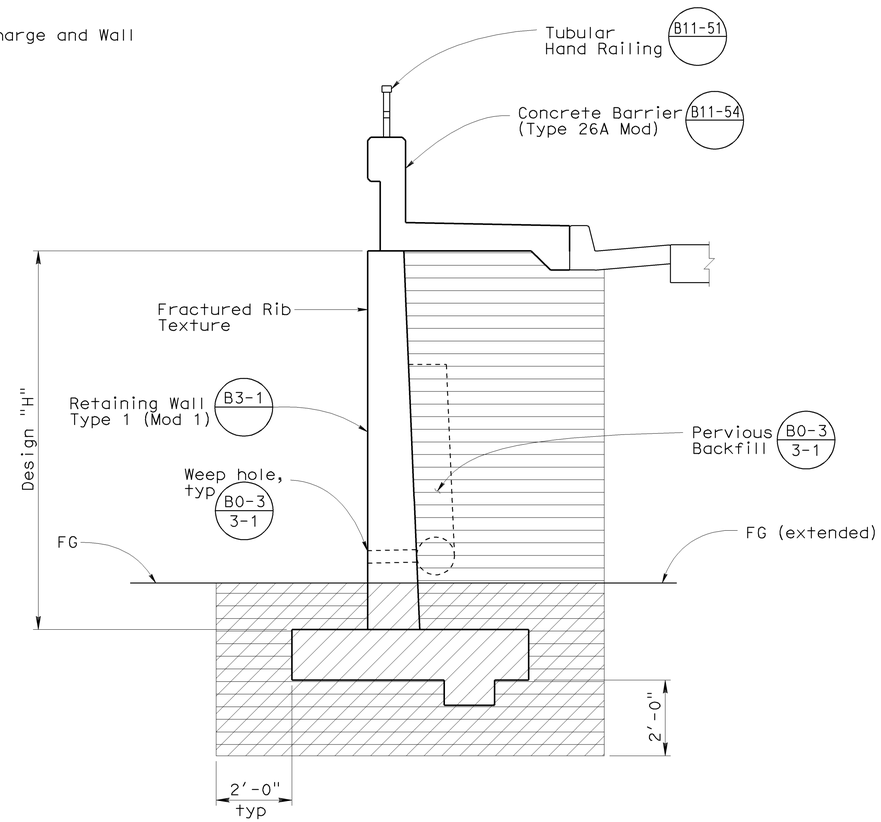

LIMITS OF EXCAVATION & BACKFILL FROM RWLOL 1+00 TO 4+56

No Scale

LEGEND

Structure Excavation (Retaining Wall)

Structure Backfill (Retaining Wall)

NOTES

1. Backfill below the bottom of footing to be recompacted to at least 95% relative compaction

DESIGN OVERSIGHT: Sudhakar Vatti	DESIGN	BY A. Priley	CHECKED K. Michalski
8-10-09 SIGN OFF DATE	DETAILS	BY A. Priley	CHECKED K. Michalski
	QUANTITIES	BY A. Priley	CHECKED J. Wong

PREPARED FOR THE STATE OF CALIFORNIA DEPARTMENT OF TRANSPORTATION

A. Priley
PROJECT ENGINEER

BRIDGE NO. 55E0100
POST MILE 22.7

RETAINING WALL NO. 419
INDEX TO PLANS

DESIGN DETAIL SHEET (ENGLISH) (REV. 2/25/05)

ORIGINAL SCALE IN INCHES FOR REDUCED PLANS 0 1 2 3

CU 12235
EA 071631

DISREGARD PRINTS BEARING EARLIER REVISION DATES

REVISION DATES (PRELIMINARY STAGE ONLY) 04/06/09 07/27/09

SHEET 5 OF 15

FILE => 55-e0100-a-itp.dgn

USERNAME => trcarol DATE PLOTTED => 04-FEB-2010 TIME PLOTTED => 09:54

DIST	COUNTY	ROUTE	POST MILES TOTAL PROJECT	SHEET No	TOTAL SHEETS
12	Ora	22,405, 605	R0.3/R0.9, 22.3/24.0,3.0/R1.6	1760	1929

REGISTERED CIVIL ENGINEER 07-27-09 DATE

2-1-10
PLANS APPROVAL DATE

REGISTERED PROFESSIONAL ENGINEER A. Priley No. C 73375 Exp. 12-31-10 CIVIL STATE OF CALIFORNIA

The State of California or its officers or agents shall not be responsible for the accuracy or completeness of electronic copies of this plan sheet.

OCTA
550 SOUTH MAIN STREET
ORANGE, CA 92863

TRC
21 TECHNOLOGY DR
IRVINE, CA 92618

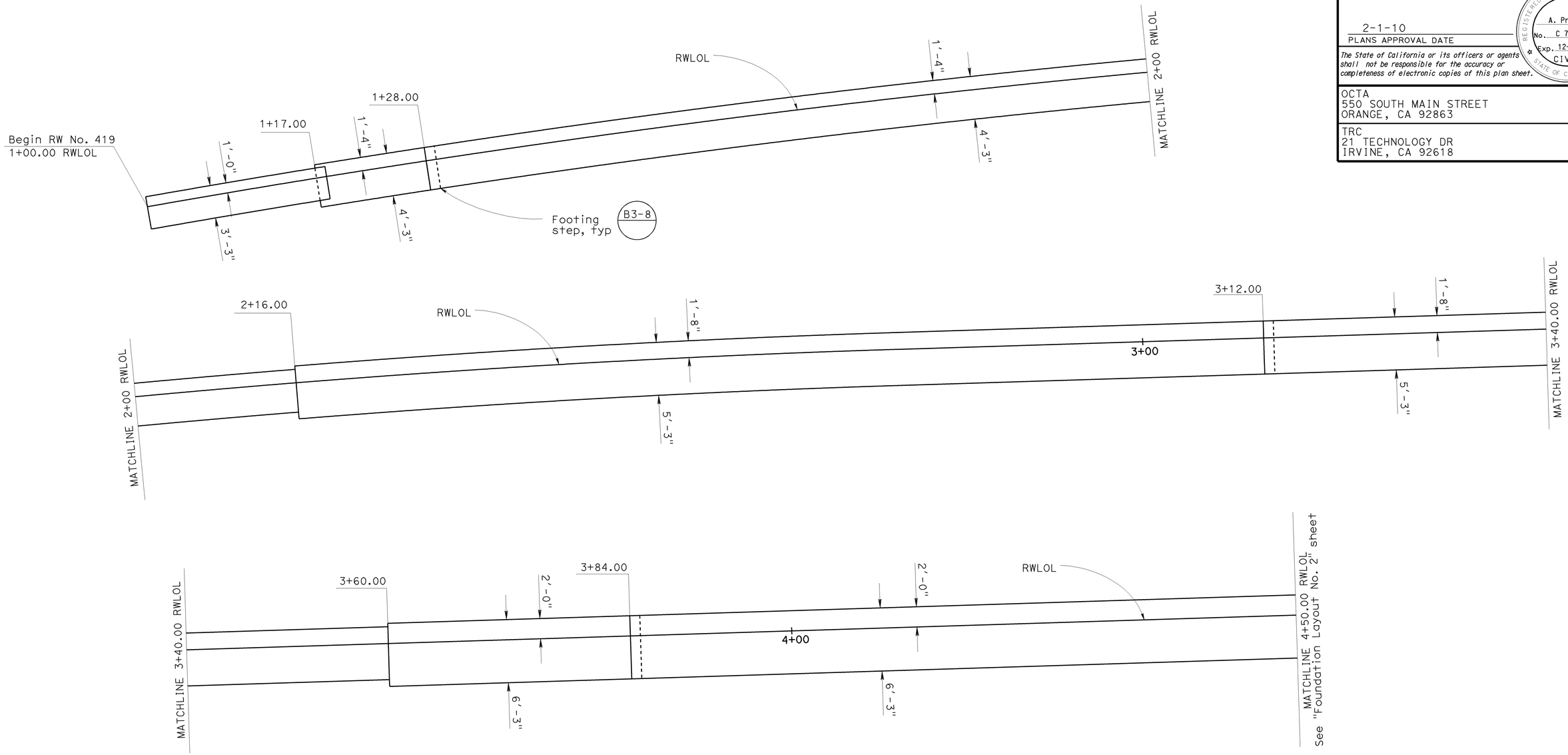

FOUNDATION LAYOUT

1" = 5'

Sudhakar Vatti
DESIGN OVERSIGHT Sudhakar Vatti

8-10-09
SIGN OFF DATE

	BY	CHECKED
DESIGN	A. Priley	K. Michalski
DETAILS	A. Priley	K. Michalski
QUANTITIES	A. Priley	J. Wong

PREPARED FOR THE STATE OF CALIFORNIA DEPARTMENT OF TRANSPORTATION

A. Priley
PROJECT ENGINEER

BRIDGE NO. 55E0100
POST MILE 22.7

RETAINING WALL NO. 419
FOUNDATION LAYOUT NO. 1

DESIGN DETAIL SHEET (ENGLISH) (REV. 2/25/05)

ORIGINAL SCALE IN INCHES FOR REDUCED PLANS 0 1 2 3

CU 12235
EA 071631

DISREGARD PRINTS BEARING EARLIER REVISION DATES

REVISION DATES (PRELIMINARY STAGE ONLY) 04/06/09 07/27/09

SHEET 6 OF 15

FILE => 55-e0100-g-rw_lo01.dgn

USERNAME => trmnguye DATE PLOTTED => 04-FEB-2010 TIME PLOTTED => 09:53

DIST	COUNTY	ROUTE	POST MILES TOTAL PROJECT	SHEET No	TOTAL SHEETS
12	Ora	22,405, 605	R0.3/R0.9, 22.3/24.0,3.0/R1.6	1761	1929

REGISTERED CIVIL ENGINEER 07-27-09 DATE

2-1-10
PLANS APPROVAL DATE

REGISTERED PROFESSIONAL ENGINEER
A. Priley
No. C 73375
Exp. 12-31-10
CIVIL
STATE OF CALIFORNIA

The State of California or its officers or agents shall not be responsible for the accuracy or completeness of electronic copies of this plan sheet.

OCTA
550 SOUTH MAIN STREET
ORANGE, CA 92863

TRC
21 TECHNOLOGY DR
IRVINE, CA 92618

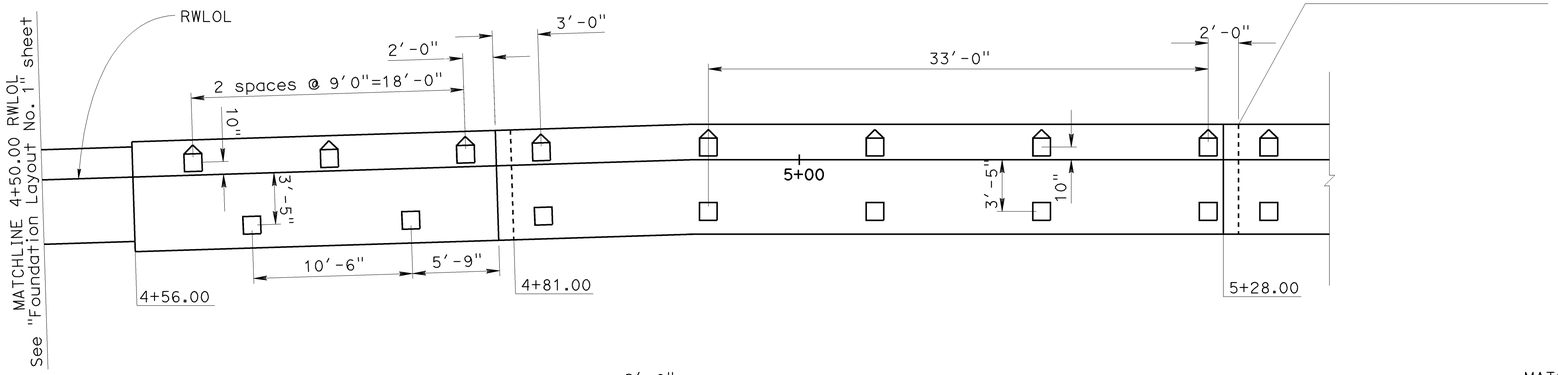

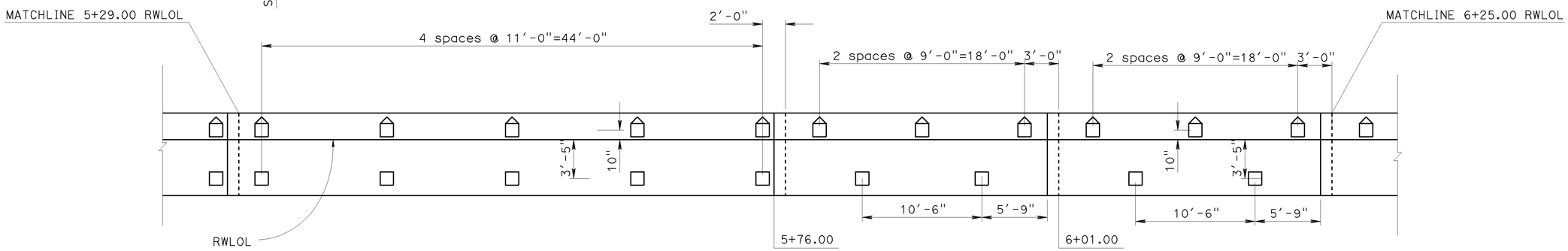

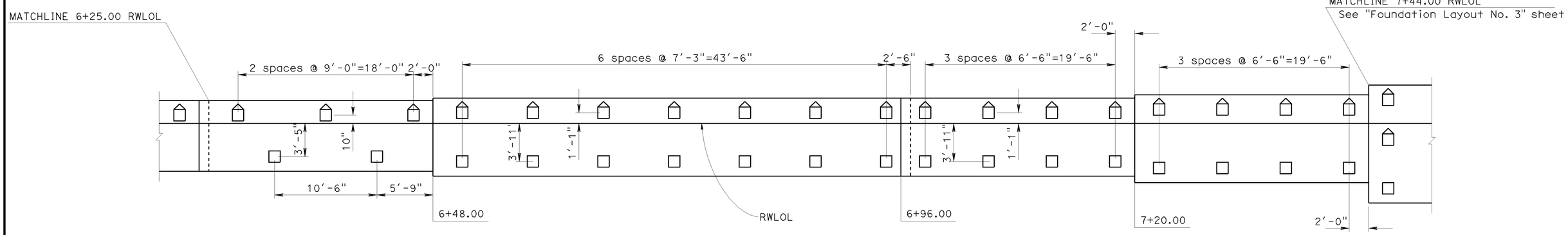

FOUNDATION LAYOUT

1" = 5'

LEGEND

- Indicates Class 200, Alt "X" Pile
- Indicates Class 200, Alt "X" Pile (Battered 3:1)

NOTES

1. For Pile Data Table, see "Foundation Layout No. 3" sheet
2. Pile spacing is measured along RWLOL

Sudhakar Vatti
DESIGN OVERSIGHT Sudhakar Vatti
8-10-09
SIGN OFF DATE

	BY	CHECKED
DESIGN	A. Priley	K. Michalski
DETAILS	A. Priley	K. Michalski
QUANTITIES	A. Priley	J. Wong

PREPARED FOR THE STATE OF CALIFORNIA DEPARTMENT OF TRANSPORTATION

A. Priley
PROJECT ENGINEER

BRIDGE NO. 55E0100
POST MILE 22.7

RETAINING WALL NO. 419
FOUNDATION LAYOUT NO. 2

DESIGN DETAIL SHEET (ENGLISH) (REV. 2/25/05)

ORIGINAL SCALE IN INCHES FOR REDUCED PLANS 0 1 2 3

CU 12235
EA 071631

DISREGARD PRINTS BEARING EARLIER REVISION DATES
REVISION DATES (PRELIMINARY STAGE ONLY) 04/06/09 07/27/09

SHEET 7 OF 15

FILE => 55-e0100-g-rw_lo02.dgn

USERNAME => trmnguye DATE PLOTTED => 04-FEB-2010 TIME PLOTTED => 09:53

DIST	COUNTY	ROUTE	POST MILES TOTAL PROJECT	SHEET No	TOTAL SHEETS
12	Ora	22,405, 605	R0.3/R0.9, 22.3/24.0,3.0/R1.6	1762	1929

REGISTERED CIVIL ENGINEER 07-27-09 DATE

2-1-10
PLANS APPROVAL DATE

REGISTERED PROFESSIONAL ENGINEER A. Priley No. C 73375 Exp. 12-31-10 CIVIL STATE OF CALIFORNIA

The State of California or its officers or agents shall not be responsible for the accuracy or completeness of electronic copies of this plan sheet.

OCTA
550 SOUTH MAIN STREET
ORANGE, CA 92863

TRC
21 TECHNOLOGY DR
IRVINE, CA 92618

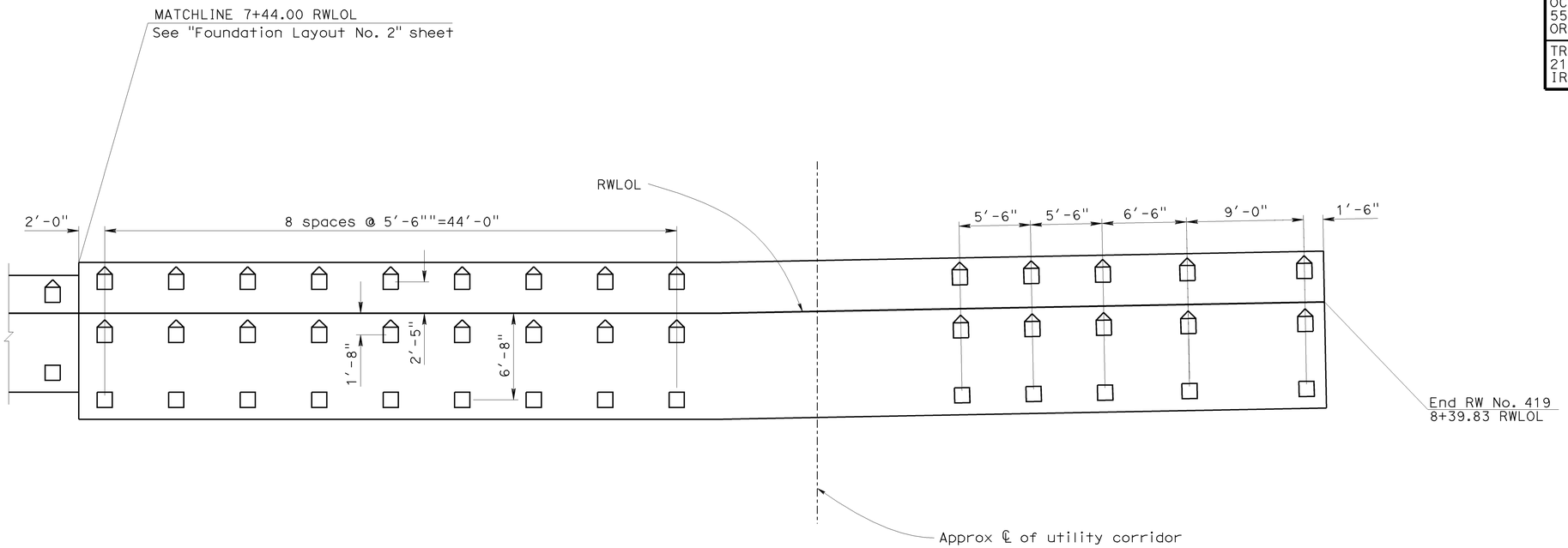

PILE LAYOUT

1" = 5'

PILE DATA TABLE

Location	Pile Type	Nominal Resistance		Design Tip Elevation (ft)	Specified Tip Elevation (ft)	Nominal Driving Resistance (kips)
		Compression (kips)	Tension (kips)			
RW No. 419	Class 200, Alt "X"	280	0	-40(a), -35(c) & -16(d)	-40	280

Notes: 1) Design tip elevation is controlled by the following demands: (a) Compression, (b) Tension, (c) Settlement, (d) Lateral Loads
2) The specified tip elevation shall not be raised above the design tip elevations for tension, lateral load, and settlement

LEGEND

☐ Indicates Class 200, Alt "X" Pile

⌂ Indicates Class 200, Alt "X" Pile (Battered 3:1)

NOTES

1. Pile spacing is measured along RWLOL

Sudhakar Vatti
DESIGN OVERSIGHT Sudhakar Vatti
9-9-09
SIGN OFF DATE

DESIGN DETAIL SHEET (ENGLISH) (REV. 2/25/05)

	BY	CHECKED
DESIGN	A. Priley	K. Michalski
DETAILS	A. Priley	K. Michalski
QUANTITIES	A. Priley	J. Wong

ORIGINAL SCALE IN INCHES FOR REDUCED PLANS 0 1 2 3

PREPARED FOR THE STATE OF CALIFORNIA DEPARTMENT OF TRANSPORTATION

A. Priley
PROJECT ENGINEER

CU 12235
EA 071631

BRIDGE NO. 55E0100
POST MILE 22.7

RETAINING WALL NO. 419
FOUNDATION LAYOUT NO. 3

DISREGARD PRINTS BEARING EARLIER REVISION DATES

REVISION DATES (PRELIMINARY STAGE ONLY) 04/06/09 07/27/09

SHEET 8 OF 15

FILE => 55-e0100-g-rw_lo03.dgn

USERNAME => trimmguye DATE PLOTTED => 04-FEB-2010 TIME PLOTTED => 09:53

DIST	COUNTY	ROUTE	POST MILES TOTAL PROJECT	SHEET No	TOTAL SHEETS
12	Ora	22,405, 605	R0.3/R0.9, 22.3/24.0,3.0/R1.6	1763	1929

REGISTERED CIVIL ENGINEER 07-27-09 DATE

2-1-10
PLANS APPROVAL DATE

REGISTERED PROFESSIONAL ENGINEER A. Priley No. C 73375 Exp. 12-31-10 CIVIL STATE OF CALIFORNIA

The State of California or its officers or agents shall not be responsible for the accuracy or completeness of electronic copies of this plan sheet.

OCTA
550 SOUTH MAIN STREET
ORANGE, CA 92863

TRC
21 TECHNOLOGY DR
IRVINE, CA 92618

NOTES

1. Mod 1 retaining wall dimensions and reinforcement to follow Standard Plan B3-1, except as shown
2. Mod 2 retaining wall dimensions and reinforcement to follow Standard Plan B3-1 including the reinforcement for Class 90 piles, except as shown
3. Mod 3 retaining wall reinforcement and dimensions to follow Standard Plan B3-1 for the stem, except as shown. Footing dimensions and reinforcement are as shown
4. For Concrete Barrier (Type 26A Mod), see "Retaining Wall Details No. 2" sheet
5. For fractured rib texture, see "Architectural Details" sheet

* Add 1" to dimension as determined by Standard Plan B3-1

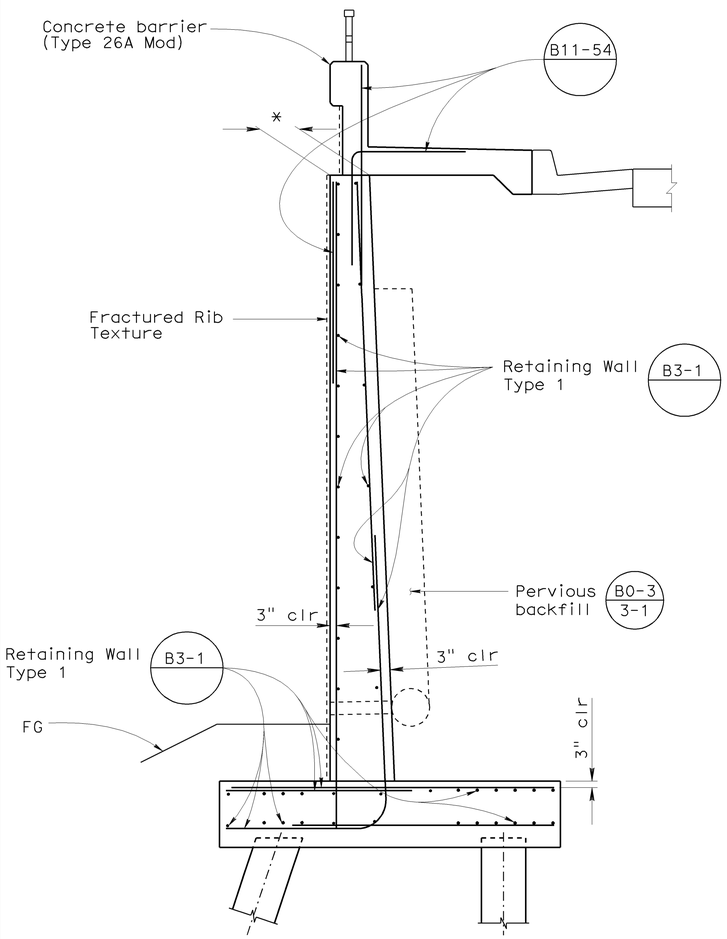

TYPICAL REINFORCEMENT DETAILS RETAINING WALL TYPE 1 (MOD 2)

1'-0" = 6"

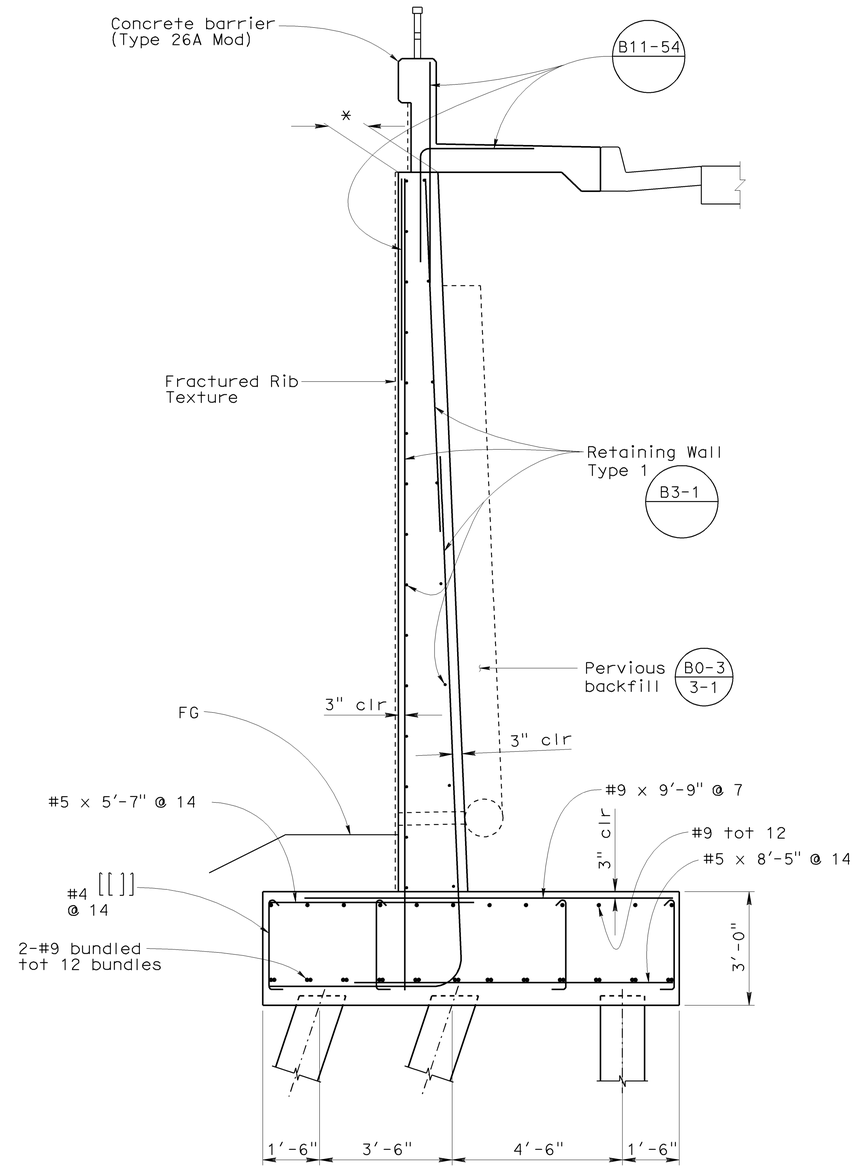

TYPICAL REINFORCEMENT DETAILS RETAINING WALL TYPE 1 (MOD 3)

1'-0" = 6"

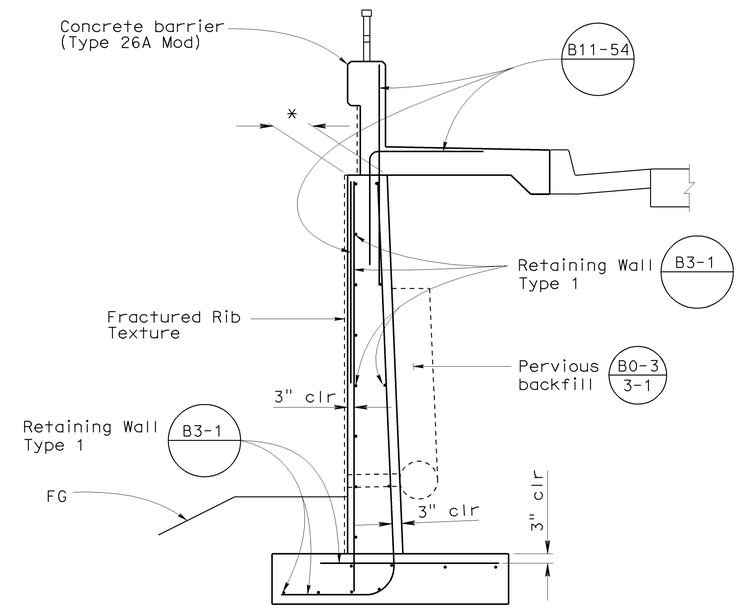

TYPICAL REINFORCEMENT DETAILS RETAINING WALL TYPE 1 (MOD 1)

1'-0" = 6"

Sudhakar Vatti
DESIGN OVERSIGHT Sudhakar Vatti

8-10-09
SIGN OFF DATE

	BY	CHECKED
DESIGN	A. Priley	K. Michalski
DETAILS	A. Priley	K. Michalski
QUANTITIES	A. Priley	J. Wong

PREPARED FOR THE STATE OF CALIFORNIA DEPARTMENT OF TRANSPORTATION

A. Priley
PROJECT ENGINEER

BRIDGE NO. 55E0100
POST MILE 22.7

RETAINING WALL NO. 419
RETAINING WALL DETAILS NO. 1

DESIGN DETAIL SHEET (ENGLISH) (REV. 2/25/05)

ORIGINAL SCALE IN INCHES FOR REDUCED PLANS 0 1 2 3

CU 12235
EA 071631

DISREGARD PRINTS BEARING EARLIER REVISION DATES → 04/06/09 07/21/09

REVISION DATES (PRELIMINARY STAGE ONLY)

SHEET 9 OF 15

FILE => 55-e0100-g-rwdet01.dgn

USERNAME => trmnguye DATE PLOTTED => 04-FEB-2010 TIME PLOTTED => 03:53

DIST	COUNTY	ROUTE	POST MILES TOTAL PROJECT	SHEET No	TOTAL SHEETS
12	Ora	22,405, 605	R0.3/R0.9, 22.3/24.0,3.0/R1.6	1764	1929

REGISTERED CIVIL ENGINEER 07-27-09 DATE

2-1-10
PLANS APPROVAL DATE

REGISTERED PROFESSIONAL ENGINEER A. Priley No. C 73375 Exp. 12-31-10 CIVIL STATE OF CALIFORNIA

The State of California or its officers or agents shall not be responsible for the accuracy or completeness of electronic copies of this plan sheet.

OCTA
550 SOUTH MAIN STREET
ORANGE, CA 92863

TRC
21 TECHNOLOGY DR
IRVINE, CA 92618

TOP OF WALL ELEVATIONS

RW 419 LOL Station	Top of Wall Elevation (ft)	RW 419 LOL Station	Top of Wall Elevation (ft)
1+00.00	16.43	4+75.00	26.64
1+12.50	16.70	4+87.50	27.14
1+25.00	16.96	5+00.00	27.57
1+37.50	17.22	5+12.50	28.13
1+50.00	17.49	5+25.00	28.69
1+62.50	17.75	5+37.50	29.29
1+75.00	18.02	5+50.00	29.78
1+87.50	18.28	5+62.50	30.42
2+00.00	18.55	5+87.50	31.08
2+12.50	18.81	6+00.00	31.75
2+25.00	19.08	6+12.50	32.40
2+37.50	19.34	6+25.00	33.10
2+50.00	19.61	6+37.50	33.77
2+62.50	19.88	6+50.00	34.45
2+75.00	20.23	6+62.50	35.12
2+87.50	20.61	6+75.00	35.80
3+00.00	20.95	6+87.50	36.46
3+12.50	21.26	7+00.00	37.11
3+25.00	21.44	7+12.50	37.74
3+37.50	21.55	7+25.00	38.37
3+50.00	21.84	7+37.50	38.97
3+62.50	22.23	7+50.00	39.56
3+75.00	22.63	7+62.50	40.13
3+87.50	23.06	7+75.00	40.69
4+00.00	23.54	7+87.50	41.22
4+12.50	24.10	8+00.00	41.75
4+25.00	24.62	8+12.50	42.30
4+37.50	25.18	8+25.00	43.25
4+50.00	25.73	8+37.50	43.71
4+62.50	26.14	8+39.83	43.79

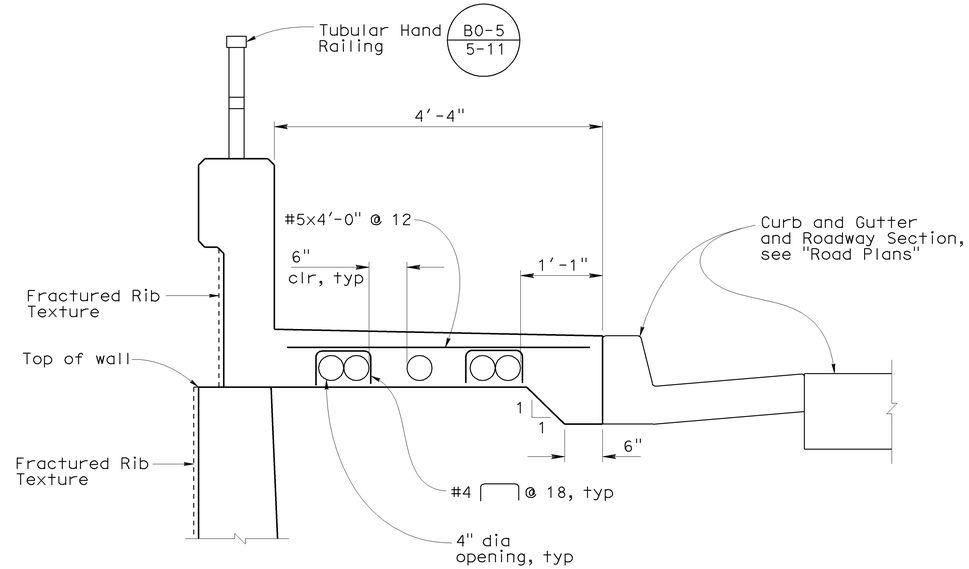

CONCRETE BARRIER TYPE 26A (MOD)

No Scale

NOTES

1. Reinforcement called out in "Concrete Barrier (Type 26A Mod)" is in addition to that shown on Standard Plan B11-54. See B11-54 for reinforcement and details not shown
2. For fractured rib texture, see "Architectural Details" sheet

Sudhakar Vatti
DESIGN OVERSIGHT Sudhakar Vatti
8-10-09
SIGN OFF DATE

	BY	CHECKED
DESIGN	A. Priley	K. Michalski
DETAILS	A. Priley	K. Michalski
QUANTITIES	A. Priley	J. Wong

PREPARED FOR THE STATE OF CALIFORNIA DEPARTMENT OF TRANSPORTATION

A. Priley
PROJECT ENGINEER

BRIDGE NO. 55E0100
POST MILE 22.7

RETAINING WALL NO. 419
RETAINING WALL DETAILS NO. 2

DESIGN DETAIL SHEET (ENGLISH) (REV. 2/25/05)

ORIGINAL SCALE IN INCHES FOR REDUCED PLANS 0 1 2 3

CU 12235
EA 071631

DISREGARD PRINTS BEARING EARLIER REVISION DATES
REVISION DATES (PRELIMINARY STAGE ONLY) 04/06/09 07/27/09

SHEET 10 OF 15

FILE => 55-e0100-g-rwdet02.dgn

USERNAME => rrmnguye DATE PLOTTED => 04-FEB-2010 TIME PLOTTED => 09:53

DIST	COUNTY	ROUTE	POST MILES TOTAL PROJECT	SHEET No	TOTAL SHEETS
12	Ora	22, 405, 605	R0.3/R0.9, 22.3/24.0,3.0/R1.6	1765	1929

LICENSED LANDSCAPE ARCHITECT

2-1-10
PLANS APPROVAL DATE

LICENSED LANDSCAPE ARCHITECT
CATHY L. JOHNSON
NO. 4545
01-31-10
Renewal Date
07-27-09
Date
STATE OF CALIFORNIA

The State of California or its officers or agents shall not be responsible for the accuracy or completeness of electronic copies of this plan sheet.

OCTA
550 SOUTH MAIN STREET
ORANGE, CA 92863

RBF CONSULTING
14725 ALTON PARKWAY
IRVINE, CA 92618

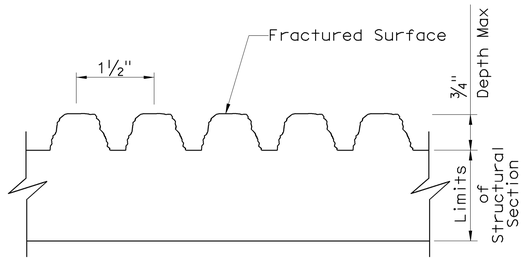

FRACTURED RIB TEXTURE

No Scale

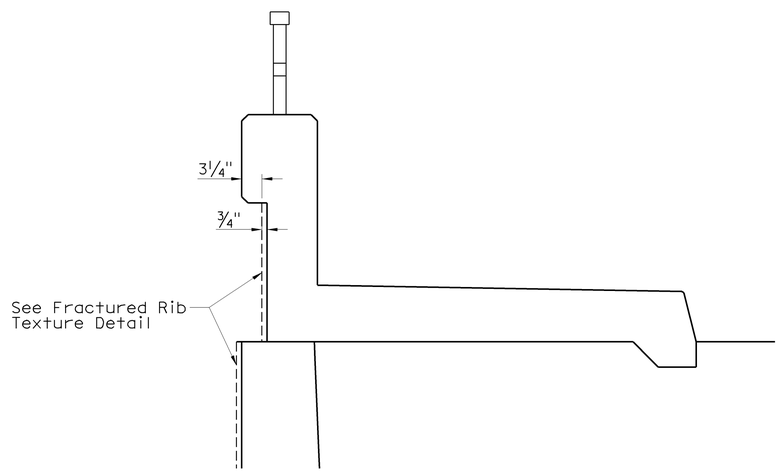

CONCRETE BARRIER (TYPE 26A MOD)

SCALE: 1"=1'-0"

Sudhakar Vatti
DESIGN OVERSIGHT Sudhakar Vatti
8-10-09
SIGN OFF DATE

	BY	CHECKED
DESIGN	C. JOHNSON	A. SU
DETAILS	R. KELCHER	A. SU
QUANTITIES	A. PRILEY	J. WONG

PREPARED FOR THE STATE OF CALIFORNIA DEPARTMENT OF TRANSPORTATION

A. PRILEY
PROJECT ENGINEER

BRIDGE NO. 55E0100
POST MILE 22.7

RETAINING WALL NO. 419
ARCHITECTURAL DETAILS

DESIGN DETAIL SHEET (ENGLISH) (REV. 2/25/05)

ORIGINAL SCALE IN INCHES FOR REDUCED PLANS 0 1 2 3

CU 12235
EA 071631

DISREGARD PRINTS BEARING EARLIER REVISION DATES
REVISION DATES (PRELIMINARY STAGE ONLY) 04/06/09 07/27/09

SHEET 11 OF 15

FILE => 55-e0100-s-arch01.dgn

USERNAME => trmnguye DATE PLOTTED => 04-FEB-2010 TIME PLOTTED => 09:53

REFERENCE: CALTRANS SOIL & ROCK LOGGING, CLASSIFICATION, AND PRESENTATION MANUAL (JUNE 2007)

DIST	COUNTY	ROUTE	POST MILES TOTAL PROJECT	SHEET No	TOTAL SHEETS
12	Ora	22,405, 605	R0.3/R0.9, 22.3/24.0,3.0/R1.6	1766	1929

REGISTERED CIVIL ENGINEER 07/27/09 DATE

2-1-10
PLANS APPROVAL DATE

REGISTERED PROFESSIONAL ENGINEER K.Arulmoli No. GE 2090 Exp.12-31-09 GEOTECHNICAL STATE OF CALIFORNIA

The State of California or its officers or agents shall not be responsible for the accuracy or completeness of electronic copies of this plan sheet.

OCTA
550 SOUTH MAIN STREET
ORANGE, CA 92863

EARTH MECHANICS, INC.
17660, NEWHOPE STREET, SUITE E
FOUNTAIN VALLEY, CA 92708

CEMENTATION

Description	Criteria
Weak	Crumbles or breaks with handling or little finger pressure.
Moderate	Crumbles or breaks with considerable finger pressure.
Strong	Will not crumble or break with finger pressure.

CONSISTENCY OF COHESIVE SOILS

Description	Unconfined Compressive Strength (tsf)	Pocket Penetrometer Measurement (tsf)	Torvane Measurement (tsf)	Field Approximation
Very Soft	< 0.25	< 0.25	< 0.12	Easily penetrated several inches by fist
Soft	0.25 to 0.50	0.25 to 0.50	0.12 to 0.25	Easily penetrated several inches by thumb
Medium Stiff	0.50 to 1.0	0.50 to 1.0	0.25 to 0.50	Penetrated several inches by thumb with moderate effort
Stiff	1 to 2	1 to 2	0.50 to 1.0	Readily indented by thumb but penetrated only with great effort
Very Stiff	2 to 4	2 to 4	1.0 to 2.0	Readily indented by thumbnail
Hard	> 4.0	> 4.0	> 2.0	Indented by thumbnail with difficulty

BOREHOLE IDENTIFICATION

Symbol	Hole Type	Description
Size	A	Auger Boring
Size	R P	Rotary drilled boring Rotary percussion boring (air)
Size	R	Rotary drilled diamond core
Size	HD HA	Hand driven (1-inch soil tube) Hand Auger
●	D	Dynamic Cone Penetration Boring
▲	CPT	Cone Penetration Test (ASTM D 5778-95)
□	O	Other

Note: Size in inches.

PLASTICITY OF FINE-GRAINED SOILS

Description	Criteria
Nonplastic	A 1/8-inch thread cannot be rolled at any water content.
Low	The thread can barely be rolled and the lump cannot be formed when drier than the plastic limit.
Medium	The thread is easy to roll and not much time is required to reach the plastic limit. The thread cannot be rerolled after reaching the plastic limit. The lump crumbles when drier than the plastic limit.
High	It takes considerable time rolling and kneading to reach the plastic limit. The thread can be rerolled several times after reaching the plastic limit. The lump can be formed without crumbling when drier than the plastic limit.

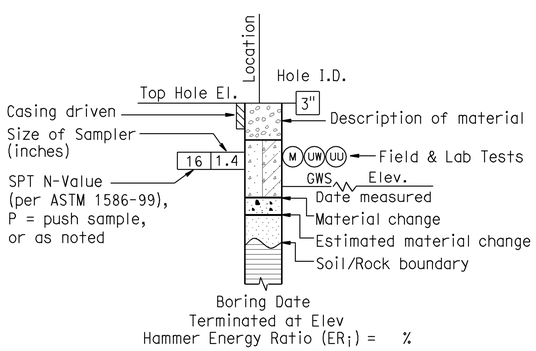

ROTARY BORING

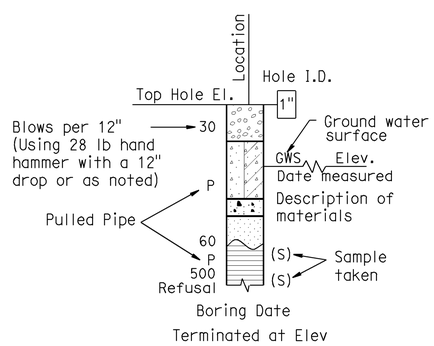

HAND BORING

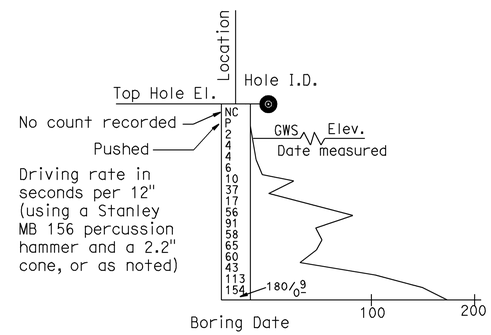

DYNAMIC CONE PENETRATION BORING

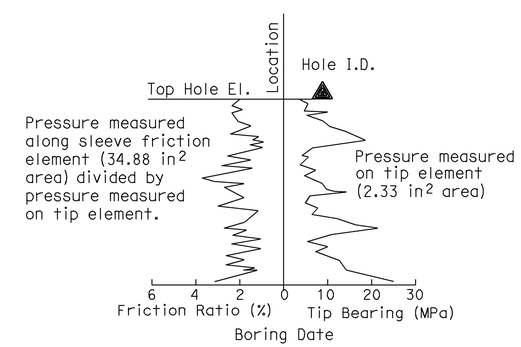

CONE PENETRATION TEST (CPT) SOUNDING

Sudhakar Vatti
DESIGN OVERSIGHT Sudhakar Vatti
8-10-09
SIGN OFF DATE

DRAWN BY: J.Fang
CHECKED BY: G.J.Gunaranjan

FIELD INVESTIGATION BY: R.Jie

PREPARED FOR THE STATE OF CALIFORNIA DEPARTMENT OF TRANSPORTATION

K.Arulmoli
PROJECT ENGINEER

BRIDGE NO. 55E0100
POST MILE 22.7

RETAINING WALL NO. 419
LOG OF TEST BORINGS NO. 1

OSF CIVIL LOG OF TEST BORINGS SHEET (ENGLISH) (REV. 2-25-05)

ORIGINAL SCALE IN INCHES FOR REDUCED PLANS 0 1 2 3

CU 12235
EA 071631

DISREGARD PRINTS BEARING EARLIER REVISION DATES

REVISION DATES (PRELIMINARY STAGE ONLY) 08/29/08 03/25/09 04/06/09 07/27/09

SHEET 12 OF 15

FILE => 55-e0100-z-ltb01.dgn

USERNAME => ttmnguye DATE PLOTTED => 04-FEB-2010 TIME PLOTTED => 09:53

REFERENCE: CALTRANS SOIL & ROCK LOGGING, CLASSIFICATION, AND PRESENTATION MANUAL (JUNE 2007)

GROUP SYMBOLS AND NAMES

Graphic/Symbol	Group Names
GW	Well-graded GRAVEL Well-graded GRAVEL with SAND
GP	Poorly graded GRAVEL Poorly graded GRAVEL with SAND
GW-GM	Well-graded GRAVEL with SILT Well-graded GRAVEL with SILT and SAND
GW-GC	Well-graded GRAVEL with CLAY (or SILTY CLAY) Well-graded GRAVEL with CLAY and SAND (or SILTY CLAY and SAND)
GP-GM	Poorly graded GRAVEL with SILT Poorly graded GRAVEL with SILT and SAND
GP-GC	Poorly graded GRAVEL with CLAY (or SILTY CLAY) Poorly graded GRAVEL with CLAY and SAND (or SILTY CLAY and SAND)
GM	SILTY GRAVEL SILTY GRAVEL with SAND
GC	CLAYEY GRAVEL CLAYEY GRAVEL with SAND
GC-GM	SILTY, CLAYEY GRAVEL SILTY, CLAYEY GRAVEL with SAND
SW	Well-graded SAND Well-graded SAND with GRAVEL
SP	Poorly graded SAND Poorly graded SAND with GRAVEL
SW-SM	Well-graded SAND with SILT Well-graded SAND with SILT and GRAVEL
SW-SC	Well-graded SAND with CLAY (or SILTY CLAY) Well-graded SAND with CLAY and GRAVEL (or SILTY CLAY and GRAVEL)
SP-SM	Poorly graded SAND with SILT Poorly graded SAND with SILT and GRAVEL
SP-SC	Poorly graded SAND with CLAY (or SILTY CLAY) Poorly graded SAND with CLAY and GRAVEL (or SILTY CLAY and GRAVEL)
SM	SILTY SAND SILTY SAND with GRAVEL
SC	CLAYEY SAND CLAYEY SAND with GRAVEL
SC-SM	SILTY, CLAYEY SAND SILTY, CLAYEY SAND with GRAVEL
PT	PEAT
	COBBLES COBBLES and BOULDERS BOULDERS

Graphic/Symbol	Group Names
CL	Lean CLAY Lean CLAY with SAND Lean CLAY with GRAVEL SANDY lean CLAY SANDY lean CLAY with GRAVEL GRAVELLY lean CLAY GRAVELLY lean CLAY with SAND
CL-ML	SILTY CLAY SILTY CLAY with SAND SILTY CLAY with GRAVEL SANDY SILTY CLAY SANDY SILTY CLAY with GRAVEL GRAVELLY SILTY CLAY GRAVELLY SILTY CLAY with SAND
ML	SILT SILT with SAND SILT with GRAVEL SANDY SILT SANDY SILT with GRAVEL GRAVELLY SILT GRAVELLY SILT with SAND
OL	ORGANIC lean CLAY ORGANIC lean CLAY with SAND ORGANIC lean CLAY with GRAVEL SANDY ORGANIC lean CLAY SANDY ORGANIC lean CLAY with GRAVEL GRAVELLY ORGANIC lean CLAY GRAVELLY ORGANIC lean CLAY with SAND
OL	ORGANIC SILT ORGANIC SILT with SAND ORGANIC SILT with GRAVEL SANDY ORGANIC SILT SANDY ORGANIC SILT with GRAVEL GRAVELLY ORGANIC SILT GRAVELLY ORGANIC SILT with SAND
CH	Fat CLAY Fat CLAY with SAND Fat CLAY with GRAVEL SANDY fat CLAY SANDY fat CLAY with GRAVEL GRAVELLY fat CLAY GRAVELLY fat CLAY with SAND
MH	Elastic SILT Elastic SILT with SAND Elastic SILT with GRAVEL SANDY elastic SILT SANDY elastic SILT with GRAVEL GRAVELLY elastic SILT GRAVELLY elastic SILT with SAND
OH	ORGANIC fat CLAY ORGANIC fat CLAY with SAND ORGANIC fat CLAY with GRAVEL SANDY ORGANIC fat CLAY SANDY ORGANIC fat CLAY with GRAVEL GRAVELLY ORGANIC fat CLAY GRAVELLY ORGANIC fat CLAY with SAND
OH	ORGANIC elastic SILT ORGANIC elastic SILT with SAND ORGANIC elastic SILT with GRAVEL SANDY ORGANIC elastic SILT SANDY ORGANIC elastic SILT with GRAVEL GRAVELLY ORGANIC elastic SILT GRAVELLY ORGANIC elastic SILT with SAND
OL/OH	ORGANIC SOIL ORGANIC SOIL with SAND ORGANIC SOIL with GRAVEL SANDY ORGANIC SOIL SANDY ORGANIC SOIL with GRAVEL GRAVELLY ORGANIC SOIL GRAVELLY ORGANIC SOIL with SAND

FIELD AND LABORATORY TESTING

- (C) Consolidation (ASTM D 2435)
- (CL) Collapse Potential (ASTM D 5333)
- (CP) Compaction Curve (CTM 216)
- (CR) Corrosivity Testing (CTM 643, CTM 422, CTM 417)
- (CU) Consolidated Undrained Triaxial (ASTM D 4767)
- (DS) Direct Shear (ASTM D 3080)
- (EI) Expansion Index (ASTM D 4829)
- (M) Moisture Content (ASTM D 2216)
- (OC) Organic Content-% (ASTM D 2974)
- (P) Permeability (CTM 220)
- (PA) Particle Size Analysis (ASTM D 422)
- (PI) Plasticity Index (AASHTO T 90) Liquid Limit (AASHTO T 89)
- (PL) Point Load Index (ASTM D 5731)
- (PM) Pressure Meter
- (PP) Pocket Penetrometer
- (R) R-Value (CTM 301)
- (SE) Sand Equivalent (CTM 217)
- (SG) Specific Gravity (AASHTO T 100)
- (SL) Shrinkage Limit (ASTM D 427)
- (SW) Swell Potential (ASTM D 4546)
- (TV) Pocket Torvane
- (UC) Unconfined Compression-Soil (ASTM D 2166) Unconfined Compression-Rock (ASTM D 2938)
- (UU) Unconsolidated Undrained Triaxial (ASTM D 2850)
- (UW) Unit Weight (ASTM D 4767)
- (VS) Vane Shear (AASHTO T 223)

DIST	COUNTY	ROUTE	POST MILES TOTAL PROJECT	SHEET No	TOTAL SHEETS
12	Ora	22, 405, 605	R0.3/R0.9, 22.3/24.0,3.0/R1.6	1767	1929

REGISTERED CIVIL ENGINEER 07/27/09 DATE

2-1-10
PLANS APPROVAL DATE

REGISTERED PROFESSIONAL ENGINEER K.Arulmoli No. GE 2090 Exp.12-31-09 GEOTECHNICAL STATE OF CALIFORNIA

The State of California or its officers or agents shall not be responsible for the accuracy or completeness of electronic copies of this plan sheet.

OCTA
550 SOUTH MAIN STREET
ORANGE, CA 92863

EARTH MECHANICS, INC.
17660, NEWHOPE STREET, SUITE E
FOUNTAIN VALLEY, CA 92708

APPARENT DENSITY OF COHESIONLESS SOILS

Description	SPT N_{60} (Blows / 12 inches)
Very loose	0 - 4
Loose	5 - 10
Medium Dense	11 - 30
Dense	31 - 50
Very Dense	> 50

MOISTURE

Description	Criteria
Dry	Absence of moisture, dusty, dry to the touch
Moist	Damp but no visible water
Wet	Visible free water, usually soil is below water table

PERCENT OR PROPORTION OF SOILS

Description	Criteria
Trace	Particles are present but estimated to be less than 5%
Few	5 to 10%
Little	15 to 25%
Some	30 to 45%
Mostly	50 to 100%

PARTICLE SIZE

Description		Size
Boulder		> 12"
Cobble		3" to 12"
Gravel	Coarse	3/4" to 3"
	Fine	No. 4 to 3/4"
Sand	Coarse	No. 10 to No. 4
	Medium	No. 40 to No. 10
	Fine	No. 200 to No. 40

Sudhakar Vatti
DESIGN OVERSIGHT Sudhakar Vatti

8-10-09
SIGN OFF DATE

DRAWN BY: J.Fang

CHECKED BY: G.J.Gunaranjan

FIELD INVESTIGATION BY: R.Jie

PREPARED FOR THE STATE OF CALIFORNIA DEPARTMENT OF TRANSPORTATION

K.Arulmoli
PROJECT ENGINEER

BRIDGE NO. 55E0100
POST MILE 22.7

RETAINING WALL NO. 419
LOG OF TEST BORINGS NO. 2

OSF CIVIL LOG OF TEST BORINGS SHEET (ENGLISH) (REV. 2-25-05)

ORIGINAL SCALE IN INCHES FOR REDUCED PLANS 0 1 2 3

CU 12235
EA 071631

DISREGARD PRINTS BEARING EARLIER REVISION DATES

REVISION DATES (PRELIMINARY STAGE ONLY) 08/28/08 03/23/09 04/06/09 07/21/09

SHEET 13 OF 15

FILE => 55-e0100-z-ltb02.dgn

USERNAME => trimmguye DATE PLOTTED => 04-FEB-2010 TIME PLOTTED => 09:54

DIST	COUNTY	ROUTE	POST MILES TOTAL PROJECT	SHEET No	TOTAL SHEETS
12	Ora	22,405, 605	R0.3/R0.9, 22.3/24.0,3.0/R1.6	1768	1929

REGISTERED CIVIL ENGINEER 07/27/09 DATE

2-1-10
PLANS APPROVAL DATE

REGISTERED PROFESSIONAL ENGINEER K.Arulmoli No. GE 2090 Exp.12-31-09 GEOTECHNICAL STATE OF CALIFORNIA

The State of California or its officers or agents shall not be responsible for the accuracy or completeness of electronic copies of this plan sheet.

OCTA
550 SOUTH MAIN STREET
ORANGE, CA 92863

EARTH MECHANICS, INC
17660 NEWHOPE STREET, SUITE E
FOUNTAIN VALLEY, CA 92708

BENCHMARKS:

Monument: 1A-144-04

Described by OCS 2005 - Found 3.75" OCS aluminum benchmark disk stamped "1A-144-04", set in the southwesterly corner of a 4.4 ft by 4.4 ft concrete catch basin. Monument is located in the northeasterly corner of the intersection of Seal Beach Boulevard and St. Cloud Drive, 44 ft easterly of the centerline of Seal Beach Boulevard and 58 ft northerly of the centerline of St. Cloud Dr. Monument is set level with the sidewalk.

Elevation: 15.37 feet

NOTES:

(1) This LOTB sheet (Boring Record) was prepared in accordance with the Caltrans Soil and Rock Classification Logging, Classification and Presentation Manual (June 2007).

(2) 2.4" samples were taken using a California Modified Sampler.

(3) An automatic trip hammer system consisting of a hammer weight of 140 lbs falling a distance of 30" was used to advance the drive sampler.

(4) Borings 04-2 and 04-3 were drilled and logged by EMI in 2004 for I-405/Seal Beach Boulevard Interchange Project (Earth Mechanics, Inc. 2005, Final Materials Report, I-405/Seal Beach Boulevard Interchange Project, Orange County, California, 12-ORA-405, KP36.1/36.5, April 25), and are only reproduced on this sheet.

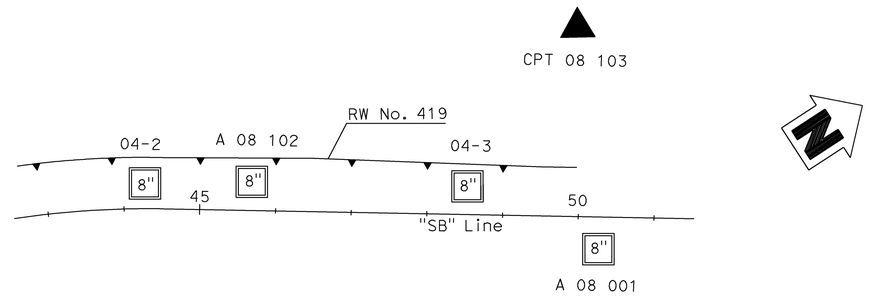

PLAN
1" = 50'

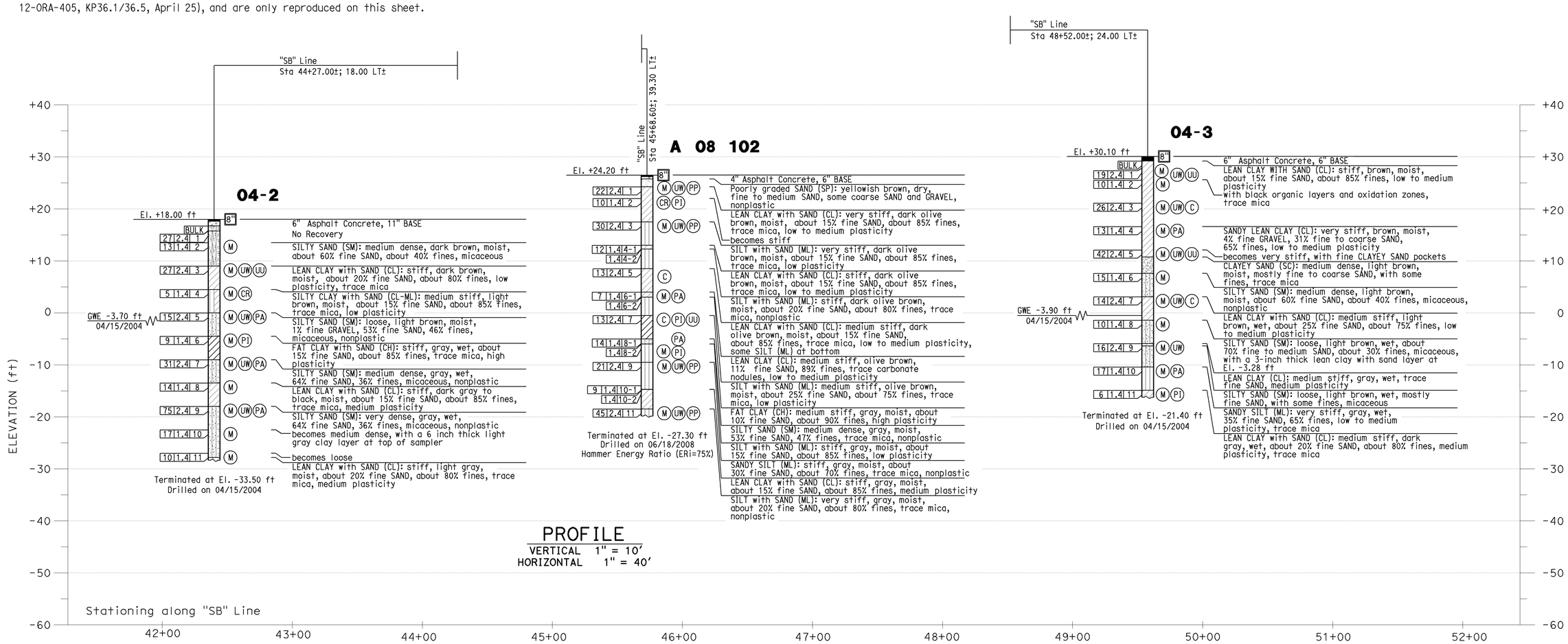

PROFILE
VERTICAL 1" = 10'
HORIZONTAL 1" = 40'

Sudhakar Vatti DESIGN OVERSIGHT Sudhakar Vatti 8-10-09 SIGN OFF DATE	DRAWN BY: J.Fang CHECKED BY: G.J.Gunaranjan	FIELD INVESTIGATION BY: R.Jie	PREPARED FOR THE STATE OF CALIFORNIA DEPARTMENT OF TRANSPORTATION	K.Arulmoli PROJECT ENGINEER	BRIDGE NO. 55E0100 POST MILE 22.7	RETAINING WALL NO. 419 LOG OF TEST BORINGS NO. 3

OSF CIVIL LOG OF TEST BORINGS SHEET (ENGLISH) (REV. 2-25-05)

ORIGINAL SCALE IN INCHES FOR REDUCED PLANS 0 1 2 3

CU 12235
EA 071631

DISREGARD PRINTS BEARING EARLIER REVISION DATES

REVISION DATES (PRELIMINARY STAGE ONLY) 08/29/08 03/23/09 04/06/09 07/21/09

SHEET 14 OF 15

FILE => 55-e0100-z-ltb03.dgn

USERNAME => ttmnguye DATE PLOTTED => 04-FEB-2010 TIME PLOTTED => 09:54

DIST	COUNTY	ROUTE	POST MILES TOTAL PROJECT	SHEET No	TOTAL SHEETS
12	Ora	22,405, 605	R0.3/R0.9, 22.3/24.0,3.0/R1.6	1769	1929

REGISTERED CIVIL ENGINEER 07/27/09 DATE

2-1-10
PLANS APPROVAL DATE

REGISTERED PROFESSIONAL ENGINEER K.Arulmoli No. GE 2090 Exp.12-31-09 GEOTECHNICAL STATE OF CALIFORNIA

The State of California or its officers or agents shall not be responsible for the accuracy or completeness of electronic copies of this plan sheet.

OCTA
550 SOUTH MAIN STREET
ORANGE, CA 92863

EARTH MECHANICS, INC
17660 NEWHOPE STREET, SUITE E
FOUNTAIN VALLEY, CA 92708

BENCHMARKS:

Monument: 1A-144-04

Described by OCS 2005 - Found 3.75" OCS aluminum benchmark disk stamped "1A-144-04", set in the southwesterly corner of a 4.4 ft by 4.4 ft concrete catch basin. Monument is located in the northeasterly corner of the intersection of Seal Beach Boulevard and St. Cloud Drive, 44 ft easterly of the centerline of Seal Beach Boulevard and 58 ft northerly of the centerline of St. Cloud Dr. Monument is set level with the sidewalk.

Elevation: 15.37 feet

NOTES:

(1) This LOTB sheet (Boring Record) was prepared in accordance with the Caltrans Soil and Rock Classification Logging, Classification and Presentation Manual (June 2007).

(2) 2.4" samples were taken using a California Modified Sampler.

(3) An automatic trip hammer system consisting of a hammer weight of 140 lbs falling a distance of 30" was used to advance the drive sampler.

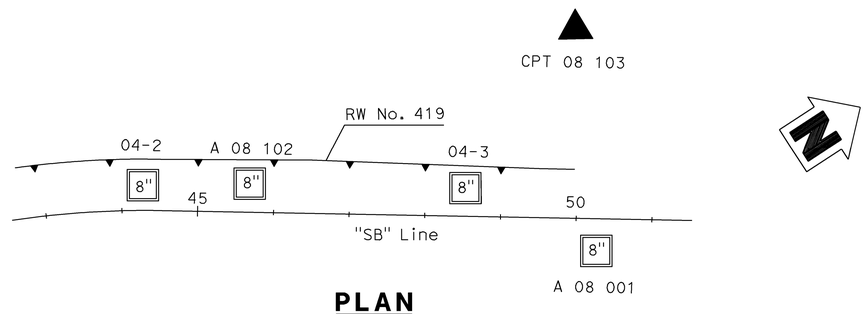

PLAN
1" = 50'

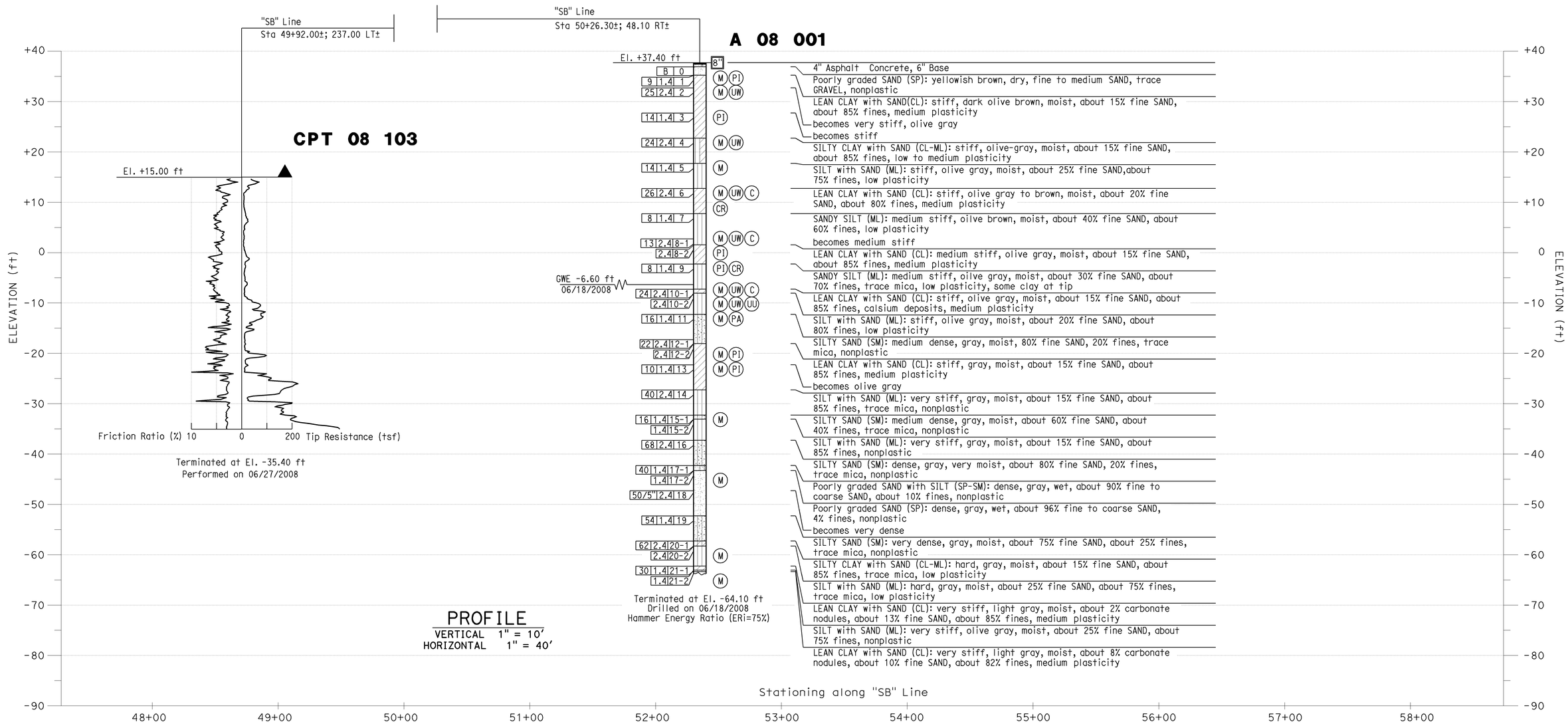

PROFILE
VERTICAL 1" = 10'
HORIZONTAL 1" = 40'

Sudhakar Vatti
DESIGN OVERSIGHT Sudhakar Vatti

8-10-09
SIGN OFF DATE

DRAWN BY: J.Fang

CHECKED BY: G.J.Gunaranjan

FIELD INVESTIGATION BY: R.Jie

PREPARED FOR THE STATE OF CALIFORNIA DEPARTMENT OF TRANSPORTATION

K.Arulmoli
PROJECT ENGINEER

BRIDGE NO. 55E0100
POST MILE 22.7

RETAINING WALL NO. 419

LOG OF TEST BORINGS NO. 4

OSF CIVIL LOG OF TEST BORINGS SHEET (ENGLISH) (REV. 2-25-05)

ORIGINAL SCALE IN INCHES FOR REDUCED PLANS 0 1 2 3

CU 12235
EA 071631

DISREGARD PRINTS BEARING EARLIER REVISION DATES

REVISION DATES (PRELIMINARY STAGE ONLY) 08/28/08 03/27/09 04/06/09 07/21/09

SHEET 15 OF 15

FILE => 55-e0100-z-lltb04.dgn

USERNAME => trimmguye DATE PLOTTED => 04-FEB-2010 TIME PLOTTED => 09:54

DIST	COUNTY	ROUTE	POST MILES TOTAL PROJECT	SHEET No	TOTAL SHEETS
12	Ora	22,405, 605	R0.3/R0.9, 22.3/24.0,3.0/R1.6	1770	1929

REGISTERED CIVIL ENGINEER 7/27/09 DATE

2-1-10
PLANS APPROVAL DATE

The State of California or its officers or agents shall not be responsible for the accuracy or completeness of electronic copies of this plan sheet.

REGISTERED PROFESSIONAL ENGINEER VINH TRINH No. C 50685 Exp. 9-30-09 CIVIL STATE OF CALIFORNIA

OCTA
550 SOUTH MAIN STREET
ORANGE, CA 92863

WKE, Inc.
400 N. Tustin Ave, Suite 285
Santa Ana, CA 92705

LEGEND

1. Concrete Barrier (Type 736 Mod) with Soundwall (H=14'-4")
2. Concrete Barrier (Type 736SV Mod) with Soundwall (H=14'-4")
3. Drainage inlet, see "Drainage Plans"

NOTES

1. For Typical Sections, see "General Plan No. 4" sheet
2. For sound wall architectural texture, see "Sound Wall Details, SW-32" sheet
3. For utility, see "Utility Plans"
4. For electrical, see "Electrical Plans"

SOUND WALL NO 434 BR NO 55E0101

QUANTITIES		
STRUCTURE EXCAVATION (RETAINING WALL)	415	CY
STRUCTURE BACKFILL (SLURRY CEMENT)	60	CY
STRUCTURE BACKFILL (RETAINING WALL)	330	CY
PERVIOUS BACKFILL MATERIAL (RETAINING WALL)	17	CY
EARTH RETAINING STRUCTURE, LOCATION 7	8,950	SQFT
24" CAST-IN-DRILLED-HOLE CONCRETE PILING	690	LF
18" CAST-IN-DRILLED-HOLE CONCRETE PILING	830	LF
STRUCTURAL CONCRETE, RETAINING WALL	110	CY
STRUCTURAL CONCRETE, BARRIER SLAB	351	CY
MINOR CONCRETE (MINOR STRUCTURE)	56	CY
SOUND WALL (MASONRY BLOCK)	14,050	SQFT
BAR REINFORCING STEEL (RETAINING WALL)	11,800	LB
BAR REINFORCING STEEL (SOUND WALL)	25,000	LB
CONCRETE BARRIER (TYPE 736 MODIFIED)	939	LF
CONCRETE BARRIER (TYPE 736SV)	300	LF

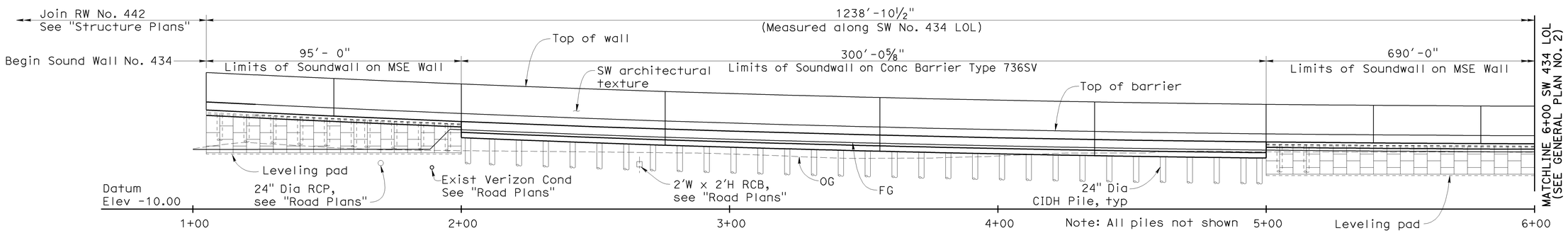

SW 434 MIRROR ELEVATION

1" = 20'

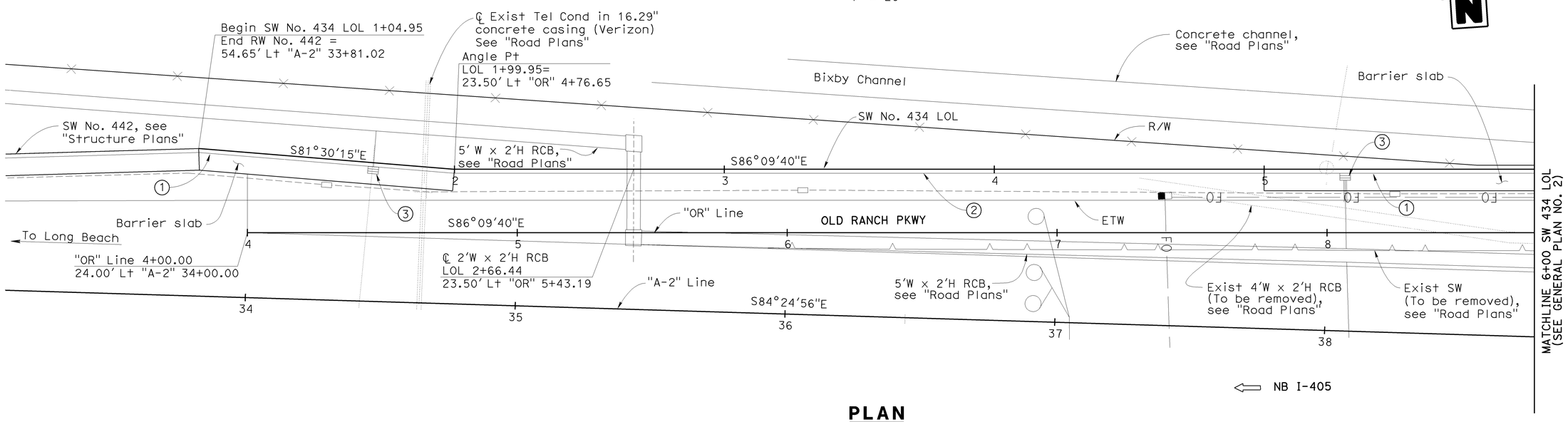

PLAN

1" = 20'

NOTE:
THE CONTRACTOR SHALL VERIFY ALL CONTROLLING FIELD DIMENSIONS BEFORE ORDERING OR FABRICATING ANY MATERIAL.

Sudhakar Vatti — DESIGN OVERSIGHT Sudhakar Vatti; 8-10-09 SIGN OFF DATE	DESIGN	BY V. Trinh	CHECKED S. Nagi	LOAD AND RESISTANCE FACTOR DESIGN (LRFD)	LIVE LOADING: HL-93 TRUCK, TANDEM AND PERMIT DESIGN LOAD (P15)
	DETAILS	BY V. Trinh	CHECKED S. Nagi	LAYOUT	BY V. Trinh / CHECKED S. Nagi
	QUANTITIES	BY K. Coates	CHECKED V. Trinh	SPECIFICATIONS	BY EL Tyk / PLANS AND SPECS COMPARED V. Trinh

DESIGN GENERAL PLAN SHEET (ENGLISH) (REV. 2/25/05)

ORIGINAL SCALE IN INCHES FOR REDUCED PLANS 0 1 2 3

PREPARED FOR THE STATE OF CALIFORNIA DEPARTMENT OF TRANSPORTATION

Vinh Trinh
PROJECT ENGINEER

CU 12235
EA 071631

BRIDGE NO. 55E0101
POST MILES 23.1

SOUND WALL NO. 434
GENERAL PLAN NO. 1

DISREGARD PRINTS BEARING EARLIER REVISION DATES
REVISION DATES (PRELIMINARY STAGE ONLY) 02/16/09 04/06/09 7/21/09

SHEET 1 OF 24

FILE => 55-e0101-a-gp01.dgn

USERNAME => trmorlok DATE PLOTTED => 04-FEB-2010 TIME PLOTTED => 10:42

DIST	COUNTY	ROUTE	POST MILES TOTAL PROJECT	SHEET No	TOTAL SHEETS
12	Ora	22,405, 605	R0.3/R0.9, 22.3/24.0,3.0/R1.6	1771	1929

REGISTERED CIVIL ENGINEER 7/27/09 DATE

2-1-10
PLANS APPROVAL DATE

REGISTERED PROFESSIONAL ENGINEER VINH TRINH No. C 50685 Exp. 9-30-09 CIVIL STATE OF CALIFORNIA

The State of California or its officers or agents shall not be responsible for the accuracy or completeness of electronic copies of this plan sheet.

OCTA
550 SOUTH MAIN STREET
ORANGE, CA 92863

WKE, Inc.
400 N. Tustin Ave, Suite 285
Santa Ana, CA 92705

LEGEND

(1) Concrete Barrier (Type 736 Mod) with Soundwall (H=14′-4")

(3) Drainage inlet, see "Drainage Plan"

NOTE

1. For Typical Sections, see "General Plan No. 4" sheet
2. For sound wall architectural texture, see "Sound Wall Details," SW-32 sheet
3. For utility, see "Utility Plans"
4. For electrical, see "Electrical Plans"

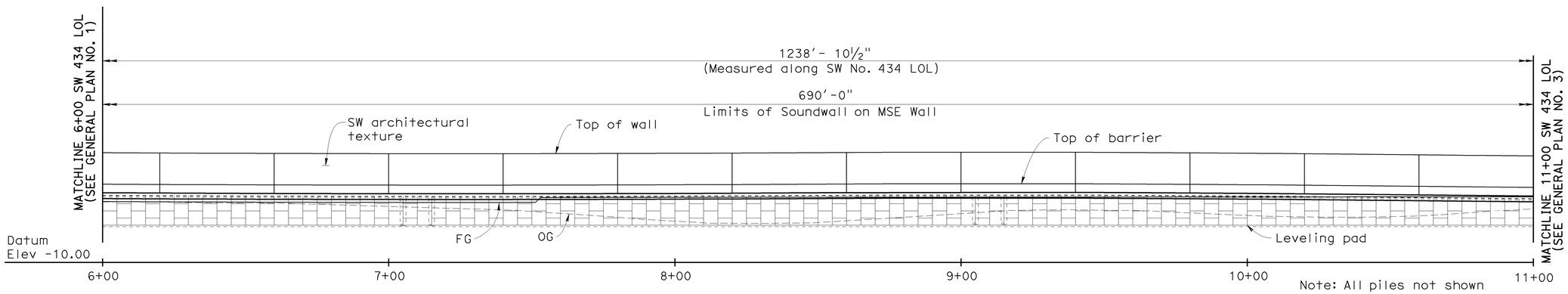

SW 434 MIRROR ELEVATION

1" = 20′

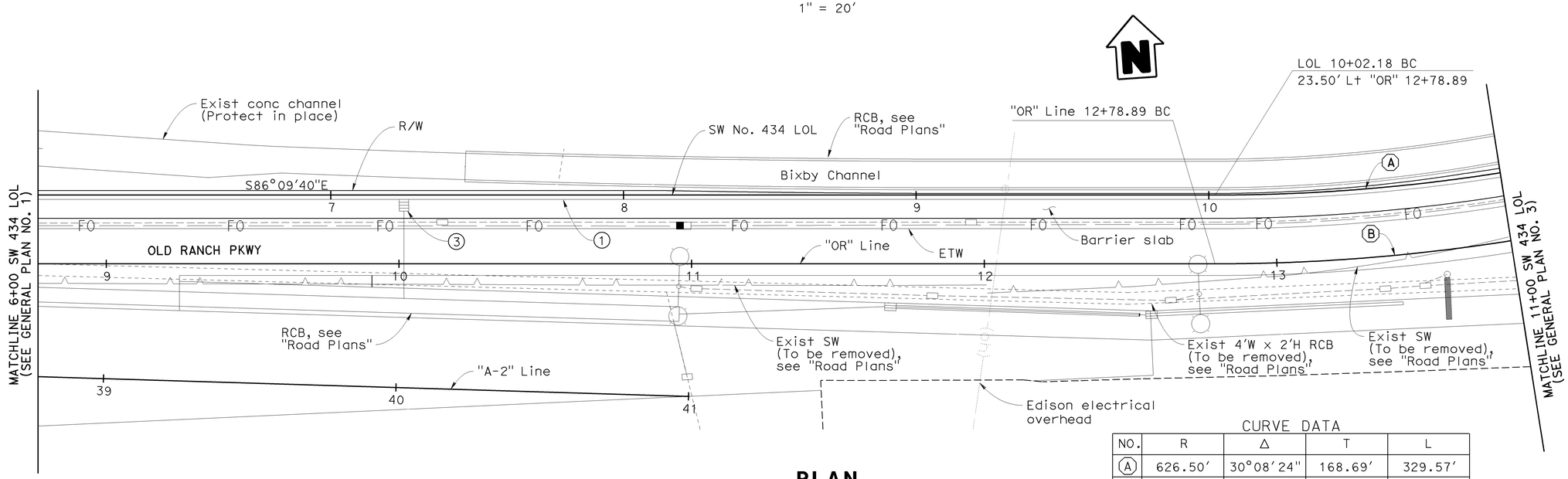

CURVE DATA

NO.	R	Δ	T	L
(A)	626.50′	30°08′24"	168.69′	329.57′
(B)	650.00′	30°08′24"	175.02′	341.93′

PLAN

1" = 20′

NOTE:
THE CONTRACTOR SHALL VERIFY ALL CONTROLLING FIELD DIMENSIONS BEFORE ORDERING OR FABRICATING ANY MATERIAL.

Sudhakar Vatti
DESIGN OVERSIGHT Sudhakar Vatti
8-10-09
SIGN OFF DATE

	BY	CHECKED		
DESIGN	V. Trinh	S. Nagi	LOAD AND RESISTANCE FACTOR DESIGN (LRFD)	LIVE LOADING: HL-93 TRUCK, TANDEM AND PERMIT DESIGN LOAD (P15)
DETAILS	V. Trinh	S. Nagi	LAYOUT	BY V. Trinh / CHECKED S. Nagi
QUANTITIES	K. Coates	V. Trinh	SPECIFICATIONS	BY EL Tyk / PLANS AND SPECS COMPARED V. Trinh

DESIGN GENERAL PLAN SHEET (ENGLISH) (REV. 2/25/05)

ORIGINAL SCALE IN INCHES FOR REDUCED PLANS 0 1 2 3

PREPARED FOR THE STATE OF CALIFORNIA DEPARTMENT OF TRANSPORTATION

Vinh Trinh
PROJECT ENGINEER

CU 12235
EA 071631

BRIDGE NO. 55E0101
POST MILES 23.1

SOUND WALL NO. 434
GENERAL PLAN NO. 2

DISREGARD PRINTS BEARING EARLIER REVISION DATES

REVISION DATES (PRELIMINARY STAGE ONLY) 02/18/09 04/06/09 7/27/09

SHEET 2 OF 24

FILE => 55-e0101-a-gp02.dgn

USERNAME => rtrmorlok DATE PLOTTED => 04-FEB-2010 TIME PLOTTED => 10:42

DIST	COUNTY	ROUTE	POST MILES TOTAL PROJECT	SHEET No	TOTAL SHEETS
12	Ora	22,405, 605	R0.3/R0.9, 22.3/24.0,3.0/R1.6	1772	1929

REGISTERED CIVIL ENGINEER 7/27/09 DATE

2-1-10
PLANS APPROVAL DATE

The State of California or its officers or agents shall not be responsible for the accuracy or completeness of electronic copies of this plan sheet.

REGISTERED PROFESSIONAL ENGINEER VINH TRINH No. C 50685 Exp. 9-30-09 CIVIL STATE OF CALIFORNIA

OCTA
550 SOUTH MAIN STREET
ORANGE, CA 92863

WKE, Inc.
400 N. Tustin Ave, Suite 285
Santa Ana, CA 92705

LEGEND

(1) Concrete Barrier (Type 736 Mod) with Soundwall (H=14'-4")

(3) Drainage inlet, see "Drainage Plans"

NOTE

1. For Typical Sections, see "General Plan No. 4" sheet
2. For sound wall architectural texture, see "Sound Wall Details," SW-32 sheet
3. For utility, see "Utility Plans"
4. For electrical, see "Electrical Plans"

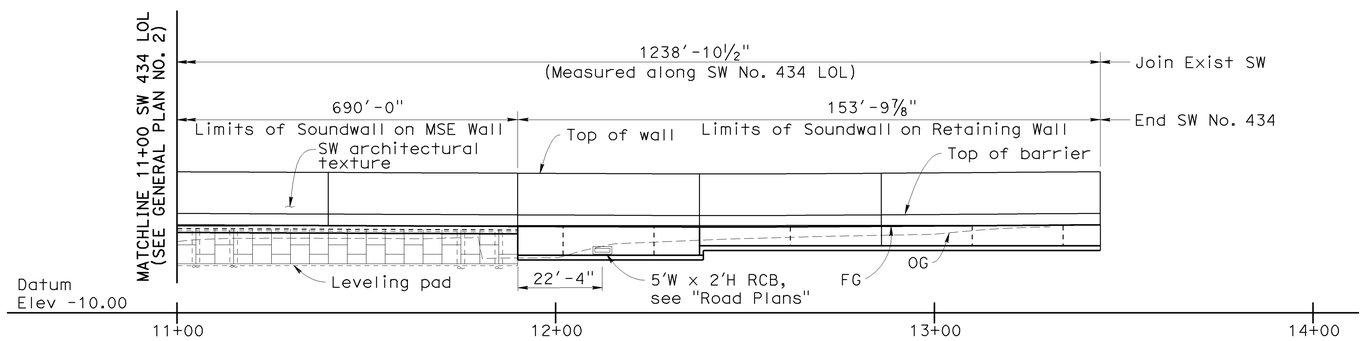

Note: All piles not shown

SW 434 MIRROR ELEVATION

1" = 20'

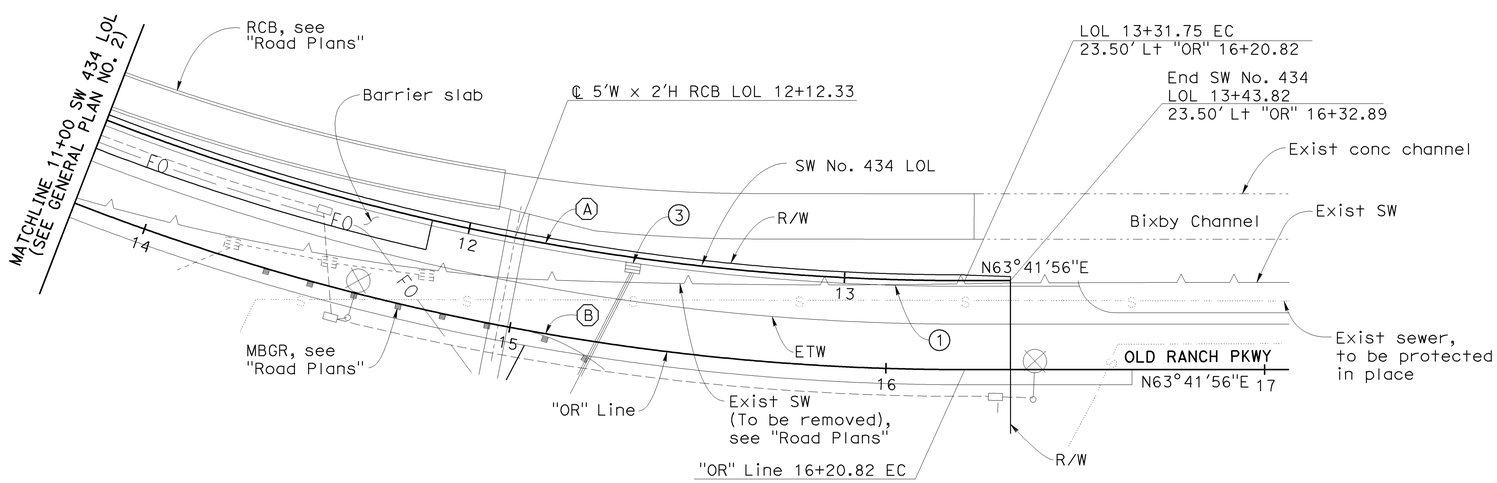

PLAN

1" = 20'

CURVE DATA

NO.	R	Δ	T	L
(A)	626.50'	30°08'24"	168.69'	329.57'
(B)	650.00'	30°08'24"	175.02'	341.93'

NOTE:
THE CONTRACTOR SHALL VERIFY ALL CONTROLLING FIELD DIMENSIONS BEFORE ORDERING OR FABRICATING ANY MATERIAL.

Sudhakar Vatti
DESIGN OVERSIGHT Sudhakar Vatti
8-10-09
SIGN OFF DATE

	BY	CHECKED			
DESIGN	V. Trinh	S. Nagi	LOAD AND RESISTANCE FACTOR DESIGN (LRFD)	LIVE LOADING: HL-93 TRUCK, TANDEM AND PERMIT DESIGN LOAD (P15)	
DETAILS	V. Trinh	S. Nagi	LAYOUT	V. Trinh	S. Nagi
QUANTITIES	K. Coates	V. Trinh	SPECIFICATIONS	EL Tyk	PLANS AND SPECS COMPARED V. Trinh

PREPARED FOR THE STATE OF CALIFORNIA DEPARTMENT OF TRANSPORTATION

Vinh Trinh
PROJECT ENGINEER

BRIDGE NO. 55E0101
POST MILES 23.1

SOUND WALL NO. 434
GENERAL PLAN NO. 3

DESIGN GENERAL PLAN SHEET (ENGLISH) (REV. 2/25/05)

ORIGINAL SCALE IN INCHES FOR REDUCED PLANS 0 1 2 3

CU 12235
EA 071631

DISREGARD PRINTS BEARING EARLIER REVISION DATES

REVISION DATES (PRELIMINARY STAGE ONLY) 02/16/09 04/06/09 7/27/09

SHEET 3 OF 24

FILE => 55-e0101-a-gp03.dgn

USERNAME => trmorlok DATE PLOTTED => 04-FEB-2010 TIME PLOTTED => 10:42

DIST	COUNTY	ROUTE	POST MILES TOTAL PROJECT	SHEET No	TOTAL SHEETS
12	Ora	22,405, 605	R0.3/R0.9, 22.3/24.0,3.0/R1.6	1773	1929

REGISTERED CIVIL ENGINEER 7/27/09 DATE

2-1-10
PLANS APPROVAL DATE

REGISTERED PROFESSIONAL ENGINEER VINH TRINH No. C 50685 Exp. 9-30-09 CIVIL STATE OF CALIFORNIA

The State of California or its officers or agents shall not be responsible for the accuracy or completeness of electronic copies of this plan sheet.

OCTA
550 SOUTH MAIN STREET
ORANGE, CA 92863

WKE, Inc.
400 N. Tustin Ave, Suite 285
Santa Ana, CA 92705

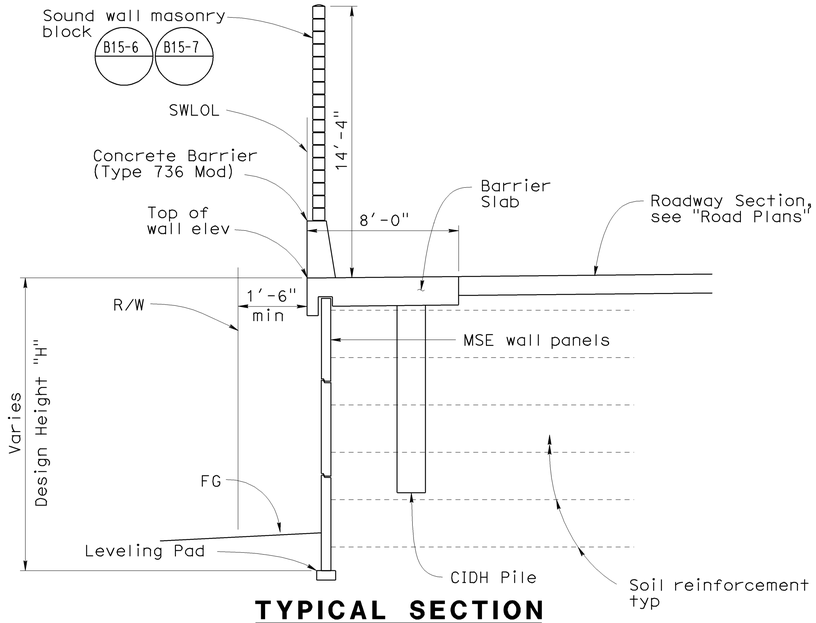

TYPICAL SECTION
SW 434 LOL STA 1+04.95 TO 1+99.95
No Scale

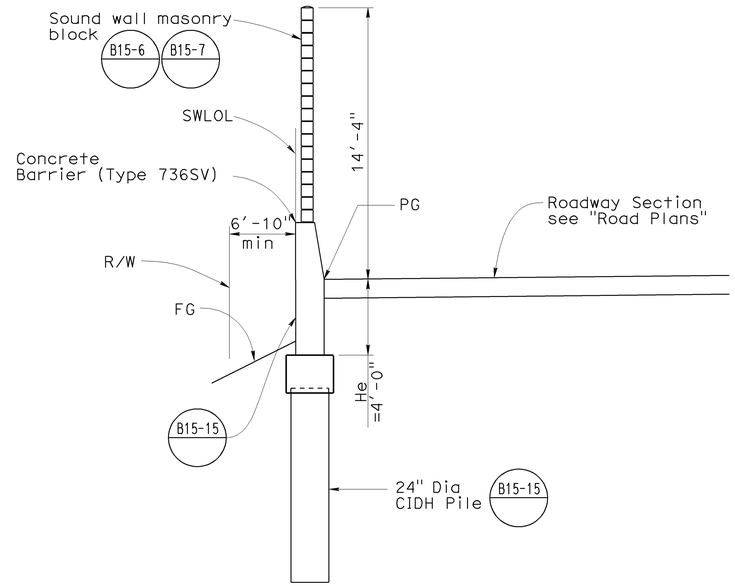

TYPICAL SECTION
SW 434 LOL STA 1+99.95 TO 5+00.00
No Scale

NOTE

1. For Plan and Elevation, see "General Plan Nos. 1 to 3" sheets

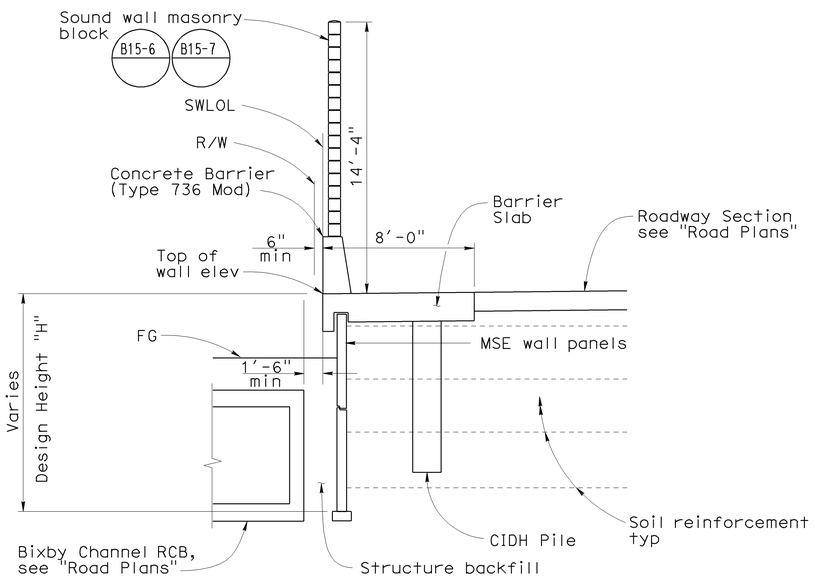

TYPICAL SECTION
SW 434 LOL STA 5+00.00 TO 11+90.00
No Scale

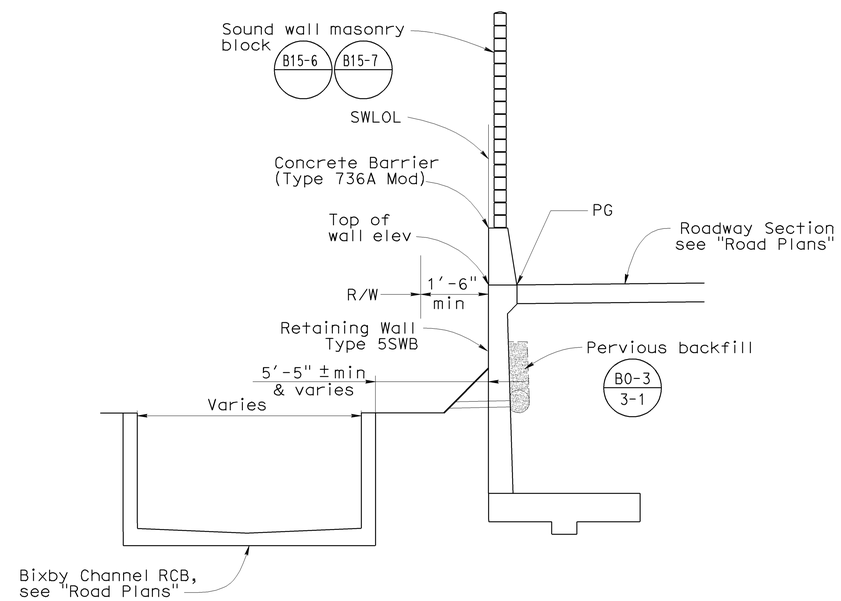

TYPICAL SECTION
SW 445 LOL STA 11+90.00 TO 13+43.82
No Scale

NOTE:
THE CONTRACTOR SHALL VERIFY ALL CONTROLLING FIELD DIMENSIONS BEFORE ORDERING OR FABRICATING ANY MATERIAL.

Sudhakar Vatti
DESIGN OVERSIGHT Sudhakar Vatti
8-10-09
SIGN OFF DATE

	BY	CHECKED			
DESIGN	V. Trinh	S. Nagi	LOAD AND RESISTANCE FACTOR DESIGN (LRFD)	LIVE LOADING: HL-93 TRUCK, TANDEM AND PERMIT DESIGN LOAD (P15)	
DETAILS	V. Trinh	S. Nagi	LAYOUT	V. Trinh	S. Nagi
QUANTITIES	K. Coates	V. Trinh	SPECIFICATIONS	EL Tyk	PLANS AND SPECS COMPARED V. Trinh

PREPARED FOR THE STATE OF CALIFORNIA DEPARTMENT OF TRANSPORTATION

Vinh Trinh
PROJECT ENGINEER

BRIDGE NO. 55E0101
POST MILES 23.1

SOUND WALL NO. 434
GENERAL PLAN NO. 4

DESIGN GENERAL PLAN SHEET (ENGLISH) (REV. 2/25/05)

ORIGINAL SCALE IN INCHES FOR REDUCED PLANS 0 1 2 3

CU 12235
EA 071631

DISREGARD PRINTS BEARING EARLIER REVISION DATES

REVISION DATES (PRELIMINARY STAGE ONLY) 02/16/09 04/06/09 7/27/09

SHEET 4 OF 24

FILE => 55-e0101-a-gp04.dgn

USERNAME => trinvin0k DATE PLOTTED => 04-FEB-2010 TIME PLOTTED => 10:42

DIST	COUNTY	ROUTE	POST MILES TOTAL PROJECT	SHEET No	TOTAL SHEETS
12	Ora	22,405, 605	R0.3/R0.9, 22.3/24.0,3.0/R1.6	1774	1929

REGISTERED CIVIL ENGINEER 7/27/09 DATE

2-1-10
PLANS APPROVAL DATE

The State of California or its officers or agents shall not be responsible for the accuracy or completeness of electronic copies of this plan sheet.

REGISTERED PROFESSIONAL ENGINEER Vinh Trinh No. C 50685 Exp. 09-30-09 CIVIL STATE OF CALIFORNIA

OCTA
550 SOUTH MAIN STREET
ORANGE, CA 92863

WKE, INC.
400 N. TUSTIN AVE, SUITE 285
SANTA ANA, CA 92705

STANDARD PLANS DATED MAY 2006

A10A	Acronyms and Abbreviations (Sheet 1 of 2)
A10B	Acronyms and Abbreviations (Sheet 2 of 2)
A10C	Symbols (Sheet 1 of 2)
A10D	Symbols (Sheet 2 of 2)
A62B	Limits of Excavation and Backfill - Bridge Surcharge and Wall
RSP A74	Survey Monuments
D102	Underdrains
D73	Drainage Inlets
B0-1	Bridge Details
B0-3	Bridge Details
B0-13	Bridge Details
B3-7	Retaining Wall Type 5
B3-8	Retaining Wall Details No. 1
B11-56	Concrete Barrier Type 736
RSP B15-6	Sound Wall Masonry Block on Type 736S/SV Barrier Details (1)
B15-7	Sound Wall Masonry Block on Type 736S/SV Barrier Details (2)
B15-15	Sound Wall Masonry Block on Type 736S/SV Barrier on Pile Footing For Spanning Utilities

Standard Plan Sheet No.

Detail No.

GENERAL NOTES

Live loading: Surcharge = 240 lb/ft^2

Soil parameters:

Internal design ϕ = 34°, γ = 120 lb/ft^3

External design ϕ(Backfill) = 34°, γ = 120 lb/ft^3

ϕ(Foundation) = 30°

MSE wall panels:

f'c = 4,000 psi (Concrete compressive strength at 28 days)

fy = 60,000 psi (Yield strength of reinforcement)

Soil reinforcement:

Welded wire mats: fy = 65,000 psi (Yield strength)

Coupler: fy = 36,000 psi (Yield strength)

Corrosion rate = 1.1 mils/year

Reinforced concrete:

f'c = 3,600 psi, except as noted

(Concrete compressive strength at 28 days)

fy = 60,000 psi (Yield strength of reinforcement)

NOTES

1. Limits to FS except to GP when in roadway section.
2. Locate 8" perforated underdrain below bottom level of welded wire mats.
3. Maximum spacing at outlet pipes is 200 ft.
4. At sags in profile of underdrain, install outlet pipe for each direction of flow.

INDEX TO PLANS

SHEET NO.	TITLE
1	General Plan No. 1
2	General Plan No. 2
3	General Plan No. 3
4	General Plan No. 4
5	Index to Plans
6	Structure Plan No. 1
7	Structure Plan No. 2
8	Structure Plan No. 3
9	Structure Plan No. 4
10	Structure Plan No. 5
11	Structure Plan No. 6
12	Structure Plan No. 7
13	Panel Details No. 1
14	Panel Details No. 2
15	Wall Details No. 1
16	Wall Details No. 2
17	Soundwall-Masonry Block with Barrier on Retaining Wall - Details No. 1
18	Soundwall-Masonry Block with Barrier on Retaining Wall - Details No. 2
19	Retaining Wall Type 5SWB
20	Architectural Details
21	Log of Test Borings No. 1
22	Log of Test Borings No. 2
23	Log of Test Borings No. 3
24	Log of Test Borings No. 4

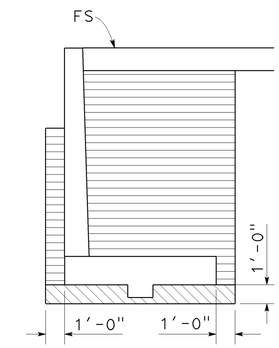

LOL 11+90.00 TO LOL 13+43.82

LEGEND

- Limits of structure excavation
- Limits of structure backfill
- Limits of permeable material
- Limits of slurry cement

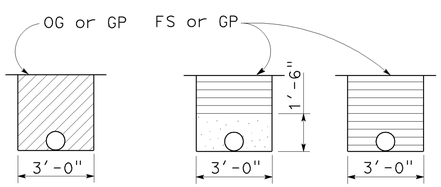

OUTLET PIPE **CLEANOUT PIPE**

EXCAVATION **BACKFILL**

OUTLET OR CLEANOUT PIPE FOR UNDERDRAIN
No Scale

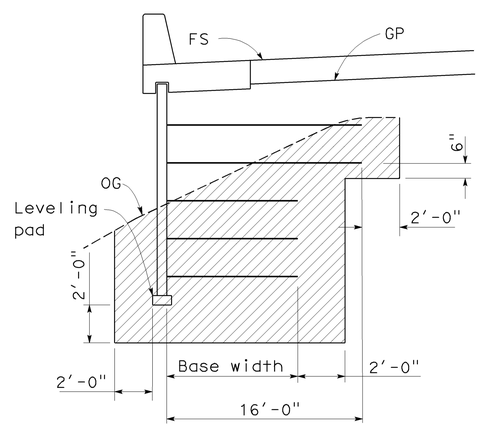

MSE WALL

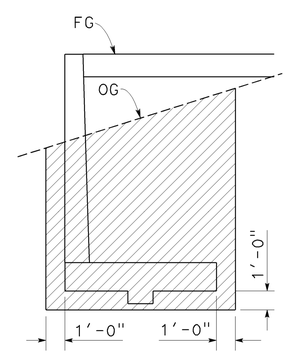

TYPE 5 RETAINING WALL

LIMITS OF EXCAVATION
No Scale

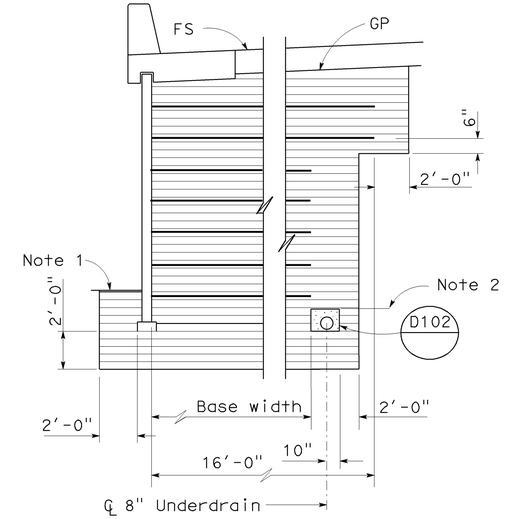

LOL 1+04.95 TO LOL 1+99.95

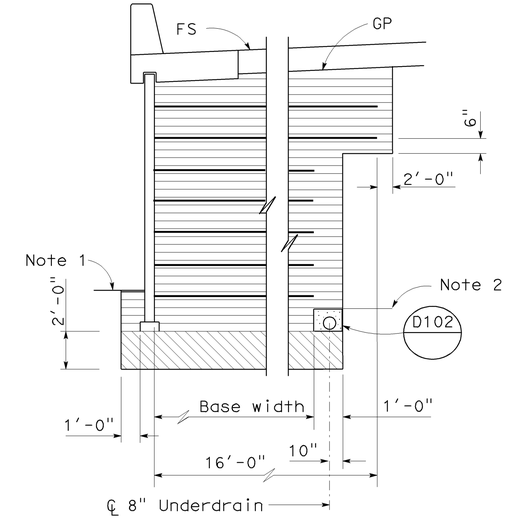

LOL 5+00.00 TO LOL 11+90.00

LIMITS OF BACKFILL
No Scale

NOTE:
THE CONTRACTOR SHALL VERIFY ALL CONTROLLING FIELD DIMENSIONS BEFORE ORDERING OR FABRICATING ANY MATERIAL.

Sudhakar Vatti
DESIGN OVERSIGHT Sudhakar Vatti
8-10-09
SIGN OFF DATE

	BY	CHECKED
DESIGN	V. Trinh	S. Nagi
DETAILS	V. Trinh	S. Nagi
QUANTITIES	K. Coates	V. Trinh

PREPARED FOR THE STATE OF CALIFORNIA DEPARTMENT OF TRANSPORTATION

V. Trinh
PROJECT ENGINEER

BRIDGE NO. 55E0101
POST MILE 23.1

SOUND WALL NO. 434
INDEX TO PLANS

DESIGN DETAIL SHEET (ENGLISH) (REV. 2/25/05)

ORIGINAL SCALE IN INCHES FOR REDUCED PLANS 0 1 2 3

CU 12235
EA 071631

DISREGARD PRINTS BEARING EARLIER REVISION DATES

REVISION DATES (PRELIMINARY STAGE ONLY) 04/06/09 7/27/09

SHEET 5 OF 24

FILE => 55-e0101-a-itp.dgn

USERNAME => trmorlok DATE PLOTTED => 04-FEB-2010 TIME PLOTTED => 10:42

DIST	COUNTY	ROUTE	POST MILES TOTAL PROJECT	SHEET No	TOTAL SHEETS
12	Ora	22,405, 605	R0.3/R0.9, 22.3/24.0,3.0/R1.6	1775	1929

REGISTERED CIVIL ENGINEER 7/27/09 DATE

2-1-10
PLANS APPROVAL DATE

The State of California or its officers or agents shall not be responsible for the accuracy or completeness of electronic copies of this plan sheet.

REGISTERED PROFESSIONAL ENGINEER Vinh Trinh No. C 50685 Exp. 09-30-09 CIVIL STATE OF CALIFORNIA

OCTA
550 SOUTH MAIN STREET
ORANGE, CA 92863

WKE, INC.
400 N. TUSTIN AVE, SUITE 285
SANTA ANA, CA 92705

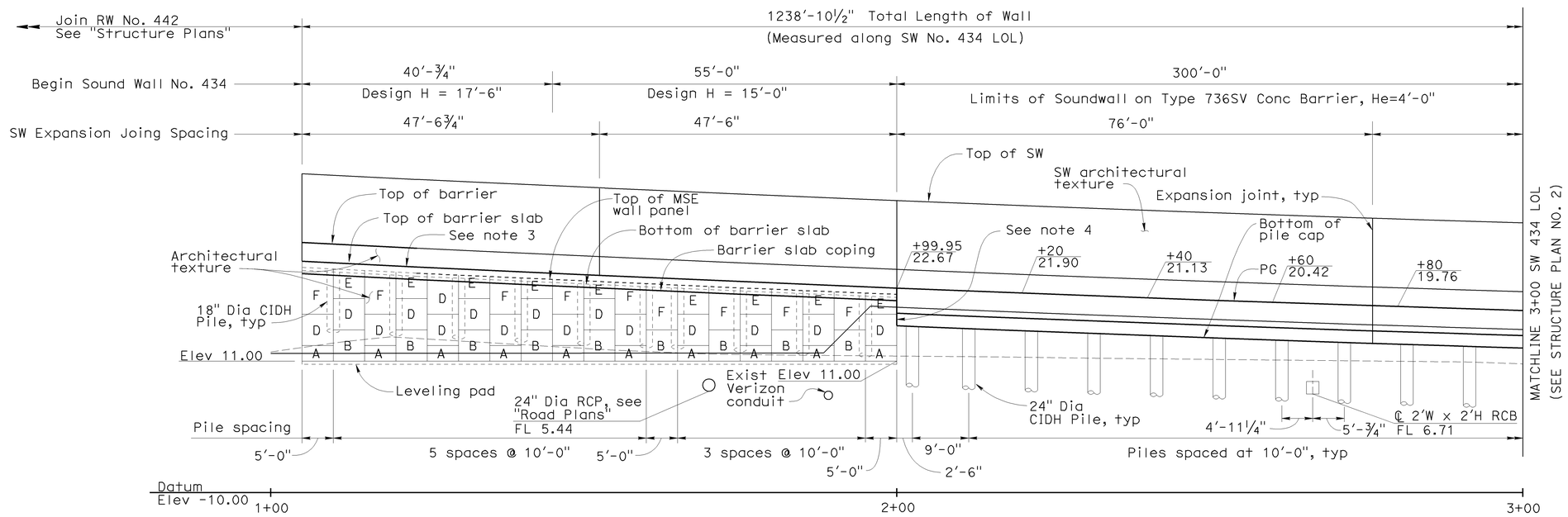

SW 434 MIRROR ELEVATION

1" = 10'

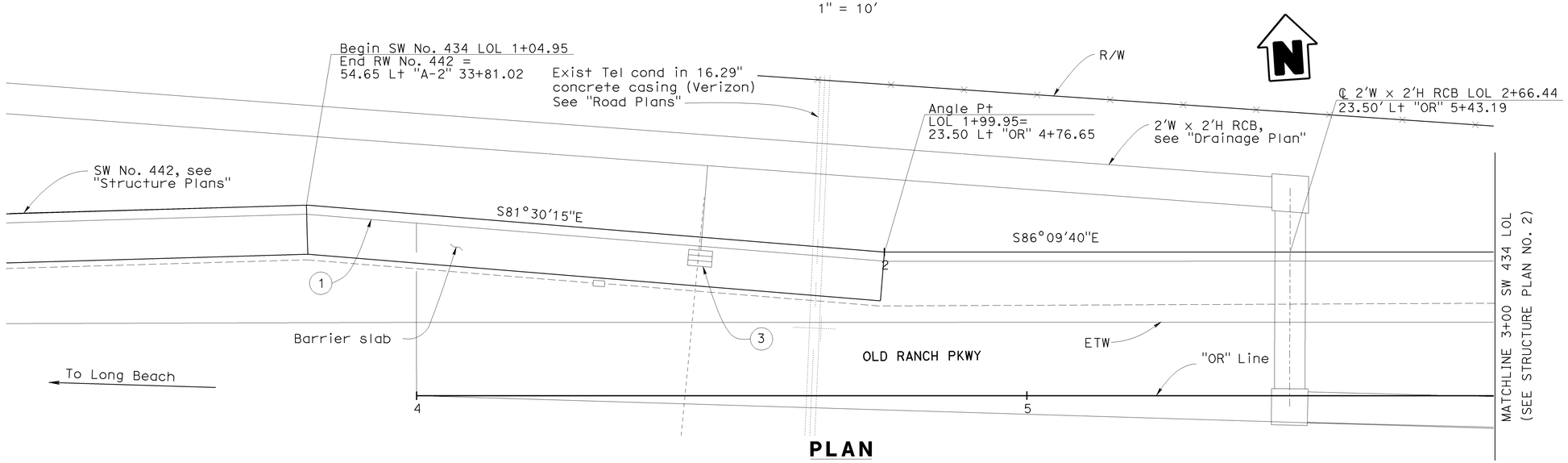

PLAN

1" = 10'

NOTE:
THE CONTRACTOR SHALL VERIFY ALL CONTROLLING FIELD DIMENSIONS BEFORE ORDERING OR FABRICATING ANY MATERIAL.

LEGEND

A — Indicates panel type designation (See notes 2 & 3)

1. Concrete Barrier (Type 736 Mod) with Soundwall (H=14'-4")
2. Concrete Barrier (Type 736SV) with Soundwall (H=14'-4")
3. Drainage inlet, see "Drainage Plans"

NOTE

1. For Typical Sections, see "General Plan No. 4" sheet
2. For MSE wall details, see "Panel Details No. 1" and "Panel Details No. 2" sheets
3. For top of wall elevations within limits of MSE wall, see "Structure Plan No. 7"
4. For connection details between MSE wall panels and concrete wall, see "Wall Details No. 1" sheet
5. For sound wall architectural texture, see "Sound Wall Details, SW-32" sheet
6. Elevation shown at leveling pad is at top of leveling pad.
7. For utility, see "Road Plans"

Sudhakar Vatti
DESIGN OVERSIGHT Sudhakar Vatti
8-10-09
SIGN OFF DATE

	BY	CHECKED
DESIGN	V. Trinh	S. Nagi
DETAILS	V. Trinh	S. Nagi
QUANTITIES	K. Coates	V. Trinh

PREPARED FOR THE STATE OF CALIFORNIA DEPARTMENT OF TRANSPORTATION

V. Trinh
PROJECT ENGINEER

BRIDGE NO. 55E0101
POST MILE 23.1

SOUND WALL NO. 434
STRUCTURE PLAN NO. 1

DESIGN DETAIL SHEET (ENGLISH) (REV. 2/25/05)

ORIGINAL SCALE IN INCHES FOR REDUCED PLANS 0 1 2 3

CU 12235
EA 071631

DISREGARD PRINTS BEARING EARLIER REVISION DATES
REVISION DATES (PRELIMINARY STAGE ONLY) 04/06/09 7/27/09

SHEET 6 OF 24

FILE => 55-e0101-c-sp01.dgn

USERNAME => trmorlok DATE PLOTTED => 04-FEB-2010 TIME PLOTTED => 10:42

DIST	COUNTY	ROUTE	POST MILES TOTAL PROJECT	SHEET No	TOTAL SHEETS
12	Ora	22,405, 605	R0.3/R0.9, 22.3/24.0,3.0/R1.6	1776	1929

REGISTERED CIVIL ENGINEER 7/27/09 DATE

2-1-10
PLANS APPROVAL DATE

REGISTERED PROFESSIONAL ENGINEER Vinh Trinh No. C 50685 Exp. 09-30-09 CIVIL STATE OF CALIFORNIA

The State of California or its officers or agents shall not be responsible for the accuracy or completeness of electronic copies of this plan sheet.

OCTA
550 SOUTH MAIN STREET
ORANGE, CA 92863

WKE, INC.
400 N. TUSTIN AVE, SUITE 285
SANTA ANA, CA 92705

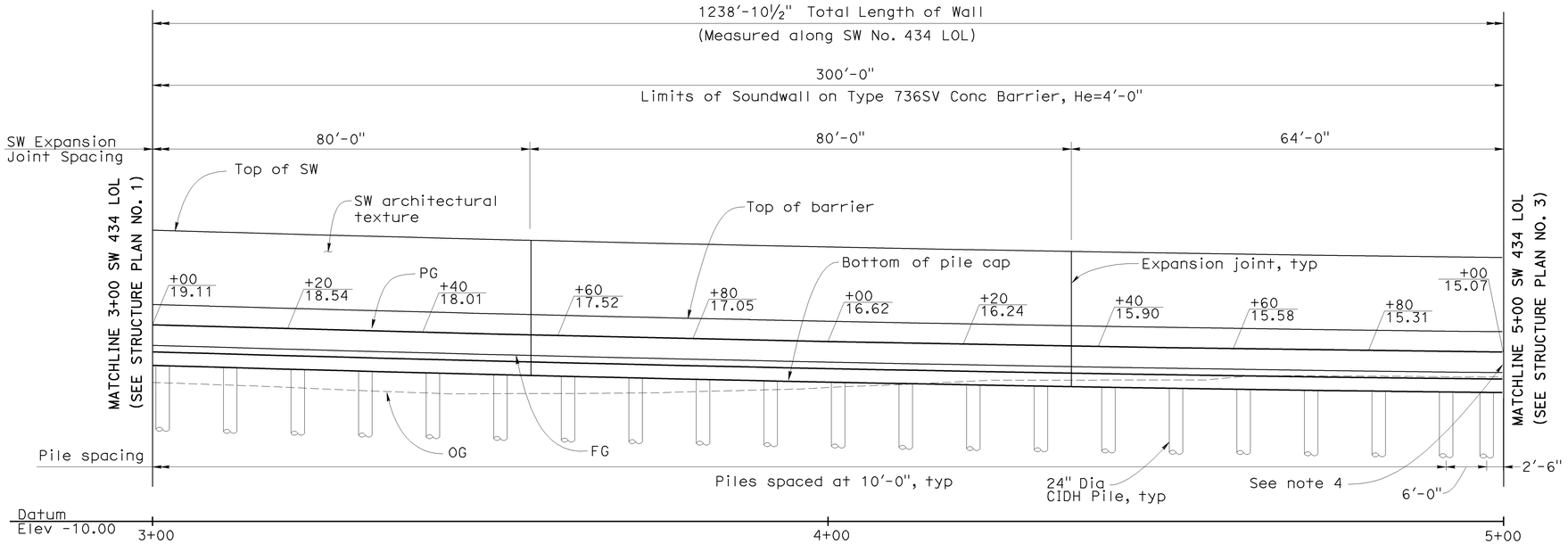

SW 434 MIRROR ELEVATION

1" = 10'

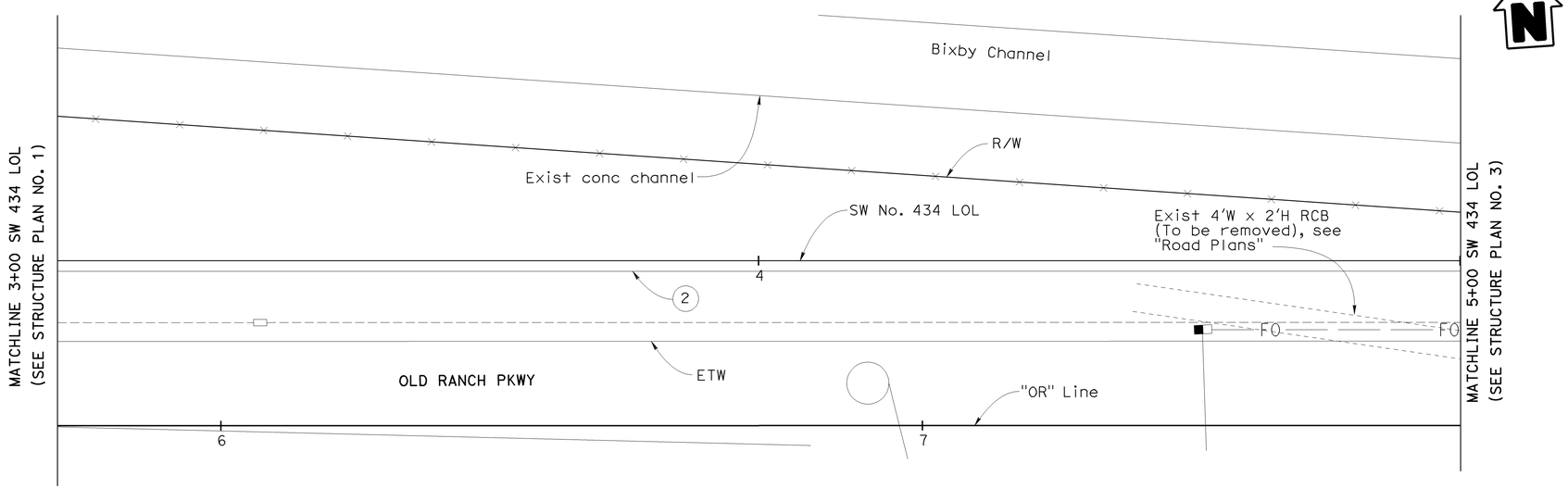

PLAN

1" = 10'

LEGEND

A	Indicates panel type designation (See notes 2 & 3)
1	Concrete Barrier (Type 736 Mod) with Soundwall (H=14'-4")
2	Concrete Barrier (Type 736SV) with Soundwall (H=14'-4")

NOTE

1. For Typical Sections, see "General Plan No. 4" sheet
2. For MSE wall panel details, see "Panel Details No. 1" and "Panel Details No. 2" sheets
3. For top of wall elevations within limits of MSE wall, see "Structure Plan No. 7"
4. For connection details between MSE wall panels and concrete wall, see "Wall Details No. 1" sheet
5. For sound wall architectural texture, see "Sound Wall Details, SW-32" sheet
7. For utility, see "Road Plans"

NOTE:
THE CONTRACTOR SHALL VERIFY ALL CONTROLLING FIELD DIMENSIONS BEFORE ORDERING OR FABRICATING ANY MATERIAL.

Sudhakar Vatti
DESIGN OVERSIGHT Sudhakar Vatti
8-10-09
SIGN OFF DATE

	BY	CHECKED
DESIGN	V. Trinh	S. Nagi
DETAILS	V. Trinh	S. Nagi
QUANTITIES	K. Coates	V. Trinh

PREPARED FOR THE STATE OF CALIFORNIA DEPARTMENT OF TRANSPORTATION

V. Trinh
PROJECT ENGINEER

BRIDGE NO. 55E0101
POST MILE 23.1

SOUND WALL NO. 434
STRUCTURE PLAN NO. 2

DESIGN DETAIL SHEET (ENGLISH) (REV. 2/25/05)

ORIGINAL SCALE IN INCHES FOR REDUCED PLANS 0 1 2 3

CU 12235
EA 071631

DISREGARD PRINTS BEARING EARLIER REVISION DATES

REVISION DATES (PRELIMINARY STAGE ONLY) 04/06/09 1/27/09

SHEET 7 OF 24

FILE => 55-e0101-c-sp02.dgn

USERNAME => trmorlok DATE PLOTTED => 04-FEB-2010 TIME PLOTTED => 10:42

DIST	COUNTY	ROUTE	POST MILES TOTAL PROJECT	SHEET No	TOTAL SHEETS
12	Ora	22,405, 605	R0.3/R0.9, 22.3/24.0,3.0/R1.6	1777	1929

REGISTERED CIVIL ENGINEER 7/27/09 DATE

2-1-10
PLANS APPROVAL DATE

The State of California or its officers or agents shall not be responsible for the accuracy or completeness of electronic copies of this plan sheet.

REGISTERED PROFESSIONAL ENGINEER Vinh Trinh No. C 50685 Exp. 09-30-09 CIVIL STATE OF CALIFORNIA

OCTA
550 SOUTH MAIN STREET
ORANGE, CA 92863

WKE, INC.
400 N. TUSTIN AVE, SUITE 285
SANTA ANA, CA 92705

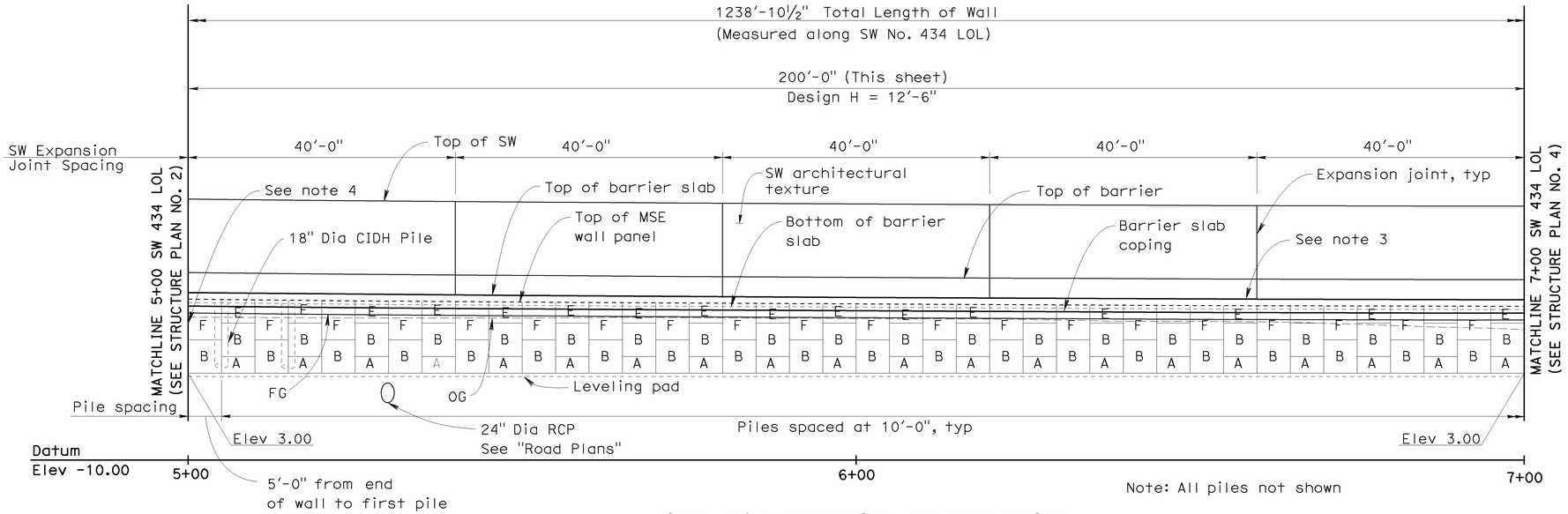

SW 434 MIRROR ELEVATION

1" = 10'

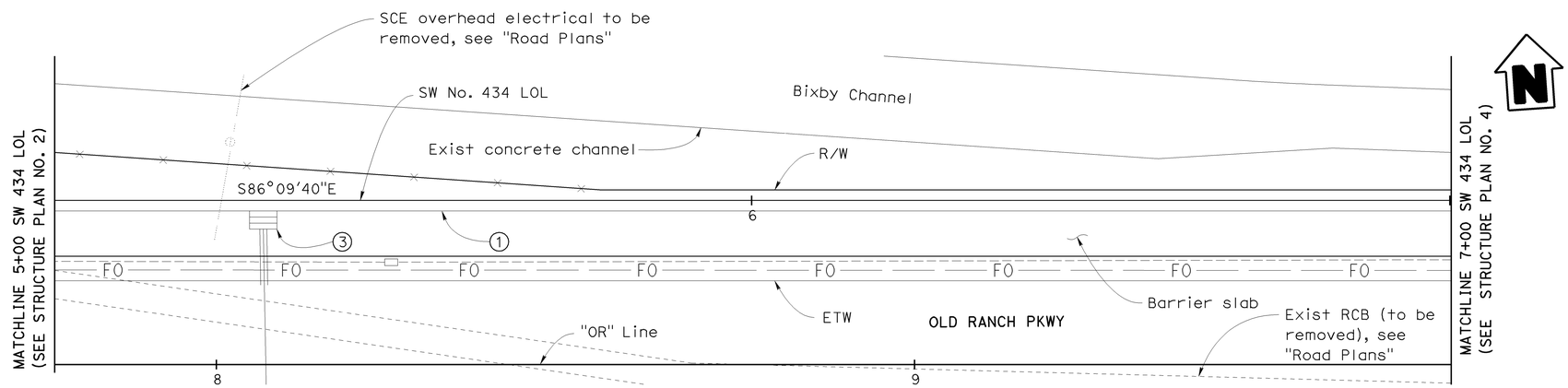

PLAN

1" = 10'

LEGEND

A — Indicates panel type designation (See notes 2 & 3)

1. Concrete Barrier (Type 736 Mod) with Soundwall (H=14'-4")
2. Concrete Barrier (Type 736SV) with Soundwall (H=14'-4")
3. Drainage inlet, see "Drainage Plans"

NOTE

1. For Typical Sections, see "General Plan No. 4" sheet
2. For MSE wall details, see "Panel Details No. 1" and "Panel Details No. 2" sheets
3. For top of wall elevations within limits of MSE wall, see "Structure Plan No. 7"
4. For connection details between MSE wall panels and concrete wall, see "Wall Details No. 1" sheet
5. For sound wall architectural texture, see "Sound Wall Details, SW-32" sheet
6. Elevation shown at leveling pad is at top of leveling pad.
7. For utility, see "Road Plans"

NOTE:
THE CONTRACTOR SHALL VERIFY ALL CONTROLLING FIELD DIMENSIONS BEFORE ORDERING OR FABRICATING ANY MATERIAL.

Sudhakar Vatti
DESIGN OVERSIGHT Sudhakar Vatti
8-10-09
SIGN OFF DATE

	BY	CHECKED
DESIGN	V. Trinh	S. Nagi
DETAILS	V. Trinh	S. Nagi
QUANTITIES	K. Coates	V. Trinh

PREPARED FOR THE STATE OF CALIFORNIA DEPARTMENT OF TRANSPORTATION

V. Trinh
PROJECT ENGINEER

BRIDGE NO. 55E0101
POST MILE 23.1

SOUND WALL NO. 434
STRUCTURE PLAN NO. 3

DESIGN DETAIL SHEET (ENGLISH) (REV. 2/25/05)

ORIGINAL SCALE IN INCHES FOR REDUCED PLANS 0 1 2 3

CU 12235
EA 071631

DISREGARD PRINTS BEARING EARLIER REVISION DATES

REVISION DATES (PRELIMINARY STAGE ONLY) 04/06/09 7/27/09

SHEET 8 OF 24

FILE => 55-e0101-c-sp03.dgn

USERNAME => trmorlok DATE PLOTTED => 04-FEB-2010 TIME PLOTTED => 10:43

DIST	COUNTY	ROUTE	POST MILES TOTAL PROJECT	SHEET No	TOTAL SHEETS
12	Ora	22,405, 605	R0.3/R0.9, 22.3/24.0,3.0/R1.6	1778	1929

REGISTERED CIVIL ENGINEER 7/27/09 DATE

2-1-10
PLANS APPROVAL DATE

REGISTERED PROFESSIONAL ENGINEER Vinh Trinh No. C 50685 Exp. 09-30-09 CIVIL STATE OF CALIFORNIA

The State of California or its officers or agents shall not be responsible for the accuracy or completeness of electronic copies of this plan sheet.

OCTA
550 SOUTH MAIN STREET
ORANGE, CA 92863

WKE, INC.
400 N. TUSTIN AVE, SUITE 285
SANTA ANA, CA 92705

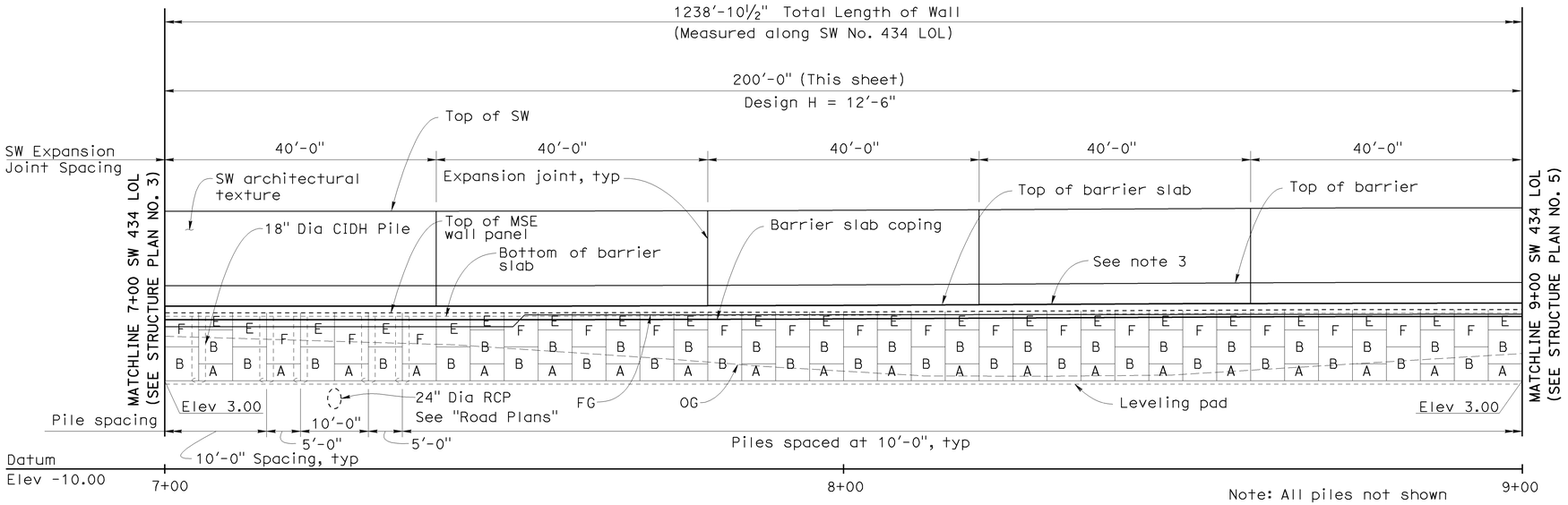

SW 434 MIRROR ELEVATION

1" = 10'

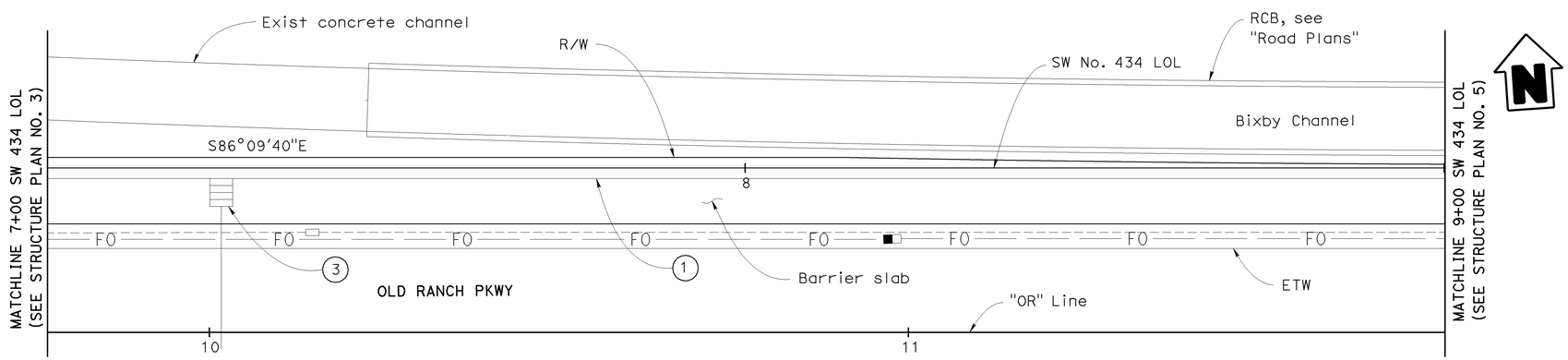

PLAN

1" = 10'

LEGEND

A — Indicates panel type designation (See notes 2 & 3)

1 Concrete Barrier (Type 736 Mod) with Soundwall (H=14'-4")

2 Concrete Barrier (Type 736SV) with Soundwall (H=14'-4")

3 Drainage inlet, see "Drainage Plans"

NOTE

1. For Typical Sections, see "General Plan No. 4" sheet
2. For MSE wall details, see "Panel Details No. 1" and "Panel Details No. 2" sheets
3. For top of wall elevations within limits of MSE wall, see "Structure Plan No. 7"
4. For sound wall architectural texture, see "Sound Wall Details, SW-32" sheet
5. Elevation shown at leveling pad is at top of leveling pad.
6. For utility, see "Road Plans"

NOTE:
THE CONTRACTOR SHALL VERIFY ALL CONTROLLING FIELD DIMENSIONS BEFORE ORDERING OR FABRICATING ANY MATERIAL.

Sudhakar Vatti
DESIGN OVERSIGHT Sudhakar Vatti
8-10-09
SIGN OFF DATE

	BY	CHECKED
DESIGN	V. Trinh	S. Nagi
DETAILS	V. Trinh	S. Nagi
QUANTITIES	K. Coates	V. Trinh

PREPARED FOR THE STATE OF CALIFORNIA DEPARTMENT OF TRANSPORTATION

V. Trinh
PROJECT ENGINEER

BRIDGE NO. 55E0101
POST MILE 23.1

SOUND WALL NO. 434
STRUCTURE PLAN NO. 4

DESIGN DETAIL SHEET (ENGLISH) (REV. 2/25/05)

ORIGINAL SCALE IN INCHES FOR REDUCED PLANS 0 1 2 3

CU 12235
EA 071631

DISREGARD PRINTS BEARING EARLIER REVISION DATES

REVISION DATES (PRELIMINARY STAGE ONLY) 04/06/09 7/27/09

SHEET 9 OF 24

FILE => 55-e0101-c-sp04.dgn

USERNAME => trmorlok DATE PLOTTED => 04-FEB-2010 TIME PLOTTED => 10:43

DIST	COUNTY	ROUTE	POST MILES TOTAL PROJECT	SHEET No	TOTAL SHEETS
12	Ora	22,405, 605	R0.3/R0.9, 22.3/24.0,3.0/R1.6	1779	1929

REGISTERED CIVIL ENGINEER 7/27/09 DATE

2-1-10
PLANS APPROVAL DATE

REGISTERED PROFESSIONAL ENGINEER Vinh Trinh No. C 50685 Exp. 09-30-09 CIVIL STATE OF CALIFORNIA

The State of California or its officers or agents shall not be responsible for the accuracy or completeness of electronic copies of this plan sheet.

OCTA
550 SOUTH MAIN STREET
ORANGE, CA 92863

WKE, INC.
400 N. TUSTIN AVE, SUITE 285
SANTA ANA, CA 92705

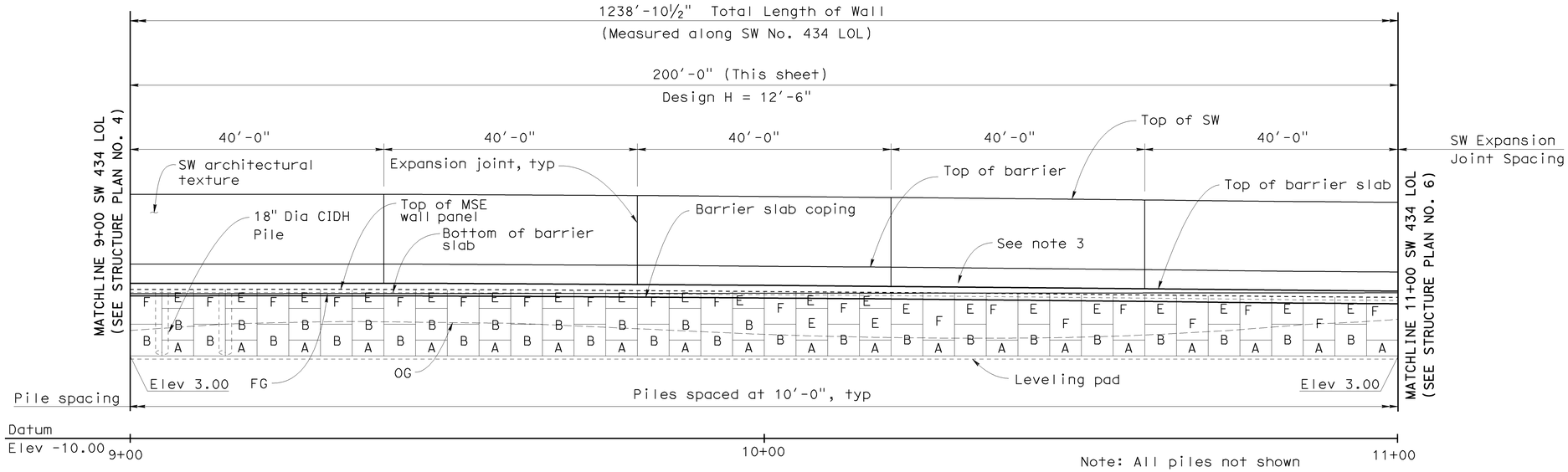

SW 434 MIRROR ELEVATION

1" = 10'

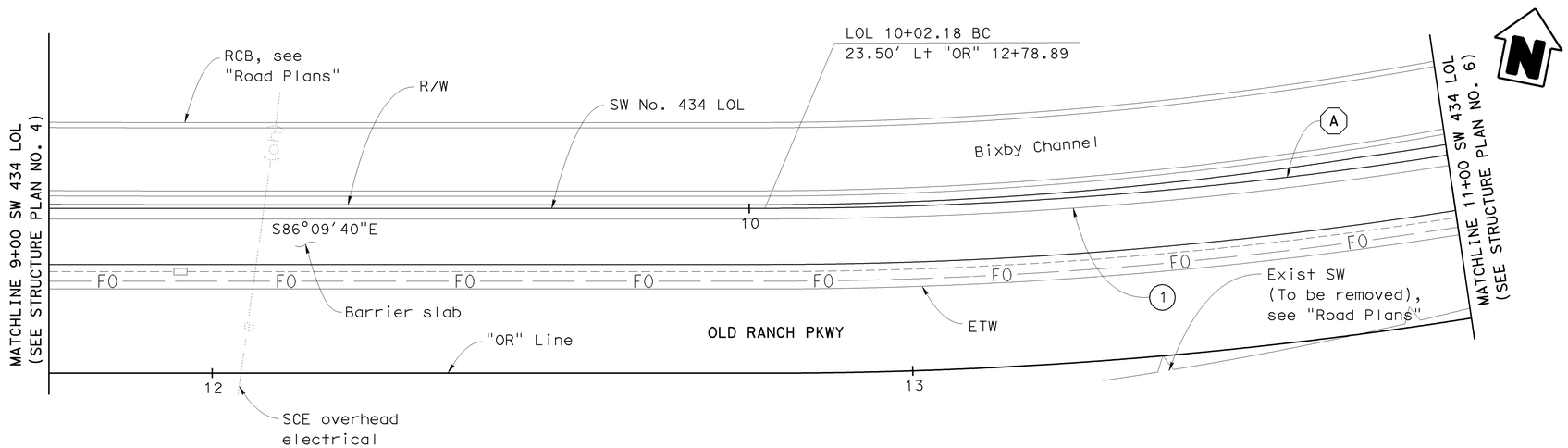

PLAN

1" = 10'

LEGEND

A — Indicates panel type designation (See notes 2 & 3)

1 Concrete Barrier (Type 736 Mod) with Soundwall (H=14'-4")

2 Concrete Barrier (Type 736SV) with Soundwall (H=14'-4")

NOTE

1. For Typical Sections, see "General Plan No. 4" sheet
2. For MSE wall details, see "Panel Details No. 1" and "Panel Details No. 2" sheets
3. For top of wall elevations within limits of MSE wall, see "Structure Plan No. 7"
4. For sound wall architectural texture, see "Sound Wall Details, SW-32" sheet
5. Elevation shown at leveling pad is at top of leveling pad.
6. For utility, see "Road Plans"

CURVE DATA

NO.	R	Δ	T	L
A	626.50'	30°08'24"	168.69'	329.57'

NOTE:
THE CONTRACTOR SHALL VERIFY ALL CONTROLLING FIELD DIMENSIONS BEFORE ORDERING OR FABRICATING ANY MATERIAL.

Sudhakar Vatti
DESIGN OVERSIGHT Sudhakar Vatti
8-10-09
SIGN OFF DATE

	BY	CHECKED
DESIGN	V. Trinh	S. Nagi
DETAILS	V. Trinh	S. Nagi
QUANTITIES	K. Coates	V. Trinh

PREPARED FOR THE STATE OF CALIFORNIA DEPARTMENT OF TRANSPORTATION

V. Trinh
PROJECT ENGINEER

BRIDGE NO. 55E0101
POST MILE 23.1

SOUND WALL NO. 434
STRUCTURE PLAN NO. 5

DESIGN DETAIL SHEET (ENGLISH) (REV. 2/25/05)

ORIGINAL SCALE IN INCHES FOR REDUCED PLANS 0 1 2 3

CU 12235
EA 071631

DISREGARD PRINTS BEARING EARLIER REVISION DATES
REVISION DATES (PRELIMINARY STAGE ONLY) 04/06/09 7/21/09

SHEET 10 OF 24

FILE => 55-e0101-c-sp05.dgn

USERNAME => trmorlok DATE PLOTTED => 04-FEB-2010 TIME PLOTTED => 10:43

DIST	COUNTY	ROUTE	POST MILES TOTAL PROJECT	SHEET No	TOTAL SHEETS
12	Ora	22,405, 605	R0.3/R0.9, 22.3/24.0,3.0/R1.6	1780	1929

REGISTERED CIVIL ENGINEER 7/27/09 DATE

2-1-10
PLANS APPROVAL DATE

REGISTERED PROFESSIONAL ENGINEER Vinh Trinh No. C 50685 Exp. 09-30-09 CIVIL STATE OF CALIFORNIA

The State of California or its officers or agents shall not be responsible for the accuracy or completeness of electronic copies of this plan sheet.

OCTA
550 SOUTH MAIN STREET
ORANGE, CA 92863

WKE, INC.
400 N. TUSTIN AVE, SUITE 285
SANTA ANA, CA 92705

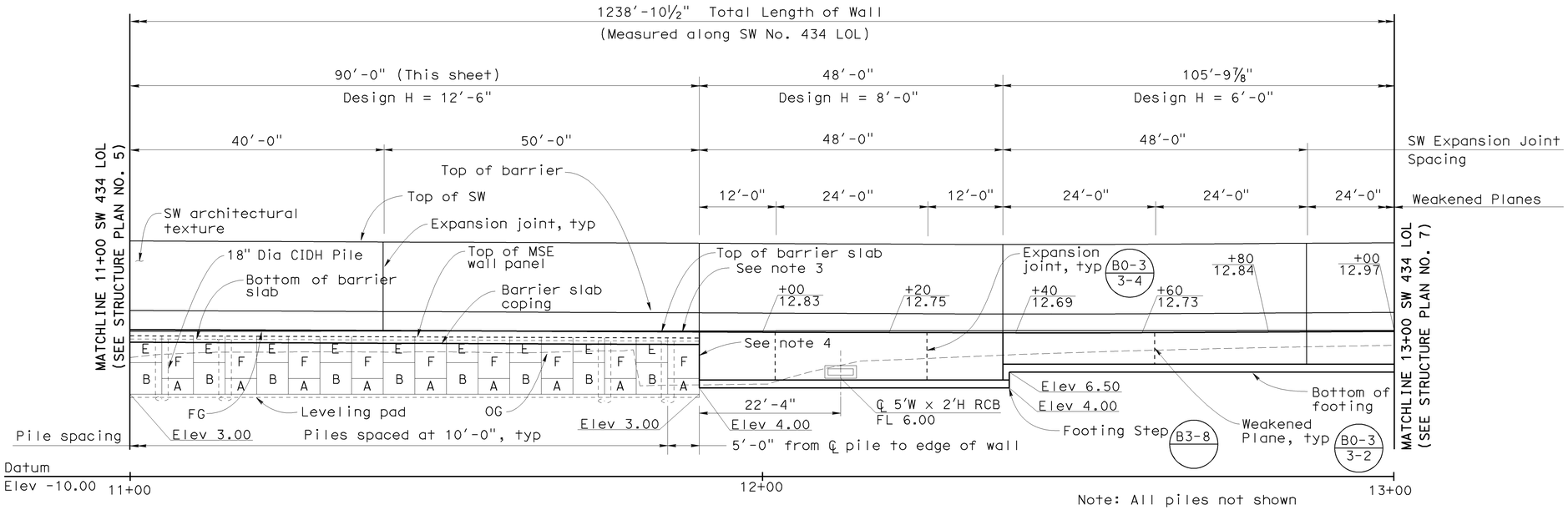

SW 434 MIRROR ELEVATION

1" = 10'

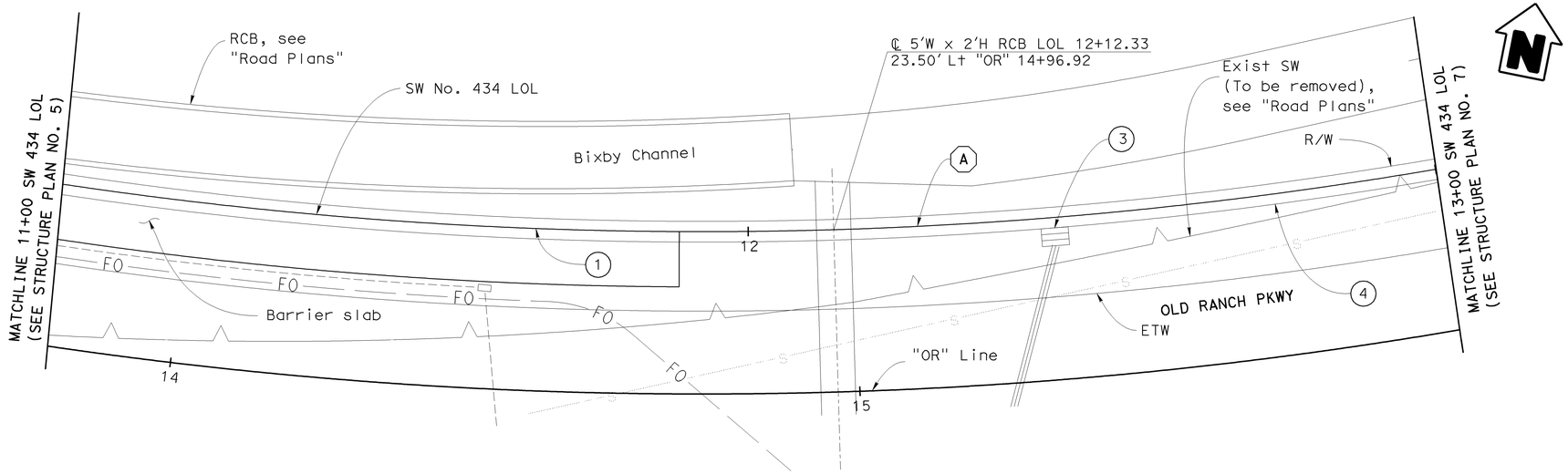

PLAN

1" = 10'

LEGEND

A — Indicates panel type designation (See notes 2 & 3)

1. Concrete Barrier (Type 736 Mod) with Soundwall (H=14'-4")
2. Concrete Barrier (Type 736SV) with Soundwall (H=14'-4")
3. Drainage inlet, see "Drainage Plans"
4. Concrete barrier (Type 736A Mod) with Soundwall (H=14'-4")

NOTE

1. For Typical Sections, see "General Plan No. 4" sheet
2. For MSE wall details, see "Panel Details No. 1" and "Panel Details No. 2" sheets
3. For top of wall elevations within limits of MSE wall, see "Structure Plan No. 7"
4. For connection details between MSE wall panels and concrete wall, see "Wall Details No. 1" sheet
5. For sound wall architectural texture, see "Sound Wall Details, SW-32" sheet
6. Elevation shown at leveling pad is at top of leveling pad.
7. For utility, see "Road Plans"

CURVE DATA

NO.	R	Δ	T	L
A	626.50'	30°08'24"	168.69'	329.57'

NOTE:
THE CONTRACTOR SHALL VERIFY ALL CONTROLLING FIELD DIMENSIONS BEFORE ORDERING OR FABRICATING ANY MATERIAL.

Sudhakar Vatti
DESIGN OVERSIGHT Sudhakar Vatti
8-10-09
SIGN OFF DATE

	BY	CHECKED
DESIGN	V. Trinh	S. Nagi
DETAILS	V. Trinh	S. Nagi
QUANTITIES	K. Coates	V. Trinh

PREPARED FOR THE STATE OF CALIFORNIA DEPARTMENT OF TRANSPORTATION

V. Trinh
PROJECT ENGINEER

BRIDGE NO. 55E0101
POST MILE 23.1

SOUND WALL NO. 434
STRUCTURE PLAN NO. 6

DESIGN DETAIL SHEET (ENGLISH) (REV. 2/25/05)

ORIGINAL SCALE IN INCHES FOR REDUCED PLANS 0 1 2 3

CU 12235
EA 071631

DISREGARD PRINTS BEARING EARLIER REVISION DATES

REVISION DATES (PRELIMINARY STAGE ONLY) 04/06/09 7/27/09

SHEET 11 OF 24

FILE => 55-e0101-c-sp06.dgn

USERNAME => trmartok DATE PLOTTED => 04-FEB-2010 TIME PLOTTED => 10:43

DIST	COUNTY	ROUTE	POST MILES TOTAL PROJECT	SHEET No	TOTAL SHEETS
12	Ora	22,405, 605	R0.3/R0.9, 22.3/24.0,3.0/R1.6	1781	1929

REGISTERED CIVIL ENGINEER 7/27/09 DATE

2-1-10
PLANS APPROVAL DATE

REGISTERED PROFESSIONAL ENGINEER Vinh Trinh No. C 50685 Exp. 09-30-09 CIVIL STATE OF CALIFORNIA

The State of California or its officers or agents shall not be responsible for the accuracy or completeness of electronic copies of this plan sheet.

OCTA
550 SOUTH MAIN STREET
ORANGE, CA 92863

WKE, INC.
400 N. TUSTIN AVE, SUITE 285
SANTA ANA, CA 92705

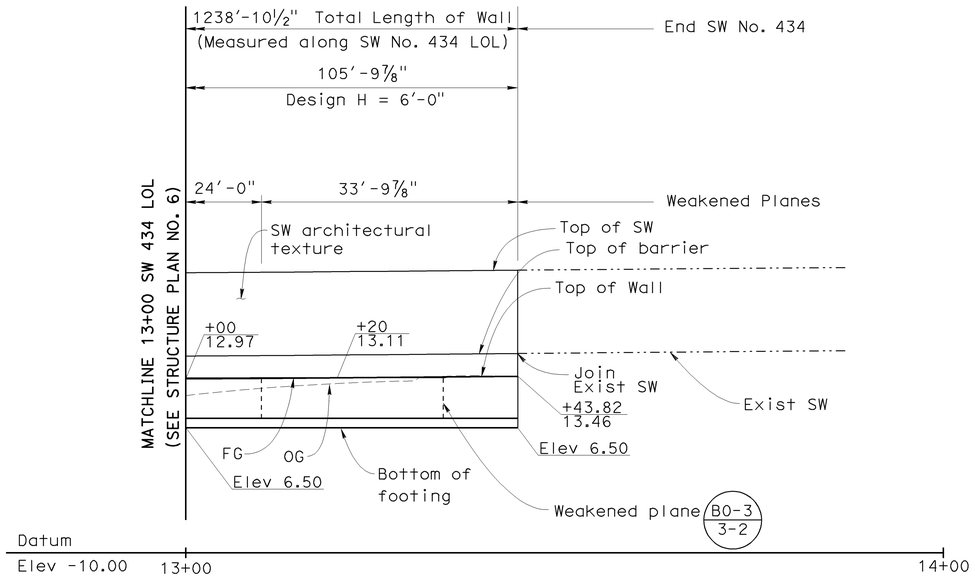

SW 434 MIRROR ELEVATION

1" = 10'

LEGEND

④ Concrete Barrier (Type 736A Mod) with Soundwall (H=14'-4")

NOTE

1. For Typical Sections, see "General Plan No. 4" sheet
2. For sound wall architectural texture see "Sound Wall Details, SW-32" sheet

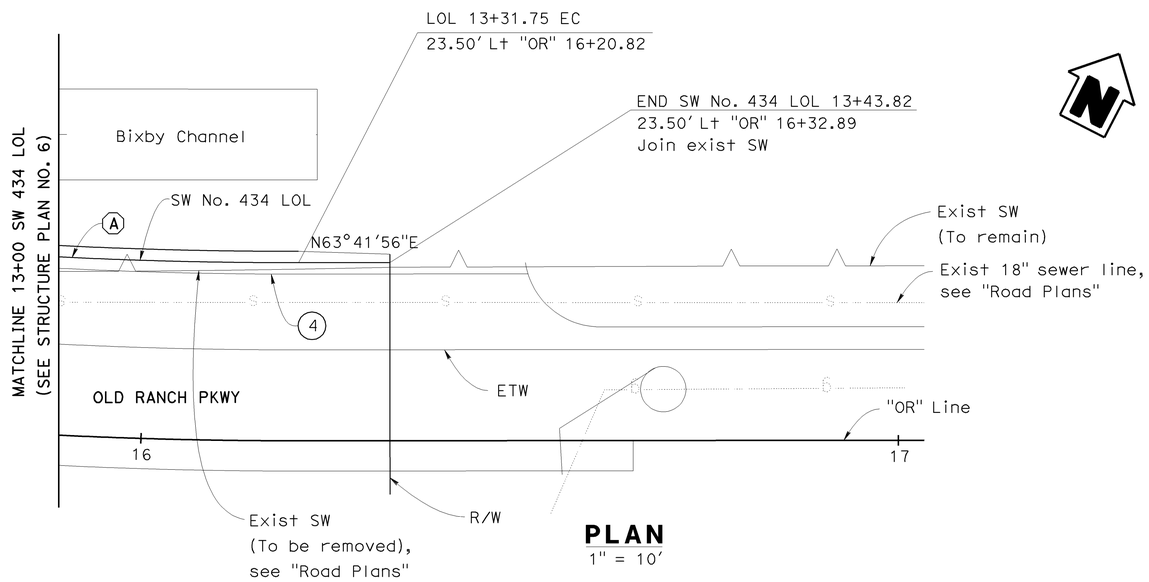

PLAN

1" = 10'

RW 434 LOL Station	Top of Wall Elevation (ft)
1+04.95	26.96
1+20.00	26.23
1+40.00	25.29
1+60.00	24.40
1+80.00	23.53
1+99.95	22.67
5+00.00	15.07
5+20.00	14.90
5+40.00	14.73
5+60.00	14.58
5+80.00	14.47
6+00.00	14.36
6+20.00	14.27
6+40.00	14.17
6+60.00	14.10
6+80.00	14.05
7+00.00	14.01
7+20.00	14.01
7+40.00	14.01
7+60.00	14.04
7+80.00	14.09
8+00.00	14.14
8+20.00	14.23
8+40.00	14.33
8+60.00	14.40
8+80.00	14.44

RW 434 LOL Station	Top of Wall Elevation (ft)
9+00.00	14.49
9+20.00	14.48
9+40.00	14.47
9+60.00	14.40
9+80.00	14.28
10+00.00	14.15
10+20.00	13.98
10+40.00	13.80
10+60.00	13.62
10+80.00	13.42
11+00.00	13.23
11+20.00	13.16
11+40.00	13.08
11+60.00	13.00
11+80.00	12.91
11+90.00	12.87

CURVE DATA

NO.	R	Δ	T	L
A	626.50'	30°08'24"	168.69'	329.57'

NOTE:
THE CONTRACTOR SHALL VERIFY ALL CONTROLLING FIELD DIMENSIONS BEFORE ORDERING OR FABRICATING ANY MATERIAL.

Sudhakar Vatti
DESIGN OVERSIGHT Sudhakar Vatti
8-10-09
SIGN OFF DATE

	BY	CHECKED
DESIGN	V. Trinh	S. Nagi
DETAILS	V. Trinh	S. Nagi
QUANTITIES	K. Coates	V. Trinh

PREPARED FOR THE STATE OF CALIFORNIA DEPARTMENT OF TRANSPORTATION

V. Trinh
PROJECT ENGINEER

BRIDGE NO. 55E0101
POST MILE 23.1

SOUND WALL NO. 434
STRUCTURE PLAN NO. 7

DESIGN DETAIL SHEET (ENGLISH) (REV. 2/25/05)

ORIGINAL SCALE IN INCHES FOR REDUCED PLANS 0 1 2 3

CU 12235
EA 071631

DISREGARD PRINTS BEARING EARLIER REVISION DATES

REVISION DATES (PRELIMINARY STAGE ONLY) 04/06/09 7/27/09

SHEET 12 OF 24

FILE => 55-e0101-c-sp07.dgn

USERNAME => trmorlok DATE PLOTTED => 04-FEB-2010 TIME PLOTTED => 10:43

DIST	COUNTY	ROUTE	POST MILES TOTAL PROJECT	SHEET No	TOTAL SHEETS
12	Ora	22,405, 605	R0.3/R0.9, 22.3/24.0,3.0/R1.6	1782	1929

REGISTERED CIVIL ENGINEER — DATE 7/27/09

2-1-10
PLANS APPROVAL DATE

REGISTERED PROFESSIONAL ENGINEER — Vinh Trinh — No. C 50685 — Exp. 09-30-09 — CIVIL — STATE OF CALIFORNIA

The State of California or its officers or agents shall not be responsible for the accuracy or completeness of electronic copies of this plan sheet.

OCTA
550 SOUTH MAIN STREET
ORANGE, CA 92863

WKE, INC.
400 N. TUSTIN AVE, SUITE 285
SANTA ANA, CA 92705

NOTES

1. Place reinforced elastomeric bearing pads in all of the panel joints. Place one in each vertical joint at intersections with horizontal joints. Place two per panel in each horizontal joint.
   ¾" x 2⅜" x 6" for vertical joints
   ¾" x 4" x 6" for horizontal joints
2. Top of Panels E and F shall be cast to conform to wall profile
3. Omit wire mat when vertical spacing between mats is less than 6"
4. Top welded wire mat in wall shall be sloped -5% min to -15% max with respect to the roadway slope. Wire mats below the top level may be sloped down as required to maintain 6" min separation from other mats

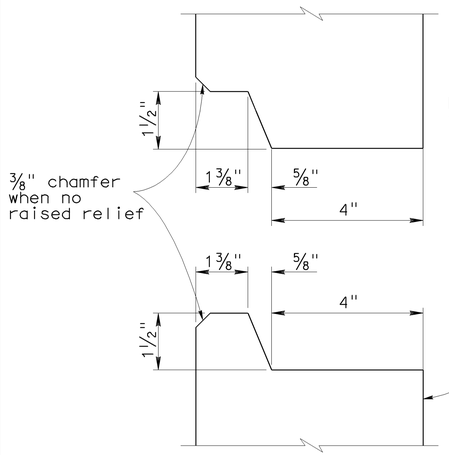

HORIZONTAL JOINT DETAIL

6" = 1'-0"

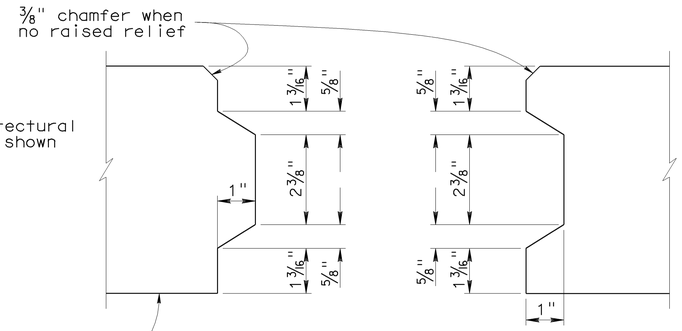

VERTICAL JOINT DETAIL

6" = 1'-0"

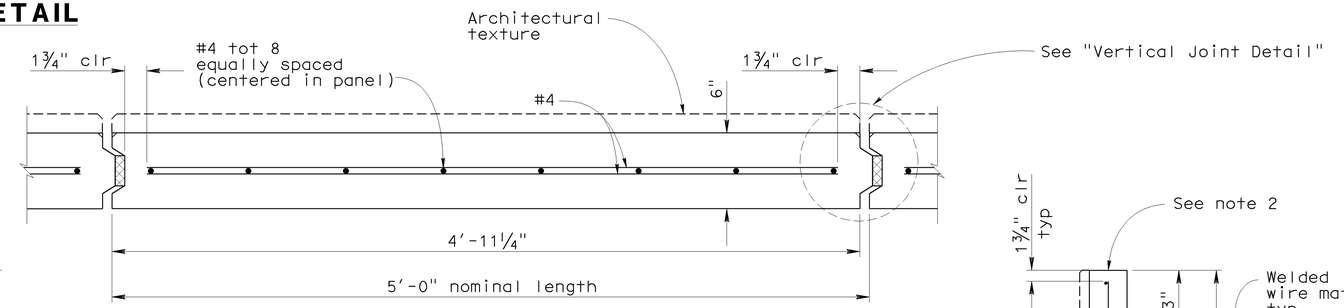

MSE WALL PANEL PLAN

2" = 1'-0"

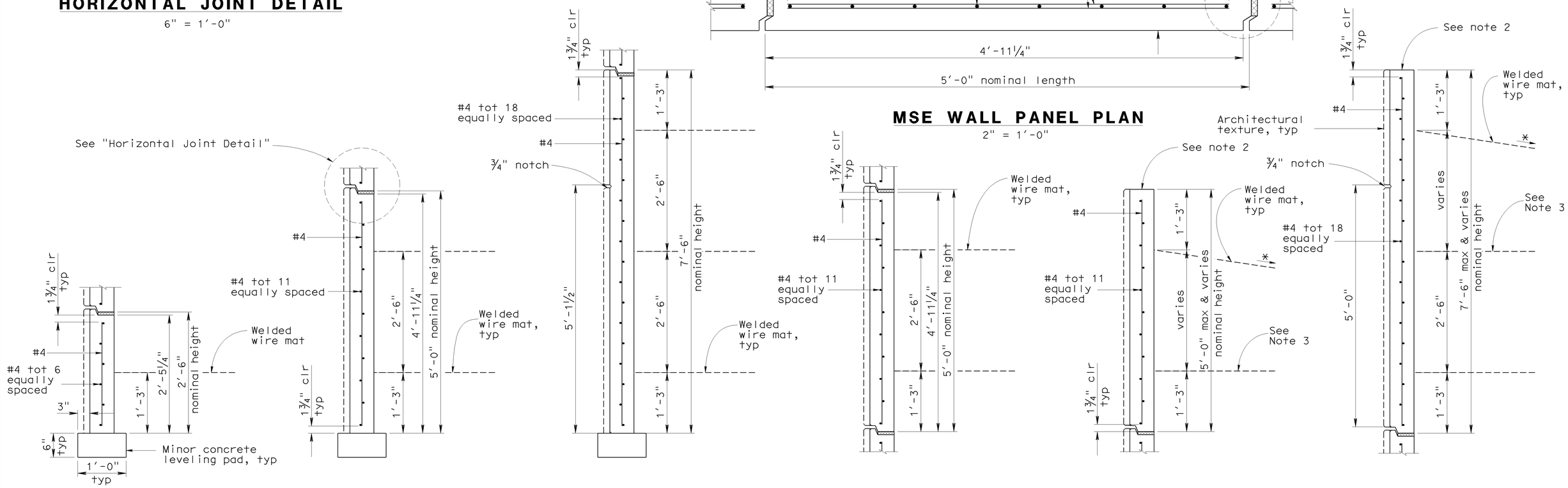

PANEL A — PANEL B — PANEL C — PANEL D — PANEL E — PANEL F

MSE WALL PANEL SECTIONS

1" = 1'-0"
* See Note 4

NOTE:
THE CONTRACTOR SHALL VERIFY ALL CONTROLLING FIELD DIMENSIONS BEFORE ORDERING OR FABRICATING ANY MATERIAL.

Sudhakar Vatti
DESIGN OVERSIGHT — Sudhakar Vatti
8-10-09
SIGN OFF DATE

	BY	CHECKED
DESIGN	V. Trinh	S. Nagi
DETAILS	V. Trinh	S. Nagi
QUANTITIES	K. Coates	V. Trinh

PREPARED FOR THE STATE OF CALIFORNIA DEPARTMENT OF TRANSPORTATION

V. Trinh
PROJECT ENGINEER

BRIDGE NO. 55E0101
POST MILE 23.1

SOUND WALL NO. 434
PANEL DETAILS NO. 1

DESIGN DETAIL SHEET (ENGLISH) (REV. 2/25/05)

ORIGINAL SCALE IN INCHES FOR REDUCED PLANS 0 1 2 3

CU 12235
EA 071631

DISREGARD PRINTS BEARING EARLIER REVISION DATES — REVISION DATES (PRELIMINARY STAGE ONLY) 04/06/09 7/27/09

SHEET 13 OF 24

FILE => 55-e0101-g-pdt01.dgn

USERNAME => s135318 DATE PLOTTED => 04-FEB-2010 TIME PLOTTED => 11:02

DIST	COUNTY	ROUTE	POST MILES TOTAL PROJECT	SHEET No	TOTAL SHEETS
12	Ora	22,405, 605	R0.3/R0.9, 22.3/24.0,3.0/R1.6	1783	1929

REGISTERED CIVIL ENGINEER 7/27/09 DATE

2-1-10
PLANS APPROVAL DATE

REGISTERED PROFESSIONAL ENGINEER Vinh Trinh No. C 50685 Exp. 09-30-09 CIVIL STATE OF CALIFORNIA

The State of California or its officers or agents shall not be responsible for the accuracy or completeness of electronic copies of this plan sheet.

OCTA
550 SOUTH MAIN STREET
ORANGE, CA 92863

WKE, INC.
400 N. TUSTIN AVE, SUITE 285
SANTA ANA, CA 92705

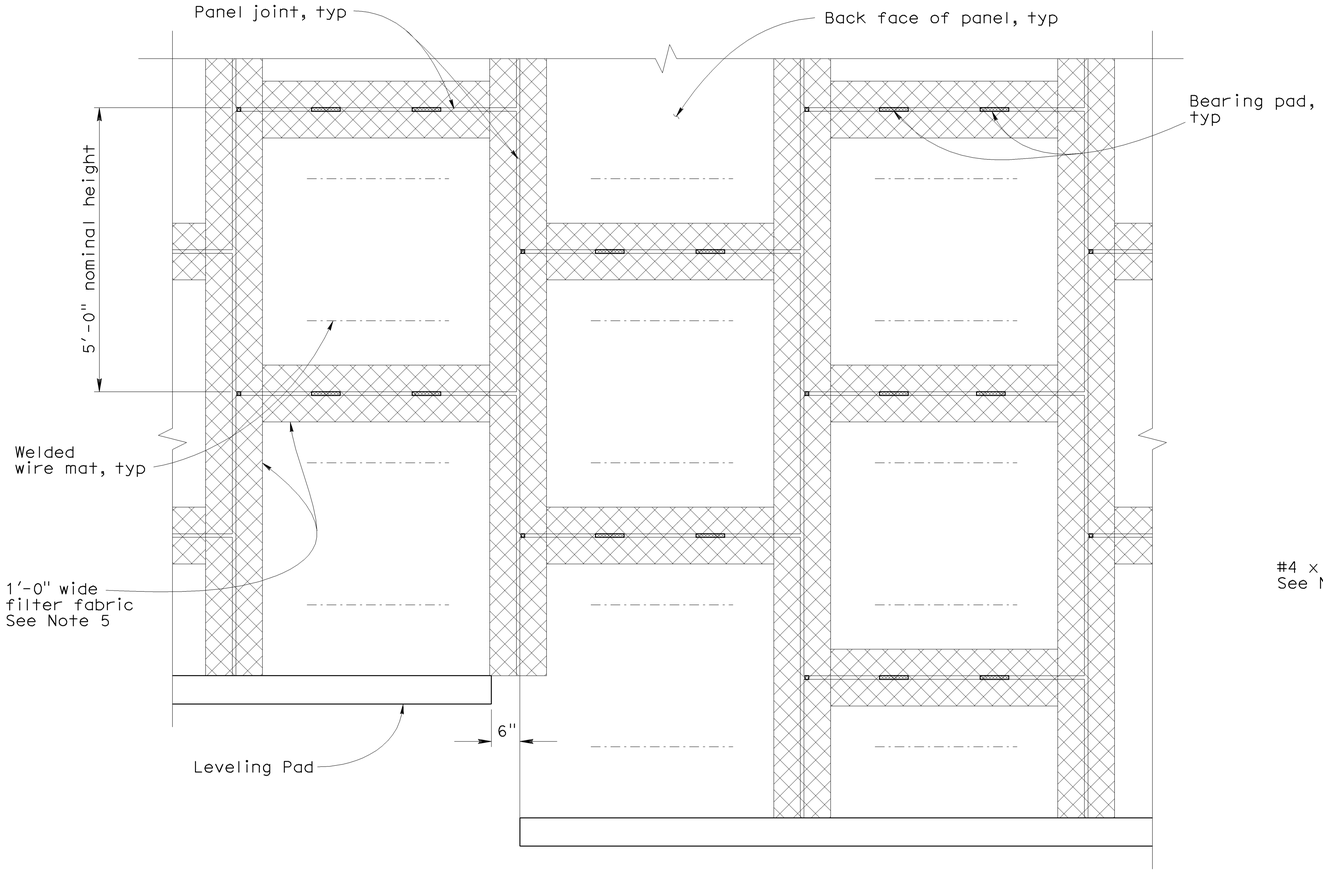

BACK FACE OF WALL ELEVATION

¾" = 1'-0"

NOTES

1. Distance as required to permit coupler to be swaged
2. Place bar centered on connector mat but not welded to it
3. Length equals "Base width" of wall as shown in the "Soil Reinforcement Table," except it shall not be less than 16'-0" for the top 2 levels of mats at the top of the wall
4. See the "Soil Reinforcement Table" for wire size and transverse wire spacing
5. Bond a strip of filter fabric 1'-0" wide over the full length of all panel joints

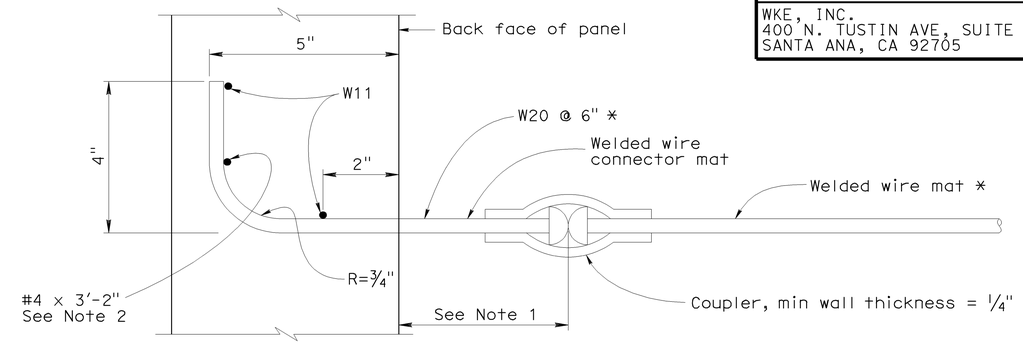

SECTION A-A

No Scale

* Buttonheaded at coupler end

Note: Panel reinforcement not shown

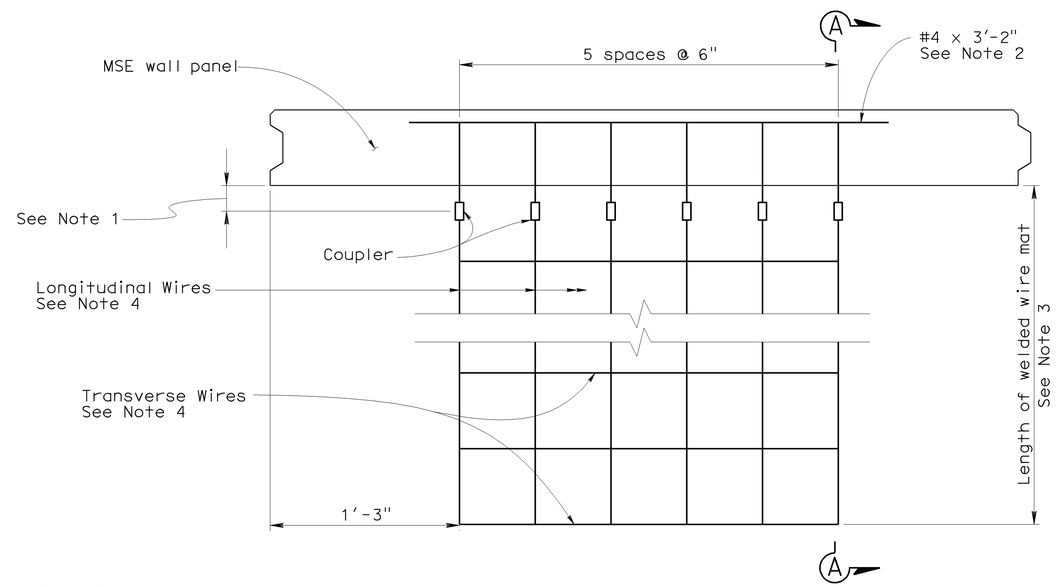

WELDED WIRE MAT DETAIL

No Scale

SOIL REINFORCEMENT TABLE

Design "H"	10'-0"	12'-6"	15'-0"	17'-6"	20'-0"
Base Width	8'-0"	9'-0"	11'-0"	12'-0"	14'-0"
Top level of mesh: Levels below:	1-W11x6" 3-W11x9"	1-W11x6" 2-W11x9" 2-W11x12"	1-W11x6" 2-W11x9" 2-W11x12" W11x18"	1-W11x6" 2-W11x9" 2-W11x12" 2-W11x18"	1-W11x6" 2-W11x9" 2-W11x12" 3-W11x18"

Note: Mesh is indicated sequentially from top level of mesh to bottom level of mesh.

LEGEND

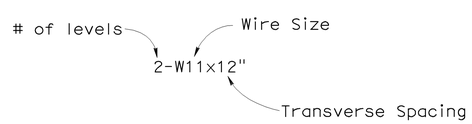

NOTE:
THE CONTRACTOR SHALL VERIFY ALL CONTROLLING FIELD DIMENSIONS BEFORE ORDERING OR FABRICATING ANY MATERIAL.

Sudhakar Vatti
DESIGN OVERSIGHT Sudhakar Vatti
8-10-09
SIGN OFF DATE

	BY	CHECKED
DESIGN	V. Trinh	S. Nagi
DETAILS	V. Trinh	S. Nagi
QUANTITIES	K. Coates	V. Trinh

PREPARED FOR THE STATE OF CALIFORNIA DEPARTMENT OF TRANSPORTATION

V. Trinh
PROJECT ENGINEER

BRIDGE NO. 55E0101
POST MILE 23.1

SOUND WALL NO. 434
PANEL DETAILS NO. 2

DESIGN DETAIL SHEET (ENGLISH) (REV. 2/25/05)

ORIGINAL SCALE IN INCHES FOR REDUCED PLANS 0 1 2 3

CU 12235
EA 071631

DISREGARD PRINTS BEARING EARLIER REVISION DATES 04/06/09 7/27/09

REVISION DATES (PRELIMINARY STAGE ONLY)

SHEET 14 OF 24

FILE => 55-e0101-g-pdt02.dgn

USERNAME => s135318 DATE PLOTTED => 04-FEB-2010 TIME PLOTTED => 11:02

DIST	COUNTY	ROUTE	POST MILES TOTAL PROJECT	SHEET No	TOTAL SHEETS
12	Ora	22,405, 605	R0.3/R0.9, 22.3/24.0,3.0/R1.6	1784	1929

REGISTERED CIVIL ENGINEER 7/27/09 DATE

2-1-10
PLANS APPROVAL DATE

REGISTERED PROFESSIONAL ENGINEER Vinh Trinh No. C 50685 Exp. 09-30-09 CIVIL STATE OF CALIFORNIA

The State of California or its officers or agents shall not be responsible for the accuracy or completeness of electronic copies of this plan sheet.

OCTA
550 SOUTH MAIN STREET
ORANGE, CA 92863

WKE, INC.
400 N. TUSTIN AVE, SUITE 285
SANTA ANA, CA 92705

NOTES:

1. No expansion joints in concrete barrier or barrier slab within MSE wall limits.
2. Bond expansion joint material to concrete wall.
3. Bond a strip of filter fabric, 1'-6" wide, to back of MSE wall concrete panels and the adjacent concrete wall for entire length of vertical joint.

LEGEND:

1. 1½" to 3" Expanded polystyrene recessed 2" into barrier slab at front of MSE wall panel.
2. 1" Expanded polystyrene.
3. Five elastomeric bearing pads ¾" x 4" x 6" bonded to top of each MSE wall panel.
4. ¾" Expanded polystyrene.
5. #5 4'-7" @ 1'-0" bundled with 6 bars
6. #5 5'-0" 3¾" @ 1'-0"

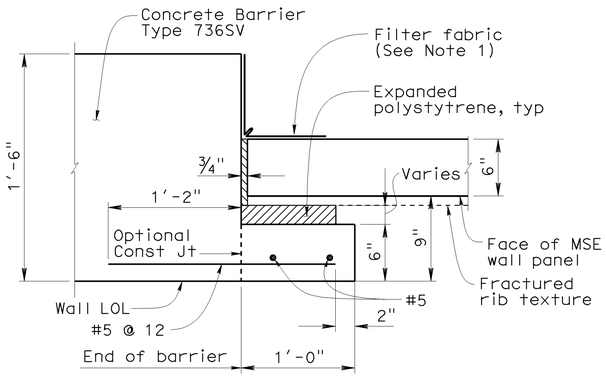

PRECAST PANEL TO BARRIER JOINT DETAIL

No Scale

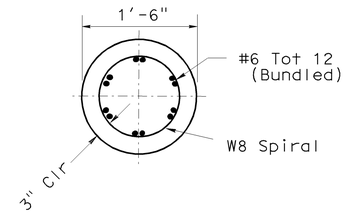

SECTION A-A

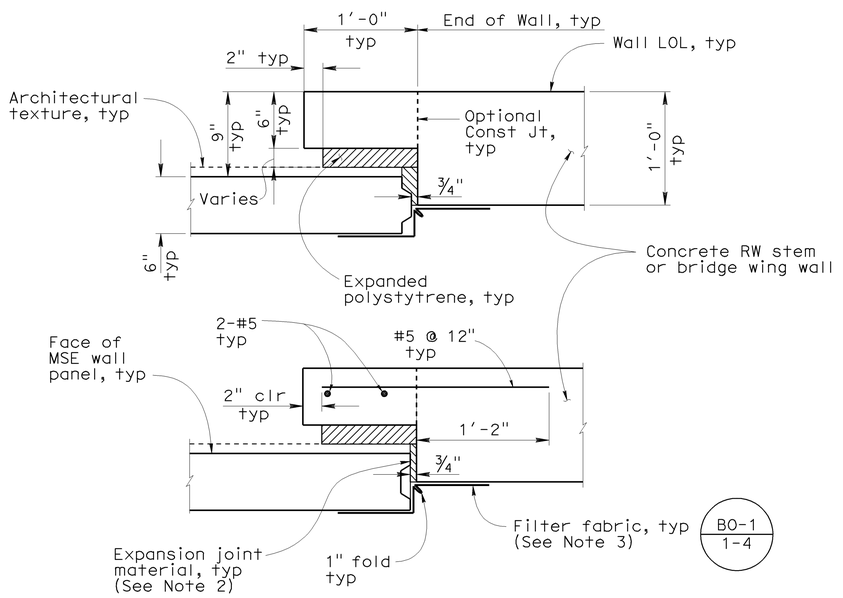

PRECAST PANEL TO CONCRETE WALL JOINT DETAILS

No Scale

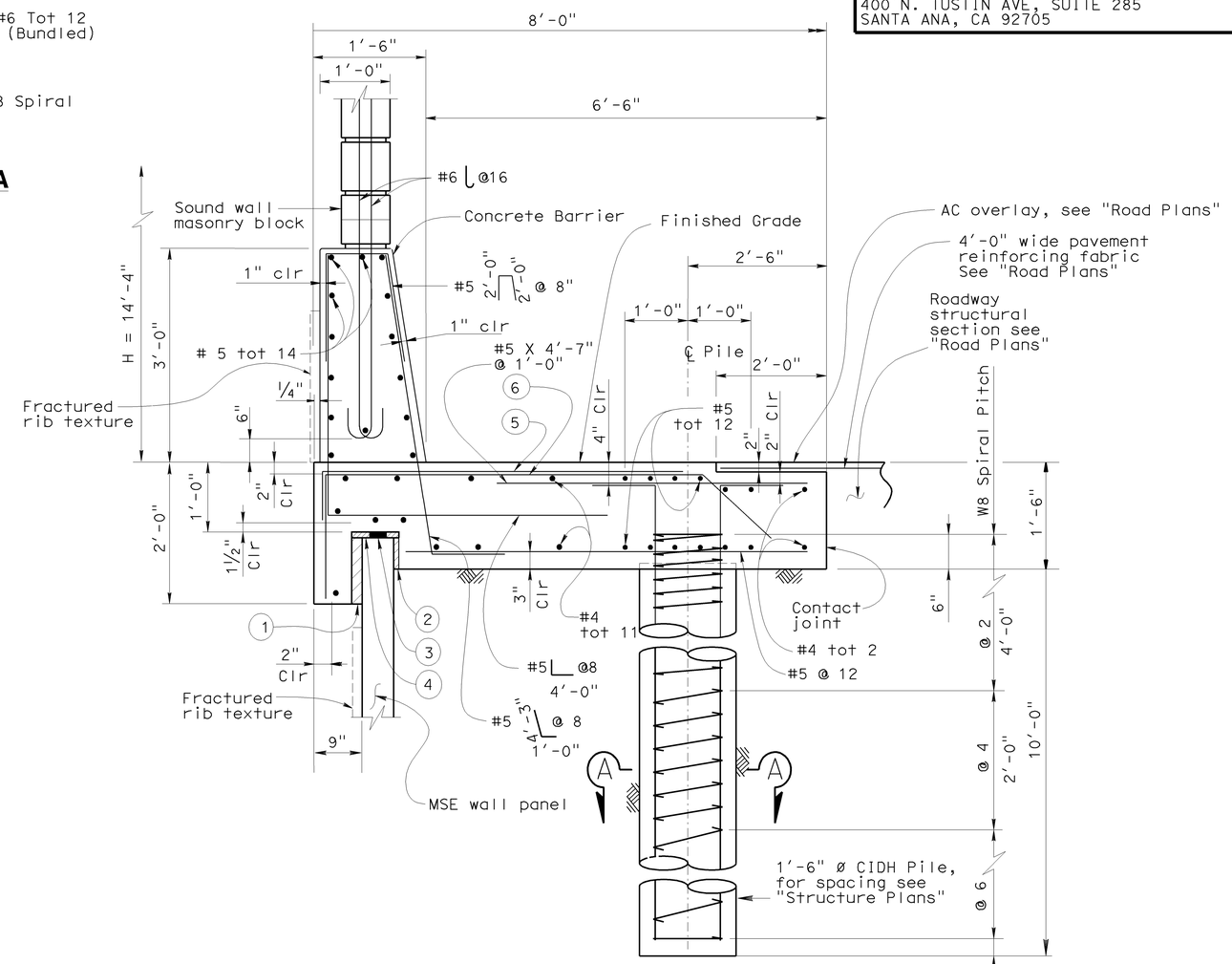

SECTION AT TOP OF WALL WITH SOUNDWALL AND CONCRETE BARRIER

NO SCALE

NOTE:
THE CONTRACTOR SHALL VERIFY ALL CONTROLLING FIELD DIMENSIONS BEFORE ORDERING OR FABRICATING ANY MATERIAL.

Sudhakar Vatti
DESIGN OVERSIGHT Sudhakar Vatti
8-10-09
SIGN OFF DATE

	BY	CHECKED
DESIGN	V. Trinh	S. Nagi
DETAILS	V. Trinh	S. Nagi
QUANTITIES	K. Coates	V. Trinh

PREPARED FOR THE STATE OF CALIFORNIA DEPARTMENT OF TRANSPORTATION

V. Trinh
PROJECT ENGINEER

BRIDGE NO. 55E0101
POST MILE 23.1

SOUND WALL NO. 434
WALL DETAILS NO. 1

DESIGN DETAIL SHEET (ENGLISH) (REV. 2/25/05)

ORIGINAL SCALE IN INCHES FOR REDUCED PLANS 0 1 2 3

CU 12235
EA 071631

DISREGARD PRINTS BEARING EARLIER REVISION DATES

REVISION DATES (PRELIMINARY STAGE ONLY) 04/06/09 7/27/09

SHEET 15 OF 24

FILE => 55-e0101-g-wdt01.dgn

USERNAME => s135318 DATE PLOTTED => 04-FEB-2010 TIME PLOTTED => 11:02

DIST	COUNTY	ROUTE	POST MILES TOTAL PROJECT	SHEET No	TOTAL SHEETS
12	Ora	22,405, 605	R0.3/R0.9, 22.3/24.0,3.0/R1.6	1785	1929

REGISTERED CIVIL ENGINEER 7/27/09 DATE

2-1-10
PLANS APPROVAL DATE

REGISTERED PROFESSIONAL ENGINEER Vinh Trinh No. C 50685 Exp. 09-30-09 CIVIL STATE OF CALIFORNIA

The State of California or its officers or agents shall not be responsible for the accuracy or completeness of electronic copies of this plan sheet.

OCTA
550 SOUTH MAIN STREET
ORANGE, CA 92863

WKE, INC.
400 N. TUSTIN AVE, SUITE 285
SANTA ANA, CA 92705

LEGEND

Indicates bundled bars

NOTES

1. Clearance to reinforcing steel in concrete barrier to be 1"
2. Not all barrier reinforcement shown
3. No expansion joints in concrete barrier or barrier slab within MSE wall limits
4. For information and reinforcement not shown, see "Typical Section at Barrier Slab" on "Wall Details No. 1" sheet
5. In addition to reinforcement shown, additional reinforcement corresponding in size and number to bars cut by the opening shall be placed half on each side of drainage inlet
6. Wall manufacturer to provide details where soil reinforcement is interrupted by drainage inlet

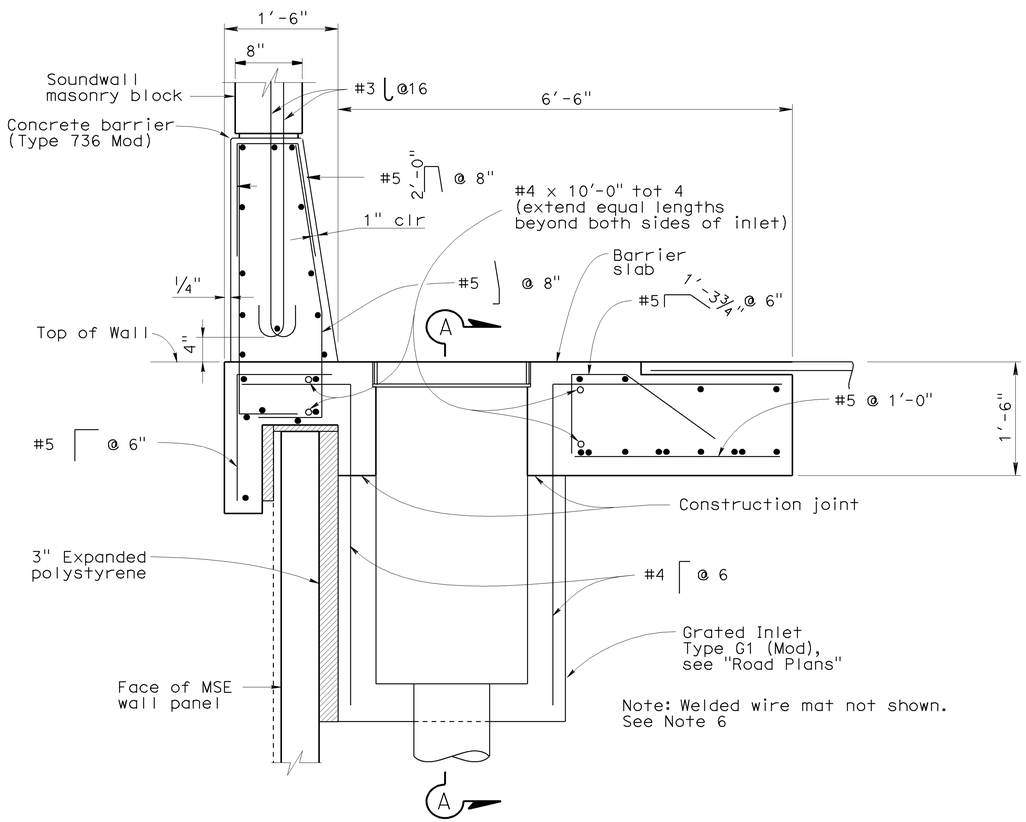

SECTION AT TYPE G1 INLET

No Scale

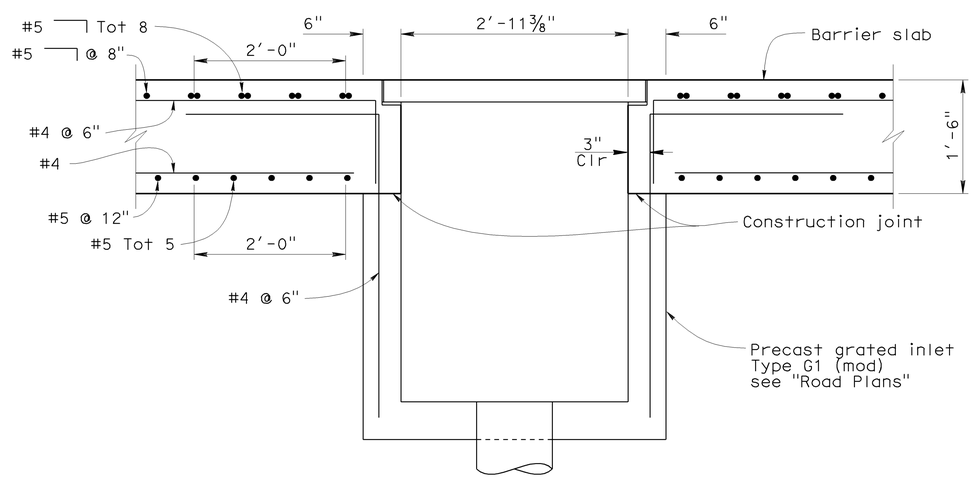

SECTION A-A

No Scale

NOTE:
THE CONTRACTOR SHALL VERIFY ALL CONTROLLING FIELD DIMENSIONS BEFORE ORDERING OR FABRICATING ANY MATERIAL.

Sudhakar Vatti
DESIGN OVERSIGHT Sudhakar Vatti
8-10-09
SIGN OFF DATE

	BY	CHECKED
DESIGN	V. Trinh	S. Nagi
DETAILS	V. Trinh	S. Nagi
QUANTITIES	K. Coates	V. Trinh

PREPARED FOR THE STATE OF CALIFORNIA DEPARTMENT OF TRANSPORTATION

V. Trinh
PROJECT ENGINEER

BRIDGE NO. 55E0101
POST MILE 23.1

SOUND WALL NO. 434
WALL DETAILS NO. 2

DESIGN DETAIL SHEET (ENGLISH) (REV. 2/25/05)

ORIGINAL SCALE IN INCHES FOR REDUCED PLANS 0 1 2 3

CU 12235
EA 071631

DISREGARD PRINTS BEARING EARLIER REVISION DATES

REVISION DATES (PRELIMINARY STAGE ONLY) 04/06/09 7/27/09

SHEET 16 OF 24

FILE => 55-e0101-g-wdt02.dgn

USERNAME => s135318 DATE PLOTTED => 04-FEB-2010 TIME PLOTTED => 11:02

DIST.	COUNTY	ROUTE	POST MILES TOTAL PROJECT	SHEET NO.	TOTAL SHEETS
12	Ora	22,405, 605	R0.3/R0.9, 22.3/24.0,3.0/R1.6	1786	1929

REGISTERED ENGINEER - CIVIL 7-27-09

2-1-10
PLANS APPROVAL DATE

REGISTERED PROFESSIONAL ENGINEER Vinh Trinh No. C 50685 Exp. 09-30-09 CIVIL STATE OF CALIFORNIA

The State of California or its officers or agents shall not be responsible for the accuracy or completeness of electronic copies of this plan sheet.

OCTA
550 SOUTH MAIN STREET
ORANGE, CA 92863

WKE, INC.
400 N. TUSTIN AVE, SUITE 285
SANTA ANA, CA 92705

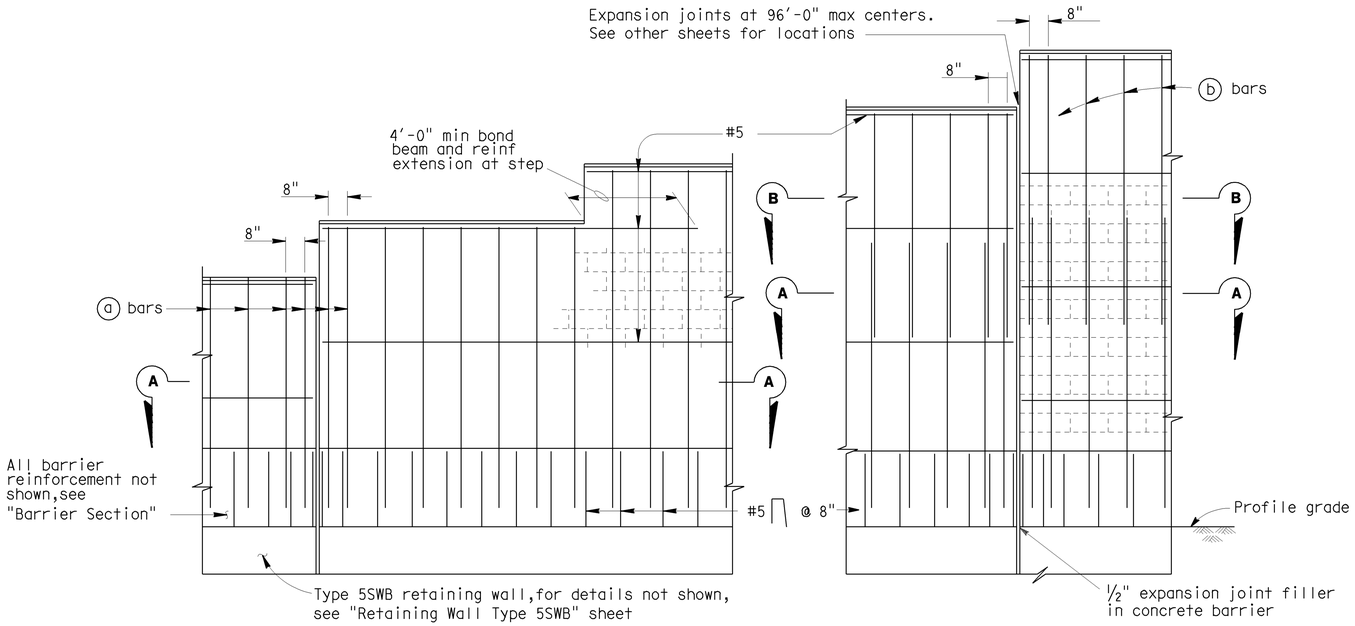

PART ELEVATIONS

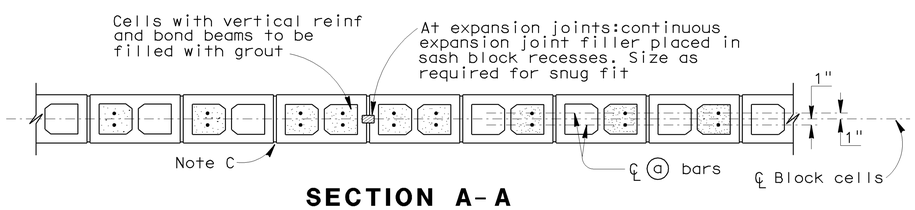

SECTION A-A

For details not shown,see other details

H=6'-4" THRU H=10'-4"

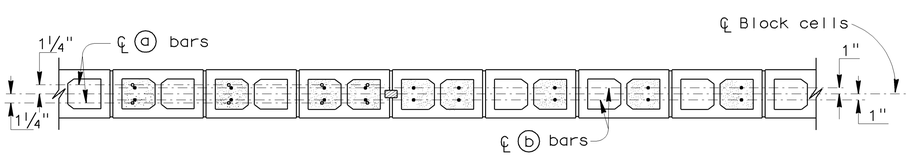

SECTION A-A

SECTION B-B

For details not shown,see other details

H=12'-4" THRU H=16'-4"

SOUNDWALL REINFORCEMENT TABLE

Maximum H	ⓐ bars @ 1'-4" max	ⓑ bars @ 1'-4" max	"y"	f'm (KSI)	Compressive Strength of CMU (KSI)	Maximum H
6'-4"	# 4	———	———	1.5	1.9	6'-4"
8'-4"	# 4	———	———	1.5	1.9	8'-4"
10'-4"	# 4	———	———	1.5	1.9	10'-4"
12'-4"	# 5	# 4	5'-0"	1.5	1.9	12'-4"
14'-4"	# 6	# 4	7'-0"	1.5	1.9	14'-4"
16'-4"	# 6	# 4	9'-0"	2.5	3.7	16'-4"

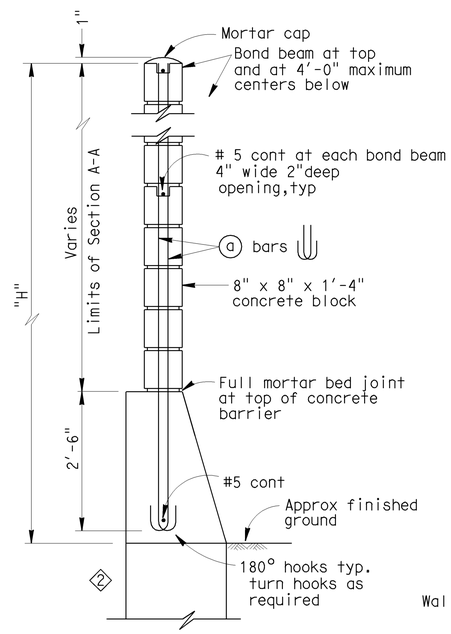

H=6'-4" THRU H=10'-4"

For details not shown,see H=12'-4" thru H=16'-4"

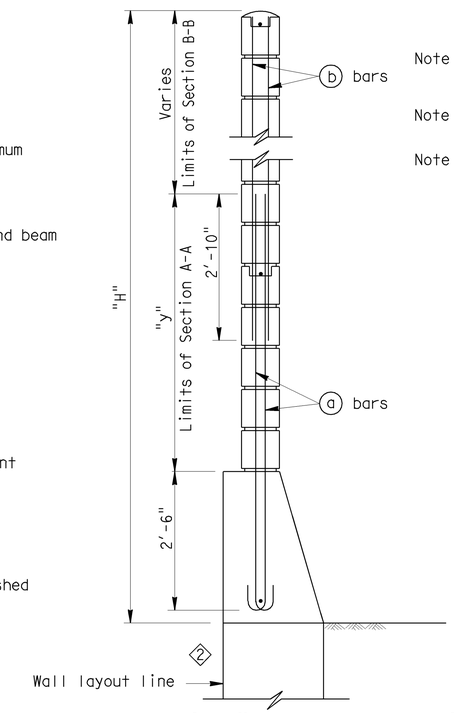

H=12'-4" THRU H=16'-4"

For details not shown,see H=6'-4" thru H=10'-4"

TYPICAL SECTIONS

Note I : For details not shown,see "SOUNDWALL WITH BARRIER ON RETAINING WALL - MASONRY BLOCK -- DETAILS NO.2" sheet.

Note II : Slope ground at traffic side of barrier to drain. Maximum slope ±10%.

Note III: See "SOUNDWALL MASONRY BLOCK - MISCELLANEOUS DETAILS" sheet for other details.

GENERAL NOTES

1 Note A: For type of block pattern and joint finish, see sheets SW-29 to SW-32.

Note B: When blocks are laid in stacked bond, ladder type, galvanized joint reinforcement shall be provided. A minimum of 0.07"-0.14" wire continuous at 4'-0" maximum to be used. Locate reinforcement in joints that are at the approximate midpoint between bond beams.

Note C: Horizontal joints shall be tooled concave or may be weathered.
Vertical joints shall be tooled concave or may be raked.

Note D: For intermediate wall heights that are between the "H's" given. Use the tabular information for the next higher "H".

Note E: Masonry strengths are listed in "SOUNDWALL REINFORCEMENT TABLE".

Note F: Concrete to be used for the barrier shall contain not less than 590 pounds of cementitious material per cubic yard.

SPECIAL DETAILS

STANDARD DRAWING

FILE NO. REVISED

APPROVED BY T SATTER — RESPONSIBLE TECHNICAL SPECIALIST
APPROVAL DATE 2-13-09

RELEASED BY ROBERTO LACALLE — RESPONSIBLE OFFICE CHIEF
RELEASE DATE 2-13-09

1 Revised Note
2 Revised Detail

STATE OF CALIFORNIA
DEPARTMENT OF TRANSPORTATION

DIVISION OF ENGINEERING SERVICES

BRIDGE NO. 55E0101
POST MILE 23.1

SOUNDWALL - MASONRY BLOCK WITH BARRIER ON RETAINING WALL

DETAILS NO. 1

DS OSD 2147A (ENGLISH STANDARD DRAWING "XS" BORDER REV. 01/11/08)

ORIGINAL SCALE IN INCHES FOR REDUCED PLANS 0 1 2 3

CU 12235
EA 071631

DISREGARD PRINTS BEARING EARLIER REVISION DATES

REVISION DATES (PRELIMINARY STAGE ONLY) 04/06/09 1/27/09

SHEET 17 OF 24

USERNAME => s135318

55-e0101-g-wdt03.dgn

DATE PLOTTED => 04-FEB-2010 TIME PLOTTED => 11:02

DIST.	COUNTY	ROUTE	POST MILES TOTAL PROJECT	SHEET NO.	TOTAL SHEETS
12	Ora	22,405, 605	R0.3/R0.9, 22.3/24.0,3.0/R1.6	1787	1929

7-27-09
REGISTERED ENGINEER - CIVIL

2-1-10
PLANS APPROVAL DATE

REGISTERED PROFESSIONAL ENGINEER Vinh Trinh No. C 50685 Exp. 09-30-09 CIVIL STATE OF CALIFORNIA

The State of California or its officers or agents shall not be responsible for the accuracy or completeness of electronic copies of this plan sheet.

OCTA
550 SOUTH MAIN STREET
ORANGE, CA 92863

WKE, INC.
400 N. TUSTIN AVE, SUITE 285
SANTA ANA, CA 92705

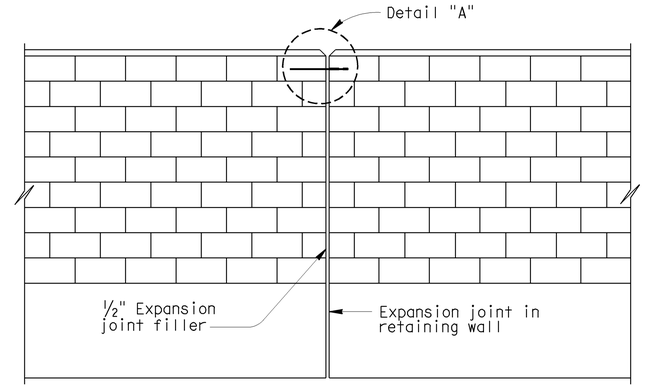

ALIGNMENT KEY DETAIL

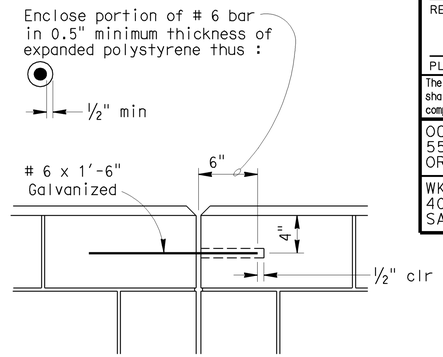

DETAIL A

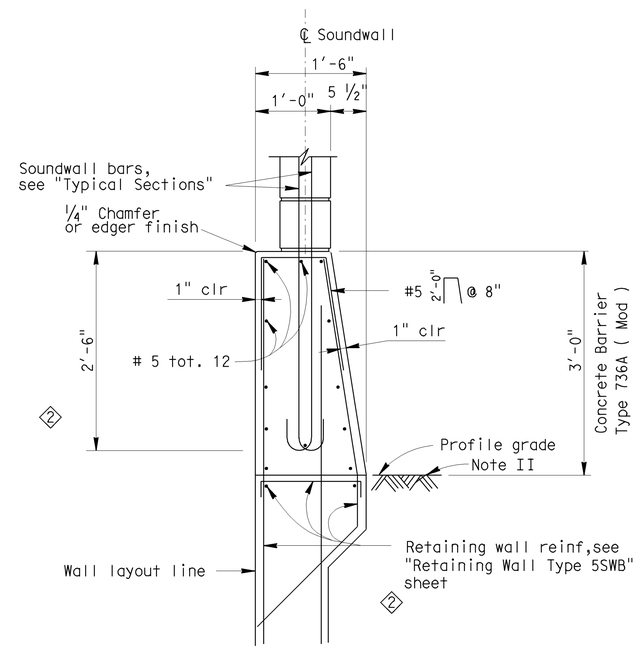

BARRIER SECTION

NOTES:

I : For details not shown,see "RETAINING WALL WITH SOUNDWALL" sheets.

II : Slope ground at traffic side of barrier to drain. Maximum slope ±10%. See Standard Plan B11-56, Note D.

DESIGN NOTES

DESIGN

Uniform Building Code,1997 Edition and the Bridge Design Specifications.

DESIGN WIND LOAD

33 PSF

DESIGN SEISMIC LOAD

0.57 Dead load

REINFORCED CONCRETE

f'c = 3250 PSI
fy = 60 KSI

CONCRETE MASONRY

REGULAR STRENGTH	HIGH STRENGTH	
f'm = 1500 PSI	f'm = 2000 PSI	f'm = 2500 PSI
f_b = 1500 PSI	f_b = 660 PSI	f_b = 830 PSI
fs = 24.0 KSI	fs = 24.0 KSI	fs = 24000 PSI
n = 25.8	n = 19.3	n = 15.5

LOAD FACTORS AND LOAD COMBINATIONS

Working Stress Design (WSD) Percentage of unit stress

Group 1: D + E + SC 100%
Group 2: D + W + SC + E 100%
Group 3: D + 0.71 EQD + E 100%

Where:

D = Dead load
E = Lateral earth pressure
SC = Live load surcharge
W = Wind load
EQD = Seismic dead load

Load Factor Design (LFD)

Group A: βD +1.7 E + 1.7 SC
Group B: βD +1.7 E + 1.3 W
Group C: βD +1.3 E + 1.0 EQE
Group D: βD +1.3 E + 1.0 EQD
Group E: βD +1.1 E + 0.85 (EQE + EQD)

Where : β = 0.9 or 1.2, whichever controls in design
D = Dead load
E = Lateral earth pressure
SC = Live load surcharge
W = Wind load
EQD = Seismic dead load
EQE = Seismic earth load

STRENGTH REDUCTION FACTORS, Ø

Reinforced concrete:
For flexure ---------- Ø=0.90
For shear ---------- Ø=0.85

Concrete masonry:
For flexure ---------- Ø=0.80
For shear ---------- Ø=0.60

Foundations :

See "RETAINING WALL WITH SOUNDWALL" sheets.

SPECIAL DETAILS

STANDARD DRAWING

FILE NO. REVISED

APPROVED BY T SATTER
RESPONSIBLE TECHNICAL SPECIALIST
APPROVAL DATE 4-15-08

RELEASED BY ROBERTO LACALLE
RESPONSIBLE OFFICE CHIEF
RELEASE DATE 4-15-08

1 Deleted Detail
2 Revised Detail

STATE OF CALIFORNIA
DEPARTMENT OF TRANSPORTATION

DIVISION OF ENGINEERING SERVICES

BRIDGE NO. 55E0101
POST MILE 23.1

SOUNDWALL - MASONRY BLOCK WITH BARRIER ON RETAINING WALL

DETAILS NO. 2

DS OSD 2147A (ENGLISH STANDARD DRAWING "XS" BORDER REV. 01/11/08)

ORIGINAL SCALE IN INCHES FOR REDUCED PLANS 0 1 2 3

CU 12235
EA 071631

DISREGARD PRINTS BEARING EARLIER REVISION DATES

REVISION DATES (PRELIMINARY STAGE ONLY) 04/06/09 7/27/09

SHEET 18 OF 24

USERNAME => s135318

55-e0101-g-wdt04.dgn

DATE PLOTTED => 04-FEB-2010 TIME PLOTTED => 11:11:02

DIST.	COUNTY	ROUTE	POST MILES TOTAL PROJECT	SHEET NO.	TOTAL SHEETS
12	Ora	22,405, 605	R0.3/R0.9, 22.3/24.0,3.0/R1.6	1788	1929

REGISTERED ENGINEER - CIVIL 7-27-09

2-1-10
PLANS APPROVAL DATE

REGISTERED PROFESSIONAL ENGINEER Vinh Trinh No. C 50685 Exp. 09-30-09 CIVIL STATE OF CALIFORNIA

The State of California or its officers or agents shall not be responsible for the accuracy or completeness of electronic copies of this plan sheet.

OCTA
550 SOUTH MAIN STREET
ORANGE, CA 92863

WKE, INC.
400 N. TUSTIN AVE, SUITE 285
SANTA ANA, CA 92705

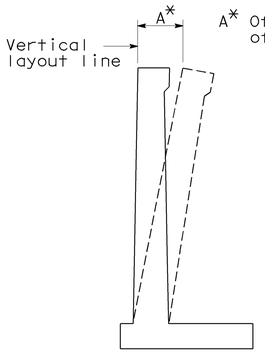

WALL OFFSET

NO SCALE

Values for offsetting forms to be determined by the engineer

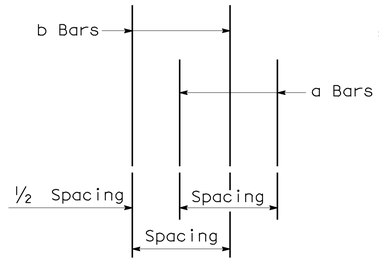

DETAIL A

NO SCALE

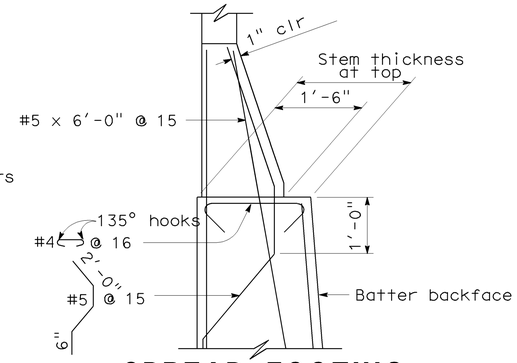

SPREAD FOOTING SECTION WITHOUT HAUNCH

NO SCALE

TABLE 1 : TABLE OF REINFORCING STEEL DIMENSION AND DATA

STEM WITH HAUNCH

DESIGN H	6'	8'	10'	12'	14'	16'	18'	20'	22'	24'	26'	28'	30'	32'
W	8'-6"	8'-6"	9'-3"	10'-0"	11'-3"	12'-3"	13'-3"	14'-6"	15'-9"	17'-0"	18'-6"	20'-0"	21'-3"	22'-9"
F SPREAD FTG.	1'-3"	1'-3"	1'-3"	1'-6"	1'-6"	1'-9"	2'-0"	2'-0"	2'-3"	2'-6"	3'-0"	3'-3"	3'-9"	4'-0"
BATTER	0	½:12	½:12	½:12	½:12	½:12	½:12	½:12	½:12	⅝:12	¾:12	⅞:12	1:12	1:12
STEM THICKNESS @ HAUNCH	1'-0"	1'-0"	1'-0"	1'-0"	1'-0"	1'-0"	1'-0"	1'-0"	1'-0"	1'-0"	1'-0"	1'-0"	1'-0"	1'-0"
a BARS				#6@18**	#7@18**	#8@18**	#9@18**	#10@18**	#8 @ 9*	#8 @ 9*	#7 @ 6*	#10@12**	#9 @ 9*	#11@12**
Y				8'-0"	6'-6"	7'-6"	8'-0"	9'-0"	9'-6"	11'-0"	11'-6"	13'-0"	14'-0"	15'-6"
b BARS	#5 @ 12	#5 @ 12	#5 @ 9	#6@18**	#7@18**	#8@18**	#9@18**	#10@18**	#8 @ 9*	#8 @ 9*	#7 @ 6*	#10@12**	#9 @ 9*	#11@12**
Y	CONT	CONT	CONT	CONT	10'-6"	13'-0"	15'-0"	17'-6"	19'-6"	21'-0"	18'-6"	19'-0"	25'-6"	23'-6"
c BARS					#6 @ 18	#6 @ 18	#6 @ 18	#6 @ 18	#6 @ 18	#6 @ 18	#6 @ 12	#7 @ 12	#7 @ 18	#7 @ 12
SHORTd BARS	#5 @ 12	#5 @ 9	#6 @ 9	#7@18**	#8@18**	#8@18**	#9@18**	#10@18**	#8 @ 9*	#8 @ 9*	#7 @ 6*	#10@12*	#9 @ 9*	#11@12**
X	CONT	CONT	CONT	5'-6"	6'-6"	7'-6"	8'-0"	8'-6"	9'-6"	10'-6"	11'-6"	12'-6"	13'-6"	15'-0"
d BARS				#7@18**	#8@18**	#8@18**	#9@18**	#10@18**	#8 @ 9*	#8 @ 9*	#7 @ 6*	#10@12*	#9 @ 9*	#11@12**
X				CONT	CONT	CONT	CONT	CONT	CONT	CONT	CONT	CONT	CONT	CONT
ULTIMATE BEARING CAPACITY REQUIRED k/sf	6.3	7.8	8.8	10.3	11.4	13.2	15	16.2	17.8	19.4	21.1	22.4	24.4	25.8

TABLE 2 : TABLE OF REINFORCING STEEL DIMENSION AND DATA

	STEM WITH HAUNCH							STEM WITHOUT HAUNCH						
DESIGN H	6'	8'	10'	12'	14'	16'	18'	20'	22'	24'	26'	28'	30'	32'
W		8'-6"	9'-0"	9'-9"	10'-6"	12'-6"	13'-3"	14'-3"	16'-3"	17'-0"	18'-9"	20'-3"	21'-3"	22'-6"
F SPREAD FTG.		1'-3"	1'-3"	1'-3"	1'-3"	1'-6"	1'-6"	1'-9"	2'-3"	2'-3"	2'-9"	3'-3"	3'-9"	3'-9"
BATTER		0	0	0	0	0	0	0	0	0	¼:12	½:12	½:12	½:12
STEM THICKNESS @ HAUNCH		1'-0"	1'-0"	1'-0"	1'-0"	1'-3"	1'-3"							
STEM THICKN @ TOP								1'-6"	2'-0"	2'-0"	2'-0"	2'-0"	2'-0"	2'-0"
a BARS				#6@12**	#5 @ 6*	#8@12**	#8 @ 9*	#9@12**	#9@12**	#7 @ 6*	#7 @ 6*	#7 @ 6*	#9 @ 9*	#11@12**
Y				5'-6"	5'-6"	6'-0"	6'-6"	8'-0"	8'-6"	9'-6"	11'-0"	12'-6"	13'-6"	14'-6"
b BARS		#5 @ 9	#6 @ 9	#6@12**	#5 @ 6*	#8@12**	#8 @ 9*	#9@12**	#9@12**	#7 @ 6*	#7 @ 6*	#7 @ 6*	#9 @ 9*	#11@12**
Y		CONT	CONT	CONT	CONT	8'-6"	11'-0"	11'-0"	11'-6"	17'-0"	19'-6"	21'-6"	24'-0"	24'-0"
c BARS						#6 @ 12	#7 @ 18	#7 @ 12	#7 @ 12	#6 @ 12	#6 @ 12	#6 @ 12	#7 @ 18	#7 @ 12
SHORTd BARS		#5 @ 9	#6 @ 9	#7@18**	#5 @ 6*	#8@12**	#8 @ 9*	#9@12**	#9@12**	#7 @ 6*	#9 @ 6*	#9 @ 6*	#9 @ 9*	#8 @ 6*
X		CONT	CONT	6'-0"	5'-6"	7'-0"	8'-6"	9'-0"	10'-0"	11'-0"	12'-0"	13'-0"	14'-0"	15'-0"
d BARS				#7@18**	#5 @ 6*	#9@18**	#8 @ 9*	#9@12**	#9@12**	#7 @ 6*	#9 @ 6*	#9 @ 6*	#9 @ 9*	#8 @ 6*
X				CONT	CONT	CONT	CONT	CONT	CONT	CONT	CONT	CONT	CONT	CONT
ULTIMATE BEARING CAPACITY REQUIRED k/sf		7.8	9	10.3	11.8	12.6	14.3	16.2	17.3	19.1	20.6	22.3	24.5	25.8

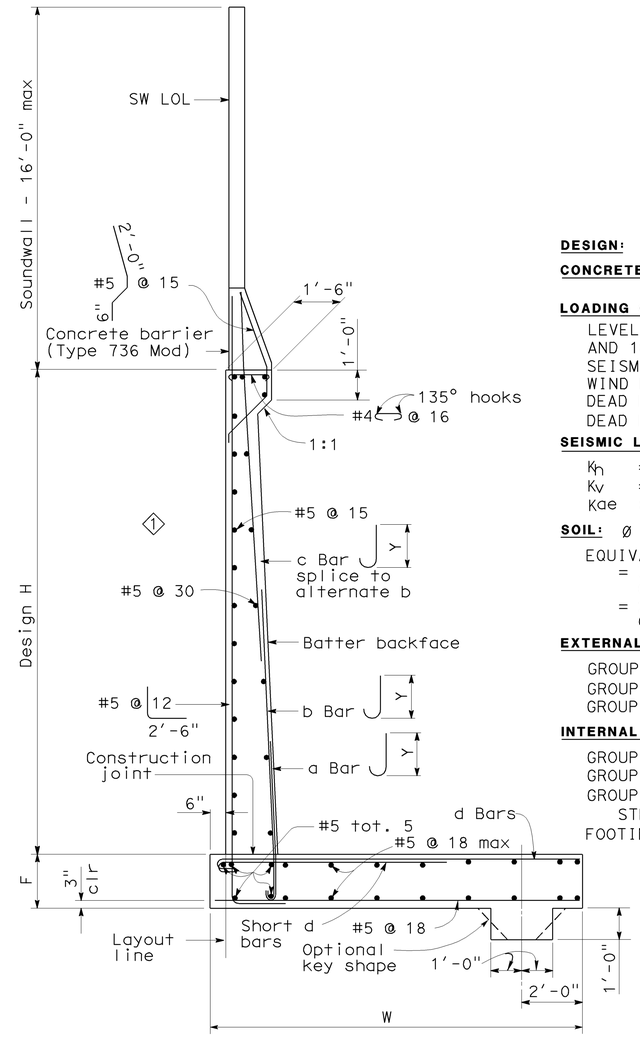

SPREAD FOOTING SECTION

NO SCALE

CONT = CONTINUOUS
* = a AND b [SHORT d & d] BARS ARE BUNDLED TOGETHER.
** = ALTERNATE a AND b BARS AS SHOWN IN DETAIL A.
= ALTERNATE SHORT d AND d BARS.

DESIGN DATA

DESIGN: LOAD FACTOR DESIGN (LFD)

CONCRETE: REINFORCED CONCRETE, fc = 3600 psi
fy = 60000 psi

LOADING CASE:

LEVEL GROUND WITH 240 psf SURCHARGE AND 16' SOUNDWALL.
SEISMIC LOAD = 0.3 DEAD LOAD
WIND LOAD = 30 psf
DEAD LOAD OF SOUNDWALL = 1414 lb/lf
DEAD LOAD OF BARRIER = 372 lb/lf

SEISMIC LOAD: SOIL

K_h = 0.3g
K_v = 0.0
K_{ae} : MONOBE-OKABE METHOD

SOIL: $\emptyset = 34°$ $\gamma = 120$ pcf

EQUIVALENT FLUID PRESSURE:
= 36 pcf MAX. FOR DETERMINATION OF TOE PRESSURE
= 27 pcf MAX. FOR DETERMINATION OF HEEL PRESSURE

EXTERNAL STABILITY:

GROUP 1 : D+E = SC
GROUP 2 : D+E+SC+W
GROUP 3 : D = PYM

INTERNAL STABILITY (LFD):

GROUP A : βD+1.7E+1.7SC
GROUP B : βD+1.7E+1.7SC+W
GROUP C :
STEM : 1.0D+1.0E+1.0EQD+1.0EQE
FOOTING : D+PYM

WHERE : β = 1.0 OR 1.3 WHICHEVER CONTROLS DESIGN
D = DEAD LOAD
E = LATERAL EARTH PRESSURE
SC = SURCHARGE
W = WIND LOAD
EQD = SEISMIC DEAD LOAD
EQE = SEISMIC LATERAL EARTH PRESSURE
PYM = PROBABLE YIELD MOMENT (1.3* NOMINAL YIELD MOMENT OF STEM)

GENERAL NOTES

1. FOR SOUNDWALL AND RETAINING WALL ARCHITECTURAL FINISH OR TEXTURE SEE DETAILS ELSEWHERE IN PROJECT PLANS.
2. FOR DETAILS NOT SHOWN AND DRAINAGE NOTES SEE B3-8
3. FOOTING COVER, 1'-6" MINIMUM.
4. FOR SOUNDWALL REINFORCEMENTS, SEE "SOUNDWALL MASONRY BLOCK" SHEETS IN STANDARD PLANS.

SPECIAL DETAILS

STANDARD DRAWING

FILE NO. REVISED

APPROVED BY G. WANG
RESPONSIBLE TECHNICAL SPECIALIST
APPROVAL DATE 5-13-08

RELEASED BY ROBERTO LACALLE
RESPONSIBLE OFFICE CHIEF
RELEASE DATE 5-13-08

1 Deleted call out

STATE OF CALIFORNIA
DEPARTMENT OF TRANSPORTATION

DIVISION OF ENGINEERING SERVICES

BRIDGE NO. 55E0101
POST MILE 23.1

SOUND WALL NO. 434

RETAINING WALL TYPE 5SWB

DS OSD 2147A (ENGLISH STANDARD DRAWING "XS" BORDER REV. 01/11/08)

ORIGINAL SCALE IN INCHES FOR REDUCED PLANS 0 1 2 3

CU 12235
EA 071631

DISREGARD PRINTS BEARING EARLIER REVISION DATES

REVISION DATES (PRELIMINARY STAGE ONLY) 04/06/09 7/27/09

SHEET 19 OF 24

USERNAME => s135318

55-e0101-i-rwdt01.dgn

DATE PLOTTED => 04-FEB-2010 TIME PLOTTED => 11:03

DIST	COUNTY	ROUTE	POST MILES TOTAL PROJECT	SHEET No	TOTAL SHEETS
12	Ora	22, 405, 605	R0.3/R0.9, 22.3/24.0,3.0/R1.6	1789	1929

LICENSED LANDSCAPE ARCHITECT

2-1-10
PLANS APPROVAL DATE

LICENSED LANDSCAPE ARCHITECT
CATHY L. JOHNSON
NO. 4545
01-31-10
Renewal Date
07-27-09
Date
STATE OF CALIFORNIA

The State of California or its officers or agents shall not be responsible for the accuracy or completeness of electronic copies of this plan sheet.

OCTA
550 SOUTH MAIN STREET
ORANGE, CA 92863

RBF CONSULTING
14725 ALTON PARKWAY
IRVINE, CA 92618

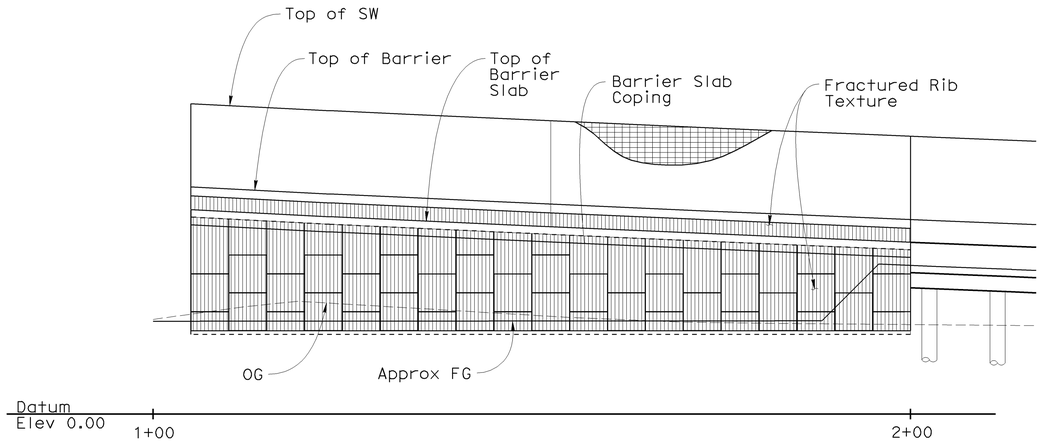

Note: All Piles Not Shown

MIRROR ELEVATION

1" = 10'

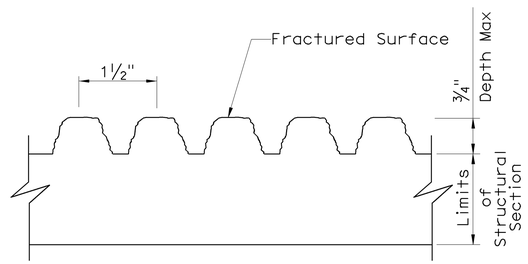

FRACTURED RIB TEXTURE

No Scale

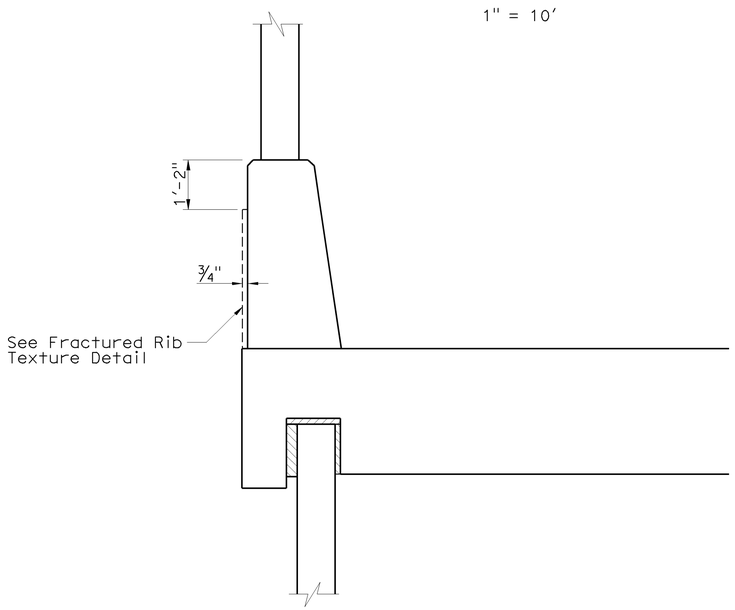

(LOL 1+05.00 TO 2+00.00)
CONCRETE BARRIER (TYPE 736 MOD)

No Scale

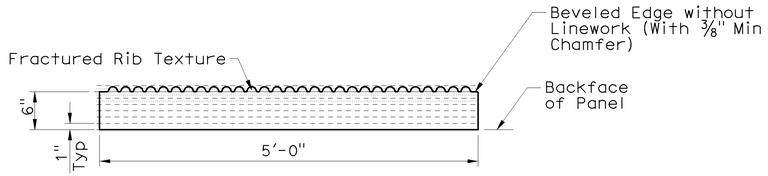

SECTION

1" = 1'-0"

Sudhakar Vatti
DESIGN OVERSIGHT Sudhakar Vatti
8-10-09
SIGN OFF DATE

DESIGN DETAIL SHEET (ENGLISH) (REV. 2/25/05)

	BY	CHECKED
DESIGN	C. JOHNSON	A. SU
DETAILS	R. KELCHER	A. SU
QUANTITIES	K. COATES	V. TRINH

ORIGINAL SCALE IN INCHES FOR REDUCED PLANS 0 1 2 3

PREPARED FOR THE
STATE OF CALIFORNIA
DEPARTMENT OF TRANSPORTATION

V. TRINH
PROJECT ENGINEER

CU 12235
EA 071631

BRIDGE NO. 55E0101
POST MILE 23.0

SOUND WALL NO. 434
ARCHITECTURAL DETAILS

DISREGARD PRINTS BEARING EARLIER REVISION DATES

REVISION DATES (PRELIMINARY STAGE ONLY) 07/27/09

SHEET 20 OF 24

FILE => 55-e0101-s-arch01.dgn

USERNAME => s136318 DATE PLOTTED => 04-FEB-2010 TIME PLOTTED => 11:03

REFERENCE: CALTRANS SOIL & ROCK LOGGING, CLASSIFICATION, AND PRESENTATION MANUAL (JUNE 2007)

DIST	COUNTY	ROUTE	POST MILES TOTAL PROJECT	SHEET No	TOTAL SHEETS
12	Ora	22,405, 605	R0.3/R0.9, 22.3/24.0,3.0/R1.6	1790	1929

REGISTERED CIVIL ENGINEER 07/27/09 DATE

2-1-10
PLANS APPROVAL DATE

REGISTERED PROFESSIONAL ENGINEER K.Arulmoli No. GE 2090 Exp.12-31-09 GEOTECHNICAL STATE OF CALIFORNIA

The State of California or its officers or agents shall not be responsible for the accuracy or completeness of electronic copies of this plan sheet.

OCTA
550 SOUTH MAIN STREET
ORANGE, CA 92863

EARTH MECHANICS, INC.
17660, NEWHOPE STREET, SUITE E
FOUNTAIN VALLEY, CA 92708

CEMENTATION

Description	Criteria
Weak	Crumbles or breaks with handling or little finger pressure.
Moderate	Crumbles or breaks with considerable finger pressure.
Strong	Will not crumble or break with finger pressure.

CONSISTENCY OF COHESIVE SOILS

Description	Unconfined Compressive Strength (tsf)	Pocket Penetrometer Measurement (tsf)	Torvane Measurement (tsf)	Field Approximation
Very Soft	< 0.25	< 0.25	< 0.12	Easily penetrated several inches by fist
Soft	0.25 to 0.50	0.25 to 0.50	0.12 to 0.25	Easily penetrated several inches by thumb
Medium Stiff	0.50 to 1.0	0.50 to 1.0	0.25 to 0.50	Penetrated several inches by thumb with moderate effort
Stiff	1 to 2	1 to 2	0.50 to 1.0	Readily indented by thumb but penetrated only with great effort
Very Stiff	2 to 4	2 to 4	1.0 to 2.0	Readily indented by thumbnail
Hard	> 4.0	> 4.0	> 2.0	Indented by thumbnail with difficulty

BOREHOLE IDENTIFICATION

Symbol	Hole Type	Description
Size	A	Auger Boring
Size	R P	Rotary drilled boring Rotary percussion boring (air)
Size	R	Rotary drilled diamond core
Size	HD HA	Hand driven (1-inch soil tube) Hand Auger
●	D	Dynamic Cone Penetration Boring
▲	CPT	Cone Penetration Test (ASTM D 5778-95)
□	O	Other

Note: Size in inches.

PLASTICITY OF FINE-GRAINED SOILS

Description	Criteria
Nonplastic	A 1/8-inch thread cannot be rolled at any water content.
Low	The thread can barely be rolled and the lump cannot be formed when drier than the plastic limit.
Medium	The thread is easy to roll and not much time is required to reach the plastic limit. The thread cannot be rerolled after reaching the plastic limit. The lump crumbles when drier than the plastic limit.
High	It takes considerable time rolling and kneading to reach the plastic limit. The thread can be rerolled several times after reaching the plastic limit. The lump can be formed without crumbling when drier than the plastic limit.

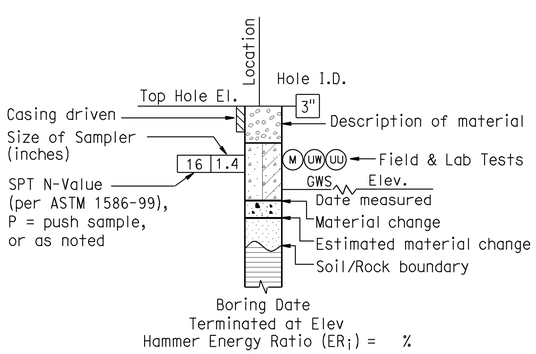

ROTARY BORING

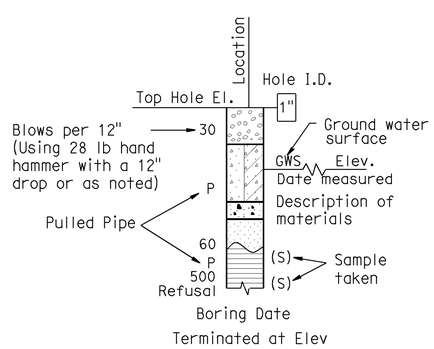

HAND BORING

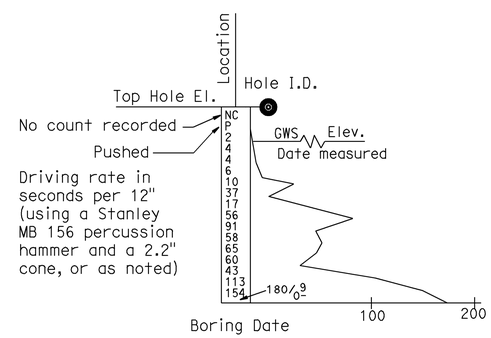

DYNAMIC CONE PENETRATION BORING

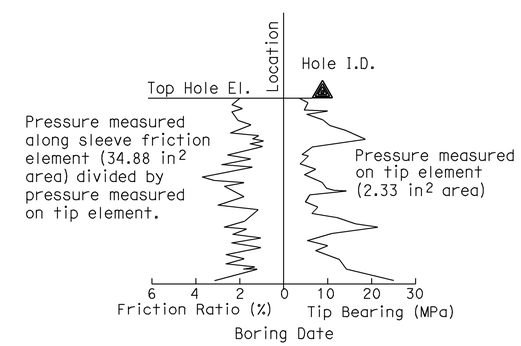

CONE PENETRATION TEST (CPT) SOUNDING

Sudhakar Vatti
DESIGN OVERSIGHT Sudhakar Vatti
8-10-09
SIGN OFF DATE

DRAWN BY: J.Fang
CHECKED BY: G.J.Gunaranjan

FIELD INVESTIGATION BY:
R.Jie

PREPARED FOR THE STATE OF CALIFORNIA DEPARTMENT OF TRANSPORTATION

K.Arulmoli
PROJECT ENGINEER

BRIDGE NO. 55E0101
POST MILE 23.1

SOUNDWALL NO 434
LOG OF TEST BORINGS NO. 1

OSF CIVIL LOG OF TEST BORINGS SHEET (ENGLISH) (REV. 2-25-05)

ORIGINAL SCALE IN INCHES FOR REDUCED PLANS 0 1 2 3

CU 12235
EA 071631

DISREGARD PRINTS BEARING EARLIER REVISION DATES

REVISION DATES (PRELIMINARY STAGE ONLY) 03/23/09 04/06/09 07/27/09

SHEET 21 OF 24

FILE => 55-e0101-z-ltb01.dgn

USERNAME => s135318 DATE PLOTTED => 04-FEB-2010 TIME PLOTTED => 11:03

REFERENCE: CALTRANS SOIL & ROCK LOGGING, CLASSIFICATION, AND PRESENTATION MANUAL (JUNE 2007)

GROUP SYMBOLS AND NAMES

Graphic/Symbol	Group Names	Graphic/Symbol	Group Names
GW	Well-graded GRAVEL Well-graded GRAVEL with SAND	CL	Lean CLAY Lean CLAY with SAND Lean CLAY with GRAVEL SANDY lean CLAY SANDY lean CLAY with GRAVEL GRAVELLY lean CLAY GRAVELLY lean CLAY with SAND
GP	Poorly graded GRAVEL Poorly graded GRAVEL with SAND		
GW-GM	Well-graded GRAVEL with SILT Well-graded GRAVEL with SILT and SAND	CL-ML	SILTY CLAY SILTY CLAY with SAND SILTY CLAY with GRAVEL SANDY SILTY CLAY SANDY SILTY CLAY with GRAVEL GRAVELLY SILTY CLAY GRAVELLY SILTY CLAY with SAND
GW-GC	Well-graded GRAVEL with CLAY (or SILTY CLAY) Well-graded GRAVEL with CLAY and SAND (or SILTY CLAY and SAND)		
GP-GM	Poorly graded GRAVEL with SILT Poorly graded GRAVEL with SILT and SAND	ML	SILT SILT with SAND SILT with GRAVEL SANDY SILT SANDY SILT with GRAVEL GRAVELLY SILT GRAVELLY SILT with SAND
GP-GC	Poorly graded GRAVEL with CLAY (or SILTY CLAY) Poorly graded GRAVEL with CLAY and SAND (or SILTY CLAY and SAND)		
GM	SILTY GRAVEL SILTY GRAVEL with SAND	OL	ORGANIC lean CLAY ORGANIC lean CLAY with SAND ORGANIC lean CLAY with GRAVEL SANDY ORGANIC lean CLAY SANDY ORGANIC lean CLAY with GRAVEL GRAVELLY ORGANIC lean CLAY GRAVELLY ORGANIC lean CLAY with SAND
GC	CLAYEY GRAVEL CLAYEY GRAVEL with SAND		
GC-GM	SILTY, CLAYEY GRAVEL SILTY, CLAYEY GRAVEL with SAND	OL	ORGANIC SILT ORGANIC SILT with SAND ORGANIC SILT with GRAVEL SANDY ORGANIC SILT SANDY ORGANIC SILT with GRAVEL GRAVELLY ORGANIC SILT GRAVELLY ORGANIC SILT with SAND
SW	Well-graded SAND Well-graded SAND with GRAVEL		
SP	Poorly graded SAND Poorly graded SAND with GRAVEL	CH	Fat CLAY Fat CLAY with SAND Fat CLAY with GRAVEL SANDY fat CLAY SANDY fat CLAY with GRAVEL GRAVELLY fat CLAY GRAVELLY fat CLAY with SAND
SW-SM	Well-graded SAND with SILT Well-graded SAND with SILT and GRAVEL		
SW-SC	Well-graded SAND with CLAY (or SILTY CLAY) Well-graded SAND with CLAY and GRAVEL (or SILTY CLAY and GRAVEL)	MH	Elastic SILT Elastic SILT with SAND Elastic SILT with GRAVEL SANDY elastic SILT SANDY elastic SILT with GRAVEL GRAVELLY elastic SILT GRAVELLY elastic SILT with SAND
SP-SM	Poorly graded SAND with SILT Poorly graded SAND with SILT and GRAVEL		
SP-SC	Poorly graded SAND with CLAY (or SILTY CLAY) Poorly graded SAND with CLAY and GRAVEL (or SILTY CLAY and GRAVEL)	OH	ORGANIC fat CLAY ORGANIC fat CLAY with SAND ORGANIC fat CLAY with GRAVEL SANDY ORGANIC fat CLAY SANDY ORGANIC fat CLAY with GRAVEL GRAVELLY ORGANIC fat CLAY GRAVELLY ORGANIC fat CLAY with SAND
SM	SILTY SAND SILTY SAND with GRAVEL		
SC	CLAYEY SAND CLAYEY SAND with GRAVEL	OH	ORGANIC elastic SILT ORGANIC elastic SILT with SAND ORGANIC elastic SILT with GRAVEL SANDY ORGANIC elastic SILT SANDY ORGANIC elastic SILT with GRAVEL GRAVELLY ORGANIC elastic SILT GRAVELLY ORGANIC elastic SILT with SAND
SC-SM	SILTY, CLAYEY SAND SILTY, CLAYEY SAND with GRAVEL		
PT	PEAT	OL/OH	ORGANIC SOIL ORGANIC SOIL with SAND ORGANIC SOIL with GRAVEL SANDY ORGANIC SOIL SANDY ORGANIC SOIL with GRAVEL GRAVELLY ORGANIC SOIL GRAVELLY ORGANIC SOIL with SAND
	COBBLES COBBLES and BOULDERS BOULDERS		

FIELD AND LABORATORY TESTING

- (C) Consolidation (ASTM D 2435)
- (CL) Collapse Potential (ASTM D 5333)
- (CP) Compaction Curve (CTM 216)
- (CR) Corrosivity Testing (CTM 643, CTM 422, CTM 417)
- (CU) Consolidated Undrained Triaxial (ASTM D 4767)
- (DS) Direct Shear (ASTM D 3080)
- (EI) Expansion Index (ASTM D 4829)
- (M) Moisture Content (ASTM D 2216)
- (OC) Organic Content-% (ASTM D 2974)
- (P) Permeability (CTM 220)
- (PA) Particle Size Analysis (ASTM D 422)
- (PI) Plasticity Index (AASHTO T 90) Liquid Limit (AASHTO T 89)
- (PL) Point Load Index (ASTM D 5731)
- (PM) Pressure Meter
- (PP) Pocket Penetrometer
- (R) R-Value (CTM 301)
- (SE) Sand Equivalent (CTM 217)
- (SG) Specific Gravity (AASHTO T 100)
- (SL) Shrinkage Limit (ASTM D 427)
- (SW) Swell Potential (ASTM D 4546)
- (TV) Pocket Torvane
- (UC) Unconfined Compression-Soil (ASTM D 2166) Unconfined Compression-Rock (ASTM D 2938)
- (UU) Unconsolidated Undrained Triaxial (ASTM D 2850)
- (UW) Unit Weight (ASTM D 4767)
- (VS) Vane Shear (AASHTO T 223)

DIST	COUNTY	ROUTE	POST MILES TOTAL PROJECT	SHEET No	TOTAL SHEETS
12	Ora	22,405, 605	R0.3/R0.9, 22.3/24.0,3.0/R1.6	1791	1929

REGISTERED CIVIL ENGINEER 07/27/09 DATE

2-1-10
PLANS APPROVAL DATE

REGISTERED PROFESSIONAL ENGINEER K.Arulmoli No. GE 2090 Exp.12-31-09 GEOTECHNICAL STATE OF CALIFORNIA

The State of California or its officers or agents shall not be responsible for the accuracy or completeness of electronic copies of this plan sheet.

OCTA
550 SOUTH MAIN STREET
ORANGE, CA 92863

EARTH MECHANICS, INC.
17660, NEWHOPE STREET, SUITE E
FOUNTAIN VALLEY, CA 92708

APPARENT DENSITY OF COHESIONLESS SOILS

Description	SPT N_{60} (Blows / 12 inches)
Very loose	0 - 4
Loose	5 - 10
Medium Dense	11 - 30
Dense	31 - 50
Very Dense	> 50

MOISTURE

Description	Criteria
Dry	Absence of moisture, dusty, dry to the touch
Moist	Damp but no visible water
Wet	Visible free water, usually soil is below water table

PERCENT OR PROPORTION OF SOILS

Description	Criteria
Trace	Particles are present but estimated to be less than 5%
Few	5 to 10%
Little	15 to 25%
Some	30 to 45%
Mostly	50 to 100%

PARTICLE SIZE

Description		Size
Boulder		> 12"
Cobble		3" to 12"
Gravel	Coarse	3/4" to 3"
	Fine	No. 4 to 3/4"
Sand	Coarse	No. 10 to No. 4
	Medium	No. 40 to No. 10
	Fine	No. 200 to No. 40

Sudhakar Vatti
DESIGN OVERSIGHT Sudhakar Vatti
8-10-09
SIGN OFF DATE

DRAWN BY: J.Fang
CHECKED BY: G.J.Gunaranjan

FIELD INVESTIGATION BY:
R.Jie

PREPARED FOR THE STATE OF CALIFORNIA DEPARTMENT OF TRANSPORTATION

K.Arulmoli
PROJECT ENGINEER

BRIDGE NO. 55E0101
POST MILE 23.1

SOUNDWALL NO 434
LOG OF TEST BORINGS NO. 2

OSF CIVIL LOG OF TEST BORINGS SHEET (ENGLISH) (REV. 2-25-05)

ORIGINAL SCALE IN INCHES FOR REDUCED PLANS 0 1 2 3

CU 12235
EA 071631

DISREGARD PRINTS BEARING EARLIER REVISION DATES

REVISION DATES (PRELIMINARY STAGE ONLY) 03/25/09 04/06/09 07/27/09

SHEET 22 OF 24

FILE => 55-e0101-z-ltb02.dgn

USERNAME => s135318 DATE PLOTTED => 04-FEB-2010 TIME PLOTTED => 11:03

DIST	COUNTY	ROUTE	POST MILES TOTAL PROJECT	SHEET No	TOTAL SHEETS
12	Ora	22,405, 605	R0.3/R0.9, 22.3/24.0,3.0/R1.6	1792	1929

REGISTERED CIVIL ENGINEER 07/27/09 DATE

2-1-10
PLANS APPROVAL DATE

REGISTERED PROFESSIONAL ENGINEER K.Arulmoli No. GE 2090 Exp.12-31-09 GEOTECHNICAL STATE OF CALIFORNIA

The State of California or its officers or agents shall not be responsible for the accuracy or completeness of electronic copies of this plan sheet.

OCTA
550 SOUTH MAIN STREET
ORANGE, CA 92863

EARTH MECHANICS, INC.
17660, NEWHOPE STREET, SUITE E
FOUNTAIN VALLEY, CA 92708

BENCHMARKS:

Monument: 1A-144-04

Described by OCS 2005 - Found 3.75" OCS aluminum benchmark disk stamped "1A-144-04", set in the southwesterly corner of a 4.4 ft by 4.4 ft concrete catch basin. Monument is located in the northeasterly corner of the intersection of Seal Beach Boulevard and St. Cloud Drive, 44 ft easterly of the centerline of Seal Beach Boulevard and 58 ft northerly of the centerline of St. Cloud Dr. Monument is set level with the sidewalk.

Elevation: 15.37 feet

NOTES:

(1) This LOTB sheet (Boring Record) was prepared in accordance with the Caltrans Soil and Rock Classification Logging, Classification and Presentation Manual (June 2007).

(2) 2.4" samples were taken using a California Modified Sampler.

(3) An automatic trip hammer system consisting of a hammer weight of 140 lbs falling a distance of 30" was used to advance the drive sampler.

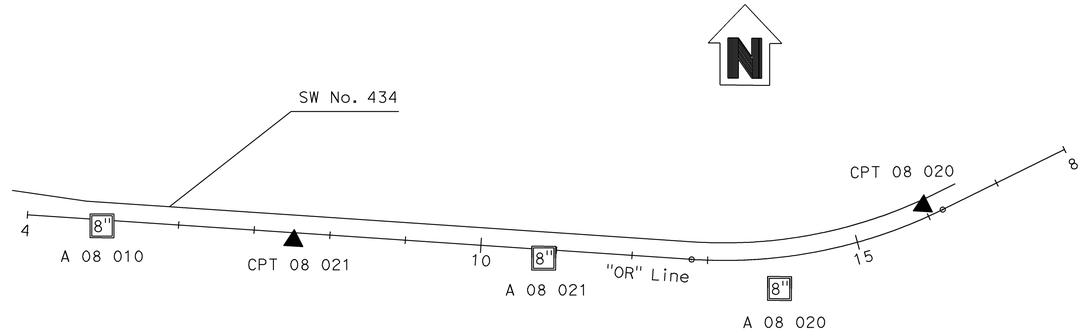

PLAN

1" = 100'

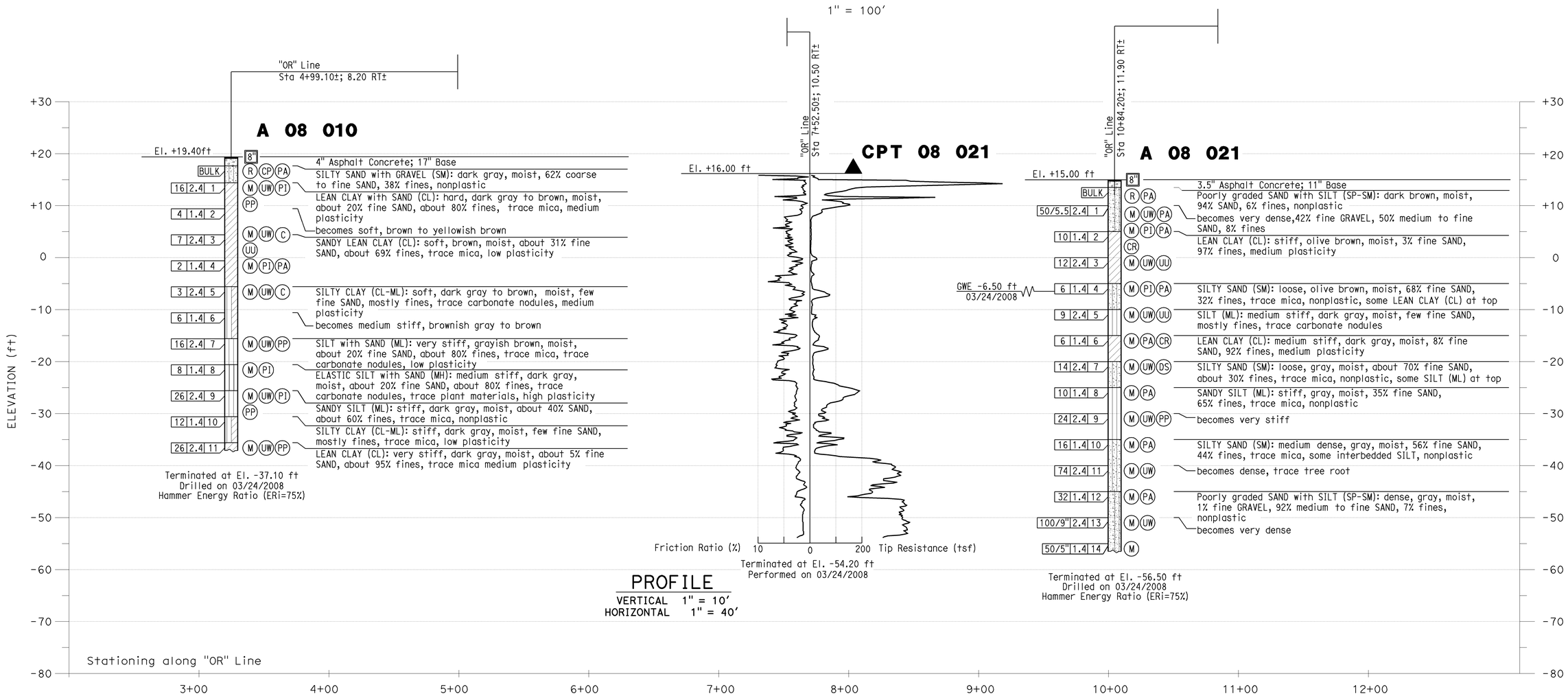

PROFILE

VERTICAL 1" = 10'
HORIZONTAL 1" = 40'

Sudhakar Vatti
DESIGN OVERSIGHT Sudhakar Vatti
8-10-09
SIGN OFF DATE

DRAWN BY: J.Fang
CHECKED BY: G.J.Gunaranjan

FIELD INVESTIGATION BY:
R.Jie

PREPARED FOR THE STATE OF CALIFORNIA DEPARTMENT OF TRANSPORTATION

K.Arulmoli
PROJECT ENGINEER

BRIDGE NO. 55E0101
POST MILE 23.1

SOUNDWALL NO 434

LOG OF TEST BORINGS NO. 3

OSF CIVIL LOG OF TEST BORINGS SHEET (ENGLISH) (REV. 2-25-05)

ORIGINAL SCALE IN INCHES FOR REDUCED PLANS 0 1 2 3

CU 12235
EA 071631

DISREGARD PRINTS BEARING EARLIER REVISION DATES

REVISION DATES (PRELIMINARY STAGE ONLY) 03/25/09 04/06/09 07/21/09

SHEET 23 OF 24

FILE => 55-e0101-z-ltb03.dgn

USERNAME => s135318 DATE PLOTTED => 04-FEB-2010 TIME PLOTTED => 11:03

DIST	COUNTY	ROUTE	POST MILES TOTAL PROJECT	SHEET No	TOTAL SHEETS
12	Ora	22,405, 605	R0.3/R0.9, 22.3/24.0,3.0/R1.6	1793	1929

REGISTERED CIVIL ENGINEER 07/27/09 DATE

2-1-10
PLANS APPROVAL DATE

REGISTERED PROFESSIONAL ENGINEER K.Arulmoli No. GE 2090 Exp.12-31-09 GEOTECHNICAL STATE OF CALIFORNIA

The State of California or its officers or agents shall not be responsible for the accuracy or completeness of electronic copies of this plan sheet.

OCTA
550 SOUTH MAIN STREET
ORANGE, CA 92863

EARTH MECHANICS, INC.
17660, NEWHOPE STREET, SUITE E
FOUNTAIN VALLEY, CA 92708

BENCHMARKS:

Monument: 1A-144-04

Described by OCS 2005 - Found 3.75" OCS aluminum benchmark disk stamped "1A-144-04", set in the southwesterly corner of a 4.4 ft by 4.4 ft concrete catch basin. Monument is located in the northeasterly corner of the intersection of Seal Beach Boulevard and St. Cloud Drive, 44 ft easterly of the centerline of Seal Beach Boulevard and 58 ft northerly of the centerline of St. Cloud Dr. Monument is set level with the sidewalk.

Elevation: 15.37 feet

NOTES:

(1) This LOTB sheet (Boring Record) was prepared in accordance with the Caltrans Soil and Rock Classification Logging, Classification and Presentation Manual (June 2007).

(2) 2.4" samples were taken using a California Modified Sampler.

(3) An automatic trip hammer system consisting of a hammer weight of 140 lbs falling a distance of 30" was used to advance the drive sampler.

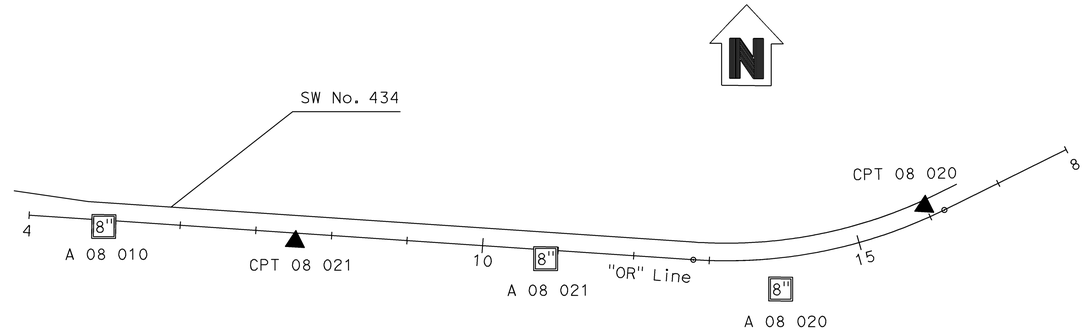

PLAN

1" = 100'

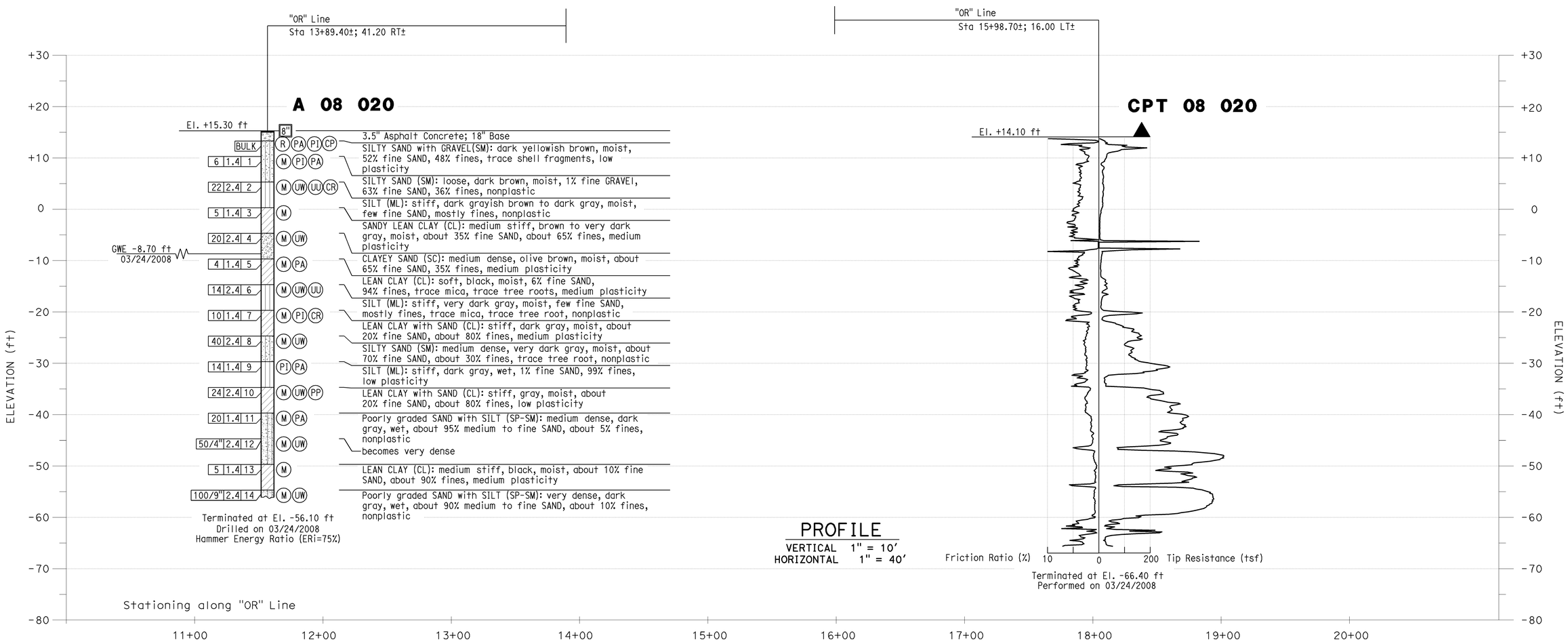

PROFILE

VERTICAL 1" = 10'
HORIZONTAL 1" = 40'

Sudhakar Vatti
DESIGN OVERSIGHT Sudhakar Vatti
8-10-09
SIGN OFF DATE

DRAWN BY: J.Fang
CHECKED BY: G.J.Gunaranjan

FIELD INVESTIGATION BY: R.Jie

PREPARED FOR THE STATE OF CALIFORNIA DEPARTMENT OF TRANSPORTATION

K.Arulmoli
PROJECT ENGINEER

BRIDGE NO. 55E0101
POST MILE 23.1

SOUNDWALL NO 434
LOG OF TEST BORINGS NO. 4

OSF CIVIL LOG OF TEST BORINGS SHEET (ENGLISH) (REV. 2-25-05)

ORIGINAL SCALE IN INCHES FOR REDUCED PLANS 0 1 2 3

CU 12235
EA 071631

DISREGARD PRINTS BEARING EARLIER REVISION DATES

REVISION DATES (PRELIMINARY STAGE ONLY) 03/25/09 04/06/09 07/27/09

SHEET 24 OF 24

FILE => 55-e0101-z-lltb04.dgn

USERNAME => s135318 DATE PLOTTED => 04-FEB-2010 TIME PLOTTED => 11:03

DIST	COUNTY	ROUTE	POST MILES TOTAL PROJECT	SHEET No	TOTAL SHEETS
12	Ora	22,405, 605	R0.3/R0.9, 22.3/24.0,3.0/R1.6	1794	1929

REGISTERED CIVIL ENGINEER 07-27-09 DATE

2-1-10
PLANS APPROVAL DATE

REGISTERED PROFESSIONAL ENGINEER A. Priley No. C 73375 Exp. 12-31-10 CIVIL STATE OF CALIFORNIA

The State of California or its officers or agents shall not be responsible for the accuracy or completeness of electronic copies of this plan sheet.

OCTA
550 SOUTH MAIN STREET
ORANGE, CA 92863

TRC
21 TECHNOLOGY DR
IRVINE, CA 92618

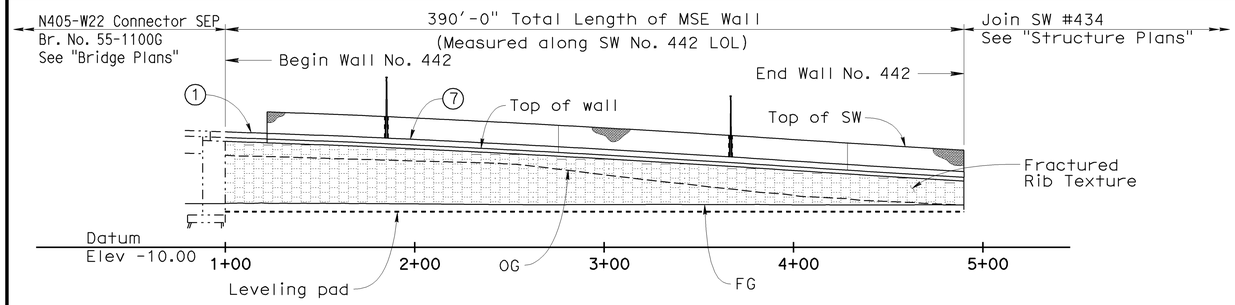

SW NO. 442 DEVELOPED MIRROR ELEVATION

1" = 40'

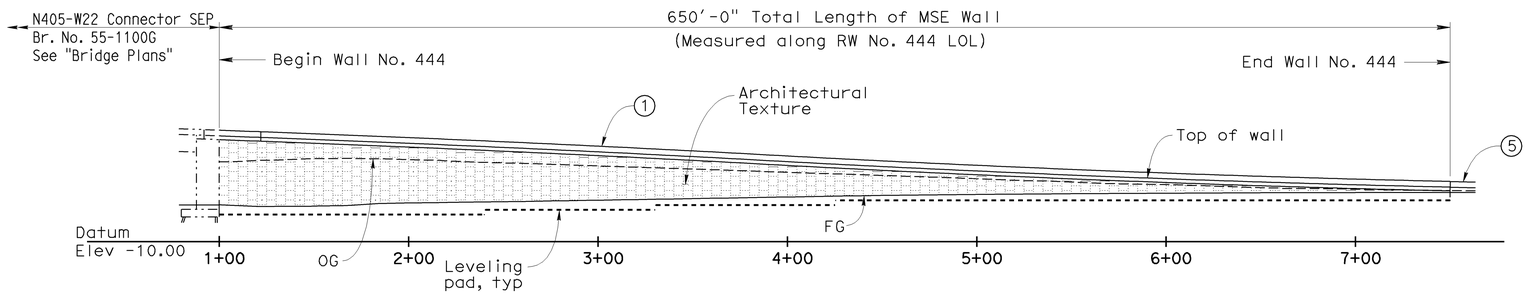

RW NO. 444 DEVELOPED ELEVATION

1" = 40'

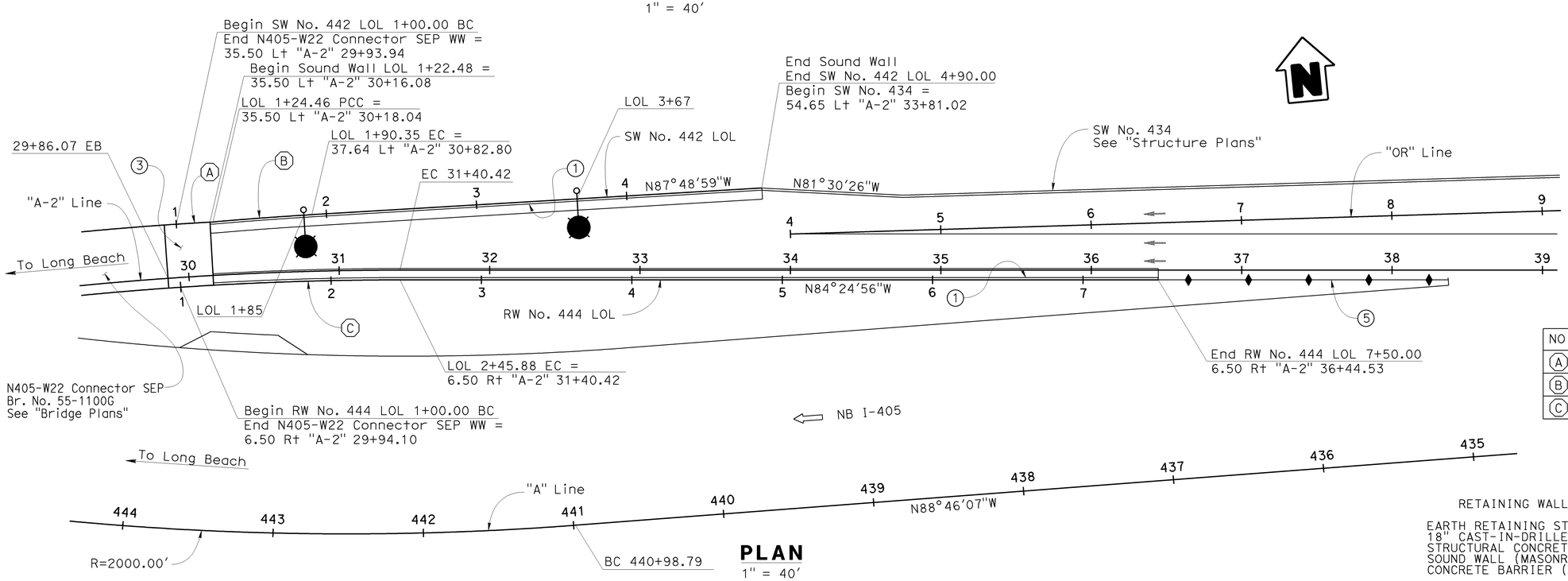

PLAN

1" = 40'

LEGEND

1. Concrete Barrier (Type 736 Mod 1)
3. Structure Approach Slab, see "Bridge Plans"
5. Concrete Barrier (Type 60C), see "Road Plans"
7. Concrete Barrier (Type 736 Mod 2)

Electrolier, see "Lighting Plans"

NOTES

1. For Typical Sections, see "General Plan No. 2" sheet

CURVE DATA

NO.	R	Δ	T	L
A	2235.50'	00°37'37"	12.23'	24.46'
B	2358.42'	01°36'29"	32.95'	65.89'
C	2193.50'	03°48'38"	72.97'	145.88'

RETAINING WALL NO 442 & 444 — BR NO 55E0102

QUANTITIES

EARTH RETAINING STRUCTURE, LOCATION 4	25,100	SQFT
18" CAST-IN-DRILLED-HOLE CONCRETE PILING	370	LF
STRUCTURAL CONCRETE, BARRIER SLAB	470	CY
SOUND WALL (MASONRY BLOCK)	4,165	SQFT
CONCRETE BARRIER (TYPE 736 MODIFIED)	996	LF

Sudhakar Vatti
DESIGN OVERSIGHT Sudhakar Vatti
8-10-09
SIGN OFF DATE

	BY	CHECKED
DESIGN	A. Priley	K. Michalski
DETAILS	A. Priley	J. Hermstad
QUANTITIES	A. Priley	J. Wong

LOAD FACTOR DESIGN (LFD) — LIVE LOADING: HS20-44 AND ALTERNATIVE AND PERMIT DESIGN LOAD

	BY	CHECKED
LAYOUT	K. Michalski	A. Priley
SPECIFICATIONS	EL Tyk	PLANS AND SPECS COMPARED J. Hermstad

PREPARED FOR THE STATE OF CALIFORNIA DEPARTMENT OF TRANSPORTATION

A. Priley
PROJECT ENGINEER

BRIDGE NO. 55E0102
POST MILES 23.2

WALLS NO. 442 & 444
GENERAL PLAN NO. 1

DESIGN GENERAL PLAN SHEET (ENGLISH) (REV.2/25/05)

ORIGINAL SCALE IN INCHES FOR REDUCED PLANS 0 1 2 3

CU 12235
EA 071631

DISREGARD PRINTS BEARING EARLIER REVISION DATES

REVISION DATES (PRELIMINARY STAGE ONLY) 10/16/08 04/06/09 06/05/09 07/27/09

SHEET 1 OF 27

FILE => 55-e0102-a-gp01.dgn

USERNAME => s135318 DATE PLOTTED => 04-FEB-2010 TIME PLOTTED => 11:03

DIST	COUNTY	ROUTE	POST MILES TOTAL PROJECT	SHEET No	TOTAL SHEETS
12	Ora	22,405, 605	R0.3/R0.9, 22.3/24.0,3.0/R1.6	1795	1929

REGISTERED CIVIL ENGINEER 07-27-09 DATE

2-1-10
PLANS APPROVAL DATE

REGISTERED PROFESSIONAL ENGINEER A. Priley No. C 73375 Exp. 12-31-10 CIVIL STATE OF CALIFORNIA

The State of California or its officers or agents shall not be responsible for the accuracy or completeness of electronic copies of this plan sheet.

OCTA
550 SOUTH MAIN STREET
ORANGE, CA 92863

TRC
21 TECHNOLOGY DR
IRVINE, CA 92618

LEGEND

1. Concrete Barrier (Type 736 Mod 1)
2. Roadway Section, see "Road Plans"
3. Structure Approach Slab, see "Bridge Plans"
4. Precast Concrete Panels with Architectural Texture
6. Precast Concrete Panels with Fractured Rib Texture
7. Concrete Barrier (Type 736 Mod 2)

NOTES

1. For Plan and Elevations, see "General Plan No. 1" sheet

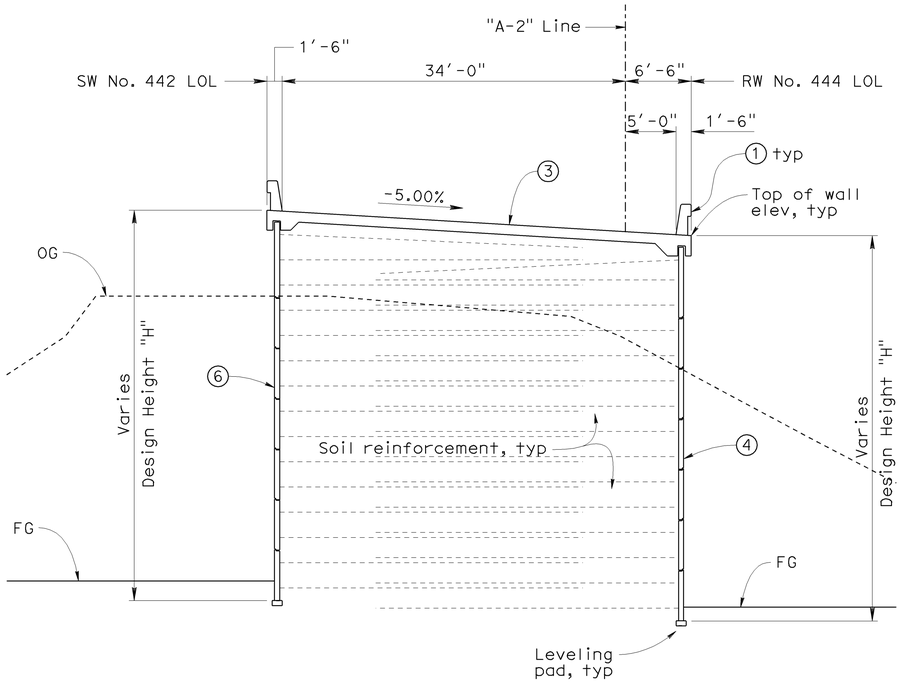

RW NO. 444 LOL STA 1+00.00 TO 1+21.91

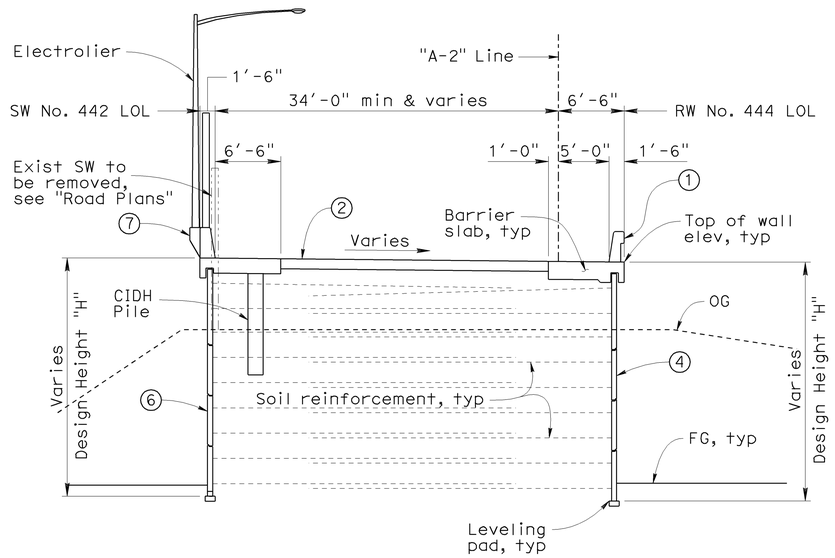

RW NO. 444 LOL STA 1+21.91 TO 4+86.41

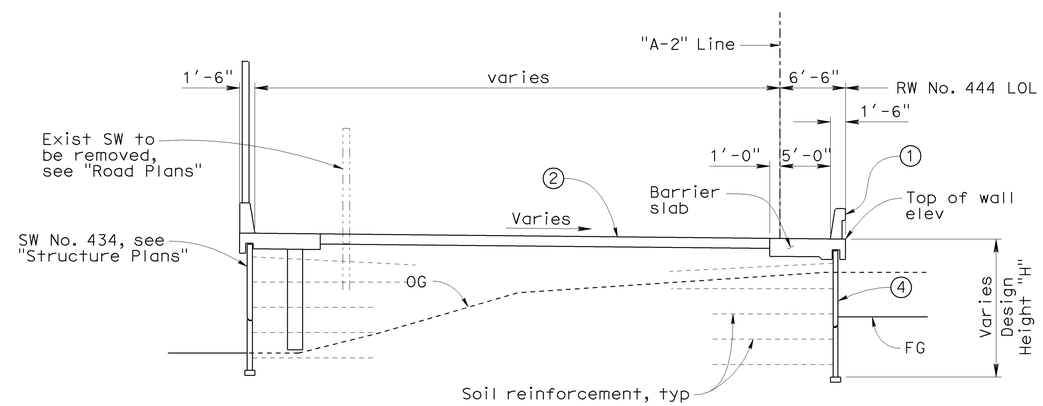

RW NO. 444 LOL STA 4+86.41 TO 7+50.00

TYPICAL SECTIONS

No Scale

Sudhakar Vatti
DESIGN OVERSIGHT Sudhakar Vatti

8-10-09
SIGN OFF DATE

	BY	CHECKED			
DESIGN	A. Priley	K. Michalski	LOAD FACTOR DESIGN (LFD)	LIVE LOADING: HS20-44 AND ALTERNATIVE AND PERMIT DESIGN LOAD	
DETAILS	A. Priley	J. Hermstad	LAYOUT	K. Michalski	A. Priley
QUANTITIES	A. Priley	J. Wong	SPECIFICATIONS	EL Tyk	PLANS AND SPECS COMPARED J. Hermstad

PREPARED FOR THE STATE OF CALIFORNIA DEPARTMENT OF TRANSPORTATION

A. Priley
PROJECT ENGINEER

BRIDGE NO. 55E0102
POST MILES 23.2

WALLS NO. 442 & 444
GENERAL PLAN NO. 2

DESIGN GENERAL PLAN SHEET (ENGLISH) (REV.2/25/05)

ORIGINAL SCALE IN INCHES FOR REDUCED PLANS 0 1 2 3

CU 12235
EA 071631

DISREGARD PRINTS BEARING EARLIER REVISION DATES

REVISION DATES (PRELIMINARY STAGE ONLY) 10/30/08 04/06/09 06/05/09 07/27/09

SHEET 2 OF 27

FILE => 55-e0102-a-gp02.dgn

USERNAME => s135318 DATE PLOTTED => 04-FEB-2010 TIME PLOTTED => 11:03

DIST	COUNTY	ROUTE	POST MILES TOTAL PROJECT	SHEET No	TOTAL SHEETS
12	Ora	22,405, 605	R0.3/R0.9, 22.3/24.0,3.0/R1.6	1796	1929

REGISTERED CIVIL ENGINEER 07-27-09 DATE

2-1-10
PLANS APPROVAL DATE

The State of California or its officers or agents shall not be responsible for the accuracy or completeness of electronic copies of this plan sheet.

REGISTERED PROFESSIONAL ENGINEER A. Priley No. C 73375 Exp. 12-31-10 CIVIL STATE OF CALIFORNIA

OCTA
550 SOUTH MAIN STREET
ORANGE, CA 92863

TRC
21 TECHNOLOGY DR
IRVINE, CA 92618

STANDARD PLANS DATED MAY 2006

A10A	Acronyms and Abbreviations (Sheet 1 of 2)
A10B	Acronyms and Abbreviations (Sheet 2 of 2)
A10C	Symbols (Sheet 1 of 2)
A10D	Symbols (Sheet 2 of 2)
A62B	Limits of Excavation and Backfill - Bridge Surcharge and Wall
A74	Survey Monuments
B11-56	Concrete Barrier Type 736
B15-9	Sound Wall Masonry Block Miscellaneous Details
D102	Underdrains
ES-6A	Electrical Systems (Lighting Standard, Types 15 and 21)
ES-6B	Electrical Systems (Lighting Standard, Types 15 and 21, Barrier Rail Mounted Details)

Standard Plan Sheet No.

Detail No.

GENERAL NOTES (MSE)

Live loading: Surcharge = 240 lb/ft^2

Soil parameters:

Internal design ϕ = 34°, γ = 120 lb/ft^3

External design ϕ(Backfill) = 34°, γ = 120 lb/ft^3

ϕ(Foundation) = 30°

Precast concrete panels:

f'c = 4,000 psi (Concrete compressive strength at 28 days)

fy = 60,000 psi (Yield strength of reinforcement)

Soil reinforcement:

Welded wire mats: fy = 65,000 psi (Yield strength)

Coupler: fy = 36,000 psi (Yield strength)

Corrosion rate = 1.1 mils/year

Reinforced concrete:

f'c = 3,600 psi, except as noted

(Concrete compressive strength at 28 days)

fy = 60,000 psi (Yield strength of reinforcement)

MSE = Mechanically stabilized embankment

INDEX TO PLANS

SHEET NO.	TITLE
1	General Plan No. 1
2	General Plan No. 2
3	Index to Plans
4	Excavation & Backfill Details
5	Structure Plan No. 1
6	Structure Plan No. 2
7	Structure Plan No. 3
8	Structure Plan No. 4
9	Structure Plan No. 5
10	Panel Details No. 1
11	Panel Details No. 2
12	Wall Details No. 1
13	Wall Details No. 2
14	Wall Details No. 3
15	Wall Details No. 4
16	Soundwall - Masonry Block with Barrier on Retaining Wall Details No. 1
17	Soundwall - Masonry Block with Barrier on Retaining Wall Details No. 2
18	Architectural Panel Layout No. 1
19	Architectural Panel Layout No. 2
20	Architectural Details No. 1
21	Architectural Details No. 2
22	Architectural Details No. 3
23	Log of Test Borings No. 1
24	Log of Test Borings No. 2
25	Log of Test Borings No. 3
26	Log of Test Borings No. 4
27	Log of Test Borings No. 5 (As-Built)

Sudhakar Vatti
DESIGN OVERSIGHT Sudhakar Vatti

8-10-09
SIGN OFF DATE

	BY	CHECKED
DESIGN	A. Priley	K. Michalski
DETAILS	A. Priley	J. Hermstad
QUANTITIES	A. Priley	J. Wong

PREPARED FOR THE STATE OF CALIFORNIA DEPARTMENT OF TRANSPORTATION

A. Priley
PROJECT ENGINEER

BRIDGE NO. 55E0102
POST MILE 23.2

WALLS NO. 442 & 444
INDEX TO PLANS

DESIGN DETAIL SHEET (ENGLISH) (REV. 2/25/05)

ORIGINAL SCALE IN INCHES FOR REDUCED PLANS 0 1 2 3

CU 12235
EA 071631

DISREGARD PRINTS BEARING EARLIER REVISION DATES

REVISION DATES (PRELIMINARY STAGE ONLY) 04/06/09 06/05/09 07/27/09

SHEET 3 OF 27

FILE => 55-e0102-a-itp.dgn

USERNAME => s135318 DATE PLOTTED => 04-FEB-2010 TIME PLOTTED => 11:03

DIST	COUNTY	ROUTE	POST MILES TOTAL PROJECT	SHEET No	TOTAL SHEETS
12	Ora	22,405, 605	R0.3/R0.9, 22.3/24.0,3.0/R1.6	1797	1929

REGISTERED CIVIL ENGINEER 07-27-09 DATE

2-1-10
PLANS APPROVAL DATE

The State of California or its officers or agents shall not be responsible for the accuracy or completeness of electronic copies of this plan sheet.

REGISTERED PROFESSIONAL ENGINEER A. Priley No. C 73375 Exp. 12-31-10 CIVIL STATE OF CALIFORNIA

OCTA
550 SOUTH MAIN STREET
ORANGE, CA 92863

TRC
21 TECHNOLOGY DR
IRVINE, CA 92618

NOTES

1. Limits to FS except to GP when in roadway section
2. Locate 8" perforated underdrain below bottom level of welded wire mats
3. Maximum spacing of outlet pipes is 200 ft
4. At sags in profile of underdrain, install outlet pipe for each direction of flow
5. For excavation and backfill details at SW No. 434, see "Structure Plans"
6. For minimum "D" dimension, see "Overexcavation Limits" Table

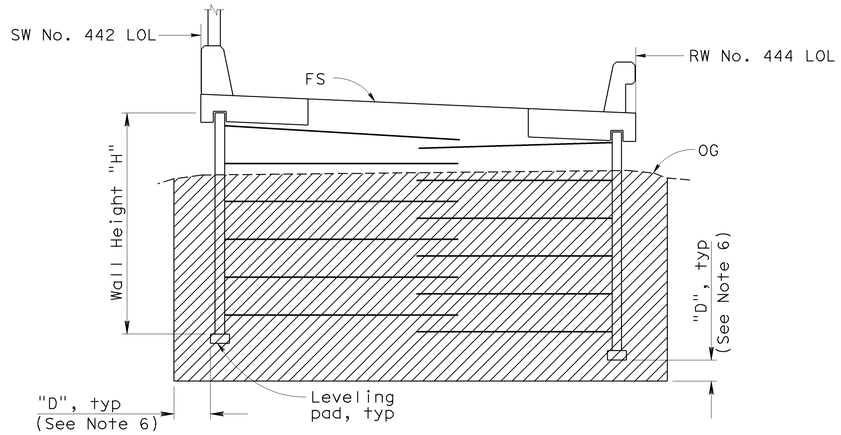

BEGIN WALL TO "A-2" STA 33+81.02

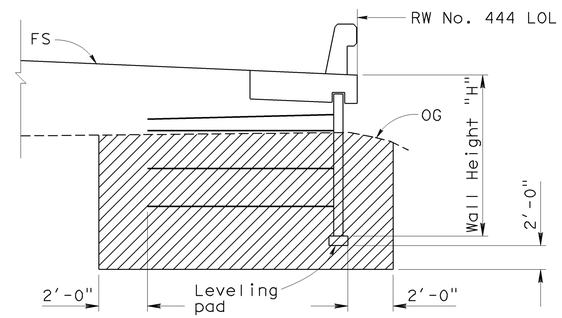

"A-2" STA 33+81.02 TO STA 36+44.53

OVEREXCAVATION LIMITS

"A-2" Station	Minimum "D"
Begin Wall to "A-2" STA 32+94	3'-0"
"A-2" STA 32+94 to STA 33+81.02	2'-0"

LIMITS OF EXCAVATION

No Scale

LEGEND

- Limits of structure excavation
- Limits of structure backfill
- Limits of permeable material

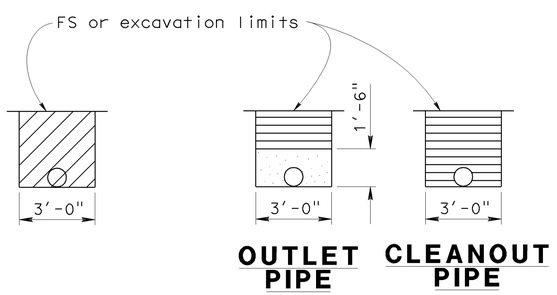

OUTLET OR CLEANOUT PIPE FOR UNDERDRAIN

No Scale

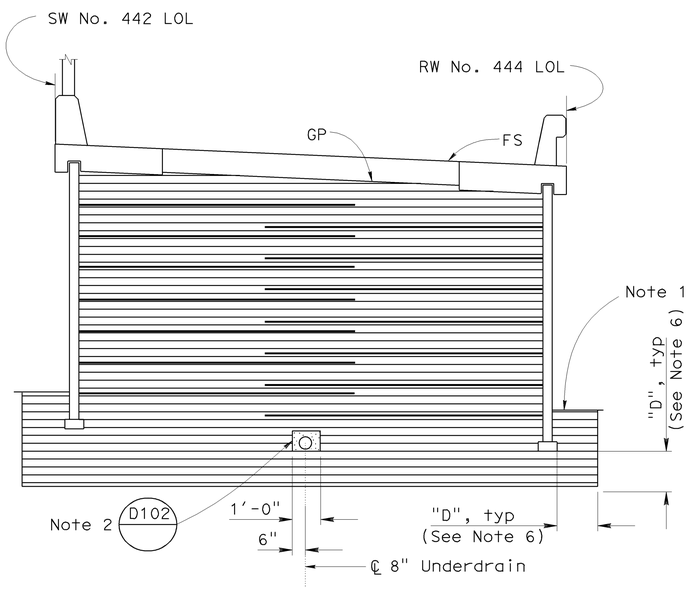

BEGIN WALL TO "A-2" STA 33+81.02

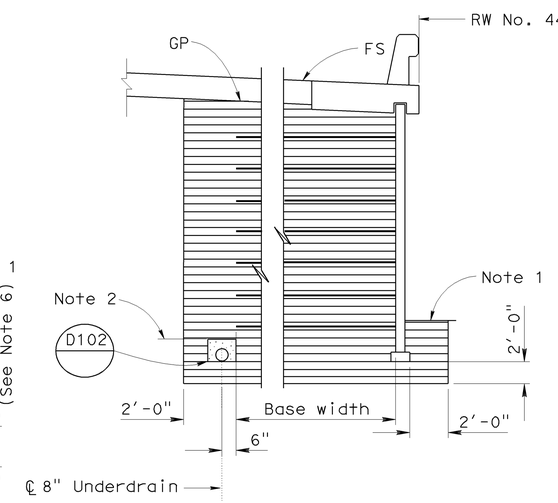

ROADWAY SECTION WITH BASE WIDTH 16' OR GREATER

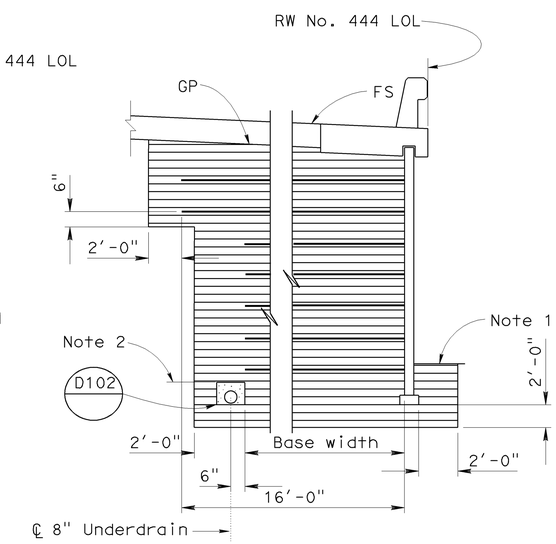

ROADWAY SECTION WITH BASE WIDTH LESS THAN 16'

"A-2" STA 33+81.02 TO STA 36+44.53

LIMITS OF BACKFILL

No Scale

Sudhakar Vatti
DESIGN OVERSIGHT Sudhakar Vatti
8-10-09
SIGN OFF DATE

	BY	CHECKED
DESIGN	A. Priley	K. Michalski
DETAILS	A. Priley	J. Hermstad
QUANTITIES	A. Priley	J. Wong

PREPARED FOR THE STATE OF CALIFORNIA DEPARTMENT OF TRANSPORTATION

A. Priley
PROJECT ENGINEER

BRIDGE NO. 55E0102
POST MILE 23.2

WALLS NO. 442 & 444
EXCAVATION & BACKFILL DETAILS

DESIGN DETAIL SHEET (ENGLISH) (REV. 2/25/05)

ORIGINAL SCALE IN INCHES FOR REDUCED PLANS 0 1 2 3

CU 12235
EA 071631

DISREGARD PRINTS BEARING EARLIER REVISION DATES

REVISION DATES (PRELIMINARY STAGE ONLY) 04/06/09 06/05/09 07/27/09

SHEET 4 OF 27

FILE => 55-e0102-b-ebd.dgn

USERNAME => s135318 DATE PLOTTED => 04-FEB-2010 TIME PLOTTED => 11:03

DIST	COUNTY	ROUTE	POST MILES TOTAL PROJECT	SHEET No	TOTAL SHEETS
12	Ora	22,405, 605	R0.3/R0.9, 22.3/24.0,3.0/R1.6	1798	1929

REGISTERED CIVIL ENGINEER 07-27-09 DATE

2-1-10
PLANS APPROVAL DATE

REGISTERED PROFESSIONAL ENGINEER A. Priley No. C 73375 Exp. 12-31-10 CIVIL STATE OF CALIFORNIA

The State of California or its officers or agents shall not be responsible for the accuracy or completeness of electronic copies of this plan sheet.

OCTA
550 SOUTH MAIN STREET
ORANGE, CA 92863

TRC
21 TECHNOLOGY DR
IRVINE, CA 92618

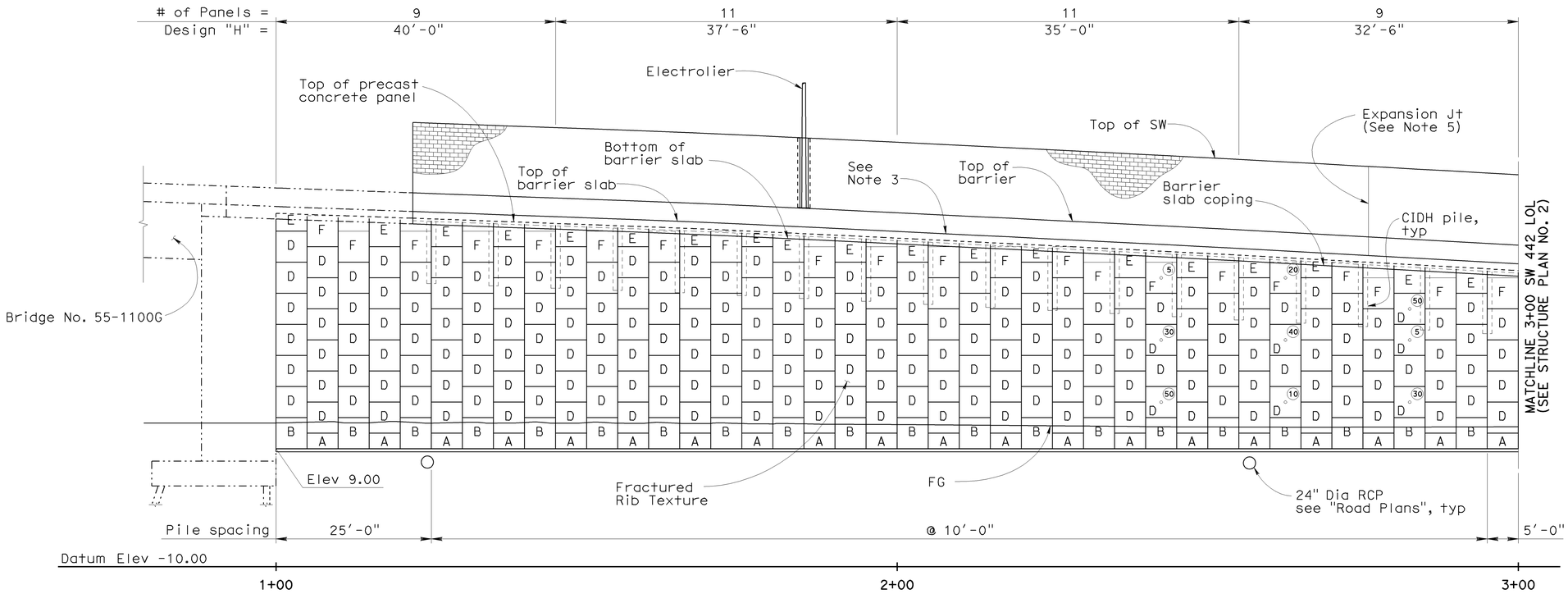

SW NO. 442 DEVELOPED MIRROR ELEVATION

1" = 10'

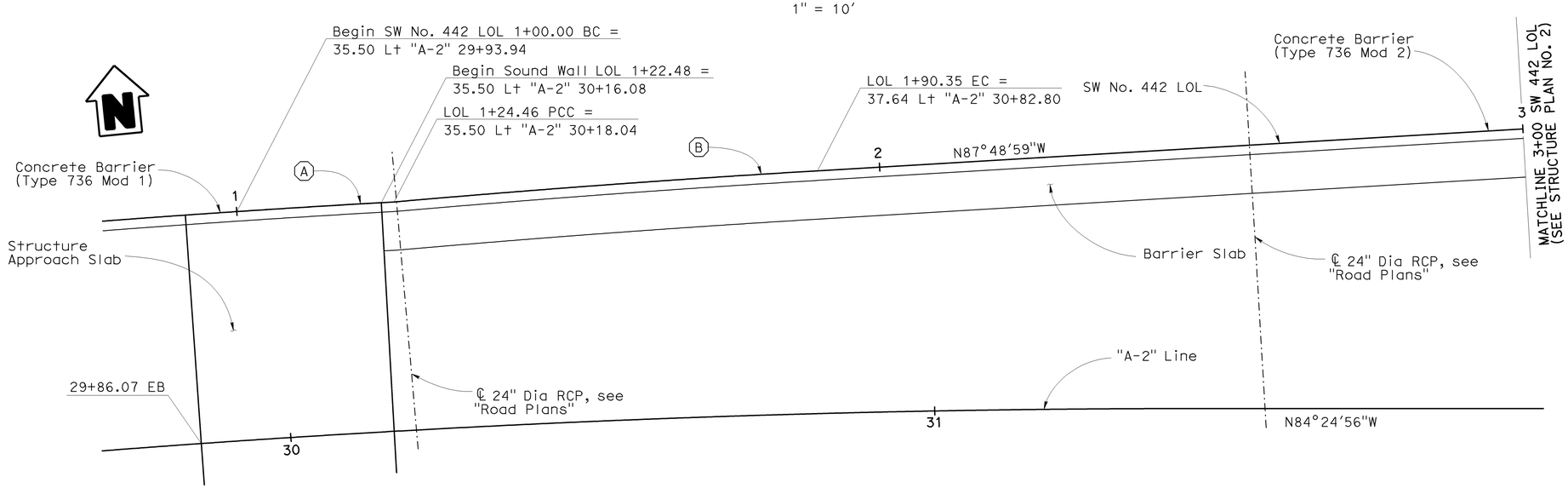

SW NO. 442 PLAN

1" = 10'

LEGEND

Indicates interval in years from time of construction to time of removal of inspection wire

Indicates location of inspection wire, see "Wall Details No. 4" sheet

Indicates panel type designation (See Notes 1 & 2)

CURVE DATA

NO.	R	Δ	T	L
A	2235.50'	00°37'37"	12.23'	24.46'
B	2358.42'	01°36'29"	32.95'	65.89'

NOTES

1. For precast panel details, see "Panel Details No. 1" and "Panel Details No. 2" sheets
2. For fractured rib texture and details, see "Architectural Layout No. 1" and "Architectural Details No. 1" thru "Architectural Details No. 3" sheets
3. For top of wall elevations, see "Wall Details No. 4" sheet
4. For barrier slab details, see "Wall Details No. 3" sheet
5. Expansion joints spaced at 96'-0" max. See "Soundwall - Masory Block with Barrier on Retaining Wall - Details No. 1" sheet
6. Elevation shown at top of leveling pad

Sudhakar Vatti
DESIGN OVERSIGHT Sudhakar Vatti
8-10-09
SIGN OFF DATE

	BY	CHECKED
DESIGN	A. Priley	K. Michalski
DETAILS	A. Priley	J. Hermstad
QUANTITIES	A. Priley	J. Wong

PREPARED FOR THE STATE OF CALIFORNIA DEPARTMENT OF TRANSPORTATION

A. Priley
PROJECT ENGINEER

BRIDGE NO. 55E0102
POST MILE 23.2

WALLS NO. 442 & 444
STRUCTURE PLAN NO. 1

DESIGN DETAIL SHEET (ENGLISH) (REV. 2/25/05)

ORIGINAL SCALE IN INCHES FOR REDUCED PLANS 0 1 2 3

CU 12235
EA 071631

DISREGARD PRINTS BEARING EARLIER REVISION DATES

REVISION DATES (PRELIMINARY STAGE ONLY) 04/06/09 06/05/09 07/21/09

SHEET 5 OF 27

FILE => 55-e0102-c-sp01.dgn

USERNAME => s135318 DATE PLOTTED => 04-FEB-2010 TIME PLOTTED => 11:04

DIST	COUNTY	ROUTE	POST MILES TOTAL PROJECT	SHEET No	TOTAL SHEETS
12	Ora	22,405, 605	R0.3/R0.9, 22.3/24.0,3.0/R1.6	1799	1929

REGISTERED CIVIL ENGINEER 07-27-09 DATE

2-1-10
PLANS APPROVAL DATE

REGISTERED PROFESSIONAL ENGINEER A. Priley No. C 73375 Exp. 12-31-10 CIVIL STATE OF CALIFORNIA

The State of California or its officers or agents shall not be responsible for the accuracy or completeness of electronic copies of this plan sheet.

OCTA
550 SOUTH MAIN STREET
ORANGE, CA 92863

TRC
21 TECHNOLOGY DR
IRVINE, CA 92618

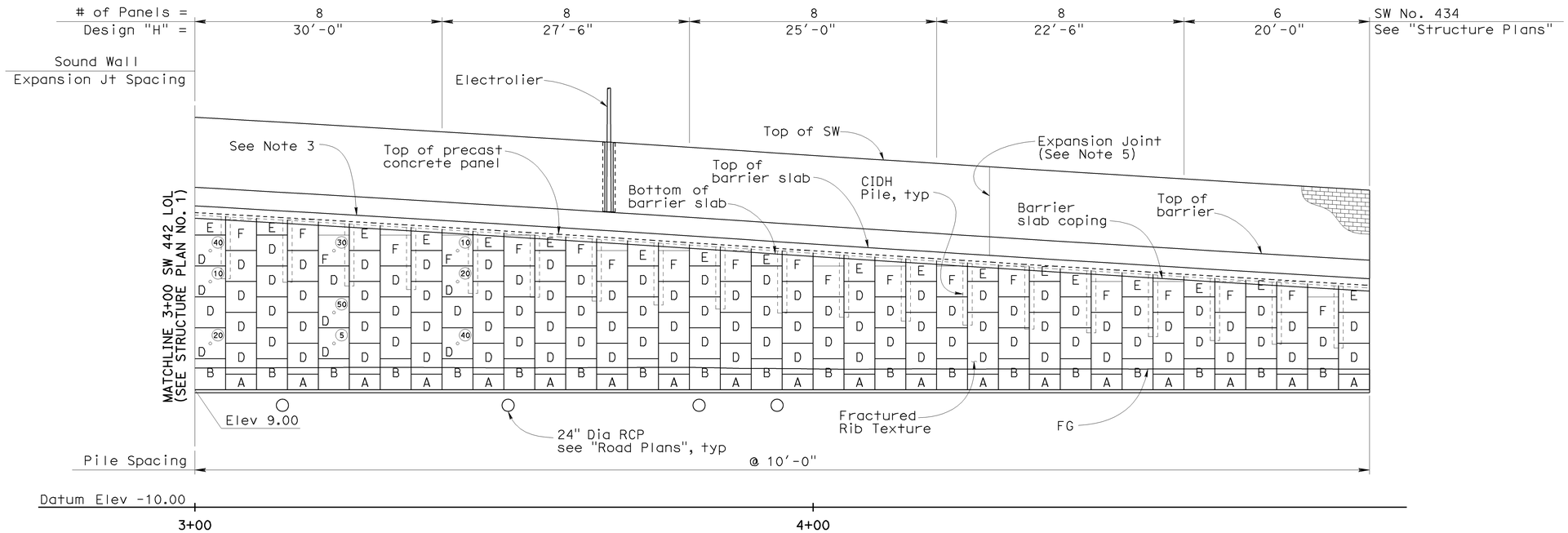

SW NO. 442 DEVELOPED MIRROR ELEVATION

1" = 10'

LEGEND

Indicates interval in years from time of construction to time of removal of inspection wire

Indicates location of inspection wire, see "Wall Details No. 4" sheet

Indicates panel type designation (See Notes 1 & 2)

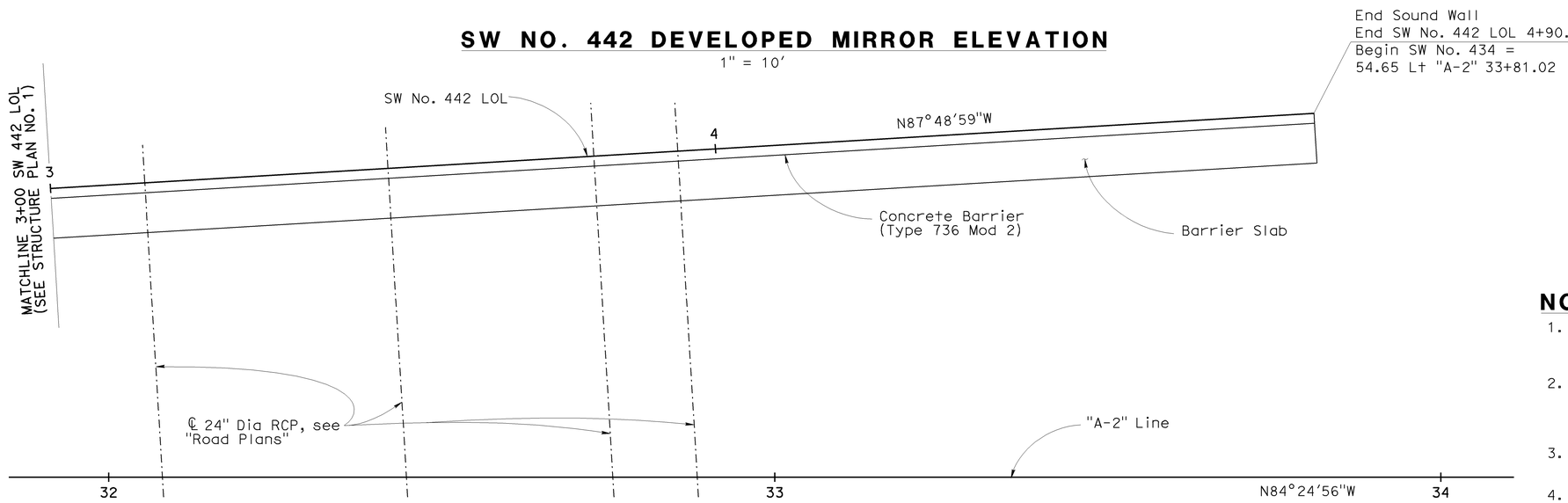

SW NO. 442 PLAN

1" = 10'

NOTES

1. For precast panel details, see "Panel Details No. 1" and "Panel Details No. 2" sheets
2. For fractured rib texture and details, see "Architectural Panel Layout No. 1" and "Architectural Details No. 1" thru "Architectural Details No. 3" sheets
3. For top of wall elevations, see "Wall Details No. 4" sheet
4. For barrier slab details, see "Wall Details No. 3" sheet
5. Expansion joints spaced at 96'-0" max. See "Soundwall - Masonry Block with Barrier on Retaining Wall - Details No. 1" sheet
6. Elevation shown at top of leveling pad

Sudhakar Vatti
DESIGN OVERSIGHT Sudhakar Vatti
8-10-09
SIGN OFF DATE

	BY	CHECKED
DESIGN	A. Priley	K. Michalski
DETAILS	A. Priley	J. Hermstad
QUANTITIES	A. Priley	J. Wong

PREPARED FOR THE STATE OF CALIFORNIA DEPARTMENT OF TRANSPORTATION

A. Priley
PROJECT ENGINEER

BRIDGE NO. 55E0102
POST MILE 23.2

WALLS NO. 442 & 444
STRUCTURE PLAN NO. 2

DESIGN DETAIL SHEET (ENGLISH) (REV. 2/25/05)

ORIGINAL SCALE IN INCHES FOR REDUCED PLANS 0 1 2 3

CU 12235
EA 071631

DISREGARD PRINTS BEARING EARLIER REVISION DATES
REVISION DATES (PRELIMINARY STAGE ONLY) 04/06/09 06/05/09 07/27/09

SHEET 6 OF 27

FILE => 55-e0102-c-sp02.dgn

USERNAME => s135318 DATE PLOTTED => 04-FEB-2010 TIME PLOTTED => 11:04

DIST	COUNTY	ROUTE	POST MILES TOTAL PROJECT	SHEET No	TOTAL SHEETS
12	Ora	22,405, 605	R0.3/R0.9, 22.3/24.0,3.0/R1.6	1800	1929

REGISTERED CIVIL ENGINEER 07-27-09 DATE

2-1-10
PLANS APPROVAL DATE

REGISTERED PROFESSIONAL ENGINEER A. Priley No. C 73375 Exp. 12-31-10 CIVIL STATE OF CALIFORNIA

The State of California or its officers or agents shall not be responsible for the accuracy or completeness of electronic copies of this plan sheet.

OCTA
550 SOUTH MAIN STREET
ORANGE, CA 92863

TRC
21 TECHNOLOGY DR
IRVINE, CA 92618

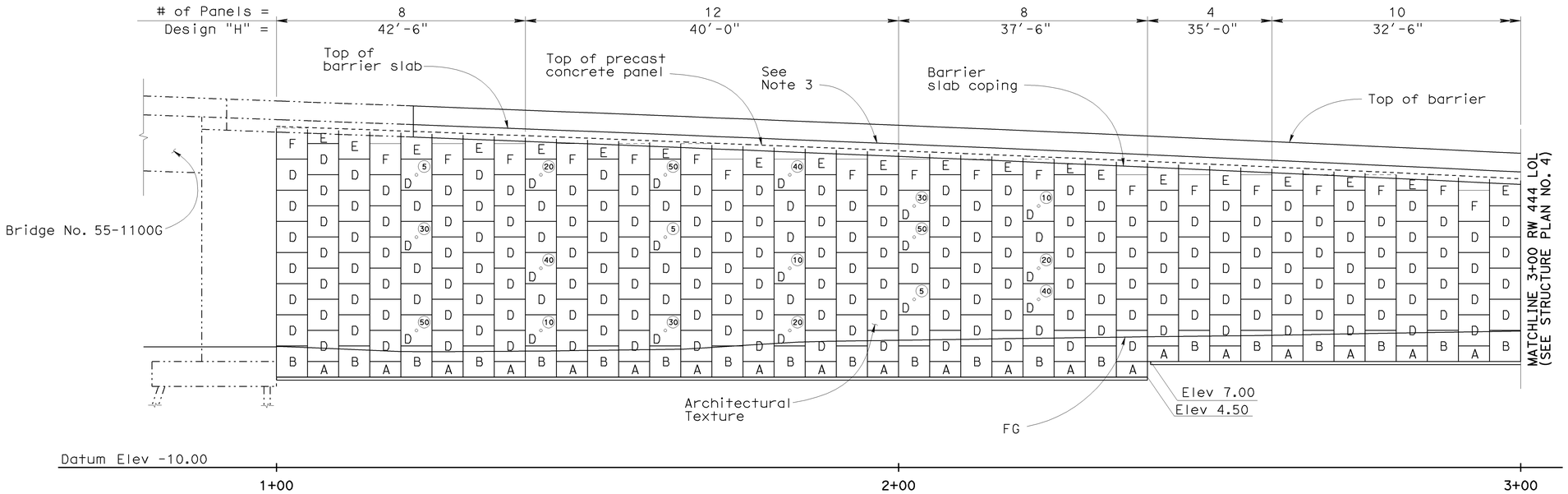

RW NO. 444 DEVELOPED ELEVATION

1" = 10'

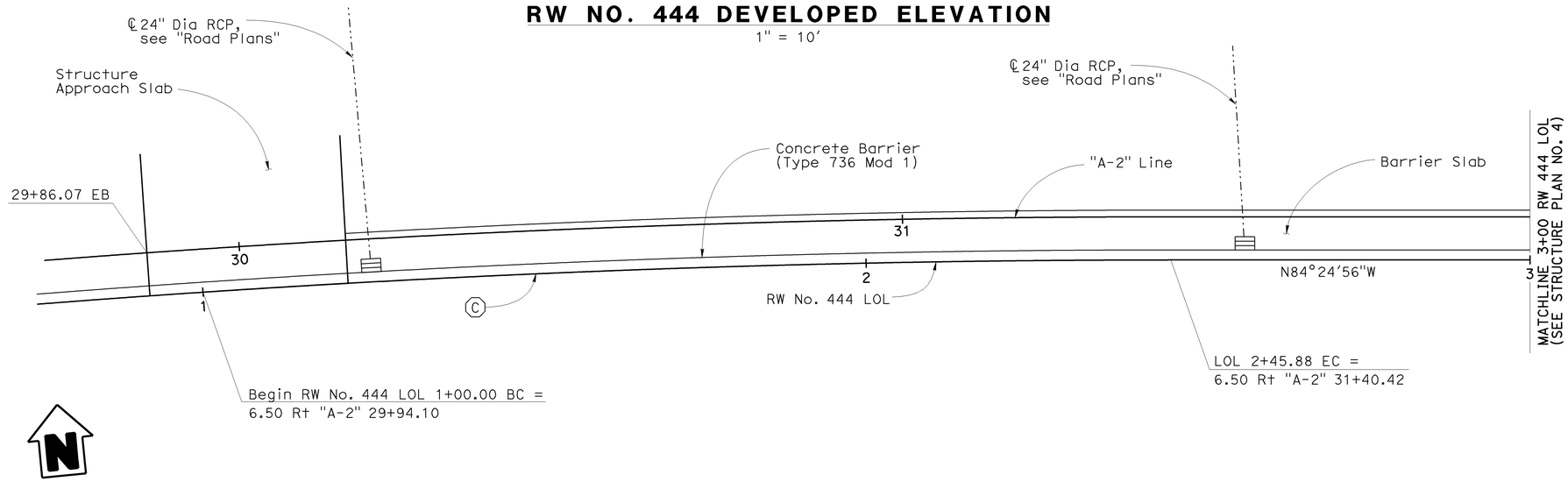

RW NO. 444 PLAN

1" = 10'

LEGEND

Indicates interval in years from time of construction to time of removal of inspection wire

30 D — Indicates location of inspection wire, see "Wall Details No. 4" sheet

Indicates panel type designation (See Notes 1 & 2)

Drainage Inlet, see "Road Plans"

CURVE DATA

NO.	R	Δ	T	L
C	2193.50'	03°48'38"	72.97'	145.88'

NOTES

1. For precast panel details, see "Panel Details No. 1" and "Panel Details No. 2" sheets
2. For architectural texture and details, see "Architectural Panel Layout No. 2" and "Architectural Details No. 1" thru "Architectural Details No. 3" sheets
3. For top of wall elevations, see "Wall Details No. 4" sheet
4. For barrier slab details, see "Wall Details No. 1" sheet. For barrier slab details at drainage inlet and line drain locations, see "Wall Details No. 2" sheet
5. Elevation shown at top of leveling pad

Sudhakar Vatti
DESIGN OVERSIGHT Sudhakar Vatti
8-10-09
SIGN OFF DATE

	BY	CHECKED
DESIGN	A. Priley	K. Michalski
DETAILS	A. Priley	J. Hermstad
QUANTITIES	A. Priley	J. Wong

PREPARED FOR THE STATE OF CALIFORNIA DEPARTMENT OF TRANSPORTATION

A. Priley
PROJECT ENGINEER

BRIDGE NO. 55E0102
POST MILE 23.2

WALLS NO. 442 & 444
STRUCTURE PLAN NO. 3

DESIGN DETAIL SHEET (ENGLISH) (REV. 2/25/05)

ORIGINAL SCALE IN INCHES FOR REDUCED PLANS 0 1 2 3

CU 12235
EA 071631

DISREGARD PRINTS BEARING EARLIER REVISION DATES

REVISION DATES (PRELIMINARY STAGE ONLY) 04/06/09 06/08/09 07/27/09

SHEET 7 OF 27

FILE => 55-e0102-c-sp03.dgn

USERNAME => s135318 DATE PLOTTED => 04-FEB-2010 TIME PLOTTED => 11:04